2.0 THERMAL CONSTANTS

The thermal constants used in the analysis are grouped into specific thermal properties of cask materials and effective thermal properties which were derived from correlations. The latter pertain to natural convection as well as to effective radiation in confined spaces.

2.1 Specific Thermal Properties

Table VIII-2 lists the thermal properties of the cask materials. Specific emissivities are listed in Table VIII-3.

2.2 Effective Thermal Properties

Natural convection coefficients are expressed in terms of the equation

$$h_{NC} = C (T_1 - T_0)^b \qquad (1)$$

whereas radiation coefficients are defined by

$$h_R = 0.174 \times 10^{-8} F (T_1^2 + T_0^2) (T_1 + T_0) \qquad (2)$$

T_0 and T_1 are sink and source temperatures, respectively. For the analyses of this report temperatures are in °F or °R and the values for C, b, and F are listed in Table VIII-4. The coefficients are in the units of Btu/hr-ft^2-°F.

3.0 ANALYTICAL METHOD

The thermal analyses of the cask are based primarily on digital computer program results with hand calculations providing a significant amount of input to the computer programs used.

TABLE VIII-2

MATERIAL PROPERTIES

	Density (lb/ft³)	Spec Heat/Temperature (Btu/lb-°F)	(°F)	Conductivity/Temperature (Btu/hr-ft-°F)	(°F)	Latent Heat/Trans. Temperature (Btu-lb)	(°F)
Stainless Steel (304) Ref. 1	494.0	0.120	32.0	7.74	32.0	—	—
		0.135	752.0	9.43	212.0		
				12.6	923.0		
				15.0	1292.0		
Lead Ref. 1	708.6	0.0305	32.0	20.0	68.0		
		0.0315	212.0	19.6	208.9	10.26	621.5
		0.0338	621.5	18.3	400.1		
		0.0340	621.7	16.9	498.9		
		0.0328	1832.0	14.5	581.0		
				12.1	630.0		
				9.68	717.1		
				9.02	799.9		
				8.71	980.1		
				8.66	1276.0		
Uranium Ref. 1	1192.0	0.0275	32.0	15.0	32.0	—	—
		0.0350	662.0	20.1	752.0		
		0.0480	1225.4	27.6	1472.0		
		0.8300	1234.4				
		0.0450	1243.4				
		0.0450	1418.0				
Dummy Cavity Fluid*	0.011	1.24	—	0.137	—	—	—
Air Ref. 1	0.08053	0.24	—	0.014	32.0		
				0.018	212.0		
				0.029	752.0		
Helium Ref. 1 & 2	0.011	1.24	—	0.079	0.0	—	—
				0.0100	200.0		
				0.119	400.0		
				0.137	600.0		
				0.152	800.0		
				0.167	1000.0		
				0.197	1400.0		
Neutron Shield Fluid (wet) Ref. 1	60.0	1.0	—	—	—	—	—
Fuel ** Ref. 1 & 3	1.0	36.5	—	—	—	—	—
6061-T6 Aluminum Ref. 1 & 8	169.0	0.20	32.0	96.8	—	167.0	1080.0
		0.23	392.0				
Neutron Shield Fluid (dry) same as air Ref. 1	0.08053	0.24	—	—	—	—	—

* This dummy fluid is used to calculate the fuel element temperature rise in a helium environment using a single point model (Section 4.1.5)

** Effective volumetric heat capacity for typical UO_2 and Zr. Based only on active fuel length. Conductivity of fuel is not used.

(Continued on page VIII-11.)

**Continuation of footnote -

The product of these two dummy variables results in 36.5 BTU/ft^3/^{o}F which is actually the volumetric specific heat used in the analysis. This heat capacity was established by volumetric weighting of the Zr clad and UO_2 fuel heat capacities of a PWR fuel pin assuming a conservatively low temperature of 212°F. Following equation provides the effective heat capacity.

$$\rho C_{eff} = \frac{\rho_c C_c V_c + \rho_f C_f V_f}{V_c + V_f} = \rho_c C_c \frac{r_o^2 - r_i^2}{r_o^2} + \rho_f C_f \frac{r_i^2}{r_o^2}$$

Where:

ρC_{eff} = effective volumetric heat capacity, 36.5 BTU/ft^3/^{o}F

ρ_c = clad density, 408.9 #/ft^3 (Ref. 3)

C_c = clad specified heat .0732 BTU/lb/^{o}F (Ref. 3)

ρ_f = fuel density - 92% T.D., 608.8 #/ft^3 (Ref. 1)

C_f = fuel specific heat, .063 BTU/lb/^{o}F (Ref. 1)

r_i = fuel pin inner radius .1867 in. (PWR)

r_o = fuel pin outer radius, .211 in. (PWR)

V_c = volume of clad per unit length of pin

V_f = volume of fuel per unit length of pin

TABLE VIII-3

EMISSIVITIES

Material	ϵ	References
Fuel pin	0.4	3
Surfaces exposed to fuel (aluminum, can and can head)	0.2	6
Neutron shield interior	0.8	5
Head cavity	0.8	5
Cask surface before and after fire	0.5	5, 6
Cask surface during fire	0.8	5 (10 CFR 71)
All dry gaps except those with aluminum surfaces	0.5	5, 6
Aluminum surfaces	0.2	6
Stainless steel surfaces opposite aluminum	0.5	5, 6

TABLE VIII-4

CONVECTION AND RADIATION FACTORS

Application	C	b	F
ID single point fuel temperature	--	--	0.1514
2D single point fuel temperature	--	--	0.1087
1D aluminum to can gap	--	--	0.1668
2D aluminum to can gap	--	--	0.167
1D can to inner shell gap	--	--	0.3351
Other gaps not covered above	--	--	0.333
Wet neutron shield	45.0	0.3333	---
Dry neutron shield	0.09	0.3333	0.7
Head cavity	--	--	0.6207
Outer surface before and after fire	0.18	0.3333	0.5
Outer surface during fire	0.18	0.3333	0.7347

3.1 Hand Calculations

Hand calculations were performed to compute:

a. The natural convection coefficients applicable to the fluid in the neutron shield.

b. The effective radiation form factors internal to the cask including a single point fuel element temperature rise model.

c. The effective conduction length applicable to the single point fuel element temperature rise model.

The calculations are based mainly on the recommendations in the "Cask Designers Guide" [5] and on references 6 and 7.

3.2 Computer Programs

Detailed steady-state and transient thermal analyses of the cask were performed with the TRUMP digital computer program [9] supplemented by the mesh generator program FED [10]. Explicit temperature distributions within the fuel element under dry conditions were calculated using a modification of a program developed by J. S. Watson [11] The modified program is identified as FETA (Fuel Element Thermal Analysis).

3.2.1 TRUMP-FED

TRUMP solves a general nonlinear parabolic partial differential equation describing flow in various kinds of potential fields, such as fields of temperature, pressure, and electricity and magnetism.

Thermal problems may include heat transport by conduction, free and forced convection, radiation, and mass flow. Heat may be produced or absorbed by internal heat sources and sinks and phase changes. Boundary

conditions may include insulation, specified surface temperatures or heat fluxes, or heat transfer by radiation, free convection, or forced convection. Thermal properties, heat generation rates, mass flow rates, and surface heat transfer coefficients may be tabulated functions of time or temperature. Surface or external temperatures may be tabulated functions of time. Temperature-dependent variables at one spatial position may be functions of temperatures at other spatial locations. Initial conditions may vary with spatial position.

The FED computer program reduces the effort required to obtain the necessary geometric input for problem solutions using the heat transfer code TRUMP. FED can properly zone any body of revolution in one, two, or three dimensions. Rectangular bodies can be only approximated by using a very large radius of revolution compared to the total radial thickness and by considering only a small angular segment in the circumferential direction.

In FED the regions of a common material are divided into four-sided areas. The boundaries of these areas are the required FED input. Each area is subdivided into volume nodes and the geometrical properties are calculated. Finally, FED connects adjacent nodes to one another, using the proper surface area, interface distance, and, if specified, radiation form factors and interface conductances.

3.2.1.1 Geometric Model

The cask, as evaluated by the TRUMP program, has been represented by two models. The first considers one-dimensional radial heat transfer at the location of maximum power density. Figure VIII-3 shows the nodal network (29 nodes) used in this model. It is noted that the fuel has been represented thermally as an annulus which preserves the volume of

FIGURE VIII–3
ONE DIMENSIONAL NODAL NETWORK

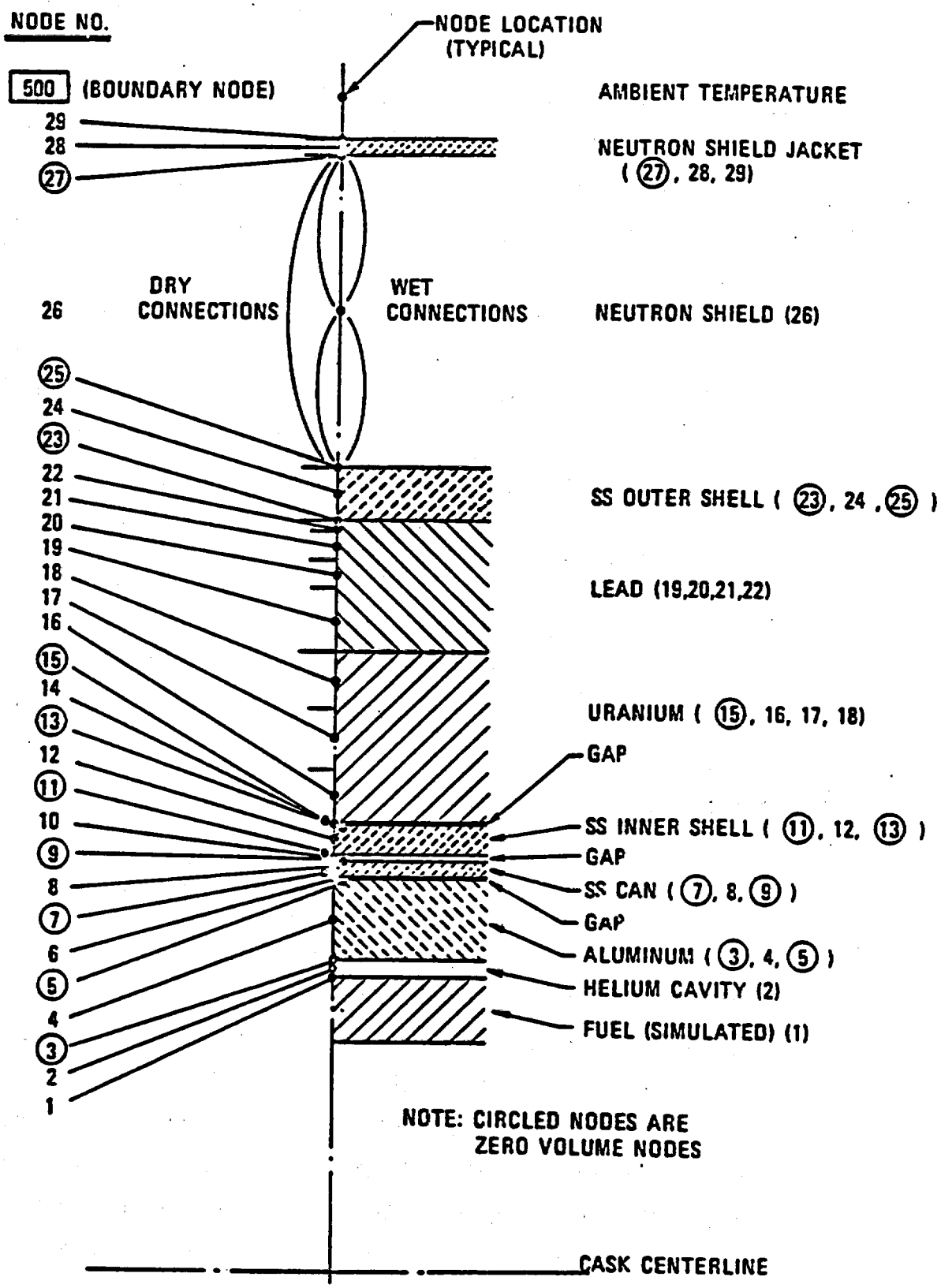

fuel and cladding. The outer radius of this annulus encloses an area equal to the fuel element cross section (8.375 x 8.375 in^2). The fuel element structure has been assumed conservatively to be non-existent.

The second model is shown in Figure VIII-4. Explicit identification of the nodes is provided in Figure VIII-5. It represents the upper half of the cask as an axisymmetric body of revolution starting at the center of the active fuel. The model consists of 324 nodes. The fuel and cavity interior have been approximated as in the one-dimensional model. Supporting structure has been omitted for conservatism. Gaps within the cask (e.g., the closure head to cask gaps) have been represented explicitly. Perfect contact has been assumed at the seating surfaces between the cask, the can and the heads. The outer closure bolt contact surface with the head has been modeled by a continuous perfect contact annulus.

3.2.1.2 Internal and Boundary Conditions

The entire decay heat load has been concentrated in the fuel for simplicity and conservatism. In the one-dimensional model the heat load corresponds to the axial maximum. In the two-dimensional model it is the uniform design average heat load. A solar heat load has been represented in all cases except during the fire by a heat generation rate in the very thin surface nodes of the cask. The balsa crash barriers have been simulated by insulating areas on the surface of the cask.

The heat transfer within the cavity from fuel to cask is modeled using a combination of radiation and conduction heat transfer. For the one-dimensional TRUMP analysis a single point radiation, conduction model with a heat transfer area of the fuel element envelope (one side 8.375 inches long) has been generated on the basis of detailed FETA analyses. In the two-dimensional model the heat transfer coefficients have been normalized to the cask internal surface rather than the outer surface of the fuel element. This in effect distributes the decay heat load evenly over the cask internal surface which is conservative with respect

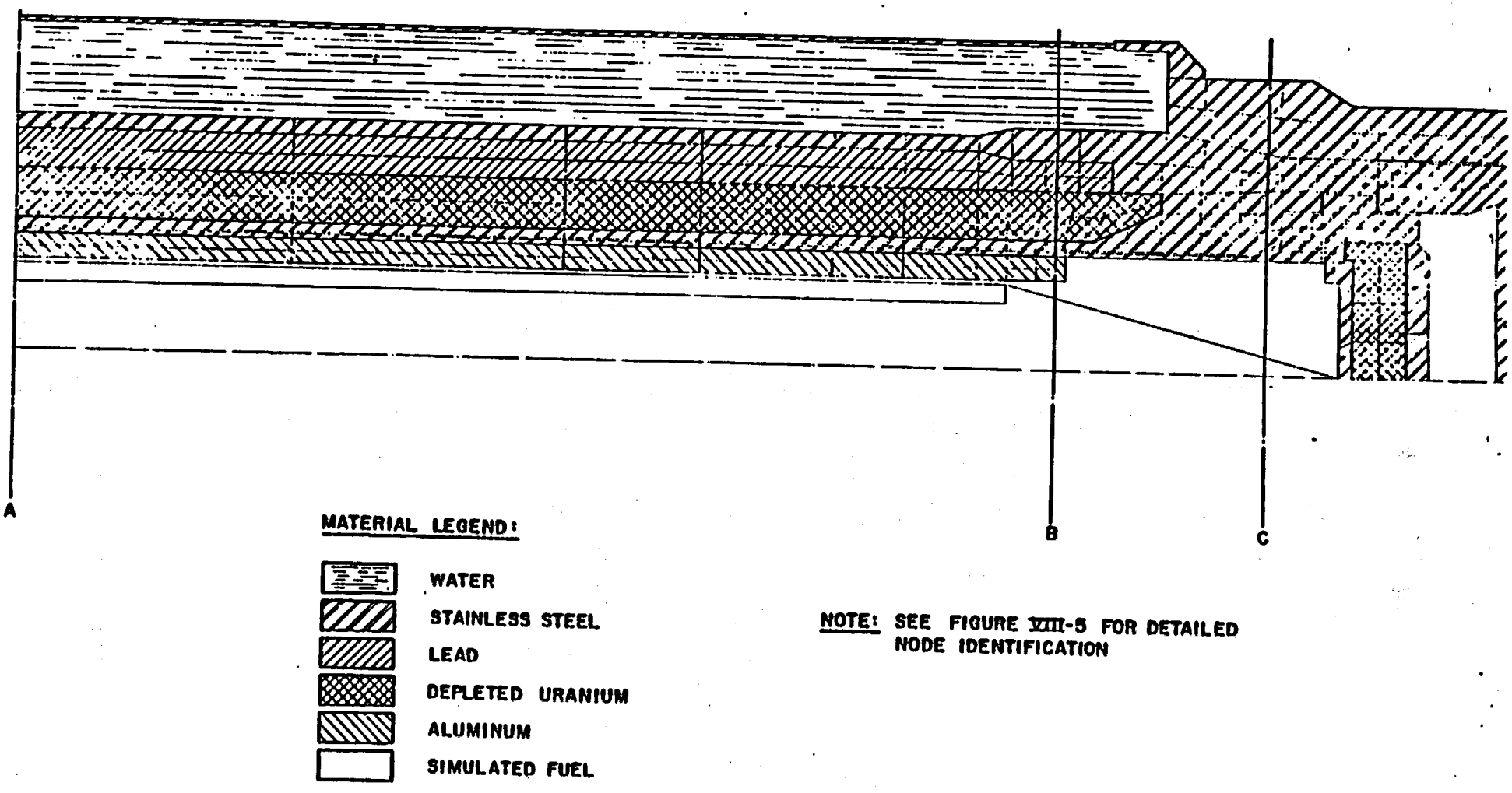

FIGURE VIII-4
TWO-DIMENSIONAL NODAL NETWORK OF CASK END

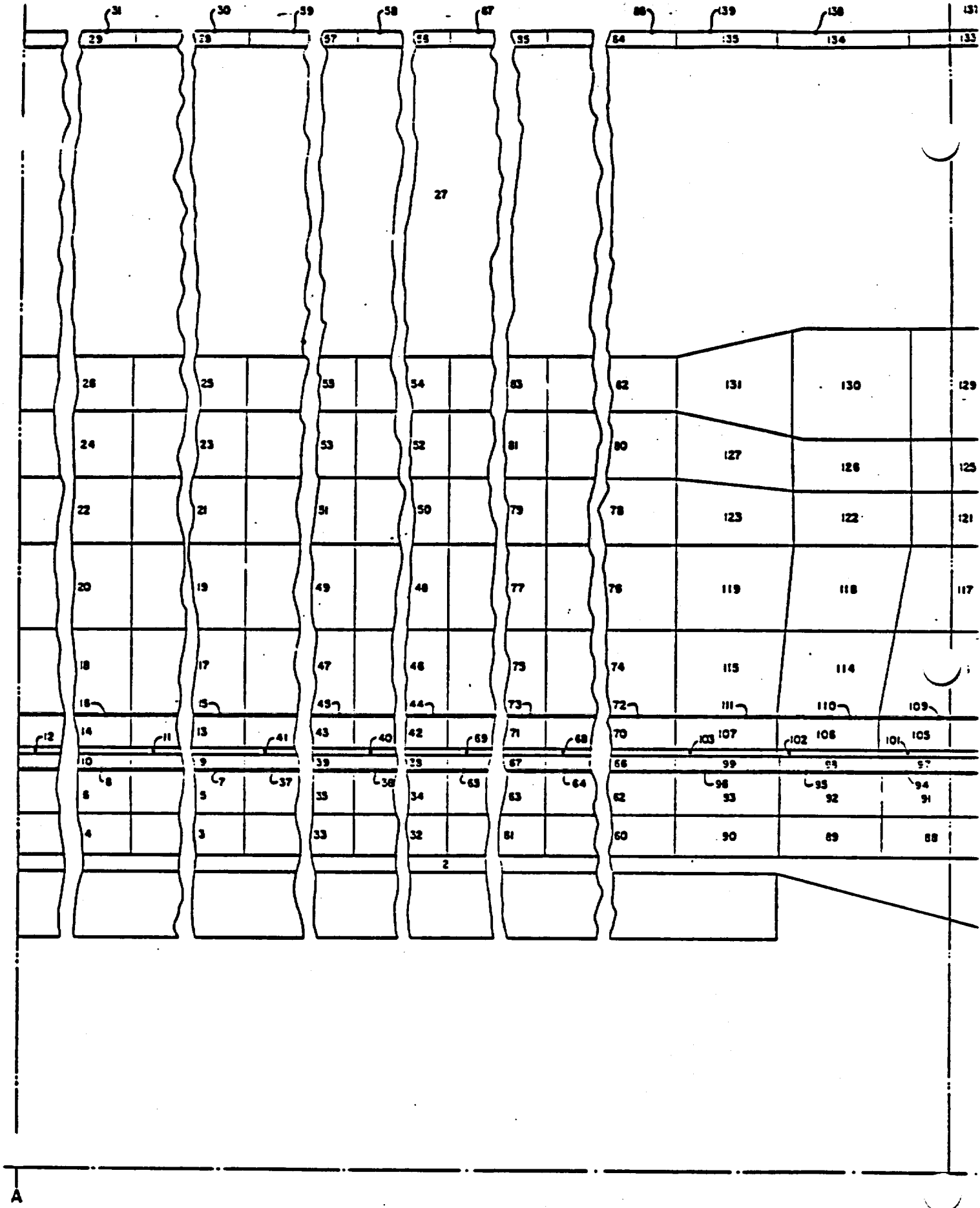

FIGURE VIII-5 SHEET 1
2D NODE IDENTIFICATION

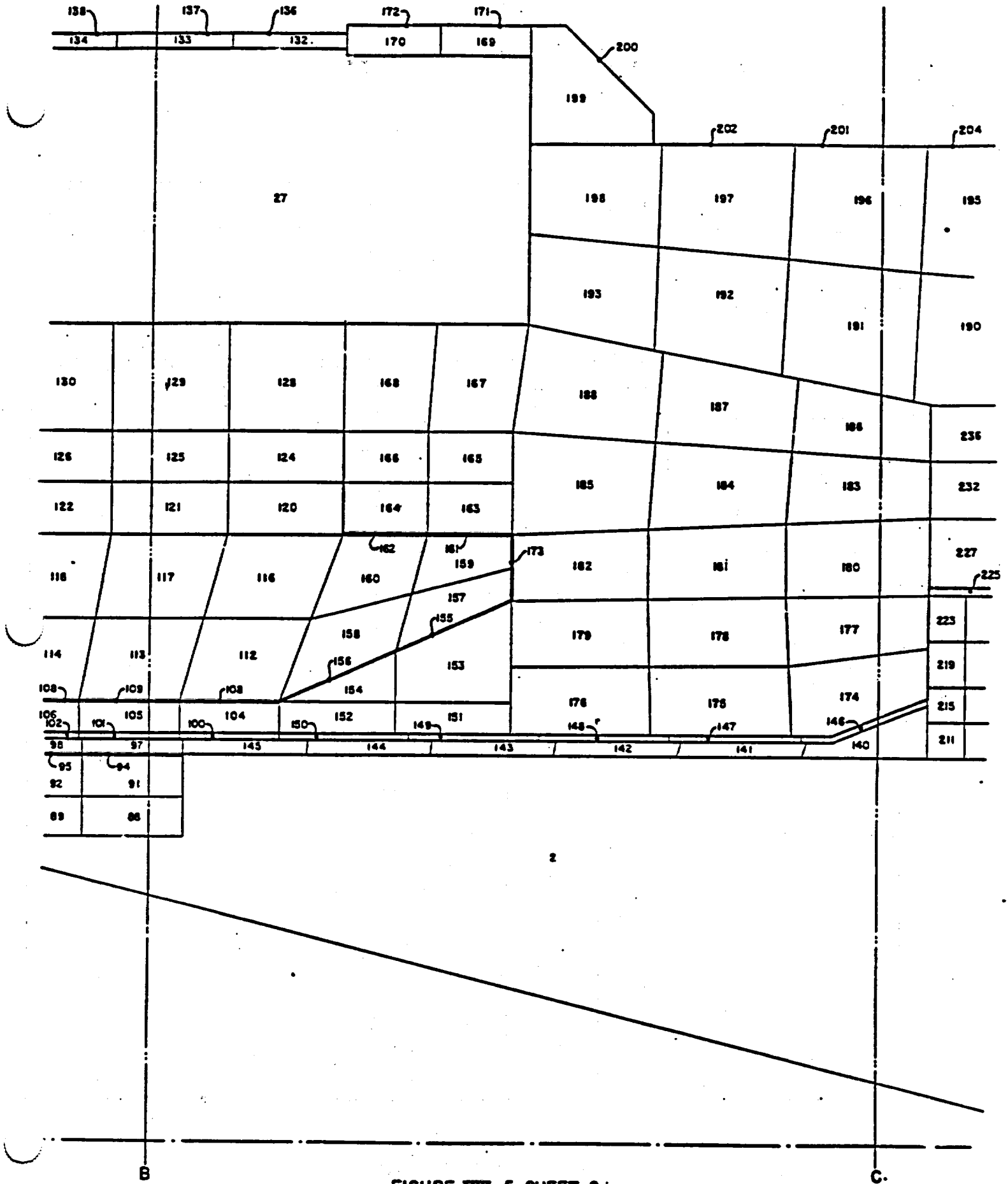

FIGURE VIII-5 SHEET 2
2D NODE IDENTIFICATION

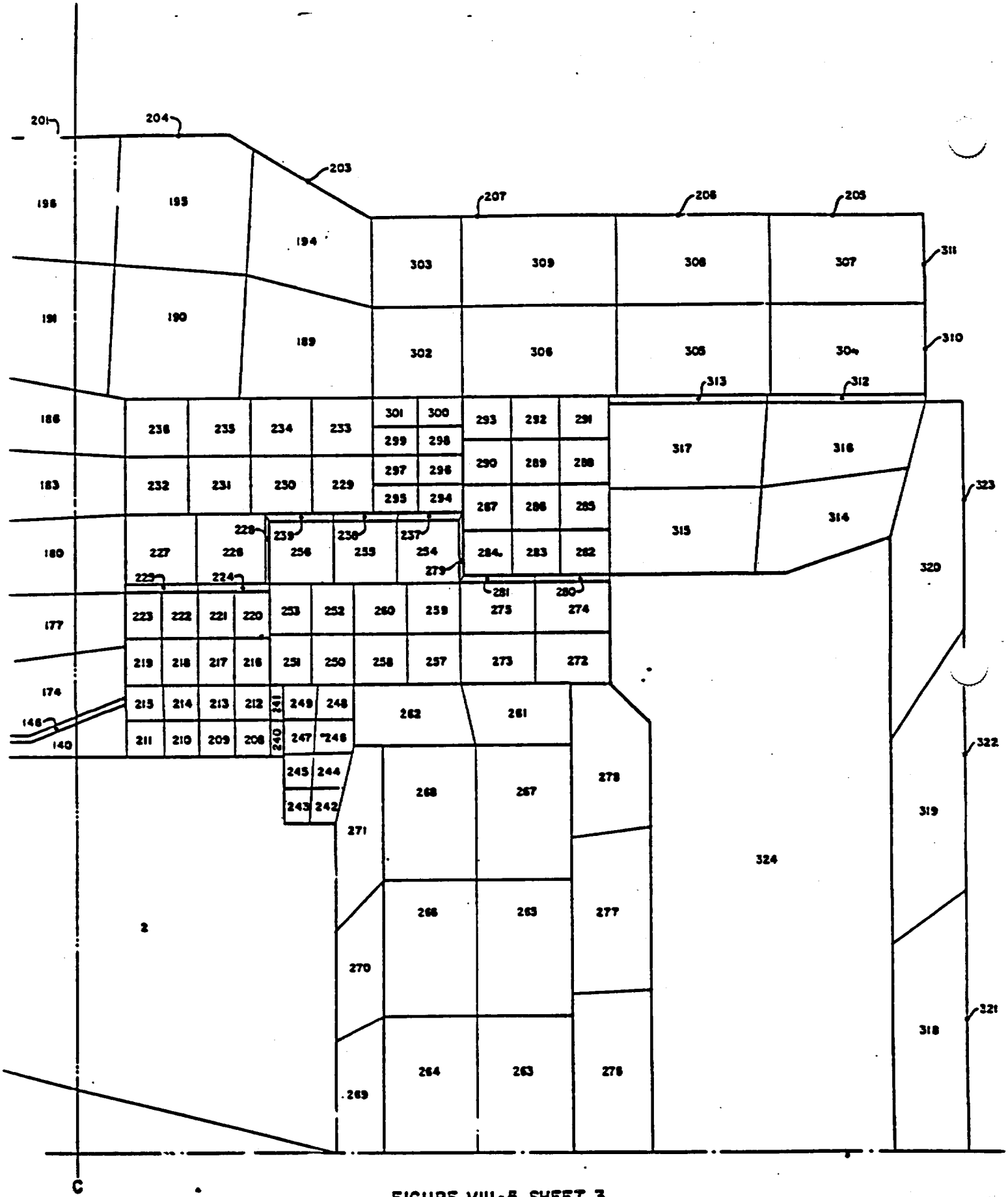

FIGURE VIII-5 SHEET 3
2D NODE IDENTIFICATION

to cask end temperatures. Maximum fuel element temperatures are established by the one-dimensional model and are thus not affected by this assumption.

In the neutron shield, natural convection has been assumed to be effective over only half the circumference of the cask. Turbulent convection has been judged to exist because the effective convection length exceeds 9 inches[7]. No convection heat transfer has been assumed in the head cavity because of an optimistic radiation heat transfer coefficient and the piping, valves and gages in this area.

Radiation in the neutron shield has been taken to be one-dimensional. The reference heat transfer area is that of the cask outer shell, not the shield jacket. In the head cavity radiation is assumed to occur only in an axial direction. A configuration factor accounting for the connecting walls between the parallel disk radiating surfaces has been considered.

Radiation and natural convection heat transfer on the surface of the cask have been modeled as recommended in the "Cask Designers Guide"[5]. All the insulating crash barrier is assumed removed at the inception of the fire. Temperatures in the head area are thus maximized. As already noted, the balsa crash barriers have not been explicitly modeled for the thermal analysis because they act essentially as insulation. They have been considered in the steady state analysis by providing an insulating boundary condition at all cask surfaces covered by balsa wood. The fire analysis is performed with the neutron shield jacket intact. This is the design basis and is also more likely than complete stripping of the structure.

Thermal radiation augments the conduction heat transfer across all gaps within the cask.

3.2.2 FETA

The FETA (Fuel Element Thermal Analysis) program provides an approximate two-dimensional steady-state temperature distribution applicable to the pins of a square array dry fuel element. Heat transfer is by radiation and conduction. Uniform or variable wall temperature of the surrounding enclosure may be analyzed. Each pin is assumed to have one temperature. All active fuel pins are assumed to generate identical power, however, any number of pin locations may have zero power. The emissivity within the array is constant but may be different from that of the enclosure. FETA is essentially an extension of a fuel element program developed by Watson[11].

3.2.2.1 Analytical Considerations

The heat transfer in a dry fuel element consists of radiation, conduction and convection. FETA analyses have been restricted to radiation and conduction which are readily modeled in two dimensions. Natural convection may be significant but has conservatively not been incorporated in the program because of the much greater complexity of an appropriate mathematical model, the large number of additional uncertainties introduced and what is currently judged to be a small return on the added effort required to evaluate natural convection explicitly. Some approximation of natural convection may be achieved in FETA by adjusting conductivity accordingly.

The computation of temperature in FETA is based on an energy balance of a single fuel pin considering the heat transfer to surrounding pins as far as two rows removed (Figure VIII-6). Radiation heat transfer occurs between the reference pin and the four closest (primary) pins, four diagonal pins, and eight (secondary) pins located two rows from the reference pin. Conduction heat transfer occurs between the reference pin and the adjacent four primary pins as well as four diagonal pins. With the exception of the corner pins, heat transfer at the boundary of the element occurs by means of one conduction link and one combined radiation link between the enclosing wall and each pin of the outside row of the fuel element. One combined radiation link and three conduction links are utilized at each corner of the fuel element.

The energy equation for each pin of unit length is:

$$q_i = \sum_{j=1}^{N} \left[A_i \sigma F \left(T_i^4 - T_j^4\right) \right] + \sum_{j=1}^{N'} \frac{kA_j}{\ell_j} \left(T_i - T_j\right) \qquad (3)$$

where

q_i	=	heat generated in pin i, BTU/hr-ft
A_i	=	surface area of pin i, (πD), ft^2/ft
σ	=	Stefan-Boltzmann constant, 0.1713×10^{-8} BTU/hr-ft^2-^oR
T_i	=	surface temperature of pin i, ^oR
T_j	=	surface temperature of pin j, ^oR
F	=	general radiation exchange factor
k	=	gas conductivity, BTU/hr-ft-^oF
A_j	=	area for conduction heat transfer between pins i and j, ft^2/ft
ℓ_j	=	conduction length between pins i and j, ft

Figure VIII-6

HEAT TRANSFER LINKS IN FUEL ELEMENT

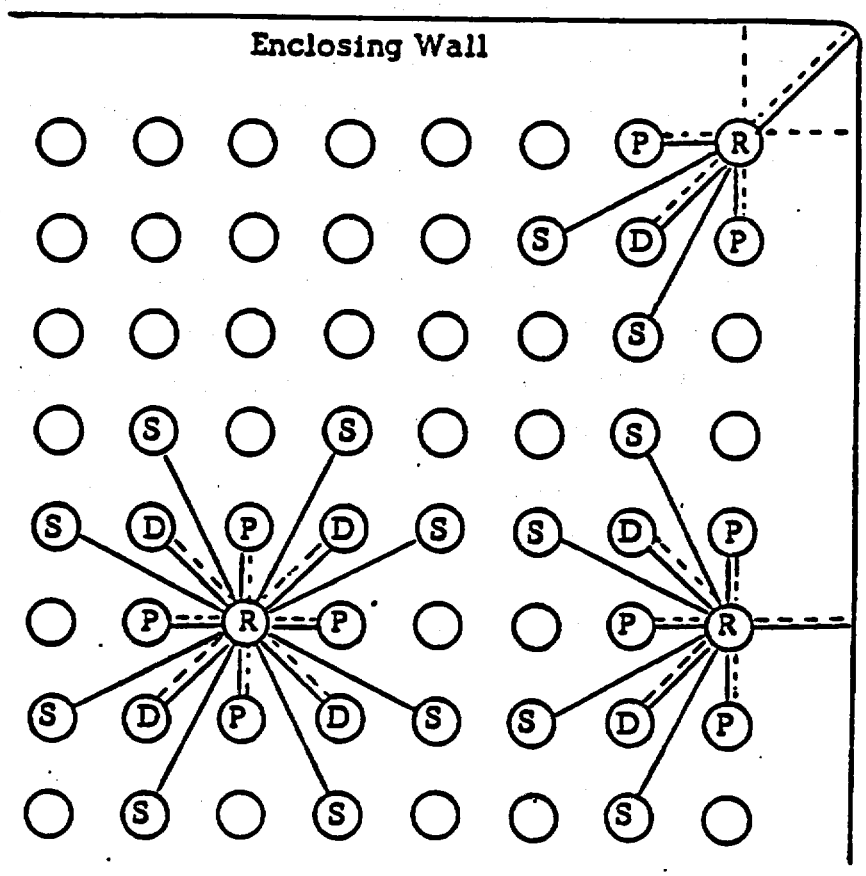

---- = Conduction Links

—— = Radiation Links

R = Reference Pin

P = Primary Pin

D = Diagonal Pin

S = Secondary Pin

N = number of radiation links applicable to pin i, ($N = 16$ for internal pins, $N = 6$ for outside corner pins, $N = 10$ for outside row pins, excluding corners).

N' = number of conduction links applicable to pin i, ($N = 8$ for internal pins, $N = 6$ for all outside row pins).

The general radiation exchange factor is evaluated by

$$F = \left(\frac{1}{F_{ij}} + \frac{1}{E_1} + \frac{1}{E_2} - 2\right)^{-1} \tag{4}$$

where

E_1, E_2 = surface emissivities, $E_1 = E_2$ for heat transfer between pins; E_1 is pin emmissivity and E_2 is wall emissivity for pin to wall heat transfer.

F_{ij} = configuration factor. (See Reference 1 for justification of using F_{ij}).

The configuration factors, F_{ij}, are those described in Reference 11.

Conduction heat transfer for pins within the fuel element array is approximated by four links to primary pins and four links to diagonal pins. The primary effective area is the projected area of a pin. For the diagonal links the effective area is the difference between the surface area of a rod and the projected area used for the primary links. The corresponding effective conduction lengths are the mean distances between pin surfaces. In effect:

$$\text{Primary } A_j = D \tag{5}$$

$$\text{Diagonal } A_j = \frac{\pi D}{2} - D = 0.571\ D \tag{6}$$

$$\text{Primary } \ell_j = P - \frac{\pi}{4} D \tag{7}$$

$$\text{Diagonal } \ell_j = 1.414\ P - \frac{\pi}{4} D \tag{8}$$

Conduction to the enclosing wall is simulated by two primary links and one diagonal link for corner pins. For the remaining pins of the outer row only one primary conduction link is utilized.

The above procedure is considered sufficiently conservative because convection is not considered. It is judged that the above conservatism combined with pessimistic emissivities compensates for the possible unconservatism mentioned in Reference 5.

The wall temperature used in the FETA analysis is the maximum established in the TRUMP analyses.

4.0 CALCULATIONS AND RESULTS

This section provides the details of hand calculations and computer calculations applicable to the thermal analysis of the cask.

4.1 Hand Calculations

4.1.1 Surface Conditions

Under normal steady-state conditions the combined convection-radiation heat transfer coefficient of the outer surface is established by equations (1) and (2) and the factors in Table VIII-4. No special hand calculations are required except that during the fire the emissivity of the cask surface is given by:

$$F = \frac{1}{\frac{1}{\epsilon_1} + \frac{1}{\epsilon_2} - 1} = \frac{1}{\frac{1}{0.8} + \frac{1}{0.9} - 1} = 0.7347 \quad (9)$$

The solar heat load is based on double the daily average normal heat flux of 144 Btu/hr-ft^2 (5) applied to the projected area of the cask.

The completely distributed surface heat flux in the computer calculations is then 92 Btu/hr-ft^2. With a surface node thickness of 0.0002 ft. this results in a surface node heat generation rate of 4.58×10^5 Btu/hr-ft^3.

4.1.2 Wet Neutron Shield Conditions

Natural convection in the water filled neutron shield is based on a conventional turbulent convection coefficient applicable to a vertical wall [6, 7] which yields

$$h_{NC} = 90 \ (\Delta T)^{1/3} \tag{10}$$

for an average temperature of 325°F. It is noted that the convection coefficient actually increased with higher fluid temperature. To account for an effective convection surface area which is half of the computer model area, the coefficient has been reduced to 45 in the computer problem. The turbulent correlation has been used since the active convection height exceeds 9 inches.

4.1.3 Dry Neutron Shield Conditions

With a dry neutron shield, the natural convection coefficient is assumed to be the same as on the outer surface [5]

$$h_{NC} = 0.18 \ (\Delta T)^{1/3} \tag{11}$$

However, to account for the difference of effective heat transfer area and heat transfer area in the computer problem, the effective natural convection coefficient is 0.09.

Radiation heat transfer in the neutron shield is assumed to act only radially. For surface emissivities of 0.8, the radiation exchange factor based on the inner surface of the neutron shield is 0.7.

4.1.4 Gap Conditions

All gaps within the cask are evaluated with simple conduction and one-dimensional radiation. With a surface emissivity of 0.5, the radiation exchange factor is 0.333 for most gaps. The ID can to inner shell gap and the aluminum to can gap are exceptions. With the ID can to inner shell gap, the variation of surface area has been considered in establishing a radiation exchange factor of 0.3351. With the aluminum to can gap, the differing emissivities result in a radiation exchange factor of 0.1668 for the more exact 1D analysis and 0.167 for the 2D analyses. The smaller surface establishes the reference area for all radiation heat transfer calculations.

4.1.5 Cask Cavity Conditions

A single point fuel element model considering radiation and conduction has been used for all TRUMP calculations. The radiation exchange factor for this model is based on wall and peak fuel pin temperatures obtained from a FETA analysis considering only radiation heat transfer.

$$F = \frac{\varphi}{\sigma\,(T_1^4 - T_0^4)} = \frac{10.63(3413)\,(1.2)}{4\,(8.375)}\left[\frac{1}{.173\times10^{-8}\,(1586^4 - 1081^4)}\right] \quad (12)$$

$$= .1514$$

The effective conduction length is obtained by using the above radiation exchange factor with wall and peak fuel pin temperatures from a second FETA analysis considering radiation and heat conduction through helium with a conductivity of 0.137 Btu/hr-ft-$^{\circ}$F.

$$\ell = \frac{k\,(T_1 - T_0)}{\varphi - F\sigma\,(T_1^4 - T_0^4)} \quad (13)$$

$$= \frac{.137\,(980 - 621)}{1299.6 - .1514\,(.173\times10^{-8})\,(1440^4 - 1081^4)} = .09256 \text{ ft.}$$

In the TRUMP analysis, conduction from the wall to the fuel occurs through two series connections (Figure VIII-3). The conduction length for use in TRUMP is thus .04628 ft.

The above calculations apply to the 1D analysis. The reference area is established by the fuel element periphery, 4 x 8.375 inches. A constant conservatively low helium conductivity applicable to a helium temperature of 600°F has been assumed. The reference internal heat load is 1.2 x 10.63 kw. The fuel element volume consists of 204 12 ft long 0.422 in. diameter rods. The maximum heat generation rate for 97% of this volume which accounts for fuel dishing and gaps is 18860 Btu/hr-ft^3. To establish the single point model parameters any reasonable surface temperature may be used in the FETA analysis because the model parameters are practically independent of temperature. This has been confirmed by FETA check problems, after obtaining TRUMP results.

For the 2D TRUMP analysis the single point fuel element model is also used. However, the energy from the fuel element is distributed over the entire cavity surface instead of just the periphery of the element. This procedure is a conservative approximation of the very complex radiation, convection and conduction heat transfer occurring in the cavity. The reference heat transfer surface is now the cavity surface with each section receiving a portion of the total heat load. To maintain the appropriate temperature differentials, the increase of the reference heat transfer surface must be offset by a reduction of heat transfer coefficients. The adjustment factor, 0.7182, is the ratio of half the fuel element surface (2HL = 16.750 ft^2) to the cavity surface (23.322 ft^2) in the 2D TRUMP model. Application of the adjustment factor to the effective conduction length results in $\ell/2$ = 0.06444 ft. Similarly the radiation exchange factor becomes F= 0.1087 for the 2D analysis.

In the 1D analysis two series connected conduction lengths act in parallel with one radiation link. In the 2D analysis one conduction length is in series with many parallel connected conduction lengths and the combination of all conduction lengths act in parallel with many radiation links. The reference area for any connection to a cavity surface node is the cavity area of that node. The reference area for the single connection between the fuel node and the cavity fluid node is the entire cavity surface area.

4.1.6 Head Cavity Conditions

For the head cavity radiation is assumed to occur only in the axial direction with a reflective configuration factor, $\bar{\bar{F}}_{12}$ of 0.9 [6] based on a parallel disc diameter to length ratio of 4.77.

With a surface emissivity of 0.8 and an area ratio of approximately 1.0, the radiation exchange factor applicable to all head cavity connections is:

$$F = \left(\frac{1}{0.9} + 2\left[\frac{1}{0.8} - 1\right]\right)^{-1} = 0.6207 \qquad (14)$$

Conduction through air contributes negligibly to the total heat transfer in the head cavity.

4.2 Computer Program Input

4.2.1 FED Input

The FED input consisted of 97 parts defining the two-dimensional TRUMP problem geometry. FED was used primarily to calculate each of the 324 nodal volumes and most of the nodal connections and provide a deck of cards forming part of block 4 and block 5 input to TRUMP. Convection and radiation factors for block 5 were added by hand. In some cases, where the volume boundaries did not provide the desired effective node connection

areas, the FED output was modified by hand.

4.2.2 TRUMP Input

Both the one-dimensional and two-dimensional TRUMP problems consisted of steady-state problems and five step continuation problems to simulate the fire transient. The latter consisted of a pre-fire steady-state, a 0 - 0.5 hr transient, a 0.5-3 hr transient, a 3-10 hr transient and a post-fire steady-state problem. The use of continuation problems permits varying temperature dependent material properties with time. Modes of heat transfer during a transient as well as edit times may also be changed. This feature was used to simulate rupture of the neutron shield with attendent introduction of radiation heat transfer.

The one-dimensional nodal volumes and nodal connections were computed by hand. With the exception of node 1 which has its nodal point on the outer surface, each nodal point was located at the arithmetic mean radius of the volume. Except for nodes 1 and 29 all surfaces were represented by zero volume nodes.

The two-dimensional problem nodes were generated by FED. All nodal points were located at the geometric center of the nodal volume as defined by FED. The cask surface nodes which provide the solar heat load simulate surfaces with high accuracy. Convection and radiation heat transfer across other surfaces within the cask were calculated using temperatures which occur at some distance from the surface inside the bounding node. This approximation is necessary because of the large size of the problem but is also considered acceptable because maximum temperatures in the cask are established by the one-dimensional problem.

4.2.3 FETA Input

The reference design fuel element used a pin emissivity of 0.4 and a wall emissivity of 0.2 With a pin diameter of 0.422 in. (15 x 15 array, 204 rods active) and a square pitch of 0.563 in, S as defined in Reference 11 is 2.67. The resulting configuration factors as defined in Reference 11 are $F_{12} = 0.1263$, $F_{13} = 0.08536$, and $F_{14} = 0.01917$. A nominal pin to wall clearance of 0.223 in. was used to calculate the conductance from the outer row of rods to the aluminum wall.

4.3 Normal Operation Results

The temperature distribution within the cask under normal operating conditions is relatively flat in all material regions with the most significant temperature rises occurring on the surface of the cask, at the gaps and through the fuel element.

A plot of the radial temperature distribution at the axial location with the highest power density is shown in Figure VIII-7. Table VIII-5 provides a complete listing of the temperatures at each node for the two-dimensional analysis of the upper end of the cask at design average power under normal steady state conditions. The location of each node is established in Figure VIII-5. Special attention is directed towards nodes 241, 290, 296, and 298 which represent respectively the can seal node and the three nodes in the vicinity of the outer closure seal.

4.4 Hypothetical Fire Results

A summary of the cask thermal response during the fire and after the fire has already been presented in Figure VIII-1. Figure VIII-8 shows the radial temperature distribution at the axial location of maximum power density just after the fire and under post-fire steady-state conditions.

FIGURE VIII–7
ONE DIMENSIONAL STEADY–STATE TEMPERATURE DISTRIBUTION
(TRUMP MODEL)

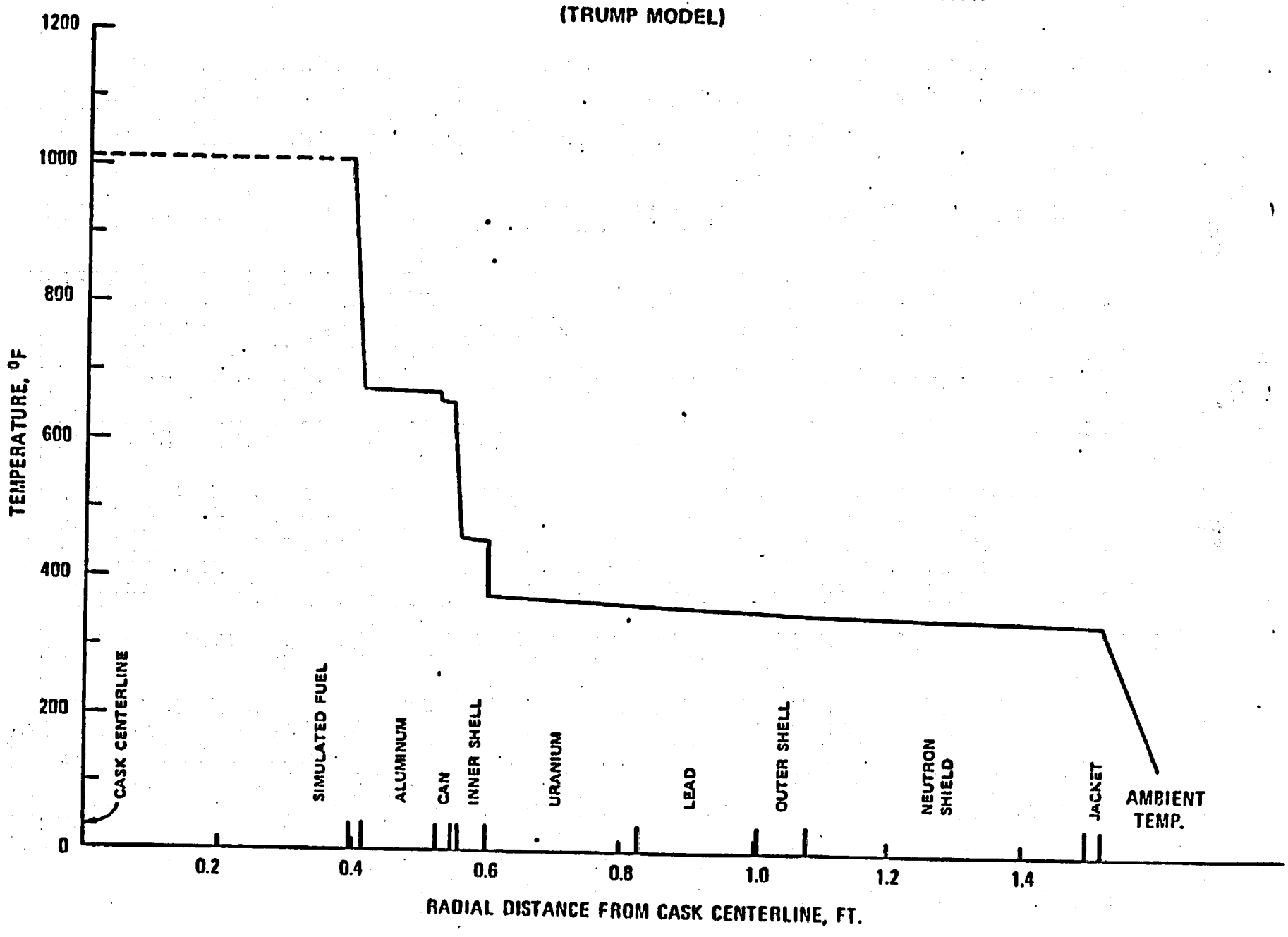

Table VIII-5
STEADY-STATE TWO-DIMENSIONAL RESULTS
(NORMAL OPERATING CONDITIONS)

NODE	TEMP	NODE	TEMP	NODE	TEMP	NODE	TEMP	NODE	TEMP
1	85.97752E+01	2	69.39209E+01	3	52.31825E+01	4	52.26156E+01	5	52.2766[illegible]1
6	52.21079E+01	7	51.80749E+01	8	51.74750E+01	9	51.29852E+01	10	51.2331[illegible]1
11	43.95973E+01	12	43.87259E+01	13	36.69992E+01	14	36.50974E+01	15	33.92499E+01
16	33.71083E+01	17	31.09966E+01	18	30.85554E+01	19	30.77939E+01	20	30.57151E+01
21	30.52179E+01	22	30.33317E+01	23	30.33155E+01	24	30.20854E+01	25	30.10789E+01
26	30.02502E+01	27	29.55015E+01	28	29.17659E+01	29	29.17659E+01	30	29.15209E+01
31	29.15209E+01	32	52.37859E+01	33	52.34447E+01	34	52.33691E+01	35	52.3328[illegible]E+01
36	51.86535E+01	37	51.83179E+01	38	51.35123E+01	39	51.31892E+01	40	43.96470E+01
41	43.94492E+01	42	36.65585E+01	43	36.64832E+01	44	33.85859E+01	45	33.85667E+01
46	31.00703E+01	47	31.01061E+01	48	30.68643E+01	49	30.69014E+01	50	30.45169E+01
51	30.45409E+01	52	30.27758E+01	53	30.28332E+01	54	30.07159E+01	55	30.07376E+01
56	29.17719E+01	57	29.17717E+01	58	29.15272E+01	59	29.15272E+01	60	52.47745E+01
61	52.42891E+01	62	52.43577E+01	63	52.38703E+01	64	51.98247E+01	65	51.91453E+01
66	51.44704E+01	67	51.39974E+01	68	44.04275E+01	69	44.00344E+01	70	36.71466E+01
71	36.68305E+01	72	33.93955E+01	73	33.88016E+01	74	31.04959E+01	75	31.02208E+01
76	30.72661E+01	77	30.69994E+01	78	30.48832E+01	79	30.46345E+01	80	30.30927E+01
81	30.28755E+01	82	30.09299E+01	83	30.07919E+01	84	29.17702E+01	85	29.17702E+01
86	29.15253E+01	87	29.15254E+01	88	52.55036E+01	89	52.53901E+01	90	52.52209E+01
91	52.50895E+01	92	52.49673E+01	93	52.47959E+01	94	52.06641E+01	95	52.02935E+01
96	52.01849E+01	97	51.55447E+01	98	51.52037E+01	99	51.49541E+01	100	43.20054E+01
101	43.96555E+01	102	44.02755E+01	103	44.07461E+01	104	36.37050E+01	105	36.61967E+01
106	36.70605E+01	107	36.73054E+01	108	33.93061E+01	109	33.95250E+01	110	33.95017E+01
111	33.93568E+01	112	31.37515E+01	113	31.22899E+01	114	31.13779E+01	115	31.09583E+01
116	31.05597E+01	117	30.90297E+01	118	30.81805E+01	119	30.76827E+01	120	30.74888E+01
121	30.67201E+01	122	30.60375E+01	123	30.54836E+01	124	30.57622E+01	125	30.52157E+01
126	30.44255E+01	127	30.39946E+01	128	30.28963E+01	129	30.17645E+01	130	30.14498E+01
131	30.12441E+01	132	29.17763E+01	133	29.17703E+01	134	29.17697E+01	135	29.17694E+01
136	29.15203E+01	137	29.15233E+01	138	29.15226E+01	139	29.15229E+01	140	41.54413E+01
141	47.58986E+01	142	50.00651E+01	143	51.14862E+01	144	51.74876E+01	145	52.04587E+01
146	37.81453E+01	147	40.80438E+01	148	42.02115E+01	149	42.90538E+01	150	43.52167E+01
151	34.44073E+01	152	35.51509E+01	153	34.38876E+01	154	35.25279E+01	155	33.02249E+01
156	33.44154E+01	157	31.74063E+01	158	31.59562E+01	159	31.65852E+01	160	31.42673E+01
161	31.29103E+01	162	31.04553E+01	163	30.91353E+01	164	30.70190E+01	165	30.72077E+01
166	30.56363E+01	167	30.40235E+01	168	30.23834E+01	169	29.28153E+01	170	29.1860[illegible]1
171	29.23045E+01	172	29.17556E+01	173	32.04863E+01	174	34.24814E+01	175	33.7561[illegible]1
176	33.89105E+01	177	33.68569E+01	178	33.17955E+01	179	33.25101E+01	180	32.67866E+01
181	32.52052E+01	182	32.42203E+01	183	32.00114E+01	184	31.86648E+01	185	31.52296E+01
186	31.52347E+01	187	31.32753E+01	188	30.89577E+01	189	30.73069E+01	190	30.94446E+01
191	31.01808E+01	192	30.84329E+01	193	30.41648E+01	194	30.25265E+01	195	30.52555E+01
196	30.67247E+01	197	30.60621E+01	198	30.13826E+01	199	29.82528E+01	200	29.82534E+01
201	30.61155E+01	202	30.61954E+01	203	30.05043E+01	204	30.19146E+01	205	28.59953E+01
206	29.01742E+01	207	29.48917E+01	208	38.10577E+01	209	38.22371E+01	210	38.49596E+01
211	39.05450E+01	212	37.50652E+01	213	37.57719E+01	214	37.71623E+01	215	38.00922E+01
216	36.79649E+01	217	36.81355E+01	218	36.70877E+01	219	36.43950E+01	220	36.27983E+01
221	36.31523E+01	222	36.13186E+01	223	35.68522E+01	224	34.17264E+01	225	34.00980E+01
226	31.94027E+01	227	32.07011E+01	228	33.23630E+01	229	31.84345E+01	230	31.60015E+01
231	31.64372E+01	232	31.74113E+01	233	31.19099E+01	234	31.24407E+01	235	31.23501E+01
236	31.41359E+01	237	32.19117E+01	238	32.88540E+01	239	34.68448E+01	240	37.97656E+01
241	37.41893E+01	242	38.74951E+01	243	39.05537E+01	244	38.22353E+01	245	38.51772E+01
246	37.72289E+01	247	37.83323E+01	248	37.34093E+01	249	37.29931E+01	250	36.72502E+01
251	36.66467E+01	252	35.92141E+01	253	35.93450E+01	254	33.40448E+01	255	33.53046E+01
256	34.69933E+01	257	37.00673E+01	258	36.95547E+01	259	36.75932E+01	260	36.56424E+01
261	37.50991E+01	262	37.50157E+01	263	37.96525E+01	264	38.27667E+01	265	37.83384E+01
266	38.11659E+01	267	37.61997E+01	268	37.80950E+01	269	38.71557E+01	270	38.59954E+01
271	38.18544E+01	272	36.60633E+01	273	36.72088E+01	274	36.52155E+01	275	36.62266E+01
276	37.74009E+01	277	37.58919E+01	278	37.38473E+01	279	32.10408E+01	280	33.66321E+01
281	33.74559E+01	282	30.77049E+01	283	30.80115E+01	284	30.89158E+01	285	30.66454E+01
286	30.63532E+01	287	30.75785E+01	288	30.52602E+01	289	30.53436E+01	290	30.62198E+01
291	30.33662E+01	292	30.32682E+01	293	30.41013E+01	294	30.94459E+01	295	31.26668E+01
296	30.85309E+01	297	31.16833E+01	298	30.72715E+01	299	30.96561E+01	300	30.59531E+01
301	30.79047E+01	302	30.32387E+01	303	29.79691E+01	304	28.81341E+01	305	29.18207E+01
306	29.91563E+01	307	28.63125E+01	308	29.02299E+01	309	29.43902E+01	310	28.81279E+01
311	28.40515E+01	312	29.86634E+01	313	29.83992E+01	314	30.94819E+01	315	30.72404E+01
316	30.33392E+01	317	30.64873E+01	318	32.05664E+01	319	31.80910E+01	320	31.45060E+01
321	32.05643E+01	322	31.83771E+01	323	31.48132E+01	324	33.48174E+01		

BOUNDARY NODE DATA

NODE	TEMPB
330	13.03005+01

FIGURE VIII–8
ONE DIMENSIONAL TRANSIENT TEMPERATURE DISTRIBUTION
(TRUMP MODEL)

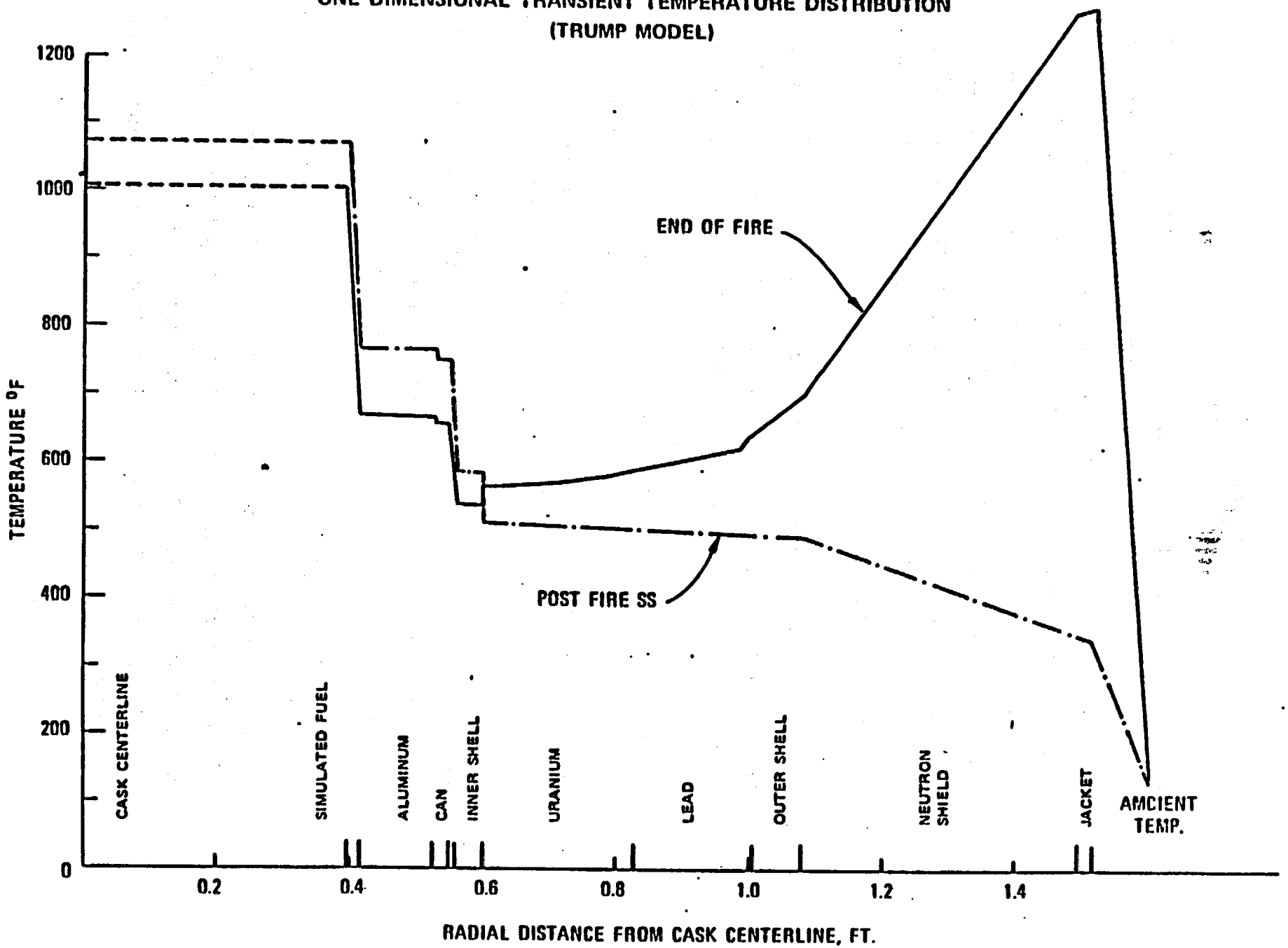

As in the case of normal operation, the gaps influence the thermal gradient considerably. Examination of the maximum fuel temperature transient indicates that a steady-state evaluation of fuel element temperature distribution is acceptable. In addition maximum transient fuel temperatures do not appear to be significantly higher than post-fire steady-state temperatures. A substantial amount of lead, almost 100%, appears to have melted at the axial location of maximum power density 1.25 hours after the start of the accident. All lead has solidified 1.75 hours after the start of the accident.

Table VIII-6 provides supplementary transient results obtained from the two-dimensional analysis of the upper end of the cask. In contrast to the extensive lead melting noted in the 1D analysis, there appears to be no molten lead at the head end of the cask (See node 124). Some lead melting may occur at the other end of the cask where there is less structural steel. A maximum external closure seal temperature of 648°F is reached 0.75 hours after the start of the accident. The can seal reaches a maximum temperature of 564°F 2.5 hours after the start of the accident.

On the basis of the entire transient calculations it is concluded that steady-state conditions are essentially reached within 48 hours after the start of the accident assuming no special external factors.

4.5 Cold Operation

An explicit evaluation of the cask under cold conditions in still air has not been considered necessary because the cask cavity fluid is helium. A uniform temperature of -40 °F, the minimum specified by regulations, is considered acceptable as long as the neutron shield contains appropriate anti-freeze.

TABLE VIII-6

TRANSIENT TWO-DIMENSIONAL TEMPERATURES AT SELECTED NODES

Time (hrs)	Location Node	Fuel 1	Al 4	Can 10	Pb 24	Al 88	Pb 124	Can 141	Inner Seal 241	Inner Head 269	Outer Seal 290	Outer Bolt 306	Outer Bolt 308
0 (ss)		850	508	497	281	511	285	460	355	369	286	278	269
.1		850	508	497	316	511	301	460	356	369	301	349	480
.2		850	508	498	396	511	345	460	358	374	350	448	632
.3		850	509	500	472	512	397	461	364	385	417	543	753
.4		851	512	504	541	514	450	465	375	403	490	631	850
.5		851	517	510	606	518	501	472	393	425	564	709	929
.75		856	540	538	606	537	534	507	449	466	648	696	750
1.0		865	570	569	588	565	536	553	493	485	642	655	666
1.5		891	617	612	562	608	532	610	542	526	595	589	576
2.0		914	643	637	542	633	523	630	560	554	554	543	525
3.0		941	665	657	512	654	503	636	561	567	499	486	466
4.0		948	666	657	492	655	484	626	545	556	464	451	431
8.0		929	634	624	443	623	426	574	478	492	390	379	364
Post-fire ss		880	565	555	374	553	338	490	379	390	300	293	284

4.6 Maximum Fuel Pin Temperatures

Maximum fuel pin temperatures are provided primarily for information. The values given in Figure VIII-2 are conservatively high. No time limit is associated with the transient temperatures because they are close to the post-fire steady state temperatures. A change of wall temperature of 1°F has been found to result in approximately 1/2°F change of hottest pin temperature.

4.7 Thermal Expansion and Contraction

Thermal expansion of the neutron shield fluid is accommodated by the provision of an expansion tank on the truck. In the cask and head cavities, the thermal expansion of helium and air results in only a minor increase of pressure.

The effects of differential expansion on gap sizes have been evaluated explicitly on all gaps except in the head area and between the uranium shield and the stainless steel inner shell where nominal cold dimensions were used. The nominal cold gap dimension between the uranium and stainless steel shell is 0.0265 inches and is the result of the nominal machine dimensions of 14.400 diameter of the stainless steel shell, and 14.453 diameter of the uranium shell. The diameters have tolerances of ± .010 and ± .015 respectively. During manufacture dimensional inspections are made to assure that all dimensions are within the specified tolerances. The uranium shall is assembled over the stainless steel shell and the gap is equalized by temporary shims placed in the gap. The shims remain in place until the lead pouring operation is complete and the cask body has returned to room temperature. At this point the concentric relationship is maintained by the surrounding lead shield. The bottom uranium cap and the outer bottom end forging are then welded into place. The bottom end forging is machined to provide radial restraint of the uranium cap thereby maintaining

the concentric relationship. Under steady-state conditions when the internal temperatures are high and heat transfer is outward the gaps will actually be reduced thus providing lower internal cask temperature than predicted. During the fire the gaps will increase thus impeding the flow of energy to the cavity to a greater degree than in the analysis. The use of uniform nominal gaps around the lid with a conservatively high heat transfer through the tie-down bolts is considered appropriate. Variations in these gaps do not alter the temperature distribution significantly at the top of the cask.

4.8 Uncertainty Factors and Design Margins

The entire thermal analysis of the cask has been directed at achieving conservative results by the use of maximum heat loads and low cavity heat capacities. Although nominal dimensions have been used throughout the analyses, physical phenomena such as blowdowns and ruptures have been simulated in the most severe manner possible. No part of the analysis depends upon artificial cooling during a transient. Independent 1D and 2D thermal analysis of the cask assure further conservatism of the temperatures predicted. It is therefore anticipated that the actual temperatures in the cask will be somewhat lower than those predicted by this analysis.

4.9 General Conclusions

The analyses performed indicate that no unusual thermal response characteristics occur. Under normal operation the cavity may locally reach a temperature of 1013°F which corresponds to the maximum fuel surface temperature (1D analysis). The actual maximum temperature will more likely be 860°F (2D analysis). Under the same conditions the maximum local neutron shield water temperature may reach 352°F although the bulk fluid temperature will more likely not exceed 296°F. The inner gasket temperature under normal conditions may reach 375°F

whereas the outer seal may reach 309°F. maximum local temperature on the surface of the cask may be as high as 340°F.

As a result of the hypothetical fire transient, the maximum fuel pin surface temperature is not expected to exceed 1102°F. Gasket temperatures are not expected to exceed 564°F and 648°F at the internal and external seals respectively. A negligible amount of lead melting may occur at the end of the cask. In the central portion of the cask, however, almost all of the lead may melt in regions of high power density. Post fire steady-state temperatures may eventually be reached if all neutron shield water is lost in an accident less severe than the hypothetical fire transient.

Under extreme cold conditions in still air, a uniform postulated temperature of -40°F should not adversely affect the cask provided sufficient antifreeze is added to the neutron shield.

4.10 Effect of Personnel Barrier on Thermal Performance

The personnel barrier description is provided in NLI Drawing No. 70514F. The solid roof portion of the barrier extends over a 96 inch arc with a 48 inch radius. Approximately 128° of the cask surface is included in the sector formed by this arc.

A conservative simplified analysis of the barrier effect on the cask temperature under normal conditions has been performed as follows. It was assumed that the solid portion of the personnel barrier roof absorbs incident solar heat but does not permit any decay heat transfer from the cask surface through its included angle. A temperature 35° higher than the maximum neutron shield jacket temperature of 340°F given the SAR was thus computed. If it is assumed that the barrier eliminates radiation heat transfer from the effected portion of the cask surface but does not reduce natural circulation, this results in a 2°F lowering of the jacket temperature provided in the SAR.

On the basis of these calculations it is concluded that increasing the shield jacket temperature by 35°F accounts conservatively for any adverse effect on the personnel barrier on the cask thermal performance. It is to be noted that this increase in temperature is attenuated towards the center of the cask because of temperature dependent heat transfer. The effect of a 35°F increase in cask peak surface temperature is insignificant.

4.11 Effect of Consolidated PWR Fuel Rods

The temperature of the hottest fuel rod during normal operation and during a hypothetical fire accident must be determined for the consolidated fuel. The cask surface temperature is also of interest, even though it is independent of the fuel form. Methods for calculating the temperature in a triangular array of rods, as in a consolidated fuel canister, are not as well developed to date as methods used for square arrays so an additional margin of conservatism has been added by using 600 watts as the fuel heat load instead of the value of 564 watts, calculated. The tables of temperature versus cool time has also been provided and compared to the design basis fuel analysis of the SAR. These comparisons show that the temperatures developed in a cask containing consolidated W14 x 14 fuel cooled 12 years will be significantly lower than temperatures for the SAR design basis intact fuel. The fuel parameters of the W14 x 14 fuel are given in Table VIII-7.

TABLE VIII-7
CONSOLIDATED PWR FUEL ANALYSIS PARAMETERS

	INTACT PWR	CONSOLIDATED W14 x 14
Number of Rods	204	358
Burnup (MWD/MTU)	40,000	25,000
Cool Time	150 days	12 years
Heat Rate (kw)	10.6	0.600 (564 calculated by ORIGEN)
Ambient Temperature	130°F	130°F
Cask Cavity Gas	Helium	Helium
Rod Array	Square	Triangular, Modeled as square

TABLE VIII-8
"SCOPE ANALYSIS"
MAXIMUM STEADY STATE TEMPERATURES

TYPE	COOL TIME (yrs.)	HEAT (kw)	TEMP(F)
W15 x 15 Intact	0.4	10.630	1022.
W14 x 14 Consolidated	5	1.300	478.
W14 x 14 Consolidated	8	0.780	387.
W14 x 14 Consolidated	10	0.650	362.
W14 x 14 Consolidated	12	0.600	352.
W14 x 14 Consolidated, In air	12	0.600	426.
SAR ANALYSIS FOR DESIGN BASIS PWR			
PWR Intact	150 days	10.6	1013.

The maximum steady state normal operation rod temperatures for consolidated and intact fuel forms are given in Table VIII-8. Inspection of this table shows that the normal operation hottest pin will be at 353°F, significantly lower than the 1013°F calculated in the SAR.

The maximum fire temperatures for consolidated and intact fuel forms are given in Table VIII-9. The results in this table show that the maximum rod temperature due to a fire accident (536°F) for the consolidated fuel is less than the temperature of normal operation for the SAR design basis PWR fuel.

Tables VIII-8 and VIII-9 also include the temperatures for W14 x 14 fuel cooled 12 years if shipped in air instead of Helium. The temperature in air is included for comparison purposes since most of the published experiments to date have been for air filled cavities.

The cask surface temperature during normal operation with consolidated W14 x 14 fuel is 216°F. This is much less than the design basis PWR fuel surface temperature of 340°F.

The SCOPE computer printouts for the W14 x 14 consolidated and W15 x 15 intact fuel are presented in Appendix C of to this Section.

TABLE VIII-9
"SCOPE" ANALYSIS
MAXIMUM PIN TEMPERATURES (FIRE ACCIDENT)

TYPE	COOL TIME(yrs)	HEAT (kw)	TEMP(°F)
W15 x 15 Intact	10.4	10.630	1203.
W14 x 14 Consolidated	5	1.300	680.
W14 x 14 Consolidated	8	0.780	576.
W14 x 14 Consolidated	10	0.650	547.
W14 x 14 Consolidated	12	0.600	536.
W14 x 14 Consolidated, In Air	12	0.600	556.
	SAR ANALYSIS FOR DESIGN BASIS PWR		
PWR Intact	150 days	10.6	1102

The temperature calculations performed in this anlysis were made by the SCOPE code (ORNL/CSD/TM-149, TTC-0316, by J.A. Buckholz). This code generates temperature distributions comparable with those produced by the HEATING-5 code commonly used for cask safety analysis, but in the radial dimension only. The maximum temperatures occur at the fuel midplane, and this is the location at which the radial temperature profile was calculatd. The code version used by Nuclear Assurance Corporation has been benchmarked against th HEATING-5 code. The calculations of rod temperatures are made in SCOPE via the Wooten-Epstein correlation method, which treats square arrays of rods. It is to be expected that this method will cause the central rod temperature to be overpredicted for consolidated fuel since the number of layers (conccentric squares) of rods required for a square lattice is larger than for a triangular lattice, and the temperature if dependent upon the number of layers.

Shipment of consolidated fuel in the NLI-1/2 cask results in lower temperatures, under all conditions, than temperatures caused by the design basis intact PWR fuel. Thus shipment of the consolidated fuel is safe from a thermal standpoint.

4.12 Effect of Metallic Fuel Rods

The temperature of the hottest fuel rod during normal operation and hypothetical fire accident were determined using the SCOPE program. The fuel is placed in an aluminum basket containing three cylindrical holes, 7 sound rods or less per location. Each group of 7 sound rods is contained in a transfer basket which is modeled in SCOPE by using the canister option of the program. For this analysis, the cask is assumed to be inside of the shipping container. The intact, design basis PWR parameters are compared to the metallic fuel parameters in Table VIII-10.

Table VIII-10
Metallic Fuel Analysis Parameters

	Intact PWR	Metallic Fuel
Number of Rods	204	21
Burnup (MWD/MTU)	40,000	1,600
Cool Time	150 days	365 days
Heat Rate (kW)	10.6	0.75
Ambient Temperature	130°F	130°F
Cask Cavity Gas	Helium	Air
Rod Array	Square	Triangular, Modeled as Square

The analysis results are summarized in Table VIII-11 and are compared to the design basis PWR assembly, demonstrating that the metallic fuel developed significantly lower temperatures than the 150 day cooled PWR assembly. The SCOPE computer printouts for the metallic fuel are presented in Appendix D of this Section.

Table VIII-11

Metallic Fuel Rod Maximum Temperatures

	Cool Time (Days)	Heat (kW)	Normal Operation Temp (°F)	Hypothetical Temp (°F)
Metallic Fuel	365	0.75	376°	603°
Intact PWR	150	10.60	1013°	1102°

The comparison of normal operation maximum rod temperatures shows that rod temperatures developed in normal operation and fire accident for the metallic fuel are much less than the temperature for the design basis PWR fuel.

The cask surface temperature during normal operation with metallic fuel with a decay heat of .750 kW is 210°F. This is much less than the design basis PWR fuel surface temperature of 340°F. Thus shipment of the metallic fuel is safe from a thermal standpoint.

Up to six individually encapsulated failed metallic fuel rods may be shipped in a specially designed six hole failed fuel aluminum basket. This aluminum basket will be limited to a maximum heat load of 30 watts (5 watts per rod). A SCOPE analysis has been performed on the six hole failed fuel basket to determine the maximum basket temperature. The SCOPE computer printouts for the failed fuel basket are presented in Appendix G.

Using a different basket comprised of three tubes, up to three, individually encapsulated, failed fuel rods may be transported in the same aluminum basket used for transporting the 21 sound fuel rods. This basket can be constructed using aluminum or stainless steel Type 304. For either case, the heat load per rod is 5 watts which brings the total heat load for the 3 element basket to 15 watts. This is enveloped by the six hole failed fuel aluminum basket, which corresponds to a maximum heat load of 30 watts. Substituting the 1/8 inch stainless steel liners for the 1/8 inch aluminum liner for the three hole basket, the change in the maximum temperature for the 15 watt heat load is negligible.

4.13 Effect of PWR or BWR Rods

The maximum heat load in the cask with up to 25 PWR rods is 1.65 kW. The maximum heat load in the cask with 25 BWR rods is 4.0 kW. The temperature of the hottest rod in normal operation and hypothetical fire accident conditions were calculated using the SCOPE program. The fuel rods are placed in a rod holder that is inserted into the cask to support the fuel. No credit for heat conduction was taken for this holder; the fuel rods were modeled free in helium. The parameters used in this analysis are compared to the design basis PWR assembly in Table VIII-12.

Table VIII-12

PWR ROD ANALYSIS PARAMETERS

	Intact PWR	PWR Rods	BWR Rods
Number of Rods	204	25	25
Burnup (MWD/MTU)	40,000	60,000	75,000
Cool Time (days)	150	150	150
Heat Rate (kW)	10.6	1.65	4.0
Ambient Temperature	130°F	130°F	130°F
Cask Cavity Gas	Helium	Helium	Helium
Rod Array	Square	Square	Square

The thermal analysis results are summarized in Table VIII-13 and are compared to the design basis PWR assembly, demonstrating that 25 PWR or 25 BWR rods developed significantly lower temperatures than the design basis PWR assembly. For the content condition of 18 PWR rods with specific power of 60 kW/kgU and a cooling time of 300 days, the decay heat load is 0.9 kW, which is less than and enveloped by, the 1.65 kW analyzed for the 25 PWR rod content condition.

Page Added
May 1987
Revised
Jan. 1990
Oct. 1991
Apr. 1992
Feb. 1996

TABLE VIII-13

PWR AND BWR ROD MAXIMUM TEMPERATURE

	Heat (kW)	Normal Operation Temperature (°F)	Hypothetical Accident Temperature (°F)
Intact PWR	10.6	1013	1102
PWR Rods (25)	1.65	393	556
BWR Rods (25)	4.0	617	697

The comparisons of maximum rod temperatures for up to 25 PWR or 25 BWR rods show that temperatures developed in normal operation and hypothetical fire accident conditions are much less than the maximum rod temperatures for the design basis PWR fuel. The actual heat source from 25 PWR rods is less than 1.65 kW, but 1.65 kW is used as a bounding case.

The cask surface temperature during normal operation with PWR rods is 229°F and 236°F with BWR rods. These are much lower than the design basis PWR fuel cask surface temperature of 340°F. Thus, shipment of up to 25 PWR rods or 25 BWR rods is safe from a thermal standpoint.

Page Added
May 1987
Revised
Jan. 1990
Oct. 1991

4.14 Effect of Mark 42 Fuel Assemblies

The maximum temperature of a Mark 42 fuel assembly during normal operation and during the hypothetical fire accident were determined using the SCOPE program. The intact, design basis PWR parameters are compared to the Mark 42 fuel assembly parameters in Table VIII-14.

Table VIII-14
Mark 42 Fuel Assembly Analysis Parameters

	Intact PWR	Mark 42 Fuel Assembly
Cool Time	150 days	1245 days
Heat Rate (kW)	10.6	0.45
Ambient Temperature	130°F	130°F
Cask Cavity Gas	Helium	Air

The thermal analysis results are summarized in Table VIII-15 and are compared to the design basis PWR fuel assembly, demonstrating that the Mark 42 fuel assembly developed significantly lower temperatures than the 150 day cooled PWR assembly. The SCOPE computer printouts for the Mark 42 fuel assembly are presented in Appendix E of this Section.

Table VIII-15
Mark 42 Fuel Assembly Maximum Temperatures

	Cool Time (Days)	Heat (kW)	Normal Operation Temp (°F)	Hypothetical Temp (°F)
Mark 42 Fuel	1245	0.45	253	410
Intact PWR	150	10.6	1013	1102

The comparison of normal operation maximum fuel temperatures shows that fuel temperatures developed in normal operation and during the fire accident for the Mark 42 fuel assembly are much less than the temperatures for the design basis PWR fuel.

The cask surface temperature during normal operation with the Mark 42 fuel assembly is 141°F. This is much less than the design basis PWR fuel surface temperature of 340°F. Thus, shipment of the Mark 42 fuel assembly in the NLI-1/2 cask is safe from a thermal standpoint.

Page added
August 1988

4.15 Effect of Mark 22 Fuel Assemblies

The maximum temperature of a Mark 22 fuel assembly during normal operation and during the hypothetical fire accident were determined using the SCOPE program. The intact, design basis PWR parameters are compared to the Mark 22 fuel assembly parameters in Table VIII-16.

Table VIII-16
Mark 22 Fuel Assembly Analysis Parameters

	Intact PWR	Two Mark 22 Fuel Assemblies
Cool Time	150 days	150 days
Heat Rate (kW)	10.6	3.451
Ambient Temperature	130°F	130°F
Cask Cavity Gas	Helium	Air

The thermal analysis results are summarized in Table VIII-17 and are compared to the design basis PWR fuel assembly, demonstrating that the Mark 22 fuel assembly developed significantly lower temperatures than the 150 day cooled PWR assembly. The SCOPE computer printouts for the Mark 22 fuel assembly are presented in Appendix F of this Section.

Table VIII-17
Mark 22 Fuel Assembly Maximum Temperatures

	Cool Time (Days)	Heat (kW)	Normal Operation Temp (°F)	Hypothetical Temp (°F)
Mark 22 Fuel	150	3.451	773	805
Intact PWR	150	10.6	1013	1102

The comparison of normal operation maximum fuel temperatures shows that fuel temperatures developed in normal operation and during the fire accident for the Mark 22 fuel assembly are much less than the temperatures for the design basis PWR fuel.

The cask surface temperature during normal operation with the Mark 22 fuel assembly is 243°F. This is much less than the design basis PWR fuel surface temperature of 340°F. Thus, shipment of the Mark 22 fuel assembly in the NLI-1/2 cask is safe from a thermal standpoint.

5.0 REFERENCES

1. Edwards, A.L., "A Compilation of Thermal Property Data for Computer Heat Conduction Calculations", UCRL-50589, Feb. 24, 1969.

2. Transactions ASME, Vol. 76 pp. 967-985, 1954

3. Scott, D.B., "Physical and Mechanical Properties of Zircaloy 2 and 4", WCAP-3269-41, May 1965.

4. Kreith, F., "Principles of Heat Transfer", Second Edition, International Textbook Co., 1965.

5. Shappert, L. B., "Cask Designers Guide", ORNL-NSIC-68, Feb. 1970.

6. McAdams, W.H., "Heat Transmission", Third Edition, McGraw-Hill Book Co., 1954.

7. Lauer, B.E., "How to Evaluate Film Coefficients for Heat-Transfer Calculations", Technical Manual reprinted from THE OIL AND GAS JOURNAL, 1953.

8. The Aluminum Association "Aluminum Standards & Data", 1972-1973.

9. Edwards, A.L.,"TRUMP: A computer Program for Transient and Steady-State Temperature Distributions in Multidimensional Systems", USAEC Report UCRL-14754, Rev. II, July 1, 1969 (Errata issued Feb. 4, 1971 and Aug. 27, 1971).

10. Schauer, D.A., "FED: A Computer Program to Generate Geometric Input for the Heat Transfer Code TRUMP", USAEC Report UCRL-50816, Feb. 10, 1970.

11. Watson, J. S., "Heat Transfer from Spent Reactor Fuels During Shipping: A Proposed Method for Predicting Temperature Distribution in Fuel Bundles and Comparison with Experimental Data", ORNL-3439, May, 1963.

APPENDIX A

Section VIII

THERMAL ANALYSIS

The modification to the truck cask consists of removing the inner container. The aluminum basket will then be made to a slightly larger diameter to fill the cask cavity. From a qualitative analysis, the modified design should be thermally less limiting than the design with the inner container. The reason for this is that one helium gap and the stainless steel inner container will be replaced with an equal thickness of aluminum and the aluminum has a higher thermal conductivity than helium and stainless steel. To prove this the thermal resistance of the added basket thickness will be compared to the resistance of the basket-inner container design.

The basket-inner container resistance to be evaluated consist of the gap from the basket to the inner container, the thickness of the inner container and the gap from the inner container to the cask cavity. The gaps include both radiation and conduction resistances.

Summary Of Temperatures

Node	Material	Average Temperature
6	Aluminum	522.2
8	Helium Gap	517.5
10	S.S. Container	512.3
11,12	Air Gap	439.6
14	Inner Shell	365.1

The above temperatures from the 2 dimensional TRUMP analysis at the cask centerline will be used to calculate the thermal resistance for both the modified design and the original design. Nominal cold gap thicknesses will be used.

I. Cask With Inner Container

A. Resistance of helium gap from basket to inner container

1. Conduction across the helium gap

gap thickness = $X = \frac{12.625 - 12.55}{2} = .0375$ in. = .003125 ft.

helium conductivity $k = .119 + \frac{517.5 - 400}{600 - 400} (.137 - .119)$

$= .13$ BTU/hr. ft.°F

Conduction resistance = $R_{1c} = \frac{X}{k} = \frac{.003125}{.13} = .02404$ hr.ft.°F/ BTU

2. Radiation across helium gap

$$h_r = .174 \times 10^{-8} F (T_1^2 + T_o^2)(T_1 + T_o)$$

$T_1 = 522.2 + 460 = 982.2°R$

$T_o = 512.3 + 460 = 972.3°R$

$F = .167$

$$h_r = .174 \times 10^{-8} (.167)(982.2^2 + 972.3^2)(982.2 + 972.3)$$

$= 1.083$ BTU/hr. ft.^{2} °F

Radiation resistance $R_{1r} = \frac{1}{h_r} = \frac{1}{1.083} = .9234$

The radiation and conduction resistance act in parallel. Therefore the combined resistance is calculated as follows:

$$R_{1T} = \frac{R_{1r} \; R_{1c}}{R_{1r} + R_{1c}}$$

$$= \frac{.9234\ (.02404)}{.9234 + .02404}$$

$$= \frac{.0222}{.9474}$$

$$R_{1T} = .0234$$

B. Resistance of SS Can

Thickness of Can = X = .275" = .0229'

SS conductivity @ 512.3

$$k = 9.43 + \frac{512.3 - 212}{923 - 212}\ (12.6 - 9.43)$$

$$= 10.77 \text{ BTU/hr.ft.}^{\circ}\text{F}$$

$$R_2 = \frac{X}{k} = \frac{.0229}{10.77} = .00212$$

C. Air gap from inner container to cask cavity

1. Conduction through air gap

$$X = \frac{13.375 - 13.175}{2} = .1" = .00833'$$

@ T = 439.6°F

$$k = .018 + \frac{439.6 - 212}{752 - 212}\ (.029 - .018)$$

$$= .0226 \text{ BTU/hr.ft.}^{\circ}\text{F}$$

$$R_{3c} = \frac{.00833}{.0226} = .3686$$

2. Radiation across air gap

$$h_r = .174 \times 10^{-8} F \ (T_1^2 + T_o^2) \ (T_1 + T_o)$$

$$T_1 = 512.3 + 460 = 972.3^oR$$

$$T_o = 365.1 + 460 = 825.1^oR$$

$$h_r = .174 \times 10^{-8} (.3351) (972.3^2 + 825.1^2) (972.3 + 825.1)$$
$$= 1.704$$

$$R_{3r} = \frac{1}{1.704} = .5869$$

the radiation and conduction resistance act in parallel. Therefore the combined resistance is calculated as follows:

$$R_{3T} = \frac{R_{3r} \ R_{3c}}{R_{3r} + R_{3c}}$$

$$= \frac{.5869 \ (.3686)}{.5869 + .3686}$$

$$= \frac{.2163}{.9555}$$

$$R_{3T} = .2264$$

D. Total Resistance

The total resistance of the original basket and inner container is the sum of the individual resistances.

$$R_T = R_{1T} + R_2 + R_{3T}$$

$$= .0234 + .00212 + .2264$$

$$R_T = .252$$

II. Cask without Inner Container

The total resistance of the new basket arrangement will now be calculated. The resistance includes the increased aluminum thickness and the helium gap from the basket to the cask cavity.

A. Resistance of Increased Aluminum Thickness

Increased aluminum thickness $= \frac{13.28 - 12.55}{2}$

$X = .365" = .0304'$

Aluminum conductivity $k = 96.8$ BTU/hr.ft.°F

$$R_1' = \frac{X}{k} = \frac{.0304}{96.8} = .000314$$

B. Helium gap from basket to inner container

1. Radiation across helium gap

Radiation coefficient $= h_r$

$$h_r = .174 \times 10^{-8} F \ (T_1^2 + T_o^2)(T_1 + T_o)$$

$F = .167$

$T_1 = 512 + 460 = 972°R$

$T_o = 365 + 460 = 825°R$

$$h_r = .174 \times 10^{-8} (.167) \ (972^2 + 825^2)(972 + 825)$$

$h_r = .85$ BTU/ hr. ft.^{2} °F

Radiation resistance $= R_{2r}' = \frac{1}{h_r} = \frac{1}{.85} = 1.176$

2. Conduction across helium

$$X = \frac{13.375 - 13.28}{2}$$

$$= .095'' = .00792'$$

Conductivity @ 440°F

$$k = .119 + \frac{440 - 400}{600 - 400}(.137 - .119)$$

$$= .1226$$

Conduction resistance $= R'_{2c} = \frac{X}{k} = \frac{.00792}{.1226} = .0646$

The radiation and conduction resistance act in parallel. Therefore the combined resistance is calculated as follows:

$$R'_{2T} = \frac{R'_{2r} \quad R'_{2c}}{R'_{2r} + R'_{2c}}$$

$$= \frac{1.176\ (.0646)}{1.176 + .0646}$$

$$= \frac{.0759}{1.24}$$

$$R'_{2T} = .0612$$

C. Total Resistance

The total resistance of the new basket is the sum of the individual resistances.

$$R'_T = R'_1 + R'_{2T}$$

$$= .000314 + .0612$$

$$= .0615$$

Therefore, the resistance of the modified basket (.0615 hr. ft^2 °F/BTU) is much less than the original basket (.252 hr. ft^2 °F/BTU) and because of this, the temperature of the fuel and basket will be less than the original basket and fuel.

APPENDIX B

Section VIII

Thermal Analysis

During shipment the cask cavity of the 1/2 LWT Cask is normally dry. The cavity is dried by forcing water out the cavity drain line using compressed air. To remove the residual moisture the cask cavity is evacuated by using a vacuum pump.

At low decay heat loads the dryout procedure is not necessary providing the maximum fuel temperature is below the saturation temperature at 365 psig (maximum allowable operating pressure) of 440°F. Maximum fuel temperature is limited to 410°F allowing for a 30°F fuel temperature increase at the end of the fire accident transient. Limiting the fuel temperature to 410°F results in the maximum decay heat load of 2.02 KW for which cask cavity dryout procedures are not necessary.

Hand calculations were used to calculate the temperature distribuiion in the cask for the post fire steady state condition. The calculations were performed for the alternate cask configuration (configuration B).

The cask surface temperatures were chosen (235°F, 225°F, 220°F), which preliminary calculations indicated would bracket the required surface temperature. A heat balance was written

for the cask surface and the cask decay heat for each of these surface temperatures was calculated. A distributed solar heat rate of 92 BTU/hr. ft^2 is included in the heat balance. The decay heat was then used to calculate the temperature distribution in the cask starting at the surface and working inward to the fuel. One dimensional heat transfer was assumed for the analysis. The cask geometry is shown schematically in figure 1.

Material thermal properties, that were used, are listed in table VIII-2 of the LWT 1/2 Safety Analysis Report. Emissivities and convection and radiation factors are listed in tables VIII-3 and VIII-4. The effective fuel conduction length and radiation exchange factor were calculated in section 4.1.5, pg. VIII-28 of the Safety Analysis Report and were used in this analysis. The ambient temperature was 130°F.

After the fuel temperatures were calculated, they were plotted against the rated decay heat. The rated decay heat is the decay heat value, used in the calculations, divided by 1.2. This was done to include the axial peaking factor. This plot is included as figure 2. The decay heat corresponding to a maximum fuel of 410°F is then read from the graph as 2.02 KW. A summary of surface temperatures, fuel temperatures and decay heat is shown in table 1.

Calculations show that leaving residual moisture in the fuel cavity of the NL 1/2 LWT cask will have no effect on cask safety if the decay heat load is below 2.02 KW. Even with the 30°F increase during the fire accident transient, the maximum fuel temperature will be no higher than the saturation temperature at 365 psig which is the maximum allowable operating pressure.

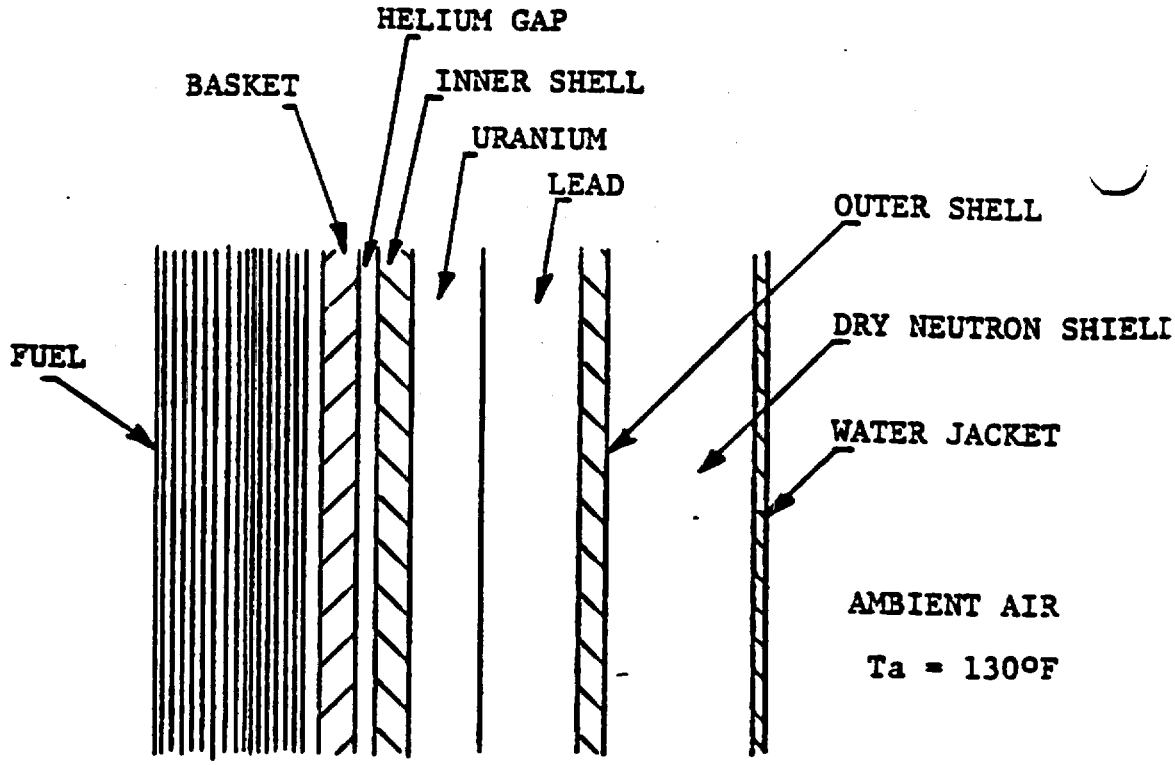

FIGURE 1 - CASK GEOMETRY

TABLE 1

SURFACE TEMP°F	FUEL TEMP°F	DECAY HEAT-KW	RATED DECAY HEAT-KW
220	376.4	2.05	1.71
225	405	2.42	2.02
235	460	3.18	2.65

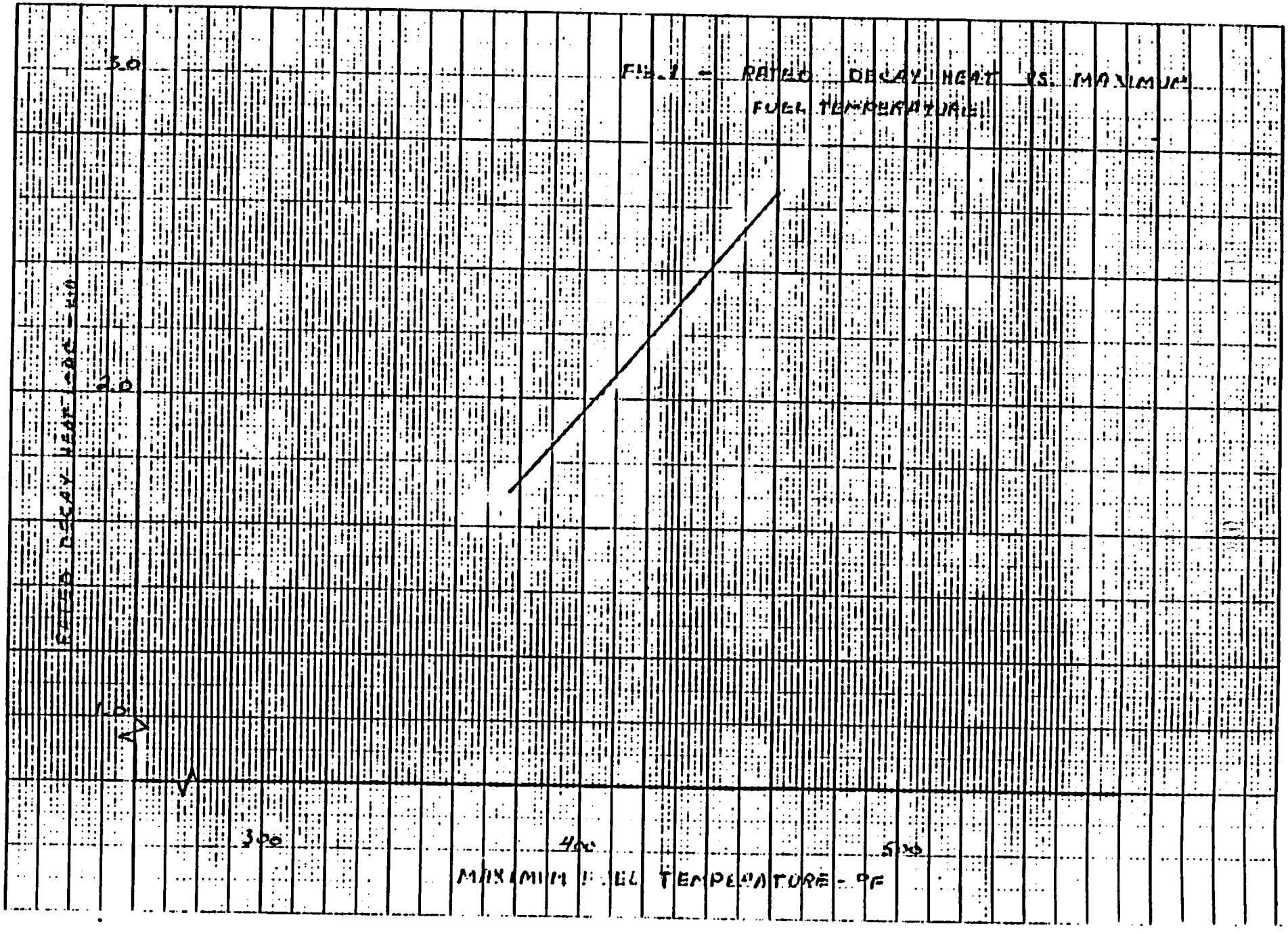

CALCULATION OF DECAY HEAT AND MAXIMUM FUEL TEMPERATURE

1. CALCULATE DECAY HEAT FOR SURFACE TEMPERATUR OF 225°F = 685°R

DECAY HEAT + SOLAR HEAT = HEAT CONVECTED + HEAT RADIAT

$$q + \frac{92\ BTU}{hr.\ FT^2} = hc(T_S - T_A)^{.333}(T_S - T_A) + .174\times10^{-8} F[T_S^4 - T_A^4]$$

$$T_A = 130°F + 460 = 590$$

$$q + 92 = .18(685-590)^{1.333} + .174\times10^{-8}(.5)(685^4 - 590^4)$$

$$q = 72\ \frac{BTU}{hr.\ FT^2}$$

CASK SURFACE AREA $= \pi DL = \frac{\pi(365)144}{144} = 114.67\ FT^2$

$\therefore$ CASK DECAY HEAT $= 72\ \frac{BTU}{hr.\ FT^2}(114.67\ FT^2) = 8256.2$ BTU/h

2. TEMPERATURE DIFFERENCE ACROSS EMPTY NEUTRON SHIELD CAVITY.

DECAY HEAT = HEAT CONVECTED + HEAT RADIATED

$$Q = hA(T_2 - T_1) + .174\times10^{-8} FA(T_2^4 - T_1^4)$$

A = INNER SURFACE AREA OF NEUTRON SHIELD CAVITY

$$= \pi DL$$

$$= \frac{\pi(26)144}{144}$$

$$= 81.68\ FT^2$$

T_1 = SURFACE TEMPERATURE = 225°F = 685°R

$h = .09(\Delta T)^{.333}$, $F = .7$

$$8256.2 = .09(81.68)(T_2 - T_1)^{1.333} + .174\times10^{-8}(.7)81.68(T_2^4 - T_1^4)$$

$$1123 = (T_2 - 685)^{1.333} + 1.354\times10^{-8}(T_2^4 - T_1^4)$$

SOLVE BY ITERATION FOR T_2

$T_2 = 734°R = 274°F$

$1123 = 179 + 949 = 1128$

3. TEMPERATURE DIFFERENCE ACROSS OUTER SHELL

$$Q = \frac{k A (T_3 - T_2)}{\Delta x}$$

$$A = \frac{\pi(\bar{D})L}{144}$$

$$= \frac{\pi(26+24.25)144}{2(144)}$$

$$= 78.9$$

$\Delta x = .875''$

$\bar{D}$ = AVERAGE SHELL DIAMETER

$$= \frac{26+24.25}{2}$$

$$K = 9.43 + \frac{274-212}{923-212}(12.6-9.43)$$

$$= 9.71$$

$$8256.2 = \frac{9.71(78.9)144(12\,IN/FT)\Delta T}{2(144)(.875)}$$

$\Delta T = .8$

$T_3 = 274 + .8$
$= 274.8$

<u>NOTE</u>: CYLINDRICAL COORDINATE CONDUCTION EQUATION NOT USED SINCE SHELL IS THIN

4. TEMPERATURE DIFFERENCE ACROSS LEAD

$$Q = \frac{2\pi k l (\Delta T)}{\ln r_4/r_3}$$

$$k = 19.6 - \frac{(274.8 - 208.9)}{(400 - 208.9)}(19.6 - 18.3)$$

$$= 19.15 \text{ BTU/ hr. FT °F}$$

$$8256.2 = \frac{2\pi (19.15) 12 (\Delta T)}{\ln 24.25/20}$$

$$T_4 = 275.9 \text{ °F}$$

5. TEMPERATURE DIFFERENCE ACROSS URANIUM

$$Q = \frac{2\pi k l (\Delta T)}{\ln r_5/r_4}$$

$$k = 15 + \frac{(275.9 - 32)}{(752 - 32)}(20.1 - 15)$$

$$= 16.7$$

$$8256.2 = \frac{2\pi (16.7) 12 (\Delta T)}{\ln 20/14.5}$$

$$\Delta T = 2.1$$

$$T_5 = 278 \text{°F}$$

6. TEMPERATURE DIFFERENCE ACROSS HELIUM GAP BETWEEN URANIUM AND INNER SHELL.

DECAY HEAT = HEAT CONDUCTED + HEAT RADIATED

$$Q = \frac{kA\,\Delta T}{\Delta x} + .174\times10^{-8}\,FA(T_6^4 - T_5^4)$$

$$k = .1 + \frac{278-200}{400-200}(.119-.1) = .107 \text{ BTU/hr. ft.°F}$$

$$A = \frac{\pi(14.5)144}{144} = 45.6 \text{ ft.}^2$$

$F = .333$

$\Delta x = .0265$ INCH (NOMINAL)

$T_5 = 266.4°F = 726.4°R$

$$8256.2 = \frac{12(.107)45.6(T_6 - 738)}{.0265} + .174\times10^{-8}(.333)45.6(T_6^4 - 738$$

$$8256.2 = 2209(T_6 - 738) + 2.642\times10^{-8}(T_6^4 - 738^4)$$

$$3.74 = (T_6 - 738) + 1.195\times10^{-11}(T_6^4 - 738^4)$$

SOLVE BY ITERATION

$T_6 = 741.7°R = 281.7°F$

$3.74 = 3.7 + .07 = 3.77$

7. TEMPERATURE DIFFERENCE ACROSS INNER SHELL

$$Q = \frac{kA\Delta T}{\Delta x}$$

$$k = 9.43 + \frac{281.7-212}{923-212}(12.6-9.43)$$

$$= 9.74 \text{ BTU/hr. FT°F}$$

$$A = \pi(\bar{D})L \qquad \bar{D} = \frac{13.375+14.375}{2}$$

$$= \frac{\pi(13.375+14.375)144}{2(144)}$$

$$= 43.6 \text{ FT}^2$$

$$\Delta x = .5 \text{ INCH}$$

$$8256.2 = \frac{9.74(43.6)\Delta T}{.5} \frac{12 \text{ INCH}}{\text{FT}}$$

$$\Delta T = .8$$

$$T_7 = 282.5°F = 742.5°R$$

8. TEMPERATURE DIFFERANCE ACROSS GAP FROM INNER SHELL TO BASKET

DECAY HEAT = HEAT CONDUCTED + HEAT RADIATED

$$Q = \frac{kA(T_8-T_7)}{\Delta x} + .174\times10^{-8} FA(T_8^4 - T_7^4)$$

$$k = .1 + \frac{282.5-200}{400-200}(.119-.1)$$

$$= .108 \text{ BTU/hr. FT °F}$$

$F = .1668$

$$A = \frac{\pi (13.265) 144}{144}$$

$$= 41.67 \text{ FT}^2$$

$\Delta x = .055$ INCH

$$8256.2 = \frac{.108(41.67)(T_B - 742.5)12}{.055} + .174 \times 10^{-8} (.1668) 41.67 (T_B - 742.5$$

$$8256.2 = 981.9(T_B - 742.5) + 1.21 \times 10^{-8} (T_B^4 - 742.5^4)$$

$$8.4 = (T_B - 742.5) + 1.23 \times 10^{-11} (T_B^4 - 742.5^4)$$

SOLVE BY ITERATION

$T_B = 750.8°R = 290.8°F$

$8.4 = 8.3 + .17 = 8.47$

9. TEMPERATURE DIFFERENCE ACROSS BASKET

CONVERT INNER BASKET SURFACE TO A CYLINDRICAL SURFACE WITH SAME SURFACE ARE

INSIDE BASKET DIMENSION 8.88" SQUARE

$$\frac{8.88 \times 12 \times 144}{144} = 35.52 \text{ FT}^2$$

DIAMETER OF EQUIVALENT CYLINDER

$$\frac{\pi D'' L}{12} = 35.52 \text{ FT}^2$$

$D = 11.3''$

$$Q = \frac{2\pi k L \Delta T}{\ln D_9/D_8} \qquad k = 96.8 \text{ BTU/hr. FT°F}$$

$$8256.2 = \frac{2\pi(96.8)\,12\,\Delta T}{\ln 13.265/11.3}$$

$$\Delta T = .18$$

$$T_9 = 290.8 + .2 = 291°F = 751°R$$

10. CALCULATE MAXIMUM FUEL TEMPERATURE

DECAY HEAT = HEAT CONDUCTED + HEAT RADIATED

$$8256.2 = \frac{kA\Delta T}{\Delta x} + .174\times10^{-8}\,FA(T_{10}^4 - T_9^4)$$

$A = 35.52$ FT^2
$\Delta x = .09256'$
$k = .137$
$F = .1514$

$$8256.2 = .137(35.52)(T_{10} - 751) + .174\times10^{-8}(.1514)35.52(T_{10}^4 - 751^4)$$

$$157.0 = (T_{10} - 751) + 1.78\times10^{-10}(T_{10}^4 - 751^4)$$

SOLVE BY ITERATION

$$T_{10} = 865.0$$

$$157 = 114 + 43 = 157$$

MAXIUM FUEL TEMPERATURE = 865°R − 460 = 405°F

11. ADJUST DECAY HEAT FOR AXIAL PEAKING FACTOR

$$8256.2 = \frac{\text{BTU}}{\text{hr.}}\;\frac{1}{1.2}\;\frac{1 \text{ kwhr.}}{3413 \text{ BTU}} = 2.02 \text{ kw}$$

APPENDIX C

SECTION VIII

SCOPE Computer Printouts

TITLE: ONE CANISTER (RCE FUEL, 12 YEARS COOLED, NLI-1/2 CASK)

DESCRIPTION OF WASTE MATERIAL

MELEM	21	(PWR)	MELEM---TYPE OF WASTE MATERIAL (SHOWN IN BRACKETS)
BU	22000.	MWD/MT	BU------AVERAGE BURNUP (EDIT FOR BOOKEEPING PURPOSES ONLY; NO LONGER USED)
TIME	12.00	YEARS	TIME----COOLING TIME (AGE OF FUEL SINCE DISCHARGE)
WHEAT	.0	WATTS/CUFT	WHEAT---DECAY HEAT GIVEN OFF BY THE WASTE MATERIAL; NOT USED IF ZERO
DHEAT	4.0+002	WATTS/ASSY	DHEAT---DECAY HEAT GIVEN OFF BY EACH ASSEMBLY (OR CANISTER); NOT USED IF ZERO
SRCN	2.3+005	N/SEC/ASSY	SRCN----NEUTRON SOURCE (EDIT FOR BOOKEEPING PURPOSES ONLY; NO LONGER USED)
SRCG	4.3+012	P/SEC/ASSY	SRCG----PHOTON SOURCE (EDIT FOR BOOKEEPING PURPOSES ONLY; NO LONGER USED)

DESCRIPTION OF WASTE CONTAINER

ITYPE	1		ITYPE---FLAG: 1 FOR SQUARE CANISTERS; 2 FOR SQUARE ASSEMBLIES (WITHOUT CAN)
NPINS	358		NPINS---NUMBER OF FUEL PINS PER ASSEMBLY (IF MELEM DENOTES PWR OR BWR)
MCAN	6	(SS)	MCAN----TYPE OF MATERIAL USED FOR CANISTERS (NO CAN USED IF MCAN=0)
ODCAN	8.00	INCHES	ODCAN---OUTSIDE DIM OF CANISTER (MCAN>0), OR WIDTH OF FUEL ASSEMBLY (MCAN=0)
TKCAN	.090	INCHES	TKCAN---WALL THICKNESS OF CANISTER (IF MCAN.GT.0)
HTCAN	13.00	FEET	HTCAN---LENGTH OF CANISTER (OR FUEL ASSEMBLY)
HTVOID	.00	FEET	HTVOID--PORTION OF CANISTER NOT OCCUPIED BY WASTE MATERIAL (IF MCAN.GT.0)
HTFUEL	12.00	FEET	HTFUEL--PORTION OF FUEL ASSEMBLY CONTAINING UO2 (IF MELEM DENOTES PWR OR BWR)

DESCRIPTION OF INSERT

MINSRT	5	(AL)	MINSRT--TYPE OF MATERIAL USED FOR INSERT (SHOWN IN BRACKETS)
EMINST	.220		EMINST--SURFACE EMISSIVITY OF THE INSERT MATERIAL (DIMENSIONLESS)
TKINST	.200	INCHES	TKINST--THICKNESS OF INSERT BETWEEN ASSEMBLIES (INCLUDES TPOISN)
TPOISN	.000	INCHES	TPOISN--THICKNESS OF NEUTRON POISON IMBEDDED IN INSERT MATL BETWEEN ASSEMBLIES
TKCGAP	.440	INCHES	TKCGAP--THICKNESS OF GAP BETWEEN CANISTER AND INSERT
MCGAP	13	(HE)	MCGAP---TYPE OF GAP ATMOSPHERE (SHOWN IN BRACKETS)
TKIGAP	.550	INCHES	TKIGAP--THICKNESS OF GAP BETWEEN INSERT AND THE INNER SHELL
MIGAP	13	(HE)	MIGAP---TYPE OF GAP ATMOSPHERE (SHOWN IN BRACKETS)
WTHICK	2.190	INCHES	WTHICK--THICKNESS OF THE INSERT BETWEEN CANISTER AND INNER SHELL
NELEM	1		NELEM---NUMBER OF ASSEMBLIES (OR CANISTERS) PER CASK; IF ZERO, PERFORM SEARCH
CASKID	13.37	INCHES	CASKID--INSIDE DIAMETER OF THE CASK (CALCULATED BY CODE IF USER ENTERS 0.0)

DESCRIPTION OF INNER & OUTER SHELL AND THE OUTSIDE LINER

MISHL	6	(SS)	MISHL---TYPE OF MATERIAL USED FOR THE INNER SHELL (SHOWN IN BRACKETS)
MOSHL	6	(SS)	MOSHL---TYPE OF MATERIAL USED FOR THE OUTER SHELL (SHOWN IN BRACKETS)
MOLIN	6	(SS)	MOLIN---TYPE OF MATERIAL USED FOR OUTSIDE LINER AND FINS (IF REQUIRED)
TKISHL	.500	INCHES	TKISHL--THICKNESS OF INNER SHELL
TKOSHL	.875	INCHES	TKOSHL--THICKNESS OF OUTER SHELL
TKOLIN	.250	INCHES	TKOLIN--THICKNESS OF OUTSIDE LINER

DESCRIPTION OF NEUTRON AND GAMMA SHIELDS

MNSHLD	15	(H2O)	MNSHLD--TYPE OF MATERIAL USED FOR NEUTRON SHIELD (SHOWN IN BRACKETS)
MCSHLD	1	(PB)	MCSHLD--TYPE OF MATERIAL USED FOR GAMMA SHIELD (SHOWN IN BRACKETS)

DESCRIPTION OF HEAT TRANSFER PARAMETERS FOR FINS (& CASK)

MFIN	6	(SS)	MFIN----TYPE OF MATERIAL USED FOR FINS (IF REQUIRED)
SPFIN	4.000	INCHES	SPFIN---SPACING BETWEEN FINS
EMISF	.537		EMISF---SURFACE EMISSIVITY OF THE F[illegible] DIMENSIONLESS)

```
   EMISC      .500              EMISC---SURFACE EMISSIVITY OF THE CASK (DIMENSIONLESS)

CASK DESIGN LIMITS

   TFNMAX    750.0 DEG.F        TFNMAX--MAXIMUM ALLOWABLE SURFACE TEMPERATURE
   WGHTMX     50.0 KILO.LBS     WGHTMX--MAXIMUM ALLOWABLE WEIGHT OF LOADED CASK
   TAMB      130.0 DEG.F        TAMB----OUTSIDE AMBIENT TEMPERATURE
   NSOLAR        1              NSOLAR--INCLUSION OF SOLAR INSOLANCE AT 122.92(BTU/HR)/FT**2 (1=YES, 2=NO)
```

COMPONENT	DIMENSION(INCHES)
O-LINER =	.250
N-SHIELD =	5.000
O-SHELL =	.075
G-SHIELD =	2.130
I-SHELL =	.500
I-GAP =	.550
W-INSRT =	.000
C/F-GAP =	.440
O-CANSTR =	8.000
I-CANSTR =	7.820
Q-LENGTH =	144.000
W-POISN =	.000
I-CASK =	13.370

THERMAL PARAMETERS

AMBIENT TEMP = 120.000 (DEG.F)

SOLAR INSOLANCE = 1 (1-YES,2-NO)

TOTAL DECAY HEAT = .600 (KW)

MAXIMUM
STEADY STATE TEMPERATURES
DEGREES-F

SURFACE	O-LINER		N-SHIELD		O-SHELL		PB-SHIELD		I-SHELL	
T	T	D-T	T	D-T	T	D-T	T	D-T	T	D-T
216.28	216.33	.05	217.53	1.20	217.79	.26	218.15	.36	218.36	.21

HE-GAP		INSERT		HE-GAP		CANISTER		FUEL PIN		
T	D-T	T	D-T	T	D-T	T	D-T	T	D-T	DEG-C
238.31	19.95	238.31	.00	261.66	23.35	266.39	4.73	352.07	85.69	177.82

6.17	6.10.	0	378.61	378.58	378.55	347.53	347.34	347.13	346.48	345.85	345.34	344.78	208.69	208.58	208.46
6.33	6.20.	0	376.22	376.20	376.17	345.26	345.07	344.87	344.22	343.61	343.10	342.55	207.74	207.63	207.51
6.50	6.30.	0	373.88	373.85	373.82	343.04	342.85	342.65	342.01	341.41	340.91	340.36	206.82	206.70	206.58
6.67	6.40.	0	371.56	371.54	371.51	340.86	340.67	340.47	339.84	339.24	338.75	338.21	205.90	205.79	205.68
6.83	6.50.	0	369.29	369.26	369.24	338.72	338.53	338.33	337.71	337.12	336.63	336.10	205.01	204.90	204.79
7.00	7. 0.	0	367.05	367.03	367.00	336.61	336.43	336.23	335.62	335.03	334.55	334.03	204.14	204.03	203.92
7.17	7.10.	0	364.85	364.83	364.80	334.55	334.36	334.17	333.56	332.98	332.51	331.99	203.28	203.17	203.06
7.33	7.20.	0	362.69	362.66	362.64	332.51	332.34	332.14	331.54	330.97	330.50	329.99	202.44	202.33	202.23
7.50	7.30.	0	360.56	360.54	360.51	330.52	330.34	330.15	329.55	328.99	328.53	328.03	201.62	201.51	201.41
7.67	7.40.	0	358.47	358.44	358.42	328.56	328.38	328.19	327.60	327.04	326.59	326.09	200.81	200.71	200.60
7.83	7.50.	0	356.41	356.39	356.36	326.63	326.45	326.27	325.68	325.13	324.68	324.19	200.02	199.92	199.81
8.00	8. 0.	0	354.39	354.36	354.34	324.73	324.56	324.37	323.80	323.25	322.81	322.33	199.25	199.15	199.04
8.17	8.10.	0	352.40	352.37	352.35	322.87	322.70	322.51	321.94	321.40	320.97	320.49	198.49	198.39	198.29
8.33	8.20.	0	350.44	350.42	350.39	321.04	320.87	320.68	320.12	319.59	319.15	318.68	197.74	197.64	197.54
8.50	8.30.	0	348.52	348.49	348.46	319.24	319.07	318.88	318.33	317.80	317.37	316.91	197.01	196.91	196.81
8.67	8.40.	0	346.62	346.60	346.57	317.47	317.30	317.12	316.56	316.04	315.62	315.16	196.29	196.20	196.10
8.83	8.50.	0	344.76	344.73	344.71	315.72	315.56	315.38	314.83	314.31	313.90	313.44	195.59	195.49	195.40
9.00	9. 0.	0	342.93	342.90	342.87	314.01	313.84	313.66	313.12	312.61	312.20	311.75	194.90	194.80	194.71
9.17	9.10.	0	341.12	341.10	341.07	312.32	312.16	311.98	311.44	310.94	310.53	310.09	194.22	194.13	194.03
9.33	9.20.	0	339.35	339.33	339.30	310.66	310.50	310.32	309.79	309.29	308.89	308.45	193.56	193.46	193.37
9.50	9.30.	0	337.61	337.58	337.55	309.03	308.87	308.69	308.17	307.67	307.27	306.84	192.90	192.81	192.72
9.67	9.40.	0	335.89	335.86	335.84	307.42	307.26	307.09	306.57	306.08	305.68	305.26	192.26	192.17	192.08
9.83	9.50.	0	334.20	334.17	334.15	305.84	305.68	305.51	304.99	304.51	304.12	303.70	191.63	191.54	191.45
10.00	10. 0.	0	332.54	332.51	332.49	304.29	304.13	303.96	303.44	302.97	302.58	302.17	191.01	190.93	190.84
10.17	10.10.	0	330.90	330.87	330.85	302.75	302.60	302.43	301.92	301.45	301.06	300.65	190.41	190.32	190.23
10.33	10.20.	0	329.29	329.26	329.24	301.25	301.09	300.92	300.42	299.95	299.57	299.17	189.81	189.72	189.64
10.50	10.30.	0	327.70	327.68	327.65	299.76	299.61	299.44	298.94	298.48	298.10	297.70	189.22	189.14	189.05
10.67	10.40.	0	326.14	326.12	326.09	298.30	298.14	297.98	297.49	297.03	296.66	296.26	188.65	188.56	188.48
10.83	10.50.	0	324.61	324.58	324.56	296.86	296.71	296.54	296.05	295.60	295.23	294.84	188.08	188.00	187.92
11.00	11. 0.	0	323.09	323.07	323.04	295.44	295.29	295.13	294.64	294.19	293.83	293.44	187.52	187.44	187.36
11.17	11.10.	0	321.60	321.58	321.55	294.05	293.90	293.74	293.25	292.81	292.45	292.07	186.98	186.90	186.82
11.33	11.20.	0	320.14	320.11	320.09	292.68	292.52	292.36	291.89	291.44	291.09	290.71	186.44	186.36	186.28
11.50	11.30.	0	318.69	318.67	318.64	291.32	291.17	291.01	290.54	290.10	289.75	289.38	185.91	185.83	185.75
11.67	11.40.	0	317.27	317.25	317.22	289.99	289.84	289.68	289.21	288.78	288.43	288.06	185.39	185.31	185.24
11.83	11.50.	0	315.87	315.85	315.82	288.68	288.53	288.37	287.90	287.48	287.13	286.76	184.88	184.80	184.73
12.00	12. 0.	0	314.49	314.47	314.44	287.38	287.24	287.08	286.62	286.19	285.85	285.49	184.38	184.30	184.23

TIME	INSERT	GAP	I-SHELL	G-SHIELD	O-SHELL	N-SHIELD	O-LINER
DELTA-T	254.13		332.01	337.88	350.80		1159.89
TIME (HRS)	2.63		.71	.65	.51		.50
MAX FIRE TEMP	425.79		481.30	486.79	499.48		1307.19

MAX FUEL PIN TEMP
535.66DEG-F 279.81DEG-C

*AS PER 10CFR PART71 SECTION71.73, NSOLAR=0, BEFORE, DURING AND AFTER THE FIRE.

End scope.

TITLE: ONE ASSEMBLY (W15X15 FUEL, .5 YEARS COOLED, NLI-1/2 CASK)

DESCRIPTION OF WASTE MATERIAL

MELEM	21	(PWR)	MELEM---TYPE OF WASTE MATERIAL (SHOWN IN BRACKETS)
BU	40000.	MWD/MT	BU------AVERAGE BURNUP (EDIT FOR BOOKEEPING PURPOSES ONLY; NO LONGER USED)
TIME	.50	YEARS	TIME----COOLING TIME (AGE OF FUEL SINCE DISCHARGE)
WHEAT	.0	WATTS/CUFT	WHEAT---DECAY HEAT GIVEN OFF BY THE WASTE MATERIAL; NOT USED IF ZERO
DHEAT	1.1+004	WATTS/ASSY	DHEAT---DECAY HEAT GIVEN OFF BY EACH ASSEMBLY (OR CANISTER); NOT USED IF ZERO
SRCN	.0	N/SEC/ASSY	SRCN----NEUTRON SOURCE (EDIT FOR BOOKEEPING PURPOSES ONLY; NO LONGER USED)
SRCG	.0	P/SEC/ASSY	SRCG----PHOTON SOURCE (EDIT FOR BOOKEEPING PURPOSES ONLY; NO LONGER USED)

DESCRIPTION OF WASTE CONTAINER

ITYPE	2		ITYPE---FLAG: 1 FOR SQUARE CANISTERS; 2 FOR SQUARE ASSEMBLIES (WITHOUT CAN)
NPINS	204		NPINS---NUMBER OF FUEL PINS PER ASSEMBLY (IF MELEM DENOTES PWR OR BWR)
MCAN	0	( )	MCAN----TYPE OF MATERIAL USED FOR CANISTERS (NO CAN USED IF MCAN=0)
ODCAN	8.47	INCHES	ODCAN---OUTSIDE DIM OF CANISTER (MCAN>0), OR WIDTH OF FUEL ASSEMBLY (MCAN=0)
TKCAN	.000	INCHES	TKCAN---WALL THICKNESS OF CANISTER (IF MCAN.GT.0)
HTCAN	14.00	FEET	HTCAN---LENGTH OF CANISTER (OR FUEL ASSEMBLY)
HTVOID	.00	FEET	HTVOID--PORTION OF CANISTER NOT OCCUPIED BY WASTE MATERIAL (IF MCAN.GT.0)
HTFUEL	12.00	FEET	HTFUEL--PORTION OF FUEL ASSEMBLY CONTAINING UO2 (IF MELEM DENOTES PWR OR BWR)

DESCRIPTION OF INSERT

MINSRT	5	(AL)	MINSRT--TYPE OF MATERIAL USED FOR INSERT (SHOWN IN BRACKETS)
EMINST	.020		EMINST--SURFACE EMISSIVITY OF THE INSERT MATERIAL (DIMENSIONLESS)
TKINST	.000	INCHES	TKINST--THICKNESS OF INSERT BETWEEN ASSEMBLIES (INCLUDES TPOISN)
TPOISN	.000	INCHES	TPOISN--THICKNESS OF NEUTRON POISON IMBEDDED IN INSERT MATL BETWEEN ASSEMBLIES
TKCGAP	.130	INCHES	TKCGAP--THICKNESS OF GAP BETWEEN CANISTER AND INSERT
MCGAP	13	(HE)	MCGAP---TYPE OF GAP ATMOSPHERE (SHOWN IN BRACKETS)
TKIGAP	.550	INCHES	TKIGAP--THICKNESS OF GAP BETWEEN INSERT AND THE INNER SHELL
MIGAP	13	(HE)	MIGAP---TYPE OF GAP ATMOSPHERE (SHOWN IN BRACKETS)
WTHICK	0.190	INCHES	WTHICK--THICKNESS OF THE INSERT BETWEEN CANISTER AND INNER SHELL
NELEM	1		NELEM---NUMBER OF ASSEMBLIES (OR CANISTERS) PER CASK; IF ZERO, PERFORM SEARCH
CASKID	13.37	INCHES	CASKID--INSIDE DIAMETER OF THE CASK (CALCULATED BY CODE IF USER ENTERS 0.0)

DESCRIPTION OF INNER & OUTER SHELL AND THE OUTSIDE LINER

MISHL	6	(SS)	MISHL---TYPE OF MATERIAL USED FOR THE INNER SHELL (SHOWN IN BRACKETS)
MOSHL	6	(SS)	MOSHL---TYPE OF MATERIAL USED FOR THE OUTER SHELL (SHOWN IN BRACKETS)
MOLIN	6	(SS)	MOLIN---TYPE OF MATERIAL USED FOR OUTSIDE LINER AND FINS (IF REQUIRED)
TKISHL	.500	INCHES	TKISHL--THICKNESS OF INNER SHELL
TKOSHL	.375	INCHES	TKOSHL--THICKNESS OF OUTER SHELL
TKOLIN	.250	INCHES	TKOLIN--THICKNESS OF OUTSIDE LINER

DESCRIPTION OF NEUTRON AND GAMMA SHIELDS

MNSHLD	15	(H2O)	MNSHLD--TYPE OF MATERIAL USED FOR NEUTRON SHIELD (SHOWN IN BRACKETS)
MGSHLD	1	(PB)	MGSHLD--TYPE OF MATERIAL USED FOR GAMMA SHIELD (SHOWN IN BRACKETS)

DESCRIPTION OF HEAT TRANSFER PARAMETERS FOR FINS (& CASK)

MFIN	6	(SS)	MFIN----TYPE OF MATERIAL USED FOR FINS (IF REQUIRED)
SPFIN	4.[illegible]	INCHES	SPFIN---SPACING BETWEEN FINS
E[illegible]	.[illegible]7		EMISF---SURFACE EMISSIVITY OF THE[illegible]S (DIMENSIONLESS)

```
   EMISC      .900            EMISC---SURFACE EMISSIVITY OF THE CASK (DIMENSIONLESS)

CASK DESIGN LIMITS

   TFNMAX    750.0 DEG.F      TFNMAX--MAXIMUM ALLOWABLE SURFACE TEMPERATURE
   WGHTMX     50.0 KILO.LBS   WGHTMX--MAXIMUM ALLOWABLE WEIGHT OF LOADED CASK
   TAMB      130.0 DEG.F      TAMB----OUTSIDE AMBIENT TEMPERATURE
   NSOLAR        1            NSOLAR--INCLUSION OF SOLAR INSOLANCE AT 122.92(BTU/HR)/FT**2 (1=YES, 2=NO)
```

COMPONENT	DIMENSION(INCHES)
O-LINER =	.250
N-SHIELD =	5.000
O-SHELL =	.875
G-SHIELD =	2.135
I-SHELL =	.500
I-GAP =	.550
W-INSPT =	.000
C/F-GAP =	.130
O-CANSTR =	8.470
I-CANSTR =	8.470
O-LENGTH =	144.000
W-POISN =	.000
I-CASK =	17.826

THERMAL PARAMETERS

AMBIENT TEMP = 130.000 (DEG.F)

SOLAR INSOLANCE = 1 (1-YES,2-NO)

TOTAL DECAY HEAT = 10.630 (KW)

MAXIMUM
STEADY STATE TEMPERATURES
DEGREES-F

SURFACE	O-LINER		N-SHIELD		O-SHELL		PB-SHIELD		I-SHELL	
T	T	D-T	T	D-T	T	D-T	T	D-T	T	D-T
333.13	343.82	.69	342.52	8.70	346.01	3.49	351.27	5.26	353.87	2.60

HE-GAP		INSERT		HE-GAP		CANISTER		FUEL PIN		
T	D-T	T	D-T	T	D-T	T	D-T	T	D-T	DEG-C
543.26	189.39	543.26	.00	543.26	.00	543.26	.00	1021.73	478.47	549.85

6.17	6.10. 0	764.14	762.99	762.25	607.07	605.67	604.32	600.75	597.75	595.65	593.62	331.54	331.12	330.70
6.33	6.20. 0	762.43	761.28	760.54	605.36	603.97	602.63	599.08	596.09	594.00	591.99	330.59	330.17	329.76
6.50	6.30. 0	760.76	759.61	756.87	603.72	602.33	600.98	597.45	594.47	592.39	590.39	329.67	329.25	328.84
6.67	6.40. 0	759.12	757.97	757.24	602.11	600.72	599.39	595.86	592.90	590.83	588.84	328.76	328.35	327.94
6.83	6.50. 0	757.52	756.37	755.64	600.55	599.16	597.83	594.32	591.37	589.31	587.33	327.89	327.48	327.07
7.00	7. 0. 0	755.95	754.81	754.07	599.03	597.65	596.32	592.82	589.88	587.83	585.86	327.03	326.63	326.22
7.17	7.10. 0	754.42	753.27	752.54	597.55	596.17	594.84	591.35	588.42	586.38	584.43	326.21	325.80	325.40
7.33	7.20. 0	752.92	751.78	751.05	596.10	594.73	593.41	589.93	587.01	584.98	583.03	325.40	325.00	324.60
7.50	7.30. 0	751.46	750.31	749.58	594.69	593.32	592.00	588.54	585.63	583.61	581.67	324.62	324.22	323.82
7.67	7.40. 0	750.03	748.88	748.15	593.32	591.95	590.64	587.19	584.29	582.27	580.35	323.85	323.45	323.06
7.83	7.50. 0	748.63	747.49	746.76	591.98	590.62	589.31	585.86	582.98	580.97	579.06	323.11	322.71	322.32
8.00	8. 0. 0	747.26	746.12	745.39	590.67	589.31	588.01	584.57	581.70	579.70	577.79	322.39	321.99	321.60
8.17	8.10. 0	745.93	744.79	744.06	589.40	588.04	586.74	583.31	580.45	578.46	576.56	321.68	321.29	320.90
8.33	8.20. 0	744.62	743.48	742.76	588.16	586.80	585.50	582.09	579.23	577.25	575.36	320.99	320.60	320.21
8.50	8.30. 0	743.35	742.21	741.49	586.94	585.59	584.29	580.89	578.05	576.07	574.19	320.33	319.93	319.55
8.67	8.40. 0	742.11	740.97	740.24	585.76	584.41	583.12	579.72	576.89	574.92	573.05	319.67	319.28	318.90
8.83	8.50. 0	740.89	739.75	739.03	584.60	583.26	581.96	578.58	575.75	573.80	571.93	319.04	318.65	318.26
9.00	9. 0. 0	739.70	738.56	737.84	583.47	582.13	580.84	577.47	574.65	572.70	570.84	318.41	318.03	317.65
9.17	9.10. 0	738.54	737.40	736.69	582.37	581.03	579.74	576.38	573.57	571.63	569.77	317.81	317.43	317.05
9.33	9.20. 0	737.41	736.27	735.55	581.29	579.96	578.67	575.31	572.52	570.58	568.73	317.22	316.84	316.46
9.50	9.30. 0	736.30	735.17	734.45	580.24	578.91	577.63	574.28	571.49	569.55	567.72	316.64	316.26	315.88
9.67	9.40. 0	735.22	734.08	733.37	579.21	577.88	576.61	573.26	570.48	568.56	566.73	316.08	315.70	315.33
9.83	9.50. 0	734.17	733.03	732.31	578.21	576.88	575.61	572.27	569.50	567.58	565.76	315.53	315.15	314.78
10.00	10. 0. 0	733.15	732.00	731.28	577.23	575.90	574.63	571.31	568.54	566.63	564.81	315.00	314.62	314.25
10.17	10.10. 0	732.15	730.99	730.28	576.27	574.95	573.68	570.36	567.60	565.69	563.88	314.47	314.10	313.73
10.33	10.20. 0	731.16	730.00	729.29	575.34	574.02	572.75	569.44	566.68	564.79	562.98	313.96	313.59	313.22
10.50	10.30. 0	730.18	729.04	728.33	574.42	573.10	571.84	568.54	565.79	563.39	562.10	313.47	313.09	312.72
10.67	10.40. 0	729.24	728.10	727.39	573.53	572.21	570.95	567.65	564.91	563.03	561.23	312.98	312.61	312.24
10.83	10.50. 0	728.32	727.18	726.48	572.66	571.34	570.08	566.79	564.06	562.18	560.39	312.50	312.14	311.77
11.00	11. 0. 0	727.42	726.29	725.58	571.81	570.49	569.23	565.95	563.22	561.35	559.57	312.04	311.67	311.31
11.17	11.10. 0	726.54	725.41	724.70	570.97	569.66	568.41	565.13	562.41	560.53	558.76	311.59	311.22	310.86
11.33	11.20. 0	725.69	724.55	723.85	570.16	568.85	567.59	564.32	561.61	559.74	557.97	311.14	310.78	310.42
11.50	11.30. 0	724.85	723.72	723.01	569.36	568.05	566.80	563.54	560.83	558.97	557.20	310.71	310.35	309.99
11.67	11.40. 0	724.03	722.90	722.19	568.58	567.28	566.03	562.77	560.07	558.21	556.45	310.29	309.93	309.57
11.83	11.50. 0	723.23	722.10	721.39	567.82	566.52	565.27	562.02	559.32	557.47	555.71	309.88	309.52	309.16
12.00	12. 0. 0	722.45	721.32	720.61	567.08	565.78	564.53	561.28	558.59	556.74	554.99	309.48	309.12	308.76

TIME	INSERT	GAP	I-SHELL	G-SHIELD	O-SHELL	N-SHIELD	O-LINER
DELTA-T	287.36		474.92	485.29	503.78		1031.84
TIME (HRS)	2.47		.63	.57	.51		.50
MAX FIRE TEMP	798.41		784.13	789.06	804.35		1322.79

MAX FUEL PIN TEMP
1202.97DEG-F 650.52DEG-C

*AS PER 10CFR PART71 SECTION71.73, NSOLAR=0, BEFORE, DURING AND AFTER THE FIRE.

This page intentionally left blank.

APPENDIX D

SECTION VIII

Metallic Fuel Computer Printout

Revised
Oct. 1986
Feb. 1987

```
S C O P E   INPUT (IN CARD-IMAGE FORMAT) FOLLOWS:

 21 RODS   (.21N WEB, 250W, 21RODS, BASKET/WALL GAP, HG=166.5, SEA, INS)
 21  1407  2  0  250  2.71E+05  7.93*E+14  1  7  5  5.50
0.125 12.000  0  12.000  5  0.22  0.29  0.00 0.44  14  0.55  14 0.125 5
1?.?? 4+6   0.5  .375  0.25  1  1  0  0.500  999   50  130.0  1
1  1       5  4.875  35.9
0
```

PROPERTIES OF MATERIALS CURRENTLY IN THE DATA LIBRARY

MATERIAL		DENSITY (LB/CUFT)	CONDUCTIVITY (BTU/HR/FT/F)	HEAT CAPACITY (BTU/LB/F)	TEMPERATURE LIMIT (DEGREES F)	CAPITAL COST ($/LB)
1	PB	709.56	18.0000	.0320	618	3.000
2	FE	489.26	26.0000	.1200	1950	2.000
3	U	1187.25	15.0000	.0280	1450	9.000
4	CU	559.35	210.0000	.0950	1730	.560
5	AL	169.49	140.0000	.2280	1050	.280
6	SS	494.43	11.0000	.1200	1800	4.000
7	NA	65.00	39.0000	.3000	1400	.200
8	LI	30.00	29.0000	1.0000	1400	11.000
9	PB-L	146.60	.4400	.1560	1200	1.880
10	CONC	207.60	18.0000	.0320	618	.160
11	ALSI	170.00	80.0000	.2000	1065	.350
12	BOWA	62.00	.0760	.5260	650	1.000
13	HE	.01	.1700	1.2400	1400	.000
14	AIR	.08	.0360	.2600	1400	.000
15	H2O	62.43	.3920	1.0000	250	.000
16	HOLT	81.20	.3000	.0660	1000	.000
17	SHOT	320.00	.3570	.0950	1600	.000
18	HOLT	284.00	1.2000	.0660	1000	.000
19	HLWG	212.00	.7000	.1600	1290	.000
20	HOLT	207.70	.6000	.0660	1000	.000
21	PWR	320.20	1.2000	.1000	1650	.000
22	BWR	192.20	1.0000	.1000	1650	.000
23	HLWC	117.70	.2570	.2270	932	.000

NOTE: THIS EDIT WILL BE PRINTED ONLY ONCE, EVEN THOUGH
THE USER MAY HAVE MULTIPLE SETS OF INPUT DATA.

```
   EMISC      .500              EMISC---SURFACE EMISSIVITY OF THE CASK (DIMENSIONLESS)

CASK DESIGN LIMITS

   TFNMAX    392.0 DEG.F        TFNMAX--MAXIMUM ALLOWABLE SURFACE TEMPERATURE
   WGHTMX     52.0 KILO.LBS     WGHTMX--MAXIMUM ALLOWABLE WEIGHT OF LOADED CASK
   TAMB      130.0 DEG.F        TAMB----OUTSIDE AMBIENT TEMPERATURE
   NSOLAR      1                NSOLAR--INCLUSION OF SOLAR INSOLANCE AT 122.92(BTU/HR)/FT**2 (1=YES, 2=NO)
```

```
TITLE:  2[illegible] (.[illegible] AIR, [illegible], 21 [illegible], BASKET/WALL GAP, HJ=156. , SEA, INS)

DESCRIPTION OF WASTE MATERIAL

   MELEM        21 (PWR )      MELEM---TYPE OF WASTE MATERIAL (SHOWN IN BRACKETS)
   BU        1600. MWD/MT      BU------AVERAGE BURNUP  (EDIT FOR BOOKEEPING PURPOSES ONLY;  NO LONGER USED)
   TIME       2.00 YEARS       TIME----COOLING TIME  (AGE OF FUEL SINCE DISCHARGE)
   WHEAT      .0   WATTS/CUFT  WHEAT---DECAY HEAT GIVEN OFF BY THE WASTE MATERIAL; NOT USED IF ZERO
   DHEAT  2.5+002 WATTS/ASSY   DHEAT---DECAY HEAT GIVEN OFF BY EACH ASSEMBLY (OR CANISTER); NOT USED IF ZERO
   SRCN   2.2+005 N/SEC/ASSY   SRCN----NEUTRON SOURCE  (EDIT FOR BOOKEEPING PURPOSES ONLY;  NO LONGER USED)
   SRCG   7.7+014 P/SEC/ASSY   SRCG----PHOTON  SOURCE  (EDIT FOR BOOKEEPING PURPOSES ONLY;  NO LONGER USED)

DESCRIPTION OF WASTE CONTAINER

   ITYPE         1             ITYPE---FLAG: 1 FOR SQUARE CANISTERS; 2 FOR SQUARE ASSEMBLIES (WITHOUT CAN)
   NPINS         0             NPINS---NUMBER OF FUEL PINS PER ASSEMBLY (IF MELEM DENOTES PWR OR BWR)
   MCAN          5 ( AL )      MCAN----TYPE OF MATERIAL USED FOR CANISTERS (NO CAN USED IF MCAN=0)
   ODCAN      5.50 INCHES      ODCAN---OUTSIDE DIM OF CANISTER (MCAN>0), OR WIDTH OF FUEL ASSEMBLY (MCAN=0)
   TKCAN      .125 INCHES      TKCAN---WALL THICKNESS OF CANISTER (IF MCAN.GT.0)
   HTCAN     12.00 FEET        HTCAN---LENGTH OF CANISTER (OR FUEL ASSEMBLY)
   HTVOID     .00  FEET        HTVOID--PORTION OF CANISTER NOT OCCUPIED BY WASTE MATERIAL (IF MCAN.GT.0)
   HTFUEL    12.00 FEET        HTFUEL--PORTION OF FUEL ASSEMBLY CONTAINING UO2 (IF MELEM DENOTES PWR OR BWR)

DESCRIPTION OF INSERT

   MINSRT        5 ( AL )      MINSRT--TYPE OF MATERIAL USED FOR INSERT (SHOWN IN BRACKETS)
   EMINST     .220             EMINST--SURFACE EMISSIVITY OF THE INSERT MATERIAL (DIMENSIONLESS)
   TKINST     .200 INCHES      TKINST--THICKNESS OF INSERT BETWEEN ASSEMBLIES (INCLUDES TPOISN)
   TPOISN     .000 INCHES      TPOISN--THICKNESS OF NEUTRON POISON IMBEDDED IN INSERT MATL BETWEEN ASSEMBLIES
   TKCGAP     .440 INCHES      TKCGAP--THICKNESS OF GAP BETWEEN CANISTER AND INSERT
   MCGAP        14 (AIR )      MCGAP---TYPE OF GAP ATMOSPHERE (SHOWN IN BRACKETS)
   TKIGAP     .550 INCHES      TKIGAP--THICKNESS OF GAP BETWEEN INSERT AND THE INNER SHELL
   MIGAP        14 (AIR )      MIGAP---TYPE OF GAP ATMOSPHERE (SHOWN IN BRACKETS)
   WTHICK     .125 INCHES      WTHICK--THICKNESS OF THE INSERT BETWEEN CANISTER AND INNER SHELL
   NELEM         3             NELEM---NUMBER OF ASSEMBLIES (OR CANISTERS) PER CASK;  IF ZERO, PERFORM SEARCH
   CASKID    13.37 INCHES      CASKID--INSIDE DIAMETER OF THE CASK (CALCULATED BY CODE IF USER ENTERS 0.0)

DESCRIPTION OF INNER & OUTER SHELL AND THE OUTSIDE LINER

   MISHL         6 ( SS )      MISHL---TYPE OF MATERIAL USED FOR THE INNER SHELL (SHOWN IN BRACKETS)
   MOSHL         6 ( SS )      MOSHL---TYPE OF MATERIAL USED FOR THE OUTER SHELL (SHOWN IN BRACKETS)
   MOLIN         6 ( SS )      MOLIN---TYPE OF MATERIAL USED FOR OUTSIDE LINER AND FINS (IF REQUIRED)
   TKISHL     .500 INCHES      TKISHL--THICKNESS OF INNER SHELL
   TKOSHL     .875 INCHES      TKOSHL--THICKNESS OF OUTER SHELL
   TKOLIN     .250 INCHES      TKOLIN--THICKNESS OF OUTSIDE LINER

DESCRIPTION OF NEUTRON AND GAMMA SHIELDS

   MNSHLD       15 (H2O )      MNSHLD--TYPE OF MATERIAL USED FOR NEUTRON SHIELD (SHOWN IN BRACKETS)
   MGSHLD        1 ( PB )      MGSHLD--TYPE OF MATERIAL USED FOR GAMMA SHIELD (SHOWN IN BRACKETS)

DESCRIPTION OF HEAT TRANSFER PARAMETERS FOR FINS (& CASK)

   MFIN          6 ( SS )      MFIN----TYPE OF MATERIAL USED FOR FINS (IF REQUIRED)
   SPFIN      1.000 INCHES     SPFIN---SPACING BETWEEN FINS
   EMISF      .997             EMISF---SURFACE EMISSIVITY OF THE FINS (DIMENSIONLESS)
```

PREFIRE TEMPERATURES DEG-F

TIME	INSERT	GAP	I-SHELL	G-SHIELD	O-SHELL	N-SHIELD	O-LINER
RADIUS (FEET)	.5195 .5196 .5112 .5571 .5783 .5987 .8272 1.0050 1.0421 1.0779 4.0696 4.0900 4.0904						

STEADY STATE TEMPERATURES USED FOR CALCULATING DELTA-T ONLY (WITH N-SHIELD FULL)

.77 0. 7. 0	140.10	140.10	140.10	140.10	139.99	139.88	139.28	138.92	138.81	138.70	137.50	137.49	137.49

STEADY STATE TEMPERATURES USED FOR CALCULATING DELTA-T ONLY (WITH N-SHIELD VOIDED)

.77 0. 7. 0	174.98	174.95	174.95	174.78	174.86	174.76	174.16	173.80	173.68	173.58	137.50	137.49	137.49
DELTA-T, TIME=0			34.88			34.88		34.88		34.88			.00

COMPONENT	DIMENSION(INCHES)
O-LINER =	.250
N-SHIELD =	75.970
O-SHELL =	.875
G-SHIELD =	4.875
I-SHELL =	.500
I-GAP =	.559
W-INSRT =	.200
C/F-GAP =	.469
O-CANSTR =	5.500
I-CANSTR =	5.250
O-LENGTH =	144.000
W-POISN =	.000
I-CASK =	13.370

THERMAL PARAMETERS

AMBIENT TEMP = 170.070 (DEG.F)
SOLAR INSOLANCE = 1 (1-YES,2-NO)
TOTAL DECAY HEAT = .750 (KW)

MAXIMUM STEADY STATE TEMPERATURES DEGREES-F

SURFACE	O-LINER		N-SHIELD		O-SHELL		PB-SHIELD		I-SHELL	
T	T	D-T	T	D-T	T	D-T	T	D-T	T	D-T
210.15	210.17	.02	211.17	1.00	211.42	.25	212.32	.90	212.58	.26

HE-GAP		INSERT		HE-GAP		CANISTER		FUEL PIN		
T	D-T	T	D-T	T	D-T	T	D-T	T	D-T	DEG-C
212.59	.70	215.71	3.15	257.29	41.55	312.21	54.92	341.33	29.12	171.85

TRANSIENT TEMPERATURES DEG-F

TIME	RADIUS (FEET)	.5195	.5154	.5112	.5571	.5783	.5987	.8272	1.0050	1.0421	1.0779	4.0696	4.0800	4.0904
		INSERT			GAP	I-SHELL		G-SHIELD		O-SHELL	N-SHIELD		O-LINER	
.00	0. 0. 9	174.98	174.98	174.98	174.98	174.86	174.76	174.16	173.80	173.69	173.60	162.22	168.02	188.04
.00	0. 0.18	174.98	174.98	174.98	174.98	174.86	174.76	174.16	173.80	173.70	173.66	201.63	205.09	211.59
.01	0. 0.27	174.98	174.98	174.98	174.98	174.86	174.76	174.16	173.80	173.73	173.76	232.94	236.85	252.51
.01	0. 0.36	174.98	174.98	174.98	174.98	174.86	174.76	174.16	173.82	173.78	173.90	268.10	272.49	281.72
.01	0. 0.45	174.98	174.98	174.98	174.98	174.86	174.76	174.16	173.84	173.85	174.08	301.32	304.79	318.46
.01	0. 0.54	174.98	174.98	174.98	174.98	174.86	174.76	174.17	173.87	173.94	174.30	334.87	339.37	349.77
.02	0. 1. 3	174.98	174.98	174.98	174.98	174.86	174.76	174.17	173.92	174.06	174.57	368.30	371.78	384.44
.02	0. 1.12	174.98	174.98	174.98	174.98	174.87	174.76	174.18	173.99	174.21	174.88	401.09	405.46	416.34
.02	0. 1.21	174.98	174.98	174.98	174.98	174.87	174.76	174.19	174.07	174.39	175.23	434.10	437.67	449.73
.02	0. 1.30	174.98	174.98	174.98	174.98	174.87	174.76	174.21	174.17	174.60	175.64	466.29	470.51	481.52
.02	0. 1.39	174.98	174.98	174.98	174.98	174.87	174.76	174.23	174.30	174.85	176.11	498.63	502.27	513.91
.02	0. 1.48	174.99	174.99	174.99	174.99	174.87	174.77	174.26	174.45	175.14	176.63	530.17	534.25	545.23
.02	0. 1.57	174.99	174.99	174.99	174.99	174.87	174.77	174.29	174.62	175.46	177.21	561.69	565.37	576.66
.03	0. 2. 6	174.99	174.99	174.99	174.99	174.88	174.78	174.34	174.83	175.84	177.86	592.46	596.42	607.25
.04	0. 2.15	175.00	175.00	175.00	175.00	174.89	174.79	174.39	175.06	176.25	178.58	623.03	626.73	637.67
.04	0. 2.24	175.01	175.01	175.01	175.01	174.89	174.80	174.45	175.33	176.72	179.36	652.90	656.76	667.35
.04	0. 2.33	175.01	175.01	175.01	175.01	174.90	174.81	174.53	175.63	177.23	180.22	682.41	686.09	696.68
.04	0. 2.42	175.03	175.03	175.03	175.03	174.92	174.83	174.62	175.97	177.80	181.16	711.23	714.99	725.30
.05	0. 2.51	175.04	175.04	175.04	175.04	174.93	174.85	174.72	176.35	178.43	182.17	739.57	743.20	753.43
.05	0. 3. 0	175.06	175.06	175.06	175.06	174.95	174.87	174.83	176.78	179.11	183.26	767.20	770.88	780.85
.05	0. 3.15	175.10	175.10	175.10	175.10	174.99	174.92	175.06	177.57	180.36	185.16	811.69	815.20	824.80
.06	0. 3.30	175.15	175.15	175.15	175.15	175.05	174.99	175.35	178.50	181.78	187.33	854.14	857.67	866.97
.06	0. 3.45	175.21	175.21	175.21	175.21	175.12	175.07	175.68	179.55	183.37	189.72	894.75	898.15	907.07
.07	0. 4. 0	175.29	175.29	175.29	175.29	175.20	175.18	176.08	180.74	185.14	192.34	933.21	936.59	945.17
.07	0. 4.15	175.40	175.40	175.40	175.40	175.31	175.30	176.55	182.08	187.09	195.16	969.63	972.90	981.09
.07	0. 4.30	175.52	175.52	175.52	175.52	175.45	175.46	177.09	183.57	189.23	198.19	1003.84	1007.06	1014.89
.08	0. 4.45	175.68	175.68	175.68	175.68	175.61	175.64	177.70	185.20	191.53	201.41	1035.92	1039.05	1046.50
.08	0. 5. 0	175.86	175.86	175.86	175.86	175.80	175.86	178.40	186.99	194.01	204.80	1065.81	1068.88	1075.96
.09	0. 5.15	176.08	176.08	176.08	176.08	176.03	176.12	179.19	188.93	196.65	208.35	1093.58	1096.57	1103.28
.09	0. 5.30	176.33	176.33	176.33	176.33	176.30	176.42	180.06	191.01	199.43	212.04	1119.24	1122.17	1128.52
.10	0. 5.45	176.63	176.63	176.63	176.63	176.60	176.76	181.02	193.23	202.36	215.85	1142.89	1145.74	1151.75
.10	0. 6. 0	176.96	176.96	176.96	176.96	176.95	177.15	182.08	195.59	205.42	219.76	1164.57	1167.37	1173.04
.10	0. 6.15	177.35	177.35	177.35	177.35	177.35	177.59	183.23	198.06	208.59	223.75	1184.40	1187.13	1192.50
.11	0. 6.30	177.79	177.79	177.79	177.79	177.81	178.08	184.47	200.66	211.86	227.81	1202.46	1205.14	1210.21
.11	0. 6.45	178.28	178.28	178.28	178.28	178.31	178.63	185.81	203.36	215.21	231.91	1218.87	1221.49	1226.28
.12	0. 7. 0	178.82	178.82	178.82	178.82	178.87	179.24	187.24	206.16	218.65	236.05	1233.73	1236.30	1240.83
.12	0. 7.15	179.43	179.43	179.43	179.43	179.50	179.91	188.76	209.04	222.14	240.21	1247.15	1249.67	1253.96
.13	0. 7.30	180.09	180.09	180.09	180.09	180.18	180.65	190.37	212.00	225.69	244.37	1259.24	1261.72	1265.79
.13	0. 7.45	180.82	180.82	180.82	180.82	180.93	181.45	192.06	215.03	229.27	248.53	1270.11	1272.55	1276.42
.13	0. 8. 0	181.61	181.61	181.61	181.61	181.74	182.31	193.83	218.12	232.88	252.67	1279.85	1282.26	1285.94
.14	0. 8.15	182.47	182.47	182.47	182.47	182.61	183.24	195.68	221.25	236.51	256.79	1288.59	1290.96	1294.47
.14	0. 8.30	183.39	183.39	183.39	183.39	183.56	184.24	197.61	224.42	240.16	260.88	1296.39	1298.74	1302.10
.15	0. 8.45	184.38	184.38	184.38	184.38	184.57	185.30	199.60	227.63	243.80	264.93	1303.36	1305.68	1308.90
.15	0. 9. 0	185.44	185.44	185.44	185.44	185.64	186.43	201.66	230.86	247.44	268.95	1309.57	1311.86	1314.96
.16	0. 9.27	187.51	187.51	187.51	187.51	187.75	188.64	205.52	236.71	253.94	275.95	1319.13	1321.37	1324.26
.16	0. 9.54	189.80	189.80	189.80	189.80	190.07	191.06	209.55	242.58	260.37	282.90	1326.84	1329.06	1331.81
.17	0.10.21	192.30	192.30	192.30	192.30	192.60	193.68	213.73	248.44	266.76	289.70	1333.09	1335.27	1337.87
.17	0.10.48	195.00	195.00	195.00	195.00	195.33	196.50	218.05	254.30	273.07	296.35	1338.09	1340.26	1342.77
.17	0.11.15	197.89	197.89	197.89	197.89	199.26	199.51	222.47	260.14	279.30	302.86	1342.13	1344.28	1346.70
.18	0.11.42	200.97	200.97	200.97	200.97	201.36	202.49	226.99	265.98	285.47	309.23	1345.37	1347.51	1349.86

Revised
Oct. 1986
Feb. 1987

---TI		----------INSERT			------GAP		------I-SHELL----		--G-SHIELD		------O-SHELL		------N-SHIELD		------O-L	-------
.20	0.12. 9	204.22	204.22	204.22	204.22	204.64	206.[illegible]4	231.59	271.69	291.48	315.47	1347.99	1350.[illegible]	1352.40
.21	0.12.36	207.63	207.63	207.63	207.63	208.08	209.55	236.25	277.39	297.43	321.58	1350.08	1352.20	1354.44
.22	0.1[illegible]. 3	211.19	211.19	211.19	211.19	211.66	213.20	240.98	283.04	303.30	327.57	1351.77	1353.87	1356.08
.22	0.13.30	214.89	214.89	214.89	214.89	215.38	216.98	245.75	288.64	309.09	333.45	1353.13	1355.23	1357.41
.23	0.13.57	218.72	218.72	218.72	218.72	219.23	220.89	250.56	294.19	314.80	339.24	1354.24	1356.32	1358.48
.24	0.14.24	222.67	222.67	222.67	222.67	223.20	224.90	255.40	299.69	320.43	344.93	1355.13	1357.21	1359.35
.25	0.14.51	226.72	226.72	226.72	226.72	227.27	229.02	260.27	305.14	325.99	350.54	1355.86	1357.93	1360.05
.25	0.15.18	230.87	230.87	230.87	230.87	231.44	233.23	265.16	310.54	331.49	356.08	1356.45	1358.53	1360.63
.26	0.15.45	235.11	235.11	235.11	235.11	235.69	237.52	270.07	315.90	336.93	361.56	1356.94	1359.01	1361.11
.27	0.16.12	239.43	239.43	239.43	239.43	240.02	241.89	274.98	321.21	342.32	366.95	1357.35	1359.41	1361.50
.27	0.16.39	243.83	243.83	243.83	243.83	244.43	246.32	279.91	326.49	347.66	372.29	1357.69	1359.75	1361.83
.28	0.17. 6	248.28	248.28	248.28	248.28	248.89	250.81	284.85	331.73	352.94	377.58	1357.97	1360.04	1362.11
.29	0.17.33	252.80	252.80	252.80	252.80	253.41	255.36	289.79	336.94	358.19	382.83	1358.22	1360.28	1362.34
.30	0.17. 0	257.36	257.36	257.36	257.36	257.99	259.95	294.74	342.11	363.40	388.03	1358.43	1360.49	1362.55
.31	0.18.45	265.07	265.07	265.07	265.07	265.70	267.70	302.98	350.67	371.97	396.55	1358.76	1360.81	1362.86
.32	0.19.30	272.87	272.87	272.87	272.87	273.52	275.54	311.22	359.14	380.46	405.03	1359.02	1361.07	1363.11
.34	0.20.15	280.77	280.77	280.77	280.77	281.42	283.46	319.46	367.55	388.88	413.41	1359.25	1361.29	1363.32
.35	0.21. 0	288.72	288.72	288.72	288.72	289.38	291.44	327.69	375.91	397.23	421.73	1359.45	1361.49	1363.52
.36	0.21.45	296.73	296.73	296.73	296.73	297.40	299.47	335.91	384.21	405.53	429.98	1359.64	1361.67	1363.69
.37	0.22.30	304.78	304.78	304.78	304.78	305.45	307.53	344.12	392.47	413.77	438.18	1359.81	1361.84	1363.86
.37	0.23.15	312.86	312.86	312.86	312.86	313.53	315.62	352.32	400.69	421.97	446.33	1359.98	1362.00	1364.02
.40	0.24. 0	320.97	320.97	320.97	320.97	321.66	323.73	360.50	408.87	430.12	454.43	1360.15	1362.16	1364.17
.41	0.24.45	329.08	329.08	329.08	329.08	329.75	331.85	368.67	417.02	438.23	462.49	1360.31	1362.32	1364.33
.42	0.25.30	337.21	337.21	337.21	337.21	337.88	339.97	376.82	425.13	446.31	470.51	1360.47	1362.48	1364.48
.44	0.26.15	345.34	345.34	345.34	345.34	346.01	348.10	384.95	433.21	454.35	478.50	1360.64	1362.64	1364.63
.45	0.27. 0	353.47	353.47	353.47	353.47	354.14	356.23	393.07	441.27	462.36	486.45	1360.80	1362.80	1364.79
.46	0.27.45	361.59	361.59	361.59	361.59	362.26	364.36	401.17	449.29	470.33	494.37	1360.97	1362.96	1364.95
.47	0.28.30	369.71	369.71	369.71	369.71	370.38	372.47	409.25	457.28	478.28	502.25	1361.14	1363.12	1365.11
.49	0.29.15	377.82	377.82	377.82	377.82	378.49	380.58	417.31	465.25	486.20	510.11	1361.31	1363.29	1365.27
.50	0.30. 0	385.92	385.92	385.92	385.92	386.59	388.68	425.34	473.19	494.09	517.93	1361.48	1363.46	1365.43
.50	0.30. 9	387.54	387.54	387.54	387.54	388.21	390.30	426.95	474.77	495.64	519.36	1341.44	1338.67	1324.32
.50	0.30.18	389.16	389.16	389.16	389.16	389.83	391.91	428.55	476.34	497.08	520.10	1311.03	1310.36	1308.07
.51	0.30.27	390.78	390.78	390.78	390.78	391.45	393.53	430.15	477.85	498.28	520.27	1288.65	1287.51	1277.33
.51	0.30.36	392.39	392.39	392.39	392.39	393.06	395.14	431.75	479.28	499.24	520.25	1263.98	1262.59	1258.60
.51	0.30.45	394.01	394.01	394.01	394.01	394.68	396.76	433.33	480.59	500.02	520.03	1242.14	1241.47	1233.53
.51	0.30.54	395.63	395.63	395.63	395.63	396.29	398.37	434.89	481.79	500.63	519.71	1220.71	1219.25	1214.69
.52	0.31. 3	397.24	397.24	397.24	397.24	397.91	399.98	436.43	482.86	501.12	519.30	1200.30	1199.71	1193.11
.52	0.31.12	398.85	398.85	398.85	398.85	399.51	401.59	437.94	483.83	501.49	518.84	1181.03	1179.69	1175.02
.52	0.31.21	400.46	400.46	400.46	400.46	401.12	403.19	439.42	484.69	501.76	518.32	1162.20	1161.58	1155.84
.52	0.31.30	402.06	402.06	402.06	402.06	402.72	404.78	440.86	485.46	501.96	517.78	1144.55	1143.37	1138.81
.53	0.31.39	403.66	403.66	403.66	403.66	404.32	406.36	442.26	486.13	502.08	517.21	1127.22	1126.56	1121.44
.53	0.31.48	405.25	405.25	405.25	405.25	405.90	407.94	443.63	486.73	502.14	516.62	1110.91	1109.87	1105.49
.53	0.31.57	406.83	406.83	406.83	406.83	407.48	409.51	444.95	487.25	502.16	516.02	1094.91	1094.23	1089.57
.53	0.32. 6	408.40	408.40	408.40	408.40	409.05	411.06	446.23	487.71	502.12	515.41	1079.76	1078.82	1074.67
.54	0.32.15	409.97	409.97	409.97	409.97	410.61	412.60	447.47	488.11	502.05	514.79	1064.93	1064.24	1059.96
.54	0.32.24	411.52	411.52	411.52	411.52	412.15	414.13	448.67	488.46	501.96	514.17	1050.91	1049.95	1046.01
.54	0.32.33	413.05	413.05	413.05	413.05	413.68	415.64	449.83	488.76	501.80	513.55	1037.01	1036.31	1032.34
.54	0.32.42	414.58	414.58	414.58	414.58	415.20	417.13	450.95	489.02	501.64	512.93	1023.79	1023.00	1019.27
.55	0.32.51	416.08	416.08	416.08	416.08	416.70	418.61	452.03	489.24	501.46	512.32	1010.90	1010.22	1006.51
.55	0.33. 0	417.57	417.57	417.57	417.57	418.18	420.07	453.07	489.43	501.26	511.70	998.50	997.76	994.24
.55	0.33.15	420.02	420.02	420.02	420.02	420.61	422.46	454.73	489.68	500.89	510.73	978.50	977.94	974.39
.56	0.33.30	422.41	422.41	422.41	422.41	422.97	424.80	456.28	489.85	500.50	509.75	959.53	958.94	955.63
.56	0.33.45	424.75	424.75	424.75	424.75	425.31	427.07	457.75	489.97	500.08	508.79	941.44	940.82	937.68
.57	0.34. 0	427.03	427.03	427.03	427.03	427.57	429.29	459.12	490.04	499.64	507.85	924.23	923.58	920.66
.57	0.34.15	429.25	429.25	429.25	429.25	429.78	431.44	460.42	490.07	499.19	506.93	907.75	907.17	904.29

TIME	INSERT	GAP	I-SHELL	G-SHIELD	O-SHELL	N-SHIELD	O-LINER						
.57 0.34.30	431.41	431.41	431.41	431.41	431.92	433.53	461.64	490.06	498.73	506.04	892.03	891.43	888.71
.59 0.34.45	433.51	433.51	433.51	433.51	434.00	435.56	462.79	490.02	498.26	505.17	876.95	876.39	873.75
.59 0.35. 0	435.54	435.54	435.54	435.54	436.01	437.52	463.87	489.96	497.80	504.33	862.51	861.95	859.43
.59 0.35.15	437.51	437.51	437.51	437.51	437.96	439.42	464.89	489.88	497.33	503.52	848.63	848.10	845.65
.59 0.35.30	439.42	439.42	439.42	439.42	439.85	441.26	465.86	489.78	496.87	502.73	835.31	834.78	832.44
.60 0.35.45	441.26	441.26	441.26	441.26	441.68	443.03	466.77	489.67	496.42	501.97	822.48	821.98	819.70
.60 0.36. 0	443.04	443.04	443.04	443.04	443.44	444.74	467.63	489.54	495.97	501.24	810.14	809.64	807.45
.60 0.36.15	444.76	444.76	444.76	444.76	445.14	446.39	468.44	489.41	495.54	500.53	798.24	797.76	795.63
.61 0.36.30	446.42	446.42	446.42	446.42	446.78	447.98	469.21	489.28	495.11	499.85	786.76	786.28	784.24
.61 0.36.45	448.02	448.02	448.02	448.02	448.36	449.52	469.94	489.14	494.69	499.19	775.68	775.21	773.22
.62 0.37. 0	449.56	449.56	449.56	449.56	449.88	450.99	470.62	488.99	494.29	498.56	764.97	764.51	762.59
.62 0.37.15	451.04	451.04	451.04	451.04	451.35	452.41	471.28	488.85	493.89	497.95	754.61	754.17	752.29
.63 0.37.30	452.46	452.46	452.46	452.46	452.76	453.78	471.90	488.70	493.51	497.37	744.59	744.15	742.34
.63 0.37.45	453.84	453.84	453.84	453.84	454.11	455.09	472.49	488.55	493.14	496.80	734.89	734.46	732.69
.63 0.38. 0	455.16	455.16	455.16	455.16	455.42	456.35	473.04	488.40	492.78	496.26	725.49	725.07	723.35
.64 0.38.15	456.42	456.42	456.42	456.42	456.67	457.56	473.57	488.26	492.43	495.74	716.37	715.96	714.29
.64 0.38.30	457.64	457.64	457.64	457.64	457.87	458.73	474.08	488.11	492.09	495.24	707.53	707.12	705.50
.65 0.38.45	458.81	458.81	458.81	458.81	459.03	459.84	474.56	487.97	491.76	494.75	698.94	698.55	696.96
.65 0.39. 0	459.93	459.93	459.93	459.93	460.14	460.92	475.01	487.83	491.44	494.29	690.61	690.22	688.68
.66 0.39.27	461.84	461.84	461.84	461.84	462.02	462.74	475.77	487.59	490.90	493.51	676.13	675.75	674.26
.66 0.39.54	463.61	463.61	463.61	463.61	463.77	464.43	476.47	487.35	490.39	492.77	662.35	661.98	660.57
.67 0.40.21	465.25	465.25	465.25	465.25	465.39	465.99	477.11	487.13	489.91	492.08	649.24	648.88	647.52
.68 0.40.48	466.77	466.77	466.77	466.77	466.90	467.44	477.70	486.91	489.46	491.43	636.73	636.38	635.09
.69 0.41.15	468.18	468.18	468.18	468.18	468.29	468.79	478.23	486.70	489.03	490.82	624.80	624.46	623.21
.69 0.41.42	469.49	469.49	469.49	469.49	469.57	470.03	478.72	486.50	488.63	490.26	613.38	613.05	611.86
.70 0.42. 9	470.69	470.69	470.69	470.69	470.77	471.18	479.17	486.31	488.25	489.72	602.46	602.14	600.98
.71 0.42.36	471.81	471.81	471.81	471.81	471.87	472.24	479.58	486.12	487.89	489.22	592.00	591.68	590.57
.72 0.43. 3	472.84	472.84	472.84	472.84	472.88	473.22	479.95	485.94	487.55	488.75	581.96	581.65	580.58
.72 0.43.30	473.79	473.79	473.79	473.79	473.82	474.13	480.29	485.77	487.23	488.31	572.33	572.03	570.99
.73 0.43.57	474.67	474.67	474.67	474.67	474.69	474.96	480.60	485.60	486.93	487.88	563.07	562.78	561.77
.74 0.44.24	475.48	475.48	475.48	475.48	475.49	475.73	480.88	485.44	486.64	487.49	554.17	553.88	552.91
.75 0.44.51	476.23	476.23	476.23	476.23	476.23	476.44	481.14	485.29	486.36	487.11	545.60	545.32	544.38
.75 0.45.18	476.91	476.91	476.91	476.91	476.90	477.09	481.37	485.13	486.09	486.75	537.35	537.07	536.16
.76 0.45.45	477.55	477.55	477.55	477.55	477.53	477.69	481.58	484.99	485.84	486.41	529.39	529.12	528.24
.77 0.46.12	478.13	478.13	478.13	478.13	478.10	478.24	481.76	484.84	485.60	486.08	521.72	521.45	520.60
.78 0.46.39	478.66	478.66	478.66	478.66	478.63	478.75	481.93	484.70	485.36	485.77	514.31	514.05	513.22
.79 0.47. 6	479.15	479.15	479.15	479.15	479.11	479.22	482.08	484.56	485.14	485.47	507.16	506.90	506.10
.79 0.47.33	479.60	479.60	479.60	479.60	479.56	479.64	482.21	484.42	484.92	485.18	500.25	499.99	499.21
.80 0.48. 0	480.01	480.01	480.01	480.01	479.96	480.03	482.32	484.28	484.71	484.91	493.56	493.31	492.55
.81 0.48.45	480.62	480.62	480.62	480.62	480.56	480.60	482.48	484.06	484.36	484.47	492.86	482.61	481.88
.82 0.49.30	481.14	481.14	481.14	481.14	481.07	481.09	482.60	483.83	484.04	484.05	472.71	472.47	471.77
.84 0.50.15	481.58	481.58	481.58	481.58	481.50	481.50	482.68	483.61	483.72	483.65	463.08	462.85	462.18
.85 0.51. 0	481.95	481.95	481.95	481.95	481.87	481.85	482.73	483.39	483.41	483.27	453.94	453.71	453.07
.86 0.51.45	482.26	482.26	482.26	482.26	482.17	482.14	482.75	483.16	483.11	482.89	445.24	445.02	444.39
.88 0.52.30	482.51	482.51	482.51	482.51	482.42	482.37	482.75	482.93	482.81	482.53	436.95	436.74	436.14
.89 0.53.15	482.71	482.71	482.71	482.71	482.61	482.55	482.72	482.70	482.51	482.17	429.06	428.85	428.27
.90 0.54. 0	482.87	482.87	482.87	482.87	482.77	482.70	482.67	482.47	482.22	481.82	421.53	421.32	420.77
.91 0.54.45	482.99	482.99	482.99	482.99	482.88	482.80	482.60	482.23	481.92	481.47	414.34	414.13	413.60
.92 0.55.30	483.06	483.06	483.06	483.06	482.96	482.86	482.51	481.98	481.62	481.13	407.46	407.26	406.75
.94 0.56.15	483.11	483.11	483.11	483.11	483.00	482.90	482.40	481.73	481.33	480.78	400.89	400.69	400.19
.95 0.57. 0	483.13	483.13	483.13	483.13	483.01	482.90	482.28	481.48	481.03	480.44	394.59	394.40	393.91
.96 0.57.45	483.11	483.11	483.11	483.11	483.00	482.88	482.14	481.22	480.73	480.10	388.56	388.37	387.90
.97 0.58.30	483.09	483.09	483.09	483.08	482.96	482.84	481.98	480.95	480.42	479.76	382.78	382.59	382.14
.99 0.59.15	483.02	483.02	483.02	483.02	482.89	482.77	481.82	480.68	480.12	479.42	377.23	377.05	376.61
1.00 1. 0. 0	482.94	482.94	482.94	482.94	482.81	482.68	481.63	480.40	479.81	479.08	371.91	371.73	371.30

----Y'	-----	----------INSERT-----+--GAP---+-----I-SHELL----						--G-SHIELD-----+-----O-SHELL-----+N-SHIELD+-----O-L.						--------
1.01	. .45	482.83	482.83	482.83	482.83	482.71	482.57	481.44	480.12	479.50	478.74	366.80	366.62	366.20
1.02	1. 1.30	482.71	482.71	482.71	482.71	482.59	482.46	481.24	479.84	479.18	478.40	361.88	361.70	361.30
1.04	1. 2.15	482.58	482.58	482.58	482.58	482.45	482.30	481.02	479.55	478.87	479.06	357.16	356.98	356.59
1.05	1. 3. 0	482.43	482.43	482.43	482.43	482.30	482.15	480.80	479.25	478.55	477.71	352.61	352.43	352.05
1.06	1. 3.45	482.26	482.26	482.26	482.26	482.13	481.98	480.57	478.96	478.23	477.36	348.23	348.06	347.69
1.07	1. 4.30	482.08	482.08	482.08	482.08	481.95	481.79	480.33	478.65	477.90	477.02	344.02	343.85	343.48
1.09	1. 5.15	481.89	481.89	481.89	481.89	481.76	481.60	480.08	478.35	477.57	476.67	339.96	339.79	339.43
1.10	1. 6. 0	481.69	481.69	481.69	481.69	481.55	481.39	479.82	479.03	477.24	476.32	336.04	335.87	335.53
1.12	1. 7.15	481.33	481.33	481.33	481.33	481.19	481.02	479.38	477.51	476.68	475.72	329.80	329.64	329.30
1.14	1. 8.30	480.94	480.94	480.94	480.94	480.80	480.63	478.91	476.97	476.11	475.13	323.93	323.76	323.44
1.16	1. 9.45	480.53	480.53	480.53	480.53	480.39	480.21	478.43	476.42	475.54	474.53	318.38	318.22	317.91
1.18	1.11. 0	480.09	480.09	480.09	480.09	479.95	479.77	477.94	475.86	474.96	473.93	313.15	312.99	312.69
1.20	1.12.15	479.64	479.64	479.64	479.64	479.50	479.31	477.43	475.30	474.38	473.32	308.20	308.05	307.76
1.22	1.13.30	479.17	479.17	479.17	479.17	479.02	478.84	476.91	474.73	473.79	472.71	303.52	303.37	303.09
1.25	1.14.45	478.68	478.68	478.68	478.68	478.53	478.35	476.38	474.15	473.19	472.10	299.09	298.94	298.66
1.27	1.16. 0	478.18	478.18	478.18	478.18	478.03	477.84	475.83	473.56	472.59	471.48	294.89	294.74	294.47
1.29	1.17.15	477.66	477.66	477.66	477.66	477.52	477.32	475.28	472.97	471.98	470.86	290.90	290.75	290.50
1.31	1.18.30	477.13	477.13	477.13	477.13	476.99	476.79	474.72	472.38	471.37	470.24	287.12	286.97	286.72
1.33	1.19.45	476.60	476.60	476.60	476.60	476.45	476.25	474.15	471.77	470.76	469.61	293.52	283.38	283.14
1.35	1.21. 0	476.05	476.05	476.05	476.05	475.90	475.70	473.57	471.17	470.14	468.98	280.11	279.96	279.73
1.37	1.22.15	475.49	475.49	475.49	475.49	475.34	475.14	472.99	470.56	469.52	468.35	276.36	276.71	276.48
1.39	1.23.30	474.92	474.92	474.92	474.92	474.77	474.57	472.40	469.94	468.90	467.72	273.76	273.62	273.40
1.41	1.24.45	474.35	474.35	474.35	474.35	474.20	474.00	471.80	469.33	468.28	467.09	270.81	270.67	270.46
1.43	1.26. 0	473.77	473.77	473.77	473.77	473.62	473.42	471.20	468.71	467.65	466.45	268.00	267.87	267.65
1.45	1.27.15	473.18	473.18	473.18	473.18	473.03	472.83	470.60	468.08	467.02	465.82	265.32	265.19	264.98
1.47	1.28.30	472.59	472.59	472.59	472.59	472.44	472.24	469.99	467.46	466.39	465.18	262.77	262.63	262.43
1.49	1.29.45	471.99	471.99	471.99	471.99	471.84	471.64	469.38	466.83	465.75	464.54	260.32	260.19	259.99
1.52	1.31. 0	471.39	471.39	471.39	471.39	471.24	471.03	468.76	466.20	465.12	463.90	257.99	257.86	257.66
1.54	1.32.15	470.78	470.78	470.78	470.78	470.63	470.42	468.14	465.57	464.48	463.26	255.76	255.63	255.44
1.56	1.33.30	470.17	470.17	470.17	470.17	470.02	469.81	467.52	464.94	463.84	462.61	253.63	253.50	253.31
1.59	1.34.45	469.56	469.56	469.56	469.56	469.40	469.20	466.90	464.30	463.21	461.97	251.59	251.46	251.27
1.61	1.36. 0	468.94	468.94	468.94	468.94	468.79	468.58	466.27	463.67	462.57	461.33	249.63	249.50	249.32
1.63	1.38. 0	467.94	467.94	467.94	467.94	467.79	467.58	465.26	462.64	461.54	460.30	246.67	246.54	246.37
1.65	1.40. 0	466.94	466.94	466.94	466.94	466.79	466.58	464.25	461.62	460.51	459.27	243.90	243.78	243.61
1.70	1.42. 0	465.94	465.94	465.94	465.94	465.78	465.57	463.23	460.60	459.49	458.24	241.32	241.19	241.02
1.72	1.44. 0	464.93	464.93	464.93	464.93	464.77	464.56	462.22	459.57	458.46	457.21	238.89	238.77	238.60
1.77	1.46. 0	463.91	463.91	463.91	463.91	463.76	463.55	461.20	458.55	457.43	456.18	236.62	236.50	236.34
1.80	1.48. 0	462.89	462.89	462.89	462.89	462.74	462.53	460.18	457.52	456.41	455.15	234.48	234.36	234.21
1.82	1.50. 0	461.87	461.87	461.87	461.87	461.72	461.51	459.15	456.50	455.38	454.13	232.48	232.36	232.21
1.85	1.52. 0	460.85	460.85	460.85	460.85	460.70	460.49	458.13	455.48	454.36	453.11	230.59	230.48	230.33
1.87	1.54. 0	459.83	459.83	459.83	459.83	459.68	459.47	457.11	454.45	453.34	452.09	228.82	228.70	228.55
1.90	1.56. 0	458.81	458.81	458.81	458.81	458.66	458.45	456.09	453.43	452.32	451.07	227.14	227.03	226.88
1.92	1.58. 0	457.79	457.79	457.79	457.79	457.64	457.43	455.07	452.42	451.30	450.05	225.57	225.45	225.31
2.00	2. 0. 0	456.77	456.77	456.77	456.77	456.62	456.41	454.05	451.40	450.29	449.04	224.07	223.96	223.82
2.02	2. 2. 0	455.75	455.75	455.75	455.75	455.60	455.39	453.03	450.39	449.28	448.03	222.66	222.55	222.41
2.05	2. 4. 0	454.73	454.73	454.73	454.73	454.58	454.37	452.02	449.37	448.27	447.03	221.33	221.21	221.08
2.10	2. 6. 0	453.72	453.72	453.72	453.72	453.56	453.35	451.00	448.37	447.26	446.02	220.06	219.95	219.81
2.12	2. 8. 0	452.70	452.70	452.70	452.70	452.55	452.34	449.99	447.36	446.26	445.02	218.86	218.75	218.62
2.15	2.10. 0	451.69	451.69	451.69	451.69	451.54	451.33	448.99	446.36	445.26	444.03	217.72	217.61	217.48
2.20	2.12. 0	450.68	450.68	450.68	450.68	450.53	450.32	447.98	445.36	444.26	443.03	216.64	216.53	216.40
2.22	2.14. 0	449.67	449.67	449.67	449.67	449.52	449.31	446.98	444.37	443.27	442.05	215.60	215.50	215.37
2.27	2.16. 0	448.67	448.67	448.67	448.67	448.52	448.31	445.98	443.37	442.28	441.06	214.62	214.51	214.39
2.30	2.18. 0	447.67	447.67	447.67	447.67	447.52	447.31	444.99	442.39	441.30	440.08	213.69	213.58	213.45
2.35	2.20. 0	446.67	446.67	446.67	446.67	446.52	446.31	443.99	441.40	440.32	439.10	212.79	212.69	212.56
2.37	2.22. 0	445.68	445.68	445.68	445.68	445.52	445.32	443.01	440.42	439.34	438.13	211.96	211.85	211.71

TIME		INSERT		GAP		I-SHELL		G-SHIELD		O-SHELL		N-SHIELD		O-LINER	
2.40	2.24. 0	444.68	444.68	444.68	444.68	444.53	444.33	442.02	439.44	438.37	437.16	211.12	211.02	210.90	
2.43	2.26. 0	443.70	443.70	443.70	443.70	443.55	443.34	441.04	438.47	437.40	436.20	210.34	210.24	210.12	
2.47	2.28. 0	442.71	442.71	442.71	442.71	442.56	442.35	440.06	437.50	436.43	435.24	209.59	209.49	209.37	
2.50	2.30. 0	441.73	441.73	441.73	441.73	441.58	441.38	439.09	436.54	435.47	434.28	208.87	208.77	208.65	
2.53	2.32. 0	440.76	440.76	440.76	440.76	440.61	440.40	438.12	435.58	434.52	433.33	208.18	208.08	207.96	
2.57	2.34. 0	439.78	439.78	439.78	439.78	439.63	439.43	437.15	434.62	433.56	432.38	207.52	207.42	207.30	
2.60	2.36. 0	438.82	438.82	438.82	438.82	438.66	438.46	436.19	433.67	432.62	431.44	206.88	206.78	206.67	
2.63	2.38. 0	437.85	437.85	437.85	437.85	437.70	437.50	435.24	432.72	431.67	430.50	206.27	206.17	206.05	
2.67	2.40. 0	436.89	436.89	436.89	436.89	436.74	436.54	434.28	431.78	430.73	429.56	205.67	205.57	205.46	
2.70	2.42. 0	435.93	435.93	435.93	435.93	435.78	435.58	433.34	430.84	429.80	428.63	205.10	205.00	204.89	
2.73	2.44. 0	434.98	434.98	434.98	434.98	434.83	434.63	432.39	429.90	428.87	427.71	204.55	204.45	204.34	
2.77	2.46. 0	434.03	434.03	434.03	434.03	433.88	433.68	431.45	428.97	427.94	426.79	204.02	203.92	203.81	
2.80	2.48. 0	433.09	433.09	433.09	433.09	432.94	432.74	430.51	428.05	427.02	425.87	203.50	203.40	203.30	
2.83	2.50. 0	432.15	432.15	432.15	432.15	432.00	431.80	429.58	427.13	426.10	424.96	203.00	202.90	202.80	
2.87	2.52. 0	431.21	431.21	431.21	431.21	431.07	430.86	428.66	426.21	425.19	424.05	202.52	202.42	202.31	
2.90	2.54. 0	430.28	430.28	430.28	430.28	430.13	429.93	427.73	425.29	424.28	423.14	202.05	201.95	201.84	
2.93	2.56. 0	429.36	429.36	429.36	429.36	429.21	429.01	426.81	424.38	423.37	422.24	201.59	201.49	201.39	
2.97	2.58. 0	428.43	428.43	428.43	428.43	428.29	428.08	425.90	423.48	422.47	421.35	201.14	201.05	200.94	
3.00	3. 0. 0	427.52	427.52	427.52	427.52	427.37	427.17	424.99	422.58	421.58	420.46	200.71	200.62	200.51	
3.03	3. 5. 0	425.24	425.24	425.24	425.24	425.09	424.89	422.73	420.34	419.35	418.24	199.68	199.59	199.49	
3.17	3.10. 0	422.99	422.99	422.99	422.99	422.84	422.64	420.50	418.13	417.15	416.05	198.72	198.62	198.52	
3.25	3.15. 0	420.76	420.76	420.76	420.76	420.61	420.42	418.29	415.95	414.98	413.89	197.80	197.71	197.61	
3.33	3.20. 0	418.56	418.56	418.56	418.56	418.41	418.22	416.11	413.79	412.83	411.76	196.94	196.85	196.75	
3.42	3.25. 0	416.39	416.39	416.39	416.39	416.24	416.05	413.96	411.67	410.71	409.65	196.11	196.02	195.93	
3.50	3.30. 0	414.24	414.24	414.24	414.24	414.09	413.90	411.83	409.56	408.62	407.57	195.33	195.24	195.14	
3.58	3.35. 0	412.12	412.12	412.12	412.12	411.97	411.78	409.73	407.48	406.55	405.51	194.57	194.48	194.39	
3.67	3.40. 0	410.03	410.03	410.03	410.03	409.88	409.69	407.66	405.43	404.51	403.48	193.85	193.76	193.67	
3.75	3.45. 0	407.96	407.96	407.96	407.96	407.81	407.62	405.61	403.41	402.49	401.48	193.15	193.06	192.97	
3.83	3.50. 0	405.91	405.91	405.91	405.91	405.77	405.58	403.58	401.40	400.50	399.49	192.47	192.39	192.30	
3.92	3.55. 0	403.90	403.90	403.90	403.90	403.75	403.56	401.58	399.42	398.53	397.54	191.82	191.73	191.64	
4.00	4. 0. 0	401.90	401.90	401.90	401.90	401.76	401.57	399.60	397.47	396.59	395.60	191.18	191.10	191.01	
4.08	4. 5. 0	399.93	399.93	399.93	399.93	399.79	399.60	397.65	395.54	394.66	393.69	190.56	190.48	190.39	
4.17	4.10. 0	397.98	397.98	397.98	397.98	397.84	397.66	395.72	393.63	392.77	391.80	189.96	189.88	189.79	
4.25	4.15. 0	396.06	396.06	396.06	396.06	395.92	395.73	393.82	391.75	390.89	389.94	189.37	189.29	189.21	
4.33	4.20. 0	394.16	394.16	394.16	394.16	394.02	393.83	391.93	389.88	389.04	388.09	188.80	188.72	188.64	
4.42	4.25. 0	392.28	392.28	392.28	392.28	392.14	391.96	390.07	388.04	387.20	386.27	188.24	188.16	188.08	
4.50	4.30. 0	390.43	390.43	390.43	390.43	390.29	390.10	388.24	386.22	385.39	384.47	187.69	187.61	187.53	
4.58	4.35. 0	388.60	388.60	388.60	388.60	388.45	388.27	386.42	384.43	383.61	382.69	187.15	187.08	187.00	
4.67	4.40. 0	386.78	386.78	386.78	386.78	386.64	386.46	384.62	382.65	381.84	380.93	186.63	186.55	186.47	
4.75	4.45. 0	384.99	384.99	384.99	384.99	384.85	384.67	382.85	380.89	380.09	379.19	186.11	186.03	185.96	
4.83	4.50. 0	383.23	383.23	383.23	383.23	383.08	382.91	381.09	379.16	378.36	377.48	185.60	185.53	185.45	
4.92	4.55. 0	381.48	381.48	381.48	381.48	381.34	381.16	379.36	377.44	376.65	375.78	185.10	185.03	184.95	
5.00	5. 0. 0	379.75	379.75	379.75	379.75	379.61	379.43	377.65	375.75	374.97	374.10	184.62	184.54	184.47	
5.08	5. 5. 0	378.04	378.04	378.04	378.04	377.90	377.72	375.95	374.07	373.30	372.44	184.13	184.06	183.99	
5.17	5.10. 0	376.35	376.35	376.35	376.35	376.21	376.03	374.28	372.41	371.65	370.80	183.66	183.59	183.52	
5.25	5.15. 0	374.68	374.68	374.68	374.68	374.54	374.37	372.62	370.78	370.02	369.18	183.20	183.13	183.05	
5.33	5.20. 0	373.03	373.03	373.03	373.03	372.89	372.72	370.99	369.16	368.40	367.57	182.74	182.67	182.60	
5.42	5.25. 0	371.40	371.40	371.40	371.40	371.26	371.09	369.37	367.55	366.81	365.98	182.29	182.22	182.15	
5.50	5.30. 0	369.78	369.78	369.78	369.78	369.64	369.47	367.77	365.97	365.23	364.42	181.84	181.78	181.71	
5.58	5.35. 0	368.19	368.19	368.19	368.19	368.05	367.88	366.18	364.40	363.67	362.86	181.41	181.34	181.27	
5.67	5.40. 0	366.61	366.61	366.61	366.61	366.47	366.30	364.62	362.85	362.13	361.33	180.98	180.91	180.84	
5.75	5.45. 0	365.05	365.05	365.05	365.05	364.91	364.74	363.07	361.32	360.61	359.81	180.55	180.49	180.42	
5.83	5.50. 0	363.51	363.51	363.51	363.51	363.37	363.20	361.54	359.81	359.10	358.31	180.14	180.07	180.00	
5.92	5.55. 0	361.98	361.98	361.98	361.98	361.84	361.67	360.03	358.31	357.60	356.83	179.72	179.66	179.59	
6.00	6. 0. 0	360.47	360.47	360.47	360.47	360.33	360.16	358.53	356.82	356.13	355.36	179.32	179.25	179.19	

6.17	6 . 0	357.50	357.50	357.50	357.50	357.36	35	355.58	353.90	353.21	352.45	178.53	178.4.	178.40
6.37	6.27. 0	354.58	354.58	354.58	354.58	354.45	354.28	352.69	351.04	350.37	349.62	177.76	177.70	177.63
6.53	6.37. 0	351.73	351.73	351.73	351.73	351.60	351.43	349.86	348.24	347.58	346.85	177.01	176.95	176.88
6.67	6.47. 0	348.94	348.94	348.94	348.94	348.81	348.65	347.10	345.50	344.85	344.13	176.28	176.22	176.16
6.83	6.57. 0	346.21	346.21	346.21	346.21	346.08	345.92	344.39	342.81	342.18	341.47	175.57	175.51	175.45
7.03	7. 7. 0	343.54	343.54	343.54	343.54	343.40	343.24	341.73	340.19	339.56	338.87	174.87	174.81	174.75
7.17	7.17. 0	340.92	340.92	340.92	340.92	340.78	340.62	339.13	337.61	336.99	336.31	174.19	174.14	174.08
7.33	7.27. 0	338.35	338.35	338.35	338.35	338.22	338.06	336.59	335.09	334.48	333.81	173.53	173.48	173.42
7.53	7.37. 0	335.84	335.84	335.84	335.84	335.71	335.55	334.09	332.62	332.02	331.36	172.89	172.84	172.78
7.67	7.47. 0	333.38	333.38	333.38	333.38	333.24	333.09	331.65	330.19	329.61	328.96	172.26	172.21	172.15
7.83	7.57. 0	330.96	330.96	330.96	330.96	330.83	330.67	329.25	327.82	327.24	326.60	171.65	171.60	171.54
8.03	8. 0. 0	328.59	328.59	328.59	328.59	328.46	328.31	326.90	325.49	324.92	324.30	171.05	171.00	170.94
8.17	8.10. 0	326.27	326.27	326.27	326.27	326.14	325.99	324.60	323.21	322.65	322.03	170.47	170.42	170.36
8.37	8.20. 0	324.00	324.00	324.00	324.00	323.87	323.72	322.34	320.97	320.42	319.81	169.90	169.85	169.79
8.53	8.30. 0	321.77	321.77	321.77	321.77	321.64	321.49	320.13	318.77	318.23	317.64	169.34	169.29	169.24
8.67	8.40. 0	319.58	319.58	319.58	319.58	319.45	319.30	317.95	316.62	316.09	315.50	168.80	168.75	168.70
8.83	8.50. 0	317.43	317.43	317.43	317.43	317.30	317.15	315.82	314.51	313.98	313.40	168.26	168.22	168.17
9.03	9. 7. 0	315.33	315.33	315.33	315.33	315.20	315.05	313.73	312.44	311.92	311.35	167.74	167.70	167.65
9.17	9.17. 0	313.26	313.26	313.26	313.26	313.13	312.98	311.68	310.40	309.89	309.33	167.24	167.19	167.14
9.37	9.20. 0	311.23	311.23	311.23	311.23	311.10	310.96	309.67	308.40	307.90	307.35	166.74	166.70	166.65
9.53	9.37. 0	309.24	309.24	309.24	309.24	309.11	308.97	307.69	306.44	305.95	305.40	166.26	166.21	166.17
9.67	9.47. 0	307.29	307.29	307.29	307.29	307.16	307.02	305.75	304.52	304.03	303.50	165.78	165.74	165.69
9.87	9.57. 0	305.37	305.37	305.37	305.37	305.24	305.10	303.85	302.63	302.15	301.62	165.32	165.28	165.23
10.03	10. 3. 0	303.49	303.49	303.49	303.49	303.36	303.22	301.98	300.78	300.30	299.78	164.87	164.82	164.78
10.17	10.17. 0	301.64	301.64	301.64	301.64	301.51	301.37	300.14	298.96	298.49	297.97	164.42	164.38	164.33
10.37	10.23. 0	299.83	299.83	299.83	299.83	299.70	299.55	298.34	297.17	296.70	296.20	163.99	163.95	163.90
10.53	10.33. 0	298.04	298.04	298.04	298.04	297.91	297.77	296.56	295.41	294.95	294.46	163.56	163.52	163.48
10.67	10.47. 0	296.29	296.29	296.29	296.29	296.16	296.02	294.82	293.68	293.23	292.74	163.15	163.11	163.06
10.87	10.57. 0	294.57	294.57	294.57	294.57	294.44	294.30	293.11	291.99	291.56	291.06	162.74	162.70	162.66
11.03	11. 3. 0	292.88	292.88	292.88	292.88	292.75	292.61	291.44	290.32	289.88	289.41	162.34	162.30	162.26
11.17	11.17. 0	291.22	291.22	291.22	291.22	291.09	290.95	289.78	288.68	288.25	287.78	161.95	161.91	161.87
11.33	11.23. 0	289.59	289.59	289.59	289.59	289.46	289.32	288.16	287.07	286.65	286.18	161.57	161.53	161.49
11.53	11.33. 0	287.98	287.98	287.98	287.98	287.85	287.71	286.57	285.49	285.07	284.61	161.19	161.15	161.11
11.67	11.47. 0	286.40	286.40	286.40	286.40	286.28	286.14	285.00	283.94	283.52	283.07	160.92	160.79	160.75
11.83	11.57. 0	284.85	284.85	284.85	284.85	284.73	284.59	283.46	282.41	282.00	281.55	160.46	160.43	160.39
12.03	12. 3. 0	283.33	283.33	283.33	283.33	283.20	283.07	281.95	280.91	280.50	280.06	160.11	160.07	160.04

-----TIME------	INSERT-----+--GAP---+-----I-SHELL-----+----G-SHIELD-----+-----O-SHELL-----+N-SHIELD+-------O-LINER-------			
DELTA-T	343.03	343.03	351.15	381.57	1227.94
TIME (HRS)	.95	.95	.57	.51	.50
MAX FIRE TEMP	493.13	482.90	490.07	520.27	1365.43

MAX FUEL PIN TEMP
603.18DEG-F 317.32DEG-C

*AS PER 10CFR PART71 SECTION71.73, NSOLAR=0, BEFORE, DURING AND AFTER THE FIRE.
DATA IGNORED - IN CONTROL MODE

APPENDIX E

SECTION VIII

Mark 42 Fuel Assembly Computer Printout

Page added
August 1988

```
S C O P E   INPUT (IN CARD-IMAGE FORMAT) FOLLOWS:

 NLI-1/2 WITH A MARK42 ASSEMBLY: INSOLANCE: 130 DEG AMBIENT
21  0  3  0  450.0  1.209E+9  2.746E+11  1  3  6
4.237  0.125  14.756  0  12.67  6  0.58  0.625  0.125
0.1   14  0.01 14  0.0  1  13.37  486
0.50  0.975  0.25  1  1.0  0.5  0.5  999  50  130.0  0
1  1    1  4.875  5.0
0
```

PROPERTIES OF MATERIALS CURRENTLY IN THE DATA LIBRARY

MATERIAL		DENSITY (LB/CUFT)	CONDUCTIVITY (BTU/HR/FT/F)	HEAT CAPACITY (BTU/LB/F)	TEMPERATURE LIMIT (DEGREES F)	CAPITAL COST ($/LB)
1	PB	709.56	18.0000	.0320	618	3.000
2	FE	489.26	26.0000	.1200	1950	2.000
3	U	1187.25	15.0000	.0230	1450	9.000
4	CU	559.35	210.0000	.0950	1730	.560
5	AL	169.49	140.0000	.2280	1050	.280
6	SS	494.43	11.0000	.1200	1800	4.000
7	NA	45.00	39.0000	.3000	1400	.200
8	LI	30.00	20.0000	1.0000	1600	11.000
9	PB-L	146.60	.4400	.1560	1200	1.890
10	CONC	207.60	18.0000	.0320	618	.160
11	ALSI	170.00	80.0000	.2000	1065	.350
12	DOWA	60.00	.0760	.5260	600	1.000
13	HE	.01	.1700	1.2400	1400	.000
14	AIR	.08	.0360	.2600	1400	.000
15	H2O	62.43	.3920	1.0000	250	.000
16	HUL3	81.20	.3000	.0660	1000	.000
17	SHOT	370.00	.3500	.0950	1400	.000
18	HUL1	284.00	1.2000	.0660	1000	.000
19	HLWG	212.00	.7070	.1600	1290	.000
20	HUL2	203.00	.6000	.0660	1000	.000
21	PWR	220.90	1.0000	.1000	1650	.000
22	BWR	199.30	1.0000	.1000	1650	.000
23	HLWC	117.00	.2500	.2200	932	.000

NOTE: THIS EDIT WILL BE PRINTED ONLY ONCE, EVEN THOUGH
THE USER MAY HAVE MULTIPLE SETS OF INPUT DATA.

```
  EMISC      .500            EMISC---SURFACE EMISSIVITY OF THE CASK (DIMENSIONLESS)

CASK DESIGN LIMITS

  TFNMAX    299.0 DEG.F      TFNMAX--MAXIMUM ALLOWABLE SURFACE TEMPERATURE
  WGHTMX     50.0 KILO.LBS   WGHTMX--MAXIMUM ALLOWABLE WEIGHT OF LOADED CASK
  TAMB      130.0 DEG.F      TAMB----OUTSIDE AMBIENT TEMPERATURE
  NSOLAR      0              NSOLAR--INCLUSION OF SOLAR INSOLANCE AT 122.92(BTU/HR)/FT**2 (1=YES, 2=NO)
```

TITLE: NL1-1/2 WITH A MARK42 ASSEMBLY: INSOLANCE: 130 DEG AMBIENT

DESCRIPTION OF WASTE MATERIAL

MELEM	21	(PWR)	MELEM---TYPE OF WASTE MATERIAL (SHOWN IN BRACKETS)
BU	0.	MWD/MT	BU------AVERAGE BURNUP (EDIT FOR BOOKEEPING PURPOSES ONLY; NO LONGER USED)
TIME	3.00	YEARS	TIME----COOLING TIME (AGE OF FUEL SINCE DISCHARGE)
WHEAT	.0	WATTS/CUFT	WHEAT---DECAY HEAT GIVEN OFF BY THE WASTE MATERIAL; NOT USED IF ZERO
BHEAT	4.5+002	WATTS/ASSY	BHEAT---DECAY HEAT GIVEN OFF BY EACH ASSEMBLY (OR CANISTER); NOT USED IF ZERO
SRCN	1.2+009	N/SEC/ASSY	SRCN----NEUTRON SOURCE (EDIT FOR BOOKEEPING PURPOSES ONLY; NO LONGER USED)
SRCG	2.7+011	P/SEC/ASSY	SRCG----PHOTON SOURCE (EDIT FOR BOOKEEPING PURPOSES ONLY; NO LONGER USED)

DESCRIPTION OF WASTE CONTAINER

ITYPE	1		ITYPE---FLAG: 1 FOR SQUARE CANISTERS; 2 FOR SQUARE ASSEMBLIES (WITHOUT CAN)
NPINS	3		NPINS---NUMBER OF FUEL PINS PER ASSEMBLY (IF MELEM DENOTES PWR OR BWR)
MCAN	6	(SS)	MCAN----TYPE OF MATERIAL USED FOR CANISTERS (NO CAN USED IF MCAN=0)
OBCAN	4.23	INCHES	OBCAN---OUTSIDE DIM OF CANISTER (MCAN>0), OR WIDTH OF FUEL ASSEMBLY (MCAN=0)
TKCAN	.125	INCHES	TKCAN---WALL THICKNESS OF CANISTER (IF MCAN.GT.0)
HTCAN	14.75	FEET	HTCAN---LENGTH OF CANISTER (OR FUEL ASSEMBLY)
HTVOID	.00	FEET	HTVOID--PORTION OF CANISTER NOT OCCUPIED BY WASTE MATERIAL (IF MCAN.GT.0)
HTFUEL	12.67	FEET	HTFUEL--PORTION OF FUEL ASSEMBLY CONTAINING UO2 (IF MELEM DENOTES PWR OR BWR)

DESCRIPTION OF INSERT

MINSRT	6	(SS)	MINSRT--TYPE OF MATERIAL USED FOR INSERT (SHOWN IN BRACKETS)
EMINST	.530		EMINST--SURFACE EMISSIVITY OF THE INSERT MATERIAL (DIMENSIONLESS)
TKINST	.625	INCHES	TKINST--THICKNESS OF INSERT BETWEEN ASSEMBLIES (INCLUDES TPOISN)
TPOISN	.125	INCHES	TPOISN--THICKNESS OF NEUTRON POISON IMBEDDED IN INSERT MATL BETWEEN ASSEMBLIES
TKCGAP	.100	INCHES	TKCGAP--THICKNESS OF GAP BETWEEN CANISTER AND INSERT
MCGAP	14	(AIR)	MCGAP---TYPE OF GAP ATMOSPHERE (SHOWN IN BRACKETS)
TKIGAP	.010	INCHES	TKIGAP--THICKNESS OF GAP BETWEEN INSERT AND THE INNER SHELL
MIGAP	14	(AIR)	MIGAP---TYPE OF GAP ATMOSPHERE (SHOWN IN BRACKETS)
WTHICK	.700	INCHES	WTHICK--THICKNESS OF THE INSERT BETWEEN CANISTER AND INNER SHELL
NELEM	1		NELEM---NUMBER OF ASSEMBLIES (OR CANISTERS) PER CASK; IF ZERO, PERFORM SEARCH
CASKID	13.37	INCHES	CASKID--INSIDE DIAMETER OF THE CASK (CALCULATED BY CODE IF USER ENTERS 0.0)

DESCRIPTION OF INNER & OUTER SHELL AND THE OUTSIDE LINER

MISHL	6	(SS)	MISHL---TYPE OF MATERIAL USED FOR THE INNER SHELL (SHOWN IN BRACKETS)
MOSHL	6	(SS)	MOSHL---TYPE OF MATERIAL USED FOR THE OUTER SHELL (SHOWN IN BRACKETS)
MOLIN	6	(SS)	MOLIN---TYPE OF MATERIAL USED FOR OUTSIDE LINER AND FINS (IF REQUIRED)
TKISHL	.500	INCHES	TKISHL--THICKNESS OF INNER SHELL
TKOSHL	.975	INCHES	TKOSHL--THICKNESS OF OUTER SHELL
TKOLIN	.250	INCHES	TKOLIN--THICKNESS OF OUTSIDE LINER

DESCRIPTION OF NEUTRON AND GAMMA SHIELDS

MNSHLD	15	(H2O)	MNSHLD--TYPE OF MATERIAL USED FOR NEUTRON SHIELD (SHOWN IN BRACKETS)
MGSHLD	1	(PB)	MGSHLD--TYPE OF MATERIAL USED FOR GAMMA SHIELD (SHOWN IN BRACKETS)

DESCRIPTION OF HEAT TRANSFER PARAMETERS FOR FINS (& CASK)

MFIN	6	(SS)	MFIN----TYPE OF MATERIAL USED FOR FINS (IF REQUIRED)
SPFIN	1.000	INCHES	SPFIN---SPACING BETWEEN FINS
EM	.500		EMISF---SURFACE EMISSIVITY [illegible] FINS (DIMENSIONLESS)

COMPONENT		DIMENSION(INCHES)
O-LINER	=	.250
N-SHIELD	=	5.000
O-SHELL	=	.875
G-SHIELD	=	4.875
I-SHELL	=	.500
I-GAP	=	.010
W-INSRT	=	.625
C/F-GAP	=	.100
O-CANSTR	=	4.230
I-CANSTR	=	3.930
O-LENGTH	=	152.040
W-POISN	=	.125
I-CASK	=	13.370

THERMAL PARAMETERS

AMBIENT TEMP = 100.000 (DEG.F)

SOLAR INSOLANCE = 0 (1-YES,2-NO)

TOTAL DECAY HEAT = .450 (KW)

MAXIMUM
STEADY STATE TEMPERATURES
DEGREES-F

SURFACE T	O-LINER T	O-LINER D-T	N-SHIELD T	N-SHIELD D-T	O-SHELL T	O-SHELL D-T	PU-SHIELD T	PU-SHIELD D-T	I-SHELL T	I-SHELL D-T
141.90	141.33	.03	142.23	.90	142.39	.15	142.89	.51	143.04	.15

HE-GAP T	HE-GAP D-T	INSERT T	INSERT D-T	HE-GAP T	HE-GAP D-T	CANISTER T	CANISTER D-T	FUEL PIN T	FUEL PIN D-T	FUEL PIN DEG-C
144.70	1.66	144.70	.00	177.03	32.33	185.78	8.75	252.69	66.91	122.60

P R E F I R E T E M P E R A T U R E S D E G - F

TIME	INSERT	GAP	I-SHELL	G-SHIELD	O-SHELL	N-SHIELD	O-LINER
RADIUS (FEET)	.2053 .4200 .5562 .5571 .5783 .5987			.8272 1.0050 1.0421 1.0779		1.4946 1.5050	1.5154

STEADY STATE TEMPERATURES USED FOR CALCULATING DELTA-T ONLY (WITH N-SHIELD FULL)

.00 0. 0. 0 145.97 144.95 144.3[illegible] 142.[illegible]1 142.64 142.58 142.24 142.04 141.97 141.91 141.01 141.00 140.99

STEADY STATE TEMPERATURES USED FOR CALCULATING DELTA-T ONLY (WITH N-SHIELD VOIDED)

.00 0. 0. 0 167.83 166.71 166.2[illegible] 164.58 164.52 164.45 164.12 163.91 163.85 163.79 141.01 141.00 140.99

DELTA-T, TIME=0 21.86 21.87 21.87 21.97 .00

TRANSIENT TEMPERATURES DEG-F

TIME	INSERT	GAP	I-SHELL	G-SHIELD	O-SHELL	N-SHIELD	O-LINER
RADIUS (FEET)	.2083	.4270	.5562	.5571	.5783	.5997	.8272	1.0050	1.0421	1.0779	1.4946	1.5050	1.5154
.00 0. 0. 9	167.83	166.71	166.23	164.58	164.52	164.46	164.12	163.91	163.85	163.80	165.82	171.67	191.70
.00 0. 7.18	167.83	166.71	166.23	164.58	164.52	164.46	164.12	163.91	163.86	163.86	205.37	209.87	215.35
.01 0. 7.27	167.83	166.71	166.22	164.58	164.52	164.46	164.12	163.92	163.89	163.96	236.73	240.70	256.38
.01 0. 7.36	167.83	166.71	166.22	164.58	164.52	164.46	164.12	163.93	163.93	164.09	271.94	276.39	285.61
.01 0. 7.45	167.83	166.71	166.22	164.58	164.52	164.46	164.12	163.95	164.00	164.26	305.13	308.69	322.38
.01 0. 7.54	167.83	166.71	166.22	164.58	164.52	164.46	164.12	163.98	164.09	164.47	338.63	343.23	353.63
.01 0. 1. 3	167.83	166.71	166.22	164.58	164.52	164.46	164.13	164.03	164.20	164.72	371.95	375.54	388.23
.02 0. 1.12	167.83	166.71	166.22	164.58	164.52	164.46	164.13	164.09	164.35	165.01	404.57	409.08	419.97
.02 0. 1.21	167.83	166.71	166.22	164.58	164.52	164.46	164.15	164.17	164.51	165.35	437.35	441.07	453.18
.02 0. 1.30	167.83	166.71	166.22	164.59	164.52	164.46	164.16	164.26	164.71	165.73	469.25	473.65	484.69
.02 0. 1.39	167.83	166.71	166.22	164.59	164.52	164.46	164.18	164.38	164.94	166.16	501.23	505.07	516.76
.03 0. 1.48	167.83	166.71	166.22	164.59	164.52	164.47	164.21	164.52	165.21	166.63	532.36	536.64	547.67
.03 0. 1.57	167.83	166.71	166.22	164.59	164.53	164.47	164.24	164.68	165.51	167.16	563.34	567.28	578.64
.03 0. 2. 6	167.83	166.71	166.22	164.60	164.53	164.48	164.28	164.97	165.85	167.75	593.54	597.78	608.68
.04 0. 2.15	167.83	166.71	166.22	164.60	164.54	164.49	164.33	165.09	166.23	168.39	623.44	627.45	638.49
.04 0. 2.24	167.83	166.71	166.22	164.61	164.55	164.50	164.39	165.34	166.65	169.08	652.57	656.77	667.47
.04 0. 2.33	167.83	166.71	166.22	164.62	164.55	164.51	164.46	165.61	167.11	169.84	681.25	685.30	696.02
.04 0. 2.42	167.83	166.71	166.22	164.63	164.57	164.52	164.54	165.92	167.61	170.66	709.15	713.34	723.78
.05 0. 2.51	167.83	166.71	166.22	164.64	164.58	164.54	164.63	166.26	168.17	171.54	736.50	740.59	750.97
.05 0. 3. 0	167.83	166.71	166.23	164.65	164.60	164.56	164.74	166.64	168.77	172.48	763.06	767.22	777.37
.05 0. 3.15	167.83	166.71	166.23	164.69	164.63	164.61	164.95	167.35	169.86	174.12	805.62	809.68	819.49
.06 0. 3.30	167.83	166.71	166.23	164.73	164.68	164.67	165.20	168.15	171.08	175.96	845.91	850.07	859.69
.06 0. 3.45	167.83	166.71	166.23	164.78	164.74	164.74	165.50	169.07	172.45	177.97	884.19	888.28	897.51
.06 0. 4. 0	167.83	166.71	166.24	164.85	164.82	164.83	165.86	170.10	173.95	180.14	920.13	924.28	933.22
.07 0. 4.15	167.83	166.71	166.24	164.94	164.91	164.95	166.27	171.24	175.58	182.46	953.89	958.00	966.62
.07 0. 4.30	167.83	166.71	166.25	165.04	165.03	165.08	166.73	172.49	177.35	184.93	985.31	989.47	997.79
.08 0. 4.45	167.83	166.71	166.26	165.17	165.16	165.24	167.27	173.87	179.25	187.52	1014.53	1018.66	1026.66
.08 0. 5. 0	167.83	166.71	166.27	165.32	165.32	165.43	167.86	175.35	181.26	190.22	1041.48	1045.64	1053.35
.09 0. 5.15	167.83	166.72	166.29	165.49	165.51	165.64	168.53	176.94	183.39	193.02	1066.31	1070.45	1077.86
.09 0. 5.30	167.83	166.72	166.39	165.69	165.73	165.99	169.26	178.46	185.62	195.91	1089.02	1093.18	1100.31
.10 0. 5.45	167.83	166.72	166.33	165.92	165.98	166.18	170.07	180.43	187.94	198.87	1109.76	1113.91	1120.78
.10 0. 6. 0	167.83	165.73	166.35	166.19	166.26	166.50	170.94	182.32	190.34	201.88	1128.59	1132.76	1139.37
.10 0. 6.15	167.83	165.73	166.39	166.49	166.58	166.85	171.89	184.28	192.81	204.92	1145.66	1149.82	1156.20
.11 0. 6.30	167.83	165.74	166.42	166.92	166.94	167.25	172.90	186.33	195.34	209.00	1161.06	1165.23	1171.38
.11 0. 6.45	167.83	165.74	166.46	167.19	167.33	167.69	173.98	188.44	197.93	211.09	1174.92	1179.09	1185.04
.12 0. 7. 0	167.84	166.75	166.50	167.60	167.77	168.18	175.13	190.62	200.55	214.19	1187.36	1191.54	1197.30
.12 0. 7.15	167.34	166.76	166.55	168.05	168.25	168.70	176.35	192.94	203.20	217.28	1198.51	1202.68	1208.27
.12 0. 7.30	167.34	166.77	166.61	168.56	168.77	169.28	177.62	195.12	205.88	220.37	1208.46	1212.64	1218.07
.13 0. 7.45	167.84	165.79	166.68	169.08	169.34	169.89	178.95	197.43	208.57	223.43	1217.33	1221.51	1226.80
.13 0. 8. 0	167.84	166.90	166.75	169.65	169.94	170.56	180.34	199.77	211.26	226.47	1225.22	1229.41	1234.57
.14 0. 8.15	167.85	166.92	166.83	170.27	170.60	171.27	181.78	202.13	213.96	229.48	1232.24	1236.42	1241.47
.14 0. 8.30	167.85	166.94	166.92	170.93	171.29	172.02	183.27	204.52	216.66	232.47	1238.47	1242.65	1247.59
.15 0. 8.45	167.85	166.86	167.02	171.64	172.03	172.82	184.80	206.91	219.35	235.41	1243.98	1248.17	1253.01
.15 0. 9. 0	167.86	166.89	167.13	172.38	172.82	173.66	186.38	209.32	222.03	238.33	1248.87	1253.05	1257.81
.16 0. 9.27	167.87	166.95	167.35	173.93	174.39	175.28	189.31	213.66	226.80	243.41	1256.35	1260.51	1265.13
.16 0. 9.54	167.89	167.01	167.62	175.40	175.99	177.04	192.34	217.99	231.51	248.43	1262.30	1266.48	1271.01
.17 0.10.21	167.90	167.09	167.89	177.10	177.76	178.93	195.47	222.30	236.16	253.33	1267.08	1271.25	1275.68
.18 0.10.48	167.93	167.19	168.20	178.92	179.66	180.93	198.67	226.59	240.73	258.12	1270.87	1275.05	1279.43
.19 0.11.15	167.95	167.29	168.55	180.94	181.66	183.04	201.93	230.84	245.24	262.80	1273.92	1278.08	1282.40
.19 0.11.42	167.99	167.42	168.94	182.86	183.77	185.26	205.24	235.05	249.68	267.37	1276.34	1280.51	1284.78

Page added
August 1988

TIME	INSERT	GAP	I-SHELL			G-SHIELD			O-SHELL		N-SHIELD		O-LINER	
.20	0.12. 9	163.03	167.56	169.37	184.98	185.97	187.57	208.59	239.22	254.04	271.85	1278.29	1282.44	1286.69
.21	0.13.36	168.07	167.72	169.85	187.18	188.26	189.96	211.97	243.35	258.33	276.23	1279.84	1284.00	1288.21
.22	0.13. 3	168.13	167.90	170.33	189.46	190.62	192.42	215.37	247.42	262.56	280.53	1281.10	1285.25	1289.46
.23	0.13.30	168.19	168.10	170.86	191.81	193.05	194.96	218.79	251.45	266.72	284.75	1282.11	1286.26	1290.43
.24	0.13.57	168.26	168.33	171.43	194.21	195.55	197.55	222.22	255.44	270.81	288.90	1282.94	1287.08	1291.24
.25	0.14.24	168.35	168.57	172.03	196.67	198.10	200.20	225.66	259.38	274.85	292.98	1283.61	1287.76	1291.90
.25	0.14.51	168.44	168.94	172.66	199.18	200.69	202.99	229.17	263.28	278.84	297.00	1284.17	1288.31	1292.44
.26	0.15.18	168.55	169.12	173.33	201.74	203.33	205.62	232.54	267.14	282.78	300.96	1284.63	1288.78	1292.90
.27	0.15.45	168.66	169.43	174.03	204.32	206.01	208.39	235.97	270.96	286.66	304.87	1285.03	1289.17	1293.28
.28	0.16.12	168.79	169.77	174.77	206.94	208.71	211.18	239.40	274.74	290.51	308.73	1285.36	1289.50	1293.60
.29	0.16.39	168.94	170.13	175.53	209.59	211.45	214.00	242.83	278.49	294.31	312.56	1285.66	1289.79	1293.88
.29	0.17. 6	169.10	170.51	176.33	212.26	214.23	216.84	246.24	282.20	298.07	316.31	1285.91	1290.04	1294.13
.29	0.17.33	169.27	170.91	177.15	214.95	216.97	219.70	249.64	285.88	301.79	320.04	1286.14	1290.26	1294.35
.30	0.18. 0	169.46	171.34	178.00	217.65	219.76	222.57	253.03	289.53	305.47	323.73	1286.34	1290.47	1294.55
.31	0.18.45	169.81	172.11	179.43	222.19	224.44	227.38	258.66	295.54	311.53	329.77	1286.69	1290.80	1294.87
.32	0.19.30	170.21	172.95	181.03	226.74	229.13	232.20	264.25	301.47	317.51	335.75	1286.98	1291.09	1295.15
.34	0.20.15	170.65	173.85	182.65	231.32	233.84	237.03	269.79	307.33	323.41	341.65	1287.25	1291.35	1295.41
.35	0.21. 0	171.15	174.82	184.34	235.89	238.55	241.87	275.30	313.12	329.26	347.47	1287.49	1291.59	1295.64
.36	0.21.45	171.70	175.85	186.09	240.47	243.25	246.69	280.77	318.84	334.99	353.22	1287.73	1291.82	1295.86
.38	0.22.30	172.30	176.95	187.91	245.04	247.95	251.51	286.19	324.51	340.69	358.91	1287.95	1292.04	1296.09
.39	0.23.15	172.96	178.11	189.78	249.60	252.64	256.31	291.58	330.12	346.32	364.53	1288.17	1292.25	1296.28
.40	0.24. 0	173.67	179.33	191.71	254.14	257.30	261.09	296.92	335.67	351.90	370.10	1288.38	1292.46	1296.49
.41	0.24.45	174.44	180.61	193.69	258.67	261.96	265.85	302.22	341.17	357.42	375.61	1288.60	1292.67	1296.69
.42	0.25.30	175.26	181.95	195.73	263.18	266.59	270.59	307.48	346.62	362.88	381.06	1288.81	1292.87	1296.89
.44	0.26.15	176.14	183.35	197.81	267.68	271.19	275.30	312.70	352.02	368.30	386.46	1289.02	1293.08	1297.09
.45	0.27. 0	177.09	184.81	199.95	272.15	275.78	279.99	317.88	357.37	373.66	391.81	1289.23	1293.28	1297.29
.46	0.27.45	178.07	186.32	202.12	276.60	280.34	284.65	323.02	362.67	378.98	397.11	1289.45	1293.49	1297.49
.47	0.28.30	179.12	187.89	204.35	281.02	284.88	289.28	328.11	367.92	384.24	402.36	1289.65	1293.70	1297.69
.48	0.29.15	180.23	189.51	206.62	285.43	289.39	293.89	333.17	373.13	389.46	407.57	1289.87	1293.90	1297.89
.50	0.30. 0	181.39	191.19	208.93	289.81	293.89	298.47	338.19	378.30	394.66	412.73	1290.08	1294.11	1298.09
.50	0.30. 9	181.63	191.53	209.40	290.67	294.77	299.39	339.19	379.32	395.65	413.64	1269.10	1268.09	1254.99
.50	0.30.18	181.89	191.87	209.87	291.54	295.66	300.30	340.19	380.34	396.57	414.02	1237.41	1238.47	1237.86
.51	0.30.27	182.12	192.22	210.34	292.41	296.55	301.21	341.19	381.30	397.30	413.96	1214.27	1214.74	1205.85
.51	0.30.36	182.36	192.57	210.82	293.28	297.44	302.11	342.17	382.20	397.85	413.75	1188.82	1188.94	1186.44
.51	0.30.45	182.61	192.92	211.29	294.15	298.33	303.02	343.15	383.02	398.26	413.19	1166.43	1167.23	1160.55
.51	0.30.54	182.86	193.27	211.77	295.02	299.22	303.93	344.11	383.73	398.54	412.96	1144.55	1144.46	1141.21
.52	0.31. 3	183.12	193.62	212.25	295.88	300.10	304.83	345.05	384.36	398.71	412.46	1123.78	1124.52	1119.10
.52	0.31.12	183.37	193.98	212.73	296.75	300.98	305.72	345.97	384.90	398.81	411.92	1104.25	1104.14	1100.70
.52	0.31.21	183.63	194.34	213.21	297.61	301.86	306.62	346.86	385.36	398.83	411.35	1085.22	1085.81	1081.20
.53	0.31.30	183.89	194.70	213.69	298.46	302.74	307.50	347.72	385.75	398.79	410.76	1067.47	1067.41	1063.98
.53	0.31.39	184.15	195.06	214.18	299.31	303.61	308.39	348.56	386.06	398.69	410.15	1050.06	1050.50	1046.44
.53	0.31.48	184.41	195.42	214.66	300.16	304.47	309.26	349.36	386.32	398.56	409.53	1033.75	1033.76	1030.42
.53	0.31.57	184.68	195.79	215.15	301.00	305.33	310.12	350.13	386.52	398.38	408.90	1017.77	1018.10	1014.65
.53	0.32. 6	184.95	196.16	215.63	301.83	306.18	310.98	350.87	386.67	398.17	408.26	1002.70	1002.72	999.55
.54	0.32.15	185.22	196.53	216.12	302.66	307.02	311.82	351.58	386.78	397.93	407.63	987.97	988.20	984.87
.54	0.32.24	185.49	196.90	216.61	303.48	307.85	312.66	352.25	386.85	397.67	406.99	973.98	974.01	971.00
.54	0.32.33	185.76	197.27	217.10	304.28	308.67	313.48	352.89	386.88	397.39	406.35	960.34	960.51	957.43
.54	0.32.42	186.04	197.65	217.59	305.08	309.47	314.29	353.50	386.89	397.08	405.72	947.31	947.34	944.49
.55	0.32.51	186.32	198.02	218.09	305.86	310.27	315.08	354.08	386.86	396.76	405.09	934.62	934.74	931.88
.55	0.33. 0	186.60	198.40	218.58	306.64	311.05	315.87	354.63	386.80	396.43	404.46	922.45	922.48	919.79
.55	0.33.15	187.07	199.04	219.40	307.90	312.33	317.14	355.49	386.67	395.85	403.45	902.84	902.92	900.26
.56	0.33.30	187.55	199.68	220.22	309.12	313.57	318.36	356.27	386.48	395.26	402.43	884.32	884.32	881.87
.56	0.33.45	188.04	200.32	221.04	310.31	314.77	319.55	356.99	386.25	394.64	401.43	866.70	866.74	864.33
.57	0.34. 0	188.53	200.97	221.85	311.46	315.92	320.69	357.62	385.98	394.01	400.44	849.95	849.96	847.71
.57	0.34.15	189.02	201.62	222.67	312.57	317.04	321.79	358.20	385.68	393.37	399.46	834.02	834.03	831.82

TIME		INSERT	GAP	I-SHELL			G-SHIELD		O-SHELL	N-SHIELD		O-LINER	
.57	0.34.30	189.52	202.28	223.68	313.63	318.11	322.92	358.72	385.35	392.72	399.51	818.82	818.72
.58	0.34.45	190.03	202.94	224.29	314.66	319.13	323.85	359.19	385.00	392.07	397.57	804.28	804.27	802.24
.51	0.35. 0	190.55	203.61	225.10	315.64	320.12	324.91	359.61	384.63	391.41	396.66	790.39	790.34	788.42
.59	0.35.15	191.06	204.27	225.90	316.58	321.06	325.72	359.99	384.24	390.76	395.76	777.06	777.03	775.16
.59	0.35.30	191.59	204.94	226.79	317.48	321.96	326.60	360.32	383.84	390.11	394.88	764.30	764.24	762.46
.60	0.35.45	192.12	205.62	227.49	318.34	322.81	327.43	360.61	383.43	389.46	394.02	752.03	751.99	750.24
.60	0.36. 0	192.65	206.29	228.29	319.16	323.63	328.21	360.86	383.01	388.82	393.17	740.26	740.19	738.52
.60	0.36.15	193.19	206.97	229.06	319.95	324.40	328.96	361.07	382.59	388.18	392.35	728.91	728.85	727.23
.61	0.36.30	193.73	207.65	229.84	320.69	325.14	329.67	361.26	382.16	387.55	391.54	718.00	717.93	716.37
.61	0.36.45	194.28	208.33	230.60	321.40	325.84	330.34	361.41	381.72	386.93	390.75	707.48	707.40	705.88
.62	0.37. 0	194.84	209.01	231.37	322.07	326.50	330.97	361.54	381.28	386.31	389.97	697.33	697.25	695.78
.62	0.37.15	195.40	209.69	232.12	322.71	327.12	331.57	361.64	380.84	385.70	389.21	687.53	687.45	686.02
.63	0.37.30	195.96	210.37	232.87	323.31	327.72	332.13	361.72	380.40	385.09	388.47	678.06	677.98	676.59
.63	0.37.45	196.53	211.05	233.61	323.88	328.27	332.65	361.77	379.96	384.49	387.74	668.91	668.82	667.47
.63	0.38. 0	197.10	211.74	234.34	324.42	328.80	333.15	361.80	379.51	383.90	387.02	660.05	659.95	658.65
.64	0.38.15	197.67	212.42	235.06	324.93	329.29	333.61	361.82	379.07	383.32	386.32	651.47	651.38	650.10
.64	0.38.30	198.25	213.10	235.79	325.41	329.76	334.05	361.81	378.62	382.74	385.63	643.17	643.07	641.89
.65	0.38.45	198.83	213.79	236.49	325.87	330.20	334.45	361.79	378.18	382.17	384.95	635.12	635.02	633.81
.65	0.39. 0	199.42	214.47	237.19	326.30	330.61	334.83	361.75	377.74	381.61	384.29	627.31	627.20	626.05
.66	0.39.27	200.43	215.69	238.43	327.00	331.29	335.45	361.64	376.95	380.62	383.13	613.77	613.66	612.52
.66	0.39.54	201.56	216.91	239.65	327.63	331.83	335.99	361.49	376.16	379.64	382.00	600.92	600.80	599.73
.67	0.40.21	202.64	218.12	240.86	328.19	332.40	336.46	361.30	375.38	378.69	380.91	588.71	588.60	587.56
.69	0.40.48	203.73	219.33	242.07	328.69	332.86	336.87	361.08	374.61	377.76	379.84	577.10	576.98	575.99
.69	0.41.15	204.83	220.53	243.15	329.12	333.26	337.21	360.83	373.94	376.84	378.80	566.03	565.92	564.96
.69	0.41.42	205.93	221.72	244.26	329.50	333.69	337.50	360.55	373.08	375.94	377.79	555.48	555.36	554.44
.71	0.42. 9	207.04	222.91	245.36	329.83	333.89	337.73	360.25	372.33	375.06	376.80	545.39	545.27	544.39
.71	0.42.36	208.16	224.08	246.43	330.12	334.11	337.93	359.92	371.58	374.19	375.83	535.75	535.63	534.78
.72	0.43. 3	209.27	225.24	247.48	330.36	334.33	338.07	359.58	370.84	373.34	374.89	526.52	526.40	525.57
.72	0.43.30	210.39	226.40	248.51	330.56	334.49	338.18	359.22	370.11	372.50	373.97	517.67	517.55	516.76
.73	0.43.57	211.52	227.54	249.52	330.73	334.61	338.26	358.84	369.39	371.68	373.06	509.19	509.06	508.29
.74	0.44.24	212.64	228.67	250.53	330.87	334.71	338.30	358.45	368.67	370.87	372.18	501.04	500.92	500.19
.75	0.44.51	213.76	229.79	251.47	330.97	334.77	338.32	358.05	367.96	370.07	371.31	493.22	493.09	492.37
.75	0.45.18	214.88	231.90	252.41	331.05	334.80	338.30	357.64	367.25	369.29	370.46	485.69	485.56	484.87
.76	0.45.45	216.01	232.00	253.34	331.10	334.81	338.27	357.22	366.55	368.51	369.62	478.45	478.32	477.64
.77	0.46.12	217.12	233.08	254.25	331.13	334.80	338.21	356.79	365.86	367.75	368.80	471.47	471.34	470.68
.78	0.46.39	218.24	234.15	255.14	331.14	334.77	338.13	356.36	365.18	366.99	367.99	464.74	464.62	463.98
.78	0.47. 6	219.35	235.22	256.02	331.13	334.72	338.03	355.92	364.50	366.25	367.20	458.26	458.13	457.51
.79	0.47.33	220.46	236.26	256.89	331.11	334.65	337.92	355.47	363.82	365.52	366.42	452.00	451.87	451.27
.80	0.48. 0	221.57	237.30	257.72	331.07	334.56	337.79	355.02	363.16	364.79	365.65	445.96	445.83	445.24
.81	0.48.45	223.40	239.00	259.09	330.97	334.39	337.54	354.27	362.06	363.61	364.39	436.30	436.17	435.60
.82	0.49.30	225.22	240.66	260.41	330.83	334.19	337.27	353.50	360.99	362.44	363.17	427.17	427.04	426.50
.84	0.50.15	227.01	242.29	261.70	330.67	333.95	336.96	352.73	359.92	361.31	361.97	418.52	418.39	417.87
.85	0.51. 0	228.79	243.99	262.95	330.48	333.69	336.64	351.96	358.88	360.19	360.80	410.32	410.19	409.70
.86	0.51.45	230.55	245.45	264.16	330.27	333.41	336.29	351.19	357.85	359.09	359.65	402.54	402.41	401.93
.88	0.52.30	232.29	246.98	265.36	330.04	333.12	335.93	350.42	356.84	358.02	358.53	395.16	395.01	394.55
.89	0.53.15	234.00	248.47	266.49	329.79	332.81	335.55	349.66	355.84	356.97	357.43	388.10	387.97	387.53
.90	0.54. 0	235.69	249.94	267.59	329.54	332.49	335.17	348.89	354.86	355.93	356.36	381.39	381.26	380.84
.91	0.54.45	237.36	251.37	268.68	329.27	332.15	334.78	348.14	353.90	354.91	355.31	374.99	374.87	374.45
.92	0.55.30	238.99	252.77	269.73	328.99	331.81	334.38	347.38	352.95	353.92	354.28	368.88	368.76	368.36
.94	0.56.15	240.61	254.14	270.75	328.71	331.47	333.97	346.64	352.01	352.94	353.27	363.04	362.92	362.53
.95	0.57. 0	242.19	255.48	271.75	328.42	331.12	333.56	345.90	351.10	351.98	352.28	357.46	357.34	356.96
.96	0.57.45	243.75	256.79	272.72	328.12	330.76	333.15	345.17	350.19	351.04	351.31	352.11	351.99	351.63
.97	0.58.30	245.28	258.08	273.67	327.83	330.40	332.74	344.44	349.31	350.11	350.36	346.99	346.87	346.51
.99	0.59.15	246.79	259.33	274.59	327.53	330.05	332.33	343.73	348.44	349.21	349.43	342.07	341.95	341.61
1.03	1. 0. 0	248.26	260.55	275.49	327.22	329.69	331.91	343.02	347.58	348.32	348.51	337.36	337.24	336.91

Page added
August 1988

TIME		INSERT		GAP		I-SHELL		G-SHIELD		O-SHELL		N-SHIELD		O-LINER	
1.01	1. 0.45	249.71	261.75	276.36	326.92	329.33	331.50	342.33	346.74	347.44	347.62	332.83	332.71	332.39
1.02	1. 1.30	251.14	262.92	277.21	326.62	328.97	331.09	341.66	345.91	346.58	346.74	328.48	328.36	328.05
1.04	1. 2.15	252.53	264.07	278.04	326.31	328.61	330.68	340.96	345.10	345.74	345.87	324.31	324.19	323.88
1.05	1. 3. 0	253.90	265.19	278.85	326.01	328.25	330.28	340.29	344.30	344.91	345.02	320.29	320.17	319.87
1.06	1. 3.45	255.24	266.28	279.64	325.71	327.90	329.88	339.63	343.52	344.10	344.19	316.43	316.31	316.02
1.07	1. 4.30	256.55	267.35	280.41	325.40	327.55	329.48	338.98	342.74	343.30	343.38	312.71	312.59	312.31
1.09	1. 5.15	257.84	268.40	281.16	325.10	327.20	329.08	338.34	341.98	342.51	342.57	309.13	309.02	308.74
1.11	1. 6. 0	259.10	269.42	281.89	324.81	326.85	328.69	337.71	341.24	341.74	341.79	305.68	305.57	305.30
1.12	1. 7.15	261.14	271.07	283.07	324.32	326.28	328.05	336.68	340.02	340.48	340.50	300.20	300.09	299.82
1.14	1. 8.30	263.12	272.66	284.20	323.83	325.72	327.41	335.68	338.84	339.27	339.26	295.06	294.93	294.65
1.16	1. 9.45	265.02	274.18	285.28	323.35	325.16	326.79	334.70	337.70	338.08	338.06	290.18	290.07	289.82
1.18	1.11. 0	266.86	275.65	286.32	322.88	324.62	326.18	333.75	336.58	336.94	336.89	285.60	285.49	285.25
1.20	1.12.15	268.63	277.07	287.32	322.42	324.09	325.59	332.82	335.50	335.82	335.76	281.27	281.16	280.94
1.22	1.13.30	270.34	278.43	288.27	321.96	323.57	325.00	331.92	334.45	334.74	334.66	277.19	277.08	276.86
1.25	1.14.45	271.98	279.73	289.18	321.51	323.05	324.43	331.04	333.43	333.69	333.59	273.33	273.22	273.00
1.27	1.16. 0	273.54	280.99	290.05	321.08	322.55	323.87	330.19	332.44	332.67	332.56	269.67	269.56	269.36
1.29	1.17.15	275.09	282.19	290.90	320.65	322.06	323.33	329.36	331.48	331.69	331.56	266.21	266.10	265.90
1.31	1.18.30	276.56	283.35	291.73	320.22	321.58	322.79	328.55	330.55	330.73	330.59	262.93	262.82	262.62
1.33	1.19.45	277.97	284.47	292.49	319.81	321.11	322.27	327.76	329.64	329.80	329.64	259.81	259.71	259.52
1.35	1.21. 0	279.33	285.54	293.21	319.40	320.65	321.76	327.00	328.76	328.90	328.73	256.86	256.75	256.57
1.37	1.22.15	280.64	286.56	293.92	319.01	320.20	321.26	326.26	327.91	328.02	327.84	254.06	253.95	253.77
1.39	1.23.30	281.89	287.55	294.60	318.62	319.76	320.78	325.53	327.08	327.17	326.98	251.39	251.28	251.11
1.41	1.24.45	283.10	288.50	295.24	318.24	319.33	320.30	324.83	326.28	326.35	326.15	248.85	248.75	248.58
1.43	1.26. 0	284.26	289.40	295.86	317.86	318.91	319.84	324.15	325.50	325.55	325.34	246.44	246.34	246.17
1.45	1.27.15	285.38	290.28	296.45	317.50	318.50	319.38	323.48	324.74	324.78	324.55	244.15	244.04	243.89
1.47	1.28.30	286.45	291.11	297.02	317.14	318.10	318.94	322.84	324.00	324.02	323.79	241.96	241.85	241.69
1.51	1.29.45	287.48	291.91	297.55	316.79	317.70	318.51	322.21	323.29	323.29	323.05	239.87	239.77	239.61
1.52	1.31. 0	288.47	292.68	298.08	316.45	317.32	318.09	321.60	322.60	322.58	322.34	237.89	237.78	237.63
1.54	1.32.15	289.42	293.41	298.57	316.11	316.94	317.68	321.01	321.92	321.89	321.64	235.99	235.89	235.74
1.56	1.33.30	290.33	294.12	299.04	315.78	316.58	317.28	320.43	321.27	321.22	320.96	234.18	234.08	233.93
1.58	1.34.45	291.21	294.79	299.49	315.46	316.22	316.88	319.87	320.63	320.57	320.31	232.45	232.35	232.21
1.60	1.36. 0	292.04	295.44	299.92	315.15	315.87	316.50	319.32	320.02	319.94	319.67	230.80	230.70	230.56
1.63	1.38. 0	293.32	296.42	300.56	314.56	315.32	315.91	318.48	319.06	318.97	318.69	228.31	228.21	228.07
1.67	1.40. 0	294.53	297.32	301.15	314.18	314.80	315.33	317.67	318.16	318.04	317.75	225.99	225.89	225.75
1.70	1.42. 0	295.61	298.17	301.70	313.82	314.29	314.78	316.90	317.29	317.16	316.86	223.83	223.73	223.59
1.73	1.44. 0	296.65	298.96	302.21	313.47	313.79	314.25	316.15	316.46	316.31	316.00	221.81	221.71	221.58
1.77	1.46. 0	297.61	299.69	302.69	312.94	313.32	313.73	315.44	315.66	315.50	315.18	219.93	219.83	219.70
1.83	1.48. 0	298.51	300.36	303.10	312.42	312.86	313.24	314.76	314.90	314.72	314.40	218.17	218.08	217.95
1.87	1.50. 0	299.34	300.99	303.49	312.01	312.41	312.76	314.11	314.17	313.98	313.66	216.53	216.43	216.31
1.87	1.52. 0	300.12	301.57	303.85	311.62	311.99	312.29	313.48	313.48	313.27	312.94	215.00	214.90	214.79
1.90	1.54. 0	300.84	302.10	304.18	311.24	311.56	311.94	312.88	312.91	312.59	312.26	213.56	213.46	213.34
1.93	1.56. 0	301.51	302.60	304.47	310.86	311.16	311.41	312.30	312.17	311.94	311.60	212.21	212.11	212.00
1.97	1.58. 0	302.13	303.05	304.74	310.50	310.77	310.99	311.74	311.55	311.32	310.97	210.95	210.85	210.74
2.03	2. 0. 0	302.70	303.47	304.98	310.15	310.38	310.58	311.20	310.96	310.71	310.36	209.76	209.67	209.55
2.03	2. 2. 0	303.23	303.85	305.20	309.80	310.01	310.19	310.69	310.39	310.14	309.78	208.65	208.56	208.44
2.07	2. 4. 0	303.71	304.20	305.39	309.47	309.65	309.80	310.19	309.85	309.58	309.23	207.61	207.51	207.40
2.10	2. 6. 0	304.16	304.51	305.56	309.16	309.30	309.43	309.71	309.32	309.05	308.69	206.62	206.53	206.42
2.13	2. 8. 0	304.57	304.90	305.71	308.92	308.96	309.07	309.25	308.82	308.54	308.17	205.70	205.61	205.50
2.17	2.10. 0	304.95	305.06	305.84	308.51	308.63	308.71	308.80	308.33	308.04	307.68	204.83	204.74	204.63
2.20	2.12. 0	305.29	305.29	305.95	308.20	308.30	308.37	308.37	307.86	307.57	307.20	204.01	203.92	203.81
2.23	2.14. 0	305.60	305.50	306.04	307.91	307.99	308.04	307.95	307.41	307.11	306.74	203.24	203.15	203.04
2.27	2.16. 0	305.89	305.69	306.12	307.61	307.68	307.71	307.54	306.97	306.66	306.29	202.51	202.42	202.31
2.30	2.18. 0	306.14	305.95	306.19	307.33	307.37	307.39	307.15	306.54	306.24	305.86	201.82	201.73	201.63
2.33	2.20. 0	306.37	305.99	306.23	307.05	307.08	307.08	306.77	306.14	305.82	305.45	201.18	201.08	200.98
2.37	2.22. 0	306.57	306.12	306.26	306.77	306.79	306.78	306.40	305.74	305.42	305.04	200.56	200.47	200.37

TIME		INSERT		GAP		I-SHELL		G-SHIELD		O-SHELL		N-SHIELD		O-LINER	
2.40	2.24. 0	306.76	306.22	306.29	306.50	306.50	306.48	306.04	305.36	305.03	304.65	199.98	199.89	199.79
2.43	2.26. 0	306.92	306.31	306.29	306.24	306.23	306.20	305.70	304.98	304.66	304.28	199.44	199.34	199.24
2.47	2.29. 0	307.06	306.38	306.29	305.98	305.95	305.91	305.36	304.62	304.29	303.91	198.92	198.83	198.73
2.50	2.30. 0	307.19	306.44	306.27	305.72	305.69	305.65	305.03	304.27	303.94	303.55	198.43	198.34	198.24
2.53	2.32. 0	307.28	306.49	306.25	305.47	305.42	305.36	304.71	303.93	303.59	303.21	197.96	197.87	197.77
2.57	2.34. 0	307.37	306.51	306.22	305.22	305.16	305.09	304.39	303.60	303.26	302.87	197.52	197.43	197.33
2.60	2.36. 0	307.44	306.53	306.17	304.98	304.91	304.83	304.09	303.28	302.93	302.55	197.10	197.01	196.91
2.63	2.39. 0	307.49	306.54	306.12	304.74	304.66	304.57	303.79	302.96	302.62	302.23	196.70	196.61	196.52
2.67	2.40. 0	307.53	306.53	306.06	304.50	304.41	304.32	303.50	302.65	302.31	301.92	196.32	196.23	196.14
2.70	2.42. 0	307.56	306.51	306.00	304.26	304.17	304.07	303.21	302.35	302.00	301.62	195.96	195.88	195.78
2.73	2.44. 0	307.58	306.49	305.92	304.03	303.93	303.82	302.93	302.06	301.71	301.32	195.62	195.53	195.44
2.77	2.46. 0	307.58	306.45	305.84	303.80	303.70	303.58	302.66	301.78	301.42	301.03	195.30	195.21	195.11
2.80	2.49. 0	307.57	306.41	305.76	303.58	303.46	303.34	302.39	301.50	301.14	300.75	194.99	194.90	194.80
2.83	2.50. 0	307.55	306.36	305.67	303.36	303.24	303.11	302.13	301.22	300.87	300.48	194.69	194.60	194.51
2.87	2.52. 0	307.53	306.30	305.57	303.13	303.01	302.88	301.87	300.96	300.60	300.21	194.41	194.32	194.23
2.90	2.54. 0	307.49	306.23	305.47	302.92	302.78	302.65	301.62	300.69	300.33	299.94	194.14	194.05	193.96
2.93	2.56. 0	307.44	306.15	305.36	302.70	302.56	302.42	301.37	300.43	300.07	299.68	193.88	193.79	193.70
2.97	2.59. 0	307.39	306.07	305.25	302.49	302.34	302.20	301.12	300.18	299.82	299.43	193.63	193.54	193.45
3.00	3. 0. 0	307.33	305.98	305.14	302.27	302.13	301.98	300.88	299.93	299.57	299.18	193.40	193.31	193.22
3.03	3. 5. 0	307.15	305.74	304.83	301.75	301.59	301.43	300.30	299.33	298.96	298.57	192.85	192.76	192.67
3.17	3.10. 0	306.92	305.47	304.50	301.24	301.07	300.90	299.73	298.75	298.38	297.99	192.35	192.26	192.17
3.25	3.15. 0	306.67	305.17	304.16	300.73	300.56	300.39	299.18	298.19	297.82	297.42	191.90	191.81	191.72
3.33	3.20. 0	306.38	304.86	303.80	300.24	300.06	299.88	298.65	297.64	297.27	296.88	191.49	191.40	191.31
3.42	3.25. 0	306.08	304.52	303.43	299.75	299.57	299.38	298.13	297.11	296.74	296.35	191.11	191.02	190.93
3.50	3.30. 0	305.75	304.16	303.05	299.27	299.09	298.89	297.62	296.60	296.23	295.84	190.76	190.67	190.59
3.58	3.35. 0	305.40	303.80	302.66	298.80	298.63	298.41	297.12	296.10	295.72	295.34	190.43	190.35	190.26
3.67	3.40. 0	305.04	303.42	302.26	298.33	298.13	297.94	296.63	295.61	295.23	294.85	190.13	190.05	189.96
3.75	3.45. 0	304.67	303.03	301.85	297.86	297.66	297.47	296.15	295.12	294.75	294.36	189.85	189.76	189.68
3.83	3.50. 0	304.29	302.63	301.44	297.40	297.20	297.00	295.68	294.65	294.28	293.89	189.59	189.50	189.41
3.92	3.55. 0	303.89	302.23	301.03	296.95	296.74	296.54	295.21	294.18	293.81	293.43	189.33	189.24	189.16
4.00	4. 0. 0	303.49	301.92	300.61	296.49	296.29	296.09	294.75	293.72	293.35	292.97	189.09	189.00	188.92
4.08	4. 5. 0	303.09	301.41	300.19	296.05	295.84	295.64	294.30	293.27	292.90	292.51	188.85	188.77	188.69
4.17	4.10. 0	302.68	300.99	299.77	295.60	295.39	295.19	293.85	292.92	292.45	292.07	188.63	188.55	188.47
4.25	4.15. 0	302.27	300.57	299.34	295.16	294.95	294.75	293.40	292.37	292.00	291.62	188.42	188.36	188.25
4.33	4.20. 0	301.85	300.15	298.92	294.72	294.51	294.31	292.96	291.93	291.57	291.19	188.21	188.13	188.05
4.42	4.25. 0	301.43	299.73	298.49	294.28	294.08	293.87	292.53	291.50	291.13	290.75	188.01	187.93	187.85
4.50	4.30. 0	301.01	299.31	298.07	293.85	293.64	293.44	292.09	291.06	290.70	290.32	187.82	187.73	187.65
4.58	4.35. 0	300.53	298.88	297.64	293.42	293.21	293.00	291.66	290.64	290.27	289.90	187.62	187.54	187.46
4.67	4.40. 0	300.16	298.46	297.21	292.79	292.79	292.57	291.23	290.21	289.85	289.47	187.44	187.36	187.27
4.75	4.45. 0	299.74	298.03	296.79	292.56	292.35	292.15	290.81	289.79	289.42	289.05	187.25	187.17	187.09
4.83	4.50. 0	299.31	297.61	296.37	292.14	291.93	291.72	290.38	289.37	289.01	288.63	187.08	186.99	186.91
4.92	4.55. 0	298.89	297.18	295.94	291.71	291.51	291.30	289.97	288.95	288.59	288.22	186.90	186.82	186.74
5.00	5. 0. 0	298.46	296.76	295.52	291.29	291.09	290.88	289.55	288.54	288.18	287.81	186.72	186.64	186.56
5.08	5. 5. 0	298.04	296.34	295.10	290.87	290.67	290.46	289.13	288.12	287.76	287.40	186.55	186.47	186.39
5.17	5.10. 0	297.62	295.91	294.68	290.46	290.25	290.05	288.72	287.71	287.36	286.99	186.38	186.30	186.22
5.25	5.15. 0	297.19	295.49	294.26	290.04	289.84	289.63	288.31	287.30	286.95	286.58	186.21	186.14	186.06
5.33	5.20. 0	296.77	295.07	293.84	289.63	289.42	289.22	287.90	286.90	286.54	286.18	186.05	185.97	185.89
5.42	5.25. 0	296.35	294.65	293.42	289.22	289.01	288.81	287.49	286.49	286.14	285.78	185.88	185.81	185.73
5.50	5.30. 0	295.93	294.24	293.01	288.81	288.60	288.40	287.09	286.09	285.74	285.38	185.72	185.64	185.56
5.58	5.35. 0	295.51	293.82	292.59	288.40	288.20	288.00	286.68	285.69	285.34	284.98	185.56	185.48	185.40
5.67	5.40. 0	295.10	293.40	292.18	288.00	287.79	287.59	286.29	285.29	284.94	284.58	185.40	185.32	185.24
5.75	5.45. 0	294.68	292.99	291.77	287.59	287.39	287.19	285.88	284.90	284.55	284.19	185.24	185.16	185.08
5.83	5.50. 0	294.27	292.58	291.36	287.19	286.99	286.79	285.49	284.50	284.16	283.80	185.08	185.01	184.93
5.92	5.55. 0	293.85	292.17	290.95	286.79	286.59	286.39	285.09	284.11	283.76	283.41	184.93	184.85	184.77
6.00	6. 0. 0	293.44	291.76	290.54	286.39	286.19	285.99	284.70	283.72	283.37	283.02	184.77	184.69	184.62

Page added
August 1988

6.17	6.10. 0	292.02	290.94	289.73	285.60	285.40	285.20	283.91	282.94	282.60	282.24	184.46	184.39	184.31
6.33	6.20. 0	291.81	290.13	288.93	284.91	284.61	284.41	283.13	282.17	281.83	281.48	184.16	184.08	184.01
6.50	6.30. 0	291.00	289.33	288.13	284.03	283.83	283.64	282.36	281.40	281.06	280.72	183.86	183.78	183.71
6.67	6.40. 0	290.20	288.54	287.34	283.26	283.06	282.86	281.60	280.65	280.31	279.96	183.56	183.48	183.41
6.83	6.50. 0	289.41	287.74	286.56	282.49	282.29	282.10	280.84	279.99	279.56	279.21	183.26	183.19	183.11
7.00	7. 0. 0	288.62	286.96	285.78	281.73	281.53	281.34	280.09	279.15	278.81	278.47	182.97	182.90	182.82
7.17	7.10. 0	287.84	286.18	285.00	280.97	280.78	280.58	279.34	278.41	278.07	277.74	182.68	182.61	182.53
7.33	7.20. 0	287.06	285.41	284.24	280.22	280.03	279.84	278.60	277.67	277.34	277.01	182.39	182.32	182.25
7.50	7.30. 0	286.29	284.64	283.48	279.48	279.29	279.10	277.87	276.94	276.62	276.28	182.11	182.03	181.96
7.67	7.40. 0	285.53	283.88	282.72	278.74	278.55	278.36	277.14	276.22	275.89	275.56	181.82	181.75	181.68
7.83	7.50. 0	284.77	283.13	281.97	278.01	277.82	277.63	276.41	275.50	275.18	274.85	181.54	181.47	181.40
8.00	8. 0. 0	284.02	282.38	281.23	277.28	277.09	276.91	275.70	274.79	274.47	274.14	181.27	181.19	181.12
8.17	8.10. 0	283.27	281.64	280.49	276.56	276.37	276.19	274.99	274.08	273.76	273.44	180.99	180.92	180.85
8.33	8.20. 0	282.53	280.90	279.76	275.85	275.66	275.47	274.28	273.38	273.07	272.74	180.72	180.65	180.58
8.50	8.30. 0	281.80	280.17	279.04	275.14	274.95	274.77	273.58	272.69	272.37	272.05	180.45	180.38	180.31
8.67	8.40. 0	281.07	279.45	278.32	274.43	274.25	274.06	272.89	272.00	271.68	271.36	180.18	180.11	180.04
8.83	8.50. 0	280.34	278.73	277.60	273.74	273.55	273.37	272.19	271.31	271.00	270.68	179.91	179.85	179.78
9.00	9. 0. 0	279.63	278.02	276.89	273.04	272.86	272.68	271.51	270.63	270.32	270.01	179.65	179.58	179.51
9.17	9.10. 0	278.91	277.31	276.19	272.35	272.17	271.99	270.83	269.96	269.65	269.34	179.39	179.32	179.25
9.33	9.20. 0	278.21	276.60	275.49	271.67	271.49	271.31	270.15	269.29	268.98	268.67	179.13	179.06	179.00
9.50	9.30. 0	277.51	275.91	274.80	271.00	270.81	270.63	269.49	268.62	268.32	268.01	178.87	178.81	178.74
9.67	9.40. 0	276.81	275.21	274.11	270.32	270.14	269.96	268.82	267.97	267.66	267.36	178.62	178.55	178.49
9.83	9.50. 0	276.12	274.53	273.43	269.66	269.49	269.30	268.16	267.31	267.01	266.71	178.37	178.30	178.23
10.00	10. 0. 0	275.44	273.85	272.76	268.99	268.82	268.64	267.51	266.66	266.37	266.06	178.12	178.05	177.99
10.17	10.10. 0	274.76	273.17	272.09	268.34	268.16	267.98	266.86	266.02	265.72	265.42	177.87	177.80	177.74
10.33	10.20. 0	274.09	272.50	271.42	267.69	267.51	267.33	266.22	265.38	265.09	264.79	177.62	177.56	177.49
10.50	10.30. 0	273.41	271.83	270.76	267.04	266.86	266.69	265.58	264.75	264.45	264.15	177.38	177.31	177.25
10.67	10.40. 0	272.75	271.17	270.10	266.40	266.22	266.05	264.94	264.12	263.82	263.53	177.14	177.07	177.01
10.83	10.50. 0	272.09	270.52	269.45	265.76	265.59	265.41	264.31	263.49	263.20	262.91	176.90	176.83	176.77
11.00	11. 0. 0	271.43	269.87	268.80	265.13	264.95	264.78	263.69	262.87	262.58	262.29	176.66	176.60	176.53
11.17	11.10. 0	270.78	269.22	268.16	264.50	264.33	264.16	263.07	262.25	261.97	261.68	176.42	176.36	176.30
11.33	11.20. 0	270.14	268.58	267.52	263.88	263.70	263.54	262.45	261.64	261.36	261.07	176.19	176.13	176.06
11.50	11.30. 0	269.50	267.94	266.89	263.26	263.09	262.92	261.84	261.04	260.75	260.47	175.96	175.89	175.83
11.67	11.40. 0	268.87	267.31	266.26	262.65	262.47	262.31	261.23	260.43	260.15	259.87	175.73	175.66	175.60
11.83	11.50. 0	268.24	266.68	265.64	262.04	261.87	261.70	260.63	259.84	259.56	259.27	175.50	175.44	175.38
12.00	12. 0. 0	267.61	266.06	265.02	261.43	261.26	261.10	260.03	259.24	258.97	258.68	175.27	175.21	175.15

--TIME--INSERT--GAP--I-SHELL--G-SHIELD--O-SHELL--N-SHIELD--O-LINER--

DELTA-T	161.92	195.73	244.85	272.10		1157.10
TIME (HRS)	2.43	.75	.54	.50		.50
MAX FIRE TEMP	336.29	338.32	386.89	414.02		1298.09

MAX FUEL PIN TEMP
409.71DEG-F 209.84DEG-C

*AS PER 10CFR PART71 SECTION71.73, NSOLAR=0, BEFORE, DURING AND AFTER THE FIRE.

BRKPT PRINTS

APPENDIX F

SECTION VIII

Mark 22 Fuel Assembly Computer Printout

Page Added
February 1990

```
S C O P E   INPUT (IN CARD-IMAGE FORMAT) FOLLOWS:

SCOPE INPUT FOR NLI-1/2 CONTAINING TWO MARK 22 ASSEMBLIES
' ==========================================================================
' MELEM   BURNUP    TIME    WHEAT    DHEAT    SRCN    SRCG     ITYPE   NPINS
   21    253000    150      0       1726     7.87+5  9.75+15   1       2
'
' MCAN    ODCAN    TKCAN    HTCAN    HTVOID    HTFUEL
   5     4.000    0.25     14.67     1.67      12.5
'
' MINSRT    EMINSRT    TKINSRT    TPOISN      TKCGAP    TKIGAP    WTHICK
   6        0.58        0.625     0.125       1.5243    0.215       0
'
' NELEM    CASKID
   2       13.37
'
' MISHL  MOSHL  MOLIN  MFIN       TKISHL  TKOSHL  TKOLIN       MGSHLD
   6      6      6     6          0.500   0.875   0.25          3
'
' SPFIN    EMISF    EMISC    TFNMAX    WGHTMX    TAMB      NSOLAR
   4        0.59     0.59     400       500      130         1
'
' KTRANS    RHONS    TCNS1    TCNS2    CPNS2  (FOLLOWING DATA IS FOR NS4FR)
   5         0        0        0        0
'
' GENERAL FORMAT FOR SHIELDING DATA:
' LTYPE, NUMPTS, (NASSYS(I,LTYPE),TKG(I,LTYPE),TKN(I,LTYPE), I=1,NUMPTS)
' ----------------------------------------------------------------------
'
' SHIELDING DATA FOR NLI-1/2 WITH TWO MARK 22 ASSEMBLIES:
'
3  1  2 4.875 5.0
' ----------------------------------------------------------------------
' TERMINATION FLAG (FOR THIS PARTICULAR CASE):
0
```

PROPERTIES OF MATERIALS CURRENTLY IN THE SCOPE DATA LIBRARY

MATERIAL		DENSITY (LB/CUFT)	CONDUCTIVITY (BTU/HR/FT/F)	HEAT CAPACITY (BTU/LB/F)	TEMPERATURE LIMIT (DEGREES F)	CAPITAL COST ($/LB)
1	PB	708.56	19.3000	.0320	618	7.500
2	FE	488.26	26.0000	.1200	1950	5.000
3	U	1189.25	15.0000	.0280	1450	22.500
4	CU	559.35	210.0000	.0950	1730	1.400
5	AL	168.49	129.0000	.2280	1050	.700
6	SS	494.43	9.5200	.1200	1800	10.000
7	NA	45.00	38.0000	.3000	1400	.500
8	LI	30.00	20.0000	1.0000	1400	27.500
9	PB-L	146.60	.4400	.1560	1200	4.700
10	CONC	707.60	18.0000	.0320	618	.400
11	ALSI	170.00	80.0000	.2000	1065	.880
12	DOWA	62.00	.0760	.5260	600	2.500
13	HE	.01	.1200	1.2400	1400	.000
14	AIR	.08	.0360	.2600	1400	.000
15	H2O	62.43	.3920	1.0000	250	.000
16	NUL3	81.20	.3000	.0660	1000	.000
17	SHOT	370.00	.3500	.0950	1400	.000
18	NUL1	284.00	1.2000	.0660	1000	.000
19	NLWG	212.00	.7000	.1600	1290	.000
20	NUL2	203.00	.6000	.0660	1000	.000
21	PWR	220.90	1.0000	.1000	1650	.000
22	BWR	199.30	1.0000	.1000	1650	.000
23	NLWC	113.00	.2500	.2200	932	.000

NOTE: THIS EDIT WILL BE PRINTED ONLY ONCE, EVEN THOUGH THE USER MAY HAVE MULTIPLE SETS OF INPUT DATA.

Page Added
February 1990

TITLE: SCOPE INPUT FOR NLI-1/2 CONTAINING TWO MARK 22 ASSEMBLIES

DESCRIPTION OF WASTE MATERIAL

```
MELEM       21 (PWR )      MELEM---TYPE OF WASTE MATERIAL (SHOWN IN BRACKETS)
BU     253000. MWD/MT      BU------AVERAGE BURNUP  (EDIT FOR BOOKEEPING PURPOSES ONLY;  NO LONGER USED)
TIME    150.00 YEARS       TIME----COOLING TIME  (AGE OF FUEL SINCE DISCHARGE)
WHEAT  0.0E+00 WATTS/CUFT  WHEAT---DECAY HEAT GIVEN OFF BY THE WASTE MATERIAL; NOT USED IF ZERO
DHEAT  1.7E+03 WATTS/ASSY  DHEAT---DECAY HEAT GIVEN OFF BY EACH ASSEMBLY (OR CANISTER); NOT USED IF ZERO
SRCN   7.9E+05 N/SEC/ASSY  SRCN----NEUTRON SOURCE  (EDIT FOR BOOKEEPING PURPOSES ONLY;  NO LONGER USED)
SRCG   9.8E+15 P/SEC/ASSY  SRCG----PHOTON  SOURCE  (EDIT FOR BOOKEEPING PURPOSES ONLY;  NO LONGER USED)
```

DESCRIPTION OF WASTE CONTAINER

```
ITYPE        1             ITYPE---1=CIRC CANISTERS, 2=SQUARE ASSYS (NO CANS), 3=SQR ASSYS WITH SQR CANS
NPINS        2             NPINS---NUMBER OF FUEL PINS PER ASSEMBLY (IF MELEM DENOTES PWR OR BWR FUEL)
MCAN         5 ( AL )      MCAN----TYPE OF MATERIAL USED FOR CANISTERS (NO CAN USED IF MCAN=0)
ODCAN     4.00 INCHES      ODCAN---OUTSIDE DIAM OR WIDTH OF CAN (MCAN.GT.0), OR WIDTH OF ASSEMBLY (MCAN=0)
TKCAN     .250 INCHES      TKCAN---WALL THICKNESS OF CANISTER (IF MCAN.GT.0)
HTCAN    14.67 FEET        HTCAN---LENGTH OF CANISTER (ITYPE=1 OR 3), OR LENGTH OF FUEL ASSEMBLY (ITYPE=2)
HTSABS    1.67 FEET        HTSABS--LENGTH OF INTERNAL SHOCK ABSORBERS HOLDING ASSYS OR CANISTERS IN CASK
HTFUEL   12.50 FEET        HTFUEL--ACTIVE LENGTH OF UO2 FUEL, OR HT OF SOLID WASTE MATL IN CAN (FULL IF 0)
```

DESCRIPTION OF INSERT

```
MINSRT       6 ( SS )      MINSRT--TYPE OF MATERIAL USED FOR INSERT (SHOWN IN BRACKETS)
EMINST    .580             EMINST--SURFACE EMISSIVITY OF THE INSERT MATERIAL (DIMENSIONLESS)
TKINST    .625 INCHES      TKINST--THICKNESS OF INSERT BETWEEN ASSEMBLIES (INCLUDES TPOISN)
TPOISN    .125 INCHES      TPOISN--THICKNESS OF NEUTRON POISON IMBEDDED IN INSERT MATL BETWEEN ASSEMBLIES
TKCGAP   1.524 INCHES      TKCGAP--THICKNESS OF GAP BETWEEN CANISTER AND INSERT (AIR-FILLED IF > 0)
TKIGAP    .215 INCHES      TKIGAP--THICKNESS OF GAP BETWEEN INSERT AND THE INNER SHELL (AIR-FILLED IF > 0)
WTHICK    .000 INCHES      WTHICK--THICKNESS OF THE INSERT BETWEEN CANISTER AND INNER SHELL
NELEM        2             NELEM---NUMBER OF ASSEMBLIES (OR CANISTERS) PER CASK;  IF ZERO, PERFORM SEARCH
CASKID   13.37 INCHES      CASKID--INSIDE DIAMETER OF THE CASK (CALCULATED BY CODE IF USER ENTERS 0.0)
```

DESCRIPTION OF INNER & OUTER SHELL AND THE OUTSIDE LINER

```
MISHL        6 ( SS )      MISHL---TYPE OF MATERIAL USED FOR THE INNER SHELL (SHOWN IN BRACKETS)
MOSHL        6 ( SS )      MOSHL---TYPE OF MATERIAL USED FOR THE OUTER SHELL (SHOWN IN BRACKETS)
MOLIN        6 ( SS )      MOLIN---TYPE OF MATERIAL USED FOR OUTSIDE LINER AND FINS (IF REQUIRED)
TKISHL    .500 INCHES      TKISHL--THICKNESS OF INNER SHELL
TKOSHL    .875 INCHES      TKOSHL--THICKNESS OF OUTER SHELL
TKOLIN    .250 INCHES      TKOLIN--THICKNESS OF OUTSIDE LINER
```

DESCRIPTION OF NEUTRON AND GAMMA SHIELDS

```
MNSHLD      15 (H2O    )   MNSHLD--TYPE OF MATERIAL USED FOR NEUTRON SHIELD (SHOWN IN BRACKETS)
MGSHLD       3 ( U     )   MGSHLD--TYPE OF MATERIAL USED FOR GAMMA SHIELD (SHOWN IN BRACKETS)
```

DESCRIPTION OF HEAT TRANSFER PARAMETERS FOR FINS (& CASK)

```
MFIN         6 ( SS )      MFIN----TYPE OF MATERIAL USED FOR FINS (IF REQUIRED)
SPFIN    4.000 INCHES      SPFIN---SPACING BETWEEN FINS
EMISF     .590             EMISF---SURFACE EMISSIVITY OF THE FINS (DIMENSIONLESS)
EMISC     .590             EMISC---SURFACE EMISSIVITY OF THE CASK (DIMENSIONLESS)
```

CASK DESIGN PARAMETERS

TFNMAX	400.0	DEG.F	TFNMAX--MAXIMUM ALLOWABLE SURFACE TEMPERATURE
WGHTMX	500.0	KILO.LBS	WGHTMX--MAXIMUM ALLOWABLE WEIGHT OF LOADED CASK
TAMB	130.0	DEG.F	TAMB----OUTSIDE AMBIENT TEMPERATURE
NSOLAR	1	INCLUDE	NSOLAR--SOLAR HEATING IN NORMAL STEADY-STATE CALCULATION (INCLUDE/IGNORE=1/0)

KIND OF TRANSIENT THERMAL ANALYSIS TO BE PERFORMED

KTRANS = 5 OPTION SELECTED BY USER; OTHER POSSIBLE OPTIONS INCLUDE:

KTRANS=4 ... ASSUME LIQUID WATER NEUTRON SHIELD IS LOST MANY HOURS BEFORE START OF FIRE (ORIGINAL SCOPE DEFAULT)
KTRANS=5 ... ASSUME LIQUID NEUTRON SHIELD IS LOST INSTANTLY AT THE START OF THE FIRE (STANDARD NRC SCENARIO)
KTRANS=6 ... ASSUME A SOLID NEUTRON SHIELD, USE DATA BELOW, AND SWITCH TO NEW THERMAL CONDUCTIVITY DURING FIRE

THERMAL CHARACTERISTICS OF SOLID NEUTRON SHIELD (THE FOLLOWING DATA IS NOT USED UNLESS KTRANS=6)

RHONS	62.43	LBM/CUFT	RHONS--NOMINAL DENSITY OF THE SOLID NEUTRON SHIELD
TCNS1	.3920	BTU/HR/FT/F	TCNS1--NOMINAL THERMAL CONDUCTIVITY OF THE SOLID NEUTRON SHIELD
TCNS2	.3920	BTU/HR/FT/F	TCNS2--THERMAL CONDUCTIVITY OF THE SOLID NEUTRON SHIELD DURING AND AFTER THE FIRE
CPNS2	1.0000	BTU/LB/DG.F	CPNS2--HEAT CAPACITY OF THE SOLID NEUTRON SHIELD DURING AND AFTER THE FIRE

Page Added
February 1990

S C O P E -- THE SHIPPING CASK OPTIMIZATION AND PARAMETRIC EVALUATION CODE, VERSION 1.2 (BY J. A. BUCHOLZ, ORNL)

TITLE: SCOPE INPUT FOR NLI-1/2 CONTAINING TWO MARK 22 ASSEMBLIES

COMPONENT DIMENSIONS (INCHES):

O-LINER	=	.250
N-SHIELD	=	5.000
O-SHELL	=	.875
G-SHIELD	=	4.875
I-SHELL	=	.500
I-CASK	=	13.370
I-GAP	=	.215
W-POISN	=	.125
W-INSRT	=	.625
C/F-GAP	=	1.524
O-CANSTR	=	4.000
I-CANSTR	=	3.500
Q-LENGTH	=	150.000

THERMAL PARAMETERS:

SOLAR INSOLANCE	=	1 (INCLUDED)
AMBIENT TEMP	=	130.000 (DEG.F)
TOTAL DECAY HEAT	=	3.452 (KW)

NOMINAL STEADY STATE TEMPERATURES (DEGREES-F)

SURFACE	O-LINER		N-SHIELD		O-SHELL		PB-SHIELD		I-SHELL	
T	DT	T(MAX)	DT	T(MAX)	DT	T(MAX)	DT	T(MAX)	DT	T(MAX)
242.72	.22	242.94	3.65	246.59	1.10	247.69	5.18	252.87	1.13	254.00

GAP	INSERT	INSERT		GAP	CAN	CANISTER		FUEL PIN		
DT	T(MIN)	DT	T(MAX)	DT	T(MIN)	DT	T(MAX)	DT	T(MAX)	DEG.C
119.75	373.75	17.97	391.72	191.27	583.00	.08	583.08	190.08	773.15	411.75

(*) OUTSIDE DIAMETER OF THE CASK BODY = 36.37 INCHES; NO EXTERNAL COOLING FINS WERE REQUIRED.
TOTAL WGHT OF CASK LOADED WITH 2 FUEL ASSEMBLIES OR CANISTERS IS APPROXIMATELY 57810 LBS.

PREFIRE TEMPERATURES (DEGREES-F)

TIME...(H.M.S)	*-------INSERT----*--GAP--*----I.SHELL----*---G.SHIELD----*----O.SHELL----*----N.SHIELD----*----O.LINER------*													
RADIUS (FT)==>	.4153	.4813	.5392	.5571	.5783	.5987	.8272	1.0050	1.0421	1.0779	1.3030	1.4946	1.5050	1.5154
	REFERENCE STEADY-STATE TEMPERATURES USED IN CALCULATING TEMP RISE (ASSUMES N-SHLD PRESENT & NO SOLAR HEATING):													
.00 0. 0. 0	358.95	348.81	340.98	209.23	206.64	204.24	201.08	199.14	196.64	194.30	192.28	190.25	189.77	189.30
	INITIAL STEADY-STATE TEMPERATURES AT START OF 30-MINUTE FIRE (SEE ASSUMPTIONS FOR KTRANS=5):													
.00 0. 0. 0	358.95	348.81	340.98	209.23	206.64	204.24	201.08	199.14	196.64	194.30	192.28	190.25	189.77	189.30
INIT TEMP RISE	.00	.00	.00	.00	.00	.00	.00	.00	.00	.00	.00	.00	.00	.00

ULTIMATE POSTFIRE TEMPERATURES (DEGREES-F)

TIME...(H.M.S)	*-------INSERT----*--GAP--*----I.SHELL----*---G.SHIELD----*----O.SHELL----*----N.SHIELD----*----O.LINER------*													
	ULTIMATE STEADY-STATE TEMPERATURES, LONG AFTER THE 30-MINUTE FIRE IS OVER:													
999.0 999.0.0	438.12	427.98	420.14	315.02	312.43	310.03	306.87	304.94	302.43	300.09	245.17	190.25	189.77	189.30

TRANSIENT TEMPERATURES (DEGREES-F)

	-------INSERT------GAP--*----I.SHELL----*---G.SHIELD----*----O.SHELL----*----N.SHIELD----*----O.LINER------*													
MAX TEMP RISE:	108.08	108.09	108.10	171.22	173.85	176.35	180.27	192.69	260.88	347.43	710.32	1074.52	1094.58	1114.44
AT TIME (HRS):	7.33	7.33	7.17	1.20	1.18	1.14	1.00	.62	.52	.50	.50	.50	.50	.50
MAX FIRE TEMP:	467.04	456.90	449.08	380.44	380.49	380.59	381.34	391.83	457.52	541.73	902.60	1264.77	1284.35	1303.73

DURING AND AFTER THE 30-MINUTE FIRE:

MAX GAMMA SHIELD TEMP..... 392 DEG.F = 200 DEG.C
MAX BASKET INSERT TEMP..... 467 DEG.F = 242 DEG.C
MAX FUEL PIN CLAD TEMP..... 805 DEG.F = 429 DEG.C

AS PER 10CFR73, SECT 71.73, THE EFFECTS OF SOLAR HEATING WERE NEGLECTED PRIOR TO, DURING, AND AFTER THE 30-MINUTE FIRE.

Page Added
February 1990

This page intentionally left blank.

APPENDIX G

SECTION VIII

Failed Metallic Fuel Basket Computer Printout

Page Added
Oct. 1990

```
S C O P E   INPUT (IN CARD-IMAGE FORMAT) FOLLOWS:

Evaluation of NLI-1/2 Containing 6 Failed Fuel Rods (30 WATTS TOTAL HEAT LOAD)
' ==========================================================================
' NELEM   BURNUP    TIME    WHEAT    DHEAT    SRCN    SRCG     ITYPE   NPINS
   21    1600       2      0.0      5.0    6.31+4  1.12+14     1       1
'
' NCAN    ODCAN    TKCAN    HTCAN    HTVOID    HTFUEL
   5      3.0     0.125    12.00      0        12.00
'
' NINSRT    EMINSRT    TKINSRT    TPOISN      TKCGAP    TKIGAP    WTHICK
   5        0.22        0.01       0.0        -0.01      3.75      0.0
'
' NELEM    CASKID
   6       13.37
'
' NISHL  NOSHL  NOLIN  NPIN       TKISHL  TKOSHL  TKOLIN       NGSHLD
   6      6      6     6          0.5     0.875   0.25           1
'
' SPPIN    EMISF    EMISC    TFNMAX    WGHTMX
   1      0.587     0.50      750       200
'
' KTRANS    RHONS    TCNS1    TCNS2    CPNS2
   6       0.071    0.0154   0.0154    0.24
'
' GENERAL FORMAT FOR SHIELDING DATA:
' LTYPE, NUMPTS, (NASSYS(I,LTYPE),TKG(I,LTYPE),TKN(I,LTYPE), I=1,NUMPTS)
' ----------------------------------------------------------------------
'
' SHIELDING DATA FOR 6.5-INCH PB-METAL CASKS
' (ASSUMES A 5-INCH NEUTRON SHIELD)
1 1  6 4.875  5
' ----------------------------------------------------------------------
' TERMINATION FLAG (FOR THIS PARTICULAR CASE):
0
```

Page Added*
Oct. 1990

PROPERTIES OF MATERIALS CURRENTLY IN THE SCOPE DATA LIBRARY

MATERIAL		DENSITY (LB/CUFT)	CONDUCTIVITY (BTU/HR/FT/F)	HEAT CAPACITY (BTU/LB/F)	TEMPERATURE LIMIT (DEGREES F)	CAPITAL COST ($/LB)
1	PB	708.56	19.3000	.0320	618	7.500
2	FE	488.26	26.0000	.1200	1950	5.000
3	U	1189.25	15.0000	.0280	1450	22.500
4	CU	559.35	210.0000	.0950	1730	1.400
5	AL	168.49	80.0000	.2280	1050	.700
6	SS	494.43	9.6900	.1200	1800	10.000
7	NA	45.00	38.0000	.3000	1400	.500
8	LI	30.00	20.0000	1.0000	1400	27.500
9	PB-L	146.60	.4400	.1560	1200	4.700
10	CONC	707.60	18.0000	.0320	618	.400
11	ALSI	170.00	80.0000	.2000	1065	.880
12	DOWA	62.00	.0760	.5260	600	2.500
13	HE	.00	.1200	1.2400	1400	.000
14	AIR	.08	.0360	.2600	1400	.000
15	H2O	62.43	.3920	1.0000	250	.000
16	HUL3	81.20	.3000	.0660	1000	.000
17	SHOT	370.00	.3500	.0950	1400	.000
18	HUL1	284.00	1.2000	.0660	1000	.000
19	HLWG	212.00	.7000	.1600	1290	.000
20	HUL2	203.00	.6000	.0660	1000	.000
21	PWR	220.90	1.0000	.1000	1650	.000
22	BWR	199.30	1.0000	.1000	1650	.000
23	HLWC	113.00	.2500	.2200	932	.000

NOTE: THIS EDIT WILL BE PRINTED ONLY ONCE, EVEN THOUGH THE USER MAY HAVE MULTIPLE SETS OF INPUT DATA.

Page Added
Oct. 1990

TITLE: Evaluation of NLI-1/2 Containing 6 Failed Fuel Rods (30 WATTS TOTAL HEAT LOAD)

DESCRIPTION OF WASTE MATERIAL

```
NELEM      21 (PWR )     NELEM---TYPE OF WASTE MATERIAL (SHOWN IN BRACKETS)
BU       1600. MWD/MT    BU------AVERAGE BURNUP  (EDIT FOR BOOKEEPING PURPOSES ONLY:  NO LONGER USED)
TIME      2.00 YEARS     TIME----COOLING TIME  (AGE OF FUEL SINCE DISCHARGE)
WHEAT  0.0E+00 WATTS/CUFT WHEAT---DECAY HEAT GIVEN OFF BY THE WASTE MATERIAL: NOT USED IF ZERO
DHEAT  5.0E+00 WATTS/ASSY DHEAT---DECAY HEAT GIVEN OFF BY EACH ASSEMBLY (OR CANISTER): NOT USED IF ZERO
SRCN   6.3E+04 N/SEC/ASSY SRCN----NEUTRON SOURCE  (EDIT FOR BOOKEEPING PURPOSES ONLY:  NO LONGER USED)
SRCG   1.1E+14 P/SEC/ASSY SRCG----PHOTON  SOURCE  (EDIT FOR BOOKEEPING PURPOSES ONLY:  NO LONGER USED)
```

DESCRIPTION OF WASTE CONTAINER

```
ITYPE       1            ITYPE---1=CIRC CANISTERS. 2=SQUARE ASSYS (NO CANS), 3=SQR ASSYS WITH SQR CANS
NPINS       1            NPINS---NUMBER OF FUEL PINS PER ASSEMBLY (IF NELEM DENOTES PWR OR BWR FUEL)
MCAN        5 ( AL )     MCAN----TYPE OF MATERIAL USED FOR CANISTERS (NO CAN USED IF MCAN=0)
ODCAN    3.00 INCHES     ODCAN---OUTSIDE DIAM OR WIDTH OF CAN (MCAN.GT.0), OR WIDTH OF ASSEMBLY (MCAN=0)
TKCAN    .125 INCHES     TKCAN---WALL THICKNESS OF CANISTER (IF MCAN.GT.0)
HTCAN   12.00 FEET       HTCAN---LENGTH OF CANISTER (ITYPE=1 OR 3), OR LENGTH OF FUEL ASSEMBLY (ITYPE=2)
HTSABS    .00 FEET       HTSABS--LENGTH OF INTERNAL SHOCK ABSORBERS HOLDING ASSYS OR CANISTERS IN CASK
HTFUEL  12.00 FEET       HTFUEL--ACTIVE LENGTH OF UO2 FUEL, OR HT OF SOLID WASTE MATL IN CAN (FULL IF 0)
```

DESCRIPTION OF INSERT

```
MINSRT      5 ( AL )     MINSRT--TYPE OF MATERIAL USED FOR INSERT (SHOWN IN BRACKETS)
EMINST   .220            EMINST--SURFACE EMISSIVITY OF THE INSERT MATERIAL (DIMENSIONLESS)
TKINST   .010 INCHES     TKINST--THICKNESS OF INSERT BETWEEN ASSEMBLIES (INCLUDES TPOISN)
TPOISN   .000 INCHES     TPOISN--THICKNESS OF NEUTRON POISON IMBEDDED IN INSERT MATL BETWEEN ASSEMBLIES
TKCGAP  -.010 INCHES     TKCGAP--THICKNESS OF GAP BETWEEN CANISTER AND INSERT (HE-FILLED IF < 0)
TKIGAP  3.750 INCHES     TKIGAP--THICKNESS OF GAP BETWEEN INSERT AND THE INNER SHELL (AIR-FILLED IF > 0)
WTHICK   .000 INCHES     WTHICK--THICKNESS OF THE INSERT BETWEEN CANISTER AND INNER SHELL
NELEM       6            NELEM---NUMBER OF ASSEMBLIES (OR CANISTERS) PER CASK:  IF ZERO, PERFORM SEARCH
CASKID  13.37 INCHES     CASKID--INSIDE DIAMETER OF THE CASK (CALCULATED BY CODE IF USER ENTERS 0.0)
```

DESCRIPTION OF INNER & OUTER SHELL AND THE OUTSIDE LINER

```
MISHL       6 ( SS )     MISHL---TYPE OF MATERIAL USED FOR THE INNER SHELL (SHOWN IN BRACKETS)
MOSHL       6 ( SS )     MOSHL---TYPE OF MATERIAL USED FOR THE OUTER SHELL (SHOWN IN BRACKETS)
MOLIN       6 ( SS )     MOLIN---TYPE OF MATERIAL USED FOR OUTSIDE LINER AND FINS (IF REQUIRED)
TKISHL   .500 INCHES     TKISHL--THICKNESS OF INNER SHELL
TKOSHL   .875 INCHES     TKOSHL--THICKNESS OF OUTER SHELL
TKOLIN   .250 INCHES     TKOLIN--THICKNESS OF OUTSIDE LINER
```

DESCRIPTION OF NEUTRON AND GAMMA SHIELDS

```
MNSHLD      0 (SOLID )   MNSHLD--TYPE OF MATERIAL USED FOR NEUTRON SHIELD (DESCRIBED BELOW IF SOLID)
MGSHLD      1 ( PB   )   MGSHLD--TYPE OF MATERIAL USED FOR GAMMA SHIELD (SHOWN IN BRACKETS)
```

DESCRIPTION OF HEAT TRANSFER PARAMETERS FOR FINS (& CASK)

```
MFIN        6 ( SS )     MFIN----TYPE OF MATERIAL USED FOR FINS (IF REQUIRED)
SPFIN    1.000 INCHES    SPFIN---SPACING BETWEEN FINS
EMISF    .587            EMISF---SURFACE EMISSIVITY OF THE FINS (DIMENSIONLESS)
EMISC    .500            EMISC---SURFACE EMISSIVITY OF THE CASK (DIMENSIONLESS)
```

Page Added
Oct. 1990

CASK DESIGN PARAMETERS

TPNMAX	750.0	DEG.F	TPNMAX--MAXIMUM ALLOWABLE SURFACE TEMPERATURE
WGHTMX	200.0	KILO.LBS	WGHTMX--MAXIMUM ALLOWABLE WEIGHT OF LOADED CASK
TAMB	100.0	DEG.F	TAMB----OUTSIDE AMBIENT TEMPERATURE
NSOLAR	1	INCLUDE	NSOLAR--SOLAR HEATING IN NORMAL STEADY-STATE CALCULATION (INCLUDE/IGNORE=1/0)

KIND OF TRANSIENT THERMAL ANALYSIS TO BE PERFORMED

KTRANS = 6 OPTION SELECTED BY USER: OTHER POSSIBLE OPTIONS INCLUDE:

KTRANS=4 ... ASSUME LIQUID WATER NEUTRON SHIELD IS LOST MANY HOURS BEFORE START OF FIRE (ORIGINAL SCOPE DEFAULT)
KTRANS=5 ... ASSUME LIQUID NEUTRON SHIELD IS LOST INSTANTLY AT THE START OF THE FIRE (STANDARD NRC SCENARIO)
KTRANS=6 ... ASSUME A SOLID NEUTRON SHIELD, USE DATA BELOW, AND SWITCH TO NEW THERMAL CONDUCTIVITY DURING FIRE

THERMAL CHARACTERISTICS OF SOLID NEUTRON SHIELD (THE FOLLOWING DATA IS NOT USED UNLESS KTRANS=6)

RHONS	.07	LBM/CUFT	RHONS--NOMINAL DENSITY OF THE SOLID NEUTRON SHIELD
TCNS1	.0154	BTU/HR/FT/F	TCNS1--NOMINAL THERMAL CONDUCTIVITY OF THE SOLID NEUTRON SHIELD
TCNS2	.0154	BTU/HR/FT/F	TCNS2--THERMAL CONDUCTIVITY OF THE SOLID NEUTRON SHIELD DURING AND AFTER THE FIRE
CPNS2	.2400	BTU/LB/DG.F	CPNS2--HEAT CAPACITY OF THE SOLID NEUTRON SHIELD DURING AND AFTER THE FIRE

Page Added
Oct. 1990

S C O P E -- THE SHIPPING CASK OPTIMIZATION AND PARAMETRIC EVALUATION CODE, VERSION 1.2 (BY J. A. BUCHOLZ, ORNL)

TITLE: Evaluation of NLI-1/2 Containing 6 Failed Fuel Rods (30 WATTS TOTAL HEAT LOAD)

COMPONENT DIMENSIONS (INCHES):

O-LINER	=	.250
N-SHIELD	=	5.000
O-SHELL	=	.875
G-SHIELD	=	4.875
I-SHELL	=	.500
I-CASK	=	16.580
I-GAP	=	3.750
W-POISN	=	.000
W-INSRT	=	.010
C/P-GAP	=	.010
O-CANSTR	=	3.000
I-CANSTR	=	2.750
Q-LENGTH	=	143.750

THERMAL PARAMETERS:

SOLAR INSOLANCE	=	1 (INCLUDED)
AMBIENT TEMP	=	100.000 (DEG.F)
TOTAL DECAY HEAT	=	.030 (KW)

NOMINAL STEADY STATE TEMPERATURES (DEGREES-F)

SURFACE	O-LINER		N-SHIELD		O-SHELL		PB-SHIELD		I-SHELL	
T	DT	T(MAX)	DT	T(MAX)	DT	T(MAX)	DT	T(MAX)	DT	T(MAX)
181.16	.00	181.16	26.11	207.26	.00	207.27	.03	207.30	.00	207.31

GAP	INSERT	INSERT		GAP	CAN	CANISTER		FUEL PIN		
DT	T(MIN)	DT	T(MAX)	DT	T(MIN)	DT	T(MAX)	DT	T(MAX)	DEG.C
8.27	215.58	.02	215.59	.09	215.68	.00	215.68	2.12	217.80	103.22

(*) OUTSIDE DIAMETER OF THE CASK BODY = 39.58 INCHES: NO EXTERNAL COOLING FINS WERE REQUIRED.
TOTAL WGHT OF CASK LOADED WITH 6 FUEL ASSEMBLIES OR CANISTERS IS APPROXIMATELY 30441 LBS.

Page Added
Oct. 1990

PREFIRE TEMPERATURES (DEGREES-F)

TIME...(H.M.S)	*-------INSERT----*--GAP--*----I.SHELL----*---G.SHIELD----*----O.SHELL----*----N.SHIELD----*----O.LINER------*													
RADIUS (FT)==)	.3082	.3451	.3783	.6908	.7120	.7325	.9574	1.1388	1.1758	1.2117	1.4352	1.6283	1.6388	1.6492
	REFERENCE STEADY-STATE TEMPERATURES USED IN CALCULATING TEMP RISE (ASSUMES N-SHLD PRESENT & NO SOLAR HEATING):													
.00 0. 0. 0	138.68	138.67	138.67	127.00	127.00	127.00	126.98	126.97	126.96	126.96	112.09	100.98	100.97	100.97
	INITIAL STEADY-STATE TEMPERATURES AT START OF 30-MINUTE FIRE (SEE ASSUMPTIONS FOR KTRANS=6):													
.00 0. 0. 0	138.68	138.67	138.67	127.00	127.00	127.00	126.98	126.97	126.96	126.96	112.09	100.98	100.97	100.97
INIT TEMP RISE	.00	.00	.00	.00	.00	.00	.00	.00	.00	.00	.00	.00	.00	.00

ULTIMATE POSTFIRE TEMPERATURES (DEGREES-F)

TIME...(H.M.S)	*-------INSERT----*--GAP--*----I.SHELL----*---G.SHIELD----*----O.SHELL----*----N.SHIELD----*----O.LINER------*													
	ULTIMATE STEADY-STATE TEMPERATURES. LONG AFTER THE 30-MINUTE FIRE IS OVER:													
999.0 999.0.0	138.68	138.67	138.67	127.00	127.00	127.00	126.98	126.97	126.96	126.96	112.09	100.98	100.97	100.97

TRANSIENT TEMPERATURES (DEGREES-F)

	-------INSERT------GAP--*----I.SHELL----*---G.SHIELD----*----O.SHELL----*----N.SHIELD----*----O.LINER------*													
MAX TEMP RISE:	2.86	2.86	2.86	3.40	3.41	3.41	3.41	3.41	3.41	3.41	757.89	1322.81	1322.86	1322.90
AT TIME (HRS):	28.67	28.67	28.67	4.17	4.17	4.17	4.08	4.00	4.00	3.92	.50	.50	.50	.50
MAX FIRE TEMP:	141.54	141.53	141.52	130.41	130.41	130.40	130.39	130.38	130.37	130.37	869.98	1423.79	1423.83	1423.88

DURING AND AFTER THE 30-MINUTE FIRE:

MAX GAMMA SHIELD TEMP..... 130 DEG.F = 54 DEG.C
MAX BASKET INSERT TEMP..... 142 DEG.F = 61 DEG.C
MAX FUEL PIN CLAD TEMP..... 145 DEG.F = 63 DEG.C

AS PER 10CFR73, SECT 71.73, THE EFFECTS OF SOLAR HEATING WERE NEGLECTED PRIOR TO, DURING, AND AFTER THE 30-MINUTE FIRE.

Page Added
Oct. 1990

This page intentionally left blank.

Section IX

SECTION IX

SHIELDING ANALYSIS

This page intentionally left blank.

SECTION IX
SHIELDING

Table of Contents

Revised
Feb. 1987
May 1987
Dec. 1988
Feb. 1990
Oct. 1990
Feb. 1991

Table of Contents (cont'd)

Revised
Feb. 1987
May 1987
Dec. 1988
Feb. 1990
Oct. 1990
Feb. 1991

List of Tables (cont'd)

List of Figures

Page Added
May 1987
Revised
Dec. 1988
Feb. 1990
Oct. 1990
Apr. 1992

INTRODUCTION

The shielding model used to calculate the radiation levels around the top corner of the cask is not an exact representation of the actual top corner arrangement. Minor design modifications were made in this area subsequent to the shielding analysis. The following sketch shows the differences between the two configurations. It can be seen that configuration changes contribute to the shielding adequacy and, therefore, a revision to the corner analysis is not necessary.

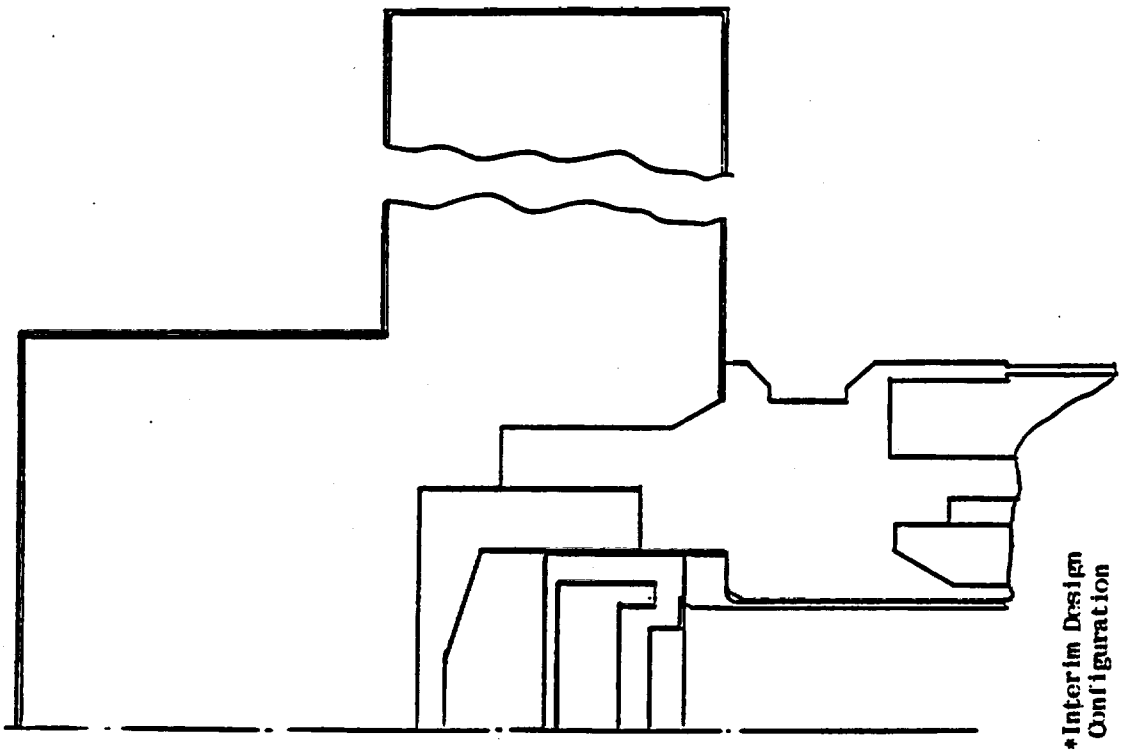

*Interim Design Configuration

*Final design configuration is addressed in Appendix A.

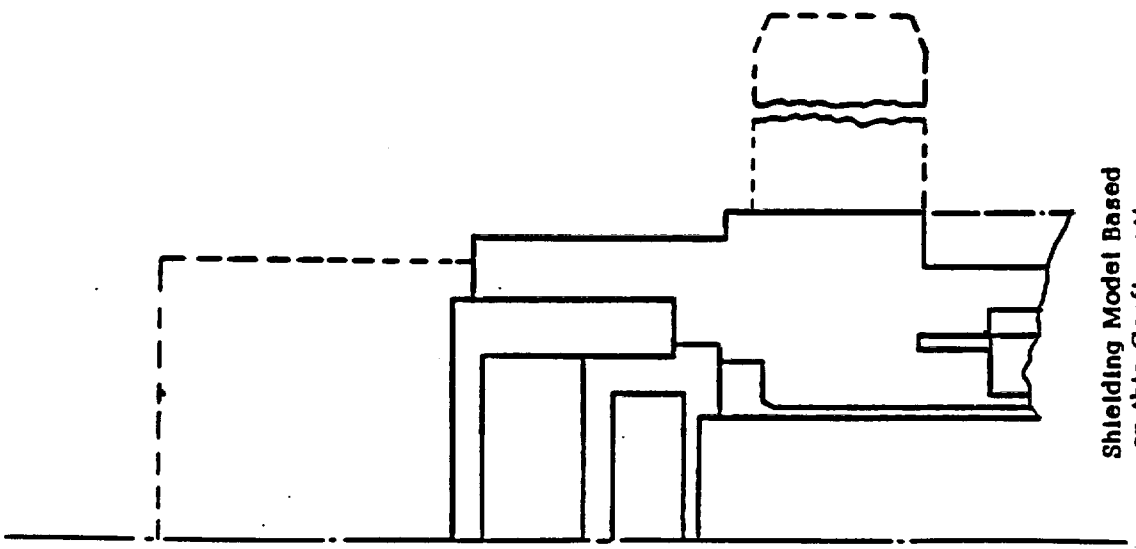

Shielding Model Based on this Configuration

Revised
Feb. 1991

This page intentionally left blank.

Section IX

SHIELDING

1.0 SUMMARY

The purpose of this section is to define the total gamma and neutron dose rates to be expected outside the NLI 1/2 spent fuel shipping cask. The fuel to be shipped and the corresponding fission product source inventories are discussed in Section III. Detailed dose rate calculations have been performed for the fuel parameters identified in Section III for a 40,000 MWD/MTU PWR fuel assembly with an average operating specific power of 40 kw/kgU, and an initial enrichment of 3.35 w/o U-235 in 0.454 MT of uranium.

The NLI spent fuel shipping cask shield has been designed to insure that the radiation emanating from the cask is effectively reduced to levels equal to or less than those levels currently specified by the DOT or AEC hazardous materials shipping regulations. The pertinent radiation standards controlling the shield design are:

From Section 173.393 of Reference 1 for normal conditions of transport

"(j)...

(1) 1000 millirem per hour at 3 feet from the external surface of the package(closed transport vehicle only);

(2) 200 millirem per hour at any point on the external surface of the car or vehicle (closed transport vehicle only);

(3) 10 millirem per hour at 6 feet from the external surface of the car or vehicle; and

(4) 2 millirem per hour in any normally occupied position in the car or vehicle, except that this provision does not apply to private motor carriers."

From Section 71.36 of Reference 2 which specifies the standards for hypothetical accident conditions for a single package

"(a)...

(1) The reduction of shielding would not be sufficient to increase the external radiation dose rate to more than 1000 millirems per hour at 3 feet from the external surface of the package."

The shield materials used in the cask design have been selected and arranged to minimize the cask weight while maintaining overall shield effectiveness. Lead and depleted uranium were chosen as effective gamma radiation shields, and a water jacket on the outside of the cask was provided to efficiently moderate the neutron radiation.

The total neutron and gamma dose rates calculated for the design fuel loading for design shipping conditions are shown in Table IX-1. It can be seen that the maximum dose rate is located on the fuel axial midplane, and does not exceed the limits specified above. The total neutron and gamma dose rates under hypothetical accident conditions are also given in Table IX-1. Again, it can be seen that the maximum expected dose rate is located on the fuel axial midplane and is within the specified limits.

The dose rates given in Table IX-1 include those from neutrons and gammas originating in the fuel, from neutrons and gammas scattered from the ground, from secondary gammas resulting from neutron capture in the shield, and from neutrons originating from fissions in the depleted uranium shield. All other sources of dose are insignificant. The details of the calculations and results are described in the following sections.

TABLE IX-1

NLI 1/2 SHIPPING CASK
SUMMARY OF MAXIMUM DOSE RATES
mrem/hr

	FUEL MIDPLANE			TOP				BOTTOM		
	Cask Surface	3' from Cask	6' from Personnel Shield	Cask Surface	3' from Cask	6' from Personnel Shield	Vehicle* Cab	Cask Surface	3' from Cask	6' from Personnel Shield
Normal Conditions										
Gamma	27.8		3.58	12.9		1.94	0.56	13.2		1.44
Neutron	25.0		5.01	29.5		5.71	1.41	37.5		5.29
Total	52.8		8.59	42.4		7.65	1.97	50.7		6.73
49 CFR 173 Limit			10			10	2			10
Hypothetical Accident Conditions										
Gamma	1438	400		63	14.5			72	13.1	
Neutron	991	387		154	53.0			224	62.0	
Total	2429	787		217	67.5			296	75.1	
10 CFR 71 Limit		1000			1000				1000	

*Dose Point Behind Vehicle Cab.

2.0 DESIGN FUEL SOURCE TERMS

Section III of this report defines the PWR and BWR fuel design and operating conditions on which the cask design is based and develops the corresponding neutron and gamma source strengths. The results, summarized in Table III-3, indicate that both source terms are larger for the 1 PWR assembly cask loading then for the 2 BWR assembly cask loading. Detailed gamma and neutron dose rate calculations were therefore performed only for the limiting 40,000 MWD/MTU PWR assembly.

Table IX-2 gives the PWR design information used as a basis for the cask shield design. The energy distributions of the primary gamma and neutron sources are given in Table IX-3. The basis for these distributions is given in Section III. In addition to the primary neutron and gamma sources originating in the spent fuel being shipped, secondary neutron and gamma sources occur because of interactions of the primary radiation with the cask materials. These sources and the resulting doses are discussed later in this section.

3.0 METHODS OF ANALYSIS

Presented below is a discussion of the techniques used to perform gamma and neutron dose rate calculations leading to the design of the NLI spent fuel shipping cask. Included is a definition of the various computer codes used in the cask design , a description of the configuration and composition of the source and shield materials used, and the location of the various dose points considered.

3.1 Shield - Dose Point Description

The shield overlay shown in Figure IX-1 and described in Table IX-4 was used to represent the NLI 1/2 cask for normal shipping conditions. Table IX-5 defines the material overlay densities and elemental composition. All

Table IX-2

PWR REFERENCE DESIGN INFORMATION

Loading	*454 kgU/assembly
Initial Enrichment	*3.35 w/o
Average Specific Power	40 kw/kg U
Average Burnup	40,000 MWD/MTU
Cooling Time	150 days
Total Gamma Energy	3.074×10^{16} MeV/sec
Neutron Source	7.55×10^{8} n/sec

*Uranium loading and initial enrivment values were subsequently increased to 475 kgU/assembly and 3.7 w/o respectively. Increasing the uranium loading from 454 Kg to 475 Kg could result in a combined gamma and neutron source strength increase of a similar magnitude (about 4.6%). The only shielding problem this could cause is in the dose at the truck cab (see table IX-1). This small increase, however, is more than offset by the fact that a uniform axial source distribution was used for the direct gamma dose calculations. If the correct axial distribution were used, it would decrease the direct gamma contribution by a factor of 2 (see page IX-27). This would result in a decrease in total dose at the truck cab of 9.6% which more than compensates for a 4.6% increase in source strength.

Table IX-3

DESIGN BASIS PWR ASSEMBLY GAMMA AND NEUTRON ENERGY DISTRIBUTIONS

Gamma

Energy Group MeV	Relative Distribution 150 Days After Shutdown	Assumed Gamma Energy MeV/γ	Gamma Decay Source MeV/sec
0.1 - 0.4	1.2×10^{-2}	0.30	3.6888×10^{14}
0.4 - 0.9	0.97526	0.80	2.9979×10^{16}
0.9 - 1.35	1.8×10^{-3}	1.25	5.5332×10^{13}
1.35 - 1.8	9.4×10^{-4}	1.50	2.889×10^{13}
1.8 - 2.2	1.0×10^{-2}	2.00	3.074×10^{14}
> 2.2	$< 2 \times 10^{-4}$	--	--
		Total	3.074×10^{16}

Neutron

Energy Group MeV	Relative Distribution Combined Spectrum	Neutron Source n/sec.
< 0.1	--	0
0.1 - 0.4	0.031	0.24×10^{8}
0.4 - 0.9	0.163	1.23×10^{8}
0.9 - 1.4	0.150	1.13×10^{8}
1.4 - 3.0	0.383	2.89×10^{8}
> 3.0	0.273	2.06×10^{8}
	Total	7.55×10^{8}

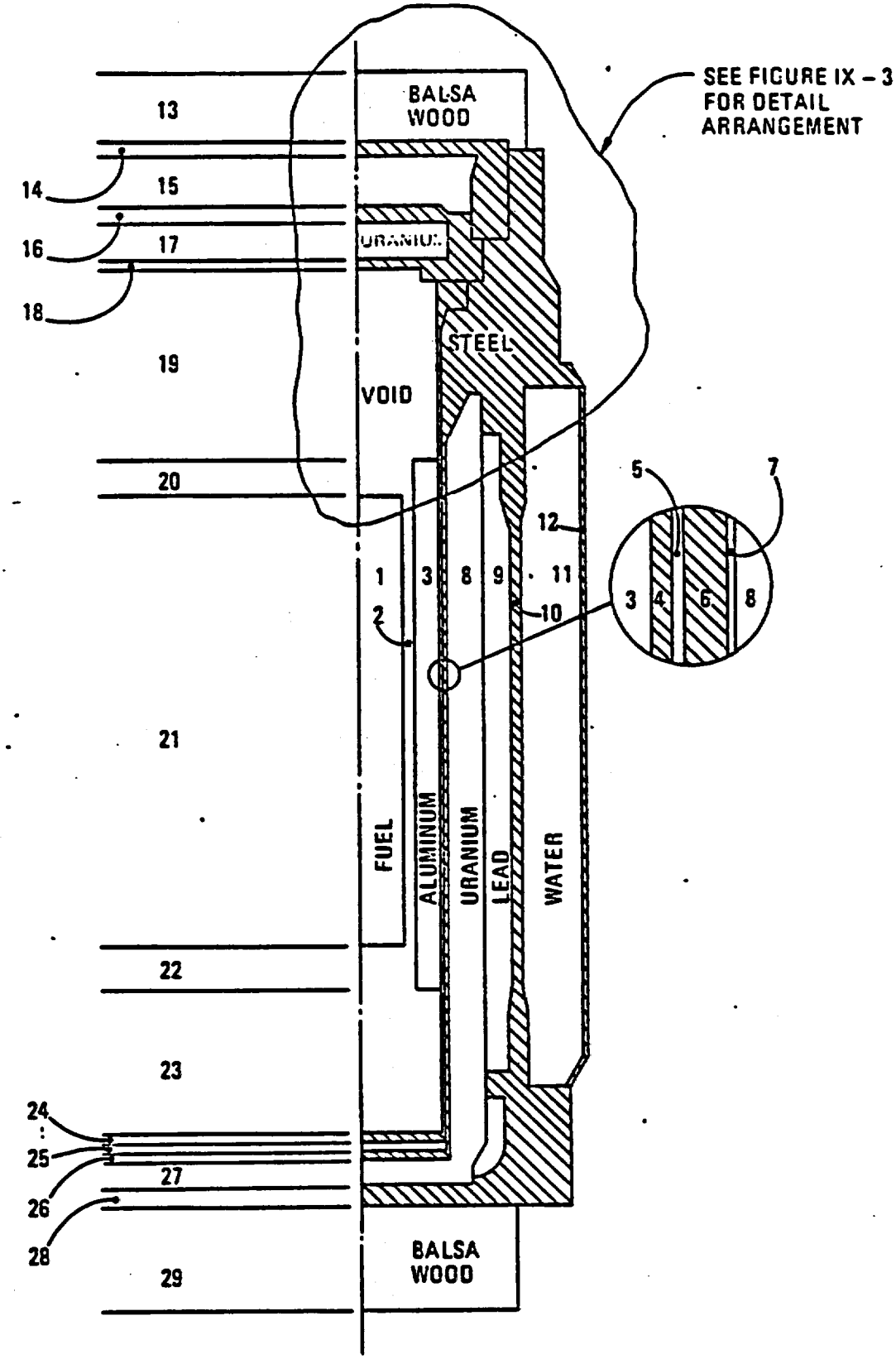

FIGURE IX – 1
NLI 1/2 REFERENCE DESIGN SHIELD MODEL –
NORMAL TRANSPORTATION MODE

TABLE IX-4

SHIELD REGION AND IDENTIFICATION

REGION	MATERIAL	THICKNESS cm
1	Dry Fuel Region	12.05
2	Void	4.7625
3	Aluminum	3.5075
4	Steel	0.635
5	Void	0.3175
6	Steel	1.27
7	Void	0.0668
8	Uranium	6.985
9	Lead	5.3975
10	Steel	2.2225
11	Cold Water	12.7
12	Steel	0.635
13	Balsa Wood	40.64
14	Steel	2.8575
15	Void	9.8425
16	Steel	3.175
17	Uranium	7.62
18	Steel	1.905
19	Void	40.1075
20	Void	7.2
21	Dry Fuel	365.76
22	Void	8.89
23	Void	30.1625
24	Steel	1.27
25	Void	0.3175
26	Steel	3.4925
27	Uranium	7.9375
28	Steel	3.175
29	Balsa Wood	40.64

TABLE IX-5

NLI 1/2 REFERENCE CASK SHIELD DENSITIES
USED IN THE SHIELD DESIGN *

Shield Material	Element	Number Density (atoms/cc) x 10^{-24}
Fuel Region		
	Oxygen	0.012975
	Chromium	0.0000085
	Iron	0.0000307
	Zirconium	0.00405
	Nickel	0.0001566
	U-235	0.0000395
	U-238	0.00605
	Pu-239	0.0000303
	Pu-240	0.0000083
Aluminum Region	Aluminum	0.059006
Stainless Steel Regions	Chromium	0.01674
	Iron	0.0606
	Nickel	0.00988
Depleted Uranium	U-235	0.0001053
	U-238	0.04785
Lead Shield Region	Lead	0.033
Water in Shield Tank**	Hydrogen	0.05919
	Oxygen	0.02960
Balsa Wood	Hydrogen	0.0040938
	Carbon	0.003024
	Oxygen	0.0017628

* See Figure IX-1 for shield arrangement
** Taken at ~ 360°F

materials thus defined conform with standard material compositions specified in References 3, 4, 5 and 6 for the materials of construction specified in Section VI. For example, the U-235 content of the depleted uranium shield, taken as 0.22 w/o U-235, is in accordance with depleted uranium material composition specifications given in Reference 3. The water density was based on calculated water tank temperatures of approximately 360°F. Of course, these temperatures are not expected to be attained and maintained, and thus these densities will assist in insuring a conservative shield design. The maximum expected temperature is 352°F for the shield tank. The density of balsa wood used was conservatively assumed to be 0.12 g/cc (See Reference 6) composed of 60% cellulose ($C_6H_{10}O_5$) and 35% Lignin ($C_{20}H_{20}O_6$).

It will be noted that all shield regions were assumed to maintain cylindrical geometries. All regions except the fuel region are cylindrical. The fuel region cross-sectional area was calculated based on dimensions specified in Table III-2 (PWR-Westinghouse) and the equivalent circular cross section was used in the dose rate calculations. This cylindrical configuration will tend to underestimate the gamma and neutron dose rates adjacent to the assembly corner and will tend to overestimate the dose rates adjacent to the assembly side. Calculations, described later, were performed to determine the magnitude of this effect.

Dose points for the normal shield design were chosen and placed in accordance with conditions specified in 49 CFR 173[1] discussed in Section 1.0 above. Thus, dose points were placed at the fuel midplane on the surface of the shield jacket and 10 feet off the cask centerline (i.e., 6 feet off the external surface of the vehicle) and on the cask centerline on the surface of the balsa wood

placed on the cask top and bottom, 6 feet off the personnel barrier at the cask top and bottom, and 197 inches off the cask top surface (to obtain dose rates to be expected behind the vehicle cab). These dose points are shown in Figure IX-2.

3.2 Primary Gamma Dose Rates

The QAD-P5 computer code was used as the principal tool for calculating the primary gamma dose rates. The QAD-P5 computer code, a version of the QAD-IV computer code [7] calculates both uncollided and collided gamma (and neutron) dose rates, energy deposition and fluxes for a volumetric source represented by a number of point isotropic sources in a user specified shield configuration. For each dose point the straight distance and attenuation in each shield material is calculated for each source point. The total dose is obtained by summing the contributions from each source point.

The code QAD has had extensive use in industry for dose rate calculations and has been shown to yield satisfactory results.[8, 9] Calculations performed on similar shield configurations with hand methods and other computer codes have shown agreement with results generated by the QAD code. The gamma cross sections used in the QAD code were obtained from Reference 10, whereas the neutron removal cross sections were obtained from Reference 11. It should be noted, as will be discussed later, that the neutron portion of this code was used only for obtaining relative neutron dose rates off the cask surface.

The buildup factors used to calculate the ratios of uncollided-to-collided dose rates were obtained from Reference 12. The general equation used for the buildup factor calculation is

$$B(\mu_o r, E) = \sum_{i=0}^{3} \sum_{j=0}^{4} C_{ij} \left[\mu_o r\right]^i \left[E\right]^j + \epsilon_{ij}(\mu_o r, E)$$

for the ranges $0 \leq \mu_o r \leq 15$ and $0.5 \text{ MeV} \leq E \leq 10 \text{ MeV}$.

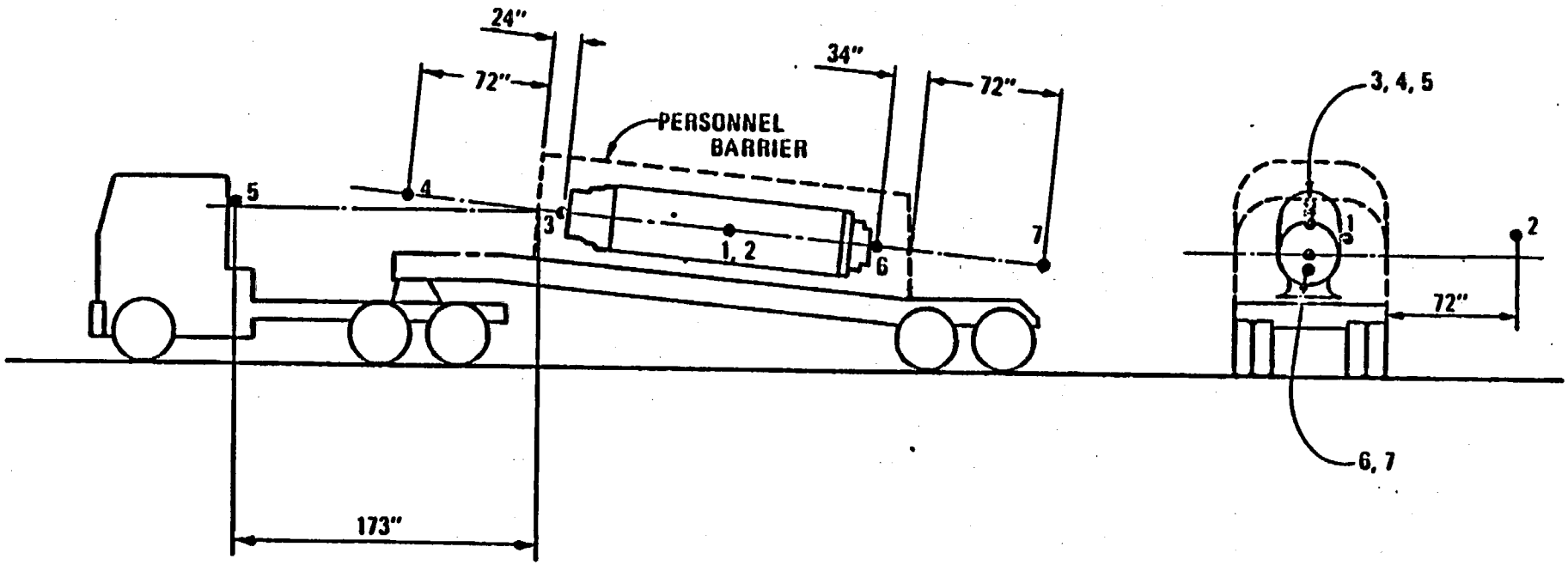

FIGURE IX – 2

DESIGN DOSE POINT LOCATIONS FOR NLI 1/2 REFERENCE CASK

E is the energy and $\mu_o r$ is the optical thickness of the shield material traversed by the gamma photon. The coefficients C_{ij} and correction terms ϵ_{ij} were obtained from Reference 12.

The above equation defines buildup factors effectively for only one element. Uranium was chosen for the basic analyses since (1) it is the most effective primary gamma attenuating material in the cask, and (2) the QAD code can handle buildup for one shield material per computer calculation.

To define the actual expected buildup effect for the NLI cask shield complex, additional hand calculations were performed to determine the actual buildup that might be experienced on the cask side, top, and bottom. A weighted mean buildup factor was calculated for a 2 MeV gamma (this is the major dose contributor) using Taylor's buildup equation.[13] The side buildup factor was calculated for the gamma traversing the region directly adjacent to the fuel midplane whereas the top and bottom buildup factors were calculated for the gamma transversing the region directly adjacent to the fuel axial centerline. The resulting buildup factor was compared to the uranium equivalent buildup factor calculated for the same cross sections using the equation given above. This comparison shows that the actual buildup factor may increase the side dose rates by 57% and the top and bottom dose rates by 45%. This increase can be attributed to the presence of a substantial quantity of light material (i.e., steel, shield water). The gamma flux to dose rate conversion factors given in Table IX-6 were used in the QAD program. These values are consistent with the information in References 14 and 15.

The source and shield configuration described in Figure IX-1 and Tables IX-4 and IX-5 was input into the QAD code and dose rates calculated at

Table IX-6

GAMMA FLUX-TO-DOSE RATE
CONVERSION FACTORS

Gamma Energy, MeV	Flux-to-Dose Conversion Factor mr/hr/photon/cm^2-sec
0.3	5.7669×10^{-4}
0.8	1.4878×10^{-3}
1.25	2.1524×10^{-3}
1.50	2.447×10^{-3}
2.00	2.9995×10^{-3}

the dose points specified in Figure IX-2. The source given in Table IX-3 was considered to be uniformly distributed over the active fuel volume. The source cross section was circularized to have the same area as that of the actual fuel assembly cross section. This assumption would be expected to overpredict the cask surface doses off the sides of the fuel assembly and underpredict the surface doses off the corners of the assembly. To evaluate this effect additional detailed dose rate calculations were performed with QAD. In these calculations the source region was arranged to mock up the actual fuel cross-sectional configuration with the dose points off the corner of the assembly. The results on the cask surface and 10 feet from the centerline were compared to those for the cylindrical source configuration. The surface gamma dose rates were found to be 11% higher than for the circularized source while the 10 foot dose rates were 6% larger.

To confirm the adequacy of the shielding at other locations off the end and side of the cask, additional QAD calculations were performed for dose points placed along the surface of the cask as shown in Figure IX-3. The results of this analysis, given in detail in Section 4.0, show that the dose rates off the top of the cask do not anywhere exceed that at the centerline (dose point 3, Figure IX-2) and that the dose rates off the side do not anywhere exceed that at the fuel midplane.

All of the above calculations were performed assuming the source to be distributed uniformly throughout the fuel region. In addition, dose rates were determined for an axial gamma source distribution taken to be the same as the burnup distribution given in Figure III-1 for 300 days operation. This is a conservative representation of specific power and therefore of gamma source strength distribution for the reference fuel conditions. The results show that the midplane surface and 10 feet dose rates will

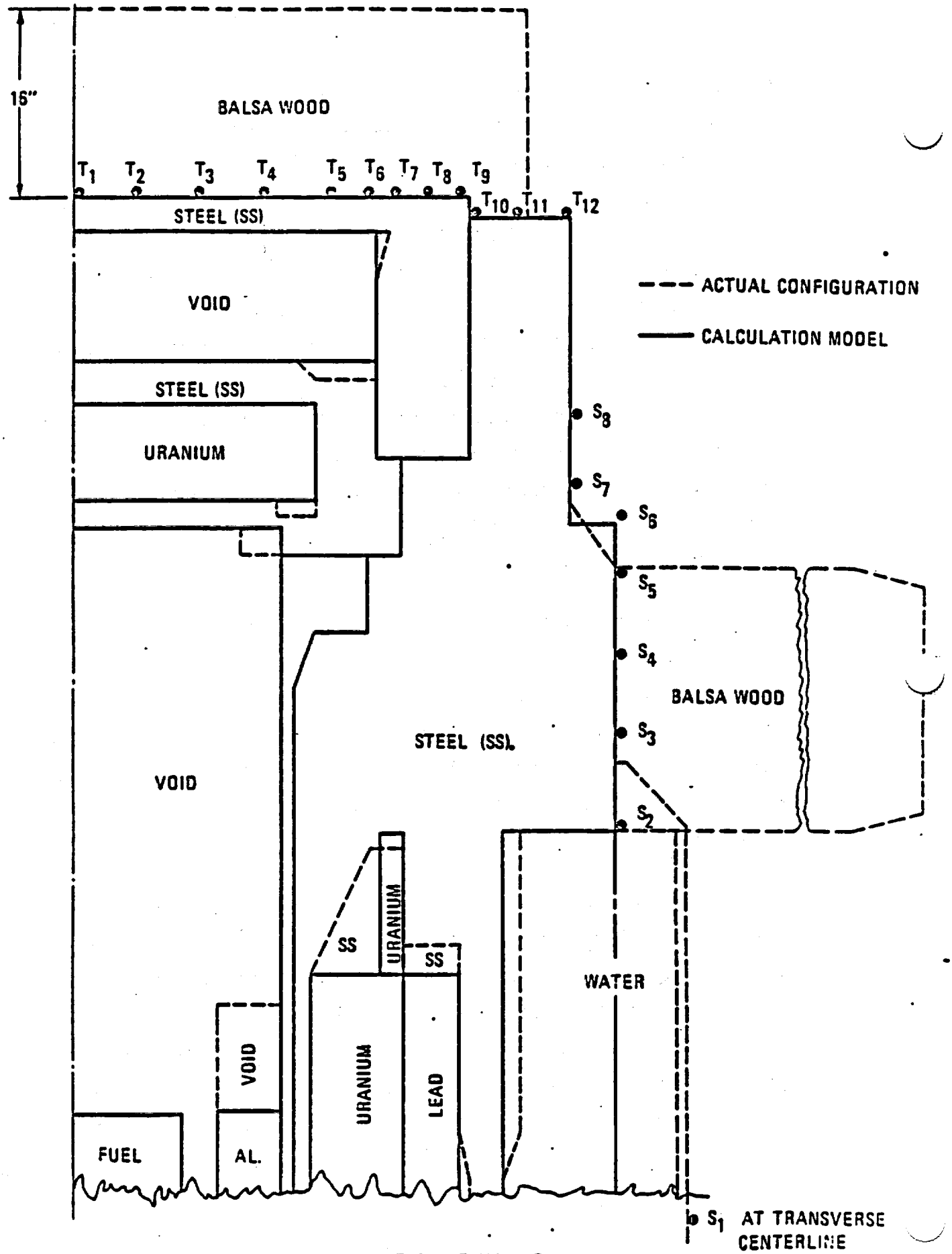

FIGURE IX – 3
TOP AND TOP – SIDE SHIELD – DOSE POINT RELATIONSHIP

increase by about 10% and 5% respectively for the 18% increase in peak source. These increases were included in the final result. The top-side and top dose rates would decrease approximately 55%; however, no credit was taken for this decrease.

3.3 Neutron Dose Rates

The principal analytical tool for the determination of neutron dose rates from the shipping cask is the DTF-IV[16] computer code. DTF-IV is a one-dimensional multigroup code which solves the Boltzman transport equation, including anisotropic scattering, by the discrete ordinate method. The DTF-IV code was developed by the Los Alamos Scientific Laboratory for use in calculating neutron flux through shield media. The code uses the same theory and equation for neutron flux calculation as the ANISN code,[17] which has been checked with several simple experiments described in References 18 and 19.

For the present analysis the P_1-S_4 approximation to the transport equations was used with a 16 group neutron energy spectrum. The spectrum, taken from that of Hansen and Roach,[20] is given in Table IX-7. The appropriate material cross sections were obtained from the Los Alamos Scientific Laboratory and are based on a U-235 fission spectrum.

The cask surface neutron fluxes determined by DTF-IV were converted to dose rates using the conversion factors in Table IX-7.[15, 21] The dose rates off the cask surface were obtained by using relative dose rate fall-off factors obtained from the neutron removal option of the QAD-P5 program described previously. This option uses neutron removal cross sections to calculate neutron flux distributions.

The DTF-IV radial dose rates were checked with several computer analyses performed with the ANISN code. The energy group specification for cross

Table IX-7

STANDARD GROUP STRUCTURE USED
IN DTF-IV FLUX CALCULATIONS

Group	Minimum Energy	Neutron Flux to Dose Rate Conversion Factors mrem/hr/n/cm^2-sec
1	3.0 MeV	0.13
2	1.4 MeV	0.13
3	0.9 MeV	0.127
4	0.4 MeV	0.071
5	0.1 MeV	0.030
6	17.0 keV	0.008
7	3.0 keV	0.00431
8	555.0 eV	0.00455
9	100.0 eV	0.0050
10	30.0 eV	0.00555
11	10.0 eV	0.00521
12	3.0 eV	0.00492
13	1.0 eV	0.00476
14	0.4 eV	0.00463
15	0.1 eV	0.00439
16	0.001 eV	0.00374

sections and flux calculations used in the ANISN code is similar to the DTF-IV distribution defined in Table IX-7. However, the cross section data was generated, assuming a Cf-252 spontaneous fission spectrum, using the CSCROS [23] computer code, which is a program containing the GAM II[24] and THERMOS [25] codes. GAM II calculates the fast neutron spectrum up to the P-3 or B-3 approximation in 99 fine groups from 14.9 MeV to 0.414 eV. THERMOS solves the one-dimensional integral transport equation in 30 groups with an upper energy cutoff at 1.85 eV. The results of the ANISN calculations were in satisfactory agreement with the DTF-IV results.

In addition to calculation of the flux distribution resulting from the spontaneous fission and (α, n) reaction neutron source in the fuel, the DTF-IV code was used to calculate the additional flux due to subcritical multiplication (i.e., fission) in the fuel and the similar effect due to fissioning in the uranium shield material. The surface fluxes and doses include all of these effects.

DTF-IV problems were set up to calculate the flux distributions radially at the fuel midplane and axially at the top and bottom of the cask using the shield description of Figure IX-1 and Tables IX-4 and IX-5. The source was considered to be uniformly distributed throughout the cylindrical fuel region. The radial DTF-IV problems used a buckling height of 12 feet. The x-y extrapolated buckling dimensions used for the axial calculations were chosen such that the fuel assembly centerline fluxes were consistent with the same fluxes obtained with the radial DTF-IV problems. This resulted in x-y buckling dimensions of 43 x 43 cm.

The effect of circularization of the fuel region was discussed for gamma dose rates in Section 3.2. A similar analysis using the neutron removal option of QAD-P5 yields a maximum dose increase 10 feet off the cask

centerline of 4%.

Based on the end of life axial burnup distribution given in Figure III-1 and the specific source strength of Figure III-3 the axial neutron source distribution has a peak to average ratio of 1.25. While earlier in life burnup distributions would have greater peak to average ratios, the average burnup, and therefore total neutron source, would be considerably less than at end of life. The neutron source axial peaking factor of 1.25 was conservatively applied directly to the off the side neutron dose rates.

The calculations described in Section 3.2 of gamma dose variations around the top and top-side of the cask also yielded relative neutron doses. These results show that the maximum neutron doses off the side and off the ends occur either on the cask axial centerline or at the fuel midplane.

In addition to the detail computer calculations performed around the side and top-side of the cask, hand calculations were performed to define the neutron dose rate contribution off the ends from neutrons streaming through the cask cavity. The calculations were performed for the dry fuel assembly for (1) direct radiation emanating from fuel pins through the assembly interior to a worst point as compared to the computerized homogeneous system, (2) radiation scattering through the fuel assembly channels interior to the assembly, and (3) radiation scattering through the assembly-aluminum gap. The calculations were performed using equations defined in References 14 and 26. It was calculated that the direct neutron dose rates off the ends should be increased by approximately 100% to account for neutron streaming. These results are included in the reported top and bottom neutron dose rates in Section 4.0.

3.4 Secondary Gamma Dose Rates

The secondary capture gamma sources and subsequent dose rates on the side and ends of the NLI spent fuel shipping cask were calculated using the ANISN computer code along with TAPEMAKER,[27] a routine to prepare a group independent cross section tape for ANISN. The ANISN code was used to calculate fast and thermal neutron fluxes in the NLI cask, and these results were then used by TAPEMAKER to generate capture gamma cross sections for each region. Then these results were put back into ANISN to calculate capture gamma source strengths and resulting capture gamma dose rates. The QAD-P5 code was used to predict the capture gamma fall off from the cask side and end surfaces. For these calculations the source was taken to be located at the cask outer shell since this was found to be a major source of secondary gammas. These results are reported in Section 4.0.

3.5 Ground Scatter

Scattering of neutrons and gamma photons from the ground could contribute to an increase in the total dose rate off the cask surface. The amount of this contribution has been calculated for both gamma photons and neutrons using the NUSALB code. This code is a portion of the SOSC code developed for NASA-Goddard Space Flight Center.[28] The NUSALB code integrates radiation scattered to a receptor by a differential area of the scattering material. Angular-differential scattering is determined according to the albedo formulae. The code results are in good agreement with graphic data published by A.B. Chilton.[29]

The cask was taken to be horizontal 5.25 feet above the ground, which was taken to be concrete. The receptor was 3 feet above the ground, 10

feet from the cask centerline. The neutron (and photon) calculation was carried out over a ground projected area defined by a distance ≥ 10 meters from both source and receptor.

The cask was defined as four point sources spaced at 3.0 feet along the cask axis. Each of these four sources were defined as having 25% of the total source strength. The energy spectral distributions (normalized to 1 mrem/hr) used in the ground scatter calculations are given in Tables IX-8 and IX-9. These distributions were obtained from the primary gamma and neutron radial shielding analysis of the cask with water inside the cavity rather than the can and aluminum blocks. These distributions differ from those for the cask with the dry can by less than 6%.

The neutron differential scattering was determined according to the empirical relationship of Y. T. Song [30] which was derived from an analysis of the Monte Carlo data of F. J. Allen.[31] For thermal neutrons the relationship of R . L. French and M. B. Wells [32] was used. The angular differential dose albedo for gamma photons was obtained from the work of A . B. Chilton. [29]

3.6 Hypothetical Accident Conditions

In order to show compliance with the requirements of 10 CFR 71, calculations similar to those described in sections 3.2 and 3.3 were performed for the expected post-hypothetical accident conditions of the cask. These conditions are loss of shield jacket water, loss of balsa wood and melting with complete loss of all lead shielding.

The calculations were actually performed for a cask design which omitted the aluminum blocks inside the can and the $\frac{1}{4}$ inch can itself. The results are conservatively applicable to the final design with the aluminum

Table IX-8

NORMALIZED NEUTRON DOSE DISTRIBUTION

Group	E min.	Normalized Group Dose (mrem)
1	3.0 MeV	0.184
2	1.4 MeV	0.340
3	0.9 MeV	0.128
4	0.4 MeV	0.151
5	0.1 MeV	0.63 -1*
6	17.0 KeV	1.26 -2
7	3.0 KeV	3.84 -3
8	555.0 eV	5.13 -3
9	100.0 eV	6.10 -3
10	30.0 eV	5.22 -3
11	10.0 eV	3.53 -3
12	3.0 eV	4.33 -3
13	1.0 eV	1.73 -3
14	0.4 eV	2.56 -3
15	0.1 eV	2.34 -3
16	0.001 eV	8.69 -2
	Total	= 1.0 mrem

*0.63-1 is 0.63×10^{-1}

Table IX-9

NORMALIZED GAMMA PHOTON DOSE

Group	Photon Energy (MeV)	Group Normalized Dose (mrem)
1	0.8	0.0031
2	1.25	0.0068
3	1.50	0.0176
4	2.0	0.9725
	Total =	1.0 (mrem)

and the can in place.

Primary gamma and neutron doses at the cask side and end surfaces and 3 feet off these surfaces were determined using the techniques previously described. The shield configuration was as described in Figure IX-1 and Table IX-4 except that the aluminum, can wall, lead and shield jacket water were omitted for the radial calculations while the balsa wood was omitted for the axial calculations. The end dose points were placed on the outer surfaces of the top and bottom heads. For the purpose of defining the cask side surface (and the 3 foot off of the surface point) it was assumed that the shield jacket was collapsed onto the cask outer shell.

4.0 RESULTS

4.1 Normal Conditions of Transport

The calculated dose rates off of the sides and ends of the cask for normal conditions are given in Table IX-10 and are discussed below.

The primary gamma dose rates on the fuel midplane as calculated by QAD are 11 mrem/hr on the cask surface and 1.6 mrem/hr ten feet from the centerline (i.e., 6 feet from the nearest accessible surface). To conservatively obtain the maximum dose rate, these must be increased by the appropriate amounts to account for the higher buildup factor due to the presence of water, the corner peaking of the actual fuel cross section and the axial peaking of the actual source distribution. These factors were discussed previously and are 57% for the buildup factor; 11% and 6% for the corner effect at the surface and 10 foot point respectively and 10% and 5% for the axial effect at the surface and at 10 feet respectively. The results are 21 mrem/hr on the surface and 2.8 mrem/hr 10 feet from the centerline.

TABLE IX-10

NLI 1/2 CASK MAXIMUM DOSE RATES
(Normal Conditions of Transport)
mrem/hr

Source Category	Fuel Midplane		Off End on Axial Centerline				
			Top			Bottom	
	Cask Surface	6' from Personnel Shield	Cask Surface	6' from Personnel Shield	Vehicle * Cab	Cask Surface	6' from Personnel Shield
Primary Gamma	21	2.8	12.5	1.79	0.56	12.9	1.29
Neutron	25	3.34	29.5	4.42	1.41	37.5	4.00
Secondary Gamma	6.8	0.61	0.37	0.033	---	0.37	0.033
Ground Scatter Gamma	---	0.17	---	0.12	---	---	0.12
Ground Scatter Neutron	---	1.67	---	1.29	---	---	1.29
Total Gamma	27.8	3.58	12.9	1.94	0.56	13.3	1.44
Total Neutron	25	5.01	29.5	5.71	1.41	37.5	5.29
Total	52.8	8.59	42.4	7.65	1.97	50.8	6.73

* Dose Point Behind Vehicle Cab (See Figure IX-2)

The neutron dose rates from DTF-IV are 18.1 and 2.57 mrem/hr on the surface and 10 feet from the centerline respectively both at the fuel midplane. These must be corrected by 9% and 4% respectively for the corner effect and 25% (conservatively applied to both surface and 10 foot doses) for axial peaking. The results are neutron doses of 25 and 3.34 mrem/hr at the surface and 10 feet from the centerline respectively.

The results of the secondary gamma dose rate calculations yield midplane dose rates of 6.8 and 0.61 mrem/hr at the surface and 10 feet from the cask centerline respectively.

The ground scatter calculations described in Section 3.5 yield backscatter dose factors of 0.05 for gamma photons and 0.5 for neutrons. These values are the effective fractional increase in the 10 foot direct gamma and neutron dose due to ground scatter. Conservatively applying these to the total maximum dose derived above yields 10 foot ground scatter dose rates of 0.17 mrem/hr and 1.67 mrem/hr for gammas and neutrons respectively.

Adding all the components gives combined dose rates on the midplane of the fuel of 52.8 mrem/hr on the cask surface and 8.59 mrem/hr 10 feet from the cask centerline. Table IX-11 summarizes the detailed derivation of the 10 foot dose rate.

The direct gamma dose rates off the top of the cask on the axial centerline were calculated to be 8.62, 1.23, and 0.38 mrem/hr at the balsa wood surface, 6 feet off the personnel barrier and behind the truck cab respectively. Off the bottom the dose rates are 8.85 and 0.89 mrem/hr on the balsa wood surface and 6 feet off of the personnel barrier respectively. The buildup correction factor applied to the gamma dose rates for the axial cases was previously defined as 1.45 and should be applied to the above numbers. The above numbers are based on a uniform axial source distribution. If the correct shape was utilized the dose off of both ends would decrease by

TABLE IX-11

DETAILED DERIVATION OF DOSE RATE
FUEL MIDPLANE 10 FEET FROM AXIS
(Normal Conditions of Transport)

	Base Value or Percent Correction	Dose Rate mrem/hr
Primary Gamma		
Base Calculated Value	1.6	
Buildup Factor Correction	57%	
Corner Correction	6%	
Axial Peak Correction	5%	
Total	75%*	2.80
Primary Neutron		
Base Calculated Value	2.57	
Corner Correction	4%	
Axial Peak Correction	25%	
Total	30%*	3.34
Secondary Gamma		0.61
Ground Scatter Gamma		
Direct Gamma Dose	3.41	
Backscatter	5%	0.17
Ground Scatter Neutron		
Direct Neutron Dose	3.34	
Backscatter	50%	1.67
	Total	8.59

*Total correction is product of individual factors

about a factor of 2. Also note that no credit is taken for any attenuation by the truck cab itself.

Including a 100% increase for streaming, the dose rates off the top would be 29.5, 4.42 and 1.41 mrem/hr on the balsa wood surface, 6 feet off the barrier, and behind the vehicle cab respectively. Off of the bottom the dose rates are 37.5 and 4.0 mrem/hr on the balsa wood surface and 6 feet off the barrier respectively.

The results of the secondary gamma dose rate calculations yield end dose rates of 0.37 and 0.033 mrem/hr on the balsa wood surface and 6 feet off the barrier respectively. These dose rates apply to both the top and bottom of the cask, since both have similar shield configurations. Ground scattering dose rates were not calculated off of the ends. However an upper limit estimate made considering the results of the side calculations yields the results given in Table IX-10.

The total dose rate six feet off the personnel barrier is seen to be 7.65 and 6.73 mrem/hr off the top and bottom respectively.

The gamma and neutron dose rates on the cask surface at the dose points defined in Figure IX-3 are given in Table IX-12. The neutron dose rates were normalized to the radial and axial DTF-IV results. It should be noted that these results include all applicable axial gamma and neutron correction factors for buildup, streaming, and corner peaking. Secondary gamma dose rates have not been included since they are small and would decrease approximately as the neutron dose decreases. It should further be noted that these dose rates do not account for any shielding offered by the balsa wood. The results show that none of the dose rates exceed the assembly axial or transverse centerline dose rates.

TABLE IX-12

END AND SIDE DOSE RATES
NORMAL CONDITIONS OF TRANSPORT

Dose Point*	Gamma Dose Rate** mrem/hr	Neutron Dose Rate*** mrem/hr
T-1	34.0	154.0
T-2	33.2	152.2
T-3	31.1	147.9
T-4	27.9	141.2
T-5	21.0	115.9
T-6	13.8	80.0
T-7	12.4	37.0
T-8	3.7	5.9
T-9	1.4	1.2
T-10	2.0	1.2
T-11	0.3	0.3
T-12	0.1	0.1
S-1	19.3	19.7
S-2	1.7	5.0
S-3	0.5	8.3
S-4	0.3	4.7
S-5	0.7	2.3
S-6	1.0	2.6
S-7	2.0	4.0
S-8	0.6	1.6

* See Figure IX-3

** Gamma dose rate include appropriate material buildup correction factors (1.57 for side and 1.45 for top) and side corner peaking correction factor of 1.12.

*** Neutron side dose rate includes an appropriate corner peaking correction factor of 1.09 and a top streaming correction factor of 2.0.

4.2 Hypothetical Accident Conditions

The results of the shielding analysis for post-hypothetical accident conditions are summarized in Table IX-13. The primary gamma dose rates off the side of the cask are 985 mrem/hr on the surface and 261 mrem/hr three feet off of the surface. These values should be increased by 10% to account for axial peaking. The buildup correction factor applicable to the case of a uranium and steel composite compared to the equivalent uranium value is 1.30. The corner correction factor for the accident case has been calculated to be approximately 1.01. The net effect is maximum primary gamma dose rates of 1423 and 377 mrem/hr on the surface and three feet from the surface respectively.

The neutron dose rates increase significantly because of the assumed loss of all water. The DTF-IV results are 785 and 204 mrem/hr at the surface and three feet from the surface respectively. Each of these are conservatively increased by 25% due to axial peaking of the neutron source, and 1% due to assembly corner peaking.

Based on a comparison of the surface neutron fluxes calculated for the accident case with those calculated for the normal case the secondary gamma dose rate is estimated as 15 mrem/hr on the surface and 4.1 mrem/hr at three feet. The ground scatter dose rates are taken to be the same relative fraction of the direct doses as was found for the normal case.

Adding all the components yield a maximum dose rate 3 feet off of the surface of 787 mrem/hr. The detailed derivation of this number is summarized in Table IX-14.

TABLE IX-13

NLI 1/2 CASK MAXIMUM DOSE RATES
(Hypothetical Accident Conditions)
mrem/hr

Source Category	Fuel Midplane		Off End on Axial Centerline			
			Top		Bottom	
	Surface	3' from Cask	Surface	3' from Cask	Surface	3' from Cask
Primary Gamma	1423	377	34	7.6	40	7.0
Neutron	991	258	154	36	224	41
Secondary Gamma	15	4.1	29	6.4	32	5.6
Ground Scatter Gamma	---	19	---	0.5	---	0.5
Ground Scatter Neutron	---	129	---	17	---	21
Total Gamma	1438	400	63	14.5	72	13.1
Total Neutron	991	387	154	53	224	62
Total	2429	787	217	67.5	296	75.1

TABLE IX-14

DETAILED DERIVATION OF DOSE RATE
FUEL MIDPLANE 3 FEET FROM SURFACE
(Hypothetical Accident Conditions)

	Base Value or Percent Correction	Dose Rate mrem/hr
Primary Gamma		
Base Calculated Value	261	
Buildup Factor Correction	30%	
Axial Peaking Correction	10%	
Corner Peaking Correction	1%	
Total	44%	377
Primary Neutron		
Base Calculated Value	204	
Axial Peaking Correction	25%	
Corner Peaking Correction	1%	
Total	26%	258
Secondary Gamma		4.1
Ground Scatter Gamma		
Direct Gamma Dose	381	
Backscatter	5%	19
Ground Scatter Neutron		
Direct Neutron Dose	258	
Backscatter	50%	129
	Total	787

*Total correction is product of individual factors.

The primary gamma and neutron doses off of the ends are given in Table IX-13 and are very similar to the normal shipping conditions dose rates, except that the accident dose rates were obtained at three feet off the surface with the balsa wood removed from the cask.

The maximum dose rate three feet from the cask surface for the design basis PWR assembly is seen to be at the midplace of the fuel. This result is less than the 10 CFR 71 limit of 1000 mrem/hr.

4.3 Shielding Analysis for Consolidated PWR Type Fuel Rods

Analyses of the effects of the shipment of consolidated fuel in the NLI 1/2 cask have been performed for criticality, shielding, structural, and thermal effects. The consoldated fuel modeled in the criticality, shielding, and structural analyses is W15 x 15 fuel cooled for two years, with an initial enrichment of 3.7 w/o U-235 and a burnup of 40,000 MWD/MTU. These values are considered to be representative of consolidated PWR spent-fuel shipments. The thermal analysis has been performed (see Section VIII) for W14 x 14 fuel cooled 12 years to add an additional margin of conservatism because the thermal behavior of consolidated spent fuel is currently being investigated.

The gamma and neutron sources generated by a PWR assembly (150 days cooled) and a conslidated fuel canister (730 days cooled) are given in Table IX-15. This Table compares SAR values obtained for the design basis PWR assembly from Section III and values calculated from the LOR-2 version of ORIGEN-2 used at Babcock and Wilcox in Lynchburg, Virginia. The gamma source for the canister is 69 percent of the source for an assembly, and the neutron source is 140 percent of the source for an assembly. Note that the consolidated fuel canister, because of its longer cool time, contains a smaller quantity of radionuclides than the design basis PWR assembly (cooled 150 days). The resulting dose rates may be obtained for canisters by multiplying the assembly dose rates contained in the NLI 1/2 SAR by the appropriate percentages. The results of these calculations are shown in Table IX-16.

TABLE IX-15

PWR ASSEMBLY AND CONSOLIDATED FUEL SOURCE STRENGTHS

		PWR Source Strengths from LOR-2			
	SAR Design Basis PWR Assembly*	Design Basis PWR Assembly*	Design Basis PWR Assembly*	Canister of Rods of 2 PWR Assemblies	%
Decay Time, days	150	150	730	730	--
Thermal Output, Kw	10.63	10.2	3.3	6.6	65
Gamma, MeV/sec	3.074×10^{16}	2.96×10^{16}	1.03×10^{16}	2.05×10^{16}	69
Neutrons, n/sec	7.55×10^{8}	6.23×10^{8}	4.37×10^{8}	8.74×10^{8}	140
Fission Products, Ci Total	--	2.17×10^{6}	6.63×10^{5}	1.33×10^{6}	61

*W15 x 15 assembly; 475 KgU; 3.7 w/o; 40,000 MWD/MTU

$$\% = \frac{\text{Source of Canister at 730 days}}{\text{Source of Assembly at 150 days}}$$

TABLE IX-16

CONSOLIDATED FUEL DOSE RATES

Normal Operation: (6 feet from Personnel Shield)*
(Assembly dose rates in parentheses)

Source	Fuel Midplane	Top	Bottom
Primary Gamma	1.93 (2.8)	1.24 (1.79)	0.89 (1.29)
Neutron	4.68 (3.34)	6.19 (4.42)	5.60 (4.00)
Secondary Gamma	0.42 (0.61)	0.02 (0.03)	0.02 (0.03)
Ground Scatter Gamma	0.12 (0.17)	0.08 (0.12)	0.08 (0.12)
Ground Scatter Neutron	2.34 (1.67)	1.81 (1.29)	1.81 (1.29)
Total Gamma	2.47 (3.58)	1.34 (1.94)	0.99 (1.44)
Total Neutron	7.01 (5.01)	7.99 (5.71)	7.41 (5.29)
Total	9.48 (8.59)	9.33 (7.65)	8.40 (6.73)

Hypothetical Accident: (3 feet from Cask Surface)*

Source	Fuel Midplane	Top	Bottom
Primary Gamma	260 (377)	5.2 (7.6)	4.8 (7.0)
Neutron	361 (258)	50.4 (36)	57.4 (41)
Secondary Gamma	2.8 (4.1)	4.4 (6.4)	3.9 (5.6)
Ground Scatter Gamma	13 (19)	0.3 (0.5)	0.3 (0.5)
Ground Scatter Neutron	181 (129)	24 (17)	29.4 (21)
Total Gamma	276 (400)	10.0 (14.5)	9.0 (13.1)
Total Neutron	542 (387)	74 (53)	87 (62)
Total	818 (787)	84 (67.5)	96 (75.1)

*Based on Table IX-10, Page IX-26

The maximum calculated Normal Operation dose rate of 9.5 mrem/hour is less than the limit of 10 mrem/hour at six feet, and the maximum Hypothetical Accident dose rate of 818 mrem/hour at three feet is less than the limit of 1000 mrem/hour. Thus, the gamma and neutron sources for consolidated fuel are acceptable.

4.4 Shielding Analysis for Metallic Fuel

Analysis of the neutron and gamm radiation dose rates is performed for metallic fuel by calculating the ratio of source strength for metallic fuel to source strength for intact PWR fuel and applying this ratio to the dose rates from PWR fuel. The neutron shield tank is drained for these shipments so the dose rates are calculated from the hypothetical accident -- loss of neutron shielding -- analysis presented in section 4.2. The dose rate ratios are computed as follows:

PWR Gamma Source:	2.25×10^{16} MEV/sec
Metallic Fuel Gamma Source:	1.253×10^{15} MEV/sec
Gamma Ratio =	0.056
PWR Neutron Source:	4.609×10^{8} n/sec
Metallic Fuel Neutron Source:	2.289×10^{5} n/sec
Neutron Source =	4.97×10^{-4}

The neutron ratio is also used for secondary gammas because secondary gammas are produced by interactions of neutrons with shielding material.

4.4.1 Fuel Midplane Dose Rates:

The PWR loss of neutron shield analysis calculates dose rates 3 feet from the cask surface. Normal operation dose rates were calculated at 6 feet from the cask package by applying a 1/r dose rate falloff relationship. The cask has a 47.125 inch outside diameter so the distance from the centerline of the cask to the 3 foot dose point is 59.6 inches. The cask may be located inside the personnel barrier on a truck trailer or inside a seagoing container. For conservatism, these packages are ignored and the cask surface is used as the package boundary for these calculations, so the 6 foot dose point is 95.6" from the cask centerline. The geometric falloff from the 3 foot distance dose point for hypothetical accident to the 6 foot normal operation location is thus 59.6/95.6 = 0.623.

The source ratios for gammas and neutrons and the geometric falloff (for hypothetical accident to normal operation) are applied to the fuel midplane dose rates for intact PWR fuel shown in Table IX-13, page IX-32. The primary gamma dose rates used in the normal operation calculation is not the value given in Table IX-13 because this assumes that the lead gamma shield is melted, which is not the case in normal operation. Instead, the primary gamma dose rate at the cask surface, 21 mrem/hr., is adjusted to the desired 6 foot location by applying the 1/r relationship from 23.6 inches to 95.6 inches, a factor of 0.25. Thus, the dose rate for normal operation with intact PWR fuel at the desired dose point is 21 mrem/hr x 0.25 = 5.25 mrem/hr. This is larger than the normal operation dose rate from primary gammas listed in Table IX-10 (2.8 mrem/hr) because of the difference in definitions of the package boundary. The metallic fuel primary gamma dose rate for normal operation is thus 0.056 x 5.25 - 0.294 mrem/hr. The groundscatter gamma is 5% of the primary gamma dose rate as specified on page IX-27, or 0.05 x (0.294 + 0.001) = 0.015.

Table IX-17
Fuel Midplane
Metallic Fuel Dose Rates (mrem/hr)

	Intact PWR Hypothetical Acc. (3' from Cask)	Ratio	Hypothetical Accident Metallic Fuel (3' from Cask)	Normal Operation Metallic Fuel (6' from Package)
Primary Gamma	377	0.056	21.11	0.294
Neutron	258	4.97×10^{-4}	0.128	0.080
Secondary Gamma	4.1	4.97×10^{-4}	0.002	0.001
Ground Scatter Gamma	19.	0.056	1.064	0.015
Ground Scatter Neutron	129.	4.97×10^{-4}	0.064	0.040
Total Gamma	400.		22.18	0.310
Total Neutron	387		0.192	0.120
TOTAL	787.		22.372	0.430

4.4.2 Top and Bottom Dose Rates

The normal operation dose rates are calculated by applying the metallic fuel/PWR fuel source ratios directly to the dose rates given in Table IX-10 (Normal Operation) and Table IX-13 (Hypothetical Accident). The results

are listed in Table IX-18 (Normal Operation) and IX-19 (Hypothetical Accident).

4.4.3 The results of these calculations are summarized in Table IX-20. Inspection of these results shows that dose rates from metallic fuel cooled two years is at most 2-1/2 percent of the dose rate from one PWR assembly cooled 150 days. This shows that transportation of metallic fuel is adequately shielded under all conditions.

Table IX-18
Top and Bottom
Metallic Fuel Dose Rates (mrem/hr)
Normal Operation

	TOP		TOP	
	PWR	Metallic	PWR	Metallic
Primary Gamma	1.79	0.100	1.29	0.072
Neutron	4.42	0.002	4.00	0.002
Secondary Gamma	0.033	0.000	0.033	0.000
Ground Scatter Gamma	0.12	0.007	0.12	0.007
Ground Scatter Neutron	1.29	0.001	1.29	0.001
Total Gamma	1.94	0.107	1.44	0.079
Total Neutron	5.71	0.003	5.29	0.003
TOTAL	7.65	0.110	6.73	0.082

Table IX-19
Top and Bottom
Metallic Fuel Dose Rates (mrem/hr)
Hypothetical Accident

	TOP		TOP	
	PWR	Metallic	PWR	Metallic
Primary Gamma	7.6	0.426	7.0	0.392
Neutron	36.	0.018	41.	0.020
Secondary Gamma	6.4	0.003	5.6	0.003
Ground Scatter Gamma	0.5	0.028	0.5	0.028
Ground Scatter Neutron	17.	0.008	21.	0.010
Total Gamma	14.5	0.457	13.1	0.423
Total Neutron	53.	0.026	62.	0.030
TOTAL	67.5	0.483	75.1	0.453

Page Added
Oct. 1986
Revised
Feb. 1987

Table IX-20

Metallic Fuel Dose Rates
Totals - mrem/hr

	Normal Operation	Hypothetical Accident
Fuel Midplane	0.430 (5.0%)	22.372 (2.8%)
Top	0.110 (1.4%)	0.483 (0.7%)
Bottom	0.082 (1.2%)	0.453 (0.6%)

Percents of intact PWR dose rates are shown in parentheses.

Page Added
Oct. 1986
Revised
Feb. 1987

4.5 Shielding Analysis for PWR or BWR Rods

The gamma and neutron sources generated by a PWR assembly and by 25 PWR rods or 25 BWR rods are given in Table IX-21. The gamma source for PWR rods is 40 percent of the high burnup PWR assembly gamma source. The neutron source is 60 percent of the high burnup PWR assembly neutron source. The dose rates for the rod shipments may be obtained by multiplying the high burnup assembly dose rates by the appropriate percentages. The results of these calculations are shown Table IX-22. Similar calculations comparing the BWR rods to the design basis BWR assembly are shown in Table IX-23. In the case of the content condition of 18 PWR fuel rods with specific power of 60 kW/kgU and a cooling time of 300 days, the dose rates will be significantly below the dose rates calculated for the 25 PWR fuel rod content condition based on the significantly smaller source terms as listed in Table IX-21.

The results given in Table IX-22 show that the dose rates from 25 PWR rods are much less than the dose rates from the high burnup PWR assembly. Similarly, the dose rates given in Table IX-23 for 25 BWR rods are much less than the design basis assembly. The shipment of up to 25 PWR or 25 BWR rods at 150 days cool time is, therefore, safe even though the burnups are greater than the design basis PWR and BWR assembly burnups.

Page Added
May 1987
Revised
Jan. 1990
Feb. 1991
Oct. 1991
Apr. 1992
Feb. 1996

Page Added
May 1987
Revised
Jan. 1990
Feb. 1991
Oct. 1991
Apr. 1992
Feb. 1996

Table IX-21

PWR ASSEMBLY AND PWR OR BWR ROD SOURCE STRENGTHS

	SAR High Burnup PWR Assembly	25 PWR Rods[1]	18 PWR Rods[2]	25 BWR Rods[3]	SAR Design Basis PWR Assembly
Decay Time, days	150	150	300	150	150
Thermal Output, kW	10.63	1.65 (16%)	0.9 (8.5%)	4.0 (38%)	10.63
Gamma, MeV/sec	1.00×10^{16}	4.04×10^{15} (40.4%)	1.94×10^{15} (19.4%)	7.54×10^{15} (75%)	3.074×10^{16}
Neutrons, n/sec	1.86×10^{9}	1.12×10^{9} (60.3%)	7.56×10^{7} (4%)	3.5×10^{8} (19%)	7.55×10^{8}
Fission Products, Ci Total	2.31×10^{6}[4]	2.84×10^{5} (12.3%)[5]	1.69×10^{5} (7%)	6.03×10^{5} (26%)[5]	2.17×10^{6}[6]

$$\% = \frac{\text{Source of Rods at 150 days}}{\text{Source of Assembly at 150 days}}$$

Notes:

(1) Calculated with the LOR2 version of ORIGEN2 which yields conservative results. Values in parentheses represent percentage as compared to SAR High Burnup PWR Assembly. Twenty three rods at 60,000 MWD/MTU and two rods at 65,000 MWD/MTU were considered.

(2) Calculated with SAS2(H). Values in parentheses represent percentage as compared to SAR High Burnup PWR Assembly.

(3) Calculated with the SAS2 sequence of the SCALE4 code package (NUREG/CR-200). Values in parentheses represent percentage as compared to SAR High Burnup PWR Assembly. Twenty-five rods at 75,000 MWD/MTU were considered.

(4) Calculated with the LOR2 version of ORIGEN2.

(5) Total Fission Product Curies for rods were not listed in the Final Report data tables, but were obtained directly from the computer results.

(6) From Table IX-15.

TABLE IX-22

25 PWR ROD DOSE RATES

Normal Operation: (6 feet from Personnel Shield)*
(High Burnup PWR Assembly dose rates in parentheses)

Source	Fuel Midplane	Top	Bottom
Primary Gamma	0.36 (0.91)	0.23 (0.58)	0.17 (0.42)
Neutron	2.09 (3.47)	3.36 (5.57)	3.06 (5.07)
Secondary Gamma	0.12 (0.20)	0.01 (0.01)	0.01 (0.01)
Ground Scatter Gamma	0.02 (0.06)	0.02 (0.04)	0.02 (0.04)
Ground Scatter Neutron	1.05 (1.73)	0.99 (1.63)	0.99 (1.63)
Total Gamma	0.50 (1.17)	0.26 (0.63)	0.20 (0.47)
Total Neutron	3.14 (5.20)	4.35 (7.20)	4.05 (6.70)
TOTAL	3.64 (6.37)	4.61 (7.83)	4.25 (7.17)

Hypothetical Accident: (3 feet from cask surface)*

Source	Fuel Midplane	Top	Bottom
Primary Gamma	49.7 (123.)	1.0 (2.5)	0.93 (2.3)
Neutron	129.0 (213.)	26.8 (44.4)	30.4 (50.5)
Secondary Gamma	0.8 (1.3)	1.2 (2.1)	1.0 (1.8)
Ground Scatter Gamma	2.5 (6.2)	0.04 (0.1)	0.08 (0.2)
Ground Scatter Neutron	64.5 (107.)	12.5 (20.9)	15.6 (25.9)
Total Gamma	53.0 (131.)	2.24 (4.7)	2.0 (4.3)
Total Neutron	193.5 (320.)	39.3 (65.3)	46.0 (76.4)
TOTAL	246.5 (451.)	41.5 (70.0)	48.0 (80.7)

* Based on Table IX-10, Page IX-26

Page Added
May 1987
Revised
Jan. 1990
Feb. 1991

TABLE IX-23

25 BWR ROD DOSE RATES
150 Days Decay Time

Normal Operation: (6 feet from Personnel Shield)*
(High Burnup PWR Assembly dose rates in parentheses)

Source	Fuel Midplane		Top		Bottom	
Primary Gamma	0.68	(0.91)	0.44	(0.58)	0.32	(0.42)
Neutron	0.66	(3.47)	1.06	(5.57)	0.96	(5.07)
Secondary Gamma	0.04	(0.20)	0.00	(0.01)	0.00	(0.01)
Ground Scatter Gamma	0.05	(0.06)	0.03	(0.04)	0.03	(0.04)
Ground Scatter Neutron	0.33	(1.73)	0.31	(1.63)	0.31	(1.63)
Total Gamma	0.77	(1.17)	0.47	(0.63)	0.35	(0.47)
Total Neutron	0.99	(5.20)	1.37	(7.20)	1.27	(6.70)
TOTAL	1.76	(6.37)	1.84	(7.83)	1.62	(7.17)

Hypothetical Accident: (3 feet from cask surface)*

Source	Fuel Midplane		Top		Bottom	
Primary Gamma	92.25	(123.)	1.88	(2.5)	1.73	(2.3)
Neutron	40.47	(213.)	8.44	(44.4)	9.60	(50.5)
Secondary Gamma	0.25	(1.3)	0.40	(2.1)	0.34	(1.8)
Ground Scatter Gamma	4.65	(6.2)	0.08	(0.1)	0.15	(0.2)
Ground Scatter Neutron	20.33	(107.)	3.97	(20.9)	4.92	(25.9)
Total Gamma	97.15	(131.)	2.36	(4.7)	2.22	(4.3)
Total Neutron	60.80	(320.)	12.41	(65.3)	14.52	(76.4)
TOTAL	157.95	(451.)	14.77	(70.0)	16.74	(80.7)

* Based on Table IX-10, Page IX-26

Page Added
May 1987
Revised
Oct. 1991
Apr. 1992

4.6 Shielding Analysis for the MARK 41 Fuel Assembly

This analysis is performed to allow the shipment of a MARK 42 fuel assembly. The analysis is based upon gamma sources from ORIGEN-2 with the CANDU library and neutron sources based upon calculations made by Savannah River Plant personnel. A decay time of 1245 days is used in the analysis, although the actual decay time will be somewhat longer. The gamma and neutron sources, generated by the design basis PWR assembly, the high burnup assembly in Section IX Appendix B, and the MARK 42 assembly, are given in Table IX-24.

Table IX-24

PWR FUEL AND MARK 42 FUEL SOURCE STRENGTHS

	SAR Design Basis PWR Assembly	High Burnup PWR Assembly	MARK 42 Fuel Assembly
Decay Time, days	150	450	1245
Gamma, MeV/sec	2.96×10^{16}	1.0×10^{16}	5.8×10^{14}
Neutrons, n/sec	6.23×10^{8}	1.86×10^{9}	1.2×10^{9}

As can be seen from Table IX-24, the gamma source from the MARK 42 assembly is 2.0% of the design basis assembly gamma source and the neutron source is 193% of the design basis PWR assembly neutron source. The MARK 42 neutron source is, however, only 65% of the neutron source of the high burnup assembly. The dose rates at two meters resulting from the NLI-1/2 containing one MARK 42 assembly are 3.11 mrem/hr at the cask midplane, 5.58 mrem/hr at the top and 5.16 mrem/hr at the bottom. These dose rates are below the requirements of 10 CFR 71.

4.6.1 Gamma Dose Calculation

The gamma dose rates at the fuel radial midplane were obtained using the XSDRNPM computer code. The XSDRNPM computer code solves the Boltzman transport equation for one-dimensional geometries. The XSDRNPM radial gamma results have been corrected for axial peaking by applying a 1.10 axial peaking factor. A backscatter factor of 1.05 for the gammas as described on page IX-27 was also applied. The gamma dose rates at the top and bottom of the cask were obtained by applying the 2.0% source ratio to the design basis PWR assembly doses. The resulting dose rates can be found in Table IX-25.

Page added
August 1988

4.6.2 Neutron Dose Calculation

The neutron dose rates at the fuel radial midplane were obtained using the XSDRNPM computer code that is accurate for neutrons which comprises the primary radiation source for the MARK 42 assembly. The XSDRNPM radial neutron results have been corrected for axial peaking by applying a 1.10 axial peaking factor. A backscatter factor of 1.5 for the neutrons as described on page IX-27 was also applied. The neutron dose rates at the top and bottom of the cask were obtained using the same method as described in Section IX Appendix B. This method corrects for the axial peaking at the ends of the cask. A 50% decrease of the design basis PWR assembly dose rates was used at the cask ends in this analysis. The dose was then adjusted for the MARK 42 assembly by a factor of 1.93 (the ratio of the MARK 42 neutron source term to the design basis PWR assembly neutron source term). The resulting dose rates can be found in Table IX-25.

Table IX-25

MARK 42 FUEL ASSEMBLY DOSE RATES (mrem/hr)

Normal Operation: (2 meters from Personnel Shield)*
(PWR assembly dose rates in parentheses)

Source	Fuel Midplane		Top		Bottom	
Primary Gamma	0.02	(2.80)	0.04	(1.79)	0.03	(1.29)
Neutron	1.75	(3.34)	4.27	(4.42)	3.86	(4.00)
Secondary Gamma	0.46	(0.61)	0.03	(0.03)	0.03	(0.03)
Ground Scatter Gamma	0.00	(0.17)	0.00	(0.12)	0.00	(0.12)
Ground Scatter Neutron	0.88	(1.67)	1.24	(1.29)	1.24	(1.29)
Total Gamma	0.48	(3.58)	0.07	(1.94)	0.06	(1.44)
Total Neutron	2.63	(5.01)	5.51	(5.71)	5.10	(5.29)
TOTAL	3.11	(8.59)	5.58	(7.65)	5.16	(6.73)

Hypothetical Accident: (1 meter from Cask Surface)*
(PWR assembly dose rates in parentheses)

Source	Fuel Midplane		Top		Bottom	
Primary Gamma	0.01	(377.)	0.15	(7.6)	0.14	(7.)
Neutron	176.	(258.)	34.7	(36.)	39.6	(41.)
Secondary Gamma	0.22	(4.1)	6.18	(6.4)	5.40	(5.6)
Ground Scatter Gamma	0.00	(19.)	0.01	(0.5)	0.01	(0.5)
Ground Scatter Neutron	87.8	(129.)	16.4	(17.)	20.3	(21.)
Total Gamma	0.23	(400.)	6.34	(14.5)	5.54	(13.1)
Total Neutron	266.	(387.)	51.1	(53.)	59.9	(62.)
TOTAL	264.	(787.)	57.4	(67.5)	65.4	(75.1)

*Based on Table IX-10, Page IX-26

Page added
August 1988

4.7 Shielding Analysis for the MARK 22 Fuel Assembly

This analysis is performed to allow the shipment of two Mark 22 fuel assemblies. The analysis is based upon gamma sources from the LOR-2 version of ORIGEN-2 available from Babcock and Wilcox. A decay time of 150 days is used in the analysis, although the actual decay time will be somewhat longer. The gamma and neutron sources, generated by the Mark 42 assembly and the Mark 22 assemblies, are given in Table IX-26.

Table IX-26

MARK 22 AND MARK 42 FUEL SOURCE STRENGTHS

	Two Mark 22 Assemblies	MARK 42 Fuel Assembly
Decay Time, days	150	1245
Gamma, MeV/sec	9.753×10^{15}	5.8×10^{14}
Neutrons, n/sec	7.872×10^{5}	1.2×10^{9}

As can be seen from Table IX-26, the gamma source from the Mark 22 assembly is 1682 percent of the Mark 42 assembly gamma source and the neutron source is 0.065 percent of the Mark 42 assembly neutron source. The dose rates at 2 meters resulting from the NLI-1/2 cask containing two Mark 22 assemblies are 0.18 mrem/hour at the cask midplane, 0.70 mrem/hour at the top and 0.53 mrem/hour at the bottom. These dose rates are below the requirements of 10 CFR 71.

All dose rates were obtained by applying the previously mentioned source ratios to the Mark 42 dose rates. A factor of 16.82 was applied to the primary gamma dose rate and a factor of 6.5×10^{-4} was applied to the neutron, secondary gamma and ground scatter neutron dose rates. The ground scatter gamma dose rate was taken to be 5 percent of the primary gamma dose rate. The resulting doses can be found in Table IX-27.

Table IX-27

MARK 22 FUEL ASSEMBLY DOSE RATES (mrem/hr)

Normal Operation: (2 meters from Personnel Shield)*
(Mark 42 assembly dose rates in parentheses)

Source	Fuel Midplane		Top		Bottom	
Primary Gamma	0.17	(0.01)	0.67	(0.04)	0.50	(0.03)
Neutron	0.00	(1.75)	0.00	(4.27)	0.00	(3.86)
Secondary Gamma	0.00	(0.46)	0.00	(0.03)	0.00	(0.03)
Ground Scatter Gamma	0.01	(0.00)	0.03	(0.00)	0.03	(0.00)
Ground Scatter Neutron	0.00	(0.88)	0.00	(1.24)	0.00	(1.24)
Total Gamma	0.18	(0.48)	0.70	(0.07)	0.53	(0.06)
Total Neutron	0.00	(2.63)	0.00	(5.51)	0.00	(5.10)
TOTAL	0.18	(3.11)	0.70	(5.58)	0.53	(5.16)

Hypothetical Accident: (1 meter from Cask Surface)*
(Mark 42 assembly dose rates in parentheses)

Source	Fuel Midplane		Top		Bottom	
Primary Gamma	0.34	(0.02)	2.52	(0.15)	2.35	(0.14)
Neutron	0.11	(176.)	0.02	(34.7)	0.03	(39.6)
Secondary Gamma	0.00	(0.22)	0.00	(6.18)	0.00	(5.40)
Ground Scatter Gamma	0.02	(0.00)	0.13	(0.01)	0.12	(0.01)
Ground Scatter Neutron	0.06	(87.8)	0.01	(16.4)	0.01	(20.3)
Total Gamma	0.36	(0.23)	2.65	(6.34)	2.47	(5.54)
Total Neutron	0.17	(266.)	0.03	(51.1)	0.04	(59.9)
TOTAL	0.53	(264.)	2.68	(57.4)	2.51	(65.4)

*Based on Table IX-25, Page IX-3j

Page added
February 1990

5.0 REFERENCES

1. Federal Register, Department of Transportation, Hazardous Materials Regulations Board, Radioactive Materials and other Miscellaneous Amendments, Volume 33, Number 194, Washington, D. C., Part II, Title 49, Transportation, Friday, October 4, 1968.

2. United States Atomic Energy Commission, Rules and Regulations Title 10 - Atomic Energy, Part 71, "Packaging of Radioactive Material for Transport", December 31, 1968.

3. Book of Standards, Part 7, ASTM, 1970.

4. Metals Handbook, 8th Editon, American Society of Metals.

5. Alcoa Aluminum Handbook, Aluminum Company of America, Pittsburgh, Pa., 1959.

6. Merritt, F. S., Standard Handbook for Civil Engineers, McGraw-Hill Book Company, New York, 1968.

7. Malenfant, R., "QAD - A Series of Point-Kernel General Purpose Shielding Programs", LA-3573, April 1967.

8. "Design and Analysis Report", IF 300 Shipping Cask, General Electric.

9. Shappert, L. B., "Cask Designer's Manual", ORNL-RSIC-68, February 1970.

10. Hubbell, J., "Photon Cross Sections, Attenuation Coefficients, and Energy Absorption Coefficients from 10 KeV to 100 Gev", NSRDS-NBS29, U.S. Department of Commerce, August 1969.

11. Chapman, G. T.,Storrs, C. L., "Effective Neutron Removal Cross Sections for Shielding", AECD 3978, September 1955.

12. Capo, M.A., APEX-510, 1958.

13. Jaeger, R. G., et al., "Engineering Compendium on Radiation Shielding, Shielding Fundamentals and Methods", Volume I, Springer-Verlag, Inc., New York, 1968.

14. Rockwell, Theodore (III), Editor, "Reactor Shielding Design Manual", D. Van Nostrand Company, Inc., New York, 1956.

15. USAEC, Rules and Regulations, Title 10 - Atomic Energy, Part 20, "Standards for Protection Against Radiation", December 31, 1970.

16. Lathrop, K. D., "DTF-IV - A Fortran Program for Solving the Multigroup Transport Equation with Anisotropic Scattering", LA-3373, 1965.

17. Engle, W. W. (Jr), Mynott, F. R., "ANISN, A One-Dimensional Discrete Ordinates Transport Code with Anisotropic Scattering, (to be published).

18. "Shielding Benchmark Problems", ORNL-RSIC-25, A. E. Profio, Editor, August 1970.

19. Trubey, D. K., "Kernal Methods for Radiation Shielding Calculations, Nuclear Engineering and Design, Radiation Shielding (2)", Vol. 13, (1970) Vol. 3.

20. NAA-SR-11980, Vol. III.

21. "Protection Against Neutron Radiation Up to 30 Million Electron Volts", Handbook 63, U. S. Department of Commerce, NBS, 1957.

22. Proceedings, Third International Symposium, "Packaging and Transportation of Radioactive Materials", CONF-710801, Richmond, Washington, August 16-20, 1971.

23. CSCROS Users Manual, Draft, Computer Sciences Corp. N.Y.

24. Joanou, G. D., Dudek, J. S., "GAM-II, A B3 Code for the Calculation of Fast Neutron Spectra and Associated Multigroup Constants", GA-4265, September 1963.

25. Honeck, H., "THERMOS, A Thermalization Transport Theory Code for Reactor Lattice Calculations", BNL-5826, 1961.

26. Fisher, E., "The Streaming of Neutrons in Shields, Nuclear Science and Engineering, 1, p.222-238 (1956).

27. "ANISN, A One-Dimensional Discrete Ordinates Transport Code, RSIC Computer Code Collection", ORNL-CCC-82.

This page intentionally left blank.

SECTION IX

APPENDIX A

An analysis has been made to determine the change in the neutron and gamma flux resulting from removing the inner container, closure head redesign, and repositioning the fuel in the cask. The analysis was based on the same neutron and gamma source strengths that were used in the original SAR except that only two energy groups (1.0 and 2.0 mev) were used for the gamma calculations and three energy groups (1.15, 2.2 and 4 mev) for the neutron calculations. Appropriate correction factors were incorporated in order to bring the method of calculation for the alternate configuration in agreement with the original computer analysis.

APPENDIX A

The following changes have been made in shielding thicknesses and fuel position for the alternate shipping configuration.

Table 1

	Original Configuration	Alternate Configuration
I. Shield Thickness		
1) Closure Heads		
a) Total thickness of Stainless Steel	3.15 in.	3.5 in.
b) Thickness of Uranium	3.00 in.	4.0 in.
2) Bottom of Cask		
a) Total thickness of Stainless Steel	3.13 in.	3.22 in.
b) Thickness of Uranium	3.13 in.	3.15 in.
II. Fuel Position		
1) Distance from active fuel to top surface of the cask	20 in.	28 in.
2) Distance from active fuel to bottom surface of the cask	28.4 in.	21.4 in.

These changes will produce the following surface radiation values at the longitudinal centerline of the cask.

Table 2

		Surface Dose Rates	
	(mrem/hr)	Neutron (mrem/hr)	Total (mrem/hr)
Original Head	34	154	188
Alternate Head	0.74	85.8	86.54
Original Bottom	13.0	104.6	117.6
Alternate Bottom	20.0	147.0	167.0

The radiation level through the bottom of the alternate configuration, including the 1/2" stainless steel Fuel Support Stand, would be 167.0.

There will also be a slight increase in the side dose rate due to the removal of the ¼" thick inner container. The maximum side dose rate for the original configuration was only 39 mrem/hr. therefore, the removal of the inner container which provided ¼" thick stainless steel shielding in this area will not result in excessive dose rates.

The dose level shown in Table-2 were calculated as follows (except for the original head values which were calculated by computer for the original configuration SAR):

The square fuel cross section was converted to an equivalent circular cross section and the flux from each incremental fuel segment to a point detector at the surface of the cask was calculated. The flux from all these fuel segments was then summed up to determine the total flux at the surface of the cask for both neutron and gamma sources as follows

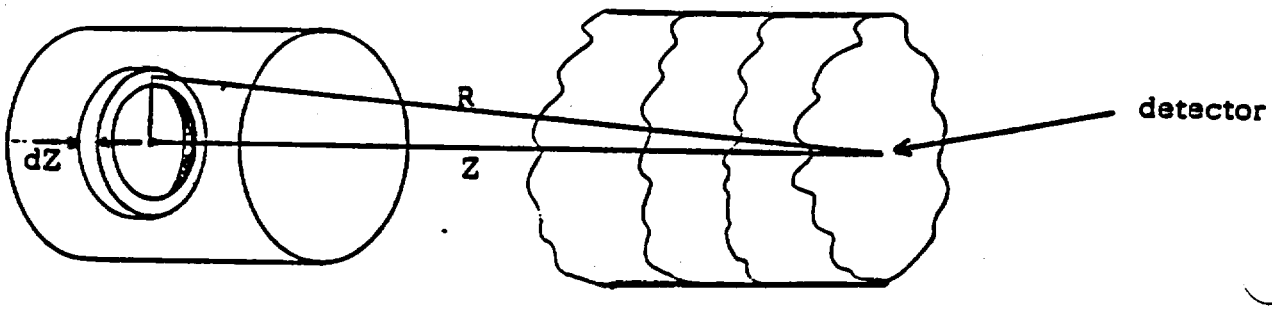

a) Gamma

$$D = \sum_{E} S_v (E)\ CR\ (E) \sum_{K=1}^{200} \left(\sum_{J=1}^{50} \frac{B_{JK}(E)\ e^{-CF\ u\ X_{JK}}}{2\ R_{JK}}\ dR_J \right) dZ_K$$

$uX = (u_1 t_1 + u_2 t_2 + u_f t_f) \quad R/Z$

u = linear absorption coefficient

u_f = linear absorption coefficient of the fuel

t = shield thickness

t_f = shield thickness of fuel for source segment considered

R = distance from source segment to detector point on the cask surface

CF = correction factor, adjusts attenuation to agree with computer code results used in original analysis

S_v = volumetric source strength

CR = gamma flux-to-dose-rate conversion factor

b) Neutron

$$D = \sum_E S_v(E)\, CR(E) \sum_{K=1}^{200} \left(\sum_{J=1}^{50} \frac{CF \quad e^{-\sum X_{JK}} \quad dR_J}{2 \quad R_{J1K}} \right) d\, Z_K$$

$\overline{\sum} X = (\overline{\sum}_1 t_1 + \overline{\sum}_2 t_2 + \overline{\sum}_f t_f) \quad R/Z$

$\overline{\sum}$ = macroscopic cross section

$\overline{\sum}_f$ = macroscopic cross section of the fuel

t = shield thickness

tf = shield thickness provided by the fuel for the source segment considered

R = distance from the source segment to the detector point on the cask surface

CF	=	correction factor, adjusts calculations to agree with computer code results obtained from original analysis
S_v	=	volumetric source strength
CR	=	neutron flux-to-dose-rate conversion factor

In summary, it can be seen that the dose rate at the surface of the outer closure head of the alternate configuration will be less than for the original configuration. The dose rate will increase on the bottom of the alternate configuration, including the 1/2" stainless steel Fuel Support Stand, to a level of 167 MREM/HR.

REFERENCES:

"Principles of Nuclear Reactor Engineering" - Glasstone, June 1957.

This page intentionally left blank.

SECTION IX - APPENDIX B
SUPPLEMENTAL ANALYSIS FOR HIGH BURN-UP PWR FUEL

This appendix presents supplemental analyses of gamma and neutron dose rates for high burn-up PWR fuel assemblies that meet the specific conditions of Appendix A, Section III.

1.0 Summary

This analysis was performed in order to allow shipment of a specific high burn-up PWR assembly. The analysis is based on the results of an ORIGEN calculation that describes an assembly with burn-up of 58,600 MWD/MTU with a cool time of 450 days. The results of the analysis are generalized to allow shipment of other assemblies whose parameters are within bounds of the specific assembly as given in Appendix A, Section III. This resulted in a fuel assembly gamma source one-third (1/3) the cask design gamma source strength and a corresponding neutron source of approximately two and one-half (2.5) times the cask design neutron source strength. For normal and accident conditions of transport, gamma dose rates were established by taking one-third of the gamma dose rates established in paragraph 3.2 of Section IX. The neutron dose rate was established separately for the top and bottom of the cask and for radial mid-plane locations. a radial ESDRNPM calculation was performed to establish acceptable normal dose rates with the 1.0 weight percent boron in the neutron shield with the (new) neutron dose rate in the cavity. The new neutron dose rate of 26.1 mrem/hr, results in a total dose rate (gamma and neutron) of 35.2 mrem/hr at the cask surface, or 6.4 mrem/hr at six feet from the personnel barrier. For the post accident condition, similar calculations show a total dose rate (gamma and neutron) of 450 mrem/hr at three feet from the cask surface. Both total dose rates are below the requirements of 49 CFR 173 and 10 CFR 71 for both normal transport and accident conditions.

2.0 Gamma Dose Calculation

The gamma source for the high burn-up assembly is 1.0×10^{16} MeV/sec. comparison of dose rates with the high burn-up source and the SAR gamma source of 3.074×10^{16} MeV/sec (Table IX-2) results in dose rates of (total gamma):

Normal Operations	Fuel Midplane		Top End		Bottom End	
	Cask Surface	6 feet*	Cask Surface	6 feet*	Cask Surface	6 feet*
SAR Source	27.8	3.58	12.9	1.94	13.3	1.44
High Burn-up Source	9.04	1.17	4.20	0.63	4.33	0.47

*from personnel barrier

Hypothetical Accident	Fuel Midplane		Top End		Bottom End	
	Cask Surface	3 feet	Cask Surface	3 feet	Cask Surface	3 feet
SAR Source	1438	400	63	14.5	72	13.1
High Burn-up Source	468	130	20.5	4.7	23.4	4.3

3.0 Neutron Dose Calculation

The neutron source for the high burn-up source is 1.86×10^9 neutrons/sec. This is significantly higher than the design basis source of 7.55×10^8 n/sec (Table IX-2). Consequently, a 1 weight percent boron solution is added to the neutron shield tank to maintain dose levels ALARA. Axial and radial neutron shielding calculations were performed using the XSDRNPM code and the 123-group GAM-THERMOS cross-section library collapsed to 50 energy groups. SAR calculations use the 16-group Hansen-Road cross-section library. Flux to dose conversation factors were obtained from ANSI/ANS 6.1.1-1977 (NGGG).

Axial calculations were performed to verify that a decrease in dose rate at the top and bottom of the cask results when axial peaking of the

neutron source is considered. A factor of 2 decrease is quoted on page IX-29, but this factor was conservatively not applied in the original analysis. Calculations performed using XSDRNPM and a 20 percent peaking factor show a 55 percent decrease at the cask ends. (Although a peaking factor of 25 percent is applied to the fuel midplane (radial) dose rate claculations, the 20 percent peaking factor was used in the axial calculations because it results in a smaller decrease at the cask ends.) These calculations confirm the factor of 2 decrease. The cask end doses listed below are based on the SAR (Table IX-10) with the end dose rate decrease, conservatively set at 50 percent, applied (total neutron):

Normal Operation

	Top End		Bottom End	
	Cask Surface	6 feet*	Cask Surface	6 feet*
SAR Source	14.8	2.9	18.8	2.7
High Burn-Up Source	36.5	7.2	46.3	6.7

*from personnel barrier

Hypothetical Accident

	Top End		Bottom End	
	Cask Surface	3 feet	Cask Surface	3 feet
SAR Source	77	26.5	112	31
High Burn-Up Source	190	65.3	276	76.4

Radial calculations were performed using a "circularized" fuel region as was done in Paragraph 3.3 of this section and the "corner" corrections described (4%) were applied to the results. A 1.0 weight percent boron addition to the neutron shield tank water is included to maintain dose levels ALARA. All water is assumed to have been lost in the hypothetical accident scenario. Subcritical multiplication is included and results in an overall 70 percent increase in neutron population in the fuel region

and depleted uranium shield. Results were adjusted for ground scatter, and a neutron source axial peaking factor of 25 percent was conservatively applied.

The density of water at 360°F was used in the shield tank even though the temperatures for an actual shipment will probably be significantly less. The density of water at 32°F was used in the fuel region to conservatively maximize the moderation of neutrons which in turn maximizes subcritical multiplication. A one percent increase was applied to dose rates to account for the higher liear power rating of the fuel, assuming a fuel pellet stack height of 142.8 inches. Therefore, dose rates are conservative for standard length (144 inches) fuel assemblies.

RADIAL NEUTRON DOSE RATE AT:	Cask Surface	.6 feet*	3 feet
Normal Operation	26.1	5.20	--
Hypothetical Accident	818.0	--	320.00

*from personnel barrier

Adding the gamma and neutron contributions for the high burn-up shipment results in total dose rates for normal and hypothetical accident scenarios:

Normal Operation

	Fuel Midplane		Top End		Bottom End	
	Cask Surface	6 ft.	Cask Surface	6 ft.	Cask Surface	6 ft.
Total Gamma	9.04	1.17	4.20	0.63	4.33	0.47
Total Neutron	26.1	5.20	36.5	7.2	46.3	6.7
Total	35.2	6.4	40.7	7.8	50.6	7.2

All dose rates at six feet from the personnel barrier are less than the 10 mrem/hr limit by more than 20 percent.

Hypothetical Accident

	Fuel Midplane		Top End		Bottom End	
	Cask Surface	6 ft.	Cask Surface	6 ft.	Cask Surface	6 ft.
Total Gamma	468	130	20.5	4.7	23.4	4.3
Total Neutron	818	320	190	65.3	276	76.4
Total	1286	450	211	70.0	300	80.7

All dose rates at three feet are less than the 1000 mrem/hour limit by more than 50 percent.

Based on the above analysis, the shipment of high burnup fuel is permitted, provided that the assembly exhibits parameters of gamma and neutron source terms equal to or less than those described above (and also in Section III-6.0), as verified by ORIGEN analysis of the prospective assembly.

4.0 Detailed Neutron Shielding Analysis

Results:

NORMAL OPERATION	mrem/hour Source Neutrons/sec	Surface* Dose Rate	Off-Cask Dose Rate
Normal with/w/o Boron	3.298-6	10.5	2.09
HYPOTHETICAL ACCIDENT			
("Essentially Intact" Shield Tank, wall, page viii-2 of SAR)	1.235-4	328.8	129

*Neutron source of 7.55×10^8 n/sec or 2.064×10^6 n/sec/cm of active fuel length.

Surface Dose Rate = F x source per cm active fuel x $\frac{\text{mrem/hr}}{\text{source n/sec}}$

where F = Flux Peaking Factor (25%)
+ Corner Correction (4%) + 100%
= 129%

$\frac{\text{HA}}{\text{Normal with 1 w/o Boron}}$ Ratio = 31.3 with low density shield water

Off the cask surface (3 ft. HA and 6 ft. normal), a 50 percent increase due to ground scatter is added.

From the NLI-1/2 SAR:

Normal: $\text{Dose}_{6\ ft}$ = 0.134 x Dose surface x 1.50 = 0.200 x dose surface

Hypothetical Accident: $\text{Dose}_{3\ ft}$ = 0.260 x Dose surface x 1.50 = 0.391 x dose surface

(From ratios of doses given in Tables IX-10 and IX-13 for fuel midplane)

1) Primary neutron dose rates are increased by 4 percent for "corner" correction (related to the circularization approximation for the fuel region). An axial peaking factor (20 percent in VEPCO high burnup analyses, 25 percent in SAR) increase is also applied.

2) A secondary neutron contribution of 50 percent was conservatively applied in the SAR.

Radial Neutron Shielding Analysis:

1. Model the cask in the radial direction as a set of concentric circular regions. The inner, square, fuel region can be modeled as a circular area whose area is equal to the edge length (8.88") squared, for a radius of 5.01 inches (12.725 cm).

2. Material Boundaries:

Region	Material	Radius (cm)	Interval	F
1	Fuel	12.725	1-7	7
2	Aluminum	16.847	8,9	2
2	Void	16.986	10	1
3	Steel	18.256	11,12	2
3	Void	18.324	13	1
4	Uranium	25.309	14-19	6
5	Lead	30.706	20-24	5
6	Steel	32.929	25	1
7	Water	45.629	26-29	4
8	Steel	46.264	30	1

3. Interval 30, the outermost, is constructed with a thin annulus of steel on its outer layer. This annulus is used for neutron dose computation, which is conservative because the flux here is always greater than the surface flux. The average flux in the outer annulus is calculated by XSDRNPM.

4. Material constituents are:

Mixture	Material	Nuclide	Density (atoms/barn-cm)
1	U-235	-922351	2.700-5
	U-238	922381	5.200-3
(Fuel)	Oxygen	555081	3.373-3
	Zirconium	400000	3.744-3
	Hydrogen	555011	4.165-2
2	Aluminum	130000	6.026-2
3	Iron	260001	6.042-2
(Steel)	Chromium	240003	1.673-2
	Nickel	280003	8.367-3

Mixture	Material	Nuclide	Density (atoms/barn-cm)	
4	U-238	555381	4.773-2	
(Depleted uranium)	U-235	-555351	1.052-4	
5	Lead	820000	3.300-2	
6	Oxygen	80003	2.960-2*	
(Water)	Hydrogen	10001	5.919-2*	
	Boron	50000	None (un-borated tank)	5.577-4** (Borated tank - 1 w/o boron)

For Hypothetical Accident case, the density of the shield tank water is set to zero to represent its loss due to a tank puncture.

*When water is at 360°F.
**From NAC-1 SAR.

SECTION IX

APPENDIX C

SUPPLEMENTAL ANALYSIS FOR FERMI-1 FUEL AND EBR-II BLANKET FUEL

The measured dose rates from Fermi-1 and EBR-II fuel may be used to estimate the normal operation (no) and hypothetical accident (ha) dose rates for the cask. The first step is to calculate the dose rate from a typical PWR fuel assembly with 40,000 MWD/MTU burnup and 150 day cool time. This was done using the ISOSHLD shielding code, which uses point-kernel methods to calculate dose rates from various geometries. The actual radionuclide mixture present in PWR fuel was represented as an equivalent source of Cs-137, whose 662 keV gamma is representative of the gamma spectrum of the fuel. The fuel was represented as a right circular cylinder whose cross sectional area was 8.5 inches squared. The fuel was treated as a uniform medium consisting of Uranium at a density of 2.65 g/cm^3, which equates to 453 kgU and a 144 inch active fuel length. The Cs-137 source was calculated from the design basis gamma source of 3.074×10^{16} MeV/sec or 4.64×10^{16} Cs-137 gammas/sec, which requires 1.41×10^{6} Curies. The dose rates at six inches and three feet calculated are 213000 R/hr and 38,9000 R/hr respectively.

Table IX-11 lists the maximum normal operation dose rate at six feet as 8.59 mrem/hour, including neutrons and gammas. The low burnups of the Fermi-1 and EBR-II fuel do not produce significant quantities of neutron emitters so use of the total dose rate is conservative. A dose rate of 787 mrem/hour is listed in Table IX-14 for the maximum hypothetical accident dose rate. These values are scaled to find equivalent dose rates for Fermi-1 fuel by applying the equation:

$$D_{Fermi\text{-}1} = \frac{12 \text{ R/hour}}{38900 \text{ R/hour}} \times 16 \text{ assemblies per cask} \times D_{pwr}$$

using the dose rate measured at three feet. The EBR-II dose rates are similarly calculated from the dose rate measured at six inches and a cask load of four cans. The resulting dose rates are

	Normal Op.	Hypothetical Accident
Fermi-1	0.042 mrem/hour	3.9 mrem/hour
EBR-II	0.001 mrem/hour	0.074 mrem/hour

The estimated dose rates are much less than the allowed limits, thus the cask shielding is adequate for these fuel types.

This page intentionally left blank.

Section X

SECTION X

CRITICALITY ANALYSIS

This page intentionally left blank.

SECTION X

CRITICALITY ANALYSIS

Table of Contents

Revised
Feb. 1987
May 1987
Dec. 1988
Feb. 1990
Oct. 1990

List of Tables

List of Figures

Revised
Feb. 1987
Feb. 1990

List of Figures (cont.)

This page intentionally left blank.

Section X

CRITICALITY ANALYSIS

1.0 INTRODUCTION AND SUMMARY

This section describes the criticality safety analysis performed for the NLI 1/2 spent fuel shipping cask. Although the cask is designed so that under hypothetical accident conditions water will not enter into the can containing the fuel, it was conservatively assumed for this analysis that the can was filled with water. Consideration was also given to possible changes in fuel rod configuration within the cask and to the interactions of an array of casks surrounded by water. All of the requirements of 10 CFR 71.33 thru 71.38 with respect to criticality safety are shown to have been satisfied.

Cask loadings of either 1 PWR assembly or 2 BWR assemblies were examined. The fuel assemblies considered have the specifications indicated in Table X-1 and are conservatively consistent with the design basis assemblies described in Section III, Table III-1. The results of this analysis yield a maximum k_{eff} of 0.94 for 1 PWR assembly and a much lower k_{eff} for 2 BWR assemblies in the isolated cask. If an array of casks is considered with each crushed up against the others (so that there is effectively zero neutron leakage at the outer boundary between casks) and with water within each cask as well as between casks the resulting k_∞ is 0.94. (In the implausible situation of an infinite array of water filled crushed casks and no surrounding water the k_∞ is 0.98).

2.0 THE FRESH FUEL ASSUMPTION

Fuel assemblies with zero burnup were used in this analysis. Aside from a fuel assembly containing burnable poison elements, a regular fuel assembly

TABLE X-1

FUEL ASSEMBLY DESCRIPTION

	PWR Type	BWR Type
Initial enrichment, w/o	*3.35	2.65
Active length, in	144	144
Rod array	15 x 15	7 x 7
Number of rods	204	49
Rod pitch, in	0.563	0.738
Rod diameter, in	0.422	0.563
Clad thickness, in	0.0243	0.032
Clad material	Zircaloy	Zircaloy
Pellet diameter, in	0.3649	0.487
Fraction of UO_2 theoretical density	0.94	1.0
Dished end pellets	No	No
Total uranium content, MTU	* 0.457	0.208

*Uranium content and initial enrichment values were subsequently increased to 0.475 MTU and 3.7 w/o respectively. These increased values result in a K_{eff} of 0.95.

A PWR fuel assembly configuration containing additional irradiated fuel rods inserted and secured in the guide thimbles is permissible provided the initial uranium content of the assembly does not exceed 495 Kg and the maximum average initial U-235 enrichment does not exceed 3.35 w/o. There will be no increase in reactivity since the increase in uranium content coupled with the decrease in enrichment results in a mass of U-235 less than the design basis fuel assembly.

always decreases in reactivity with burnup. Therefore the most reactive condition of the fuel which a cask is expected to accommodate is fresh or near zero burnup fuel.

Although the reactivity of a fuel assembly with burnable poison pins increases with burnup until most of the burnable poison is depleted, its peak reactivity never exceeds, in practical power reactor applications, the initial reactivity of a fuel assembly without poison pins. Fuel assemblies with poison pins were therefore not included in this analysis.

3.0 THE MOST REACTIVE WATER/FUEL RATIO

The fuel assembly design parameters that have been used by several reactor manufacturers in this country are given in Table III-2. Some variation can be seen in fuel dimensions and configurations. To account for this variation, a most reactive water/fuel ratio was established for each fuel pin cell. Introduction of this most reactive ratio also protects the cask against any possible rise of reactivity due to the temporary displacement of fuel pins within the fuel can under hypothetical accident conditions.

As described in Section VIII, the aluminum blocks placed inside the fuel can to serve as a heat transfer medium will not melt under hypothetical accident conditions. The most reactive water/fuel ratio is limited by the amount of water available in the fuel can when the cask is flooded with water. This ratio, in turn, is restricted by the across flats dimension of the aluminum blocks. This dimension is 8 3/4 inches.

The search for the most reactive water/fuel ratio was accomplished by performing a series of fuel pin cell calculations with the LEOPARD [1] code. LEOPARD

TABLE X-2

THE MOST REACTIVE WATER/FUEL RATIO

FWR Fuel Pin Cell at 32°F

Pitch in	Water/Fuel Ratio	k_∞
0.5630 (normal)	1.69	1.4063
0.5949*	2.05	1.4212
0.6368	2.54	1.4260
0.6437	2.62	1.4255
0.6506	2.71	1.4248

BWR Fuel Pin Cell at 32°F

Pitch in	Water/Fuel Ratio	k_∞
0.7380 (normal)	1.59	1.3536
0.7914	2.03	1.3661
0.8084	2.17	1.3665
0.8251	2.32	1.3654

*Maximum pitch allowed by constraint of aluminum blocks.

analyzes a repetitive lattice of fuel pin cells each consisting of concentric cylindrical regions of fuel, gap, clad, and moderator. Similar to MUFT and KATE, LEOPARD performs a unit cell calculation and calculates an infinite medium spectrum for a given set of homogenized constituents. It then uses the spectrum to reduce 54 energy group fast cross sections to few-group fast cross sections. In a similar manner, it weighs each of 172 thermal groups to form one energy group thermal cross section. This set of macroscopic cross sections is then used in calculating the multiplication factor of the system.

In this calculation, the fuel pin size was maintained constant. By varying the amount of water associated with a fuel pin, the fuel pin cell reactivity varies. Results are presented in Table X-2. The asterisk indicates the largest uniform pitch which the fuel pins can possibly attain within the barrier of the aluminum blocks. For the BWR type fuel pin cell, the most reactive water/fuel ratio is 2.17. In the case of PWR type fuel pin cell, the most reactive ratio is limited by the largest possible pitch and, therefore, is 2.05. The largest uniform pitch was then entered into the cask calculation. This analysis assumes that the most reactive condition of the cask corresponds to the most reactive condition of the fuel pin cells.

Although the above calculations were performed for Westinghouse and General Electric type fuels, the resulting most reactive water/fuel ratios also represent the most reactive conditions for the fuel designs described in Section III.

4.0 GENERATION OF CROSS SECTIONS FOR NEUTRON TRANSPORT CALCULATIONS

In view of the small size of the cask, neutron transport theory was applied in determining the reactivity of the cask. Sixteen groups of cross sections

Table X-3

THE 16 ENERGY GROUPS USED IN TRANSPORT CALCULATION

Group Number	Group Lower Energy Limit, eV
1	3.0×10^6
2	1.4×10^6
3	9.1×10^5
4	4.1×10^5
5	1.1×10^5
6	1.5×10^4
7	3.4×10^3
8	5.8×10^2
9	1.0×10^2
10	2.9×10^1
11	1.1×10^1
12	3.06
13	1.86
14	1.13
15	0.41
16	0

(15 fast and 1 thermal) for each material region of the cask were generated using GAM-II[2] and THERMOS[3] codes. The 16-group neutron energy structure is given in Table X-3.

GAM-II is a code for calculation of fast neutron spectra and the associated multi-group constants. The code contains 99 energy groups, ranging from 0.414 eV to 14.9 MeV. The neutron scattering kernel may be calculated by the code up to B3 or P3 approximations. Each of the scattering kernels is correct up to the sixth moment for anisotropic scattering in the center-of-mass system. Thus, the energy angle correlation is preserved for slowing down in all nuclides in the medium. The inelastic scattering and (n, 2n) processes are also included in the calculation. The resonance absorption is treated quantitatively with the integral method developed by L. W. Nordheim.[4]

THERMOS code solves the one-dimensional integral transport equation in 30 energy groups. The code computes the scalar thermal neutron spectrum as a function of position in a lattice by solving numerically the multi-thermal-group integral transport equation with isotropic scattering. All cross sections are weighted by the spectrum and edited into one single group from zero to 0.4 eV.

Both fast and thermal cross sections for the homogenized UO_2, clad and moderator were averaged over a neutron spectrum of the flooded fuel assembly with the most reactive water/fuel ratio. The fast cross sections for the nuclides present in the shielding materials were weighted by the infinite medium spectrum of each material region. The thermal cross section of these nuclides were weighted by the spectrum in the flooded fuel assembly. These cross sections were then ready for use in spatial calculations.

5.0 CRITICALITY OF PWR LOADING

The code ANISN[5, 6] was employed for spatial calculation of the cask and for determining its effective multiplication factor. ANISN is a one-dimensional, multi-group transport program which solves the Boltzmann transport equation by the method of discrete ordinates. The code allows anisotropic scattering which may be approximated in any chosen order of Legendre expansion.

S8 quadrature coefficients which were derived for use in the Carlson Sn method[7] were input to ANISN. These coefficients are distinctive in that the direction angles are restricted to symmetrical orientations about each space point. Although other sets are available, the Carlson Sn quadratures are the most commonly used.

Figure X-1 shows a layout of the PWR cask. There are nine regions representing, explicitly, the following materials:

Region	Description
1	Homogenized fuel with the most reactive water/fuel ratio.
2.	Aluminum
3	1/4" thick stainless steel can
4	1/8" gap filled with water
5	1/2" thick stainless steel wall of the inner cylinder
6	2 3/4" thick depleted uranium
7	2 1/8" thick lead

FIGURE WITHHELD UNDER 10 CFR 2.390

FIGURE X-1 ANISN LAYOUT FOR NLI PWR CASK

Region	Description
8	7/8" thick stainless steel wall of the outer cylinder
9	5" water shield

The fuel region was treated as a homogeneous mixture of UO_2, clad, moderator and structure materials all within a fuel assembly and has an equivalent diameter of 10.02 inches. This value was obtained by transforming the square fuel assembly to a right cylinder by conserving the fuel volume. The geometric transformation will conservatively underestimate the neutron leakage by approximately 10% . The fuel assembly was assumed to be of infinite length and, therefore, the axial neutron leakage was neglected. The U-235 content of the depleted uranium which serves as a shielding material was taken as 0.22%.

The basic calculation assumed that the cask was filled with 100°F water and that the fuel was also at 100°F. The effective multiplication factor as calculated by P1, S8 ANISN is 0.944 for the PWR cask. It is estimated that the BWR cask will have an effective multiplication factor of 0.85 (Section X-9.0).

Previous experience in the transport calculation on a geometry and material compositions similar to those shown in Figure X-1 indicates that P1 and P2 approximations yield results of k_{eff} within 0.1%. As the anisotropic scattering is calculated with high and higher order approximations, the result converges to the true value of the multiplication factor. For

this analysis, the P1 approximation appears to give a converged k_{eff}. As to the order of angular quadrature, S2 and S8 produce little different in reactivity, (~0.002).

6.0 TEMPERATURE EFFECT ON REACTIVITY

The multiplication factor of the cask was evaluated at 100°F as mentioned in Section X-5.0. At temperatures other than 100°F, the change of reactivity was estimated by running several LEOPARD fuel assembly cell problems. In addition to the capability described in Section X-3.0, LEOPARD has an option to include the non-fueled cells in a fuel assembly. Outside the basic fuel pin cell, there is provision for describing an additional (non-lattice) region which is allowed to affect the spectrum but does not affect any of the calculations of spatial effects. The thermal flux in this region relative to the thermal flux in the cell moderator is an input item and, in this case, the ratio was estimated from experience with similar PWR fuel assemblies. Inclusion of the non-lattice region and, consequently, the presence of more water will make the temperature effect more pronounced.

Table X-4 lists the fuel assembly reactivity at 32, 100, and 270°F. The reactivity change due to the change of water temperature is negligibly small in the temperature range of our interest. From 100 to 32°, $\Delta\rho$ is +0.04% and +0.02% for PWR and BWR type fuel respectively.

7.0 THE DRY FUEL

If there is no water in the inner cavity of the cask as in the case of normal transport conditions, the cask reactivity would decrease substantially. According to Reference 8, UO_2 containing less than 5 w/o U-235 cannot become critical if no moderating material is present. Transport of the dry

TABLE X-4

TEMPERATURE EFFECT ON REACTIVITY

Temperature	PWR Type Fuel Assy 3.5% Enriched k_∞	BWR Type Fuel Assy 2.65% Enriched k_∞
32°F	1.4356	1.3665
100°F	1.4348	1.3661
270°F	1.4280	1.3618

fuel will, therefore, pose no criticality problem.

8.0 AN INFINITE ARRAY OF CASKS

The effective multiplication factor presented in Section X-5.0 is the result of the ANISN problem which has a zero flux condition at the outer boundary of the cask.

To conservatively simulate the condition of an infinite array of casks, additional ANISN problems were run with a reflection or zero current outer boundary. It has been found (See Section X-9.0) that the 5 inch water shield is thick enough to serve as an infinite reflector and there is no practical difference between k_{eff} and k_{∞} values of the cask. The value given in Section 5.0 therefore is applicable to an infinite array of undamaged casks.

If the casks are so damaged that the water jackets are collapsed or crushed, the casks may be placed somewhat closer to one another. The cask has shoulders (33 inches in diameter) at its top and bottom With the water jackets crushed and neglecting the impact absorbers on each end, the distance between two adjacent casks is maintained by the shoulders and the closest center-to-center distance is, therefore, 33 inches (Figure X-2). Two damaged conditions were examined. The first case assumes that the space between casks is filled with water, while the second assumes the space between casks contains no water. The fuel conditions are the same as prescribed in the preceding sections for a cask loading of 1 PWR fuel assembly. The resulting infinite multiplication factor of the cask conservatively represents the multiplication factor of an infinite array of damaged casks. The k_{∞} values are as follows:

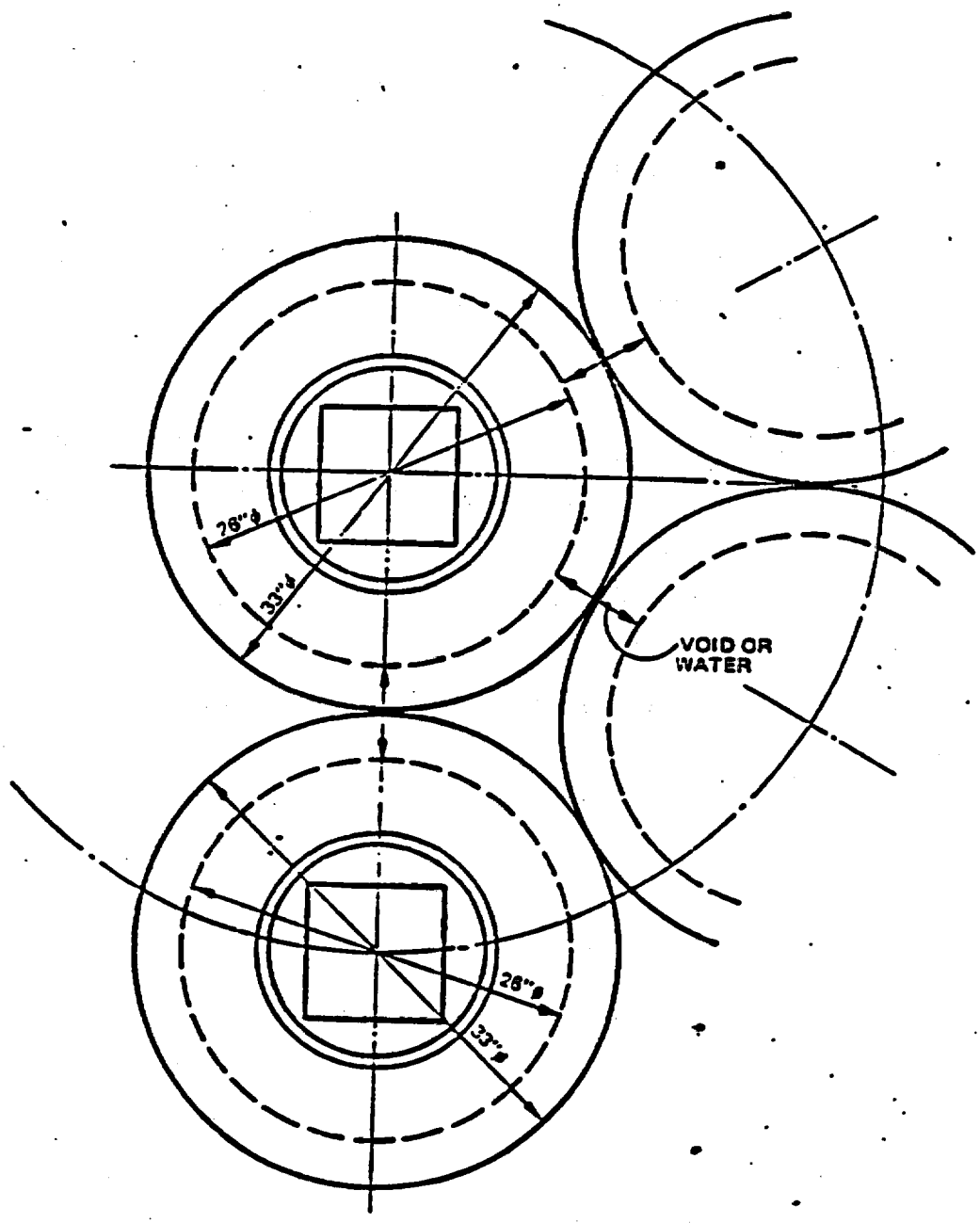

FIGURE X–2 AN INFINITE ARRAY OF PWR CASKS

	Cask k_∞
With water between casks (3.5 inch thick)	0.944
Without water between casks	0.979

The higher k_∞ in the second case is due to the fast neutron interactions between adjacent casks. Any water between the casks will thermalize the fast neutrons and since thermal neutrons are unable to penetrate deep into a neighboring cask, the k_∞ is lower in the first case.

Note must be taken that a flooded fuel assembly was assumed in all calculations presented in this chapter. As pointed out in Section X-1.0, the fuel can in which the fuel assembly is loaded is designed to be water-tight so that this, in itself, is a conservative assumption. That a fuel can can be flooded while the space between casks is dry is unlikely. The k_∞ of 0.979 is therefore a very conservative upper bound of the cask reactivity.

9.0 BWR LOADING

Criticality analysis of the 2 BWR loading (and the 1 PWR loading) was performed for the cask with a previous internals concept which utilized a stainless steel fuel basket in place of the can and aluminum blocks presently used. The methods of analysis were identical to those described in the preceding sections. The ANISN layout for these analyses is shown in Figure X-3. Note that the basic cask dimensions are identical to those given in Figure X-1.

The results of these analyses are given in Table X-5. Since the difference in reactivity for the PWR loading resulting from the change in internals

TABLE X-5

EFFECTIVE MULTIPLICATION FACTOR OF BASKET CONCEPT

Number of Fuel Assys in Cask	Fuel Enrichment, w/o	Fraction of UO_2 Density	Cask k_{eff}	Cask k_∞
1 PWR	3.35	0.94	0.925	0.925
1 PWR	2.50	1.00	0.865	--
2 BWR	2.65	1.00	0.821	---

FIGURE WITHHELD UNDER 10 CFR 2.390

4.52"

0.07

FIGURE X-3 ANISN LAYOUT WITH BASKET NLI 1/2 CASK

design is small compared to the margin for the BWR loading, it was concluded that reanalysis of the BWR loading was not necessary. If the same increase in reactivity of the PWR loading applies to the BWR loading, the effective multiplication factor of the present BWR cask will be no higher than 0.85.

10.0 CONSOLIDATED PWR FUEL

Consolidation of fuel consists of packing the fuel rods from up to two PWR assemblies in a stainless steel canister. The non-fuel bearing components of the assemblies are packaged seperately.

Analyses of the effects of the shipment of consolidated fuel in the NLI-1/2 cask have been performed for criticality, shielding, structural and thermal effects. The consolidated fuel modeled in the criticality, shielding, and structural analyses ifs W15 x 15 fuel cooled for two years, with an initial enrichment of 3.7 w/o U-235 and a burnup of 40,000 MWD/MTU. These values are considered to be representative of consolidated PWR spent fuel shipments. The thermal analysis has been performed for W14 x 14 fuel cooled 12 years to add an additional margin of conservatism because the thermal behavior of consolidated spent fuel is currently being investigated.

10.1 Analysis Method

The process of rod consolidation makes it difficult to guarantee a specific number of rods in a canister, because some rods may be bowed, dented, or otherwise at variance with their original manufactured dimensions. The effective multiplication factor, k-effective, depends on the number of rods per canister and the resulting rod pitch. The k-effective for design basis fuel canisters is therefore variable, but k-effective may be bounded by calculating it for a standard assembly (W15x15, 204 rods) and for a canister consolidated 2 to 1 (408 rods). It is also necessary to establish the trend of k-effective between these bounds. To establish this trend, k-infinity was calculated at various rod pitches (with an equivalent number of rods) and plotted in Figure X-4. This figure shows that the standard assembly is undermoderated, and that k-infinity decreases as the number of rods is increased from 204 (standard

Figure X-4 - K_∞ vs. Number of Rods

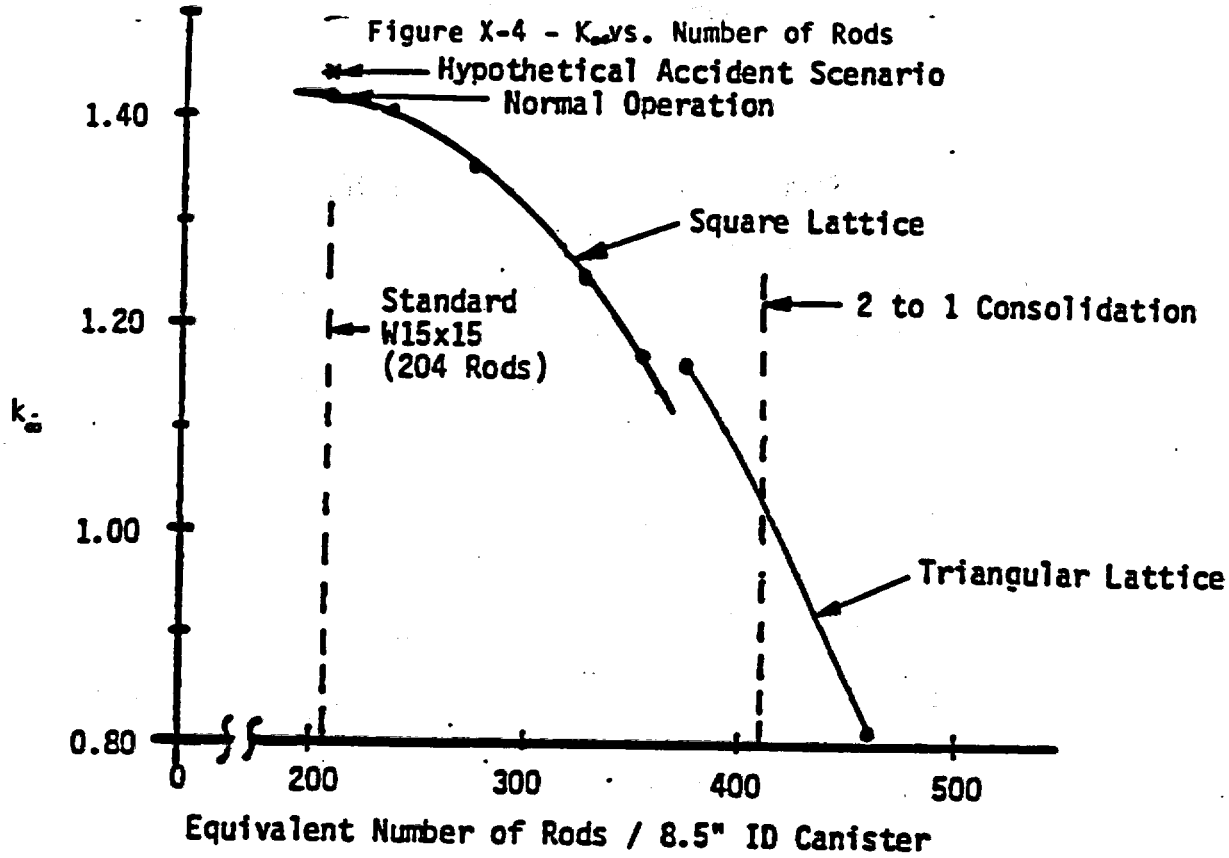

Figure X-5 - K_{eff} vs. Number of Rods

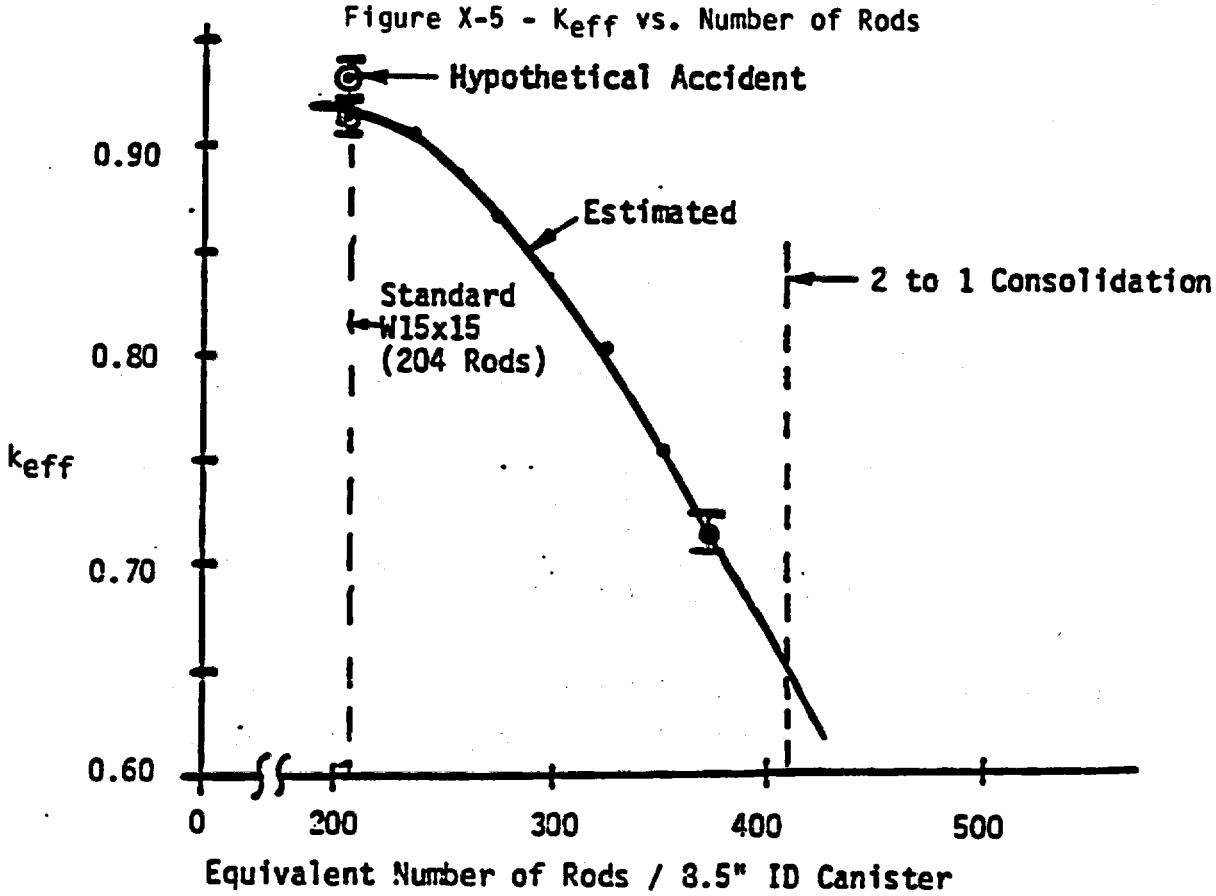

assembly) to 408 (2 to 1 consolidation). A calculation of k-effective for a standard assembly in the cask was performed and yielded k-eff = 0.91564 ± 0.00371 for Normal Operation conditions. (A similar calculation for Transportation Hypothetical Accident conditions yielded K-effective = 0.93092 ± 0.00260.) Rather than calculate k-effective at each possible number of rods between 204 and 408, an estimated k-eff was calculated by multiplying k-eff for a standard assembly by the ratio of k-infinity for the desired number of rods, N, to the k-infinity for the standard assembly:

$$k_{est}(N) = k_{eff}(\text{Std. Asbl.}) \times \frac{k_{\infty}(N)}{k_{\infty}(\text{Std. Asbl.})}$$

The calculated k-effectives and k-estimateds are plotted in Figure X-5 and the specific results are shown in Table X-6. A verification check was made by calculating k-effective at 373 rods/canister, which is the most loosely-packed canister expected in actual consolidation operations.

10.2 Results and Discussion

Inspection of Figure X-5 and Table X-6 shows that:

(1) k-effective decreases as the number of rods increases, i.e., k-effective is less for any consolidated fuel canister containing more rods than a standard asembly.

(2) k-effective for Normal Operations for consolidated canisters is less than k-effective in the Hypothetical Accident scenario, because the Hypothetical Accident scenario employs a larger rod pitch with a larger k-infinity.

(3) k-effective for the worst case, the standard assembly Hypothetical Accident, is 0.93092 ± 0.00260. A calculation of k_s, which includes corrections for bias and uncertainties give k_s = 0.950 for the Hypothetical Accident scenario and k_s = 0.936 for the worse case Normal Operation conditions (Std. Asbl.).

Thus, the consolidated fuel canister is shown to be less reactive than the standard assembly, under all conditions, and is subcritical for all conditions.

TABLE X-6

k_∞ vs. Pitch (XSDRNPM, S_n)

k_{eff} (Keno)	R_{eff}	k_s	Equivalent No. of Rods (8.50" ID can)	Pitch (cm)
0.93092 ± 0.00260	0.8484	1.4403650	204, H.A. (8.87" cav.)	1.504 square
0.91564 ± 0.00371	0.8068	1.4213351	204, Normal Operations	1.430 square
0.907 est.	0.7899	1.4073366	237	1.400 square
0.868 est.	0.7334	1.3476443	275	1.300 square
0.802 est.	0.6670	1.2444021	323	1.200 square
0.752 est.	0.6488	1.1683589	352	1.150 square
0.71336 ± 0.00255	0.6301	1.1627481	373, loosest expected packing (1.85 to 1)	1.200 triangular
0.635 est.	0.6024	0.98522996	2 to 1	1.147
0.520 est.	0.5681	0.80736114	459, maximum packing	1.082 triangular rod dia. 1.072

$$\# \text{ rods} = \frac{\text{Can area}}{\text{Cell area}} (8.50")^2$$

Can ID = 8.50"
2 x can wall = 0.18"
8.68"

8.87" cavity gives 0.1" clearance

10.3 Computer Codes

The calculations for k-infinity were performed using the XSDRNPM module of SCALE-2. Calculations for k-effective were performed using NITAWL, XSDRNPM, and KENO-IV modules of SCALE-2. Dancoff correction factors and effective moderator cross-sections for NITAWL were calculated by the NULIF code provided by Babcock and Wilcox.

10.4 Criticality Evaluation for Metallic Fuel

The metallic fuel has only natural enrichment, 0.711 w/o uranium-235. Metallic natural uranium fuel cannot achieve criticality in any geometric configuration with (light) water as a moderator. Neither is an array of packages containing natural uranium fuel critical, with or without light water moderation. Table X-7 demonstrates that the loaded cask meets the criteria established for Fissile Class I packages, as defined by 10 CFR 71.38. A description of the fuel and its configuration in the cask are provided in the following section.

10.5 Criticality Evaluation for PWR or BWR Rods

The enrichment limit for a BWR rod shipment is 5.0 w/o uranium-235. This enrichment is higher than that of the design basis BWR fuel assembly. Therefore, an analysis must be performed to demonstrate that a shipment of these rods is critically safe.

A series of runs was performed with the CSAS25/KENO V.a sequence, modeling an infinite array of NLI-1/2 casks containing 25 BWR rods, enriched to 5.0 w/o U-235, in the PWR basket. The pitch between rods in the cask was varied, and the k_{eff} values recorded.

The peak k_{eff} was determined to occur at a pitch of 3.0 centimeters. This configuration represents the optimum pitch for the BWR rods in the NLI-1/2 cask. This configuration resulted in a k_{eff} value of 0.6790 $\pm$ 0.0027, which gives a k_{eff} + 2σ value of 0.6844. This value is well below the accepted limit of 0.95; therefore, the NLI-1/2 can safely transport 25 BWR rods with an enrichment of 5.0 w/o uranium-235.

Revised
Oct. 1986
May 1987
Jan. 1990
Feb. 1991
Oct. 1991

The enrichment limit for a PWR rod shipment is 4.9 w/o uranium-235. This enrichment is higher than the design basis enrichment limit. During the shipment of PWR rods, it is hypothetically possible for the rods to attain their optimum or most reactive pitch. Therefore, it is necessary to calculate the optimum pitch for a PWR rod and determine the reactivity of an array of 25 rods.

The XSDRNPM discrete ordinates code was used to determine k_∞ values for various rod pitches. A pitch of 1.53 centimeters was used as a starting point. The pitch was increased by a small distance and k_∞ was calculated for that case. The pitch was steadily increased and k_∞ calculated until a maximum value of k_∞ was determined. The values for each pitch analyzed are listed below:

Pitch	k_∞
1.53	1.4983526
1.56	1.5044017
1.58	1.5076288
1.60	1.5103494
1.62	1.5125901
1.64	1.5143920
1.66	1.5156379
1.68	1.5165032
1.70	1.5169899
1.72	1.5170627
1.74	1.5168190
1.76	1.5162339
1.78	1.5153357
1.80	1.5141438
1.82	1.5126569
1.84	1.5109039

A peak in k_∞ was seen at a pitch of 1.72 centimeters. This is the optimum pitch for the PWR rods. KENO-IV was used to model a square 5 x 5 array containing 25 rods at optimum pitch inside the NLI-1/2 cask. This case gave a k_{eff} of 0.52478 ± 0.00254, which corresponds to a k_s of 0.545. A homogenized, cylindrical array of 25 rods yielded a k_s of 0.540, indicating that the array geometry does not have a strong effect on reactivity. Therefore, the NLI-1/2 cask can safely transport 25 PWR rods with an enrichment of 4.9 w/o uranium-235.

Page Added
Jan. 1990
Revised
Oct. 1991

Table X-7
SUMMARY OF CRITICALITY EVALUATION FOR METALLIC FUELS
FISSILE CLASS I

NORMAL CONDITIONS	
Number of undamaged packages calculated to be subcritical (Fissile Class I must be infinite; Fissile Class II must be at least 25; and Fissile Class III must be at least identical shipment.)	Infinite*
Optimum interspersed hydrogenous moderation (required for Fissile Class I)	yes
Closely reflected by water (required for Fissile Class II and III)	yes
Package size, cm^3	60,240
ACCIDENT CONDITIONS	
Number of damaged packages calculated to be subcritical (Fissile Class I must be at least 250; Fissile Class II must be at least 10; and Fissile Class III must be at least 1.	250*
Optimum interspersed hydrogenous moderation, full water reflection	yes
Package size, cm^3	60,240
Other Transport Index (must not exceed 10 for Fissile Class II)	Not Applicable

*Natural Enrichment Uranium Fuel cannot go critical in any configuration, with or without (light) water moderation. No combination of damaged or undamaged packages can result in criticality.

Page Added
Oct. 1986
Revised
Feb. 1987
Jan. 1990

FIGURE WITHHELD UNDER 10 CFR 2.390

Figure X-6 NL-1/2 CASK. & METALLIC FUEL CONTENTS
NORMAL FUEL CONFIGURATION

Page Added
Oct. 1986

FIGURE WITHHELD UNDER 10 CFR 2.390

Figure X-7 NL-1/2 CASK AND METALLIC FUEL CONTENTS
FAILED FUEL CONFIGURATION

Page Added
Oct. 1986

10.6 Criticality Evaluation for MARK 42 Fuel

A MARK 42 fuel assembly consists of three concentric fuel tubes with PuO_2-Al powder metallurgy cores containing a total of 3.350 kg of plutonium as shown in Figure X-8 and Figure X-9. The cores are clad with type 6063 aluminum and previously surrounded an inner target which has been removed. The plutonium was initially enriched to contain 78.28 w/o Pu^{239}, 18.58 w/o Pu^{240}, 2.27 w/o Pu^{241}, 0.71 w/o Pu^{242} and 0.15 w/o Pu^{238}.

Cross-section sets were prepared by NITAWL using infinite dilution. Dancoff factors are not applicable for this assembly because of the annular cylinder geometry and resonance calculations were conservatively ignored in these analyses. The cross-section set used for these analyses is the 27 group version of the ENDF-B/IV library. These cross-sections were not collapsed or weighted, and were passed directly from NITAWL to KENO-IV. The output for NITAWL is given in Appendix A. Oak Ridge National Laboratory has validated the codes and cross-section set used in the analyses as shown in Reference 9., that no bias is required when analyzing plutonium systems.

The Mark 42 will eventually be sectioned into several twenty inch long segments. When the Mark 42 fuel is transported in the NLI-1/2 cask following sectioning, two quadrants of the four quadrant "Rockwell basket" will contain the sectioned assembly. The criticality analyses were conservatively performed for two adjacent fuel assemblies as shown in Figure X-10. The cask geometry that was modeled in KENO-IV is shown in Figure X-11. Several analyses were performed to determine the effect of different parameters on the reactivity of the fuel. The normal operation analysis utilized the initial concentrations of plutonium isotopes including neutron poisons such as Pu^{240} (18.58 w/o) and Pu^{242} (0.71 w/o). Aluminum was also included in the fuel modeling.

Page Added
Aug. 1988
Page Revised
Dec. 1988
Oct. 1990

This analysis yielded a k_{eff} of 0.556. In the off-normal analysis, the neutron poisons, such as Pu^{240} and Pu^{242}, were conservatively removed to account for possible inaccuracies in the plutonium isotope measurements for the fresh fuel. Aluminum in the fuel was also removed, which does not have much effect since aluminum is almost transparent to neutrons. This analysis resulted in a k_{eff} of 0.612. The input and output for this limiting case are given in Appendix B.

Alternate configurations of the fuel were also modeled to simulate a hypothetical accident scenario. The fuel was evaluated as two cubes either centered in opposing quadrants or closely packed in adjacent quadrants as seen in Figures X-12 and X-13 respectively. All of the accident configurations yielded a k_{eff} lower than 0.612. These analyses show that the initial annular configuration of the Mark 42 fuel assembly is the most reactive one. The criticality results for the different cases are presented in Table X-8. Table X-9 demonstrates that the loaded cask meets the criteria established for Fissile Class I packages, as determined by 10 CFR 71.57. The results of the criticality evaluation for the NLI-1/2 cask containing Mark 42 fuel show that k_{eff} does not exceed 0.612.

Table X-8

Mark 42 Fuel Criticality Results Summary

Case	k_{eff}
Normal Operation	0.556
Off-normal Operation	0.612
Centered - Opposing quadrants	0.321
Closely packed - Adjacent quadrants	0.285

Page Added
Aug. 1988
Page Revised
Dec. 1988
Oct. 1990

Table X-9

SUMMARY OF CRITICALITY EVALUATION FOR MARK 42 FUEL ASSEMBLIES
FISSILE CLASS I

NORMAL CONDITIONS	
Number of undamaged packages calculated to be subcritical (Fissile Class I must be infinite)	Infinite
Optimum interspersed hydrogenous moderation (required for Fissile Class I)	yes
Closely reflected by water (required for Fissile Class II and III)	yes
Package size, cm^3	60,240
ACCIDENT CONDITIONS	
Number of damaged packages calculated to be subcritical	Infinite
Optimum interspersed hydrogenous moderation, full water reflection	yes
Package size, cm^3	60,240
Other Transport Index	Not applicable

Figure X-8
MARK 42 ASSEMBLY CROSS SECTION

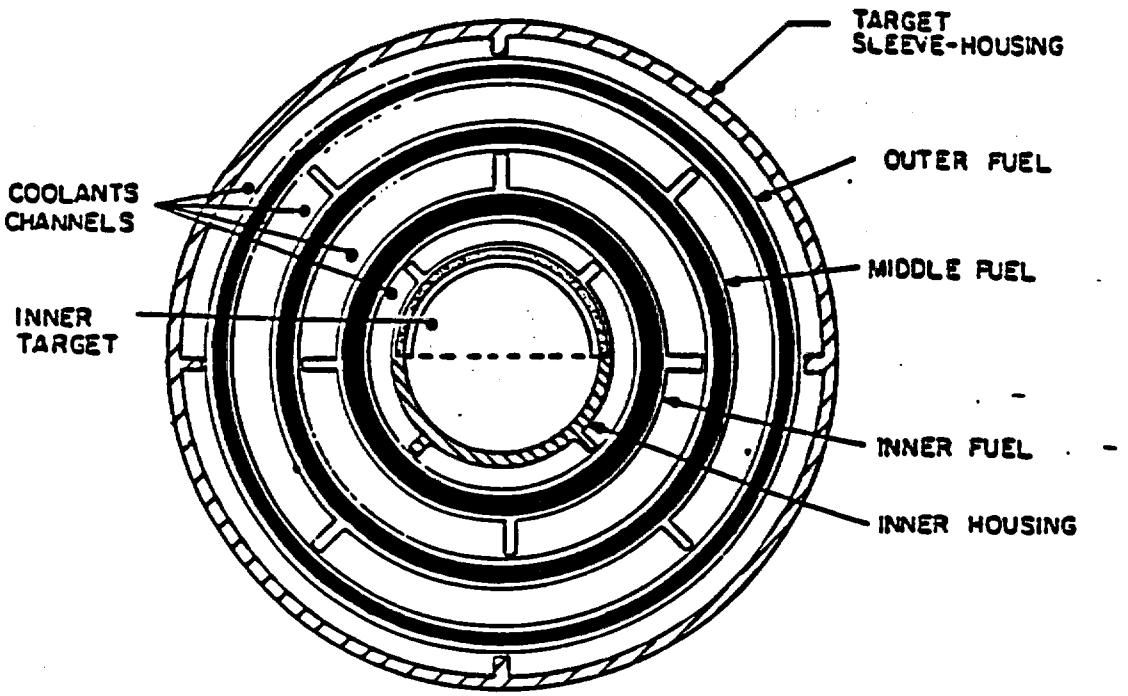

MARK 42
Cross Section

Not to Scale

		Target Sleeve-housing	Fuel Middle Outer Cladding	Fuel Middle Outer Core	Fuel Middle Outer Belt	Fuel Middle Cladding	Fuel Middle Core	Fuel Middle Belt	Fuel Middle Inner Cladding	Fuel Middle Inner Core	Fuel Middle Inner Belt	Lower Assembly Target Cladding	Lower Assembly Target Core	Lower Assembly Target Belt	Lower Assembly Lower Housing
Material		Al	Al	PuO_2-Al	-	Al	PuO_2-Al	-	Al	PuO_2-Al	-	Al	Li-Al	-	Al
Length	EC	231.68[a]													
	P	232.06	187.93	152	-	181.25	152	-	159.91	152	-	175.06	152	-	175.06
OD		4.110	3.708	3.648	-	2.936	2.876	-	2.084	2.024	-	1.378	1.328	-	1.378
ID		4.010	3.634	3.604	-	2.590	2.650	-	1.718	1.798	-	1.125	1.175	-	1.278
Bid circle dia		3.748	-	-	-	3.404	-	-	2.568	-	-	1.678	-	-	1.678
Thickness[b]		0.038	0.030	0.073	0.133	0.030	0.113	0.173	0.040[d] 0.030[e]	0.113	0.183	0.025	0.076	0.128	0.038
Weight,	EC	33.6[c]													
	P	34.96	-	-	20.1	-	-	27.6	-	-	28.2	-	-	8.9[f]	5.2[f]
Pu, g		-	-	1061.95	-	-	1587.3	-	-	788.35	-	-	-	-	-
^{6}Li, g/ft		-	-	83.8	-	-	119.8	-	-	61.6	-	-	-	-	-
		-	-	-	-	-	-	-	-	-	-	-	f	-	-
Cross-sectional area, in.^{2}		0.678	0.672	0.818	1.490	0.587	0.981	1.368	0.471	0.678	1.149	0.226	0.301	0.322	0.238

	Outer	Outer Inlets	Inner Inlets	Inner	Dead Space IP	Dead Space IB
Channel flow area, in.^{2}	1.840	2.432	1.797	0.786	0.99	1.28
Total assembly Volume displacement, in.^{3a}	IP 1158	IB 1103				
Weight, lb	89.2	82.9				

Page Added
December 1988

FIGURE WITHHELD UNDER 10 CFR 2.390

9603010285-01

Figure X-10

MARK 42 - ACTUAL LOADED CASK GEOMETRY

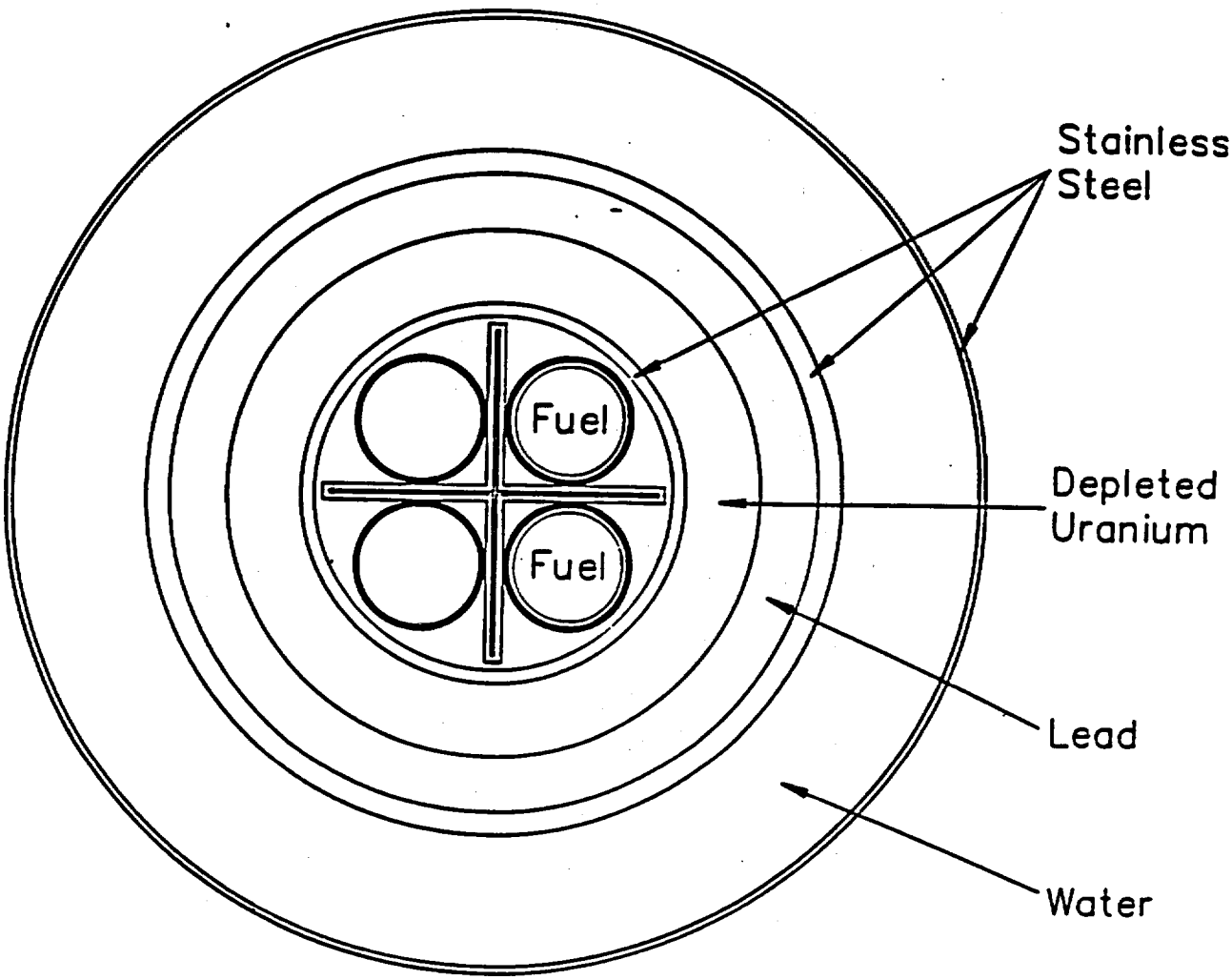

Page Added
December 1988

Figure X-11
MARK 42 - KENO MODEL

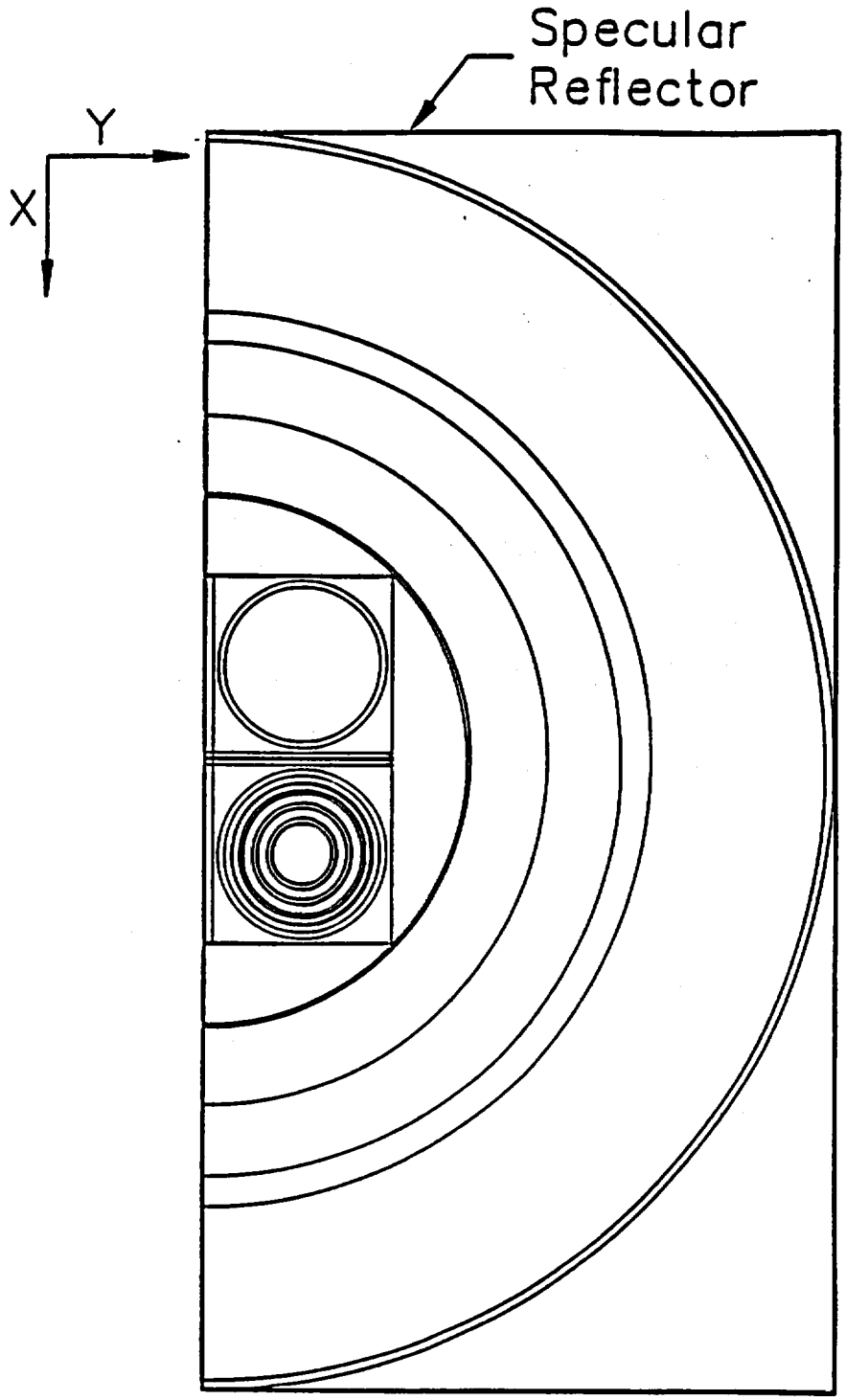

Figure X-12
MARK 42 - KENO MODEL
Hypothetical Accident

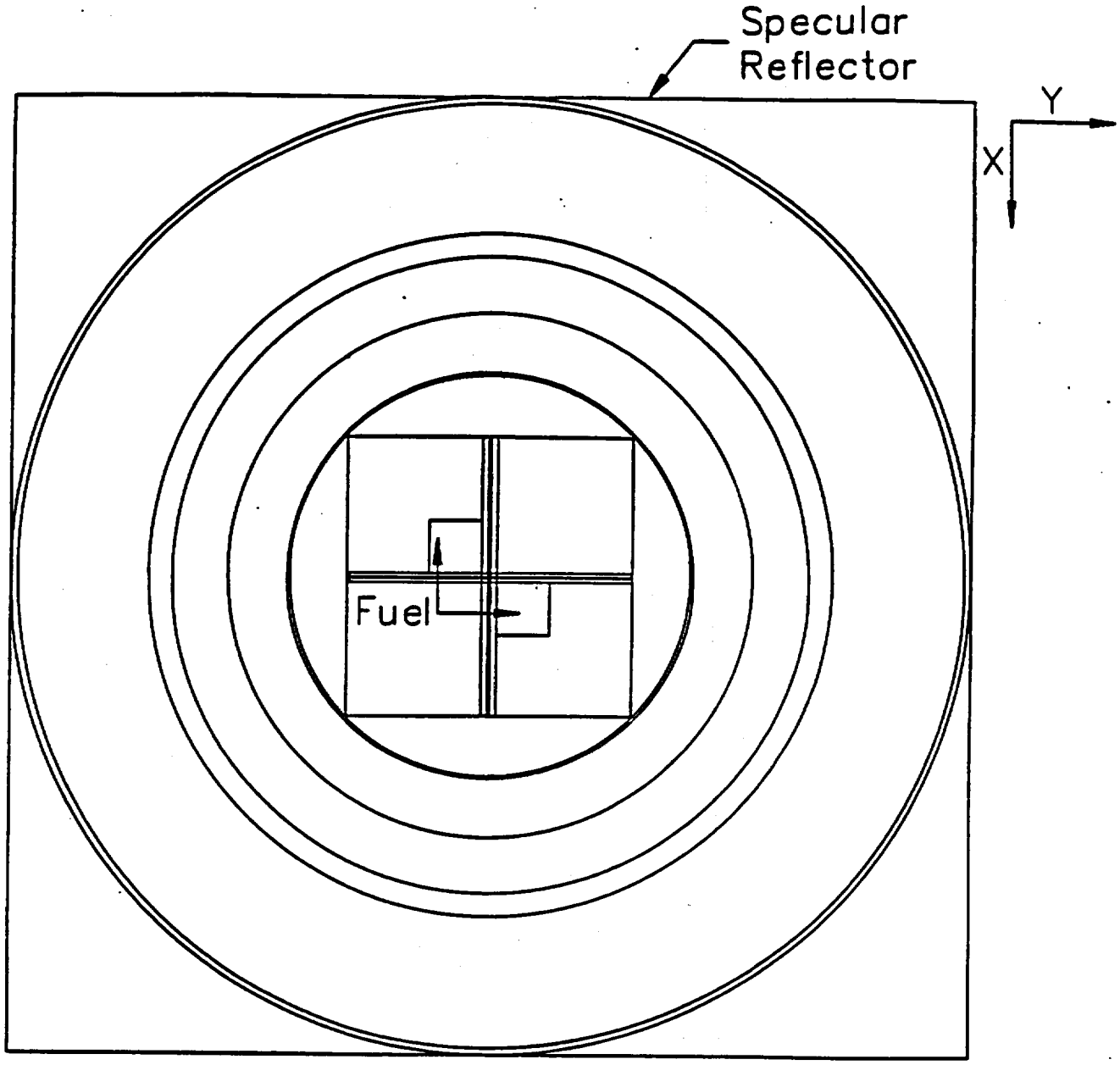

Page Added
December 1988

Figure X-13
MARK 42 - KENO MODEL
Hypothetical Accident