June 2001

SAFETY ANALYSIS REPORT ADDENDUM

for the

OAK RIDGE CONTAINER

in the

TN-FSV PACKAGING

Docket No. 71-9253

Transnuclear Inc.
Four Skyline Drive
Hawthorne, NY 10532

TN-FSV SAFETY ANALYSIS REPORT

REVISION 3

As part of the requested license amendment for the TN-FSV Package, Revisions 2 of the TN-FSV SAR has been reviewed against the current requirements of the 10CFR71 regulations. As a result, several pages of the TN-FSV SAR have been revised and are also included as part of this submittal. The revised SAR pages are listed below.

Revised Page Number	Description
Table of Contents	Added SAR Addendum for Oak Ridge Container.
1-1 & 1-1a	Defined Configuration 1 (FSV container) and Configuration 2 (Oak Ridge Container). Exceptions to NUREG-1617.
1-11	Corrected lid spacer diameter.
1-12	Defined Configuration 1 (FSV container) and Configuration 2 (Oak Ridge Container). Discussion of optional personnel barrier.
1-12a	Spill over from revision of page 1-12.
1-18	New revision for SAR drawings.
SAR drawings	Added Configuration 1 and Configuration 2 description with seal material and leak test requirements. Added fabrication tolerances.
2-70 & 2-70a	Reference new lead slump analysis in Addendum and spill over from insertion.
2-87, 2-87a & 2-88	Revised immersion evaluations.
2-121 & 2-122	Revised stress tables for immersion.
3-ii	Addition of new table.
3-19, 3-19a, 3-20, & 3-20a	Address the requirement for a convection coefficient in the thermal accident.
3-31	Addition of a new reference.
4-7 & 4-9	Revised in accordance with the current A_2 value for Kr-85 and ANSI N145.5 1997
4-12	Revised in accordance with the current accident conditions release limit for Kr-85 and ANSI N14.5 1997.
5-1 & 5-3	Revised to include accident dose rate considering lead slump.

Revised Page Number	Description
7-1	Include Configuration 1 and Configuration 2 activities and remove statement on underlined steps. Added option for using personnel barrier.
7-3	Removed underlining in steps and add verification of contents to C of C.
7-4 & 7-5	Removed underlining in steps.
7-6 & 7-7	Removed underlining in steps and option for personnel barrier.
7-9	Removed underlining in steps.
7-10	Removed underlining in steps and option for personnel barrier.

TABLE OF CONTENTS

Page

1. GENERAL INFORMATION 1-1

1.1 Introduction 1-1
1.2 Package Description 1-2
1.3 Appendix 1-18

2. STRUCTURAL EVALUATION 2-1

2.1 Structural Design 2-1
2.2 Weights and Centers of Gravity 2-11
2.3 Mechanical Properties of Materials 2-12
2.4 General Standards for All Packages 2-23
2.5 Lifting and Tiedown Standards for All Packages 2-24
2.6 Normal Conditions of Transport 2-33
2.7 Hypothetical Accident Conditions 2-65
2.8 Special Form 2-90
2.9 Fuel Rods 2-90
2.10 Appendices 2.10.1-1

3. THERMAL EVALUATION 3-1

3.1 Discussion 3-1
3.2 Summary of Thermal Properties of Materials 3-3
3.3 Technical Specifications of Components 3-6
3.4 Thermal Evaluation for Normal Conditions of Transport 3-6
3.5 Hypothetical Accident Thermal Evaluation 3-16
3.6 References 3-31

4. CONTAINMENT 4-1

4.1 Containment Boundary 4-1
4.2 Requirements for Normal Conditions of Transport 4-6
4.3 Containment Requirements for Hypothetical Accident Conditions 4-11
4.4 References 4-12

5. SHIELDING EVALUATION 5-1

5.1 Discussion and Results 5-1
5.2 Source Specification 5-4
5.3 Model Specification 5-7
5.4 Shielding Evaluation 5-11
5.5 References 5-12

TABLE OF CONTENTS (Cont'd)

Page

6. CRITICALITY EVALUATION 6-1

6.1 Discussion and Results 6-1
6.2 Packaging Fuel Loading 6-3
6.3 Model Specification 6-5
6.4 Criticality Calculations 6-8
6.5 Criticality Benchmark 6-15
6.6 References 6-15
6.7 Appendix 6.7-1

7. OPERATING PROCEDURES 7-1

7.1 Procedures for Loading Package 7-1
7.2 Procedures for Unloading Package 7-7
7.3 Preparation of Empty Package for Transport 7-10

8. ACCEPTANCE TESTS AND MAINTENANCE PROGRAM 8-1

8.1 Acceptance Tests 8-1
8.2 Maintenance Program 8-6

SAFETY ANALYSIS REPORT ADDENDUM FOR THE OAK RIDGE CONTAINER

CHAPTER ONE

GENERAL INFORMATION

1.1 INTRODUCTION

This Safety Analysis Report (SAR) presents the evaluation of a Type B(U)F, spent fuel transport packaging developed by Transnuclear, Inc. and designated the TN-FSV. This SAR describes the design features and presents the safety analyses which demonstrate that the TN-FSV complies with applicable requirements of 10CFR71. All references to 10CFR71 in this Safety Analysis Report consider the current revision at time of submittal, June 2001. The format and content of this SAR follow the guidelines of Regulatory Guide 7.9.

The packaging is intended to be shipped as exclusive use. The Transport Index for nuclear criticality control for the TN-FSV cask is determined to be one hundred (100) in accordance with 10CFR71.59.

Transnuclear, Inc. has a NRC approved quality assurance program (Docket Number 71-0250) which satisfies the requirements of 10CFR71, Subpart H.

The TN-FSV packaging is used to transport dry canistered High Temperature Gas Cooled Reactor (HTGR) spent fuel. The HTGR fuel is from the Fort. St. Vrain Nuclear Plant and is stored in carbon steel containers, each containing six fuel elements. Shipments will occur by highway travel with one loaded container installed in the TN-FSV cask. The TN-FSV packaging configuration for transport of Ft. ST. Vrain HTGR spent fuel is designated as Configuration 1.

The TN-FSV packaging is also used to transport dry canistered spent fuel from Oak Ridge National Laboratory (ORNL) to Idaho National Engineering and Environmental Laboratory (INEEL).

The canistered fuel is loaded into the Oak Ridge Container which is installed in the TN-FSV cask. The TN-FSV packaging loaded with the Oak Ridge Container is designated as Configuration 2. The Oak Ridge Container SAR Addendum describes and analyzes this package configuration.

The TN-FSV is a right circular cylinder with steel containment, lead shielding, and wood filled impact limiters. A detailed description of the packaging is presented in Section 1.2.

Since the content of this SAR was prepared prior to the availability of NUREG-1617, a review was performed to compare the SAR against the guidance provided in NUREG-1617. Except for the topics identified below, the content of the SAR is consistent with NUREG-1617 requirements.

Two of the exceptions are not using Section III, Subsection WB of the ASME Boiler and Pressure Vessel Code and not using an Authorized Nuclear Inspector (ANI). As stated in Chapter two and on the drawings, the containment of the TN-FSV is designed and fabricated to Section III, Subsection NB of the Code which is essentially equivalent. Also, since the vessel is not stamped, an ANI is not utilized. The Code exceptions listed for the Oak Ridge Container containment vessel in Section 2.9 of the Addendum are applicable to the TN-FSV containment vessel with the exception of the hydrostatic testing which is performed on the TN-FSV containment vessel.

The vent port is closed by a 3.81 inch diameter, 0.75 inch thick blind flange which is secured to the lid with four 0.25 inch diameter socket head cap screws. The penetration cover is recessed into the outer plate of the lid so that the outer surfaces are flush. A single silicone O-ring is mounted in a dovetail groove machined in the underside of the penetration cover. Leak testing of the penetration is accomplished using a vacuum bell as described in Chapter Seven.

Drain Port

This penetration is located in the bottom of the cask body. Access to this penetration is located on the side of the cask body at the bottom plate. A 0.5 inch hole is drilled from the inside surface of the cavity bottom to the cask body side and includes a 90° bend as shown on drawing 1090-SAR-4. The drain port permits draining of the cask cavity with the TN-FSV in a vertical orientation. A quick-connect coupling is provided at this penetration. As on the vent port, a blind flange which maintains the containment boundary at this point is secured over the drain port by four bolts. A single silicone O-ring is located in the dovetail groove machined in the penetration cover. Leak testing of this penetration is accomplished using a vacuum bell as described in Chapter Seven.

1.2.1.7 Fuel Storage Container Spacers

Two aluminum (6061-T6) spacers are located at the bottom and top of the TN-FSV cavity. The bottom spacer, shown on drawings 1090-SAR-2 and 4, is a 17.62 inch diameter, 2.69 inch thick disk with a 4.88 inch diameter hole at its center. The fuel storage container has a 4.5 inch diameter, 2.5 inch long foot that sits in this center hole above the cask bottom. All loads applied to the container bottom are transferred directly and uniformly to the cask bottom through the spacer. The top spacer is shown on drawing 1090-SAR-5. It is a 17.63 inch diameter, 0.56 inch disk that ensures all loads applied to the container lid are transferred directly and uniformly to the cask.

1.2.2 Operational Features

There are no complex operational features associated with the TN-FSV. The packaging is designed to accommodate dry loading/unloading operations. The TN-FSV is up-righted from the horizontal transport orientation to the vertical position by lifting at the front lifting sockets and allowing the packaging to pivot about the rear trunnions while supported in the transport cradle. Both impact limiters are removed prior to this handling operation. Cask handling in the vertical position is accomplished with the lifting sockets. A "personnel barrier" may be utilized with the transport. If utilized, the "personnel barrier" will be of an open mesh design which allows free flow of air and does not affect the thermal analysis. The personnel barrier has no safety function.

The sequential steps to be followed for cask loading/unloading operations and pre-transport preparations including seal testing are provided in Chapter Seven.

1.2.3 Contents of Packaging

The contents of the cask (Configuration 1) consist of six (6) spent fuel elements from the Fort St. Vrain, High Temperature Gas-Cooled Reactor (HTGR), stacked vertically in a carbon steel fuel storage container as shown in Figure 1-2. A description of the fuel and the fuel storage container follows.

For Configuration 2, the contents of the cask are described in the Oak Ridge Container SAR Addendum.

1.2.3.1 HTGR Spent Fuel

The HTGR fuel elements consist of graphite blocks containing fuel rods and coolant passages. The fuel rods, shown in Figure 1-3, contain the nuclear fuel in the form of micro-spheres of either thorium/uranium carbide (fissile particles) or thorium carbide (fertile particles). The uranium is enriched to 93% (U-235) and the thorium material was partially converted during reactor operation to produce U-233. The fission product per fuel element is given in Chapter 4.

1.3 APPENDIX

TN-FSV DRAWINGS/DOCUMENTS

DRAWING/DOCUMENT NO.	TITLE	REVISION
1090-SAR-1	TN-FSV Packaging - Assembly	3
1090-SAR-2	Shell Assembly	3
1090-SAR-3	Details and Shell Parts List	3
1090-SAR-4	Shell Details	3
1090-SAR-5	Lid Assembly and Parts List	3
1090-SAR-6	Front Impact Limiter Assembly	3
1090-SAR-7	Front Impact Limiter Details & Parts List	3
1090-SAR-8	Rear Impact Limiter Assembly	3
1090-SAR-9	Rear Impact Limiter Details & Parts List	3
1090-SAR-10	Impact Limiter Attachment Bolt	2

FIGURE WITHHELD UNDER 10 CFR 2.390

APPROVALS	DATE	TRANSNUCLEAR, INC. HAWTHORNE, N.Y.			
G.G. PROJ.	11 MAR. 93	TN-FSV PACKAGING ASSEMBLY			
T.J.N. CHK'D. BY	11 MAR. 93				
J.T.G. DWN. BY.	27 JAN. 93	1/10 SCALE	B SIZE	1090-SAR-1 DWG. NO.	3 REV.

FIGURE WITHHELD UNDER 10 CFR 2.390

APPROVALS	DATE	TRANSNUCLEAR, INC. HAWTHORNE, N.Y.			
G.G. PROJ.	11 MAR. 93	TN-FSV PACKAGING SHELL ASSEMBLY			
T.J.N. CHK'D. BY	11 MAR. 93				
J.T.G. DWN. BY.	27 JAN. 93	1/10 SCALE	B SIZE	1090-SAR-2 DWG. NO.	3 REV.

FIGURE WITHHELD UNDER 10 CFR 2.390

APPROVALS	DATE	TRANSNUCLEAR, INC. HAWTHORNE, N.Y.			
G.G. PROJ.	11 MAR. 93	TN-FSV PACKAGING SHELL DETAILS & PARTS LIST			
T.J.N. CHK'D. BY	11 MAR. 93				
J.T.G. DWN. BY.	27 JAN. 93	1/10 SCALE	B SIZE	1090-SAR-3 DWG. NO.	3 REV.

FIGURE WITHHELD UNDER 10 CFR 2.390

NO.	DATE	REVISIONS			
APPROVALS	DATE	TRANSNUCLEAR, INC. HAWTHORNE, N.Y.			
G.G. PROJ.	11 MAR. 93	TN-FSV PACKAGING SHELL DETAILS			
T.J.N. CHK'D. BY	11 MAR. 93				
J.T.G. DWN. BY.	27 JAN. 93	1/10 SCALE	B SIZE	1090-SAR-4 DWG. NO.	3 REV.

FIGURE WITHHELD UNDER 10 CFR 2.390

FIGURE WITHHELD UNDER 10 CFR 2.390

APPROVALS	DATE	TRANSNUCLEAR, INC. HAWTHORNE, N.Y.			
G.G. PROJ.	11 MAR. 93	TN-FSV PACKAGING FRONT IMPACT LIMITER ASSEMBLY			
T.J.N. CHK'D. BY	11 MAR. 93				
J.T.G. DWN. BY.	27 JAN. 93	NONE SCALE	B SIZE	1090-SAR-6 DWG. NO.	3 REV.

FIGURE WITHHELD UNDER 10 CFR 2.390

FIGURE WITHHELD UNDER 10 CFR 2.390

APPROVALS	DATE	TRANSNUCLEAR, INC. HAWTHORNE, N.Y.			
G.G. PROJ.	11 MAR. 93	TN-FSV PACKAGING REAR IMPACT LIMITER ASSEMBLY			
T.J.N. CHK'D. BY	11 MAR. 93				
J.T.G. DWN. BY.	27 JAN. 93	1/8 & 1/4 SCALE	B SIZE	1090-SAR-8 DWG. NO.	3 REV.

FIGURE WITHHELD UNDER 10 CFR 2.390

NO.	DATE	REVISIONS	DWN.	CHK'D.	PROJ.

APPROVALS	DATE	
G.G. PROJ.	11 MAR. 93	TRANSNUCLEAR, INC. HAWTHORNE, N.Y.
T.J.N. CHK'D. BY	11 MAR. 93	TN-FSV PACKAGING REAR IMPACT LIMITER DETAILS & PARTS LIST
J.T.G. DWN. BY.	27 JAN. 93	AS NOTED SCALE / B SIZE / 1090-SAR-9 DWG. NO. / 3 REV.

FIGURE WITHHELD UNDER 10 CFR 2.390

NO.	DATE	REVISIONS	DWN.	CK'D.	PROJ.
2	11/2/00	ADDED TOL. TO 10.38", 1.072" DIA. AND 1.38" DIMENSIONS.	J.T.G.	M	
1	16 FEB 94	NOTE 2 - NF 2580 WAS ASTM A614, 1.072" DIA WAS 1.125" DIA, CHROME PLATE THKNESS WAS .002"	J.T.G.	P.S.	

APPROVALS	DATE
PROJ.	3/11/93
CK'D. BY	3/11/93
DWN. BY J.T.G.	27 JAN 93

TRANSNUCLEAR, INC.
HAWTHORNE, N.Y.

TN-FSV PACKAGING

IMPACT LIMITER

ATTACHMENT BOLT

SCALE	SIZE	DWG. NO.	REV.
NONE	B	1090-SAR-10	2

90° orientation. Because of the symmetry of the cask and impact limiters, these values are applicable for both the bottom end drop and lid end drop. The following calculation is performed to evaluate the possibility of lead slump (which could result in a loss of shielding):

Axial G Load = 54 G

Lead Cylinder O.D. = 27.125 in.

Lead Cylinder I.D. = 20.25 in.

Cross Section Area = $\frac{\pi}{4}$ (OD^2 - ID^2) = 255.81 in^2.

Lead Weight = 19,800 lb.

Deceleration Load = 54(19,800) = 1,069,200 lb.

Deceleration End Stress = $\frac{1,069,200}{255.81}$ = 4,180 psi

Since the Dynamic Flow Stress of Lead is 5,000 psi (Section 2.3)

The Factor of Safety:

$$F.S. = \frac{5,000}{4,180} = 1.2$$

Based on this simple analysis, any lead slump that might occur would be small and of minor consequence; however, to better quantify the lead slump, a non-linear finite element analysis is performed. The analysis is performed for Configuration 2 and is discussed in Appendix 2.10.8 of the Addendum. The analysis calculates a lead slump of about 1.9" for the end drop.

The structural analysis of the cask body for this loading condition was performed using an inertial loading of 54 g (90° bottom end drop). As shown in Table 2.7-1C, the stresses due to the bottom end (Table 2.10.1-11) drop are combined with bolt preload stresses, the hot environment stresses and MNOP stresses in Table 2.7-1 for the selected standard locations shown in Figure 2.7-1.

The maximum membrane stress intensity in the containment is 19,013 psi at location 8 and the maximum membrane plus bending stress intensity is 35,566 psi at location 9. The maximum membrane stress intensity in the non-containment is 20,962 psi and the maximum membrane plus bending stress intensity is 21,127 psi, both at location 16.

2.7.3.3 Combined Stresses

The stress component results from these thermal stress cases are combined with those due to lid bolt preload and internal pressure using the same procedure described above for the 30 foot drop events. Tables 2.7-25 and 2.7-25A present the combined stress intensities at the standard locations.

The maximum membrane stress intensity in the containment is 8,865 psi and the maximum membrane plus bending stress intensity is 14,018 psi, at location 3. The maximum membrane stress intensity in the non-containment is 4,141 psi and the maximum membrane plus bending stress intensity is 6,231 psi, both at location 17.

These stress results are less than the allowables for membrane stress intensity of 47,950 psi and membrane plus bending stress intensity of 68,500 psi for the containment. In the non-containment, the stress values are also less than the allowables for membrane stress intensity of 47,950 psi and membrane plus bending stress intensity of 68,500 psi.

2.7.4 Immersion - Fissile Material

The criticality evaluation presented in Chapter 6.0 considers the effect of water in leakage. Thus, the requirements of 10CFR71.73(c)(4) are met.

2.7.5 Water Immersion

2.7.5.1 Immersion - Special Requirements for Irradiated Fuel

The stresses in the cask body due to an inward pressure difference of 290 psi combined with bolt preload are presented in Table 2.7-26. The stresses presented are very low compared to the stress allowables of Section 2.1.2. The highest stress intensity of any category is 4,238 psi, at location 17, almost negligible compared to the allowables, always in excess of 48,000 psi.

The stresses in the cask body due to 290 psi pressure directly applied to inner shell are also presented in Table 2.7-26A. These stresses are well below the allowable stresses.

2.7.5.2 Immersion - All Packages (Water Head of 50 feet)

This immersion loading condition results in an external pressure applied to the cask body corresponding to a 50 foot head of water (21.7 psi). Assuming a 0 psia cavity pressure, this results in a maximum external pressure loading of 36.4 psi (21.7+14.7) which is bounded by the external immersion loading evaluated above in 2.7.5.1.

2.7.6 Summary of Damage

From the analyses presented in Section 2.7.1 through 2.7.5, it can be shown that the accident test sequence will not result in any significant structural damage of the TN-FSV Packaging.

In the 30 foot drop event, the top and bottom impact limiters absorb the impact energy. The flange and seal area will not be affected by the 30 foot drop.

The stresses due to the 30 foot drop event are presented in Tables 2.7-1 through 2.7-24. These stresses were calculated elastically using a lead modulus of elasticity of 27,750 psi. In the containment the primary membrane stresses due to these hypothetical accident conditions do not exceed 2.4 S_m, or 48,000 psi and neither the local primary membrane stresses nor the membrane plus bending stresses exceed 3.6 S_m or 72,000 psi. In the non-containment, the primary membrane stress intensities do not exceed 0.7 Su, or 50,650 psi and membrane plus bending stress intensities do not exceed S_u or 72,350 psi.

It is also shown in Appendix 2.10.4 that the stresses in the inner shell due to the 30 foot end drops are small enough to preclude buckling in accordance with Code Case N-284.

The lid bolt stresses do not exceed yield strength or 0.7 times the ultimate strength during the hypothetical 30 ft drop accidents as shown in Section 2.10.1.3 of Appendix 2.10.1.

TABLE 2.7-26
CASK BODY STRESSES UNDER IMMERSION
(Bolt Preload, 290 psi. External Pressure Applied to Outer Shell)

Location (See Fig. 2.6-1 of TN-FSV SAR)	Membrane Stress Components (psi)		Stress Intensities (psi)		
			Membrane Pm	Membrane & Bending Pm + Pb	
	Meridonal	Hoop	Average	Inner Surface	Outer Surface
Containment					
1	-776	-776	776	2228	4069
2	-776	-776	776	3089	1746
3	-545	-298	545	140	1088
4	-557	-108	557	555	557
5	-557	-108	557	557	557
6	-557	-108	557	557	557
7	-557	-108	557	557	557
8	-557	-108	557	557	557
9	-602	198	602	1622	503
Non-Containment					
10	-1164	-1678	1678	1820	1536
11	-1148	-2462	2462	2462	2462
12	-1148	-2462	2462	2462	2462
13	-1148	-2462	2462	2462	2462
14	-1148	-2462	2462	2462	2462
15	-1148	-2462	2462	2462	2462
16	-1148	-2503	2503	2505	2501
17	-1423	-324	1423	4238	1102

TABLE 2.7-26A
CASK BODY STRESSES UNDER IMMERSION
(Bolt Preload, 290 psi. External Pressure Applied to Inner Shell)

Location (See Fig. 2.6-1 of TN-FSV SAR)	Membrane Stress Components (psi)		Stress Intensities (psi)		
			Membrane Pm	Membrane & Bending Pm + Pb	
	Meridonal	Hoop	Average	Inner Surface	Outer Surface
Containment					
1	-690	-690	690	2293	3962
2	-690	-690	690	3296	1924
3	-1262	-2337	2337	2339	2625
4	-1286	-2319	2319	2670	2257
5	-1286	-2319	2319	2670	2257
6	-1286	-2319	2319	2670	2257
7	-1286	-2319	2319	2670	2257
8	-1286	-2319	2319	2670	2257
9	-1360	-419	1360	3074	64
Non-Containment					
10	-654	-59	654	923	405
11	-646	1	647	647	647
12	-646	1	647	647	647
13	-646	1	647	647	647
14	-646	1	647	647	647
15	-646	1	647	647	647
16	-646	1	646	646	646
17	-767	-218	767	1044	491

CHAPTER THREE
THERMAL EVALUATION
LIST OF TABLES

		PAGE
Table 3-1	Summary of Results	3-4
Table 3-2	Thermal Properties of Materials	3-5
Table 3-3	Heat Transfer Coefficients - Normal	3-11
Table 3-4	Thermal Analysis Results - Normal	3-12
Table 3-5	Heat Transfer Coefficients - Before and After Thermal Accident	3-18
Table 3-6	Heat Transfer Coefficients - During Thermal Accident	3-20
Table 3-6a	Comparison of the Heat Transfer Coefficients	3-20a
Table 3-7	Thermal Analysis Results - Accident	3-27

During the thermal accident, heat absorption at the outer surface occurs by radiation and forced convection on the basis of air properties at 1475°F. The total heat transfer coefficient, H_t, for dissipation by radiation and convection is:

$$H_t = H_c + H_r$$

Where,

H_c = Convection heat transfer coefficient Btu/hr-ft^2-°F

H_r = Radiation heat transfer coefficient

$= 0.1714 \times 10^{-8} (F_0) [E_f (T_f+460)^4 - (T_s+460)^4]$

= Btu/hr- ft^2-°F

T_f = Radiation environment temperature

= 1475°F

Ts = Surface temperature of the packaging, °F

F_o = Outer packaging surface absorptivity

= 0.8

E_f = Radiation environment emissivity

= 0.9

The following equations [7] can be used to calculate the forced convection heat transfer coefficient.

$$\frac{C_f}{2} = 0.185/(\log_{10} \mathrm{Re}_x)^{2.584}$$

$$St = \frac{C_f}{2} \cdot \mathrm{Pr}^{-2/3}$$

Where,

C_f = Friction factor
Re_x = local Reynolds number (Assuming air velocity = 5 m/s)
Pr = Prandtl number
St = Stanton number = Nu / (Re·Pr)
Nu = Nusselt number = $h_x \cdot x$ / k

Rearranging of the above equations results in the following equation to calculate the local forced convection heat transfer coefficient.

$$h_x = \frac{k}{x} \cdot 0.185\,\mathrm{Re}_x / (\log_{10} \mathrm{Re}_x)^{2.584} \cdot \mathrm{Pr}^{1/3}$$

The average forced convection heat transfer coefficient ($\overline{H_c}$) can be calculated over a horizontal plate with a length of L by using the following equation.

$$\overline{H_c} = \frac{\int_0^L h_x\,dx}{L}$$

However, previous calculations using the natural convection correlation introduced in Section 3.4.1.1, predicted higher convection coefficients than predicted by the forced convection correlation shown above. Table 3-6a shows a comparison between the convection coefficients calculated from the natural and forced convection correlations. As can be seen, the natural convection coefficients are more conservative and therefore, the heat transfer coefficients shown in Table 3-6 remain bounding for the hypothetical fire accident analysis and are used as a boundary input during the 30 minute duration of the thermal radiation environment.

TABLE 3-6

CONVECTION AND RADIATION HEAT TRANSFER COEFFICIENT DURING THE THERMAL ACCIDENT

Temperature T_s (°F)	Total Heat Transfer Coefficient H_t (Btu/hr-ft^2-°F)
101	14.485
110	14.557
120	14.637
130	14.718
140	14.800
150	14.882
160	14.966
175	15.093
200	15.308
225	15.529
250	15.756
300	16.225
400	17.230
500	18.324
600	19.505
700	20.762
800	22.078
900	23.415
1000	24.698
1100	25.765
1200	26.208

Table 3-6a

Comparison of the convection coefficients

T_s (°F)	H_c* (Btu/hr-ft^2-°F)	$\overline{H_c}$ ** (Btu/hr-ft^2-°F)
101	2.00	1.64
110	2.00	1.64
120	1.99	1.63
130	1.99	1.63
140	1.98	1.62
150	1.98	1.62
160	1.97	1.61
175	1.96	1.60
200	1.95	1.59
225	1.94	1.57
250	1.93	1.56
300	1.90	1.53
400	1.84	1.47
500	1.78	1.41
600	1.72	1.38
700	1.65	1.35
800	1.58	1.31
900	1.50	1.28
1000	1.40	1.24
1100	1.30	1.21
1200	1.17	1.17

* $H_c = 0.18\,(T_f - T_s)^{1/3}$

** $\overline{H_c} = \dfrac{\int_0^L h_x\,dx}{L}$

3.6 REFERENCES

3-1 Title 10, Code of Federal Regulations, Part 71, "Packaging of Radioactive Material for Transport and Transportation of Radioactive Material Under Certain Conditions," 1989.

3-2 ASME B&PV Code, Section III, Appendices, 1989 Ed.

3-3 Kreith, et. al., "Principles of Heat Transfer," 4th Edition, Harper and Row Publishers, 1986.

3-4 DeSalvo G. J. and Swanson, J. A., "ANSYS Engineering Analysis System," User's Manual Rev. 4.4, Swanson Analysis Systems, Inc., Houston, 1989.

3-5 Shappert, L. B., "Cask Designers Guide, A Guide for the Design, Fabrication and Operation of Shipping Casks for Nuclear Applications," ORNL-NSIC-68, UC-80-Reactor Technology, Oak Ridge National Laboratory, 1970.

3-6 Thermal-Hydraulic Analysis of the MVDS, Appendix A3-1.1, Safety Analysis Report for the Fort St. Vrain ISFSI, Revision 2, Issue Date 29th July 1991.

3-7 Rohsenow, W. M. and Hartnett, J.P. "Handbook of Heat Transfer Fundamentals", 2nd Edition, 1985.

4.2.1.1. Fission Gas Products

The maximum fission product activity that will be contained in the TN-FSV at any time would be that associated with six elements having the maximum burnup. Total fission product per fuel element is given in Table 4-1.

Assuming a power peaking factor of 1.8 over the 6 years in the reactor and 1600 days of decay since shutdown, the volatile inventory in the fuel elements would amount to about 392 curies of noble gas (principally Kr-85). In addition, about 1.4 gm moles of stable noble gas and iodine would be present.

This fission product activity is doubly contained, first by the fuel particles and their impervious TRISO coatings, and secondly by the cask containment. Fission products can be annealed from fuel particles, but not in significant quantity at temperatures below 1000°F.

4.2.1.2 Release of Contents

The maximum allowable release rate for the packaging is

$A_2 \times 10^{-6}$ Ci/hr.

Kr-85 is the only radioactive isotope that is of significance for potential release; A_2 value is 270. Therefore, the maximum allowable release rate is

$$R_N = 2.7 \times 10^{-4} \text{ Ci/hr}$$

The Kr-85 activity available for release is:

$$392 \text{ Ci/element} \times 6 \text{ elements/cask} \times 0.0025 = 5.88 \text{ Ci}$$

The net void volume in the TN-FSV packaging is 2.67×10^5 cc. Therefore the specific activity is:

$$C_N = \frac{5.88 \text{ Ci}}{2.67 \times 10^5 \text{ cc}} = 2.20 \times 10^{-5} \text{ Ci/cc}$$

The permissible leakage rate for normal conditions is calculated as:

$$L_N = \frac{R_N}{C_N} x \frac{1}{3600} = \frac{2.7x10^{-4}}{7.92x10^{-2}} = 3.41x10^{-3}\ cc/s$$

Assuming this leakage rate criteria, it is of interest to estimate the diameter of the possible leak path. From Ref. 4-3, equations B3, B4, and B5 can be used to find the hole size. For the specified leakage rate:

$$F_C + F_M = 3.41x10^{-3} /((1.56-1.0)(1.28/1.56)) = 5.29x10^{-3} \quad \text{(B5)}$$

If we assume the leak path length is the o-ring diameter (0.7 cm), the air viscosity μ = 0.0207 cp at 74 C°, and P_u = 1.56 atm., equations B3 and B4 can be used to find the hole size D. By iteration, D is found to be 2.27 x 10^{-3} cm and F_c = 5.11 x 10^{-3} and F_m = 1.74 x 10^{-4}.

Using equation B5, the volumetric leakage rate L_N can be converted into a reference leakage rate $L_{R,N}$ which is equal to 2.76 x 10^{-3} ref cc/s. However, a conservative fabrication verification leak test will be performed to satisfy a criterion of 1 x 10^{-3} ref cc/s.

In Chapter 6, the minimum size of the fissile or fertile particle is approximately 200 microns in diameter. The diameter of the fuel particles with the TRISO coating is approximately 460 microns. It is easily seen that the fuel particles are at least an order of magnitude larger than the leak path and therefore the probability of particles leaking out of the packaging is extremely small.

4.2.2 Pressurization of Containment Vessel

The TN-FSV contents will not include any organic materials. Therefore neither hydrogen nor other gases will be generated by radiolysis and there will be no flammable gas hazard.

4.3.2. Containment of Radioactive Material

Kr85 is the only radioactive material that must be considered. If all of the Kr85 is assumed to be available for leakage out of the packaging, the specific activity is:

$$C_A = \frac{2354}{2.67 \times 105} = 8.81 \times 10^{-3} \text{ Ci/cc}$$

The maximum permissible release rate R_A is 2,700 Ci/week.

Therefore the maximum permissible leak rate is:

$$L_A = (R_A/C_A) \times 1.65 \times 10^{-6} = 0.51 \text{ cc/sec}$$

As in Section 4.2.1, equations B3, B4, and B5 can be used to find the hole size and the reference leak rate $L_{R,A}$. The hole diameter D is determined to be 6.34×10^{-3} and $L_{R,A} = 0.16$ ref cc/sec.

4.3.3 Containment Criterion

As can be seen from above, the requirements for normal condition of transport are limiting and therefore, the leakage tests specified in Section 4.2.3 are applicable.

4.4 REFERENCES

4-1 Parker O-Ring Handbook, ORD-5700, Copyright 1982

4-2 Federal Regulation, 10CFR71 - Packaging and Transportation of Radioactive Material, Pacific Northwest Laboratories, September 1987.

4-3 "American National Standard for Leakage Tests of Packages for Shipment of Radioactive Material," ANSI N14.5 - 1997.

CHAPTER FIVE
SHIELDING EVALUATION

5.1 DISCUSSION AND RESULTS

An evaluation of the shielding performance of the TN-FSV is performed to demonstrate compliance with the dose rate limits of 10CFR71.47. This also demonstrates compliance with the accident dose rate limit of 10CFR71.51(a)(2) because the components of the package shielding which are not an integral part of the body (the impact limiters, the lid, and the thermal shield) will remain in position under all accident conditions, as demonstrated in Appendices 2.10.1 and 2.10.2. However, a dose rate analysis to evaluate the lead slump (Addendum Appendix 2.10.8) is performed. It is the basic MCNP cask accident model, described in Appendix 5.6.1 of the Addendum, but with the FSV Canister in place of the Oak Ridge Container. The contents of the TN-FSV consist of six irradiated FSV fuel elements enclosed within a fuel storage container (FSC). The fuel elements have a maximum burnup of 70,000 MWD/MTU (Megawatt-Days/Initial Metric Tons of Thorium and Uranium) and have been decayed for at least 1600 days since discharge from the reactor.

The most significant shielding design feature of the TN-FSV is the cask body, which consists of an inner layer of stainless steel, followed by lead and an outer layer of stainless steel. The impact limiters, which consist of wood in stainless steel cases, provide additional axial shielding, and the thermal shield, a stainless steel shell, provides additional radial shielding. Additional shielding at the top of the packaging is provided by a depleted uranium plug which is inserted into the closure lid of the FSC. The shield layers and thickness are listed in Table 5-1.

The shielding analysis of the TN-FSV is performed with regulatory acceptable codes from the SCALE system (Ref. 5-1). Conservative modeling of the source provides an upper bound on the dose rates. Table 5-2 summarizes the calculated dose rates and shows that all applicable limits are satisfied.

TABLE 5-2

CALCULATED DOSE RATES

		Dose Rates, mrem/hr Calculated(1)		
Normal		Gamma	Neutron	Limit
Package Surface	Side	99	3.2	200
	Top	<0.01	nil	200
	Bottom	76.8	nil	200
Two Meters from	Side	9.5	0.22	10
	Top	<0.01	nil	10
	Bottom	6.1	nil	10
Occupied Position(2)		<0.01	nil	2
Accident 3)				
One Meter from	Side	<99	<1.0	1000
Package Surface	Ends	<77	nil	1000

(1) All dose rates are calculated using the minimum lead thickness.

(2) The occupied position is assumed to be in a cab five meters from the package top. No credit is taken for shielding by cab materials.

(3) Because there is a change in shielding due to hypothetical accident conditions, the one meter accident dose rates were calculated to show that they are less than 1000 mrem/hr.The MCNP calculated accident dose rates showed that at the impact end, at a cylindrical plane at the OD of the impact limiters, (less than one meter), there would be an increase from the range of 3 to 5 mrem/hr (normal) to 8 to 20 mrem/hr due to the lead slump in the end of the gamma shield.

CHAPTER SEVEN
OPERATING PROCEDURES

This chapter contains TN-FSV loading and handling procedure guidelines which show the general approach to cask operational activities. The information in this chapter will be used to prepare site specific procedures. The operational steps are to be performed to maintain the validity of the cask transport regulations and safety analysis conclusions contained herein. Some steps may be performed out of the sequence shown below to allow for efficiency in cask handling operations.

The procedures in this section are for those activities associated with the loading and transport of canistered spent fuel elements from the Ft. St. Vrain High Temperature Gas Cooled Reactor (Configuration 1). The loading and unloading of the cask shall be performed dry.

Configuration 2 operation activities are provided in the SAR Addendum.

The final steps of cask acceptance testing are performed at the loading site prior to the cask being transported for the initial shipment.

7.1 PROCEDURES FOR LOADING PACKAGE

7.1.1 Receipt of Empty Package

7.1.1.1 Inspect and clean the tractor and semi-trailer, removing any road dirt. Check for damage or irregularities and begin performance of radiation and contamination survey. (The radiation and contamination survey continues following removal of the personnel barrier, if used, and as shipping cask surfaces become accessible.)

7.1.1.2 Remove the personnel barrier, if used. Inspect and clean the shipping cask.

7.1.2 Dry Loading

Note: The drain port is not used for the loading operations.

7.1.2.1 Install the lid lifting attachments.

7.1.2.2 Remove the twelve (12) socket bolts that hold lid in place.

7.1.2.3 Lift the lid from the cask and store.

7.1.2.4 Remove the lid o-ring port plug.

7.1.2.5 Examine the cask sealing surface.

7.1.2.6 Visually inspect the cavity of the cask for any damage or debris. If any is noted, evaluate and take corrective action if necessary.

7.1.2.7 Verify that the contents to be loaded are in compliance with the Certificate of Compliance. Load the canister with six (6) spent fuel elements in to the cask. Record the contents on the cask loading report.

7.1.2.8 Inspect the o-rings in the lid for damage and replace if defects are noted. Record inspection results on the cask loading report.

7.1.2.9 Transfer the lid to a position directly over the cask cavity. Establish correct lid orientation using the orientation marks and lower the lid until fully seated. Visually verify the lid for proper installation.

7.1.2.10 Inspect the lid bolts. Replace defective bolts and note any defect indications on the cask loading report. Apply light coating of Nuclear Grade Neolube to bolt threads and install all 12 lid bolts. Tighten to hand tight. Torque all lid bolts to 130 ft-lbs. in several stages. Follow an approved torquing sequence.

7.1.2.11 Install the Leak Test System (LTS) to the lid gasket port and evacuate the lid gasket inter-space until a vacuum of equal to or greater than 60 cm Hg is achieved.

7.1.2.12 Perform a pressure rise leakage test for assembly verification of the cask lid

The test must have a sensitivity of at least 1×10^{-3} ref-cm^3/sec.

The acceptance criteria is a leakage rate of no greater than 1×10^{-3} ref-cm^3/sec. Replace the lid o-ring port plug.

7.1.2.13 Remove the vent cover and evacuate the cask using the leak test system. Back fill with dry air.

7.1.2.14 Inspect the vent cover, seal and bolts for damage and replace if defects are noted. Record inspection results on the cask loading report.

7.1.2.15 Install the Vent port cover and bolts. Torque the bolts to 20 in-lbs.

7.1.2.16 Remove the lid lifting attachments.

7.1.2.17 Place the test bell over the Vent cover and use the LTS to reduce the pressure between the Vent port O-ring and ,the O-ring on the test bell until a vacuum of equal to or greater than 60 cm Hg is achieved. Isolate the vacuum pump and perform a pressure rise leakage rate test of the vent port cover. The acceptance criteria is a leakage rate no greater than 1×10^{-3} ref-cm^3/sec. The test must have a sensitivity of at least 1×10^{-3} ref-cm^3/sec.

7.1.2.18 If the sum of the leakage rates from both tests is greater than the allowable rate, the leakage area shall be identified, repaired as needed and, the test repeated until the acceptance criteria is satisfied.

7.1.2.19 Remove the CLUP hatch cover.

7.1.2.20 Engage the cask lifting apparatus in the recessed lifting sockets. Use the hand-crank to lock the balls in the sockets.

7.1.2.21 Remove the restraint from the bottom of the cask.

7.1.2.22 Lift the cask from the fuel loading port, and lower it into the truck bay.

7.1.2.23 Position the trailer such that the rear cask supports are under the cask.

7.1.2.24 Align the trunnions of the cask with the support pedestals on the trailer.

7.1.2.25 Place the trunnions on transport vehicle rear trunnion supports and rotate cask from the vertical to horizontal position. (This will require moving the trailer back into the transfer cask reception bay while lowering cask.)

7.1.2.26 Install and torque the rear trunnion tie-downs.

7.1.2.27 Remove the cask and trailer from the truck bay.

7.1.2.28 Install and torque the front saddle tie-downs.

7.1.2.29 Install the front and rear impact limiters and torque attachment bolts diametricallv to 40' ft-lbs. Repeat torquing sequence to 80 ft-lbs.

7.1.2.30 Install security seal on the front impact limiter.

7.1.2.31 Perform final radiation and contamination surveys to assure compliance with lOCFR71.47 and 71.87.

7.1.2.32 Apply appropriate labels to the cask and placards to the vehicle in accordance with 49CFR172.

7.1.2.33 Install Personnel Barrier, if used.

7.1.2.34 Prepare final shipping documentation.

7.1.2.35 Release the loaded cask for shipment.

7.2 PROCEDURES FOR UNLOADING PACKAGE

7.2.1 Receipt and Dry Unloading of Loaded Package

7.2.1.1 Upon arrival of the loaded cask at the receiving site; perform receipt inspection. Inspect for damage, verify security seals are intact and begin performance of radiation and contamination survey.

7.2.1.2 Verify that placards, labels and shipping papers are in place and correct.

7.2.1.3 Remove the personnel barrier, if used.

7.2.1.4 Inspect and clean the tractor, trailer and cask as required.

7.2.1.5 Remove the security seal from the front impact limiter.

7.2.1.6 Remove the impact limiter attachment bolts and remove the front and rear impact limiters using a suitable crane and rigging.

7.2.1.7 Release and remove the front saddle and rear trunnion tie-downs.

7.2.1.8 Attach the cask lifting apparatus to the crane hook.

7.2.1.9 Engage the cask lifting apparatus in the recessed lifting sockets. Use hand-crank to lock the balls into the sockets.

7.2.1.10 Lift the cask slowly to the vertical position.

7.2.1.22 Visually examine the lid, especially the o-ring seals for any damage.

7.2.1.23 Transfer the lid to a position directly over the cask cavity. Establish correct lid orientation using the orientation marks and lower the lid until fully seated. Visually verify the lid for proper installation.

7.2.1.24 Remove the lid o-ring port plug.

7.2.1.25 Inspect the lid bolts. Replace defective bolts and note any defect indications on the cask loading report. Apply a light coating of Nuclear Grade Neolube to bolt threads and install all 12 lid bolts. Tighten to hand tight. Torque all lid bolts to 130 ft-lbs. in several stages. Follow an approved torquing sequence

7.2.1.26. Replace the lid o-ring port plug.

7.2.1.27 Inspect the vent cover, seal and bolts for damage and replace if defects are noted. Record inspection results on the cask loading report.

7.2.1.28 Install the Vent port cover and bolts. Torque the bolts to 20 in-lbs.

7.2.1.29 Remove the lid lifting attachments.

7.2.1.30 Engage the cask lifting apparatus in the recessed lifting sockets. Use the hand crank to lock the balls in the sockets.

7.3 PREPARATION OF EMPTY PACKAGE FOR TRANSPORT

7.3.1 Raise the cask into the vertical position and return to the trailer.

7.3.2 Position the cask above the trunnion supports and lower the cask.

7.3.3 Rotate cask from the vertical to the horizontal position.

7.3.4 Install and torque the rear trunnion tie-downs and the front saddle tie-downs.

7.3.5 Perform radiation and contamination survey.

7.3.6 Install the front impact limiter and torque attachment bolts diametricallv to 40 ft-lbs. Repeat torquinq sequence to 80 ft-lbs.

7.3.7 Apply appropriate transport labels to the cask and placards to the vehicle.

7.3.8 Install personnel barrier, if used.

7.3.9 Release empty cask for shipment.

June 2001

SAFETY ANALYSIS REPORT ADDENDUM

for the

OAK RIDGE CONTAINER

in the

TN-FSV PACKAGING

Docket No. 71-9253

Transnuclear Inc.
Four Skyline Drive
Hawthorne, NY 10532

TABLE OF CONTENTS

Page

1.0 GENERAL INFORMATION **1-1**
1.1 Introduction **1-1**
1.2 Description of Package Modifications **1-3**
1.2.1 Packaging 1-3
1.2.2 Operational Features 1-8
1.2.3 Contents of Package 1-9
1.3 References **1-15**
1.4 Appendix **1-28**
2.0 STRUCTURAL EVALUATION **2-1**
2.1 Structural Design **2-1**
2.1.1 Discussion 2-1
2.1.2 Design Criteria 2-2
2.2 Weights and Centers of Gravity **2-4**
2.3 Mechanical Properties of Material **2-5**
2.4 General Standards for All Packages **2-6**
2.4.1 Minimum Package Size 2-6
2.4.2 Tamperproof Features 2-6
2.4.3 Positive Closure 2-6
2.4.4 Chemical and Galvanic Reactions 2-6
2.5 Lifting and Tie-down Standards for All Packages **2-6**
2.6 Normal Conditions of Transport **2-6**
2.6.1 Heat 2-7
2.6.2 Cold 2-10
2.6.3 Reduced External Pressure 2-11
2.6.4 Increased External Pressure 2-11
2.6.5 Shock and Vibration 2-12
2.6.6 Water Spray 2-14
2.6.7 Free Drop 2-14
2.6.8 Corner Drop 2-15
2.6.9 Compression 2-15
2.6.10 Penetration 2-15
2.6.11 Lid Bolt Analysis 2-15
2.6.12 Fatigue Analysis 2-16
2.7 Hypothetical Accident Conditions **2-18**
2.7.1 Free Drop 2-18
2.7.2 Puncture 2-19
2.7.3 Thermal 2-19
2.7.4 Immersion – Fissile Material 2-20
2.7.5 Immersion – All Packages 2-20
2.7.6 Summary of Damage 2-20
2.8 Special Form / Fuel Rods **2-21**
2.8.1 Special Form 2-21
2.8.2 Fuel Rods 2-21
2.9 ASME Code Exceptions **2-22**
2.10 References **2-24**
2.11 APPENDIX **2-39**
3.0 THERMAL EVALUATION **3-1**
3.1 Discussion **3-1**
3.2 Summary of Thermal Properties of Materials **3-2**
3.3 Technical Specification of Components **3-3**
3.4 Thermal Evaluation for Normal Conditions of Transport **3-3**

TABLE OF CONTENTS

Page

3.4.1 Thermal Models 3-3
3.4.2 Maximum Temperatures 3-7
3.4.3 Minimum Temperatures 3-7
3.4.4 Maximum Internal Pressures 3-7
3.4.5 Maximum Thermal Stresses 3-7
3.4.6 Evaluation of Package Performance for Normal Conditions of Transport 3-7
3.5 Hypothetical Accident Thermal Conditions 3-8
3.5.1 Package Temperatures 3-8
3.5.2 Maximum Internal Pressures 3-8
3.5.3 Maximum Thermal Stresses 3-8
3.5.4 Evaluation of Package Performance for Hypothetical Accident Conditions 3-8
3.6 References 3-9
4.0 CONTAINMENT 4-1
4.1 Containment Boundary 4-1
4.1.1 Containment Vessel 4-1
4.1.2 Containment Penetrations 4-2
4.1.3 Seals and Welds 4-2
4.1.4 Closure 4-3
4.2 Requirements for Normal Conditions of Transport 4-3
4.2.1 Containment of Radioactive Material 4-3
4.2.2 Pressurization of Containment Vessel 4-4
4.2.3 Containment Criterion 4-5
4.3 Containment Requirements for Hypothetical Accident Conditions 4-5
4.3.1 Pressurization of Containment Vessel 4-5
4.3.2 Containment of Radioactive Material 4-5
4.3.3 Containment Criterion 4-6
4.4 Special Requirements 4-6
4.5 References 4-6
5.0 SHIELDING EVALUATION 5-1
5.1 Discussion and Results 5-1
5.2 Source Specification 5-3
5.2.1 Gamma Source 5-3
5.2.2 Neutron Source 5-4
5.3 Model Specification 5-4
5.3.1 Description of Radial and Axial Shielding Configuration 5-4
5.3.2 Shield Regional Densities 5-5
5.4 Shielding Evaluation 5-7
5.4.1 Radial Analysis 5-8
5.4.2 Axial Analysis 5-8
5.5 References 5-8
Appendix 5-16
5.6.1 Dose Rates for Representative Loading of Oak Ridge Container 5-16
5.6.2 Appendix 5-27
6.0 CRITICALITY EVALUATION 6-1
6.1 Discussion and Results 6-1
6.2 Package Fuel Loading 6-3
6.2.1 Loading Patterns 6-5
6.2.2 Oak Ridge Canisters 6-7
6.2.3 Peach Bottom Assemblies 6-8
6.2.4 Loading of Fissile Material Into The Oak Ridge Container 6-8
6.2.5 Special Considerations 6-9

TABLE OF CONTENTS

Page

6.2.6 Justification of Homogenization 6-10
6.3 Model Specification 6-13
6.3.1 Description of Calculational Model 6-13
6.3.2 Package Regional Densities 6-32
6.4 Criticality Calculation 6-38
6.4.1 Calculational Method 6-38
6.4.2 Fuel Loading Optimization 6-38
6.4.3 Criticality Results 6-49
6.5 Critical Benchmark Experiments 6-71
6.5.1 Benchmark Experiments and Applicability 6-71
6.5.2 Details of Benchmark Calculations 6-71
6.5.3 Results of Benchmark Calculations 6-74
6.6 References 6-83
6.7 Appendix 6-84
7.0 OPERATING PROCEDURES 7-1
7.1 Package Loading 7-1
7.1.1 Preparation for Loading 7-1
7.1.2 Dry Loading 7-2
7.1.3 Preparation for Transport 7-5
7.2 Procedures for Unloading Package 7-6
7.2.1 Receipt of Package from Carrier 7-6
7.2.2 Preparation for Unloading 7-7
7.2.3 Contents Removal 7-8
7.3 Preparation of Empty Package for Transport 7-8
8.0 ACCEPTANCE TESTS AND MAINTENANCE PROGRAM 8-1
8.1 Acceptance Tests 8-1
8.1.1 Visual Inspection and Measurements 8-1
8.1.2 Weld Inspections 8-2
8.1.3 Structural and Pressure Tests 8-2
8.1.4 Leakage Tests 8-2
8.1.5 Component Tests 8-3
8.1.6 Shielding Tests 8-3
8.1.7 Neutron Absorber Tests 8-3
8.2 Maintenance Program 8-10
8.2.1 Structural and Pressure Tests 8-10
8.2.2 Leakage Test 8-10
8.2.3 Subsystem Maintenance 8-10
8.2.4 Valves, Rupture Discs, and Gaskets on Containment Vessel 8-10
8.2.5 Shielding 8-11
8.2.6 Thermal 8-11
8.2.7 Miscellaneous 8-11
8.3 References 8-11

LIST OF FIGURES

Page

Figure 1-1 SNF Stainless Steel Canister 1-21
Figure 1-2 Oak Ridge Canister – Overall View with Freeze Plug 1-22
Figure 1-3 Oak Ridge Canister – Lower End View with Freeze Plug 1-23
Figure 1-4 Oak Ridge Canister with Inner Sleeve and Cans 1-24
Figure 1-5 General Arrangement of the Oak Ridge SNF Container 1-25
Figure 1-6 Arrangement of Oak Ridge Container in the TN-FSV Cask 1-26
Figure 1-7 Peach Bottom Fuel Assembly Canister 1-27
Figure 3-1 Oak Ridge Container Cross Section Finite Element Model 3-12
Figure 3-2 Oak Ridge Container Cross Section, Model Dimensions 3-13
Figure 3-3 Oak Ridge Container Cross Section Boundary Condition Application for Worst Case Loading 3-14
Figure 3-4 Oak Ridge Container Cross Section Temperature Distribution, Worst Case Loading 3-15
Figure 3-5 Oak Ridge Container Cross Section Boundary Condition Application, Average Temperatures 3-16
Figure 3-6 Oak Ridge Container Cross Section Temperature Distribution, Average Temperatures 3-17
Figure 3-7 Oak Ridge Container Seal Region Finite Element Model 3-18
Figure 3-8 Oak Ridge Container Seal Region Model, Dimensions and Materials 3-19
Figure 3-9 Oak Ridge Container Seal Region Boundary Condition Application 3-20
Figure 3-10 Oak Ridge Container Seal Region Model, Temperature Distribution 3-21
Figure 3-11 Oak Ridge Container Seal Region Model, Temperature Distribution (Container Lid) 3-22
Figure 3-12 Support Disc Thermal Gradient Model, Finite Element Model 3-23
Figure 3-13 Support Disc Thermal Gradient Model, Temperature Distribution 3-24
Figure 4-1 Oak Ridge Container Containment Boundary Components 4-7
Figure 5-1 Shielding Model – Radial 5-13
Figure 5-2 Shielding Models, Axial 5-14
Figure 5-3 Oak Ridge Canister Model 5-15
Figure 6-1 Variation of k-eff with increasing number of canisters in the cask 6-7
Figure 6-2 Reactivity of an infinite heterogeneous 100% ^{235}U system 6-12
Figure 6-3 Reactivity of an infinite heterogeneous ^{235}U and ^{239}Pu system 6-12
Figure 6-4 Horizontal cross section view of the basket assembly 6-15
Figure 6-5 Isometric view of an assembled poison enclosure 6-15
Figure 6-6 Axial cross section of the basket assembly. 6-16
Figure 6-7 Cross section of a central pentagon panel. 6-17
Figure 6-8 Cross section view of KENO VI model of poison plate insert 6-18
Figure 6-9 Poison plate centered inside the enclosure. 6-18
Figure 6-10 Poison plate centered inside the enclosure in the horizontal plane. 6-19
Figure 6-11 Coordinate translation equations for the pentagon. 6-20
Figure 6-12 Cross section view of a single radial arm panel. 6-21
Figure 6-13 Cross section view of KENO VI model of a single radial arm panel 6-21
Figure 6-14 Cross section view of the flux trap. 6-24

Figure 6-15 Comparison of actual profile of poison panels to the model 6-25
Figure 6-16 TN-FSV cask. 6-27
Figure 6-17 Horizontal cross section of the KENO VI model. 6-28
Figure 6-18 Horizontal cross section of the KENO VI model. 6-29
Figure 6-19 Axial cross section of the cask. 6-30
Figure 6-20 Axial cut through the KENO VI model. 6-31
Figure 6-21 Variation of the system multiplication factor as a function of H/X 6-49
Figure 6-22 Elevation view of IPB fuel compartment with other fuel compartment. 6-56
Figure 6-23 System reactivity with H/X ratio 6-57
Figure 6-24 System reactivity with reduced fissile region diameter. 6-62
Figure 6-25 System reactivity with interstitial water concentration. 6-63
Figure 6-26 System reactivity with C/X ratio for an infinite array. 6-64
Figure 6-27 System reactivity with C/X ratio for a dry cask with no axial spacers 6-65
Figure 6-28 Reactivity vs boron concentration in the poison plates. 6-66
Figure 6-29 Plot of results of all 118 validation calculations, ... 6-75

LIST OF TABLES

Page

Table 1-1 Terminology 1-16
Table 1-2 Oak Ridge Container Typical Dimensions and Weights 1-18
Table 1-3 Oak Ridge SNF Canisters 1-19
Table 2-1 Containment Vessel Stress Limits 2-25
Table 2-2 Containment Bolt Stress Limits 2-26
Table 2-3 Non Containment Structures Stress Limits 2-27
Table 2-4 Basket Stress Limits 2-28
Table 2-5 Summary of Oak Ridge Container Weight and Center of Gravity 2-29
Table 2-5A Summary of Oak Ridge Container Payload Weight 2-30
Table 2-6 Summary of Support Disc Normal Condition Stress Analysis 2-31
Table 2-7 Summary of Oak Ridge Container Shell Normal Condition Stress Analysis 2-32
Table 2-8 Summary of Normal Condition Stress Analysis for the Standoffs, Tie Rods, Flux Traps, and Fuel Compartments 2-33
Table 2-9 Summary of Normal Condition Stress Analysis for the Poison Enclosures 2-34
Table 2-10 Summary of Support Disc Accident Condition Stress Analysis 2-35
Table 2-11 Summary of Oak Ridge Container Shell Accident Condition Stress Analysis 2-36
Table 2-12 Summary of Accident Condition Stress Analysis for the Standoffs, Tie Rods, Flux Traps, and Fuel Compartments 2-37
Table 2-13 Summary of Normal Condition Stress Analysis for the Poison Enclosures 2-38
Table 3-1 Temperatures within Oak Ridge Container, Worst Case Loading 3-10
Table 3-2 Temperatures within Oak Ridge Container, Average Temperatures for Internal Pressure Determination 3-11
Table 5-1 Summary of Dose Rates for Reference Oak Ridge Container 5-9
(Exclusive Use) 5-9
Table 5-2 Shielding Configurations 5-10
Table 5-3 Source and Shield Material Densities 5-11
Table 5-4 SAS1 Analyses Results 5-12
Table 5-5 SAS4 Analysis Results 5-12
Table 6-1 Summary of Criticality Results 6-3
Table 6-2 Isotopic Content Limits for Each Group 6-5
Table 6-3 Oak Ridge Container Fuel Compartment Loading Patterns 6-6
Table 6-4 Geometry Parameters for Central Pentagon Poison Enclosure 6-17
Table 6-5 Rotation and Translation for the Vertices of the Central Pentagon 6-19
Table 6-6 Body Descriptions for the Radial Arm Poison Enclosure 6-22
Table 6-7 Oak Ridge Container Model Specifications 6-26
Table 6-8 Model Dimensions for the TN-FSV Cask 6-26
Table 6-9 Densities for Oak Ridge Canister with Group 1 Contents 6-32
Table 6-10 Densities for Oak Ridge Canister with Group 2 Contents 6-33
Table 6-11 Densities for Oak Ridge Canister with Group 3 Contents 6-33
Table 6-12 Densities for Oak Ridge Canister with Group 4 Contents 6-34
Table 6-13 Densities for Oak Ridge Canister with Group 5 Contents 6-34
Table 6-14 Densities for Intact Peach Bottom Assemblies 6-34

Table 6-15 Densities for Oak Ridge Canister with Group 1 Contents 6-35
Table 6-16 Densities for Oak Ridge Canister with Group 2 Contents 6-35
Table 6-17 Densities for Oak Ridge Canister with Group 3 Contents 6-35
Table 6-18 Densities for Oak Ridge Canister with Group 4 Contents 6-36
Table 6-19 Densities for Oak Ridge Canister with Group 5 Contents 6-36
Table 6-20 Densities for Oak Ridge Canister with IPB Contents 6-36
Table 6-21 Package Regional Densities for Non-Fissile Materials 6-38
Table 6-22 Optimal H/X Ratio for Loading Pattern 1 6-51
Table 6-23 Optimal H/X Ratio for Loading Pattern 2 6-51
Table 6-24 Optimal H/X Ratio for Loading Pattern 3 6-52
Table 6-25 Optimal H/X Ratio for Loading Pattern 4 6-53
Table 6-26 Optimal H/X Ratio for Loading Pattern 4- Middle Group 3 6-53
Table 6-27 Optimal H/X Ratio for Loading Pattern 4- Middle Group 4 6-54
Table 6-28 Optimal H/X Ratio for Loading Pattern 4- Bottom Group 4 6-54
Table 6-29 Optimal H/X Ratio for Loading Pattern 4 IPB 6-54
Table 6-30 Containment System Closely Reflected by 12-In. of Water 6-54
Table 6-31 Parameters for Reduced Diameter Studies Canister Groups 1 – 3 6-55
Table 6-32 Parameters for Reduced Diameter Studies Canister Groups 4 and 5 6-55
Table 6-33 Smaller Fissile Region Diameter Study - Loading Pattern 1 6-58
Table 6-34 Fissile Region Diameter Study – Loading Pattern 2 6-59
Table 6-35 Smaller Fissile Region Diameter Study – Loading Pattern 3 6-60
Table 6-36 Smaller Fissile Region Diameter Study –Loading Pattern 4 6-61
Table 6-37 Sensitivity Studies - Loading Pattern 1 6-67
Table 6-38 Sensitivity Studies - Loading Pattern 2 6-68
Table 6-39 Sensitivity Studies - Loading Pattern 3 6-69
Table 6-40 Sensitivity Studies - Loading Pattern 4 6-70
Table 6-41 Experiments HEU-SOL-THERM-001 6-76
Table 6-42 Experiments HEU-SOL-THERM-007 6-77
Table 6-43 Experiments HEU-SOL-THERM-008 6-77
Table 6-44 Experiments HEU-SOL-THERM-009 6-78
Table 6-45 Experiments HEU-SOL-THERM-010 6-78
Table 6-46 Experiments HEU-SOL-THERM-011 6-78
Table 6-47 Experiments HEU-SOL-THERM-012 6-78
Table 6-48 Experiments HEU-SOL-THERM-013 6-78
Table 6-49 Experiments HEU-SOL-THERM-028 6-79
Table 6-50 Experiments HEU-SOL-THERM-029 6-79
Table 6-51 Experiments HEU-SOL-THERM-030 6-80
Table 6-52 Experiments HEU-SOL-THERM-031 6-80
Table 6-53 Experiments HEU-SOL-THERM-035 6-80
Table 6-54 Experiments HEU-SOL-THERM-036 6-81
Table 6-55 Experiments MIX-SOL-THERM-001 6-81
Table 6-56 Experiments MIX-SOL-THERM-002 6-82
Table 6-57 Experiments MIX-SOL-THERM-004 6-82

1.0 GENERAL INFORMATION

The main body of the Safety Analysis Report for the TN-FSV Package (SAR) describes the package configuration for safe transport of irradiated High Temperature Gas Reactor (HTGR) fuel from the Fort St. Vrain (FSV) HTGR. That package configuration containing HTGR spent fuel is identified as Configuration 1 in the design drawings in Appendix 1.3 of the main body of the SAR.

This SAR Addendum is used in conjunction with the information in the main body of the SAR and describes the package configuration for safe transport of Oak Ridge spent nuclear fuel (SNF). This package configuration containing Oak Ridge SNF, identified as Configuration 2, is described in the drawings in Appendix 1.4 of this SAR Addendum.

This section of this SAR Addendum presents a general introduction to and description of TN-FSV Package Configuration 2. Terminology used throughout this SAR Addendum is presented in Table 1-1. When other chapters, sections, appendices, or tables are referred to herein, the cross-reference is to information in this SAR Addendum, unless specifically identified as being in the main body of the SAR. This SAR Addendum is referred to as the "Addendum" and the main body is referred to as the "SAR."

1.1 Introduction

This Addendum provides information and the supporting analyses for exclusive use shipments from the Oak Ridge National Laboratory (ORNL) to the Idaho National Engineering and Environmental Laboratory (INEEL) using the TN-FSV Package Configuration 2. This configuration, with contents as described in this Addendum, may be used to make shipments from locations other than ORNL to INEEL, as long as each shipment meets the criteria set forth in this document and the latest Certificate of Compliance issued by the NRC. This Addendum, together with the safety analysis in the SAR, demonstrate that TN-FSV Packaging Configuration 2 with the contents described herein satisfies the current requirements of 10CFR71.

The Oak Ridge SNF to be shipped consists of approximately 73 Oak Ridge canisters and nine intact Peach Bottom elements. The Oak Ridge canisters are constructed from stainless steel and confine a variety of SNF types that are well characterized. In compliance with 10CFR71.63, "Special requirements for plutonium shipments," the SNF (in its transport configuration) is packaged in a separate inner container designated the Oak Ridge Container that meets the applicable requirements of 10CFR71, Subparts E and F. As a result, the SNF will be contained within two independent containment boundaries, i.e., the primary boundary provided by the TN-FSV cask and the secondary boundary provided by the Oak Ridge Container (ORC).

TN-FSV Package Configuration 1 is an approved Type B(U) package designed and fabricated by Transnuclear, Inc. to transport irradiated HTGR fuel elements loaded in a FSV Container. That package configuration was approved and assigned identification number USA/9253/B(U)F and has a current U.S. NRC Certificate of Compliance No. 9253[1].

The description and safety analysis evaluation of that package configuration is presented in the SAR. Two TN-FSV packagings, Unit 1 and Unit 2, were fabricated in 1995 and conform to the approved design. Each existing packaging is uniquely identified by its serial number which is legibly and durably marked on the outside of the packaging.

For the Oak Ridge SNF shipments, the TN-FSV Packaging will be modified by replacing the silicone seals with butyl seals and removing the lower axial spacer in the cask cavity. The Oak Ridge Container will be added to the cask cavity as another subassembly of the reuseable portion of the packaging. The Oak Ridge Container performs containment, shielding, and criticality control functions for safe transport of the Oak Ridge SNF. The Oak Ridge SNF will be transported in canisters within the Oak Ridge Container. Together, these two components, the TN-FSV cask with butyl seals, and the Oak Ridge Container with the Oak Ridge SNF, are designated as TN-FSV Package Configuration 2.

This Addendum describes the design features and presents the safety analyses for TN-FSV Package Configuration 2. In the analyses, the Oak Ridge Container is identified as the "Container or ORC" and the Oak Ridge canister is identified as the "canister" or the "Oak Ridge SNF canister." The evaluations demonstrate the safety of TN-FSV Package Configuration 2 which complies with applicable requirements of 10CFR 71. Format and content of this Addendum follow the guidelines of NRC Regulatory Guide 7.9[(2)]. The terminology used throughout the addendum is summarized in Table 1-1.

The contents of this SAR Addendum are consistent with the guidance of NUREG-1609 with the exception of full compliance with Section III, Subsection WB of the ASME Boiler and Pressure Vessel Code. Areas not in compliance have been identified, and are listed in Section 2.9 of this Addendum and on drawing 3044-70-9.

The Transport Index for nuclear criticality control for the TN-FSV is one-hundred (100) per the TN-FSV Certificate of Compliance No. 9253, and remains unchanged. Transport will occur as exclusive use shipment from Oak Ridge, Tennessee to Idaho National Engineering and Environmental Laboratory (INEEL) containing SNF described in this document.

Transnuclear, Inc., the design organization, has a NRC approved quality assurance program (Docket Number 71-0250) which satisfies the requirements of 10CFR71, Subpart H. Activities for the Oak Ridge SNF Project will be completed under the Oak Ridge SNF QA Program, which is tiered to RW-0333P, Rev 9, the NRC-approved QA Program for the Yucca Mountain repository, which has been approved by NRC (Docket Number 71-0786).

1.2 Description of Package Modifications

1.2.1 Packaging

1.2.1.1 TN-FSV Cask

In this Addendum, the TN-FSV cask refers to a modified version of TN-FSV Packaging. In comparison to TN-FSV Packaging Configuration 1 which is described in detail in Section 1.2.1 of the SAR, the principal design modification made to the TN-FSV Packaging is the revision of the leakage rate criterion of the containment boundary from 1×10^{-3} ref·cm^3/s to a more stringent requirement of 1×10^{-7} ref·cm^3/s (leak-tight). To meet this more stringent requirement and to permit leak testing of the containment boundary of the package to the revised leakage rate requirement, the material for the elastomer seals is changed from silicone to butyl for the TN-FSV cask. The applicable drawings in the SAR have been revised to add TN-FSV Packaging Configuration 2 and incorporate this design modification.

The revised drawings are provided in Appendix 1.3 of the SAR. The revised seal material is the same as that used for the Oak Ridge Container seals. The properties of this seal material are evaluated in the appropriate sections to demonstrate that the containment function provided by the seals is maintained during normal conditions of transport and accident conditions.

The other modification to TN-FSV Packaging Configuration 1 is removal of the lower spacer used in the cask cavity. The TN-FSV Package Configuration 1 contents consist of a FSV (Fuel Storage) Container and its HTGR spent fuel assemblies. The FSV Container was located axially in the cask cavity with a spacer above and below it. For the unit being modified to TN-FSV Packaging Configuration 2, the lower spacer is removed and the upper spacer, attached to the lid, is retained. The Oak Ridge Container includes a sleeve type spacer that locates and supports the Oak Ridge Container radially in the TN-FSV cask cavity.

1.2.1.2 Oak Ridge Container

The ORC is a right circular cylindrical stainless steel enclosure with a five-tube basket. The ORC is designed to carry twenty (20) Oak Ridge SNF canisters (approx. 4.75 in. diameter x 34.75 in. long), or five (5) Peach Bottom fuel assemblies (approx. 5 in. diameter x 153 in. long), or a combination thereof, in the following loading arrangements:

- One (1) Peach Bottom fuel assembly and one (1) Oak Ridge canister
- Four (4) Oak Ridge canisters per fuel compartment with a flux trap spacer (Item 24, dwg. 3044-70-3) between each canister.

The layouts for each of these two fuel compartment loading arrangements are shown on drawing 3044-70-8. These two loading arrangements are used in four different loading patterns as described and evaluated in Chapter 6 of the Addendum and are listed in Table 6-3.

The Oak Ridge Container consists of the following components:

- A cylindrical vessel with a bolted closure lid and seals, which provides radioactive materials containment.

- A basket assembly which (a) locates and supports the Oak Ridge canisters and the Peach Bottom fuel assemblies, (b) transfers heat to the containment vessel (which, in turn, is dissipated to the TN-FSV packaging), and (c) provides neutron absorption to satisfy nuclear criticality requirements.

The general arrangement of the ORC is shown in Figure 1-5. Figure 1-6 shows the arrangement of the ORC in the TN-FSV cask. The overall length of the ORC is 198 in. The overall outside diameter is 20.19 in. at the lid end and 16.85 in. along the body. The ORC has five fuel compartments, which are 188.00 in. long and 5.3 in. in diameter. Detailed design drawings for the Oak Ridge Container are provided in Appendix 1.4.
The packaging materials of fabrication are shown in the Parts List on Drawing 3044-70-1. Where more than one material has been specified for a component, the most limiting properties are used in the analyses in the subsequent chapters of this Addendum.

The maximum gross weight of the loaded ORC is 4761 lbs., consistent with the maximum payload weight evaluated with the TN-FSV Package Configuration 1 (Section 2.2 of the SAR). This includes a maximum payload of 1800 lbs. for the Oak Ridge canisters, any Peach Bottom assemblies and any flux trap spacers. Table 1-2 summarizes the dimensions and weights of the ORC. The ORC is loaded in the vertical configuration in the TN-FSV packaging, and transported in the horizontal orientation, with the lid end facing the direction of travel.

The maximum heat load per Oak Ridge canister is 35 watts, and the total heat load per shipment is 120 watts. However, since the TN-FSV packaging is designed to dissipate a total decay heat of 360 watts uniformly distributed along its cavity wall (Section 3.1 of the SAR), administrative controls will limit the heat load of a cross-section, corresponding to the length of the Oak Ridge canister or equal length of a Peach Bottom assembly, to 55 watts to remain within the TN-FSV Package Configuration 1 uniform heat flux. In addition, to maintain seal temperatures reasonably low, administrative controls will restrict the heat load in the axial cross-section directly below the ORC lid to less than 35 watts.

The maximum normal operating pressure of the ORC in the TN-FSV packaging is less than 4 psig. The spent fuel payload is transported in a dry (bottled) air atmosphere.

The shielding analysis for the package takes credit for the shielding provided by the ORC with its basket. The criticality analysis takes credit for the ORC and basket materials, the spatial arrangement of the SNF maintained by the basket during normal and accident conditions.

The following sections provide a physical and functional description of each major component. Detail drawings showing dimensions of significance to the safety analyses, welding and NDE information, and a complete materials list are provided in Appendix 1.4.

Reference to these drawings is made in the following physical description sections and in general, throughout this SAR addendum. Fabrication of the Oak Ridge Container is performed in accordance with these drawings.

Containment Vessel

The ORC is a containment vessel; it provides a secondary leak-tight containment boundary around the SNF payload which complies with the requirements of 10CFR71.63(b). The containment boundary consists of the shell, bottom plate, shell flange, lid with its inner seal and bolts, and the penetration cover with is inner seal and bolts. The containment boundary prevents leakage of radioactive material from the Container cavity. It also maintains a dry air atmosphere in the Container cavity.

The ORC length is 198.0 in. with a shell wall thickness of 0.14 in. The cylindrical cavity has a nominal diameter of 16.58 in. and a length of 190.0 in. The ORC lid is 7.0 in. thick and is fastened to the shell by 12 one-half inch. diameter bolts.

One penetration (vent port) through the lid is provided for cask operations activities which are described in Chapter 7. This penetration is for gas sampling and to backfill the ORC cavity with dry (bottled) air. This is a direct penetration through the lid, 1.5 inches in diameter part way with a step down to 0.36 inch diameter. The later portion of the penetration is threaded to accept a quick-connect fitting. This penetration is closed by 4.31 in. diameter, 0.75 in. thick blind flange which is secured to the lid with four 0.25 in. diameter socket head cap screws. The penetration cover is recessed into the lid so that the outer surfaces are flush.

Two concentric dovetail seal grooves are machined in the underside of both the lid and the vent port cover. Butyl o-rings are installed in these seal grooves. A leak test port provides access to the region between the two seals for pre-shipment leak testing. The leak test port is closed when not in use by a threaded plug. Only the inner o-rings in the lid and the vent port cover provide a containment boundary function. The outer o-rings are provided to facilitate the leak testing procedure.

Two alignment pin holes are located at the diameter of the closure bolt circle. These holes correspond to two 0.5 in. diameter alignment pins mounted on the shell flange. These alignment pins facilitate the alignment of the lid bolt holes for easy lid bolt installation.

The ORC lid is handled using three lifting eyes that can be bolted to the top of the lid. These lifting attachments are provided for use with a lid lifting device to handle the Container lid during cask operations.

The ORC shell, bottom, and lid materials are SA-240 type 304 stainless steel. The containment vessel is designed, fabricated, examined and tested in accordance with the requirements of Subsection WB of the ASME[3] Code Section III, Division 3, to the maximum practical extent. In addition, the design meets the requirements of Regulatory Guides 7.6[4] and 7.8[5]. The construction of the containment vessel is shown on drawings 3044-70-2 and 6 provided in

Appendix 1.4.

The design of the containment boundary is discussed in Chapter 2 and the fabrication requirements (including examination and testing) is discussed in Chapter 4.

Fuel Basket

The basket structure is designed, fabricated and inspected in accordance with the ASME Code Subsection NG. The basket assembly is a typical tube and disc design. It consists of a five-tube assembly supported by ten (10) support discs. The basket components (excluding the poison plates) are constructed from 300 series stainless steel. The material specified for the basket components are shown on Drawing 3044-70-1. Where more than one material has been listed for a component, the most limiting properties are used in the analyses in the subsequent chapters of this Addendum.

The main components of the basket are:

- Five (5) fuel compartments.
- Ten (10) basket support discs.
- Five (5) tie-rod assemblies to maintain spacing of basket support discs.
- Canister spacers.
- Poison plate assembly.

Fuel compartment

The fuel compartment is constructed from 5 in. diameter schedule 10 pipes. Each fuel compartment tube is designed to accommodate the following loading arrangements (see dwg. 3044-70-8):

- One (1) Peach Bottom assembly and one (1) Oak Ridge canister.

- Four (4) Oak Ridge SNF canisters stacked vertically with a flux trap spacer between each canister.

Each tube has a closure plate tack-welded to the bottom of the tube to form the fuel compartment. The nominal dimensions of the fuel compartment are a length of 188 in. and a diameter of 5.3 in.

Support discs

The support discs consist of a top support disc, eight (8) middle support discs and a bottom support disc. The stainless steel disc is 16.41 in. in diameter and 0.75 in. thick. Five (5) tie rod assemblies maintain the spacing between the support discs. The support discs are designed to preserve the spatial arrangement of the fuel compartments during normal conditions of transport and accident conditions.

Canister Flux Trap Spacers

The Oak Ridge canister spacers restrict movement of the canisters in the fuel compartment tube. It is 5 in. in diameter and 16 in. long. The spacer confines the contents of the canister between spacers. The spacer is constructed of Type 304 stainless steel and traps a 0.31 in. neutron absorption plate within its structure. It is provided with a handling pintle fabricated from 17-4 precipitation hardened (ph) stainless steel. The pintle is heat-treated to provide additional durability for handling operations. The neutron absorption material within the spacer assists in criticality control within the Oak Ridge Container.

Neutron absorption structure

The basket is provided with a neutron absorption structure (poison enclosure). This is an assembly of 0.31 in. poison plates in a "star" type formation with a pentagon type arrangement at the center of the star. Dwg. 3044-70-5 shows the arrangement. Each poison plate is enclosed in a stainless steel enclosure that structurally supports and maintains its position during normal conditions of transport and accident conditions.

1.2.1.3 Oak Ridge Canisters

All Oak Ridge SNF shipped to INEEL in the TN-FSV packaging, other than intact Peach Bottom fuel assemblies, will be packaged in specially designed canisters fabricated in accordance with a standard design under the Oak Ridge Quality Assurance Program. The Oak Ridge Quality Assurance Program is approved under the DOE/RW-0333P, Revision 9 Quality Assurance Program for the proposed Yucca Mountain repository which has been approved by NRC (Docket Number 71-0786). Each canister has an outside diameter of 4.75 in. and an overall length of 34.75 in. The canister body has a wall thickness of 0.12 in. These dimensions were selected to be compatible with available storage locations, shielded carriers, hot cell access ports, and handling equipment. The canisters are constructed entirely of Type 304 stainless steel, with the exception of a handling pintle, which is fabricated from 17-4 precipitation hardened (ph) stainless steel. The pintle is heat-treated to provide additional durability for handling operations. The top end of each canister includes the pintle and handling head assembly attached to a 0.38 in. thick plate which is welded to the canister body. Two versions of the handling head assembly were developed. Both versions will be used in the shipments. A detail drawing (X3E020566A175) showing the dimensions and materials of significance to the safety analyses is provided in Appendix 1.4. The general layout of the Oak Ridge canister is shown in Figure 1-1. Photographs of a typical canister are shown in Figures 1-2 and 1-3.

During the loading of the canisters, the contents are first placed into an inner sleeve closed at one end. The inner sleeve is inserted into the canisters with the closed end positioned at the freeze plug end of the canister (see Figure 1-4). After the contents are loaded, a canister is closed by the insertion of an interference fit plug into the bottom of the canister. A stainless steel plug, with a head thickness of 0.25 in., is chilled by immersion in liquid nitrogen. Before the plug returns to room temperature, it is inserted into the canister body, and rotated to engage two pins into two slots in the canister wall. As the plug returns to room temperature, an interference fit of 0.005 to 0.007 inches forms between a machined half torus on the body of the plug and the inside of the canister wall and secures the plug in position.

The pins and slots provide a secondary closure system that forms a positive mechanical load path in accordance with hoisting safety requirements.

The boundary formed by the cylindrical shell of the Oak Ridge canister, the handling head welded to the top of the shell, and the interference fit closure between the freeze plug and the bottom of the shell is designed and fabricated to provide the required structural integrity to retain the canister contents. Analyses in Appendix 2.11.7 demonstrate that there is no change in the Oak Ridge canister geometry due to loads experienced during normal conditions of transport or hypothetical accident conditions. Shell and head stresses remain below allowable limits, and no buckling of the shell or handling head is indicated. Appendix 2.11.7 also demonstrates that the freeze plug is not separated from the canister shell due to loads generated under either normal or accident conditions.

The canisters are handled remotely by the pintle using various types of handling equipment. The canisters are normally lifted and lowered vertically. The handling head includes features that permit the attachment of rigid tools for operations when the canister is in a horizontal attitude.

Each Peach Bottom Assembly is packaged inside an aluminum canister fitted with a steel liner. However, since the Peach Bottom canisters are not specifically designed to perform the safety function of confining the Peach Bottom assembly during transport, the canisters are described as part of the contents in section 1.2.3.

1.2.2 Operational Features

The operational features of the TN-FSV packaging are described in Section 1.2.2 of the SAR. The Oak Ridge Container will be manufactured, inspected and tested in accordance with this Addendum. A TN-FSV cask will be transported to the fabricator's facility for seal replacement and leak testing. At the fabricator's facility, the Oak Ridge Container spacer sleeve will be installed into the TN-FSV cask cavity followed by the installation of the Oak Ridge Container. The ORC will be remain in the TN-FSV cask for the duration of the Oak Ridge SNF campaign.

With the exception of the revised leakage rate criterion, there is no change to the operational steps associated with the handling of the TN-FSV packaging. However, there are additional operational steps associated with the installation and removal of the Container lid, the loading of the SNF, and the leak testing of the ORC in the TN-FSV cask.

Container loading/unloading occurs when the cask is in the upright position. The ORC lid is removed and installed using the lid lifting attachments. The sequential operational steps to be followed, and pre-transport preparations including pre-shipment leak testing are provided in Chapter 7.

1.2.3 Contents of Package

The modification to the TN-FSV Package Configuration 1 contents consists of the replacement of the Fort St. Vrain Fuel Storage Container and its HTGR spent fuel contents with the Oak Ridge Container and its SNF contents. The Fort St. Vrain Fuel Storage Container was located and supported axially with a spacer positioned at the bottom of the TN-FSV cask cavity. This spacer is removed and replaced with a sleeve type spacer that locates and supports the Oak Ridge Container radially in the TN-FSV cask cavity. The top 0.56 in. thick aluminum spacer disk is retained.

There are two general types of SNF to be loaded into the Oak Ridge Container and transported in the TN-FSV cask. One type consists of a variety of SNF materials in stainless steel Oak Ridge canisters, and the second type is intact Peach Bottom assemblies (graphite-based HTGR SNF assemblies). The Peach Bottom assemblies are still in the aluminum canisters used to ship the assemblies from the reactor to the ORNL and will remain in the canisters for transport to the INEEL.

Multiple Oak Ridge canisters and Peach Bottom assemblies can be loaded into an Oak Ridge Container and transported in the TN-FSV cask. Most of the SNF in the Oak Ridge canisters and the Peach Bottom assemblies were placed in dry storage in the 1970's.
Although some underground storage locations were found to be partially flooded when the SNF materials were retrieved for repackaging or inspection in the 1990's, all Oak Ridge canisters and Peach Bottom assemblies have been stored in monitored locations confirmed to remain dry since the Oak Ridge canisters were loaded and the Peach Bottom assemblies were placed back into storage following visual inspections.

There are anticipated to be approximately 73 Oak Ridge canisters of SNF and nine intact Peach Bottom assemblies that will be transported. Each Oak Ridge Canister contains pieces of irradiated nuclear material from various types of reactors including light water reactors, fast reactors, high temperature gas cooled reactors, and the Keuring van Electrotechnische Materialen reactor. The maximum fissile material content for each canister are within the five fissile content groups that are based on the maximum pre-irradiation mass of U-235 and fissile plutonium (Pu-239 plus Pu-241). Uranium enrichments for the materials vary greatly depending on the material types. The maximum pre-irradiation uranium enrichment for any individual fuel component is 98 weight percent U-235, however, only a small amount of material exceeds 94 weight percent enrichment in U-235 and no individual Oak Ridge Canisters are comprised solely of materials with greater than 94 weight percent enrichment in U-235. The maximum burnup for the materials vary greatly depending on the material types. The highest burnup materials are from fast reactor facilities which have a maximum burnup of 15 atom percent, and a minimum cool time of 15 years. The maximum burnup for individual Oak Ridge Canisters and the estimated decay heats are shown in Table 1-3.

Each intact Peach Bottom fuel element initially contained up to 0.25 kg of uranium enriched to a maximum of 93.15 weight percent U-235 and up to approximately 1.5 kg of thorium prior to irradiation. The maximum burnup is approximately 72,700 MWd/MTHM, and the minimum cool time is 27 years. The maximum decay heat for any individual element is < 3 watts.

The estimated decay heats for the specific fuel elements to be shipped in the Oak Ridge Container are shown in Table 1-3.

As part of the repackaging activities, the contents of all Oak Ridge canisters are visually examined, inspected, weighed, and photographed in a hot cell facility prior to closure in order to verify the contents and also to ensure the absence of water and organic materials. The documented contents of each canister will be provided to INEEL as part of the SNF transfer.

Table 1-3 presents data that has been compiled for the loaded and forecast Oak Ridge canisters and Peach Bottom assemblies. The information provided in Table 1-3 is for information purposes only, but is representative of the data for the canisters already loaded and of the anticipated data for the forecast Oak Ridge canisters. All canister contents data used for transportation purposes will be taken from the certified SNF canisters contents data packages which are prepared in accordance with the Oak Ridge SNF Quality Assurance (QA) Program. The Oak Ridge QA Program is approved under the DOE/RW-0333P Quality Assurance Program for the proposed Yucca Mountain repository. The data in this table includes for each canister: the canister number, the fissile-content group number (discussed further below in section 1.2.3.7), the SNF type, pre-irradiation fissile values, estimated burnup, post-irradiation radionuclide contents, estimated decay heat, and weight.

The fission product inventories and estimated decay heat values are based on a decay period of only 15 years to conservatively bound the values. Some typical operational parameters of the fuel materials, such as specific power and fuel densities, are not available for the material in the Oak Ridge inventory, but were not needed to demonstrate criticality safety in the current repackaged configuration. The Oak Ridge canisters will be packaged, or if necessary repackaged, to meet all the SAR requirements as specified in this Addendum.

1.2.3.1 LWR Spent Fuel Materials

LWR fuel types in the Oak Ridge inventory include SNF originating from a variety of commercial reactor facilities including: Oconee, Peach Bottom Unit 2, Indian Point, Big Rock Point, Dresden, Point Beach, Quad City, and H.B. Robinson.

The LWR SNF rods have been sectioned either during post-irradiation examinations or as part of repackaging activities. The materials consist of either large rod segments that can be placed directly in a sleeve in an Oak Ridge canister, or small segments of cut-up fuel rods that are placed into a small inner can prior to loading into a sleeve in an Oak Ridge canister. The large segments of LWR SNF rods are generally one to three feet long sections of clad fuel that are self supporting and have exposed fuel material in only a small number of locations at the cut points. The small segments of cut-up fuel are typically only a few inches long, and may not be structurally stable.

The small fuel segments are loaded into appropriately sized inner cans, such as a 4.25 in. OD quart-sized steel can, that is tin plated inside and out, uncoated, and has a friction locking type lid (See Figure 1-4). The LWR fuel meat is in a UO_2 ceramic form with in-bred Pu and stainless steel or zirconium alloy cladding.

Any fill gases, fission product gases, and helium from alpha-particle decay were released from each LWR rod when it was sectioned. Fission product gases and helium will result in negligible pressure increases during storage and transport. Fission product gases have decayed during the long period of storage prior to repackaging of these materials into the inner cans and Oak Ridge canisters. The amount of isotopes that decay by alpha-particle emission is too low for helium production to generate a significant increase in pressure during storage and transport.

Since the LWR SNF materials are stored dry after repackaging, the water vapor in the air in the canisters and inner cans will result in negligible pressure increases due to temperature changes and negligible hydrogen generation during storage and transport. There are no materials in the LWR SNF that could cause gases to form from radiolysis, or from other chemical reactions including dehydration, combustion, or decomposition.

1.2.3.2 Fast Reactor SNF Materials

Fast reactor fuel types in the Oak Ridge inventory include SNF originating from several government fast reactor facilities including EBR-II, FFTF, and SRE.

The fast reactor SNF rods have been sectioned either during post-irradiation examinations or as part of repackaging activities. The materials consist of either large rod segments that can be placed directly in a sleeve in an Oak Ridge canister, or small segments of cut-up fuel rods that are placed into a small inner can prior to loading into a sleeve in an Oak Ridge canister. The large segments of fast reactor SNF rods are generally one to three feel long sections of clad fuel that are self supporting and have exposed fuel material in only a small number of locations at the cut points. The small segments of cut-up fuel are typically only a few inches long, and may not be structurally stable.

The small fuel segments are loaded into appropriately sized inner cans, such as a 4.25 in. OD quart sized steel can, that is tin plated inside and out, uncoated, and has a friction locking type lid. The fast reactor fuel meat can be in the form of $(U, Pu)O_2$, (U, Pu)C, or (U, Pu)N with stainless steel or zirconium alloy cladding.

Most of the fast reactor SNF at Oak Ridge was originally helium bonded fuel, however, some sodium bonded fuel rods have been encountered. For the helium bonded rods, the helium was released when the cladding was breached. The sodium bonded rods were sectioned in the hot-cell facility and the sodium bond material stabilized by reaction with the moisture present in the hot cell air. After stabilization, the rods are placed in dry storage prior to shipment.

Any fill gases, fission product gases, and helium from alpha decay were released from each fast reactor SNF rod when it was sectioned. Fission product gases and helium will result in negligible pressure increases during storage and transport. Fission product gases have decayed during the long period of storage prior to repackaging of these materials into the inner cans and Oak Ridge canisters. The amount of isotopes that decay by alpha-particle emission is too low for helium production to generate a significant increase in pressure during storage and transport.

Since the fast reactor SNF materials are stored dry after repackaging, the water vapor in the air in the canisters and inner cans will result in negligible pressure increases due to temperature changes and negligible hydrogen generation during storage and transport. Since the sodium bonding materials were allowed to stabilize in the hot cell prior to repackaging, there are no materials remaining in the fast reactor SNF that could cause gases to form from radiolysis, or from other chemical reactions including dehydration, combustion, or decomposition.

1.2.3.3 Sectioned HTGR SNF Materials

HTGR fuel types in the Oak Ridge inventory consist primarily of SNF from Peach Bottom Unit 1, Core 2 material, however, there are small quantities of SNF in inventory from the Gas Turbine Modular Helium Reactor, New Production Reactor, and CEA Comedie Programs.

Except for the intact Peach Bottom assemblies, the HTGR SNF elements have been sectioned either during post-irradiation examinations or as part of repackaging activities. The materials consist of fuel compacts both with and without the supporting graphite bodies. These compacts can be placed loosely in a sleeve in an Oak Ridge canister or packaged in appropriately sized inner cans, such as a 4.25 in. OD quart sized steel can, that is tin plated inside and out, uncoated, and has a friction locking type lid. The HTGR fuel meat is primarily of a uranium-thorium carbide kernel compact design in a graphite matrix.

The HTGR fuel was fabricated with coated fuel particles and does not have cladding or a fill gas. Fission product gases and helium will result in negligible pressure increases during storage and transport. Fission product gases have decayed during the long period of storage prior to repackaging of these materials into the inner cans and Oak Ridge canisters. The amount of isotopes that decay by alpha-particle emission is too low for helium production to generate a significant increase in pressure during storage and transport. Since the sectioned HTGR SNF materials are stored dry after repackaging, the water vapor in the air in the canisters and inner cans will result in negligible pressure increases due to temperature changes and negligible hydrogen generation during storage and transport. There are no materials in the HTGR SNF that could cause gases to form from radiolysis, or from chemical reactions including dehydration or decomposition. Combustion of the graphite is not possible at the low temperatures in the Oak Ridge Container during normal and accident conditions.

1.2.3.4 Intact Peach Bottom HTGR SNF

In addition to the sectioned HTGR SNF, there are also nine intact Peach Bottom Unit 1, Core 2 SNF assemblies (elements) in dry storage at Oak Ridge that will be transported in the Oak Ridge Container. The assemblies are still in the original aluminum canisters with steel liners in which they were received in 1976, and consist of five fuel test elements (FTE-7, -8, -9, -12, -17), three fuel bed test elements (FBTE-1, -3, -5) and one driver fuel element (B11-03). The aluminum canisters for the intact Peach Bottom assemblies have an overall length of approximately 153 inches, and an outer diameter of approximately 4.5 inches. The intact Peach Bottom assemblies have an overall length of 144 in., and an outer diameter of 3.5 in. Figure 1-7 shows a Peach Bottom fuel assembly in an aluminum canister.

The active part of the assemblies consists of 30 annular fuel compacts stacked on top of each other. Each compact is 3.0 inches high, and has an inner diameter of 1.75 inches and an outer diameter of 2.75 inches. The fuel consists of enriched uranium/thorium carbide particles, coated with pyrolitic carbon. These fuel particles were poured into the annular space in the compact, which was then annealed. The active fuel length of the assembly is 30 * 3 = 90 inches.

The top of the assembly consists of a porous plug, an upper reflector apparatus, and a grappling hook. There is no fissile material in this section, which has an overall length of 23.44 in. The bottom of the assembly contains a lower reflector, an internal fission trap, and a bottom connector. The length of this section, which also does not contain fissile material, is (144 – 90 – 23.44) = 30.56 in.

The Peach Bottom canister shell consists of a cylindrical aluminum tube sealed with an upper aluminum end cap and a lower aluminum end plug. The tubing is approximately 4.5 in. outside diameter and has a 0.065 in. wall thickness. The upper aluminum end cap includes a machined feature that can be handled with a grappling tool for retrieval and transfer.

In each canister is a steel liner that has an outside diameter of 4.3 in. The upper 116 in. of the liner has a wall thickness of 0.06 in., while the lower 24 in. of the liner has a wall thickness of 0.16 in.
A 0.13 in. thick steel plate is welded to close the steel liner approximately 3.5 in. from the bottom of the liner. This plate supports the Peach Bottom assembly.

The intact Peach Bottom HTGR fuel assemblies were fabricated with coated fuel particles and do not have cladding or a fill gas. Fission product gases accumulated in the sealed aluminum canisters are negligible as shown by comparison of the FSV HTGR SNF to the intact Peach Bottom SNF. The information below on the FSV HTGR SNF is from Section 1.2.3.1 of the SAR.

The maximum burnup for these two types of HTGR spent fuels is about the same with 70,000 MWD/MTU for the FSV HTGR fuel, and 72,709 MWD/MTU for the Peach Bottom assemblies. The weight of an intact Peach Bottom assembly is about one-half that of a FSV HTGR SNF element. The weight of an intact Peach Bottom assembly is 155 lbs. while a FSV HTGR element is 285 lbs. The decay time for an intact Peach Bottom assembly is more than nine times that of a FSV HTGR SNF element. The decay time considered for the estimate of fission products for the FSV SNF was 1,600 days while there has been 27 or more years of cooling for SNF from the Peach Bottom reactor which was shutdown in 1972. The longer time provided for decay of the radionuclides in the Peach Bottom SNF is reflected in the much lower heat levels. The estimate for a FSV SNF element is 60 watts, while the estimate for a Peach Bottom assembly is 2 watts.

As discussed in Section 4.2.2 of the SAR, the fission product gas contribution to total pressure is negligible for the FSV SNF. Based on a lower weight of SNF per assembly, and the increased time for radioactive decay, the fission product gas contribution will be lower and negligible for the intact Peach Bottom assemblies in their aluminum canisters.

The helium generated from alpha particle decay is negligible for the intact Peach Bottom assemblies. The amount of isotopes that decay by alpha-particle emission is too low for helium production to generate a significant increase in pressure during storage and transport.

Since the intact Peach Bottom assemblies were not opened for inspection, there was no introduction of air into the sealed aluminum canisters. Even assuming that ambient air with water vapor was originally sealed in the canisters, rather than inert gas, there will be negligible pressure increases due to temperature changes and negligible hydrogen generation during storage and transport. There are no other materials in the aluminum canisters with the intact peach Bottom assemblies that could cause gases to form from radiolysis, or chemical reactions including dehydration or decomposition. Combustion of the graphite is not possible at the low temperatures in the Oak Ridge Container during normal and accident conditions.

1.2.3.5 KEMA SNF Materials

KEMA SNF in the Oak Ridge inventory consists solely of lightly irradiated UO_2/ThO_2 fuel from the KEMA Suspension Test Reactor in the Netherlands. This prototype nuclear reactor produced approximately 154 MWh of thermal energy from 1975 to 1977. The Oak Ridge inventory of KEMA SNF consists of approximately 26 kg of fuel microspheres.

These microspheres will be packaged in appropriately sized inner cans, such as a 4.25 in. OD quart sized steel can, that is tin plated inside and out, uncoated, and has a friction locking type lid.

The KEMA microspheres were fabricated without a cladding and without a fill gas. Fission product gases in this spent fuel material are negligible due to the very low burnup and long period of decay of the radionuclides. Helium from alpha-particle decay is likewise negligible during storage and transport. The amount of isotopes that decay by alpha-particle emission is too low for helium production to generate a significant increase in pressure during storage and transport.

Since the KEMA SNF materials are stored dry after repackaging, the water vapor in the air in the canisters and inner cans will result in negligible pressure increases due to temperature changes and negligible hydrogen generation during storage and transport. There are no materials in the KEMA SNF that could cause other gases to form from radiolysis or chemical reactions including dehydration, combustion, or decomposition.

1.2.3.6 Fissile Content Groups

Because of the variety of SNF to be transported and to simplify the criticality safety evaluation, the SNF has been placed into five groups based on their fissile content, with a sixth for intact Peach Bottom assemblies. The pre-irradiation fissile material contents allowed in each group are defined below and are discussed further in Chapter 6.

Fissile Content for Each Group

Group	Grams ^{235}U (Max)	Grams $^{239}Pu + ^{241}Pu$ (Max)	No. of Canisters	FEM
1	475	0	48	475
2	865	191	8	1171
3	200	415	2	864
4	275	160	11	531
5	910	0	4	910
IPB	250	0	9	250

1.3 References

1. U.S. Nuclear Regulatory Commission Certificate of Compliance for Radioactive Material Packages, No. 9253, Pkg. ID No. USA/9253/B(U)F, Docket No. 71-9253, Rev. 4, May 1999.

2. U.S. Nuclear Regulatory Commission, Regulatory Guide 7.9, Standard Format and Content of Part 71 Applications for Approval of Packaging for Radioactive Material, Proposed Rev.2, 1986.

3. ASME Boiler & Pressure Vessel Code, Division 1, Section III, 1998 Edition.

4. U.S. Nuclear Regulatory Commission, Regulatory Guide 7.6, Design Criteria for the Structural Analysis of Shipping Cask Containment Vessels, March 1978.

5. U.S. Nuclear Regulatory Commission, Regulatory Guide 7.8, Load Combinations for the Structural Analysis of Shipping Casks, May 1977.

Table 1-1 Terminology

Addendum	This Addendum to the SAR which was submitted to support approval for transport of the Oak Ridge SNF canisters and Peach Bottom assemblies in the Oak Ridge Container in the TN-FSV cask.
ASME	1998 ASME Boiler & Pressure Vessel Code, Division 1
Basket	The assembly of components that maintains the spatial arrangement of the Oak Ridge canisters and any Peach Bottom assemblies in the Container.
Canister	Oak Ridge Canister
CFR	Code of Federal Regulations
Container	Oak Ridge Container
Containment Boundary	The primary containment boundary provided by the TN-FSV cask. Also, the secondary containment boundary provided by the Oak Ridge Container which satisfies the containment requirement of 10CFR71.63 for a separate inner container.
FSV	Fort St. Vrain
FSV Container	A fuel storage container for FSV HTGR fuel elements. The payload for TN-FSV Package Configuration 1.
Flux Trap Spacer	A spacer that will be used to inhibit neutron interaction between adjacent Oak Ridge canisters in the axial direction and to maintain axial location of the Oak Ridge canister within the basket cavity.
Fuel Compartment	Cylindrical enclosure into which the Oak Ridge canisters and any Peach Bottom assemblies are loaded
HTGR	High Temperature Gas Reactor
INEEL	Idaho National Engineering and Environmental Laboratory, Idaho
NRC	U.S. Nuclear Regulatory Commission
Oak Ridge Canister	A stainless steel vessel with an inner sleeve. The Oak Ridge Canisters are a part of TN-FSV Packaging Configuration 2 since each canister confines the SNF during transport for criticality control. The canisters are not a re-useable part of the packaging.

Oak Ridge Container	The assembly of components which provide shielding, containment, and criticality control for the Oak Ridge canisters with SNF and any intact Peach Bottom Assemblies. The Oak Ridge Container is the secondary containment boundary for TN-FSV Package Configuration 2.
Package	The packaging with its radioactive contents as presented for transport. In this Addendum, this refers to the TN-FSV cask with the Oak Ridge Container loaded with the Oak Ridge canisters with SNF and any intact Peach Bottom Assemblies.
Packaging	The assembly of components necessary to ensure compliance with the packaging requirements of 10CFR, Part 71. In this Addendum, this refers to the TN-FSV Packaging Configuration 2.
SAR	Safety Analysis Report for the TN-FSV Package. In this Addendum, SAR refers to the main body of the SAR which was originally submitted to support approval for transport of HTGR fuel in the FSV Container in the TN-FSV cask. This Addendum supports approval for transport of the Oak Ridge SNF.
TN-FSV cask	In this Addendum, TN-FSV cask refers to the cask body, cask lid, port plugs, impact limiters, etc., with butyl material for the containment boundary seals. The TN-FSV cask with silicone seals is the packaging for TN-FSV Package Configuration 1.
TN-FSV Package Configuration 1	The TN-FSV cask with silicone seals and a payload consisting of a FSV Container with FSV HTGR fuel elements.
TN-FSV Package Configuration 2	The TN-FSV cask with butyl seals, the Oak Ridge Container, the Oak Ridge canisters with SNF, and any intact Peach Bottom assemblies.
TN-FSV Packaging Configuration 1	In the main body of the SAR, TN-FSV cask refers to the cask body, cask lid, port plugs, impact limiters, etc., with silicone material for the containment boundary seals.
TN-FSV Packaging Configuration 2	The TN-FSV cask with butyl seals and the Oak Ridge Container are the re-useable parts of TN-FSV Packaging Configuration 2. The Oak Ridge Canisters are non-re-useable parts of this configuration.
SNF	Oak Ridge Spent Nuclear Fuel refers to either a variety of spent fuel from research, test, or commercial reactors that has been loaded in an Oak Ridge canister, or intact Peach Bottom fuel assemblies.

Table 1-2 Oak Ridge Container Typical Dimensions and Weights

Overall Length	198 inches
Outside Diameter	
Lid	20.19 inches
Body	17.75 inches
Lid Thickness	7.00 inches
Fuel Compartment Length	188 inches
Fuel Compartment Diameter	5.30 inches
Weight of SNF (includes canisters)	1600 lb.
Weight of Lid	487 lb
Weight of Flux Trap Spacers	170 lb.
Loaded weight of Container	4273 lb.
Loaded weight of Container and Spacer Sleeve	4761 lb. max.

#	Fissile Content Group	Canister Number	Primary SNF Type	Preirradiation Fissile Values									Significant Radionuclide Content Post-Irradiation (Does not include miscellaneous activation products)																				Est. Heat (W)	Radiation Measurements in Radial Direction [c]			Gross Weight (lbs)
				U-233 (g)	U-235 (g)	U-238[a] (g)	Pu-239 (g)	Pu-240 (g)	Pu-241 (g)	Th-232 (g)	Total HM (g)	Estimated Burnup [b]	Th-232 (Ci)	U-233 (Ci)	U-235 (Ci)	U-238 (Ci)	Pu-238 (Ci)	Pu-239 (Ci)	Pu-240 (Ci)	Pu-241 (Ci)	Am-241 (Ci)	Cm-244 (Ci)	Kr-85 (Ci)	Sr-90 (Ci)	Y-90 (Ci)	Cs-134 (Ci)	Cs-137 (Ci)	Ba-137m (Ci)	Pm-147 (Ci)	Eu-154 (Ci)	Eu-155 (Ci)	Total (Ci)		Max. B/γ (R/hr)	Max. Neutron (mRem/hr)	Screening Value Fraction	
1	5	CAN-GSF-176	LWR	0	575	16,388	0.0	0.0	0.0	0	16,963	< 57,100 MWd/MTHM	0	0	4.0E-04	5.4E-03	97	3.7	5.8	981	64	68	79	1,241	1,241	30	1,854	1,739	59	95	26	7,583	26	489	149	0.58	75.8
2	1	CAN-GSF-177	LWR	0	455	12947	0.0	0.0	0.0	0	13,402	< 57,300 MWd/MTHM	0	0	1.8E-04	4.2E-03	75	3.1	6.0	813	50	53	61	967	967	24	1,446	1,356	46	74	20	5,962	20	316	88	0.36	64.9
3	2	CAN-GSF-178	LWR	0	679	8,517	147.0	8.0	2.0	0	9,353	< 50,000 MWd/MTHM	0	0	8.0E-04	2.8E-03	52	5.7	4.1	1,500	35	36	42	670	670	16	1,002	940	32	51	14	5,071	14	527	42	0.36	53.9
4	1	CAN-GSF-179	LWR	0	198	4755	0.0	0.0	0.0	0	4,953	< 48,950 MWd/MTHM	0	0	9.0E-05	1.6E-03	28	1.4	0.7	364	18	19	23	357	357	8.7	533	500	17	27	7.4	2,261	7.5	112	3	0.06	59.9
5	2	CAN-GSF-180	LWR	0	545	13,778	90.0	18.0	13.0	0	14,444	< 27,600 MWd/MTHM	0	0	9.1E-04	5.0E-03	91	3.4	3.7	883	60	64	74	1,166	1,166	29	1,743	1,635	55	90	24	7,087	24	343	37	0.26	69.5
6	1	CAN-GSF-182	HTGR	0	238	77	0.0	0.0	0.0	1,026	1,341	< 72,709 MWd/MTHM	1.1E-04	0.3	2.8E-04	2.1E-05	7.3	0.1	0.0	14	4.9	5.1	6.0	94	94	2.3	141	132	4.5	7.2	2.0	514	2.0	381	4	0.20	41.0
7	1	CAN-GSF-183	HTGR	0	18	120	0.0	0.0	0.0	108	246	< 70,000 MWd/MTHM	1.2E-05	0.02	2.0E-05	2.6E-05	1.2	0.1	0.0	14	0.8	0.8	0.9	15	15	0.4	22	21	0.7	1.1	0.3	93	0.3	70	1	0.04	34.2
8	5	CAN-GSF-185	LWR	0	861	22,094	0.0	0.0	0.0	0	22,955	< 50,000 MWd/MTHM	0	0	5.7E-04	7.3E-03	131	5.5	6.7	1,444	87	92	107	1,681	1,681	41	2,513	2,357	80	129	35	10,388	35	316	31	0.23	93.9
9	1	CAN-GSF-186	LWR	0	451	14,594	0.0	0.0	0.0	0	15,045	23,500 MWd/MTHM	0	0	4.0E-04	4.9E-03	88	11	11	2,957	59	62	72	1,135	1,135	28	1,697	1,591	54	87	24	9,011	24	174	35	0.17	68.0
10	1	CAN-GSF-187	LWR	0	300	9,698	0.0	0.0	0.0	0	9,998	< 40,350 MWd/MTHM	0	0	1.4E-04	3.2E-03	57	4.4	6.7	1,163	38	40	47	735	735	18	1,098	1,030	35	56	15	5,078	16	397	61	0.34	56.4
11	5	CAN-GSF-188	LWR	0	908	18,153	0.0	0.0	0.0	0	19,062	10,100 MWd/MTHM	0	0	1.0E-03	6.0E-03	109	3.9	4.6	1,037	72	76	89	1,402	1,402	34	2,096	1,966	67	108	29	8,496	29	558	183	.0.70	83.6
12	2	CAN-GSF-189	Fast Reactor	0	522	6,354	102.0	5.0	1.0	2,066	9,050	< 15 atom%	2.3E-04	0	8.3E-04	1.1E-03	35	3.6	0.9	939	23	24	28	448	448	11	669	628	21	34	9.3	3,322	9.5	150	35	0.16	52.5
13	2	CAN-GSF-190	LWR/Fast Reactor	0	862	6,406	186.0	21.0	4.0	87	7,566	< 15 atom%	9.6E-06	0	6.1E-04	2.1E-03	40	4.3	2.3	1,121	26	28	32	510	510	13	762	715	24	39	11	3,836	11	162	40	0.17	52.0
14	2	CAN-GSF-191	Fast Reactor	0	400	178	125.6	14.3	2.9	0	721	< 15 atom%	0	0	5.9E-04	8.8E-06	2.3	4.6	2.5	1,205	1.5	1.6	1.9	30	30	0.7	45	42	1.4	2.3	0.6	1,372	0.9	350	4	0.19	32.9
15	1	CAN-GSF-192	HTGR	0	300.7	93	0.0	0.0	0.0	0	394	< 72,709 MWd/MTHM	0	0.1	2.5E-04	1.9E-05	1.1	0.1	0	14	0.7	0.8	0.9	14	14	0.4	21	20	0.7	1.1	0.3	90	0.3	516	7	0.28	39.8
16	1	CAN-GSF-193	HTGR	0	132.8	25	0.0	0.0	0.0	1,021	1,179	36,367 MWd/MTHM	1.1E-04	0.1	1.8E-04	6.8E-06	6.7	0	0	0	4.4	4.7	5.4	86	86	2.1	128	120	4.1	6.6	1.8	455	1.8	481	8	0.26	38.8
17	2	CAN-GSF-194	Fast Reactor	0	506	69	142.0	8.0	2.0	0	727	< 15 atom%	0	0	9.6E-04	2.2E-05	3.7	5.8	1.6	1528	2.5	2.6	3.0	48	48	1.2	71	67	2.3	3.7	1.0	1,788	1.3	312	2	0.16	30.6
18	2	CAN-GSF-195	Fast Reactor	0	414	26	104.0	6.0	1.0	0	551	< 15 atom%	0	0	7.6E-04	1.1E-05	2.8	4.5	1.6	1177	1.9	2.0	2.3	36	36	0.9	54	51	1.7	2.8	0.7	1,375	1.0	181	2	0.10	29.6
19	1	CAN-GSF-196	LWR	0	343	14,513	0.0	0.0	0.0	0	14,856	< 50,000 MWd/MTHM	0	0.0	1.5E-04	4.8E-03	85	3.3	6.4	855	56	59	69	1,088	1,088	27	1,627	1,526	52	84	23	6,648	23	481	89	0.45	65.1
20	4	CAN-GSF-197	Fast Reactor	0	274	18	68.5	3.6	0.7	0	364	< 15 atom%	0	0	4.7E-04	1.1E-05	2.1	3.1	0.7	827	1.4	1.5	1.7	27	27	0.7	41	38	1.3	2.1	0.6	975	0.7	227	3	0.12	27.5
21	2	CAN-GSF-198	Fast Reactor	0	303	131	95.3	10.8	2.2	0	542	< 15 atom%	0	0	6.4E-04	1.2E-05	2.6	5.8	3.0	0	1.7	1.8	2.1	33	33	0.8	50	47	1.6	2.6	0.7	186	1.0	397	4	0.21	32
22	4	CAN-GSF-199	Fast Reactor	0	247	108	77.7	8.8	1.8	0	443	< 15 atom%	0	0	5.3E-04	1.0E-05	2.2	4.9	2.5	0	1.4	1.5	1.8	28	28	0.7	42	39	1.3	2.1	0.6	156	0.8	347	3	0.19	31
23	4	CAN-GSF-200	Fast Reactor	0	199	176	52.0	3.0	6.0	0	436	< 15 atom%	0	0	4.0E-04	5.2E-05	2.4	3.0	0.5	800	1.6	1.6	1.9	30	30	0.7	45	42	1.4	2.3	0.6	964	0.8	77	2	0.04	38
24	3	CAN-GSF-201	Fast Reactor	0	92	3167	378	33	4	0	3674	< 15 atom%	0	0	1.0E-04	9.5E-04	19	15	7.8	0	12.4	13.1	15.3	241	241	5.9	360	338	11.5	18.5	5.0	1,303	5.7	131	5	0.08	32
25	1	CAN-GSF-202	LWR	0	293	7026	0.0	0.0	0.0	1,677	8,996	47,150 MWd/MTHM	1.8E-04	0	1.4E-04	2.3E-03	8	1.2	2.4	326	34	36	42	657	657	16	981	921	31	50	14	3,775	12	327	200	0.62	48
26	4	CAN-GSF-203	Fast Reactor	0	166	185	96.0	5.0	1.0	0	453	< 15 atom%	0	0	3.1E-04	5.5E-05	2.3	3.9	2.7	1010	1.5	1.6	1.9	30	30	0.7	44	42	1.4	2.3	0.6	1,174	0.8	127	4	0.07	46.1
27	4	CAN-GSF-204	Fast Reactor	0	0	0	18.0	1.0	0.2	0	19	< 15 atom%	0	0	0.0E+00	0.0E+00	0.1	0.7	0.5	200	0.1	0.1	0.1	1	1	0.0	2	2	0.1	0.1	0.0	208	0.1	154	1	0.08	38
28	1	CAN-GSF-205	HTGR	0	140.1	33	0.0	0.0	0.0	491	664	< 72,709 MWd/MTHM	5.1E-05	0.1	1.0E-04	6.6E-06	3.3	0	0	0	2.2	2.3	2.7	42	42	1.0	63	59	2.0	3.2	0.9	224	0.9	170	2	0.09	36.7
29	1	CAN-GSF-206	HTGR	0	140.1	33	0.0	0.0	0.0	491	664	< 72,709 MWd/MTHM	5.1E-05	0.1	1.0E-04	6.6E-06	3.3	0	0	0	2.2	2.3	2.7	42	42	1.0	63	59	2.0	3.2	0.9	224	0.9	158	2	0.09	36.2
30	1	CAN-GSF-207	HTGR	0	179.9	48	0.0	0.0	0.0	527	755	72,709 MWd/MTHM	5.5E-05	0.2	1.3E-04	9.7E-06	3.7	2.1E-02	2.3E-02	5.6	2.4	2.6	3.0	47	47	1.2	70	66	2.2	3.6	1.0	256	1.0	193	5	0.11	39.3
31	1	CAN-GSF-208	HTGR	0	176.9	50	0.0	0.0	0.0	527	753	72,709 MWd/MTHM	5.5E-05	0.2	1.3E-04	1.0E-05	3.7	2.1E-02	2.3E-02	5.6	2.4	2.6	3.0	47	47	1.2	70	66	2.2	3.6	1.0	256	1.0	189	3	0.10	39.4
32	1	CAN-GSF-209	HTGR	0	148.6	39	0.0	0.0	0.0	561	748	72,709 MWd/MTHM	5.9E-05	0.2	1.1E-04	7.9E-06	3.8	2.5E-02	2.0E-02	6.5	2.5	2.6	3.1	48	48	1.2	72	68	2.3	3.7	1.0	263	1.0	220	3	0.12	38.6
33	1	CAN-GSF-210	HTGR	0	135.0	35	0.0	0.0	0.0	510	680	72,709 MWd/MTHM	5.3E-05	0.2	1.0E-04	7.2E-06	3.4	2.2E-02	1.8E-02	5.9	2.3	2.4	2.8	44	44	1.1	65	61	2.1	3.4	0.9	239	0.9	231	3	0.13	37.7
34	1	CAN-GSF-211	HTGR	0	135.0	35	0.0	0.0	0.0	510	680	72,709 MWd/MTHM	5.3E-05	0.2	1.0E-04	7.2E-06	3.4	2.2E-02	1.8E-02	5.9	2.3	2.4	2.8	44	44	1.1	65	61	2.1	3.4	0.9	239	0.9	254	4	0.14	37.6
35	4	CAN-GSF-213	Fast Reactor	0	187	12	51	3.8	0.5	0	254	< 15 atom%	0	0	3.5E-04	3.8E-06	1.3	2.1	1.4	763	0.9	0.9	1.1	17	17	0.4	25	23	0.8	1.3	0.3	855	0.5	443	8	0.25	43.6
36	4	CAN-GSF-214	Fast Reactor	0	72	37	24.0	1.0	0.3	0	134	< 15 atom%	0	0	1.3E-04	1.2E-05	0.7	0.9	0.92	200	0.5	0.5	0.6	8.8	8.8	0.2	13.1	12	0.4	0.7	0.2	249	0.2	524	72	0.43	39
37	1	CAN-GSF-215	HTGR	0	190.4	61	0.0	0.0	0.0	1,123	1,375	< 72,709 MWd/MTHM	1.2E-04	2.5E-01	1.4E-04	1.2E-05	7.1	0	0	0	4.7	5.0	5.8	91	91	2.2	137	128	4.3	7.0	1.9	486	1.9	385	6	0.21	35.1
38	1	CAN-GSF-216	LWR	0	169	3560	0.0	0.0	0.0	0	3,729	33,300 MWd/MTHM	0	0	1.6E-04	1.2E-03	21	1.2	1.4	307	14	15	17	273	273	6.7	409	383	13.0	21.0	5.7	1,762	5.8	408	33	0.28	52.7
39	1	CAN-GSF-217	HTGR	0	168.8	55	0.0	0.0	0.0	996	1,219	< 72,710 MWd/MTHM	1.0E-04	2.2E-01	1.3E-04	1.1E-05	6.3	0	0	0	4.2	4.4	5.1	81	81	2.0	121	114	3.9	6.2	1.7	431	1.7	439	4	0.23	34.1
40	1	CAN-GSF-218	HTGR	0	336.2	59	0.0	0.0	0.0	1,848	2,243	< 31,229 MWd/MTHM	2.0E-04	2.4E-01	5.0E-04	1.3E-05	12.6	0	0	0	8.4	8.8	10.3	162	162	4.0	242	227	7.7	12.4	3.4	861	3.4	181	2	0.10	41.9
41	1	CAN-GSF-219	HTGR	0	173.0	57	0.0	0.0	0.0	1,052	1,282	< 72,709 MWd/MTHM	1.1E-04	0.2	1.3E-04	1.2E-05	6.7	0	0	0	4.4	4.7	5.4	86	86	2.1	128	121	4.1	6.6	1.8	457	1.8	458	6	0.25	35
42	1	CAN-GSF-220	HTGR	0	153.8	75	0.0	0.0	0.0	715	944	< 56,819 MWd/MTHM	7.6E-05	0.1	1.7E-04	1.6E-05	5.0	1.4E-01	9.2E-02	40.0	3.3	3.5	4.0	64	64	1.6	95	89	3.0	4.9	1.3	379	1.3	250	5	0.14	33
43	1	CAN-GSF-221	HTGR	0	231.3	32	0.0	0.0	0.0	579	842	< 72,709 MWd/MTHM	6.1E-05	0.1	1.7E-04	6.4E-06	4.0	1.6E-02	0	3.8	2.6	2.8	3.2	51	51	1.2	76	71	2.4	3.9	1.1	275	1.1	100	2	0.06	39
44	1	CAN-GSF-222	HTGR	0	260.1	36	0.0	0.0	0.0	651	947	< 72,709 MWd/MTHM	6.8E-05	0.1	1.9E-04	7.2E-06	4.5	1.8E-02	0	4.3	3.0	3.1	3.6	57	57	1.4	86	80	2.7	4.4	1.2	309	1.2	231	3	0.12	41

#	Fissile Content Group	Canister Number	Primary SNF Type	Preirradiation Fissile Values									Significant Radionuclide Content Post-Irradiation (Does not include miscellaneous activation products)																				Est. Heat (W)	Radiation Measurements in Radial Direction [c]			Gross Weight (lbs)
				U-233 (g)	U-235 (g)	U-238[a] (g)	Pu-239 (g)	Pu-240 (g)	Pu-241 (g)	Th-232 (g)	Total HM (g)	Estimated Burnup [b]	Th-232 (Ci)	U-233 (Ci)	U-235 (Ci)	U-238 (Ci)	Pu-238 (Ci)	Pu-239 (Ci)	Pu-240 (Ci)	Pu-241 (Ci)	Am-241 (Ci)	Cm-244 (Ci)	Kr-85 (Ci)	Sr-90 (Ci)	Y-90 (Ci)	Cs-134 (Ci)	Cs-137 (Ci)	Ba-137m (Ci)	Pm-147 (Ci)	Eu-154 (Ci)	Eu-155 (Ci)	Total (Ci)		Max. B/γ (R/hr)	Max. Neutron (mRem/hr)	Screening Value Fraction	
45	1	CAN-GSF-223	HTGR	0	271.1	37	0.0	0.0	0.0	679	987	< 72,709 MWd/MTHM	7.1E-05	0.2	2.0E-04	7.5E-06	4.7	1.8E-02	0	4.5	3.1	3.2	3.8	60	60	1.5	89	84	2.8	4.6	1.2	322	1.2	189	1	0.10	41
46	4	CAN-GSF-224	Fast Reactor	0	20	862	133.0	7.0	1.0	0	1,023	< 15 atom%	0	0	3.7E-05	2.6E-04	3.7	3.7	4.9	960	2.4	2.6	3.0	47	47	1.2	71	66	2.2	3.6	1.0	1,219	1.3	TBD	TBD	TBD	58
47	4	CAN-GSF-225	Fast Reactor	0	93	839	154.7	8.2	1.6	0	1,097	< 15 atom%	0	0	1.1E-04	2.7E-04	5.6	4.3	5.6	1120	3.7	3.9	4.6	72	72	1.8	107	101	3.4	5.5	1.5	1,511	1.8	TBD	TBD	TBD	34
48	1	CAN-GSF-226	HTGR	0	32	66	0	0	0	192	290	< 70,000 MWd/MTHM	2.0E-05	0.05	1.1E-05	1.9E-05	1.5	0.1	0.0	14	1.0	1.1	1.2	20	20	0.5	29	27	0.9	1.5	0.4	118	0.4	85	4	0.05	27.4
49	5	Forecast-28	Fast Reactor	0	865	4,145	0.0	0.0	0.0	0	5,010	< 15 atom%	0	0	1.1E-03	1.3E-03	26	0	0	0	17	18	21	328	328	8.1	491	460	15.6	25.2	6.8	1,744	6.8	TBD	TBD	TBD	< 95
50	1	Forecast-53	KEMA	0	346	39	0.0	0.0	0.0	1,153	1,538	270 MWd/MTHM	1.3E-04	3.9E-04	7.6E-04	1.3E-05	0	0	0	0	0	0	0	5.6	5.6	0.04	2.3	2.13	3.2	0	0	19	0.05	TBD	TBD	TBD	< 95
51	1	Forecast-54	KEMA	0	346	39	0.0	0.0	0.0	1,153	1,538	270 MWd/MTHM	1.3E-04	3.9E-04	7.6E-04	1.3E-05	0	0	0	0	0	0	0	5.6	5.6	0.04	2.3	2.13	3.2	0	0	19	0.05	TBD	TBD	TBD	< 95
52	1	Forecast-55	KEMA	0	346	39	0.0	0.0	0.0	1,153	1,538	270 MWd/MTHM	1.3E-04	3.9E-04	7.6E-04	1.3E-05	0	0	0	0	0	0	0	5.6	5.6	0.04	2.3	2.13	3.2	0	0	19	0.05	TBD	TBD	TBD	< 95
53	1	Forecast-56	KEMA	0	346	39	0.0	0.0	0.0	1,153	1,538	270 MWd/MTHM	1.3E-04	3.9E-04	7.6E-04	1.3E-05	0	0	0	0	0	0	0	5.6	5.6	0.04	2.3	2.13	3.2	0	0	19	0.05	TBD	TBD	TBD	< 95
54	1	Forecast-57	KEMA	0	346	39	0.0	0.0	0.0	1,153	1,538	270 MWd/MTHM	1.3E-04	3.9E-04	7.6E-04	1.3E-05	0	0	0	0	0	0	0	5.6	5.6	0.04	2.3	2.13	3.2	0	0	19	0.05	TBD	TBD	TBD	< 95
55	1	Forecast-58	KEMA	0	346	39	0.0	0.0	0.0	1,153	1,538	270 MWd/MTHM	1.3E-04	3.9E-04	7.6E-04	1.3E-05	0	0	0	0	0	0	0	5.6	5.6	0.04	2.3	2.13	3.2	0	0	19	0.05	TBD	TBD	TBD	< 95
56	1	Forecast-59	KEMA	0	346	39	0.0	0.0	0.0	1,153	1,538	270 MWd/MTHM	1.3E-04	3.9E-04	7.6E-04	1.3E-05	0	0	0	0	0	0	0	5.6	5.6	0.04	2.3	2.13	3.2	0	0	19	0.05	TBD	TBD	TBD	< 95
57	1	Forecast-60	KEMA	0	346	39	0.0	0.0	0.0	1,153	1,538	270 MWd/MTHM	1.3E-04	3.9E-04	7.6E-04	1.3E-05	0	0	0	0	0	0	0	5.6	5.6	0.04	2.3	2.13	3.2	0	0	19	0.05	TBD	TBD	TBD	< 95
58	1	Forecast-61	KEMA	0	346	39	0.0	0.0	0.0	1,153	1,538	270 MWd/MTHM	1.3E-04	3.9E-04	7.6E-04	1.3E-05	0	0	0	0	0	0	0	5.6	5.6	0.04	2.3	2.13	3.2	0	0	19	0.05	TBD	TBD	TBD	< 95
59	1	Forecast-62	KEMA	0	346	39	0.0	0.0	0.0	1,153	1,538	270 MWd/MTHM	1.3E-04	3.9E-04	7.6E-04	1.3E-05	0	0	0	0	0	0	0	5.6	5.6	0.04	2.3	2.13	3.2	0	0	19	0.05	TBD	TBD	TBD	< 95
60	1	Forecast-63	KEMA	0	346	39	0.0	0.0	0.0	1,153	1,538	270 MWd/MTHM	1.3E-04	3.9E-04	7.6E-04	1.3E-05	0	0	0	0	0	0	0	5.6	5.6	0.04	2.3	2.13	3.2	0	0	19	0.05	TBD	TBD	TBD	< 95
61	1	Forecast-64	KEMA	0	346	39	0.0	0.0	0.0	1,153	1,538	270 MWd/MTHM	1.3E-04	3.9E-04	7.6E-04	1.3E-05	0	0	0	0	0	0	0	5.6	5.6	0.04	2.3	2.13	3.2	0	0	19	0.05	TBD	TBD	TBD	< 95
62	1	Forecast-65	KEMA	0	346	39	0.0	0.0	0.0	1,153	1,538	270 MWd/MTHM	1.3E-04	3.9E-04	7.6E-04	1.3E-05	0	0	0	0	0	0	0	5.6	5.6	0.04	2.3	2.13	3.2	0	0	19	0.05	TBD	TBD	TBD	< 95
63	1	Forecast-66	KEMA	0	346	39	0.0	0.0	0.0	1,153	1,538	270 MWd/MTHM	1.3E-04	3.9E-04	7.6E-04	1.3E-05	0	0	0	0	0	0	0	5.6	5.6	0.04	2.3	2.13	3.2	0	0	19	0.05	TBD	TBD	TBD	< 95
64	1	Forecast-67	KEMA	0	346	39	0.0	0.0	0.0	1,153	1,538	270 MWd/MTHM	1.3E-04	3.9E-04	7.6E-04	1.3E-05	0	0	0	0	0	0	0	5.6	5.6	0.04	2.3	2.13	3.2	0	0	19	0.05	TBD	TBD	TBD	< 95
65	1	Forecast-Spare																																TBD	TBD	TBD	< 95
66	1	Forecast-Spare																																TBD	TBD	TBD	< 95
67	1	Forecast-Spare																																TBD	TBD	TBD	< 95
68	1	Forecast-Spare																																TBD	TBD	TBD	< 95
69	1	Forecast-Spare																																TBD	TBD	TBD	< 95
70	1	Forecast-Spare																																TBD	TBD	TBD	< 95
71	3	Forecast-Spare																																TBD	TBD	TBD	< 95
72	4	Forecast-Spare																																TBD	TBD	TBD	< 95
73	4	Forecast-Spare																																TBD	TBD	TBD	< 95
74	P	Intact PB 1	HTGR	0	181.1	13.3	0.0	0.0	0.0	1,518	1,713	72,709 MWd/MTHM	1.6E-04	0.3	1.5E-04	1.2E-05	9.6	1.2E-02	1.6E-02	12	6.3	6.7	7.8	123	123	3.0	184	172	5.8	9.4	2.6	665	2.6	TBD	TBD	TBD	139
75	P	Intact PB 2	HTGR	0	178.4	13.1	0.0	0.0	0.0	1,339	1,530	52,257 MWd/MTHM	1.4E-04	0.2	2.0E-04	1.0E-05	8.7	1.7E-02	2.1E-02	12	5.8	6.1	7.1	112	112	2.7	167	156	5.3	8.6	2.3	605	2.3	TBD	TBD	TBD	141
76	P	Intact PB 3	HTGR	0	169.9	12.5	0.0	0.0	0.0	519	702	52,257 MWd/MTHM	5.5E-05	0.1	1.8E-04	9.8E-06	3.7	1.4E-02	1.6E-02	10	2.5	2.6	3.0	48	48	1.2	72	67	2.3	3.7	1.0	265	1.0	TBD	TBD	TBD	140
77	P	Intact PB 4	HTGR	0	201.1	14.8	0.0	0.0	0.0	1,264	1,480	72,709 MWd/MTHM	1.3E-04	0.3	1.8E-04	1.3E-05	8.2	1.6E-02	2.1E-02	14	5.4	5.7	6.7	105	105	2.6	157	147	5.0	8.1	2.2	573	2.2	TBD	TBD	TBD	141
78	P	Intact PB 5	HTGR	0	167.4	12.3	0.0	0.0	0.0	1,115	1,294	52,257 MWd/MTHM	1.2E-04	0.2	1.8E-04	9.8E-06	7.3	1.6E-02	1.8E-02	12	4.8	5.1	5.9	94	94	2.3	140	131	4.5	7.2	1.9	510	2.0	TBD	TBD	TBD	140
79	P	Intact PB 6	HTGR	0	93.9	6.9	0.0	0.0	0.0	907	1,008	41,480 MWd/MTHM	9.7E-05	0.2	1.1E-04	5.4E-06	5.8	6.8E-03	9.2E-03	5	3.8	4.0	4.7	74	74	1.8	111	104	3.5	5.7	1.5	400	1.5	TBD	TBD	TBD	142
80	P	Intact PB 7	HTGR	0	208.1	15.3	0.0	0.0	0.0	1,396	1,619	52,257 MWd/MTHM	1.5E-04	0.2	2.2E-04	1.2E-05	9.1	1.7E-02	2.1E-02	13	6.0	6.4	7.4	117	117	2.9	175	164	5.6	9.0	2.4	636	2.4	TBD	TBD	TBD	140
81	P	Intact PB 8	HTGR	0	180.9	13.3	0.0	0.0	0.0	762	956	72,709 MWd/MTHM	8.0E-05	0.2	1.5E-04	1.2E-05	5.1	1.2E-02	1.4E-02	11	3.4	3.6	4.2	65	65	1.6	98	92	3.1	5.0	1.4	359	1.4	TBD	TBD	TBD	140
82	P	Intact PB 9	HTGR	0	232.5	17.1	0.0	0.0	0.0	1,374	1,624	72,709 MWd/MTHM	1.1E-04	0.3	2.0E-04	1.5E-05	7.0	4.3E-02	4.6E-02	11	4.6	4.9	5.7	90	90	2.2	135	126	4.3	6.9	1.9	490	1.9	TBD	TBD	TBD	155
		Totals		0	21,368	170,503	2,045	166	45	44,931	239,057		4.8E-03	5	2.9E-02	5.5E-02	1,151	119	99	24,719	791	835	972	15,412	15,412	377	22,947	21,523	776	1,177	318	106,634	325				

Notes

a.) Values for U-238 composition include residual amounts of U-234 and U-236.
b.) Values listed as "<" are best available bounding estimates.
c.) Maximum beta/gamma radiation measurements are corrected for Co-60 equivalency

Figure 1-1 SNF Stainless Steel Canister

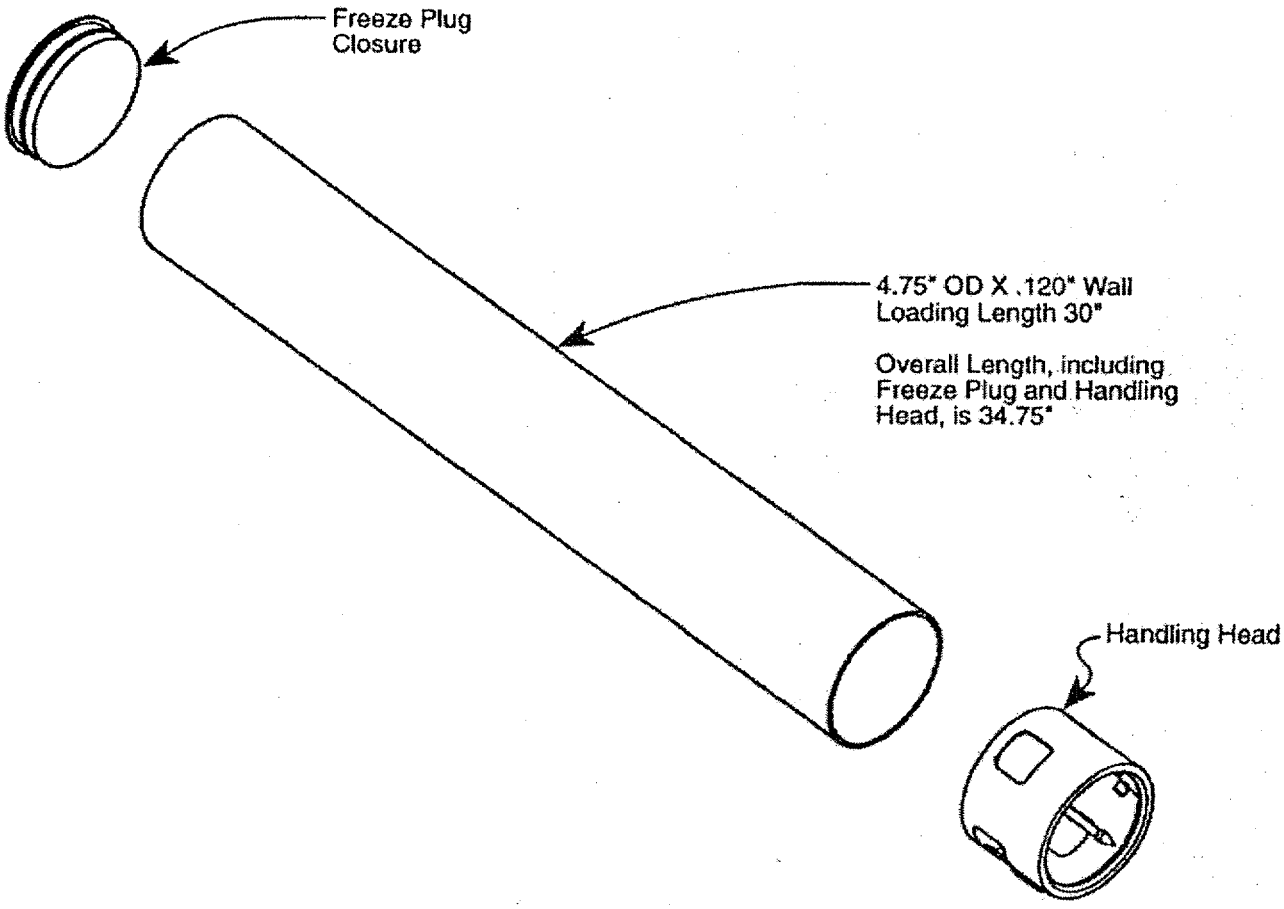

Figure 1-2 Oak Ridge Canister – Overall View with Freeze Plug

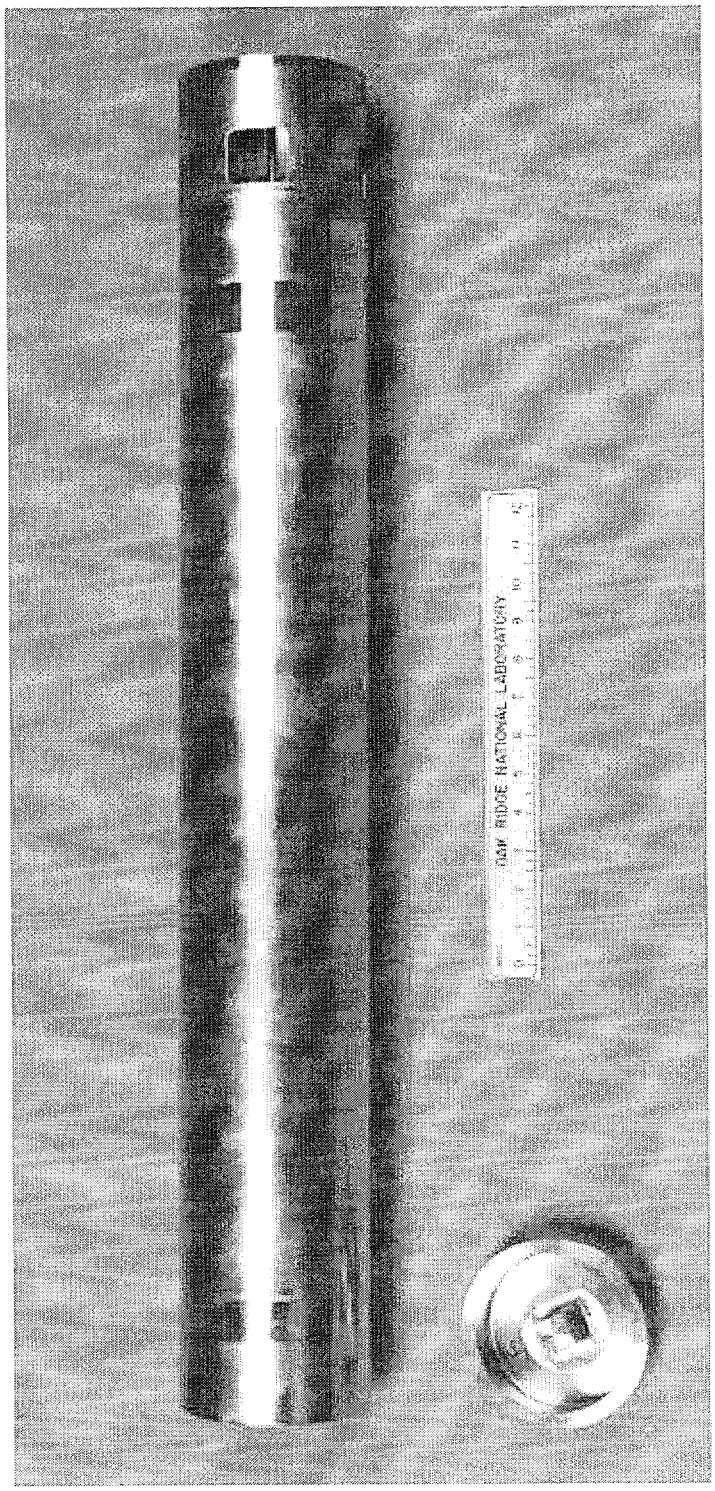

Figure 1-3 Oak Ridge Canister – Lower End View with Freeze Plug

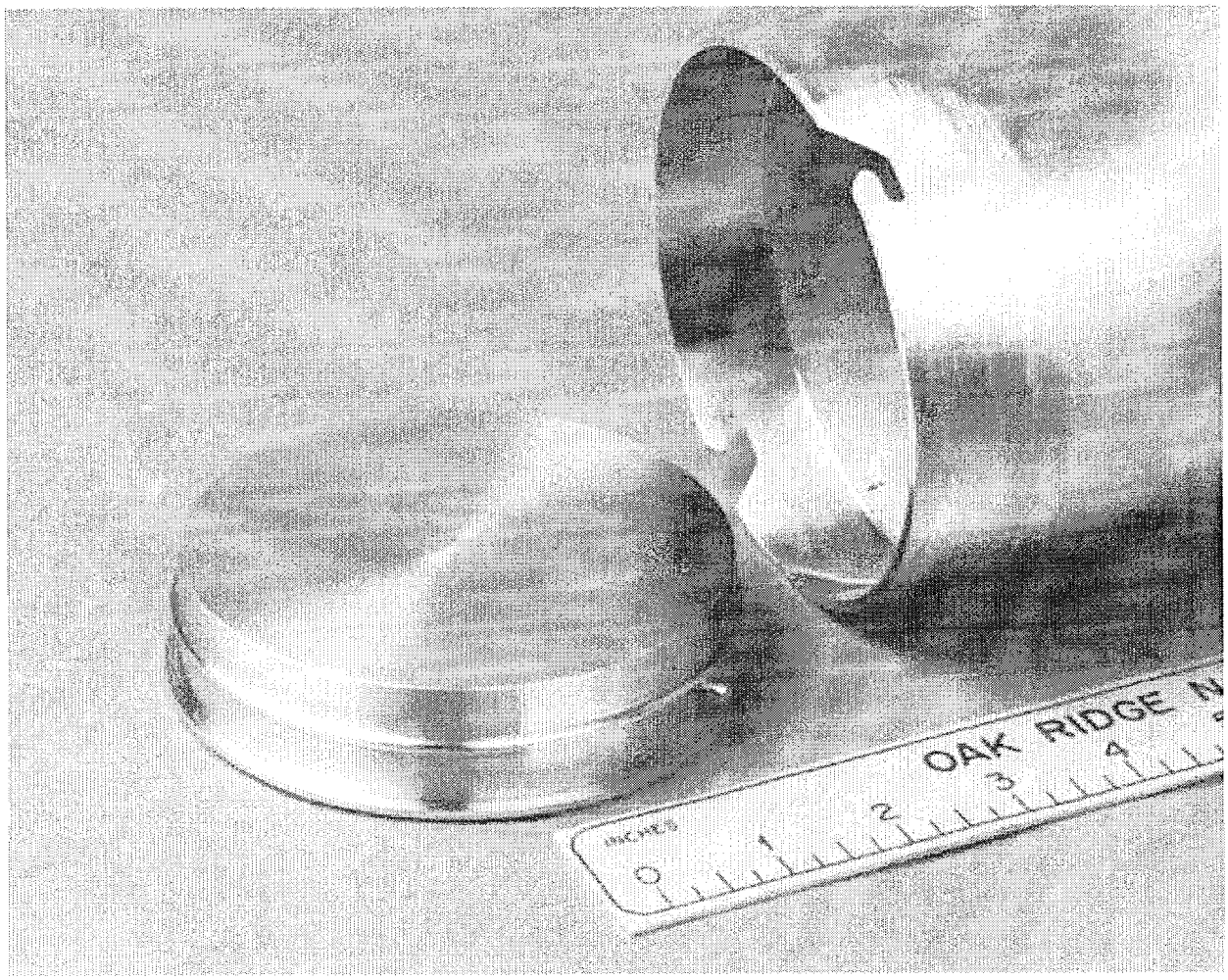

Figure 1-4 Oak Ridge Canister with Inner Sleeve and Cans

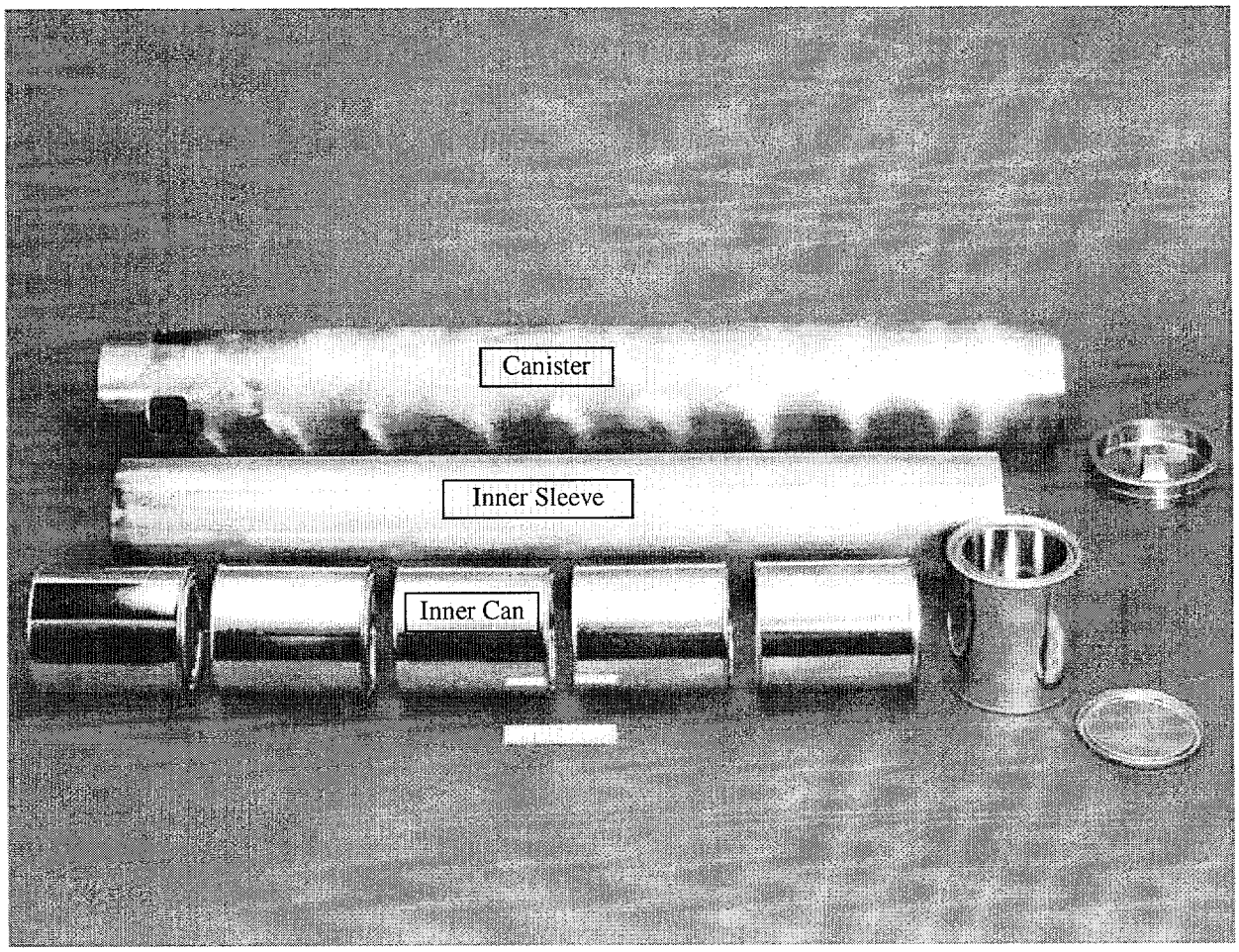

Figure 1-5 General Arrangement of the Oak Ridge SNF Container

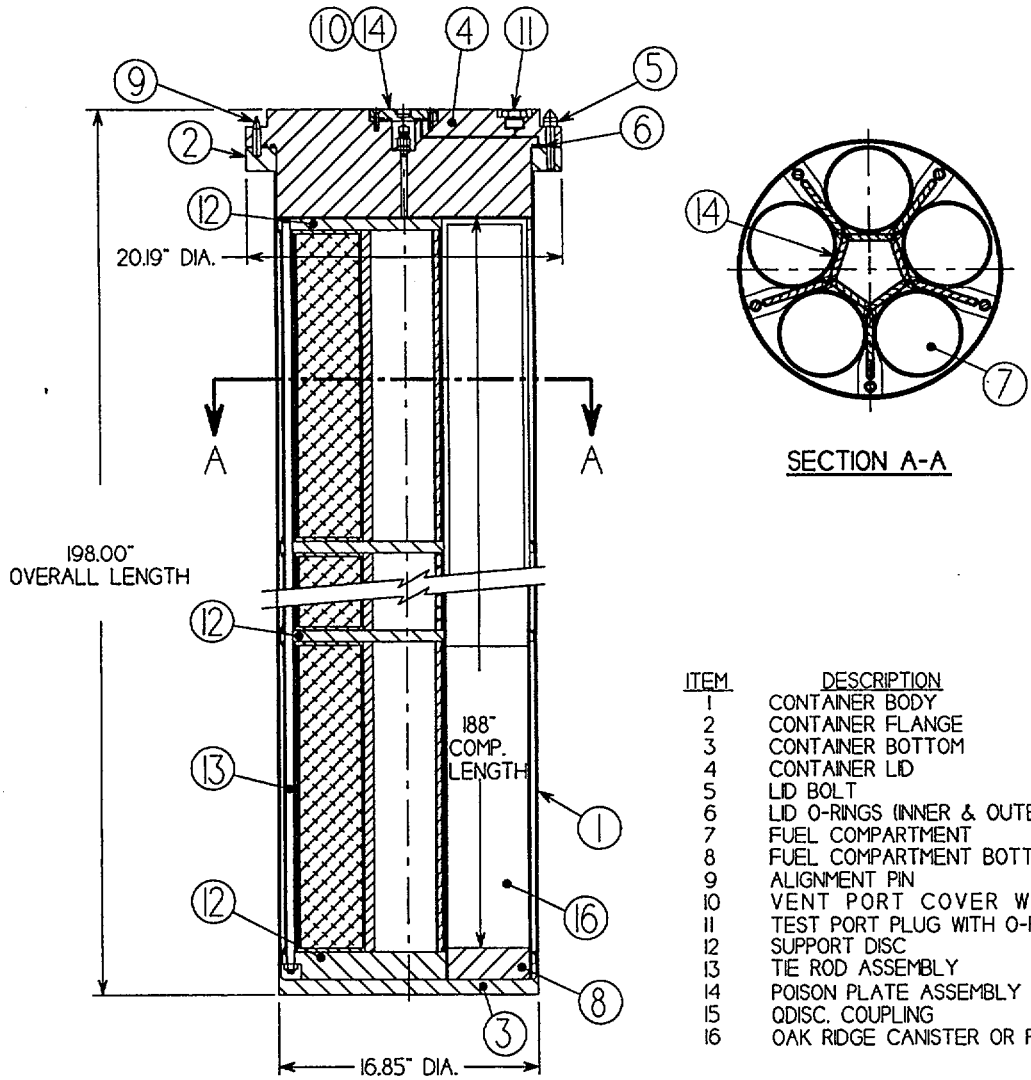

ITEM	DESCRIPTION
1	CONTAINER BODY
2	CONTAINER FLANGE
3	CONTAINER BOTTOM
4	CONTAINER LID
5	LID BOLT
6	LID O-RINGS (INNER & OUTER)
7	FUEL COMPARTMENT
8	FUEL COMPARTMENT BOTTOM
9	ALIGNMENT PIN
10	VENT PORT COVER WITH O-RINGS
11	TEST PORT PLUG WITH O-RING
12	SUPPORT DISC
13	TIE ROD ASSEMBLY
14	POISON PLATE ASSEMBLY
15	QDISC. COUPLING
16	OAK RIDGE CANISTER OR PEACH BOTTOM ASSY.

LONGITUDINAL SECTION

Test port, alignment pin rotated into section for clarity. Item 16 for pictoral purposes only.

Figure 1-6 Arrangement of Oak Ridge Container in the TN-FSV Cask

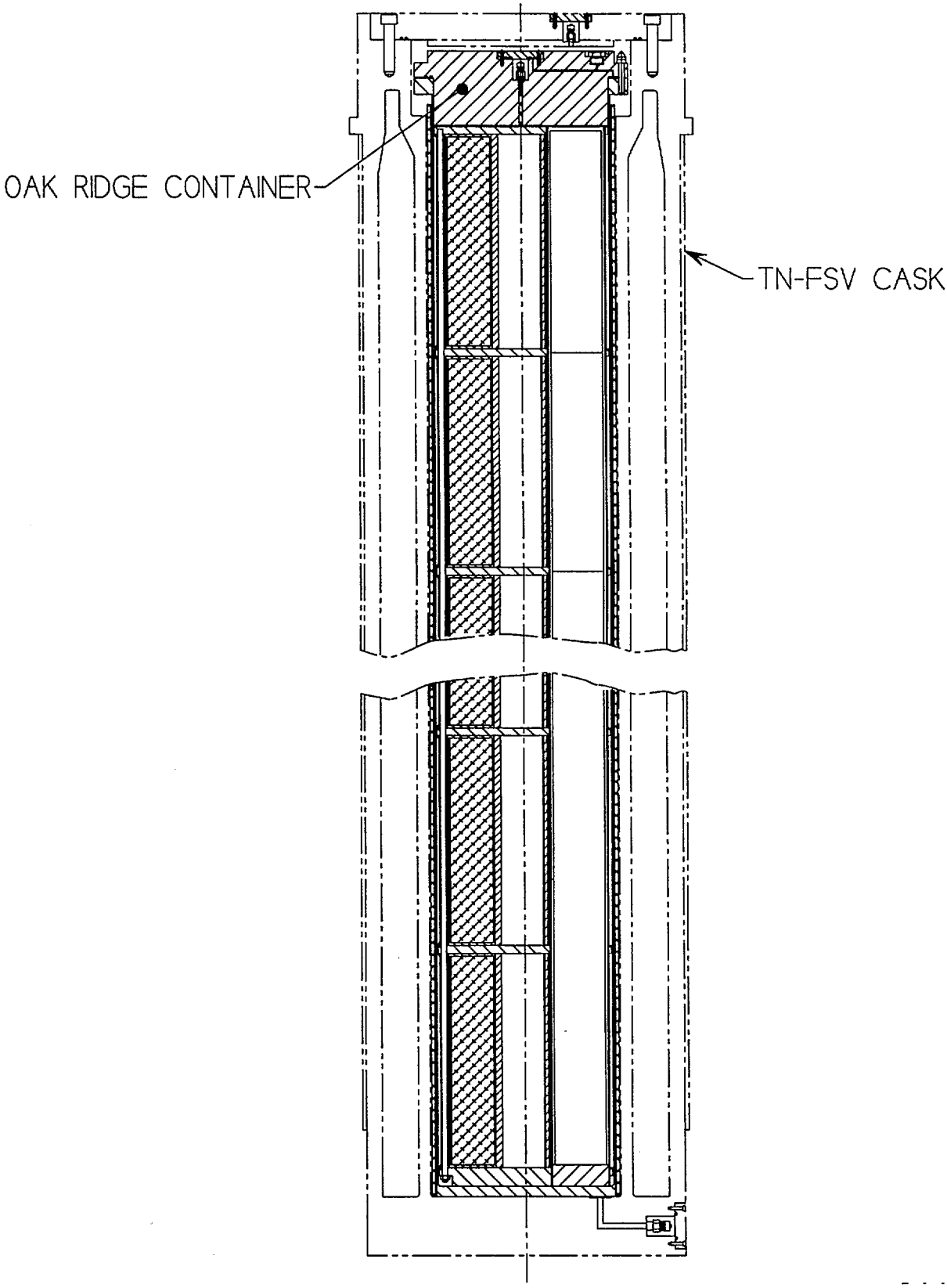

Figure 1-7 Peach Bottom Fuel Assembly Canister

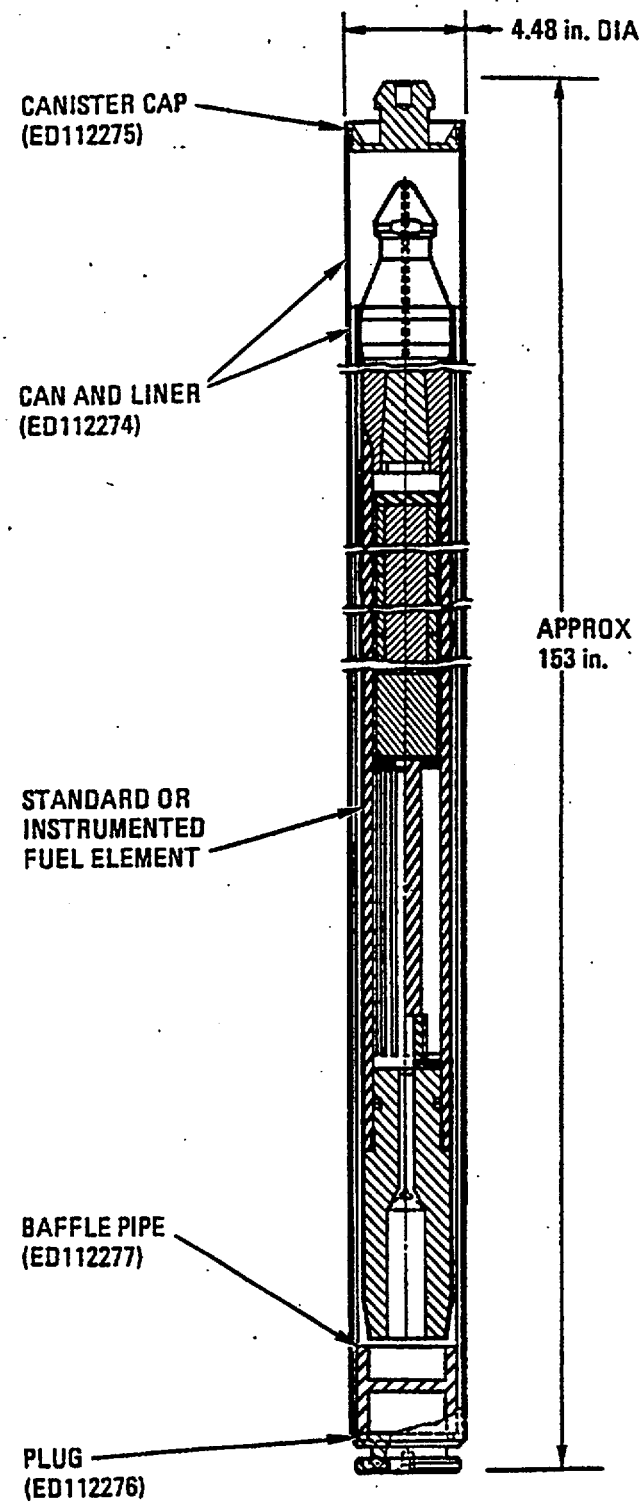

1.4 Appendix

Oak Ridge Container Drawings

Drawing No.	Title	Revision
3044-70-1	Oak Ridge Container, General Arrangement	1
3044-70-2	Oak Ridge Container, Container Weldment	1
3044-70-3	Oak Ridge Container, Details	1
3044-70-4	Oak Ridge Container, Assembly Details	0
3044-70-5	Oak Ridge Container, Poison Enclosure Details	1
3044-70-6	Oak Ridge Container, Lid Details	0
3044-70-7	Oak Ridge Container, Details	1
3044-70-8	Oak Ridge Container, Loading Arrangements	0
3044-70-9	Oak Ridge Container ASME Code Compliance and Exceptions	0
X3E020566A175	ORNL SNF Program Oak Ridge Canister SAR Information	0

2.0 STRUCTURAL EVALUATION

2.1 Structural Design

This chapter, including its appendices, presents the structural evaluation of the Oak Ridge Container installed in the TN-FSV packaging. This evaluation consists of numerical analyses of the Oak Ridge Container components to demonstrate that the TN-FSV packaging with the contents described in this Addendum satisfies applicable requirements for a Type B(U) package.

2.1.1 Discussion

The structural integrity of the Oak Ridge Container under normal conditions of transport and hypothetical accident conditions specified in 10CFR71[(1)] is shown to meet the design criteria described in Section 2.1.2. The Oak Ridge Container consists of two major structural components:

- Container Containment Vessel (Container Shell/Flange/Bottom Closure/Lid/Lid bolts)
- Fuel Basket (Support Discs, Tie Rods/Standoffs, Fuel Compartments, Poison Plates and Enclosures)

These components are described in Chapter 1 and are shown on drawings provided in Appendix 1.4. The Oak Ridge Container is designed to accommodate the Oak Ridge SNF in stainless steel canisters and the Peach Bottom fuel assemblies as discussed in Section 1.2.3. The Oak Ridge Canisters are analyzed in Appendix 2.11.7 for the confinement of the SNF during normal and accident conditions of transport. The intact Peach Bottom fuel assemblies are confined in canisters. However, as discussed in Chapter 6, no credit is taken for the confinement capabilities of the Peach Bottom Canisters as they contain intact fuel assemblies which are graphite fuel compacts and the graphite fuel sections keep the fissile material within the active fuel region. Consequently, these canisters are not analyzed for structural strength.

The Oak Ridge Container is a leak-tight container consisting of a shell body with a closure lid. The design of the fuel basket represents a typical tube-and-disc design with each tube forming a fuel compartment. All materials of construction except the lid bolts are stainless steel. The material for the lid bolts is SA-453, Type 651, Class A, a high strength alloy steel.

The fuel basket contains five (5) fuel compartments constructed from five-inch diameter schedule 10S pipes with integrally welded bottom closures. Nine (9) ¾ inch thick and one (1) 1 ¾ inch thick support disc laterally support and maintain the spacing of the fuel compartments during normal and accident conditions. The support discs transmit loads from the fuel compartments to the TN-FSV cask cavity wall. Tie-rod assemblies maintain the spacing between the support discs.

The closure lid consists of a 7.00 inch thick plate made of ASME SA 240 Type 304 or SA-182, F304 stainless steel. The lid is grooved to retain two elastomer closure seals. The lid is bolted to the flange with twelve (12) 0.5-inch diameter lid bolts. Drawings 3044-70-1 to 3044-70-8 (Appendix 1.4) show details of the Oak Ridge Container assembly, materials of construction, and weldments.

Numerical analyses have been performed for both normal and accident conditions. In general, numerical analyses have been performed for all of the regulatory events. These analyses are summarized in the main body of this section, and described in detail in Appendices 2.11.x:

2.11.1 Fuel Basket Structural Analysis
2.11.2 Oak Ridge Container Shell Structural Analysis
2.11.3 Oak Ridge Container Support Disc and Container Shell Finite Element Model Analyses
2.11.4 Oak Ridge Container Lid Bolt Analysis
2.11.5 TN-FSV Cask and Oak Ridge Container Shell Fatigue Analysis
2.11.6 Dynamic Amplification Factor For Oak Ridge Container Drop Analysis
2.11.7 Oak Ridge Canister Structural Analysis

2.1.2 Design Criteria

2.1.2.1 Oak Ridge Container Containment Vessel (Container Shell/Flange/Bottom Closure/Lid/Lid Bolt)

The Oak Ridge Container containment vessel consists of the cylindrical shell with flange, the bottom closure, and the lid. The lid bolts and seals are also part of the containment vessel as are the vent port and test plug cover plates, bolts and seals. The containment vessel is designed as an ASME Class I component in accordance with the rules of the ASME Boiler and Pressure Vessel Code, Section III, Division 3, Subsection WB[3]. The Subsection WB rules for materials, design, fabrication, and examination are applied to all of the above components to the maximum practical extent. In addition, the design meets the requirements Regulatory Guides 7.6[7] and 7.8[8].

The acceptability of the containment vessel under the applied loads, is based on the following criteria:

- Title 10, Chapter I, Code of Federal Regulations, Part 71.
- Regulatory Guide 7.6, Design Criteria
- ASME Code Design Stress Intensities
- Preclusion of Fatigue Failure
- Preclusion of Brittle Fracture

The stresses due to each load are categorized as to the type of stress induced, e.g. , membrane, bending, etc., and the classification of stress, e.g., primary, secondary, etc.

Stress limits for containment vessel components, other than bolts, for Normal (Level A) and Hypothetical Accident (Level D) Loading Conditions are given in Table 2-1. Local yielding is permitted at the point of contact where the load is applied.

The primary membrane stress and primary membrane plus bending stress are limited to S_m (S_m is the code allowable stress intensity) and 1.5 S_m, respectively, at any location in the containment vessel for normal load conditions. The hypothetical impact accidents are evaluated as short duration, Level D conditions. The stress criteria are taken from Section III, Appendix F of ASME[2-6] Code. For elastic quasi-static analysis, the primary membrane stress intensity (P_m) is limited to smaller of 2.4 S_m or 0.7 S_u, and membrane plus bending stress intensities ($P_m + P_b$) are limited to smaller of 3.6S_m or S_u. For elastic/plastic analysis, the primary membrane stress intensity (P_m) is limited to 0.7 S_u, and membrane plus bending stress intensities ($P_m + P_b$) are limited to 0.9 S_u.

The allowable stress limits for the lid bolts are listed in Table 2-2.

The allowable stress intensity value, S_m, as defined by the Code, is taken at the maximum temperature calculated for each service load condition.

The containment vessel wall, when subjected to compressive loading, is also evaluated against ASME Code rules for component supports to ensure that buckling will not occur. The acceptance criteria (allowable buckling loads) are taken from ASME Code, Section III, Subsection NF, paragraph NF-3322.1.

In addition, the analytical method provided in ASME Code Case N-284-1 is used to determine the adequacy of the Oak Ridge Container shell with respect to buckling due to external pressure.

2.1.2.2 Non-Containment Structures

The aluminum spacer sleeve, and lifting eyes are not part of the Oak Ridge Container containment vessel but do have structural functions. These components, referred to as non-containment structures, are required to react to the containment environmental loads, and in some cases share the loads with the containment vessel. The stress limits for the non-containment structures (excluding the basket) are given in Table 2-3. The non-containment structures are designed, fabricated, and inspected in accordance with the ASME Code Subsection NF[5], to the maximum practical extent, as identified in Section 2.9.

2.1.2.3 Fuel Basket (Support Discs, Tie Rods/Standoffs, Flux Traps, Fuel Compartments, Poison Plates and Enclosures)

The fuel basket is designed, fabricated, and inspected in accordance with the ASME Code Subsection NG[4], to the maximum practical extent, as identified in Section 2.9. The following exceptions are taken:

The strength of the poison plates is not used for structural support, and are therefore not evaluated in the structural analysis.

The quality assurance requirements of NQA-1 are imposed in lieu of NCA-3800. The fuel basket will not be code stamped. Therefore, the requirements of NCA are not imposed. Fabrication and inspection surveillance is performed by the design organization in lieu of an authorized nuclear inspector.

The stress limits for the fuel basket are summarized in Table 2-4. The wall thickness of the basket fuel compartment is established to meet the heat transfer, nuclear criticality, and structural requirements. The fuel basket structure must provide sufficient rigidity to maintain a subcritical configuration under the applied loads. The 304 stainless steel members in the fuel basket are the primary structural components. The neutron poison plates are the primary criticality control components.

The basis for the allowable stresses for the Type 304 stainless steel in the fuel basket is Section III, Division I, Subsection NG of the ASME Code. The primary membrane stress and primary membrane plus bending stress are limited to S_m (S_m is the code allowable stress intensity) and 1.5 S_m, respectively, at any location in the basket for normal (Design and Level A) load conditions.

The hypothetical impact accidents are evaluated as short duration, Level D conditions. The stress criteria are taken from Section III, Appendix F of the ASME Code[6]. For elastic quasi-static analysis, the primary membrane stress intensity (P_m) is limited to the smaller of 2.4 S_m or 0.7 S_u, and membrane plus bending stress intensities ($P_m + P_b$) are limited to the smaller of 3.6 S_m or S_u,. For elastic/plastic analysis, the primary membrane stress intensity (P_m) is limited to 0.7 S_u, and membrane plus bending stress intensities ($P_m + P_b$) are limited to 0.9 S_u.

The standoffs and fuel compartment walls under compressive loads are also evaluated against the ASME Code rules for component supports, to ensure that buckling will not occur. The acceptance criteria (allowable buckling loads) are taken from ASME Code, Section III, Subsection NF, Paragraph NF-3322.1.

In addition, the support discs are also evaluated against the ASME Code rules for component supports, to ensure that buckling will not occur. The acceptance criteria (allowable buckling loads) are taken from the ASME Code, Section III, Appendix F, Paragraph F-1341.3[6], plastic analysis collapse load. The allowable buckling load is equal to 100% of the calculated plastic analysis collapse load.

2.2 Weights and Centers of Gravity

The weight and center of gravity (CG) of the TN-FSV cask is summarized in Section 2.2 of the TN-FSV SAR. The weight and center of gravity of the Oak Ridge Container is presented in Table 2-5. The weights of the loaded and empty Peach Bottom and Oak Ridge canisters as well as the maximum Oak Ridge Container payload weight is summarizes in Table 2-5A.

According to the TN-FSV SAR, Section 2.2, the total weight and CG location of the empty TN-FSV cask with impact limiters are 42,000 lb. and 105.1 in. from the outer lid surface

respectively. The CG location of the TN-FSV package including the loaded Oak Ridge Container is calculated as follows:

- CG location of the Oak Ridge Container from bottom of the Container: 104.71 in.
- Distance from inside bottom of TN-FSV cask cavity to top of outer lid surface: 201.5 in.
- CG location of the Oak Ridge Container installed in the TN-FSV cask from cask outer lid surface: 201.5-104.71 = 96.79 in.
- Nominal weight of the loaded Oak Ridge Container: 4,603 lb.
- Total weight of the TN-FSV transport package loaded with the Oak Ridge Container is 42,000 lb. + 4,603 lb. = 46,603 lb.
- Therefore, the CG location of the TN-FSV package including the loaded Oak Ridge Container from the cask outer lid surface is (105.1 in. × 42,000 lb. + 96.79 in. × 4,603 lb.) / 46,603 lb = 104.28 in

2.3 Mechanical Properties of Material

The mechanical properties of the materials used in the TN-FSV cask are provided in the TN-FSV SAR, Section 2.3.

The Oak Ridge Container is constructed primarily of Type 304 stainless steel. The properties of this material at the maximum normal condition temperature of 250° F are as follows[2].

S_m = 20.0 ksi.
S_y = 23.75 ksi.
S_u = 68.5 ksi.
$E = 27.3 \times 10^6$ psi.
$\alpha = 8.90 \times 10^{-6}$ in./in. °F^{-1}

Properties of fuel basket standoff material (SA-693, Type 630, condition H1150) at 250° F are as follows[2].

S_m = 45.0 ksi.
S_y = 95.05 ksi.
S_u = 135.00 ksi.
$E = 27.5 \times 10^6$ psi.
$\alpha = 5.90 \times 10^{-6}$ in./in. °F^{-1}

The mechanical properties of the lid bolt material (SA-453, Type 651, class A) are provided in Tables 2.11.4-3 and 2.11.4-4.

2.4 General Standards for All Packages

The TN-FSV cask with Oak Ridge Container and alternate contents as described in this Addendum continues to comply with the general standards for all packages specified in 10 CFR 71.43.

2.4.1 Minimum Package Size

The minimum package size requirements are addressed for the TN-FSV Package in the TN-FSV SAR, Section 2.4.1. These requirements do not apply to the Oak Ridge Container.

2.4.2 Tamperproof Features

The tamperproof features of the TN-FSV Package are addressed in the TN-FSV SAR, Section 2.4.2. Tamper proof requirements do not apply to the Oak Ridge Container.

2.4.3 Positive Closure

Positive closure of the TN-FSV Package is addressed in the TN-FSV SAR, Section 2.4.3. Positive fastening of all access openings through the containment boundary of the Oak Ridge Container is accomplished by bolted closures, which preclude any unintentional opening. The primary lid closure system is discussed in detail in Appendix 2.11.4.

2.4.4 Chemical and Galvanic Reactions

Chemical and galvanic reactions with respect to the TN-FSV cask are discussed in TN-FSV SAR, Section 2.4.4. The containment boundary of the Oak Ridge Container is fabricated from stainless steel. Fabrication will be monitored to ensure that it is not subject to any chemical or galvanic action during that process. Furthermore, all fuel loading is performed in air eliminating the risk of chemical or galvanic reactions.

2.5 Lifting and Tie-down Standards for All Packages

The lifting and tie-down standards for the TN-FSV Package are discussed in TN-FSV SAR, Section 2.5. These requirements do not apply to the Oak Ridge Container.

2.6 Normal Conditions of Transport

The normal condition structural analysis of the TN-FSV cask is provided in the TN-FSV SAR, Section 2.6. The normal condition structural analysis of the Oak Ridge Container is provided below.

This section describes the responses of the Oak Ridge Container to the loading conditions specified by 10CFR71.71.

The design criteria established for the Oak Ridge Container for the normal conditions of transport are described in Section 2.1.2. These criteria are selected to ensure that the package performance standards specified by 10CFR71.43 and 71.51 are satisfied. Under normal conditions of transport, there will be no loss or dispersal of radioactive contents, no significant increase in external radiation levels, and no substantial reduction in the effectiveness of the packaging.

Detailed analyses of various Oak Ridge Container components subjected to individual loads are provided in the Appendices to this chapter. The limiting results from these analyses are used in this section to quantify package performance in response to the normal condition of transport load combinations, specified in 10CFR71.71 and Regulatory Guide 7.8. Each subsection provides the limiting analysis result for the affected cask component(s) in comparison to the established design criteria. These comparisons permit the minimum margin of safety for a given component subjected to a given loading condition to be readily identified. In all cases, the acceptability of the Oak Ridge Container design with respect to established criteria, and consequently with respect to 10CFR71 performance standards, is demonstrated.

2.6.1 Heat

Chapter 3 of TN-FSV SAR describes the thermal analysis of the TN-FSV Package Configuration 1, with HTGR fuel elements, subjected to high temperature environmental conditions. Chapter 3 of this Addendum describes the TN-FSV cask and Oak Ridge Container with Oak Ridge canisters and Peach Bottom fuel assemblies when subjected to a 100° F external environment as required by the normal conditions of transport specified in 10CFR 71.71. The thermal analysis results are used to support various aspects of the structural evaluations as described in the following subsections.

2.6.1.1 Maximum Temperatures

Allowable stresses for the packaging components are a function of the component temperatures, which are based on actual maximum calculated temperatures or conservatively selected higher temperatures. Chapter 3 of TN-FSV SAR and Chapter 3 of this Addendum summarize the significant temperatures calculated for the existing and modified TN-FSV packages, respectively, when subjected to high temperature environmental conditions.

These temperatures are used in establishing the allowable values for every normal and hypothetical accident (except the thermal accident, which has higher temperatures) load combination, evaluated in the TN-FSV SAR and this Addendum.

The thermal analysis results are summarized below. The summary also lists the selection of cask and Oak Ridge Container component design temperatures for structural analysis purposes.

Summary of Thermal Analysis Results

Component	Normal Condition Thermal Analysis Results (°F)		
	Chapter 3 of TN-FSV SAR	Chapter 3 of This Addendum	Selected Design Temperature
TN-FSV Cavity Wall	167	-(2)	250
TN-FSV Cask Lid/Seal Region	166	-(2)	250
Oak Ridge Container Wall	-(1)	201(3)	250
Oak Ridge Container Seal	-(1)	206(3)	250
Fuel Basket	-(1)	246(3)	250

Notes:

1. Not applicable to existing TN-FSV Package Configuration 1 with HTGR fuel elements.
2. Temperature distribution for the TN-FSV cask cavity based on a maximum decay heat of 360 watts was conservatively used as input for the Oak Ridge Container thermal analysis.
3. These temperatures are based on the results of the Oak Ridge Container thermal analysis by assuming the cask cavity wall temperature at 167 °F based on a maximum decay heat of 360 watts. For detailed assumptions and thermal analysis, see Chapter 3 of this Addendum.

2.6.1.2 Maximum Internal Pressure

The thermal analyses, presented in Chapter 3 of TN-FSV SAR and this Addendum provide the average cavity gas temperatures when subjected to a 100°F external environment as required by the normal conditions of transport specified in 10 CFR71.71. These values are used in Chapter 4 of TN-FSV SAR and this Addendum to determine the Maximum Normal Operating Pressures (MNOP). The results from these analyses are summarized below.

Summary of TN-FSV Cask and Oak Ridge Container MNOP

Component	MNOP (psig)		
	Chapter 4 of TN-FSV SAR	Chapter 4 of This Addendum	Selected Design Pressure
TN-FSV Cask Containment Vessel	8.3	2.8	30
Oak Ridge Container Containment Vessel	N/A	3.1	5

For purposes of the structural analysis of cask containment, a value of 30 psig (much higher than the Chapter 4 value) is conservatively assumed for cask body stress calculation. This pressure loading is analyzed using the ANSYS model of the cask body as described in Appendix 2.10.1 of the TN-FSV SAR, and the results are reported in Table 2.10.1-5 of that Appendix. This load case and corresponding results are designated as individual load IL-5 and are used to support evaluations of various load combinations as listed in Table 2.6-1c of TN-FSV SAR.

Even though the maximum normal operating pressure is 3.1 psig, for the structural analysis of the Oak Ridge Container containment vessel, a value of 5 psi is conservatively assumed for stress calculation. This analysis is described in detail in Appendix 2.11.2 of this Addendum.

2.6.1.3 Thermal Stresses (Hot)

The thermal analysis of the TN-FSV cask is performed as described in Chapter 3 of TN-FSV SAR. The temperature distribution from that analysis is used to perform an ANSYS structural analysis of the cask body thermal stresses, with stress results reported at the standard locations shown on Figure 2.6-1 of TN-FSV SAR. The stress results for this load case are reported in Table 2.10.1-2 in Appendix 2.10.1 of the TN-FSV SAR. This load case is designated as IL-2 and is used to support various load combinations as listed in Table 2.6-1c of TN-FSV SAR.

There will be very little stresses generated by hot thermal expansion, since the Oak Ridge Container shell, flange, bottom plate and lid are all constructed from SA-240 Type 304 or SA-182 F304 stainless steel, and the Container is not constrained by the TN-FSV cavity wall.

The fuel basket support disc thermal finite element model, as described in Chapter 3 of this Addendum, is used to determine the stresses generated in the support discs due to the maximum temperature gradient. This model is first used to determine the temperature distribution under both normal and accident conditions. The elements of the model are then changed to structural elements, and the computed temperature distribution is applied in order to determine the thermal stresses in the support disc.

The thermal stress analysis for the support disc is described in Section 2.11.3.4 of Appendix 2.11.3 of this Addendum. The computed thermal stress distribution is shown in Figure 2.11.3-16. The maximum thermal stress generated in the support disc is 644 psi. The thermal stress at the outer radius of the disc is tension, whereas the interior thermal stress is compression. With the application of the primary loads, the area in contact with the shell is in compression, thus reducing the combined stress. Therefore, this small thermal stress is negligible and has no significant affect on the overall load combinations.

2.6.1.4 Hot Environment Load Combinations

Cask body stresses for the normal condition high temperature environment are obtained by a combination of individual loads as summarized in Table 2.6-1c of TN-FSV SAR.

For this condition, it is assumed that the cask is in its normal transport configuration, mounted horizontally on the transport cradle, and supported by the front saddle and two rear trunnions. Pre-load effects on the lid bolts, 30 psi internal pressure, thermal stresses calculated in load case IL-2, and the local stresses at the trunnions due to their reactions to the dead weight loading, are also included. The maximum nodal stress intensity at each of the standard reporting locations for this load combination are listed in Table 2.6-1 of TN-FSV SAR.

The Oak Ridge Container containment vessel subject to 5 psi internal pressure is analyzed in Appendix 2.11.2 of this Addendum. The maximum calculated hoop stress is 310 psi, which is much less than the allowable stress of 20,000 psi. There will be very little stress generated by thermal expansion, since the Oak Ridge Container shell, flange, bottom plate and lid are all constructed from SA-240 Type 304 or SA-182 F304 stainless steel, and the Container is not constrained by the TN-FSV cask cavity wall.

2.6.2 Cold

2.6.2.1 Cold Environment Load Combinations at –40°F Ambient Temperature

The Regulatory Guide 7.8[8] cold environment load combination results in all cask components in thermal equilibrium at -40°F. Containment vessel thermal stresses do occur in this case due to the differential thermal expansion between the lead and steel. The thermal stresses are determined in load case IL-4 with results tabulated in Tables 2.10.1-4 of TN-FSV SAR. The cask cavity pressure at the cold environment condition is conservatively assumed to be 0 psia. This results in a net external pressure loading of 14.7 psi . The stresses due to 14.7 psi external pressure are determined in load case IL-6 with results in Table 2.10.1-6 of the TN-FSV SAR. Again, lid bolt preload, gravity, and local trunnion loads are included. The maximum nodal stress intensity at each of the standard reporting locations for this load combination are listed in Table 2.6-2 of the TN-FSV SAR.

There will be very little stresses generated by material contraction in the -40° F environment, since the Oak Ridge Container shell, flange, bottom plate and lid are all constructed from SA-240 Type 304 or SA-182 F304 stainless steel, and the Container is not constrained by the TN-FSV cask cavity wall.

The 0 psia internal cavity pressure and 14.7 psia cask external pressure is a conservative assumption made during the TN-FSV cask structural analysis. The 14.7 psig. pressure difference is applied to the cask wall only. Inside the TN-FSV cask, the pressure is assumed to be 0 psia, both between the cask wall and container, and inside the container itself. Therefore the pressure difference across the Oak Ridge Container shell is 0 psi., and can be ignored.

2.6.2.2 Thermal Stresses for Cold Environment at –20°F Ambient Temperature

The Regulatory Guide 7.8[6] requires that the stresses due to the normal and hypothetical accident load conditions to be combined with the thermal stresses for cold environment conditions at -20°F ambient temperature.

A uniform temperature of –20°F is input to the structure model to calculate the cask body stresses due to differential thermal expansion between the two shells of the cask and the lead. The thermal stresses are determined in load case IL-3 with results tabulated in Table 2.10.1-3 of the TN-FSV SAR.

2.6.3 Reduced External Pressure

Cask body stresses for the 3.5 psia ambient normal condition of transport are obtained by a combination of individual loads as summarized in Table 2.6-1c. The conservatively assumed MNOP of 30 psi results in a net internal pressure loading of 41.2 psi (30 + 14.7 –3.5). For this condition, the cask is in the horizontal orientation supported on the transport cradle by the front saddle and two rear trunnions. Lid bolt pre-load, gravity, and the local trunnion loads are included. The thermal stresses for the hot thermal condition are included in the load combination. The maximum nodal stress intensity at each of the standard reporting locations for this load combination are listed in Table 2.6-4 of TN-FSV SAR.

The reduced external pressure is not applicable to the Oak Ridge Container, since the container is installed inside the TN-FSV cask. The maximum pressure across the Oak Ridge Container shell is conservatively taken to be 5 psi., even though the maximum normal operating pressure is 3.1 psi. Stresses in the Oak Ridge Container containment vessel due to 5 psi external pressure are analyzed in Appendix 2.11.2. The maximum calculated hoop stress is 310 psi, which is much less than the allowable stress of 20,000 psi. Since the Oak Ridge Container shell, flange, bottom plate, and lid are all constructed from SA-240 Type 304 or SA-183 F304 stainless steel, there will be very little stresses generated by thermal expansion. Therefore, the thermal stress affect on the Oak Ridge Container containment vessel will be insignificant.

2.6.4 Increased External Pressure

Cask body stresses for the increased external pressure, 20 psia, normal condition of transport are obtained by a combination of individual loads as summarized in Table 2-18 of the TN-FSV SAR. The conservatively assumed minimum cask cavity pressure of 0 psia results in a net external pressure loading of 20 psi (25 psi is conservatively used). For this condition, the cask is assumed to be in the horizontal orientation, supported on the transport cradle by the front saddle and two rear trunnions.

Lid bolt pre-load, gravity, and the local trunnion loads are included. In addition, the thermal stresses for the -20°F minimum temperature are also included in the combination. The maximum nodal stress intensity at each of the standard reporting locations for this load combination are listed in Table 2.6-3 of the TN-FSV SAR.

The increased external pressure is not applicable to the Oak Ridge Container, Since the container is installed inside the TN-FSV cask. The increased external pressure across the Oak Ridge Container shell is conservatively taken to be 5 psi.

This pressure load is conservative since the temperature in the gap between the TN-FSV cask and the Oak Ridge Container and temperature inside the Oak Ridge Container will always remain roughly the same. Therefore, the maximum pressure that could occur between the TN-FSV cask and the Oak Ridge Container is roughly the same as the maximum normal operating pressure inside the Oak Ridge Container, 3.1 psi. The maximum stress generated in the Oak Ridge Container shell due to an increased external pressure is 310 psi. The normal condition pressure at which the Oak Ridge Container will buckle is calculated to be 14.3 psi. (at 250°F), therefore the Oak Ridge container will not buckle due to the 5 psi external pressure. A detailed description of the stress and buckling analysis of the Oak Ridge Container shell subjected to the external pressure is provided in Appendix 2.11. 2.

2.6.5 Shock and Vibration

2.6.5.1 Shock

TN-FSV cask body stresses for transport shock loading and their load combinations are described in Section 2.6.5.1 of the TN-FSV SAR. The TN-FSV cask body structural analysis presented in the TN-FSV SAR assumes a payload of 5,000 lb. which bounds the weight of the Oak Ridge Container. Therefore, no further structural analysis of the TN-FSV cask body is required. The stresses in the Oak Ridge Container due to transport shock are described as follows:

The transport shock loadings used to evaluate the Oak Ridge Container are based on the truck bed accelerations in ANSI N14.23[10] which are 2.3 *g* in the longitudinal direction, 1.6 *g* in the horizontal direction, and 2.5 *g* in the vertical direction. Gravity is added to the vertical acceleration giving 3.5 *g*. The resultant transverse loading is $\sqrt{1.6^2 + 3.5^2}$ or 3.85 *g*s.

The applied load used for the shock stress analysis consists of 2.3 *g*s longitudinal and 3.85 *g*s transverse. The shock loading stress analysis is performed for the Oak Ridge Container components that have the highest stresses due to acceleration loading.

Stress Due to 2.3g Longitudinal Acceleration:

In the Oak Ridge Container shell, the highest stress generated by the 16 g end drop event is 2.32 ksi. (Table 2-7). Since this calculation is linear (Appendix 2.11.2), the stress at 16 g can be ratioed to obtain the stress at 2.3 g, as follows: 2.32 ksi. × (2.3/16) = 0.33 ksi.

In the fuel basket, the highest stress generated by the 16 *g* end drop event occurs in the support discs (and standoffs), and is 11.26 ksi. (Table 2-8 , page 2-30). Since this calculation is also linear (Appendix 2.11.1), the stress at 16 *g* can be ratioed to obtain the stress at 2.3 *g*, as follows: 11.26 ksi. × (2.3/16) = 1.62 ksi.

Stress Due to 3.85g Transverse Acceleration:

The highest stresses generated in the support discs, fuel basket, and Oak Ridge Container shell due to the 20g side drop are listed in Tables 2-6, 2-7, and 2-8. Since the side drop (transverse acceleration) stress analysis of the support disc and Oak Ridge Container shell is performed using a finite element model with gap elements (Appendix 2.11.3), the stress is not linearly proportional to the applied acceleration. Therefore, the stress computed at 20 *g* can not be interpolated to obtain the stress at 3.85 *g*. Consequently, the ANSYS load step corresponding to 3.85 *g* transverse acceleration was extracted so that the stress generated in the support disc and Oak Ridge Container shell could be analyzed.

The maximum stresses generated in the Oak Ridge Container subjected to longitudinal and transverse accelerations due to a truck shock event are summarized below.

Summary of Truck Shock Stress Analysis

Applied Load	Stress Category	Support Disc Stress (ksi.)	Oak Ridge Container Shell Stress (ksi.)	Allowable Stress (ksi.)
2.3 *g* longitudinal	Compression	1.62	0.33	20.0
3.85 *g* transverse	P_m	3.01	3.39	20.0
	$P_m + P_b$	12.55	6.39	30.0

Load Combinations:

Thermal stress in Support Disc: 0.64 ksi.
Thermal stress in Oak Ridge Container shell: ≈ 0 ksi

Stress due to internal/external pressure at support disc: 0 ksi.
Stress due to internal/external pressure at Oak Ridge Container shell: 0.31 ksi.

Therefore, the maximum combined stress for the support disc is 13.19 ksi (12.55 + 0.64), and for Oak Ridge Container shell is 6.70 ksi (6.39 + 0.31). Since all of the maximum stresses generated in the support disc and Oak Ridge Container shell are much less then their corresponding allowable stresses, the support disc and Oak Ridge Container shell are structurally adequate to withstand a shock event.

2.6.5.2 Vibration

The input loading conditions used to evaluate the Oak Ridge Container for transport truck vibration are also obtained from truck bed accelerations in ANSI N14.23[10]. The peak inertia values used are 0.60 *g* in the vertical direction, 0.30 *g* in the longitudinal direction, and 0.30 *g* in the lateral direction.

The resultant transverse load is $(0.6^2 + 0.3^2)^{1/2} = 0.67\ g$. These accelerations are very small relative to the normal condition free drop and shock accelerations. Therefore, the stresses generated by the transport truck vibration are insignificant and are bounded by the stresses generated by the truck shock event.

2.6.6 Water Spray

The water spray condition does not apply to the Oak Ridge Container.

2.6.7 Free Drop

TN-FSV cask body stresses for the one foot free drop normal condition of transport and their load combinations are described in Section 2.6.7 of the TN-FSV SAR. Since the maximum pay load weight remains unchanged, the cask body stresses will not be affected by installing the Oak Ridge Container inside the TN-FSV cask; therefore, new analyses for the cask body are not required. The stresses in the Oak Ridge Container due to the one foot drop are described as follows:

Two drop orientations are considered credible for the one-foot free drop normal condition of transport. The structural response of the Oak Ridge Container is evaluated for a one-foot end drop and a one-foot side drop. The following accelerations due to normal condition end and side drops (TN-FSV SAR Appendix 2.10.2), including 1.10 Dynamic Amplification Factor (Appendix 2.11.6) are used as the applied load.

Summary of Applied Load Caused by 1 Foot Free Drop

Impact Load	Normal Conditions (1 foot drop)
Axial g load (end drop)	14 gs × 1.10 ≈ 16 gs.
Transverse g load (side drop)	17 gs × 1.10 ≈ 20 gs.

Detailed structural analyses of the Oak Ridge Container due to one foot end drop and side drop are described in the following Appendices of this Addendum.

Appendix 2.11.1	Fuel Basket Structural Analysis
Appendix 2.11.2	Oak Ridge Container Shell Structural Analysis
Appendix 2.11.3	Oak Ridge Container Support Disc and Container Shell Finite Element Model Analyses

A summary of the results of the stress and buckling analyses for the Oak Ridge Container subjected to normal condition free drop events are provided in Tables 2-6 through 2-9 of this Addendum.

Since all of the maximum stresses generated in the Oak Ridge Container are less then their corresponding allowable stresses, the Oak Ridge Container is structurally adequate to withstand a one foot free drop event.

2.6.8 Corner Drop

This condition does not apply to the TN-FSV cask, and the Oak Ridge Container, since the package weight is in excess of 100 kg. (220 lb.).

2.6.9 Compression

Compression does not apply to the Oak Ridge Container.

2.6.10 Penetration

Penetration does not apply to the Oak Ridge Container.

2.6.11 Lid Bolt Analysis

There are two sets of closure lid bolts in the TN-FSV Package, which are:

1. TN-FSV Cask Lid Bolts
2. Oak Ridge Container Lid Bolts

The TN-FSV cask lid bolt analysis is summarized in TN-FSV SAR, Section 2.6.12, and a detailed analysis is presented in TN-FSV SAR, Section 2.10.1.3. The Oak Ridge Container lid bolt analysis is described in detail in Appendix 2.11.4 of this Addendum, and is summarized below.

The Oak Ridge Container lid bolt analysis is based on NUREG/CR-6007[9]. The bolts are analyzed for the following normal and accident condition loadings: operating pre-load, gasket seating load, internal pressure, temperature changes, impact loads, and puncture loads.

The bolt pre-load is calculated to withstand the worst case load combination and to maintain a clamping (compressive) force on the closure joint, both under normal and accident conditions. Based upon the load combination results (see Appendix 2.11.4, Section 2.11.4.3), it is shown that a positive (compressive) load is maintained on the clamped joint for all load combinations.

Therefore, for both normal and accident load cases, the maximum non-prying tensile force of 3,600 lb. from pre-load (without temperature load) is used for bolt stress calculations. A summary of the calculated and allowable lid bolt stresses is provided below.

Summary of Calculated and Allowable Container Lid Bolt Stresses

Stress Type	Normal Condition		Accident Condition	
	Stress	Allowable	Stress	Allowable
Average Tensile (ksi.)	25.4	41.2	25.4	61.8
Shear (ksi)	6.0	24.8	6.0	37.1
Combined (ksi)	28.0	56.6	Not Required(9)	
Interaction E.Q. $R_t^2 + R_s^2 < 1$	0.435	1	0.194	1
Bearing Stress (ksi)	13.2	23.75	Not Required(9)	

Based on the results of the analysis, the following conclusions can be drawn.

1. Bolt stresses meet the acceptance criteria of NUREG/CR-6007, "Stress Analysis of Closure Bolts for Shipping Casks".

2. A positive (compressive) load is maintained during all normal and accident condition loads, since the bolt preload is higher than all applied loads.

A similar analysis of the Oak Ridge Container vent port cover bolts was performed in Appendix 2.11.4, Section 2.11.4.8. The vent port cover bolt analysis demonstrates that a compressive load is maintained during all normal and accident condition loads. The maximum stress in the vent port cover bolts is caused by the maximum bolt torque preload, and is 12,618 psi, which is less than the allowable stress of 15,800 psi.

2.6.12 Fatigue Analysis

The following four TN-FSV Package components are analyzed for fatigue damage.

1. TN-FSV cask containment boundary
2. TN-FSV cask Lid Bolts
3. Oak Ridge Container shell
4. Oak Ridge Container lid bolts

The TN-FSV cask containment boundary and lid bolt fatigue analysis presented in this addendum are reevaluated based on the Oak Ridge Container shipments. The purpose of the fatigue analysis is to show that the containment component stresses are within acceptable limits under normal transport conditions. This is done by determining the fatigue damage factor for each normal transport event at the locations on the component with the highest stresses. The cumulative fatigue damage or usage factor for all of the events is conservatively determined by adding the fatigue usage factors for the individual events, assuming these maximum stress intensities occur at the same location. If the fatigue damage factor is less than 1 for a given number of cycles (round trip shipments), then the component analyzed will not fail due to fatigue.

The fatigue analysis is based on the procedure described in Regulatory Guide 7.6[7] and ASME Code Section III Appendices. When determining the stress cycles, consideration is given to the superposition of individual loads which can occur together and produce a total stress intensity range greater than the stress intensity range of individual loads. Also, the maximum stress intensities for all individual loads are conservatively combined simultaneously.

Detailed fatigue analyses are included in Appendix 2.11.5 of this Addendum for TN-FSV containment vessel, TN-FSV cask lid bolt and Oak Ridge Container shell. The Oak Ridge Container lid bolt fatigue analysis is described in Appendix 2.11.4 of this Addendum. The results of the fatigue analyses are summarized below.

Summary of Fatigue Analysis

Component	Reference Section	Damage Factor	# Round Trips
TN-FSV Containment Boundary	2.11.5.2	0.00	>350
TN-FSV Lid Bolts	2.11.5.3	0.93	>350
Oak Ridge Container Shell	2.11.5.4	0.00	>350
Oak Ridge Container Lid Bolts	2.11.4.6	0.46	>500

Based on the results of these fatigue evaluations, the following conclusions can be made.

- Fatigue failure will not occur in the TN-FSV cask containment vessel
- Assuming the cask lid bolts are changed after 350 round trip shipments, the TN-FSV cask lid bolts will not fail due to fatigue, since the total damage factor is less than one.
- Fatigue failure will not occur in the Oak Ridge Container shell.
- If the Oak Ridge Container lid bolts are replaced after every 500 round trip shipments, they will not fail due to fatigue during transport.

2.7 Hypothetical Accident Conditions

The accident condition structural analysis of the TN-FSV cask is provided in the TN-FSV SAR, Section 2.7. The accident condition structural analysis of the Oak Ridge Container is provided below.

This section describes the response of the Oak Ridge Container to the accident loading conditions specified by 10CFR71.73. The design criteria established for the Oak Ridge Container for the hypothetical accident conditions are described in Section 2.1.2. These criteria are selected to ensure that the packaging performance standards specified by 10CFR71.51 are satisfied.

The presentation of the hypothetical accident condition analyses and results is accomplished in the same manner as that used for the normal condition of transport. The detailed analyses of the various packaging components under different loading conditions are presented in the Appendices to this Chapter. The limiting results for the specified hypothetical accident loading conditions are taken from the Appendices and summarized here along with a comparison made to the established design criteria. In all cases, the acceptability of the Oak Ridge Container design with respect to hypothetical accident loads is demonstrated.

2.7.1 Free Drop

TN-FSV cask body stresses for the 30 foot free drop and their load combinations are described in Section 2.7.1 of the TN-FSV SAR. Since the maximum weight of the payload is bounded by the payload weight analyzed in the TN-FSV SAR, the cask body stresses will not be affected by installing the Oak Ridge Container inside the TN-FSV cask. Therefore, new analyses of the cask body are not required. The stresses in the Oak Ridge Container due to the 30 foot drop are described as follows:

The response of the Oak Ridge Container is evaluated for a free drop from a height of 30 feet onto an unyielding surface at various orientations. The two accident condition drop orientations that generate the highest longitudinal and transverse accelerations are the 30 foot end and 30 foot side drops respectively. While other drop orientations, such as the C.G. over corner and slap down drops, cause large damage to the impact limiters, the accelerations seen during these are much less than those generated during the side and end drops (see TN-FSV SAR, Appendices 2.10.2 and 2.10.3). The structural response of the Oak Ridge Container is evaluated for a 30 foot end drop and a 30 foot side drop. The following accelerations due to accident condition end and side drops (TN-FSV SAR Appendix 2.10.2), including 1.10 Dynamic Amplification Factor (Appendix 2.11.6) are used as the applied load.

Summary of Applied Load Caused by 30 Foot Free Drop

Impact Load	Accident Conditions (30 foot drop)
Axial g load (end drop)	54 gs × 1.10 ≈ 60 gs.
Transverse g load (side drop)	71 gs × 1.10 ≈ 80 gs.

Detail structural analyses of the Oak Ridge Container due to 30 foot end drop and side drop are described in the following Appendices of this Addendum.

Appendix 2.11.1	Fuel Basket Structural Analysis
Appendix 2.11.2	Oak Ridge Container Shell Structural Analysis
Appendix 2.11.3	Oak Ridge Container Support Disc and Container Shell Finite Element Model Analyses

A summary of the results of the stress and buckling analyses for the Oak Ridge Container subjected to accident condition free drop events is provided in Tables 2-10 through 2-13 of this Addendum.

Since all of the maximum stresses generated in the Oak Ridge Container are less then their corresponding allowable stresses, the Oak Ridge Container is structurally adequate to withstand a 30 foot free drop event.

2.7.2 Puncture

This section does not apply to the Oak Ridge Container, since the TN-FSV cask is designed to withstand a puncture event and prevent penetration of the puncture bar through the cask wall (TN-FSV SAR, Section 2.7.2).

2.7.3 Thermal

The analysis of the thermal accident is presented in Chapter 3 of this Addendum. The initial condition is steady state, at an ambient temperature of 100°F and maximum decay heat. The initial steady state condition is followed by a 0.5 hour severe thermal transient which is then followed by a cool-down period.

The temperature distribution from the thermal accident analysis is reported in Chapter 3. The thermal gradient across the support discs is very similar to that of the normal condition hot and cold environments. Since the thermal gradient across the canister is relatively insensitive to the ambient environment, the resulting thermal stress due to thermal gradient in the thermal accident environment will be of the same order as that in the hot environment, which is very low (0.64 ksi.).

2.7.4 Immersion – Fissile Material

This section does not apply to the Oak Ridge Container.

2.7.5 Immersion – All Packages

This section does not apply to the Oak Ridge Container.

2.7.6 Summary of Damage

From the analysis presented in Sections 2.7.1 through 2.7.5, it has been shown that the accident condition sequence of events will not result in any significant damage to the Oak Ridge Container.

During the 30 foot drop event the TN-FSV Package impact limiters absorb the impact energy, and the TN-FSV Cask shell protects the Oak Ridge Container shell. Consequently, the Container flange and seal regions will not be affected by the 30 foot drop.

The Stresses generated by the 30 foot drop event are presented in Tables 2-10 through 2-13. All stress presented in these tables are less than their corresponding allowable stresses.

It is also shown in Appendix 2.11.2 that the stresses in the Oak Ridge Container shell due to the 30 foot drop event are small enough to preclude buckling in accordance with ASME Code Case N-284.

The Oak Ridge Container closure maintains a leak tight seal under accident conditions, and the lid bolt stresses do not exceed the allowable stresses set forth by NUREG 6007[9] as shown in Appendix 2.11.4.

The TN-FSV cask is designed to withstand a puncture event and prevent penetration of the puncture bar through the cask wall (TN-FSV SAR, Section 2.7.2). Also, the TN-FSV cask is designed to withstand the immersion event (TN-FSV SAR, Section 2.7.5). Consequently, the Oak Ridge Container is protected against damage from the puncture and immersion events.

During the hypothetical 30 minute thermal accident, the stresses generated in the Oak Ridge Container wall will not exceed 1 ksi., which is negligible (Section 2.7.3).

As described above, the integrity of the Oak Ridge Container is not compromised by the accident event sequence set forth by 10 CFR71.73 since it meets the design criteria of Regulatory guide 7.6 for the load combinations identified in Regulatory guide 7.8.

2.8 Special Form / Fuel Rods

2.8.1 Special Form

This section does not apply to the Oak Ridge Container.

2.8.2 Fuel Rods

This section does not apply to the Oak Ridge Container.

2.9 ASME Code Exceptions

The Oak Ridge Container containment boundary is designed, fabricated, and inspected in accordance with the ASME Code Subsection WB to the maximum practical extent. The fuel basket is designed, fabricated, and inspected in accordance with ASME Code Subsection NG to the maximum practical extent. Other Oak Ridge Container components, such as the spacer sleeve, are designed per ASME Code Subsection NF.

Component	Reference ASME Code/Section	Code Requirement	Exception, Justification & Compensatory Measures
Oak Ridge Container Containment Vessel	WB-1100/ WB-2000	Stamping and preparation of reports by the Certificate Holder, Surveillances, Use of ASME Certificate Holders	The Oak Ridge Container is not N/TP stamped, nor is there a code design specification or stress report generated. A design criteria document is generated in accordance with TN's QA Program and the design and analysis performed under TN's QA Program and presented in this SAR Addendum. The Oak Ridge Container may also be fabricated by other than N-stamp holders and materials may be supplied by other than ASME Certificate holders. Surveillances are performed by TN rather than by an Authorized Nuclear Inspector (ANI).
Oak Ridge Container Containment Vessel	NCA-3800	QA Requirements	The quality assurance requirements of NQA-1 or 10 CFR 71 are imposed in lieu of NCA-3800 requirements.
Oak Ridge Container Containment Vessel	WB-6200	Hydrostatic Testing	The containment vessel is not hydrostatically tested in accordance with the requirements of the ASME B&PV Code, Section III, Articles WB-6200. 10CFR71.85(b) does not require hydrostatic testing if the MNOP is less than 5 psi.

Component	Reference ASME Code/Section	Code Requirement	Exception, Justification & Compensatory Measures
Oak Ridge Container Containment Vessel	WA-8000	Requirements for nameplates, stamping and reports per NCA-8000	Oak Ridge Container is to be marked and identified in accordance with 10 CFR71 requirements. Code stamping is not required. QA data package to be in accordance with TN approved QA program.
Oak Ridge Container Containment Vessel	WB-1132	The design specification shall define the boundary of a component to which another component is attached.	A code design specification was not prepared for the Oak Ridge Container. A TN design criteria was prepared in accordance with TN's QA program.
Basket poison plates	NG-2000	Use of ASME Materials	No structural credit is taken for the poison material. The poison material provides criticality control and heat transfer. They are not code materials.

2.10 References

1. Title 10, Code of Federal Regulations, Part 71, Packaging and Transportation of Radioactive Materials, 1-1-99 Edition.

2. American Society of Mechanical Engineers, ASME Boiler and Pressure Vessel Code, Section II, Part D, 1998.

3. ASME B&PV Code, Section III, Division 1, Subsection WB, 1998.

4. ASME B&PV Code, Section III, Division 1, Subsection NG, 1998.

5. ASME B&PV Code, Section III, Division 1, Subsection NF, 1998.

6. ASME B&PV Code, Section III, Division 1, Appendix F, 1998.

7. Design Criteria for the Structural Analysis of Shipping Cask Containment Vessels, USNRC Regulatory Guide 7.6, Rev. 1, March 1978.

8. Load Combinations for the Structural Analysis of Shipping Casks for Radioactive Material, USNRC Regulatory Guide 7.8, Rev. 1, March 1989.

9. Stress Analysis of Closure Bolts for Shipping Casks, NUREG/CR-6007, 1992.

10. Draft American National Standard Design Basis for Resistance to Shock and Vibration, ANSI N14.23, May, 1980.

Table 2-1 Containment Vessel Stress Limits

CLASSIFICATION	STRESS INTENSITY LIMIT
Normal (Level A) Conditions[1]	
P_m	S_m
P_l	1.5 S_m
(P_m or P_l) + P_b	1.5 S_m
Shear Stress	0.6 S_m
Bearing Stress	S_y
(P_m or P_l) + P_b + Q	3 S_m
(P_m or P_l) + P_b + Q + F	S_a
Hypothetical Accident (Level D)[2]	
P_m	Smaller of 2.4 S_m or 0.7 S_u
P_l	Smaller of 3.6 S_m or S_u
(P_m or P_l) + P_b	Smaller of 3.6 S_m or S_u
Shear Stress	0.42 S_u

NOTES:

1. Classifications and stress sntensity limits are as defined in ASME B&PV Code, Section III, Subsection WB[3].

2. Stress intensity limits are in accordance with ASME B&PV Code, Section III, Appendix F[6].

3. When evaluating the results from the nonlinear elastic plastic analysis, the general primary membrane stress intensity, P_m, shall not exceed 0.7 S_u and the maximum primary stress intensity at any location [(P_l or P_m) + P_b] shall not exceed 0.9 S_u.

Table 2-2 Containment Bolt Stress Limits
(Ref. 1, 7)

CLASSIFICATION	STRESS INTENSITY LIMIT
Normal (Level A) Conditions [2]	
Average Tensile Stress	$2\ S_m$
Maximum Combined Stress	$3\ S_m$
Bearing Stress	S_y
Hypothetical Accident (Level D)[3]	
Average Tensile Stress	Smaller of S_y or $0.7\ S_u$
Average Shear Stress	Smaller of $0.4\ S_u$ or $0.6\ S_y$
Maximum Combined Stress	S_u
Combined Shear & Tension	$R_t^2 + R_s^2 < 1$[4]

NOTES:

1. The stress analysis of the lid bolt is performed in accordance with NUREG/CR-6007[9] described in Appendix 2.11.4. The stress limits for the lid bolts are listed separately in Tables 2.11.4-3 and 2.11.4-4).

2. Classifications and stress limits are as defined in ASME B&PV Code, Section III, Subsection WB[3].

3. Stress limits are in accordance with ASME B&PV Code, Section III, Appendix F[6].

4. R_t : Ratio of average tensile stress to allowable average tensile stress
   R_s : Ratio of average shear stress to allowable average shear stress

5. All stresses include the effect of tensile and torsional loads due to bolt preloading.

Table 2-3 Non Containment Structures Stress Limits

CLASSIFICATION	STRESS INTENSITY LIMIT
Normal (Level A) Conditions [1]	
P_m	S_m
P_l	$1.5\ S_m$
$(P_m$ or $P_l) + P_b$	$1.5\ S_m$
$(P_m$ or $P_l) + P_b + Q$	$3\ S_m$
Shear Stress	$0.60\ S_m$
Bearing Stress	S_y
Hypothetical Accident (Level D) [2]	
P_m	$0.7\ S_u$
P_l	S_u
$(P_m$ or $P_l) + P_b$	S_u
Shear Stress	$0.42\ S_u$

NOTES:

1. Classifications and stress intensity limits are as defined in ASME B&PV Code, Section III, Subsection NF[5].

2. Stress intensity limits are in accordance with ASME B&PV Code, Section III, Appendix F[6].

Table 2-4 Basket Stress Limits

CLASSIFICATION	STRESS INTENSITY LIMIT
Normal (Level A) Conditions [1]	
P_m	S_m
P_l	1.5 S_m
(P_m or P_l) + P_b	1.5 S_m
(P_m or P_l) + P_b + Q	3 S_m
(P_m or P_l) + P_b + Q + F	S_a
Shear Stress	0.6 S_m
Hypothetical Accident (Level D) [2]	
P_m	Smaller of 2.4 S_m or 0.7 S_u
P_l	Smaller of 3.6 S_m or S_u
(P_m or P_l) + P_b	Smaller of 3.6 S_m or S_u
Shear Stress	Smaller of 0.42 S_u or 2(0.6 S_m)

NOTES:

1. Classifications and stress intensity limits are as defined in ASME B&PV Code, Section III, Subsection NG[4].

2. Limits are in accordance with ASME B&PV Code, Section III, Appendix F[6].

3. When evaluating the results from the nonlinear elastic plastic analysis, the general primary membrane stress intensity, P_m, shall not exceed 0.7 S_u and the maximum primary stress intensity at any location [(P_l or P_m) + P_b] shall not exceed 0.9 S_u.

Table 2-5 Summary of Oak Ridge Container Weight and Center of Gravity

Component (quantity)	Nominal dimension weight (lb.)	Maximum dimension weight (lb.)	C.G. location (in.) from cask cavity base
Fuel Compartments + Compartment Spacers (5)	693	741	87.26
Container (1)	507	540	93.7
Small Poison Plates (45)	83	84	96.7
Large Poison Plates (45)	108	110	96.7
Tie Rods (5)	54	61	96.39
Standoffs (45)	93	112	96.7
Poison Enclosure (9)	272	285	96.7
Support Discs (10)	208	217	85.5
Lid (1) + Lid Bolts (12)	487	488	194.65
Aluminum Spacer Sleeve (1)	330	334	96.5
Empty Oak Ridge Container	**2,835**	**2,972**	**109.83**
Fuel Assemblies (20)	1,600	1,600	96.5
Flux Traps (15)	168	189	96.5
Total	**4,603**	**4,761**	**104.71**

Notes:

1. Weight and center of gravity calculation considers 20 Oak Ridge Canisters and 15 flux traps. Other loading arrangements are bounded by this arrangement.

Table 2-5A Summary of Oak Ridge Container Payload Weight

Oak Ridge Canister	
Component	**Maximum Weight (lb.)**
Maximum weight of the empty Oak Ridge Canister	23(1)
Maximum weight of contents per Oak Ridge Canister (including any secondary containers)	72(2)
Maximum weight of a loaded Oak Ridge Canister	95
Average gross weight for the Oak Ridge Canisters (including contents)	80
Peach Bottom Canister	
Component	**Maximum Weight (lb.)**
Weight of intact Peach Bottom fuel assembly (includes fuel and structural material that make up the PB fuel assembly)	100(3)
Weight of empty Peach Bottom canister (includes aluminum canister and end plugs, and steel liner)	55(3)
Gross weight of Peach Bottom canister (includes canister, liner, and intact Peach Bottom fuel assembly contained within the canister)	155(3)
Total	
Component	**Maximum Weight (lb.)**
Maximum total weight for all canisters in a shipment (either all Oak Ridge canisters or a combination of Oak Ridge and Peach Bottom canisters)	1,600

NOTES:

(1) This weight includes the canister shell/handling head weldment, and the freeze plug. The weights of the inner sleeve, any other internal containers, and the contents are not included. Weights of each canister shell/handling head weldment and each freeze plug are measured after fabrication and recorded in the data package for each canister. The measured weights are summed for each canister.

(2) The maximum weight of the contents of an Oak Ridge canister is 72 lb. This weight includes the SNF material, the inner sleeve, and any other internal containers. Content weights are measured and recorded in the data package for each canister.

(3) Gross weights have been measured for each of the 9 canisters containing intact Peach Bottom assemblies in storage in Oak Ridge. The total weight of the aluminum canister, aluminum end caps, and the steel liner in the canister was calculated from the available canister fabrication drawings. By subtracting this calculated weight of the canister and liner from the measured gross weight, the weight of each intact Peach Bottom assembly was determined. The intact Peach Bottom assemblies are each in a Peach Bottom canister and are not accessible to be weighed directly.

Table 2-6 Summary of Support Disc Normal Condition Stress Analysis

Drop Orientation	Stress Category	Maximum Stress (ksi)	Allowable Stress (ksi)
End Drop (16 g)	P_m	0.0	20.0
	$P_m + P_b$	5.15	30.0
	Bearing	11.26	23.75
0° Side Drop (20 g)	P_m	11.47	20.0
	$P_m + P_b$	11.97	30.0
36° Side Drop (20 g)	P_m	13.76	20.0
	$P_m + P_b$	29.45	30.0

Table 2-7 Summary of Oak Ridge Container Shell Normal Condition Stress Analysis

Component	Applied Load	Stress Category	Applied Stress (ksi.)	Allowable Stress (ksi.)
Oak Ridge Container shell	5 psi. internal & external pressure (Normal conditions)	Hoop	0.31	20.00
		Buckling	0.31	0.88
	16 g End drop (Normal conditions)	Compression	2.32	20.00
		Buckling	2.32	9.37
	20 g, 0° Side Drop	Compression	10.04	20.00
		Bending + Compression	11.21	30.00
	20 g, 36° Side Drop	Compression	5.70	20.00
		Bending + Compression	11.69	30.00
Oak Ridge Container bottom plate	5 psi. internal & external pressure (Normal conditions)	Compression	0.16	20.00
		Bending + Compression	0.42	30.00

Table 2-8 Summary of Normal Condition Stress Analysis for the Standoffs, Tie Rods, Flux Traps, and Fuel Compartments

Component	Applied Load	Stress Category	Applied Stress (ksi.)	Allowable Stress (ksi.)
Standoffs	16 *g* End drop (Normal conditions)	Compression	11.26	45.00
		Buckling	11.26	26.16
Tie Rods	20 *g* Side drop (Normal conditions)	Shear	1.40	12.00
Flux Traps	16 *g* End drop (Normal conditions)	Compression	2.52	20.00
		Buckling	2.52	10.67
Fuel Compartment	16 *g* End drop (Normal conditions)	Compression	1.04	20.00
		Buckling	1.04	5.87
	20 *g* Side drop (Normal conditions)	Bending	0.83	20.00

Table 2-9 Summary of Normal Condition Stress Analysis for the Poison Enclosures

Component	Applied Load	Stress Category	Applied Stress (ksi.)	Allowable Stress (ksi.)
3.268 in. wide plate	20 *g* Side drop (Normal conditions)	Bending	1.72	20.00
Top and bottom support plates	20 *g* Side drop (Normal conditions)	Shear	5.02	12.00
		Compression	2.68	20.00
		Buckling	2.68	10.13
Inner and outer braces	20 *g* Side drop (Normal conditions)	Bending	4.27	20.00
Top / bottom support plate welds	20 *g* Side drop (Normal conditions)	Shear	0.57	12.00

Table 2-10 Summary of Support Disc Accident Condition Stress Analysis

Drop Orientation	Stress Category	Maximum Stress (ksi)	Allowable Stress (ksi)
End Drop (60 g)	P_m	0.0	47.95
	$P_m + P_b$	19.32	68.50
	Bearing	42.21	68.50
0° Side Drop (80 g)	P_m	29.50	47.95
	$P_m + P_b$	29.78	61.65
36° Side Drop (80 g)	P_m	10.74	47.95
	$P_m + P_b$	33.31	61.65

Table 2-11 Summary of Oak Ridge Container Shell Accident Condition Stress Analysis

Component	Applied Load	Stress Category	Applied Stress (ksi.)	Allowable Stress (ksi.)
Oak Ridge Container shell	60 g End drop (Accident conditions)	Compression	8.70	47.95
		Buckling	8.70	18.74
	80 g, 0° Side Drop	Compression	6.38	47.95
		Buckling	27.40	61.65
	80 g, 36° Side Drop	Compression	24.03	47.95
		Buckling	29.48	61.65
	10 psi. internal & external pressure (Accident conditions)	Hoop	0.62	47.95
		Buckling	0.62	1.32
Oak Ridge Container bottom Plate	10 psi. internal & external pressure (Normal conditions)	Compression	0.31	47.95
		Bending + Compression	0.85	68.50

Table 2-12 Summary of Accident Condition Stress Analysis for the Standoffs, Tie Rods, Flux Traps, and Fuel Compartments

Component	Applied Load	Stress Category	Applied Stress (ksi.)	Allowable Stress (ksi.)
Standoffs	60 *g* End drop (Accident conditions)	Compression	42.21	94.50
		Buckling	42.21	43.42
Tie Rods	80 *g* Side drop (Accident conditions)	Shear	5.60	28.77
Flux Traps	60 *g* End drop (Accident conditions)	Compression	9.46	47.95
		Buckling	9.46	21.33
Fuel compartment	60 *g* End drop (Accident conditions)	Compression	3.89	47.95
		Buckling	3.89	11.74
	80 *g* Side drop (Accident conditions)	Bending	3.34	47.95

Table 2-13 Summary of Normal Condition Stress Analysis for the Poison Enclosures

Component	Applied Load	Stress Category	Applied Stress (ksi.)	Allowable Stress (ksi.)
Poison enclosure outer sheet	80 *g* Side drop (Accident conditions)	Bending	6.87	47.95
Top and bottom support plates	80 *g* Side drop (Accident conditions)	Shear	20.09	28.77
		Compression	10.73	47.95
		Buckling	10.73	20.25
Inner and outer braces	80 *g* Side drop (Accident conditions)	Bending	17.08	47.95
Top / bottom support plate welds	80 *g* Side drop (Accident conditions)	Shear	2.27	28.77

2.11 APPENDIX

Contents of Appendix 2.11

2.11.1 Fuel Basket Structural Analysis

- Tie Rods and Standoffs
- Support Disc Bearing Stress
- Fuel Compartments
- Poison Enclosures
- Thermal Stress
- Support Disc Finite Element Model Analysis (included in Appendix 2.11.3)
- Flux Traps

2.11.2 Oak Ridge Container Shell Structural Analysis

- Oak Ridge Container Shell due to End drop Load
- Oak Ridge Container Shell Due to Internal Pressure
- Oak Ridge Container Shell Due to External Pressure
- Oak Ridge Container Shell Bottom Plate Stress Analysis
- Oak Ridge Container Shell Side Drop Finite Element Model Analysis (included in Appendix 2.11.3)

2.11.3 Support Disc and Oak Ridge Container Shell Finite Element Model Analyses

- Support Disc Stress and Buckling analysis
- Oak Ridge Container Shell Side Drop Stress Analysis

2.11.4 Oak Ridge Container Lid Bolt Analysis

2.11.5 TN-FSV cask and Oak Ridge Container Shell Fatigue Analysis

2.11.6 Dynamic Amplification Factor For Oak Ridge Container Drop Analysis

2.11.7 Oak Ridge Canister Structural Analysis

2.11.8 TN-FSV Cask Lead Slump Analysis

FIGURE WITHHELD UNDER 10 CFR 2.390

NO.	DATE	REVISIONS	DWN.	CHK'D.	M.E.	Q/A	PROJ.
1	6/14/01	SEE DCN 3044-23	RMM	JC	PS		

APPROVALS		DATE
PROJ.	M.M.	01 NOV. 00
Q/A	W.R.S.	02 NOV. 00
MECH. ENG.	J.C.	01 NOV. 00
CHK'D. BY	M.M.	01 NOV. 00
DWN. BY.	J.T.G.	24 OCT. 00

TRANSNUCLEAR, INC.
HAWTHORNE, N.Y.

OAK RIDGE CONTAINER
GENERAL ARRANGEMENT

SAR

NONE	B	3044-70-1	1
SCALE	SIZE	DWG. NO.	REV.

FIGURE WITHHELD UNDER 10 CFR 2.390

NO.	DATE	REVISIONS	DWN.	CHK'D.	ME.	Q/A	PROJ.
1	11/01/11	SEE DCN 3044-24		JC	PS		

APPROVALS	DATE
MM PROJ.	1 NOV. 00
WRS Q/A	2 NOV. 00
JC MECH. ENG.	1 NOV. 00
MM CHK'D. BY	1 NOV. 00
JTG DWN. BY.	24 OCT. 00

TRANSNUCLEAR, INC.
HAWTHORNE, N.Y.

OAK RIDGE CONTAINER
CONTAINER WELDMENT

SAR

SCALE	SIZE	DWG. NO.	REV.
NONE	B	3044-70-2	1

FIGURE WITHHELD UNDER 10 CFR 2.390

NO.	DATE	REVISIONS	DWN.	CHK'D.	ME.	Q/A	PROJ.
1	4/13/01	SEE DCN 3044-25		JC	PS		

APPROVALS	DATE
MM PROJ.	1 NOV. 00
WRS Q/A	2 NOV. 00
JC MECH. ENG.	1 NOV. 00
MM CHK'D. BY	1 NOV. 00
JTG DWN. BY.	24 OCT. 00

TRANSNUCLEAR, INC.
HAWTHORNE, N.Y.

OAK RIDGE CONTAINER DETAILS

SAR

NONE SCALE	B SIZE	3044-70-3 DWG. NO.	1 REV.

FIGURE WITHHELD UNDER 10 CFR 2.390

NO.	DATE	REVISIONS	DWN.	CHK'D.	ME.	Q/A	PROJ.

APPROVALS	DATE	
PROJ.	11/1/00	TRANSNUCLEAR, INC. HAWTHORNE, N.Y.
Q/A WRS	11/2/00	
		OAK RIDGE CONTAINER ASSEMBLY DETAILS
JC MECH. ENG.	11/1/00	
CHK'D. BY	11/1/00	SAR
DWN. BY	24 OCT. 00	NONE SCALE · B SIZE · 3044-70-4 DWG. NO. · 0 REV.

FIGURE WITHHELD UNDER 10 CFR 2.390

NO.	DATE	REVISIONS	DWN.	CHK'D.	ME.	Q/A	PROJ.
1	6/13/01	SEE DCN 3044-26					

APPROVALS	DATE
MM PROJ.	1 NOV. 00
WRS Q/A	2 NOV. 00
JC MECH. ENG.	1 NOV. 00
MM CHK'D. BY	1 NOV. 00
JTG DWN. BY.	24 OCT. 00

TRANSNUCLEAR, INC.
HAWTHORNE, N.Y.

OAK RIDGE CONTAINER
POISON ENCLOSURE
DETAILS

NONE SCALE	B SIZE	3044-70-5 DWG. NO.	1 REV.

SAR

FIGURE WITHHELD UNDER 10 CFR 2.390

NO.	DATE	REVISIONS	DWN.	CHK'D.	NE.	Q/A	PROJ.
APPROVALS	DATE						
PROJ.	11/1/00	TRANSNUCLEAR, INC. HAWTHORNE, N.Y.					
Q/A WRS	11/2/00						
		OAK RIDGE CONTAINER LID DETAILS					
JC MECH. ENG.	11/1/00						
CHK'D. BY	11/1/00						SAR
DWN. BY	24 OCT. 00	NONE SCALE	B SIZE	3044-70-6 DWG. NO.			0 REV.

FIGURE WITHHELD UNDER 10 CFR 2.390

NO.	DATE	REVISIONS	DWN.	CHK'D.	M.E.	Q/A	PROJ.
1	6/13/01	SEE DCN 3044-27					

APPROVALS	DATE
MM PROJ.	2 NOV. 00
WRS Q/A	2 NOV. 00
JC MECH. ENG.	1 NOV. 00
MM CHK'D. BY	1 NOV. 00
JTG DWN. BY.	24 OCT. 00

TRANSNUCLEAR, INC.
HAWTHORNE, N.Y.

OAK RIDGE CONTAINER DETAILS

SAR

NONE SCALE	B SIZE	3044-70-7 DWG. NO.	1 REV.

FIGURE WITHHELD UNDER 10 CFR 2.390

NO.	DATE	REVISIONS	DWN.	CHK'D.	M.E.	Q/A	PROJ.

APPROVALS	DATE
PROJ.	
Q/A	
MECH. ENG.	
CHK'D. BY	
DWN. BY.	24 OCT. 00

TRANSNUCLEAR, INC.
HAWTHORNE, N.Y.

OAK RIDGE CONTAINER
LOADING ARRANGEMENTS

NONE SCALE	B SIZE	3044-70-8 DWG. NO.	SAR 0 REV.

ASME Code Exceptions

The Oak Ridge Container containment boundary is designed, fabricated, and inspected in accordance with the ASME Code Subsection WB to the maximum practical extent. The fuel basket is designed, fabricated, and inspected in accordance with ASME Code Subsection NG to the maximum practical extent. Other Oak Ridge Container components, such as the spacer sleeve, are designed per ASME Code Subsection NF.

Component	Reference ASME Code/Section	Code Requirement	Exception, Justification & Compensatory Measures
Oak Ridge Container Containment Vessel	WB-1100/ WB-2000	Stamping and preparation of reports by the Certificate Holder, Surveillances, Use of ASME Certificate Holders	The Oak Ridge Container is not N/TP stamped, nor is there a code design specification or stress report generated. A design criteria document is generated in accordance with TN's QA Program and the design and analysis performed under TN's QA Program and presented in this SAR Addendum. The Oak Ridge Container may also be fabricated by other than N-stamp holders and materials may be supplied by other than ASME Certificate holders. Surveillances are performed by TN rather than by an Authorized Nuclear Inspector (ANI).
Oak Ridge Container Containment Vessel	NCA-3800	QA Requirements	The quality assurance requirements of NQA-1 or 10 CFR 71 are imposed in lieu of NCA-3800 requirements.
Oak Ridge Container Containment Vessel	WB-6200	Hydrostatic Testing	The containment vessel is not hydrostatically tested in accordance with the requirements of the ASME B&PV Code, Section III, Articles WB-6200. 10CFR71.85(b) does not require hydrostatic testing if the MNOP is less than 5 psi.
Oak Ridge Container Containment Vessel	WA-8000	Requirements for nameplates, stamping and reports per NCA-8000	Oak Ridge Container is to be marked and identified in accordance with 10 CFR71 requirements. Code stamping is not required. QA data package to be in accordance with TN approved QA program.
Oak Ridge Container Containment Vessel	WB-1132	The design specification shall define the boundary of a component to which another component is attached.	A code design specification was not prepared for the Oak Ridge Container. A TN design criteria was prepared in accordance with TN's QA program.
Basket poison plates	NG-2000	Use of ASME Materials	No structural credit is taken for the poison material. The poison material provides criticality control and heat transfer. They are not code materials.

NO.	DATE	REVISIONS	DWN.	CHK'D.	M.E.		Q/A	PROJ.
APPROVALS	DATE	[redacted]						
PROJ.	6/12/01	TRANSNUCLEAR, INC. HAWTHORNE, N.Y.						
Q/A	6/12/01	OAK RIDGE CONTAINER						
MECH. ENG.	6/14/01	ASME CODE COMPLIANCE						
CHK'D. BY	6/14/01	AND EXCEPTIONS						SAR
DWN. BY.	11 JUNE 01	NONE SCALE	B SIZE	3044-70-9 DWG. NO.				0 REV.