SOUTH TEXAS PROJECT
UNITS 3 & 4

Presentation to the NRC

December 14, 2006

Agenda

Objectives & Opening Remarks	Greg Gibson
Design Acceptance Criteria	Steve Stark/Greg Gibson
Licensing Topical Reports	Steve Stark/Greg Gibson
Instrumentation & Controls	Tim Hurst/Jim Hawks
ABWR COLA Fuel Issues	Steve Stark
Summary	Greg Gibson

Objectives and Opening Remarks

Greg Gibson

Manager-Regulatory Affairs

Objectives

- Review plans for LTRs
- Summarize I&C Design
- Summarize ABWR Fuel Issues

Remarks

- Topical Reports from GE (ABWR)
- Technical Reports from STP
  - Security Plan
  - Emergency Plan
  - Quality Assurance Plan
- Briefing on I&C to correct misperceptions on ABWR DCD

DAC and LTR Discussion

Steve Stark

Manager, GE ABWR Licensing and STP Assistant Project Manager

Objectives

- Identify response plans for DACs
- Identify LTRs
- Identify schedules for LTR submittals
- Enable the NRC to determine proper level of resources for timely LTR reviews

DAC & LTR Presentation Goals

- Design Acceptance Criteria (DAC)
  - A set of prescribed limits, parameters, procedures, and attributes upon which the NRC relies, in a limited number of technical areas, in making a final safety determination to support a design certification

- Licensing Topical Report (LTR)
  - Provides supplemental or alternate DCWG design information for potential DCD amendment(s)

Design Acceptance Criteria (DAC) Subjects

- Four DCD Topical Subjects in DCD Tier 1
- DAC scope not covered in the system-by-system DCD information
- DAC address multi-system issues
- Scope of DAC & ITAAC are defined within Chapter 3 of the DCD Tier 1

Four DAC Subjects in DCD Tier 1

- 3.1 Human Factors Engineering
- 3.2 Radiation Protection
- 3.3 Piping Design
- 3.4 Instrumentation and Control

Human Factors Engineering DAC

- Defines the programmatic requirements for implementing the detailed HFE design activities
- Human System Interface (HSI) must be developed, designed, and evaluated per prescribed HFE plans
- Requirements and ITAACs are well defined
- HFE management team includes STP and GE
- Discussed further in I&C Presentation
- LTR not anticipated

Radiation Protection DAC

- ABWR experience through operating plants
- Radiation protection DAC focus on radiation protection design features
- Plant ventilation systems features must limit airborne radionuclide
- Design features keep exposures for plant personnel / general public below limits
- LTR not anticipated

Piping Design DAC

- Piping systems shall be designed to meet code and seismic requirements
- ITAAC are focused on piping systems pressure boundary integrity and functional capability
- Requirements for piping system leaks and breaks are prescriptive
- Design life for US ABWR is 60 years
- LTR is not anticipated

Instrumentation and Control DAC

- Defines the programmatic requirements related to the design and implementation of the safety related I&C systems
  - Safety System Logic and Control Functional Requirements
  - I&C Development and Qualification Processes
  - Diversity & Defense In Depth Considerations
- An LTR is being developed in this area - ABWR Safety Related I&C Architecture

LTRs for DCD Design Departures or Design Completion

- Alternate RCIC Pump
- ABWR Safety Related I&C Architecture
- Common Equipment and Structures
- Plant Medium Voltage Electrical System
- Alternate Hydrogen Control
- Ultimate Heat Sink (UHS) Design

LTRs for COL Items

- Plant Procedures Development Plan
- Startup Administrative Manual
- Vibration Assessment Program
- APRM Oscillation Monitoring
- Materials and Surveillance Capsule
- Startup Test Specifications
- Life Cycle Management Program
- Pre-Operational Test Specifications
- Meteorological Measurements Program

15 ABWR LTRs Submittal Dates

Alternate RCIC Pumps	12/29/06
Plant Procedures Development Plan	01/31/07
Startup Administrative Manual	02/28/07
ABWR Safety Related I&C Architecture	04/02/07
APRM Oscillation Monitoring	04/02/07
Vibration Assessment Program	04/19/07
Materials and Surveillance Capsule	04/19/07
Common Equipment and Structures	04/19/07
Startup Test Specifications	04/30/07
Plant Medium Voltage Electrical System	05/18/07
Alternate Hydrogen Control	05/18/07
Life Cycle Management Program	05/18/07
Pre-Operational Test Specifications	06/01/07
Meteorological Measurements Program	TBD
Ultimate Heat Sink (UHS) Design	TBD

Fuel and the COLA

ABWR Fuel

Discuss the need and proposal for using GE14 Fuel and GE Computer Codes to correct information in the ABWR DCD

Fuel in ABWR DCD

- NRC certified ABWR with GE 7 (P8x8R) fuel
- Current DCD with GE 7 fuel is basis for STP COLA
- Continue using DCD analysis for COLA FSAR Chapters 4 and 15
- Need to correct ABWR DCD Tier 2 section 6.2 (Containment) and Chapter 19 (PRA)

Fuel and Analysis

- With STP 3&4 fuel load in 2014, safety analyses for present day (GE 14) fuel would need to be revised for a future fuel design (GNF-x)
- As is typical with Operating Reactors, a fuel amendment will be submitted circa 2011
- DCD identification of fuel design as Tier 2* is structured to accommodate this

GE14 Fuel Analysis

Licensing analyses show ABWR with GE 14 fuel meets all related safety criteria and results bound GE 7 fuel analysis results

Summary

- Continue using DCD analysis for COLA FSAR Chapters 4 and 15
- Use GE 14 fuel with corrected inputs for any additional analyses
- Submit fuel change when final fuel decision is made (~2011)

STP 3&4
Instrumentation & Controls

Jim Hawks & Tim Hurst

STP 3 & 4 I&C Design Engineering

STP 3&4
Overview - Instrumentation & Controls

- STP Units 3 & 4 are based upon Design Certification
- The design has been implemented and is in operation
- All departures from the Design Certification will be addressed in COLA and/or thru LTRs.

Agenda – STP 3 & 4 I&C

- Basis For STP Design
- History of ABWR I&C Systems
- Safety Systems
- Non- Safety Related Systems
- Control Room & HSI Design
- Major Industry I&C Issues

Basis for STP I&C Systems

- Based upon the ABWR DCD [NUREG-1503]
- The ABWR Certification process, reviewed and approved, the design details and/or design process for the I&C Systems
- ITAACs are a part of the Certified Design
- The Design and Design Process has been implemented in 4 operating and one plant under construction in Japan, and two plants in Taiwan.

ABWR History / Experience

★ ABWR Certified Design Approved

ABWR Review | ABWR Review

GE Submits ABWR Application (9/87)

NRC Issues ABWR SER NUREG-1503 (7/94)

NRC Issues ABWR SER Supplement (5/97)

KK #6 — CO 11/96

KK #7 — CO 7/97

20+ Reactor years of Operating History

Hamaoka #5 — CO 1/05

Shika #2 — CO 3/06

Shimane #3

Lungmen 1 & 2

1987 | 1988 | 1989 | 1990 | 1991 | 1992 | 1993 | 1994 | 1995 | 1996 | 1997 | 1998 | 1999 | 2000 | 2001 | 2002 | 2003 | 2004 | 2005 | 2006

Safety Related I&C Systems

Safety System Logic & Control - SSLC

- **Reactor Protection System – RPS**
  - Reactor Trip
  - MSIV
- **Engineered Safety Features – ESF**
  - Emergency Core Cooling Systems (ECCS)
  - Leak Detection And Isolation System (LDS)
  - Wetwell And Drywell Spray mode of the RHR System (WDCS-RHR)
  - Suppression Pool Cooling mode of the RHR System (SPC-RHR)
  - Standby Gas Treatment System (SGTS)
  - Emergency diesel generator support systems
  - Reactor Building Cooling Water (RCW) System and Reactor Service Water (RSW) System
  - Essential HVAC Systems
  - HVAC Emergency Cooling Water (HECW) System
  - High-Pressure Nitrogen Gas Supply (HPIN) System

Safety System Logic & Control

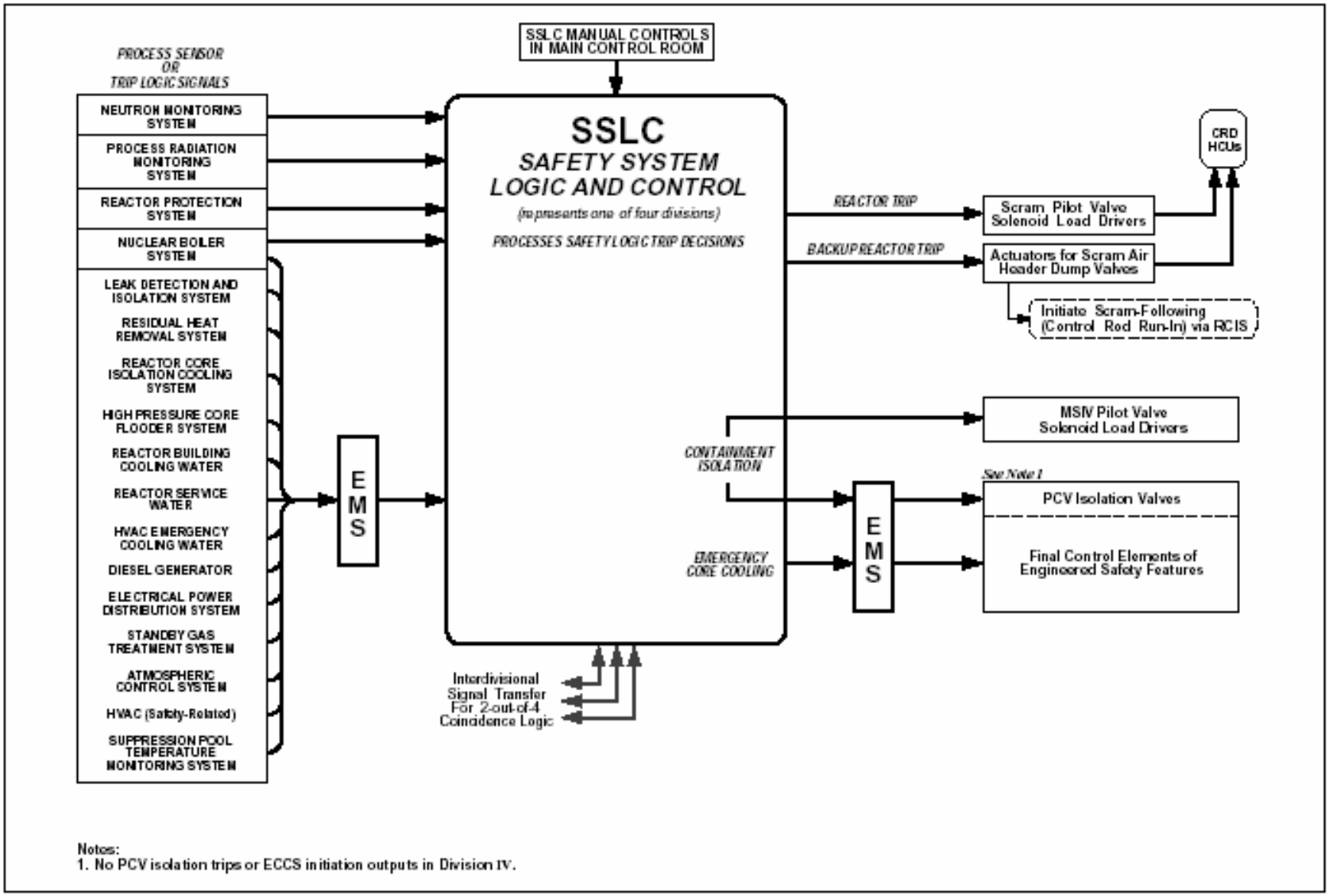

RPS Functional Block Diagram

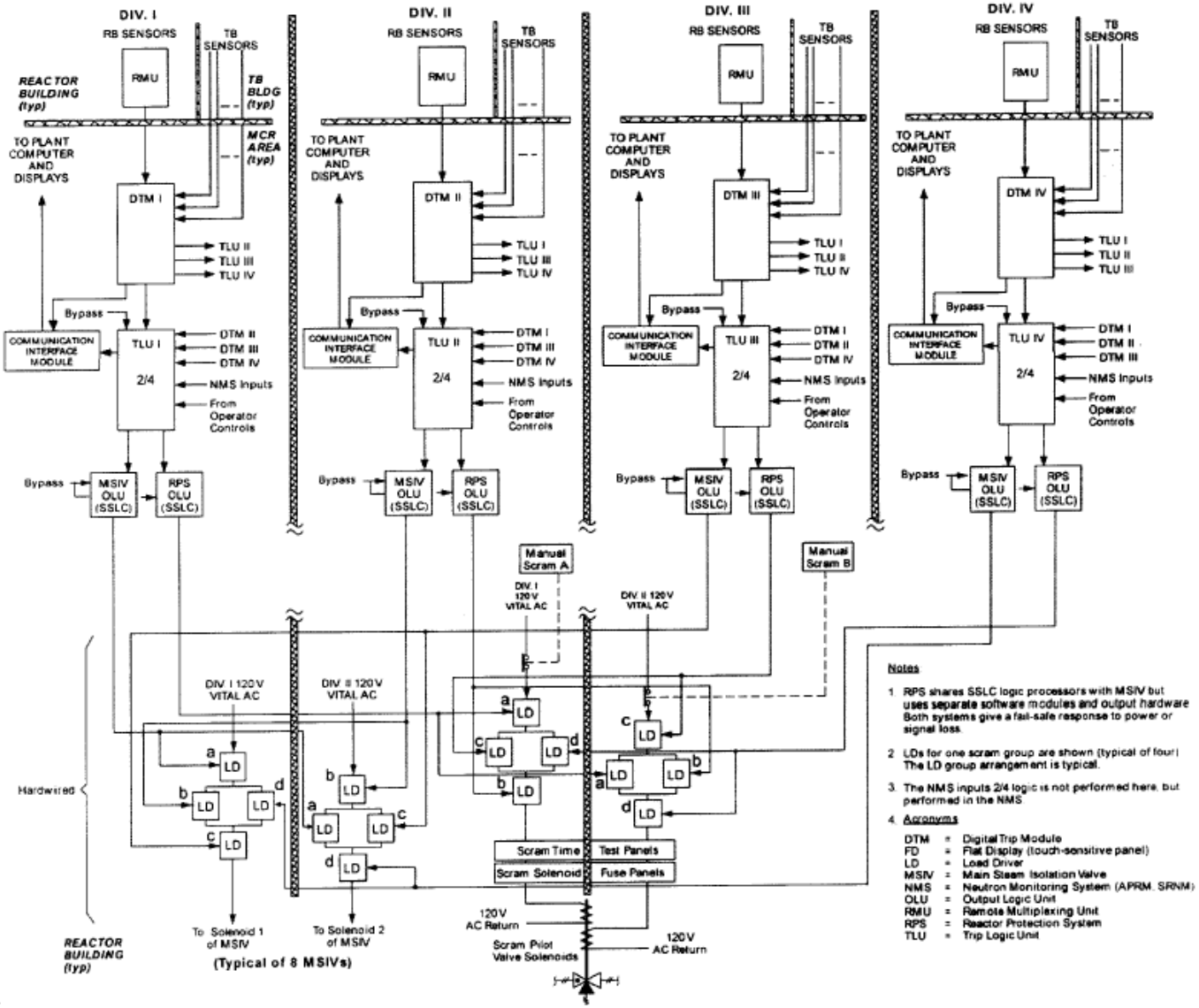

Safety Related System Descriptions

- An LTR on the SSLC Architecture is being prepared for submittal
  - Addresses current I&C technology
- Other Safety Related Systems
  - Neutron Monitoring System (SRNM, LPRM, and APRM)
  - Process Radiation Monitoring System (RMS)
  - High Pressure to Low Pressure (HP/LP) interlocks
  - Drywell Vacuum Relief System
  - Containment Atmosphere Monitoring System (CAMS)
  - Suppression Pool Temperature Monitoring System
- Post Accident Monitoring System – PAMS

ABWR Control Room

Key Features of ABWR I&C Design

- Integrated Control Systems
  - Integration of overall I&C system through Gateways
  - ~ 60,000 I/O points (Hard I/O and Soft I/O) per unit
  - Different platforms for Safety-Related and Non-Safety Related system
  - Extensive use of F.O. based communications
  - High degrees of redundancy
  - Implementation of extensive Plant Automation

ABWR Non Safety Related Systems

- Nuclear Boiler System—Reactor Vessel Instrumentation
- Rod Control and Information System (RCIS)
- Recirculation Flow Control System
- Feedwater Control System (FWCS)
- Process Computer System
- Neutron Monitoring System—ATIP Subsystem
- Automatic Power Regulator System (APR)
- Steam Bypass and Pressure Control System
- Non-Essential Multiplexing System
- Other Non-Safety Related Control System
- Fire Protection System
- Drywell Cooling System
- Instrument Air Systems
- Makeup Water System
- Atmospheric Control System
- Fuel Pool Cooling and Cleanup System

Advanced Main Control Room

- Main Control Room
  - Wide Display Panel (WDP)
  - Main Control Console (MCC)
  - Shift Supervisor's Console (SSC)
- Uniform Display for Entire Plant
- Alarm System
  - Plant Level Alarm: Change Text / Color depend on plant operation status
  - System Level Alarm: Change Color depend on the Priority.
  - Component Alarm
- Soft switch on the Flat Display and Hard switch

Main Control Room Layout

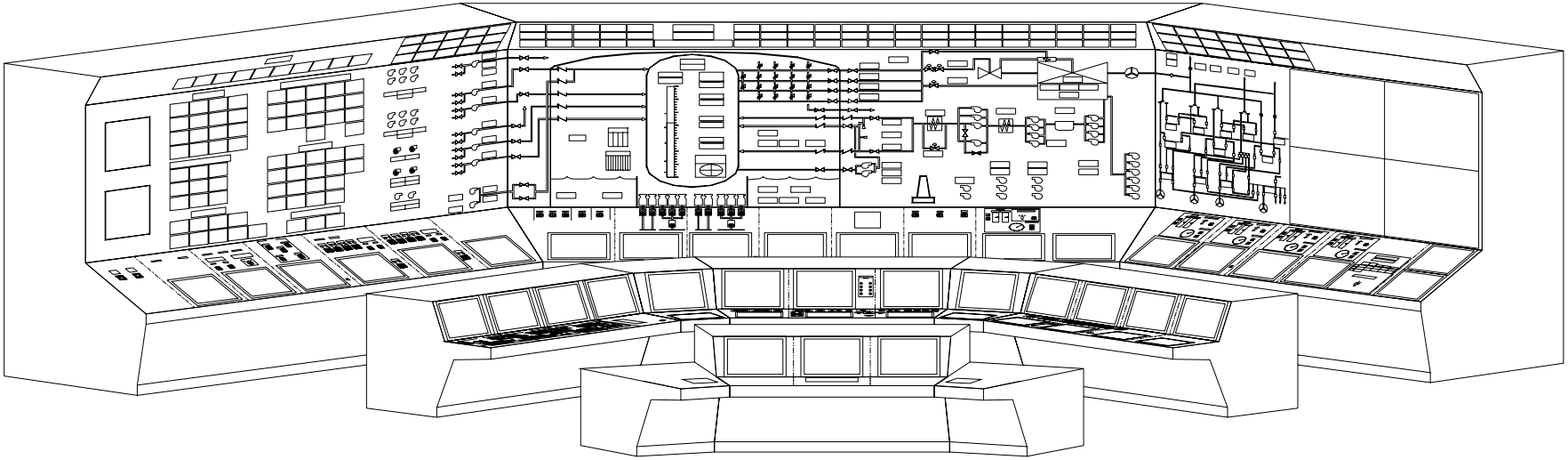

Main Control Room

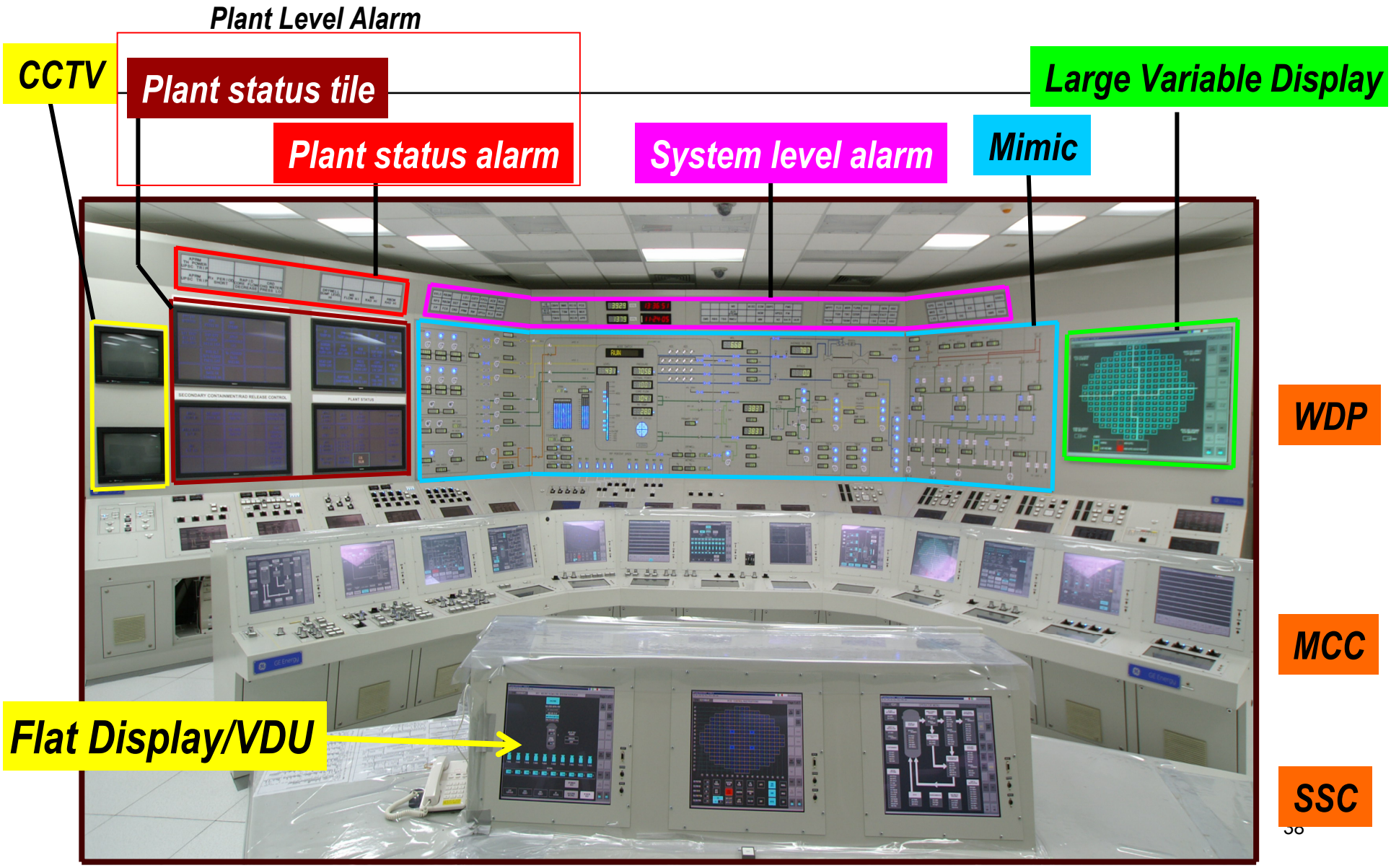

Integrated Control Functional Capabilities

The primary non-safety controls provide the following:

- A Distributed Control System concept, with remote Processor and I/O modules, that collects plant process data for the monitoring and control of the non-safety related portion of the plant.
- Interfaces for safety related equipment (receive only) to provide monitoring, alarming, and data management functions for safety related systems.
- Interfaces for third party equipment, in the non-safety related portion of the plant, through various gateways to provide integrated process monitoring, alarming, control, and data management
- Information to the Emergency Operations Facilities and Technical Support Center.

Plant Computer Functions

- Plant Computer System (Functional sub-system of DCS) provides the primary computational and data storage functions
- Performs all computations related to
  - Plant performance
  - Determination of limiting conditions
  - Safety & critical data computations
- Provides Functional Groupings of Data
  - Data Collection/Control
  - Computations
  - Data Presentation

Data Collection/Control Functions

- Alarm & Annunciator System
  - Message Manager
  - Alarm Reprioritization
  - Alarm Manager (Current Alarms Display – CAD)
  - Voice Alarm Systems
  - Dynamic Plant Status Alarm
  - Mosaic Mimic Panels

- Historical Data Sources
  - Sequence of Events (SOE)
  - Transient Data Recorder
  - High Speed Historian
  - Long Term Process Data Storage

Computation Functions

- Safety Parameters Display System (SPDS)
  - Computes values of safety-related parameters
  - Approx. 1000 calculations for each unit
- Core Thermal Power Computation
  - Computes real time thermal power from critical to 100%
  - Executed every 100 ms
- Thermal Performance Monitoring & Diagnostics
  - Computes thermal efficiency of plant equipment during thermal heat cycle
  - Provides on-line diagnostic and alerts plant personnel if > 5% loss of thermal efficiency
- Technical Specification Monitoring
  - Monitors the Limiting Conditions (LCO's)
  - Generates alarms if conditions are exceeded

Automatic Power Regulation

- Objectives:
  - Increase efficiency of plant operations
    - Reduce operator workload
    - Reduce the potential for human errors
  - Increase plant performance
    - Minimize the time it takes to perform common procedures (e.g. plant startup & shutdown)
- Primary Functions:
  - Provide supervisory control of the entire plant
  - Provide for operator involvement
  - Issue prompts to the operator
  - Manage the progression of normal plant startup & shutdown

Automatic Power Regulation Interface

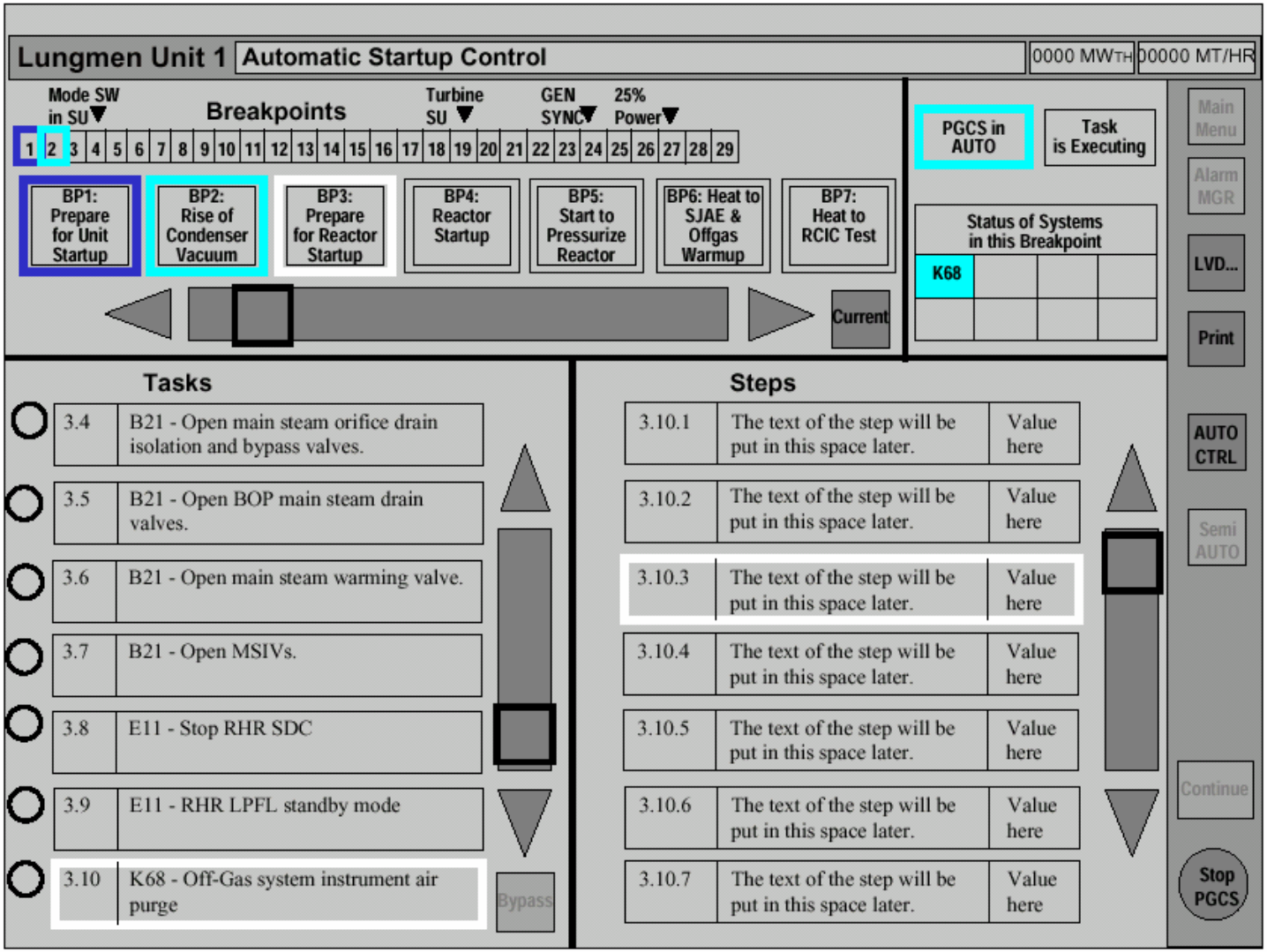

Operator Interface

- HSI interface fully developed per the requirements of the DCD
- Control Room and all operator interface screens have been developed per defined HFE requirements
- Operating Procedures have been developed and verified against the HSI design

Data Presentation Functions

- Displays
  - Primary Displays provide the general navigational & overview graphics
  - Special Displays provide interfaces to specific operations tasks
  - Security provided through a matrix that maps users to available functions on operator and engineering workstations using passwords and class protection
- On-Line Procedures System (OLPS)
  - Alarm selected – associated procedure opened

Main Control Room Operator Interface

	Number of Video Display Unit (VDU)
WDP	Safety Related: 9 sets
	Non-safety Related: 10 sets
MCC	Safety Related: 3 sets
	Non-safety Related: 20 sets
SSC	Non-safety Related: 3 sets
Total	12 (SR) + 33 (NSR) = 45 sets

	Number of Pictures (P&ID/Trend..)
Safety Related	237 pages
Non-safety Related	827 pages
Total	1064 pages

Defined HMI Criteria

No. of State	Tagout	PTL	Test Mode Selected	Example
1	1	X	X	TAG
2	0	1	X	PTL
3	0	0	1	LOC
4	0	0	0	

No. of State	States	Symbol	Border Color	Fill color	Location	Sample Valve	Sample Damper
1	Normal at Full Open	Valve Damper	Cyan #30	Cyan #30			
2	Normal at Intermediate	———	None	Cyan #30	Under Component		
		Valve Damper	Left=Cyan #30 Right=White #31	Left=Cyan #30 Right=None			
3	Normal at Full Closed	Valve Damper	White #31	None			
4	Failed to Close at Full Open	Valve Damper	Red #25	Red #25			
5	Failed to Open or Close at Intermediate	Valve Damper	Red #25	Left=Red #25 Right=None			

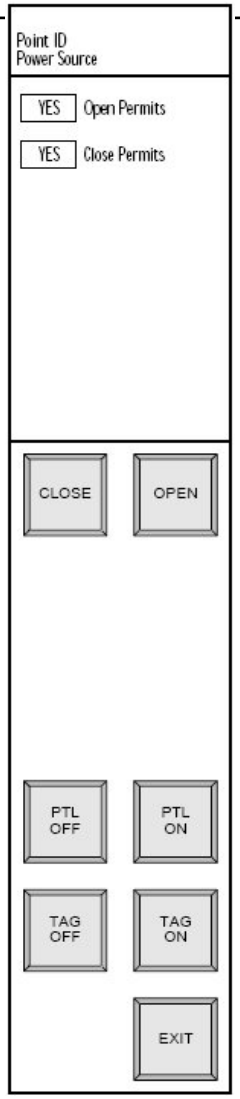

General Displays

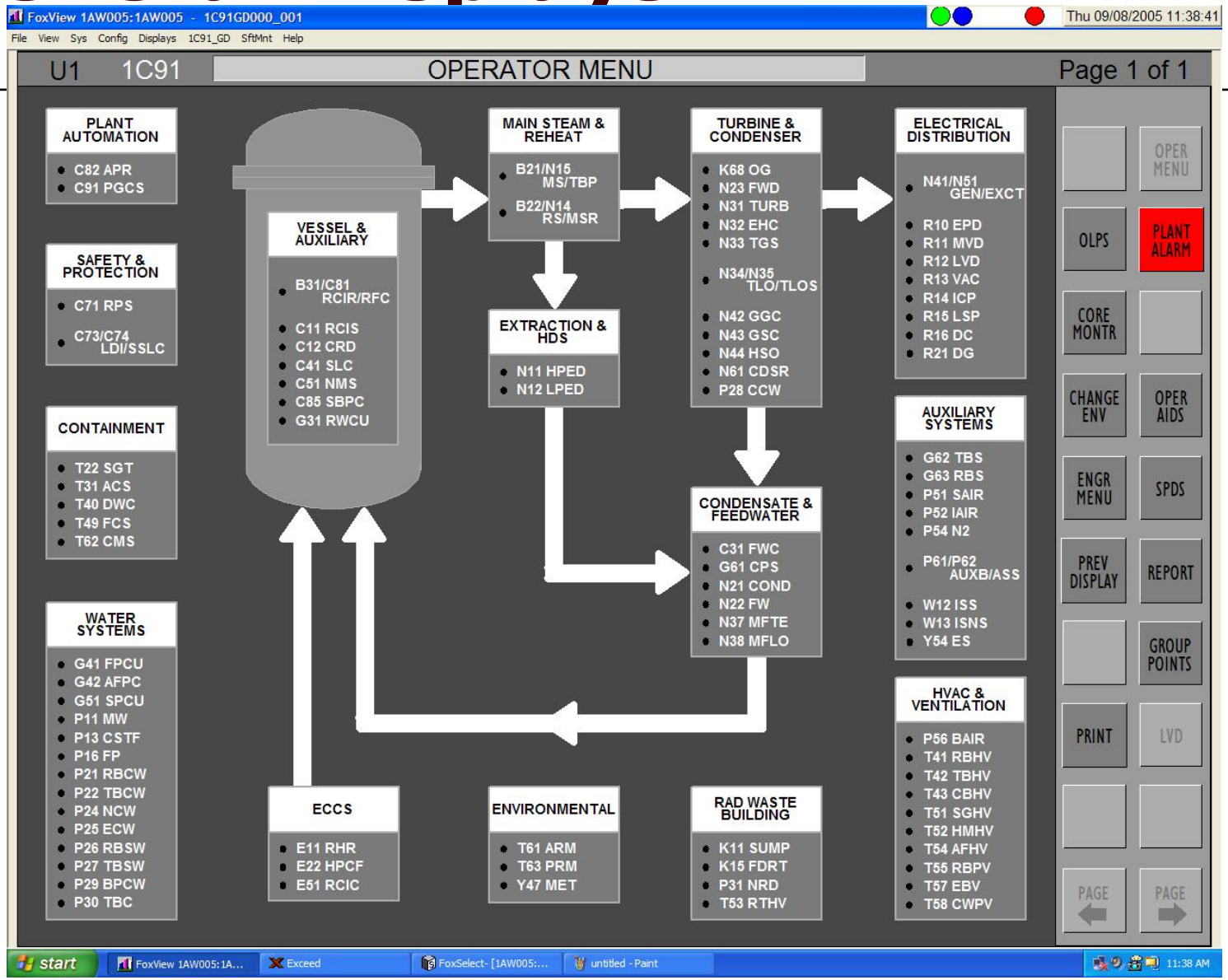

P&ID Screen

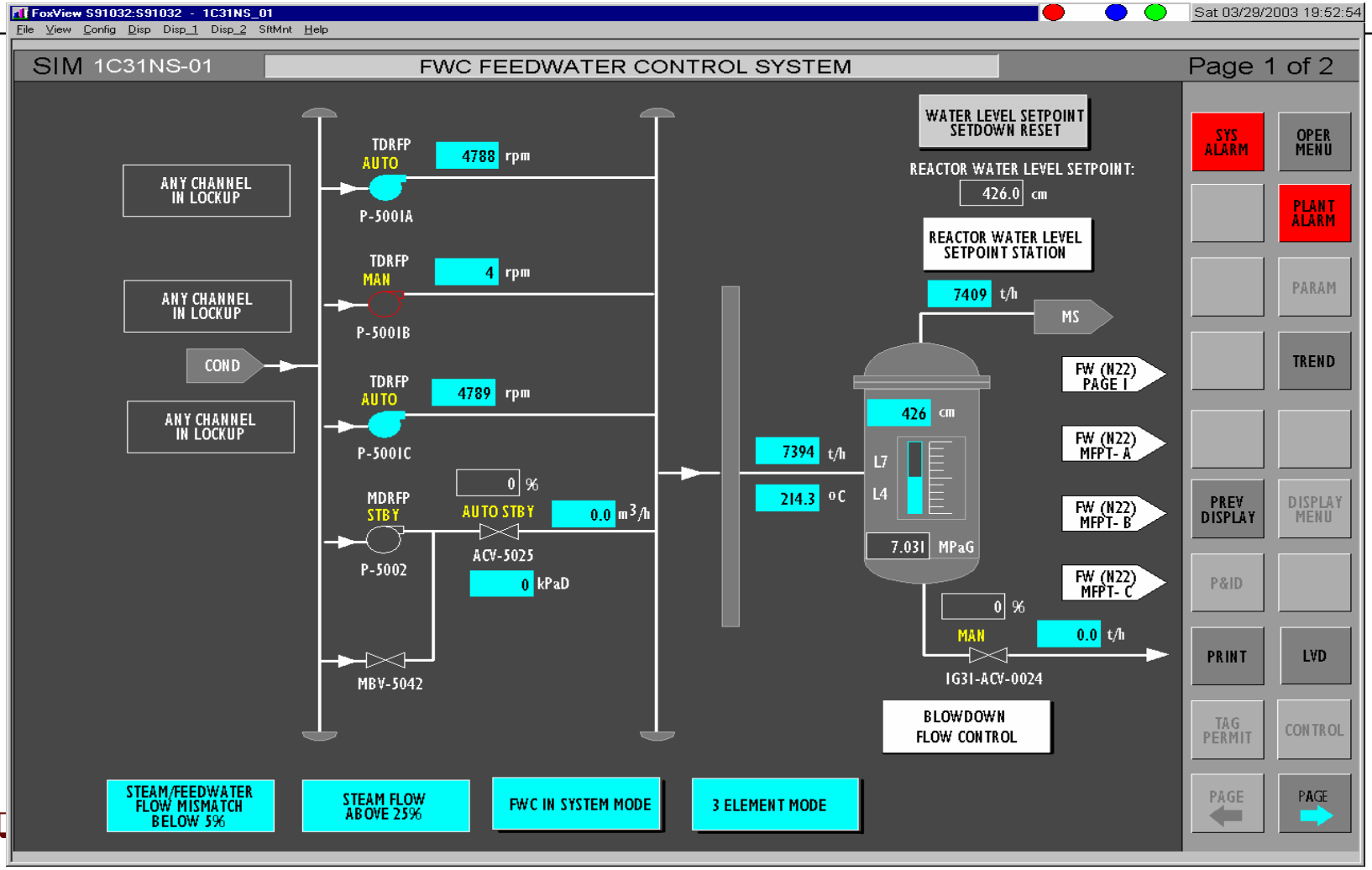
FoxView S91032:S91032 - 1C31NS_01
Sat 03/29/2003 19:52:54
File View Config Disp Disp_1 Disp_2 SftMnt Help
SIM 1C31NS-01
FWC FEEDWATER CONTROL SYSTEM
Page 1 of 2
ANY CHANNEL IN LOCKUP
ANY CHANNEL IN LOCKUP
COND
ANY CHANNEL IN LOCKUP
TDRFP AUTO
4788 rpm
P-5001A
TDRFP MAN
4 rpm
P-5001B
TDRFP AUTO
4789 rpm
P-5001C
MDRFP STBY
0 %
AUTO STBY
0.0 m3/h
ACV-5025
0 kPaD
P-5002
MBV-5042
7394 t/h
214.3 oC
WATER LEVEL SETPOINT SETDOWN RESET
REACTOR WATER LEVEL SETPOINT:
426.0 cm
REACTOR WATER LEVEL SETPOINT STATION
7409 t/h
MS
426 cm
L7
L4
7.031 MPaG
0 %
MAN
0.0 t/h
IG31-ACV-0024
BLOWDOWN FLOW CONTROL
FW (N22) PAGE I
FW (N22) MFPT- A
FW (N22) MFPT- B
FW (N22) MFPT- C
SYS ALARM
OPER MENU
PLANT ALARM
PARAM
TREND
PREV DISPLAY
DISPLAY MENU
P&ID
PRINT
LVD
TAG PERMIT
CONTROL
PAGE
PAGE
STEAM/FEEDWATER FLOW MISMATCH BELOW 5%
STEAM FLOW ABOVE 25%
FWC IN SYSTEM MODE
3 ELEMENT MODE

Special Displays

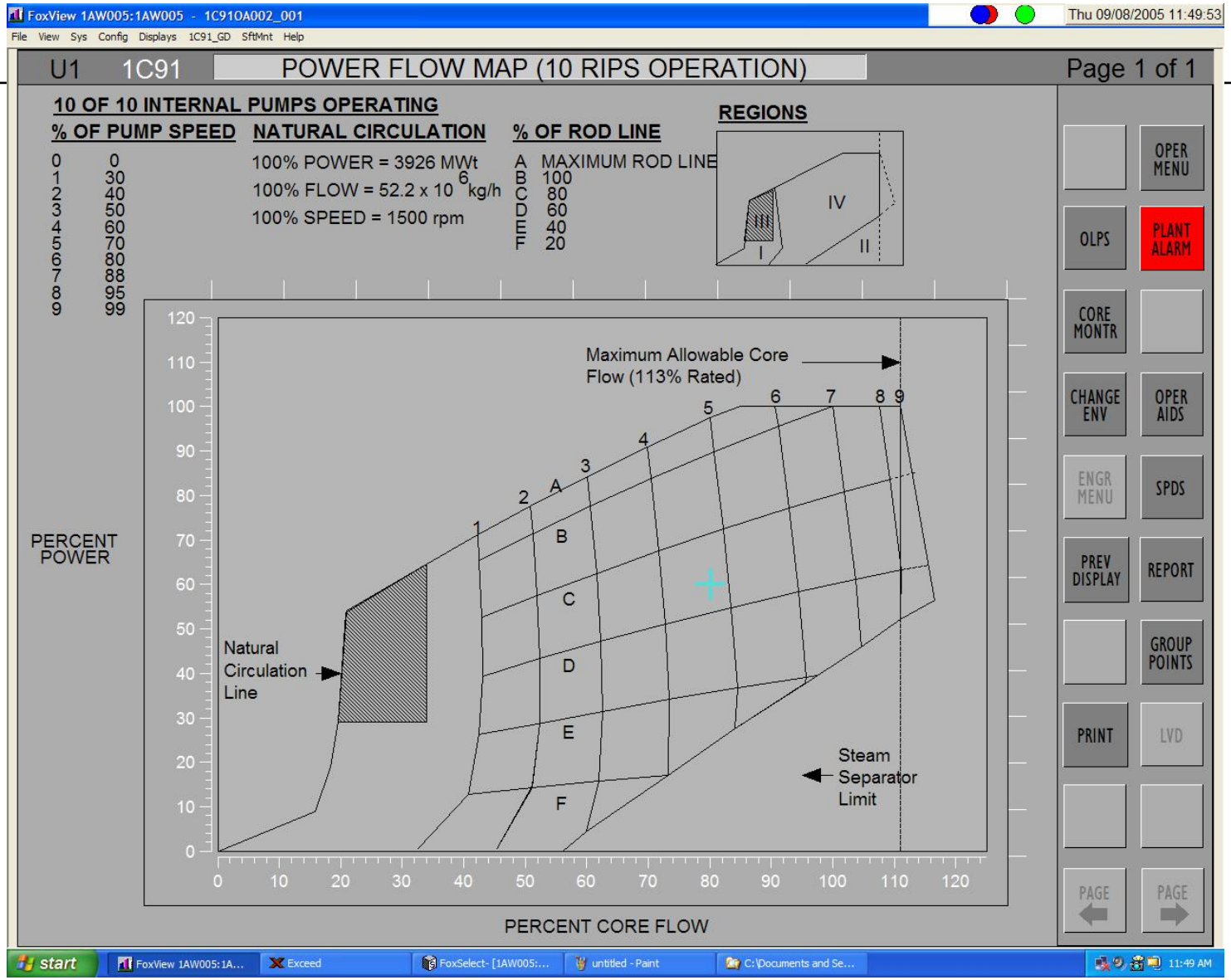

Bypass INOP Displays

FoxView 1AW005:1AW005 - 1C91OA005_004 Thu 09/08/2005 11:56:29

File View Sys Config Displays 1C91_GD SftMnt Help

U1 1C91 SAFETY SYSTEMS BISI Page 4 of 6

SAFETY SYSTEMS BYPASSED AND INOPERABLE STATUS INDICATION

	BYPASSED (YES / NO)				INOPERABLE (YES / NO)			
	DIV I	DIV II	DIV III	DIV IV	DIV I	DIV II	DIV III	DIV IV
ECCS SUPPORT SYSTEMS								
T31 RBHV	YES	NO	-	-	NO	NO	NO	-
C74 SSLC, H23 MUX, P52 IAIR, P54 N2, R12 LVD, R13 VAC, R14 ICP, T41 RBHV								
T43 CBHV	YES	NO	NO	-	NO	NO	NO	-
C74 SSLC, H23 MUX, P21 RBCW, P24 NCWS, P25 ECW, R11 MVD, R12 LVD, R13 VAC, T63 PRM								
T55 RBPV	-	-	-	-	NO	NO	NO	-
H23 MUX, P52 IAIR, R11 MVD, R12 LVD								

OPER MENU | OLPS | PLANT ALARM | CORE MONTR | CHANGE ENV | OPER AIDS | ENGR MENU | SPDS | PREV DISPLAY | REPORT | GROUP POINTS | PRINT | LVD | PREV | NEXT

start FoxView 1AW005:1A... Exceed FoxSelect- [1AW005:... untitled - Paint C:\Documents and Se... 11:56 AM

On-Line Operating Procedures

OLPS Thu 09/08/2005 12:12:04

Lungmen Unit 1 | 551.2 TSM (Technical Specification Monitor) [C91]

TAIWAN POWER COMPANY
THE FOURTH NUCLEAR POWER STATION
ALARM RESPONSE PROCEDURE

Procedure No.: 551.2 Revision: 0
Procedure Title: TSM

15. LCO 3.3.1.1.1b SRNM SHORT PERIOD
Alarm PID: 1(2)C918004DTSM33111B

The application opens the Alarm Response Procedure for the selected tag.

SETPOINT: None Tech. Spec.:

A. SENSOR:
None

B. AUTOMATIC ACTIONS:
None

C. OPERATOR ACTIONS:
1. Review Function 1b of Table 3.3.1.1-1 to investigate the cause of the alarm.
2. IF failure to meet Function 1b of Table 3.3.1.1-1 is confirmed, THEN follow actions of LCO 3.3.1.1 for compliance.

D. PROBABLE CAUSES:
1. SRNM operability not meeting Function 1b of Table 3.3.1.1-1

E. REFERENCES:
1. Technical Specification, 16.3.3.1.1

OPER MENU | PLANT ALARMS | LVD | PRINT | FIND PROC | ZOOM | GO TO | CON-TENTS | LAST VIEW | PREV PAGE | NEXT PAGE

PG 30 OF 286

Some Industry I&C Issues versus the ABWR Design

- Control Room Design / HFE Factors
- Diversity & Defense in Depth - D3
- Cyber Security

Control Room Design / HFE Factors

- ABWR Design has a detailed review in Chapter 18 and an accepted design and/or design process.
- Approved design and process has been used for ABWR plants.
- Note: NUREG-0711 is not applicable since it was issued post-DCD

ABWR FSER, NUREG-1503 Section 18

- 18.10 Conclusion
  - "The staff concludes that the design and implementation process discussed in the SSAR describes an acceptable HFE program, and if applied, will result in an acceptable HSI designs for the main CR and RSS…"
  - "…In addition, the design commitments and ITAAC in Table 3.1 of the CDM accurately summarize the minimum HFE requirements for an acceptable design, development, Implementation, and V&V process for the main CR and RSS…"

Defense-in-Depth and Diversity

- The ABWR DCD has a detailed review of this issue and was accepted at the time of certification.
- Not based on Risk Methodology
- Diversity is provided in the form of:
  - Hardwired backup of reactor trip,
  - Diverse display of important process parameters,
  - Defense-in-depth arrangement of equipment and equipment diversity

Defense-in-Depth and Diversity

- Manual scram and isolation by the operator in the main control room in response to diverse parameter indications.
- Core makeup water capability from the feedwater system, Control Rod Drive (CRD) System, and condensate system, which are diverse from SSLC and the EMS.
- Availability of manual high pressure injection capability.
- Long term shutdown capability provided in a conventionally hardwired, 2-division, analog Remote Shutdown System (RSS); local displays of process variables in RSS are continuously powered and so are available for monitoring at any time.

Cyber Security

- New Guidance
  - RG 1.152
  - NEI 04-04

- This is a new area and we will address it in the COLA.

Conclusions

- STP Units 3 & 4 are based upon ABWR DCD
- The design has been implemented and is in operation
- All departures from the DCD will be addressed in COLA and/or thru LTRs.

Next Meetings – January 17-18

- Quality Assurance
- Security
- Schedule