TRANSNUCLEAR

NUHOMS®-MP187 MULTI-PURPOSE CASK

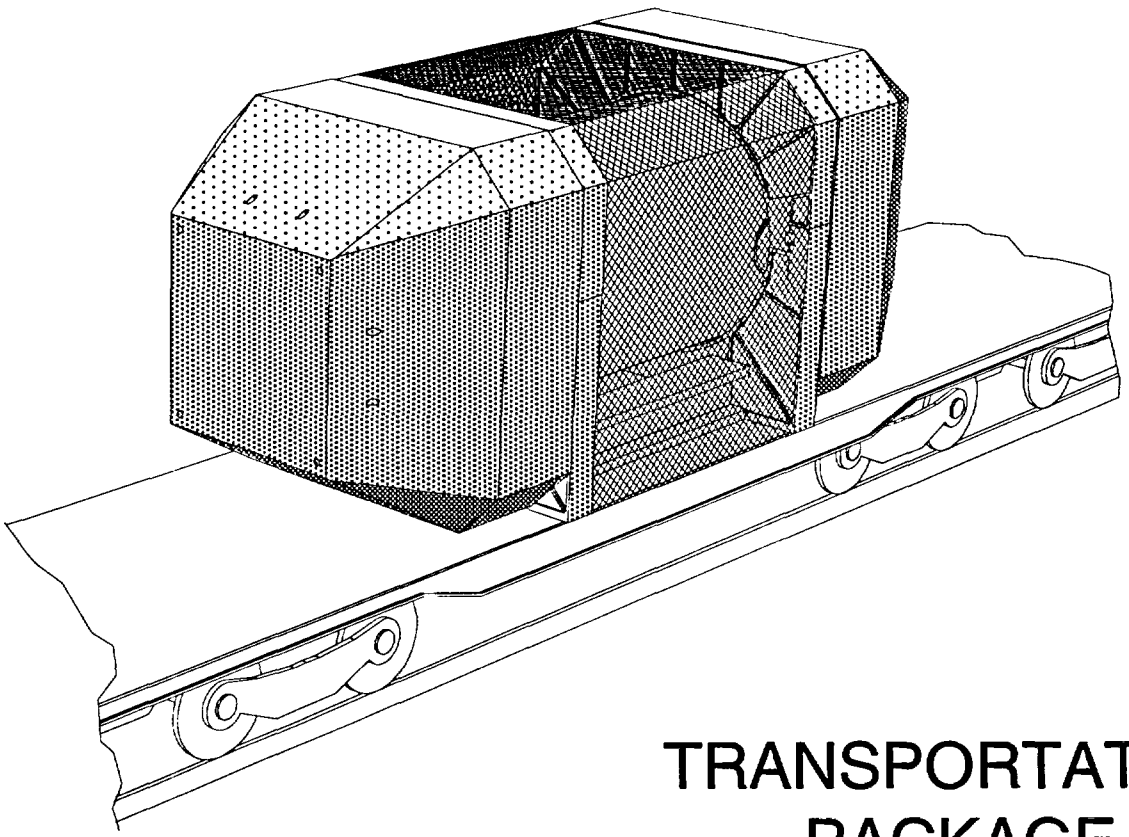

TRANSPORTATION PACKAGE

SAFETY ANALYSIS REPORT

NON-PROPRIETARY DATA

DOCUMENT NO. NUH-05-151
Volume I OF III

NUH-05-151
Revision 17
July 2003
File: NUH005.0151

SAFETY ANALYSIS REPORT

FOR THE

NUHOMS®-MP187

MULTI-PURPOSE CASK

Docket 71-9255

Prepared by:

Transnuclear, Inc.
Fremont, California

Copyright 1994 – Transnuclear, Inc.

NON-PROPRIETARY

REVISION HISTORY

Rev. 0	September 1993	Initial Issue
Rev. 1	February 1995	Response to NRC Comments
Rev. 2	February 1996	Response to NRC Comments
Rev. 3	July 1997	Response to NRC Comments
Rev. 4	November 1997	Response to NRC Comments
Rev. 5	January 1998	Minor Editorial Corrections
Rev. 6	May 1998	Response to NRC Comments
Rev. 7	August 1998	Clarifications and Editorial
Rev. 8	August 1998	Change Company Name
Rev. 9	September 1998	Revise Cask Inspection Requirements
Rev. 10	November 2000	Incorporate Amendments
Rev. 11	January 2001	Incorporate 24PT1-DSC Payload
Rev. 12	August 2001	Response to NRC RAIs for 24PT1-DSC
Rev. 13	September 2001	Amended Response to NRC RAI for 24PT1-DSC
Rev. 14	September 2001	Provide Alternate Design for FO/FC/FF-DSC and MP187 Cask Components
Rev. 15	November 2001	Supplement to Amendment 7
Rev. 16	June 2002	Additional Supplement to Amendment 7
Rev. 17	July 2003	Incorporate Amendments 6, 7 and 8

TABLE OF CONTENTS

Page

Revision History ..... **ii**

List of Tables ..... **viii**

List of Figures ..... **xxvii**

1. General Information **1-1**

1.1 Introduction 1.1-1
1.2 Package Description 1.2-1
1.2.1 Packaging 1.2-1
1.2.2 Operational Features 1.2-8
1.2.3 Contents of Packaging 1.2-8
1.3 Appendix 1.3-i
1.3.1 References 1.3-1
1.3.2 General Arrangement Drawings 1.3-2

2. Structural Evaluation **2-1**

2.1 Structural Design 2.1-1
2.1.1 Discussion 2.1-1
2.1.2 Design Criteria 2.1-15
2.2 Weights and Centers of Gravity 2.2-1
2.3 Mechanical Properties of Materials 2.3-1
2.3.1 NUHOMS® MP187 Cask Material Properties 2.3-1
2.3.2 FF, FC, and FO DSC Material Properties 2.3-8
2.3.3 Impact Limiter Energy Absorbing Material Properties 2.3-15
2.3.4 Shielding Material Properties 2.3-15
2.3.5 DSC Neutron Absorber Sheet Material Properties 2.3-19
2.4 General Standards for All Packages 2.4-1
2.4.1 Minimum Package Size 2.4-1
2.4.2 Tamper Indicating Device 2.4-1
2.4.3 Positive Closure 2.4-1
2.4.4 Chemical and Galvanic Reactions 2.4-1
2.5 Lifting and Tie-Down Standards for All Packages 2.5-1
2.5.1 Lifting Devices 2.5-1
2.5.2 Tie-Down Devices 2.5-10
2.5.3 Shear Key Analysis 2.5-14
2.6 Normal Conditions of Transport 2.6-1
2.6.1 Heat 2.6-1
2.6.2 Cold 2.6-17
2.6.3 Pressure 2.6-23
2.6.4 Vibration 2.6-28
2.6.5 Water Spray 2.6-38

2.6.6 Free Drop 2.6-38
2.6.7 Corner Drop 2.6-59
2.6.8 Compression 2.6-59
2.6.9 Penetration 2.6-59
2.6.10 Fabrication Stress Analysis 2.6-59
2.6.11 FO- and FC-DSC Analysis - Normal Conditions of Transport 2.6-67
2.6.12 FF-DSC Basket Analysis - Normal Conditions of Transport 2.6-116
2.6.13 NCT Load Combination Evaluation 2.6-138
2.7 Hypothetical Accident Conditions 2.7-1
2.7.1 Free Drop 2.7-1
2.7.2 Puncture 2.7-155
2.7.3 Thermal 2.7-183
2.7.4 Water Immersion 2.7-193
2.7.5 Summary of Damage 2.7-197
2.7.6 FO- and FC-DSC Analysis - Hypothetical Accident Conditions 2.7-199
2.7.7 FF-DSC Analysis - Hypothetical Accident Conditions 2.7-369
2.7.8 HAC Load Combination Evaluation 2.7-424
2.8 Special Form 2.8-1
2.9 Fuel Rods 2.9-1
2.10 Appendices 2.10-i
2.10.1 References 2.10.1-1
2.10.2 NUHOMS®-MP187 Cask Finite Element Analysis 2.10.2-1
2.10.3 FO- and FC-DSC Basket Assembly Finite Element Analysis 2.10.3-1
2.10.4 FF-DSC Basket Assembly Finite Element Analysis 2.10.4-1
2.10.5 Bolt Evaluation 2.10.5-1
2.10.6 Buckling Evaluation 2.10.6-1
2.10.7 Cask Lead Slump Finite Element Analysis 2.10.7-1
2.10.8 Impact Limiter Energy Absorbing Material Bench Tests 2.10.8-1
2.10.9 Impact Limiter Design and Performance Evaluation 2.10.9-1
2.10.10 Determination of Dynamic Load Factors for Free Drop Analysis 2.10.10-1
2.10.11 Impact Limiter Dynamic Verification Testing 2.10.11-1
2.10.12 Impact Limiter Static Verification Testing 2.10.12-1
2.10.13 Evaluation of the Type XM-19 Basket Design Option for the FF-DSC 2.10.13-1

3. Thermal Evaluation 3.1-1

3.1 Discussion 3.1-1
3.1.1 Thermal Load Case Definition 3.1-1
3.1.2 Thermal Design Criteria 3.1-2
3.1.3 Results of Design Basis Thermal Analyses 3.1-3
3.2 Summary of Thermal Properties of Materials 3.2-1
3.2.1 Thermophysical Properties of Materials 3.2-1
3.2.2 Emissivities 3.2-7
3.2.3 Natural Convection Coefficient 3.2-10
3.2.4 Forced Convection Coefficient 3.2-10
3.3 Technical Specifications for Components 3.3-1
3.4 Thermal Evaluation for Normal Conditions of Transport 3.4-1

3.4.1 Thermal Model 3.4-1
3.4.2 Maximum Temperatures 3.4-8
3.4.3 Minimum Temperatures 3.4-8
3.4.4 Maximum Internal Pressures 3.4-8
3.4.5 Maximum Thermal Stresses 3.4-8
3.4.6 Evaluation of Package Performance for Normal Conditions of Transport 3.4-9
3.5 Hypothetical Accident Thermal Evaluation 3.5-1
3.5.1 Bounding Condition for Accident Transients 3.5-1
3.5.2 Thermal Model 3.5-3
3.5.3 Maximum Internal Pressures 3.5-6
3.5.4 Maximum Temperatures 3.5-6
3.5.5 Maximum Thermal Stresses 3.5-7
3.5.6 Evaluation of Package Performance for Accident Conditions 3.5-7
3.6 Appendix 3.6-i
3.6.1 References 3.6.1-1
3.6.2 NOC Results 3.6.2-1
3.6.3 Accident Condition Results 3.6.3-1
3.6.4 Calculation of Maximum Clad Temperatures 3.6.4-1
3.6.5 FF-DSC Temperature Distribution 3.6.5-1
3.6.6 Calculation of Maximum Pressures 3.6.6-1

4. Containment 4.1-1

4.1 Containment Boundary 4.1-1
4.1.1 Containment Vessel 4.1-1
4.1.2 Containment Penetrations 4.1-1
4.1.3 Seals and Welds 4.1-1
4.2 Requirements for Normal Conditions of Transport 4.2-1
4.2.1 Containment of Radioactive Material 4.2-1
4.2.2 Pressurization of Containment Vessel 4.2-1
4.2.3 Contamination Criteria 4.2-1
4.3 Containment Requirements for Hypothetical Accident Conditions 4.3-1
4.3.1 Fission Gas Products 4.3-1
4.3.2 Containment of Radioactive Material 4.3-1
4.3.3 Containment Criteria 4.3-1
4.4 Appendix 4.4-i
4.4.1 References 4.4.1-1
4.4.2 Seal Material 4.4.2-1
4.4.3 Excerpts (8 pages) From "Seal for Ultra-Vacuum and Cryogenics" [4.5] 4.4.3-1
4.4.4 Excerpts (9 pages) From "Helicoflex Company Metallic O-Rings" [4.6] 4.4.4-1

5. Shielding Evaluation 5.1-1

5.1 Discussion and Results 5.1-2
5.2 Source Specification 5.2-1
5.2.1 Gamma Source 5.2-5
5.2.2 Neutron Source 5.2-27
5.3 Model Specification 5.3-1

5.3.1 Description of the Radial and Axial Shielding Configuration 5.3-1
5.3.2 Shield Regional Densities 5.3-11
5.4 Shielding Evaluation 5.4-1
5.4.1 DORT-PC Input Parameters 5.4-1
5.4.2 NUHOMS®-MP187 Package Dose Rate Results 5.4-33
5.5 Appendix 5.5-i
5.5.1 References 5.5.1-1
5.5.2 ORIGEN2 Input Files 5.5.2-1
5.5.3 MCNP Input Files 5.5.3-1
5.5.4 DORT-PC and GIP Input Files 5.5.4-1
5.5.5 ANISN Input Files 5.5.5-1
5.5.6 Moderate Temperature Weight Loss of NS-3 ..... 5.5.6-1
5.5.7 Fuel Assembly Axial Burnup Profiles 5.5.7-1
5.5.8 Alternate Fuel Parameters 5.5.8-1

6. Criticality Evaluation 6.1-1

6.1 Discussion and Results 6.1-1
6.1.1 NUHOMS®-MP187 Cask Design Features 6.1-1
6.1.2 Fuel-Only (FO) DSC Design Features 6.1-1
6.1.3 Fuel-Control Components (FC) DSC Design Features 6.1-4
6.1.4 Failed Fuel (FF) DSC Design Features 6.1-4
6.1.5 Criticality Analysis Summary and Results 6.1-5
6.2 Package Fuel Loading 6.2-1
6.3 Model Specification 6.3-1
6.3.1 Description of Calculational Model 6.3-1
6.3.2 NUHOMS®-MP187 Cask/FO-DSC Model 6.3-1
6.3.3 NUHOMS®-MP187 Cask/FF-DSC Model 6.3-9
6.3.4 Package Regional Densities 6.3-9
6.4 Criticality Calculation 6.4-1
6.4.1 Calculational Method 6.4-1
6.4.2 Fuel Loading Optimization 6.4-2
6.4.3 Criticality Results 6.4-4
6.5 Critical Benchmark Experiments 6.5-1
6.5.1 Benchmark Experiments and Applicability 6.5-1
6.5.2 Details of Benchmark Calculations 6.5-2
6.5.3 Results of Benchmark Calculations 6.5-2
6.6 Appendix 6.6-i
6.6.1 References 6.6.1-1
6.6.2 KENO Input Files 6.6.2-1

7. Operating Procedures 7.1-1

7.1 Procedures for Loading the Package 7.1-1
7.1.1 Preparation of the NUHOMS®-MP187 Cask for Use 7.1-1
7.1.2 Wet Loading the NUHOMS®-MP187 Cask and DSC 7.1-3
7.1.3 Transferring the DSC to an Onsite Storage Facility 7.1-7
7.1.4 Placing the DSC in an HSM for Storage 7.1-7

7.1.5 Loading the DSC into the Cask from an HSM 7.1-9
7.1.6 Placing the DSC in Metal Cask Storage at an Onsite Facility 7.1-10
7.1.7 Preparing the Cask for Transportation 7.1-11
7.1.8 Placing the Cask onto the Railcar 7.1-13
7.1.9 Glossary 7.1-14
7.2 Procedures for Unloading the Cask 7.2-1
7.2.1 Receipt of the Loaded NUHOMS®-MP187 Cask 7.2-1
7.2.2 Unloading the NUHOMS®-MP187 Cask to a Staging Module 7.2-2
7.2.3 Unloading the NUHOMS®-MP187 Cask to a Fuel Pool 7.2-3
7.2.4 Unloading the NUHOMS®-MP187 Cask to a Dry Cell 7.2-6
7.3 Preparation of an Empty Cask for Transport 7.3-1
7.4 Appendix 7.4-i
7.4.1 References 7.4.1-1
7.4.2 Leakage Rate Testing of the Containment Boundary 7.4.2-1

8. Acceptance Tests and Maintenance Program 8.1-1

8.1 Acceptance Tests 8.1-1
8.1.1 Visual Inspection 8.1-1
8.1.2 Structural and Pressure Tests 8.1-1
8.1.3 Leak Tests 8.1-2
8.1.4 Component Tests -Impact Limiter - Energy Absorption Material 8.1-9
8.1.5 Tests for Shielding Integrity 8.1-11
8.1.6 Thermal Acceptance Tests 8.1-15
8.1.7 Lead Installation Tests 8.1-16
8.1.8 Neutron Absorber Plates 8.1-16
8.2 Maintenance Program 8.2-1
8.2.1 Structural and Pressure Tests 8.2-1
8.2.2 Leak Tests 8.2-1
8.2.3 Subsystems Maintenance 8.2-2
8.2.4 Valves, Rupture Disks, and Gaskets 8.2-3
8.2.5 Shielding 8.2-4
8.2.6 Thermal 8.2-4
8.3 Appendix 8.3-i
8.3.1 References 8.3.1-1
8.3.2 Lead Installation Procedure 8.3.2-1
8.3.3 NS-3 Specification 8.3.3-1

See Appendix A for a Table of Contents for Appendix A.

LIST OF TABLES

Table	Title	Page
Table 1.1-1	Terminology and Notation Model: NUHOMS®-MP187	1-1
Table 1.2-1	Cooling Times to Meet Decay Heat Limits	1.2-12
Table 1.2-2	Fuel Characteristics	1.2-15
Table 1.2-3	Alternate Cooling Times for Fuel Qualification	1.2-15
Table 2.1.2-1	Containment Allowable Stress Limit Criteria	2.1-16
Table 2.1.2-2	Non-containment Allowable Stress Limit Criteria - Structural Components	2.1-18
Table 2.1.2-3	Non-containment Allowable Stress Limit Criteria - Criticality Control Components	2.1-19
Table 2.1.2-4	Load Combination Definitions	2.1-21
Table 2.1.2-1	NUHOMS®-MP187 Package Mass Properties	2.2-2
Table 2.1.2-2	NUHOMS® System Mass Properties	2.2-3
Table 2.3.1-1	NUHOMS®-MP187 Cask Structural Component Materials	2.3-2
Table 2.3.1-2	Mechanical Properties of ASME SA-240, Type 304 Stainless Steel	2.3-3
Table 2.3.1-3	Mechanical Properties of ASME SA-240, Type XM-19 Stainless Steel	2.3-4
Table 2.3.1-4	Mechanical Properties of ASME SA-182, Type F304 and F304H Stainless Steels	2.3-5
Table 2.3.1-5	Mechanical Properties of ASME SA-182, Type F304N Stainless Steel	2.3-6
Table 2.3.1-6	Mechanical Properties of ASME SA-320, Type L43 Carbon Steel	2.3-7
Table 2.3.2-1	NUHOMS® Dry Shielded Canister Structural Component Materials	2.3-11
Table 2.3.2-2	Mechanical Properties of ASME SA-564, Type 630	2.3-12
Table 2.3.2-3	Mechanical Properties of ASME SA-537, Class 2 Carbon Steel	2.3-13
Table 2.3.2-4	Comparison of Alternate DSC Spacer Disc Materials at Design Temperatures	2.3-14
Table 2.3.4-1	Mechanical Properties of Neutron Shielding Materials	2.3-17
Table 2.3.4-2	Static Mechanical Properties of ASTM-B29, Chemical Lead	2.3-17
Table 2.3.4-3	Dynamic Stress-Strain Lead Properties(2)	2.3-17
Table 2.4.4-1	NUHOMS®-MP187 FC-DSC (envelops FO- and FF-DSCs)	2.4-3
Table 2.4.4-2	Water Chemistry Environment	2.4-4
Table 2.5.1-1	Trunnion Sleeve Lifting Stresses	2.5-5
Table 2.5.1-2	Permissible Trunnion Bolt Materials and Properties at 100°F	2.5-10
Table 2.5.1-3	Critical Stress Components for Lifting Load	2.5-10
Table 2.6.1-1	Cask Thermal Stress Summary - Heat (100°F) Thermal Condition	2.6-8
Table 2.6.1-2	Cask Membrane S.I. Summary - 50 psig Internal Pressure	2.6-11
Table 2.6.1-3	Cask Membrane Plus Bending S.I. Summary - 50 psig Internal Pressure	2.6-12

Table 2.6.1-4 Cask Primary Plus Secondary S.I. Summary - 50 psig Internal Pressure 2.6-13
Table 2.6.2-1 Cask Thermal Stress Summary - Cold (-40°F) Thermal Condition 2.6-22
Table 2.6.3-1 Cask Membrane S.I. Summary - 5.3 psig External Pressure 2.6-25
Table 2.6.3-2 Cask Membrane Plus Bending S.I. Summary - 5.3 psig External Pressure 2.6-26
Table 2.6.3-3 Cask Primary Plus Secondary S.I. Summary - 5.3 psig External Pressure 2.6-27
Table 2.6.4-1 Cask Dead Weight Total Stress Summary, 0° Azimuth 2.6-33
Table 2.6.4-2 Cask Dead Weight Total Stress Summary, 45° Azimuth 2.6-34
Table 2.6.4-3 Cask Dead Weight Total Stress Summary, 90° Azimuth 2.6-35
Table 2.6.4-4 Cask Dead Weight Total Stress Summary, 135° Azimuth 2.6-36
Table 2.6.4-5 Cask Dead Weight Total Stress Summary, 180° Azimuth 2.6-37
Table 2.6.6-1 Cask 1-Foot Side Drop Membrane Stress Summary, 0° Azimuth 2.6-44
Table 2.6.6-2 Cask 1-Foot Side Drop Membrane Stress Summary, 45° Azimuth 2.6-45
Table 2.6.6-3 Cask 1-Foot Side Drop Membrane Stress Summary, 90° Azimuth 2.6-46
Table 2.6.6-4 Cask 1-Foot Side Drop Membrane Stress Summary, 135° Azimuth 2.6-47
Table 2.6.6-5 Cask 1-Foot Side Drop Membrane Stress Summary, 180° Azimuth 2.6-48
Table 2.6.6-6 Cask 1-Foot Side Drop Membrane Plus Bending Stress Summary, 0° Azimuth 2.6-49
Table 2.6.6-7 Cask 1-Foot Side Drop Membrane Plus Bending Stress Summary, 45° Azimuth 2.6-50
Table 2.6.6-8 Cask 1-Foot Side Drop Membrane Plus Bending Stress Summary, 90° Azimuth 2.6-51
Table 2.6.6-9 Cask 1-Foot Side Drop Membrane Plus Bending Stress Summary, 135° Azimuth 2.6-52
Table 2.6.6-10 Cask 1-Foot Side Drop Membrane Plus Bending Stress Summary, 180° Azimuth 2.6-53
Table 2.6.6-11 Cask 1-Foot Side Drop Primary Plus Secondary Stress Summary, 0° Azimuth 2.6-54
Table 2.6.6-12 Cask 1-Foot Side Drop Primary Plus Secondary Stress Summary, 45° Azimuth 2.6-55
Table 2.6.6-13 Cask 1-Foot Side Drop Primary Plus Secondary Stress Summary, 90° Azimuth 2.6-56
Table 2.6.6-14 Cask 1-Foot Side Drop Primary Plus Secondary Stress Summary, 135° Azimuth 2.6-57
Table 2.6.6-15 Cask 1-Foot Side Drop Primary Plus Secondary Stress Summary, 180° Azimuth 2.6-58
Table 2.6.11-1 FC-DSC Spacer Disc Ligament S.I. for -20°F Thermal Condition 2.6-76
Table 2.6.11-2 Top 20 FC-DSC Spacer Disc S.I. for -20°F Thermal Condition 2.6-78
Table 2.6.11-3 FC-DSC Spacer Disc Ligament S.I. for Vibration 2.6-88
Table 2.6.11-4 Top 20 FC-DSC Spacer Disc S.I. for Vibration 2.6-89
Table 2.6.11-5 FC-DSC Spacer Disc Ligament S.I. for 1-Foot Drop 2.6-103

Table 2.6.11-6 Top 20 FC-DSC Spacer Disc S.I. for 1-Foot Drop 2.6-104
Table 2.6.12-1 FF Spacer Disc 20 Highest S.I. - Heat Condition (100°F) 2.6-119
Table 2.6.12-2 Vibration Spacer Disc 20 Highest S.I. - Vibration 2.6-124
Table 2.6.12-3 Spacer Disc Ligament Stresses - Vibration 2.6-126
Table 2.6.12-4 Spacer Disc 20 Highest S.I. - 1-Foot Side Drop 2.6-129
Table 2.6.12-5 Spacer Disc Ligament Stresses - 1-Foot Side Drop 2.6-131
Table 2.6.13-1 50 psig Internal Pressure + Thermal (100°F) - Pm @ All Azimuths 2.6-144
Table 2.6.13-2 50 psig Internal Pressure + Thermal (100°F) - Pm + Pb @ All Azimuths 2.6-145
Table 2.6.13-3 50 psig Internal Pressure + Thermal (100°F) - Total Stresses @ All Azimuths 2.6-146
Table 2.6.13-4 Vibration + Thermal (-40°F) + 50 psig Internal Pressure - Pm @ 0° Azimuth 2.6-147
Table 2.6.13-5 Vibration + Thermal (-40°F) + 50 psig Internal Pressure - Pm @ 45° Azimuth 2.6-148
Table 2.6.13-6 Vibration + Thermal (-40°F) + 50 psig Internal Pressure - Pm @ 90° Azimuth 2.6-149
Table 2.6.13-7 Vibration + Thermal (-40°F) + 50 psig Internal Pressure - Pm @ 135° Azimuth 2.6-150
Table 2.6.13-8 Vibration + Thermal (-40°F) + 50 psig Internal Pressure - Pm @ 180° Azimuth 2.6-151
Table 2.6.13-9 Vibration + Thermal (-40°F) + 50 psig Internal Pressure - Pm + Pb @ 0° Azimuth 2.6-152
Table 2.6.13-10 Vibration + Thermal (-40°F) + 50 psig Internal Pressure - Pm + Pb @ 45° Azimuth 2.6-153
Table 2.6.13-11 Vibration + Thermal (-40°F) + 50 psig Internal Pressure - Pm + Pb @ 90° Azimuth 2.6-154
Table 2.6.13-12 Vibration + Thermal (-40°F) + 50 psig Internal Pressure - Pm + Pb @ 135° Azimuth 2.6-155
Table 2.6.13-13 Vibration + Thermal (-40°F) + 50 psig Internal Pressure - Pm + Pb @ 180° Azimuth 2.6-156
Table 2.6.13-14 Vibration + Thermal (-40°F) + 50 psig Internal Pressure - Total Stresses @ 0° Azimuth 2.6-157
Table 2.6.13-15 Vibration + Thermal (-40°F) + 50 psig Internal Pressure - Total Stresses @ 45° Azimuth 2.6-158
Table 2.6.13-16 Vibration + Thermal (-40°F) + 50 psig Internal Pressure - Total Stresses @ 90° Azimuth 2.6-159
Table 2.6.13-17 Vibration + Thermal (-40°F) + 50 psig Internal Pressure - Total Stresses @ 135° Azimuth 2.6-160
Table 2.6.13-18 Vibration + Thermal (-40°F) + 50 psig Internal Pressure - Total Stresses @ 180° Azimuth 2.6-161
Table 2.6.13-19 Vibration + Thermal (100°F) + 50 psig Internal Pressure - Pm @ 0° Azimuth 2.6-162
Table 2.6.13-20 Vibration + Thermal (100°F) + 50 psig Internal Pressure - Pm @ 45° Azimuth 2.6-163

Table 2.6.13-21 Vibration + Thermal (100°F) + 50 psig Internal Pressure - Pm @ 90° Azimuth 2.6-164
Table 2.6.13-22 Vibration + Thermal (100°F) + 50 psig Internal Pressure - Pm @ 135° Azimuth 2.6-165
Table 2.6.13-23 Vibration + Thermal (100°F) + 50 psig Internal Pressure - Pm @ 180° Azimuth 2.6-166
Table 2.6.13-24 Vibration + Thermal (100°F) + 50 psig Internal Pressure - Pm + Pb @ 0° Azimuth 2.6-167
Table 2.6.13-25 Vibration + Thermal (100°F) + 50 psig Internal Pressure - Pm + Pb @ 45° Azimuth 2.6-168
Table 2.6.13-26 Vibration + Thermal (100°F) + 50 psig Internal Pressure - Pm + Pb @ 90° Azimuth 2.6-169
Table 2.6.13-27 Vibration + Thermal (100°F) + 50 psig Internal Pressure - Pm + Pb @ 135° Azimuth 2.6-170
Table 2.6.13-28 Vibration + Thermal (100°F) + 50 psig Internal Pressure - Pm + Pb @ 180° Azimuth 2.6-171
Table 2.6.13-29 Vibration + Thermal (100°F) + 50 psig Internal Pressure - Total Stresses @ 0° Azimuth 2.6-172
Table 2.6.13-30 Vibration + Thermal (100°F) + 50 psig Internal Pressure - Total Stresses @ 45° Azimuth 2.6-173
Table 2.6.13-31 Vibration + Thermal (100°F) + 50 psig Internal Pressure - Total Stresses @ 90° Azimuth 2.6-174
Table 2.6.13-32 Vibration + Thermal (100°F) + 50 psig Internal Pressure - Total Stresses @ 135° Azimuth 2.6-175
Table 2.6.13-33 Vibration + Thermal (100°F) + 50 psig Internal Pressure - Total Stresses @ 180° Azimuth 2.6-176
Table 2.6.13-34 1' Drop + Thermal (100°F) + 50 psig Internal Pressure - Pm @ 0° Azimuth 2.6-177
Table 2.6.13-35 1' Drop + Thermal (100°F) + 50 psig Internal Pressure - Pm @ 45° Azimuth 2.6-178
Table 2.6.13-36 1' Drop + Thermal (100°F) + 50 psig Internal Pressure - Pm @ 90° Azimuth 2.6-179
Table 2.6.13-37 1' Drop + Thermal (100°F) + 50 psig Internal Pressure - Pm @ 135° Azimuth 2.6-180
Table 2.6.13-38 1' Drop + Thermal (100°F) + 50 psig Internal Pressure - Pm @ 180° Azimuth 2.6-181
Table 2.6.13-39 1' Drop + Thermal (100°F) + 50 psig Internal Pressure - Pm + Pb @ 0° Azimuth 2.6-182
Table 2.6.13-40 1' Drop + Thermal (100°F) + 50 psig Internal Pressure - Pm + Pb @ 45° Azimuth 2.6-183
Table 2.6.13-41 1' Drop + Thermal (100°F) + 50 psig Internal Pressure - Pm + Pb @ 90° Azimuth 2.6-184
Table 2.6.13-42 1' Drop + Thermal (100°F) + 50 psig Internal Pressure - Pm + Pb @ 135° Azimuth 2.6-185
Table 2.6.13-43 1' Drop + Thermal (100°F) + 50 psig Internal Pressure - Pm + Pb @ 180° Azimuth 2.6-186

Table 2.6.13-44 1' Drop + Thermal (100°F) + 50 psig Internal Pressure - Total Stresses @ 0° Azimuth 2.6-187
Table 2.6.13-45 1' Drop + Thermal (100°F) + 50 psig Internal Pressure - Total Stresses @ 45° Azimuth 2.6-188
Table 2.6.13-46 1' Drop + Thermal (100°F) + 50 psig Internal Pressure - Total Stresses @ 90° Azimuth 2.6-189
Table 2.6.13-47 1' Drop + Thermal (100°F) + 50 psig Internal Pressure - Total Stresses @ 135° Azimuth 2.6-190
Table 2.6.13-48 1' Drop + Thermal (100°F) + 50 psig Internal Pressure - Total Stresses @ 180° Azimuth 2.6-191
Table 2.6.13-49 1' Drop + Thermal (-40°F) + 50 psig Internal Pressure - Pm @ 0° Azimuth 2.6-192
Table 2.6.13-50 1' Drop + Thermal (-40°F) + 50 psig Internal Pressure - Pm @ 45° Azimuth 2.6-193
Table 2.6.13-51 1' Drop + Thermal (-40°F) + 50 psig Internal Pressure - Pm @ 90° Azimuth 2.6-194
Table 2.6.13-52 1' Drop + Thermal (-40°F) + 50 psig Internal Pressure - Pm @ 135° Azimuth 2.6-195
Table 2.6.13-53 1' Drop + Thermal (-40°F) + 50 psig Internal Pressure - Pm @ 180° Azimuth 2.6-196
Table 2.6.13-54 1' Drop + Thermal (-40°F) + 50 psig Internal Pressure - Pm + Pb @ 0° Azimuth 2.6-197
Table 2.6.13-55 1' Drop + Thermal (-40°F) + 50 psig Internal Pressure - Pm + Pb @ 45° Azimuth 2.6-198
Table 2.6.13-56 1' Drop + Thermal (-40°F) + 50 psig Internal Pressure - Pm + Pb @ 90° Azimuth 2.6-199
Table 2.6.13-57 1' Drop + Thermal (-40°F) + 50 psig Internal Pressure - Pm + Pb @ 135° Azimuth 2.6-200
Table 2.6.13-58 1' Drop + Thermal (-40°F) + 50 psig Internal Pressure - Pm + Pb @ 180° Azimuth 2.6-201
Table 2.6.13-59 1' Drop + Thermal (-40°F) + 50 psig Internal Pressure - Total Stresses @ 0° Azimuth 2.6-202
Table 2.6.13-60 1' Drop + Thermal (-40°F) + 50 psig Internal Pressure - Total Stresses @ 45° Azimuth 2.6-203
Table 2.6.13-61 1' Drop + Thermal (-40°F) + 50 psig Internal Pressure - Total Stresses @ 90° Azimuth 2.6-204
Table 2.6.13-62 1' Drop + Thermal (-40°F) + 50 psig Internal Pressure - Total Stresses @ 135° Azimuth 2.6-205
Table 2.6.13-63 1' Drop + Thermal (-40°F) + 50 psig Internal Pressure - Total Stresses @ 180° Azimuth 2.6-206
Table 2.6.13-64 5.3 psig External Pressure + Thermal (-40°F) - Pm @ All Azimuths 2.6-207
Table 2.6.13-65 5.3 psig External Pressure + Thermal (-40°F) - Pm + Pb @ All Azimuths 2.6-208
Table 2.6.13-66 5.3 psig External Pressure + Thermal (-40°F) - Total Stresses @ All Azimuths 2.6-209

Table 2.6.13-67 FC-DSC Spacer Disc Ligament S.I. for Vibration + Thermal 2.6-211
Table 2.6.13-68 Top 20 FC-DSC Spacer Disc S.I. for Vibration + Thermal 2.6-212
Table 2.6.13-69 FC-DSC Spacer Disc Ligament S.I. for 1-Foot Drop + Thermal..... 2.6-216
Table 2.6.13-70 Top 20 FC-DSC Spacer Disc S.I. for 1-Foot Drop + Thermal 2.6-217
Table 2.6.13-71 Combined Load Stress Intensities - Normal Conditions of Transport 2.6-221
Table 2.6.13-72 Spacer Disc Top 20 S.I. - Vibration plus Normal Thermal..... 2.6-222
Table 2.6.13-73 Spacer Disc Top 20 S.I. - 1-Foot Side Drop + Normal Thermal 2.6-225
Table 2.7.1-1 Cask Drop Equivalent Static G-Loads 2.7-4
Table 2.7.1-1a Comparison of Analyzed and Predicted Static G-Loads..... 2.7-5
Table 2.7.1-2 Comparison of Cask Equivalent Static and Quasi-Static G-Loads..... 2.7-7
Table 2.7.1-3 Cask 30-Foot Top End Drop Primary Membrane Stress Summary..... 2.7-17
Table 2.7.1-4 Cask 30-Foot Top End Drop Membrane Plus Bending Stress Summary..... 2.7-18
Table 2.7.1-5 Cask 30-Foot Bottom End Drop Primary Membrane Stress Summary..... 2.7-19
Table 2.7.1-6 Cask 30-Foot Bottom End Drop Membrane Plus Bending Stress Summary..... 2.7-20
Table 2.7.1-7 Cask Nominal Shell Stresses - 30' End Drop 2.7-33
Table 2.7.1-8 Ram Closure Plate Stresses Due to 1g End Drop..... 2.7-35
Table 2.7.1-9 Bottom End Closure Stresses due to 1g Bottom End Drop..... 2.7-38
Table 2.7.1-10 Top Cover Plate Stresses due to 1g Top End Drop..... 2.7-39
Table 2.7.1-11 Cask Primary Membrane S.I. Summary - Cold 30-foot End Drop 2.7-41
Table 2.7.1-12 Cask Primary Membrane S.I. Summary - Hot 30-foot End Drop..... 2.7-42
Table 2.7.1-13 Cask 30-Foot Side Drop Membrane Shell Stresses Summary, 0° Azimuth 2.7-49
Table 2.7.1-14 Cask 30-Foot Side Drop Membrane Stress Summary, 45° Azimuth 2.7-50
Table 2.7.1-15 Cask 30-Foot Side Drop Membrane Stress Summary, 90° Azimuth 2.7-51
Table 2.7.1-16 Cask 30-Foot Side Drop Membrane Stress Summary, 135° Azimuth 2.7-52
Table 2.7.1-17 Cask 30-Foot Side Drop Membrane Stress Summary, 180° Azimuth 2.7-53
Table 2.7.1-18 Cask 30-Foot Side Drop Membrane Plus Bending Stress Summary, 0° Azimuth 2.7-54
Table 2.7.1-19 Cask 30-Foot Side Drop Membrane Plus Bending Stress Summary, 45° Azimuth 2.7-55
Table 2.7.1-20 Cask 30-Foot Side Drop Membrane Plus Bending Stress Summary, 90° Azimuth 2.7-56
Table 2.7.1-21 Cask 30-Foot Side Drop Membrane Plus Bending Stress Summary, 135° Azimuth 2.7-57
Table 2.7.1-22 Cask 30-Foot Side Drop Membrane Plus Bending Stress Summary, 180° Azimuth 2.7-58

Table 2.7.1-23 Cask 30-Foot C.G. Over Top Flatside Drop Membrane Stress Summary, 0° Azimuth 2.7-71
Table 2.7.1-24 Cask 30-Foot C.G. Over Top Flatside Drop Membrane Stress Summary, 45° Azimuth 2.7-72
Table 2.7.1-25 Cask 30-Foot C.G. Over Top Flatside Drop Membrane Stress Summary, 90° Azimuth 2.7-73
Table 2.7.1-26 Cask 30-Foot C.G. Over Top Flatside Drop Membrane Stress Summary, 135° Azimuth 2.7-74
Table 2.7.1-27 Cask 30-Foot C.G. Over Top Flatside Drop Membrane Stress Summary, 180° Azimuth 2.7-75
Table 2.7.1-28 Cask 30-Foot C.G. Over Top Flatside Drop Membrane Plus Bending Stress Summary, 0° Azimuth 2.7-76
Table 2.7.1-29 Cask 30-Foot C.G. Over Top Flatside Drop Membrane Plus Bending Stress Summary, 45° Azimuth 2.7-77
Table 2.7.1-30 Cask 30-Foot C.G. Over Top Flatside Drop Membrane Plus Bending Stress Summary, 90° Azimuth 2.7-78
Table 2.7.1-31 Cask 30-Foot C.G. Over Top Flatside Drop Membrane Plus Bending Stress Summary, 135° Azimuth 2.7-79
Table 2.7.1-32 Cask 30-Foot C.G. Over Top Flatside Drop Membrane Plus Bending Stress Summary, 180° Azimuth 2.7-80
Table 2.7.1-33 Cask 30-Foot C.G. Over Bottom Flatside Drop Membrane Stress Summary, 0° Azimuth 2.7-81
Table 2.7.1-34 Cask 30-Foot C.G. Over Bottom Flatside Drop Membrane Stress Summary, 45° Azimuth 2.7-82
Table 2.7.1-35 Cask 30-Foot C.G. Over Bottom Flatside Drop Membrane Stress Summary, 90° Azimuth 2.7-83
Table 2.7.1-36 Cask 30-Foot C.G. Over Bottom Flatside Drop Membrane Stress Summary, 135° Azimuth 2.7-84
Table 2.7.1-37 Cask 30-Foot C.G. Over Bottom Flatside Drop Membrane Stress Summary, 180° Azimuth 2.7-85
Table 2.7.1-38 Cask 30-Foot C.G. Over Bottom Flatside Drop Membrane Plus Bending Stress Summary, 0° Azimuth 2.7-86
Table 2.7.1-39 Cask 30-Foot C.G. Over Bottom Flatside Drop Membrane Plus Bending Stress Summary, 45° Azimuth 2.7-87
Table 2.7.1-40 Cask 30-Foot C.G. Over Bottom Flatside Drop Membrane Plus Bending Stress Summary, 90° Azimuth 2.7-88
Table 2.7.1-41 Cask 30-Foot C.G. Over Bottom Flatside Drop Membrane Plus Bending Stress Summary, 135° Azimuth 2.7-89
Table 2.7.1-42 Cask 30-Foot C.G. Over Bottom Flatside Drop Membrane Plus Bending Stress Summary, 180° Azimuth 2.7-90
Table 2.7.1-43 Cask 30-Foot 30° Primary Impact Drop Membrane Shell Stresses Summary, 0° Azimuth 2.7-104
Table 2.7.1-44 Cask 30-Foot 30° Primary Impact Drop Membrane Stress Summary, 45° Azimuth 2.7-105

Table 2.7.1-45 Cask 30-Foot 30° Primary Impact Drop Membrane Stress Summary, 90° Azimuth 2.7-106
Table 2.7.1-46 Cask 30-Foot 30° Primary Impact Drop Membrane Stress Summary, 135° Azimuth 2.7-107
Table 2.7.1-47 Cask 30-Foot 30° Primary Impact Drop Membrane Stress Summary, 180° Azimuth 2.7-108
Table 2.7.1-48 Cask 30-Foot 30° Primary Impact Drop Membrane Plus Bending Stress Summary, 0° Azimuth 2.7-109
Table 2.7.1-49 Cask 30-Foot 30° Primary Impact Drop Membrane Plus Bending Stress Summary, 45° Azimuth 2.7-110
Table 2.7.1-50 Cask 30-Foot 30° Primary Impact Drop Membrane Plus Bending Stress Summary, 90° Azimuth 2.7-111
Table 2.7.1-51 Cask 30-Foot 30° Primary Impact Drop Membrane Plus Bending Stress Summary, 135° Azimuth 2.7-112
Table 2.7.1-52 Cask 30-Foot 30° Primary Impact Drop Membrane Plus Bending Stress Summary, 180° Azimuth 2.7-113
Table 2.7.1-53 Cask 30-Foot 60° Primary Impact Drop Membrane Shell Stresses Summary, 0° Azimuth 2.7-124
Table 2.7.1-54 Cask 30-Foot 60° Primary Impact Drop Membrane Stress Summary, 45° Azimuth 2.7-125
Table 2.7.1-55 Cask 30-Foot 60° Primary Impact Drop Membrane Stress Summary, 90° Azimuth 2.7-126
Table 2.7.1-56 Cask 30-Foot 60° Primary Impact Drop Membrane Stress Summary, 135° Azimuth 2.7-127
Table 2.7.1-57 Cask 30-Foot 60° Primary Impact Drop Membrane Stress Summary, 180° Azimuth 2.7-128
Table 2.7.1-58 Cask 30-Foot 60° Primary Impact Drop Membrane Plus Bending Stress Summary, 0° Azimuth 2.7-129
Table 2.7.1-59 Cask 30-Foot 60° Primary Impact Drop Membrane Plus Bending Stress Summary, 45° Azimuth 2.7-130
Table 2.7.1-60 Cask 30-Foot 60° Primary Impact Drop Membrane Plus Bending Stress Summary, 90° Azimuth 2.7-131
Table 2.7.1-61 Cask 30-Foot 60° Primary Impact Drop Membrane Plus Bending Stress Summary, 135° Azimuth 2.7-132
Table 2.7.1-62 Cask 30-Foot 60° Primary Impact Drop Membrane Plus Bending Stress Summary, 180° Azimuth 2.7-133
Table 2.7.1-63 Cask 30-Foot Flatside Slapdown Drop Membrane Shell Stresses Summary, 0° Azimuth 2.7-145
Table 2.7.1-64 Cask 30-Foot Flatside Slapdown Drop Membrane Stress Summary, 45° Azimuth 2.7-146
Table 2.7.1-65 Cask 30-Foot Flatside Slapdown Drop Membrane Stress Summary, 90° Azimuth 2.7-147
Table 2.7.1-66 Cask 30-Foot Flatside Slapdown Drop Membrane Stress Summary, 135° Azimuth 2.7-148

Table 2.7.1-67 Cask 30-Foot Flatside Slapdown Drop Membrane Stress Summary, 180° Azimuth 2.7-149
Table 2.7.1-68 Cask 30-Foot Flatside Slapdown Drop Membrane Plus Bending Stress Summary, 0° Azimuth 2.7-150
Table 2.7.1-69 Cask 30-Foot Flatside Slapdown Drop Membrane Plus Bending Stress Summary, 45° Azimuth 2.7-151
Table 2.7.1-70 Cask 30-Foot Flatside Slapdown Drop Membrane Plus Bending Stress Summary, 90° Azimuth 2.7-152
Table 2.7.1-71 Cask 30-Foot Flatside Slapdown Drop Membrane Plus Bending Stress Summary, 135° Azimuth 2.7-153
Table 2.7.1-72 Cask 30-Foot Flatside Slapdown Drop Membrane Plus Bending Stress Summary, 180° Azimuth 2.7-154
Table 2.7.3-1 Cask Fire Thermal Stresses at 30 Minutes 2.7-191
Table 2.7.3-2 Cask Post-Fire Steady-State Stresses 2.7-192
Table 2.7.4-1 Cask Primary Membrane S.I. Summary - 200m Immersion 2.7-195
Table 2.7.4-2 Cask Membrane Plus Bending S.I. Summary - 200m Immersion 2.7-196
Table 2.7.6-1 Summary of Maximum Disc Loads and Comparison of Analyzed and Calculated Loads 2.7-205
Table 2.7.6-2 Top 20 Spacer Disc S.I. (Extreme Fiber) - End Drop 2.7-207
Table 2.7.6-3 Spacer Disc Ligament S.I. - Corner 72° Impact 2.7-216
Table 2.7.6-4 FC Spacer Disc Top 20 S.I. (Middle Fiber) - Corner 72° Impact 2.7-217
Table 2.7.6-5 FC Spacer Disc Top 20 S.I. (Top Fiber) - Corner 72° Impact 2.7-218
Table 2.7.6-6 FC Spacer Disc Top 20 S.I. (Bottom Fiber) - Corner 72° Impact 2.7-219
Table 2.7.6-7 FC Spacer Disc Ligament S.I. - Flatside 60° Impact 2.7-235
Table 2.7.6-8 FC Spacer Disc Top 20 S.I. (Middle Fiber) - Flatside 60° Impact 2.7-236
Table 2.7.6-9 FC Spacer Disc Top 20 S.I. (Top Fiber) - Flatside 60° Impact 2.7-237
Table 2.7.6-10 FC Spacer Disc Top 20 S.I. (Bottom Fiber) - Flatside 60° Impact 2.7-238
Table 2.7.6-11 FC Spacer Disc Ligament S.I. - Flatside 30° Primary Impact 2.7-240
Table 2.7.6-12 FC Spacer Disc Top 20 S.I. (Middle Fiber) - Flatside 30° Primary Impact 2.7-241
Table 2.7.6-13 Spacer Disc Top 20 S.I. (Top Fiber) - Flatside 30° Primary Impact 2.7-242
Table 2.7.6-14 Spacer Disc Top 20 S.I. (Bottom Fiber) - Flatside 30° Primary Impact 2.7-243
Table 2.7.6-15 FC Spacer Disc Ligament S.I. - Flatside Slapdown 2.7-245
Table 2.7.6-16 FC Spacer Disc Top 20 S.I. (Middle Fiber) - Flatside Slapdown 2.7-246
Table 2.7.6-17 FC Spacer Disc Top 20 S.I. (Top Fiber) - Flatside Slapdown 2.7-247
Table 2.7.6-18 FC Spacer Disc Top 20 S.I. (Bottom Fiber) - Flatside Slapdown 2.7-248
Table 2.7.6-19 FC Spacer Disc Ligament S.I. - Corner 60° Impact 2.7-268
Table 2.7.6-20 FC Spacer Disc Top 20 S.I. (Middle Fiber) - Corner 60° Impact 2.7-269
Table 2.7.6-21 FC Spacer Disc Top 20 S.I. (Top Fiber) - Corner 60° Impact 2.7-270
Table 2.7.6-22 FC Spacer Disc Top 20 S.I. (Bottom Fiber) - Corner 60° Impact 2.7-271
Table 2.7.6-23 FC Spacer Disc Ligament S.I. - Corner 30° Primary Impact 2.7-273
Table 2.7.6-24 FC Spacer Disc Top 20 S.I. (Middle Fiber) - Corner 30° Primary Impact 2.7-274

Table 2.7.6-25 FC Spacer Disc Top 20 S.I. (Top Fiber) - Corner 30° Primary Impact 2.7-275
Table 2.7.6-26 FC Spacer Disc Top 20 S.I. (Bottom Fiber) - Corner 30° Primary Impact 2.7-276
Table 2.7.6-27 FC Spacer Disc Ligament S.I. - Corner Slapdown 2.7-278
Table 2.7.6-28 FC Spacer Disc Top 20 S.I. (Middle Fiber) - Corner Slapdown 2.7-279
Table 2.7.6-29 FC Spacer Disc Top 20 S.I. (Top Fiber) - Corner Slapdown 2.7-280
Table 2.7.6-30 FC Spacer Disc Top 20 S.I. (Bottom Fiber) - Corner Slapdown 2.7-281
Table 2.7.6-31 FO/FC Support Rod 30' Drop G-Loads 2.7-310
Table 2.7.6-32 Support Rod Deflection Due to 75g End Drop Impact 2.7-317
Table 2.7.6-33 Support Rod Sleeve Forces and Moments - 75g End Drop 2.7-323
Table 2.7.6-34 Support Rod Sleeve Stresses - 75g End Drop 2.7-326
Table 2.7.6-35 Support Rod Sleeve Shear and Bearing Stresses - 75g End Drop 2.7-328
Table 2.7.6-36 Support Rod Deflection Due to 45g Longitudinal Load 2.7-330
Table 2.7.6-37 Support Rod Sleeve Forces and Moments - Oblique Drop 2.7-333
Table 2.7.6-38 Support Rod Sleeve Stresses - Oblique Drop 2.7-334
Table 2.7.6-39 Support Rod Shear and Bearing Stresses - Oblique Drop 2.7-336
Table 2.7.6-40 FC Guide Sleeve 30' Drop G-Loads 2.7-342
Table 2.7.7-1 Bounding 30-Foot Drop Cases 2.7-370
Table 2.7.7-2 Spacer Disc Equivalent Static G-loads 2.7-372
Table 2.7.7-3 Top 20 Spacer Disc S.I. (Extreme Fiber) - End Drop 2.7-374
Table 2.7.7-4 Spacer Disc Top 20 S.I (Bottom Fiber) - Bounding Flatside Impact 2.7-378
Table 2.7.7-5 Spacer Disc Top 20 S.I (Middle Fiber) - Bounding Flatside Impact 2.7-380
Table 2.7.7-6 Spacer Disc Top 20 S.I (Top Fiber) - Bounding Flatside Impact 2.7-382
Table 2.7.7-7 Spacer Disc Ligament S.I. - Flat Oblique Secondary Impact 2.7-384
Table 2.7.7-8 Spacer Disc 20 Maximum S.I (Bottom Fiber) - Corner Oblique Impact 2.7-388
Table 2.7.7-9 Spacer Disc 20 Maximum S.I (Middle Fiber) - Corner Oblique Impact 2.7-390
Table 2.7.7-10 Spacer Disc 20 Maximum S.I (Top Fiber) - Corner Oblique Impact 2.7-392
Table 2.7.7-11 Spacer Disc Ligament S.I. - Corner Oblique Impact 2.7-394
Table 2.7.7-12 Spacer Disc 20 Maximum S.I. (Bottom Fiber) - Corner Slapdown 2.7-397
Table 2.7.7-13 Spacer Disc 20 Maximum S.I. (Middle Fiber) - Corner Slapdown 2.7-399
Table 2.7.7-14 Spacer Disc 20 Maximum S.I. (Top Fiber) - Corner Slapdown 2.7-401
Table 2.7.7-15 Spacer Disc Ligament S.I. - Corner Slapdown 2.7-403
Table 2.7.7-16 Fuel Can Oblique Drop Equivalent Static Loads 2.7-420
Table 2.7.8-41 Cask Pm S.I. Summary - 30' Top End Drop + 50 psi Internal Pressure - All Azimuths 2.7-470
Table 2.7.8-42 Cask $P_m + P_b$ S.I. Summary - 30' Top End Drop + 50 psi Internal Pressure - All Azimuths 2.7-471
Table 2.7.8-43 Cask P_m S.I. Summary - 30' Bottom End Drop + 50 psi Internal Pressure - All Azimuths 2.7-472

Table 2.7.8-44 Cask $P_m + P_b$ S.I. Summary - 30' Bottom End Drop + 50 psi Internal Pressure - All Azimuths 2.7-473
Table 2.10.3-1 Spacer Disc Analytical Tributary Weight Distribution 2.10.3-13
Table 2.10.3-2 Spacer Disc Actual Tributary Weight Distribution 2.10.3-14
Table 2.10.3-3 FC Spacer Disc Oblique Drop Bounding Impact Loads 2.10.3-15
Table 2.10.3-4 FC Spacer Disc Flatside Oblique Impact Bounding Analytical Tangential Loads 2.10.3-15
Table 2.10.3-5 FC Spacer Disc Flatside Oblique Impact Actual Tangential Loads 2.10.3-16
Table 2.10.3-6 DSC Shell Stiffness Analysis Results 2.10.3-22
Table 2.10.3-7 Summary of PWR Fuel Assembly Weights 2.10.3-23
Table 2.10.3-8 FC Spacer Disc Corner Oblique Impact Bounding AnalyticalTangential Loads 2.10.3-30
Table 2.10.3-9 FC Spacer Disc Corner Oblique Impact Actual Tangential Loads 2.10.3-31
Table 2.10.3-10 FC Spacer Disc Corner Oblique Drop Impact Loads 2.10.3-31
Table 2.10.4-1 Summary of PWR Fuel Assembly Weights 2.10.4-7
Table 2.10.7-1 Cask Primary Membrane S.I. Summary - Bottom End Drop Lead Slump 2.10.7-9
Table 2.10.7-2 Cask Membrane Plus Bending S.I. Summary - Bottom End Drop Lead Slump 2.10.7-10
Table 2.10.7-3 Cask Primary Plus Secondary S.I. Summary - Bottom End Drop Lead Slump 2.10.7-11
Table 2.10.7-4 Cask Primary Membrane S.I. Summary - Top End Drop Lead Slump 2.10.7-12
Table 2.10.7-5 Cask Membrane Plus Bending S.I. Summary - Top End Drop Lead Slump 2.10.7-13
Table 2.10.7-6 Cask Primary Plus Secondary S.I. Summary - Top End Drop Lead Slump 2.10.7-14
Table 2.10.10-1 NUHOMS®-MP187 Transportation Package Component Frequency Summary 2.10.10-49
Table 2.10.10-2 Maximum DLF for FC- and FO-DSC Components Drop Condition 2.10.10-50
Table 2.10.10-3 Maximum DLF for FF-DSC Components 2.10.10-51
Table 2.10.10-4 Maximum DLF for Multi-Purpose Cask 2.10.10-52
Table 2.10.10-5 DLF Program Verification Results - Undamped Systems 2.10.10-55
Table 2.10.10-6 DLF Program Verification Results - Damped Systems 2.10.10-55
Table 2.10.10-7 DLF Program Verification Results - Undamped Systems 2.10.10-56
Table 2.10.11-1 NUHOMS®-MP187 Impact Limiter Certification Test Matrix 2.10.11-13
Table 2.10.11-2 Test Matrix for Dynamic Tests 2.10.11-17
Table 2.10.11-3 Comparison of Measured and Predicted Data for 30 Foot Drop 2.10.11-21
Table 2.10.12-1 Instrumentation List 2.10.12-5
Table 2.10.12-2 Static Test Matrix 2.10.12-6
Table 2.10.13-1 Allowable Stress Intensities (S_m) 2.10.13-3
Table 2.10.13-2 Yield Stress Values (S_y) 2.10.13-3
Table 2.10.13-3 Ultimate Stress Values (S_u) 2.10.13-3
Table 2.10.13-4 Moduli of Elasticity (E) 2.10.13-4

Table 2.10.13-5 Thermal Expansion Coefficient (α) [3] 2.10.13-4
Table 2.10.13-6 Comparison of Allowable Stresses (ksi) 2.10.13-6
Table 2.10.13-7 Results of Thermal Analysis with Alternate Material 2.10.13-10
Table 2.10.13-8 Effect of Thermal Properties on Disc Thermal Stress 2.10.13-11
Table 3.1-1 Design Basis Thermal Analysis Results 3.1-4
Table 3.2-1 Thermal Properties of Materials 3.2-12
Table 3.2-2 Thermal Properties of Air Used for Forced Convection Coefficient Calculations 3.2-16
Table 3.2-3 Forced Convection Heat Transfer Coefficient as a function of Temperature 3.2-18
Table 3.4-1 Cask/DSC Temperatures, Normal Conditions of Transport, 100°F Ambient 3.4-10
Table 3.4-2 Cask/DSC Temperatures Normal Conditions of Transport -40°F Ambient[1] 3.4-11
Table 3.5-1 Cask/DSC Temperatures PREFIRE Condition 3.5-9
Table 3.5-2 Cask/DSC Temperatures 30 Minute FIRE Transient 3.5-10
Table 3.5-3 Cask/DSC Temperatures POSTFIRE Transient at 600 Minutes 3.5-11
Table 3.5-4 Cask/DSC Temperatures Final Steady State Conditions 3.5-12
Table 3.5-5 Material Temperature Limits 3.5-13
Table 3.6-1 FO/FC DSC Maximum Clad Temperatures 3.6.4-5
Table 3.6-1a Maximum Guide Sleeve and Support Rod Temperatures 3.6.4-5
Table 3.6-2 Spacer Disk Temperature Distribution for FO/FC DSC, -20°F NOC 3.6.4-8
Table 3.6-3a Thermal Properties of XM-19 Stainless Steel 3.6.5-3
Table 3.6-3 FF-DSC Shell Temperatures when Inside NUHOMS®-MP187 Cask, NOC 3.6.5-4
Table 3.6-4 FF-DSC Carbon Steel Spacer Disk Temperature Distribution, 100°F, NOC 3.6.5-5
Table 3.6-4a FF-DSC XM-19 Spacer Disk Temperature Distribution, 100°F, NOC 3.6.5-7
Table 3.6-5 FF-DSC Carbon Steel Spacer Disk Temperature Distribution, -20°F, NOC 3.6.5-9
Table 3.6-5a FF-DSC XM-19 Spacer Disk Temperature Distribution, -20°F, NOC 3.6.5-11
Table 3.6-6 Cask Internal Cavity Normal Conditions of Transport Pressures 3.6.6-2
Table 3.6-7 Cask Internal Cavity Accident Condition Pressures 3.6.6-11
Table 5.1-1 Summary of Maximum Dose Rates (mrem/hr) 5.1-5
Table 5.2-1 ORIGEN2 Input Cases for Shielding Evaluation 5.2-4
Table 5.2-2 Summary of Fuel Assembly Material Weights Used in Source Term Calculations 5.2-6
Table 5.2-3 Control Component Regional Weights 5.2-7
Table 5.2-4 In-Core FO-DSC Gamma Source Strength and Energy Spectrum for Each Burnup Case for Type I Fuel 5.2-10
Table 5.2-5 In-Core FO-DSC Gamma Source Strength and Energy Spectrum for Each Burnup Case for Type II Fuel 5.2-12

Table 5.2-6 Type I Assembly Design Basis Gamma Source Strength and Energy Spectrum 5.2-14
Table 5.2-7 Type II Assembly Design Basis Gamma Source Strength and Energy Spectrum 5.2-15
Table 5.2-8 FO-DSC Design Basis Gamma Source Strength and Energy Spectrum 5.2-16
Table 5.2-9 FO-DSC Design Basis Gamma Power and Energy Spectrum 5.2-17
Table 5.2-10 Formulae for Mapping Gamma Source from ORIGEN2 to CASK-81 Energy Groups 5.2-18
Table 5.2-11 Design Basis Control Component Source Terms 5.2-20
Table 5.2-12 Type I Assembly w/ Control Component Design Basis Gamma Source Strength and Energy Spectrum 5.2-21
Table 5.2-13 Type II Assembly w/ Control Component Design Basis Gamma Source Strength and Energy Spectrum 5.2-22
Table 5.2-14 FC-DSC Design Basis Gamma Source Strength and Energy Spectrum 5.2-23
Table 5.2-15 FC-DSC Design Basis Gamma Power and Energy Spectrum 5.2-24
Table 5.2-16 FC-DSC Gamma Source Strength and Energy Spectrum for Each Burnup Case for Type I Fuel 5.2-25
Table 5.2-17 FC-DSC Gamma Source Strength and Energy Spectrum for Each Burnup Case for Type II Fuel 5.2-26
Table 5.2-18 Design Basis Neutron Source Strength and Energy Spectrum for Type I Fuel 5.2-28
Table 5.2-19 Design Basis Neutron Source Strength and Energy Spectrum for Type II Fuel 5.2-29
Table 5.3-1 Summary of NUHOMS®-MP187 Cask Shielding Material Densities (atoms/b·cm, g/cc) 5.3-13
Table 5.4-1 PWR Fuel Assembly Axial Flux Distribution 5.4-5
Table 5.4-2 Gamma-Ray Flux-to-Dose Rate Factors 5.4-8
Table 5.4-3 Neutron Flux-to-Dose Rate Factors 5.4-9
Table 5.4-4 ANISN Results for Trunnion Models 5.4-11
Table 5.4-5 FC-DSC Trunnion Surface Dose Rates 5.4-12
Table 5.4-6 FO-DSC Trunnion Surface Dose Rates 5.4-12
Table 5.4-7 Trunnion Dose Calculations on the Vehicle Surface 5.4-15
Table 5.4-8 Trunnion Dose Calculations 2 Meters from the Vehicle Surface 5.4-16
Table 5.4-9 Shear Key Dose Rate Results 5.4-21
Table 5.4-10 FC-DSC Shield Plug Geometry Comparison 5.4-24
Table 5.4-11 Tolerance Evaluation Results 5.4-26
Table 5.4-12 Calculation of Corrected Assembly Source Term 5.4-28
Table 5.4-13 Photon Source Evaluation Results 5.4-28
Table 5.4-14 Neutron Shield Material Evaluation Results 5.4-31
Table 5.4-15 Summary of Maximum Normal Operation Dose Rates 5.4-34
Table 5.4-16 Summary of Maximum Hypothetical Accident Dose Rates 5.4-35
Table 5.5.8-1 Burnup/Enrichment Cases 5.5.8-4
Table 5.5.8-2 ORIGEN2 Result Summary 5.5.8-9
Table 5.5.8-3 ORIGEN2 In-Core Gamma Results by Energy Group 5.5.8-9

Table 5.5.8-4 Neutron Source Calculations 5.5.8-10
Table 5.5.8-5 Gamma Source Calculations 5.5.8-11
Table 5.5.8-6 ANISN Dose Rate Results 5.5.8-12
Table 5.5.8-7 Total Dose Rate Results 5.5.8-12
Table 5.5.8-8 FC-DSC Gamma Source Terms for DORT Calculations 5.5.8-14
Table 5.5.8-9 Case 1 Dose Rate Results 5.5.8-16
Table 5.5.8-10 Case 2 Dose Rate Results 5.5.8-17
Table 5.5.8-11 Case 3 Dose Rate Results 5.5.8-18
Table 5.5.8-12 Hypothetical Accident Dose Rate Results 5.5.8-19
Table 5.5.8-13 Alternate Cooling Times for Fuel Qualification 5.5.8-20
Table 5.5.8-14 Summary of Maximum Package Dose Rates 5.5.8-21
Table 6.1-1 Summary of Criticality Evaluation 6.1-6
Table 6.2-1 Maximum Fuel Loading Parameters 6.2-1
Table 6.2-2 Design Basis Fuel Parameters for Criticality Analysis 6.2-2
Table 6.3-1 KENO Model Atom Densities 6.3-10
Table 6.3-2 KENO Model Moderator Atom Densities 6.3-11
Table 6.4-1 Summary of KENO Parametric Studies 6.4-6
Table 6.4-2 MP187/FO-DSC KENO Results (Guide Sleeve Deformation) 6.4-8
Table 6.4-3 MP187/FO-DSC KENO Results (Cask Layer Removal) 6.4-8
Table 6.4-4 MP187/FO-DSC KENO Results 6.4-9
Table 6.4-5 MP187/FF-DSC KENO Results 6.4-10
Table 6.4-6 MP187/FF-DSC KENO Results (Cask Layer Removal) 6.4-11

See Appendix A for a List of Tables for Appendix A

LIST OF FIGURES

Figure	Title	Page
Figure 1.1-1	NUHOMS®-MP187 Transportation Package Assembly	1.1-3
Figure 1.1-2	NUHOMS®-MP187 Cask Assembly	1.1-4
Figure 1.1-3	Dry Shielded Canister Assembly	1.1-5
Figure 1.2-1	Required FO-DSC and FC-DSC Fuel Loading Pattern	1.2-13
Figure 2.1.1-1	The NUHOMS®-MP187 Cask	2.1-2
Figure 2.1.1-2	Sealing Surface and Bolt Detail	2.1-4
Figure 2.1.1-3	NUHOMS®-MP187 Cask Trunnion Configurations	2.1-6
Figure 2.1.1-4	NUHOMS®-MP187 Cask Shear Key Configurations	2.1-7
Figure 2.1.1-5	NUHOMS®-MP187 Transportation Skid	2.1-8
Figure 2.1.1-6	Transport Skid Front View, Typical Design	2.1-9
Figure 2.1.1-7	NUHOMS®-MP187 Package Transportation Configuration (Personnel Barrier not Shown for Clarity)	2.1-9
Figure 2.1.1-8	FO and FC-DSC Assembly Schematic	2.1-10
Figure 2.1.1-9	FF-DSC Assembly Schematic	2.1-11
Figure 2.1.2-1	NUHOMS®-MP187 Cask Center of Gravity Schematic	2.2-4
Figure 2.1.2-2	NUHOMS®-MP187 FC-DSC Center of Gravity Schematic	2.2-5
Figure 2.1.2-3	NUHOMS®-MP187 FO-DSC Center of Gravity Schematic	2.2-6
Figure 2.1.2-4	NUHOMS®-MP187 FF-DSC Center of Gravity Schematic	2.2-7
Figure 2.3.2-1	Stress-Strain curve at 700°F for SA-240, Type 304 Stainless Steel	2.3-10
Figure 2.3.4-1	Stress-Strain Curves for Lead	2.3-18
Figure 2.4.4-1	Test No. 16; BORAL® in 1200 ppm boron solution, January 1997 [2.66]	2.4-8
Figure 2.5.1-1	Vertical Lift Loads	2.5-2
Figure 2.5.1-2	Upper Trunnion Detail	2.5-4
Figure 2.5.1-3	Stress Contour Plot of Upper Trunnion During Vertical Lift	2.5-7
Figure 2.5.2-1	MP187 Cask Transportation Skid Restraint	2.5-11
Figure 2.5.2-2	Support Ring Weld Detail	2.5-12
Figure 2.5.2-3	Support Ring Force Profile	2.5-12
Figure 2.5.3-1	Shear Key Block	2.5-15
Figure 2.6.1-1	Cask Stress Summary Points	2.6-5
Figure 2.6.1-2	Cask Top End Temperature Distribution - Heat (100°F) Thermal Condition	2.6-6
Figure 2.6.1-3	Cask Bottom End Temperature Distribution - Heat (100°F) Thermal Condition	2.6-7
Figure 2.6.2-1	Cask Top End Temperature Distribution - Cold (-40°F) Thermal Condition	2.6-20
Figure 2.6.2-2	Cask Bottom End Temperature Distribution - Cold (-40°F) Thermal Condition	2.6-21
Figure 2.6.4-1	Cask Free Body Diagram for Normal Vibration	2.6-29
Figure 2.6.6-1	Cask Free Body Diagram for 1 Foot Side Drop	2.6-39

Figure 2.6.11-1 FO- and FC-DSC Basket Assembly Detail 2.6-70
Figure 2.6.11-2 FO- and FC-DSC Spacer Disc Detail 2.6-71
Figure 2.6.11-3 FC-DSC Spacer Disc Temperature Contour Plot for -20°F Ambient Thermal Condition 2.6-75
Figure 2.6.11-4 FC Spacer Disc 1/2 Symmetry Model Critical Ligament Nodes 2.6-77
Figure 2.6.11-5 Location of Top 20 FC-DSC Spacer Disc S.I. for -20°F Thermal Condition 2.6-79
Figure 2.6.11-6 FC Spacer Disc Vibration Free Body Diagram 2.6-86
Figure 2.6.11-7 Gap Element Behavior for 2g Vertical Vibration Load 2.6-87
Figure 2.6.11-8 Location of Top 20 FC-DSC Spacer Disc S.I. for Vibration 2.6-90
Figure 2.6.11-9 Gap Element Behavior for 1-Foot Side Drop 2.6-101
Figure 2.6.11-10 FC Spacer Disc 1-Foot Side Drop Free Body Diagram 2.6-102
Figure 2.6.11-11 Location of Top 20 FC-DSC Spacer Disc S.I. for 1-Foot Drop 2.6-105
Figure 2.6.11-12 Guide Sleeve Middle Fiber S.I. Contour Plot for 1-Foot Drop 2.6-113
Figure 2.6.11-13 Guide Sleeve Top Fiber S.I. Contour Plot for 1-Foot Drop 2.6-114
Figure 2.6.11-14 Guide Sleeve Bottom Fiber S.I. Contour Plot for 1-Foot Drop 2.6-115
Figure 2.6.12-1 FF Spacer Disc Heat Condition (100°F) Temperature Distribution 2.6-118
Figure 2.6.12-2 Node Locations of 20 Highest S.I. - Heat Condition (100°F) 2.6-120
Figure 2.6.12-3 Node Locations of 20 Highest S.I. - Vibration 2.6-125
Figure 2.6.12-4 Spacer Disc Ligament Stresses - Vibration 2.6-127
Figure 2.6.12-5 Node Locations of 20 Highest S.I. - 1-Foot Side Drop 2.6-130
Figure 2.6.13-1 Location of Top 20 FC-DSC Spacer Disc S.I. for Vibration + Thermal 2.6-213
Figure 2.6.13-2 Location of Top 20 FC-DSC Spacer Disc S.I. for 1-Foot Drop + Thermal 2.6-218
Figure 2.6.13-3 Node Locations of 20 Highest S.I. - Vibration + Thermal 2.6-223
Figure 2.6.13-4 Node Locations of 20 Highest S.I. - 1-Foot Side Drop + Thermal 2.6-226
Figure 2.7.1-1 Cask Stress Summary Point Locations 2.7-3
Figure 2.7.1-2 Cold Flatside Horizontal Drop Strain Energy Curve 2.7-6
Figure 2.7.1-3 Top End Drop Free Body Diagram 2.7-12
Figure 2.7.1-4 Bottom End Drop Free Body Diagram 2.7-13
Figure 2.7.1-5 Cask Stress Point Locations (Deleted; see Figure 2.7.1-1.) 2.7-23
Figure 2.7.1-6 Cask Shell End Drop Axial Force Diagram 2.7-24
Figure 2.7.1-7 Ram Closure Plate Stress Points 2.7-34
Figure 2.7.1-8 Bottom End Closure Stress Points 2.7-36
Figure 2.7.1-9 Top Closure Plate Stress Points 2.7-38
Figure 2.7.1-10 Cask Free Body Diagram for 30-Foot Side Drop 2.7-44
Figure 2.7.1-11 Cask 30-Foot Top End Corner Drop Free Body Diagram 2.7-61
Figure 2.7.1-12 Cask 30-Foot Bottom End Corner Drop Free Body Diagram 2.7-62
Figure 2.7.1-13 Cask Free Body Diagram for 30-Foot Flatside 30° Primary Impact 2.7-94
Figure 2.7.1-14 Cask Free Body Diagram for 30-Foot Flatside 60° Primary Impact 2.7-115
Figure 2.7.1-15 Cask Free Body Diagram for 30-Foot Flatside Slapdown 2.7-135
Figure 2.7.2-1 Cask Free Body Diagram (Puncture) 2.7-159

Figure 2.7.2-2 Bottom End Center Puncture Condition S.I. Contour Plot - Ram Access Cover Plate 2.7-162
Figure 2.7.2-3 Bottom End Center Puncture Condition S.I. Contour Plot - Bottom Forging 2.7-163
Figure 2.7.2-4 Bottom Off-Center Puncture Ram Closure Plate S.I. Contour Plot 2.7-167
Figure 2.7.2-5 Bottom Off-Center Puncture Bottom End Closure Forging S.I. Contour Plot 2.7-168
Figure 2.7.2-6 Cask Top End Center Puncture model Node Numbers 2.7-173
Figure 2.7.2-7 Cask Top End Center Puncture S.I. Contour Plot 2.7-174
Figure 2.7.2-8 Top Flange Bearing Stress Due to Top End Off-Center Puncture 2.7-177
Figure 2.7.2-9 Top Off-Center Puncture Top Flange S.I. Contour Plot 2.7-178
Figure 2.7.2-10 Top Off-Center Puncture Top Closure Plate S.I. Contour Plot 2.7-179
Figure 2.7.2-11 Side Puncture Free Body Diagram 2.7-181
Figure 2.7.3-1 Cask Through-Wall Thermal Gradient 2.7-185
Figure 2.7.3-2 Cask Fire Top Half Temperature Distribution at 30 Minutes 2.7-187
Figure 2.7.3-3 Cask Fire Bottom Half Temperature Distribution at 30 Minutes 2.7-188
Figure 2.7.3-4 Cask Post-Fire Steady-State Top Half Temperature Distribution 2.7-189
Figure 2.7.3-5 Cask Post-Fire Steady-State Bottom Half Temperature Distribution 2.7-190
Figure 2.7.6-1 FO- and FC-DSC Basket Assembly Detail 2.7-201
Figure 2.7.6-2 FO- and FC-DSC Spacer Disc Detail 2.7-202
Figure 2.7.6-3 Top 20 FC Spacer Disc Extreme Fiber S.I. - End Drop 2.7-208
Figure 2.7.6-4 Gap Element Behavior for Cold Corner Drop 2.7-214
Figure 2.7.6-5 FC Spacer Disc Corner Drop Free Body Diagram 2.7-215
Figure 2.7.6-6 FC Spacer Disc Full Model Critical Ligament Node Locations 2.7-220
Figure 2.7.6-7 Location of Top 20 FC Spacer Disc S.I. (Middle Fiber) - Corner 72° Impact 2.7-221
Figure 2.7.6-8 Location of Top 20 FC Spacer Disc S.I. (Top Fiber) - Corner 72° Impact 2.7-222
Figure 2.7.6-9 Location of Top 20 FC Spacer Disc S.I. (Bottom Fiber) - Corner 72° Impact 2.7-223
Figure 2.7.6-10 FC Spacer Disc Flatside Oblique Drop Free Body Diagram 2.7-226
Figure 2.7.6-11 Gap Element Behavior for Flatside 60° Impact 2.7-234
Figure 2.7.6-12 Gap Element Behavior for Flatside 30° Impact 2.7-239
Figure 2.7.6-13 Gap Element Behavior for Flatside Slapdown 2.7-244
Figure 2.7.6-14 FC Spacer Disc 1/2 Symmetry Model Critical Ligament Node Locations 2.7-249
Figure 2.7.6-15 Location of Top 20 FC Spacer Disc S.I. (Middle Fiber) - Flatside 60° Impact 2.7-250
Figure 2.7.6-16 Location of Top 20 FC Spacer Disc S.I. (Top Fiber) - Flatside 60° Impact 2.7-251
Figure 2.7.6-17 Location of Top 20 FC Spacer Disc S.I. (Bottom Fiber) - Flatside 60° Impact 2.7-252
Figure 2.7.6-18 Location of Top 20 FC Spacer Disc S.I. (Middle Fiber) - Flatside 30° Primary Impact 2.7-253

Figure 2.7.6-19 Location of Top 20 FC Spacer Disc S.I. (Top Fiber) - Flatside 30° Primary Impact 2.7-254
Figure 2.7.6-20 Location of Top 20 FC Spacer Disc S.I. (Bottom Fiber) - Flatside 30° Primary Impact 2.7-255
Figure 2.7.6-21 Location of Top 20 FC Spacer Disc S.I. (Middle Fiber) - Flatside Slapdown 2.7-256
Figure 2.7.6-22 Location of Top 20 FC Spacer Disc S.I. (Top Fiber) - Flatside Slapdown 2.7-257
Figure 2.7.6-23 Location of Top 20 FC Spacer Disc S.I. (Bottom Fiber) - Flatside Slapdown 2.7-258
Figure 2.7.6-24 FC Spacer Disc Corner Oblique Drop Free Body Diagram 2.7-266
Figure 2.7.6-25 Gap Element Behavior for Corner 60° Impact 2.7-267
Figure 2.7.6-26 Gap Element Behavior for Corner 30° Impact 2.7-272
Figure 2.7.6-27 Gap Element Behavior for Corner Slapdown Impact 2.7-277
Figure 2.7.6-28 Location of Top 20 FC Spacer Disc S.I. (Middle Fiber) - Corner 60° Impact 2.7-282
Figure 2.7.6-29 Location of Top 20 FC Spacer Disc S.I. (Top Fiber) - Corner 60° Impact 2.7-283
Figure 2.7.6-30 Location of Top 20 FC Spacer Disc S.I. (Bottom Fiber) - Corner 60° Impact 2.7-284
Figure 2.7.6-31 Location of Top 20 FC Spacer Disc S.I. (Middle Fiber) - Corner 30° Primary Impact 2.7-285
Figure 2.7.6-32 Location of Top 20 FC Spacer Disc S.I. (Top Fiber) - Corner 30° Primary Impact 2.7-286
Figure 2.7.6-33 Location of Top 20 FC Spacer Disc S.I. (Bottom Fiber) - Corner 30° Primary Impact 2.7-287
Figure 2.7.6-34 Location of Top 20 FC Spacer Disc S.I. (Middle Fiber) - Corner Slapdown 2.7-288
Figure 2.7.6-35 Location of Top 20 FC Spacer Disc S.I. (Top Fiber) - Corner Slapdown 2.7-289
Figure 2.7.6-36 Location of Top 20 FC Spacer Disc S.I. (Bottom Fiber) - Corner Slapdown 2.7-290
Figure 2.7.6-37 In-Plane Impact Loads Acting on Critical Ligament 2.7-296
Figure 2.7.6-38 Free Body Diagram of Critical Spacer Disc Ligament 2.7-299
Figure 2.7.6-39 FC Spacer Disc Buckled Shape - Flatside Slapdown 2.7-305
Figure 2.7.6-40 FC Spacer Disc Buckled Shape - Corner Slapdown 2.7-308
Figure 2.7.6-41 Joint Free Body Diagram for Fully Clamped Condition 2.7-312
Figure 2.7.6-42 Joint Free Body Diagram for Lift-Off Condition 2.7-313
Figure 2.7.6-43 Support Rod Assembly Free Body Diagram - End Drop 2.7-319
Figure 2.7.6-44 Free Body Diagram of a Typical Support Rod Sleeve - End Drop 2.7-320
Figure 2.7.6-45 Guide Sleeve S.I. Contour Plot (Middle Fiber) - Flatside Slapdown 2.7-347
Figure 2.7.6-46 Guide Sleeve S.I. Contour Plot (Top Fiber) - Flatside Slapdown 2.7-348
Figure 2.7.6-47 Guide Sleeve S.I. Contour Plot (Bottom Fiber) - Flatside Slapdown 2.7-349

Figure 2.7.6-48 Guide Sleeve Displacement (UY) Plot - Flatside Slapdown 2.7-350
Figure 2.7.6-49 Guide Sleeve Plastic Strain (Middle Fiber) - Flatside Slapdown 2.7-351
Figure 2.7.6-50 Guide Sleeve Plastic Strain (Top Fiber) - Flatside Slapdown 2.7-352
Figure 2.7.6-51 Guide Sleeve Plastic Strain (Bottom Fiber) - Flatside Slapdown 2.7-353
Figure 2.7.6-52 Guide Sleeve Permanent Deformation (UY) - Flatside Slapdown 2.7-354
Figure 2.7.7-1 Top 20 FF Spacer Disc Extreme Fiber S.I. - End Drop 2.7-375
Figure 2.7.7-2 Spacer Disc Free Body Diagram 2.7-377
Figure 2.7.7-3 Location of Top 20 Spacer Disc S.I. (Bottom Fiber) - Bounding Flatside Impact 2.7-379
Figure 2.7.7-4 Location of Top 20 Spacer Disc S.I. (Middle Fiber) - Bounding Flatside Impact 2.7-381
Figure 2.7.7-5 Location of Top 20 Spacer Disc S.I. (Top Fiber) - Bounding Flatside Impact 2.7-383
Figure 2.7.7-6 Location of Spacer Disc Ligament S.I. - Bounding Flatside Impact 2.7-385
Figure 2.7.7-7 Corner Oblique Force Body Diagram 2.7-386
Figure 2.7.7-8 Location of 20 Maximum Spacer Disc S.I. (Bottom Fiber) - Corner Oblique Impact 2.7-389
Figure 2.7.7-9 Location of 20 Maximum Spacer Disc S.I. (Middle Fiber) - Corner Oblique Impact 2.7-391
Figure 2.7.7-10 Location of 20 Maximum Spacer Disc S.I. (Top Fiber) - Corner Oblique Impact 2.7-393
Figure 2.7.7-11 Location of Spacer Disc Ligament S.I. - Corner Oblique Impact 2.7-395
Figure 2.7.7-12 Location of 20 Maximum Spacer Disc S.I (Bottom Fiber) - Corner Slapdown 2.7-398
Figure 2.7.7-13 Location of 20 Maximum Spacer Disc S.I. (Middle Fiber) - Corner Slapdown 2.7-400
Figure 2.7.7-14 Location of 20 Maximum Spacer Disc S.I. (Top Fiber) - Corner Slapdown 2.7-402
Figure 2.7.7-15 Location of Critical Spacer Disc Ligament Stresses - Corner Slapdown 2.7-404
Figure 2.7.7-16 Spacer Disc Flatside Impact Buckled Shape 2.7-407
Figure 2.7.7-17 Spacer Disc Corner Impact Buckled Shape 2.7-408
Figure 2.7.8-1 Cask Stress Point Locations 2.7-430
Figure 2.10.2-1 Cask Vertical Lift Half Symmetry Analytical Model 2.10.2-2
Figure 2.10.2-2 Axisymmetric Cask Model 2.10.2-7
Figure 2.10.2-3 Cask Axisymmetric Model Top End Node Numbers 2.10.2-8
Figure 2.10.2-4 Cask Axisymmetric Model Bottom End Node Numbers 2.10.2-9
Figure 2.10.2-5 Cask Axisymmetric Model Top Corner Node and Element Numbers 2.10.2-10
Figure 2.10.2-6 Cask Axisymmetric Model Bottom Corner Node and Element Numbers 2.10.2-11
Figure 2.10.2-7 Cask Axisymmetric Model Bottom Center Node and Element Numbers 2.10.2-12
Figure 2.10.2-8 Circumferential Pressure Load Distribution 2.10.2-20
Figure 2.10.2-9 Half Symmetry Three-Dimensional Cask Finite Element Model 2.10.2-22

Figure 2.10.2-10 Bottom End Node Numbers at 0° Azimuth - Three-Dimensional Cask Model 2.10.2-23
Figure 2.10.2-11 Top End Node Numbers at 0° Azimuth - Three-Dimensional Cask Model 2.10.2-24
Figure 2.10.2-12 Bottom End Off-Center Puncture Analytical Model 2.10.2-26
Figure 2.10.2-13 Bottom Off-Center Puncture Model Node Numbers at Y=0 ..... 2.10.2-28
Figure 2.10.2-14 Bottom Off-Center Puncture Model Element Numbers at Y=0 ..... 2.10.2-29
Figure 2.10.2-15 Top Off-Center Puncture Analytical Model 2.10.2-33
Figure 2.10.2-16 Top Off-Center Puncture Model Node Numbers at Y=0 ..... 2.10.2-34
Figure 2.10.2-17 Top Off-Center Puncture Model Element Numbers at Y=0 ..... 2.10.2-35
Figure 2.10.3-1 FC Spacer Disc 1/4 Symmetry Model 2.10.3-5
Figure 2.10.3-2 Spacer Disc 1/4 Symmetry Model Node Numbers 2.10.3-6
Figure 2.10.3-3 Spacer Disc 1/2 Symmetry Model 2.10.3-20
Figure 2.10.3-4 Spacer Disc 1/2 Symmetry Model Node Numbers - Lower Quadrant 2.10.3-21
Figure 2.10.3-5 DSC Shell Stiffness Vs. Angle 2.10.3-22
Figure 2.10.3-6 FC Spacer Disc Corner Impact Half Symmetry Model 2.10.3-26
Figure 2.10.3-7 FC-DSC Spacer Disc Full Model 2.10.3-33
Figure 2.10.3-8 FC Spacer Disc Full Model Node Numbers - Upper Left Quadrant 2.10.3-34
Figure 2.10.3-9 FC Spacer Disc Full Model Node Numbers - Lower Left Quadrant 2.10.3-35
Figure 2.10.3-10 DSC Shell 1/2 Symmetry Model 2.10.3-37
Figure 2.10.3-11 Guide Sleeve Model Periodic Segment 2.10.3-40
Figure 2.10.3-12 Guide Sleeve 1/2 Symmetry Periodic Model 2.10.3-41
Figure 2.10.4-1 FF Spacer Disc Temperature Distribution for 100°F Ambient Condition 2.10.4-2
Figure 2.10.4-2 FF Spacer Disc Temperature Distribution for -20°F Ambient Condition 2.10.4-3
Figure 2.10.4-3 FF Spacer Disc Quarter Symmetry End Drop Model 2.10.4-11
Figure 2.10.4-4 Node Plot of the Quarter Symmetry Model 2.10.4-12
Figure 2.10.4-5 Modal Analysis Half Symmetry Model 2.10.4-14
Figure 2.10.4-6 Stress Analysis Half Symmetry Model 2.10.4-15
Figure 2.10.4-7 Node Plot of Half Symmetry Model (Top Half) 2.10.4-16
Figure 2.10.4-8 Node Plot of Half Symmetry Model (Bottom Half) 2.10.4-17
Figure 2.10.4-9 Modal Analysis Full Model 2.10.4-19
Figure 2.10.4-10 Stress Analysis Full Model 2.10.4-20
Figure 2.10.4-11 Full Model Node Plot, Right Top Quadrant 2.10.4-21
Figure 2.10.4-12 Full Model Node Plot, Right Bottom Quadrant 2.10.4-22
Figure 2.10.4-13 Full Model Node Plot, Left Top Quadrant 2.10.4-23
Figure 2.10.4-14 Full Model Node Plot, Left Bottom Quadrant 2.10.4-24
Figure 2.10.7-1 Cask Stress Point Locations 2.10.7-8
Figure 2.10.10-1 Flat Side 30° Drop Orientation 2.10.10-4
Figure 2.10.10-2 Flat Side 30° Drop Primary Impact Acceleration Time Histories 2.10.10-5
Figure 2.10.10-3 Flat Side 30° Primary Impact DLFs 2.10.10-5

Figure 2.10.10-4 Flat Side Slapdown Acceleration Time Histories 2.10.10-6
Figure 2.10.10-5 Flat Side Slapdown DLFs 2.10.10-6
Figure 2.10.10-6 Corner 30° Drop Orientation 2.10.10-7
Figure 2.10.10-7 Corner 30° Primary Impact Acceleration Time Histories 2.10.10-8
Figure 2.10.10-8 Corner 30° Primary Impact DLFs 2.10.10-8
Figure 2.10.10-9 Corner Slapdown Acceleration Time Histories 2.10.10-9
Figure 2.10.10-10 Corner Slapdown DLFs 2.10.10-9
Figure 2.10.10-11 Corner 60° Drop Orientation 2.10.10-10
Figure 2.10.10-12 Corner 60° Drop Acceleration Time Histories 2.10.10-11
Figure 2.10.10-13 Corner 60° Drop DLFs 2.10.10-11
Figure 2.10.10-14 Flat Side 60° Drop Orientation 2.10.10-12
Figure 2.10.10-15 Flat Side 60° Drop Acceleration Time Histories 2.10.10-13
Figure 2.10.10-16 Flat Side 60° Drop DLFs 2.10.10-13
Figure 2.10.10-17 Flat 72° Drop Orientation (C.G. over Flat) 2.10.10-14
Figure 2.10.10-18 Flat 72° (C.G. over Flat) Acceleration Time Histories 2.10.10-15
Figure 2.10.10-19 Flat 72° (C.G. over Flat) Drop DLFs 2.10.10-15
Figure 2.10.10-20 Corner 72° Drop Orientation (C.G. over Corner) 2.10.10-16
Figure 2.10.10-21 Corner 72° (C.G. over Corner) Acceleration Time Histories 2.10.10-17
Figure 2.10.10-22 Corner 72° (C.G. over Corner) Drop DLFs 2.10.10-17
Figure 2.10.10-23 Vertical End Drop Orientation 2.10.10-18
Figure 2.10.10-24 End Drop Acceleration Time Histories 2.10.10-19
Figure 2.10.10-25 End Drop DLFs 2.10.10-19
Figure 2.10.10-26 Flat-Side Horizontal Drop Orientation 2.10.10-20
Figure 2.10.10-27 Flat Side Horizontal 30' Drop Acceleration Time Histories 2.10.10-21
Figure 2.10.10-28 Flat Side Horizontal 30' Drop DLFs 2.10.10-21
Figure 2.10.10-29 Flat Side Horizontal 1' Drop Acceleration Time Histories 2.10.10-22
Figure 2.10.10-30 Flat Side Horizontal 1' Drop DLFs 2.10.10-22
Figure 2.10.10-31 Corner Horizontal Drop Orientation 2.10.10-23
Figure 2.10.10-32 Corner Horizontal Drop Acceleration Time Histories 2.10.10-24
Figure 2.10.10-33 Corner Horizontal Drop DLFs 2.10.10-24
Figure 2.10.10-34 FC-DSC Spacer Disc In-Plane Flat Side Ovalling Mode 2.10.10-27
Figure 2.10.10-35 FC-DSC Spacer Disc In-Plane Corner Ovalling Mode 2.10.10-28
Figure 2.10.10-36 FC Spacer Disc Out-of-Plane Bending Mode 2.10.10-29
Figure 2.10.10-37 FF-DSC Spacer Disc Out-Of-Plane Bending Mode 2.10.10-36
Figure 2.10.10-38 FF-DSC Spacer Disc Flat Side Ovalling Mode 2.10.10-37
Figure 2.10.10-39 FF-DSC Spacer Disc Corner Ovalling Mode 2.10.10-38
Figure 2.10.10-40 Effect of Damping on Dynamic Response 2.10.10-56
Figure 2.10.11-1 1/4 Scale Impact Limiter-Sheet 1 ..... 2.10.11-4
Figure 2.10.11-2 1/4 Scale Impact Limiter-Sheet 2 ..... 2.10.11-5
Figure 2.10.11-3 1/4 Scale Impact Limiter-Sheet 3 ..... 2.10.11-6
Figure 2.10.11-4 1/4 Scale Honeycomb Block Construction 2.10.11-7
Figure 2.10.11-5 MP187 Test Package 2.10.11-8
Figure 2.10.11-6 Accelerometer Location 2.10.11-11
Figure 2.10.11-7 Impact Limiter Test Series - Certification Tests 2.10.11-14
Figure 2.10.11-8 Camera Placement 2.10.11-15

Figure 2.10.11-9 30°, Primary Impact Acceleration History - Point 1 ..... 2.10.11-26
Figure 2.10.11-10 30°, Primary Impact Acceleration History - Point 2 ..... 2.10.11-26
Figure 2.10.11-11 30° , Primary Impact Acceleration History - Point 4 ..... 2.10.11-27
Figure 2.10.11-11a 30°, Secoondary Impact Acceleration History - Point 4 ..... 2.10.11-27
Figure 2.10.11-12 30°, Primary Impact Acceleration History - Point 5 ..... 2.10.11-28
Figure 2.10.11-13 30°, Secondary impact Acceleration History - Point 5 ..... 2.10.11-28
Figure 2.10.11-14 30°, Primary Impact Acceleration History - Point 6 ..... 2.10.11-29
Figure 2.10.11-14a 30°, Secondary Impact Acceleration History - Point 6 ..... 2.10.11-29
Figure 2.10.11-15 30°, Secondary Impact Acceleration History - Point 7 ..... 2.10.11-30
Figure 2.10.11-16 72° Drop Acceleration History - Point 1 ..... 2.10.11-30
Figure 2.10.11-17 72° Drop Acceleration History - Point 2 ..... 2.10.11-31
Figure 2.10.11-18 72° Drop Acceleration History - Point 4 ..... 2.10.11-31
Figure 2.10.11-19 72° Drop Acceleration History - Point 5 ..... 2.10.11-32
Figure 2.10.11-20 72° Drop Acceleration History - Point 6 ..... 2.10.11-32
Figure 2.10.11-21 Test 1: Set Up And Drop Sequence 2.10.11-33
Figure 2.10.11-22 Test 2: Setup And Drop Sequence 2.10.11-34
Figure 2.10.11-23 Set Up for Bare Cask Drop 2.10.11-37
Figure 2.10.11-24 Test 3: 45° Puncture Pin Drop 2.10.11-39
Figure 2.10.11-25 Test 4: Vertical Puncture Pin Drop 2.10.11-40
Figure 2.10.12-1 Impact Limiter Test Series - Certification Tests 2.10.12-3
Figure 2.10.12-2 Configuration for Test No. 5 ..... 2.10.12-8
Figure 2.10.12-3 Transnuclear Impact Limiters Static Tests - Test No. 5 ..... 2.10.12-9
Figure 2.10.12-4 Configuration for Test No. 6 ..... 2.10.12-11
Figure 2.10.12-5 Transnuclear Impact Limiters Static Tests - Test No. 6 ..... 2.10.12-12
Figure 2.10.12-6 Configuration for Test No. 7 ..... 2.10.12-14
Figure 2.10.12-7 Transnuclear mpact Limiters Static Tests - Test No. 7 ..... 2.10.12-15
Figure 2.10.12-8 Configuration for Test No. 8 ..... 2.10.12-16
Figure 2.10.12-9 Transnuclear Impact Limiters Static Tests - Test No. 8 ..... 2.10.12-17
Figure 2.10.12-10 Configuration for Test No. 9 ..... 2.10.12-19
Figure 2.10.12-11 Measured Static F-δ Curve - Test No. 9 ..... 2.10.12-20
Figure 2.10.12-12 Comparison of Measured and Predicted Static F-δ Curves - Test No. 5 ..... 2.10.12-21
Figure 2.10.12-13 Comparison of Measured and Predicted Static F-δ Curves - Test No. 6 ..... 2.10.12-22
Figure 2.10.12-14 Comparison of Measured and Predicted Static F-δ Curves - Test No. 7 ..... 2.10.12-23
Figure 2.10.12-15 Comparison of Measured and Predicted Static F-δ Curves - Test No. 8 ..... 2.10.12-24
Figure 2.10.12-16 Comparison of Measured and Predicted Static F-δ Curves - Test No. 9 ..... 2.10.12-25
Figure 2.10.13-1 Boundary Conditions (Support Plate Welded on 2 Short Sides) 2.10.13-25
Figure 2.10.13-2 Boundary Conditions (Support Plate Welded on 3 Sides) 2.10.13-25
Figure 2.10.13-3 75g End Drop P_m+P_b Stress Int. (2 Support Plate Welds) 2.10.13-26
Figure 2.10.13-4 75g End Drop P_m+P_b Stress Int. (psi) (3 Support Plate Welds) 2.10.13-26
Figure 2.10.13-5 Weld Node Numbers 2.10.13-27

Figure 2.10.13-6 Shear Key 2.10.13-30
Figure 3.1-1 Zircaloy Cladding Perforation Temperatures [3.3] 3.1-5
Figure 3.2-1 Series and Parallel Conductors Geometry Used for NS-3/B_4C with Stiffeners 3.2-20
Figure 3.4-1 Heat Transfer Thermal Model for the Cask and DSC, NOC 3.4-12
Figure 3.4-2 Cask/DSC Temperature Distribution 100°F Ambient NOC 3.4-14
Figure 3.4-3 Seal Temperature Distribution 100°F NOC 3.4-15
Figure 3.5-1 Heat Transfer Thermal Model for the Cask/DSC, Accident Conditions 3.5-14
Figure 3.5-2 Temperature Transient Crushed Impact Limiter FIRE Case Plot 1 ..... 3.5-15
Figure 3.5-3 Temperature Transient Crushed Impact Limiter FIRE Case Plot 2 ..... 3.5-16
Figure 3.5-4 Temperature Transient Crushed Impact Limiter Seal Temperatures FIRE Case 3.5-17
Figure 3.6-1 HEATING7.2 Model of NUHOMS® DSC Basket 3.6.4-6
Figure 3.6-2 HEATING7.2 Model of FF-DSC Basket 3.6.5-13
Figure 5.2-1 Source Term Calculation Flow Chart 5.2-3
Figure 5.2-2 Determination of Bounding Type I Assembly Source 5.2-11
Figure 5.2-3 Determination of Bounding Type II Assembly Source 5.2-13
Figure 5.3-1 NUHOMS®-MP187 Cask Configuration 5.3-4
Figure 5.3-2 NUHOMS®-MP187 Normal Operations DORT-PC FC-DSC Top End Model 5.3-5
Figure 5.3-3 NUHOMS®-MP187 Normal Operations DORT-PC FC-DSC Bottom End Model 5.3-6
Figure 5.3-4 NUHOMS®-MP187 Normal Operations DORT-PC FO-DSC Top End Model 5.3-7
Figure 5.3-5 NUHOMS®-MP187 Normal Operations DORT-PC FO-DSC Bottom End Model 5.3-8
Figure 5.3-6 NUHOMS®-MP187 Normal Operation Shielding Materials 5.3-9
Figure 5.3-7 NUHOMS®-MP187 Hypothetical Accident Condition Shielding Materials 5.3-10
Figure 5.4-1 DSC Dose Rate Ratios as a Function of Angle 5.4-3
Figure 5.4-2 NUHOMS®-MP187 Cask Upper Trunnion Geometry 5.4-17
Figure 5.4-3 Neutron and Gamma-Ray Angular Distributions on the Cask Surface 5.4-18
Figure 5.4-4 Source Geometry Used in Trunnion Manual Dose Calculations 5.4-19
Figure 5.4-5 NUHOMS®-MP187 Cask Shear Key Geometry and ANISN Models 5.4-22
Figure 5.4-6 Source Self-Shielding Geometry 5.4-30
Figure 5.4-7 NUHOMS®-MP187 FC-DSC Normal Operation Dose Rate Distribution 5.4-36
Figure 5.4-8 NUHOMS®-MP187 FO-DSC Normal Operation Dose Rate Distribution 5.4-37
Figure 5.4-9 NUHOMS®-MP187 Hypothetical Accident Dose Rate Distribution 5.4-38
Figure 6.3-1 KENO Model and DSC Basket 6.3-3
Figure 6.3-2 Exploded View of KENO Model 6.3-5

Figure 6.3-3 Structure of KENO Model UNITS 33 and 34 ..... 6.3-6
Figure 6.3-4 KENO Model UNITS 1-8, plus 6.3-7
Figure 6.3-5 KENO Model of a Design Basis Fuel Assembly 6.3-8
Figure 6.4-1 K vs. Guide Sleeve Deformation 6.4-12
Figure 6.4-2 FF-DSC Broken Fuel Rod Models 6.4-13
Figure 6.4-3 FF-DSC Double-Ended Rod Break Models 6.4-14
Figure 6.4-4 NUHOMS®-MP187 Cask/FO-DSC Criticality Results 6.4-15
Figure 6.4-5 NUHOMS®-MP187 Cask/FF-DSC Criticality Results 6.4-16
Figure 6.5-1 Critical Benchmark Results 6.5-9
Figure 7.1-1 NUHOMS®-MP187 Cask Operating Procedures Flow Chart 7.1-15
Figure 7.1-2 NUHOMS®-MP187 Wet Loading Procedure 7.1-16
Figure 7.1-3 NUHOMS®-MP187 Dry Loading Procedure 7.1-18
Figure 7.1-4 NUHOMS®-MP187 Preparation for Transportation 7.1-19
Figure 7.4-1 Assembly Verification Leak Test Flow Chart 7.4.2-6
Figure 8.1-1 Thermocouple Locations for Thermal Acceptance Test 8.1-14
Figure 8.3-1 Thermocouple Locations for Lead Installation 8.3.2-2

See Appendix A for a List of Figures for Appendix A

SUMMARY OFCHANGES[1]

Incorporate changes from Amendments 6, 7 & 8.

[1]Revisions are denoted by vertical bars along the right margin. Corrected spelling and punctuation have not been marked as revised text. Changes in pagination have also not been marked as revised text.

1. GENERAL INFORMATION

This section of the NUHOMS®-MP187 Multi-Purpose Cask 10CFR71 Safety Analysis Report (SAR) presents a general introduction to and a description of the NUHOMS®-MP187 Package. The NUHOMS®-MP187 Cask in this configuration is to be utilized for the off-site transportation of NUHOMS® Dry Shielded Canisters (DSCs) in accordance with 10CFR71 [1.1] and 49CFR173 [1.2]. The DSC is sometimes referred to generically as a type of Multi-Element Sealed Canister (MESC) or a Multi-Purpose Canister (MPC). The terminology used throughout this SAR is presented in Table 1.1-1. Illustrations of the NUHOMS®-MP187 Packaging are provided in Figure 1.1-1 through Figure 1.1-3.

The NUHOMS®-MP187 Cask is also used for on-site transfer of a DSC to and from NUHOMS® modular storage under a separate 10CFR72 license application.

Chapters 1 through 8 of this SAR address the MP187 Package with the FO, FC or FF-DSC payload containing B&W 15x15 spent fuel assemblies. Appendix A to this SAR addresses the MP187 Package with the 24PT1-DSC payload containing Westinghouse 14x14 spent fuel assemblies.

Table 1.1-1

Terminology and Notation

Model: NUHOMS®-MP187

Package:	The Packaging with its radioactive contents, or Payload, as presented for transport (10 CFR 71.4).
Packaging:	The Cask, one of three different DSCs, and the impact limiters.
Payload:	The fuel assemblies within a DSC.
Cask:	The NUHOMS®-MP187 Cask. The Cask consists of a containment boundary, structural shell, gamma shielding material, and solid neutron shield. The containment boundary consists of a cylindrical shell, bottom end (closure) plate with a ram access penetration, top end (lid) forging ring, bottom and top cover plates (lids) with associated seals and bolts, and vent and drain port closure bolts and seals.
DSC:	The Dry Shielded Canister. The DSC consists of a cylindrical shell, top and bottom shield plugs, inner and outer bottom closure plates, inner and outer top cover plates, and the internal basket. There are three different types of DSCs: the FO-DSC, the FC-DSC, and the FF-DSC. All three DSCs have the same outside diameter and the same overall length.
Impact Limiter:	Polyurethane foam and crushable aluminum honeycomb filled stainless steel shells which are attached to the Cask for transportation to absorb energy for the postulated normal and accident drop events.
Canister:	The DSC.

Table 1.1-1

Terminology and Notation (concluded)

Basket:	A structural framework for the support of fuel assemblies which resides in the stainless steel canister shell assembly. For the FO-DSC and FC-DSC, the Basket Assembly consists of twenty-six carbon steel spacer discs with 24 openings each, supported in position by four high strength stainless steel support rods. Placed within each of the 24 openings is a composite guide sleeve consisting of a stainless steel inner sleeve, borated neutron absorbing material, and a stainless steel outer sleeve. For the FF-DSC, the Basket Assembly consists of 15 carbon steel or austenitic stainless steel (SA-240, Type XM-19) spacer discs with 13 openings each, supported in position by four carbon steel or austenitic stainless steel (SA-240, Type XM-19) support plates. Placed within each of the 13 openings is a stainless steel failed fuel can which provides confinement for the failed fuel assembly.
FO-DSC:	The Fuel-Only (FO) DSC, which is designed to hold 24 intact fuel assemblies without control components. The top and bottom shield plugs of the FO-DSC are solid carbon steel.
FC-DSC:	The Fuel with Control Components (FC) DSC, which is designed to hold 24 intact fuel assemblies with control components. The FC-DSC has a longer internal cavity than the FO-DSC, with composite lead/steel shield plugs. The Basket for the FC-DSC has longer support rods than the FO-DSC. Guide sleeves are provided with extension angles or formed plates to limit movement of the guide sleeve while allowing unobstructed grapple operation.
FF-DSC:	The Failed Fuel (FF) DSC is designed to hold 13 damaged fuel assemblies (without control components), each contained within a Failed Fuel Can.
Failed Fuel Can:	A stainless steel closed-end tubular structure, with a screened bottom end and screened removable top end.

1.1 Introduction

The NUHOMS®-MP187 Packaging has been developed by Transnuclear, Inc. (TN) (previously Transnuclear West, Inc. (TNW), VECTRA Technologies, Inc. and Pacific Nuclear Systems, Inc. (PNSI)), to provide a safe and efficient means of transporting DSCs with fuel off-site directly from the spent fuel pool or from storage in NUHOMS® storage modules or from the metal cask storage mode. The cask portion of the Packaging also functions as a transfer cask for moving DSCs with fuel from the fuel pool to NUHOMS® storage modules and for retrieving DSCs from the modules. The cask can also store the DSCs with fuel on-site.

The NUHOMS®-MP187 Packaging is composed of the Cask, one of three types of DSCs, and the impact limiters. The cask is composed of an inner shell assembly which is part of the containment boundary, an outer structural shell which acts as an environmental barrier, lead gamma shielding between the inner and outer shells, neutron shielding outside the structural shell, and a stainless steel jacket around the neutron shielding material. The containment boundary provided by the cask consists of a cylindrical shell, bottom closure plate with a ram access penetration, top (lid) end forging ring, bottom and top cover plates (lids) with innermost seals and bolts, and vent and drain port closure bolts.

The three DSC types consist of one for 24 PWR fuel elements without control components (FO-DSC), one for 24 PWR elements with control components (FC-DSC), and one for 13 PWR damaged fuel elements (FF-DSC). The DSCs are high integrity stainless steel, welded pressure vessels that provide confinement of radioactive materials; encapsulate the fuel in an inert atmosphere; and provide biological shielding during the DSC closure, transfer operations, storage, and transport. As an integral welded vessel, the canister shell assembly also provides containment for the fuel, however, credit other than biological shielding is not being taken for this additional containment in this transportation SAR. Structural support for the PWR fuel and basket guide sleeves in the lateral direction is provided by circular spacer disc plates. Axial support for the DSC basket is provided by four support rods or plates which extend over the full length of the DSC cavity and bear on the canister top and bottom assemblies.

Polyurethane foam and aluminum honeycomb filled energy absorbers (impact limiters) are attached to each end of the cask to limit the consequences of normal, hypothetical accident, and design conditions specified by 10CFR71.41-71.47 and 10CFR71.71 and 71.73 [1.1].

Authorization is sought for shipment of the NUHOMS®-MP187 Package by rail, heavy haul, or barge as a Type B(U), package per the definitions delineated in 10CFR71.4 [1.1].

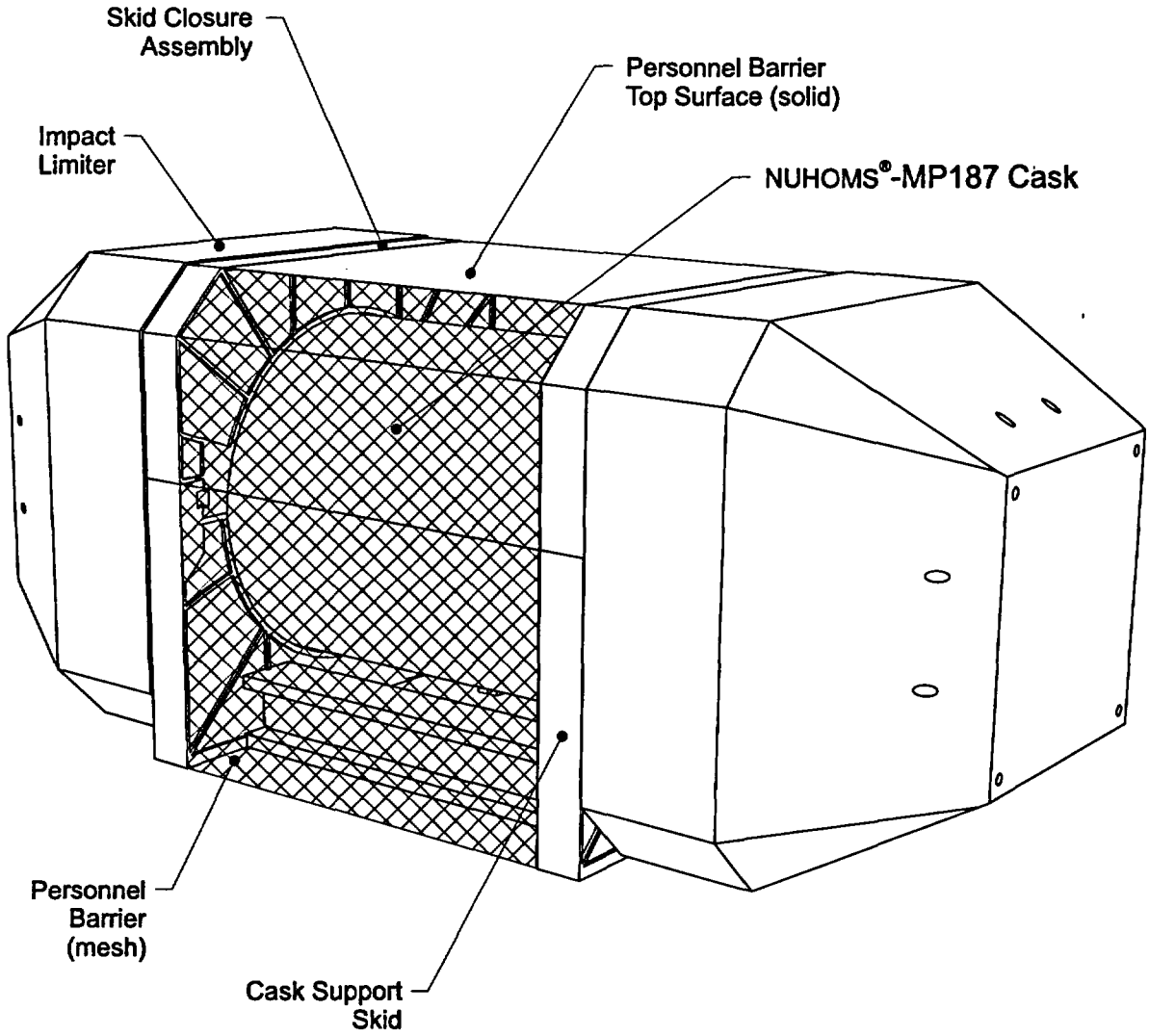

Figure 1.1-1

NUHOMS®-MP187 Transportation Package Assembly

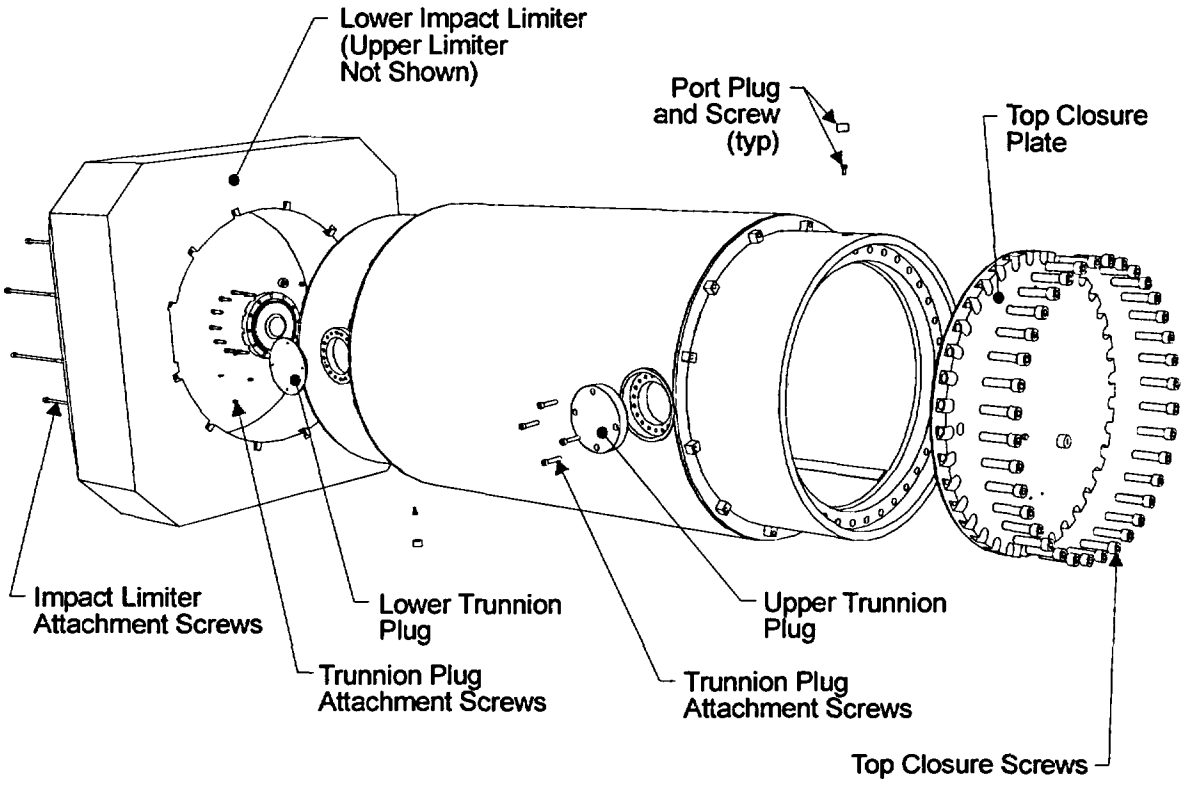

Figure 1.1-2

NUHOMS®-MP187 Cask Assembly

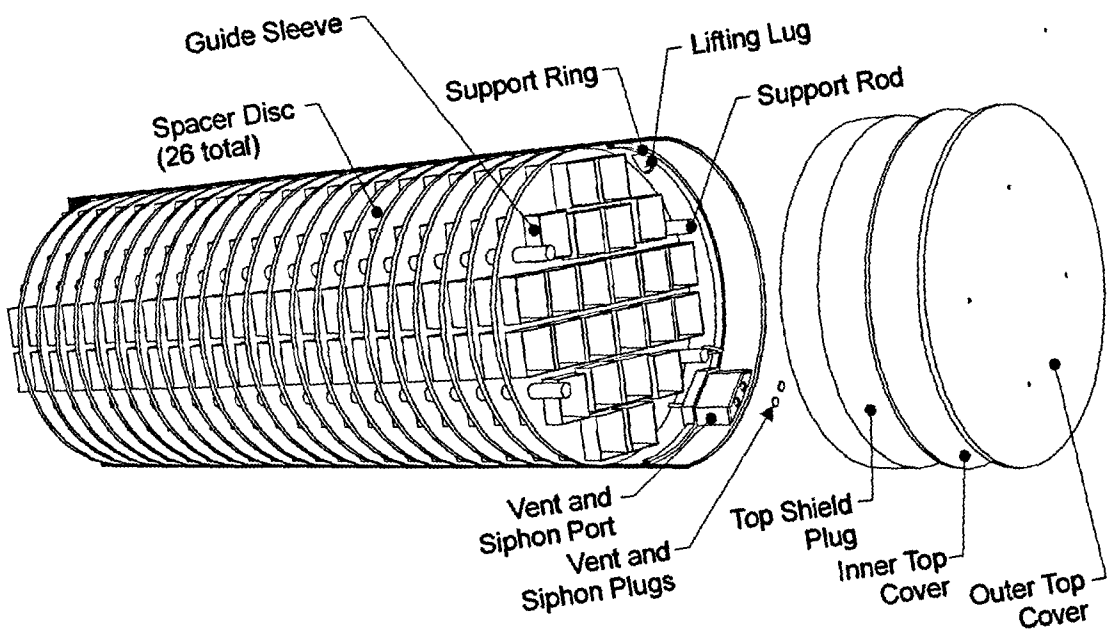

Figure 1.1-3
Dry Shielded Canister Assembly

1.2 Package Description

This section presents a basic description of the NUHOMS®-MP187 Package. Defining general arrangement drawings are presented in Section 1.3.2.

1.2.1 Packaging

1.2.1.1 Gross Weight

Gross shipping weight of the NUHOMS®-MP187 Packaging varies from 132 tons to 136 tons depending on the type of DSC that is being shipped.

1.2.1.2 Materials of Construction, Dimensions, and Fabrication Methods

The NUHOMS®-MP187 Package consists of one of three different DSCs that support the fuel, a cask that provides containment and acts as an environmental barrier, and energy absorbing impact limiters. The cask is a composite structure of steel and lead surrounded by neutron shielding material. The cask including the DSC is protected at each end by energy absorbing impact limiters which consist of stainless steel skins filled with polyurethane foam and aluminum honeycomb. These impact limiters also provide thermal insulation which protects the cask top and bottom seal areas during the hypothetical fire transient event. The overall arrangement and design details of the various components of the NUHOMS®-MP187 Packaging are presented in Section 1.3.2. The DSCs, cask, and impact limiters are more fully described in the following sections.

1.2.1.2.1 Dry Shielded Canisters

The DSCs are high integrity stainless steel, welded pressure vessels that provide confinement of the radioactive materials, encapsulate the fuel in an inert atmosphere, and provide axial biological shielding during DSC closure, transfer operations, storage, and transport. Because of the nature of the fuel that is to be transported, three different types of DSCs are designed for the Package. All three DSCs have an outside diameter of 67.19 inches and are 186.2 inches long.

The shell is composed of 5/8-inch austenitic stainless steel. The cylindrical shell and the top and bottom cover plate assemblies form the pressure retaining boundary for the spent fuel and cover gas. The DSCs are equipped with two shielded end plugs so that the occupational doses at the ends are minimized for drying, sealing and handling operations. The DSCs have double, redundant seal welds which join the shell and the top and bottom shield plug and cover plate assemblies to seal the canister. The bottom end assembly welds are made during fabrication of the DSC. The top end closure welds are made after fuel loading. Both top plug penetrations (siphon and vent ports) are redundantly sealed after the DSC drying operations are complete. Other than for biological shielding purposes, the pressure containment capability of the DSC shell assembly is conservatively neglected for transportation.

The internal basket assembly contains a storage position for each fuel assembly. The basket is composed of circular spacer discs machined from thick carbon steel plates or alternatively, austenitic stainless steel, SA-240, Type XM-19, for the FF-DSC only. Axial support for the DSC basket is provided by four high strength stainless steel support rods (FO and FC-DSC) and four carbon steel or austenitic stainless steel, SA-240, Type XM-19, (FF-DSC) support plates which extend over the full length of the DSC cavity and bear on the canister top and bottom end assemblies. All of the DSCs are inerted with helium before being sealed. Carbon steel components of each DSC basket assembly are coated with a thin corrosion resistant layer of nickel to provide corrosion resistance for the short time that the DSC is in the spent fuel pool for fuel loading. After the DSC is drained, dried, inerted and sealed for storage or transportation, there is no mechanism available for corrosion of the carbon steel components.

On the bottom of each DSC there is a grapple ring which allows the DSC to be transferred in and out of the NUHOMS® storage modules from the Cask horizontally. The DSC basket is keyed to the DSC shell and the grapple ring is keyed to the cask bottom closure to maintain the basket-to-cask alignment during all operations.

(A) Fuel-Only (FO) Dry Shielded Canister

The FO-DSC has a cavity length of 167 inches and has solid steel shield plugs at both ends. The FO-DSC is capable of carrying 24 intact PWR spent fuel assemblies as described in Section 1.2.3. The FO-DSC basket assembly consists of 24 guide sleeve assemblies with integral borated neutron absorbing plates, twenty-six spacer discs and four support rods. The spacer discs have machined openings which allow the guide sleeves and the fixed borated neutron absorber plates to pass through. No borated materials are used for structural load carrying members.

(B) Fuel/Control Components (FC) Dry Shielded Canister

The FC-DSC has an internal cavity length of 173 inches to accommodate fuel with control components. To obtain this increased cavity length the shield plugs are a composite of lead and steel. The support rods are six inches longer above the top spacer disc than those in the FO-DSC. The FC-DSC has a capacity of 24 intact PWR spent fuel assemblies with control components as described in Section 1.2.3. To ensure that guide sleeve displacements during a top end drop do not uncover the active portion of the fuel assemblies, four 6.25-inch lengths of angle, or formed plates, protrude above the top of each guide sleeve. Angles are used to preclude interference of the fuel handling grapple during insertion and removal of fuel assemblies. All other features of the FC-DSC are the same as those of the FO-DSC.

(C) Failed Fuel (FF) Dry Shielded Canister

The FF-DSC is similar to the FC-DSC in most respects with the exception of the basket assembly. The internal cavity length is 173 inches. The FF-DSC shell assembly, bottom shield plug, top shield plug, grapple ring, drain and vent ports, and outer cover plate are similar to the FC-DSC shell assembly.

The FF-DSC shell and top and bottom end assemblies enclose a basket assembly which serves as the structural support for the fuel assemblies. The fuel assemblies may be normal intact fuel, fuel with known or suspected cladding defects greater than hairline cracks or pinhole leaks or

with cracked, bulging, or discolored cladding. Prior to loading fuel in the DSCs, assemblies will be visually inspected to document that cladding damage is limited to no more than 15 fuel pins of the assembly. Inspection will be performed only once, prior to placement of fuel in the DSC. DSCs may be placed in storage and transported anytime thereafter without further fuel inspection. Because of the fuel cladding defects, individual (screened) fuel cans are provided to confine any loose material, maintain the geometry for criticality control in accordance with Chapter 6 of this SAR, and facilitate loading and unloading operations.

The FF-DSC basket assembly consists of fifteen carbon steel spacer discs, steel or austenitic stainless steel (SA-240, Type XM-19), four carbon steel or austenitic stainless steel (SA-240, Type XM-19) axial support plates, and thirteen stainless steel failed fuel cans. The spacer discs maintain the cross-sectional spacing of the fuel assemblies and provide lateral support for the fuel assemblies and failed fuel cans. The spacer discs are held in place by the support plates which maintain longitudinal separation. The failed fuel cans are removable and, therefore, are not permanently attached to the basket assembly or DSC shell.

The carbon steel spacer discs in the FF-DSC have thirteen square cut-outs. Additionally, the four support plates are fitted between cut-outs in the spacer discs. These plates have the same function as the support rods in the FO- and FC-DSC designs. Support plates are welded between the spacer discs at the 45°, 135°, 225°, and 315° azimuth positions.

The FF-DSC failed fuel can consists of a seam-welded stainless steel tube with a welded bottom lid assembly and a welded removable top lid assembly. The cans do not contain any borated neutron absorbing materials. They provide for the confinement of the fuel pellets/shards by means of a fixed bottom screen and a removable top screen. The bottom lid and top lid stainless steel screens allow for dewatering of the failed fuel can. The bottom end of the can includes provisions for fuel support. The fuel can lid is fitted with a fuel handling type pintle to interface with the plant fuel handling equipment for placement of the lid and handling of the removable fuel can.

1.2.1.2.2 Cask

The cask is fabricated primarily of stainless steel. Non-stainless steel members include the cast lead shielding between the containment boundary inner shell and the structural shell, the o-ring seals, the cementitious neutron shield material and the carbon steel closure bolts. Socket headed cap screws (bolts) are used to secure the top closure plate to the cask body and the ram-access closure plate to the bottom of the cask. The body of the cask is constructed of a 1.25-inch, 68-inch inside diameter stainless steel inner (containment) shell and a 2.5-inch thick, 83.5-inch outside diameter stainless steel structural shell which sandwich the 4-inch thick cast lead shielding material. The cask containment boundary consists of the inner shell, an 8-inch thick bottom plate with a 17-inch diameter, 5-inch thick ram access closure, a top closure plate end forging ring, a 6.5-inch thick top closure plate (lid) and double O-ring seals for each of the lids with closure bolts, and vent and drain port closure bolts. A 68-inch diameter by 187-inch long cavity is provided. As noted above, the DSC grapple ring is keyed to the cask bottom closure to maintain the basket-to-cask alignment during offsite transportation operations.

The neutron shield assembly consists of an outer jacket, a series of support angles, top and bottom support rings, and the cementitious neutron shielding material. The neutron shield support angles provide support for the outer jacket, which is the confinement boundary for placement of the neutron shield material. The neutron shield support rings provide closure for the neutron shield and attachment support for the impact limiters. The support rings also provide the means for reaction of transport skid tiedown loads.

The overall external dimensions of the Cask are 201.5 inches long and 92.5 inches outer diameter. The weight of the cask body (excluding the cover, which weighs approximately 8,500 pounds) is approximately 150,000 pounds, including 11,500 pounds of neutron shield material and 70,000 pounds of cast lead.

There are four trunnion sockets on the cask. They receive removable trunnions for handling and lifting of the cask. These trunnion sockets are attached to the structural shell. The bottom two trunnion sockets are covered by the lower impact limiter during transport. The upper two

trunnions have covers which contain neutron shielding material. When the cask is in the horizontal position, a shear key receptacle on the cask bottom reacts the longitudinal tiedown loads. The shear key receptacle is welded to the structural shell and protrudes through the neutron shield. During transport the receptacle interfaces with the shear block attached to the transport skid.

1.2.1.2.3 Impact limiters

The impact limiter shells are fabricated from stainless steel. Non-stainless steel members include the closed-cell polyurethane foam, the aluminum honeycomb material, and the carbon steel impact limiter attachment bolts. The material properties of the polyurethane foam and the aluminum honeycomb are provided in Section 2.3.3. Both impact limiters are bolted to the cask body.

The dimensions of the impact limiter are provided in Section 1.3.2. The total length of the package with the impact limiters attached is 308 inches. The weight of each impact limiter is 15,800 pounds.

1.2.1.3 Neutron Moderation and Absorption

Neutron moderation is provided in each FO-DSC and FC-DSC by geometric spacing of the guide sleeve assemblies and by borated neutron absorbing material contained in the guide sleeve assembly. The geometric spacing is maintained by the spacer discs that support the guide sleeves and the fuel assemblies. The borated neutron absorber plates are secured to the guide sleeves by additional outer sleeves. No credit is taken for the borated material in the structural analysis of the guide sleeves. Borated materials are not provided for the FF-DSC. Due to the reduced payload and increased spacing, the failed fuel cans are made from thick steel tubes which provide enough neutron absorption so that borated material is not necessary.

1.2.1.4 Receptacles, Valves, Testing and Sampling Ports

The Cask has a top and bottom seal test port, a combination vent/sampling port and a drain port. The seal test port accesses the volume between the two O-ring seals on the lid, thereby verifying leak tight assembly prior to shipping the loaded package. The vent port permits venting of the cask cavity during loading and unloading of the package. It also permits sampling at the receiving end of the shipment to determine contamination levels. There are no receptacles or valves utilized on this package. A more detailed discussion of the package test and vent port features is provided in Chapter 4.

1.2.1.5 Heat Dissipation

There are no special devices utilized on the NUHOMS®-MP187 Package for the transfer or dissipation of heat. Heat dissipation from the package is entirely passive. The package maximum heat dissipation for this license application is 13,500 thermal watts. A more detailed discussion of the package thermal characteristics is provided in Chapter 3.

1.2.1.6 Coolants

There are no coolants utilized within the package other than the normal transportation atmosphere of helium in the canisters.

1.2.1.7 Protrusions

There are no outer or inner protrusions on the package other than the four (4) external lifting and handling trunnion sockets and a shear key keyway. All of these are located well within the envelope protected by the impact limiters. The bottom trunnions are covered by the impact limiter. The keyway and the top trunnion sockets are within the neutron shield. The top trunnion sockets are covered during transport and the keyway is covered during on-site handling operations. Refer to the General Arrangement Drawings in Section 1.3.2 for more detail.

1.2.1.8 Lifting and Tiedown Devices

All four (4) of the trunnion sockets are used in handling the package. The bottom trunnion sockets are used to pivot the cask into the horizontal position on the on-site transfer skid for moving canisters to on-site storage. The top trunnions are used to lift the package into the

vertical position and for all lifts in the vertical position. The cask is lifted from an on-site transfer skid to the transportation skid in the horizontal position using slings around the cask body.

1.2.1.9 Pressure Relief System

There is no pressure relief system in the containment system of the NUHOMS®-MP187 package. Stainless steel rupture discs are provided in the NSP bottom support ring, and may also be installed in the NSP top support ring, in accordance with the drawings to protect the neutron shield cavity from potential overpressure.

1.2.1.10 Shielding

The package contains both neutron and gamma sources. The lead and steel shells of the cask provide shielding between the fuel and the exterior surface of the package for the attenuation of gamma radiation. In the center region of the cask between the impact limiters there is borated cementitious neutron shield material. During transport, the impact limiters also act as neutron shields. Further detail is provided in Chapter 5.

1.2.2 Operational Features

The NUHOMS®-MP187 Package is not considered to be operationally complex and is similar to other licensed transportation packages such as the NUPAC-125B Cask. All operational features are readily apparent from inspection of the General Arrangement Drawings provided in Section 1.3.2. Operational procedures are provided in Chapter 7.

1.2.3 Contents of Packaging

The contents of the NUHOMS®-MP187 Packaging as described above consist of spent reactor fuel. This fuel is in several different forms. The first form of fuel will be intact Pressurized Water Reactor (PWR) fuel with control components. The second form of fuel will be intact PWR fuel without control components. The third form of fuel will be damaged PWR fuel without control components. Each of these forms of fuel is described below and will be placed in different types of canisters as previously described. Other fuel having varied characteristics will be licensed by amendment to the Certificate of Compliance for this package.

1.2.3.1 Intact PWR Fuel Assemblies

The fuel design included in this payload is B&W 15 X 15 PWR fuel with a maximum initial enrichment of 3.43% by weight of ^{235}U. The fuel will have a maximum burnup of 40,000 megawatt days per metric ton of initial heavy metal (MWd/MTIHM). The fuel will have been decayed for a time sufficient to meet the thermal criteria defined below. The minimum acceptable cooling time is five years. The maximum allowable cask heat load under any conditions, including storage and on-site transfer use, is 13.5 kW, with a maximum assembly decay heat of 0.764 kW (Type I) or 0.563 kW (Type II). Intact fuel assemblies include those with minor cladding damage, including pinhole leaks and hairline cracks, provided the cladding integrity is sufficient to prevent significant fuel particulate release. Each FO-DSC will contain 24 of the intact fuel assemblies described in this section. Where an FO-DSC is to be loaded with fewer than 24 fuel assemblies, dummy fuel assemblies will be installed in the unoccupied spaces. These dummy assemblies will have the same nominal weight as a standard fuel assembly to maintain the symmetric weight distribution in the FO-DSC and minimize loads on the DSC/cask alignment keys.

Fuel assemblies are separated into two types, Type I and Type II. Type I assemblies are those assemblies which meet the 0.764 kW assembly heat load limit, but not the cask average (0.563 kW per assembly) heat load limit. Type II assemblies are those assemblies which meet the 0.563 kW per assembly cask average decay heat limit. As shown in Figure 1.2-1, Type I assemblies shall only be loaded into the inner four fuel cells of the FO-DSC. Type II assemblies may be loaded into any fuel cell in the FO-DSC. Cooling times necessary to reach these heat loads are tabulated versus burnup in Table 1.2-1.

1.2.3.2 Intact PWR Fuel Assemblies with Control Components

The fuel design included in this payload is B&W 15 X 15 PWR fuel, including control components, with a maximum initial enrichment of 3.43% by weight of ^{235}U. The fuel will have a maximum burnup of 40,000 megawatt days per metric ton of initial heavy metal (MWd/MTIHM). The fuel will have been decayed for a time sufficient to meet the thermal criteria defined below. The minimum acceptable cooling time is five years. The maximum

allowable cask heat load (including contributions from control components) under any conditions, including storage and on-site transfer use, is 13.5 kW, with a maximum assembly decay heat of 0.764 kW (Type I) or 0.563 kW (Type II). Intact fuel assemblies include those with minor cladding damage, including pinhole leaks and hairline cracks, provided the cladding integrity is sufficient to prevent significant fuel particulate release. Each FC-DSC will contain 24 of the intact fuel assemblies described in this section. Where an FC-DSC is to be loaded with fewer than 24 fuel assemblies, dummy fuel assemblies will be installed in the unoccupied spaces. These dummy assemblies will have the same nominal weight as a standard fuel assembly to maintain the symmetric weight distribution in the FC-DSC and minimize loads on the DSC/cask alignment keys.

Fuel assemblies are separated into two types, Type I and Type II. Type I assemblies are those assemblies which meet the 0.764 kW assembly heat load limit, but not the cask average (0.563 kW per assembly) heat load limit. Type II assemblies are those assemblies which meet the 0.563 kW per assembly cask average decay heat limit. As shown in Figure 1.2-1, Type I assemblies shall only be loaded into the inner four fuel cells of the FC-DSC. Type II assemblies may be loaded into any fuel cell in the FC-DSC. Cooling times necessary to reach these heat loads are tabulated versus burnup in Table 1.2-1. Control components shall be cooled for at least 8 years. Details of the fuel characteristics can be found in Table 1.2-2.

1.2.3.3 Damaged PWR Fuel Assemblies

The fuel design included in this payload is B&W 15 X 15 PWR fuel with a maximum initial enrichment of 3.43% by weight of ^{235}U. The fuel will have a maximum burnup of 40,000 megawatt days per metric ton of initial heavy metal (MWd/MTIHM). The fuel will have been decayed for a time sufficient to meet the thermal criteria defined below. The minimum acceptable cooling time is five years. The maximum allowable assembly decay heat for this payload is 0.764 kW. Each FF-DSC will contain 13 of the damaged fuel assemblies described in this section or the intact fuel assemblies described in Section 1.2.3.1 (either Type I or Type II assemblies may be placed in any of the 13 openings in the FF-DSC). Where an FF-DSC is to be loaded with fewer than 13 fuel assemblies, dummy fuel assemblies will be installed in the

unoccupied spaces. These dummy assemblies will have the same nominal weight as a standard fuel assembly to maintain the symmetric weight distribution in the FF-DSC and minimize loads on the DSC/cask alignment keys.

Damaged fuel assemblies contain fuel rods with known or suspected cladding defects greater than hairline cracks or pinhole leaks or with cracked, bulging, or discolored cladding. The FF-DSC contains individual fuel cans which confine any gross fuel particles to a known, subcritical volume during off-normal and accident conditions and facilitate handling and retrievability. The criticality analysis provided in Chapter 6 requires that cladding damage be limited to no more than 15 fuel pins of the assembly. Visual inspection of assemblies will be performed once, prior to placement of the fuel in the DSC, which may then be placed in storage and transported anytime thereafter without further fuel inspection. Spent fuel with plutonium in excess of 20 curies per package, in the form of debris, particles, loose pellets, and fragmented rods or assemblies are not authorized.

Table 1.2-1

Cooling Times to Meet Decay Heat Limits

Maximum Burnup (MWD/MTIHM)	Minimum Enrichment (w/o U-235)	Required Type I Cooling Time (years)	Required Type II Cooling Time (years)
<23,200	n/a	5	5
23,200	2.38	5	5
24,000	2.43	5	6
25,000	2.49	5	6
26,000	2.55	5	7
27,000	2.61	5	7
28,000	2.66	5	8
29,000	2.71	5	8
30,000	2.76	5	8
31,000	2.81	6	9
32,000	2.86	6	10
33,000	2.90	7	10
34,000	2.95	7	11
35,000	2.99	7	11
36,000	3.03	8	13
37,000	3.07	8	14
38,000	3.11	9	15
39,000	3.15	9	16
40,000	3.19	9	17

Notes:

(1) Required DSC/fuel loading patterns are specified in Figure 1.2-1.

(2) Required cooling times are linearly interpolated between the burnup cases evaluated in Section 5 and rounded up to the next higher integral year. Fuel burnups between those tabulated above shall be rounded up to determine the appropriate required cooling time and minimum enrichment.

(3) Assemblies with initial enrichments less than those specified may alternately be qualified using the maximum burnup, minimum enrichment, and minimum cooling times specified in Table 1.2-3.

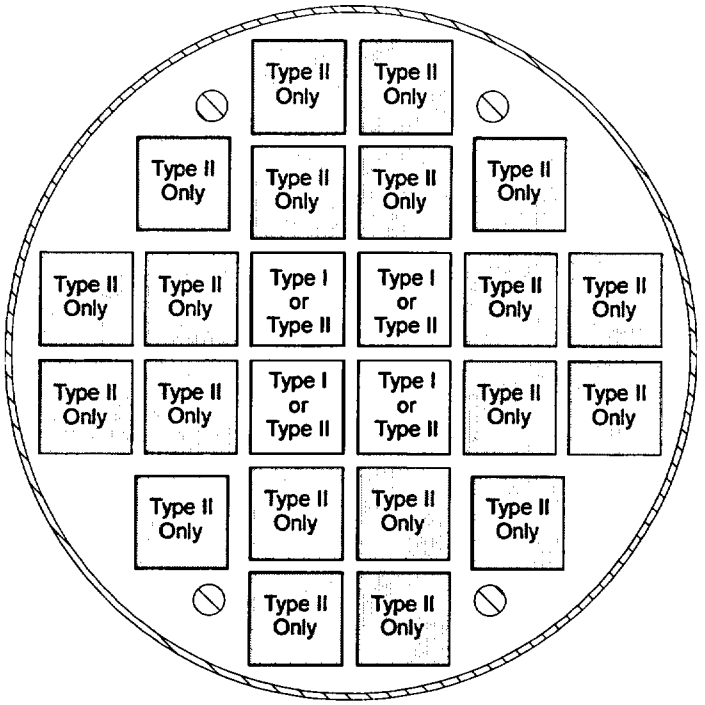

Figure 1.2-1

Required FO-DSC and FC-DSC Fuel Loading Pattern

1.2.3.4 Radionuclide Inventory

The radionuclide inventory used for the shielding evaluation of the NUHOMS®-MP187 Package is based on the actual histories of the design basis PWR fuel assemblies and control components for this license application. The shielding evaluation described in Chapter 5 is bounding for PWR assemblies having a maximum burnup of 40,000 MWd/MTU, a minimum cooling time of five years, and maximum heat loads of 13.5 kW/cask, 0.764 kW/assy for Type I assemblies, and 0.563 kW/assy for Type II assemblies. The design basis payload neutron and gamma sources are less than 4.640×10^9 neutrons per second and 3.162×10^{16} MeV(γ) per second, respectively.

The source term used for the criticality evaluation is based on the nonirradiated inventory of fissile material.

1.2.3.5 Maximum Payload Weight

The maximum weight of the payload for each canister type is as follows:

FO-DSC	36,900	pounds of intact fuel assemblies
FC-DSC	39,900	pounds of intact fuel assemblies with control components
FF-DSC	20,000	pounds of damaged fuel assemblies.

Weights of the loaded DSCs can be found in Section 2.2.

1.2.3.6 Maximum Decay Heat

The maximum design basis decay heat in the cask inner cavity for this license application is 13.5 kilowatts with a DSC containing 24 fuel assemblies and 9.93 kilowatts with a DSC containing 13 fuel assemblies. The maximum allowable decay heat for a single assembly is 0.764 kW. Other fuel having varied characteristics will be licensed by amendment to the Certificate of Compliance for this package.

1.2.3.7 Maximum Pressure Buildup

The cask is designed for a maximum pressure of 64.7 psia. As shown in Chapter 3, the Maximum Normal Operating Pressure is considerably less as is the maximum pressure that is expected during the hypothetical accident conditions.

Table 1.2-2

Fuel Characteristics

Fuel Parameter	Value
Fuel Assemblies	
Fuel Design	B&W 15X15
Rods per Assembly	208
Control Rod Guide Tubes per Assembly	16
In-Core Instrument Position	1
Assembly Cross Section	8.536 in.
Fuel Rod Outside Diameter	0.430 in.
Cladding Thickness	0.0265 in.
Fuel Rod Pitch	0.568 in.
Active Fuel Length (nominal)(1)	141.8 in.
Assembly Length (600 F, 40 GWd/MTU)	166.893 in.
Total Assembly Only Weight (FO-DSC)	1530 lb
Non-Fuel Component Weight (FC-DSC)	135 lb (max)
Cladding Material	Zircaloy-4

1) Active fuel length may include natural/depleted uranium blankets. Blanket length is less than or equal to 6 inches. Blankets may be present at the top and/or bottom of the active fuel length. Presence of blankets has a conservative effect on both criticality (reduces the amount of enriched uranium) and shielding (lower neutron flux at ends available for activation) analyses.

Table 1.2-3

Alternate Cooling Times for Fuel Qualification

Maximum Burnup(1) (MWD/MTIHM)	Minimum Enrichment (w/o U-235)	Required Type I Cooling Time (years)	Required Type II Cooling Time (years)
29,000	2.00	6	10
35,000	2.67	7	14
37,000	3.00	8	14

(1) Actual fuel burnup shall be rounded up to the values shown in this column to determine applicable enrichment and cooling limits.

1.3 Appendix

1.3.1 References

1.3.2 General Arrangement Drawings

1.3.1 References

1.1 U.S. Government, Packaging and Transportation of Radioactive Material, Title 10 Code of Federal Regulations, Part 71, Office of the Federal Register, Washington, DC.

1.2 U.S. Government, Shippers-General Requirements for Shipments and Packagings, Title 49 Code of Federal Regulations, Part 173, Office of the Federal Register, Washington, DC.

1.3.2 General Arrangement Drawings

The following drawings are provided in this appendix:

1. NUH-05-4000NP, NUHOMS®-MP187 Multi-Purpose Cask - General Arrangement, Rev. 9
2. NUH-05-4001NP, NUHOMS®-MP187 Multi-Purpose Cask - Main Assembly, Rev. 13
3. NUH-05-4002NP, NUHOMS®-MP187 Multi-Purpose Cask - Impact Limiters, Rev. 5
4. NUH-05-4003NP, NUHOMS®-MP187 Multi-Purpose Cask - On-site Transfer Arrangement, Rev. 10
5. NUH-05-4004NP, NUHOMS® FO-DSC & FC-DSC for PWR Fuel, Rev. 13
6. NUH-05-4005NP, NUHOMS® FF-DSC for PWR Fuel, Rev. 12
7. NUH-05-4006NP, NUHOMS®-MP187 Multi-Purpose Cask - Personnel Barrier, Rev. 7

FIGURE WITHHELD UNDER 10 CFR 2.390

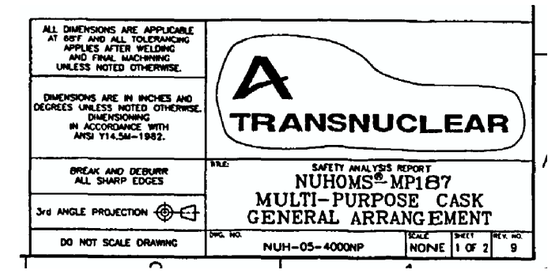

FIGURE WITHHELD UNDER 10 CFR 2.390

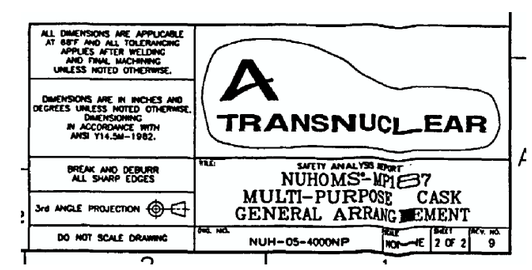

FIGURE WITHHELD UNDER 10 CFR 2.390

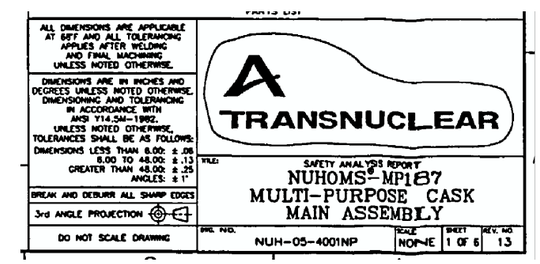

FIGURE WITHHELD UNDER 10 CFR 2.390

ALL DIMENSIONS ARE APPLICABLE AT 68°F AND ALL TOLERANCING APPLIES AFTER WELDING AND FINAL MACHINING UNLESS NOTED OTHERWISE.

DIMENSIONS ARE IN INCHES AND DEGREES UNLESS NOTED OTHERWISE. DIMENSIONING AND TOLERANCING IN ACCORDANCE WITH ANSI Y14.5M-1982. UNLESS NOTED OTHERWISE, TOLERANCES SHALL BE AS FOLLOWS:
DIMENSIONS LESS THAN 6.00: ± .06
6.00 TO 48.00: ± .13
GREATER THAN 48.00: ± .25
ANGLES: ± 1°

BREAK AND DEBURR ALL SHARP EDGES

3rd ANGLE PROJECTION

DO NOT SCALE DRAWING

TRANSNUCLEAR

TITLE: SAFETY ANALYSIS REPORT
NUHOMS®-MP187
MULTI-PURPOSE CASK
MAIN ASSEMBLY

DWG. NO.	SCALE	SHEET	REV. NO
NUH-05-4001NP	NONE	2 OF 6	13

FIGURE WITHHELD UNDER 10 CFR 2.390

ALL DIMENSIONS ARE APPLICABLE AT 68°F AND ALL TOLERANCING APPLIES AFTER WELDING AND FINAL MACHINING UNLESS NOTED OTHERWISE.	TRANSNUCLEAR
DIMENSIONS ARE IN INCHES AND DEGREES UNLESS NOTED OTHERWISE. DIMENSIONING AND TOLERANCING IN ACCORDANCE WITH ANSI Y14.5M-1982. UNLESS NOTED OTHERWISE, TOLERANCES SHALL BE AS FOLLOWS: DIMENSIONS LESS THAN 6.00: ± .08; 6.00 TO 48.00: ± .13; GREATER THAN 48.00: ± .25; ANGLES: ± 1°	FILE: SAFETY ANALYSIS REPORT NUHOMS®-MP187 MULTI-PURPOSE CASK MAIN ASSEMBLY
BREAK AND DEBURR ALL SHARP EDGES	
3rd ANGLE PROJECTION	
DO NOT SCALE DRAWING	DWG. NO: NUH-05-4001NP; SCALE: NONE; SHEET: 3 OF 6; REV. NO: 13

FIGURE WITHHELD UNDER 10 CFR 2.390

ALL DIMENSIONS ARE APPLICABLE AT 68°F AND ALL TOLERANCING APPLIES AFTER WELDING AND FINAL MACHINING UNLESS NOTED OTHERWISE.	TRANSNUCLEAR
DIMENSIONS ARE IN INCHES AND DEGREES UNLESS NOTED OTHERWISE. DIMENSIONING AND TOLERANCING IN ACCORDANCE WITH ANSI Y14.5M-1982. UNLESS NOTED OTHERWISE, TOLERANCES SHALL BE AS FOLLOWS: DIMENSIONS LESS THAN 6.00: ± .06; 6.00 TO 48.00: ± .13; GREATER THAN 48.00: ± .25; ANGLES: ± 1°	FILE: SAFETY ANALYSIS REPORT NUHOMS®-MP187 MULTI-PURPOSE CASK MAIN ASSEMBLY
BREAK AND DEBURR ALL SHARP EDGES	
3rd ANGLE PROJECTION	
DO NOT SCALE DRAWING	DWG. NO. NUH-05-4001NP; SCALE NONE; SHEET 4 OF 6; REV. NO 13

FIGURE WITHHELD UNDER 10 CFR 2.390

ALL DIMENSIONS ARE APPLICABLE AT 68°F AND ALL TOLERANCING APPLIES AFTER WELDING AND FINAL MACHINING UNLESS NOTED OTHERWISE.

DIMENSIONS ARE IN INCHES AND DEGREES UNLESS NOTED OTHERWISE. DIMENSIONING AND TOLERANCING IN ACCORDANCE WITH ANSI Y14.5M-1982. UNLESS NOTED OTHERWISE, TOLERANCES SHALL BE AS FOLLOWS:
DIMENSIONS LESS THAN 6.00: ± .06
6.00 TO 48.00: ± .13
GREATER THAN 48.00: ± .25
ANGLES: ± 1°

BREAK AND DEBURR ALL SHARP EDGES

3rd ANGLE PROJECTION

DO NOT SCALE DRAWING

TRANSNUCLEAR

TITLE: SAFETY ANALYSIS REPORT
NUHOMS®-MP187
MULTI-PURPOSE CASK
MAIN ASSEMBLY

DWG. NO.	SCALE	SHEET	REV. NO
NUH-05-4001NP	NONE	5 OF 6	13

FIGURE WITHHELD UNDER 10 CFR 2.390

ALL DIMENSIONS ARE APPLICABLE AT 68°F AND ALL TOLERANCING APPLIES AFTER WELDING AND FINAL MACHINING UNLESS NOTED OTHERWISE.

DIMENSIONS ARE IN INCHES AND DEGREES UNLESS NOTED OTHERWISE. DIMENSIONING AND TOLERANCING IN ACCORDANCE WITH ANSI Y14.5M-1982. UNLESS NOTED OTHERWISE, TOLERANCES SHALL BE AS FOLLOWS:
DIMENSIONS LESS THAN 6.00: ± .08
6.00 TO 48.00: ± .13
GREATER THAN 48.00: ± .25
ANGLES: ± 1°

BREAK AND DEBURR ALL SHARP EDGES

3rd ANGLE PROJECTION

DO NOT SCALE DRAWING

TRANSNUCLEAR

TITLE: SAFETY ANALYSIS REPORT
NUHOMS®-MP187
MULTI-PURPOSE CASK
MAIN ASSEMBLY

DWG. NO.	SCALE	SHEET	REV. NO.
NUH-05-4001NP	NONE	6 OF 6	13

FIGURE WITHHELD UNDER 10 CFR 2.390

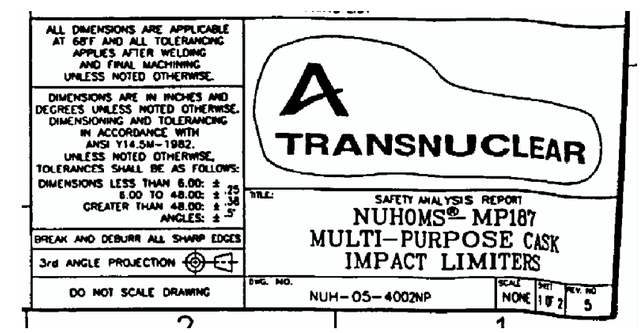

FIGURE WITHHELD UNDER 10 CFR 2.390

ALL DIMENSIONS ARE APPLICABLE AT 68FT AND ALL TOLERANCING APPLIES AFTER WELDING AND FINAL MACHINING UNLESS NOTED OTHERWISE.

DIMENSIONS ARE IN INCHES AND DEGREES UNLESS NOTED OTHERWISE. DIMENSIONING AND TOLERANCING IN ACCORDANCE WITH ANSI Y14.5M-1982. UNLESS NOTED OTHERWISE, TOLERANCES SHALL BE AS FOLLOWS:
DIMENSIONS LESS THAN 6.00: ± .25
6.00 TO 48.00: ± .38
GREATER THAN 48.00: ± .5
ANGLES: ± .5°

BREAK AND DEBURR ALL SHARP EDGES

3rd ANGLE PROJECTION

DO NOT SCALE DRAWING

TRANSNUCLEAR

TITLE: SAFETY ANALYSIS REPORT
NUHOMS®-MP187
MULTI-PURPOSE CASK
IMPACT LIMITERS

DWG. NO	SCALE	SHEET	REV. NO
NUH-05-4002NP	NONE	2 OF 2	5

FIGURE WITHHELD UNDER 10 CFR 2.390

ALL DIMENSIONS ARE APPLICABLE AT 68°F AND ALL TOLERANCING APPLIES AFTER WELDING AND FINAL MACHINING UNLESS NOTED OTHERWISE.	TRANSNUCLEAR
DIMENSIONS ARE IN INCHES AND DEGREES UNLESS NOTED OTHERWISE. DIMENSIONING AND TOLERANCING IN ACCORDANCE WITH ANSI Y14.5M-1982. UNLESS NOTED OTHERWISE, TOLERANCES SHALL BE AS FOLLOWS: DIMENSIONS LESS THAN 6.00: ± .06; 6.00 TO 48.00: ± .13; GREATER THAN 48.00: ± .25; ANGLES: ± 1°	TITLE: SAFETY ANALYSIS REPORT NUHOMS® MP187 MULTI-PURPOSE CASK ON-SITE TRANSFER ARRANGEMENT
BREAK AND DEBURR ALL SHARP EDGES	
3rd ANGLE PROJECTION	
DO NOT SCALE DRAWING	DWG. NO. NUH-05-4003NP; SCALE NONE; SHEET 1 OF 2; REV. NO. 10

FIGURE WITHHELD UNDER 10 CFR 2.390

ALL DIMENSIONS ARE APPLICABLE AT 68°F AND ALL TOLERANCING APPLIES AFTER WELDING AND FINAL MACHINING UNLESS NOTED OTHERWISE.

DIMENSIONS ARE IN INCHES AND DEGREES UNLESS NOTED OTHERWISE. DIMENSIONING AND TOLERANCING IN ACCORDANCE WITH ANSI Y14.5M-1982. UNLESS NOTED OTHERWISE, TOLERANCES SHALL BE AS FOLLOWS:

DIMENSIONS LESS THAN 6.00: ± .06
6.00 TO 48.00: ± .13
GREATER THAN 48.00: ± .25
ANGLES: ± 1°

BREAK AND DEBURR ALL SHARP EDGES

3rd ANGLE PROJECTION

DO NOT SCALE DRAWING

TRANSNUCLEAR

TITLE: SAFETY ANALYSIS REPORT
NUHOMS® MP187
MULTI-PURPOSE CASK
ON-SITE TRANSFER ARRANGEMENT

DWG. NO.	SCALE	SHEET	REV. NO.
NUH-05-4003NP	NONE	2 OF 2	10

FIGURE WITHHELD UNDER 10 CFR 2.390

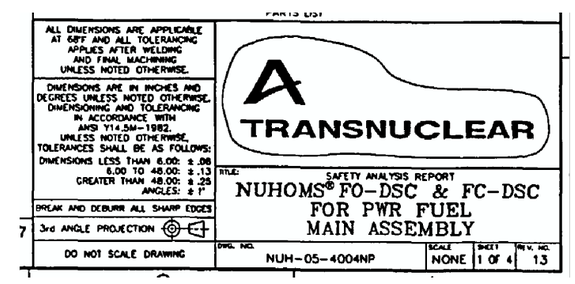

FIGURE WITHHELD UNDER 10 CFR 2.390

ALL DIMENSIONS ARE APPLICABLE AT 68°F AND ALL TOLERANCING APPLIES AFTER WELDING AND FINAL MACHINING UNLESS NOTED OTHERWISE.

DIMENSIONS ARE IN INCHES AND DEGREES UNLESS NOTED OTHERWISE. DIMENSIONING AND TOLERANCING IN ACCORDANCE WITH ANSI Y14.5M-1982. UNLESS NOTED OTHERWISE, TOLERANCES SHALL BE AS FOLLOWS:
DIMENSIONS LESS THAN 6.00: ± .06
6.00 TO 48.00: ± .13
GREATER THAN 48.00: ± .25
ANGLES: ± 1°

BREAK AND DEBURR ALL SHARP EDGES

3rd ANGLE PROJECTION

DO NOT SCALE DRAWING

TRANSNUCLEAR

TITLE: SAFETY ANALYSIS REPORT
NUHOMS® FO-DSC & FC-DSC
FOR PWR FUEL
MAIN ASSEMBLY

DWG. NO.	SCALE	SHEET	REV. NO
NUH-05-4004NP	NONE	2 OF 4	13

FIGURE WITHHELD UNDER 10 CFR 2.390

ALL DIMENSIONS ARE APPLICABLE AT 68°F AND ALL TOLERANCING APPLIES AFTER WELDING AND FINAL MACHINING UNLESS NOTED OTHERWISE.	TRANSNUCLEAR
DIMENSIONS ARE IN INCHES AND DEGREES UNLESS NOTED OTHERWISE. DIMENSIONING AND TOLERANCING IN ACCORDANCE WITH ANSI Y14.5M-1982. UNLESS NOTED OTHERWISE, TOLERANCES SHALL BE AS FOLLOWS: DIMENSIONS LESS THAN 6.00: ± .06; 6.00 TO 48.00: ± .13; GREATER THAN 48.00: ± .25; ANGLES: ± 1°	TITLE: SAFETY ANALYSIS REPORT NUHOMS® FO-DSC & FC-DSC FOR PWR FUEL MAIN ASSEMBLY
BREAK AND DEBURR ALL SHARP EDGES	
3rd ANGLE PROJECTION	
DO NOT SCALE DRAWING	DWG. NO. NUH-05-4004NP; SCALE NONE; SHEET 3 OF 4; REV. NO. 13

FIGURE WITHHELD UNDER 10 CFR 2.390

ALL DIMENSIONS ARE APPLICABLE AT S&T AND ALL TOLERANCING APPLIES AFTER WELDING AND FINAL MACHINING UNLESS NOTED OTHERWISE.

DIMENSIONS ARE IN INCHES AND DEGREES UNLESS NOTED OTHERWISE. DIMENSIONING AND TOLERANCING IN ACCORDANCE WITH ANSI Y14.5M-1982. UNLESS NOTED OTHERWISE, TOLERANCES SHALL BE AS FOLLOWS:
DIMENSIONS LESS THAN 6.00: ± .06
6.00 TO 48.00: ± .13
GREATER THAN 48.00: ± .25
ANGLES: ± 1°

BREAK AND DEBURR ALL SHARP EDGES

3rd ANGLE PROJECTION

DO NOT SCALE DRAWING

TRANSNUCLEAR

TITLE: SAFETY ANALYSIS REPORT
NUHOMS® FO-DSC & FC-DSC
FOR PWR FUEL
MAIN ASSEMBLY

DWG. NO.	SCALE	SHEET	REV. NO.
NUH-05-4004NP	NONE	4 OF 4	13

FIGURE WITHHELD UNDER 10 CFR 2.390

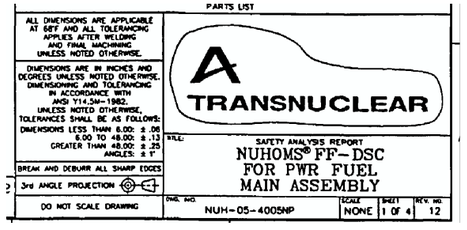

FIGURE WITHHELD UNDER 10 CFR 2.390

ALL DIMENSIONS ARE APPLICABLE AT 68°F AND ALL TOLERANCING APPLIES AFTER WELDING AND FINAL MACHINING UNLESS NOTED OTHERWISE.

DIMENSIONS ARE IN INCHES AND DEGREES UNLESS NOTED OTHERWISE. DIMENSIONING AND TOLERANCING IN ACCORDANCE WITH ANSI Y14.5M-1982. UNLESS NOTED OTHERWISE, TOLERANCES SHALL BE AS FOLLOWS:
DIMENSIONS LESS THAN 6.00: ± .06
6.00 TO 48.00: ± .13
GREATER THAN 48.00: ± .25
ANGLES: ± 1°

BREAK AND DEBURR ALL SHARP EDGES

3rd ANGLE PROJECTION

DO NOT SCALE DRAWING

TRANSNUCLEAR

TITLE: SAFETY ANALYSIS REPORT
NUHOMS® FF-DSC
FOR PWR FUEL
MAIN ASSEMBLY

DWG. NO.	SCALE	SHEET	REV. NO
NUH-05-4005NP	NONE	2 OF 4	12

FIGURE WITHHELD UNDER 10 CFR 2.390

ALL DIMENSIONS ARE APPLICABLE AT 68°F AND ALL TOLERANCING APPLIES AFTER WELDING AND FINAL MACHINING UNLESS NOTED OTHERWISE.

DIMENSIONS ARE IN INCHES AND DEGREES UNLESS NOTED OTHERWISE. DIMENSIONING AND TOLERANCING IN ACCORDANCE WITH ANSI Y14.5M-1982. UNLESS NOTED OTHERWISE, TOLERANCES SHALL BE AS FOLLOWS:
DIMENSIONS LESS THAN 6.00: ± .06
6.00 TO 48.00: ± .13
GREATER THAN 48.00: ± .25
ANGLES: ± 1°

BREAK AND DEBURR ALL SHARP EDGES

3rd ANGLE PROJECTION

DO NOT SCALE DRAWING

TRANSNUCLEAR

FILE:

SAFETY ANALYSIS REPORT
NUHOMS® FF-DSC
FOR PWR FUEL
MAIN ASSEMBLY

DWG. NO.	SCALE	SHEET	REV. NO.
NUH-05-4005NP	NONE	3 OF 4	12

FIGURE WITHHELD UNDER 10 CFR 2.390

ALL DIMENSIONS ARE APPLICABLE AT 68°F AND ALL TOLERANCING APPLIES AFTER WELDING AND FINAL MACHINING UNLESS NOTED OTHERWISE.

DIMENSIONS ARE IN INCHES AND DEGREES UNLESS NOTED OTHERWISE. DIMENSIONING AND TOLERANCING IN ACCORDANCE WITH ANSI Y14.5M-1982. UNLESS NOTED OTHERWISE, TOLERANCES SHALL BE AS FOLLOWS:
DIMENSIONS LESS THAN 6.00: ± .06
6.00 TO 48.00: ± .13
GREATER THAN 48.00: ± .25
ANGLES: ± 1°

BREAK AND DEBURR ALL SHARP EDGES

3rd ANGLE PROJECTION

DO NOT SCALE DRAWING

TRANSNUCLEAR

TITLE: SAFETY ANALYSIS REPORT
NUHOMS® FF-DSC
FOR PWR FUEL
MAIN ASSEMBLY

DWG. NO.	SCALE	SHEET	REV. NO.
NUH-05-4005NP	NONE	4 OF 4	12

FIGURE WITHHELD UNDER 10 CFR 2.390

TRANSNUCLEAR

TITLE: SAFETY ANALYSIS REPORT NUHOMS® MP187 MULTI-PURPOSE TRANSPORTATION SKID/PERSONNEL BARRIER			
DWG. NO. NUH-05-4006NP	SCALE NONE	SHEET 1 OF 2	REV. NO 7

FIGURE WITHHELD UNDER 10 CFR 2.390

TRANSNUCLEAR

TITLE: SAFETY ANALYSIS REPORT
NUHOMS®-MP187
MULTI-PURPOSE TRANSPORTATION
SKID/PERSONNEL BARRIER

DWG. NO.	SCALE	SHEET	REV. NO.
NUH-4-05-4006NP	NONE	2 OF 2	7

2. STRUCTURAL EVALUATION

The structural evaluations presented herein demonstrate that the NUHOMS®-MP187 transportation package meets all applicable structural criteria of 10CFR71 [2.1]. The NUHOMS®-MP187 Cask and impact limiters are evaluated and shown to provide adequate protection for the cask payload and dry shielded canisters. Normal and hypothetical accident condition evaluations are performed using analytical and experimental techniques in accordance with 10CFR71 [2.1] requirements. The experimental verifications and evaluations employed in the structural analysis of the Package are of the following forms:

- 1/4-Scale Drop and Puncture Tests are performed to verify the behavior of the NUHOMS®-MP187 Cask impact limiters for the hypothetical accident drop conditions. Drop test results are summarized and compared with analytic results in Appendix 2.10.11. The results of the drop and puncture tests, coupled with appropriate analytic evaluations, demonstrate the capability of the transportation package to meet the requirements of 10CFR71[2.1]. As described in Appendix 2.10.11, the measured displacements and accelerations were correlated to the analytical predictions in order to benchmark the analyses and completely define the loads on the package. This data, when correlated with analytic results, provides accurate predictions of internal stresses and deformations for the hypothetical accident drop loading events. Puncture tests at various locations provided a basis for the estimated damage considered in the thermal evaluation.

- Component tests are performed, to verify mechanical or physical properties of the impact limiter materials. For example, material bench testing for the impact limiters was done to characterize the behavior and performance of the component materials. The results of the impact limiter material bench tests are presented in Appendix 2.10.8. Static tests of the scaled impact limiters were performed to verify analytical modeling results, as discussed in Appendix 2.10.12.

Analytical demonstration techniques employed herein comply with the methodology presented in Regulatory Guide 7.6 [2.4]. The 1/4-scale drop tests, puncture, and the static deflection tests of the impact limiter are the only experimental techniques employed in this evaluation. Detailed test results are presented in Appendices 2.10.11 and 2.10.12.

2.1 Structural Design

2.1.1 Discussion

The NUHOMS®-MP187 transportation package consists of the MP187 Cask with impact limiters, loaded with one of three different Dry Shielded Canisters (DSCs). The NUHOMS®-MP187 Cask consists of a cask body that provides containment and acts as an environmental barrier. The three types of DSCs which may be transported with the MP187 Cask are:

1. Fuel Only (FO) DSC: Designed to hold 24 PWR Fuel Assemblies only (i.e., without control components)
2. Fuel with Control Components (FC) DSC: Designed to hold 24 PWR Fuel Assemblies with control components inserted into each fuel assembly.
3. Failed Fuel (FF) DSC: Designed to hold 13 Failed PWR Fuel Assemblies.

The DSCs are designed to provide structural stability for the fuel. The impact limiters provide protection against structurally overloading the NUHOMS®-MP187 components during postulated normal and accident conditions.

For purposes of the structural evaluation of the NUHOMS®-MP187, components are categorized as containment and non-containment components and qualified based upon the appropriate acceptance criteria, as discussed in Section 2.1.2.

2.1.1.1 NUHOMS®-MP187 Cask

The NUHOMS®-MP187 Cask, shown in Figure 2.1.1-1, serves as the primary containment boundary. There are both containment and non-containment structures. The cask containment boundary is comprised of the inner shell, bottom end closure, top flange, ram access closure plate, top closure plate and all associated welds, closure bolts, sealing surfaces, and the innermost seal at all closure locations. The cask non-containment structures include the bottom structural shell, top structural shell, trunnions, shear key way, the leak test seals, and the

shielding components (i.e. gamma shield, neutron shielding material, neutron shield shell and neutron shield support ring).

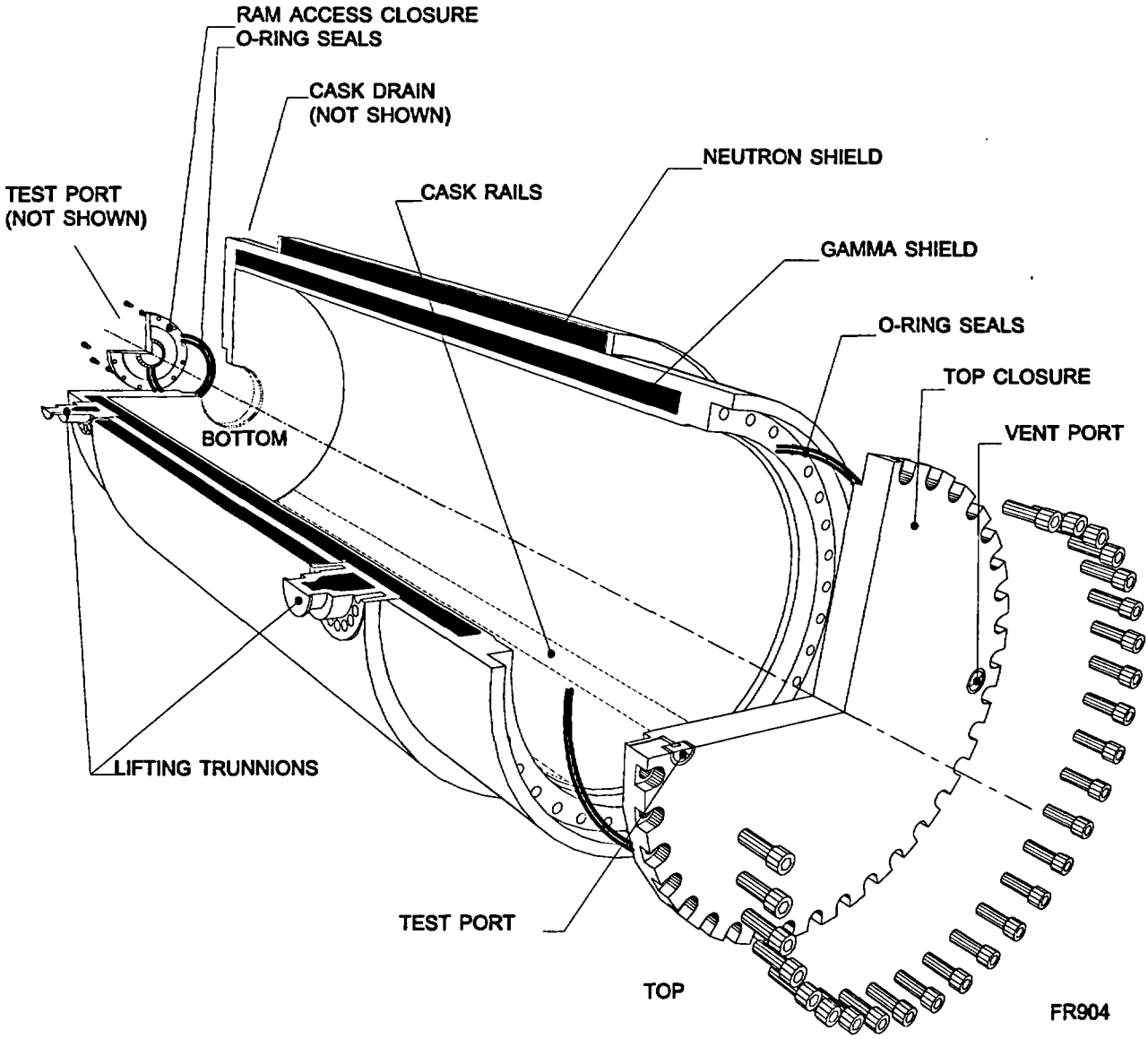

Figure 2.1.1-1
The NUHOMS®-MP187 Cask

The NUHOMS®-MP187 Cask is designed to be "leaktight" in accordance with the definition given in ANSI N14.5 [2.35]. The top and bottom end closures each include an inner metallic containment O-ring face seal. The outer seals are used to test the leak tightness of the package and may be metallic or elastomeric O-rings. The seals used in the cask are capable of sealing for temperatures ranging from -40°F to 600°F. The top closure plate is bolted to the top flange using 36 evenly spaced 2-12UN cap screws. Sufficient clearance is provided between the screws and

the top closure plate holes to ensure that the screws are not loaded in shear. The top and bottom cask closure sealing surfaces include Inconel overlays, as shown in Figure 2.1.1-2, which provide a hardened surface to prevent damage to the sealing surfaces.

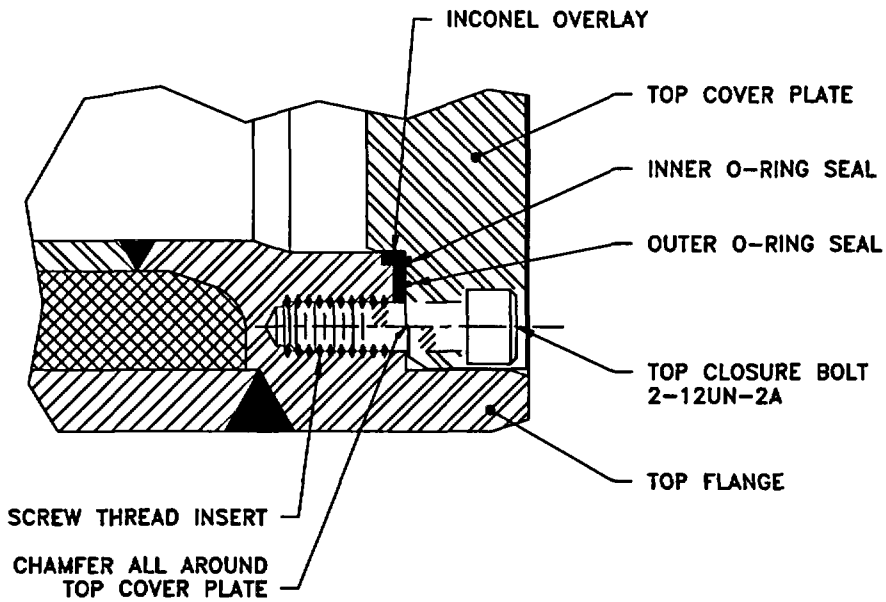

TOP CLOSURE DETAIL

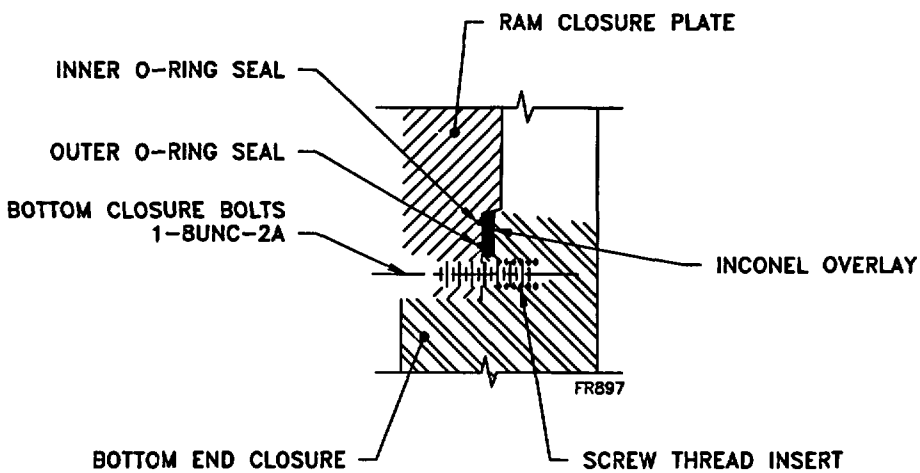

BOTTOM CLOSURE DETAIL

Figure 2.1.1-2
Sealing Surface and Bolt Detail

The NUHOMS®-MP187 Cask includes removable upper and lower trunnions, as shown in Figure 2.1.1-3, which are used for on-site lifting and transfer operations. The trunnions are removed prior to transportation and replaced with non-protruding plugs to provide the required crush distance for the impact limiter, thereby allowing the largest possible stopping distance and minimizing the package impact loads resulting from the postulated accident drop conditions. The trunnion plugs also provide shielding in the trunnion regions during transportation.

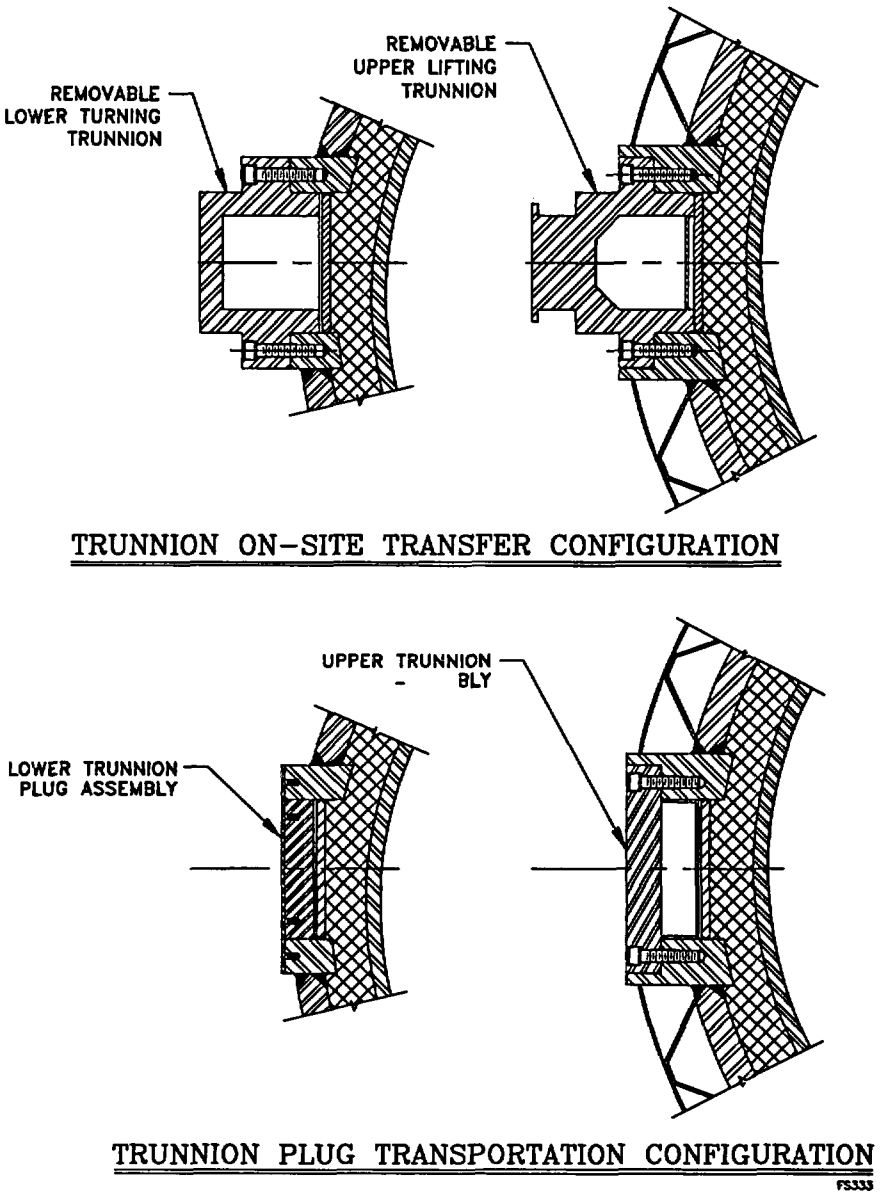

Figure 2.1.1-3
NUHOMS®-MP187 Cask Trunnion Configurations

The NUHOMS®-MP187 Cask includes a shear key (Figure 2.1.1-4), located at the mid-length of the cask on the bottom side, designed to react all longitudinal loads encountered during transportation. As shown in Figure 2.1.1-5 and Figure 2.1.1-6, the NUHOMS®-MP187 transportation package is supported by ring assemblies during transportation. The ring assemblies are designed to support the vertical and lateral loads encountered during transport,

while the shear key resists the cask longitudinal transportation loads. The details of the transportation skid are discussed in Section 2.5.2.1. Figure 2.1.1-7 shows the configuration of the NUHOMS®-MP187 package during transportation.

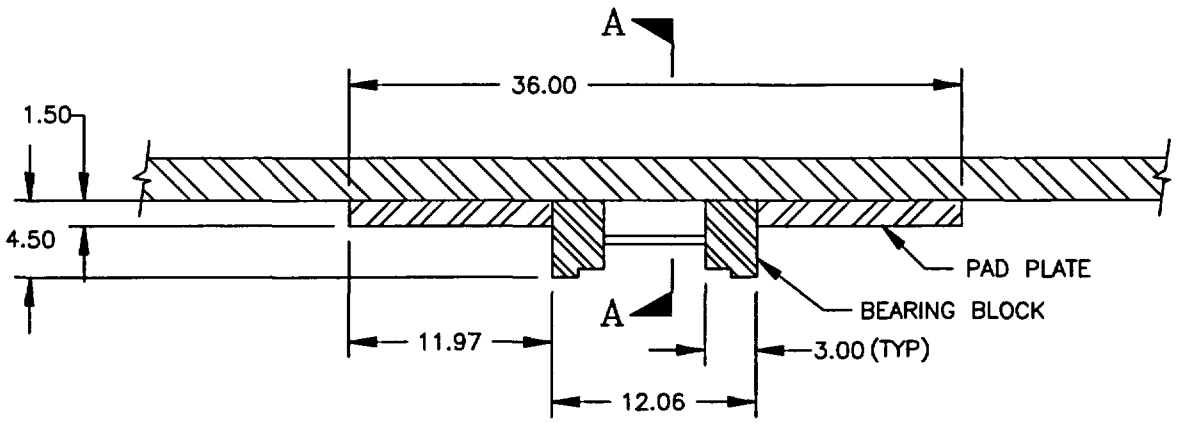

ELEVATION

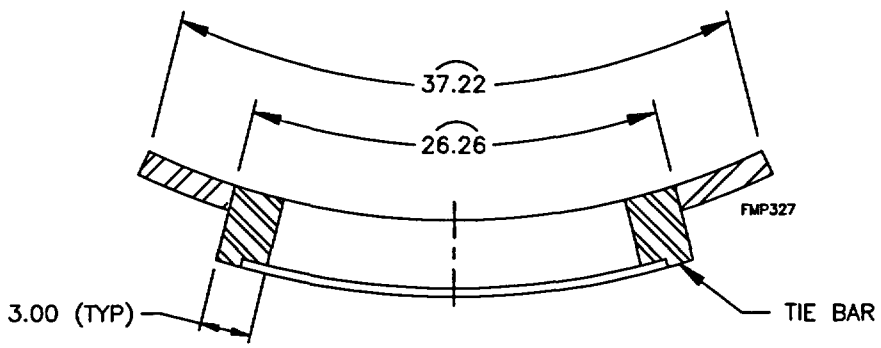

SECTION A–A

(NEUTRON SHIELD SHELL AND SHIELDING MATERIAL NOT SHOWN FOR CLARITY)

Figure 2.1.1-4
NUHOMS®-MP187 Cask Shear Key Configurations

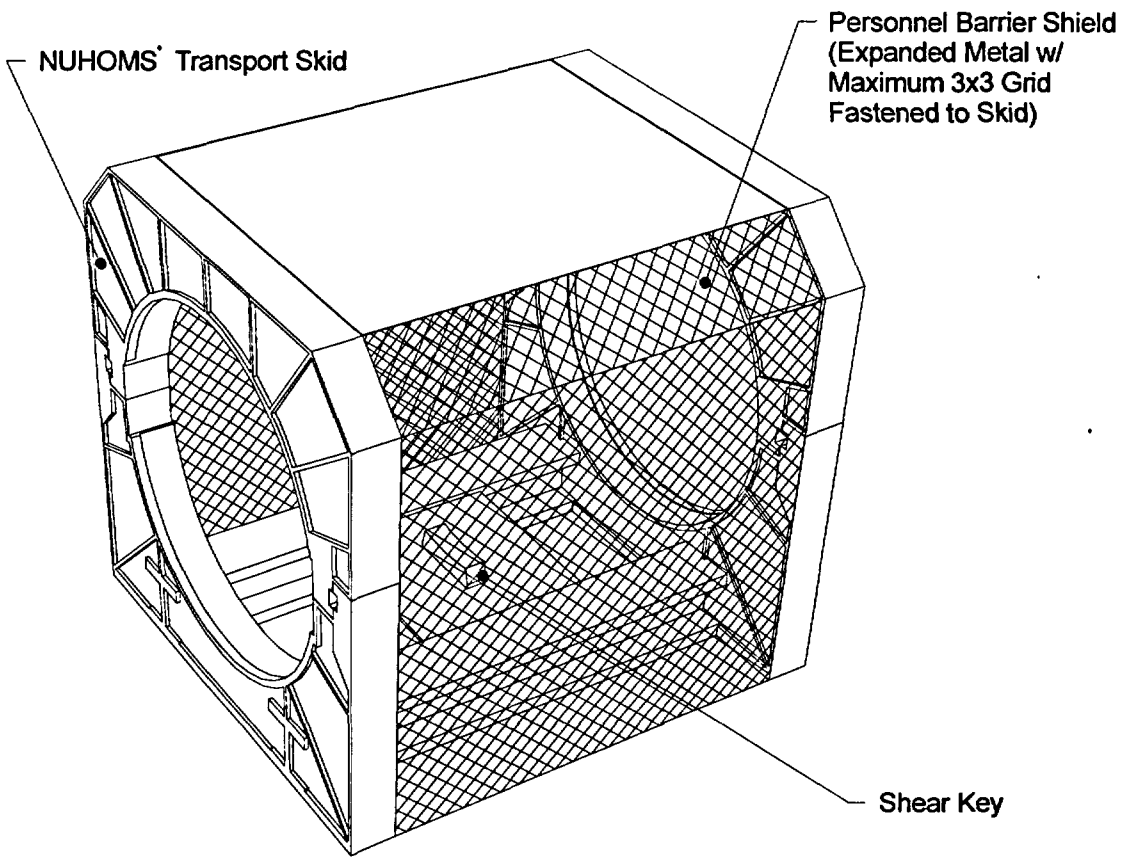

Figure 2.1.1-5
NUHOMS®-MP187 Transportation Skid
(Neutron Shielding for Trunnion is Not Shown on this View)

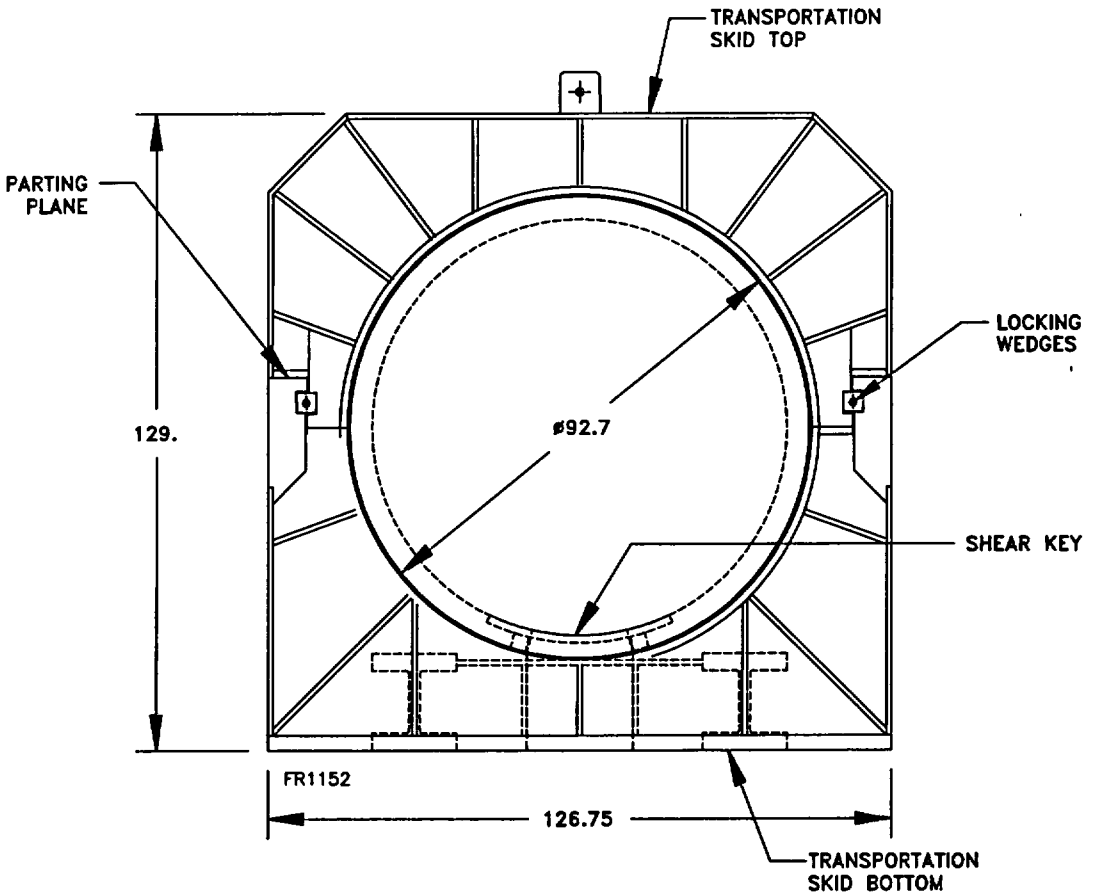

Figure 2.1.1-6
Transport Skid Front View, Typical Design

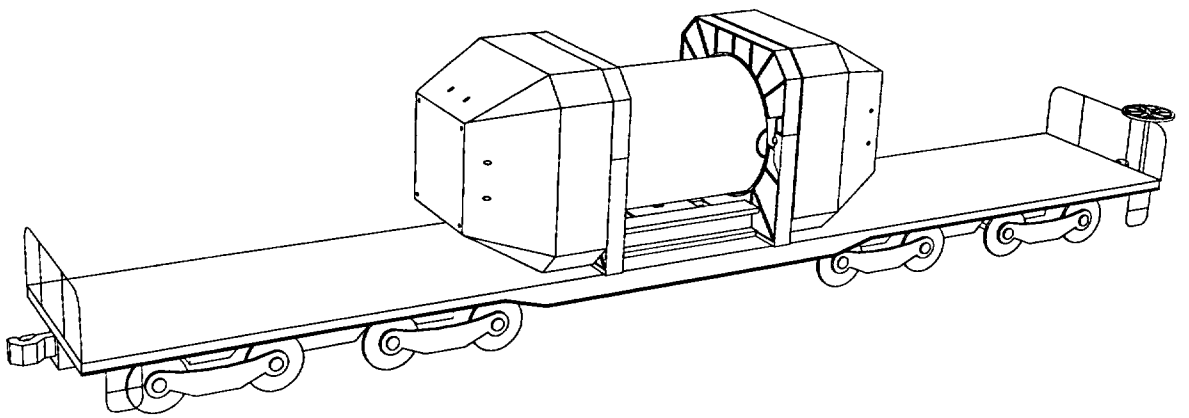

Figure 2.1.1-7
NUHOMS®-MP187 Package Transportation Configuration
(Personnel Barrier not Shown for Clarity)

2.1.1.2 NUHOMS® DSC Assemblies

The NUHOMS®-MP187 Fuel Only (FO) and Fuel with Control components (FC) Dry Shielded Canisters (DSCs) are each designed to accommodate 24 PWR fuel elements. The FO-DSC is used for fuel assemblies without control components, and the FC-DSC for fuel assemblies with control components inserted. The NUHOMS®-MP187 Failed Fuel (FF) Dry Shielded Canister is designed to accommodate 13 Failed PWR Fuel assemblies. The FF-DSC is designed to be used with what is classified as 'Failed Fuel'. The definition of failed fuel is given in Chapter 6. The FF-DSC basket is specifically designed to provide the confinement and spacing requirements of the failed fuel payload.

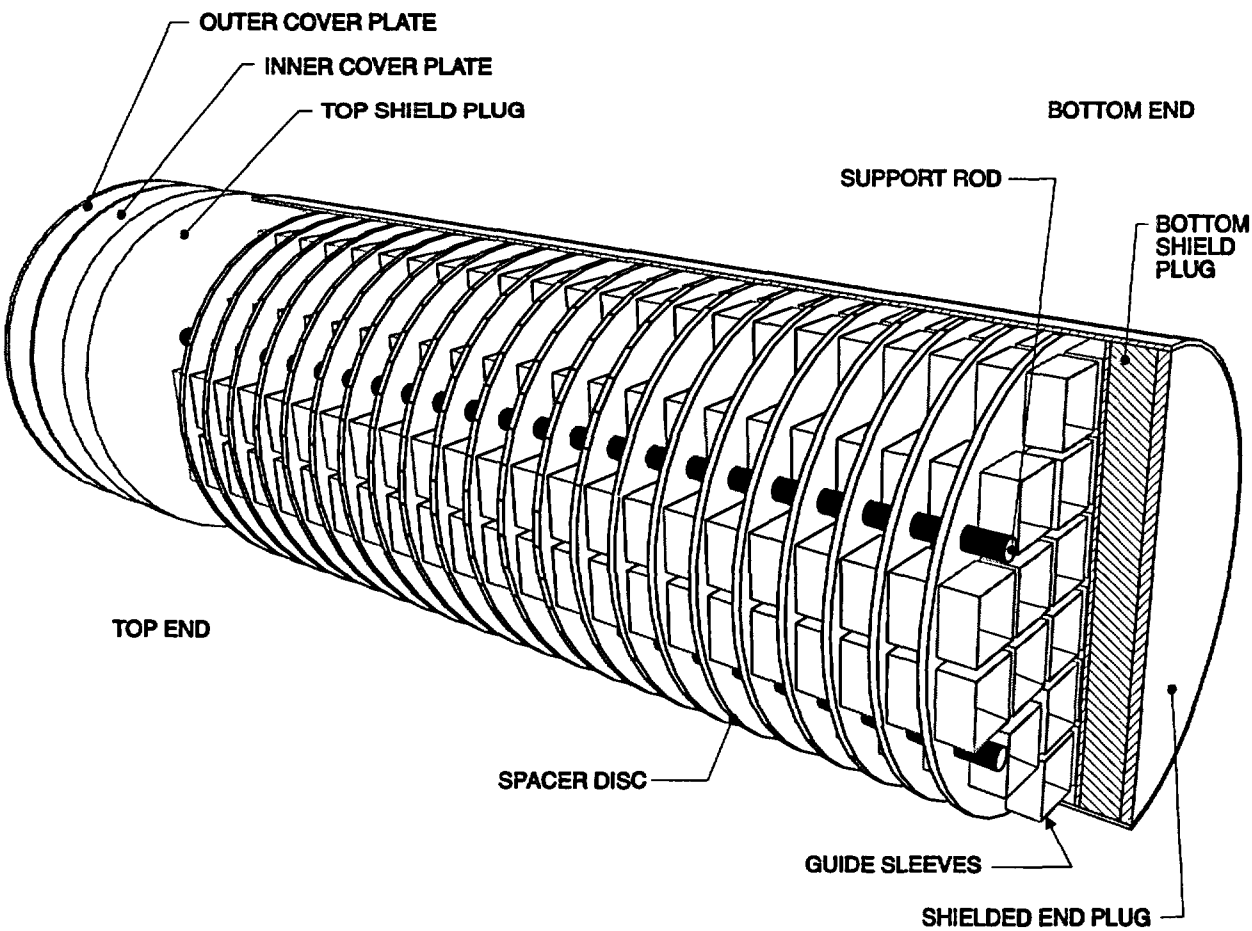

Figure 2.1.1-8
FO and FC-DSC Assembly Schematic

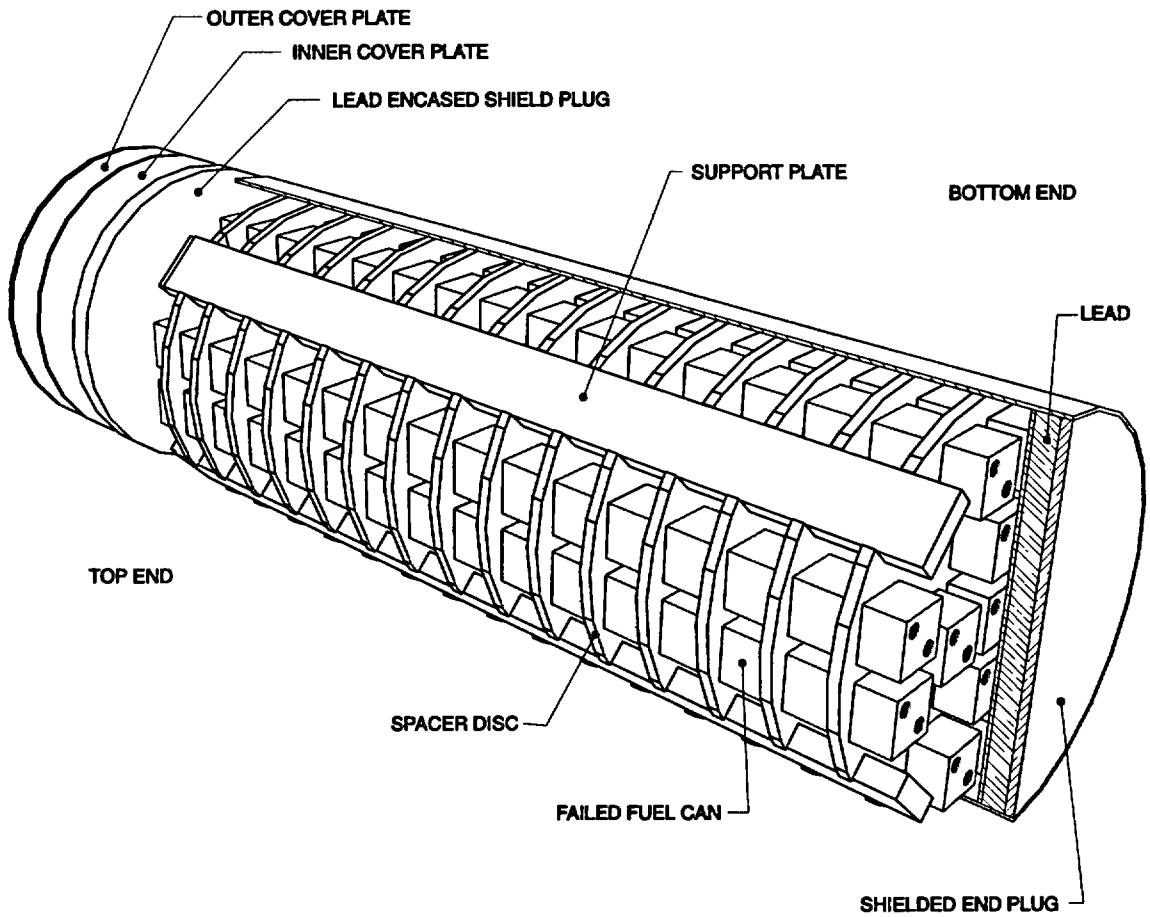

Figure 2.1.1-9
FF-DSC Assembly Schematic

Each DSC consists of a shell assembly and a basket assembly. The DSC shell assembly is a high integrity stainless steel welded pressure vessel that provides confinement of radioactive materials, encapsulates the fuel in an inert atmosphere (the DSC is backfilled with Helium before being seal welded closed), and provides biological shielding (in the axial direction). The overall length of all DSC shells is the same; however, the FO cavity is 6 inches shorter than the FC and FF cavity lengths. The FC and FF-DSC cavities utilize thin lead filled shield plugs to maintain the overall length of the DSC shell assembly, while providing the equivalent amount of

biological shielding to the carbon steel plugs used in the FO-DSC. Although no credit is taken for the containment provided by the DSC shell assemblies for transportation conditions, the canister shell, top cover plates and shield plugs are analyzed to meet the requirements of 10CFR72, and the ASME Boiler and Pressure Vessel Code (BPVC) [2.2], Section III, Subsection NB. Using ASME Section III, Subsection NB Plastic Analysis acceptance criteria, the shield plugs were analyzed for the 10CFR72 worst case 75g postulated end drop loading, the elastic-plastic analysis showed minor permanent deformation of the shield plugs. The 10CFR72 postulated accident drop conditions do not result in gross structural failure of the DSC shell which would negatively impact the ability of the NUHOMS®-MP187 to meet any 10CFR71 safety requirements. The structural evaluations provided in the following sections concentrate on the MP187 Cask body and the basket assemblies, and do not address the DSC shell assemblies except where they impact the 10CFR71 analytical results.

The nominal length of a cold PWR fuel assembly is 165.63 inches [2.8]. The maximum length of a PWR fuel assembly, including tolerances, thermal growth, and irradiation growth, is 166.89 inches [2.8]. The length of the FO-DSC cavity is 167.00 inches to accommodate the maximum PWR fuel assembly length. The FO basket assembly support rods are 166.5 inches long, allowing a gap of 0.50 inches between the support rods and DSC cavity for thermal expansion.

The addition of control components to the fuel increases the fuel assembly weight (see Table 2.1.2-1) and adds 5.125 inches to the overall length of the fuel assembly. Therefore, the total length of a PWR fuel assembly with control components is 172.02 inches. The length of the FC-DSC cavity is 173.00 inches to accommodate the maximum length of the PWR fuel assembly with control components. The FC basket assembly support rods are 172.50 inches long, allowing a gap of 0.50 inches between the support rods and DSC cavity for thermal expansion.

Failed fuel is an assembly in which the fuel cladding has been breached in some way, and therefore fuel confinement cannot be guaranteed by the fuel assembly alone. A failed fuel assembly (without control components) has the same dimensions as an FO assembly. As described below, a failed fuel assembly is placed into a fuel can, which will provide confinement of the failed fuel for criticality control. The cavity length of the failed fuel can is 167.25 inches

to accommodate the maximum PWR fuel assembly length. The length of the FF-DSC cavity is 173.00 inches to accommodate the 172.25 inch length of the FF fuel can assembly. The FF basket assembly support plates are 172.50 inches long, allowing a gap of 0.50 inches between the support plates and DSC cavity for thermal expansion.

The construction of the FO and FC basket assemblies is identical, except the FC support rod length extends 6.0 inches further above the top spacer disc and 6.5 inch long angles are attached to the top of each guide sleeve to accommodate the additional length of the control components. Each FO and FC-DSC basket assembly consists of 26 spacer discs, four support rod assemblies, and 24 guide sleeve assemblies. Each support rod assembly consists of a 2.00-inch or a 1.25 inch diameter support rod, threaded at each end, and 26 3.00 inch O.D. support rod sleeves, which are positioned between the spacer discs and on the top and bottom ends to maintain the longitudinal position of the spacer discs. The support rod assemblies are tensioned to provide additional stiffness to the basket assembly. Each FO guide sleeve assembly consists of a stainless steel guide sleeve, neutron absorber sheets, and stainless steel oversleeves, with an inner dimension of 8.90 inches square, and a total length of 161.80 inches. The neutron absorber sheets run nearly the entire length of the guide sleeve. The stainless steel oversleeves are welded to the guide sleeves to capture the neutron absorber sheets. The twelve guide sleeve assemblies located on the perimeter of the basket include only two neutron absorber sheets and oversleeves facing the adjacent fuel cells. The twelve interior guide sleeve assemblies include neutron absorber sleeves on all four sides. The FC guide sleeves are identical to the FO guide sleeves, described above, except that four 6.5 inch long angles are welded to the top of the guide sleeves to ensure that the guide sleeve and poison do not uncover the active fuel region in case of a top end drop event.

The FF basket utilizes eight, 2" x 12" x 172.5" support plates (optionally replaced by four, 4" x 12" x 172.5" support plates) constructed of SA-537, Class 2 or SA-543, Type B, Class 1 carbon steel, or four 4" thick SA-240, Type XM-19 austenitic stainless steel support plates to maintain the position of the spacer discs. The eight massive FF-DSC support plates are not required for structural purposes, but are utilized to add mass such that the weight of the FF-DSC is approximately the same as the FO and FC-DSCs to eliminate impact limiter design permutations.

The failed fuel cans are constructed of ASME SA-240, Type 304 stainless steel or equivalent product forms. The three main components are the fuel can bodies, the bottom lid subassembly, and top lid subassembly. The top and bottom lids each have two mesh covered drainage holes to allow water to drain and allow proper drying during the vacuum drying process.

Spacer discs provide lateral support for the support rod/ support plate assemblies, guide sleeve assemblies, and fuel assemblies. The FC/FO spacer discs are 1.25 inches thick. The FF spacer discs are 2.00 inches thick. The FC/FO spacer disc longitudinal pitch provides a relatively uniform loading on each disc; the interior spans are spaced at 6.75 inches with slight variations in the spans at the top and bottom ends of the basket. The FF spacer disc longitudinal pitch is 11.25 inches in the interior spans and has a slightly reduced span at the top and bottom. The spacer disc pitch in the active fuel region is sufficiently small to provide adequate support of the fuel assemblies and limit guide sleeve stresses for the normal operations and accident drop conditions to maintain criticality control.

The overall arrangement of the NUHOMS®-MP187 transportation package, including design details of the NUHOMS®-MP187 Cask and Dry Shielded Canisters, are presented in Section 1.3.2, General Arrangement Drawings.

The structural analyses of the NUHOMS®-MP187 package components for normal and hypothetical accident conditions of transport, as defined in 10CFR71 [2.1], are presented in Sections 2.6 and 2.7, respectively. The analysis of the cask impact limiters is presented in Appendix 2.10.9.

2.1.2 Design Criteria

2.1.2.1 Allowable Stress Limit Criteria

2.1.2.1.1 Containment Structures

The NUHOMS®-MP187 transportation package containment boundary components are designed in accordance with Regulatory Guide 7.6 [2.4], "Design Criteria for the Structural Analysis of Shipping Cask Containment Vessels," and American Society of Mechanical Engineers (ASME) Boiler and Pressure Vessel Code (BPVC) [2.2], Section III, Subsection NB, "Class 1 Components," and Appendix F, "Rules for Evaluation of Service Loadings with Level D Service Limits."

The buckling evaluation of the cask shells is performed in accordance with ASME BPVC Code Case N-284 [2.25]. The cask top and bottom closure bolts are evaluated in accordance with the recommendations of NUREG/CR-6007 [2.20]. A summary of the allowable stresses used for containment structures is presented in Table 2.1.2-1.

Table 2.1.2-1
Containment Allowable Stress Limit Criteria

Type of Structure	Stress Category	Normal Conditions of Transport	Hypothetical Accident Conditions
Structural Components	Primary Membrane Stress Intensity	S_m	Lesser of $2.4S_m$ or $0.7\ S_u$
	Membrane + Bending Stress Intensity	$1.5S_m$	Lesser of $3.6S_m$ or S_u
	Primary + Secondary Stress Intensity Range	$3.0S_m$	N/A
	Bearing Stress	S_y	N/A(1)
	Average Primary Shear Stress	$0.6S_m$	$0.42S_u$
	Peak Stress Intensity	Per Section 2.1.2.3.2	N/A
	Buckling	Per Section 2.1.2.3.3	
Fasteners(2)	Average Tensile Stress	S_m	Smaller of $0.7S_u$ or S_y
	Average Shear Stress	$0.6S_m$	Smaller of $0.42S_u$ or $0.6S_y$
	Tension + Shear	$R_t^2 + R_s^2 < 1$	$R_t^2 + R_s^2 < 1$
	Tension + Shear + Bending S.I.	$1.5S_m$ for $S_u < 100$ ksi $1.35S_m$ for $S_u > 100$ ksi	N/A

NOTES:
(1) The allowable bearing stress on seal surfaces is S_y.
(2) Containment fasteners stress limits are in accordance with NUREG/CR-6007 [2.20].

2.1.2.1.2 Non-Containment Structures

The NUHOMS®-MP187 transportation package non-containment structural components, with exceptions noted below, are designed in accordance with American Society of Mechanical Engineers (ASME) Boiler and Pressure Vessel Code (BPVC) [2.2] Section III, Subsection NB. The cask structural shell is not part of the cask containment boundary and is classified as an NF component by NUREG 3019 [2.36], but is conservatively evaluated to the requirements of Subsection NB of the ASME Code [2.2]. The neutron shield jacket assembly and cask trunnion assemblies are designed to meet the requirements of Subsection NF of the ASME Code for Class 1 components. The maximum compressive stress for cask non-containment structures in accordance with NF-3220, is limited to 1/2 of the critical buckling stress. A summary of the acceptance criteria applicable to non-containment structural components is presented in Table 2.1.2-2.

Impact limiter components are allowed to exceed yield for all conditions. The acceptance criterion for impact related loads is that no cask "hard points" come directly into contact with the impact surface.

For lifting and handling loads, the "non-containment" normal condition allowables are utilized in conjunction with a load factor of three in accordance with the requirements of 10CFR71.45 [2.1] for the design of the cask trunnions.

Table 2.1.2-2
Non-containment Allowable Stress Limit Criteria - Structural Components

Type of Structure	Stress Category	Normal Conditions of Transport	Hypothetical Accident Conditions
Structural Components	Primary Membrane Stress Intensity	S_m	0.7 S_u
	Membrane + Bending Stress Intensity	$1.5S_m$	S_u
	Primary + Secondary Stress Intensity Range	$3.0S_m$	N/A
	Average Bearing Stress	S_y	N/A(1)
	Average Primary Shear Stress	$0.6S_m$	$0.42S_u$
	Peak Stress Intensity	Per Section 2.1.2.3.2	N/A
	Buckling	Equivalent static loads shall not exceed 1/2 of the limit analysis-collapse load, P_{cr}	
Threaded Structural Fasteners	Average Tensile F_{tb}	$S_u/2$ (Ferritic Fasteners)	125% of Normal Condition Allowable
	Average Shear F_{vb}	$0.62S_u/3$	125% of Normal Condition Allowable S_u
	Average Bearing Stress Under Fastener Head	$f_t^2/F_{tb}^2 + f_t^2/F_{tb}^2 \leq 1$	N/A(1)

NOTES:
(1) Bearing stresses need not be evaluated for accident conditions.

2.1.2.1.3 Criticality Control Structures

The various criticality control (basket) structures (spacer discs, support rods, support plates) are designed per Subsection NG of the ASME Code. Buckling is evaluated in accordance with F-1334 of the ASME Code. A summary of the design criteria used for the criticality components is presented in Table 2.1.2-3.

Table 2.1.2-3
Non-containment Allowable Stress Limit Criteria - Criticality Control Components

Type of Structure	Stress Category	Normal Conditions of Transport	Hypothetical Accident Conditions	
			Elastic Analysis, F-1341.1	Elastic/Plastic Analysis, F-1341.2
Criticality Control	Primary Membrane Stress Intensity	S_m	Lesser of $2.4S_m$ or $0.7\ S_u$	Greater of $0.7S_u$, $S_y + 1/3(S_u - S_e)$
	Membrane + Bending Stress Intensity	$1.5S_m$	Lesser of $3.6S_m$ or S_u	$0.90\ S_u$
	Primary + Secondary Stress Intensity Range	$3.0S_m$	N/A	N/A
	Average Bearing Stress	S_y	N/A(1)	N/A
	Average Primary Shear Stress	$0.6S_m$	150% of Normal Conditions Allowable	$0.42S_u$
	Buckling	Equivalent static loads shall not exceed 2/3 of the limit analysis-collapse load, P_{cr}		

NOTES:
(1) Bearing stresses need not be evaluated for accident conditions.

2.1.2.2 Load Combinations

The load combinations used for the NUHOMS®-MP187 Cask structural evaluations are developed in accordance with Regulatory Guide 7.8 [2.3]. The resulting load combinations are shown in Table 2.1.2-4.

Table 2.1.2-4
Load Combination Definitions

Normal or Accident Condition	Applicable Initial Condition							
	Ambient Temperature		Insolation		Decay Heat		Internal Pressure	
	100°F	-20°F	Max.	Zero	Max.	Zero	Max.	Min. (3)
Normal Conditions (Analyzed Separately)								
Hot environment: 100°F ambient temp.			x		x		x	
Cold environment: -40°F ambient temp.				x x	x	 x	x x	
Increased external pressure: 20 psia	x x		x x		 x	x x		x x
Minimum external pressure: 3.5 psia	x x		x x		x x		x x	
Vibration and shock[2]: normally incident to the mode of transport	x x		x x		x x		x x	
Free Drop: 1-foot drop	x x		x x		x x		x x	
Accident Conditions (Apply sequentially)								
Free drop: 30-foot drop	x x		x(1) x		x x	 x	x x	
Puncture: drop onto bar	x x		x(1) x		x x		x x	
Thermal: Fire accident	x		x(1)		x		x	

NOTES:
(1) Evaluation of the accident thermal (fire accident) case is performed in accordance with Regulatory Guide 7.6 [2.4].
(2) Evaluated for fatigue.
(3) The minimum internal pressure is assumed to be zero.
(4) Fabrication stresses due to the lead pour are negligible due to creep effects in the lead. The lead is assumed to be in a stress free state at 70°F.

2.1.2.3 Miscellaneous Failure Modes

2.1.2.3.1 Brittle Fracture

A. NUHOMS®-MP187 Cask Brittle Fracture

With the exception of the NUHOMS®-MP187 Cask closure fasteners, all of the structural components are fabricated from ASME SA-240 Type/Grade 304 or XM-19 stainless steels. Regulatory Guide 7.6 [2.4] defines these materials as ductile in the temperature range of interest (-40°F to 600°F), and does not require evaluation for brittle fracture.

The NUHOMS®-MP187 Cask top and bottom end closure fasteners are fabricated from ASME SA-320, Grade L43 low alloy steel. Brittle fracture is not generally considered to be a failure mode of closure bolts due to the redundancy provided by multiple load paths, per Section 5 of NUREG/CR-1815 [2.18]. The nil-ductility transition (NDT) temperature of the closure bolts is calculated for comparison with the requirements of NUREG/CR-1815.

The dynamic fracture toughness of the bolts, K_{ID}, is calculated at a temperature of -150°F as follows:

$K_{ID} = [5EC_v]^{0.5}$ (Section 4.2 of [2.18])

where;

K_{ID} = Dynamic fracture toughness (psi-in$^{0.5}$)

E = 28.8×10^6 psi, Modulus of Elasticity of Gr. L43 steel at -150°F

C_v = 20 ft-lb., Charpy impact measurement at -150°F per SA-320, Grade L43 low alloy steel specification.

Therefore,

$K_{ID} = [5(28.8 \times 10^6)(20)]^{0.5} = 53{,}666$ psi-in$^{0.5}$

Using the dynamic fracture toughness, the nil-ductility transition temperature, NDT, is determined using the Pellini reference curve given in Figure 2 of NUREG/CR-1815. The temperature, T, relative to NDT is calculated by interpolation as follows:

$$(T - NDT) = 30°F$$

Therefore, the NDT temperature is:

$$\begin{aligned} NDT &= T - 30°F \\ &= -150 - 30 \\ &= -180°F \end{aligned}$$

For Category I fracture critical components having a thickness of 2.0 inches the maximum offset temperature, A, corresponding to σ/σ_{yd} of 1.0 is approximately 70°F (Figure 3 of [2.18]). The maximum NDT temperature corresponding to the lowest service temperature, LST, is given by:

$$\begin{aligned} T_{NDT} &= LST - A \\ &= -20°F - 70°F \\ &= -90°F > -180°F \end{aligned}$$

The ASTM SA-320, Grade L43, closure bolts experience a ductile to brittle transition temperature at -180°F, whereas the criterion of Reference [2.18] prescribes a maximum NDT temperature of -80°F. The 100°F margin between criteria requirements and material capability provides assurance that brittle fracture will not occur in the low alloy closure bolt materials.

B. Dry Shielded Canister Brittle Fracture

The structural components of the Dry Shielded Canisters are fabricated from stainless steel and carbon steel. Stainless steel materials do not undergo a ductile to brittle transition in the temperature range of interest (down to -40°F) and therefore are not subject to brittle fracture.

The FF-DSC support plates and spacer discs are fabricated from 2.00" thick ASME SA-537, Class 2, or SA-543, Class B, Type 1 carbon steel, or from 2" thick (spacer discs) and 4" thick (support plates) SA-240, Type XM-19 austenitic stainless steel plate material. Evaluations of the carbon steel components are based on properties of SA-537, Class 2, as described in Section 2.3.2. An evaluation of SA-240, Type XM-19 for use as an FF-DSC basket structural material is

provided in Appendix 2.10.13. The FO and FC DSC spacer discs are evaluated using SA-537, Class 2 carbon steel and, as described in Section 2.3.2, may be fabricated from either SA-537 Class 2 or SA-517 Class A, B, E, F, J, or P.

The actual material used will be tested in accordance with the requirements of NG-2300 [2.2] and ASTM E-208 or ASTM E-604 to demonstrate compliance with the brittle fracture criteria specified in Section 5 of NUREG/CR-1815 [2.18].

2.1.2.3.2 Fatigue

A. Cask Containment Boundary Fatigue Analysis

Fatigue effects on cask components which comprise the containment boundary due to normal operating cycles are addressed using the criteria contained in NB-3222.4 of the ASME Code [2.2]. Fatigue effects need not be specifically evaluated provided the criteria contained in NB-3222.4(d) are met. Satisfaction of these criteria eliminate the need to perform detailed fatigue evaluations at locations where specific fatigue strength reduction factors are applied. These criteria apply to all cask components including the containment final closure full penetration weld joint where the backing is not removed. The NB-3352.2 requirement that a fatigue strength reduction factor of not less than 2 be used for this type of joint is applicable only for a detailed fatigue evaluation where the criteria below are not satisfied. A summary of the six criteria and their application to the cask are presented in the paragraphs which follow:

a. The first criterion states that the cask is adequate for fatigue effects provided that the total number of atmospheric-to-operating pressure cycles during normal operation (including startup and shutdown) does not exceed the number of cycles on the applicable fatigue curve corresponding to an S_a value of three times the S_m value of the material at operating temperatures. The cask is designed to serve as a pressure boundary during transportation. The pressure established at the time that the cask is sealed, following loading of a DSC and cask closure operations, is maintained during transportation operations. Therefore, the cask will experience only one pressure cycle per fuel shipment. The value of S_m for ASME SA-240, Type 304 stainless steel at 300°F and below is 20.0 ksi and for XM-19 at 100°F and below is 25.0 ksi. Therefore, for the most limiting S_m, the number of cycles for a value of S_a equal to $3S_m$ (75.0 ksi) is approximately 5,000. If the cask were to make

one transportation trip per week for 50 years, this would produce only 2500 pressure cycles. Therefore, the first criterion is satisfied.

b. The second criterion states that the cask is adequate for fatigue effects provided that the specified full range of pressure fluctuations during normal operation does not exceed the quantity (1/3) x design pressure x (S_a/S_m), where S_a is the value obtained from the applicable fatigue curve for the total specified number of significant pressure fluctuations, and S_m is the allowable stress intensity for the material at operating temperatures.

Significant pressure fluctuations are those for which the total excursion exceeds (1/3) x design pressure x (S/S_m), where S equals the value of S_a for 10^6 cycles. For a cask maximum normal operating pressure of 50 psig, an S_m value of 25,000 psi for XM-19 steel, and an S value of 28,200 psi, the total range for a significant pressure fluctuation is 18.8 psig. This pressure fluctuation would only occur during an accident in which the fuel pins and the DSC shell are breached. Therefore the second criterion is satisfied for the cask since the required pressure is only reached during a one-time accident scenario.

c. The third criterion states that the cask is adequate for fatigue effects provided that the temperature differences between any two adjacent points on the cask during normal operation do not exceed $S_a/2E\alpha$, where S_a is the value obtained from the applicable fatigue curve for the specified number of startup-shutdown cycles, α is the instantaneous coefficient of thermal expansion at the mean value of the temperatures at the two points, and E is the modulus of elasticity at the mean value of the temperatures at the two points. For an operational cycle of the cask, thermal gradients occur during fuel loading, cask closure, transportation, and unloading of the DSC. Assuming 50 operational cycles per year over a 50 year period, the total number of cycles associated with the cask is 2,500. The value of S_a for 2,500 cycles is approximately 90 ksi. Hence the value of $S_a/2E\alpha$ is 173°F. This is far greater than the temperature difference between any two adjacent points on the cask. Thus, the third criterion is satisfied for the cask.

d. The fourth criterion states that the cask is adequate for fatigue effects provided that the temperature difference between any two adjacent points on the cask does not change during normal operation by more than the quantity $S_a/2E\alpha$, where S_a is the value obtained from the applicable fatigue curve for the total specified number of significant temperature-difference fluctuations. Small fluctuations in the cask thermal gradients during normal storage occur as a result of seasonal ambient temperature changes. Ambient temperature cycles significant enough to cause a measurable thermal gradient fluctuation are assumed to occur five times per year for 50 years. The cask stresses resulting from thermal gradient fluctuations are small compared to the structural capacity as the cask is designed for extreme accident loads, such as cask drop loads, which are postulated to be a one time occurrence. A temperature difference fluctuation is considered to be significant if its total algebraic range exceeds the quantity $S/2E\alpha$, where S is the value of S_a obtained from the applicable fatigue curve for 10^6 cycles. Taking the value of S = 28,200 psi, E = 26.5 x 10^6 psi and α = 9.8 x 10^{-6} in./in./°F, the value of $S/2E\alpha$ = 54°F. The most significant fluctuation in normal operating temperature occurs during a change in ambient temperature from -20°F to 100°F. This fluctuation results in a maximum temperature difference of approximately 30°F at the cask bottom end closure. The effects of this temperature difference are not significant; therefore, the fourth condition is satisfied for the cask.

e. The fifth criterion states that for components fabricated from materials of differing moduli of elasticity or coefficients of thermal expansion, the total algebraic range of temperature fluctuation experienced by the component during normal operation must not exceed the magnitude $S_a/2(E_1\alpha_1 - E_2\alpha_2)$, where S_a is the value obtained from the applicable fatigue curve for the total specified number of significant temperature fluctuations, E_1 and E_2 are the moduli of elasticity, and α_1 and α_2 are the values of the instantaneous coefficients of thermal expansion at the mean temperature value involved for the two materials of construction. A temperature fluctuation is considered to be significant if its total excursion exceeds the quantity $S/2(E_1\alpha_1-E_2\alpha_2)$, where S is the value of S_a obtained from the applicable fatigue curve for 10^6 cycles. If the two materials used

have different applicable design fatigue curves, the lower value of S_a shall be used. The structural components of the cask consist entirely of ASME SA-240, Type 304 and XM-19 stainless steels, which have identical moduli of elasticity and slightly different coefficients of thermal expansion. The modulus of elasticity for these two steels at 300°F is 27.0 x 10^6 psi. The coefficients of thermal expansion of ASME SA-240, Type 304 and XM-19 stainless steels at 300°F are 9.46 x 10^{-6} in/in-°F and 8.95 x 10^{-6} in/in-°F, respectively. Inconel weld material (UNS N06625) is used for the longitudinal welds in the XM-19 cask shells and the stainless steel lifting trunnion sleeve to XM-19 cask shell welds. The modulus of elasticity and the coefficient of thermal expansion of the inconel material at 300°F are 28.8 x 10^6 psi and 7.62 x 10^{-6} in/in-°F, respectively. The value of S_a for 2,500 cycles is approximately 90,000 psi. Therefore, using the most limiting material combination (stainless steel to inconel), the value of $S_a/2(E_1\alpha_1-E_2\alpha_2)$ at 300°F is 1,251°F. The maximum temperature difference in the cask for the range of normal storage conditions is much less than this value. Therefore, the fifth condition is satisfied for the cask.

f. The sixth criterion states that the cask is adequate for fatigue effects provided that the specified full range of mechanical loads do not result in a stress range which exceeds the S_a value obtained from the applicable fatigue curve for the total specified number of significant load fluctuations. If the total specified number of significant load fluctuations exceeds 10^6, the S_a value at N = 10^6 may be used. A load fluctuation is considered to be significant if the total excursion of stresses exceed the value of S_a obtained from the applicable fatigue curve for 10^6 cycles. The only mechanical loads which affect the cask are those associated with handling loads, normal drop and shock and vibration transportation loads. The cask stresses resulting from these mechanical load fluctuations are small since the structural capacity of the cask is designed for extreme accident loads such as a postulated cask drop. The number of significant cycles associated with mechanical load fluctuations are conservatively assumed to be 4 times 2,500 = 10,000 and are associated with lifting of the cask. The value of S_a associated with this number of cycles is 64 ksi. As shown in Table 2.5.1-3, the maximum stress intensity range due to lifting of the cask is 12.9 ksi. Conservatively applying a fatigue strength reduction factor

of 4 for the trunnion weld, the maximum stress range due to the lifting loads is 51.6 ksi which is less than the 64 ksi allowed. Therefore, this sixth condition is satisfied for the cask.

The evaluation presented in the preceding paragraphs demonstrates that the six criteria contained in NB-3222.4(d) [2.2] are satisfied for all components of the cask body. Therefore, fatigue failure of the cask body due to normal operating cycles is not a concern.

B. Cask Closure Bolts Fatigue Analysis

(1) Top Closure Bolts

As shown in Appendix 2.10.5, the maximum stress intensity developed in the top closure bolts during normal operating conditions is 84.5 ksi for the combined loading due to normal heat (100°F) and internal pressure. The alternating stress in the bolt is equal to 1/2 of the maximum stress due to normal conditions, or 42.3 ksi. The permissible number of cycles for an alternating stress of 42.3 ksi is 5,500 per Figure I-9.4 of the ASME Code Appendices [2.2]. The cask top closure bolts will be installed prior to each shipment and removed prior to unloading of the DSC. Conservatively assuming one fuel shipment every week, 50 weeks a year, the total number of years for which a bolt may be used prior to the onset of fatigue is 110. The closure bolts are replaced after 5 years of use. Therefore, fatigue failure of the top end closure bolts is not a concern.

The maximum shear stress in the top closure bolt threads, thread inserts and the corresponding threads in the top flange result from the combined loading of the bolt preload and the normal heat condition (temperature and pressure). As described in Appendix 2.10.5, the minimum top closure bolt preload is 130 kips. The maximum tensile force developed in the bolt for the normal heat condition due to differential thermal expansion and cask internal pressure are 34.5 kips and 5.5 kips, respectively, per Appendix 2.10.5. Load sharing is accounted for due to the difference in relative stiffnesses of the member and bolt. As shown in Appendix 2.10.5, the bolt receives 11% of external loads. Therefore the thread shear load is (1.1*130)+34.5+(.11*5.9)=178.1 kips.

The top closure bolt thread engagement is 5.5 inches. The shear area of the 2-12UN-2A top closure bolts is 3.45 in^2 per inch of length [2.21]. Therefore, the total shear area of the top closure bolt threads is:

$$A_v = (3.45)(5.5) = 19.0 \text{ in}^2$$

Therefore, the shear stress in the top closure bolt threads due to the controlling normal operating condition load combination is:

$$\sigma_v = 178.1/19.0 = 9.3 \text{ ksi}$$

The shear stress developed in the threads of the top closure bolts is significantly less than the stress developed across the bolt shaft. Therefore, fatigue of the top closure bolts is not controlled by shear stress in the bolt threads.

The shear area of the top flange 2"x12UNx2B threads is 4.55 in^2 per inch of length [2.21]. Therefore, the total shear area of the top flange threads is:

$$A_v = (4.55)(5.5) = 25.0 \text{ in}^2$$

Therefore, the shear stress in the top flange threads due to the controlling normal operating condition load combination is:

$$\sigma_v = 178.1/25.0 = 7.1 \text{ ksi}$$

The primary membrane stress in the top flange threads due to the controlling normal condition load combination is equal to twice the maximum shear stress, or 14.2 ksi. The range of stress for the top flange threads is equal to the maximum primary membrane stress intensity, or 14.2 ksi. The alternating stress in the threads, S_a, is equal to 1/2 of the total range stress, or 7.1 ksi. The permissible number of cycles for an alternating stress of 7.1 ksi is greater than 1,000,000 per Figure I-9.2.1 of the ASME Code Appendices [2.2]. The bolts are installed once every fuel

shipment and experience only one thermal cycle per fuel shipment. Therefore, the total number of years before the onset of fatigue in the top flange threads is well in excess of the expected useful life of the cask.

(2) Bottom Closure Bolts

As shown in Appendix 2.10.5, the stresses developed in the bottom closure bolts due to normal conditions are significantly less than those developed in the top closure bolts. As shown in the previous section, fatigue of the top closure bolts for normal conditions of transport is not a controlling failure mode. Therefore, fatigue failure of the bottom closure bolts will not control the design.

C. FO/FC-DSC Fatigue Analysis

As discussed in Section 2.6.11.3.1, the stresses in the FO-DSC spacer discs due to normal thermal and normal vibration are bounded by those calculated for the FC-DSC spacer discs, and the two baskets have the same geometry. Therefore, the analysis of the two will be bounded by the FC spacer disc. The FO/FC-DSC shell assemblies are not considered containment boundaries for transportation conditions. Therefore, only stresses due to normal vibration and normal thermal cycles need be considered in the FO/FC-DSC fatigue analysis. The maximum stresses in the FO/FC-DSC structural components due to normal vibration and normal thermal are highest in the spacer discs.

The vibration fatigue analysis of the FO/FC-DSC basket components is performed in accordance with NG-3222.4(e) [2.2]. The fatigue evaluation is performed for the vibration loads and for the cumulative effects of vibration and thermal loads for the expected life of the DSC.

The results from the FO/FC-DSC spacer disc vibration analysis, presented in Section 2.6.11.3.1, show a maximum stress intensity of 6.5 ksi. The range of stress, S_a, due to vibration is conservatively assumed equal to twice the maximum FO/FC-DSC spacer disc stress intensity, or 13.0 ksi. Therefore, the maximum alternating stress, S_{alt}, is:

S_{alt} = 0.5(13.0) = 6.5 ksi

The effect of the elastic modulus is calculated by multiplying the maximum alternating stress by the ratio of the modulus of elasticity given on the appropriate design fatigue curve to the value of the elastic modulus used in the stress analysis. The adjusted maximum alternating stress due to vibration loading is:

S_{alt} = $(6.5)(30.0 \times 10^6/29.9 \times 10^6)$ = 6.5 ksi

The allowable number of cycles for this alternating stress is greater than 1,000,000 (Figure I-9.1 [2.2]). Based on the IF-300 transportation records, a 5,000 mile shipment would be expected to produce less than 100,000 significant stress cycles due to vibration. Each DSC is designed for long term dry storage with a single shipment to the final repository, with a possible diversion to an MRS. Conservatively assuming 100,000 cycles per shipment, and a maximum of 5 shipments (25,000 miles) per FO/FC-DSC, the resulting usage factor is:

U1 = 500,000/1,000,000 = 0.5

As discussed in Section 2.6.11.2.2, the peak stress in the FO/FC-DSC spacer discs due to normal thermal conditions is 70.3 ksi. The range of stress, S_a, due to normal thermal conditions is equal to the maximum spacer disc thermal stress intensity, or 70.3 ksi. Therefore, the maximum alternating stress, S_{alt}, is:

S_{alt} = 0.5(70.3) = 35.2 ksi

The effect of the Elastic Modulus is calculated by multiplying the maximum alternating stress by the ratio of the modulus of elasticity given on the appropriate design fatigue curve to the value of the Elastic Modulus used in the stress analysis. The adjusted maximum alternating stress due to vibration loading is:

S_{alt} = $(35.2)(30.0 \times 10^6/27.3 \times 10^6)$ = 38.7 ksi

The allowable number of cycles for this alternating stress is greater than 10,000 (Figure I-9.1 [2.2]). During transportation, each NUHOMS® DSC will experience only 1 thermal cycle of this magnitude. Conservatively assuming that the spacer discs experience a thermal cycle of this

magnitude during storage once a week for the 50 year life of the DSC, the resulting usage factor is:

$$U2 = (1+(52)(50))/10{,}000 = 0.26$$

Therefore, the cumulative usage factor for the FO/FC-DSC spacer discs is:

$$U = 0.50 + 0.26 = 0.76 < 1.0$$

The stresses in all other FO/FC-DSC structural components due to vibration and normal thermal loading are much less than those calculated for the spacer discs. Therefore, fatigue is not a concern for the FO/FC-DSCs.

D. FF-DSC Fatigue Analysis

The vibration fatigue analysis of the FF-DSC basket components is performed in accordance with NG-3222.4(e) [2.2]. The fatigue evaluation is performed for the vibration loads and for the cumulative effects of vibration and thermal loads for the expected life of the DSC. The evaluation below for carbon steel bounds the alternate Type XM-19 austenitic stainless steel (see Appendix 2.10.13), which has a larger number of allowable stress cycles due to increased ductility.

The results from the FF-DSC spacer disc vibration analysis, presented in Section 2.6.12.2, show a maximum primary plus secondary stress intensity of 1.75 ksi. The range of stress, S_a, due to vibration is conservatively assumed equal to twice the maximum spacer disc stress intensity, or 3.5 ksi. Therefore, the maximum alternating stress, S_{alt}, is:

$$S_{alt} = 0.5(3.5) = 1.75 \text{ ksi}$$

The effect of the Elastic Modulus is calculated by multiplying the maximum alternating stress by the ratio of the modulus of elasticity given on the appropriate design fatigue curve to the value of the Elastic Modulus used in the stress analysis. The adjusted maximum alternating stress due to vibration loading is:

$$S_{alt} = (1.75)(30.0 \times 10^6/27.7 \times 10^6) = 1.9 \text{ ksi}$$

The allowable number of cycles for this alternating stress is greater than 1,000,000 (Figure I-9.1 [2.2]). As noted above, a single FF-DSC will experience less than 100,000 cycles per shipment, and a maximum of 5 shipments per canister, the resulting usage factor is:

$U_1 = 500{,}000/1{,}000{,}000 = 0.5$

As discussed in Section 2.6.12.1.2, the peak stress in the FF-DSC spacer disc due to normal thermal conditions is 25.2 ksi. The range of stress, S_a, due to normal thermal conditions is equal to the maximum spacer disc thermal stress intensity, or 25.2 ksi. Therefore, the maximum alternating stress, S_{alt}, is:

$S_{alt} = 0.5(25.2) = 12.6$ ksi

The effect of the Elastic Modulus is calculated by multiplying the maximum alternating stress by the ratio of the modulus of elasticity given on the appropriate design fatigue curve to the value of the Elastic Modulus used in the stress analysis. The adjusted maximum alternating stress due to vibration loading is:

$S_{alt} = (12.6)(30.0 \times 10^6/27.7 \times 10^6) = 13.7$ ksi

The allowable number of cycles for this alternating stress is greater than 100,000 (Figure I-9.1 [2.2]). During transportation, each NUHOMS® FF-DSC will experience only 1 thermal cycle of this magnitude. Conservatively assuming that the spacer discs experience a thermal cycle of this magnitude during storage once a week for the 50 year life of the DSC, the resulting usage factor is:

$U_2 = (1+(52)(50))/100{,}000 = 0.026$

Therefore, the cumulative usage factor for the FF-DSC spacer discs is:

$U = 0.50 + 0.026 = 0.53 < 1.0$

The stresses in all other FF-DSC structural components due to vibration and normal thermal loading are much less than those calculated for the spacer discs. Therefore, fatigue is not a concern for the FF-DSC.

2.1.2.3.3 Buckling

Paragraph C.5 of Regulatory Guide 7.6 states that buckling is an unacceptable failure mode for the containment vessel and criticality control components. The intent of this provision is to ensure containment integrity by precluding large deformations that would compromise the validity of linear analysis assumptions and quasi-linear stress allowables, as given in Paragraph C.6 of Regulatory Guide 7.6.

There are two shells within the MP-187 cask where buckling prevention criteria are applicable - the inner containment boundary shell and the structural shell. For reference purposes, the principal geometric features of these shells are as follows:

	Dimension (inches)			
	Mean Radius	Thickness	R/t Ratio	Length
Inner Shell	34.62	1.25	27.7	173.75
Structural Shell	40.50	2.50	16.2	183.50

As shown in Section 2.7.1.1.6, the stresses in the inner shell are consistently higher than those in the structural shell. Considering the geometry and stresses in both the containment and structural shell, it is conservative to conclude that the buckling can not occur in the structural shell if buckling does not occur in the inner shell. To demonstrate that buckling will not occur in the inner shell, the methodology of ASME Code Case N-284 [2.25] is directly applied. The N-284 Code Case addresses both elastic and inelastic buckling and employs a factor of safety (F.S.) of 2.0 for level A (normal) conditions and 1.34 for level D (accident) conditions. The effect of combined hoop compressive, axial compressive, and in-plane shear loadings are considered. The Code Case N-284 analytic approach is described in Appendix 2.10.6.

The results of the buckling evaluation presented in Appendix 2.10.6 show that the requirements of Code Case N-284 [2.25] are satisfied for all load conditions.

In addition to the buckling evaluation presented in Appendix 2.10.6, a similar transportation package (NUPAC 125B [2.23] Appendix 2.10.7), demonstrates that buckling of the cask shells will not occur. This conclusion is based on the results of the 125B analysis and successful testing program which produced no evidence of buckling of the 125B cask shells.

2.2 Weights and Centers of Gravity

The total weight of the NUHOMS®-MP187 transportation package, including a payload of 81,200 pounds, is 271,300 pounds. The cask is nearly symmetrical, therefore the center of gravity (C.G.) is very near the geometric center of the cask. The weight, center of gravity (C.G.) and mass moment of inertia (M.O.I.) of the major NUHOMS®-MP187 transportation package assemblies are presented in Table 2.1.2-1. Refer to Figure 2.1.2-1, Figure 2.1.2-2, Figure 2.1.2-3, and Figure 2.1.2-4. The mass properties of the various configurations of the NUHOMS®-MP187 package for on-site and transportation conditions are presented in Table 2.1.2-2.

The dimensions and weights presented in this section have been developed using the dimensions of the MP187 components. As discussed in Appendix 2.10.9, the maximum accelerations due to the hypothetical accident condition are developed using the minimum weight of the cask/contents which results in the minimum impact limiter crush and maximum accelerations for each drop orientation. Using the maximum cask/contents weight increases the calculated crush depth, and reduces the calculated accelerations. As described in Section 2.7, the maximum accelerations are applied to the nominal cask weights, with the nominal FC DSC weight (heaviest of the three types of DSC) and contents, to produce the conservative stress results reported in Section 2.7. Manufacturing and plate tolerances involved in the fabrication of the MP187 components vary depending on the actual dimensions of each piece. Historically, this variation will be within the range of nominal weights +/- 3%. The upper bound gross weight, assuming maximum tolerances, is 247,000 lbs and the lower bound (minimum tolerances) gross weight is 228,000 lbs (MP187 cask with FF DSC) compared to the nominal maximum cask plus FC DSC weight of 239,700 lbs reported in Table 2.1.2-2.

As described in Sections 2.4 and 2.5, these weights are enveloped by the 250,000 lbs used as the design basis for the lifting and tiedown loads, and are within the range of accelerations, impact limiter displacements, and stresses reported for the analytical results described in Chapter 2. Therefore, the MP187 nameplate gross weight will be reported as 250,000 lbs.

Table 2.1.2-1
NUHOMS®-MP187 Package Mass Properties

COMPONENT DESCRIPTION	WEIGHT (lb)	C.G. (in.)(1)	M.O.I. (lbm-in²)(2)
Cask Impact Limiters			
Bottom Impact Limiter	15,800	-1.5	4.48E+07
Top Impact Limiter	15,800	203.0	4.48E+07
MP187 Cask:			
Body (including Lead and Neutron Shielding)	149,650	94.4	6.08E+08
Lead	(70,000)	-	-
Neutron Shielding	(11,500)	-	-
Top Cover Plate	8,450	198.4	3.11E+06
Ram Access Cover Plate	475	1.9	1.60E+04
TOTAL WEIGHT (EMPTY, DRY)	**158,580**	**99.7**	**7.02E+08**
FC-DSC:			
Shell Assembly	14,400	55.5	5.64E+07
Basket Assembly	18,420	98.9	4.65E+07
Shield Plug	6,460	189.6	1.74E+06
Inner Cover Plate	730	192.4	1.99E+05
Outer Cover Plate	1,220	193.4	3.31E+05
Fuel (24 assemblies, with control assemblies)	39,890	94.9	8.32E+07
TOTAL WEIGHT (DRY)	**81,120**	**98.7**	**2.88E+08**
FO-DSC:			
Shell Assembly	15,620	52.7	9.63E+07
Basket Assembly	18,380	101.4	4.93E+07
Shield Plug	7,950	187.9	2.19E+06
Containment Cover Plate	730	192.4	1.99E+05
Outer Cover Plate	1,220	193.4	3.31E+05
Fuel (24 assemblies, w/out control assemblies)	36,820	96.4	7.43E+07
TOTAL WEIGHT (DRY)	**80,710**	**100.4**	**3.36E+08**
FF-DSC:			
Shell Assembly	14,400	55.5	5.64E+07
Basket Assembly	25,420	103.7	7.95E+07
Fuel cans (13 cans)	6,730	110.6	1.33E+07
Fuel Assemblies (13 assemblies, w/o control components)	19,950	97.4	4.03E+07
Shield Plug	6,460	189.6	1.74E+06
Containment Cover Plate	730	192.4	1.99E+05
Outer Cover Plate	1,220	193.4	3.31E+05
TOTAL WEIGHT (DRY)	**74,900**	**102.4**	**3.03E+08**
WATER(3):			
FC-DSC cavity water (w/o inner & outer top cover plates)	13,350	100.5	2.88E+05
FO-DSC cavity water (w/o inner & outer top cover plates)	13,110	97.5	2.63E+05
FF-DSC cavity water (w/o inner & outer top cover plates)	14,670	100.5	2.87E+05
Cask/DSC annulus water (w/o cask lid)	1,770	104.8	6.50E+06

Notes:
(1) Longitudinal centers of gravity (C.G.) are measured from the outer surface of the multi-purpose cask bottom cover plate.
(2) Mass moments of inertia (M.O.I.) are determined relative to C.G. of each component
(3) The water in the cask annulus and DSC cavity is drained prior to removal of the package from the fuel building. The water weight is used only for the analysis of the vertical lift from the fuel pool.

Table 2.1.2-2
NUHOMS® System Mass Properties

ITEM DESCRIPTION	WEIGHT (lb)	C.G. (in.)(1)	M.O.I. (lbm-in²)(2)
MP187 Cask	158,600	99.7	7.02E+08
Bottom Impact Limiter	15,800	-1.5	4.48E+07
Top Impact Limiter	15,800	203.0	4.48E+07
MP187 Cask/FC- DSC(Loaded, Dry)	239,700	99.4	9.90E+08
MP187 Cask/FO- DSC(Loaded, Dry)	239,300	99.9	1.04E+09
MP187 Cask/FF- DSC(Loaded, Dry)	233,500	100.6	1.01E+09
MP187 Cask/FC-DSC/Impact Limiter (W/ Fuel, Dry)	271,300	99.5	1.41E+09
MP187 Cask/F0-DSC/Impact Limiter (W/ Fuel, Dry)	270,900	100.0	1.46E+09
MP187 Cask/FF-DSC/Impact Limiter (W/ Fuel, Dry)	265,100	100.6	1.43E+09
MP187 Cask/FC-DSC (W/ Fuel, Water & W/ Cover Plates)	244,400	-	-
MP187 Cask/FO-DSC (W/ Fuel, Water & W/ Cover Plates)	243,800	-	-
MP187 Cask/FF-DSC (W/ Fuel, Water & W/ Cover Plates)	239,500	-	-

Notes:
(1) Longitudinal centers of gravity (C.G.) are measured from the outer surface of the multi-purpose cask bottom cover plate.
(2) Mass moments of inertia (M.O.I.) are determined relative to C.G. of each component

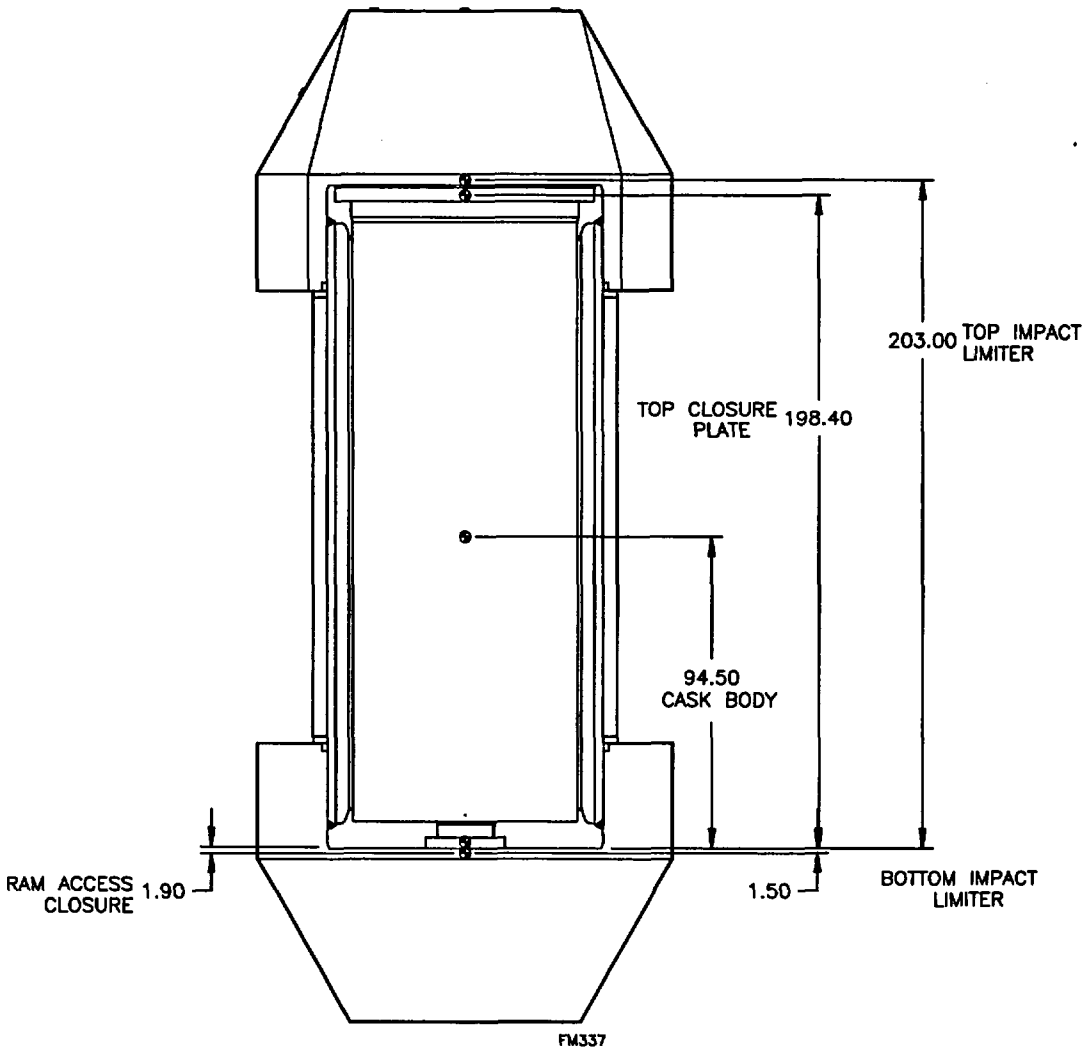

Figure 2.1.2-1
NUHOMS®-MP187 Cask Center of Gravity Schematic

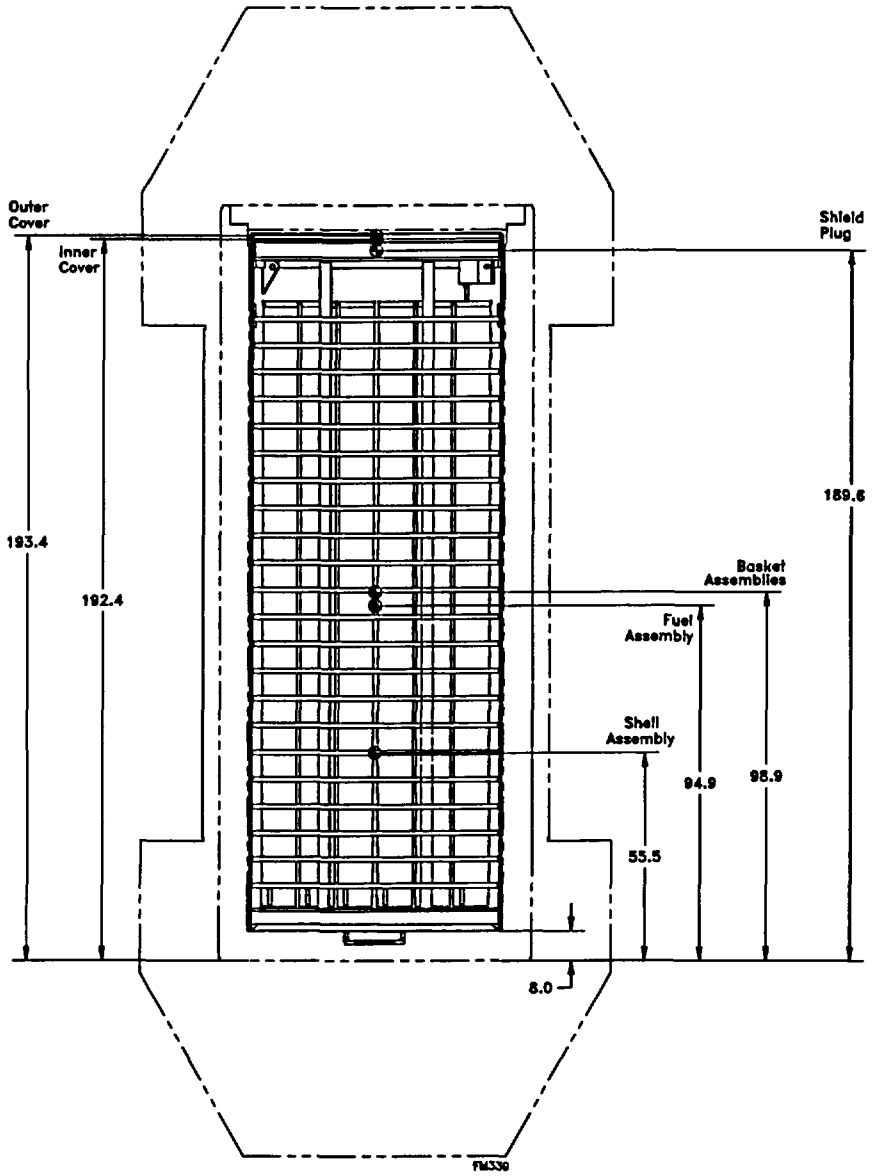

Figure 2.1.2-2
NUHOMS®-MP187 FC-DSC Center of Gravity Schematic

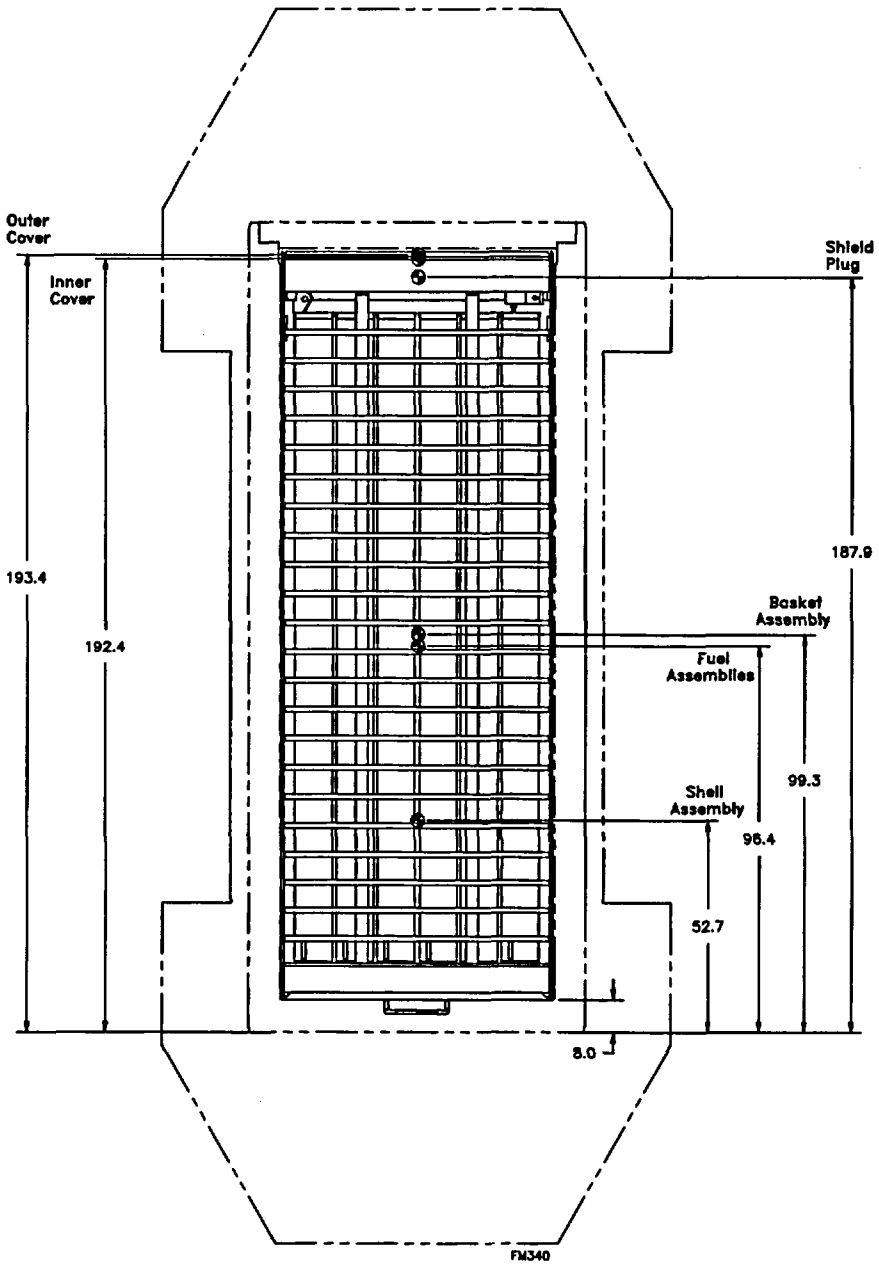

Figure 2.1.2-3
NUHOMS®-MP187 FO-DSC Center of Gravity Schematic

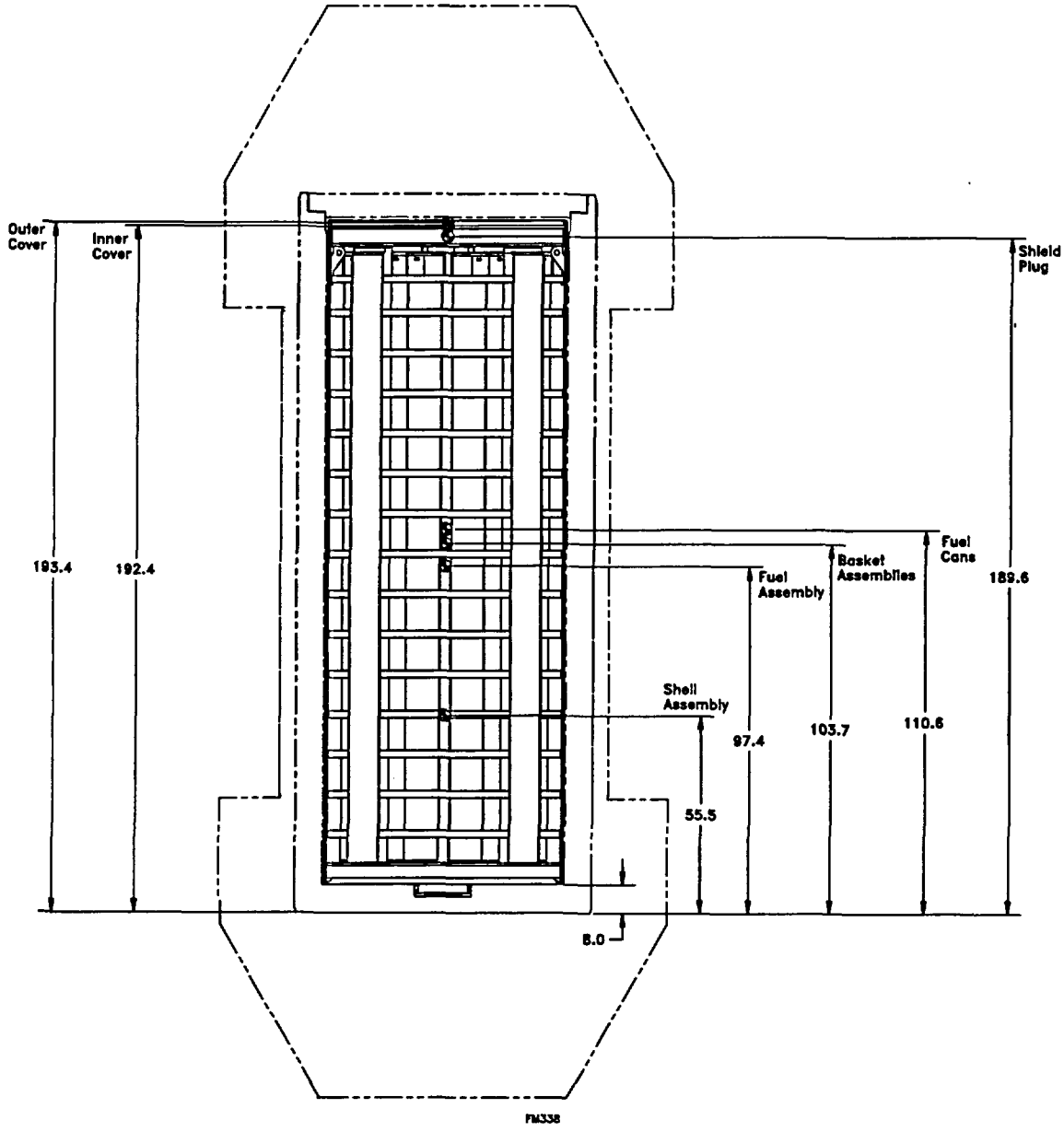

Figure 2.1.2-4
NUHOMS®-MP187 FF-DSC Center of Gravity Schematic

2.3 Mechanical Properties of Materials

2.3.1 NUHOMS® MP187 Cask Material Properties

As shown in Table 2.3.1-1, all structural components, with the exception of the fasteners, are constructed of austenitic stainless steels. The structural fasteners for the top and bottom cask closures are fabricated from low alloy steel. The structural fasteners used for the trunnion-to-trunnion sleeve joints may be either low alloy carbon or stainless steel. The material properties for the NUHOMS®-MP187 Cask structural components are tabulated in the following pages. The density of stainless steel used in the analysis is 493 pcf [2.22]. Poisson's ratio used for analysis for stainless steel is 0.29.

As shown in Table 2.3.1-1, the bottom end closure and top flange may be fabricated from either SA-182, Type F304, F304H, or F304N stainless steel. These materials differ only in strength properties. The mechanical material properties of Type F304 and F304H stainless steels are identical. Type F304N stainless steel has slightly higher strength properties than Type F304 and F304H stainless steel. The stress limits used for the structural evaluation are based on the forging material having the lowest mechanical strength properties.

Stress-strain and creep data are required for ASTM B29 chemical lead to adequately address fabrication stresses induced by lead shrinkage in the NUHOMS®-MP187 Cask. The composition is primarily lead (99.90% minimum). Stress-strain and creep data are extracted from References [2.14, 2.37 and 2.38]. The general material properties for Chemical Lead are presented in Table 2.3.4-2.

Table 2.3.1-1
NUHOMS®-MP187 Cask Structural Component Materials

NUHOMS®-MP187 Cask Component	Material Specification	Type/Grade
Containment Shell (Mid-Section)	SA-240	Type 304
Containment Shell (End-Sections)	SA-240	Type XM-19
Bottom End Closure	SA-182	Grade F304, F304H, or F304N
Ram Access Closure Plate	SA-240	Type XM-19
Ram Closure Plate Fasteners	SA-320	Type L43
Top Flange	SA-182	Grade F304, F304H, or F304N
Top Closure Plate	SA-240	Type 304
Top Closure Plate Fasteners	SA-320	Type L43
Bottom Structural Shell	SA-240	Type 304
Top Structural Shell	SA-240	Type XM-19
Trunnion Sleeves	SA-182	Grade F XM-19
Trunnions	SA-182(1)	Grade F XM-19

Note:

(1) The lower trunnion forging is fabricated to ASTM A-182 requirements.

Table 2.3.1-2
Mechanical Properties of ASME SA-240, Type 304 Stainless Steel

Temp (°F)	Stress (ksi)[7]					Elastic Modulus[5] (10^6 psi)	Coef of Thermal Expansion[6] (10^{-6} in/in/°F)
	Yield Strength	Ultimate Strength	Design Stress Intensity	Alternating Stress (@10^6 Cycles)	Alternating Stress (@10 Cycles)		
	S_y[1]	S_u[2]	S_m[3]	S_a[4]	S_a[4]		
-40	(30.0)	(75.0)	(20.0)	(28.8)	(721)	(28.8)	(7.84)
-20	30.0	75.0	20.0	(28.7)	(718)	(28.7)	(7.95)
70	30.0	75.0	20.0	28.3	708	28.3	8.46
100	30.0	75.0	20.0	(28.1)	(703)	(28.1)	8.63
200	25.0	71.0	20.0	(27.6)	(690)	27.6	9.08
300	22.5	66.0	20.0	(27.0)	(675)	27.0	9.46
400	20.7	64.4	18.7	(26.5)	(663)	26.5	9.80
500	19.4	63.5	17.5	(25.8)	(645)	25.8	10.10
600	18.2	63.5	16.4	(25.3)	(633)	25.3	10.38
700	17.7	63.5	16.0	(24.8)	(620)	24.8	10.60

NOTES:
(1) ASME B&PV Code [2.2], Section II, Part D, Table Y-1
(2) ASME B&PV Code [2.2], Section II, Part D, Table U
(3) ASME B&PV Code [2.2], Section II, Part D, Table 2A
(4) ASME B&PV Code [2.2], Section III, Division 1, Appendix I, Figure I-9.2.1 and Table I-9.1
(5) ASME B&PV Code [2.2], Section II, Part D, Table TM-1
(6) ASME B&PV Code [2.2], Section II, Part D, Table TE-1
(7) When necessary, values are linearly interpolated as indicated by ( ).

Table 2.3.1-3
Mechanical Properties of ASME SA-240, Type XM-19 Stainless Steel

Temp (°F)	Stress (ksi) (7)					Elastic Modulus(5) (10^6 psi)	Coef of Thermal Expansion(6) (10^{-6} in/in/°F)
	Yield Strength	Ultimate Strength	Design Stress Intensity	Alternating Stress (@10^6 Cycles)	Alternating Stress (@10 Cycles)		
	S_y(1)	S_u(2)	S_m(3)	S_a(4)	S_a(4)		
-40	(55)	(100)	(33.3)	(28.8)	(721)	(28.8)	(7.8)
-20	55.0	100	33.3	(28.7)	(718)	(28.7)	(7.9)
70	55.0	100	33.3	28.3	708	28.3	8.24
100	55.0	100	33.3	(28.1)	(703)	(28.1)	8.35
200	47.0	99.5	33.2	(27.6)	(690)	27.6	8.67
300	43.4	94.3	31.4	(27.0)	(675)	27.0	8.95
400	40.8	90.7	30.2	(26.5)	(663)	26.5	9.21
500	38.8	89.1	29.7	(25.8)	(645)	25.8	9.44
600	37.3	87.8	29.2	(25.3)	(633)	25.3	9.64

NOTES:
(1) ASME B&PV Code [2.2], Section II, Part D, Table Y-1
(2) ASME B&PV Code [2.2], Section II, Part D, Table U
(3) ASME B&PV Code [2.2], Section II, Part D, Table 2A
(4) ASME B&PV Code [2.2], Section III, Division 1, Appendix I, Figure I-9.2.1 and Table I-9.1
(5) ASME B&PV Code [2.2], Section II, Part D, Table TM-1
(6) ASME B&PV Code [2.2], Section II, Part D, Table TE-1
(7) When necessary, values are linearly interpolated as indicated by ( ).

Table 2.3.1-4
Mechanical Properties of ASME SA-182, Type F304 and F304H Stainless Steels

Temp (°F)	Stress (ksi)(7)					Elastic Modulus(5) (10^6 psi)	Coef of Thermal Expansion(6) (10^{-6} in/in/°F)
	Yield Strength	Ultimate Strength	Design Stress Intensity	Alternating Stress (@10^6 Cycles)	Alternating Stress (@10 Cycles)		
	S_y(1)	S_u(2)	S_m(3)	S_a(4)	S_a(4)		
-40	(30.0)	(70.0)	(20.0)	(28.8)	(721)	(28.8)	(7.84)
-20	30.0	70.0	20.0	(28.7)	(718)	(28.7)	(7.95)
70	30.0	70.0	20.0	28.3	708	28.3	8.46
100	30.0	70.0	20.0	(28.1)	(703)	(28.1)	8.63
200	25.0	66.2	20.0	(27.6)	(690)	27.6	9.08
300	22.5	61.5	20.0	(27.0)	(675)	27.0	9.46
400	20.7	60.0	18.7	(26.5)	(663)	26.5	9.80
500	19.4	59.3	17.5	(25.8)	(645)	25.8	10.10
600	18.2	59.3	16.4	(25.3)	(633)	25.3	10.38

NOTES:
(1) ASME B&PV Code [2.2], Section II, Part D, Table Y-1
(2) ASME B&PV Code [2.2], Section II, Part D, Table U
(3) ASME B&PV Code [2.2], Section II, Part D, Table 2A
(4) ASME B&PV Code [2.2], Section III, Division 1, Appendix I, Figure I-9.2.1 and Table I-9.1
(5) ASME B&PV Code [2.2], Section II, Part D, Table TM-1
(6) ASME B&PV Code [2.2], Section II, Part D, Table TE-1
(7) When necessary, values are linearly interpolated as indicated by ( ).

Table 2.3.1-5
Mechanical Properties of ASME SA-182, Type F304N Stainless Steel

Temp (°F)	Stress (ksi)(7)					Elastic Modulus(5) (10^6 psi)	Coef of Thermal Expansion(6) (10^{-6} in/in/°F)
	Yield Strength	Ultimate Strength	Design Stress Intensity	Alternating Stress (@10^6 Cycles)	Alternating Stress (@10 Cycles)		
	S_y(1)	S_u(2)	S_m(3)	S_a(4)	S_a(4)		
-40	(35.0)	(80.0)	(23.3)	(28.8)	(721)	(28.8)	(7.84)
-20	35.0	80.0	23.3	(28.7)	(718)	(28.7)	(7.95)
70	35.0	80.0	23.3	28.3	708	28.3	8.46
100	35.0	80.0	23.3	(28.1)	(703)	(28.1)	8.63
200	28.7	80.0	23.3	(27.6)	(690)	27.6	9.08
300	25.0	75.9	22.5	(27.0)	(675)	27.0	9.46
400	22.5	73.2	20.3	(26.5)	(663)	26.5	9.80
500	20.9	71.2	18.8	(25.8)	(645)	25.8	10.10
600	19.8	69.7	17.8	(25.3)	(633)	25.3	10.38

NOTES:
(1) ASME B&PV Code [2.2], Section II, Part D, Table Y-1
(2) ASME B&PV Code [2.2], Section II, Part D, Table U
(3) ASME B&PV Code [2.2], Section II, Part D, Table 2A
(4) ASME B&PV Code [2.2], Section III, Division 1, Appendix I, Figure I-9.2.1 and Table I-9.1
(5) ASME B&PV Code [2.2], Section II, Part D, Table TM-1
(6) ASME B&PV Code [2.2], Section II, Part D, Table TE-1
(7) When necessary, values are linearly interpolated as indicated by ( ).

Table 2.3.1-6
Mechanical Properties of ASME SA-320, Type L43 Carbon Steel

Temp (°F)	Stress (ksi) [6]			Elastic Modulus[4] (10^6 psi)	Coef of Thermal Expansion[5] (10^{-6} in/in/°F)
	Yield Strength	Ultimate Strength	Design Stress Intensity		
	S_y [1]	S_u [2]	S_m [3]		
100	105.0	125.0	35.0		6.37
200	99.0	125.0	33.0	27.1	6.85
300	95.7	125.0	31.9	26.7	7.25
400	91.8	125.0	30.6	26.1	7.59
500	88.5	125.0	29.5	25.7	7.90
600	84.3	125.0	28.1	25.2	8.16

NOTES:
(1) ASME B&PV Code [2.2], Section II, Part D, Table Y-1
(2) ASME B&PV Code [2.2], Section II, Part D, Table U
(3) ASME B&PV Code [2.2], Section II, Part D, Table 2A
(4) ASME B&PV Code [2.2], Section II, Part D, Table TM-1
(5) ASME B&PV Code [2.2], Section II, Part D, Table TE-1
(6) When necessary, values are linearly interpolated as indicated by ( ).

2.3.2 FF, FC, and FO DSC Material Properties

As shown in Table 2.3.2-1, the structural components of the FO, FC, and FF-DSCs are fabricated from ferritic steel and austenitic stainless steel. The material specification for each DSC structural component is listed in Table 2.3.2-1. The densities of stainless and carbon steel used in the analysis are 493 pcf and 490 pcf, respectively [2.22]. Poisson's ratio used for analysis for stainless and carbon steel are 0.29 and 0.30, respectively. Plastic material properties are used for the analysis of the guide sleeves, which are fabricated from ASME SA-240, Type 304 stainless steel. The elastic-plastic stress-strain data used for the plastic analysis of the guide sleeves is based on the data provided in NUREG/CR-0481, SAND77-1872, "An Assessment of Stress-Strain Data Suitable for Finite Element Elastic-Plastic Analysis of Shipping Containers" [2.37]. The stress-strain curves at 700°F used in the guide sleeve analyses are shown in Figure 2.3.2-1.

As shown in Table 2.3.2-1, the FO/FC DSC spacer discs may be fabricated from a number of low alloy carbon steels. These materials have been chosen for their ability to meet the nil-ductility requirements for criticality supports specified by NUREG/CR-1815 [2.18]. These materials differ in their strength properties, with the SA-537, Class 2 material used for the reported structural evaluation having the lowest mechanical strength properties of those listed. Also, SA-537, Class 2 is the only one of this group with full properties listed in Section II, Part D [2.2] of the ASME Code for use under Subsection NG.

As permitted by NUREG/CR-3019 [2.36], NUREG/CR-3854 [2.53], and Regulatory Guide 7.6 [2.4], appropriate design properties for the other steels in this group have been developed using the guidelines of Appendix 2 of the ASME Code, Section II, Part D [2.2]. The conservatively low allowable stress intensities developed for each steel, shown in Table 2.3.2-3 and

Table 2.3.2-4, clearly envelope the SA-537, Class 2 allowables reported in this evaluation. Minor differences in the material elastic modulus and thermal conductivities will result in small changes to the reported stress values. However, these variations are small and well within the additional design margins which ensue from the use of the alternate steels.

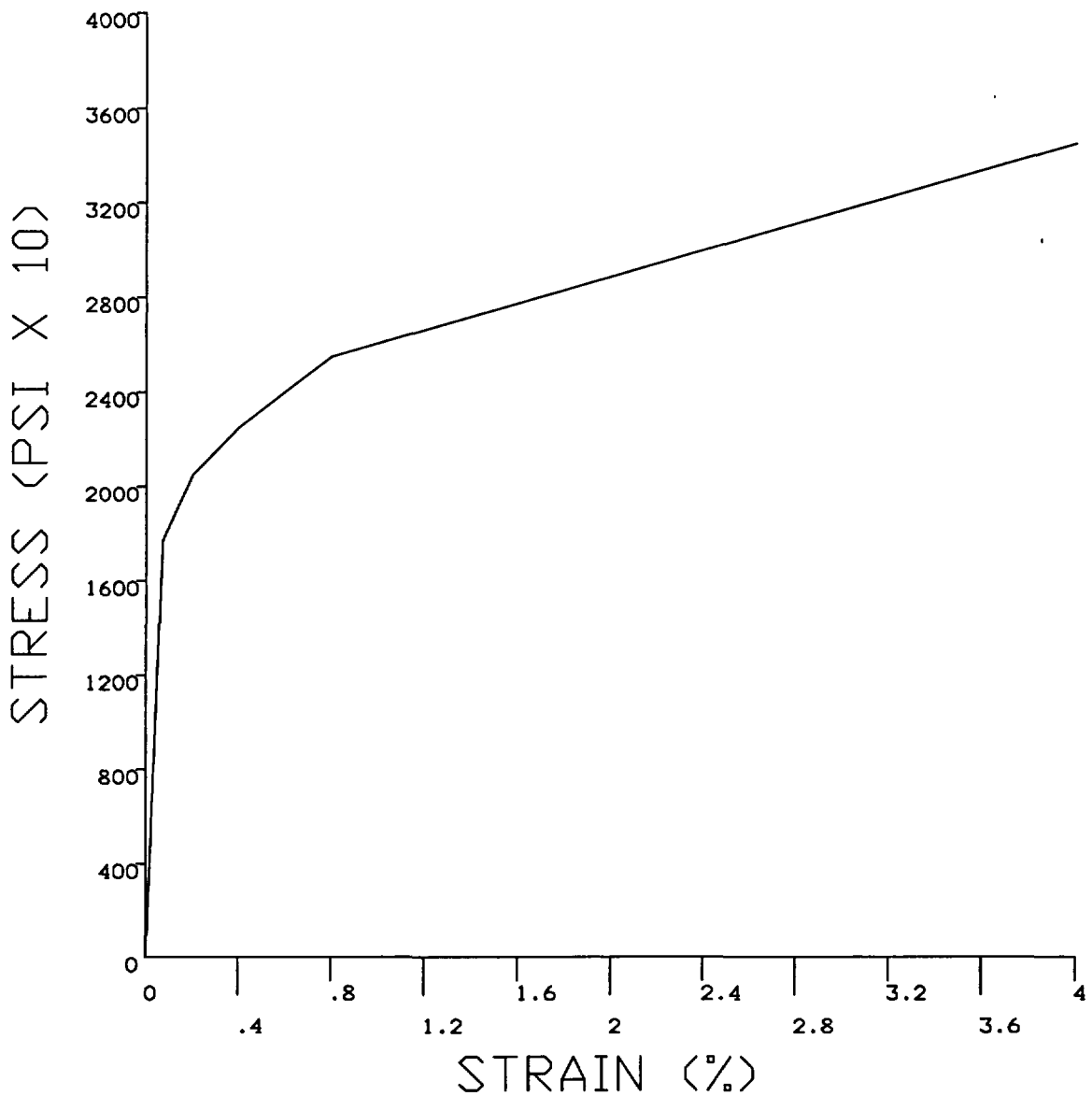

Figure 2.3.2-1
Stress-Strain curve at 700°F for SA-240, Type 304 Stainless Steel

Table 2.3.2-1
NUHOMS® Dry Shielded Canister Structural Component Materials

NUHOMS®-MP187 Cask Component	Material Specification	Type/Grade
Shell (All DSCs)(3)	SA-240	Type 304
Spacer Disc (FO/FC-DSCs)(1)	SA-537 or	Class 2
	SA-517 or	Grade A, B, E, F, J, P, or T
	SA-533	Grade B Class 1
Spacer Disc (FF-DSC only)(1)	SA-537 or	Class 2
	SA-543 or	Type B, Class 1 (Code Case N-7)
	SA-240	Type XM-19
Support Rod (FC- and FO-DSC)	SA-564	Type 630
Support Rod Sleeves (FC- and FO-DSC)	SA-564	Type 630
Guide Sleeves (FC- and FO-DSC)	SA-240	Type 304
Oversleeves (FC- and FO-DSC)	SA-240	Type 304
Support Plate (FF-DSC)(1)	SA-537 or	Class 2
	SA-543 or	Type B, Class 1 (Code Case N-7)
	SA-240	Type XM-19
Failed Fuel Can (FF-DSC)	SA-240	Type 304
Top and Bottom Shield Plugs (FO-DSC)	A36	-
Top Shield Plugs (FC- and FF-DSC)	B29 Lead Encased in Carbon Steel	Chemical Lead A36
Outer Bottom Cover Plate	SA-240	Type 304
Inner Bottom Cover Plate	SA-240	Type 304
Inner Bottom Cover Plate (all DSCs)	SA-240	Type 304
Inner Top Cover Plate	SA-240	Type 304
Outer Cover Plate	SA-240	Type 304

NOTES:
(1) Material properties of SA-537, Class 2 have been conservatively used for structural analysis.
(2) Appendix 2.10.13 provides an evaluation of SA-240, Type XM-19 as an FF-DSC basket structural material.
(3) The bottom end of the FF-DSC shell may be fabricated with equivalent stainless steel plate and forging material that meet the criteria of NB.

Table 2.3.2-2
Mechanical Properties of ASME SA-564, Type 630

Temp (°F)	Stress (ksi)[7]					Elastic Modulus[5] (10^6 psi)	Coef of Thermal Expansion[6] (10^{-6} in/in/°F)
	Yield Strength	Ultimate Strength	Design Stress Intensity	Alternating Stress (@10^6 Cycles)	Alternating Stress (@10 Cycles)		
	S_y[1]	S_u[2]	S_m[3]	S_a[4]	S_a[4]		
-40	(115.0)	(140.0)	(46.7)	(28.8)	(721)	(29.8)	(5.89)
-20	115.0	140.0	46.7	(28.7)	(718)	(29.7)	(5.89)
70	115.0	140.0	46.7	28.3	708	29.2	5.89
100	115.0	140.0	46.7	(28.1)	(703)	(29.0)	5.89
200	106.3	140.0	46.7	(27.6)	(690)	28.5	5.90
300	101.9	140.0	46.7	(27.0)	(675)	27.9	5.90
400	98.3	131.4	45.5	(26.5)	(663)	27.3	5.91
500	95.2	128.5	44.4	(25.8)	(645)	26.7	5.91
600	92.8	126.7	43.8	(25.3)	(633)	26.1	5.96

NOTES:
(1) ASME B&PV Code [2.2], Section II, Part D, Table Y-1
(2) ASME B&PV Code [2.2], Section II, Part D, Table U
(3) ASME B&PV Code [2.2], Section II, Part D, Table 2A
(4) ASME B&PV Code [2.2], Section III, Division 1, Appendix I, Figure I-9.2.1 and Table I-9.1
(5) ASME B&PV Code [2.2], Section II, Part D, Table TM-1
(6) ASME B&PV Code [2.2], Section II, Part D, Table TE-1
(7) When necessary, values are linearly interpolated as indicated by ( ).
(8) Properties are for material age hardened at 1100°F.

Table 2.3.2-3
Mechanical Properties of ASME SA-537, Class 2 Carbon Steel

Temp (°F)	Stress (ksi) [7]					Elastic Modulus[5] (10^6 psi)	Coef of Thermal Expansion[6] (10^{-6} in/in/°F)
	Yield Strength	Ultimate Strength	Design Stress Intensity	Alternating Stress (@10^6 Cycles)	Alternating Stress (@10 Cycles)		
	S_y[1]	S_u[2]	S_m[3]	S_a[4]	S_a[4]		
-40	(60.0)	(80.0)	(26.7)	(20)	(427)	(30.0)	(4.58)
-20	60.0	80.0	26.7	(20)	(426)	(29.9)	(4.73)
70	60.0	80.0	26.7	20	420	29.5	5.42
100	60.0	80.0	26.7	(20)	(417)	(29.3)	5.65
200	55.0	80.0	26.7	(19)	(410)	28.8	6.39
300	52.2	80.0	26.7	(19)	(403)	28.3	7.04
400	50.0	79.3	26.4	(18)	(395)	27.7	7.60
500	47.6	79.3	26.4	(18)	(388)	27.3	8.07
600	46.0	79.3	26.4	(18)	(380)	26.7	8.46

NOTES:
(1) ASME B&PV Code [2.2], Section II, Part D, Table Y-1
(2) ASME B&PV Code [2.2], Section II, Part D, Table U
(3) ASME B&PV Code [2.2], Section II, Part D, Table 2A
(4) ASME B&PV Code [2.2], Section III, Division 1, Appendix I, Figure I-9.2.1 and Table I-9.1
(5) ASME B&PV Code [2.2], Section II, Part D, Table TM-1
(6) ASME B&PV Code [2.2], Section II, Part D, Table TE-1
(7) When necessary, values are linearly interpolated as indicated by ( ).

Table 2.3.2-4
Comparison of Alternate DSC Spacer Disc Materials at Design Temperatures

Material	SA-537, Class 2		SA-517, Class A, B, E, F, J, P(1)		SA-543, Class B, Type 1		SA-533, Grade B, Class 1(2)		SA-240, Type XM-19(3)	
Design Temperature	-20°F	600°F	-20°F	600°F	-20°F	600°F	-20°F	600°F	-20°F	600°F
Yield Strength (S_y), ksi	60.0	46.0	100.0	87.5	85.0	73.2	50.0	43.8	55.0	37.3
Ultimate Strength (S_u), ksi	80.0	79.3	115.0	114.0	105.0	102.0	80.0	80.0	100.0	87.8
Design Stress Intensity (S_m), ksi	26.7	26.4	38.3	38.1	35.0	33.9	26.7	26.7	33.3	29.3
Elastic Modulus (E), 10^6 psi	29.9	26.7	28.2	25.2	28.2	25.2	29.6	26.4	28.7	25.3
Coefficient of Thermal Expansion (α), 10^{-6}in/in/°F	4.73	8.46	6.29	8.55	5.55	8.16	6.69	8.46	8.08	9.03

NOTES:

(1) Minimum values for S_y, S_u, S_m, E, and maximum value for α are reported for Grades A, B, E, F, J, and P.

(2) The yield stress of SA-533 Grade B, Class 1 is less than SA-537 Class 2 at all temperatures. This is acceptable because all allowable stresses with the exception of bearing stress are calculated based on ultimate stress (Su) or design stress intensity (Sm). Bearing stresses are very small and there is sufficient margin. In addition, yield stress is not needed for the stress analysis of the spacer discs.

(3) Appendix 2.10.13 provides an evaluation of SA-240, Type XM-19 austenitic stainless steel as an FF-DSC basket structural material.

2.3.3 Impact Limiter Energy Absorbing Material Properties

The impact limiter shells are fabricated from ASTM A240, Type 304 stainless steel. Non-stainless steel members include the closed-cell polyurethane foam, the aluminum honeycomb type material, and the ASTM SA-320, Type L43 attachment bolts. The polyurethane foam and aluminum honeycomb material properties are presented in Appendix 2.10.8. The impact limiter is defined by two regions; the annular region into which the cask ends fit, and the tapered portion which extends beyond the ends of the cask. The material in the annular region is an aluminum honeycomb, which has essentially uniform crush strength in one plane and a slightly lesser strength perpendicular to that plane. The material in the tapered section is a closed cell polyurethane foam of nominal 15 lb per cubic foot density. The material specifications for the honeycomb and foam materials are provided in Appendix 2.10.8.

As described and summarized in Appendix 2.10.8, the crush strengths of the energy absorbing materials were determined with bench tests. Test temperatures were chosen to correspond to the actual full scale impact limiter normal condition maximum and minimum temperatures. Following completion of the bench tests, stress-strain curves were developed for both the aluminum honeycomb and polyurethane energy absorbing materials. The stress-strain curves are then utilized in analytical predictions of impact limiter force-deflection characteristics.

All impact limiter energy absorbing material properties are discussed in detail in Appendix 2.10.8. The analytical performance evaluation of the impact limiters is presented in Appendix 2.10.9.

2.3.4 Shielding Material Properties

Radiation shielding in the NUHOMS®-MP187 package is provided by the DSC shield plugs, the steel cask body and closure plates, and by the lead gamma shield and the solid neutron shield. The DSC shield plugs and the cask closure plates provide shielding in the axial directions. The lead gamma shield and solid neutron shield provide the primary shielding mechanisms in the radial direction. The DSC shield plugs consist of either solid carbon steel (FO-DSC) or lead

encased in steel (FC and FF-DSCs). The MP187 Cask lead gamma shield consists of cast lead in the annulus between the cask inner and outer shells. The lead pour fabrication procedure minimizes voids within the lead gamma shield. In the event of impact loading, slumping of the lead will be minimal due to the stiffness of the cask shells which form the lead annulus and the low near incompressibility of the lead material. The approximate melting temperature of chemical lead is 620°F [2.24]. The density of lead used in the analysis is 705 pcf (0.408 lb/in^3) [2.24].

Due to the severity of the hypothetical accident drop conditions and the low strength properties of lead at the high temperatures experienced under transport conditions, the material properties of lead have a significant impact on the package response. The material properties of lead are very sensitive to temperature and strain-rate. The static material properties of lead are summarized in Table 2.3.4-2. These mechanical properties are used for load conditions which are static in nature. For impact load conditions, the dynamic stress-strain properties at a strain rate of 100/second, which is typical for impact velocities approaching 50 feet per second [2.38], are used for the structural evaluation described in Section 2.7. These properties are based on the strain-rate dependent compressive strength of lead at room temperature given in Figure 1 of [2.38]. Dynamic test data for lead at elevated temperatures shows that lead experiences a reduction in compressive strength of 15% to 35% at strains of 10% to 50%, respectively, at a strain rate of 10/second and at 230°F [2.38]. The stress-strain curves for lead at elevated temperatures (Figure 2.3.4-1) are determined based on this data. The dynamic compressive strength of lead as a function of strain for a strain rate of 100/second is summarized in Table 2.3.4-2.

The NUHOMS®-MP187 Cask solid neutron shielding material serves no structural function in the design. The NUHOMS®-MP187 Cask and DSC models conservatively ignore any support provided by the neutron shield and lead shielding materials. The solid neutron shielding material is similar to a sand-cement mortar mix. Mechanical properties of the solid neutron absorbing material are summarized in Table 2.3.4-1.

Table 2.3.4-1
Mechanical Properties of Neutron Shielding Materials

Material Specification	Poisson's Ratio	Compressive Strength (ksi)	Elastic Modulus (E) (10^6 psi)	Coef. of Thermal Exp. (α) (10^{-6} in/in °F)
Solid Neutron Shielding Material(1)	0.2	4.5	0.16	7.81

Table 2.3.4-2
Static Mechanical Properties of ASTM-B29, Chemical Lead

Temp (°F)	Static Stress Properties (ksi)(1)			Elastic Modulus (10^6 psi)	Coef. of Thermal Exp (10^{-6} in/in/°F)
	Yield (S_y)		Ultimate (S_u)		
	Tension	Compression	Tension		
-99	-	-	-	2.50	15.28
70	-	-	-	2.34	16.07
100	0.584	0.490	1.570	2.30	16.21
175	0.509	0.428	1.162	2.20	16.58
250	0.498	0.391	0.844	2.09	16.95
325	0.311	0.320	0.642	1.96	17.54
440	-	-	-	1.74	18.50
620	-	-	-	1.36	20.39

Notes:
(1) Reference [2.14]

Table 2.3.4-3
Dynamic Stress-Strain Lead Properties(2)

Strain (in./in.)	Stress at Temperature (ksi)	
	100°F	230°F
0.03	2.2	2.0
0.10	3.3	2.8
0.30	4.9	3.2
0.50	5.6	3.6

Notes:
(1) Reference [2.38]
(2) Measured at a strain value of 100 in/in/second.

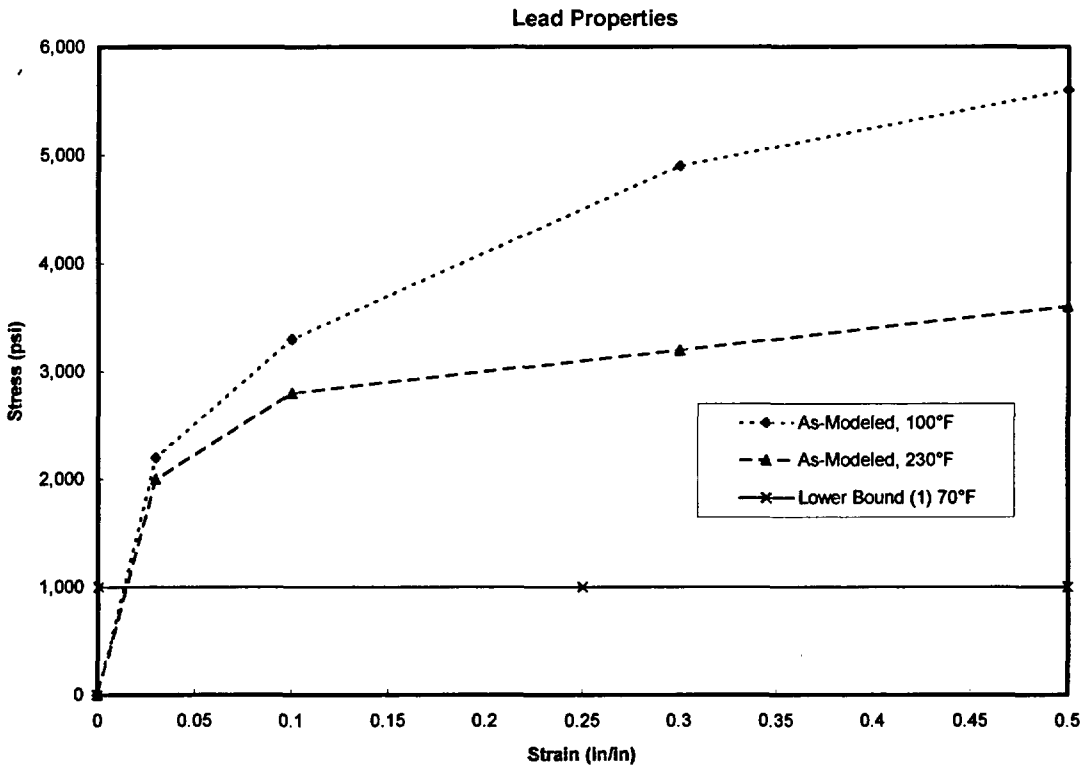

(1) The lower bound lead properties are utilized in the confirmatory finite element lead slump analysis described in Appendix 2.10.7.

Figure 2.3.4-1
Stress-Strain Curves for Lead

2.3.5 DSC Neutron Absorber Sheet Material Properties

The FC- and FO-DSC guide sleeve assembly poison materials are fabricated from boron impregnated aluminum neutron absorber sheets. The BORAL™ neutron absorber sheets consist of a sintered B_4C-Al composite core which is mechanically bonded to thin aluminum sheets on both sides. The neutron absorber sheets are assumed to provide no structural support to the guide sleeve assembly.

2.4 General Standards for All Packages

This section demonstrates that the general standards for all packages are met.

2.4.1 Minimum Package Size

The minimum transverse dimension of the NUHOMS®-MP187 transportation package, without impact limiters, is 92.50 inches (measured across the neutron shield), and the minimum longitudinal dimension is 201.50 inches.

2.4.2 Tamper Indicating Device

A lock wire, or equivalent, will be utilized over one impact limiter bolt hole on each end after installation. Failure of the lock wire will indicate deliberate tampering in accordance with 10CFR71.43(b) [2.1].

2.4.3 Positive Closure

Inadvertent opening of the cask closures cannot occur for the NUHOMS®-MP187 Cask. Upon completion of loading the cask payload, the top closure plate thirty-six 2-12UN and ram closure plate twelve 1-8UNC cap screws are tightened. These bolted closure plates eliminate access to the containment cavity. Following leak tight certification, the impact limiters are installed on each end of the cask using twelve 1-$^1/_4$UNC necked attachment screws. Once installed, the impact limiters eliminate all access to the outer cask closures. With the containment closure, and the presence of the impact limiters, inadvertent opening of the cask cannot occur.

2.4.4 Chemical and Galvanic Reactions

The materials from which the NUHOMS®-MP187 transportation package is fabricated (i.e., stainless steel, carbon steel, lead, polyurethane foam, and neutron absorbing material) will not cause significant chemical, galvanic, or other reactions in air, helium, or water environments. The inner surfaces of the impact limiter skins are treated with a wax, or equivalent, bond release

agent so that the bonding of polyurethane foam and steel does not occur. This is done so that g-loads due to drop conditions are minimized (i.e., bonding creates additional load paths which create the potential for increased g-loadings).

Bulletin 96-04 [2.59] notified addressees about the potential for chemical, galvanic or other reactions among the materials of a spent fuel storage or transportation cask, its contents and the environments the cask may encounter during use. To resolve Bulletin 96-04 issues related to hydrogen generation in the NUHOMS®-MP187 transportation package, an evaluation is provided in the following paragraphs.

2.4.4.1 Description of NUHOMS®-MP187 DSC Materials

The spacer discs and the top shield plug of the FO/FC-DSCs are fabricated from carbon steel which is coated with electroless nickel. These coated surfaces may potentially be subject to galvanic or chemical reactions during the short time that they are in contact with Spent Fuel Pool (SFP) borated water during cask loading/unloading operations. In addition, the DSCs have BORAL® neutron absorber plates attached to the guide sleeves for criticality control. BORAL® consists of a sintered boron carbide and aluminum composite, mechanically bonded to thin aluminum sheets on both sides. Due to the use of aluminum sheets on the outside, BORAL® also needs to be evaluated for its potential to generate hydrogen when in contact with SFP water. The FF-DSC is not a bounding canister for this evaluation since it is constructed from fewer spacer discs and does not have any neutron absorber material. The FF-DSC basket alternatively can be fabricated with SA-240 Type XM-19 austenitic stainless steel which does not require coating. The surface area and material of construction of each sub-component (including the coating) used in the NUHOMS®-MP187 FC-DSCs (envelopes FO and FF) have been identified in Table 2.4.4-1.

Table 2.4.4-1
NUHOMS®-MP187 FC-DSC (envelops FO- and FF-DSCs)

Item Name	Material Specification	Coating Type	Area (ft^2)
Spacer Disc Sides(1)	ASME SA-537, CL.2 or SA-517 Gr A, B, E, F, J, P or SA-533 Gr B, CL 1	Nickel	447
Spacer Disc Cut-outs(1)	ASME SA-537, CL.2 or SA-517 Gr A, B, E, F, J, P or SA-533 Gr B, CL 1	Nickel	203
Spacer Disc Edges(1)	ASME SA-537, CL.2 or SA-517 Gr A, B, E, F, J, P or SA-533 Gr B, CL 1	Nickel	47
Top Shield Plug	ASTM A36	Nickel	54
Total Coated Surface Area:			751
Support Rods/Spacer Sleeves	ASME SA-564, type 630	None	45
Type A Guide Sleeves			
Neutron Absorber Sheets [2 sides]	BORAL®	None	433
Oversleeve	ASTM A240 type 304	None	446
Guide Sleeve	ASTM A240 type 304	None	493
Type B Guide Sleeves			
Neutron Absorber Sheets [4 sides]	BORAL®	None	866
Oversleeve	ASTM A240 type 304	None	892
Guide Sleeve	ASTM A240 type 304	None	986
Inner Bottom Cover Plate	ASME-SA-240, type 304	None	24
Outer Bottom Cover Plate	ASME-SA-240, type 304	None	24
Cylindrical Shell			
inside	ASME-SA-240, type 304	None	259
outside	ASME-SA-240, type 304	None	273

Notes:
(1) The FF-DSC spacer discs alternatively can be fabricated from SA-240 Type XM-19 austenitic stainless steel which is not coated.

2.4.4.2 NUHOMS®-MP187 DSC Cavity Water Chemistry Environment

Table 2.4.4-2 lists the typical values for key chemistry parameters in PWR SFP water.

Table 2.4.4-2
Water Chemistry Environment

- Boron Concentration 2000 ppm (Minimum 1200 ppm)
- pH = 5.0
- Chloride = <10 ppb
- Fluoride = <10 ppb

2.4.4.3 NUHOMS®-MP187 DSC Cavity Water Temperature Environment

The temperature environment for the DSC during the loading and preparation steps varies over time due to spent fuel decay heat which slowly elevates the temperature of the DSC and its contents. The heat-up rate of DSC cavity water using time intervals which closely simulate the service conditions during typical loading was used in simulating the expected service environment for the laboratory tests for evaluating BORAL as described in Section 2.4.4.6.

During DSC unloading, the operations are similar to loading, but in reverse order. One significant variation in the environment is that during initial flooding, while the water levels are low, the water will be in a bulk boiling state for a small time interval.

2.4.4.4 Description Of Nickel Coating

Electroless nickel plating has been used in applications which require excellent corrosion and wear resistance since the 1950's and has now become an established industrial process. ASTM Standard B656 [2.62] and Military Specification MIL-C-26074B [2.63] provide guidelines for obtaining a smooth, adherent and uniform coating. The coating is an alloy of nickel and phosphorus produced by autocatalytic chemical reduction of a nickel based solution such as nickel sulfate or nickel chloride with sodium hypophosphite without the use of an electric current. The coating is deposited from baths typically operating at a pH of 4.5-5.3 and a temperature of 85°C to 95°C.

Electroless nickel is an effective barrier coating due to its non-porous structure, which protects the substrate by sealing it off from the environment, rather than using sacrificial action. Because of its amorphous nature and passivity, the corrosion resistance of the coating system is excellent, and in many environments superior to that of pure nickel or chromium alloys [2.64].

Adhesion of nickel coatings to most metals is excellent. The bond strength of the coating to properly cleaned carbon steel has been found to be at least 40 to 60 ksi [2.64]. For a moderate corrosive service environment, ASTM B656 [2.62] recommends an electroless nickel coating thickness of 13 to 30 μm (0.5 to 1.25 mil). The chemical reduction process results in a uniform coating of predictable thickness which can be controlled to within a tolerance of 2.5 μm or 0.1 mil [2.64].

2.4.4.5 Evaluation Of Nickel Coating

Table 1 of Reference [2.65] reports corrosion test data for steel coupons coated with electroless nickel. The corrosion rate in deionized water at 95°C was measured to be 0 μm/yr, while at 22°C in deionized water , the corrosion rate was 1.5 μm/yr. Also, Table 2 of the same source reports the effect of pH on corrosion of electroless nickel in deionized water. A decrease in solution pH from 7.0 to 4.0 results in an increase in corrosion rate from 1.5 μm/yr to 2.0 μm/yr. These reported corrosion rates are insignificant and are expected to result in a negligible rate of

reaction for the NUHOMS®-MP187 DSCs, since the DSC loading/unloading operations typically involve less than a 24 hour period during which the SFP water is in contact with the DSC nickel coating.

Table 7 of Reference [2.65] also reports a corrosion rate of 19 μm/yr for electroless nickel in 4.8 wt % boric acid (approximately 3 times the concentration of boron in the SFP). This rate translates into an insignificant loss of less than 0.05 μm of the nickel coating thickness (out of a total coating thickness of 13-30 μm) for a NUHOMS®-MP187 DSC, since the DSC loading/unloading operations typically involve less than 24 hour period during which the borated SFP water is in contact with the DSC nickel coating. The excellent corrosion resistance of electroless nickel is due to its unusual glass-like non-porous structure which prevents initiation of a galvanic corrosion mechanism when in contact with an electrolyte.

Since no chemical or galvanic reactions are expected to occur during cask loading/unloading operations, no appreciable quantities of boron precipitates for NUHOMS®-MP187 DSCs are expected to occur. Since no reactions have been identified, any effect of reaction products on the overall integrity of the cask or its contents during storage or transportation is expected to be insignificant. Since no NUHOMS®-MP187 casks are currently loaded, no action is required in response to Bulletin Requested Action 2.

2.4.4.6 Evaluation of BORAL®

As a result of unanticipated blistering on a small number of BORAL® plates, a study [2.67] was undertaken which concluded that boron carbide itself was an inert material when in contact with SFP water environment. The cause of the blisters was rapid generation of hydrogen beneath the aluminum cladding. This study concluded that high hydrogen rates were obtained ONLY with demineralized water and when boron carbide powder had very low boron content.

To determine the hydrogen generation rates due to the interaction of BORAL® with PWR SFP water, laboratory tests using a simulated SFP temperature and water chemistry environment as described in sections 2.4.4.2 and 2.4.4.3 were performed [2.66]. These laboratory tests showed

that hydrogen generation rates are almost negligible for a typical environment expected during DSC loading/unloading operations. A visual observation during the conduct of the test indicated that most of the hydrogen evolution was limited to the edges of the specimen where the boron carbide had been exposed during fabrication. Results of the laboratory test program related to corrosion of BORAL® in a 1200 ppm boron solution (Test No. 16) are reported in Figure 2.4.4-1 and envelope those observed for a 3000 ppm boron solution [2.66]. A chemical analysis of the test solution did not show any insoluble precipitates and no reduction in boron concentration was observed during the conduct of the test. Hence, any effect of the BORAL® reaction products with SFP water on the integrity of the NUHOMS®-MP187 cask or its contents during storage or transportation is expected to be insignificant.

2.4.4.7 Conclusion

- Based on the laboratory test results for BORAL® and the passive response of electroless nickel in borated water environments, there will be negligible hydrogen generation for most service conditions during loading/unloading of NUHOMS®-MP187 DSCs due to chemical or galvanic corrosion.

- Radiolysis of water is expected to generate hydrogen, but its contribution is expected to be small [2.60, 2.61].

THIS SECTION CONTAINS
PROPRIETARY INFORMATION

Figure 2.4.4-1
Test No. 16; BORAL® in 1200 ppm boron solution, January 1997 [2.66]

2.5 Lifting and Tie-Down Standards for All Packages

2.5.1 Lifting Devices

10CFR71.45(a) [2.1] requires that a minimum factor of safety of three against yield is required for all lifting attachments which are structural parts of the NUHOMS®-MP187 transportation package for any lifting condition. In addition, the package must be designed such that "*failure of any lifting device under excessive load would not impair the ability of the package to meet the requirements*" of 10CFR71.

The NUHOMS®-MP187 cask is lifted by the removable upper trunnions. The trunnion sleeves are welded to the cask structural shell and as such are considered a structural part of the package. The removable trunnion bodies, although designed per Subsection NF of the ASME Code are not structural parts of the transportation package, and are evaluated per the requirements of 10CFR71.45(a) [2.1]. The associated lifting devices used to move the MP187 cask during loading operations are not included in the report. However, the special lifting devices used to transfer the MP187 cask are designed and fabricated in accordance with the requirements of NUREG 0612 [2.48] and ANSI N14.6 [2.49].

2.5.1.1 Lifting Loads

The loaded NUHOMS®-MP187 cask is lifted from the fuel pool vertically by the upper trunnions using the fuel building crane. During the vertical lift, the cask and DSC are filled with water while the cask top closure plate and DSC inner and outer top cover plates are not in place. The temperature of the cask for this lift is equal to the fuel pool water temperature, which is typically less than 100°F. The maximum dead load for the vertical lift from the fuel pool is conservatively assumed to be 250,000 lb (See Table 2.1.2-2) distributed evenly to the two upper trunnions. A free body diagram for the vertical lift from the fuel pool is shown in Figure 2.5.1-1. A detail of the upper lifting trunnions is shown in Figure 2.5.1-2.

For movement from the transport skid to the onsite transfer skid, the cask is lifted in the horizontal orientation using slings positioned around the cask outer shell adjacent to the ends of the neutron shield. The horizontal lift does not use the lifting trunnions. The maximum dead load of the loaded cask is 239,700 lb (Table 2.1.2-2). The stresses in the cask components due to the horizontal lift are small due to the slings, which spread the load over a large area. Therefore, the cask need not be analyzed for the horizontal lift.

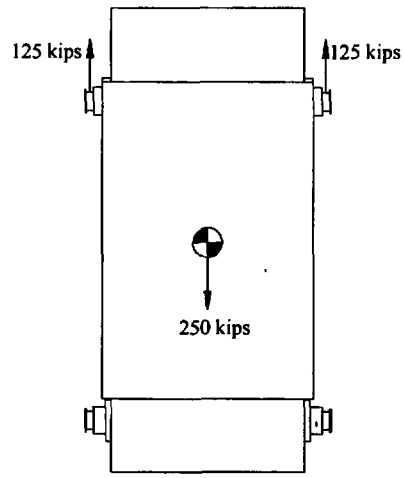

Figure 2.5.1-1
Vertical Lift Loads

2.5.1.2 Trunnion and Sleeve Stresses

The stresses at the critical sections of the upper cask trunnion sleeve and removable trunnions are calculated for the 125 kip vertical lift load described in Section 2.5.1.1. The area and section modulus for the upper trunnion sleeves and removable trunnions at the critical sections are:

$$A_i = \frac{\pi}{4}(D_o^2 - D_i^2)$$

$$S_i = \frac{\pi}{32D_o}(D_o^4 - D_i^4)$$

Where D_o and D_i are the outer and inner diameters, respectively.

The bending stresses in the upper trunnion sleeve and trunnion at each end of the critical sections are:

$$\sigma_{bi} = M_i/S_i$$

where

M_i = $V \cdot e_i$

V = Trunnion shear load

= 125 kip

e_i = Distance from load application point to critical section

= 1.75 in (Section A)

= 5.50 in (Section B)

= 11.22 in (Section C)

The maximum shear stress for a circular cylinder is:

$$\tau = \frac{K \cdot V}{A}$$

where

$$K = \frac{2A}{Ib}\left[\int_0^{R_o}\sqrt{R_o^{\,2} - y^2}\cdot ydy - \int_0^{R_i}\sqrt{R_i^{\,2} - y^2}\cdot ydy\right]$$

R_o = Trunnion outer radius

R_i = Trunnion inner radius

$I = \frac{\pi}{4}(R_o^{\,4} - R_i^{\,4})$

$b = 2(R_o - R_i)$

$A = \pi(R_o - R_i)$

The appropriate values of R_o, R_i, I, and b, at Sections A, B, and C are shown in Figure 2.5.1-2.

FIGURE WITHHELD UNDER 10 CFR 2.390

The corresponding shape values are:

K = 1.33 (Section A)

K = 1.95 (Section B)

K = 2.00 (Section C)

The maximum stress intensity in the trunnion at each section is calculated as the larger of:

$$SI = \frac{\sigma_a}{2} \pm \sqrt{\left(\frac{\sigma_a}{2}\right)^2 + \tau^2} \quad \text{or} \quad 2\tau$$

The calculated stresses are shown in Table 2.5.1-1. The stress intensity in the trunnion sleeve resulting from the vertical lift is 2.6 ksi. The highest stress intensity in the trunnion body is 7.8 ksi.

Table 2.5.1-1
Trunnion Sleeve Lifting Stresses

Item	Section	Stress Type	Stress (ksi)
Upper Trunnion Sleeve	C	Shear Bending S.I.	1.3 2.1 2.6
Upper Trunnion Body (Small Diameter Section)	A	Shear Bending S.I.	3.3 4.4 6.6
Upper Trunnion Body (Large Diameter Section)	B	Shear Bending S.I.	3.9 5.1 7.8

The allowable stress intensity is equal to 1/3 of the yield strength for ASME SA-240 Type XM-19 stainless steel sleeve material at 100°F. Given that the yield strength of this material at temperature is 55 ksi, the allowable stress intensity is 18.3 ksi.

The minimum margin of safety in the trunnion sleeve for the critical lift condition is:

$$MS = \frac{18.3}{2.6} - 1 = +6.0$$

The minimum margin of safety in the upper trunnions occurs at Section B (trunnion body):

$$MS = \frac{18.3}{7.8} - 1 = +1.3$$

2.5.1.3 Trunnion Weld Analysis

The upper and lower trunnion sleeve are connected to the cask structural shell with full penetration welds with 1/4" cover fillets. The strength properties of the weld metal are greater than or equal to the strength properties of the ASME SA-240 Type XM-19 base metal. As shown in Section 2.5.1.4, the stresses in the cask structural shell meet the applicable stress acceptance criteria. Therefore, the trunnion welds are adequate.

2.5.1.4 Cask Structural Shell Stresses

The stresses in the cask outer shell resulting from the vertical lift are determined using the half symmetry finite element model described in Appendix 2.10.2. The analytical model includes the cask structural shell and the upper and lower trunnion sleeves the model conservatively ignores any support provided by the neutron shield and lead shielding materials.

The vertical lifting loads, discussed in Section 2.1.1.1, are applied to the model in linear elastic static analyses performed using the ANSYS program [2.6]. The maximum stress intensities in the cask outer shell for the vertical lift condition is 12.9 ksi, and the point of maximum stress is shown in Figure 2.5.1-3.

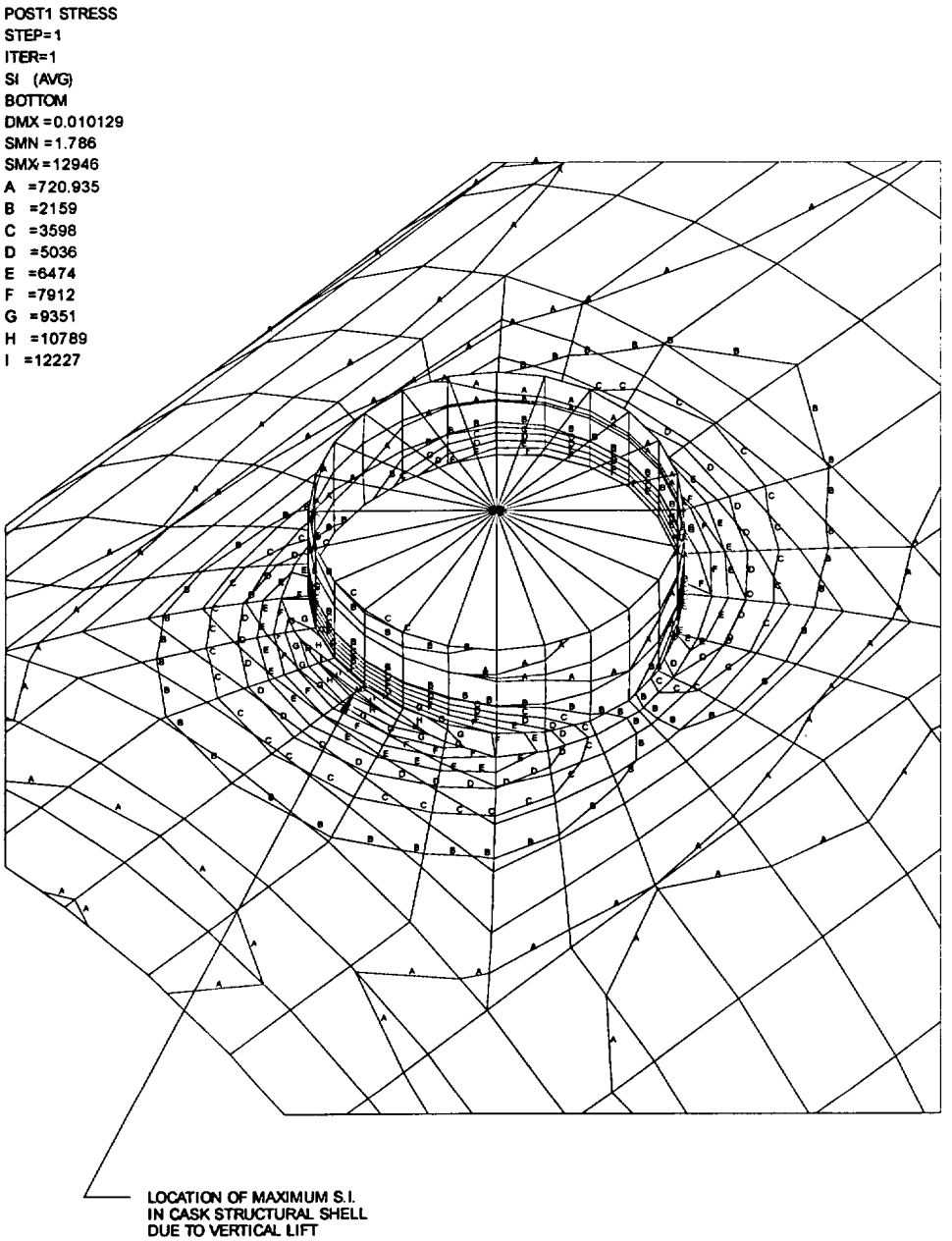

Figure 2.5.1-3
Stress Contour Plot of Upper Trunnion During Vertical Lift

The allowable stress intensities for the upper structural shell high strength stainless steel is equal to 1/3 of the material yield strength, or 18.3 ksi. The minimum margin of safety in the cask outer shell for the critical lift condition is:

$$MS = \frac{18.3}{12.9} - 1 = 0.42$$

2.5.1.5 Trunnion Attachment Bolt Analysis

To allow removal of the trunnions prior to transportation, each trunnion body is fastened to the trunnion sleeve with eighteen 1-8 UNC cap screws placed at a radius of 7.5 inches. The trunnion bodies and trunnion sleeves are fabricated with close fit tolerance to ensure that shear loads are transferred by bearing between the trunnion and sleeve and not by shear in the bolts. The trunnion attachment bolts are designed to be loaded in tension only.

The maximum trunnion attachment bolt load occurs during the vertical lift from the fuel pool during which each upper trunnion carries a load of 125 kips. The applied bolt design load for all critical lift conditions are calculated including a 15% allowance for crane hoist motion loads in accordance with the recommendations of CMAA-70. The applied moment at the head of the cap screw is:

$$M = (125 \text{ kips} * 1.15)(6.0 \text{ in})$$
$$= 863 \text{ kip-in}$$

The stresses in the bolts due to applied moment load are calculated assuming the bolt circle acts as a cylinder having the same mean radius and area as the 18 attachment bolts. The tensile area of a 1 inch diameter cap screw is 0.606 square inches. Therefore, the total area of the attachment bolt circle is: $A_b = 18*0.606 = 10.9 \text{ in}^2$.

The equivalent thickness of a cylinder having the same mean radius and area is:

$$t_{eq} = \frac{10.9}{2 * \pi * 7.5} = 0.23 \text{ in}$$

The section modulus of the equivalent cylinder is:

$$S_b = \pi d^2 t_{eq} / 4$$

$$= \pi(15.0)^2(0.23) / 4$$

$$= 40.6 \text{ in}^3$$

The applied moment is resisted by compression between the trunnion and trunnion sleeve, and tension in the bolts, similar to a circular reinforced concrete column. Assuming that the applied moment is resisted entirely by the bolt circle with rotation about the center line of the trunnion produces a conservatively low value for the section modulus and over-predicts the maximum bolt stress by approximately 30%.

The maximum axial stress in the bolts due to the applied moment is:

$$\sigma_b = M/S_b$$

$$= 863/40.6 \qquad = 21.2 \text{ ksi}$$

The trunnion bolts may be manufactured from low alloy carbon or high strength stainless steels as listed in Table 2.5.1-2. In accordance with the requirements of ANSI N14.6 [2.49], the allowable stress for a redundant lifting system are the lesser of one third of yield or one fifth of ultimate. Based on the minimum bolt strength of Table 2.5.1-2, the allowable stress is 23 ksi for the ASTM A193 Gr. B7 bolting material. The margin of safety in the bolts for the critical lifting condition is:

$$MS = \frac{23.0}{21.2} - 1 = 0.08$$

Table 2.5.1-2

Permissible Trunnion Bolt Materials and Properties at 100°F

Material	Yield Strength, S_y	Ultimate Strength, S_u (ksi)
ASTM A320 Gr. L43	105	125
ASTM A193 Gr. B7	95	115
ASTM A564 Type 630	115	135
ASTM A705 Type 630	115	135

2.5.1.6 Lifting Failure Path

The following table summarizes the stress intensities in the lifting components and illustrates that the structural shell would not be impaired until the excessive lifting loads reach a minimum of 7.7 times the maximum cask weight. Therefore the requirements of 10CFR71 are met.

Table 2.5.1-3
Critical Stress Components for Lifting Load

Component	Ultimate Strength(1)	Lifting Stress	Margin to Failure	Stress at Failure of "Critical Component"
Trunnion Sleeve	100	2.6	38.4	14.1
Structural Shell	100	12.9	7.7	70.0(2)
Trunnion	100	7.9	12.6	42.9
Trunnion Bolts	115	21.2	5.4	115

Note:
(1) Ultimate Strength at 100°F. All stresses reported in ksi.
(2) The structural shell will reach its ultimate strength at a trunnion load of 125 x 7.7 or 963 kip.

2.5.2 Tie-Down Devices

The structural parts of the NUHOMS®-MP187 cask are designed to withstand transportation loads of 2g in the vertical direction, 5g in the transverse direction, and 10g in the longitudinal direction (direction of travel) without generating stress in any structural part of the transportation package in excess of the material yield strength, per the requirements of 10CFR71.45(b)(1) [2.1].

The NUHOMS®-MP187 transportation package is secured during transport by the transportation skid. The cask shear key is designed to transfer the longitudinal cask transport load to the skid. The vertical and transverse cask transport loads are transferred by a pair of 2-inch wide rings which form the ends of the neutron shield and are welded near the ends of the cask. The neutron shield, embedded angles, and neutron absorbing material are conservatively assumed to carry no load for the transport condition. A diagram of the MP187 tie-down system is shown in Figure 2.5.2-1.

The reaction forces due to the transportation loads are calculated for the NUHOMS®-MP187 transportation package in its heaviest configuration (Cask + FC-DSC + Impact Limiters) of 272,000 lb. For conservatism this value is rounded up to 280,000 lb. The transportation loads used in the tie-down and lifting analyses are:

F_L	=	Longitudinal Load		
	=	10g·280 kip	=	2,800 kip
F_T	=	Lateral Load		
	=	5g·280 kip	=	1,400 kip
F_V	=	Vertical Load		
	=	2g·280 kip	=	560 kip

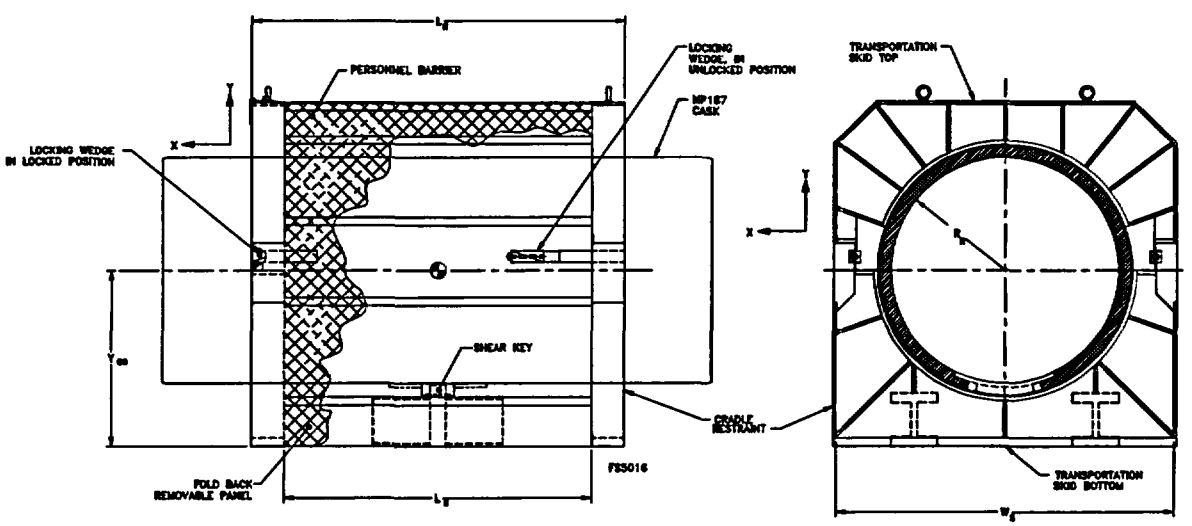

Figure 2.5.2-1
MP187 Cask Transportation Skid Restraint

2.5.2.1 Support Ring Design

Each neutron shell support ring is connected to the cask by a 1/2 inch groove weld with 3/16 inch cover fillet on impact limiter side and a 3/8 inch groove weld with 3/8 inch cover fillet on the neutron shield side. To account for possible gaps between the rings and the cask structural shell, the welds are designed to carry 100% of the transportation loads.

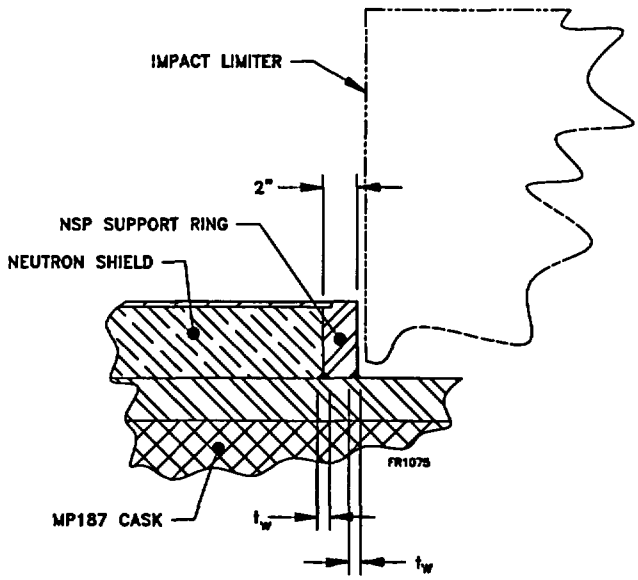

Figure 2.5.2-2
Support Ring Weld Detail

Each ring has an inside radius, R_R, of 41.75 inches. The two rings are separated by distance L_R, 135.5 inches.

In designing the ring welds to carry vertical and transverse loads, a sinusoidal radial stress distribution between the support ring and the transportation cradle is assumed. This distribution acts about a 180° angle and has the form:

$$f_R(\theta) = f_o \cdot \cos\theta$$

where θ ranges from -90° to +90° for lateral load (as shown) and 0° to 180° for vertical load (rotate 90°). Note that the stress is maximum at 0° (-90° for vertical load) and is zero at -90° and 90° (0° and 180° for vertical load).

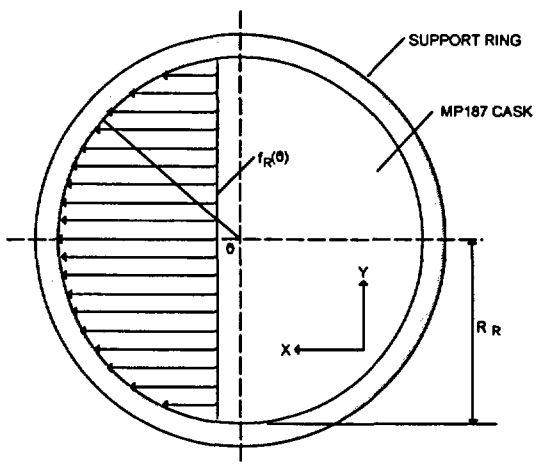

Figure 2.5.2-3
Support Ring Force Profile

The differential radial force is equal to the radial stress multiplied by a differential element:

$$dF = F_R(\theta)\cdot R\cdot d\theta$$
$$= f_o\cdot \mathrm{Cos}\theta\ R\ d\theta$$

The total force is found by integrating the differential force:

$$F = \int_{-\pi/2}^{\pi/2} f_o \cdot R \cdot \mathrm{Cos}\theta \cdot d\theta$$
$$= f_o \cdot R[\mathrm{Sin}\theta]_{-\pi/2}^{\pi/2}$$
$$= 2\cdot f_o\cdot R$$

Therefore, the maximum line load is:

$$f_o = \frac{F}{2R}$$

Lateral Acceleration

The load on each ring in the transverse direction due to lateral acceleration (5g) is:

$$F_T = \frac{A_T \cdot W}{2} = 700{,}000 \text{ lb}$$

Vertical Acceleration

The load on each ring from combined deadweight and vertical acceleration (2g) is:

$$F_V = \frac{W + A_V \cdot W}{2} = 420{,}000 \text{ lb}$$

Longitudinal Acceleration

The load on each ring resulting from deadweight and the longitudinal load eccentricity is:

$$F_L = \frac{W}{2} + \frac{A_L \cdot W \cdot R_R}{L_R} = 1{,}003{,}000 \text{ lb}$$

The load due to longitudinal acceleration controls. The line stress due to this load is:

$$f_o = \frac{F_L}{2R} = 12{,}000 \text{ lb/in}$$

The allowable shear stress in the base metal is $0.60S_m$. For SA-240 Type 304 stainless steel, the value of S_m is 20.0 ksi. The strength of the weld material will be significantly higher than the strength of the base material. Therefore, the required effective weld thickness is:

$$t_{w1} = \frac{f_o}{0.60S_m} = 1.00 \text{ in}$$

The effective weld throat provided by the 3/8 inch groove weld with 3/8 inch cover fillet on the neutron shield side of the support ring is 0.375*1.414=0.53 inches. The effective weld throat provided by the 1/2 inch groove weld with 3/16 inch cover fillet on the impact limiter side is $(.188^2+.5^2)^{1/2}$ =0.534 inches. The weld on the impact limiter side is broken by the 12 2.5 inch long impact limiter attachment blocks. The weld therefore covers $1 - \frac{12*2.5}{83.5\pi} = 0.885$ of the cask outside perimeter. The net effective weld throat is 0.53 inches + (0.885*0.534 inch) = 1.00 inches. Significant margin exists in these weld sizes due to the conservative assumption that all load is taken by the welds.

2.5.3 Shear Key Analysis

The shear key is a part of the cask structure designed to resist the 10g longitudinal transportation load required by 10CFR71.45(b)(1) [2.1]. The shear key shown in Figure 2.1.1-4, consists of a welded box structure (bearing blocks and tie bars), which interfaces with a solid steel plug that is secured to the transport skid. A 36" x 36" x 1.50" thick pad plate is used to spread the load over a large area of the cask structural shell. The bearing block, tie bars and pad plate are manufactured from SA-240, Type XM-19 stainless steel. The properties of these materials at the design temperature (250°F) are taken from Table 2.3.1-3.

The shear key components and the attachment welds are analyzed for 10g longitudinal transport load, or 2800 kips.

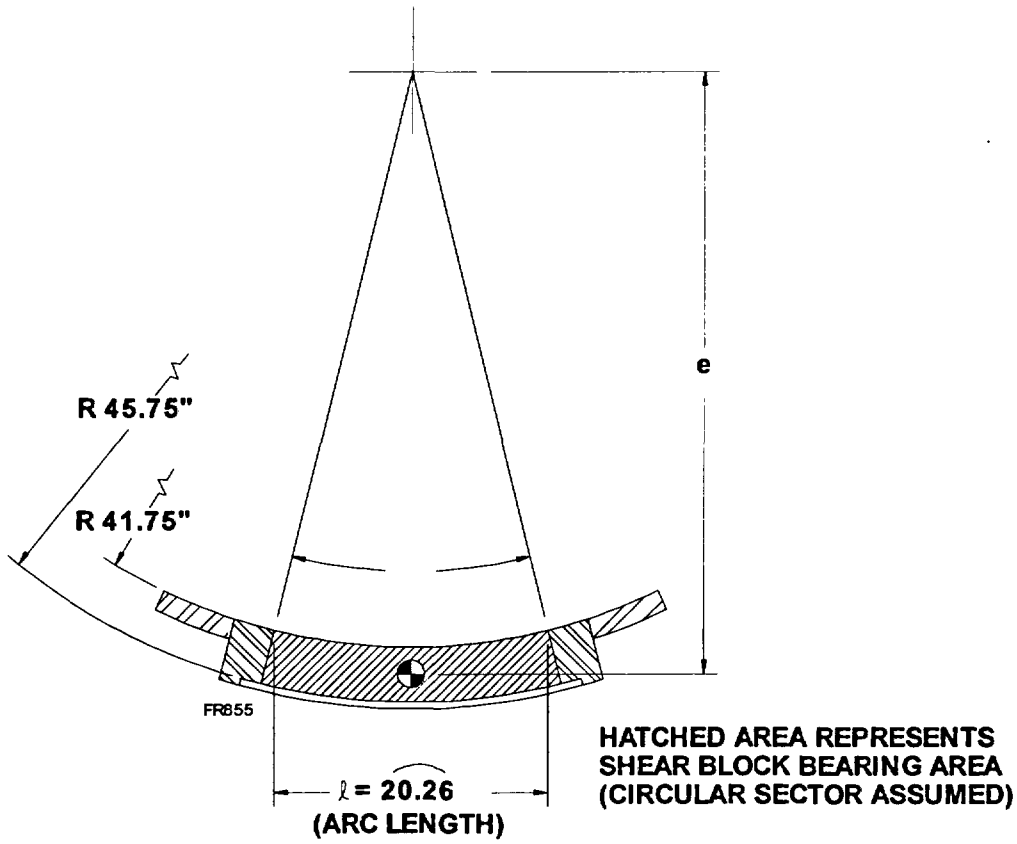

Figure 2.5.3-1
Shear Key Block

The bearing stress due to the 10g longitudinal transportation load is calculated assuming the load is applied uniformly to a single bearing block. The average bearing stress, σ_p, in the bearing block is:

σ_p = P/A

A = (20.26 - 2{.25}) x 4 (allowance for 1/4" clearance on each side)

σ_p = 35.4 ksi

The allowable average bearing stress is limited to S_y. The yield strength of SA-240, Type XM-19 stainless steel at 250°F is 45.2 ksi. Therefore, the margin of safety is:

$$M.S. = \frac{45.2}{35.4} - 1 = +0.28$$

The shear key is a prefabricated structure which is welded to the cask structural shell all around the pad plate with a 1" inch partial penetration groove weld and a 5/8" cover fillet weld. A seal weld is provided around the inner edges of the shear key way assembly to avoid a potential crud trap. The seal weld is a non-structural weld and is not considered in the weld analysis.

The shear stress in the base metal at section A is calculated at the weld shear plane between the weld material and the cask structural shell. The weld shear stress at the junction of the weld material and cask outer shell is:

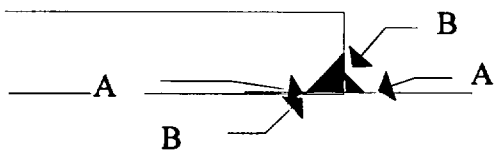

$$\sigma_v = \frac{V}{L \cdot t_{eff}}$$

$$= \frac{2800}{4x36x1.625} = 12.0 \text{ ksi}$$

The average primary shear stress across a section loaded in pure shear is limited to $0.6S_m$. The allowable stress, S_m, for Type 304 stainless steel base material at 250°F is 20.0 ksi. Therefore, the allowable weld shear stress is 12.0 ksi. The margin of safety in the base metal is:

$$\text{M.S.} = \frac{12.0}{12.0} - 1 = 0.0$$

The minimum effective weld throat is:

$$t_{eff} = [1.0^2 + (5/8)^2]^{1/2} = 1.18 \text{ inches}$$

Therefore, the weld shear stress across the weld throat is:

$$\sigma_v = \frac{V}{L \cdot t_{eff}}$$

$$= \frac{2800}{4x36x1.18} = 16.5 \text{ ksi}$$

The value of S_m for XM-19 stainless steel base material at 250°F is 32.3 ksi, this is less than the value of S_m for the weld material. Therefore, the allowable weld shear stress is:

$$F_v = 0.6 \times 32.3 = 19.4 \text{ ksi}$$

The margin of safety in the weld at the section of the smallest weld area is:

$$M.S. = \frac{19.4}{16.5} - 1 = +0.17$$

The bearing block is welded to the 1.5" thick pad plate all around with full penetration welds and a 1/4" outside cover fillet weld. The welds are loaded in bending, resulting from the offset, e, of the 10g longitudinal load point to the center of the pad plate, which is calculated as follows:

$$M = P \cdot e$$

$$= 2800 \cdot \left(\frac{4-1.5}{2}\right) = 3{,}500 \text{ in-kips}$$

The effective weld throat required, t_{eff}, is determined by treating the weld as a line, approximated by a rectangle for which the weld section modulus per unit thickness, S_w, is given by:

$$S_w = (bd + d^2/3)t_{eff}$$

$$= \left[(26.26 \text{x} 12.06) + \frac{12.06^2}{3}\right] t_{eff} = 365.2 \cdot t_{eff} \text{ in}^3$$

The weld stresses are given by:

$$f_b = M/S_w$$

$$= 3{,}500/365.2\ t_{eff} = 9.58/\ t_{eff} \text{ ksi}$$

The allowable stress, S_m, of the weld material is equal to or greater than the stronger base material (Type XM-19 stainless steel) at 250°F. Therefore, the allowable weld shear stress is equal to 0.6 x 32.3 = 19.4 ksi. The minimum weld throat required is:

$$t_{req'd} = 9.58/19.4 = 0.49 \text{ inches}$$

The minimum weld throat provided between the bearing block and 1.5" pad plate is 1.5". Therefore, the maximum weld stress is 32% of allowable.

In the event of excessive loading during normal transport, the weld between the shear key and the cask structural shell would fail in shear, leaving the cask body intact without impairing the ability of the package to meet the other requirements of 10CFR71 [2.1].

2.6 Normal Conditions of Transport

The NUHOMS®-MP187 transportation package, when subjected to normal conditions of transport as specified in 10CFR71.71 [2.1], meets the performance requirements specified in Subpart E of 10CFR71. This is demonstrated in the following subsections where each normal condition is addressed and shown to meet the applicable design criteria previously discussed in Section 2.1.2.

The cask normal condition load combination evaluation, presented in Section 2.6.13, is performed in accordance with Regulatory Guide 7.8 [2.3]. The load combination evaluation results demonstrate the structural adequacy of the package for the normal conditions of transport specified in 10CFR71.71 [2.1].

2.6.1 Heat

Section 71.71(c)(1) of the Part 71 regulations [2.1] requires that the package be subjected to an ambient temperature of 100°F in still air, and insolation. The thermal evaluation of the NUHOMS®-MP187 transportation package for the 100°F ambient normal heat condition is performed in Chapter 3. The structural evaluation of the NUHOMS®-MP187 transportation package for the resulting thermal distributions is presented in the following sections.

2.6.1.1 Summary of Pressures and Temperatures

The temperatures of the various package components due to the normal heat (100°F ambient) condition are calculated in Chapter 3. The maximum temperature in the cask due to the normal heat (100°F) condition is 302°F on the inner surface of the top cover plate at the cask centerline. A design temperature of 300°F is used for the cask components for the normal heat conditions.

The cask internal pressure under normal conditions is 22.5 psia (7.8 psig), as shown in Table 3.6-7. The maximum cask internal accident pressure resulting from the post fire steady state condition is 56.7 psia (42.0 psig), as shown in Table 3.6-7. A design internal pressure of 50 psig,

which bounds all normal and accident condition internal pressure, is conservatively assumed for the cask normal conditions. In addition, a hydro-test pressure of 75 psig, 150% of the design pressure, is evaluated.

2.6.1.2 Differential Thermal Expansion

Stresses in the package components result from both differential thermal expansion between package components and local thermal gradients in the components. Analyses are provided in this section to address differential thermal expansion between the various package components. In the cask transportation cradle, the cask is restrained only axially at the mid-plane by the shear key. At the neutron support rings a 0.10 inch radial gap provides adequate clearance to ensure that there is no binding force for the worst case of a hot cask in a cold skid. The cask's thermal growth is not restrained by the transportation skid components or any other operational configuration. The thermal stress analyses of the cask components are provided in Section 2.6.1.3.

2.6.1.2.1 Cask Differential Thermal Expansion

As discussed in Section 2.6.1.3.1, the maximum thermal growth of the cask in the longitudinal and radial directions are 0.470 inches and 0.123 inches, respectively. The free thermal growth of the DSC shell in the longitudinal direction, based on the DSC shell design temperature for the 100°F normal heat condition of 300°F, is:

$$\delta_t = \alpha L \Delta T$$

$$= (9.46 \times 10^{-6})(186.17)(300 - 70)$$

$$= 0.41 \text{ inches}$$

The free radial growth of the DSC shell due to the 300°F design temperature is calculated assuming the DSC shell behaves as a thin annular ring. The radial growth of the DSC shell is:

$$\delta_t = \alpha L \Delta T$$

$$= (9.46 \times 10^{-6})(33.625)(300 - 70)$$

$$= 0.07 \text{ inches}$$

The thermal growth of the DSC shell in the longitudinal and radial directions is less than the nominal longitudinal and radial gaps between the outer surface of the DSC and the inner surface of the cask of 0.83 inches and 0.405 inches, respectively. Therefore the cask and DSC will expand freely relative to one another under normal thermal conditions.

The effects of differential thermal expansion between the cask inner shell, structural shell, gamma shielding, neutron shielding and neutron shield jacket are addressed in Section 2.6.1.3.1.

2.6.1.3 Stress Calculations

The stresses in the cask structural components due to the normal thermal conditions specified in the regulations [2.1] are addressed in the following sections. The normal thermal stress analysis results are summarized in Table 2.6.1-1.

2.6.1.3.1 Cask Thermal Stress Analysis

The thermal analysis of the NUHOMS®-MP187 cask for the normal heat (100°F ambient) condition is performed in Chapter 3. The temperature of the cask body due to the normal heat condition varies between 172°F and 302°F. The maximum temperatures occur at the centerlines of the cask top cover plate and ram closure plate and also in the inner shell at the mid-length of the cask.

The thermal stress analysis of the cask for the normal heat conditions is performed using the axisymmetric finite element model described in Section 2.10.2.1.2. The analytical model consists of the cask inner and structural shell, top cover plate, top flange, lead shielding, ram closure plate, bottom end closure, neutron shielding material and neutron shield casing steel, modeled with axisymmetric 2-D quadrilateral solid elements.

Temperature dependent material properties, given in Section 2.3, are used for the cask structural and shielding materials. The temperature distribution in the cask due to the normal heat condition, shown in Figure 2.6.1-2 and Figure 2.6.1-3, is applied to the analytical model and a linear elastic static analysis is performed using the ANSYS program [2.6].

The maximum stress intensities due to the heat condition are reported in Table 2.6.1-1 at the 52 cask body stress points shown in Figure 2.6.1-1. The maximum general thermal stress intensity in the cask resulting from the heat thermal condition, neglecting stress concentrations, is 17.7 ksi in the inner shell (stress point 12). The allowable primary plus secondary stress intensity for normal conditions of transport is limited to $3.0S_m$. The design stress intensity, S_m, of the inner shell SA-240, Type 304 material at 300°F is 20.0 ksi. Therefore, the allowable primary plus secondary stress intensity is 60.0 ksi. The corresponding margin of safety in the inner shell is:

$$\text{M.S.} = (60.0/17.7) - 1$$

$$= +2.39$$

Therefore, the cask stresses meet the stress limits for the normal thermal heat condition.

The maximum cask peak stress intensity, occurring in the neutron shield panel near the NSP support ring (node 1141), is 19.9 ksi. The maximum radial expansion of the cask, occurring in lead shield panel at the mid-length of the cask (node 468), is 0.123 inches. The maximum axial expansion of the cask, occurring at the junction of the inner shell and top flange (node 775), is 0.470 inches.

FIGURE WITHHELD UNDER 10 CFR 2.390

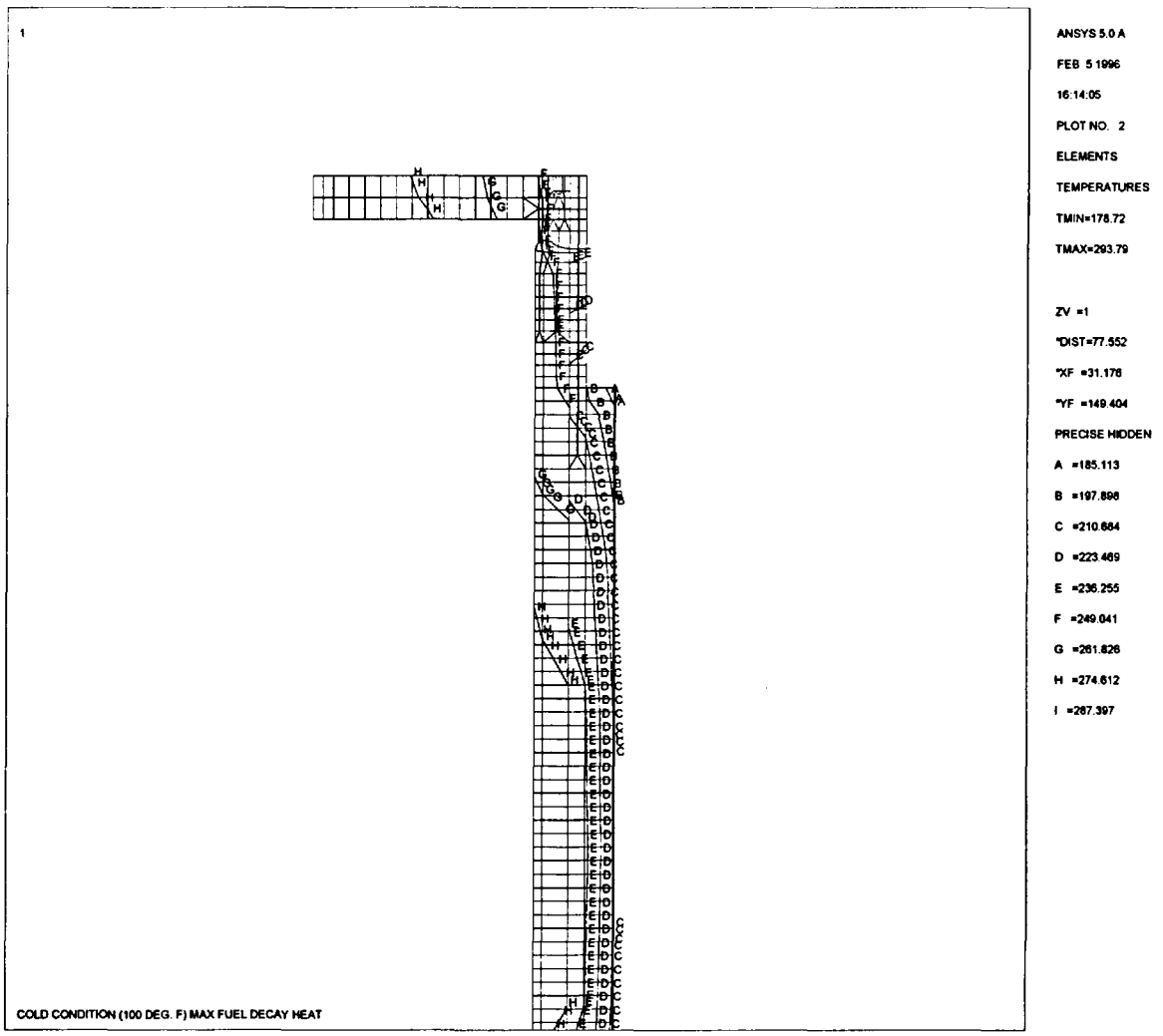

Figure 2.6.1-2
Cask Top End Temperature Distribution - Heat (100°F) Thermal Condition

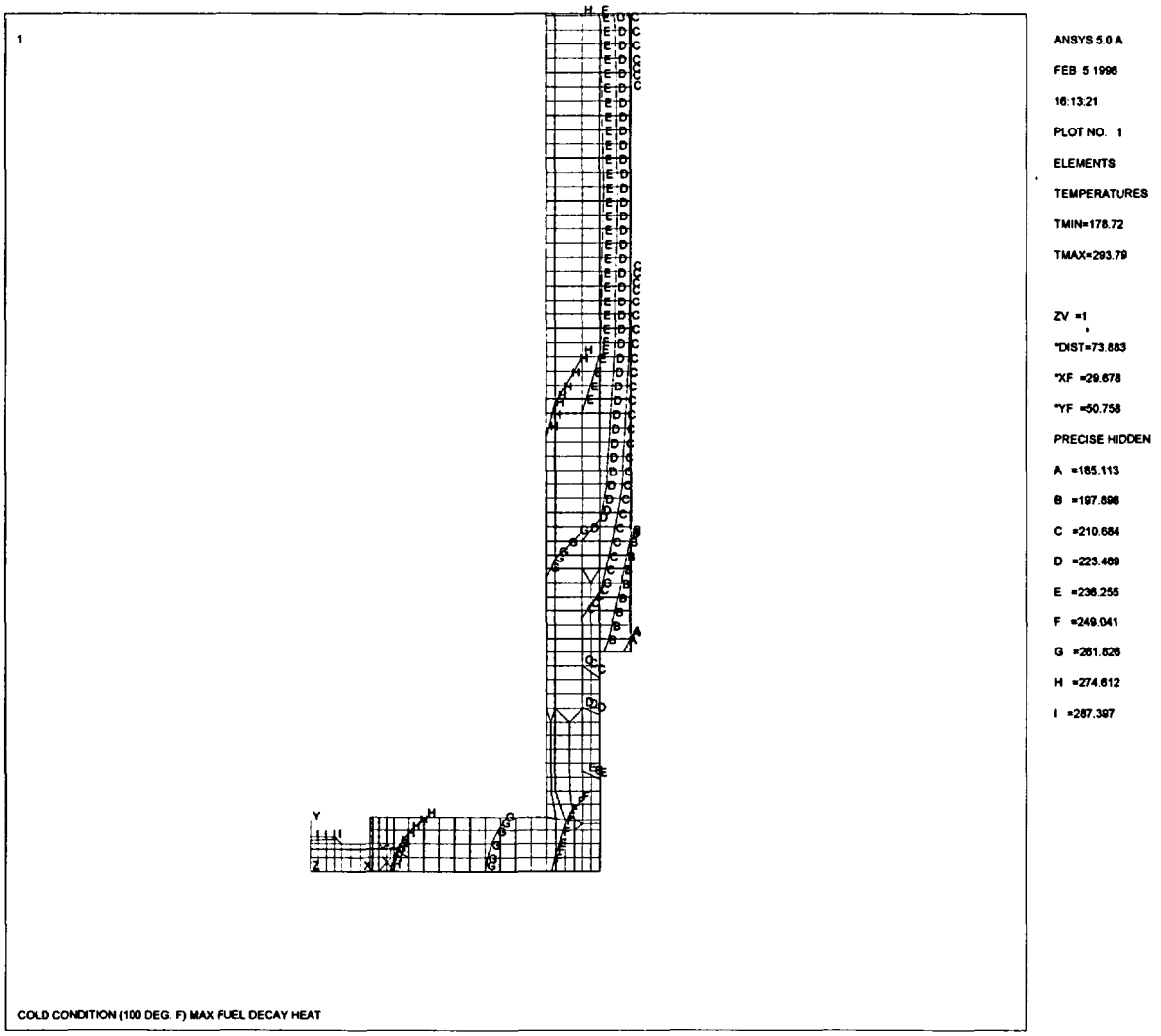

Figure 2.6.1-3
Cask Bottom End Temperature Distribution - Heat (100°F) Thermal Condition

Table 2.6.1-1
Cask Thermal Stress Summary - Heat (100°F) Thermal Condition

Cask Component	Stress Point	Node Number	Stress Components (ksi)				Principal Stresses (ksi)			SI (ksi)
			SX	SY	SZ	SXY	S1	S2	S3	
Top Closure	1	830	0.0	-2.5	-2.5	0.0	0.0	-2.5	-2.5	2.5
	2	886	0.0	-3.2	-3.1	0.0	0.0	-3.1	-3.2	3.1
	3	838	0.0	-1.8	-0.7	-0.1	0.0	-0.7	-1.8	1.9
	4	894	0.0	-2.4	-1.3	0.1	0.0	-1.3	-2.4	2.5
	5	846	0.9	0.3	4.6	0.1	4.6	0.9	0.3	4.3
	6	901	-0.1	-0.7	3.5	-0.2	3.5	-0.1	-0.8	4.3
Top Flange	7	815	-2.4	-3.6	3.2	-0.9	3.2	-1.9	-4.0	7.3
	8	817	-0.5	4.1	6.1	-0.2	6.1	4.1	-0.5	6.6
	9	772	-0.5	2.0	-3.9	0.3	2.1	-0.5	-3.9	6.0
	10	774	-2.7	-7.4	-6.8	-0.6	-2.6	-6.8	-7.5	4.9
Inner Shell	11	754	-0.4	5.9	-5.5	-0.2	5.9	-0.4	-5.5	11.4
	12	756	-0.9	-17.9	-11.9	-2.6	-0.5	-11.9	-18.3	17.7
	13	674	0.0	-7.0	0.2	0.1	0.2	0.0	-7.0	7.1
	14	675	0.0	-6.0	0.9	0.1	0.9	0.0	-6.0	6.9
	15	621	0.0	-6.9	-0.4	0.0	0.0	-0.4	-6.9	6.9
	16	622	0.0	-6.1	0.4	0.0	0.4	0.0	-6.1	6.5
	17	471	0.0	-7.0	-0.5	0.0	0.0	-0.5	-7.0	7.0
	18	472	0.0	-6.0	0.4	0.0	0.4	0.0	-6.0	6.4
	19	321	0.0	-7.0	-0.4	0.0	0.0	-0.4	-7.0	7.0
	20	322	0.0	-6.0	0.4	0.0	0.4	0.0	-6.0	6.4
	21	261	0.0	-6.5	0.0	0.0	0.0	0.0	-6.5	6.5
	22	262	0.0	-6.5	0.5	0.0	0.5	0.0	-6.5	7.0
	23	164	-0.3	-1.1	-1.8	0.1	-0.3	-1.1	-1.8	1.6
	24	166	-0.2	-10.6	-4.1	1.0	-0.1	-4.1	-10.7	10.5
	25	156	-3.3	-1.9	-1.3	-0.4	-1.3	-1.9	-3.4	2.1
	26	158	-4.6	-2.8	-0.9	1.1	-0.9	-2.3	-5.1	4.2
Outer Shell	27	780	2.0	8.2	3.9	-0.5	8.3	3.9	1.9	6.3
	28	782	0.8	-2.0	1.0	0.6	1.0	1.0	-2.2	3.2
	29	678	0.7	3.3	2.3	0.7	3.5	2.3	0.5	3.0
	30	680	2.9	3.9	4.7	0.5	4.7	4.1	2.7	2.0
	31	625	-0.1	1.5	0.0	0.0	1.5	0.0	-0.1	1.6
	32	626	-0.1	3.8	1.4	0.0	3.8	1.4	-0.1	3.8
	33	475	-0.1	1.9	0.5	0.0	1.9	0.5	-0.1	2.0
	34	476	-0.1	3.4	1.7	0.0	3.4	1.7	-0.1	3.5
	35	325	-0.1	1.1	-0.2	0.0	1.1	-0.1	-0.2	1.4
	36	326	-0.1	4.2	1.5	0.0	4.2	1.5	-0.1	4.2
	37	265	0.6	4.2	2.4	-0.7	4.3	2.4	0.5	3.9
	38	267	2.8	2.7	4.1	-0.5	4.1	3.3	2.2	1.9
	39	173	-2.1	1.3	1.5	0.6	1.5	1.4	-2.2	3.7
	40	175	0.1	3.3	3.3	-0.2	3.3	3.3	0.1	3.3
Bottom Forging	41	156	-1.9	-3.4	-1.3	0.1	-1.3	-1.9	-3.4	2.1
	42	66	-0.1	2.5	6.4	0.0	6.4	2.5	-0.1	6.6
	43	151	0.0	-4.8	-4.7	0.2	0.0	-4.7	-4.8	4.8
	44	61	0.0	1.5	3.7	0.1	3.7	1.5	0.0	3.7
	45	146	-0.2	-3.2	-9.0	0.6	-0.1	-3.3	-9.0	9.0
	46	96	-0.4	-1.2	-2.7	0.0	-0.4	-1.2	-2.7	2.3
Ram Closure Plate	47	37	-0.1	-0.3	0.3	0.0	0.3	-0.1	-0.3	0.5
	48	8	0.0	-0.1	0.1	0.0	0.1	0.0	-0.1	0.2
	49	48	0.5	0.1	0.5	-0.3	0.7	0.5	-0.1	0.8
	50	5	0.0	0.3	0.5	0.0	0.0	0.4	-0.5	0.4
	51	52	0.0	-3.0	-3.0	0.0	0.0	-3.0	-3.0	3.0
	52	1	0.0	-0.9	-0.9	0.0	0.0	-0.9	-0.9	1.0

2.6.1.3.2 Cask Internal Pressure Analysis

The design internal pressure load for the MP187 cask is 50 psig, as discussed in Section 2.6.1.1. The stresses in the cask resulting from the 50 psig internal design pressure load are determined using the axisymmetric finite element described in Section 2.10.2.1.2.

A 50 psig pressure load is applied to the inner surfaces of the ram closure plate, bottom end closure, inner shell, top flange and top closure plate and a linear elastic static analysis is performed using the ANSYS program [2.6].

The primary membrane, membrane plus bending, and primary plus secondary stress intensities due to the heat condition are reported at the 52 cask body stress points shown in Figure 2.6.1-1 in Table 2.6.1-2, Table 2.6.1-3, and Table 2.6.1-4, respectively. The maximum primary membrane stress intensity in the cask due to the 50 psig internal pressure load is 1.3 ksi in the inner shell. The allowable primary membrane at 300°F is 20.0 ksi for SA-240, Type 304. Therefore, the minimum margin of safety in the cask for primary membrane stress intensity is:

$$\text{M.S.} = (20.0/1.3) - 1$$
$$= +14.4$$

The maximum membrane plus bending stress intensity in the cask due to the 50 psig internal pressure load is 2.0 ksi in the top cover plate. The allowable primary membrane plus bending stress intensity at 300°F is 30.0 ksi for SA-240, Type 304. Therefore, the minimum margin of safety in the cask for membrane plus bending stress intensity is:

$$\text{M.S.} = (30.0/2.0) - 1$$
$$= 14.0$$

The hydro-test pressure of 75 psig at room temperature (100°F) is evaluated by factoring the design pressure stresses by 1.5. Therefore, the maximum primary membrane stress intensity in the cask due to the 75 psig hydro-test internal pressure load is 2.0 ksi in the inner shell. The

allowable primary membrane stress intensity at 100°F is 0.9 S_y or 27.0 ksi for SA-240 Type 304 material and the minimum margin of safety in the cask for primary membrane stress intensity is:

$$M.S. = (27.0/2.0) - 1$$
$$= +12.5$$

The maximum membrane plus bending stress intensity in the cask due to the 75 psig hydro-test internal pressure load is 3.0 ksi in the top cover plate. The allowable primary membrane plus bending stress intensity per NB-3226 is 1.35 S_y or 40.5 ksi for SA-240, Type 304 material at 100°F. The minimum margin of safety in the cask for membrane plus bending stress intensity is:

$$M.S. = (40.5/3.0) - 1$$
$$= +12.5$$

Table 2.6.1-2
Cask Membrane S.I. Summary - 50 psig Internal Pressure

Cask Component	Stress Point	Node Number	Stress Components (ksi)				Principal Stresses (ksi)			SI (ksi)
			SX	SY	SZ	SXY	S1	S2	S3	
Top Closure	1	830	0.0	0.0	0.0	0.0	0.0	0.0	0.0	0.0
	2	886	0.0	0.0	0.0	0.0	0.0	0.0	0.0	0.0
	3	838	0.0	0.0	0.0	0.1	0.0	0.0	-0.1	0.1
	4	894	0.0	0.0	0.0	0.1	0.0	0.0	-0.1	0.1
	5	846	-0.1	0.1	0.2	0.2	0.2	0.2	-0.2	0.4
	6	901	-0.1	0.1	0.2	0.2	0.2	0.2	-0.2	0.4
Top Flange	7	815	0.0	0.0	0.0	0.0	0.0	0.0	0.0	0.0
	8	817	0.0	0.0	0.0	0.0	0.0	0.0	0.0	0.0
	9	772	-0.2	0.3	0.3	0.0	0.3	0.3	-0.2	0.5
	10	774	-0.2	0.3	0.3	0.0	0.3	0.3	-0.2	0.5
Inner Shell	11	754	0.0	0.4	0.8	0.0	0.8	0.4	0.0	0.8
	12	756	0.0	0.4	0.8	0.0	0.8	0.4	0.0	0.8
	13	674	0.0	0.5	1.3	0.0	1.3	0.5	0.0	1.3
	14	675	0.0	0.5	1.3	0.0	1.3	0.5	0.0	1.3
	15	621	0.0	0.5	1.3	0.0	1.3	0.5	0.0	1.3
	16	622	0.0	0.5	1.3	0.0	1.3	0.5	0.0	1.3
	17	471	0.0	0.5	1.3	0.0	1.3	0.5	0.0	1.3
	18	472	0.0	0.5	1.3	0.0	1.3	0.5	0.0	1.3
	19	321	0.0	0.5	1.3	0.0	1.3	0.5	0.0	1.3
	20	322	0.0	0.5	1.3	0.0	1.3	0.5	0.0	1.3
	21	261	0.0	0.5	1.3	0.0	1.3	0.5	0.0	1.3
	22	262	0.0	0.5	1.3	0.0	1.3	0.5	0.0	1.3
	23	164	-0.1	0.4	-0.1	0.1	0.4	-0.1	-0.1	0.5
	24	166	-0.1	0.4	-0.1	0.1	0.4	-0.1	-0.1	0.5
	25	156	0.2	0.1	-0.1	0.1	0.3	0.1	-0.1	0.4
	26	158	0.2	0.1	-0.1	0.1	0.3	0.1	-0.1	0.4
Outer Shell	27	780	-0.1	0.1	0.2	0.0	0.2	0.1	-0.1	0.3
	28	782	-0.1	0.1	0.2	0.0	0.2	0.1	-0.1	0.3
	29	678	0.0	0.1	0.0	0.0	0.1	0.0	0.0	0.1
	30	680	0.0	0.1	0.0	0.0	0.1	0.0	0.0	0.1
	31	625	0.0	0.1	0.0	0.0	0.1	0.0	0.0	0.1
	32	626	0.0	0.1	0.0	0.0	0.1	0.0	0.0	0.1
	33	475	0.0	0.1	0.0	0.0	0.1	0.0	0.0	0.1
	34	476	0.0	0.1	0.0	0.0	0.1	0.0	0.0	0.1
	35	325	0.0	0.1	0.0	0.0	0.1	0.0	0.0	0.1
	36	326	0.0	0.1	0.0	0.0	0.1	0.0	0.0	0.1
	37	265	0.0	0.1	0.0	0.0	0.1	0.0	0.0	0.1
	38	267	0.0	0.1	0.0	0.0	0.1	0.0	0.0	0.1
	39	173	0.1	0.0	-0.1	0.0	0.1	0.0	-0.1	0.3
	40	175	0.1	0.0	-0.1	0.0	0.1	0.0	-0.1	0.3
Bottom Forging	41	156	0.3	0.0	0.2	0.0	0.3	0.2	0.0	0.2
	42	66	0.3	0.0	0.2	0.0	0.3	0.2	0.0	0.2
	43	151	0.0	0.0	0.1	-0.1	0.1	0.1	-0.1	0.2
	44	61	0.0	0.0	0.1	-0.1	0.1	0.1	-0.1	0.2
	45	146	0.0	-0.1	-0.3	-0.1	0.0	-0.2	-0.3	0.3
	46	96	0.0	-0.1	-0.3	-0.1	0.0	-0.2	-0.3	0.3
Ram Closure Plate	47	37	-0.1	0.0	0.0	-0.1	0.0	0.0	-0.1	0.1
	48	8	-0.1	0.0	0.0	-0.1	0.0	0.0	-0.1	0.1
	49	48	0.0	0.0	0.0	0.0	0.0	0.0	-0.1	0.1
	50	5	0.0	0.0	0.0	0.0	0.0	0.0	-0.1	0.1
	51	52	0.0	0.0	0.0	0.0	0.0	0.0	0.0	0.0
	52	1	0.0	0.0	0.0	0.0	0.0	0.0	0.0	0.0

Table 2.6.1-3
Cask Membrane Plus Bending S.I. Summary - 50 psig Internal Pressure

Cask Component	Stress Point	Node Number	Stress Components (ksi)				Principal Stresses (ksi)			SI (ksi)
			SX	SY	SZ	SXY	S1	S2	S3	
Top Closure	1	830	0.0	-2.1	-2.1	0.0	0.0	-2.1	-2.1	2.0
	2	886	0.0	2.0	2.0	0.0	2.0	2.0	0.0	2.0
	3	838	0.0	-1.6	-1.8	0.1	0.0	-1.6	-1.8	1.8
	4	894	0.0	1.6	1.7	0.1	1.7	1.6	0.0	1.8
	5	846	-0.1	-0.3	-0.6	0.2	-0.1	-0.4	-0.6	0.6
	6	901	0.0	0.4	1.1	0.2	1.1	0.5	-0.1	1.2
Top Flange	7	815	0.1	0.1	0.0	0.0	0.1	0.0	0.0	0.0
	8	817	0.0	0.0	0.0	0.0	0.0	0.0	0.0	0.1
	9	772	-0.1	0.7	0.5	0.0	0.7	0.5	-0.1	0.8
	10	774	-0.3	0.0	0.2	0.0	0.2	0.0	-0.3	0.5
Inner Shell	11	754	0.0	0.4	0.8	0.0	0.8	0.4	0.0	0.8
	12	756	0.0	0.4	0.7	0.0	0.7	0.4	0.0	0.8
	13	674	0.0	0.5	1.3	0.0	1.3	0.5	0.0	1.4
	14	675	0.0	0.5	1.3	0.0	1.3	0.5	0.0	1.3
	15	621	0.0	0.5	1.3	0.0	1.3	0.5	0.0	1.4
	16	622	0.0	0.5	1.3	0.0	1.3	0.5	0.0	1.3
	17	471	0.0	0.5	1.3	0.0	1.3	0.5	0.0	1.4
	18	472	0.0	0.5	1.3	0.0	1.3	0.5	0.0	1.3
	19	321	0.0	0.5	1.3	0.0	1.3	0.5	0.0	1.4
	20	322	0.0	0.5	1.3	0.0	1.3	0.5	0.0	1.3
	21	261	-0.1	0.5	1.3	0.0	1.3	0.5	-0.1	1.4
	22	262	0.0	0.4	1.3	0.0	1.3	0.4	0.0	1.3
	23	164	0.0	1.6	0.3	0.1	1.6	0.3	0.0	1.7
	24	166	-0.1	-0.8	-0.5	0.1	-0.1	-0.5	-0.8	0.7
	25	156	0.5	0.9	0.1	0.1	0.9	0.4	0.1	0.8
	26	158	0.0	-0.6	-0.4	0.1	0.0	-0.4	-0.6	0.6
Outer Shell	27	780	-0.2	-0.4	0.1	0.0	0.1	-0.2	-0.4	0.5
	28	782	-0.1	0.6	0.4	0.0	0.6	0.4	-0.1	0.7
	29	678	0.0	0.1	0.0	0.0	0.1	0.0	0.0	0.1
	30	680	0.0	0.0	0.0	0.0	0.0	0.0	0.0	0.0
	31	625	0.0	0.1	0.0	0.0	0.1	0.0	0.0	0.1
	32	626	0.0	0.1	0.0	0.0	0.1	0.0	0.0	0.1
	33	475	0.0	0.1	0.0	0.0	0.1	0.0	0.0	0.1
	34	476	0.0	0.1	0.0	0.0	0.1	0.0	0.0	0.1
	35	325	0.0	0.1	0.0	0.0	0.1	0.0	0.0	0.1
	36	326	0.0	0.1	0.0	0.0	0.1	0.0	0.0	0.1
	37	265	0.0	0.0	0.0	0.0	0.0	0.0	0.0	0.0
	38	267	0.0	0.1	0.0	0.0	0.1	0.0	0.0	0.1
	39	173	0.5	0.7	0.1	0.0	0.7	0.5	0.1	0.6
	40	175	0.1	-0.6	-0.3	0.0	0.1	-0.3	-0.6	0.7
Bottom Forging	41	156	1.0	0.3	0.0	0.0	1.0	0.3	0.0	1.0
	42	66	0.0	-0.2	0.3	0.0	0.3	0.0	-0.2	0.5
	43	151	0.0	-0.1	-0.6	-0.1	0.0	-0.2	-0.6	0.6
	44	61	0.0	0.2	0.8	-0.1	0.8	0.2	0.0	0.8
	45	146	0.0	-0.3	-1.1	-0.1	0.0	-0.3	-1.1	1.1
	46	96	0.0	0.0	0.5	-0.1	0.5	0.1	-0.1	0.5
Ram Closure Plate	47	37	-0.1	-0.2	-0.2	-0.1	-0.1	-0.2	-0.2	0.1
	48	8	0.0	0.2	0.3	-0.1	0.3	0.2	0.0	0.3
	49	48	-0.1	-0.3	-0.3	0.0	-0.1	-0.3	-0.3	0.2
	50	5	0.0	0.3	0.3	0.0	0.3	0.3	0.0	0.3
	52	1	0.0	0.3	0.3	0.0	0.3	0.3	0.0	0.3

Table 2.6.1-4
Cask Primary Plus Secondary S.I. Summary - 50 psig Internal Pressure

Cask Component	Stress Point	Node Number	Stress Components (ksi)				Principal Stresses (ksi)			SI (ksi)
			SX	SY	SZ	SXY	S1	S2	S3	
Top Closure	1	830	0.0	-2.1	-2.1	0.0	0.0	-2.1	-2.1	2.0
	2	886	0.0	2.0	2.0	0.0	2.0	2.0	0.0	2.0
	3	838	0.0	-1.6	-1.8	0.0	0.0	-1.6	-1.8	1.8
	4	894	0.0	1.6	1.8	0.0	1.8	1.6	0.0	1.8
	5	846	-0.1	-0.4	-0.6	0.2	0.0	-0.5	-0.6	0.6
	6	901	0.0	0.4	1.1	0.1	1.1	0.4	-0.1	1.1
Top Flange	7	815	0.1	0.0	0.0	0.0	0.1	0.0	0.0	0.0
	8	817	0.0	-0.1	0.0	0.0	0.0	0.0	-0.1	0.1
	9	772	-0.1	0.7	0.5	0.0	0.7	0.5	-0.1	0.8
	10	774	-0.3	-0.1	0.2	0.0	0.2	-0.1	-0.3	0.5
Inner Shell	11	754	0.0	0.4	0.8	0.0	0.8	0.5	0.0	0.8
	12	756	0.0	0.4	0.7	0.0	0.7	0.4	0.0	0.8
	13	674	0.0	0.5	1.3	0.0	1.3	0.5	0.0	1.4
	14	675	0.0	0.5	1.3	0.0	1.3	0.5	0.0	1.3
	15	621	0.0	0.5	1.3	0.0	1.3	0.5	0.0	1.4
	16	622	0.0	0.5	1.3	0.0	1.3	0.5	0.0	1.3
	17	471	0.0	0.5	1.3	0.0	1.3	0.5	0.0	1.4
	18	472	0.0	0.5	1.3	0.0	1.3	0.5	0.0	1.3
	19	321	0.0	0.5	1.3	0.0	1.3	0.5	0.0	1.4
	20	322	0.0	0.5	1.3	0.0	1.3	0.5	0.0	1.3
	21	261	-0.1	0.5	1.3	0.0	1.3	0.5	-0.1	1.4
	22	262	0.0	0.4	1.3	0.0	1.3	0.4	0.0	1.3
	23	164	0.0	1.6	0.3	0.0	1.6	0.3	0.0	1.6
	24	166	-0.1	-0.8	-0.5	0.3	0.0	-0.5	-1.0	1.0
	25	156	0.5	1.0	0.1	-0.1	1.0	0.4	0.1	0.9
	26	158	0.0	-0.5	-0.4	0.2	0.1	-0.4	-0.6	0.7
Outer Shell	27	780	-0.2	-0.4	0.1	0.0	0.1	-0.2	-0.4	0.5
	28	782	-0.1	0.6	0.4	0.0	0.6	0.4	-0.1	0.7
	29	678	0.0	0.1	0.0	0.0	0.1	0.0	0.0	0.1
	30	680	0.0	0.0	0.0	0.0	0.0	0.0	0.0	0.0
	31	625	0.0	0.1	0.0	0.0	0.1	0.0	0.0	0.1
	32	626	0.0	0.1	0.0	0.0	0.1	0.0	0.0	0.1
	33	475	0.0	0.1	0.0	0.0	0.1	0.0	0.0	0.1
	34	476	0.0	0.1	0.0	0.0	0.1	0.0	0.0	0.1
	35	325	0.0	0.1	0.0	0.0	0.1	0.0	0.0	0.1
	36	326	0.0	0.1	0.0	0.0	0.1	0.0	0.0	0.1
	37	265	0.0	0.0	0.0	0.0	0.0	0.0	0.0	0.0
	38	267	0.0	0.1	0.0	0.0	0.1	0.0	0.0	0.1
	39	173	0.5	0.5	0.1	0.3	0.8	0.2	0.1	0.7
	40	175	0.1	-0.6	-0.3	0.0	0.1	-0.3	-0.6	0.7
Bottom Forging	41	156	1.0	0.4	0.1	0.0	1.0	0.4	0.1	0.9
	42	66	0.0	-0.2	0.4	0.0	0.4	0.0	-0.2	0.6
	43	151	0.0	-0.1	-0.6	0.0	0.0	-0.2	-0.6	0.5
	44	61	0.0	0.2	0.8	0.0	0.8	0.2	0.0	0.8
	45	146	0.0	-0.3	-1.1	0.0	0.0	-0.3	-1.1	1.1
	46	96	0.0	0.0	0.5	-0.1	0.5	0.1	-0.1	0.5
Ram Closure Plate	47	37	-0.1	-0.2	-0.2	-0.1	-0.1	-0.2	-0.3	0.2
	48	8	0.0	0.2	0.3	0.0	0.3	0.2	0.0	0.3
	49	48	-0.1	-0.3	-0.3	-0.1	-0.1	-0.3	-0.4	0.3
	50	5	0.0	0.3	0.3	0.0	0.3	0.3	0.0	0.3
	51	52	0.0	-0.3	-0.4	0.0	0.0	-0.3	-0.4	0.3
	52	1	0.0	0.3	0.3	0.0	0.3	0.3	0.0	0.3

2.6.1.3.3 Cask Top Closure Bolt Normal Thermal Stresses

The stresses in the cask top closure bolts due to the normal heat (100°F) condition are calculated in Appendix 2.10.5.

2.6.1.3.4 Neutron Shield Internal Pressure Analysis

The cask neutron shield jacket is designed to retain pressure during normal conditions of transport. This feature prevents the free hydrogen atoms released from the neutron absorbing material at elevated temperatures from escaping into the atmosphere. Thus, upon cooling, the hydrogen atoms are adsorbed by the neutron shielding material. As shown in Chapter 3, the maximum pressure inside the neutron shield during normal operating conditions is approximately 21 psig. The hoop stress, σ_h, in the NSP jacket due to a 21 psig internal pressure is:

$$\sigma_h = pR/t$$
$$= (21)(45.9375)/(0.1875)$$
$$= 5{,}145 \text{ psi}$$

Conservatively assuming no strain hardening of the NSP jacket material, the lower bound pressure load which will cause the NSP jacket to rupture is conservatively assumed equal to the pressure load at which the hoop stress in the NSP jacket reaches the minimum material yield strength. The minimum yield strength of the NSP jacket mild stainless steel material at 300°F is 22,500 psi. Therefore, the lower bound rupture pressure of the NSP jacket, p_o, is:

$$p_o = (21)(22{,}500/5{,}145)$$
$$= 92 \text{ psig}$$

In the unlikely event that excessive pressure builds up inside the neutron shield, the neutron shield is equipped with rupture discs. Rupture discs may be commercially available discs and holders installed directly into threaded holes in the NSP support ring(s). A minimum of four one-inch diameter discs with a nominal rated burst pressure of 75 psig will be installed in the

NSP bottom support ring. As an alternate, the rupture discs may be thin, flat plates, installed as closure plugs in up to twelve of the neutron shield pour holes. These alternate rupture discs consist of 0.0355 inch thick by 2.0 inch diameter stainless steel discs which are welded around their circumference to the NSP support rings. The alternate rupture discs are designed to fail at a pressure well in excess of pressures experienced during normal operation but less than the lower bound rupture pressure of the NSP jacket.

A limit analysis is performed to determine the ultimate capacity of the rupture discs. Conservatively assuming elastic perfectly plastic material properties for the stainless steel rupture discs (i.e., no strain hardening), the ultimate moment capacity in pure bending, M_o, is equal to 150% of the moment at which yielding initiates on the extreme fibers [2.10], or in terms of the yield strength of the material, σ_y, the rupture stress, σ_o, is:

$$\sigma_o = 1.5\sigma_y$$

The minimum pressure at which the ultimate moment capacity of the rupture discs is reached is calculated assuming the rupture discs behave as simply supported circular plates under uniform pressure loading. The ultimate bending stress in the rupture disc is:

$$\sigma_o = 6M/t^2 \quad \text{([2.7], Table 24)}$$

where:

σ_o	=	$1.5\sigma_y$
σ_y	=	22,500 psi, Published minimum yield strength of ASTM A-240, Type 304 stainless steel at 300°F.
t	=	0.0355 in., Plate thickness
M_o	=	Bending moment of plate
	=	$K_M q a^2$ ([2.7], Table 24, case 10a)
K_M	=	0.20625 for $r_o = 0$ ([2.7], Table 24, case 10a)
q	=	pressure load
a	=	1.0 in., Radius of rupture disc

Therefore, the minimum pressure at which the yield capacity of the rupture discs are reached is:

$$q = (1.5 \times 22{,}500)(0.0355)^2/[6(0.20625)(1.0)^2]$$

$$= 34 \text{ psig}$$

The probable maximum pressure at which failure of the rupture discs will occur is calculated for a fixed edge circular plate under uniform pressure loading using the expression developed above, where K_M equals -0.125 for $r_o = 0$ ([2.7], Table 24, case 10b). The failure mechanism will also be affected by the actual yield strength of the material which is normally greater than the code minimum yield strength. The maximum permissible rupture disc yield strength to maintain the neutron shield integrity during normal operating condition is:

$$S_y(300°\,F) = \frac{92}{\left[(1.5)(.0355)^2 / [6(0.125)(1.0)^2]\right]}$$

$$= 37 \text{ ksi}$$

$$S_y(70°\,F) = \frac{30}{22.5} x37 = 49 \text{ ksi} \qquad \text{(63\% above the minimum } S_y\text{)}$$

Therefore, the rupture discs will maintain pressure within the neutron shield during normal operating conditions and prevent rupture of the NSP jacket under excessive pressure loading. In the event of the postulated 30 minute fire the rupture discs are expected to fail. The consequences of the loss of hydrogen from the neutron shielding material due to the fire are addressed in Chapters 3 & 5. The structural analysis of the cask for the postulated fire condition is presented in Section 2.7.3.

2.6.1.4 Comparison with Allowable Stresses

The controlling normal conditions of transport load combination for all of the cask body and DSC components is:

Normal Thermal + 1 foot Drop

The controlling normal condition load combination stress results for the cask and DSCs are presented in Section 2.6.13. The load combination results demonstrate that the stresses in all of the package structural components meet the applicable stress acceptance criteria for all normal condition load combinations. Furthermore, all stresses are below the material yield strengths. Therefore, no permanent deformation of the package structural components will result from the normal conditions of transport.

The controlling load combination in the bolts for normal conditions of transport is Normal Thermal (100°F) + Internal Pressure. Analysis of bolts is provided in Appendix 2.10.5. This analysis demonstrates that bolt stresses are maintained within allowable stress limits.

Therefore, the top closure bolts are adequate for the normal conditions of transport specified in 10CFR71 [2.1].

2.6.2 Cold

Section 71.71(c)(2) of the Part 71 regulations [2.1] requires that the package be subjected to an ambient temperature of -40°F in still air and shade. This temperature in conjunction with no fuel decay heat will result in a minimum temperature throughout the package of -40°F. The materials of construction for the package are not adversely affected by the -40°F condition.

2.6.2.1 Summary of Pressures and Temperatures

As shown in Chapter 3, the temperature of the cask for the normal cold (-40°F ambient air) condition ranges from 49°F to 184°F. A design temperature of 150°F is used for the cask components for normal cold conditions. A design internal pressure of 50 psig is conservatively used for the normal cold conditions.

2.6.2.2 Differential Thermal Expansion

Differential thermal expansion between the cask and DSC shell is controlled by the 100°F normal heat condition discussed in Section 2.6.1.2.

2.6.2.2.1 Stress Calculations

2.6.2.2.2 Cask Top Closure Bolt Normal Thermal Stresses

The stresses in the cask top closure bolts due to the normal cold (-40°F) condition are calculated in Appendix 2.10.5.

2.6.2.2.3 Cask Thermal Stress Analysis

The normal cold condition is defined as an ambient temperature of -40°F ambient air with no solar insolation and no fuel decay heat load. Under these conditions, the temperature throughout the cask will be -40°F. Per Regulatory Guide 7.8 [2.3] the most limiting combination of initial conditions must be considered in the analysis. For the normal cold condition, two thermal conditions are considered:

1. Maximum fuel decay heat load, -40°F ambient air
2. No fuel decay heat load, -40°F ambient air.

The cask normal cold thermal condition for -40°F ambient air with no solar and maximum fuel decay heat results in thermal gradients throughout the cask body which result in induced stresses. The -40°F case with no fuel decay heat results in a cask at a uniform -40°F temperature with no thermal gradients, and therefore, no induced thermal stresses. The thermal analysis of the NUHOMS®-MP187 cask for the normal cold condition is performed in Chapter 3. The temperature of the cask body due to the normal cold condition plus fuel decay heat varies between 49°F and 184°F. The maximum temperatures occur at the centerlines of the cask top closure plate and ram closure plate and also in the inner shell at the mid-length of the cask.

The thermal stress analysis of the cask for the normal cold conditions is performed using the axisymmetric finite element model described in Section 2.10.2.1.2. The temperature distribution in the cask due to the normal cold condition, shown in Figure 2.6.2-1 and Figure 2.6.2-2, is

applied to the analytical model and a linear elastic static analysis is performed using the ANSYS program [2.6].

The maximum stress intensities in the cask structural components resulting from normal cold (-40°F ambient) thermal condition at the 52 stress points shown in Figure 2.6.1-1 are reported in Table 2.6.2-1. The maximum thermal stress in the cask is 19.1 ksi at the junction of the inner shell and top flange (stress point 12). Thermal stresses are self-relieving in nature, and consequently are classified as secondary stresses. The allowable primary plus secondary stress intensity for normal conditions of transport is limited to $3.0S_m$. The design stress intensity, S_m, of SA-240, Type 304 at 300°F is 20.0 ksi. Therefore, the allowable primary plus secondary stress intensity is 60.0 ksi. The minimum margin of safety in the cask body due to the cold thermal condition is:

$$\begin{aligned} M.S. &= (60.0/19.1) - 1 \\ &= +2.14 \end{aligned}$$

The maximum cask peak stress intensity, occurring at the junction of the neutron shield panel and NSP support rings (node 1141), is 21.7 ksi. The maximum radial expansion of the cask, occurring in the lead shield panel at the mid-length of the cask (node 468), is 0.047 inches. The maximum axial expansion of the cask, occurring at the junction of the inner shell and top flange (node 775), is 0.169 inches.

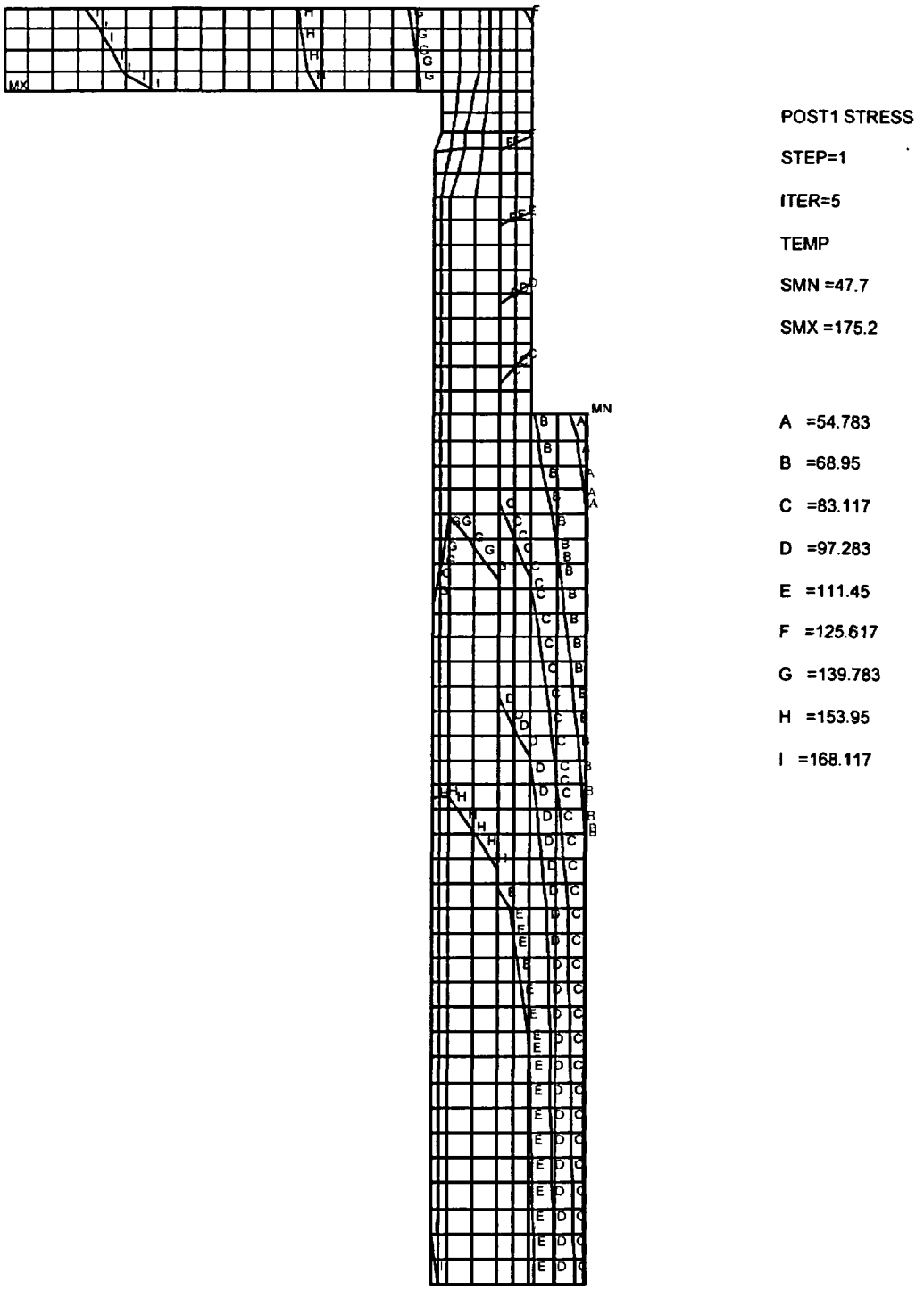

Figure 2.6.2-1
Cask Top End Temperature Distribution - Cold (-40°F) Thermal Condition

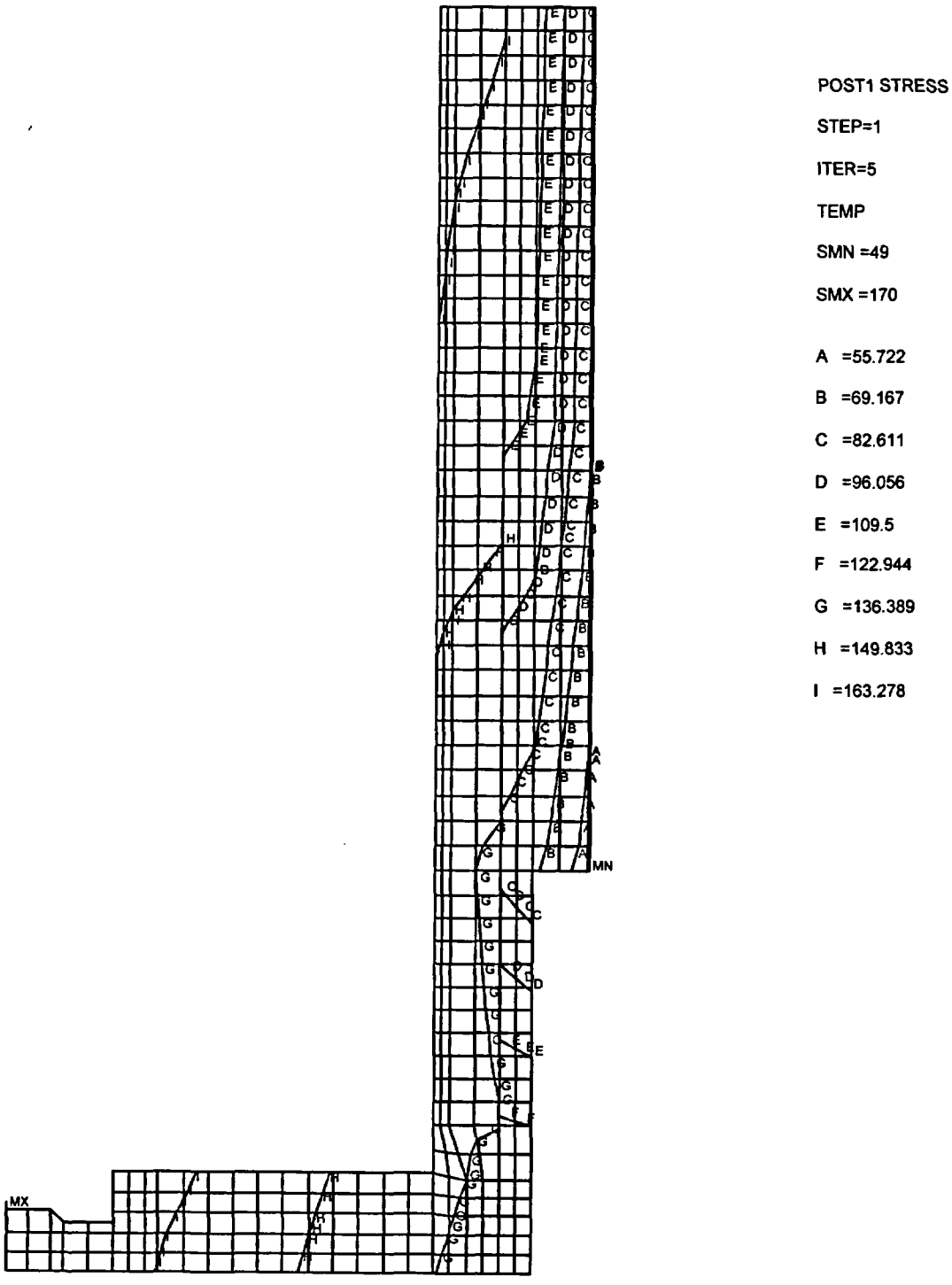

Figure 2.6.2-2
Cask Bottom End Temperature Distribution - Cold (-40°F) Thermal Condition

Table 2.6.2-1
Cask Thermal Stress Summary - Cold (-40°F) Thermal Condition

Cask Component	Stress Point	Node Number	Stress Components (ksi)				Principal Stresses (ksi)			SI (ksi)
			SX	SY	SZ	SXY	S1	S2	S3	
Top Closure	1	830	0.0	-2.6	-2.6	0.0	0.0	-2.6	-2.6	2.6
	2	886	0.0	-3.3	-3.3	0.0	0.0	-3.3	-3.3	3.2
	3	838	0.0	-1.9	-0.7	-0.1	0.0	-0.7	-1.9	1.9
	4	894	0.0	-2.5	-1.3	0.1	0.0	-1.3	-2.5	2.5
	5	846	1.0	0.3	4.8	0.1	4.8	1.0	0.3	4.5
	6	901	-0.1	-0.7	3.6	-0.2	3.6	-0.1	-0.8	4.4
Top Flange	7	815	-2.5	-3.6	3.4	-1.0	3.4	-2.0	-4.2	7.5
	8	817	-0.6	4.2	6.3	-0.2	6.3	4.2	-0.6	6.9
	9	772	-0.4	1.7	-4.0	0.4	1.7	-0.5	-4.0	5.8
	10	774	-2.4	-7.5	-6.7	-0.8	-2.3	-6.7	-7.6	5.3
Inner Shell	11	754	-0.4	5.9	-5.8	-0.2	5.9	-0.4	-5.8	11.7
	12	756	-0.9	-19.3	-12.5	-2.8	-0.5	-12.5	-19.7	19.1
	13	674	0.0	-7.8	0.2	0.1	0.2	0.0	-7.8	7.9
	14	675	0.0	-6.7	0.9	0.1	0.9	0.0	-6.7	7.6
	15	621	0.0	-7.6	-0.4	0.0	0.0	-0.4	-7.6	7.6
	16	622	0.0	-6.9	0.4	0.0	0.4	0.0	-6.9	7.2
	17	471	0.0	-7.8	-0.5	0.0	0.0	-0.5	-7.8	7.8
	18	472	0.0	-6.7	0.4	0.0	0.4	0.0	-6.7	7.1
	19	321	0.0	-7.7	-0.4	0.0	0.0	-0.4	-7.7	7.7
	20	322	0.0	-6.8	0.4	0.0	0.4	0.0	-6.8	7.2
	21	261	0.0	-7.3	0.0	0.0	0.0	0.0	-7.3	7.3
	22	262	0.0	-7.2	0.5	0.0	0.5	0.0	-7.2	7.7
	23	164	-0.3	-1.3	-2.2	0.1	-0.3	-1.3	-2.2	1.9
	24	166	-0.3	-11.7	-4.7	1.2	-0.1	-4.7	-11.9	11.7
	25	156	-3.5	-2.1	-1.6	-0.4	-1.6	-2.0	-3.6	2.1
	26	158	-5.0	-3.0	-1.2	1.2	-1.2	-2.4	-5.6	4.3
Outer Shell	27	780	1.5	7.8	2.0	-0.5	7.8	2.0	1.5	6.3
	28	782	0.6	-1.9	-0.5	0.4	0.7	-0.5	-1.9	2.6
	29	678	0.7	3.7	1.5	0.7	3.9	1.5	0.5	3.4
	30	680	3.1	3.1	3.7	0.5	3.7	3.6	2.5	1.2
	31	625	-0.1	1.4	-1.0	0.0	1.4	-0.1	-1.0	2.4
	32	626	-0.1	3.8	0.6	0.0	3.8	0.6	-0.1	3.8
	33	475	-0.1	1.8	-0.4	0.0	1.8	-0.1	-0.4	2.1
	34	476	0.0	3.4	1.0	0.0	3.4	1.0	0.0	3.5
	35	325	-0.1	1.1	-1.0	0.0	1.1	-0.1	-1.0	2.2
	36	326	-0.1	4.1	0.8	0.0	4.1	0.8	-0.1	4.1
	37	265	0.7	4.3	1.9	-0.7	4.5	1.9	0.5	3.9
	38	267	3.0	2.6	3.8	-0.6	3.8	3.4	2.2	1.6
	39	173	-2.7	1.1	1.1	0.3	1.1	1.1	-2.7	3.8
	40	175	0.0	4.0	3.3	-0.2	4.0	3.3	0.0	4.0
Bottom Forging	41	156	-2.0	-3.6	-1.6	0.1	-1.6	-2.0	-3.6	2.1
	42	66	-0.1	2.8	6.8	0.0	6.8	2.8	-0.1	6.9
	43	151	0.0	-5.1	-5.1	0.2	0.0	-5.1	-5.1	5.2
	44	61	0.0	1.7	4.0	0.1	4.0	1.8	0.0	4.0
	45	146	-0.1	-3.4	-9.6	0.6	0.0	-3.5	-9.6	9.7
	46	96	-0.4	-1.2	-2.6	0.0	-0.4	-1.2	-2.6	2.3
Ram Closure Plate	47	37	-0.1	-0.2	0.3	0.0	0.3	-0.1	-0.2	0.5
	48	8	0.0	-0.1	0.0	0.0	0.0	0.0	-0.1	0.1
	49	48	0.7	0.2	0.8	-0.5	0.9	0.8	-0.1	1.0
	50	5	-0.1	-0.4	-0.6	0.1	0.0	-0.4	-0.6	0.5
	51	52	0.0	-4.2	-4.2	0.0	0.0	-4.2	-4.2	4.2
	52	1	0.1	-1.1	-1.1	0.0	0.1	-1.1	-1.1	1.2

2.6.3 Pressure

The NUHOMS®-MP187 cask provides the primary containment for the spent fuel for transportation conditions. The cask containment boundary consists of the inner shell, bottom plate, ram closure plate, top (lid) end forging ring, top closure plate (lid), and inner-most O-ring seals for each of the lids with closure bolts, and vent and drain port closure bolts. The DSC shell is assumed to provide no containment boundary for transportation conditions. Therefore, only the cask need be analyzed for pressure loads.

2.6.3.1 Reduced External Pressure

Section 71.71(c)(3) of the Part 71 regulations [2.1] requires that the cask be subjected to a reduced external pressure of 3.5 psia. The internal pressure of the NUHOMS®-MP187 cask is assumed to be one atmosphere (14.7 psia). Therefore, the reduced external pressure condition will result in a net internal pressure of 11.2 psig on the cask inner surface. A bounding design internal pressure of 50 psig is used for the cask evaluation. The stresses in the cask due to the 50 psig internal pressure are summarized in Section 2.6.1.3.2.

2.6.3.2 Increased External Pressure

Section 71.71(c)(4) of the Part 71 regulations [2.1] requires that the cask be subjected to an increased external pressure of 20 psia. The internal pressure of the NUHOMS®-MP187 cask is conservatively assumed to be one atmosphere (14.7 psia). Therefore, the net pressure load acting on the external surface of the cask is 5.3 psig.

The MP187 cask is analyzed for a unit external pressure using the same finite element model used for the internal pressure analysis in Section 2.6.1.3.2. A one psig pressure load is applied to the external surfaces of the cask containment boundary (i.e. ram closure plate, bottom end closure, inner shell, top flange and top closure plate) and a linear elastic static analysis is performed using the ANSYS program [2.6]. The stresses in the cask components due to the 5.3 psig net external pressure resulting from the increased external pressure are calculated by factoring the cask stresses due to a one psig external pressure by 5.3. The resulting cask primary

membrane, membrane plus bending, and primary plus secondary stress intensities for the 52 cask stress points shown in Figure 2.6.1-1, are listed in Table 2.6.3-1, Table 2.6.3-2, and Table 2.6.3-3, respectively. The results show that the cask stresses due to the 5.3 psig external pressure load are insignificant. The maximum primary membrane stress intensity, occurring in the inner shell, is 0.1 ksi. The maximum membrane plus bending stress intensity, occurring in the top cover plate, is 0.2 ksi. The cask stresses due to the increased external pressure load are considered in the normal condition of transport load combination evaluation presented in Section 2.6.13.1, and shown to meet the applicable stress acceptance criteria.

Table 2.6.3-1
Cask Membrane S.I. Summary - 5.3 psig External Pressure

Cask Component	Stress Point	Node Number	Stress Components (ks				Principal Stresses (ks			SI (ksi)
			SX	SY	SZ	SXY	S1	S2	S3	
Top Cover	1	1390	0.0	0.0	0.0	0.0	0.0	0.0	0.0	0.0
	2	1430	0.0	0.0	0.0	0.0	0.0	0.0	0.0	0.0
	3	1398	0.0	0.0	0.0	0.0	0.0	0.0	0.0	0.0
	4	1438	0.0	0.0	0.0	0.0	0.0	0.0	0.0	0.0
	5	1369	0.0	0.0	0.0	0.0	0.0	0.0	0.0	0.0
	6	1445	0.0	0.0	0.0	0.0	0.0	0.0	0.0	0.0
Top Flange	7	1373	0.0	0.0	0.0	0.0	0.0	0.0	0.0	0.0
	8	1375	0.0	0.0	0.0	0.0	0.0	0.0	0.0	0.0
	9	1334	0.0	0.0	0.0	0.0	0.0	0.0	0.0	0.1
	10	1336	0.0	0.0	0.0	0.0	0.0	0.0	0.0	0.1
Inner Shell	11	1316	0.0	0.0	0.0	0.0	0.0	0.0	0.0	0.0
	12	1318	0.0	0.0	0.0	0.0	0.0	0.0	0.0	0.0
	13	1235	0.0	0.0	-0.1	0.0	0.0	0.0	-0.1	0.1
	14	1237	0.0	0.0	-0.1	0.0	0.0	0.0	-0.1	0.1
	15	1092	0.0	0.0	-0.1	0.0	0.0	0.0	-0.1	0.1
	16	1094	0.0	0.0	-0.1	0.0	0.0	0.0	-0.1	0.1
	17	742	0.0	0.0	-0.1	0.0	0.0	0.0	-0.1	0.1
	18	744	0.0	0.0	-0.1	0.0	0.0	0.0	-0.1	0.1
	19	392	0.0	0.0	-0.1	0.0	0.0	0.0	-0.1	0.1
	20	394	0.0	0.0	-0.1	0.0	0.0	0.0	-0.1	0.1
	21	263	0.0	0.0	-0.1	0.0	0.0	0.0	-0.1	0.1
	22	265	0.0	0.0	-0.1	0.0	0.0	0.0	-0.1	0.1
	23	156	0.0	0.0	0.0	0.0	0.0	0.0	0.0	0.1
	24	158	0.0	0.0	0.0	0.0	0.0	0.0	0.0	0.1
	25	148	0.0	0.0	0.0	0.0	0.0	0.0	0.0	0.0
	26	150	0.0	0.0	0.0	0.0	0.0	0.0	0.0	0.0
Outer Shell	27	1342	0.0	0.0	0.0	0.0	0.0	0.0	0.0	0.0
	28	1344	0.0	0.0	0.0	0.0	0.0	0.0	0.0	0.0
	29	1241	0.0	0.0	0.0	0.0	0.0	0.0	0.0	0.0
	30	1243	0.0	0.0	0.0	0.0	0.0	0.0	0.0	0.0
	31	1098	0.0	0.0	0.0	0.0	0.0	0.0	0.0	0.0
	32	1100	0.0	0.0	0.0	0.0	0.0	0.0	0.0	0.0
	33	747	0.0	0.0	0.0	0.0	0.0	0.0	0.0	0.0
	34	750	0.0	0.0	0.0	0.0	0.0	0.0	0.0	0.0
	35	399	0.0	0.0	0.0	0.0	0.0	0.0	0.0	0.0
	36	400	0.0	0.0	0.0	0.0	0.0	0.0	0.0	0.0
	37	269	0.0	0.0	0.0	0.0	0.0	0.0	0.0	0.0
	38	271	0.0	0.0	0.0	0.0	0.0	0.0	0.0	0.0
	39	131	0.0	0.0	0.0	0.0	0.0	0.0	0.0	0.0
	40	133	0.0	0.0	0.0	0.0	0.0	0.0	0.0	0.0
Bottom Forging	41	148	0.0	0.0	0.0	0.0	0.0	0.0	0.0	0.0
	42	60	0.0	0.0	0.0	0.0	0.0	0.0	0.0	0.0
	43	143	0.0	0.0	0.0	0.0	0.0	0.0	0.0	0.0
	44	55	0.0	0.0	0.0	0.0	0.0	0.0	0.0	0.0
	45	138	0.0	0.0	0.0	0.0	0.0	0.0	0.0	0.0
	46	88	0.0	0.0	0.0	0.0	0.0	0.0	0.0	0.0
Ram Access Cover Plate	47	33	0.0	0.0	0.0	0.0	0.0	0.0	0.0	0.0
	48	8	0.0	0.0	0.0	0.0	0.0	0.0	0.0	0.0
	49	42	0.0	0.0	0.0	0.0	0.0	0.0	0.0	0.0
	50	5	0.0	0.0	0.0	0.0	0.0	0.0	0.0	0.0
	51	46	0.0	0.0	0.0	0.0	0.0	0.0	0.0	0.0
	52	1	0.0	0.0	0.0	0.0	0.0	0.0	0.0	0.0

Table 2.6.3-2
Cask Membrane Plus Bending S.I. Summary - 5.3 psig External Pressure

Cask Component	Stress Point	Node Number	Stress Components (ksi)				Principal Stresses (ksi)			SI (ksi)
			Sx	Sy	Sz	Sxy	S1	S2	S3	
Top Cover	1	1390	0.2	0.0	0.2	0.0	0.2	0.2	0.0	0.2
	2	1430	-0.2	0.0	-0.2	0.0	0.0	-0.2	-0.2	0.2
	3	1398	0.2	0.0	0.2	0.0	0.2	0.2	0.0	0.2
	4	1438	-0.2	0.0	-0.2	0.0	0.0	-0.2	-0.2	0.2
	5	1369	0.0	0.0	0.1	0.0	0.1	0.0	0.0	0.1
	6	1445	0.0	0.0	-0.1	0.0	0.0	0.0	-0.1	0.1
Top Flange	7	1373	0.0	0.0	-0.1	0.0	0.0	0.0	-0.1	0.0
	8	1375	0.0	0.0	0.0	0.0	0.0	0.0	0.0	0.1
	9	1334	0.0	0.0	-0.1	0.0	0.0	0.0	-0.1	0.1
	10	1336	0.0	0.0	0.0	0.0	0.0	0.0	0.0	0.0
Inner Shell	11	1316	0.0	0.0	-0.1	0.0	0.0	0.0	-0.1	0.1
	12	1318	0.0	0.0	0.0	0.0	0.0	0.0	0.0	0.0
	13	1235	0.0	0.0	-0.1	0.0	0.0	0.0	-0.1	0.1
	14	1237	0.0	0.0	-0.1	0.0	0.0	0.0	-0.1	0.1
	15	1092	0.0	0.0	-0.1	0.0	0.0	0.0	-0.1	0.1
	16	1094	0.0	0.0	-0.1	0.0	0.0	0.0	-0.1	0.1
	17	742	0.0	0.0	-0.1	0.0	0.0	0.0	-0.1	0.1
	18	744	0.0	0.0	-0.1	0.0	0.0	0.0	-0.1	0.1
	19	392	0.0	0.0	-0.1	0.0	0.0	0.0	-0.1	0.1
	20	394	0.0	0.0	-0.1	0.0	0.0	0.0	-0.1	0.1
	21	263	0.0	0.0	-0.1	0.0	0.0	0.0	-0.1	0.1
	22	265	0.0	0.0	-0.1	0.0	0.0	0.0	-0.1	0.1
	23	156	0.0	-0.1	0.0	0.0	0.0	0.0	-0.1	0.1
	24	158	0.0	0.0	0.0	0.0	0.0	0.0	0.0	0.1
	25	148	-0.1	-0.1	0.0	0.0	0.0	-0.1	-0.1	0.1
	26	150	0.0	0.1	0.0	0.0	0.1	0.0	0.0	0.1
Outer Shell	27	1342	0.0	0.0	0.0	0.0	0.0	0.0	0.0	0.0
	28	1344	0.0	0.0	0.0	0.0	0.0	0.0	0.0	0.0
	29	1241	0.0	0.0	0.0	0.0	0.0	0.0	0.0	0.0
	30	1243	0.0	0.0	0.0	0.0	0.0	0.0	0.0	0.0
	31	1098	0.0	0.0	0.0	0.0	0.0	0.0	0.0	0.0
	32	1100	0.0	0.0	0.0	0.0	0.0	0.0	0.0	0.0
	33	747	0.0	0.0	0.0	0.0	0.0	0.0	0.0	0.0
	34	750	0.0	0.0	0.0	0.0	0.0	0.0	0.0	0.0
	35	399	0.0	0.0	0.0	0.0	0.0	0.0	0.0	0.0
	36	400	0.0	0.0	0.0	0.0	0.0	0.0	0.0	0.0
	37	269	0.0	0.0	0.0	0.0	0.0	0.0	0.0	0.0
	38	271	0.0	0.0	0.0	0.0	0.0	0.0	0.0	0.0
	39	131	0.0	-0.1	0.0	0.0	0.0	0.0	-0.1	0.0
	40	133	0.0	0.1	0.0	0.0	0.1	0.0	0.0	0.1
Bottom Forging	41	148	0.0	-0.1	0.0	0.0	0.0	0.0	-0.1	0.1
	42	60	0.0	0.0	0.0	0.0	0.0	0.0	0.0	0.1
	43	143	0.0	0.0	0.1	0.0	0.1	0.0	0.0	0.1
	44	55	0.0	0.0	-0.1	0.0	0.0	0.0	-0.1	0.1
	45	138	0.0	0.0	0.1	0.0	0.1	0.0	0.0	0.1
	46	88	0.0	0.0	-0.1	0.0	0.0	0.0	-0.1	0.1
Ram Access Cover Plate	47	33	0.0	0.0	0.0	0.0	0.0	0.0	0.0	0.0
	48	8	0.0	0.0	0.0	0.0	0.0	0.0	0.0	0.0
	49	42	0.0	0.0	0.0	0.0	0.0	0.0	0.0	0.0
	50	5	0.0	0.0	0.0	0.0	0.0	0.0	0.0	0.0
	51	46	0.0	0.0	0.0	0.0	0.0	0.0	0.0	0.0
	52	1	0.0	0.0	0.0	0.0	0.0	0.0	0.0	0.0

Table 2.6.3-3
Cask Primary Plus Secondary S.I. Summary - 5.3 psig External Pressure

Cask Component	Stress Point	Node Number	Stress Components (ksi)				Principal Stresses (ksi)			SI (ksi)
			Sx	Sy	Sz	Sxy	S1	S2	S3	
Top Cover	1	1390	0.2	0.0	0.2	0.0	0.2	0.2	0.0	0.2
	2	1430	-0.2	0.0	-0.2	0.0	0.0	-0.2	-0.2	0.2
	3	1398	0.2	0.0	0.2	0.0	0.2	0.2	0.0	0.2
	4	1438	-0.2	0.0	-0.2	0.0	0.0	-0.2	-0.2	0.2
	5	1369	0.0	0.0	-0.1	0.0	0.0	0.0	-0.1	0.1
	6	1445	0.0	0.0	-0.1	0.0	0.0	0.0	-0.1	0.1
Top Flange	7	1373	0.0	0.0	-0.1	0.0	0.0	0.0	-0.1	0.1
	8	1375	0.0	0.0	0.0	0.0	0.0	0.0	0.0	0.1
	9	1334	0.0	0.0	-0.1	0.0	0.0	0.0	-0.1	0.1
	10	1336	0.0	0.0	0.0	0.0	0.0	0.0	0.0	0.0
Inner Shell	11	1316	0.0	0.0	-0.1	0.0	0.0	0.0	-0.1	0.1
	12	1318	0.0	0.0	0.0	0.0	0.0	0.0	0.0	0.0
	13	1235	0.0	0.0	-0.1	0.0	0.0	0.0	-0.1	0.1
	14	1237	0.0	0.0	-0.1	0.0	0.0	0.0	-0.1	0.1
	15	1092	0.0	0.0	-0.1	0.0	0.0	0.0	-0.1	0.1
	16	1094	0.0	0.0	-0.1	0.0	0.0	0.0	-0.1	0.1
	17	742	0.0	0.0	-0.1	0.0	0.0	0.0	-0.1	0.1
	18	744	0.0	0.0	-0.1	0.0	0.0	0.0	-0.1	0.1
	19	392	0.0	0.0	-0.1	0.0	0.0	0.0	-0.1	0.1
	20	394	0.0	0.0	-0.1	0.0	0.0	0.0	-0.1	0.1
	21	263	0.0	0.0	-0.1	0.0	0.0	0.0	-0.1	0.1
	22	265	0.0	0.0	-0.1	0.0	0.0	0.0	-0.1	0.1
	23	156	0.0	-0.1	0.0	0.0	0.0	0.0	-0.1	0.1
	24	158	0.0	0.0	0.0	0.0	0.1	0.0	0.0	0.1
	25	148	-0.1	-0.1	0.0	0.0	0.0	0.0	-0.1	0.1
	26	150	0.0	0.0	0.0	0.0	0.1	0.0	0.0	0.1
Outer Shell	27	1342	0.0	0.0	0.0	0.0	0.0	0.0	0.0	0.0
	28	1344	0.0	0.0	0.0	0.0	0.0	0.0	0.0	0.0
	29	1241	0.0	0.0	0.0	0.0	0.0	0.0	0.0	0.0
	30	1243	0.0	0.0	0.0	0.0	0.0	0.0	0.0	0.0
	31	1098	0.0	0.0	0.0	0.0	0.0	0.0	0.0	0.0
	32	1100	0.0	0.0	0.0	0.0	0.0	0.0	0.0	0.0
	33	747	0.0	0.0	0.0	0.0	0.0	0.0	0.0	0.0
	34	750	0.0	0.0	0.0	0.0	0.0	0.0	0.0	0.0
	35	399	0.0	0.0	0.0	0.0	0.0	0.0	0.0	0.0
	36	400	0.0	0.0	0.0	0.0	0.0	0.0	0.0	0.0
	37	269	0.0	0.0	0.0	0.0	0.0	0.0	0.0	0.0
	38	271	0.0	0.0	0.0	0.0	0.0	0.0	0.0	0.0
	39	131	0.0	0.0	0.0	0.0	0.0	0.0	-0.1	0.1
	40	133	0.0	0.1	0.0	0.0	0.1	0.0	0.0	0.1
Bottom Forging	41	148	-0.1	-0.1	0.0	0.0	0.0	0.0	-0.1	0.1
	42	60	0.0	0.0	-0.1	0.0	0.0	0.0	-0.1	0.1
	43	143	0.0	0.0	0.1	0.0	0.1	0.0	0.0	0.1
	44	55	0.0	0.0	-0.1	0.0	0.0	0.0	-0.1	0.1
	45	138	0.0	0.0	0.1	0.0	0.1	0.0	0.0	0.1
	46	88	0.0	0.0	0.0	0.0	0.0	0.0	0.0	0.0
Ram Access Cover Plate	47	33	0.0	0.0	0.0	0.0	0.0	0.0	0.0	0.0
	48	8	0.0	0.0	0.0	0.0	0.0	0.0	0.0	0.0
	49	42	0.0	0.0	0.0	0.0	0.0	0.0	0.0	0.0
	50	5	0.0	0.0	0.0	0.0	0.0	0.0	0.0	0.0
	51	46	0.0	0.0	0.0	0.0	0.0	0.0	0.0	0.0
	52	1	0.0	0.0	0.0	0.0	0.0	0.0	0.0	0.0

2.6.4 Vibration

The stresses induced by vibration normally incident to handling and transportation of the package are determined in the following sections. The maximum expected vibration loads in the frequency range of 0 to 1,900 Hz for large shipping containers (weighing 56,000 pounds) during truck transport are [2.5]:

Axis	Peak Acceleration (g)
Longitudinal	0.27
Transverse	0.19
Vertical	0.52

For heavier packages, the longitudinal and transverse responses decrease at frequencies above 20 Hz [2.5]. Similarly, the vertical response of heavier packages decreases for frequencies above 3 Hz [2.5]. The fundamental frequencies of the NUHOMS®-MP187 structural components are all greater than 20 Hz, as shown in Appendix 2.10.10. Therefore, the peak acceleration loads due to vibration loading will be less than those reported above.

As a conservative worst case, the maximum vibration g-load is assumed equal to the 2g vertical loading imposed on the tie-downs. The stresses in the NUHOMS®-MP187 transportation package components due to the 2g vertical vibration load are determined in the following sections.

2.6.4.1 Cask Vibration Analysis

During normal transport conditions, the cask is supported by the transportation skid at the location of the neutron shield end support rings. The cask is loaded by its own self weight in addition to the weight of the top and bottom impact limiters and the loaded DSC. The highest stresses in the cask body due to normal vibration are expected to occur in the cask shells at the base of the cantilever sections near the ends of the neutron shield. Figure 2.6.4-1 shows a free body diagram of the cask for vibration loads occurring during normal transport conditions.

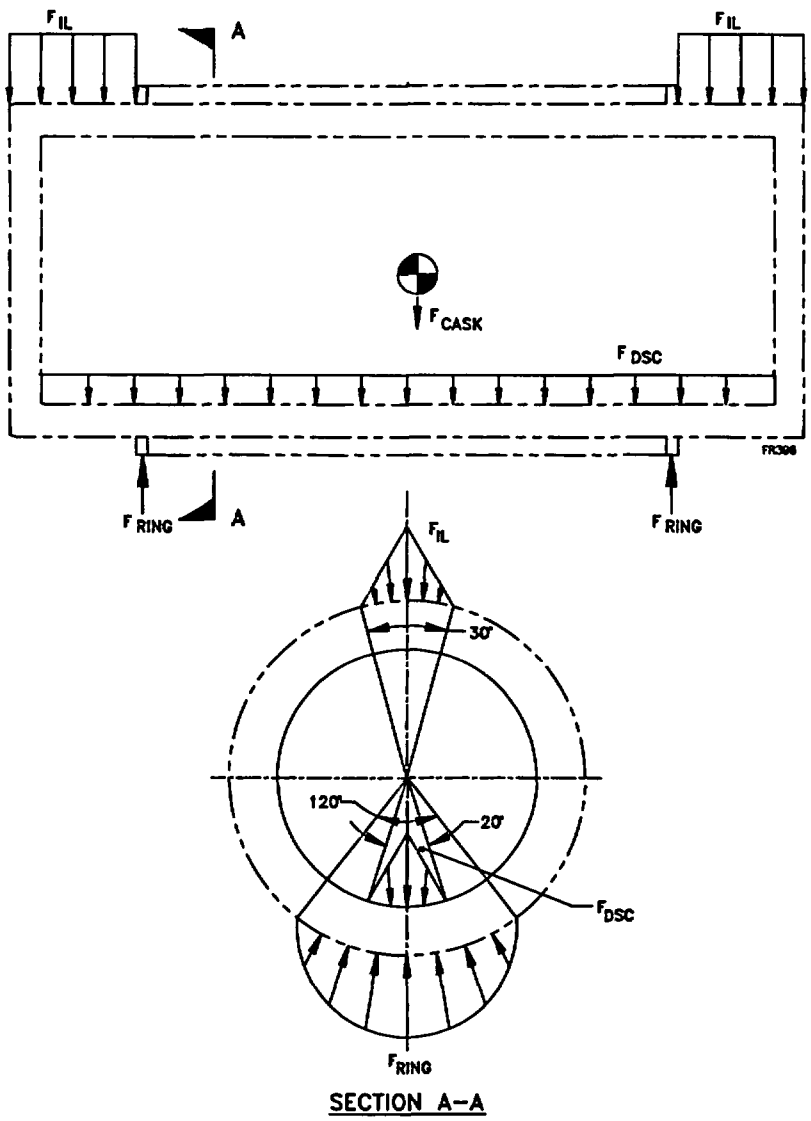

Figure 2.6.4-1
Cask Free Body Diagram for Normal Vibration

The stress analysis of the cask due to the 2g vertical vibration design load are determined by multiplying the cask dead weight stresses by a factor of two. The cask dead weight stresses are determined using the half symmetry three dimensional model described in Section 2.10.2.1.3. The support ring reaction loads are assumed to have a cosine distribution in the circumferential direction. Since the cask three dimensional model does not include the neutron shield support rings, the support ring reactions are applied directly to the cask outer shell. The angle of contact between the cradle and the cask neutron shield support ring is assumed to be 120 degrees (i.e. θ

= 60°). The reaction load at each support ring is equal to half of the package weight. The total mass calculated in the cask half symmetry three-dimensional model is 77.3 kips, which indicates an approximated cask weight of 154.6 kips. In order to maintain a balanced loading in the finite element model, the reaction load at each support ring is approximated as 133.3 kips based on a total package weight calculated using the finite element cask weight. The pressure distribution around the circumference of the of the cask at the support ring location is determined using the formula derived in Section 2.10.2.1.3.1, as follows:

$$P_i = \frac{F_{RING}}{LR}\left[\frac{\sin\left(\frac{\pi}{2}+\theta\right)}{\left(\frac{\pi}{2\theta}\right)+1}+\frac{\sin\left(\frac{\pi}{2}-\theta\right)}{\left(\frac{\pi}{2\theta}\right)-1}\right]^{-1}\cos\left(\frac{\pi\theta_i}{2\theta}\right)$$

where;

F_{RING} = 133.3 kips

L = 2.00 in., Support ring width

R = 41.75 in., Outer radius of cask outer shell

θ = 60°, Half angle of contact

The resulting pressure distribution around the circumference of the cask outer shell at the location of the neutron shield support rings is summarized below:

Circumferential Location	Pressure Load (psi)
0°	1,331
10°	1,285
20°	1,153
30°	941
45°	509
60°	0

The DSC dead weight load (F_{DSC} = 81.3 kips) on the cask inner shell is modeled as a pressure load having a uniform distribution along the length of the cask cavity (187 inches) and a triangular distribution in the circumferential direction. A triangular distribution is assumed as opposed to a cosine distribution since a half angle of contact of 10 degrees, covering only one element in the circumferential direction, is assumed between the DSC and cask inner shell for the dead weight condition. The resulting pressure distribution is calculated as follows:

$$P_i = \frac{F_{DSC}}{2LR}\left(\frac{\theta - \theta_i}{1 - \cos(\theta)}\right)$$

The resulting peak pressure for the triangular dead weight pressure distribution is 72 psi at the 0 degree azimuth, reducing to 0 psi at the 10 degree azimuth.

For normal transport conditions, the impact limiters are supported by the cask. The impact limiters are assumed to hang from the cask cantilever sections. Therefore, the load from the impact limiter is modeled as a pressure load acting on the top side of the cask. The impact limiter dead weight load (F_{IL} = 16 kips) on the cask outer shell (R = 41.75 inches) is modeled as a pressure load having a uniform distribution along the length of the cask overhang (L = 32 inches) and a triangular distribution in the circumferential direction. A triangular distribution is assumed as opposed to a cosine distribution since a half angle of contact of 15 degrees, covering only one element in the circumferential direction, is assumed between the impact limiter and cask outer shell for the dead weight condition. The resulting pressure distribution is calculated as follows:

$$P_i = \frac{F_{IL}}{2LR}\left(\frac{\theta - \theta_i}{1 - \cos(\theta)}\right)$$

The resulting peak pressure for the triangular dead weight pressure distribution is 46 psi at the 0 degree azimuth, reducing to 0 psi at the 15 degree azimuth.

In addition to the cask reaction loads, DSC load, and impact limiter loads, the cask is loaded by its own self weight. The cask self weight load is applied as a vertical acceleration load of 1g. As discussed in Section 2.10.2.1.3, the nodes at each end of the cask half symmetry three dimensional model are pinned to prevent rigid body translation. The maximum vertical reaction load at these constrained nodes due to the unbalanced forces on the model is 1,337 pounds. This is equivalent to 1.0% of the total dead weight load which is insignificant. Therefore, the applied forces and reactions applied to the finite element model are essentially balanced.

The resulting cask total dead weight stresses, which include primary, secondary, and peak stress contributions, are reported for each of the 52 cask stress points shown in Figure 2.6.1-1 at the 0°, 45°, 90°, 135°, and 180° azimuth planes in Table 2.6.4-1 through Table 2.6.4-5, respectively. The results of the cask dead weight analysis show that the controlling cask dead weight stresses occur on the 0 degree azimuth plane. The maximum total stress intensity in the cask body due to dead weight is 3.0 ksi, occurring in the cask outer shell at the location of each neutron shield support ring (stress points 29 and 37). The maximum total stress intensity due to the 2g vertical vibration design basis load is equal to twice the dead weight stress or 6.0 ksi. This stress is conservatively compared to primary membrane stress intensity allowables. The allowable primary membrane stress intensity for the cask outer shell is 20 ksi for a design temperature of 300°F. Therefore, the minimum margin of safety in the cask body due to vibration loading is:

$$\text{M.S.} = (20.0/6.0) - 1$$

$$= +2.33$$

Therefore, the cask meets the normal condition stress acceptance criteria for the vibration load condition.

Table 2.6.4-1
Cask Dead Weight Total Stress Summary, 0° Azimuth

Cask Component	Stress Point	Node Number	Stress Components (ksi)				Principal Stresses (ksi)			SI (ksi)
			SX	SY	SZ	SXY	S1	S2	S3	
Top Closure	1	730	0.0	0.0	0.1	0.0	0.1	0.0	0.0	0.1
	2	771	0.0	0.0	0.0	0.0	0.0	0.0	0.0	0.0
	3	738	-0.1	0.0	0.1	0.0	0.1	0.0	-0.1	0.2
	4	779	0.0	0.0	0.0	0.0	0.0	0.0	0.0	0.1
	5	746	-0.1	0.0	0.1	0.0	0.1	0.0	-0.1	0.2
	6	786	0.1	0.0	0.1	0.0	0.1	0.1	0.0	0.1
Top Flange	7	711	-0.2	-0.3	0.0	0.0	0.0	-0.2	-0.3	0.3
	8	713	-0.1	0.4	0.2	0.0	0.4	0.2	-0.1	0.4
	9	672	-0.1	-0.2	0.2	0.0	0.2	0.0	-0.2	0.4
	10	674	0.0	0.1	0.3	0.0	0.3	0.1	0.0	0.3
Inner Shell	11	654	0.0	-0.5	0.1	0.0	0.1	0.0	-0.5	0.6
	12	656	0.0	0.4	0.5	0.1	0.5	0.4	0.0	0.5
	13	574	-0.1	0.7	-1.3	0.0	0.7	-0.1	-1.3	2.0
	14	576	-0.1	-1.4	-1.8	0.0	-0.1	-1.4	-1.8	1.7
	15	521	0.0	-0.5	-0.2	0.0	0.0	-0.2	-0.5	0.5
	16	522	0.0	0.1	0.3	0.0	0.3	0.1	0.0	0.3
	17	371	0.0	0.0	-0.2	0.0	0.0	0.0	-0.2	0.2
	18	372	0.0	0.3	0.4	0.0	0.4	0.3	0.0	0.5
	19	221	0.0	-0.5	-0.1	0.0	0.0	-0.1	-0.5	0.5
	20	222	0.0	0.0	0.4	0.0	0.4	0.0	0.0	0.4
	21	161	-0.1	0.7	-1.3	0.0	0.7	-0.1	-1.3	2.0
	22	162	-0.1	-1.5	-1.8	0.0	-0.1	-1.5	-1.8	1.7
	23	62	0.0	-0.4	0.1	0.0	0.1	-0.1	-0.4	0.5
	24	64	0.0	0.4	0.4	-0.1	0.5	0.3	-0.1	0.5
	25	54	0.0	-0.1	0.2	0.0	0.2	0.0	-0.1	0.3
	26	56	0.0	0.1	0.2	0.0	0.2	0.1	0.0	0.2
Outer Shell	27	680	0.0	-0.7	0.0	0.0	0.0	0.0	-0.7	0.7
	28	682	0.0	0.4	0.3	0.0	0.4	0.3	0.0	0.4
	29	578	-0.4	2.1	-0.8	0.2	2.1	-0.4	-0.8	3.0
	30	580	-0.7	-2.9	-2.3	0.2	-0.6	-2.3	-2.9	2.3
	31	525	0.0	-0.8	-0.3	0.0	0.0	-0.3	-0.8	0.8
	32	526	0.0	0.3	0.4	0.0	0.4	0.3	0.0	0.4
	33	375	0.0	-0.1	-0.3	0.0	0.0	-0.1	-0.3	0.3
	34	376	0.0	0.3	0.6	0.0	0.6	0.3	0.0	0.6
	35	225	0.0	-0.7	-0.2	0.0	0.0	-0.2	-0.7	0.7
	36	226	0.0	0.2	0.4	0.0	0.4	0.2	0.0	0.4
	37	165	-0.3	2.1	-0.8	-0.2	2.1	-0.4	-0.8	3.0
	38	167	-0.6	-2.9	-2.3	-0.2	-0.6	-2.3	-2.9	2.3
	39	73	0.0	0.0	0.2	0.0	0.2	0.0	0.0	0.2
	40	75	0.0	0.2	0.3	0.0	0.3	0.2	0.0	0.4
Bottom Forging	41	54	0.0	-0.1	0.2	0.0	0.2	0.0	-0.1	0.3
	42	21	0.0	0.0	0.0	0.0	0.0	0.0	0.0	0.1
	43	51	-0.1	0.0	0.2	0.0	0.2	0.0	-0.1	0.2
	44	18	0.0	0.0	0.0	0.0	0.0	0.0	0.0	0.0
	45	48	0.0	0.0	0.1	0.0	0.1	0.0	0.0	0.2
	46	10	0.0	0.0	0.1	0.0	0.1	0.0	0.0	0.1
Ram Closure Plate	47	12	-0.1	0.0	0.1	0.0	0.1	0.0	-0.1	0.1
	48	4	0.0	0.0	0.0	0.0	0.0	0.0	0.0	0.0
	49	11	-0.1	0.0	0.0	0.0	0.0	0.0	-0.1	0.1
	50	3	0.0	0.0	0.0	0.0	0.0	0.0	0.0	0.0
	51	13	0.0	0.0	0.0	0.0	0.0	0.0	0.0	0.0
	52	1	0.0	0.0	0.0	0.0	0.0	0.0	0.0	0.0

Table 2.6.4-2
Cask Dead Weight Total Stress Summary, 45° Azimuth

Cask Component	Stress Point	Node Number	Stress Components (ksi)				Principal Stresses (ksi)			SI (ksi)
			SX	SY	SZ	SXY	S1	S2	S3	
Top Closure	1	4730	0.0	0.0	0.0	0.0	0.1	0.0	0.0	0.1
	2	4771	0.0	0.0	0.0	0.0	0.0	0.0	0.0	0.0
	3	4738	0.0	0.0	0.0	0.0	0.1	0.0	-0.1	0.2
	4	4779	0.0	0.0	0.0	0.0	0.0	0.0	0.0	0.1
	5	4746	0.0	0.0	0.0	0.0	0.2	0.0	-0.1	0.3
	6	4786	0.0	0.0	0.0	0.0	0.0	0.0	0.0	0.1
Top Flange	7	4711	0.0	0.0	0.0	0.0	0.0	0.0	0.0	0.1
	8	4713	0.0	0.0	0.0	0.0	0.1	0.0	0.0	0.1
	9	4672	0.0	0.0	0.0	0.0	0.2	0.0	-0.2	0.5
	10	4674	0.0	0.0	0.0	0.0	0.1	0.0	-0.1	0.2
Inner Shell	11	4654	0.0	-0.1	0.0	0.0	0.4	0.0	-0.4	0.8
	12	4656	0.0	0.1	0.0	0.0	0.3	0.0	-0.2	0.4
	13	4574	0.0	0.4	-0.7	0.0	0.4	0.0	-0.7	1.1
	14	4576	0.0	-0.3	-0.8	0.0	0.0	-0.3	-0.8	0.7
	15	4521	0.0	-0.1	0.0	0.0	0.3	0.0	-0.3	0.6
	16	4522	0.0	0.1	0.0	0.0	0.3	0.0	-0.1	0.4
	17	4371	0.0	0.1	0.3	0.0	0.3	0.1	0.0	0.3
	18	4372	0.0	-0.1	-0.1	0.0	0.0	-0.1	-0.1	0.1
	19	4221	0.0	-0.1	0.1	0.0	0.3	0.0	-0.3	0.6
	20	4222	0.0	0.1	0.0	0.0	0.3	0.0	-0.1	0.4
	21	4161	0.0	0.4	-0.7	0.0	0.4	0.0	-0.7	1.1
	22	4162	0.0	-0.3	-0.8	0.0	0.0	-0.3	-0.8	0.7
	23	4062	0.0	0.0	0.0	0.0	0.4	0.0	-0.4	0.7
	24	4064	0.0	0.0	0.0	0.0	0.2	0.0	-0.2	0.4
	25	4054	0.0	0.0	0.0	0.0	0.2	0.0	-0.2	0.4
	26	4056	0.0	0.0	0.0	0.0	0.1	0.0	-0.1	0.2
Outer Shell	27	4680	0.0	0.0	0.0	0.0	0.4	0.0	-0.4	0.8
	28	4682	0.0	0.1	0.0	0.0	0.1	0.0	0.0	0.2
	29	4578	-0.2	0.9	-0.5	0.1	0.9	-0.2	-0.5	1.4
	30	4580	-0.3	-0.7	-0.9	0.1	-0.3	-0.7	-0.9	0.6
	31	4525	0.0	-0.2	0.0	0.0	0.3	0.0	-0.4	0.7
	32	4526	0.0	0.3	0.0	0.0	0.3	0.0	-0.1	0.4
	33	4375	0.0	0.1	0.4	0.0	0.4	0.1	0.0	0.4
	34	4376	0.0	-0.1	-0.2	0.0	0.0	-0.1	-0.2	0.2
	35	4225	0.0	-0.1	0.1	0.0	0.3	0.0	-0.3	0.6
	36	4226	0.0	0.2	0.0	0.0	0.3	0.0	-0.1	0.4
	37	4165	-0.2	0.9	-0.5	-0.1	0.9	-0.2	-0.5	1.4
	38	4167	-0.3	-0.7	-0.9	-0.1	-0.2	-0.7	-0.9	0.6
	39	4073	0.0	0.0	0.0	0.0	0.2	0.0	-0.1	0.3
	40	4075	0.0	0.0	0.0	0.0	0.1	0.0	-0.1	0.2
Bottom Forging	41	4054	0.0	0.0	0.0	0.0	0.2	0.0	-0.2	0.4
	42	4021	0.0	0.0	0.0	0.0	0.0	0.0	0.0	0.0
	43	4051	0.0	0.0	0.0	0.0	0.1	0.0	-0.1	0.2
	44	4018	0.0	0.0	0.0	0.0	0.0	0.0	0.0	0.0
	45	4048	0.0	0.0	0.0	0.0	0.1	0.0	-0.1	0.2
	46	4010	0.0	0.0	0.0	0.0	0.0	0.0	0.0	0.1
Ram Closure Plate	47	4012	0.0	0.0	0.0	0.0	0.1	0.0	-0.1	0.1
	48	4004	0.0	0.0	0.0	0.0	0.0	0.0	0.0	0.0
	49	4011	0.0	0.0	0.0	0.0	0.1	0.0	-0.1	0.2
	50	4003	0.0	0.0	0.0	0.0	0.0	0.0	0.0	0.0
	51	4013	0.0	0.0	0.0	0.0	0.0	0.0	0.0	0.0
	52	4001	0.0	0.0	0.0	0.0	0.0	0.0	0.0	0.0

Table 2.6.4-3
Cask Dead Weight Total Stress Summary, 90° Azimuth

Cask Component	Stress Point	Node Number	Stress Components (ksi)				Principal Stresses (ksi)			SI (ksi)
			SX	SY	SZ	SXY	S1	S2	S3	
Top Closure	1	7730	0.1	0.0	0.0	0.0	0.1	0.0	0.0	0.1
	2	7771	0.0	0.0	0.0	0.0	0.0	0.0	0.0	0.0
	3	7738	0.1	0.0	-0.1	0.0	0.1	0.0	-0.1	0.2
	4	7779	0.0	0.0	0.0	0.0	0.0	0.0	0.0	0.0
	5	7746	0.2	0.1	0.0	0.0	0.2	0.1	0.0	0.2
	6	7786	-0.1	0.0	-0.1	0.0	0.0	-0.1	-0.1	0.2
Top Flange	7	7711	0.0	0.0	-0.1	0.0	0.0	0.0	-0.1	0.1
	8	7713	0.0	0.0	0.0	0.0	0.0	0.0	-0.1	0.1
	9	7672	0.0	0.1	-0.2	0.0	0.1	0.0	-0.2	0.3
	10	7674	-0.1	-0.1	-0.2	0.0	-0.1	-0.1	-0.2	0.2
Inner Shell	11	7654	0.0	0.1	-0.2	0.0	0.1	0.0	-0.2	0.3
	12	7656	0.0	-0.2	-0.2	0.0	0.0	-0.1	-0.3	0.2
	13	7574	0.0	0.1	-0.1	0.0	0.1	0.0	-0.1	0.2
	14	7576	0.0	0.2	0.1	0.0	0.2	0.1	0.0	0.2
	15	7521	0.0	0.1	-0.1	0.0	0.1	0.0	-0.1	0.3
	16	7522	0.0	0.2	0.1	0.0	0.3	0.1	0.0	0.3
	17	7371	0.0	0.0	-0.2	0.0	0.0	0.0	-0.2	0.2
	18	7372	0.0	0.1	0.2	0.0	0.2	0.1	0.0	0.2
	19	7221	0.0	0.1	-0.1	0.0	0.1	0.0	-0.2	0.3
	20	7222	0.0	0.3	0.1	0.0	0.3	0.1	0.0	0.3
	21	7161	0.0	0.1	-0.1	0.0	0.1	0.0	-0.1	0.2
	22	7162	0.0	0.3	0.1	0.0	0.3	0.1	0.0	0.3
	23	7062	0.0	0.2	-0.1	0.0	0.2	0.0	-0.1	0.3
	24	7064	0.0	-0.3	-0.2	0.1	0.0	-0.2	-0.3	0.3
	25	7054	0.1	0.2	-0.1	0.0	0.2	0.1	-0.1	0.2
	26	7056	0.0	-0.2	-0.2	0.1	0.0	-0.1	-0.2	0.2
Outer Shell	27	7680	0.0	0.5	0.0	-0.1	0.5	0.0	0.0	0.5
	28	7682	0.0	-0.1	-0.1	0.0	0.0	-0.1	-0.2	0.2
	29	7578	0.0	0.1	-0.1	0.0	0.1	0.0	-0.1	0.2
	30	7580	0.0	0.4	0.2	0.0	0.4	0.2	0.0	0.4
	31	7525	0.0	0.1	-0.2	0.0	0.1	0.0	-0.2	0.3
	32	7526	0.0	0.3	0.2	0.0	0.4	0.1	0.0	0.4
	33	7375	0.0	0.0	-0.3	0.0	0.0	0.0	-0.3	0.3
	34	7376	0.0	0.2	0.3	0.0	0.3	0.2	0.0	0.2
	35	7225	0.0	0.1	-0.2	0.0	0.1	0.0	-0.2	0.3
	36	7226	0.0	0.3	0.2	0.0	0.4	0.1	0.0	0.4
	37	7165	0.0	0.1	-0.1	0.0	0.1	0.0	-0.1	0.2
	38	7167	0.0	0.4	0.2	0.0	0.4	0.2	0.0	0.4
	39	7073	0.0	-0.1	-0.2	0.0	0.0	-0.1	-0.2	0.1
	40	7075	0.0	-0.3	-0.2	0.0	0.0	-0.2	-0.3	0.3
Bottom Forging	41	7054	0.1	0.2	-0.1	0.0	0.2	0.1	-0.1	0.2
	42	7021	0.0	0.0	0.0	0.0	0.0	0.0	-0.1	0.1
	43	7051	0.1	0.0	-0.1	0.0	0.1	0.0	-0.1	0.2
	44	7018	0.0	0.0	0.0	0.0	0.0	0.0	0.0	0.1
	45	7048	0.0	0.0	-0.1	0.0	0.0	0.0	-0.1	0.1
	46	7010	0.0	0.0	-0.1	0.0	0.0	0.0	-0.1	0.1
Ram Closure Plate	47	7012	0.1	0.0	-0.1	0.0	0.1	0.0	-0.1	0.1
	48	7004	0.0	0.0	0.0	0.0	0.0	0.0	0.0	0.0
	49	7011	0.1	0.0	0.0	0.0	0.1	0.0	0.0	0.1
	50	7003	0.0	0.0	0.0	0.0	0.0	0.0	0.0	0.0
	51	7013	0.0	0.0	0.0	0.0	0.0	0.0	0.0	0.0
	52	7001	0.0	0.0	0.0	0.0	0.0	0.0	0.0	0.0

Table 2.6.4-4
Cask Dead Weight Total Stress Summary, 135° Azimuth

Cask Component	Stress Point	Node Number	Stress Components (ksi)				Principal Stresses (ksi)			SI (ksi)
			SX	SY	SZ	SXY	S1	S2	S3	
Top Closure	1	10730	0.0	0.0	0.0	0.0	0.1	0.0	0.0	0.1
	2	10771	0.0	0.0	0.0	0.0	0.0	0.0	0.0	0.0
	3	10738	0.0	0.0	0.0	0.0	0.1	0.0	-0.1	0.2
	4	10779	0.0	0.0	0.0	0.0	0.0	0.0	0.0	0.0
	5	10746	0.0	0.0	0.0	0.0	0.1	0.0	-0.1	0.2
	6	10786	0.0	0.0	0.0	0.0	0.0	0.0	0.0	0.1
Top Flange	7	10711	0.0	0.0	0.0	0.0	0.0	0.0	0.0	0.1
	8	10713	0.0	0.0	0.0	0.0	0.0	0.0	0.0	0.1
	9	10672	0.0	0.0	0.0	0.0	0.1	0.0	-0.1	0.2
	10	10674	0.0	0.0	0.0	0.0	0.0	0.0	-0.1	0.1
Inner Shell	11	10654	0.0	0.0	0.0	0.0	0.1	0.0	-0.2	0.3
	12	10656	0.0	0.0	0.0	0.0	0.1	0.0	-0.1	0.2
	13	10574	0.0	0.0	-0.1	0.0	0.1	0.0	-0.2	0.3
	14	10576	0.0	0.0	0.0	0.0	0.1	0.0	-0.1	0.1
	15	10521	0.0	0.0	0.0	0.0	0.1	0.0	-0.1	0.2
	16	10522	0.0	0.0	0.0	0.0	0.0	0.0	-0.1	0.1
	17	10371	0.0	0.0	0.0	0.0	0.0	0.0	0.0	0.0
	18	10372	0.0	0.0	0.0	0.0	0.0	0.0	0.0	0.0
	19	10221	0.0	0.0	0.0	0.0	0.0	0.0	-0.1	0.1
	20	10222	0.0	0.0	0.0	0.0	0.0	0.0	-0.1	0.1
	21	10161	0.0	0.0	-0.1	0.0	0.1	0.0	-0.2	0.2
	22	10162	0.0	0.0	0.0	0.0	0.0	0.0	-0.1	0.1
	23	10062	0.0	0.0	0.0	0.0	0.1	0.0	-0.2	0.3
	24	10064	0.0	0.0	0.0	0.0	0.1	0.0	-0.1	0.2
	25	10054	0.0	0.0	0.0	0.0	0.1	0.0	-0.1	0.2
	26	10056	0.0	0.0	0.0	0.0	0.0	0.0	-0.1	0.1
Outer Shell	27	10680	0.0	0.0	0.0	0.0	0.2	0.0	-0.2	0.4
	28	10682	0.0	0.0	0.0	0.0	0.0	0.0	-0.1	0.1
	29	10578	0.0	0.0	0.0	0.0	0.1	0.0	-0.1	0.2
	30	10580	0.0	0.0	0.0	0.0	0.0	0.0	0.0	0.0
	31	10525	0.0	0.0	0.0	0.0	0.0	0.0	-0.1	0.1
	32	10526	0.0	-0.1	0.0	0.0	0.0	0.0	-0.1	0.1
	33	10375	0.0	0.0	0.0	0.0	0.0	0.0	-0.1	0.1
	34	10376	0.0	0.0	0.0	0.0	0.0	0.0	0.0	0.0
	35	10225	0.0	0.0	0.0	0.0	0.1	0.0	-0.1	0.1
	36	10226	0.0	-0.1	0.0	0.0	0.0	0.0	-0.1	0.1
	37	10165	0.0	0.0	-0.1	0.0	0.1	0.0	-0.2	0.2
	38	10167	0.0	0.0	0.0	0.0	0.0	0.0	0.0	0.0
	39	10073	0.0	0.0	0.0	0.0	0.1	0.0	-0.1	0.2
	40	10075	0.0	0.0	0.0	0.0	0.0	0.0	-0.1	0.1
Bottom Forging	41	10054	0.0	0.0	0.0	0.0	0.1	0.0	-0.1	0.2
	42	10021	0.0	0.0	0.0	0.0	0.0	0.0	0.0	0.0
	43	10051	0.0	0.0	0.0	0.0	0.1	0.0	-0.1	0.2
	44	10018	0.0	0.0	0.0	0.0	0.0	0.0	0.0	0.0
	45	10048	0.0	0.0	0.0	0.0	0.1	0.0	-0.1	0.2
	46	10010	0.0	0.0	0.0	0.0	0.0	0.0	0.0	0.1
Ram Closure Plate	47	10012	0.0	0.0	0.0	0.0	0.1	0.0	-0.1	0.1
	48	10004	0.0	0.0	0.0	0.0	0.0	0.0	0.0	0.0
	49	10011	0.0	0.0	0.0	0.0	0.1	0.0	-0.1	0.2
	50	10003	0.0	0.0	0.0	0.0	0.0	0.0	0.0	0.0
	51	10013	0.0	0.0	0.0	0.0	0.0	0.0	0.0	0.0
	52	10001	0.0	0.0	0.0	0.0	0.0	0.0	0.0	0.0

Table 2.6.4-5
Cask Dead Weight Total Stress Summary, 180° Azimuth

Cask Component	Stress Point	Node Number	Stress Components (ksi)				Principal Stresses (ksi)			SI (ksi)
			SX	SY	SZ	SXY	S1	S2	S3	
Top Closure	1	13730	0.0	0.0	0.1	0.0	0.1	0.0	0.0	0.1
	2	13771	0.0	0.0	0.0	0.0	0.0	0.0	0.0	0.0
	3	13738	-0.1	0.0	0.0	0.0	0.0	0.0	-0.1	0.2
	4	13779	0.0	0.0	0.0	0.0	0.0	0.0	0.0	0.0
	5	13746	-0.2	-0.1	0.0	0.0	0.0	-0.1	-0.2	0.2
	6	13786	0.1	-0.1	0.1	0.0	0.1	0.1	-0.1	0.2
Top Flange	7	13711	-0.2	-0.1	-0.1	0.0	-0.1	-0.1	-0.2	0.1
	8	13713	-0.1	0.2	0.0	0.0	0.2	0.0	-0.1	0.3
	9	13672	0.0	-0.1	0.2	0.0	0.2	0.0	-0.1	0.3
	10	13674	0.1	0.2	0.2	0.1	0.2	0.2	0.1	0.2
Inner Shell	11	13654	0.0	-0.1	0.1	0.0	0.1	0.0	-0.1	0.2
	12	13656	0.0	0.2	0.1	0.1	0.2	0.1	0.0	0.3
	13	13574	0.0	0.0	0.0	0.0	0.0	0.0	0.0	0.1
	14	13576	0.0	-0.2	-0.3	0.0	0.0	-0.2	-0.3	0.2
	15	13521	0.0	-0.1	0.1	0.0	0.1	0.0	-0.1	0.2
	16	13522	0.0	-0.2	-0.2	0.0	0.0	-0.1	-0.2	0.2
	17	13371	0.0	-0.1	0.1	0.0	0.1	0.0	-0.1	0.3
	18	13372	0.0	-0.3	-0.2	0.0	0.0	-0.2	-0.3	0.3
	19	13221	0.0	-0.1	0.1	0.0	0.1	0.0	-0.1	0.2
	20	13222	0.0	-0.2	-0.2	0.0	0.0	-0.2	-0.2	0.2
	21	13161	0.0	0.0	0.0	0.0	0.0	0.0	-0.1	0.1
	22	13162	0.0	-0.2	-0.3	0.0	0.0	-0.2	-0.3	0.2
	23	13062	-0.1	-0.2	0.1	0.0	0.1	-0.1	-0.2	0.3
	24	13064	0.0	0.3	0.1	-0.1	0.3	0.1	0.0	0.4
	25	13054	-0.2	-0.2	0.0	0.0	0.0	-0.2	-0.3	0.2
	26	13056	-0.1	0.2	0.1	-0.1	0.2	0.1	-0.1	0.3
Outer Shell	27	13680	-0.1	-0.6	-0.1	0.1	0.0	-0.1	-0.6	0.6
	28	13682	-0.1	0.2	0.0	0.0	0.2	0.0	-0.1	0.3
	29	13578	0.0	-0.1	0.1	0.0	0.1	0.0	-0.1	0.2
	30	13580	0.0	-0.4	-0.3	0.0	0.0	-0.3	-0.4	0.3
	31	13525	0.0	-0.2	0.1	0.0	0.1	0.0	-0.2	0.3
	32	13526	0.0	-0.3	-0.2	0.0	0.0	-0.2	-0.3	0.3
	33	13375	0.0	-0.1	0.2	0.0	0.2	0.0	-0.1	0.4
	34	13376	0.0	-0.3	-0.3	0.0	0.0	-0.3	-0.3	0.3
	35	13225	0.0	-0.1	0.1	0.0	0.1	0.0	-0.1	0.3
	36	13226	0.0	-0.2	-0.2	0.0	0.0	-0.2	-0.2	0.2
	37	13165	0.0	-0.1	0.1	0.0	0.1	0.0	-0.1	0.2
	38	13167	0.0	-0.3	-0.3	0.0	0.0	-0.3	-0.3	0.3
	39	13073	0.0	0.1	0.1	0.0	0.1	0.1	-0.1	0.2
	40	13075	-0.1	0.4	0.1	0.0	0.4	0.1	-0.1	0.4
Bottom Forging	41	13054	-0.2	-0.2	0.0	0.0	0.0	-0.2	-0.3	0.2
	42	13021	0.0	0.0	0.0	0.0	0.0	0.0	0.0	0.0
	43	13051	-0.1	0.0	0.1	0.0	0.1	0.0	-0.1	0.2
	44	13018	0.0	0.0	0.0	0.0	0.0	0.0	0.0	0.0
	45	13048	0.0	0.0	0.1	0.0	0.1	0.0	0.0	0.1
	46	13010	0.0	0.0	0.0	0.0	0.0	0.0	0.0	0.1
Ram Closure Plate	47	13012	-0.1	0.0	0.1	0.0	0.1	0.0	-0.1	0.1
	48	13004	0.0	0.0	0.0	0.0	0.0	0.0	0.0	0.0
	49	13011	-0.1	0.0	0.0	0.0	0.0	0.0	-0.1	0.1
	50	13003	0.0	0.0	0.0	0.0	0.0	0.0	0.0	0.0
	51	13013	0.0	0.0	0.0	0.0	0.0	0.0	0.0	0.0
	52	13001	0.0	0.0	0.0	0.0	0.0	0.0	0.0	0.0

2.6.4.2 Cask Top Closure Bolt Vibration Analysis

The stresses in the cask top closure bolts due to the normal vibration condition are calculated in Appendix 2.10.5.

2.6.5 Water Spray

Regulatory Guide 7.8 [2.3] states that the water spray test of 10CFR71.71 [2.1] is of no structural significance for large casks. Therefore, the NUHOMS®-MP187 transportation package need not be analyzed for the water spray condition.

2.6.6 Free Drop

Section 71.71(c)(7) of the Part 71 regulations [2.1] include a 0.3 meter (1 foot) free drop as a normal condition of transport for packages weighing more than 33,000 pounds. The loaded NUHOMS®-MP187 cask with impact limiters attached weighs 271,300 pounds, and therefore must be analyzed for a 1 foot free drop. Since the NUHOMS®-MP187 transportation package is transported solely in a horizontal orientation, the package is only analyzed for a 1 foot drop in the horizontal orientation to satisfy the intent of the regulations [2.1].

The NUHOMS®-MP187 transportation package components are analyzed for the 1 foot drop condition using equivalent static loading. The peak g-load resulting from a 1 foot side drop for hot (100°F) and cold conditions (-20°F) are 13.9 g's and 21.0 g's, respectively [Appendix 2.10.9]. The equivalent static loads used for the 1 foot drop analyses are calculated by multiplying the peak 1 foot drop g-load by the appropriate DLFs from Appendix 2.10.10 for the various package components. The 1 foot drop analyses are presented in the following sections.

2.6.6.1 Cask Free Drop Analysis

In the event of a 1 foot flat side horizontal drop, the cask is supported by the top and bottom impact limiters along the lower surface of the cask structural shell outside the region of the neutron shield.

The cask is loaded by its own self weight and the weight of the DSC. The maximum cask DLFs for the hot and cold 1 foot flat side horizontal drop condition are 1.65 and 1.63, respectively [Appendix 2.10.10]. Therefore, the equivalent static g-loads for the 1 foot flat side horizontal drop in hot and cold conditions are 22.9 g's and 34.2 g's, respectively. Figure 2.6.6-1 shows a free body diagram of the cask for the 1 foot side drop condition. The stresses in the cask components are presented in Table 2.6.6-1 through Table 2.6.6-15 for the 1-foot cold side drop maximum g-load of 34.2g.

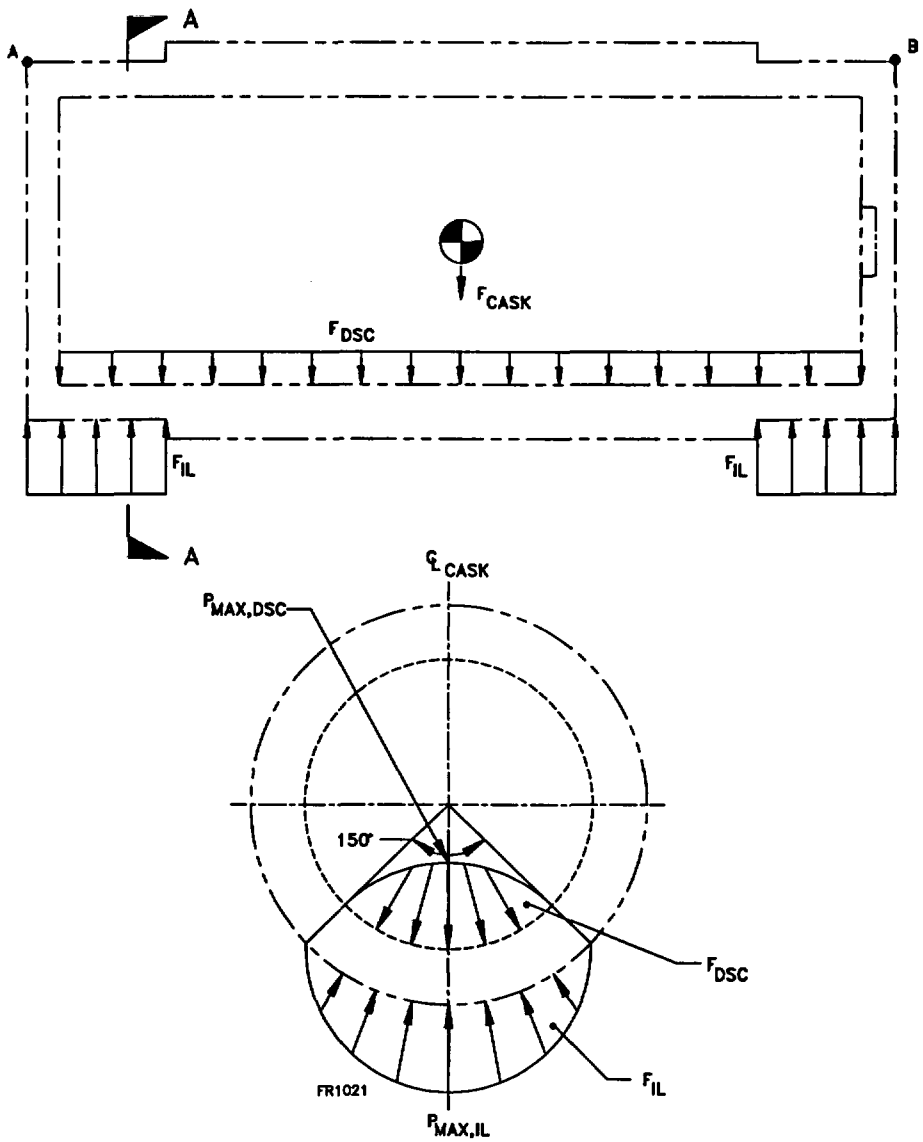

Figure 2.6.6-1
Cask Free Body Diagram for 1 Foot Side Drop

The cask 1-foot side drop stress analysis is performed using the half symmetry three dimensional finite element model described in Section 2.10.2.1.3. The cask loads due to the 1-foot side drop include the DSC inertial load, the cask inertial load, and the impact reaction loads. The maximum package decelerations resulting from the cold drop condition correspond to the minimum package weight (i.e. cask, DSC, and impact limiters) of 256.6 kips. The weight of the DSC used for the evaluation is calculated as the total package weight, less the weight of the impact limiters and the cask model (77.3 x 2 = 154.6 kips), as follows:

$$W_{DSC} = 256.6 - 2(15.8) - 154.6$$

$$= 70.4 \text{ kips}$$

The cask loads from the DSC and the impact limiter reactions are assumed to have cosine distributions, as shown in Figure 2.6.6-1, spread over a 75 degree half angle of contact between the impact limiters and cask outer surface. The pressure load acting on the inner surface of the cask, assuming a uniform distribution over the length of the cask cavity (L = 187 inches), is determined using the formula derived in Section 2.10.2.1.3.1, as follows:

$$P_i = \frac{F_{DSC}}{LR}\left[\frac{\sin\left(\frac{\pi}{2}+\theta\right)}{\left(\frac{\pi}{2\theta}\right)+1}+\frac{\sin\left(\frac{\pi}{2}-\theta\right)}{\left(\frac{\pi}{2\theta}\right)-1}\right]^{-1}\cos\left(\frac{\pi\theta_i}{2\theta}\right)$$

where;

L	=	187 in., Length of cask cavity
R	=	34.0 in., Radius of cask cavity
F_{DSC}	=	W_{DSC} G, Inertial load due to DSC
W_{DSC}	=	70,400 lb., Weight of DSC
G	=	30.8g, Equivalent static cold 1-foot side drop g-load
θ	=	75° (1.309 radians), Half angle of contact

The resulting pressure distribution around the circumference of the cask inner shell, applied uniformly over the length of the cask cavity, is summarized below:

Circumferential Location	Pressure Load (psi)
0°	241.6
10°	236.3
20°	220.7
30°	195.4
45°	142.0
60°	74.7
75°	0.0

The impact loads are reacted by the impact limiters at each end of the cask. The total reaction load at each impact limiter, F_{IL}, is calculated as follows:

$$F_{IL} = [W_{CASK} + W_{DSC}](G)/2$$

$$= [154{,}600 + 70{,}400](30.8)/2$$

$$= 3.465 \times 10^6 \text{ lb.}$$

The loading on the outer surface of the cask due to the impact reaction load is assumed to be uniform along the length of the 32 inch overhang region and vary with a cosine distribution around the circumference of the cask (R = 41.75 inches). The resulting cosine pressure load distribution is calculated as discussed above, assuming a 75 degree half angle of contact between the impact limiter and cask outer surface, and summarized below:

Circumferential Location	Pressure Load (psi)
0°	1,837
10°	1,797
20°	1,678
30°	1,486
45°	1,080

60°	568
75°	0

In addition to the applied pressure loads from the DSC and impact limiter reactions, a vertical acceleration load of 34.2g is applied to the cask model to account for the cask inertial load. The model is pinned at the nodes on each end of the cask (points A and B in Figure 2.6.6-1) to prevent rigid body motion. The total vertical reaction load at these nodes for the one foot drop condition is 8,725 pounds due to a slight unbalance in the applied inertial loads and reaction loads. The load unbalance represents 0.25% of the total impact load which is considered negligable.

The cask stress components, principal stresses, and stress intensities at the 52 stress points shown in Figure 2.6.1-1 due to the 34.2g 1-foot side drop are summarized in Table 2.6.6-1 through Table 2.6.6-15. The maximum primary membrane stress intensity in the cask due to the 34.2g maximum 1-foot side drop deceleration, occuring in the cask outer shell at the 45° azimuth near the ends of the neutron shield (stress points 29 and 30) is 14.0 ksi. The allowable primary membrane stress intensity at 300°F is 20.0 ksi for SA-240, Type 304 stainless steel. Therefore, the minimum margin of safety in the cask for primary membrane stress intenstiy due to the 34.2g maximum 1-foot side drop deceleration is:

$$\text{M.S.} = (20.0/14.0) - 1$$

$$= +0.43$$

The maximum membrane plus bending stress intensity in the cask due to the 34.2g 1-foot side drop, occuring on the 0° azimuth at the junction of the outer shell and bottom end forging (stress point 40), is 19.2 ksi. The allowable membrane plus bending stress intensity in the cask outer shell at the design temperature of 300°F is limited to 30.0 ksi. Therefore, the minimum margin of safety in the cask for membrane plus bending stress intensity due to the 34.2g maximum 1-foot side drop deceleration is:

$$\text{M.S.} = (30.0/19.2) - 1$$

$= \quad +0.56$

The maximum primary plus secondary stress intensity in the cask due to the 1-foot side drop, occuring on the 0 degree azimuth in the top flange (stress point 8), is 18.0 ksi. Note that the total stress intensity at the junction of the outer shell and bottom end forging (stress point 40) is 18.0 ksi, which is lower than the membrane plus bending stress intensity due to the peak stress components (i.e. non-linear bending contribution) which acts opposite to the linearized bending distribution. The allowable primary plus secondary stress intensity in the cask outer shell at the design temperature of 300°F is limited to 60.0 ksi. Therefore, the minimum margin of safety in the cask for primary plus secondary stress intensity due to the 34.2g maximum 1-foot side drop deceleration is:

$$\text{M.S.} = (60.0/18.0) - 1$$

$$= +2.33$$

Therefore, the cask meets the stress acceptance criteria for the 1-foot side drop condition.

Table 2.6.6-1
Cask 1-Foot Side Drop Membrane Stress Summary, 0° Azimuth

Cask Component	Stress Point	Node Number	Stress Components (ksi)				Principal Stresses (ksi)			SI (ksi)
			SX	SY	SZ	SXY	S1	S2	S3	
Top Cover	1	730	-0.13	0.08	0.50	0.06	0.54	0.10	-0.18	0.72
	2	771	-0.13	0.08	0.50	0.06	0.54	0.10	-0.18	0.72
	3	738	-2.79	0.00	-0.26	0.20	0.02	-0.26	-2.81	2.82
	4	779	-2.79	0.00	-0.26	0.20	0.02	-0.26	-2.81	2.82
	5	746	-1.73	-2.45	-1.15	0.19	-1.13	-1.70	-2.50	1.37
	6	786	-1.73	-2.45	-1.15	0.19	-1.13	-1.70	-2.50	1.37
Top Flange	7	711	-7.39	1.49	-5.31	-0.76	1.55	-5.31	-7.46	9.01
	8	713	-7.39	1.49	-5.31	-0.76	1.55	-5.31	-7.46	9.01
Inner Shell	9	672	-0.25	0.89	-6.27	0.31	0.98	-0.24	-6.38	7.36
	10	674	-0.25	0.89	-6.27	0.31	0.98	-0.24	-6.38	7.36
	11	654	-0.20	1.33	-8.88	0.39	1.43	-0.24	-8.93	10.36
	12	656	-0.20	1.33	-8.88	0.39	1.43	-0.24	-8.93	10.36
	13	574	-0.38	2.01	-4.89	-0.11	2.06	-0.35	-4.96	7.02
	14	576	-0.38	2.01	-4.89	-0.11	2.06	-0.35	-4.96	7.02
	15	521	-0.19	5.12	3.22	0.00	5.27	3.11	-0.22	5.49
	16	522	-0.19	5.12	3.22	0.00	5.27	3.11	-0.22	5.49
	17	371	-0.18	9.92	3.54	0.00	9.92	3.57	-0.21	10.13
	18	372	-0.18	9.92	3.54	0.00	9.92	3.57	-0.21	10.13
	19	221	-0.18	4.96	3.33	0.00	5.13	3.18	-0.21	5.35
	20	222	-0.18	4.96	3.33	0.00	5.13	3.18	-0.21	5.35
	21	161	-0.36	1.38	-5.38	0.13	1.42	-0.32	-5.46	6.88
	22	162	-0.36	1.38	-5.38	0.13	1.42	-0.32	-5.46	6.88
	23	62	-0.55	0.58	-4.43	-0.56	0.81	-0.75	-4.46	5.27
	24	64	-0.55	0.58	-4.43	-0.56	0.81	-0.75	-4.46	5.27
	25	54	-5.30	0.23	-4.10	-0.03	0.24	-4.10	-5.30	5.54
	26	56	-5.30	0.23	-4.10	-0.03	0.24	-4.10	-5.30	5.54
Outer Shell	27	680	-2.07	-2.47	-9.44	2.61	0.37	-4.84	-9.51	9.88
	28	682	-2.07	-2.47	-9.44	2.61	0.37	-4.84	-9.51	9.88
	29	578	-0.76	-0.50	-8.75	-1.42	0.79	-1.90	-8.91	9.70
	30	580	-0.76	-0.50	-8.75	-1.42	0.79	-1.90	-8.91	9.70
	31	525	-0.10	3.72	5.20	0.17	5.62	3.35	-0.16	5.78
	32	526	-0.10	3.72	5.20	0.17	5.62	3.35	-0.16	5.78
	33	375	-0.11	10.01	4.05	0.00	10.01	4.09	-0.15	10.15
	34	376	-0.11	10.01	4.05	0.00	10.01	4.09	-0.15	10.15
	35	225	-0.10	4.53	5.18	-0.13	5.72	4.03	-0.15	5.88
	36	226	-0.10	4.53	5.18	-0.13	5.72	4.03	-0.15	5.88
	37	165	-0.79	0.09	-8.72	1.33	1.06	-1.62	-8.85	9.91
	38	167	-0.79	0.09	-8.72	1.33	1.06	-1.62	-8.85	9.91
	39	73	-2.38	-1.00	-4.55	-3.17	1.56	-4.49	-5.00	6.55
	40	75	-2.38	-1.00	-4.55	-3.17	1.56	-4.49	-5.00	6.55
Bottom Cover	41	54	-2.72	-0.24	-2.14	-0.13	-0.23	-2.13	-2.74	2.51
	42	21	-2.72	-0.24	-2.14	-0.13	-0.23	-2.13	-2.74	2.51
	43	51	-2.34	0.00	-1.24	-0.17	0.01	-1.23	-2.36	2.38
	44	18	-2.34	0.00	-1.24	-0.17	0.01	-1.23	-2.36	2.38
	45	48	-1.46	-0.60	-1.12	-0.31	-0.47	-1.11	-1.60	1.13
	46	10	-1.46	-0.60	-1.12	-0.31	-0.47	-1.11	-1.60	1.13
Ram Access Cover Plate	47	12	-1.64	0.04	0.82	-0.06	0.82	0.04	-1.64	2.46
	48	4	-1.64	0.04	0.82	-0.06	0.82	0.04	-1.64	2.46
	49	11	-1.36	0.21	0.71	-0.08	0.72	0.21	-1.37	2.09
	50	3	-1.36	0.21	0.71	-0.08	0.72	0.21	-1.37	2.09
	51	13	-0.07	-0.03	0.50	-0.13	0.53	0.08	-0.21	0.74
	52	1	-0.07	-0.03	0.50	-0.13	0.53	0.08	-0.21	0.74

(1.110)*Pm, hsd1-3.xls

Table 2.6.6-2
Cask 1-Foot Side Drop Membrane Stress Summary, 45° Azimuth

Cask Component	Stress Point	Node Number	Components (ksi)				Principal Stresses (ksi)			SI (ksi)
			SX	SY	SZ	SXY	S1	S2	S3	
Top Cover	1	4730	0.34	0.08	0.03	0.02	0.54	0.10	-0.18	0.72
	2	4771	0.34	0.08	0.03	0.02	0.54	0.10	-0.18	0.72
	3	4738	-0.94	0.00	-1.58	0.04	0.14	-0.03	-2.62	2.75
	4	4779	-0.94	0.00	-1.58	0.04	0.14	-0.03	-2.62	2.75
	5	4746	-0.70	-0.61	-2.00	0.00	-0.17	-0.65	-2.50	2.33
	6	4786	-0.70	-0.61	-2.00	0.00	-0.17	-0.65	-2.50	2.33
Top Flange	7	4711	-4.12	0.75	-4.04	-0.45	0.82	-3.93	-4.29	5.11
	8	4713	-4.12	0.75	-4.04	-0.45	0.82	-3.93	-4.29	5.11
Inner Shell	9	4672	-1.33	1.11	-6.11	0.15	1.22	-1.31	-6.25	7.47
	10	4674	-1.33	1.11	-6.11	0.15	1.22	-1.31	-6.25	7.47
	11	4654	-0.52	1.33	-6.68	-0.20	1.38	-0.54	-6.71	8.09
	12	4656	-0.52	1.33	-6.68	-0.20	1.38	-0.54	-6.71	8.09
	13	4574	-0.27	2.66	-2.54	-0.06	4.46	-0.27	-4.34	8.80
	14	4576	-0.27	2.66	-2.54	-0.06	4.46	-0.27	-4.34	8.80
	15	4521	-0.04	3.74	2.27	0.02	6.77	-0.04	-0.76	7.54
	16	4522	-0.04	3.74	2.27	0.02	6.77	-0.04	-0.76	7.54
	17	4371	0.01	5.33	2.44	0.00	5.33	2.44	0.01	5.32
	18	4372	0.01	5.33	2.44	0.00	5.33	2.44	0.01	5.32
	19	4221	-0.05	3.88	2.32	-0.02	6.95	-0.05	-0.75	7.69
	20	4222	-0.05	3.88	2.32	-0.02	6.95	-0.05	-0.75	7.69
	21	4161	-0.31	2.56	-2.51	0.06	4.47	-0.32	-4.43	8.90
	22	4162	-0.31	2.56	-2.51	0.06	4.47	-0.32	-4.43	8.90
	23	4062	-0.44	1.21	-3.77	-0.18	1.34	-0.46	-3.88	5.23
	24	4064	-0.44	1.21	-3.77	-0.18	1.34	-0.46	-3.88	5.23
	25	4054	-2.48	0.31	-3.50	-0.01	0.33	-1.84	-4.16	4.50
	26	4056	-2.48	0.31	-3.50	-0.01	0.33	-1.84	-4.16	4.50
Outer Shell	27	4680	-1.06	0.43	-6.05	1.12	1.07	-1.63	-6.12	7.19
	28	4682	-1.06	0.43	-6.05	1.12	1.07	-1.63	-6.12	7.19
	29	4578	-0.63	2.09	-4.58	-0.77	5.80	-0.69	-8.22	14.02
	30	4580	-0.63	2.09	-4.58	-0.77	5.80	-0.69	-8.22	14.02
	31	4525	-0.04	3.49	3.10	0.15	8.89	-0.04	-2.31	11.20
	32	4526	-0.04	3.49	3.10	0.15	8.89	-0.04	-2.31	11.20
	33	4375	0.01	5.13	2.45	0.00	5.14	2.44	0.01	5.13
	34	4376	0.01	5.13	2.45	0.00	5.14	2.44	0.01	5.13
	35	4225	-0.05	3.58	3.11	-0.11	8.54	-0.05	-1.85	10.39
	36	4226	-0.05	3.58	3.11	-0.11	8.54	-0.05	-1.85	10.39
	37	4165	-0.68	1.91	-4.65	0.75	5.52	-0.74	-8.20	13.72
	38	4167	-0.68	1.91	-4.65	0.75	5.52	-0.74	-8.20	13.72
	39	4073	-1.21	0.08	-3.82	-1.50	1.33	-1.90	-4.38	5.70
	40	4075	-1.21	0.08	-3.82	-1.50	1.33	-1.90	-4.38	5.70
Bottom Cover	41	4054	-1.33	0.20	-2.39	-0.05	0.26	-1.01	-2.77	3.02
	42	4021	-1.33	0.20	-2.39	-0.05	0.26	-1.01	-2.77	3.02
	43	4051	-1.09	0.00	-2.01	-0.03	0.02	-0.43	-2.68	2.69
	44	4018	-1.09	0.00	-2.01	-0.03	0.02	-0.43	-2.68	2.69
	45	4048	-0.78	0.04	-2.24	-0.05	0.13	-0.27	-2.84	2.97
	46	4010	-0.78	0.04	-2.24	-0.05	0.13	-0.27	-2.84	2.97
Ram Access Cover Plate	47	4012	-0.35	-0.16	-0.79	0.06	0.80	-0.19	-1.91	2.71
	48	4004	-0.35	-0.16	-0.79	0.06	0.80	-0.19	-1.91	2.71
	49	4011	-0.07	0.15	-0.70	-0.04	1.13	0.15	-1.90	3.03
	50	4003	-0.07	0.15	-0.70	-0.04	1.13	0.15	-1.90	3.03
	51	4013	0.35	-0.03	0.08	-0.06	0.53	0.08	-0.21	0.74
	52	4001	0.35	-0.03	0.08	-0.06	0.53	0.08	-0.21	0.74

(1.110)*Pm, hsd1-3.xls

Table 2.6.6-3
Cask 1-Foot Side Drop Membrane Stress Summary, 90° Azimuth

Cask Component	Stress Point	Node Number	Components (ksi)				Principal Stresses (ksi)			SI (ksi)
			SX	SY	SZ	SXY	S1	S2	S3	
Top Cover	1	7730	0.50	0.08	-0.13	-0.04	0.54	0.10	-0.18	0.72
	2	7771	0.50	0.08	-0.13	-0.04	0.54	0.10	-0.18	0.72
	3	7738	0.67	0.00	-2.10	-0.10	0.76	-0.01	-2.19	2.95
	4	7779	0.67	0.00	-2.10	-0.10	0.76	-0.01	-2.19	2.95
	5	7746	0.33	0.85	-1.74	-0.17	1.01	0.51	-2.08	3.09
	6	7786	0.33	0.85	-1.74	-0.17	1.01	0.51	-2.08	3.09
Top Flange	7	7711	0.30	-0.18	-1.36	0.08	0.41	-0.03	-1.62	2.02
	8	7713	0.30	-0.18	-1.36	0.08	0.41	-0.03	-1.62	2.02
Inner Shell	9	7672	-0.58	0.89	-3.20	0.05	1.01	-0.57	-3.34	4.35
	10	7674	-0.58	0.89	-3.20	0.05	1.01	-0.57	-3.34	4.35
	11	7654	-0.10	1.16	-2.36	-0.15	1.85	-0.11	-3.04	4.89
	12	7656	-0.10	1.16	-2.36	-0.15	1.85	-0.11	-3.04	4.89
	13	7574	0.04	1.55	0.50	0.03	4.67	0.04	-2.62	7.29
	14	7576	0.04	1.55	0.50	0.03	4.67	0.04	-2.62	7.29
	15	7521	0.03	0.43	0.84	0.03	3.85	0.03	-2.57	6.42
	16	7522	0.03	0.43	0.84	0.03	3.85	0.03	-2.57	6.42
	17	7371	-0.03	-1.30	0.71	0.00	0.71	-0.03	-1.30	2.01
	18	7372	-0.03	-1.30	0.71	0.00	0.71	-0.03	-1.30	2.01
	19	7221	0.04	0.60	0.82	-0.03	3.83	0.04	-2.41	6.24
	20	7222	0.04	0.60	0.82	-0.03	3.83	0.04	-2.41	6.24
	21	7161	0.06	2.07	0.72	-0.03	5.02	0.06	-2.23	7.25
	22	7162	0.06	2.07	0.72	-0.03	5.02	0.06	-2.23	7.25
	23	7062	-0.05	1.22	-1.77	0.25	1.94	-0.08	-2.46	4.40
	24	7064	-0.05	1.22	-1.77	0.25	1.94	-0.08	-2.46	4.40
	25	7054	1.00	0.35	-1.68	0.09	1.35	0.36	-2.04	3.39
	26	7056	1.00	0.35	-1.68	0.09	1.35	0.36	-2.04	3.39
Outer Shell	27	7680	0.22	1.56	-1.54	-0.60	4.23	0.08	-4.06	8.29
	28	7682	0.22	1.56	-1.54	-0.60	4.23	0.08	-4.06	8.29
	29	7578	-0.02	2.10	-0.60	0.11	6.23	-0.02	-4.74	10.97
	30	7580	-0.02	2.10	-0.60	0.11	6.23	-0.02	-4.74	10.97
	31	7525	0.03	0.35	-0.12	0.07	4.53	0.03	-4.30	8.82
	32	7526	0.03	0.35	-0.12	0.07	4.53	0.03	-4.30	8.82
	33	7375	-0.02	-2.11	-0.10	0.00	0.01	-0.13	-2.11	2.12
	34	7376	-0.02	-2.11	-0.10	0.00	0.01	-0.13	-2.11	2.12
	35	7225	0.03	-0.02	-0.14	-0.06	4.16	0.03	-4.32	8.48
	36	7226	0.03	-0.02	-0.14	-0.06	4.16	0.03	-4.32	8.48
	37	7165	-0.01	1.93	-0.70	-0.10	5.97	-0.01	-4.74	10.72
	38	7167	-0.01	1.93	-0.70	-0.10	5.97	-0.01	-4.74	10.72
	39	7073	0.27	0.72	-1.74	0.73	3.02	0.01	-3.79	6.81
	40	7075	0.27	0.72	-1.74	0.73	3.02	0.01	-3.79	6.81
Bottom Cover	41	7054	0.37	0.60	-1.51	0.08	0.86	0.49	-1.89	2.75
	42	7021	0.37	0.60	-1.51	0.08	0.86	0.49	-1.89	2.75
	43	7051	0.24	0.00	-1.95	0.11	0.45	-0.01	-2.14	2.60
	44	7018	0.24	0.00	-1.95	0.11	0.45	-0.01	-2.14	2.60
	45	7048	-0.07	0.58	-2.77	0.19	0.63	-0.09	-2.80	3.43
	46	7010	-0.07	0.58	-2.77	0.19	0.63	-0.09	-2.80	3.43
Ram Access Cover Plate	47	7012	0.69	-0.31	-2.06	0.14	0.72	-0.32	-2.08	2.79
	48	7004	0.69	-0.31	-2.06	0.14	0.72	-0.32	-2.08	2.79
	49	7011	0.53	0.00	-1.96	0.07	0.55	-0.01	-1.97	2.52
	50	7003	0.53	0.00	-1.96	0.07	0.55	-0.01	-1.97	2.52
	51	7013	0.50	-0.03	-0.07	0.06	0.53	0.08	-0.21	0.74
	52	7001	0.50	-0.03	-0.07	0.06	0.53	0.08	-0.21	0.74

(1.110)*Pm, hsd1-3.xls

Table 2.6.6-4

Cask 1-Foot Side Drop Membrane Stress Summary, 135° Azimuth

Cask Component	Stress Point	Node Number	Components (ksi)				Principal Stresses (ksi)			SI (ksi)
			SX	SY	SZ	SXY	S1	S2	S3	
Top Cover	1	10730	0.03	0.08	0.34	-0.07	0.54	0.10	-0.18	0.72
	2	10771	0.03	0.08	0.34	-0.07	0.54	0.10	-0.18	0.72
	3	10738	-0.57	0.00	0.08	-0.04	1.23	0.00	-1.71	2.94
	4	10779	-0.57	0.00	0.08	-0.04	1.23	0.00	-1.71	2.94
	5	10746	-0.26	-0.21	0.94	-0.01	1.80	-0.21	-1.11	2.90
	6	10786	-0.26	-0.21	0.94	-0.01	1.80	-0.21	-1.11	2.90
Top Flange	7	10711	-0.43	0.00	0.64	-0.09	1.17	-0.31	-0.65	1.81
	8	10713	-0.43	0.00	0.64	-0.09	1.17	-0.31	-0.65	1.81
Inner Shell	9	10672	-0.36	0.16	0.37	0.03	1.32	-0.36	-0.79	2.11
	10	10674	-0.36	0.16	0.37	0.03	1.32	-0.36	-0.79	2.11
	11	10654	0.00	-0.29	0.50	-0.20	1.77	0.03	-1.58	3.35
	12	10656	0.00	-0.29	0.50	-0.20	1.77	0.03	-1.58	3.35
	13	10574	0.01	-1.61	0.49	0.01	1.63	0.01	-2.75	4.38
	14	10576	0.01	-1.61	0.49	0.01	1.63	0.01	-2.75	4.38
	15	10521	-0.01	-2.60	0.08	0.01	0.80	-0.01	-3.32	4.11
	16	10522	-0.01	-2.60	0.08	0.01	0.80	-0.01	-3.32	4.11
	17	10371	0.04	-4.03	-0.38	0.00	0.04	-0.38	-4.03	4.07
	18	10372	0.04	-4.03	-0.38	0.00	0.04	-0.38	-4.03	4.07
	19	10221	-0.01	-2.68	0.08	-0.01	0.71	-0.01	-3.31	4.02
	20	10222	-0.01	-2.68	0.08	-0.01	0.71	-0.01	-3.31	4.02
	21	10161	0.01	-1.69	0.50	-0.01	1.65	0.01	-2.84	4.50
	22	10162	0.01	-1.69	0.50	-0.01	1.65	0.01	-2.84	4.50
	23	10062	0.02	-0.14	0.95	0.09	2.23	0.03	-1.43	3.65
	24	10064	0.02	-0.14	0.95	0.09	2.23	0.03	-1.43	3.65
	25	10054	-0.62	-0.02	0.59	0.02	1.41	-0.14	-1.31	2.72
	26	10056	-0.62	-0.02	0.59	0.02	1.41	-0.14	-1.31	2.72
Outer Shell	27	10680	-0.30	-1.09	0.07	0.59	3.29	-0.18	-4.44	7.73
	28	10682	-0.30	-1.09	0.07	0.59	3.29	-0.18	-4.44	7.73
	29	10578	0.03	-2.94	-1.81	-0.01	0.63	0.03	-5.39	6.03
	30	10580	0.03	-2.94	-1.81	-0.01	0.63	0.03	-5.39	6.03
	31	10525	0.01	-3.98	-1.63	0.00	0.01	-0.48	-5.14	5.15
	32	10526	0.01	-3.98	-1.63	0.00	0.01	-0.48	-5.14	5.15
	33	10375	0.05	-5.48	-1.54	0.00	0.05	-1.54	-5.48	5.53
	34	10376	0.05	-5.48	-1.54	0.00	0.05	-1.54	-5.48	5.53
	35	10225	0.01	-4.04	-1.61	0.00	0.01	-0.54	-5.11	5.12
	36	10226	0.01	-4.04	-1.61	0.00	0.01	-0.54	-5.11	5.12
	37	10165	0.03	-2.88	-1.70	0.00	0.64	0.03	-5.23	5.87
	38	10167	0.03	-2.88	-1.70	0.00	0.64	0.03	-5.23	5.87
	39	10073	-0.34	-0.69	0.76	-0.67	3.71	-0.16	-3.82	7.52
	40	10075	-0.34	-0.69	0.76	-0.67	3.71	-0.16	-3.82	7.52
Bottom Cover	41	10054	-0.31	0.16	0.95	-0.04	1.73	0.14	-1.08	2.81
	42	10021	-0.31	0.16	0.95	-0.04	1.73	0.14	-1.08	2.81
	43	10051	-0.44	0.00	0.36	0.02	1.33	0.00	-1.41	2.75
	44	10018	-0.44	0.00	0.36	0.02	1.33	0.00	-1.41	2.75
	45	10048	-0.41	-0.08	-0.76	0.01	0.60	-0.10	-1.75	2.35
	46	10010	-0.41	-0.08	-0.76	0.01	0.60	-0.10	-1.75	2.35
Ram Access Cover Plate	47	10012	-0.23	-0.02	-0.14	0.05	1.17	-0.03	-1.54	2.71
	48	10004	-0.23	-0.02	-0.14	0.05	1.17	-0.03	-1.54	2.71
	49	10011	0.00	0.05	-0.43	0.01	1.29	0.06	-1.72	3.01
	50	10003	0.00	0.05	-0.43	0.01	1.29	0.06	-1.72	3.01
	51	10013	0.08	-0.03	0.35	0.13	0.53	0.08	-0.21	0.74
	52	10001	0.08	-0.03	0.35	0.13	0.53	0.08	-0.21	0.74

(1.110)*Pm, hsd1-3.xls

Table 2.6.6-5
Cask 1-Foot Side Drop Membrane Stress Summary, 180° Azimuth

Cask Component	Stress Point	Node Number	Components (ksi) SX	SY	SZ	SXY	Principal Stresses (ksi) S1	S2	S3	SI (ksi)
Top Cover	1	13730	-0.13	0.08	0.50	-0.06	0.54	0.10	-0.18	0.72
	2	13771	-0.13	0.08	0.50	-0.06	0.54	0.10	-0.18	0.72
	3	13738	-1.49	0.00	1.41	0.00	1.41	0.00	-1.49	2.91
	4	13779	-1.49	0.00	1.41	0.00	1.41	0.00	-1.49	2.91
	5	13746	-0.78	-0.41	2.33	0.05	2.33	-0.41	-0.79	3.11
	6	13786	-0.78	-0.41	2.33	0.05	2.33	-0.41	-0.79	3.11
Top Flange	7	13711	-3.11	0.93	1.16	-0.32	1.25	0.95	-3.21	4.47
	8	13713	-3.11	0.93	1.16	-0.32	1.25	0.95	-3.21	4.47
Inner Shell	9	13672	-0.35	-0.27	0.70	-0.07	0.75	-0.23	-0.45	1.20
	10	13674	-0.35	-0.27	0.70	-0.07	0.75	-0.23	-0.45	1.20
	11	13654	0.01	-1.15	0.61	-0.36	0.66	0.11	-1.30	1.96
	12	13656	0.01	-1.15	0.61	-0.36	0.66	0.11	-1.30	1.96
	13	13574	0.03	-2.35	0.48	0.01	0.52	0.03	-2.38	2.90
	14	13576	0.03	-2.35	0.48	0.01	0.52	0.03	-2.38	2.90
	15	13521	0.01	-3.43	-0.16	0.01	0.02	-0.14	-3.46	3.48
	16	13522	0.01	-3.43	-0.16	0.01	0.02	-0.14	-3.46	3.48
	17	13371	-0.05	-5.14	-0.68	0.00	-0.04	-0.70	-5.14	5.10
	18	13372	-0.05	-5.14	-0.68	0.00	-0.04	-0.70	-5.14	5.10
	19	13221	0.01	-3.69	-0.23	-0.01	0.02	-0.21	-3.71	3.73
	20	13222	0.01	-3.69	-0.23	-0.01	0.02	-0.21	-3.71	3.73
	21	13161	0.03	-2.41	0.31	-0.01	0.35	0.03	-2.46	2.81
	22	13162	0.03	-2.41	0.31	-0.01	0.35	0.03	-2.46	2.81
	23	13062	0.02	-0.87	1.34	0.21	1.40	0.05	-0.97	2.37
	24	13064	0.02	-0.87	1.34	0.21	1.40	0.05	-0.97	2.37
	25	13054	-1.17	-0.27	1.14	0.10	1.15	-0.27	-1.18	2.34
	26	13056	-1.17	-0.27	1.14	0.10	1.15	-0.27	-1.18	2.34
Outer Shell	27	13680	-0.42	-1.07	0.59	0.86	0.95	-0.07	-1.78	2.73
	28	13682	-0.42	-1.07	0.59	0.86	0.95	-0.07	-1.78	2.73
	29	13578	0.04	-3.79	-2.75	-0.01	0.09	-2.55	-4.04	4.13
	30	13580	0.04	-3.79	-2.75	-0.01	0.09	-2.55	-4.04	4.13
	31	13525	0.03	-5.25	-2.27	0.02	0.07	-2.27	-5.30	5.37
	32	13526	0.03	-5.25	-2.27	0.02	0.07	-2.27	-5.30	5.37
	33	13375	-0.02	-6.98	-1.88	0.00	0.02	-1.92	-6.98	7.00
	34	13376	-0.02	-6.98	-1.88	0.00	0.02	-1.92	-6.98	7.00
	35	13225	0.03	-5.38	-2.20	-0.02	0.07	-2.19	-5.42	5.49
	36	13226	0.03	-5.38	-2.20	-0.02	0.07	-2.19	-5.42	5.49
	37	13165	0.04	-3.84	-2.50	0.01	0.08	-2.37	-4.02	4.10
	38	13167	0.04	-3.84	-2.50	0.01	0.08	-2.37	-4.02	4.10
	39	13073	-0.43	-1.24	1.50	-0.87	1.62	0.03	-1.83	3.45
	40	13075	-0.43	-1.24	1.50	-0.87	1.62	0.03	-1.83	3.45
Bottom Cover	41	13054	-0.25	0.19	2.04	-0.14	2.06	0.22	-0.30	2.36
	42	13021	-0.25	0.19	2.04	-0.14	2.06	0.22	-0.30	2.36
	43	13051	-0.65	0.00	1.45	-0.03	1.45	0.00	-0.65	2.10
	44	13018	-0.65	0.00	1.45	-0.03	1.45	0.00	-0.65	2.10
	45	13048	-0.62	-0.59	0.50	-0.15	0.51	-0.47	-0.76	1.27
	46	13010	-0.62	-0.59	0.50	-0.15	0.51	-0.47	-0.76	1.27
Ram Access Cover Plate	47	13012	-1.19	0.17	1.35	-0.02	1.35	0.17	-1.19	2.54
	48	13004	-1.19	0.17	1.35	-0.02	1.35	0.17	-1.19	2.54
	49	13011	-1.06	0.04	0.91	0.02	0.92	0.04	-1.07	1.99
	50	13003	-1.06	0.04	0.91	0.02	0.92	0.04	-1.07	1.99
	51	13013	-0.07	-0.03	0.50	0.13	0.53	0.08	-0.21	0.74
	52	13001	-0.07	-0.03	0.50	0.13	0.53	0.08	-0.21	0.74

(1.110)*Pm, hsd1-3.xls

Table 2.6.6-6
Cask 1-Foot Side Drop Membrane Plus Bending Stress Summary, 0° Azimuth

Cask Component	Stress Point	Node Number	Stress Components (ksi)				Principal Stresses (ksi)			SI (ksi)
			SX	SY	SZ	SXY	S1	S2	S3	
Top Cover	1	730	-0.29	-0.31	-1.47	-0.11	-0.16	-0.41	-1.51	1.35
	2	771	0.04	0.47	2.47	0.24	2.48	0.58	-0.07	2.55
	3	738	-5.34	0.00	-2.93	0.20	0.01	-2.93	-5.35	5.35
	4	779	-0.25	0.00	2.41	0.20	2.41	0.11	-0.36	2.78
	5	746	-8.68	-3.22	-5.10	-0.17	-3.21	-5.10	-8.69	5.47
	6	786	5.22	-1.68	2.79	0.55	5.27	2.78	-1.72	6.99
Top Flange	7	711	-10.25	-10.56	-9.13	-1.35	-9.00	-9.17	-11.77	2.76
	8	713	-4.53	13.53	-1.50	-0.17	13.53	-1.48	-4.55	18.08
Inner Shell	9	672	-0.13	0.86	-5.51	0.08	0.96	-0.07	-5.66	6.61
	10	674	-0.38	0.91	-7.04	0.53	1.11	-0.48	-7.14	8.24
	11	654	-0.17	2.10	-7.98	0.31	2.17	-0.17	-8.04	10.21
	12	656	-0.23	0.56	-9.78	0.47	0.78	-0.40	-9.84	10.62
	13	574	-0.40	2.04	-4.33	-0.11	2.10	-0.38	-4.43	6.53
	14	576	-0.36	1.98	-5.44	-0.12	2.01	-0.32	-5.50	7.52
	15	521	-0.20	4.16	2.79	0.00	4.38	2.60	-0.23	4.61
	16	522	-0.18	6.09	3.66	0.00	6.18	3.60	-0.21	6.39
	17	371	-0.20	9.01	2.14	0.00	9.01	2.16	-0.22	9.23
	18	372	-0.16	10.82	4.95	0.00	10.82	4.99	-0.20	11.03
	19	221	-0.19	4.17	2.74	0.00	4.39	2.54	-0.22	4.61
	20	222	-0.18	5.74	3.91	0.01	5.88	3.81	-0.21	6.09
	21	161	-0.35	2.14	-5.09	0.13	2.18	-0.31	-5.17	7.35
	22	162	-0.37	0.62	-5.68	0.13	0.66	-0.34	-5.75	6.41
	23	62	-0.59	-3.37	-5.47	-0.04	-0.56	-3.36	-5.52	4.96
	24	64	-0.51	4.54	-3.39	-1.08	4.76	-0.71	-3.41	8.17
	25	54	-4.89	-0.65	-4.18	0.23	-0.63	-4.18	-4.92	4.29
	26	56	-5.70	1.12	-4.02	-0.29	1.13	-4.02	-5.71	6.85
Outer Shell	27	680	-1.11	-12.30	-11.53	3.60	0.01	-11.48	-13.48	13.49
	28	682	-3.03	7.37	-7.35	1.62	7.62	-3.24	-7.39	15.01
	29	578	-0.62	1.86	-7.29	-1.43	2.55	-1.12	-7.48	10.03
	30	580	-0.91	-2.86	-10.21	-1.42	-0.14	-3.50	-10.34	10.20
	31	525	-0.13	0.45	4.14	0.18	4.40	0.35	-0.29	4.69
	32	526	-0.07	6.98	6.26	0.16	7.48	5.82	-0.13	7.60
	33	375	-0.14	8.42	2.04	0.00	8.42	2.06	-0.16	8.58
	34	376	-0.08	11.59	6.06	0.00	11.59	6.11	-0.13	11.72
	35	225	-0.12	2.15	4.08	-0.14	4.43	1.85	-0.17	4.61
	36	226	-0.08	6.90	6.28	-0.12	7.38	5.86	-0.13	7.51
	37	165	-0.65	1.97	-7.88	1.34	2.57	-1.08	-8.04	10.61
	38	167	-0.93	-1.79	-9.56	1.32	0.04	-2.65	-9.67	9.71
	39	73	-1.71	-17.73	-8.95	-4.45	-0.53	-8.97	-18.89	18.36
	40	75	-3.04	15.72	-0.14	-1.90	15.91	-0.12	-3.26	19.16
Bottom Cover	41	54	-5.82	-0.97	-4.58	0.06	-0.96	-4.58	-5.83	4.87
	42	21	0.39	0.48	0.30	-0.32	0.77	0.32	0.09	0.68
	43	51	-4.42	0.00	-3.15	-0.16	0.00	-3.15	-4.43	4.43
	44	18	-0.27	0.00	0.67	-0.17	0.69	0.08	-0.36	1.05
	45	48	-0.87	-0.53	-2.04	-0.27	-0.37	-0.97	-2.09	1.73
	46	10	-2.05	-0.67	-0.20	-0.36	-0.13	-0.65	-2.14	2.01
Ram Access Cover Plate	47	12	-4.03	-0.15	-0.59	0.28	-0.13	-0.59	-4.05	3.92
	48	4	0.76	0.23	2.23	-0.40	2.24	0.97	0.01	2.23
	49	11	-2.57	0.32	-0.40	0.18	0.34	-0.40	-2.58	2.92
	50	3	-0.16	0.10	1.83	-0.34	1.84	0.33	-0.40	2.23
	51	13	-0.32	-0.47	-0.99	-0.16	-0.20	-0.52	-1.05	0.85
	52	1	0.18	0.42	1.99	-0.11	1.99	0.46	0.13	1.87

(1.110)*Pm+Pb, hsd1-3.xls

Table 2.6.6-7
Cask 1-Foot Side Drop Membrane Plus Bending Stress Summary, 45° Azimuth

Cask Component	Stress Point	Node Number	Components (ksi)				Principal Stresses (ksi)			SI (ksi)
			SX	SY	SZ	SXY	S1	S2	S3	
Top Cover	1	4730	-0.68	-0.31	-1.09	-0.13	-0.16	-0.41	-1.51	1.35
	2	4771	1.36	0.47	1.15	0.17	2.48	0.58	-0.07	2.55
	3	4738	-2.85	0.00	-3.11	0.04	0.01	-1.79	-4.18	4.19
	4	4779	0.98	0.00	-0.04	0.04	2.00	0.02	-1.09	3.08
	5	4746	-3.15	-0.92	-3.83	-0.19	-0.72	-1.74	-5.45	4.73
	6	4786	1.76	-0.31	-0.17	0.19	1.89	0.37	-0.98	2.87
Top Flange	7	4711	-5.66	-6.03	-6.31	-0.81	-4.94	-6.38	-6.67	1.73
	8	4713	-2.57	7.53	-1.76	-0.10	7.56	-1.75	-2.61	10.17
Inner Shell	9	4672	-0.48	3.48	-5.36	0.55	3.83	-0.56	-5.63	9.46
	10	4674	-2.17	-1.27	-6.86	-0.24	-1.16	-2.10	-7.03	5.87
	11	4654	-0.37	3.44	-6.21	-0.06	3.52	-0.37	-6.30	9.82
	12	4656	-0.67	-0.78	-7.16	-0.34	-0.38	-1.07	-7.16	6.78
	13	4574	-0.25	2.70	-2.64	-0.06	5.01	-0.25	-4.95	9.96
	14	4576	-0.29	2.62	-2.44	-0.06	3.94	-0.29	-3.76	7.69
	15	4521	-0.05	3.22	2.11	0.02	6.89	-0.05	-1.56	8.46
	16	4522	-0.03	4.26	2.44	0.02	6.68	0.03	-0.04	6.71
	17	4371	0.02	5.30	2.71	0.00	5.30	2.71	0.02	5.28
	18	4372	0.00	5.35	2.18	0.00	5.35	2.18	0.00	5.36
	19	4221	-0.06	3.50	2.31	-0.02	7.20	-0.06	-1.39	8.58
	20	4222	-0.04	4.25	2.34	-0.02	6.72	-0.04	-0.13	6.85
	21	4161	-0.30	2.62	-2.39	0.06	5.15	-0.30	-4.92	10.07
	22	4162	-0.32	2.49	-2.64	0.07	3.83	-0.32	-3.98	7.81
	23	4062	-0.39	0.37	-3.98	-0.03	0.76	-0.39	-4.37	5.12
	24	4064	-0.49	2.05	-3.56	-0.32	2.09	-0.53	-3.56	5.66
	25	4054	-2.13	0.48	-3.37	0.08	0.61	-1.63	-4.01	4.62
	26	4056	-2.83	0.14	-3.63	-0.10	0.15	-2.10	-4.37	4.52
Outer Shell	27	4680	-0.62	-2.22	-6.70	1.47	0.55	-2.05	-8.03	8.58
	28	4682	-1.50	3.08	-5.40	0.78	3.44	-1.62	-5.63	9.07
	29	4578	-0.60	2.15	-4.45	-0.76	7.69	-0.63	-9.95	17.65
	30	4580	-0.66	2.03	-4.71	-0.78	4.07	-0.77	-6.63	10.71
	31	4525	-0.07	1.61	2.66	0.15	8.67	-0.07	-4.40	13.06
	32	4526	0.00	5.36	3.54	0.14	9.22	0.01	-0.33	9.54
	33	4375	0.02	5.05	2.92	0.00	5.06	2.90	0.02	5.04
	34	4376	0.00	5.22	1.99	0.00	5.23	1.99	-0.01	5.23
	35	4225	-0.07	2.34	3.01	-0.12	8.72	-0.07	-3.38	12.10
	36	4226	-0.02	4.83	3.21	-0.11	8.43	-0.02	-0.39	8.82
	37	4165	-0.65	2.14	-4.18	0.74	7.72	-0.68	-9.74	17.46
	38	4167	-0.71	1.67	-5.13	0.76	3.54	-0.84	-6.87	10.41
	39	4073	-0.92	-6.25	-5.40	-2.04	0.01	-3.09	-9.49	9.50
	40	4075	-1.51	6.41	-2.24	-0.96	6.55	-1.62	-2.27	8.82
Bottom Cover	41	4054	-2.65	0.26	-3.57	0.03	0.38	-1.91	-4.42	4.80
	42	4021	-0.02	0.14	-1.20	-0.13	0.21	-0.05	-1.25	1.46
	43	4051	-2.26	0.00	-3.18	-0.03	0.01	-1.56	-3.88	3.89
	44	4018	0.07	0.00	-0.84	-0.03	0.70	0.01	-1.47	2.17
	45	4048	-0.93	0.04	-3.06	-0.04	0.05	-0.61	-3.39	3.43
	46	4010	-0.63	0.04	-1.43	-0.06	0.54	-0.13	-2.42	2.96
Ram Access Cover Plate	47	4012	-1.54	-0.16	-1.80	0.15	0.12	-0.15	-3.47	3.60
	48	4004	0.84	-0.17	0.22	-0.02	1.49	0.16	-0.74	2.23
	49	4011	-1.05	0.18	-1.47	0.09	0.28	0.12	-2.75	3.02
	50	4003	0.92	0.13	0.07	-0.17	2.06	0.13	-1.07	3.13
	51	4013	-0.48	-0.47	-0.82	-0.06	-0.20	-0.52	-1.05	0.85
	52	4001	1.18	0.42	0.99	-0.05	1.99	0.46	0.13	1.87

(1.110)*Pm+Pb, hsd1-3.xls

Table 2.6.6-8
Cask 1-Foot Side Drop Membrane Plus Bending Stress Summary, 90° Azimuth

Cask Component	Stress Point	Node Number	Components (ksi)				Principal Stresses (ksi)			SI (ksi)
			SX	SY	SZ	SXY	S1	S2	S3	
Top Cover	1	7730	-1.47	-0.31	-0.29	-0.07	-0.16	-0.41	-1.51	1.35
	2	7771	2.47	0.47	0.04	0.00	2.48	0.58	-0.07	2.55
	3	7738	-0.25	0.00	-2.55	-0.10	0.04	-0.26	-2.57	2.61
	4	7779	1.59	0.00	-1.65	-0.10	1.76	0.00	-1.82	3.58
	5	7746	1.83	0.99	-1.51	-0.16	2.15	0.96	-1.80	3.95
	6	7786	-1.18	0.72	-1.96	-0.17	0.78	-0.75	-2.45	3.23
Top Flange	7	7711	0.54	0.34	-1.44	0.13	0.77	0.47	-1.80	2.57
	8	7713	0.05	-0.70	-1.27	0.03	0.07	-0.49	-1.50	1.57
Inner Shell	9	7672	-0.16	2.19	-3.27	0.30	2.39	-0.20	-3.43	5.82
	10	7674	-1.01	-0.41	-3.14	-0.21	-0.22	-1.03	-3.31	3.09
	11	7654	-0.04	1.68	-2.59	-0.11	2.37	-0.04	-3.28	5.65
	12	7656	-0.17	0.63	-2.12	-0.19	1.34	-0.18	-2.82	4.16
	13	7574	0.01	0.95	0.03	0.02	4.17	0.01	-3.18	7.35
	14	7576	0.08	2.14	0.97	0.03	5.17	0.08	-2.06	7.23
	15	7521	0.05	0.57	1.16	0.02	3.90	0.05	-2.17	6.08
	16	7522	0.02	0.29	0.52	0.03	3.79	0.02	-2.98	6.77
	17	7371	0.00	-0.77	1.85	0.00	1.85	0.00	-0.77	2.62
	18	7372	-0.06	-1.84	-0.42	0.00	-0.05	-0.43	-1.84	1.79
	19	7221	0.06	0.77	1.14	-0.02	3.88	0.06	-1.98	5.87
	20	7222	0.03	0.43	0.50	-0.03	3.77	0.03	-2.84	6.62
	21	7161	0.02	1.40	0.12	-0.02	4.39	0.02	-2.87	7.25
	22	7162	0.10	2.75	1.31	-0.03	5.65	0.10	-1.60	7.25
	23	7062	0.14	3.36	-1.36	0.03	3.89	0.14	-1.89	5.79
	24	7064	-0.25	-0.91	-2.18	0.47	0.31	-0.44	-3.21	3.53
	25	7054	1.18	1.53	-1.43	0.03	1.78	1.31	-1.81	3.59
	26	7056	0.83	-0.82	-1.93	0.15	1.18	-0.83	-2.28	3.46
Outer Shell	27	7680	0.23	5.25	-1.04	-0.88	8.24	0.09	-3.90	12.14
	28	7682	0.22	-2.13	-2.04	-0.32	0.77	-0.21	-4.51	5.28
	29	7578	-0.06	0.46	-1.98	0.11	4.86	-0.05	-6.38	11.24
	30	7580	0.01	3.74	0.78	0.11	7.61	0.01	-3.09	10.70
	31	7525	0.06	0.50	0.13	0.06	4.40	0.06	-3.77	8.16
	32	7526	-0.01	0.19	-0.37	0.08	4.66	-0.01	-4.83	9.49
	33	7375	0.02	-1.28	1.36	0.00	1.38	0.01	-1.28	2.66
	34	7376	-0.06	-2.94	-1.57	0.00	-0.06	-1.56	-2.95	2.89
	35	7225	0.07	0.23	0.13	-0.05	4.07	0.07	-3.71	7.78
	36	7226	0.00	-0.28	-0.41	-0.07	4.25	0.00	-4.94	9.19
	37	7165	-0.03	0.33	-2.24	-0.10	4.48	-0.03	-6.39	10.87
	38	7167	0.02	3.54	0.84	-0.10	7.47	0.01	-3.09	10.57
	39	7073	0.39	5.44	-0.72	1.05	7.70	0.20	-2.78	10.48
	40	7075	0.15	-4.01	-2.76	0.42	0.31	-1.49	-5.43	5.74
Bottom Cover	41	7054	1.18	1.45	-1.44	0.08	1.76	1.27	-1.84	3.59
	42	7021	-0.43	-0.25	-1.58	0.08	0.01	-0.27	-2.00	2.01
	43	7051	0.16	0.01	-2.35	0.10	0.31	-0.02	-2.46	2.77
	44	7018	0.32	-0.01	-1.55	0.11	0.63	-0.02	-1.85	2.48
	45	7048	-0.82	0.52	-3.43	0.18	0.55	-0.83	-3.44	3.99
	46	7010	0.67	0.64	-2.10	0.19	0.86	0.52	-2.18	3.04
Ram Access Cover Plate	47	7012	0.65	-0.15	-2.65	-0.02	0.65	-0.14	-2.66	3.31
	48	7004	0.73	-0.46	-1.48	0.31	0.82	-0.52	-1.51	2.33
	49	7011	-0.13	-0.05	-2.31	0.10	0.02	-0.19	-2.31	2.33
	50	7003	1.19	0.05	-1.62	0.04	1.21	0.05	-1.64	2.84
	51	7013	-0.99	-0.47	-0.32	0.07	-0.20	-0.52	-1.05	0.85
	52	7001	1.99	0.42	0.18	0.04	1.99	0.46	0.13	1.87

(1.110)*Pm+Pb, hsd1-3.xls

Table 2.6.6-9
Cask 1-Foot Side Drop Membrane Plus Bending Stress Summary, 135° Azimuth

Cask Component	Stress Point	Node Number	Components (ksi)			Principal Stresses (ksi)				SI (ksi)
			SX	SY	SZ	SXY	S1	S2	S3	
Top Cover	1	10730	-1.09	-0.31	-0.68	0.03	-0.16	-0.41	-1.51	1.35
	2	10771	1.15	0.47	1.36	-0.17	2.48	0.58	-0.07	2.55
	3	10738	-1.07	-0.01	-0.79	-0.04	0.16	-0.02	-2.00	2.16
	4	10779	-0.07	0.00	0.96	-0.04	2.32	0.00	-1.43	3.76
	5	10746	-0.72	-0.26	0.48	-0.04	1.64	-0.27	-1.86	3.50
	6	10786	0.20	-0.16	1.41	0.03	1.98	-0.03	-0.50	2.48
Top Flange	7	10711	-0.69	-0.67	0.50	-0.10	1.13	-0.78	-1.20	2.33
	8	10713	-0.17	0.68	0.78	-0.07	1.31	0.19	-0.21	1.52
Inner Shell	9	10672	-0.11	1.18	0.86	0.24	2.28	-0.14	-0.21	2.48
	10	10674	-0.62	-0.86	-0.12	-0.18	0.53	-0.66	-1.46	1.99
	11	10654	-0.01	0.54	0.86	-0.09	2.23	0.00	-0.85	3.09
	12	10656	0.00	-1.12	0.15	-0.31	1.32	0.05	-2.34	3.67
	13	10574	0.03	-1.22	0.85	0.01	1.95	0.03	-2.32	4.27
	14	10576	-0.02	-1.99	0.13	0.01	1.31	-0.02	-3.17	4.48
	15	10521	0.00	-2.45	0.16	0.01	0.84	0.00	-3.14	3.98
	16	10522	-0.01	-2.74	0.01	0.00	0.76	-0.01	-3.49	4.25
	17	10371	0.03	-4.11	-0.95	0.00	0.03	-0.95	-4.11	4.13
	18	10372	0.05	-3.95	0.19	0.00	0.19	0.05	-3.95	4.14
	19	10221	-0.01	-2.54	0.14	-0.01	0.75	-0.01	-3.14	3.89
	20	10222	-0.01	-2.83	0.01	0.00	0.67	-0.01	-3.48	4.14
	21	10161	0.03	-1.32	0.89	-0.01	2.00	0.03	-2.43	4.44
	22	10162	-0.02	-2.05	0.10	-0.01	1.30	-0.02	-3.26	4.56
	23	10062	-0.01	-0.26	0.98	0.05	2.09	0.00	-1.38	3.47
	24	10064	0.05	-0.01	0.92	0.13	2.37	0.08	-1.49	3.85
	25	10054	-0.44	0.37	0.71	0.00	1.75	0.12	-1.23	2.97
	26	10056	-0.79	-0.41	0.46	0.04	1.14	-0.46	-1.42	2.56
Outer Shell	27	10680	-0.24	-4.80	-0.88	0.87	2.32	-0.12	-8.12	10.44
	28	10682	-0.36	2.62	1.02	0.31	4.67	-0.13	-1.27	5.94
	29	10578	0.08	-2.09	-1.22	-0.01	1.25	0.08	-4.55	5.80
	30	10580	-0.02	-3.80	-2.42	-0.01	0.02	-0.02	-6.23	6.26
	31	10525	0.02	-3.65	-1.48	0.01	0.03	-0.37	-4.75	4.78
	32	10526	0.00	-4.32	-1.79	-0.01	0.00	-0.58	-5.53	5.52
	33	10375	0.03	-5.54	-2.36	0.00	0.03	-2.36	-5.54	5.57
	34	10376	0.07	-5.43	-0.72	0.00	0.07	-0.72	-5.43	5.50
	35	10225	0.02	-3.71	-1.48	0.00	0.02	-0.44	-4.75	4.77
	36	10226	0.00	-4.38	-1.75	0.01	0.00	-0.64	-5.48	5.48
	37	10165	0.08	-2.24	-1.10	0.00	1.19	0.08	-4.52	5.71
	38	10167	-0.02	-3.53	-2.31	0.00	0.09	-0.02	-5.93	6.02
	39	10073	-0.38	-5.05	-0.44	-0.94	2.27	-0.22	-7.92	10.19
	40	10075	-0.29	3.67	1.96	-0.39	5.68	0.33	-0.67	6.36
Bottom Cover	41	10054	-0.65	0.33	0.62	-0.02	1.64	0.14	-1.47	3.11
	42	10021	0.03	-0.01	1.28	-0.06	1.99	0.00	-0.69	2.68
	43	10051	-0.76	-0.01	-0.25	0.02	0.57	-0.02	-1.57	2.15
	44	10018	-0.13	0.00	0.97	0.02	2.10	0.00	-1.26	3.35
	45	10048	-0.37	-0.04	-1.29	0.01	0.07	-0.05	-1.72	1.79
	46	10010	-0.45	-0.11	-0.23	0.01	1.25	-0.15	-1.90	3.15
Ram Access Cover Plate	47	10012	-0.92	-0.08	-0.84	0.10	0.81	-0.07	-2.59	3.40
	48	10004	0.46	0.03	0.56	0.00	1.56	0.08	-0.58	2.13
	49	10011	-0.61	0.07	-1.03	0.08	0.58	0.07	-2.22	2.80
	50	10003	0.61	0.04	0.17	-0.06	2.01	0.03	-1.22	3.23
	51	10013	-0.82	-0.47	-0.48	0.16	-0.20	-0.52	-1.05	0.85
	52	10001	0.99	0.42	1.18	0.11	1.99	0.46	0.13	1.87

(1.110)*Pm+Pb, hsd1-3.xls

Table 2.6.6-10
Cask 1-Foot Side Drop Membrane Plus Bending Stress Summary, 180° Azimuth

Cask Component	Stress Point	Node Number	Components (ksi)				Principal Stresses (ksi)			SI (ksi)
			SX	SY	SZ	SXY	S1	S2	S3	
Top Cover	1	13730	-0.29	-0.31	-1.47	0.11	-0.16	-0.41	-1.51	1.35
	2	13771	0.04	0.47	2.47	-0.24	2.48	0.58	-0.07	2.55
	3	13738	-1.92	-0.01	0.14	0.00	0.14	-0.01	-1.92	2.06
	4	13779	-1.06	0.00	2.69	0.00	2.69	0.00	-1.07	3.75
	5	13746	-2.11	-0.58	1.26	-0.08	1.26	-0.57	-2.12	3.38
	6	13786	0.55	-0.25	3.39	0.17	3.39	0.59	-0.29	3.68
Top Flange	7	13711	-5.09	-8.09	-1.17	-0.87	-1.09	-4.91	-8.34	7.25
	8	13713	-1.12	9.96	3.49	0.23	10.04	3.55	-1.26	11.30
Inner Shell	9	13672	-0.05	1.13	1.25	0.25	1.41	1.04	-0.12	1.53
	10	13674	-0.65	-1.67	0.14	-0.39	0.19	-0.52	-1.84	2.02
	11	13654	0.03	0.53	1.05	-0.14	1.15	0.51	-0.05	1.20
	12	13656	0.00	-2.83	0.17	-0.57	0.22	0.11	-2.98	3.19
	13	13574	0.03	-2.17	0.32	0.01	0.36	0.02	-2.21	2.57
	14	13576	0.04	-2.53	0.64	0.01	0.68	0.03	-2.56	3.23
	15	13521	0.01	-3.42	-0.40	0.01	0.01	-0.38	-3.44	3.46
	16	13522	0.02	-3.45	0.07	0.01	0.10	0.02	-3.47	3.57
	17	13371	-0.05	-5.01	-0.72	0.00	-0.04	-0.73	-5.01	4.98
	18	13372	-0.06	-5.26	-0.65	0.00	-0.04	-0.66	-5.26	5.22
	19	13221	0.01	-3.64	-0.46	-0.01	0.02	-0.44	-3.66	3.68
	20	13222	0.02	-3.74	0.00	-0.01	0.02	0.02	-3.76	3.79
	21	13161	0.02	-2.33	0.10	-0.01	0.14	0.02	-2.37	2.52
	22	13162	0.04	-2.50	0.51	-0.01	0.56	0.03	-2.54	3.10
	23	13062	0.03	-0.40	1.48	0.10	1.54	0.04	-0.48	2.01
	24	13064	0.01	-1.34	1.20	0.31	1.26	0.07	-1.47	2.73
	25	13054	-0.84	0.40	1.34	-0.02	1.37	0.38	-0.85	2.22
	26	13056	-1.49	-0.94	0.93	0.22	0.94	-0.86	-1.57	2.51
Outer Shell	27	13680	-0.34	-6.27	-0.89	1.27	-0.08	-0.80	-6.62	6.53
	28	13682	-0.49	4.14	2.07	0.46	4.38	1.89	-0.56	4.94
	29	13578	0.08	-3.19	-2.90	-0.01	0.13	-2.51	-3.63	3.76
	30	13580	0.01	-4.39	-2.60	-0.02	0.05	-2.48	-4.55	4.61
	31	13525	0.02	-5.11	-2.59	0.02	0.07	-2.57	-5.17	5.23
	32	13526	0.04	-5.40	-1.96	0.02	0.07	-1.96	-5.43	5.51
	33	13375	-0.01	-6.69	-1.89	0.00	0.03	-1.92	-6.69	6.72
	34	13376	-0.02	-7.26	-1.88	0.00	0.01	-1.91	-7.26	7.27
	35	13225	0.02	-5.16	-2.48	-0.02	0.07	-2.47	-5.22	5.28
	36	13226	0.04	-5.60	-1.91	-0.02	0.07	-1.91	-5.63	5.70
	37	13165	0.07	-3.60	-2.76	0.01	0.12	-2.56	-3.84	3.95
	38	13167	0.01	-4.09	-2.24	0.01	0.05	-2.14	-4.23	4.28
	39	13073	-0.43	-6.96	-0.11	-1.20	-0.07	-0.21	-7.22	7.15
	40	13075	-0.44	4.48	3.10	-0.54	4.67	3.01	-0.53	5.19
Bottom Cover	41	13054	-1.22	0.35	1.19	-0.06	1.21	0.34	-1.23	2.44
	42	13021	0.71	0.02	2.90	-0.22	2.91	0.76	-0.04	2.95
	43	13051	-1.09	-0.02	0.49	-0.03	0.49	-0.02	-1.09	1.58
	44	13018	-0.21	0.02	2.40	-0.03	2.40	0.02	-0.22	2.62
	45	13048	0.09	-0.48	0.03	-0.14	0.25	-0.10	-0.52	0.77
	46	13010	-1.33	-0.69	0.97	-0.17	0.98	-0.67	-1.37	2.35
Ram Access Cover Plate	47	13012	-2.62	-0.04	0.40	0.21	0.40	-0.02	-2.64	3.03
	48	13004	0.23	0.38	2.30	-0.25	2.31	0.57	0.04	2.27
	49	13011	-1.75	0.12	0.08	0.17	0.14	0.09	-1.77	1.91
	50	13003	-0.37	-0.04	1.74	-0.13	1.75	0.00	-0.42	2.17
	51	13013	-0.32	-0.47	-0.99	0.16	-0.20	-0.52	-1.05	0.85
	52	13001	0.18	0.42	1.99	0.11	1.99	0.46	0.13	1.87

(1.110)*Pm+Pb, hsd1-3.xls

Table 2.6.6-11
Cask 1-Foot Side Drop Primary Plus Secondary Stress Summary, 0° Azimuth

Cask Component	Stress Point	Node Number	Stress Components (ksi)				Principal Stresses (ksi)			SI (ksi)
			SX	SY	SZ	SXY	S1	S2	S3	
Top Cover	1	730	-0.24	-0.33	-1.60	-0.15	-0.10	-0.43	-1.63	1.54
	2	771	0.09	0.45	2.35	0.20	2.36	0.54	0.00	2.36
	3	738	-5.34	0.00	-2.93	0.20	0.01	-2.93	-5.35	5.35
	4	779	-0.25	0.00	2.42	0.20	2.42	0.11	-0.36	2.78
	5	746	-9.22	-2.73	-5.07	-0.49	-2.66	-5.11	-9.25	6.60
	6	786	4.95	-1.43	2.80	0.39	4.99	2.80	-1.45	6.44
Top Flange	7	711	-10.45	-10.86	-9.27	-1.38	-9.20	-9.33	-12.04	2.85
	8	713	-4.73	13.23	-1.64	-0.19	13.24	-1.62	-4.75	17.99
Inner Shell	9	672	-0.16	0.89	-5.46	0.11	0.99	-0.10	-5.63	6.62
	10	674	-0.41	0.94	-7.00	0.56	1.14	-0.52	-7.10	8.25
	11	654	-0.16	2.15	-7.95	0.32	2.21	-0.16	-8.02	10.23
	12	656	-0.22	0.60	-9.76	0.47	0.82	-0.39	-9.81	10.64
	13	574	-0.40	2.04	-4.33	-0.11	2.10	-0.38	-4.43	6.53
	14	576	-0.36	1.98	-5.44	-0.12	2.01	-0.32	-5.50	7.52
	15	521	-0.20	4.16	2.79	0.00	4.38	2.60	-0.23	4.61
	16	522	-0.18	6.09	3.66	0.00	6.18	3.60	-0.21	6.39
	17	371	-0.20	9.01	2.14	0.00	9.01	2.15	-0.22	9.23
	18	372	-0.16	10.82	4.95	0.00	10.82	4.99	-0.20	11.03
	19	221	-0.19	4.17	2.74	0.00	4.39	2.54	-0.22	4.61
	20	222	-0.18	5.74	3.92	0.01	5.88	3.81	-0.21	6.09
	21	161	-0.35	2.14	-5.09	0.13	2.18	-0.31	-5.17	7.35
	22	162	-0.37	0.62	-5.68	0.13	0.66	-0.34	-5.75	6.41
	23	62	-0.54	-3.19	-5.41	-0.20	-0.50	-3.19	-5.46	4.96
	24	64	-0.45	4.73	-3.33	-1.24	5.01	-0.72	-3.35	8.36
	25	54	-5.40	-1.22	-4.50	0.12	-1.21	-4.50	-5.42	4.21
	26	56	-6.21	0.55	-4.35	-0.41	0.58	-4.35	-6.23	6.81
Outer Shell	27	680	-1.14	-13.96	-12.05	3.61	-0.13	-12.03	-14.99	14.86
	28	682	-3.06	5.72	-7.88	1.62	6.02	-3.31	-7.92	13.94
	29	578	-0.62	1.86	-7.27	-1.42	2.55	-1.12	-7.46	10.02
	30	580	-0.91	-2.85	-10.20	-1.41	-0.14	-3.50	-10.32	10.18
	31	525	-0.13	0.45	4.14	0.18	4.40	0.35	-0.29	4.69
	32	526	-0.07	6.98	6.26	0.16	7.48	5.82	-0.13	7.61
	33	375	-0.14	8.42	2.04	0.00	8.42	2.06	-0.16	8.58
	34	376	-0.08	11.60	6.06	0.00	11.60	6.11	-0.13	11.72
	35	225	-0.12	2.15	4.08	-0.14	4.43	1.85	-0.17	4.60
	36	226	-0.08	6.91	6.28	-0.12	7.38	5.86	-0.13	7.51
	37	165	-0.65	1.98	-7.87	1.34	2.57	-1.08	-8.03	10.60
	38	167	-0.93	-1.78	-9.55	1.32	0.04	-2.65	-9.66	9.70
	39	73	-4.73	-0.85	-4.48	1.87	-0.09	-4.45	-5.52	5.42
	40	75	-3.14	14.37	-0.61	-1.78	14.55	-0.60	-3.34	17.89
Bottom Cover	41	54	-5.40	-1.22	-4.50	0.12	-1.21	-4.50	-5.42	4.21
	42	21	0.81	0.23	0.38	-0.27	0.93	0.38	0.11	0.82
	43	51	-4.43	-0.01	-3.16	-0.16	0.00	-3.16	-4.45	4.45
	44	18	-0.28	0.00	0.67	-0.17	0.68	0.08	-0.37	1.05
	45	48	-0.92	-0.55	-2.06	-0.27	-0.39	-1.02	-2.12	1.72
	46	10	-2.18	-0.75	-0.28	-0.36	-0.16	-0.78	-2.26	2.10
Ram Access Cover Plate	47	12	-2.33	-0.14	0.04	0.64	0.07	0.01	-2.51	2.59
	48	4	1.14	0.23	2.38	-0.32	2.38	1.24	0.13	2.26
	49	11	-3.36	-0.10	-0.98	0.83	0.11	-0.99	-3.56	3.67
	50	3	-0.34	0.00	1.70	-0.20	1.70	0.09	-0.43	2.13
	51	13	-0.24	-0.50	-1.20	-0.12	-0.18	-0.52	-1.24	1.06
	52	1	0.22	0.40	1.87	-0.09	1.88	0.44	0.18	1.70

(1.110)*Total, hsd1-3.xls

Table 2.6.6-12
Cask 1-Foot Side Drop Primary Plus Secondary Stress Summary, 45° Azimuth

Cask Component	Stress Point	Node Number	Components (ksi)				Principal Stresses (ksi)			SI (ksi)
			SX	SY	SZ	SXY	S1	S2	S3	
Top Cover	1	4730	-0.70	-0.33	-1.14	-0.16	-0.10	-0.43	-1.63	1.54
	2	4771	1.34	0.45	1.11	0.14	2.36	0.54	0.00	2.36
	3	4738	-2.85	0.00	-3.11	0.04	0.01	-1.79	-4.18	4.19
	4	4779	0.98	0.00	-0.04	0.04	2.00	0.02	-1.09	3.08
	5	4746	-3.32	-0.82	-3.83	-0.28	-0.69	-1.51	-5.78	5.09
	6	4786	1.67	-0.26	-0.17	0.14	1.74	0.32	-0.81	2.55
Top Flange	7	4711	-5.74	-6.24	-6.40	-0.85	-5.04	-6.45	-6.87	1.83
	8	4713	-2.65	7.33	-1.84	-0.14	7.36	-1.85	-2.67	10.03
Inner Shell	9	4672	-0.64	3.28	-5.46	0.51	3.61	-0.70	-5.73	9.34
	10	4674	-2.32	-1.47	-6.97	-0.28	-1.34	-2.25	-7.17	5.83
	11	4654	-0.39	3.49	-6.20	-0.10	3.58	-0.39	-6.29	9.86
	12	4656	-0.69	-0.73	-7.15	-0.38	-0.33	-1.09	-7.15	6.82
	13	4574	-0.25	2.70	-2.64	-0.06	5.01	-0.25	-4.95	9.96
	14	4576	-0.29	2.62	-2.44	-0.06	3.94	-0.29	-3.76	7.69
	15	4521	-0.05	3.22	2.11	0.02	6.89	-0.05	-1.56	8.46
	16	4522	-0.03	4.26	2.44	0.02	6.68	0.03	-0.04	6.71
	17	4371	0.02	5.30	2.71	0.00	5.30	2.71	0.02	5.28
	18	4372	0.00	5.35	2.18	0.00	5.35	2.18	0.00	5.36
	19	4221	-0.06	3.50	2.31	-0.02	7.20	-0.06	-1.39	8.58
	20	4222	-0.04	4.25	2.34	-0.02	6.72	-0.04	-0.13	6.85
	21	4161	-0.30	2.62	-2.39	0.06	5.15	-0.30	-4.92	10.07
	22	4162	-0.32	2.49	-2.64	0.07	3.83	-0.32	-3.98	7.81
	23	4062	-0.38	0.43	-3.96	-0.06	0.82	-0.38	-4.34	5.16
	24	4064	-0.48	2.11	-3.54	-0.35	2.16	-0.52	-3.54	5.71
	25	4054	-2.39	0.27	-3.50	0.05	0.41	-1.76	-4.28	4.69
	26	4056	-3.09	-0.07	-3.77	-0.13	-0.06	-2.21	-4.65	4.59
Outer Shell	27	4680	-0.64	-2.65	-6.84	1.48	0.46	-2.13	-8.46	8.93
	28	4682	-1.52	2.66	-5.54	0.79	2.95	-1.66	-5.69	8.65
	29	4578	-0.60	2.15	-4.45	-0.75	7.71	-0.63	-9.98	17.68
	30	4580	-0.66	2.03	-4.71	-0.77	4.09	-0.77	-6.65	10.74
	31	4525	-0.07	1.61	2.66	0.15	8.67	-0.07	-4.40	13.06
	32	4526	0.00	5.36	3.54	0.14	9.22	0.01	-0.32	9.54
	33	4375	0.02	5.05	2.92	0.00	5.06	2.91	0.02	5.04
	34	4376	0.00	5.22	1.99	0.00	5.23	1.99	-0.01	5.23
	35	4225	-0.07	2.34	3.01	-0.12	8.72	-0.07	-3.38	12.10
	36	4226	-0.02	4.83	3.21	-0.11	8.43	-0.02	-0.39	8.82
	37	4165	-0.65	2.14	-4.18	0.74	7.74	-0.68	-9.75	17.49
	38	4167	-0.72	1.68	-5.12	0.75	3.55	-0.84	-6.88	10.43
	39	4073	-2.57	-0.49	-3.92	1.03	-0.07	-1.85	-5.05	4.98
	40	4075	-1.57	5.89	-2.42	-0.92	6.02	-1.68	-2.44	8.45
Bottom Cover	41	4054	-2.39	0.27	-3.50	0.05	0.41	-1.76	-4.28	4.69
	42	4021	0.23	0.14	-1.14	-0.11	0.31	0.12	-1.19	1.49
	43	4051	-2.26	0.00	-3.18	-0.03	0.01	-1.55	-3.89	3.90
	44	4018	0.07	0.00	-0.83	-0.03	0.70	0.01	-1.48	2.18
	45	4048	-0.95	0.01	-3.09	-0.05	0.02	-0.64	-3.41	3.43
	46	4010	-0.71	-0.11	-1.55	-0.12	0.56	-0.38	-2.54	3.10
Ram Access Cover Plate	47	4012	-0.93	-0.01	-1.40	0.26	0.41	0.06	-2.80	3.21
	48	4004	0.98	-0.13	0.31	0.00	1.55	0.19	-0.57	2.12
	49	4011	-1.41	-0.10	-1.79	0.39	0.23	-0.26	-3.27	3.51
	50	4003	0.84	0.07	0.00	-0.11	2.02	0.07	-1.18	3.19
	51	4013	-0.54	-0.50	-0.90	-0.03	-0.18	-0.52	-1.24	1.06
	52	4001	1.14	0.40	0.95	-0.04	1.88	0.44	0.18	1.70

(1.110)*Total, hsd1-3.xls

Table 2.6.6-13
Cask 1-Foot Side Drop Primary Plus Secondary Stress Summary, 90° Azimuth

Cask Component	Stress Point	Node Number	Components (ksi)				Principal Stresses (ksi)			SI (ksi)
			SX	SY	SZ	SXY	S1	S2	S3	
Top Cover	1	7730	-1.60	-0.33	-0.24	-0.08	-0.10	-0.43	-1.63	1.54
	2	7771	2.35	0.45	0.09	0.00	2.36	0.54	0.00	2.36
	3	7738	-0.25	0.00	-2.55	-0.10	0.04	-0.26	-2.57	2.61
	4	7779	1.59	0.00	-1.65	-0.10	1.76	0.00	-1.82	3.58
	5	7746	1.97	0.78	-1.53	-0.06	2.33	0.78	-1.88	4.21
	6	7786	-1.12	0.62	-1.96	-0.12	0.66	-0.62	-2.50	3.16
Top Flange	7	7711	0.60	0.33	-1.43	0.10	0.83	0.45	-1.79	2.62
	8	7713	0.10	-0.72	-1.25	0.01	0.13	-0.50	-1.50	1.62
Inner Shell	9	7672	-0.24	1.99	-3.39	0.28	2.17	-0.27	-3.54	5.71
	10	7674	-1.09	-0.61	-3.26	-0.24	-0.38	-1.14	-3.44	3.06
	11	7654	-0.04	1.72	-2.59	-0.13	2.42	-0.05	-3.28	5.70
	12	7656	-0.18	0.67	-2.11	-0.21	1.39	-0.19	-2.82	4.21
	13	7574	0.01	0.95	0.03	0.02	4.17	0.01	-3.18	7.35
	14	7576	0.08	2.14	0.97	0.03	5.17	0.08	-2.06	7.23
	15	7521	0.05	0.57	1.16	0.02	3.90	0.05	-2.17	6.08
	16	7522	0.02	0.29	0.52	0.03	3.79	0.02	-2.98	6.77
	17	7371	0.00	-0.77	1.85	0.00	1.85	0.00	-0.77	2.62
	18	7372	-0.06	-1.84	-0.42	0.00	-0.05	-0.43	-1.84	1.79
	19	7221	0.06	0.77	1.14	-0.02	3.88	0.06	-1.98	5.87
	20	7222	0.03	0.43	0.50	-0.03	3.77	0.03	-2.84	6.62
	21	7161	0.02	1.40	0.12	-0.02	4.39	0.02	-2.87	7.25
	22	7162	0.10	2.75	1.31	-0.03	5.65	0.10	-1.60	7.25
	23	7062	0.11	3.26	-1.39	0.11	3.81	0.10	-1.94	5.75
	24	7064	-0.28	-1.00	-2.21	0.55	0.32	-0.53	-3.28	3.60
	25	7054	1.24	1.71	-1.37	0.08	1.97	1.40	-1.79	3.76
	26	7056	0.89	-0.65	-1.88	0.19	1.31	-0.67	-2.27	3.58
Outer Shell	27	7680	0.26	5.83	-0.86	-0.88	9.07	0.14	-3.98	13.04
	28	7682	0.26	-1.55	-1.86	-0.33	1.35	0.04	-4.55	5.90
	29	7578	-0.06	0.45	-2.00	0.10	4.85	-0.05	-6.41	11.26
	30	7580	0.01	3.73	0.75	0.10	7.61	0.01	-3.12	10.72
	31	7525	0.06	0.50	0.13	0.06	4.40	0.06	-3.77	8.16
	32	7526	-0.01	0.19	-0.37	0.08	4.66	-0.01	-4.83	9.49
	33	7375	0.02	-1.28	1.36	0.00	1.38	0.01	-1.28	2.66
	34	7376	-0.06	-2.94	-1.57	0.00	-0.06	-1.57	-2.95	2.89
	35	7225	0.07	0.23	0.13	-0.05	4.07	0.07	-3.71	7.78
	36	7226	0.00	-0.28	-0.41	-0.07	4.25	0.00	-4.94	9.19
	37	7165	-0.03	0.32	-2.27	-0.10	4.47	-0.03	-6.42	10.89
	38	7167	0.02	3.53	0.82	-0.10	7.47	0.01	-3.12	10.59
	39	7073	0.46	0.05	-1.98	-0.18	1.46	-0.02	-2.92	4.38
	40	7075	0.19	-3.62	-2.62	0.41	0.41	-1.07	-5.40	5.81
Bottom Cover	41	7054	1.24	1.71	-1.37	0.08	1.97	1.40	-1.79	3.76
	42	7021	-0.37	0.01	-1.52	0.08	0.14	-0.08	-1.94	2.07
	43	7051	0.17	0.01	-2.34	0.10	0.31	-0.02	-2.46	2.77
	44	7018	0.32	-0.01	-1.55	0.11	0.64	-0.02	-1.85	2.49
	45	7048	-0.82	0.48	-3.46	0.15	0.50	-0.83	-3.47	3.96
	46	7010	0.63	0.43	-2.24	0.09	0.70	0.44	-2.31	3.01
Ram Access Cover Plate	47	7012	0.08	0.04	-2.60	-0.16	0.22	-0.10	-2.60	2.82
	48	7004	0.60	-0.42	-1.47	0.28	0.68	-0.48	-1.50	2.18
	49	7011	0.09	-0.12	-2.14	0.03	0.09	-0.12	-2.14	2.23
	50	7003	1.24	0.03	-1.58	0.02	1.25	0.03	-1.60	2.85
	51	7013	-1.20	-0.50	-0.24	0.07	-0.18	-0.52	-1.24	1.06
	52	7001	1.87	0.40	0.22	0.04	1.88	0.44	0.18	1.70

(1.110)*Total, hsd1-3.xls

Table 2.6.6-14
Cask 1-Foot Side Drop Primary Plus Secondary Stress Summary, 135° Azimuth

Cask Component	Stress Point	Node Number	Components (ksi)				Principal Stresses (ksi)			SI (ksi)
			SX	SY	SZ	SXY	S1	S2	S3	
Top Cover	1	10730	-1.14	-0.33	-0.70	0.05	-0.10	-0.43	-1.63	1.54
	2	10771	1.11	0.45	1.34	-0.15	2.36	0.54	0.00	2.36
	3	10738	-1.07	-0.01	-0.79	-0.04	0.16	-0.02	-2.00	2.16
	4	10779	-0.07	0.00	0.96	-0.04	2.32	0.00	-1.43	3.76
	5	10746	-0.78	-0.21	0.47	-0.06	1.79	-0.21	-2.09	3.88
	6	10786	0.17	-0.14	1.40	0.02	2.03	-0.07	-0.52	2.55
Top Flange	7	10711	-0.70	-0.71	0.48	-0.10	1.14	-0.80	-1.27	2.40
	8	10713	-0.19	0.64	0.76	-0.07	1.33	0.12	-0.23	1.56
Inner Shell	9	10672	-0.12	1.16	0.86	0.22	2.21	-0.10	-0.21	2.42
	10	10674	-0.63	-0.88	-0.11	-0.21	0.51	-0.71	-1.43	1.94
	11	10654	-0.02	0.55	0.86	-0.12	2.25	0.00	-0.86	3.12
	12	10656	-0.01	-1.11	0.15	-0.33	1.34	0.05	-2.36	3.70
	13	10574	0.03	-1.22	0.85	0.01	1.95	0.03	-2.32	4.27
	14	10576	-0.02	-1.99	0.13	0.01	1.31	-0.02	-3.17	4.48
	15	10521	0.00	-2.45	0.16	0.01	0.84	0.00	-3.14	3.98
	16	10522	-0.01	-2.74	0.01	0.00	0.76	-0.01	-3.49	4.25
	17	10371	0.03	-4.11	-0.95	0.00	0.03	-0.95	-4.11	4.13
	18	10372	0.05	-3.95	0.19	0.00	0.19	0.05	-3.95	4.14
	19	10221	-0.01	-2.54	0.14	-0.01	0.75	-0.01	-3.14	3.89
	20	10222	-0.01	-2.83	0.01	0.00	0.67	-0.01	-3.48	4.14
	21	10161	0.03	-1.32	0.89	-0.01	2.00	0.03	-2.43	4.44
	22	10162	-0.02	-2.05	0.10	-0.01	1.30	-0.02	-3.26	4.56
	23	10062	-0.01	-0.27	0.98	0.07	2.10	0.00	-1.39	3.49
	24	10064	0.04	-0.02	0.92	0.15	2.37	0.08	-1.50	3.87
	25	10054	-0.52	0.38	0.69	-0.01	1.77	0.16	-1.38	3.15
	26	10056	-0.87	-0.41	0.45	0.03	1.19	-0.44	-1.58	2.77
Outer Shell	27	10680	-0.26	-5.30	-1.04	0.87	2.39	-0.14	-8.85	11.24
	28	10682	-0.38	2.12	0.86	0.31	4.66	-0.23	-1.83	6.49
	29	10578	0.08	-2.09	-1.21	-0.01	1.26	0.08	-4.55	5.80
	30	10580	-0.02	-3.79	-2.41	-0.01	0.03	-0.02	-6.23	6.26
	31	10525	0.02	-3.65	-1.48	0.01	0.03	-0.37	-4.75	4.78
	32	10526	0.00	-4.32	-1.79	-0.01	0.00	-0.58	-5.53	5.52
	33	10375	0.03	-5.54	-2.36	0.00	0.03	-2.36	-5.54	5.57
	34	10376	0.07	-5.43	-0.72	0.00	0.07	-0.72	-5.43	5.50
	35	10225	0.02	-3.71	-1.48	0.00	0.02	-0.44	-4.75	4.77
	36	10226	0.00	-4.38	-1.75	0.01	0.00	-0.64	-5.48	5.48
	37	10165	0.08	-2.24	-1.08	0.00	1.20	0.08	-4.52	5.71
	38	10167	-0.02	-3.53	-2.30	0.00	0.10	-0.02	-5.92	6.03
	39	10073	-0.37	0.04	1.00	0.15	2.43	0.08	-1.85	4.29
	40	10075	-0.31	3.29	1.83	-0.37	5.68	0.08	-0.94	6.62
Bottom Cover	41	10054	-0.52	0.38	0.69	-0.01	1.77	0.16	-1.38	3.15
	42	10021	0.16	0.04	1.35	-0.05	2.07	0.06	-0.59	2.66
	43	10051	-0.76	-0.01	-0.25	0.02	0.57	-0.02	-1.58	2.15
	44	10018	-0.13	0.00	0.97	0.02	2.10	0.00	-1.26	3.36
	45	10048	-0.40	-0.07	-1.31	0.00	0.06	-0.10	-1.74	1.81
	46	10010	-0.54	-0.22	-0.30	-0.01	1.27	-0.30	-2.03	3.30
Ram Access Cover Plate	47	10012	-0.58	-0.03	-0.65	0.16	0.84	0.02	-2.12	2.96
	48	10004	0.54	0.05	0.60	0.01	1.55	0.08	-0.44	1.99
	49	10011	-0.81	-0.06	-1.20	0.24	0.54	-0.06	-2.55	3.09
	50	10003	0.57	0.01	0.13	-0.02	1.99	0.01	-1.30	3.29
	51	10013	-0.90	-0.50	-0.54	0.13	-0.18	-0.52	-1.24	1.06
	52	10001	0.95	0.40	1.14	0.09	1.88	0.44	0.18	1.70

(1.110)*Total, hsd1-3.xls

Table 2.6.6-15

Cask 1-Foot Side Drop Primary Plus Secondary Stress Summary, 180° Azimuth

Cask Component	Stress Point	Node Number	Components (ksi)				Principal Stresses (ksi)			SI (ksi)
			SX	SY	SZ	SXY	S1	S2	S3	
Top Cover	1	13730	-0.24	-0.33	-1.60	0.15	-0.10	-0.43	-1.63	1.54
	2	13771	0.09	0.45	2.35	-0.20	2.36	0.54	0.00	2.36
	3	13738	-1.92	-0.01	0.14	0.00	0.14	-0.01	-1.92	2.06
	4	13779	-1.06	0.00	2.69	0.00	2.69	0.00	-1.06	3.75
	5	13746	-2.17	-0.49	1.27	-0.17	1.28	-0.48	-2.19	3.47
	6	13786	0.52	-0.21	3.39	0.13	3.39	0.54	-0.23	3.63
Top Flange	7	13711	-5.14	-8.04	-1.24	-0.96	-1.18	-4.90	-8.34	7.17
	8	13713	-1.17	10.01	3.43	0.15	10.10	3.46	-1.30	11.40
Inner Shell	9	13672	-0.07	1.16	1.25	0.22	1.41	1.05	-0.13	1.54
	10	13674	-0.67	-1.64	0.14	-0.42	0.18	-0.51	-1.84	2.02
	11	13654	0.01	0.52	1.04	-0.19	1.14	0.52	-0.10	1.24
	12	13656	-0.01	-2.84	0.16	-0.62	0.21	0.11	-3.02	3.22
	13	13574	0.03	-2.17	0.32	0.01	0.36	0.02	-2.21	2.57
	14	13576	0.04	-2.53	0.64	0.01	0.68	0.03	-2.56	3.23
	15	13521	0.01	-3.42	-0.40	0.01	0.01	-0.38	-3.44	3.46
	16	13522	0.02	-3.45	0.07	0.01	0.10	0.02	-3.47	3.57
	17	13371	-0.05	-5.01	-0.72	0.00	-0.04	-0.73	-5.01	4.98
	18	13372	-0.06	-5.26	-0.65	0.00	-0.04	-0.66	-5.26	5.22
	19	13221	0.01	-3.64	-0.46	-0.01	0.02	-0.44	-3.66	3.68
	20	13222	0.02	-3.74	0.00	-0.01	0.02	0.02	-3.76	3.79
	21	13161	0.02	-2.33	0.10	-0.01	0.14	0.02	-2.37	2.52
	22	13162	0.04	-2.50	0.51	-0.01	0.56	0.03	-2.54	3.10
	23	13062	0.02	-0.42	1.47	0.12	1.53	0.04	-0.50	2.03
	24	13064	0.00	-1.36	1.19	0.33	1.25	0.07	-1.50	2.75
	25	13054	-0.97	0.43	1.31	-0.03	1.34	0.41	-0.97	2.31
	26	13056	-1.61	-0.91	0.90	0.20	0.91	-0.86	-1.67	2.58
Outer Shell	27	13680	-0.36	-7.02	-1.13	1.26	-0.13	-1.04	-7.34	7.21
	28	13682	-0.51	3.39	1.83	0.45	3.71	1.58	-0.58	4.29
	29	13578	0.08	-3.19	-2.90	-0.01	0.13	-2.51	-3.63	3.76
	30	13580	0.01	-4.39	-2.60	-0.02	0.06	-2.48	-4.55	4.61
	31	13525	0.02	-5.11	-2.59	0.02	0.07	-2.57	-5.17	5.23
	32	13526	0.04	-5.40	-1.96	0.02	0.07	-1.96	-5.43	5.51
	33	13375	-0.01	-6.69	-1.89	0.00	0.03	-1.92	-6.69	6.72
	34	13376	-0.02	-7.26	-1.88	0.00	0.01	-1.91	-7.26	7.27
	35	13225	0.02	-5.16	-2.48	-0.02	0.07	-2.47	-5.22	5.28
	36	13226	0.04	-5.60	-1.91	-0.02	0.07	-1.91	-5.63	5.70
	37	13165	0.07	-3.60	-2.76	0.01	0.12	-2.57	-3.84	3.96
	38	13167	0.01	-4.09	-2.25	0.01	0.05	-2.15	-4.23	4.28
	39	13073	-0.75	0.02	1.81	0.32	1.91	0.11	-0.93	2.84
	40	13075	-0.44	4.03	2.96	-0.52	4.26	2.81	-0.52	4.78
Bottom Cover	41	13054	-0.97	0.43	1.31	-0.03	1.34	0.41	-0.97	2.31
	42	13021	0.96	0.10	3.03	-0.18	3.04	0.98	0.06	2.98
	43	13051	-1.10	-0.02	0.48	-0.03	0.48	-0.02	-1.10	1.59
	44	13018	-0.22	0.02	2.40	-0.03	2.40	0.02	-0.23	2.63
	45	13048	0.04	-0.50	0.01	-0.13	0.21	-0.13	-0.53	0.74
	46	13010	-1.47	-0.75	0.92	-0.12	0.96	-0.77	-1.49	2.45
Ram Access Cover Plate	47	13012	-1.67	-0.11	0.68	0.44	0.68	0.00	-1.79	2.47
	48	13004	0.45	0.36	2.37	-0.20	2.37	0.61	0.20	2.17
	49	13011	-2.23	-0.06	-0.23	0.56	0.09	-0.24	-2.38	2.47
	50	13003	-0.48	-0.08	1.67	-0.05	1.68	-0.08	-0.49	2.17
	51	13013	-0.24	-0.50	-1.20	0.12	-0.18	-0.52	-1.24	1.06
	52	13001	0.22	0.40	1.87	0.09	1.88	0.44	0.18	1.70

(1.110)*Total, hsd1-3.xls

2.6.7 Corner Drop

The corner drop conditions specified in Section 71.71(c)(8) of the Part 71 regulations [2.1] apply only to rectangular fiberboard or wood packages weighing less than 110 pounds or cylindrical fiberboard or wood packages weighing less than 220 pounds. Therefore, the NUHOMS®-MP187 transportation package need not be analyzed for the corner drop condition.

2.6.8 Compression

The NUHOMS®-MP187 transportation package weighs much more than 5,000 pounds and, therefore, need not be evaluated for compression loading, as specified in 10 CFR 71.71(c)(9) [2.1].

2.6.9 Penetration

As discussed in Regulatory Guide 7.8 [2.3], the NRC staff does not consider the penetration test of 10 CFR 71.71 [2.1] to have any structural significance for large packages and does not consider this a general requirement. The NUHOMS®-MP187 transportation package is large, and therefore, need not be evaluated for the penetration load condition.

2.6.10 Fabrication Stress Analysis

As discussed in Appendix 8.3.2, the cask lead shielding material is poured into the cask annulus during fabrication. The temperature of the cask shells is raised above 625°F prior to the lead pour. Liquid lead is poured into the cask annulus through stand pipes placed on top of the cask. As the lead is allowed to cool, it will shrink onto the cask inner shell loading it in compression. The compressive forces developed during the fabrication process are considered in the buckling evaluation of the cask shells in Section 2.1.2.3.3. The following paragraphs present detailed calculations of the cask fabrication stresses for a range of initial conditions used for the normal and accident analysis.

The nominal dimensions of the cask inner and outer shells at room temperature (70°F) prior to the lead pour are :

Inner shell:	I.R.	=	34.00 inches
	O.R.	=	35.25 inches
Outer shell:	I.R.	=	39.25 inches
	O.R.	=	41.75 inches

The cask shells will remain in a stress-free state until the lead begins to solidify at 620°F. The nominal dimensions of the cask inner shell and structural shell (also referred to as the cask outer shell) at 620°F prior in the stress-free state are calculated as follows:

$$R' = R\alpha[1 + (620 - 70)]$$

$$t' = t\alpha[1 + (620 - 70)]$$

where;

R'	=	shell radius at 620°F
t'	=	shell thickness at 620°F
R	=	shell radius at 70°F
t	=	shell thickness at 70°F
α	=	coefficient of thermal expansion of mild stainless steel at 620°F
	=	10.43×10^{-6} in/in-°F

The resulting cask shell dimensions in the stress-free state are:

Inner shell:

Inner Radius (I.R.)	=	34.192 inches
Outer Radius (O.R.)	=	35.449 inches

Structural shell:

Inner Radius (I.R.) = 39.477 inches

Outer Radius (O.R.) = 41.991 inches

As the liquid lead cools and is allowed to solidify, the lead will shrink at a greater rate than the stainless steel shells. This process results in the lead shrinking onto the inner (containment) shell and a small air gap between the lead and the outer cask (structural) shell. The hydrostatic pressure at the base of the lead column after the lead pour but prior to cool-down is:

$$p = \rho h$$

where:

ρ = 0.386 lb/in^3, density of liquid lead

h = height of lead column = length of cask annulus and overflow pipes

= 182.94 + 22.0

= 204.94 inches (use 210 inches conservatively)

Therefore,

$$p = (0.386)(210)$$

= 81 psi (NOTE: The 81 psi hydrostatic pressure actually only exists at the base of the lead column and will linearly decrease to 8.5 psi at the top of the column.)

At this point, the hoop stresses in the cask inner shell, σ_{is}, and structural shell, σ_{os}, due to the molten lead, are:

$$\sigma_{is} = pR_{is}/t_{is}$$

$$= (-81)[(35.449 + 34.192)/2]/(35.449 - 34.192)$$

$$= -2{,}244 \text{ psi (compression)}$$

$$\sigma_{os} = pR_{os}/t_{os}$$

$$= (81)[(41.991 + 39.477)/2]/(41.991 - 39.477)$$

$$= 1{,}312 \text{ psi (tension)}$$

As the cask cools, the lead separates from the cask structural shell and shrinks onto the cask inner shell, loading the cask inner shell in compression. The relationship between the contact pressure between the cask inner shell and the lead, p, and the interference between the cask inner shell and the lead, δ, is as follows ([2.50, Equation 2.9.1]):

$$\delta = p\left[\frac{b_l}{E_l}\left(\frac{c^2 + b_l^2}{c^2 - b_l^2} + \upsilon_l\right) + \frac{b_s}{E_s}\left(\frac{b_s^2 + a^2}{b_s^2 - a^2} - \upsilon_s\right)\right]$$

Rearranging, the contact pressure is calculated by:

$$p = \frac{\delta}{\left[\frac{b_l}{E_l}\left(\frac{c^2 + b_l^2}{c^2 - b_l^2} + \upsilon_l\right) + \frac{b_s}{E_s}\left(\frac{b_s^2 + a^2}{b_s^2 - a^2} - \upsilon_s\right)\right]}$$

where;

a	=	34.0 inches, cask inner shell inner radius at 70°F
b_s	=	35.25 inches, cask inner shell outer radius at 70°F
b_l	=	35.056 inches, lead free contraction inner radius at 70°F
c	=	39.0394 inches, lead outer radius at 70°F
	=	$b_s - b_l = 0.194$ inches
E_s	=	28.3E6 psi, Young's Modulus of mild SS at 70°F
υ_s	=	0.29, Poisson's ratio for stainless steel
E_l	=	2.34E6 psi, Young's Modulus of lead at 70°F (See discussion below)
υ_l	=	0.45, Poisson's ratio for lead

As shown in Section 2.3, the elastic modulus of lead varies significantly in the temperature range of interest, At 600°F (just below the solidification point of lead) the elastic modulus of lead is approximately 1.6×10^6 psi. As the temperature of the lead decreases, its elastic modulus increases significantly. For the purpose of the lead shrinkage stress calculations, the elastic modulus of lead at 70°F is conservatively used. Therefore, the contact pressure at 70°F, immediately after cooling, is:

$$p = 1{,}074 \text{ psi}$$

The hoop stress at the inner surface of the lead, σ_{il}, due to this contact pressure is:

$$\sigma_{il} = p(c^2 + b_l^2)/(c^2 - b_l^2) \quad \text{([2.16], Eqn. 2-61)}$$

$$= (1{,}074)(39.039^2 + 35.056^2)/(39.039^2 - 35.056^2)$$

$$= 10{,}020 \text{ psi}$$

The hoop stress calculated for the lead can not be sustained due to the low yield strength of lead. The hoop strain at the inner radius of the lead, ε_{il}, conservatively assuming a radial displacement of 0.194 inches in the lead, is calculated as follows:

$$\varepsilon_{il} = \delta/b_l$$
$$= 0.194/35.056$$
$$= 0.0055 \text{ in/in.}$$

The stress in the lead corresponding to a strain of 0.55% at 70°F is estimated using the tensile stress-strain properties of lead given in Figure 1 of Reference 2.14 to be approximately 550 psi. The contact pressure, p, corresponding to a lead hoop stress (σ_{il}) of 550 psi is:

$$p = \sigma_{il}[(c^2 - b_l^2)/(c^2 + b_l^2)]$$
$$= (550)[(39.039^2 - 35.056^2)/(39.039^2 + 35.056^2)]$$
$$= 59 \text{ psi}$$

The decrease in the radius of the inner shell, δ_{is}, due to the 59 psi contact pressure is:

$$\delta_{is} = (b_s p/E_s)\{[(b_s^2 + a^2)/(b_s^2 - a^2)] - \upsilon_s\}$$
$$= 0.002 \text{ inches}$$

The 0.002 inch decrease in the radius of the inner shell is insignificant relative to the total interference of 0.194 inches and consequently is conservatively neglected in this analysis.

The hoop stress in the inner steel shell, σ_h, due to the 59 psi contact pressure is:

$$\sigma_h = p[(b_s^2 + a^2)/(b_s^2 - a^2)]$$
$$= 1635 \text{ psi}$$

The axial compressive stress in the cask inner shell for the 70°F ambient condition is conservatively calculated assuming the lead bonds to the cask inner shell and the length of the cask inner shell does not change as a result of the axial compressive load. The length of the lead column at 620°F is assumed equal to the length of the cask annulus (182.94 inches). The length of the lead column at 70°F, assuming no axial restraint, L', is:

$$L' = L[1 + (T - 620)]$$

$$= (182.94)[1 + (16.07 \times 10^{-6})(70 - 620)]$$

$$= 181.32 \text{ inches}$$

The axial strain in the lead, ε_a, is:

$$\varepsilon_a = (182.94 - 181.32)/182.94$$

$$= 0.00884 \text{ in/in or } 0.884\% \text{ strain (tensile)}$$

Extrapolating from Figure 11 of [2.14], an axial stress of approximately 650 psi will exist in the lead for this strain. The effective force in the lead shell, P_a, is:

$$P_a = pA_l$$

$$= (650)\{ [(39.25)^2 - (35.25)^2]\}$$

$$= 608{,}500 \text{ lbs.}$$

From equilibrium, this same force is developed in the inner steel shell (assuming full lead bonding). Thus, the worst case compressive axial stress in the inner steel shell is:

$$\sigma_a = P/A_i$$

$$= -608{,}500/ [(35.25)^2 - (34.00)^2]$$

$$= -2{,}240 \text{ psi}$$

The primary membrane stress intensity in the cask inner shell for a state of pure compressive stresses is calculated as the greater of the axial stress, σ_a, or the hoop stress, σ_h. Therefore, the maximum fabrication primary membrane stress intensity in the cask inner shell for 70°F ambient conditions is 2,240 psi.

The residual stresses in the cask due to the lead pour will decrease rapidly with time due to creep in the lead. The fabrication stresses remaining in the cask components at the time the cask will be used for transportation will be insignificant. It is assumed that the cask returns to a stress free state at room temperature (70°F).

2.6.11 FO- and FC-DSC Analysis - Normal Conditions of Transport

THIS SECTION CONTAINS
PROPRIETARY INFORMATION

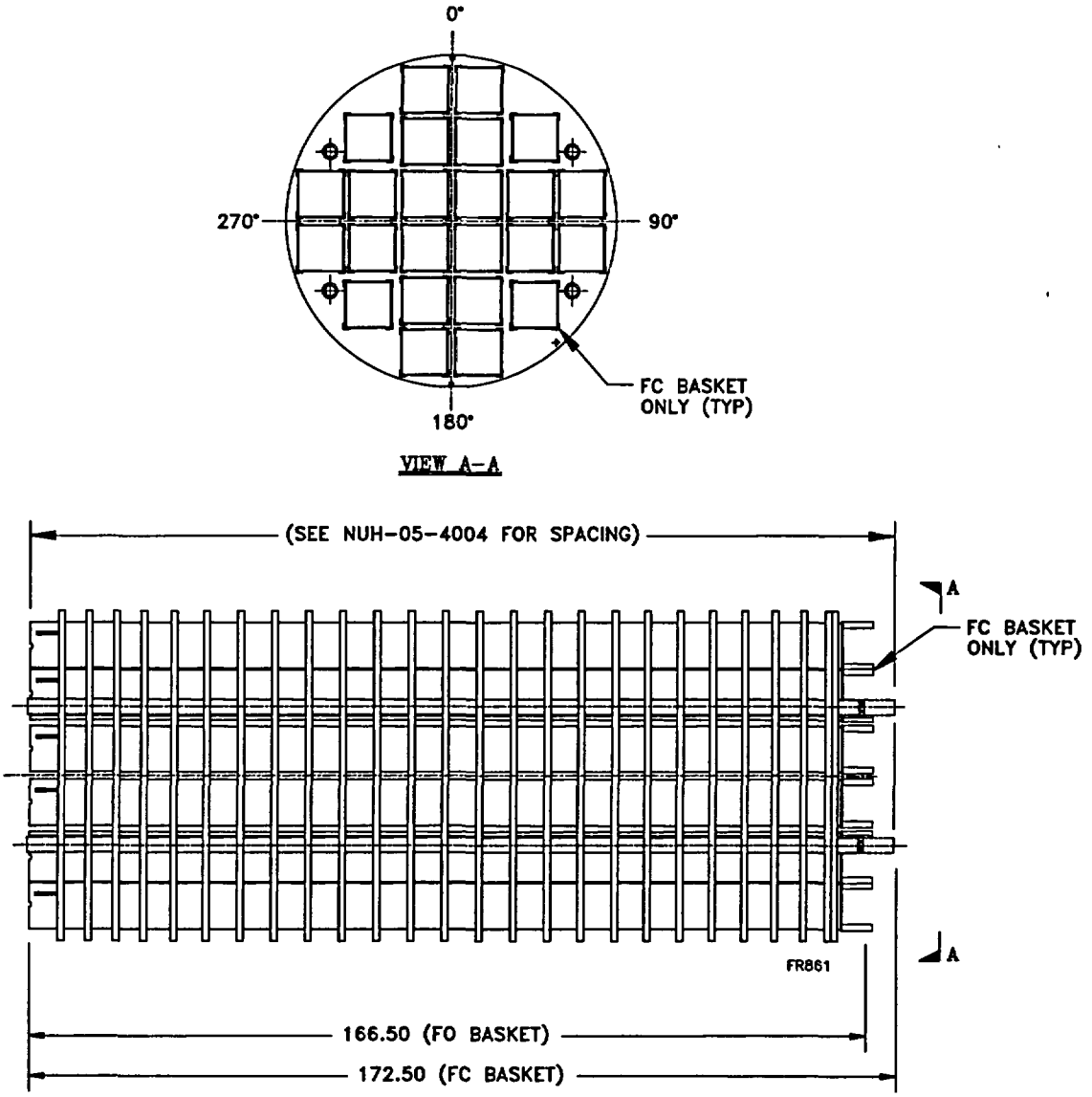

Figure 2.6.11-1
FO- and FC-DSC Basket Assembly Detail

FIGURE WITHHELD UNDER 10 CFR 2.390

2.6.11.1 Basket Fabrication Stress Analysis

Due to the unique construction of the FO and FC basket assemblies, no welding is required between the support rods and spacer discs during fabrication. Instead, the support rod assemblies are pre-tensioned during assembly to maintain the basket configuration. A preload of 80 ± 5 kips is applied to each support rod assembly. The axial compressive stress in the support rod sleeves due to the pretension is:

$$\sigma_a = P/A$$

where;

$$P = 85 \text{ kips, pre-tension load}$$

$$A = \pi(do^2 - di^2)/4$$

$$= \pi(3.00^2 - 2.08^2)/4$$

$$= 3.67 \text{ in}^2$$

Therefore,

$$\sigma_a = 85/3.67$$

$$= 23.2 \text{ ksi}$$

The axial tensile stress in the support rods due to the pretension is:

$$\sigma_a = P/A$$

where;

$$P = 85 \text{ kips, pre-tension load}$$

$$A = \pi d^2/4$$

$$= \pi(2.00^2)/4$$

$$= 3.14 \text{ in}^2$$

Therefore,

$$\sigma a = 85/3.14$$

$$= 27.1 \text{ ksi}$$

2.6.11.2 Thermal

The FC basket assembly components are evaluated for the effects of normal thermal conditions in the following sections. Thermal expansion of the various components is determined to ensure free thermal expansion of the basket assembly within the DSC shell cavity. The stresses in the basket assembly components resulting from thermal gradients and differential thermal expansion are also evaluated.

2.6.11.2.1 Spacer Disc Thermal Expansion

The maximum radial thermal growth of the spacer disc for the controlling normal condition is 0.1 inches. Therefore, the maximum diametrical thermal growth of the spacer disc for the controlling normal thermal condition is 0.2 inches This is much less than the nominal 0.38 inch diametrical gap between the FO- and FC-DSC spacer disc and the DSC shells. Therefore, the FO- and FC-DSC spacer discs will expand freely under normal thermal conditions.

2.6.11.2.2 Spacer Disc Thermal Stress Analysis

The thermal stresses in the spacer disc due to the heat condition are calculated using the half symmetry finite element model described in Section 2.10.3.1.2. The spacer disc thermal stress analysis is performed using the temperature dependent material properties of SA-537, Class 2, given in Table 2.3.1-2. The -20°F ambient condition results in higher thermal gradients

throughout the spacer disc than the 100°F ambient heat condition, and consequently will produce higher spacer disc stresses. In addition, the regulations [2.1] include a cold thermal condition of -40°F ambient air with zero solar insolation, and maximum fuel decay heat. This condition results in spacer disc thermal gradients which are approximately equal to those from the -20°F condition. Therefore, the spacer disc temperatures resulting from the -20°F ambient condition, calculated in the heat transfer analysis [Chapter 3], are conservatively applied to the spacer disc finite element model for the heat condition thermal stress analysis. The spacer disc temperature distribution resulting from the -20°F ambient condition is shown in Figure 2.6.11-3.

The maximum stress intensity due to the -20°F thermal condition is 71.0 ksi. The resulting maximum 20 spacer disc stress intensities due to the -20°F thermal condition are listed in Table 2.6.11-2, and the node locations are shown in Figure 2.6.11-5. In addition, the stresses at the critical spacer disc ligament node locations, shown in Figure 2.6.11-4, are reported in Figure 2.6.11-1.

The maximum primary plus secondary stress intensity due to the -20°F thermal condition is 71.0 ksi. The allowable service level A primary plus secondary stress intensity is $3S_m$. The design stress intensity for SA-537, Class 2, at the edge of the spacer disc (highest stressed area) is taken at 350°F, is 26.55 ksi. Therefore, the margin of safety for primary plus secondary stress intensity due to the -20°F thermal condition is:

$$\text{M.S.} = (79.6/71.0) - 1$$

$$= +0.12 \text{ (12\% margin)}$$

Therefore, the FO- and FC-DSC spacer discs meet the stress acceptance criteria for the -20°F thermal condition.

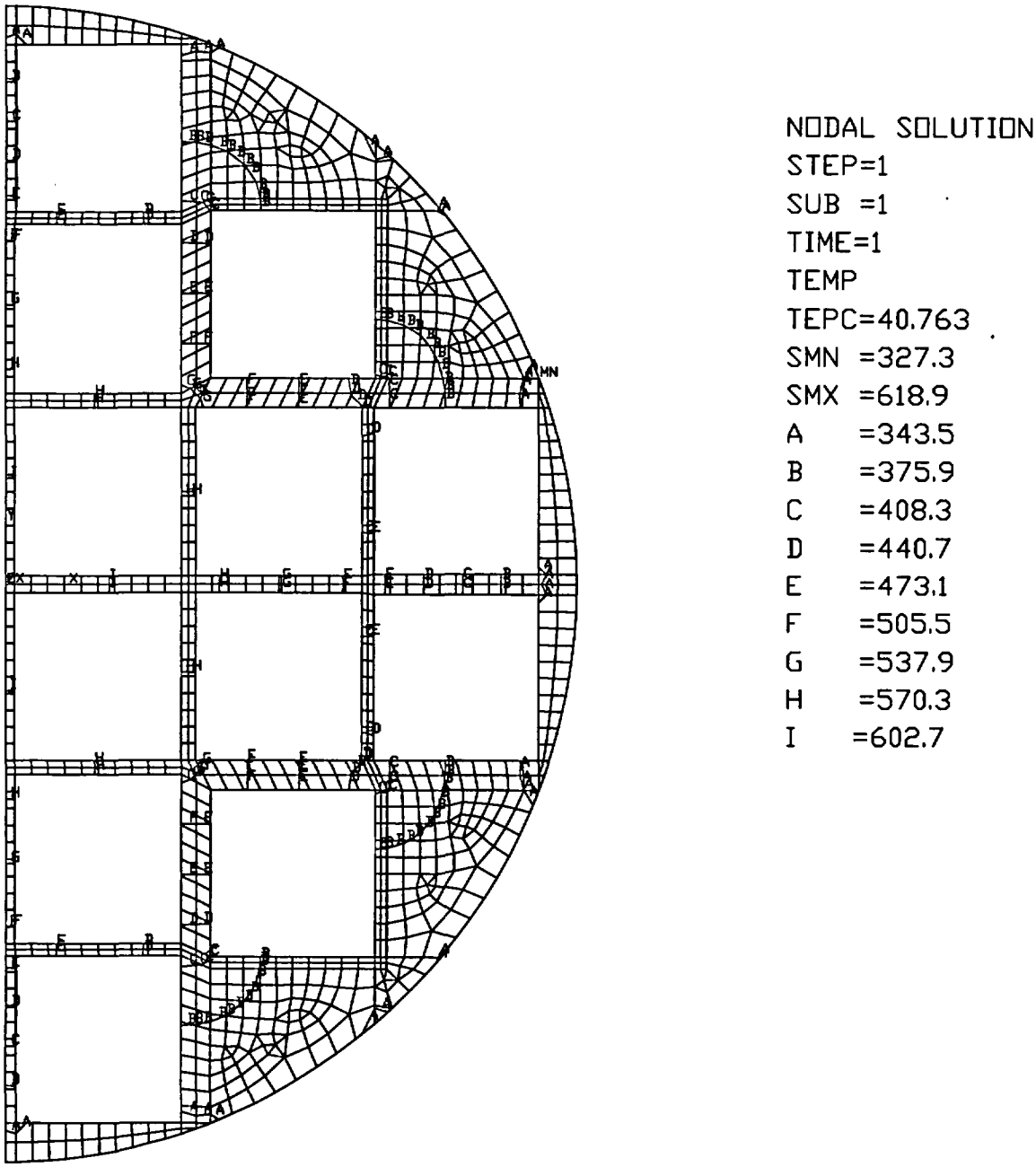

Figure 2.6.11-3
FC-DSC Spacer Disc Temperature Contour Plot for -20°F Ambient Thermal Condition

Table 2.6.11-1
FC-DSC Spacer Disc Ligament S.I. for -20°F Thermal Condition

Node	Stress Components (ksi)						SINT	Stress Type	Stress Limit	Margin of Safety
	SX	SY	SZ	SXY	SYZ	SXZ				
26	-7.1	-22.9	0.0	0.0	0.0	0.0	22.9	P_l+P_b+Q	79.2	246%
190	-23.2	-7.1	0.0	0.22	0.0	0.0	23.2	P_l+P_b+Q	79.2	241%
844	-23.2	-7.1	0.0	-0.22	0.0	0.0	23.2	P_l+P_b+Q	79.2	241%
108	-13.5	-21.5	0.0	-0.23	0.0	0.0	21.5	P_l+P_b+Q	79.2	268%
762	-13.5	-21.5	0.0	0.22	0.0	0.0	21.5	P_l+P_b+Q	79.2	268%
201	-21.8	-13.3	0.0	-0.25	0.0	0.0	21.9	P_l+P_b+Q	79.2	261%
855	-21.8	-13.3	0.0	0.25	0.0	0.0	21.9	P_l+P_b+Q	79.2	261%
951	-4.8	-9.5	0.0	0.99	0.0	0.0	9.7	P_l+P_b+Q	79.2	Large
369	-3.4	-10.0	0.0	-0.07	0.0	0.0	10.0	P_l+P_b+Q	79.2	Large
50	-9.8	-4.0	0.0	0.00	0.0	0.0	9.8	P_l+P_b+Q	79.2	Large
1	-9.1	-9.2	0.0	0.0	0.0	0.0	9.2	P_l+P_b+Q	79.2	Large
446	-7.2	-4.3	0.0	-1.30	0.0	0.0	7.7	P_l+P_b+Q	79.2	Large
1169	-7.3	-4.3	0.0	1.30	0.0	0.0	7.7	P_l+P_b+Q	79.2	Large
380	-4.6	-4.6	0.0	-0.12	0.0	0.0	4.7	P_l+P_b+Q	79.2	Large
1098	-4.6	-4.6	0.0	0.12	0.0	0.0	4.7	P_l+P_b+Q	79.2	Large
138	-4.6	-5.2	0.0	-0.21	0.0	0.0	5.3	P_l+P_b+Q	79.2	Large
792	-4.7	-5.2	0.0	0.21	0.0	0.0	5.3	P_l+P_b+Q	79.2	Large
53	-4.3	-7.0	0.0	0.0	0.0	0.0	7.0	P_l+P_b+Q	79.2	Large

Notes:
(1) All stresses reported are in units of ksi.
(2) Thermal stress intensities are classified as primary plus secondary.
(3) The spacer disc ligament node locations corresponding to the reported stresses are shown in Figure 2.6.11-4.

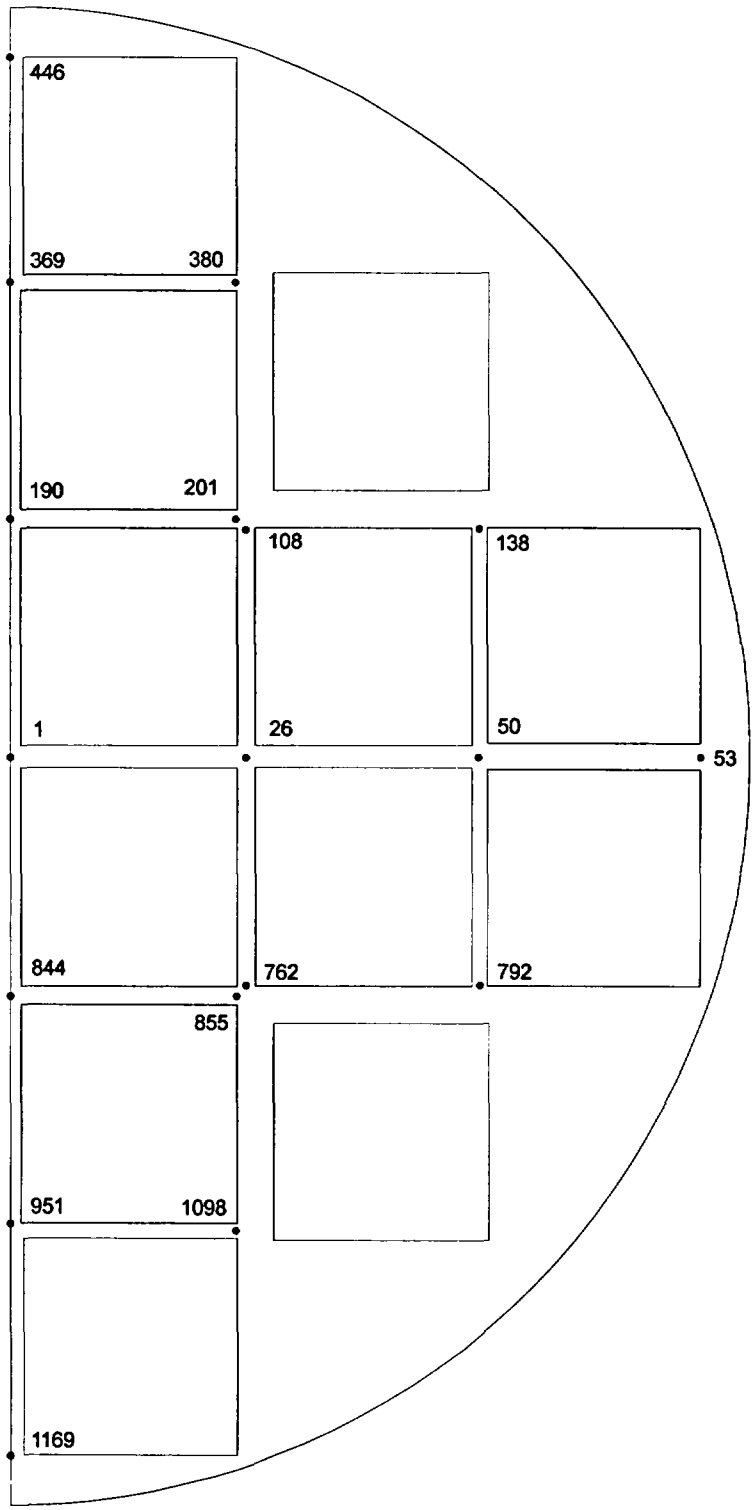

Figure 2.6.11-4
FC Spacer Disc 1/2 Symmetry Model Critical Ligament Nodes

Table 2.6.11-2
Top 20 FC-DSC Spacer Disc S.I. for -20°F Thermal Condition

Node	Stress Components (ksi)						SINT	Stress Type	Stress Limit	Margin of Safety
	SX	SY	SZ	SXY	SYZ	SXZ				
498	68.9	-0.029	0.0	-8.4	0.0	0.0	71.0	P_l+P_b+Q	79.6	12.1%
1287	68.9	-0.029	0.0	8.4	0.0	0.0	71.0	P_l+P_b+Q	79.6	12.1%
169	-0.32	67.9	0.0	-8.2	0.0	0.0	70.1	P_l+P_b+Q	79.6	13.5%
823	-0.32	67.9	0.0	8.2	0.0	0.0	70.1	P_l+P_b+Q	79.6	13.5%
167	-1.20	55.9	0.0	-10.9	0.0	0.0	61.1	P_l+P_b+Q	79.2	29.6%
821	-1.20	55.9	0.0	10.9	0.0	0.0	61.1	P_l+P_b+Q	79.2	29.6%
466	54.8	-2.2	0.0	-10.2	0.0	0.0	60.5	P_l+P_b+Q	79.2	30.9%
1189	54.8	-2.2	0.0	10.2	0.0	0.0	60.5	P_l+P_b+Q	79.2	30.9%
921	-0.1	36.9	0.0	12.4	0.0	0.0	44.5	P_l+P_b+Q	79.2	77.9%
267	-0.1	36.9	0.0	-12.4	0.0	0.0	44.5	P_l+P_b+Q	79.2	77.9%
920	5.9	34.9	0.0	16.2	0.0	0.0	43.5	P_l+P_b+Q	79.2	82.1%
266	5.9	34.9	0.0	-16.2	0.0	0.0	43.5	P_l+P_b+Q	79.2	82.1%
940	0.9	35.5	0.0	12.9	0.0	0.0	43.1	P_l+P_b+Q	79.2	83.7%
519	0.9	35.5	0.0	-12.9	0.0	0.0	43.1	P_l+P_b+Q	79.2	83.7%
497	42.5	0.97	0.0	-4.2	0.0	0.0	42.9	P_l+P_b+Q	79.2	84.6%
1286	42.5	0.97	0.0	4.2	0.0	0.0	42.9	P_l+P_b+Q	79.2	84.6%
520	39.7	3.4	0.0	-10.6	0.0	0.0	42.5	P_l+P_b+Q	79.2	86.3%
1308	39.7	3.4	0.0	10.6	0.0	0.0	42.5	P_l+P_b+Q	79.2	86.3%
170	0.9	42.1	0.0	-4.1	0.0	0.0	42.5	P_l+P_b+Q	79.2	86.3%
824	0.9	42.1	0.0	4.1	0.0	0.0	42.5	P_l+P_b+Q	79.2	86.3%

Notes:
(1) All stresses reported are in units of ksi.
(2) Thermal stress intensities are classified as primary plus secondary.
(3) The node locations of the 20 highest spacer disc stress intensities due to the -20°F thermal condition are shown in Figure 2.6.11-5.

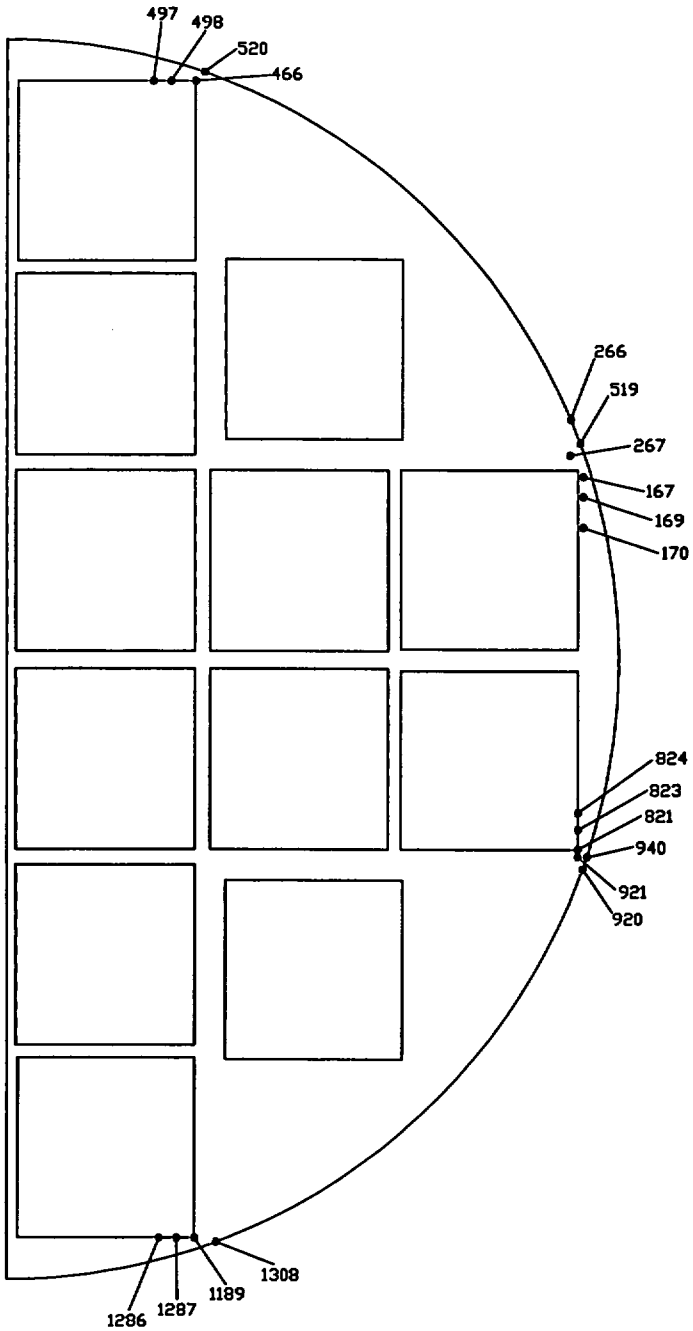

Figure 2.6.11-5
Location of Top 20 FC-DSC Spacer Disc S.I. for -20°F Thermal Condition

2.6.11.2.3 Support Rod Thermal Expansion

The maximum design temperature of the support rods is 500°F. The nominal length of the FC-DSC support rods is 172.5 inches. The coefficient of thermal expansion of the support rod SA-564, Type 630 17-4 PH material at 500°F is 5.91×10^{-6} in/in·°F. The maximum free thermal growth of a support rod, conservatively assuming a uniform temperature of 500°F along its entire length, is:

$$\delta_L = \alpha L \Delta T$$

$$= (5.91 \times 10^{-6})(172.5)(500 - 70)$$

$$= 0.44 \text{ inches}$$

Similarly, the free axial thermal growth of the FC-DSC shell at the design temperature of 300°F is:

$$\delta_L = \alpha L \Delta T$$

$$= (9.46 \times 10^{-6})(173.0 \text{ in})(300 - 70)$$

$$= 0.38 \text{ inches}$$

Therefore the differential growth between the support rods and the DSC shell is 0.06 inches which is less than the nominal gap of 0.50 inches. Therefore the support rods will expand freely under normal thermal conditions.

2.6.11.2.4 Support Rod Thermal Stress Analysis

As shown in Section 2.6.11.2.3, the support rod assemblies experience free thermal expansion for both normal and accident conditions of transport. Therefore, the only thermal stresses that the support rods will experience due to thermal loading during normal and accident conditions of transport is due to differential thermal growth between the spacer disc carbon steel material and the support rod assembly stainless steel material.

The spacer disc carbon steel material has a higher coefficient of thermal expansion than that of the support rod stainless steel material. Therefore, thermal loads will result in greater thermal growth in the spacer discs than in the support rod material in the same thickness. The total thickness of the 26 spacer discs is 32.5 inches. The support rods and support rod sleeves are fabricated from SA-564, Type 630, which has a coefficient of thermal expansion of 5.91×10^{-6} in/in-°F at 500°F. The maximum coefficient of thermal expansion of the spacer disc SA-537 or SA-517 material at 500°F is 8.18×10^{-6} in/in-°F. Therefore, the differential thermal expansion between the spacer discs and support rods is:

$$\delta_L = \Delta\alpha L \Delta T$$

$$= (8.18\text{x}10^{-6} - 5.91\text{x}10^{-6})(32.5 \text{ in})(500 - 70)$$

$$= 0.032 \text{ inches}$$

The resulting axial compressive stress in the support rod due to the differential thermal expansion, conservatively assuming all of the differential thermal expansion is applied to the rod, is:

$$\sigma_a = E\varepsilon$$

$$= (26.7 \times 10^3)(0.032/172.5)$$

$$= 5.0 \text{ ksi}$$

2.6.11.2.5 Guide Sleeve Thermal Expansion

Top of DSC

The maximum design temperature of the guide sleeve is 700°F. The nominal length of the FC guide sleeve is 167.8 inches. The mean coefficient of thermal expansion of ASME SA-240 Type 304 from 70°F to 700°F is $9.69\text{x}10^{-6}$ in/in·°F [2.2]. The maximum thermal growth of the FC guide sleeve, conservatively assuming a uniform temperature of 700°F along its entire length, is:

$$\Delta_L = \alpha L \Delta T$$
$$= (9.69 \times 10^{-6})(167.8)(700-70)$$
$$= 1.02 \text{ inches}$$

This is much smaller than the nominal gap of 3.95 inches provided between the top end of the guide sleeves and the FC-DSC shell top end shield plug. (Note that the FO gap is the same as FC with the shorter length, thus FC controls for thermal expansion.) Therefore, the guide sleeves will expand freely in the upward direction under normal thermal conditions.

Bottom of DSC

The guide sleeves are rigidly fastened only at the bottom end spacer disc. Considering tolerances, the maximum distance between the bottom spacer disc and the bottom end of the support rods is:

$$L_{max} = (6.25" \pm .25") = 6.50 \text{ inches}$$

The minimum gap between the end of the sleeves and the bottom cover (end of the support rods) is 0.25" (0.50"± 0.25").

Assuming a sleeve temperature of 700°F, the maximum longitudinal thermal expansion of the sleeves is:

$$\Delta L = \alpha\ L\ \Delta T_{max}$$
$$= \left(9.69\ x\ 10^{-6}\ in\ /\ in/^{o}F\right)\left(6.50in\right)\left(700^{o}F - 70^{o}F\right)$$
$$= 0.0397\ inches$$

The increase in length is much less than the available gap, thus the sleeves are free to expand in the downward direction.

"Radial" Direction

In the plane of the spacer discs, the maximum nominal dimension of the guide sleeve is 9.346 inches. The minimum spacer disc opening is 9.450 inches. Assuming the sleeve is at 700°F:

$$\begin{aligned}\Delta L &= \alpha\ L\ \Delta T_{max} \\ &= \left(9.69\ x\ 10^{-6}\ in\ /\ in/^{o}F\right)\left(9.346\ in\right)\left(700^{o}F - 70^{o}F\right) \\ &= 0.057\ \ inches\end{aligned}$$

Compared to the nominal gap of:

Gap = 9.450 in – 9.346 in = .104 in

The gap is approximately twice the maximum expansion. Therefore, sleeve is free to expand in the radial direction.

2.6.11.2.6 Guide Sleeve Thermal Stress Analysis

As shown in Section 2.6.11.2.5, the guide sleeves expand freely for the normal transportation thermal conditions specified in the regulations [2.1]. Therefore, the guide sleeves will not experience any stresses due to thermal loading during the normal and accident conditions of transport.

2.6.11.3 Vibration

As described in Section 2.6.4, the MP187 cask and components are conservatively designed for a vibration loading equal to the tie-down design basis load of 2g vertical.

2.6.11.3.1 Spacer Disc Vibration Stress Analysis

The critical spacer disc, based on the analyses of Appendix 2.10.3, is evaluated for a bounding 2g vertical vibration load.

The stresses in the FC-DSC spacer disc due to the vibration loading are analyzed using the half symmetry spacer disc finite element model described in Section 2.10.3.1.2. The 2g vertical vibration load is applied to the model and a linear elastic static analysis is performed using the ANSYS program. A free body diagram of the FC spacer disc for the 2g vertical vibration load is shown in Figure 2.6.11-6.

As shown in Table 2.10.3-1, the most heavily loaded spacer disc supports a total tributary weight of 2,475 pounds. Therefore, the total spacer disc load due to the 2g vibration load is 5.0 kips. The vertical load applied to the analytical model of the spacer disc is 2,607 pounds. This adds a conservatism of 5% in the reported results. The total vertical reaction force applied to the 1/2 symmetry finite element solution is 2,607 pounds, corresponding to a full disc load of 5,218 pounds. Therefore, the finite element model is in static equilibrium.

As discussed in Section 2.10.3.1.2.1, gap elements are used to model the interaction between the spacer disc, DSC shell, and cask inner shell. The gap elements, which are modeled around the entire circumference of the spacer disc, have zero stiffness when open and are nearly rigid when closed. The gap element loads and gap sizes resulting from the cold corner drop load condition are shown in Figure 2.6.11-7. The results show that the spacer disc contact angle resulting from the 2g vertical vibration load is approximately 26° (i.e., 13° half angle of contact.) The gap element forces are highest in the region of the impact (i.e. -90° azimuth). The maximum bearing stress on the edge of the spacer disc is calculated by dividing the gap element forces by the tributary area of each gap element. The maximum bearing stress on the spacer disc due to the edge reaction occurs along the spacer disc centerline. The gap force and tributary area of the gap element lying on the spacer disc centerline are 479 pounds and 0.372 in^2, respectively, resulting in a bearing stress of 1.3 ksi. Per NG-3227.1(a) of the ASME Code [2.2], the average bearing stress for Service Level A conditions is limited to the material yield strength, S_y. Therefore, the allowable bearing stress in the spacer disc is 46.0 ksi at 600°F. The minimum margin of safety for bearing stress in the spacer disc due to the 2g vertical vibration load is:

$$\text{M.S.} = (46.0/1.3) - 1$$

$$= +34.4 \text{ (Large Margin)}$$

The maximum gap separation is approximately 0.384 inches directly opposite the point of contact. This gap separation consists of 0.380 inches due to the nominal diametrical gap existing between the spacer discs and DSC shell plus 0.004 inches due to deformation of the spacer disc.

The resulting maximum 20 spacer disc stress intensities due to vibration are listed in Table 2.6.11-4, and the node locations are shown in Figure 2.6.11-8. In addition, the stresses at the critical spacer disc ligament node locations, shown in Figure 2.6.11-4, are reported in Table 2.6.11-3.

The maximum primary membrane stress intensity due to vibration is 6.5 ksi. The allowable service level A primary membrane stress intensity is limited to the design stress intensity, S_m. The design stress intensity for SA-537, Class 2, conservatively taken at 600°F, is 26.4 ksi. Therefore, the margin of safety for primary membrane stress intensity due to vibration is:

$$\begin{aligned} M.S. &= (26.4/6.5) - 1 \\ &= +3.04 \end{aligned}$$

The margins of safety for membrane plus bending and primary plus secondary stress intensity are much greater than that for primary membrane stress intensity. Therefore, the FO- and FC-DSC spacer discs meets the stress acceptance criteria for the vibration condition.

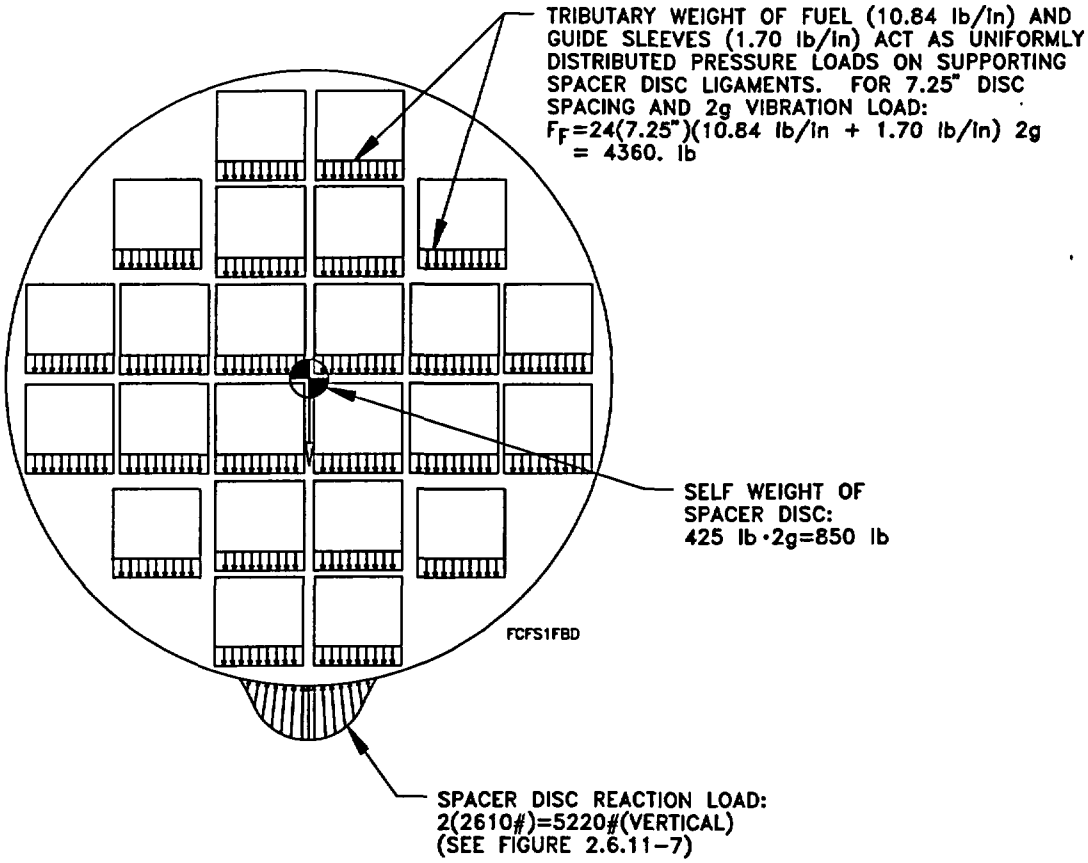

Figure 2.6.11-6
FC Spacer Disc Vibration Free Body Diagram

Component	Dead Load		Vibration
F_P, FC Spacer Disk	425 #	–	850. #
F_F, Fuel	10.84 lb/in	1886. #	3772. #
F_{GS}, Guide Sleeve	1.70 lb/in	296. #	592. #
$F_{Applied}$, Total Applied Load			5214. #
$F_{Reaction}$, ANSYS Reaction Load*2			5218. #
Ratio ($F_{Applied}/F_{Reaction}$)			1.00

disctabl.xls, vibration

Notes:
1. Fuel & Guide Sleeve load based on 24 fuel elements and 7.25" disk spacing.
2. Acceleration for Vibration, 2.0 g.

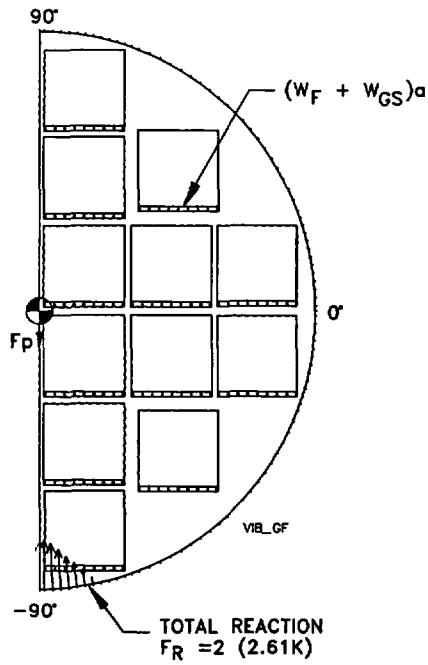

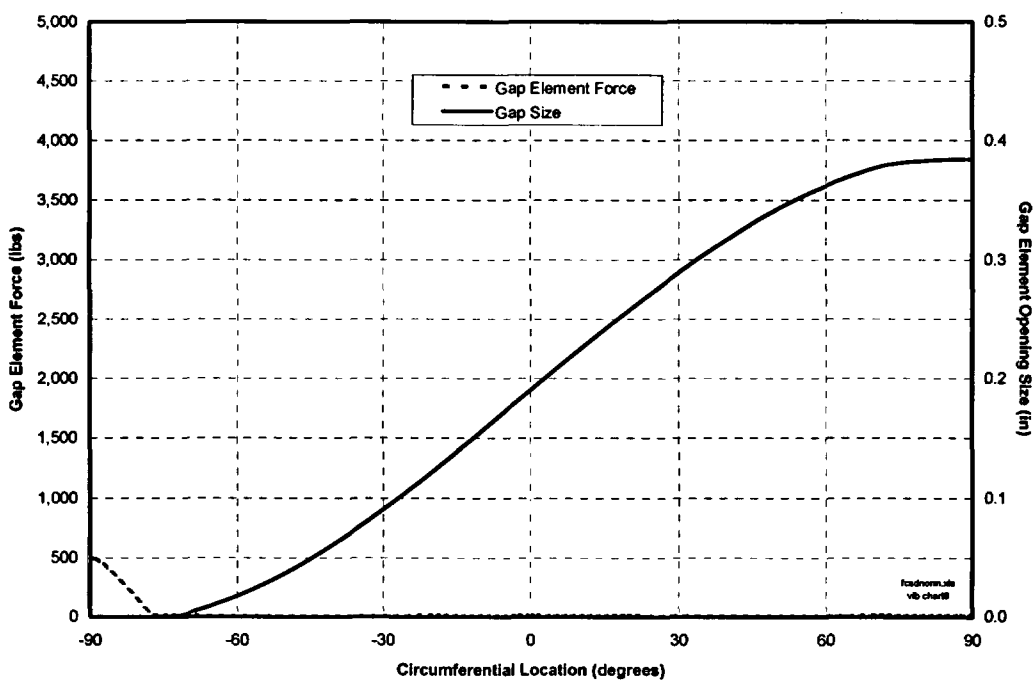

Figure 2.6.11-7
Gap Element Behavior for 2g Vertical Vibration Load

Table 2.6.11-3
FC-DSC Spacer Disc Ligament S.I. for Vibration

Node	Stress Components (ksi)						SINT	Stress Type	Stress Limit	Margin of Safety
	SX	SY	SZ	SXY	SYZ	SXZ				
951	1.6	-2.2	0.0	0.1	0.0	0.0	3.8	P_m	26.4	Large
1169	1.8	-1.8	0.0	0.1	0.0	0.0	3.5	P_m	26.4	Large
844	0.4	-1.9	0.0	0.2	0.0	0.0	2.3	P_m	26.4	Large
446	-1.9	-0.2	0.0	-0.1	0.0	0.0	1.9	P_m	26.4	Large
1	0.2	-1.4	0.0	0.1	0.0	0.0	1.7	P_m	26.4	Large
190	0.1	-1.1	0.0	0.1	0.0	0.0	1.3	P_m	26.4	Large
369	-0.3	-0.8	0.0	0.1	0.0	0.0	0.8	P_m	26.4	Large
1098	0.7	0.1	0.0	0.0	0.0	0.0	0.7	P_m	26.4	Large
26	0.0	0.0	0.0	0.3	0.0	0.0	0.7	P_m	26.4	Large
762	-0.5	0.0	0.0	0.2	0.0	0.0	0.6	P_m	26.4	Large
108	0.4	0.0	0.0	0.1	0.0	0.0	0.5	P_m	26.4	Large
380	-0.4	0.0	0.0	0.0	0.0	0.0	0.4	P_m	26.4	Large
855	0.2	0.0	0.0	0.1	0.0	0.0	0.4	P_m	26.4	Large
201	0.0	0.0	0.0	0.1	0.0	0.0	0.3	P_m	26.4	Large
792	0.1	-0.1	0.0	0.0	0.0	0.0	0.2	P_m	26.4	Large
50	0.0	0.0	0.0	-0.1	0.0	0.0	0.2	P_m	26.4	Large
138	0.0	0.1	0.0	0.0	0.0	0.0	0.2	P_m	26.4	Large
53	0.0	0.0	0.0	0.0	0.0	0.0	0.0	P_m	26.4	Large

Notes:
(1) All spacer disc stress intensities are conservatively classified as primary membrane.
(2) All stress results are reported in units of ksi.
(3) The node locations of the spacer disc ligament stress intensities due to vibration are shown in Figure 2.6.11-4.

Table 2.6.11-4
Top 20 FC-DSC Spacer Disc S.I. for Vibration

Node	Stress Components (ksi)						SINT	Stress Type	Stress Limit	Margin of Safety
	SX	SY	SZ	SXY	SYZ	SXZ				
1288	5.2	-0.1	0.0	1.9	0.0	0.0	6.5	P_m	26.4	304%
1287	-4.8	0.6	0.0	-1.3	0.0	0.0	6.0	P_m	26.4	340%
1296	-5.2	-0.2	0.0	-0.5	0.0	0.0	5.2	P_m	26.4	405%
1295	-5.1	-0.2	0.0	-0.7	0.0	0.0	5.2	P_m	26.4	408%
1189	-4.8	-2.8	0.0	-0.7	0.0	0.0	5.0	P_m	26.4	423%
1088	5.0	0.1	0.0	-0.2	0.0	0.0	5.0	P_m	26.4	424%
1297	-5.0	-0.2	0.0	-0.2	0.0	0.0	5.0	P_m	26.4	428%
1294	-4.8	-0.2	0.0	-0.9	0.0	0.0	5.0	P_m	26.4	431%
1293	-4.3	-0.2	0.0	-1.0	0.0	0.0	4.5	P_m	26.4	484%
1281	4.4	-0.1	0.0	0.0	0.0	0.0	4.5	P_m	26.4	487%
1298	-4.5	-0.2	0.0	0.0	0.0	0.0	4.5	P_m	26.4	487%
1280	4.4	-0.1	0.0	0.1	0.0	0.0	4.4	P_m	26.4	495%
1282	4.4	-0.1	0.0	0.0	0.0	0.0	4.4	P_m	26.4	498%
941	3.0	-1.3	0.0	0.0	0.0	0.0	4.3	P_m	26.4	Large
1277	-4.3	-1.4	0.0	-0.1	0.0	0.0	4.3	P_m	26.4	Large
1275	-4.2	-0.7	0.0	0.0	0.0	0.0	4.2	P_m	26.4	Large
1279	4.1	0.1	0.0	0.2	0.0	0.0	4.1	P_m	26.4	Large
1283	4.0	-0.1	0.0	-0.1	0.0	0.0	4.1	P_m	26.4	Large
845	4.1	0.1	0.0	-0.2	0.0	0.0	4.1	P_m	26.4	Large
864	-3.6	0.3	0.0	-0.2	0.0	0.0	3.9	P_m	26.4	Large

Notes:
(1) All spacer disc stress intensities are conservatively classified as primary membrane.
(2) All stress results are reported in units of ksi.
(3) The node locations of the 20 highest spacer disc stress intensities due to vibration are shown in Figure 2.6.11-8.

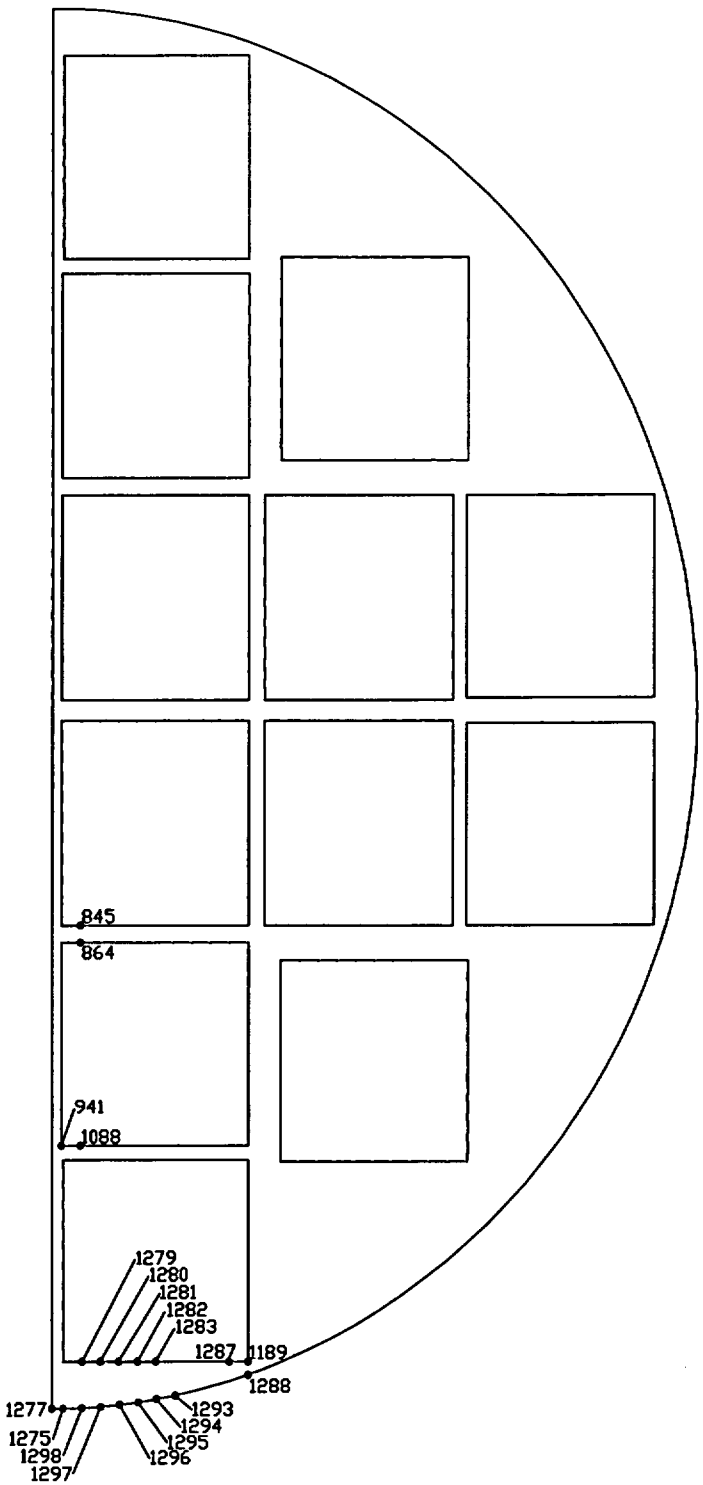

Figure 2.6.11-8
Location of Top 20 FC-DSC Spacer Disc S.I. for Vibration

2.6.11.3.2 Support Rod Vibration Stress Analysis

The support rod stresses due to the bounding 2g vertical vibration load are determined by scaling the stresses from the 1-foot side drop linear elastic analysis in Section 2.6.11.4.2 by the ratio of the g-loads. The resulting primary membrane, membrane plus bending, and primary plus secondary stress intensities in the support rods are (where a conservative acceleration of 30g was used for the 1-foot drop):

P_m	=	0.8 x (2.0/30.0)	=	0.1 ksi
$P_l + P_b$	=	7.6 x (2.0/30.0)	=	0.51 ksi
$P_l + P_b + Q$	=	7.6 x (2.0/30.0)	=	0.51 ksi

The allowable normal condition primary membrane, membrane plus bending, and primary plus secondary stress intensities for SA-564, Type 630 at 500°F are 42.8 ksi, 64.2 ksi, and 128.4 ksi, respectively. The minimum margin of safety in the support rod for the vibration loading, due to membrane plus bending stress intensity, is:

$$M.S. = (64.2/0.51) - 1$$

$$= +125$$

Therefore, the support rods meet the stress acceptance criteria for the normal vibration loading.

2.6.11.3.3 Guide Sleeve Vibration Stress Analysis

The guide sleeve stresses due to the bounding 2g vertical vibration load are determined by scaling the stresses from the horizontal dead weight (1g) linear elastic analysis in Section 2.6.11.4.3 by the ratio of the g-loads. The resulting membrane plus bending stress intensity in the guide sleeve is:

$$P_l + P_b = 0.91 \times 2 = 1.8 \text{ ksi}$$

The results show that the stresses in the guide sleeve due to vibration are much less than the yield strength of the guide sleeve material. Therefore, no permanent deformation of the guide sleeve will occur during normal transport due to vibration loading. The allowable normal condition membrane plus bending stress intensity for SA-240, Type 304 at 700°F is 24.0 ksi. The minimum margin of safety in the guide sleeves for the vibration loading, due to membrane plus bending stress intensity, is:

$$M.S. = (24/1.82) - 1$$

$$= +12.2$$

Therefore, the guide sleeves meet the stress acceptance criteria for the normal vibration loading.

2.6.11.3.4 DSC Anti-Rotation Shear Key Analyses

This section provides an evaluation of the DSC shell-to-cask body and DSC shell-to-basket shear keys provided to prevent rotation of the dry shielded canisters during transportation in the MP187 cask. An enveloping configuration and loading are utilized to evaluate the keys on the FO, FC, and FF DSCs. An evaluation of the DSC shell-to-basket shear keys for the XM-19 basket design option of the FF-DSC is presented in Appendix 2.10.13.

As shown on the Section 1.3.2 drawings, the DSC shell-to-cask body key is welded to the DSC grapple ring and outer bottom cover of each DSC at 180 degrees (bottom) azimuth. This key mates with a keyway adjacent to the ram access penetration located in the bottom end closure of the cask. The key prevents rotation of the DSC within the cask.

The DSC shell-to-basket keys are welded to the inner wall of the DSC shell and mate with slots on the outer circumference of the top spacer discs. Each DSC has two keys of this type, spaced at 180 degrees to prevent rotation of the basket assembly within the DSC. The design basis loading for the anti-rotation keys assumes that during loading one assembly at the extreme edge of the DSC basket is added/missing. All other assemblies are uniformly distributed throughout

the basket. The maximum vertical acceleration is equal to the design basis vertical tie-down load of 2g. This produces a rotational moment:

M_r = 25.86 in x 2g x 1665 lb

= 86.1 in-kips

Alternatively, assuming there is a possible variation in the weight of individual fuel assemblies of 10% (10% x 12 x 1665 lb = 2,000 lb) and loading all the heavy assemblies on one side and light assemblies on the other produces a rotational moment of:

$$M_r = \bar{x} \times W_f \times 2g$$

Where $\bar{x}$ = distance from c.g. of 12 heavy fuel assemblies and 12 light fuel assemblies.

$$M_r = \bar{x}(12W_f - 0.9 \times 12W_f) \times 2g$$

= 24.62(12 x 1665 - 0.9 x 12 x 1665) x 2

= 98.4 in-kip

$\bar{x}$ = [4(5.28) + 2(5.33) + 2(15.66) + 2(16.46) + 2(25.855)] / 12

= 24.62 in

2.6.11.3.4.1 <u>DSC Shear Key Analysis</u>

From the Section 1.3.2 drawings, the minimum radius from the DSC center line to the location of resisting lug shear,

r = 8 + 0.095

= 8.1" (conservatively use 8.0")

The maximum shear force in the lug is developed for the FC DSC loading which envelops the FO and FF DSCs:

$V = M_{FC} / r$

$= 98.4 / 8.0 = 12.3$ kips

Maximum Shear Stress in Lug

$f_v = V / A + T / \alpha b d^2$

$= 12.3 / (3)(1.75) + 12.3[3/2 - (3 - 0.905)/2] / 0.23(3)(1.75)^2$

= 5.0 ksi (less than NF-3320 shear allowable of 0.4 S_y at 400°F for A240 Type 304 material of 8.3 ksi)

Bending Stress in Lug

The shear reaction force is applied at the centroid of the bearing area, the grapple ring plate to key weld is neglected, and the plate considered cantilevered off the DSC base.

Moment,

$M = V(1.00" + 1.00"/2)$

$= 12.3(1.5) = 18.5$ in-kip

Section modulus of the 3 inch deep x 1.75 inch thick shear key about the weak axis is

$S = 3(1.75)^2 / 6 = 1.53 \text{ in}^3$

Shear Key Bending Stress,

$f_b = M / S =$ 12.1 ksi [meets the NF-3320 plate bending stress allowable of 0.75 S_y (15.5 ksi at 400°F)]

Shear Key Bearing Stress

Due to tapering of both the shear key and the keyway, bearing occurs over a width of 1.00 in. (minimum). The height of the bearing area, adjusted for the clear distance between the outer

diameter of the grapple ring plate and the inner diameter of the ram access hole and adjusted for the 1.25 inch chamfer in the keyway, is 1.66 inches.

Bearing stress,

f_p = 12.3 / (1.00)(1.66) = 7.4 ksi [meets the NF-3220 bearing allowable of 0.9 S_y (18.6 ksi at 400°F)]

Ignoring the weld between the grapple ring and shear key, and assuming the shear key is considered to be cantilevered off the base of the DSC, the load per inch of weld is calculated for a shear load of 12.3 kips, a moment of 18.5 in-kip, and a torsional moment of 8.3 in-kip. The resultant loads for the 3 inch long double fillet welds are:

f_x = V/A + T(1.5)/J = 3.41 kip/in

f_y = T(0.875)/J = 0.79 kip/in

f_z = M/S_y = 3.52 kip/in

f_w = $(f_x^2 + f_y^2 + f_z^2)^{1/2}$ = 4.96 kip/in

Checking the base metal and weld allowables for the 5/8 inch fillet welds to the requirements of NF-3320 and Table NF-3324.5(a)-1 gives an allowable load of:

F_w = 0.4(20.7)(5/8) = 5.2 kip/in (base metal, controls)

= 0.3(70)(0.707)(5/8) = 9.3 kip/in (weld metal)

This exceeds the calculated resultant force of 4.96 kips per inch and is acceptable.

DSC Bottom Cover Plate Stress

The local stresses in the 0.75 inch thick (FC and FF-DSCs) and the 1.75 inch thick (FO-DSC) bottom cover plates induced by bending of the key were found to be acceptable (maximum stress ratio of 0.81) even by ignoring the additional stiffness provided by the grapple ring plate at that location. The weld of the key to the grapple ring plate will significantly reduce stresses in the base of the DSC. Therefore, further evaluation is not required.

2.6.11.3.4.2 DSC Basket Shear Key Analysis

The two DSC basket shear keys are located on the inside surface of the DSC shell, spaced 65.2 inches apart, on the 0°-180° diameter, and mate with slots in the top spacer discs. The configuration of the DSC basket keys is identical for the FO, FC, and FF DSCs. Therefore, the following evaluation is based on the calculated rotational moment of 98.4 in-kip described above. An evaluation of the basket keys for the XM-19 basket design option of the FF-DSC is presented in Appendix 2.10.13.

The shear reaction at each key to restrain rotation,

$$V = M_{FC} / d$$
$$= 98.5 / 65.19 = 1.5 \text{ kip}$$

Therefore, the shear stress in the 3/4 inch square key is:

$$f_v = V_{FC} / A$$
$$= 1.51 / (0.75)^2 = 2.7 \text{ ksi (less than the NF-3320 stress allowable of 8.3 ksi at 400°F)}$$

The DSC shear key is welded to the inner surface of the DSC shell to within 1/4 inch of the top surface of the spacer disc. The shear key is considered cantilevered from the ends of this weld and the moment arm is the distance from the end of the weld to 1/4 inch below the disc surface or 1/2 inch. The bending moment in the key is:

$$M = 0.5\,V = 0.76 \text{ in-kip}$$

And the bending stress in the DSC shear keys is given by:

f_b = M / S = 0.76 / [0.75(0.75^2) / 6]

= 10.8 ksi (meets NF-3320 bending allowable of 15.5 ksi at 400°F)

The minimum depth of bearing area is determined assuming that the DSC basket assembly is in contact with the inner diameter of the DSC shell and that one key is located opposite the point of contact. Only 1/2 inch of the key length (at the top of the spacer disc) is conservatively assumed to be in contact with the spacer disc. This gives a bearing area of 0.31 inch radially and 0.5 inch long, or 0.15 square inch.

The bearing stress for the key is:

f_p = 1.50 / (0.15)

= 10 ksi (meets the NF-3320 allowable of 18.6 ksi at 400°F)

The two-sided, 3 inch long, 3/16 inch fillet welds are evaluated for the FC DSC loading. The maximum shear load is 1.5 kips, moment is 1.1 in-kip, and torsional moment is 3.0 in-kip.

The resultant weld forces are:

f_x	=	T(0.375)/J	=	0.21 kip/in
f_y	=	V/A + T(1.5)/J=	1.10 kip/in	
f_z	=	M/S_x	=	0.50 kip/in
f_w	=	$(f_x^2 + f_y^2 + f_z^2)^{1/2}$	=	1.23 kip/in

Checking the base material and weld allowables to the requirements of NF-3320 and Table NF-3324.5(a)-1 gives an allowable weld loading of:

F_w	=	0.4(20.7)(3/16)	=	1.55 kip/in	(base metal, controls)
	=	0.3(70)(0.707)(3/16)	=	2.78 kip/in	(weld metal)

These values easily exceed the calculated resultant weld force of 1.23 kip-inch and are acceptable.

2.6.11.4 1-Foot Drop

Section 71.71(c)(7) of the Part 71 regulations [2.1] include a 0.3 meter (1-foot) free drop as a normal condition of transport for packages weighing more than 33,000 pounds. The loaded NUHOMS®-MP187 cask with impact limiters exceeds this weight, and therefore must be analyzed for a 1-foot free drop. Since the NUHOMS®-MP187 transportation package is transported solely in a horizontal orientation, the package need only be analyzed for a 1-foot drop in the horizontal orientation to satisfy the intent of the regulations.

The FC-DSC basket assembly components are analyzed for the 1-foot drop condition using equivalent static loading. The peak g-loads resulting from a 1-foot side drop for cold (-20°F, no decay heat) and hot (100°F ambient, max. fuel decay heat) are 21.0 g's and 13.9 g's, respectively [Appendix 2.10.9]. The equivalent static loads used for the 1-foot drop analyses are calculated by multiplying the peak 1-foot drop g-load by the appropriate DLFs from Appendix 2.10.10, for the various DSC structural components. The 1-foot drop analyses are presented in the following sections.

2.6.11.4.1 Spacer Disc 1-Foot Drop Stress Analysis

As shown in Table 2.10.3-1, spacer discs #7 through #17 support the largest tributary weight of the 26 spacer discs. Therefore, these spacer discs are the most heavily loaded spacer discs for the 1-foot side drop condition. The FC-DSC spacer disc DLF for the cold and hot flat side 1-foot horizontal drop are 1.18 and 1.21, respectively, as shown in Appendix 2.10.10. Therefore, the equivalent static 1-foot drop g-load for hot and cold flat side 1-foot drop conditions are:

Hot:	g	=	1.21 x 13.9	=	16.8 g's
Cold:	g	=	1.18 x 21.0	=	24.8 g's

The FC-DSC spacer discs are analyzed for the 1-foot drop loading using the half symmetry ANSYS finite element model described in Section 2.10.3.1.2. The total loads on the design basis spacer disc for the hot and cold 1-foot side drop conditions are 41.6 kips and 61.4 kips,

respectively. The spacer disc flat side 1-foot horizontal drop analysis is performed using a bounding disc load of 65.4 kips. A free body diagram of the spacer disc for the 1-foot side drop load condition is shown in Figure 2.6.11-10.

The total vertical reaction force from the 1/2 symmetry finite element solution is 32,741 pounds, corresponding to a full disc load of 65,482 pounds. The difference between the applied load and reaction load is approximately 0.1%. Therefore, the finite element model is in static equilibrium.

As discussed in Section 2.10.3.1.2.1, gap elements are used to model the interaction between the spacer disc, DSC shell, and cask inner shell. The gap elements, which are modeled around the entire circumference of the spacer disc, have zero stiffness when open and are nearly rigid when closed. The gap element loads and gap sizes resulting from the cold corner drop load condition are shown in Figure 2.6.11-9. The results show that the spacer disc contact angle resulting from the 65.4 kip enveloping load is approximately 56° (i.e., 28° half angle of contact.) The gap element forces are highest in the region of the impact (i.e. -90° azimuth). The bearing stress along the edge of the spacer disc is calculated by dividing the gap element forces by the corresponding tributary area of each gap element. The maximum bearing stress occurs along the centerline of the spacer disc. The gap force and tributary area corresponding to the largest bearing stress are 1,985 pounds and 0.372 in^2, respectively, resulting in a bearing stress of 5.3 ksi. Per NG-3227.1(a) of the ASME Code [2.2], the average bearing stress for Service Level A conditions is limited to the material yield strength, S_y. Therefore, the allowable bearing stress in the spacer disc is 46.0 ksi at 600°F. The minimum margin of safety for bearing stress in the spacer disc is:

$$\text{M.S.} = (46.0/5.3) - 1$$

$$= +7.7$$

The maximum gap separation is 0.40 inches near the 75° azimuth location. This gap separation consists of 0.38 inches due to the nominal diametrical gap existing between the spacer discs and DSC shell plus 0.02 inches due to deformation of the spacer disc.

The 20 highest spacer disc stresses resulting from the 1-foot side drop are reported in Table 2.6.11-6 and the corresponding node locations are shown in Figure 2.6.11-11. In addition, the stresses at the critical spacer disc ligament node locations, shown in Figure 2.6.11-4, are reported in Table 2.6.11-5.

The maximum spacer disc primary membrane stress intensity due to the 1-foot side drop is 21.9 ksi. The allowable service level A primary membrane stress intensity is limited to the design stress intensity, S_m. The design stress intensity for SA-537, Class 2, conservatively taken at 600°F, is 26.4 ksi. Therefore, the margin of safety for primary membrane stress intensity due to the 1-foot horizontal side drop is:

$$\text{M.S.} = (26.4/21.9) - 1$$
$$= +0.21$$

The maximum spacer disc membrane plus bending stress intensity due to the 1-foot side drop is 30.3 ksi. The allowable service level A membrane plus bending stress intensity is limited to 150% of the design stress intensity, S_m. The design stress intensity for SA-537, Class 2, conservatively taken at 600°F, is 26.4 ksi. Therefore, the margin of safety for primary membrane stress intensity due to the 1-foot horizontal side drop is:

$$\text{M.S.} = (39.6/30.3) - 1$$
$$= 0.31$$

The margins of safety for primary plus secondary stress intensity are much greater than that for primary membrane and membrane plus bending stress intensities. Therefore, the FO- and FC-DSC spacer discs meets the stress acceptance criteria for the 1-foot side drop condition.

Component	Dead Load		1' Drop
F_P, FC Spacer Disk	425 #	--	10.7 k
F_F, Fuel	10.84 lb/in	1886. #	47.3 k
F_{GS}, Guide Sleeve	1.70 lb/in	296. #	7.42 k
$F_{Applied}$, Total Applied Load			65.4 k
$F_{Reaction}$, ANSYS Reaction Load*2			65.5 k
Ratio ($F_{Applied}/F_{Reaction}$)			1.00

Notes: disctabl.xls, 1' drop

1. Fuel & Guide Sleeve load based on 24 fuel elements and 7.25" disk spacing.
2. Acceleration for 1 Foot Drop, 25.1 g.

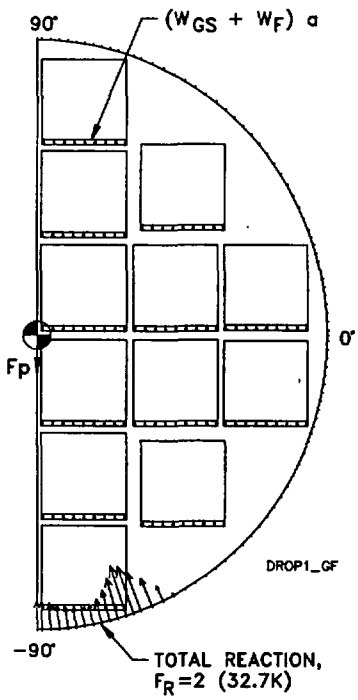

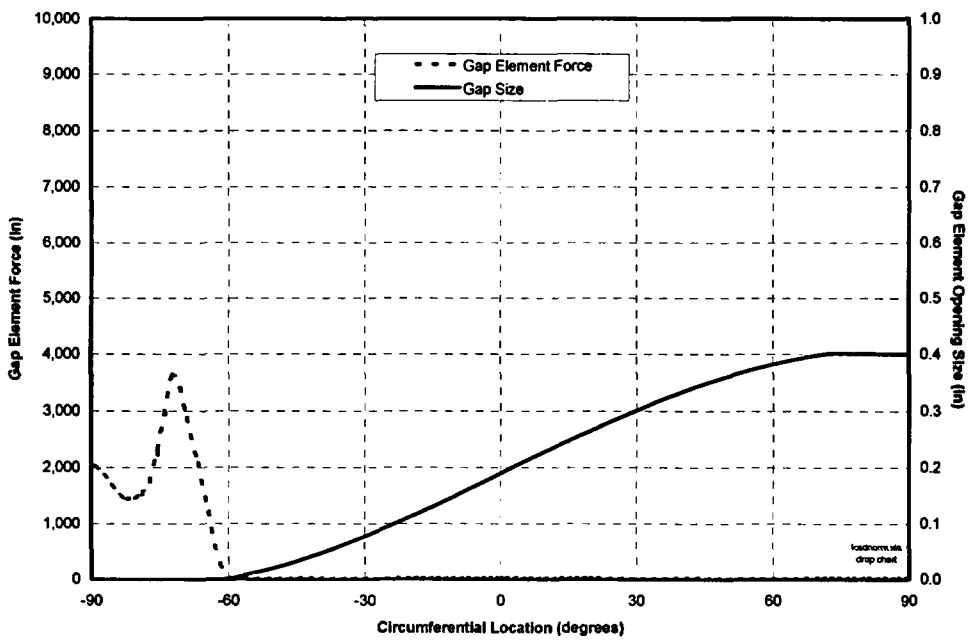

Figure 2.6.11-9
Gap Element Behavior for 1-Foot Side Drop

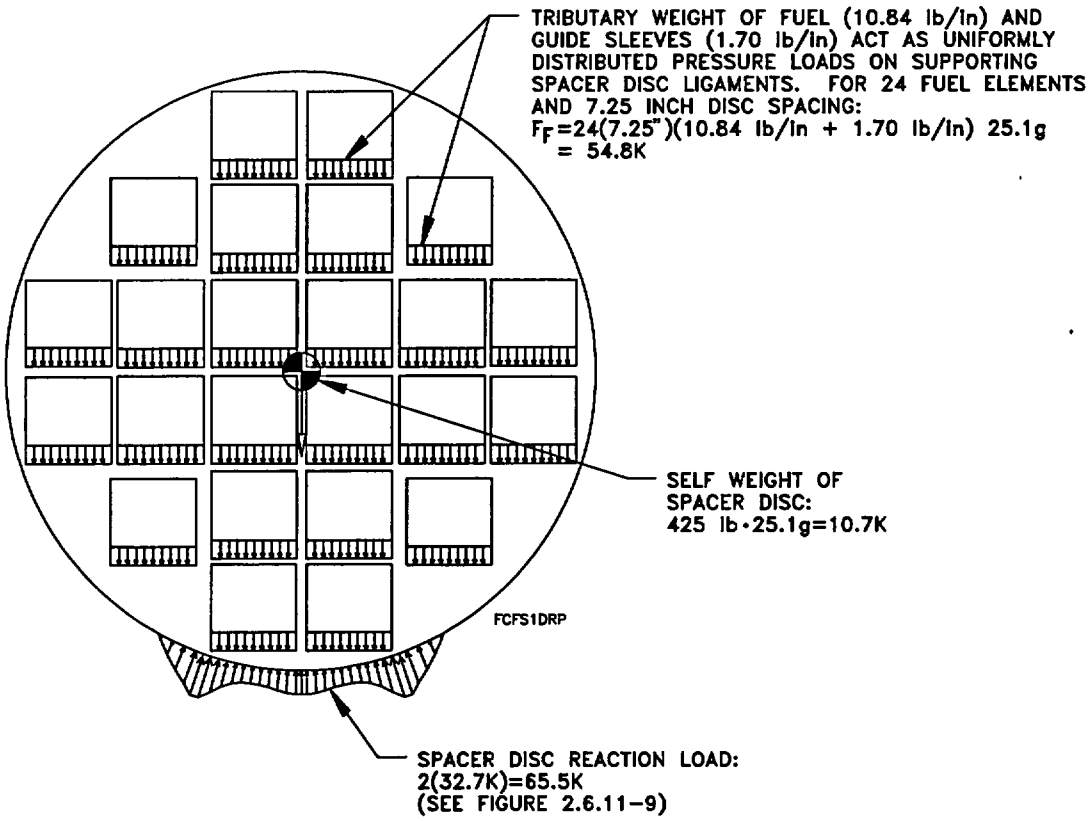

Figure 2.6.11-10
FC Spacer Disc 1-Foot Side Drop Free Body Diagram

Table 2.6.11-5
FC-DSC Spacer Disc Ligament S.I. for 1-Foot Drop

Node	Stress Components (ksi)						SINT	Stress Type	Stress Limit	Margin of Safety
	SX	SY	SZ	SXY	SYZ	SXZ				
951	9.3	-12.6	0.0	0.6	0.0	0.0	21.9	P_m	26.4	21%
844	4.4	-10.8	0.0	0.5	0.0	0.0	15.3	P_m	26.4	73%
762	3.2	-5.7	0.0	0.6	0.0	0.0	9.0	P_m	26.4	194%
1	1.5	-7.5	0.0	0.3	0.0	0.0	9.0	P_m	26.4	194%
1169	-5.7	-8.3	0.0	1.2	0.0	0.0	8.8	P_m	26.4	199%
1098	5.0	-3.2	0.0	-0.6	0.0	0.0	8.3	P_m	26.4	220%
855	3.3	-4.0	0.0	0.5	0.0	0.0	7.4	P_m	26.4	259%
26	1.2	-4.7	0.0	1.0	0.0	0.0	6.3	P_m	26.4	322%
190	0.5	-5.4	0.0	0.5	0.0	0.0	5.9	P_m	26.4	345%
446	-4.8	-0.6	0.0	-0.3	0.0	0.0	4.9	P_m	26.4	444%
369	-1.5	-3.1	0.0	0.7	0.0	0.0	3.4	P_m	26.4	Large
108	-1.9	-3.3	0.0	-0.2	0.0	0.0	3.3	P_m	26.4	Large
792	-1.3	-1.9	0.0	0.5	0.0	0.0	2.2	P_m	26.4	Large
380	-1.4	0.5	0.0	-0.1	0.0	0.0	1.9	P_m	26.4	Large
50	0.5	-1.0	0.0	-0.3	0.0	0.0	1.7	P_m	26.4	Large
201	-0.1	-1.0	0.0	0.7	0.0	0.0	1.6	P_m	26.4	Large
138	-0.2	0.3	0.0	0.2	0.0	0.0	0.6	P_m	26.4	Large
53	0.2	0.2	0.0	0.1	0.0	0.0	0.3	P_m	26.4	Large

Notes:
(1) All spacer disc ligament stress intensities are conservatively classified as primary membrane.
(2) All stress results are reported in units of ksi.
(3) See Figure 2.6.11-4 for the spacer disc node locations of reported ligament stresses.

Table 2.6.11-6
Top 20 FC-DSC Spacer Disc S.I. for 1-Foot Drop

Node	Stress Components (ksi)						SINT	Stress Type	Stress Limit	Margin of Safety
	SX	SY	SZ	SXY	SYZ	SXZ				
1189	-26.0	-20.7	0.0	-6.4	0.0	0.0	30.3	$P_l + P_b$	39.6	31%
1292	-28.5	-2.1	0.0	-5.3	0.0	0.0	29.6	$P_l + P_b$	39.6	34%
1291	-27.5	-2.0	0.0	-7.1	0.0	0.0	29.4	$P_l + P_b$	39.6	35%
1293	-26.0	-1.4	0.0	-3.8	0.0	0.0	26.5	$P_l + P_b$	39.6	49%
1287	-18.0	2.5	0.0	-7.3	0.0	0.0	25.2	$P_l + P_b$	39.6	57%
1088	25.0	0.7	0.0	-1.5	0.0	0.0	25.0	$P_l + P_b$	39.6	58%
941	16.4	-7.4	0.0	-0.1	0.0	0.0	23.8	$P_l + P_b$	39.6	66%
1294	-22.8	-1.1	0.0	-2.4	0.0	0.0	23.1	$P_l + P_b$	39.6	71%
951	9.3	-12.6	0.0	0.6	0.0	0.0	21.9	P_m	26.4	21%
1191	0.5	-18.7	0.0	-4.9	0.0	0.0	21.4	$P_l + P_b$	39.6	85%
1087	6.9	-12.9	0.0	1.6	0.0	0.0	20.1	P_m	26.4	32%
1295	-19.6	-0.9	0.0	-1.3	0.0	0.0	19.7	$P_l + P_b$	39.6	101%
731	13.2	-6.1	0.0	-0.3	0.0	0.0	19.3	$P_l + P_b$	39.6	105%
1307	-12.8	-1.0	0.0	-7.3	0.0	0.0	18.8	P_m	26.4	41%
845	18.4	0.6	0.0	-1.3	0.0	0.0	18.5	$P_l + P_b$	39.6	114%
741	8.2	-10.2	0.0	0.2	0.0	0.0	18.4	P_m	26.4	44%
370	-17.2	0.9	0.0	-1.1	0.0	0.0	18.3	$P_l + P_b$	39.6	117%
1102	17.8	-0.2	0.0	0.0	0.0	0.0	18.0	$P_l + P_b$	39.6	120%
1103	16.8	-0.1	0.0	-0.3	0.0	0.0	16.9	$P_l + P_b$	39.6	135%
1101	16.7	0.0	0.0	0.3	0.0	0.0	16.7	$P_l + P_b$	39.6	138%

Notes:
(1) All spacer disc primary + secondary stress intensities are conservatively classified as membrane + bending.
(2) All stress results are reported in units of ksi.
(3) The node locations corresponding to the 20 highest spacer disc stress intensities due to the 1-foot side drop are shown in Figure 2.6.11-11.

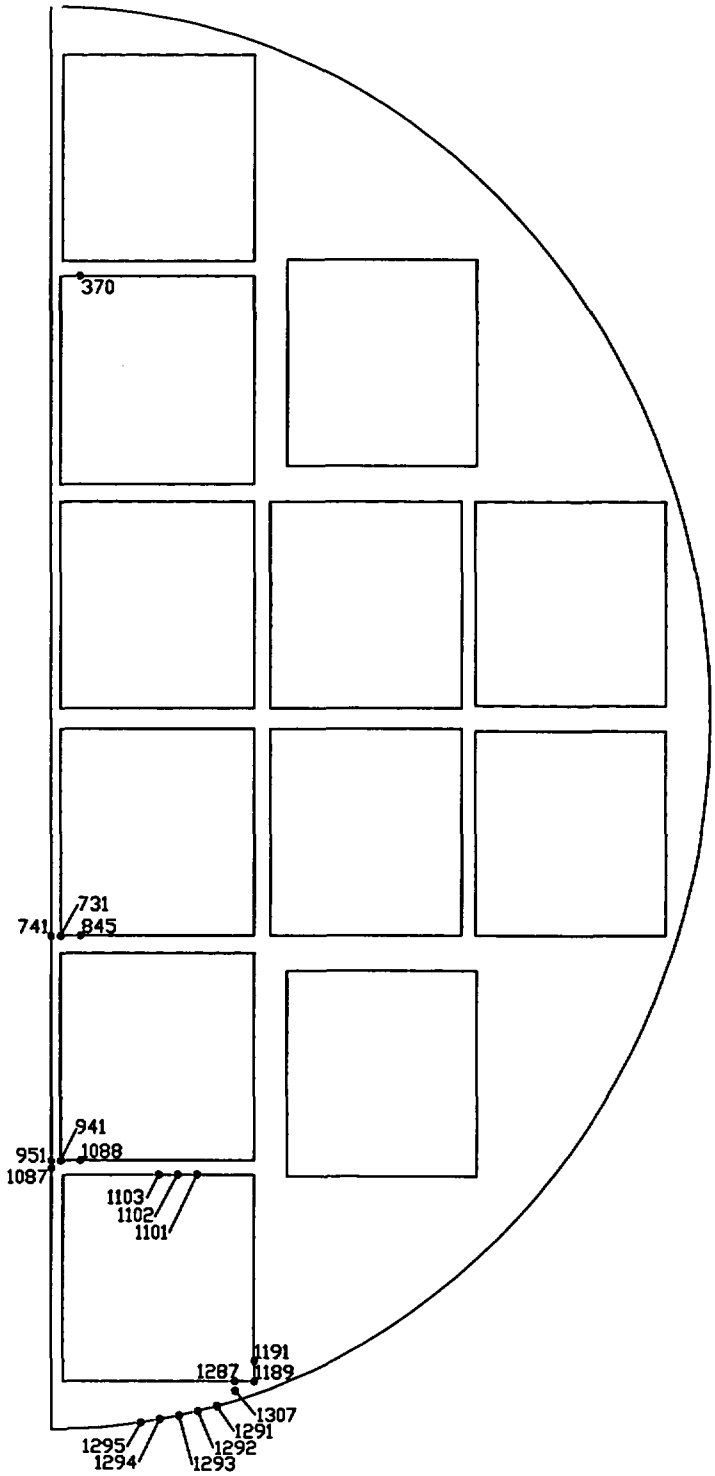

Figure 2.6.11-11
Location of Top 20 FC-DSC Spacer Disc S.I. for 1-Foot Drop

2.6.11.4.2 Support Rod 1-Foot Drop Stress Analysis

THIS SECTION CONTAINS
PROPRIETARY INFORMATION

The maximum bending stress in the support rods at the top end section, analyzing the rod as a cantilever beam with a length of 14.0 inches subjected to a uniformly distributed load, w, is calculated as:

$$\sigma_b = \frac{M \cdot R_{ROD}}{I_{ROD}}$$

where:

$$\begin{aligned} M &= \frac{wl^2}{2} \\ &= \frac{(\pi R^2_{SLEEVE} \gamma_{STEEL}) a \cdot l^2}{2} \\ &= \frac{\pi (1.50in)^2 (.2853\, lb/in^3)(30.0g)(14.0in)^2}{2} \\ &= 5.93 in \cdot kips \end{aligned}$$

$$\begin{aligned} I &= \frac{\pi R^4_{ROD}}{4} \\ &= \frac{\pi (1.00in)^4}{4} \\ &= 0.785 in^4 \end{aligned}$$

Therefore, the maximum support rod bending stress in the top cantilever section is:

$$\begin{aligned} \sigma_b &= \frac{(5.93 in \cdot kip)(1.00 in)}{0.785 in^4} \\ &= 7.6 ksi \end{aligned}$$

The maximum bending stress in the support rod sleeves is much lower than the compressive stress due to the preload. Therefore, the support rod assemblies will remain tight during the 1-foot side drop.

The shear loads due to the 1-foot side drop are assumed to be carried entirely by the support rod, ignoring friction between the support rod sleeves and spacer discs. The maximum support rod shear stress at the top cantilever section is calculated as:

$$\sigma_V = \frac{4 \cdot V}{3 \cdot A}$$

where:

$$
\begin{aligned}
V &= wl \\
&= \left(\pi R^2_{SLEEVE}\gamma_{STEEL}\right)a \cdot l \\
&= \pi(1.50in)^2(.2853\,\text{lb}/in^3)(30.0g)(14.0in) \\
&= 0.85kip \\
A &= \pi R^2_{ROD} \\
&= \pi(1.00in)^2 \\
&= 3.14in^2
\end{aligned}
$$

Therefore,

$$
\begin{aligned}
\sigma_v &= \frac{4 \cdot 0.85kip}{3 \cdot 3.14in^2} \\
&= 0.4ksi
\end{aligned}
$$

The maximum primary membrane stress intensity in the support rod due to the cold flat side 1-foot horizontal drop loading is equal to twice the peak shear stress, or 0.8 ksi. The allowable service level A primary membrane stress intensity for SA-564, Type 630 at 600°F is 42.8 ksi. Therefore, the minimum margin of safety for primary membrane stress intensity in the support rods due to the 1-foot side drop is:

$$
\begin{aligned}
\text{M.S.} &= (42.8/0.8) - 1 \\
&= +52.5
\end{aligned}
$$

The maximum membrane plus bending stress intensity in the support rod sleeves due to the 1-foot side drop is:

$$
\begin{aligned}
P_l + P_b &= \left(\frac{\sigma_b}{2}\right) + \sqrt{\left(\frac{\sigma_b}{2}\right)^2 + \sigma_v^{\,2}} \\
&= 7.6 \text{ ksi}
\end{aligned}
$$

The allowable membrane plus bending stress intensities for normal conditions of transport is limited to 1.5 S_m. Therefore, the allowable membrane plus bending stress intensity is 64.2 ksi. The margin of safety for the maximum support rod membrane plus bending stress intensity resulting from the cold 1-foot side drop is:

$$
\begin{aligned}
\text{M.S.} &= (64.2/7.6 - 1) \\
&= +7.4
\end{aligned}
$$

The cantilever lengths of the FO support rod at the top end is less than half that of the FC (5.13" vs. 11.12") and are therefore covered by the FC analysis presented above.

2.6.11.4.3 Guide Sleeve 1-Foot Drop Stress Analysis

In the event of a 1-foot side drop, the guide sleeve assemblies are supported by the 26 spacer discs. Under dead weight conditions, the load from the fuel assemblies is transferred to the supporting guide sleeve panel through the fuel grid spacers. The fuel grid spacers are located approximately 21 to 22 inches apart for B&W 15x15 Mark B fuel assemblies. The fuel rods spanning between grid spacers are relatively flexible due to the thin fuel rod tubes and the high mass density of the fuel pellets contained in the fuel rod tubes. Consequently, the fuel rod deflections due to the 1-foot side drop loading will be much larger than the 0.020 inch thickness of the grid spacers. Small indentations are provided around the perimeter of the grid spacer. The grid spacer material thickness plus the indentation result in a space of .06 inches between the O.D. of the fuel assembly outer fuel rods and the inside surface of the guide sleeve. Therefore, the fuel rods will be supported by the bottom panel of the guide sleeve in the event of a 1-foot side drop. The loads resulting from this condition are represented by a uniformly distributed load on the bottom panel of the guide sleeve. A finite element analysis of the guide sleeve is performed for the self weight and 1-foot side drop conditions using the symmetry finite element model described in Section 2.10.3.1.6. The guide sleeve model ignores the structural capacity of the neutron absorber panels and oversleeves but includes their mass by adjusting the guide sleeve density accordingly. The loads from the fuel assembly corresponding to a 1g (dead weight) and a bounding 25.1g side drop load are modeled as a uniform pressure loads acting over the area of the bottom panel. In addition, the corresponding g (1g and 25.1g) vertical accelerations applied to the model include the inertial loads of the guide sleeve assembly.

The resulting primary membrane, membrane plus bending, and primary plus secondary stress intensities in the guide sleeve for horizontal dead weight are:

P_m = 0.08 ksi (node 5)

$P_l + P_b$ = 0.91 ksi (node 74)

$P_l + P_b + Q$ = 0.91 ksi (node 74)

The maximum stress intensities at the middle, top, and bottom fibers of the guide sleeve plate resulting from the 25.1g 1-foot side drop load are shown in Figure 2.6.11-12, Figure 2.6.11-13, and Figure 2.6.11-14, respectively. The resulting primary membrane, membrane plus bending, and primary plus secondary stress intensities in the guide sleeve are:

P_m = 1.9 ksi (node 5)

$P_l + P_b$ = 23.44 ksi (node 74)

$P_l + P_b + Q$ = 23.44 ksi (node 74)

The allowable membrane plus bending stress for normal conditions of transport is limited to 1.5 S_m. The design stress intensity, S_m, for the guide sleeve material at 700°F is 16 ksi. Therefore, the allowable stress is 24.0 ksi. The resulting margin of safety for membrane plus bending stress in the guide sleeves due to the 1-foot side drop is :

M.S. = (24.0/23.44) - 1

= +0.024

2.6.11.5 Guide Sleeve 1 Foot Drop Weld Evaluation

The guide sleeve design allows four methods of fabricating the sleeves:

1. Two "C" shaped sections of material can be joined using full penetration butt welds.
2. Two "L" shaped sections of material can be joined at opposite corners with continuous fillet welds.
3. The sleeve can be fabricated from one piece of material, formed and jointed at one corner using a continuous fillet weld. The maximum size of the fillet weld is controlled by the material thickness. Conservatively assume a nominal 0.09 inch weld size.
4. Sleeve may be drawn from seamless or welded material.

Since the full penetration or continuous section sleeve (option 1 and 4, respectively), will be stronger than the fillet welded sleeve, the analysis model will be based on fillet welds at the corners. In addition, since stresses are maximum at the loaded panel (i.e., the "bottom" panel of

the sleeve), a weld at one of the "top" corners will have little impact on the results and fabrication options 2 and 3 are analytically equivalent. Thus the analysis model assumes a continuous structure with a fillet weld at a "bottom" corner (Fabrication option 3).

For the three "continuous" corners, the shell elements in the side and top panels are modeled using the same nodes. This provides for transfer of both forces and moments at these locations. For the fillet welded corner, corner nodes for the side and bottom panels are separate and coincident (the bottom panel uses nodes 1 to 9 while the side panel uses nodes 577 to 585). The weld is modeled by coupling the translations of the coincident nodes. This provides for transfer of forces across the weld but allows rotation (i.e. the fillet weld is assumed to transfer forces but not moments). The detailed weld modeling is shown in Section 2.10.3.1.6.

The loads at each of the selected nodes are obtained from the ANSYS analysis described in Section 2.10.3.1.7.13. The x, y, and z components of the load are combined to find a resultant force (F_R) using the "square root of the sum of the squares" method.

A force per unit length (F_R/L) is calculated by dividing the resultant force by the tributary length. based on the coordinates of each node point. The above calculations are as follows:

Normal 1-Foot Drop (25.1g) Loading Condition

Node	Z	L	Fx	Fy	Fz	F_R	F/L
577	0	0.15625	-0.05	-30.95	19.67	36.7	**234.7**
578	0.3125	0.3125	-0.10	-52.53	3.62	52.7	**168.5**
579	0.625	0.3853	-0.12	-55.19	9.87	56.1	**145.5**
580	1.083	0.4585	-0.12	-7.89	13.93	16.0	**34.9**
581	1.542	0.4585	-0.15	11.51	12.82	17.2	**37.6**
582	2	0.4580	-0.22	17.67	11.47	21.1	**46.0**
583	2.458	0.4585	-0.29	24.00	9.11	25.7	**56.0**
584	2.917	0.4585	-0.35	26.39	5.04	26.9	**58.6**
585	3.375	0.2290	-0.18	13.82	4.24	14.5	**63.1**
						Maximum	**234.7**

Units of force are in lbs and length is in inches

The maximum combined load for the normal condition of transportation is 235 lbs/in. The corresponding weld stresses are determined by dividing the calculated load by the effective thickness of the weld.

The stress in the throat of the 0.09" fillet corner weld for the normal 1-foot side drop loading conditions is:

$$f_{w\text{-}nor.} = (0.24 \text{ kips/in}) / [(0.09 \text{ inch} \times 0.707)]$$
$$= 3.8 \text{ ksi}$$

From NG-3352 of ASME Code, the allowable weld stress is taken as the factor *n* times the allowable stress limit. From Table NG3352-1, single fillet welds are Type VII welds with a value of *n* of 0.35 (surface visual examination).

The allowable weld stress for the 1-foot side drop is taken as the primary stress allowable (see Table 2.1.2-3) for normal conditions at the maximum sleeve temperature of 700°F factored by *n*:

$$F_w = 0.35\ (1.5S_m)$$
$$= 0.35 \times 24.1 \text{ ksi}$$
$$= 8.5 \text{ ksi} > 3.8 \text{ ksi}$$

Therefore, the welds are qualified for the normal 1-foot side drop loads.

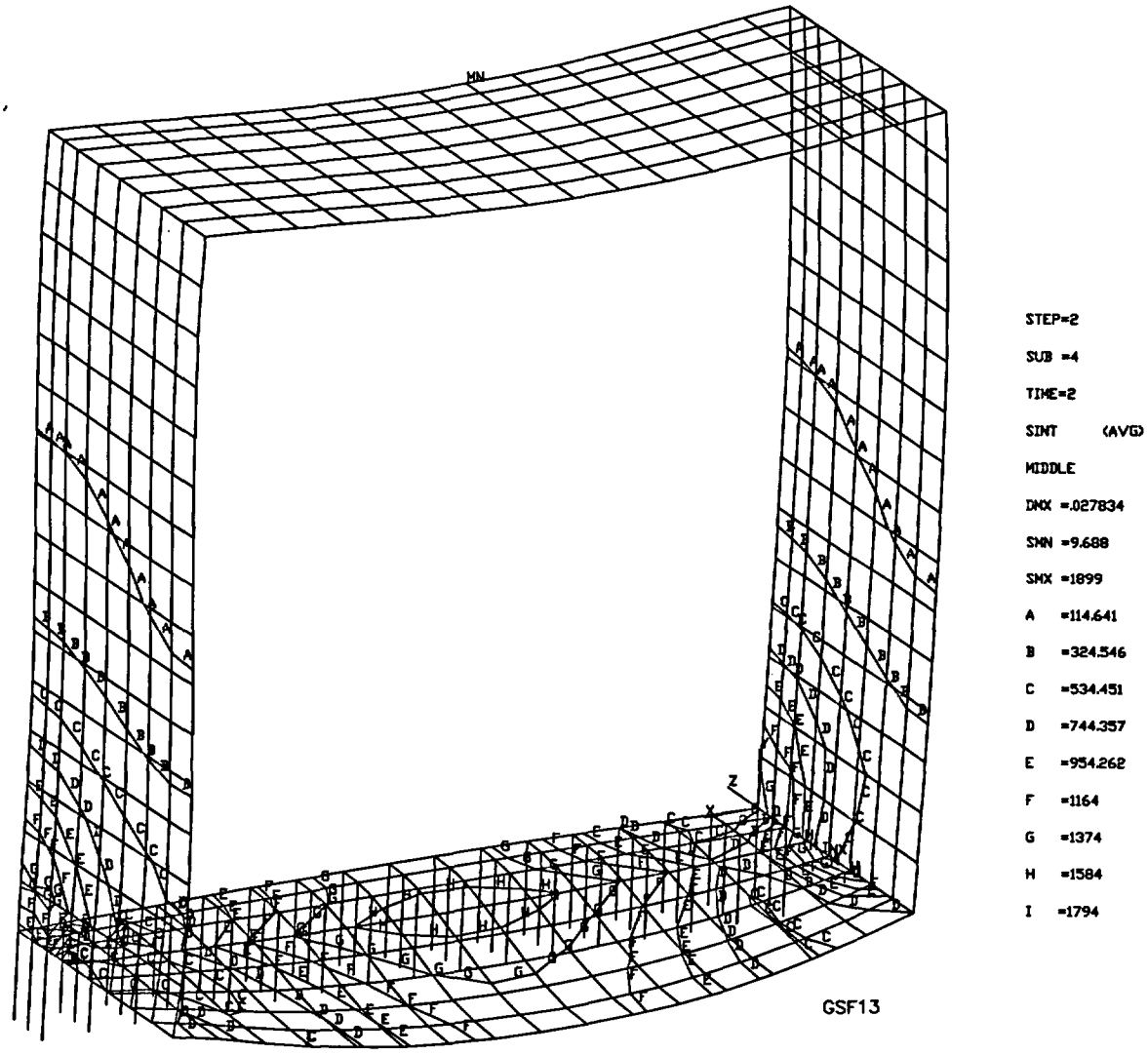

Figure 2.6.11-12

Guide Sleeve Middle Fiber S.I. Contour Plot for 1-Foot Drop

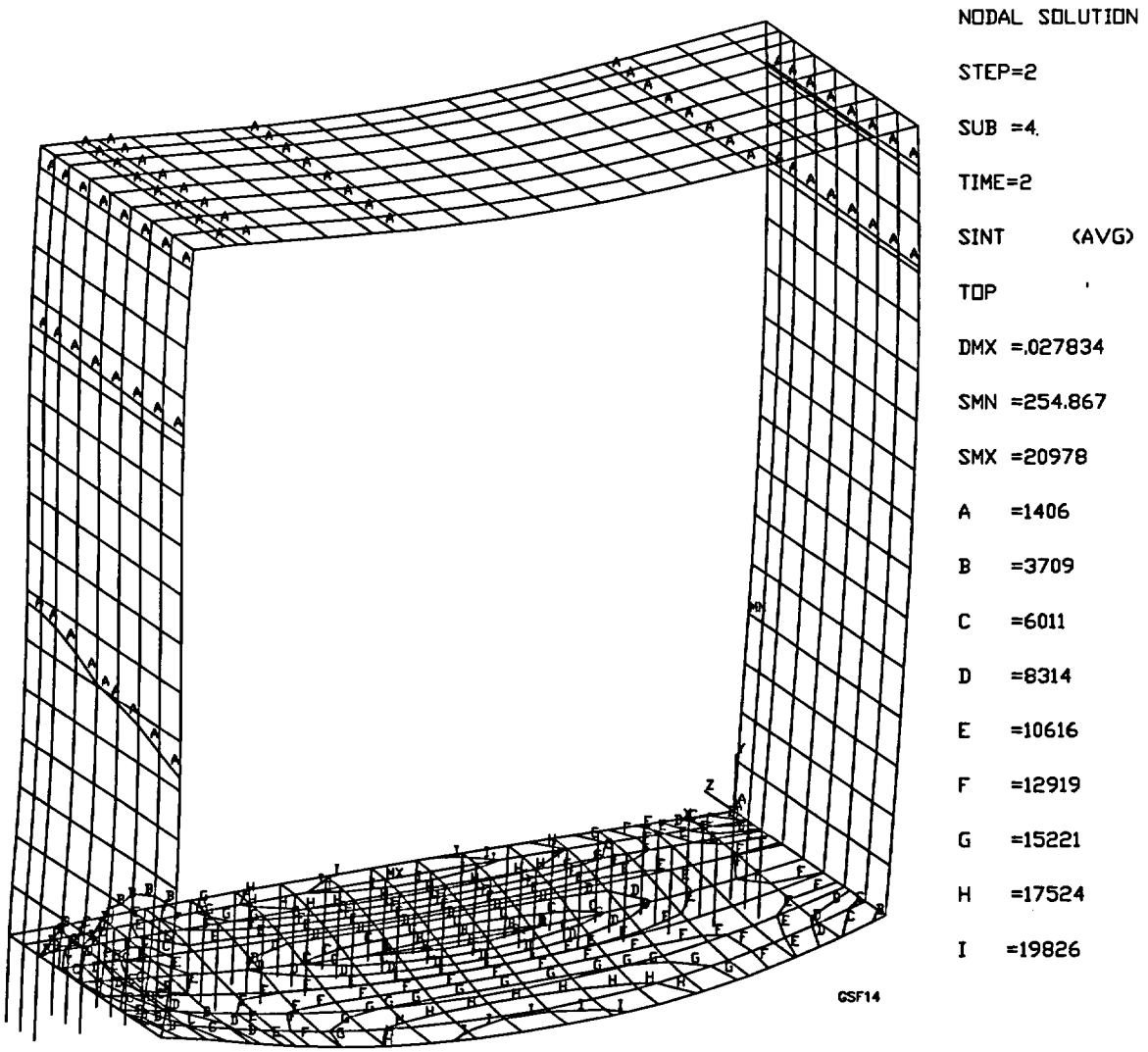

Figure 2.6.11-13

Guide Sleeve Top Fiber S.I. Contour Plot for 1-Foot Drop

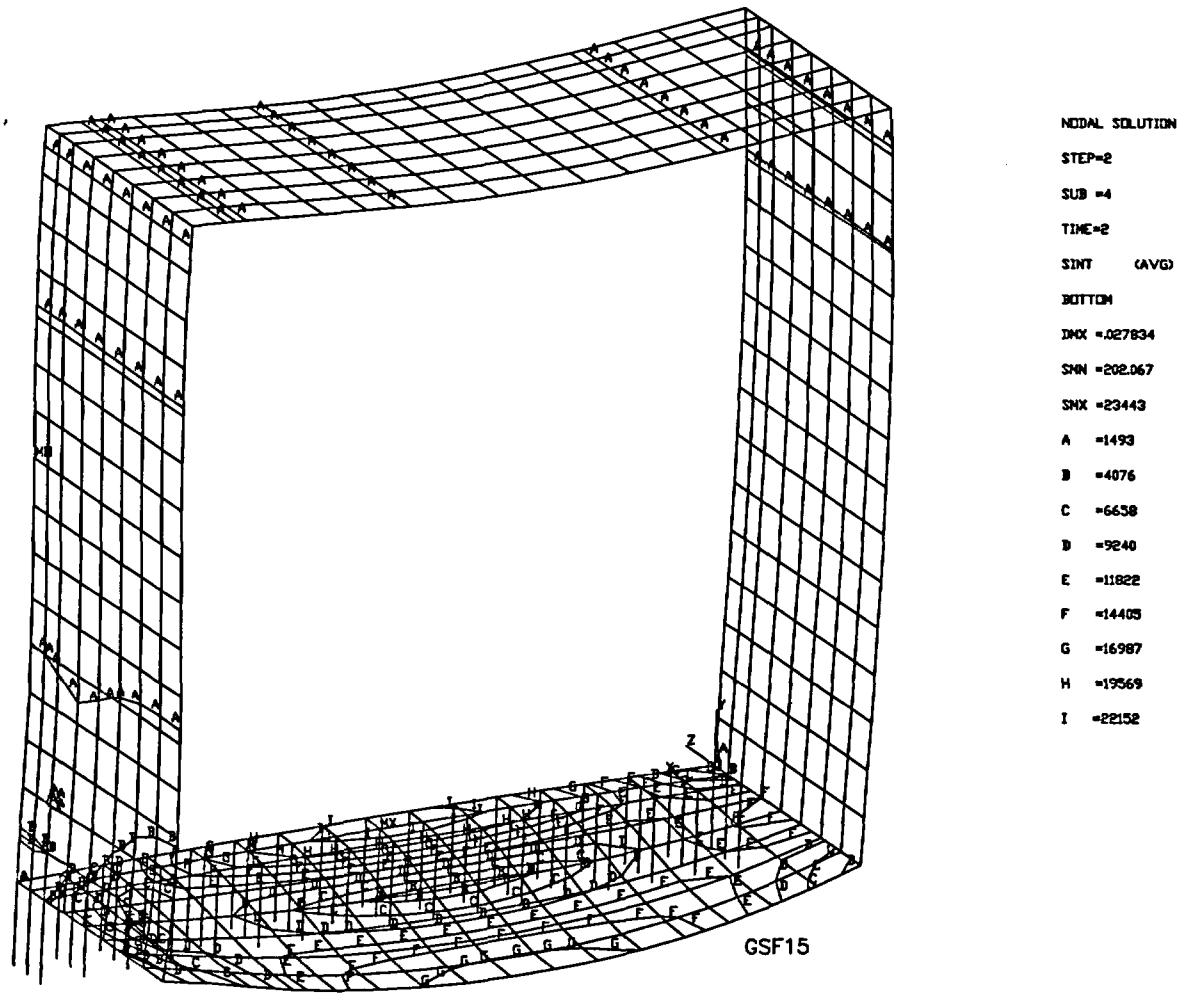

Figure 2.6.11-14
Guide Sleeve Bottom Fiber S.I. Contour Plot for 1-Foot Drop

2.6.12 FF-DSC Basket Analysis - Normal Conditions of Transport

The NUHOMS®-MP187 Failed Fuel (FF) Dry Shielded Canister (DSC) is designed to accommodate 13 PWR failed fuel assemblies. The DSC is a high integrity stainless steel welded pressure vessel that provides confinement of radioactive materials, encapsulates the fuel in an inert atmosphere, and provides biological shielding (in the axial direction). A detailed discussion of the FF-DSC assembly can be found in Section 2.1.1.2. The analyses provided in this section are based on the SA-537, Class 2 carbon steel basket option for fabrication of the FF-DSC. Appendix 2.10.13 provides an evaluation of the XM-19 basket design option for the FF-DSC which addresses the alternate basket assembly material (SA-240, Type XM-19 austenitic stainless steel) as well as other configuration modifications. For transportation condition, no credit is taken for the containment provided by the DSC shell. The DSC shell is designed to ensure that no gross failure will result from the normal conditions which would result in potential damage to the DSC contents.

The basket assembly consists of 15, 2.0 inch thick spacer discs, four support plates, and 13 fuel can assemblies, as shown in Section 2.1.1.2. Each support plate assembly consists of two 2 inch (or a single 4 inch) x 12.0 inch plates welded to the spacer discs to maintain longitudinal spacing. The structural evaluation presented in the following sections concentrates on the basket assembly components which maintain the position of the fuel assemblies and provide criticality control. The nominal length of a cold PWR fuel assembly is 165.63 inches [2.8]. The total length of a PWR fuel assembly, including tolerances, thermal growth, and irradiation growth, is 166.89 inches [2.8]. The length of the FF-DSC cavity is 173.0 inches to accommodate the fuel can enclosing the maximum PWR fuel assembly length. The FF basket assembly support plates are 172.50 inches long, allowing a gap of 0.50 inches between the support plates and DSC cavity for thermal expansion.

2.6.12.1 Thermal

The FF basket assembly components are evaluated for the effects of normal thermal conditions in the following sections. The FF-DSC basket and shell assemblies are designed to ensure free thermal expansion of the basket assembly within the DSC shell cavity. A description of the stress evaluation for the basket assembly components resulting from thermal gradients and differential thermal expansion is provided below.

2.6.12.1.1 FF Spacer Disc Thermal Expansion

The maximum thermal expansion of the FF spacer disc is determined by analysis, using the 2-D ANSYS model described in Appendix 2.10.4. The maximum diametrical growth of the FF spacer disc occurs for the 100°F ambient conditions and is as follows:

Δx	=	Radial thermal growth in the x direction.
	=	2 x 0.117
	=	0.234 inches.
Δy	=	Diametrical thermal growth in the y direction.
	=	0.135
Max. $\Delta\phi$	=	$(\Delta x^2 + \Delta y^2)^{1/2}$
Max. $\Delta\phi$	=	0.27 << 0.44 inch nominal diametrical gap

The maximum diametrical thermal growth of the FF spacer disc for the controlling normal condition is 0.27 inches. This is less than the 0.44 inch nominal diametrical gap between the FF-DSC spacer disc and the DSC shell. Therefore the FF-DSC spacer discs will expand freely under normal thermal conditions.

2.6.12.1.2 FF Spacer Disc Thermal Stress Analysis

The thermal stresses in the FF spacer disc due to the 100°F ambient condition are calculated using the half symmetry finite element model described in Appendix 2.10.4. The finite element model includes only the elements which represent the spacer disc.

The FF spacer disc thermal stress analysis is performed using temperature dependent material properties. The FF spacer disc temperatures resulting from the heat condition presented in Chapter 3 are shown in Figure 2.6.12-1. The 20 highest stress points due to the thermal analysis are presented in Table 2.6.12-1 for the points identified in Figure 2.6.12-2.

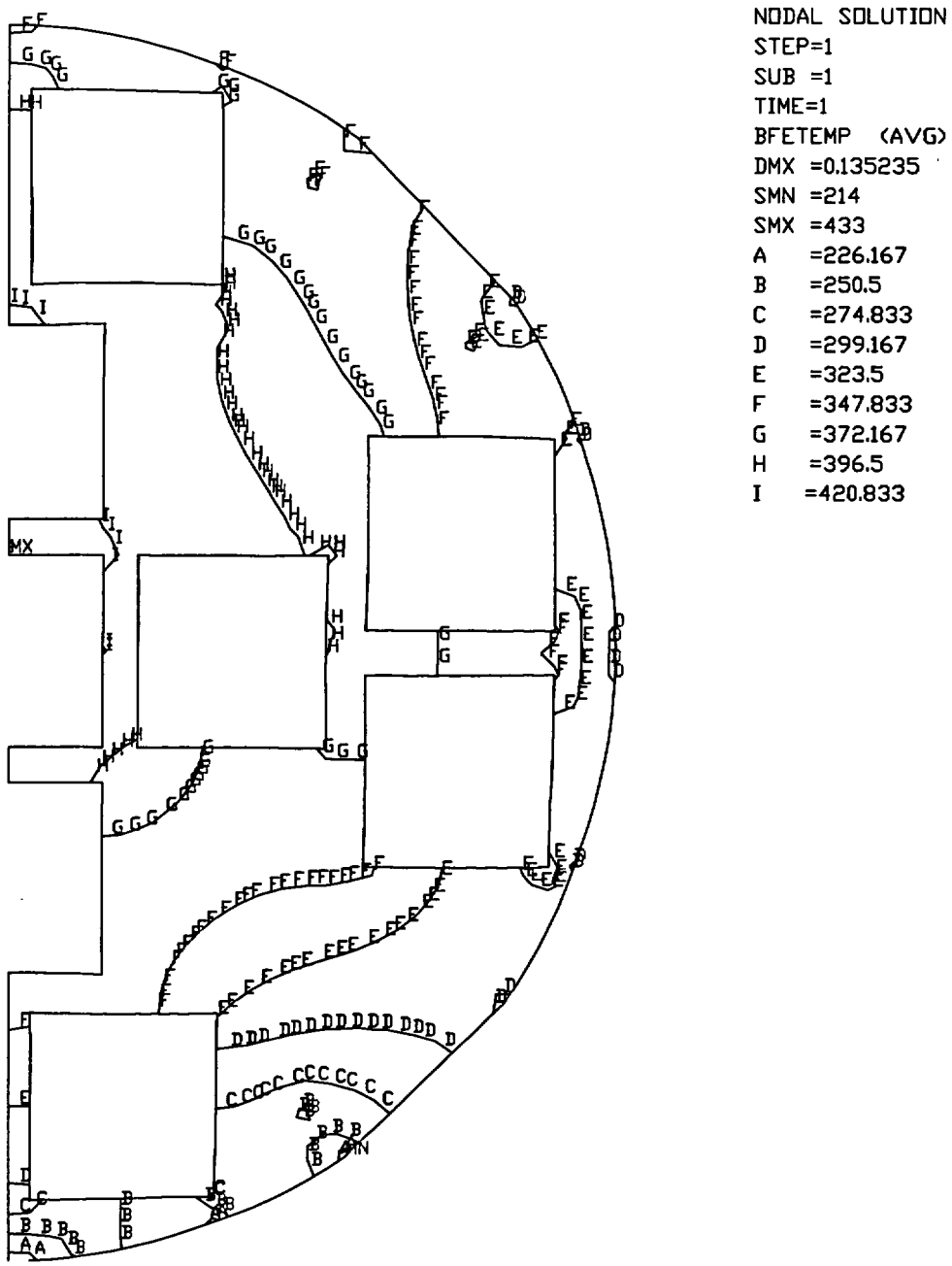

Figure 2.6.12-1

FF Spacer Disc Heat Condition (100°F) Temperature Distribution

Table 2.6.12-1

FF Spacer Disc 20 Highest S.I. - Heat Condition (100°F)

NODE	SX	SY	SZ	SXY	SYZ	SXZ	SINT	Allowable S.I.	Stress Type
1105	24.7	0.83	0	3.2	0	0	25.2(3)	79.2	P_l+P_b+Q
545	23.5	0.55	0	-3.0	0	0	23.9	79.2	P_l+P_b+Q
152	0.66	23.2	0	-2.7	0	0	23.6	79.2	P_l+P_b+Q
714	.45	23.2	0	-2.4	0	0	23.5	79.2	P_l+P_b+Q
310	2.4	14.2	0	-6.9	0	0	18.2	79.2	P_l+P_b+Q
1045	15.7	0.40	0	4.8	0	0	18.0	79.2	P_l+P_b+Q
477	15.0	-0.2	0	-4.7	0	0	17.8	79.2	P_l+P_b+Q
713	-0.26	14.8	0	4.7	0	0	17.7	79.2	P_l+P_b+Q
150	-1.07	14.4	0	-4.3	0	0	17.7	79.2	P_l+P_b+Q
510	13.8	2.2	0	-6.7	0	0	17.7	79.2	P_l+P_b+Q
881	2.2	13.6	0	6.5	0	0	17.3	79.2	P_l+P_b+Q
311	4.05	12.9	0	-7.1	0	0	16.9	79.2	P_l+P_b+Q
509	12.8	3.9	0	-6.9	0	0	16.6	79.2	P_l+P_b+Q
514	11.7	-1.7	0	-5.0	0	0	16.6	79.2	P_l+P_b+Q
317	-1.55	11.7	0	-5.0	0	0	16.6	79.2	P_l+P_b+Q
882	3.8	12.7	0	6.9	0	0	16.4	79.2	P_l+P_b+Q
886	-1.8	11.4	0	4.8	0	0	16.3	79.2	P_l+P_b+Q
1078	11.7	3.0	0	6.9	0	0	16.3	79.2	P_l+P_b+Q
1079	13.4	3.1	0	6.1	0	0	16.2	79.2	P_l+P_b+Q
1104	15.9	0.5	0	1.7	0	0	16.1	79.2	P_l+P_b+Q

Notes:

(1) Thermal stresses are classified as primary plus secondary. The allowable service level A primary plus secondary stress intensities for ASME SA-537, Class 2 carbon steel at 400°F is 79.2 ksi.

(2) All stress results are reported in units of ksi.

(3) The minimum margin of safety M.S. = (79.2/25.2)-1 = 2.15 (215% margin)

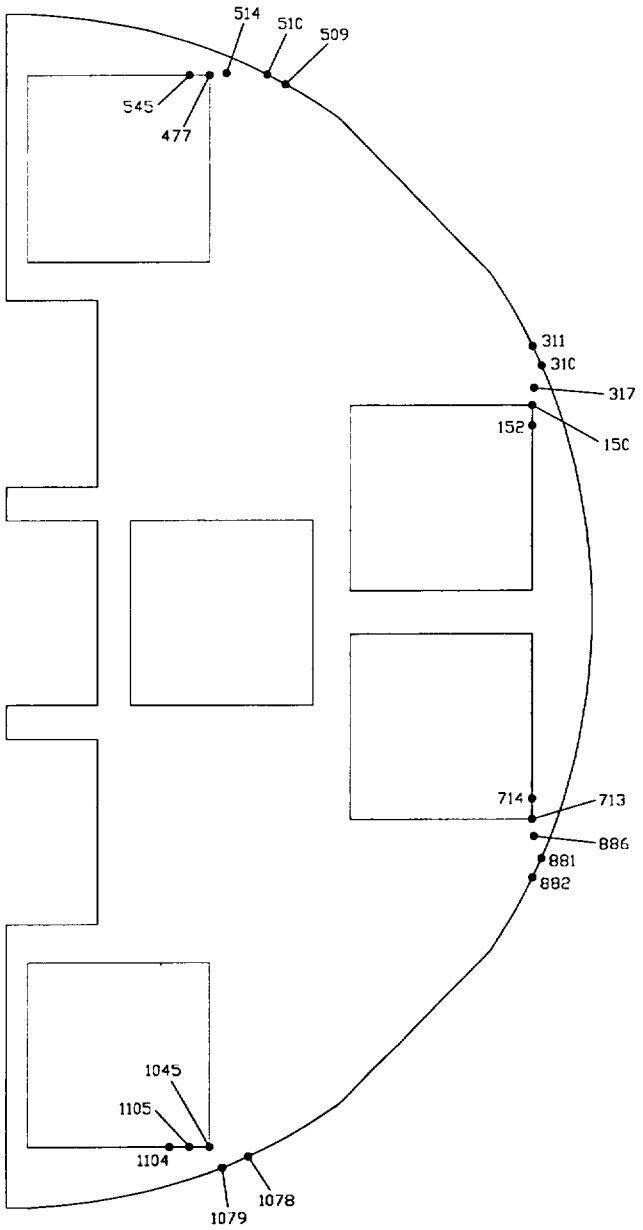

Figure 2.6.12-2

Node Locations of 20 Highest S.I. - Heat Condition (100°F)

2.6.12.1.3 Support Plate Thermal Expansion

As discussed, for the FO/FC DSC support rods the design temperature for the FF-DSC support plates is 364°F for the 100°F ambient condition. The nominal length of the support plates is 172.5 inches. The coefficient of thermal expansion of the support plate material at 364°F is 7.4×10^{-6} in/in°F. The free thermal growth of the support plates is:

$$\delta_t = \alpha \cdot L \cdot \Delta T$$
$$= (7.4 \times 10^{-6} \text{ in/in°F})(172.5 \text{ in})(364°F - 70°F)$$
$$= 0.38 \text{ inches}$$

The average FF-DSC shell temperature for the 100°F ambient condition is 348°F. The free axial thermal growth of the FF-DSC shell is:

$$\delta_t = \alpha \cdot L \cdot \Delta T$$
$$= (9.63 \times 10^{-6} \text{ in/in°F})(173.0 \text{ in})(348°F - 70°F)$$
$$= 0.47 \text{ inches}$$

The differential growth between the support plate and the DSC shell is (0.38 - 0.47) = -0.09 inches which is less than the nominal gap of 0.50 inches. Therefore the support plates will expand freely under normal thermal conditions.

2.6.12.1.4 Support Plate Thermal Stress Analysis

As discussed in Appendix 2.10.4, the support plates are loaded in bending due to differential thermal expansion of the adjacent spacer discs at the ends of the basket. The spacer disc differential thermal expansion between the spacer disc at the top end of the basket is 0.005 inches. The bending moment in the support plates due to the differential expansion is:

$$M = 6EI\delta_r/L^2$$
$$= 6(27.7 \times 10^6)(64.0)(0.005)/(9.50)^2$$
$$= 590 \text{ in-kips}$$

where: I is calculated for 2 - 2 inch x 12 inch plates joined at the neutral axis by groove welds which equals a solid 4 inch x 12 inch plate = 64 in^4.

The bending stress in the support plates is:

$$\sigma_t = Mc/I$$
$$= (590)(2.0)/64$$
$$= 18.5 \text{ ksi}$$

2.6.12.1.5 Fuel Can Thermal Expansion

The design temperature of the FF fuel can body is 407°F for the 100°F ambient condition. The nominal length of the fuel can body including lid assembly is 172.25 inches. The coefficient of thermal expansion of the FF fuel can at 407°F is 9.82×10^{-6} in/in°F. The maximum thermal growth of the FF fuel can body can be conservatively calculated as:

$$\delta_t = \alpha \cdot L \cdot \Delta T$$
$$= (9.82 \times 10^{-6} \text{ in/in°F})\ (172.25 \text{ in})(407°F - 70°F)$$
$$= 0.57 \text{ inches}$$

where 70°F is the reference temperature.

As described in 2.6.12.1.3, the free axial thermal growth of the DSC shell is 0.47 inches; therefore, the differential growth between the FF fuel can body and the DSC shell is (0.57 - 0.47), or 0.10 inches which is less than the gap of 0.50 inches provided. Therefore the FF fuel can body will expand freely under normal thermal conditions.

2.6.12.1.6 FF Fuel Can Thermal Stress Analysis

Section 2.6.12.1.5 demonstrated that the FF fuel cans are free to expand longitudinally, therefore they will not experience any thermal stresses. Since there are no thermal stresses present a fatigue analysis for the FF fuel cans is not required.

2.6.12.2 Vibration

The maximum expected vibration loads in the frequency range of 0 to 1,900 Hz for large shipping containers (weighing 56,000 pounds) during truck transport are:

Axis	Peak Acceleration (g)
Longitudinal	0.27
Transverse	0.19
Vertical	0.52

For heavier packages, the longitudinal and transverse responses decrease at frequencies above 20 Hz. Similarly, the vertical response of heavier packages decreases for frequencies above 3 Hz. The fundamental frequencies of the NUHOMS®-MP187 structural components are all greater than 20 Hz. Therefore, the peak acceleration loads due to vibration loading will be less than those reported above.

As a conservative worst case, the maximum vibration g-load are assumed equal to the 2g vertical loading imposed on the tie-downs. The results of the 1-foot drop analysis show that the support plate and FF fuel can stresses are negligible in comparison to the spacer disc stresses. Therefore, only the stresses in the spacer disc are calculated for the vibration loading.

2.6.12.2.1 Spacer Disc Vibration Stress Analysis

The stresses in the FF-DSC spacer disc due to the vibration loading are analyzed using the half symmetry spacer disc finite element model described in Appendix 2.10.4. The resulting 20 maximum spacer disc stress intensities due to the vibration load are listed in Table 2.6.12-2, and the node locations are shown in Figure 2.6.12-3. In addition, the stresses at the critical spacer disc ligament node locations, shown in Figure 2.6.12-4, are reported in Table 2.6.12-3.

Table 2.6.12-2

Vibration Spacer Disc 20 Highest S.I. - Vibration

NODE	SX	SY	SZ	SXY	SYZ	SXZ	SINT	Allowable S.I.	Stress Type(1)
1073	-1.5	-1.3	0.0	-0.3	0.0	0.0	1.71(3)	26.4	P_m
1106	-1.2	0.3	0.0	-0.1	0.0	0.0	1.42	26.4	P_m
1045	0.3	-0.9	0.0	-0.0	0.0	0.0	1.12	26.4	P_m
1080	-0.72	-0.9	0.0	-0.4	0.0	0.0	1.11	26.4	P_m
1051	-0.0	-1.1	0.0	-0.0	0.0	0.0	1.04	26.4	P_m
1074	-0.42	-0.96	0.0	-0.2	0.0	0.0	0.96	26.4	P_m
1114	-0.68	0.2	0.0	0.0	0.0	0.0	0.89	26.4	P_m
1052	0.0	-0.83	0.0	-0.0	0.0	0.0	0.84	26.4	P_m
1050	0.10	-0.81	0.0	-0.1	0.0	0.0	0.83	26.4	P_m
1098	-0.77	-0.0	0.0	0.0	0.0	0.0	0.77	26.4	P_m
1083	-0.13	-0.78	0.0	-0.2	0.0	0.0	0.77	26.4	P_m
1059	-0.0	-0.74	0.0	0.0	0.0	0.0	0.74	26.4	P_m
1099	-0.74	-0.0	0.0	-0.0	0.0	0.0	0.74	26.4	P_m
1100	-0.73	-0.0	0.0	-0.0	0.0	0.0	0.73	26.4	P_m
1101	-0.72	0.0	0.0	0.0	0.0	0.0	0.72	26.4	P_m
1053	0.0	-0.70	0.0	0.0	0.0	0.0	0.70	26.4	P_m
1063	-0.0	-0.68	0.0	-0.1	0.0	0.0	0.70	26.4	P_m
1102	-0.68	-0.0	0.0	0.2	0.0	0.0	0.68	26.4	P_m
1061	-0.0	-0.6	0.0	-0.1	0.0	0.0	0.62	26.4	P_m
1054	-0.0	-0.61	0.0	-0.1	0.0	0.0	0.62	26.4	P_m

Notes:

(1) All stress are conservatively classified as primary membrane. The allowable service level A primary membrane stress intensity for ASME SA-537, Class 2 carbon steel at 400°F is 26.4 ksi.

(2) All stress are in ksi units.

(3) The minimum margin of safety M.S. = (26.4/1.71)-1 = 14.4 (large margin)

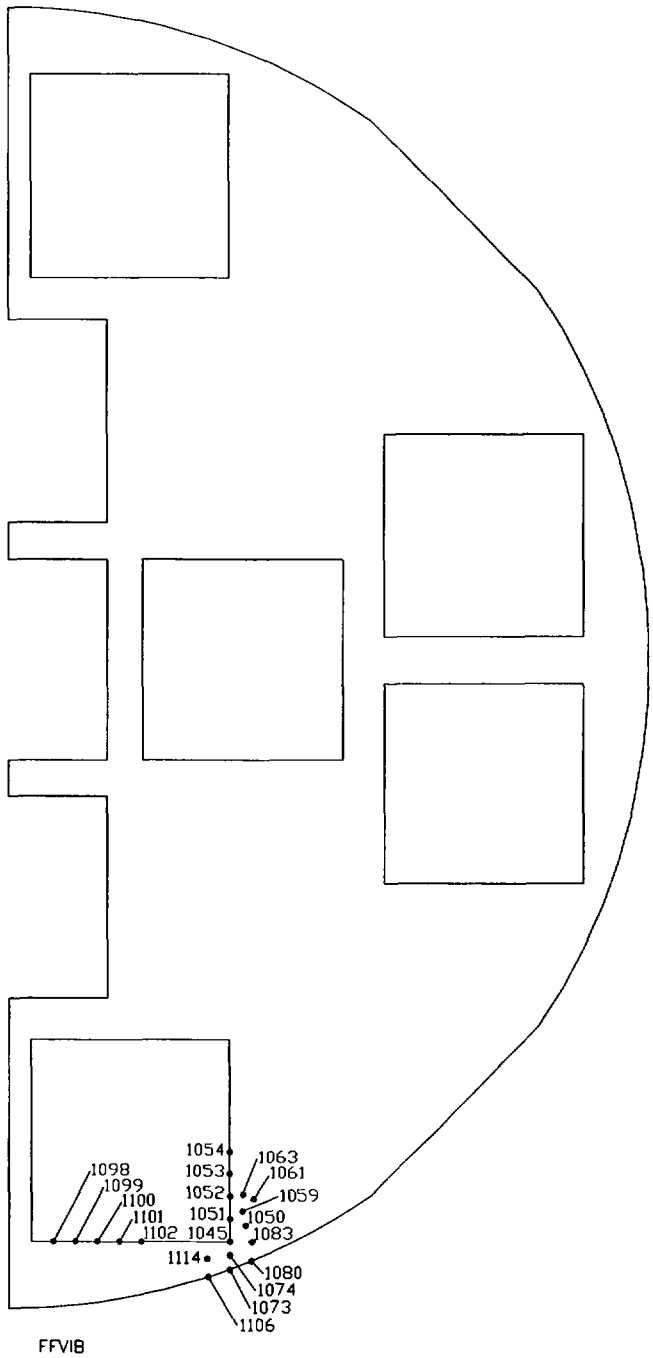

Figure 2.6.12-3

Node Locations of 20 Highest S.I. - Vibration

Table 2.6.12-3

Spacer Disc Ligament Stresses - Vibration

NODE	SX	SY	SZ	SXY	SYZ	SXZ	SINT	Allowable S.I.	Stress Type
10	-0.07	-0.12	0.00	0.00	0.00	0.00	0.12	26.4	P_m
20	-0.0	-0.08	0.00	-0.00	0.00	0.00	0.08	26.4	P_m
24	0.06	-0.17	0.00	0.00	0.00	0.00	0.22	26.4	P_m
25	0.00	-0.01	0.00	0.01	0.00	0.00	0.04	26.4	P_m
55	-0.00	-0.08	0.00	0.01	0.00	0.00	0.09	26.4	P_m
135	0.02	-0.14	0.00	-0.01	0.00	0.00	0.17	26.4	P_m
330	0.00	-0.01	0.00	0.00	0.00	0.00	0.03	26.4	P_m
331	-0.06	0.01	0.00	0.00	0.00	0.00	0.07	26.4	P_m
341	0.01	-0.05	0.00	0.02	0.00	0.00	0.08	26.4	P_m
459	0.02	-0.00	0.00	0.00	0.00	0.00	0.03	26.4	P_m
548	0.02	0.00	0.00	0.00	0.00	0.00	0.02	26.4	P_m
596	-0.05	-0.17	0.00	0.00	0.00	0.00	0.17	26.4	P_m
628	0.04	-0.12	0.00	0.01	0.00	0.00	0.16	26.4	P_m
700	-0.00	-0.18	0.00	-0.01	0.00	0.00	0.18	26.4	P_m
897	0.20	0.01	0.00	0.02	0.00	0.00	0.22	26.4	P_m
902	0.10	0.03	0.00	0.02	0.00	0.00	0.09	26.4	P_m
904	0.08	0.07	0.00	0.03	0.00	0.00	0.11	26.4	P_m
1028	-0.38	0.09	0.00	0.02	0.00	0.00	0.46(3)	26.4	P_m

Notes:

(1) All stress are conservatively classified as primary membrane. The allowable service level A primary membrane stress intensity for ASME SA-537, Class 2 carbon steel at 400°F is 26.4 ksi.

(2) All stress are in ksi units.

(3) The minimum margin of safety M.S. = (26.4/0.46)-1 = 56.4 (large margin)

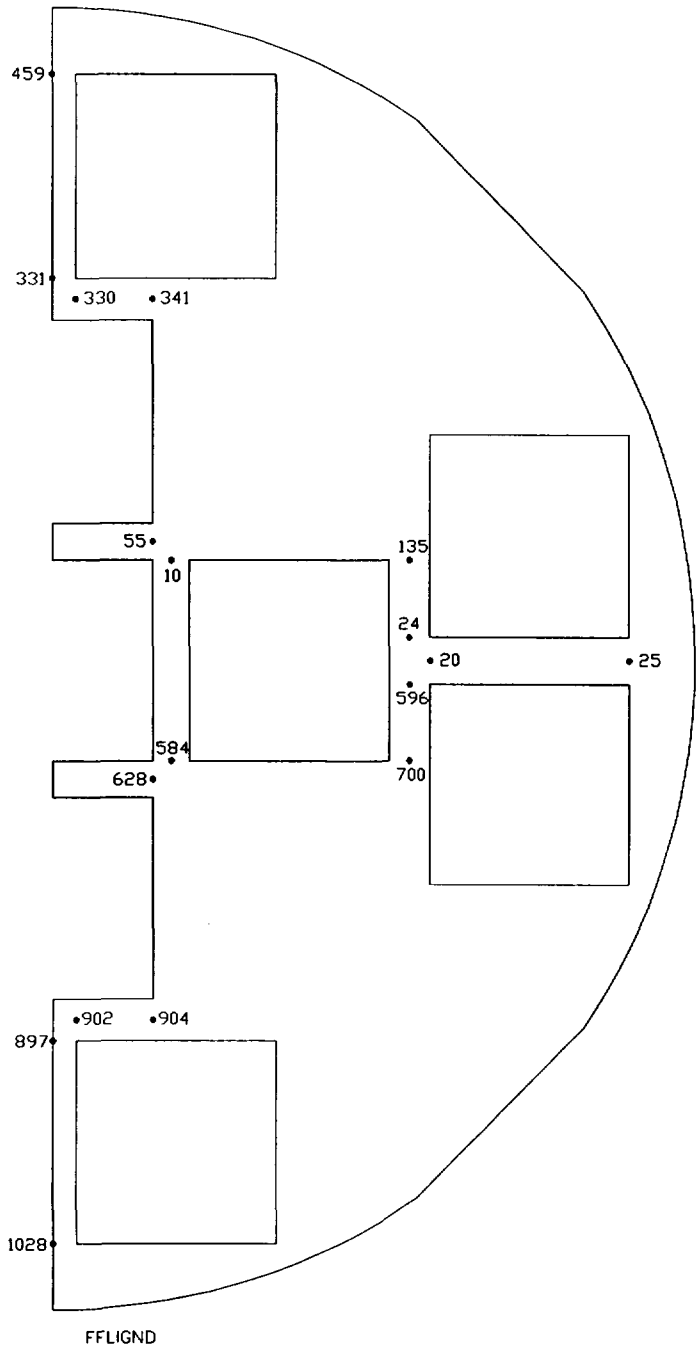

Figure 2.6.12-4

Spacer Disc Ligament Stresses - Vibration

2.6.12.2.2 Support Plate Vibration Stress Analysis

As stated in Section 2.6.12.2, the loads on the support plate due to vibration are bounded by the 1-foot side drop.

2.6.12.2.3 FF Fuel Can Vibration Stress Analysis

As stated in Section 2.6.12.2, the loads on the fuel can due to vibration are bounded by the 1-foot side drop.

2.6.12.3 1-Foot Drop

The 10CFR71 regulations [2.1] require consideration of a 0.3 meter (1-foot) free drop as a normal condition of transport for packages weighing more than 33,000 pounds. The NUHOMS®-MP187 cask, loaded with an FF-DSC and impact limiters attached exceeds this criteria and is analyzed for a 1-foot free drop. Since the NUHOMS®-MP187 transportation package is transported solely in the horizontal orientation, the package need only be analyzed for a 1-foot drop in the horizontal orientation to satisfy the 10CFR71.

The FF-DSC components are analyzed for the 1-foot drop condition using equivalent static loading. The peak g-loads resulting from a 1-foot side drop for hot ambient (100°F) and cold ambient drop conditions (-20°F) are 13.9 g's and 21.0 g's, respectively [Appendix 2.10.9]. The equivalent static loads used for the 1-foot drop analyses are calculated by multiplying the peak g-load by the appropriate DLFs from Appendix 2.10.10 for the various FF-DSC structural components. The 1-foot drop analyses are presented in the following sections.

2.6.12.3.1 Spacer Disc 1-Foot Drop Stress Analysis

The FF-DSC spacer discs are analyzed for the 1-foot side drop condition using the half symmetry finite element model described in Appendix 2.10.4. The FF-DSC spacer disc DLFs for the cold and hot flat side 1-foot horizontal drop are 1.18 and 1.21, respectively [Appendix 2.10.10]. Therefore, the equivalent static 1-foot drop g-load for the hot and cold flat side 1-foot drop conditions are:

Hot: 1.21 x 13.9 = 16.8 g

Cold: 1.18 x 21.0 = 24.8 g

A bounding equivalent static g-load of 25.1 g's is used to analyze the spacer disc. The 20 highest spacer disc stress resulting from the 1-foot side drop are reported in Table 2.6.12-4 with the corresponding node location shown in Figure 2.6.12-5. In addition, the stresses for the critical spacer disc ligament node locations, shown in Figure 2.6.12-4 are reported in Table 2.6.12-5.

Table 2.6.12-4

Spacer Disc 20 Highest S.I. - 1-Foot Side Drop

NODE	SX	SY	SZ	SXY	SYZ	SXZ	SINT	Allowable S.I.	Stress Type(1)
1073	-10.05	-5.48	0.0	-3.03	0.0	0.0	11.56	26.4	P_m
1106	-10.61	-2.01	0.0	-1.97	0.0	0.0	11.04	26.4	P_m
1098	-8.37	-0.21	0.0	0.19	0.0	0.0	8.37	26.4	P_m
1107	-8.23	-1.07	0.0	-0.73	0.0	0.0	8.30	26.4	P_m
1080	-6.38	-5.00	0.0	-2.21	0.0	0.0	8.00	26.4	P_m
1099	-7.73	-0.19	0.0	0.05	0.0	0.0	7.73	26.4	P_m
1100	-7.44	-0.13	0.0	0.09	0.0	0.0	7.44	26.4	P_m
1101	-6.90	-0.09	0.0	0.20	0.0	0.0	6.91	26.4	P_m
1074	-4.74	-4.87	0.0	-1.72	0.0	0.0	6.52	26.4	P_m
1058	-0.24	-6.24	0.0	0.97	0.0	0.0	6.39	26.4	P_m
1114	-5.92	-1.06	0.0	-0.77	0.0	0.0	6.03	26.4	P_m
1045	-1.40	-5.53	0.0	-1.50	0.0	0.0	6.02	26.4	P_m
1050	-1.50	-5.65	0.0	-1.21	0.0	0.0	5.98	26.4	P_m
1051	0.15	-5.76	0.0	-0.11	0.0	0.0	5.91	26.4	P_m
1102	-5.86	-0.13	0.0	0.37	0.0	0.0	5.88	26.4	P_m
1027	-5.73	-0.26	0.0	0.28	0.0	0.0	5.75	26.4	P_m
1083	-3.16	-4.99	0.0	-1.39	0.0	0.0	5.74	26.4	P_m
905	-2.03	-5.27	0.0	1.31	0.0	0.0	5.73	26.4	P_m
938	-1.00	-5.25	0.0	1.06	0.0	0.0	5.50	26.4	P_m
1119	-5.36	-0.44	0.0	0.43	0.0	0.0	5.39	26.4	P_m

Notes:

(1) All stress are conservatively classified as primary membrane. The allowable service level A primary membrane stress intensities for ASME SA-537, Class 2 carbon steel at 400°F is 26.4 ksi.

(2) All stress results are reported in units of ksi.

(3) The minimum margin of safety M.S. = (26.4/11.56)-1 = 1.28 (128% margin)

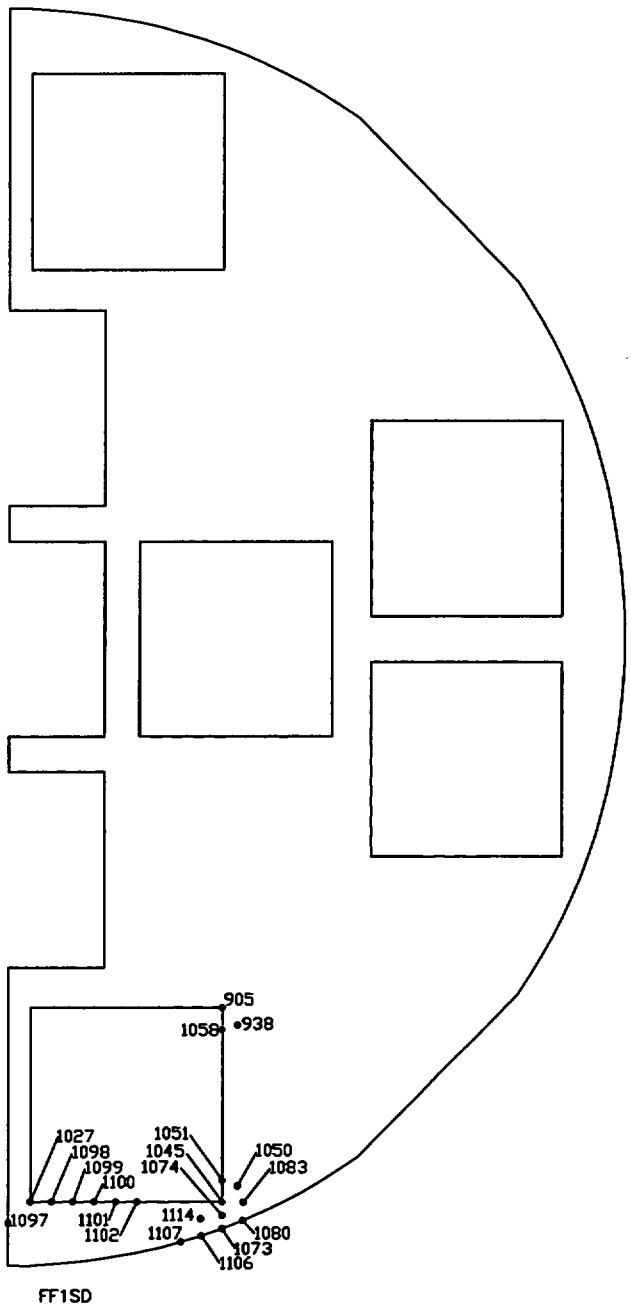

Figure 2.6.12-5
Node Locations of 20 Highest S.I. - 1-Foot Side Drop

Table 2.6.12-5

Spacer Disc Ligament Stresses - 1-Foot Side Drop

NODE	SX	SY	SZ	SXY	SYZ	SXZ	SINT	Allowable S.I.	Stress Type
10	-0.90	-1.59	0.00	-0.09	0.00	0.00	1.60	26.4	P_m
20	-0.05	-0.90	0.00	-0.11	0.00	0.00	0.92	26.4	P_m
24	0.65	-1.96	0.00	0.02	0.00	0.00	2.61	26.4	P_m
25	0.04	-0.19	0.00	0.18	0.00	0.00	0.43	26.4	P_m
55	0.03	-1.00	0.00	0.18	0.00	0.00	1.09	26.4	P_m
135	0.27	-1.69	0.00	-0.13	0.00	0.00	1.98	26.4	P_m
330	0.15	-0.62	0.00	0.23	0.00	0.00	0.36	26.4	P_m
331	0.25	-0.12	0.00	0.00	0.00	0.00	0.84	26.4	P_m
341	0.24	0.01	0.00	-0.02	0.00	0.00	0.98	26.4	P_m
459	-0.65	-1.56	0.00	0.20	0.00	0.00	0.34	26.4	P_m
548	0.25	0.02	0.00	-0.03	0.00	0.00	0.24	26.4	P_m
596	-0.65	-2.01	0.00	0.04	0.00	0.00	2.01	26.4	P_m
628	0.25	-1.56	0.00	0.20	0.00	0.00	1.86	26.4	P_m
700	-0.21	-2.07	0.00	-0.16	0.00	0.00	2.09	26.4	P_m
897	1.49	-0.27	0.00	0.17	0.00	0.00	1.79	26.4	P_m
902	0.32	0.18	0.00	0.16	0.00	0.00	0.41	26.4	P_m
904	0.18	0.05	0.00	0.31	0.00	0.00	0.80	26.4	P_m
1038	-4.18	0.76	0.00	0.26	0.00	0.00	4.96(3)	26.4	P_m

Notes:

(1) All stress are conservatively classified as primary membrane. The allowable service level A primary membrane plus bending is 26.4 ksi.
(2) All stress results are reported in units of ksi.
(3) The minimum margin of safety M.S. = (26.4/4.96)-1 = 4.32 (large margin)

2.6.12.3.2 Support Plate 1-Foot Drop Stress Analysis

The support plates are loaded by the acceleration of their own mass for the side drop conditions. The maximum stress will occur in the unsupported span of the support plate which carries the most weight. The largest weight supported span is at the top span of the basket assembly. The cantilever span length is conservatively assumed to be 9.25 inches. Assuming cantilever condition, the bending stress in the support plate is, assuming a conservative design temperature of 400°F:

$$\sigma_b = Mc/I$$

where:

$$M = wl^2/2 = [(4*12)(0.2835)](9.25)^2/2 = 582 \text{ lb-in.}$$

Conservatively assume weak axis bending and one plate is subjected to above moment,

$$I_Z = bd^3/12 = 12(2.0)^3/12 = 8.0 \text{ in}^4$$

$$c = d/2 = 1.0 \text{ inches}$$

For the 24.82g side drop load, the maximum support plate bending stress is:

$$\sigma_b = 24.82 * [0.582(1.0)/8.0] = 1.8 \text{ ksi}$$

The maximum support plate shear stress is defined as:

$$\tau_{max} = V/A_S = 3/2(V/A)$$

where:

$$V = wl = (4*12)(0.2835)(9.25) = 125.9 \text{ lbs.}$$

$$A = tw = 2*12 = 24 \text{ in}^2$$

Therefore,

$$\tau_{max} = 24.82 * 1.5 [0.1259/24] = 0.2 \text{ ksi}$$

Conservatively assuming that the maximum shear and bending stresses occur in the same location at the conservative g-load of 24.82 g's, the support plate side drop maximum stress intensity is:

$$S.I.\ (P_l + P_b) = 2\,[(1.8/2)^2 + (0.20)^2]^{1/2}$$

$$= 1.84 \text{ ksi}$$

The allowable primary membrane plus bending stress intensity for ASME SA-537, Class 2 carbon steel @ 400°F is 1.5 x 26.4 ksi, or 39.6 ksi. Therefore the margin of safety for the support plates for the 1-foot drop condition is:

M.S. = 39.6/1.84 - 1 = +20.5

2.6.12.3.3 FF Fuel Can 1-Foot Horizontal Drop Stress Analysis

For the regulatory 1-foot side drop, each FF fuel can assembly is loaded by its own self weight and the weight of the confined fuel assembly. As described in Section 2.1.1.2, the FF fuel can assemblies are supported by 15 spacer discs, with a free-span between spacer discs of 9.25 inches. Under dead weight conditions, the load from the FF fuel assemblies is transferred to the supporting fuel can panel through the fuel grid spacers. The fuel grid spacers are located approximately 21 to 22 inches apart for B&W 15x15 Mark B fuel assemblies. The fuel rods spanning between grid spacers are relatively flexible due to the thin fuel rod tubes and the high mass density of the fuel pellets contained in the fuel rod tubes. Consequently, the fuel rod deflections due to the 1-foot side drop loading will be much larger than the thickness of the grid spacers. Therefore, the FF fuel rods will be supported by the fuel can bottom panel in the event of a 1-foot side drop. The nature of the fuel loads resulting from this condition are best represented by a uniformly distributed load on the supporting FF fuel can panel.

The stresses in the FF fuel can panel which supports the fuel load for the 1-foot drop condition are determined using a closed form hand calculation for a rectangular plate subjected to a uniform pressure load. The portion of the FF fuel can panel spanning between spacer discs is evaluated, assuming fixed edges along the spacer disc ligaments and simply supported edges along the edges of the FF fuel can side panels. These boundary conditions conservatively ignore

the bending support provided by the FF fuel can side panels. The maximum bending stress in the FF fuel can bottom panel due to the 1-foot side drop load is:

$\sigma_b = -\beta q b^2/t^2$ ([2.7], Table 26, Case 5a)

where;

a = 9.25 in., Length of fuel can panel free-span

b = 9.00 in., Width of fuel can panel

β = 0.4244 for a/b = 1.028 ([2.7], Table 26, Case 5a)

t = 0.25 in., FF fuel can panel thickness

q = $G(w_{fuel} + w_{can})$, Uniform pressure load due to fuel and FF fuel can assy.

G = Equivalent static g-load for 1-foot drop

w_{fuel} = Unit pressure due to fuel weight

= (10.84 lb/in.)/(9.00 in.)

= 1.204 psi/G

w_{can} = Unit pressure due to FF fuel can bottom panel

= $(0.2853\ lb/in^3)(0.250\ in.)$

= 0.071 psi/G

The equivalent static 1-foot side drop g-load is equal to the peak g-load resulting from the 1-foot side drop multiplied by the corresponding DLF. The DLF for the 1-foot side drop is based upon the response frequency of the FF fuel can and fuel assembly. The response of the fuel assembly during the 1-foot side drop event is a function of its natural frequency. As shown in Appendix 2.10.10, the fundamental frequency of the FF fuel can assemblies is over 900 Hz. The DLFs for the hot and cold 1-foot side drop conditions, conservatively taken at a vibration frequency of 200 Hz, are 1.21 and 1.18, respectively [Appendix 2.10.9]. The peak g-loads due to the hot and cold 1-foot side drops are 13.9 and 21.0 g's, respectively. Therefore, the equivalent static g-loads for the hot and cold 1-foot side drops are 16.8 g's and 24.8 g's, respectively. The equivalent static

pressure load on the FF fuel can bottom panel due to an enveloping 25.1g equivalent static cold 1-foot side drop load fuel assembly weight is calculated as follows:

$$q = 25.1(1.204 + 0.071)$$

$$= 32.0 \text{ psi}$$

Therefore, the maximum bending stress in the FF fuel can bottom panel due to the 1-foot side drop condition is:

$$\sigma_b = (0.4244)(32.0)(9.00)^2/(0.250)^2$$

$$= 17.6 \text{ ksi}$$

The allowable membrane plus bending stress for normal conditions of transport is limited to $1.5S_m$. The design stress intensity, S_m, for the FF fuel can material at 500°F is 17.5 ksi. Therefore, the allowable bending stress is 26.3 ksi. The resulting margin of safety for membrane plus bending stress in the fuel can bottom panel due to the 1-foot side drop is +49%.

The FF-DSC fuel can bodies are also analyzed using hand calculations to determine the moments and shears induced by the FF fuel can body self weight and the failed fuel assembly in the top cantilever section for the 1-foot side drop loading. The length of the cantilever section is maximized by assuming that the basket assembly has slid to the bottom end of the DSC cavity and that the FF fuel can is in contact at the top of the DSC cavity. The bending stress at the base of the FF fuel can top end cantilever section due to the 25.1g 1-foot side drop load is:

$$\sigma_b = Mc/I$$

Moment due to top lid assembly and fuel can body is:

$$M_1 = [P_L e_L + P_c e_c] \text{ x Side Drop g-load}$$

where:

$$L = \text{Top end cantilever length}$$

$$= 173.0" - 7" - 146.25" - 9.5" - 2"$$

= 8.25"

P_L = Top lid assembly load

= 52.64 lbs.

e_L = Top lid assembly moment arm

= 8.25" - 4" + 1.05"

= 5.3"

P_c = Fuel can load

= $(8.25" - 1")(9.5^2 - 9.0^2) \times 0.2853$

= $7.25" \times 9.25"^2 \times 0.2853$ lb/in^3

= 19.13 lbs.

e_c = FF fuel can moment arm

= (8.25" - 1")/2

= 3.63"

Therefore:

M_1 = [(52.64)(5.3) + (19.13)(3.63)] x 25.1 (Conservatively, a side drop g load of 25.1g assumed for the fuel can)

= 8746 in-lb

Moment due to fuel is:

M_2 = $[P_T e_T + P_P e_P]$ x Side Drop g-load

where:

P_T = Fuel top region load

= 23.72 lb.

e_T = 8.25" - 4" - (3.73"/2)

= 2.39 in.

P_p = Plenum fuel region load

= 1.39 lb.

e_p = 8.25" - 4" - 3.73" - (0.52"/2)

= 0.26 in

Therefore:

M_2 = [(23.72)(2.39) + (1.39)(0.26)] 25.1

= 1432 in-lb

Total Moment

M = 8746 + 1432

= 10178 in-lb.

I_z = $bd^3/12 - b_i d_i^3/12$

= $9.5(9.5)^3/12 - 9(9)^3/12$

= 132 in^4

where i denotes inner can dimensions.

c = d/2 = 4.75 inches

For the 25.1g side drop load, the maximum can bending stress is:

σ_b = [10.2 (4.75)]/132

= 0.37 ksi

The maximum can shear stress is defined as:

τ_{max} = $3/2\ (V/A_{web})$

where:

V' = $[P_L + P_C + P_T + P_P]$ x g-load

= [52.64 + 19.13 + 23.72 + 1.39] x 25.1

= 2432 lb.

Therefore:

τ_{max} = 3/2(2.5/ (0.5 x 9.0))

= 0.84 ksi

The maximum primary membrane stress intensity is equal to twice the peak shear, or 1.7 ksi. Conservatively assuming that the maximum shear and bending stresses occur in the same location, the fuel can body side drop maximum stress intensity are:

P_m = 1.7 ksi

$SI(P_l+P_b)$ = $.37/2 + [(.37/2)^2 + (.84)^2]^{1/2}$

= 1.1 ksi < 1.7 ksi, $\therefore P_l+P_b$ = 1.7 ksi

The maximum membrane plus bending stress at the base of the top end cantilever section of the FF fuel can assembly is lower than the bending stress in the FF fuel can bottom panel due to plate bending behavior. Therefore, the stresses in the FF fuel can top end cantilever section do not control the FF fuel can assembly design.

2.6.13 NCT Load Combination Evaluation

The NUHOMS®-MP187 package structural components are evaluated for the normal condition of transport and hypothetical accident condition load combinations presented in Table 2.1.2-4, which were developed in accordance with Regulatory Guide 7.8 [2.3]. The load combination evaluations for the cask, FO- and FC-DSCs, and FF-DSC are presented in the following sections.

The results demonstrate that all of the package containment related structures and criticality control structures meet the applicable stress design criteria discussed in Section 2.1.2.

2.6.13.1 Cask NCT Load Combinations

The NUHOMS®-MP187 cask is evaluated for the normal conditions of transport in Sections 2.6.1 through 2.6.9. The stress components at the 52 cask stress points shown in Figure 2.6.1-1 are combined in accordance with the requirements of Regulatory Guide 7.8 [2.3]. As discussed in Section 2.6.10, fabrication stresses in the cask are insignificant, and consequently, need not be included in the load combination evaluation. The controlling normal condition of transport load combinations considered for the cask are:

1.) Hot Environment - 100°F ambient temp.: Maximum internal pressure (50 psig), maximum fuel decay heat load, maximum solar insolation, and 100°F ambient air temperature. The membrane, membrane plus bending, and total stress intensities resulting from this load combination are shown in Table 2.6.13-1, Table 2.6.13-2, and Table 2.6.13-3, respectively. In all cases, the margins are large. Therefore the cask meets the applicable stress acceptance criteria for this load combination.

2.) Cold Environment - -40°F ambient temp.: 2 conditions are considered for this load combination:

   A.) Zero insolation, maximum decay heat, and maximum internal pressure. The cask stresses due to this load combination are bounded by those due to load combinations 4 and 5, discussed below.

   B.) Zero insolation, zero decay heat, and maximum internal pressure. This load combination is bounded by load combinations 4 and 5, as discussed below.

3.) Minimum External Pressure: Two conditions are considered for this load combination:

A.) 100°F ambient temperature, maximum insolation, maximum decay heat, maximum internal pressure: The 50 psig internal design pressure bounds the combined maximum cask normal operating design pressure of 22.5 psia (7.8 psig) combined with the 11.2 psig net internal pressure due to the minimum external pressure condition. Therefore, this condition is bounded by load combinations 4 and 5, as discussed below.

B.) -20°F ambient temperature, zero insolation, maximum decay heat, maximum internal pressure: The 50 psig internal design pressure bounds the combined maximum cask normal operating design pressure of 22.5 psia (7.8 psig) combined with the 11.2 psig net internal pressure due to the minimum external pressure condition. Therefore, this condition is bounded by load combinations 4 and 5, as discussed below.

4.) Vibration & Shock - Normally Incident to the Mode of Transport: Three load combinations are considered for this condition:

A.) Vibration and shock, maximum internal pressure (50 psig), maximum fuel decay heat load, maximum solar insolation, and 100°F ambient air temperature. Results are shown in Table 2.6.13-4 through Table 2.6.13-8 (membrane stress), Table 2.6.13-9 through Table 2.6.13-13 (membrane plus bending stress), and Table 2.6.13-14 through Table 2.6.13-18 (total stress). The allowable stress intensities and corresponding margins of safety are also presented in each table. The minimum margin of safety for this load combination is +2.37 for total stress intensity at stress point 12 in the cask inner shell. Therefore, the cask meets the applicable stress acceptance criteria for this load combination.

B.) Vibration and shock, maximum internal pressure (50 psig), maximum fuel decay heat load, zero solar insolation, and -20°F ambient air temperature. The load combination evaluation for this condition is conservatively performed using the cask thermal stresses resulting from the extreme cold

normal thermal condition (-40°F ambient temperature, maximum decay heat, zero solar insolation). Results are shown in Table 2.6.13-19 through Table 2.6.13-23 (membrane stress), Table 2.6.13-24 through Table 2.6.13-28 (membrane plus bending stress), and Table 2.6.13-29 through Table 2.6.13-33 (total stress). The allowable stress intensities and corresponding margins of safety are also presented in each table. The minimum margin of safety for this load combination is +2.65 for total stress intensity at stress point 12 in the cask inner shell. Therefore, the cask meets the applicable stress acceptance criteria for this load combination.

C.) Vibration and shock, maximum internal pressure (50 psig), zero decay heat, zero solar insolation, and -20°F ambient air temperature. This load combination is bounded by load combination 4B discussed above, and consequently need not be evaluated.

5.) 1-Foot Free Drop: Three load combinations are considered for this condition:

A.) 1-foot free drop, maximum internal pressure (50 psig), maximum fuel decay heat load, maximum solar insolation, and 100°F ambient air temperature: Results are shown in Table 2.6.13-34 through Table 2.6.13-38 (membrane stress), Table 2.6.13-39 through Table 2.6.13-43 (membrane plus bending stress), and Table 2.6.13-44 through Table 2.6.13-48 (total stress). The allowable stress intensities and corresponding margins of safety are also presented in each table. The minimum margin of safety for this load combination is +0.58 for primary membrane stress intensity at stress point 29 in the cask outer shell. Therefore, the cask meets the applicable stress acceptance criteria for this load combination.

B.) 1-foot free drop, maximum internal pressure (50 psig), maximum fuel decay heat load, zero solar insolation, and -20°F ambient air temperature. The load combination evaluation for this condition is conservatively

performed using the cask thermal stresses resulting from the extreme cold normal thermal condition (-40°F ambient temperature, maximum decay heat, zero solar insolation). Results are shown in Table 2.6.13-49 through Table 2.6.13-53 (membrane stress), Table 2.6.13-54 through Table 2.6.13-58 (membrane plus bending stress), and Table 2.6.13-59 through Table 2.6.13-63 (total stress). The allowable stress intensities and corresponding margins of safety are also presented in each table. The minimum margin of safety for this load combination is +0.58 for primary membrane stress intensity at stress point 29 in the cask outer shell. Therefore, the cask meets the applicable stress acceptance criteria for this load combination.

C.) 1-foot drop, maximum internal pressure (50 psig), zero decay heat, zero solar insolation, and -20°F ambient air temperature. This load combination is bounded by load combination 5B discussed above, and consequently need not be evaluated.

The principal stresses and stress intensity at each of the 52 cask stress points shown in Figure 2.6.1-1 can be found by determining the roots of the cubic equation:

$$\sigma^3 - I_1\sigma^2 + I_2\sigma - I_3 = 0$$

Where I_1, I_2, and I_3 are the principal invariants of stress and the three roots of the equation (σ_1, σ_2, and σ_3) are the principal stresses. The principal invariants are determined as follows:

$$I_1 = SX^2 + SY^2 + SZ^2$$

$$I_2 = \begin{vmatrix} SX & SXY \\ SXY & SY \end{vmatrix} \begin{vmatrix} SX & SXZ \\ SXZ & SZ \end{vmatrix} \begin{vmatrix} SY & SYZ \\ SYZ & SZ \end{vmatrix}$$

$$I_3 = \begin{vmatrix} SX & SXY & SXZ \\ SXY & SY & SYZ \\ SXZ & SYZ & SZ \end{vmatrix}$$

The stress intensity is calculated as the greater of the absolute value of the largest principal stress or the largest difference between principal stresses.

Table 2.6.13-1
50 psig Internal Pressure + Thermal (100°F) - Pm @ All Azimuths

Cask Component	Stress Point	Stress Components (ksi)						Principal Stresses (ksi)			SI (ksi)	Stress Limit	M.S.
		S_X	S_Y	S_Z	S_{XY}	S_{YZ}	S_{XZ}	S_1	S_2	S_3			
Top Cover	1	-0.02	-0.02	-0.02	0.00	0.00	0.00	-0.02	-0.02	-0.02	0.00	20.0	Large
	2	-0.02	-0.02	-0.02	0.00	0.00	0.00	-0.02	-0.02	-0.02	0.00	20.0	Large
	3	-0.03	-0.02	-0.02	0.07	0.00	0.00	-0.09	-0.02	0.04	0.14	20.0	Large
	4	-0.03	-0.02	-0.02	0.07	0.00	0.00	-0.09	-0.02	0.04	0.14	20.0	Large
	5	-0.08	0.05	0.22	0.15	0.00	0.00	-0.18	0.15	0.22	0.40	20.0	Large
	6	-0.08	0.05	0.22	0.15	0.00	0.00	-0.18	0.15	0.22	0.40	20.0	Large
Top Flange	7	0.03	0.00	0.01	-0.01	0.00	0.00	0.00	0.01	0.03	0.03	20.0	Large
	8	0.03	0.00	0.01	-0.01	0.00	0.00	0.00	0.01	0.03	0.03	20.0	Large
	9	-0.20	0.33	0.35	-0.01	0.00	0.00	-0.20	0.33	0.35	0.55	20.0	Large
	10	-0.20	0.33	0.35	-0.01	0.00	0.00	-0.20	0.33	0.35	0.55	20.0	Large
Inner Shell	11	-0.04	0.41	0.75	-0.03	0.00	0.00	-0.04	0.42	0.75	0.79	20.0	Large
	12	-0.04	0.41	0.75	-0.03	0.00	0.00	-0.04	0.42	0.75	0.79	20.0	Large
	13	-0.03	0.46	1.30	0.00	0.00	0.00	1.30	-0.03	0.46	1.33	20.0	Large
	14	-0.03	0.46	1.30	0.00	0.00	0.00	1.30	-0.03	0.46	1.33	20.0	Large
	15	-0.03	0.46	1.29	0.00	0.00	0.00	1.29	-0.03	0.46	1.32	20.0	Large
	16	-0.03	0.46	1.29	0.00	0.00	0.00	1.29	-0.03	0.46	1.32	20.0	Large
	17	-0.03	0.46	1.29	0.00	0.00	0.00	1.29	-0.03	0.46	1.32	20.0	Large
	18	-0.03	0.46	1.29	0.00	0.00	0.00	1.29	-0.03	0.46	1.32	20.0	Large
	19	-0.03	0.46	1.29	0.00	0.00	0.00	1.29	-0.03	0.46	1.32	20.0	Large
	20	-0.03	0.46	1.29	0.00	0.00	0.00	1.29	-0.03	0.46	1.32	20.0	Large
	21	-0.03	0.46	1.32	0.00	0.00	0.00	1.32	-0.03	0.46	1.35	20.0	Large
	22	-0.03	0.46	1.32	0.00	0.00	0.00	1.32	-0.03	0.46	1.35	20.0	Large
	23	-0.06	0.41	-0.09	0.14	0.00	0.00	0.45	-0.10	-0.09	0.55	20.0	Large
	24	-0.06	0.41	-0.09	0.14	0.00	0.00	0.45	-0.10	-0.09	0.55	20.0	Large
	25	0.22	0.15	-0.15	0.06	0.00	0.00	-0.15	0.11	0.25	0.40	20.0	Large
	26	0.22	0.15	-0.15	0.06	0.00	0.00	-0.15	0.11	0.25	0.40	20.0	Large
Outer Shell	27	-0.12	0.12	0.22	0.02	0.00	0.00	-0.12	0.13	0.22	0.35	20.0	Large
	28	-0.12	0.12	0.22	0.02	0.00	0.00	-0.12	0.13	0.22	0.35	20.0	Large
	29	0.01	0.09	0.02	0.00	0.00	0.00	0.09	0.01	0.02	0.07	20.0	Large
	30	0.01	0.09	0.02	0.00	0.00	0.00	0.09	0.01	0.02	0.07	20.0	Large
	31	0.00	0.08	0.00	0.00	0.00	0.00	0.08	0.00	0.00	0.08	20.0	Large
	32	0.00	0.08	0.00	0.00	0.00	0.00	0.08	0.00	0.00	0.08	20.0	Large
	33	0.00	0.08	0.01	0.00	0.00	0.00	0.08	0.00	0.01	0.08	20.0	Large
	34	0.00	0.08	0.01	0.00	0.00	0.00	0.08	0.00	0.01	0.08	20.0	Large
	35	0.00	0.08	0.01	0.00	0.00	0.00	0.08	0.00	0.01	0.08	20.0	Large
	36	0.00	0.08	0.01	0.00	0.00	0.00	0.08	0.00	0.01	0.08	20.0	Large
	37	0.01	0.08	0.02	-0.01	0.00	0.00	0.08	0.01	0.02	0.07	20.0	Large
	38	0.01	0.08	0.02	-0.01	0.00	0.00	0.08	0.01	0.02	0.07	20.0	Large
	39	0.15	0.01	-0.13	0.01	0.00	0.00	-0.13	0.01	0.15	0.28	20.0	Large
	40	0.15	0.01	-0.13	0.01	0.00	0.00	-0.13	0.01	0.15	0.28	20.0	Large
Bottom Forging	41	0.26	0.04	0.17	-0.04	0.00	0.00	0.03	0.17	0.26	0.23	20.0	Large
	42	0.26	0.04	0.17	-0.04	0.00	0.00	0.03	0.17	0.26	0.23	20.0	Large
	43	-0.03	0.03	0.12	-0.07	0.00	0.00	-0.07	0.08	0.12	0.19	20.0	Large
	44	-0.03	0.03	0.12	-0.07	0.00	0.00	-0.07	0.08	0.12	0.19	20.0	Large
	45	-0.04	-0.13	-0.31	-0.06	0.00	0.00	-0.31	-0.16	-0.02	0.29	20.0	Large
	46	-0.04	-0.13	-0.31	-0.06	0.00	0.00	-0.31	-0.16	-0.02	0.29	20.0	Large
Ram Access Cover Plate	47	-0.05	0.00	0.03	-0.06	0.00	0.00	-0.09	0.03	0.04	0.13	31.4	Large
	48	-0.05	0.00	0.03	-0.06	0.00	0.00	-0.09	0.03	0.04	0.13	31.4	Large
	49	-0.05	0.00	0.00	-0.03	0.00	0.00	-0.06	0.00	0.01	0.07	31.4	Large
	50	-0.05	0.00	0.00	-0.03	0.00	0.00	-0.06	0.00	0.01	0.07	31.4	Large
	51	-0.02	-0.03	-0.03	0.00	0.00	0.00	-0.02	-0.03	-0.03	0.01	31.4	Large
	52	-0.02	-0.03	-0.03	0.00	0.00	0.00	-0.02	-0.03	-0.03	0.01	31.4	Large

nct_sar.xls, ip50+t100

Table 2.6.13-2
50 psig Internal Pressure + Thermal (100°F) - Pm + Pb @ All Azimuths

Cask Component	Stress Point	Stress Components (ksi)						Principal Stresses (ksi)			SI (ksi)	Stress Limit	M.S.
		S_X	S_Y	S_Z	S_{XY}	S_{YZ}	S_{XZ}	S_1	S_2	S_3			
Top Cover	1	-0.04	-2.07	-2.08	0.00	0.00	0.00	-0.04	-2.07	-2.07	2.04	30.0	Large
	2	-0.01	2.03	2.03	0.00	0.00	0.00	-0.01	2.03	2.03	2.05	30.0	Large
	3	-0.04	-1.59	-1.79	0.07	0.00	0.00	-0.03	-1.79	-1.60	1.76	30.0	Large
	4	-0.01	1.55	1.75	0.07	0.00	0.00	-0.02	1.55	1.75	1.77	30.0	Large
	5	-0.14	-0.32	-0.63	0.15	0.00	0.00	-0.05	-0.63	-0.40	0.58	30.0	Large
	6	-0.04	0.43	1.06	0.15	0.00	0.00	1.06	-0.09	0.47	1.15	30.0	Large
Top Flange	7	0.06	0.05	0.04	-0.01	0.00	0.00	0.04	0.05	0.06	0.03	30.0	Large
	8	0.01	-0.05	-0.01	-0.01	0.00	0.00	-0.05	-0.01	0.01	0.06	30.0	Large
	9	-0.12	0.71	0.50	-0.01	0.00	0.00	-0.12	0.50	0.71	0.83	30.0	Large
	10	-0.30	-0.05	0.20	-0.01	0.00	0.00	-0.30	-0.05	0.20	0.50	30.0	Large
Inner Shell	11	-0.05	0.43	0.78	-0.03	0.00	0.00	-0.05	0.43	0.78	0.82	30.0	Large
	12	-0.03	0.40	0.73	-0.03	0.00	0.00	-0.03	0.40	0.73	0.77	30.0	Large
	13	-0.05	0.46	1.33	0.00	0.00	0.00	1.33	-0.05	0.46	1.38	30.0	Large
	14	0.00	0.45	1.28	0.00	0.00	0.00	1.28	0.00	0.45	1.28	30.0	Large
	15	-0.05	0.46	1.31	0.00	0.00	0.00	1.31	-0.05	0.46	1.36	30.0	Large
	16	0.00	0.46	1.27	0.00	0.00	0.00	1.27	0.00	0.46	1.27	30.0	Large
	17	-0.05	0.46	1.31	0.00	0.00	0.00	1.31	-0.05	0.46	1.36	30.0	Large
	18	0.00	0.46	1.27	0.00	0.00	0.00	1.27	0.00	0.46	1.27	30.0	Large
	19	-0.05	0.46	1.31	0.00	0.00	0.00	1.31	-0.05	0.46	1.36	30.0	Large
	20	0.00	0.46	1.27	0.00	0.00	0.00	1.27	0.00	0.46	1.27	30.0	Large
	21	-0.05	0.46	1.35	0.00	0.00	0.00	1.35	-0.05	0.46	1.40	30.0	Large
	22	0.00	0.45	1.29	0.00	0.00	0.00	1.29	0.00	0.45	1.30	30.0	Large
	23	-0.03	1.62	0.27	0.14	0.00	0.00	1.63	-0.04	0.27	1.67	30.0	Large
	24	-0.13	-0.78	-0.46	0.14	0.00	0.00	-0.81	-0.46	-0.10	0.71	30.0	Large
	25	0.45	0.90	0.10	0.06	0.00	0.00	0.91	0.10	0.45	0.81	30.0	Large
	26	0.01	-0.59	-0.39	0.06	0.00	0.00	0.02	-0.60	-0.39	0.62	30.0	Large
Outer Shell	27	-0.18	-0.38	0.07	0.02	0.00	0.00	0.07	-0.39	-0.18	0.46	30.0	Large
	28	-0.06	0.62	0.37	0.02	0.00	0.00	-0.06	0.37	0.62	0.68	30.0	Large
	29	0.00	0.13	0.03	0.00	0.00	0.00	0.13	0.00	0.03	0.12	30.0	Large
	30	0.02	0.04	0.01	0.00	0.00	0.00	0.04	0.01	0.02	0.04	30.0	Large
	31	0.00	0.08	0.00	0.00	0.00	0.00	0.08	0.00	0.00	0.08	30.0	Large
	32	0.00	0.09	0.00	0.00	0.00	0.00	0.09	0.00	0.00	0.09	30.0	Large
	33	0.00	0.08	0.01	0.00	0.00	0.00	0.08	0.00	0.01	0.08	30.0	Large
	34	0.00	0.08	0.01	0.00	0.00	0.00	0.08	0.00	0.01	0.08	30.0	Large
	35	0.00	0.09	0.01	0.00	0.00	0.00	0.09	0.00	0.01	0.09	30.0	Large
	36	0.00	0.08	0.01	0.00	0.00	0.00	0.08	0.00	0.01	0.08	30.0	Large
	37	0.00	0.04	0.00	-0.01	0.00	0.00	0.04	0.00	0.00	0.04	30.0	Large
	38	0.02	0.12	0.03	-0.01	0.00	0.00	0.12	0.02	0.03	0.10	30.0	Large
	39	0.52	0.67	0.07	0.01	0.00	0.00	0.07	0.52	0.67	0.59	30.0	Large
	40	0.08	-0.62	-0.32	0.01	0.00	0.00	0.08	-0.62	-0.32	0.70	30.0	Large
Bottom Forging	41	1.02	0.27	-0.01	-0.04	0.00	0.00	1.02	-0.01	0.27	1.04	30.0	Large
	42	0.01	-0.19	0.34	-0.04	0.00	0.00	0.34	-0.20	0.02	0.54	30.0	Large
	43	-0.05	-0.14	-0.58	-0.07	0.00	0.00	-0.58	-0.18	-0.01	0.57	30.0	Large
	44	-0.01	0.21	0.81	-0.07	0.00	0.00	0.81	-0.03	0.23	0.84	30.0	Large
	45	-0.04	-0.30	-1.08	-0.06	0.00	0.00	-1.08	-0.31	-0.03	1.06	30.0	Large
	46	-0.02	0.03	0.46	-0.06	0.00	0.00	0.46	-0.06	0.07	0.52	30.0	Large
Ram Access Cover Plate	47	-0.11	-0.20	-0.20	-0.06	0.00	0.00	-0.08	-0.23	-0.20	0.15	47.1	Large
	48	-0.02	0.21	0.26	-0.06	0.00	0.00	-0.03	0.22	0.26	0.29	47.1	Large
	49	-0.09	-0.33	-0.30	-0.03	0.00	0.00	-0.09	-0.33	-0.30	0.24	47.1	Large
	50	-0.01	0.32	0.31	-0.03	0.00	0.00	-0.01	0.31	0.32	0.33	47.1	Large
	51	-0.04	-0.35	-0.35	0.00	0.00	0.00	-0.04	-0.35	-0.35	0.31	47.1	Large
	52	0.00	0.29	0.30	0.00	0.00	0.00	0.00	0.29	0.30	0.30	47.1	Large

nct_sar.xls, ip50+t100

Table 2.6.13-3
50 psig Internal Pressure + Thermal (100°F) - Total Stresses @ All Azimuths

Cask Component	Stress Point	Stress Components (ksi)						Principal Stresses (ksi)			SI (ksi)	Stress Limit	M.S.
		S_X	S_Y	S_Z	S_{XY}	S_{YZ}	S_{XZ}	S_1	S_2	S_3			
Top Cover	1	-0.07	-4.62	-4.62	0.00	0.00	0.00	-0.07	-4.62	-4.62	4.54	60.0	Large
	2	-0.05	-1.12	-1.11	0.00	0.00	0.00	-0.05	-1.12	-1.11	1.08	60.0	Large
	3	-0.03	-3.44	-2.47	-0.08	0.00	0.00	-0.02	-3.44	-2.47	3.42	60.0	Large
	4	0.00	-0.89	0.47	0.08	0.00	0.00	-0.90	0.01	0.47	1.37	60.0	Large
	5	0.79	-0.11	3.94	0.26	0.00	0.00	3.94	-0.18	0.86	4.11	60.0	Large
	6	-0.18	-0.31	4.54	-0.10	0.00	0.00	4.54	-0.37	-0.13	4.91	60.0	Large
Top Flange	7	-2.33	-3.51	3.27	-0.92	0.00	0.00	3.27	-4.01	-1.82	7.28	60.0	7.24
	8	-0.53	4.07	6.10	-0.23	0.00	0.00	-0.54	4.08	6.10	6.63	60.0	8.04
	9	-0.57	2.71	-3.40	0.34	0.00	0.00	2.74	-3.40	-0.61	6.14	60.0	8.77
	10	-2.99	-7.51	-6.57	-0.61	0.00	0.00	-2.91	-7.59	-6.57	4.68	60.0	Large
Inner Shell	11	-0.46	6.30	-4.76	-0.27	0.00	0.00	6.31	-4.76	-0.47	11.07	60.0	4.42
	12	-0.94	-17.46	-11.14	-2.63	0.00	0.00	-0.53	-17.87	-11.14	17.34	60.0	2.46
	13	-0.06	-6.51	1.50	0.06	0.00	0.00	-6.51	-0.06	1.50	8.00	60.0	6.50
	14	0.00	-5.58	2.16	0.05	0.00	0.00	-5.58	0.00	2.16	7.74	60.0	6.75
	15	-0.05	-6.42	0.94	-0.01	0.00	0.00	-6.42	-0.05	0.94	7.35	60.0	7.16
	16	0.00	-5.67	1.62	-0.01	0.00	0.00	-5.67	0.00	1.62	7.29	60.0	7.23
	17	-0.05	-6.57	0.85	0.00	0.00	0.00	-6.57	-0.05	0.85	7.43	60.0	7.08
	18	0.00	-5.52	1.66	0.00	0.00	0.00	-5.52	0.00	1.66	7.18	60.0	7.36
	19	-0.05	-6.51	0.92	0.00	0.00	0.00	-6.51	-0.05	0.92	7.43	60.0	7.07
	20	0.00	-5.58	1.66	0.00	0.00	0.00	-5.58	0.00	1.66	7.24	60.0	7.29
	21	-0.06	-6.02	1.38	-0.02	0.00	0.00	-6.02	-0.06	1.38	7.40	60.0	7.11
	22	0.00	-6.06	1.78	-0.02	0.00	0.00	-6.06	0.00	1.78	7.84	60.0	6.65
	23	-0.32	0.48	-1.59	0.11	0.00	0.00	-1.59	-0.33	0.49	2.08	60.0	Large
	24	-0.37	-11.40	-4.60	1.37	0.00	0.00	-11.56	-4.60	-0.20	11.36	60.0	4.28
	25	-2.82	-0.93	-1.12	-0.43	0.00	0.00	-2.92	-1.12	-0.84	2.08	60.0	Large
	26	-4.62	-3.28	-1.30	1.29	0.00	0.00	-5.41	-2.49	-1.30	4.10	60.0	Large
Outer Shell	27	1.78	7.83	3.95	-0.41	0.00	0.00	7.86	1.75	3.95	6.11	60.0	8.81
	28	0.78	-1.42	1.40	0.58	0.00	0.00	-1.57	0.93	1.40	2.97	60.0	Large
	29	0.66	3.44	2.38	0.66	0.00	0.00	0.52	2.38	3.59	3.07	60.0	Large
	30	2.96	3.90	4.67	0.51	0.00	0.00	2.73	4.13	4.67	1.93	60.0	Large
	31	-0.11	1.59	-0.01	-0.04	0.00	0.00	1.59	-0.11	-0.01	1.71	60.0	Large
	32	-0.06	3.85	1.39	-0.04	0.00	0.00	3.85	-0.06	1.39	3.91	60.0	Large
	33	-0.12	1.95	0.47	0.00	0.00	0.00	1.95	-0.12	0.47	2.07	60.0	Large
	34	-0.05	3.50	1.72	0.00	0.00	0.00	3.50	-0.05	1.72	3.56	60.0	Large
	35	-0.10	1.20	-0.23	0.04	0.00	0.00	1.20	-0.23	-0.10	1.43	60.0	Large
	36	-0.06	4.23	1.49	0.04	0.00	0.00	4.24	-0.06	1.49	4.30	60.0	Large
	37	0.59	4.24	2.42	-0.72	0.00	0.00	0.45	2.42	4.38	3.93	60.0	Large
	38	2.79	2.81	4.18	-0.53	0.00	0.00	2.27	3.33	4.18	1.91	60.0	Large
	39	-1.60	1.78	1.57	0.88	0.00	0.00	-1.81	1.57	1.99	3.81	60.0	Large
	40	0.16	2.68	2.97	-0.23	0.00	0.00	0.14	2.70	2.97	2.83	60.0	Large
Bottom Forging	41	-0.84	-2.92	-1.12	0.06	0.00	0.00	-2.92	-1.12	-0.84	2.08	60.0	Large
	42	-0.12	2.36	6.83	-0.03	0.00	0.00	6.83	-0.12	2.36	6.95	60.0	7.63
	43	-0.03	-4.94	-5.26	0.15	0.00	0.00	-0.02	-5.26	-4.95	5.24	60.0	Large
	44	0.01	1.74	4.47	0.08	0.00	0.00	4.47	0.00	1.74	4.47	60.0	Large
	45	-0.20	-3.55	-10.13	0.59	0.00	0.00	-10.13	-3.65	-0.10	10.03	60.0	4.98
	46	-0.42	-1.21	-2.20	-0.05	0.00	0.00	-2.20	-1.21	-0.42	1.79	60.0	Large
Ram Access Cover Plate	47	-0.19	-0.49	0.05	-0.09	0.00	0.00	-0.52	-0.17	0.05	0.57	94.2	Large
	48	-0.04	0.10	0.33	-0.01	0.00	0.00	0.33	-0.04	0.10	0.37	94.2	Large
	49	0.38	-0.27	0.24	-0.38	0.00	0.00	-0.45	0.24	0.56	1.01	94.2	Large
	50	-0.05	-0.03	-0.15	0.04	0.00	0.00	0.00	-0.15	-0.08	0.15	94.2	Large
	51	-0.07	-3.33	-3.40	0.00	0.00	0.00	-0.07	-3.40	-3.33	3.33	94.2	Large
	52	0.03	-0.59	-0.64	0.00	0.00	0.00	0.03	-0.64	-0.59	0.67	94.2	Large

nct_sar.xls, ip50+t100

Table 2.6.13-4
Vibration + Thermal (-40°F) + 50 psig Internal Pressure - Pm @ 0° Azimuth

Cask Component	Stress Point	Stress Components (ksi)						Principal Stresses (ksi)			SI (ksi)	Stress Limit	M.S.
		S_X	S_Y	S_Z	S_{XY}	S_{YZ}	S_{XZ}	S_1	S_2	S_3			
Top Cover	1	-0.03	-0.02	0.08	0.00	0.00	-0.01	0.08	-0.03	-0.01	0.11	20.0	Large
	2	-0.03	-0.02	0.08	0.00	0.00	-0.01	0.08	-0.03	-0.01	0.11	20.0	Large
	3	-0.12	-0.02	0.12	0.07	0.00	0.00	-0.16	0.02	0.12	0.28	20.0	Large
	4	-0.12	-0.02	0.12	0.07	0.00	0.00	-0.16	0.02	0.12	0.28	20.0	Large
	5	-0.11	-0.03	0.40	0.15	0.00	0.00	-0.23	0.09	0.40	0.64	20.0	Large
	6	-0.11	-0.03	0.40	0.15	0.00	0.00	-0.23	0.09	0.40	0.64	20.0	Large
Top Flange	7	-0.20	0.07	0.22	-0.04	0.04	0.06	-0.22	0.07	0.23	0.45	20.0	Large
	8	-0.20	0.07	0.22	-0.04	0.04	0.06	-0.22	0.07	0.23	0.45	20.0	Large
	9	-0.25	0.21	0.83	-0.05	0.04	0.09	0.83	-0.26	0.22	1.10	20.0	Large
	10	-0.25	0.21	0.83	-0.05	0.04	0.09	0.83	-0.26	0.22	1.10	20.0	Large
Inner Shell	11	-0.10	0.30	1.32	0.02	0.08	0.09	1.33	-0.11	0.29	1.44	20.0	Large
	12	-0.10	0.30	1.32	0.02	0.08	0.09	1.33	-0.11	0.29	1.44	20.0	Large
	13	-0.18	-0.23	-1.78	0.03	0.05	-0.22	-1.81	-0.23	-0.14	1.67	20.0	Large
	14	-0.18	-0.23	-1.78	0.03	0.05	-0.22	-1.81	-0.23	-0.14	1.67	20.0	Large
	15	-0.08	0.02	1.41	0.00	-0.09	0.06	1.42	-0.09	0.02	1.51	20.0	Large
	16	-0.08	0.02	1.41	0.00	-0.09	0.06	1.42	-0.09	0.02	1.51	20.0	Large
	17	-0.08	0.72	1.52	0.00	0.00	0.07	-0.08	0.72	1.52	1.60	20.0	Large
	18	-0.08	0.72	1.52	0.00	0.00	0.07	-0.08	0.72	1.52	1.60	20.0	Large
	19	-0.08	0.03	1.59	0.00	0.10	0.08	1.60	-0.09	0.02	1.69	20.0	Large
	20	-0.08	0.03	1.59	0.00	0.10	0.08	1.60	-0.09	0.02	1.69	20.0	Large
	21	-0.18	-0.33	-1.77	-0.04	-0.04	-0.22	-1.80	-0.33	-0.14	1.66	20.0	Large
	22	-0.18	-0.33	-1.77	-0.04	-0.04	-0.22	-1.80	-0.33	-0.14	1.66	20.0	Large
	23	-0.15	0.35	0.45	0.08	-0.09	0.09	-0.18	0.33	0.50	0.68	20.0	Large
	24	-0.15	0.35	0.45	0.08	-0.09	0.09	-0.18	0.33	0.50	0.68	20.0	Large
	25	0.18	0.17	0.26	0.08	-0.03	0.03	0.08	0.26	0.27	0.19	20.0	Large
	26	0.18	0.17	0.26	0.08	-0.03	0.03	0.08	0.26	0.27	0.19	20.0	Large
Outer Shell	27	-0.16	-0.11	0.63	0.00	0.09	0.04	0.65	-0.16	-0.12	0.81	20.0	Large
	28	-0.16	-0.11	0.63	0.00	0.09	0.04	0.65	-0.16	-0.12	0.81	20.0	Large
	29	-1.02	-0.65	-3.14	0.34	0.00	-0.17	-3.15	-1.21	-0.44	2.71	20.0	6.37
	30	-1.02	-0.65	-3.14	0.34	0.00	-0.17	-3.15	-1.21	-0.44	2.71	20.0	6.37
	31	0.00	-0.44	0.09	0.02	-0.10	0.05	-0.46	-0.01	0.13	0.58	20.0	Large
	32	0.00	-0.44	0.09	0.02	-0.10	0.05	-0.46	-0.01	0.13	0.58	20.0	Large
	33	0.00	0.31	0.28	0.00	0.00	0.07	-0.01	0.30	0.31	0.32	20.0	Large
	34	0.00	0.31	0.28	0.00	0.00	0.07	-0.01	0.30	0.31	0.32	20.0	Large
	35	0.00	-0.37	0.24	-0.03	0.10	0.06	-0.39	-0.01	0.27	0.66	20.0	Large
	36	0.00	-0.37	0.24	-0.03	0.10	0.06	-0.39	-0.01	0.27	0.66	20.0	Large
	37	-0.97	-0.63	-3.13	-0.34	0.00	-0.18	-3.14	-1.17	-0.42	2.72	20.0	6.35
	38	-0.97	-0.63	-3.13	-0.34	0.00	-0.18	-3.14	-1.17	-0.42	2.72	20.0	6.35
	39	0.14	-0.10	0.28	0.05	-0.09	0.02	-0.13	0.14	0.30	0.43	20.0	Large
	40	0.14	-0.10	0.28	0.05	-0.09	0.02	-0.13	0.14	0.30	0.43	20.0	Large
Bottom Forging	41	0.21	-0.03	0.38	0.00	-0.01	0.00	-0.03	0.21	0.38	0.41	20.0	Large
	42	0.21	-0.03	0.38	0.00	-0.01	0.00	-0.03	0.21	0.38	0.41	20.0	Large
	43	-0.07	0.03	0.27	-0.08	0.00	0.00	0.27	-0.11	0.07	0.38	20.0	Large
	44	-0.07	0.03	0.27	-0.08	0.00	0.00	0.27	-0.11	0.07	0.38	20.0	Large
	45	-0.07	-0.15	-0.11	-0.08	0.00	0.00	-0.02	-0.20	-0.11	0.17	20.0	Large
	46	-0.07	-0.15	-0.11	-0.08	0.00	0.00	-0.02	-0.20	-0.11	0.17	20.0	Large
Ram Access Cover Plate	47	-0.12	0.01	0.13	-0.06	0.00	0.00	-0.14	0.03	0.13	0.27	31.4	Large
	48	-0.12	0.01	0.13	-0.06	0.00	0.00	-0.14	0.03	0.13	0.27	31.4	Large
	49	-0.10	0.00	0.07	-0.02	0.00	0.00	-0.11	0.00	0.07	0.18	31.4	Large
	50	-0.10	0.00	0.07	-0.02	0.00	0.00	-0.11	0.00	0.07	0.18	31.4	Large
	51	-0.02	-0.02	0.04	0.00	0.00	-0.01	0.04	-0.02	-0.02	0.06	31.4	Large
	52	-0.02	-0.02	0.04	0.00	0.00	-0.01	0.04	-0.02	-0.02	0.06	31.4	Large

nct_sar.xls, vib+t-40+ip50

Table 2.6.13-5
Vibration + Thermal (-40°F) + 50 psig Internal Pressure - Pm @ 45° Azimuth

Cask Component	Stress Point	Stress Components (ksi)						Principal Stresses (ksi)			SI (ksi)	Stress Limit	M.S.
		S_X	S_Y	S_Z	S_{XY}	S_{YZ}	S_{XZ}	S_1	S_2	S_3			
Top Cover	1	0.03	-0.02	0.02	0.00	0.00	-0.05	0.08	-0.03	-0.01	0.11	20.0	Large
	2	0.03	-0.02	0.02	0.00	0.00	-0.05	0.08	-0.03	-0.01	0.11	20.0	Large
	3	-0.02	-0.02	0.00	0.07	0.01	-0.12	-0.15	-0.01	0.12	0.27	20.0	Large
	4	-0.02	-0.02	0.00	0.07	0.01	-0.12	-0.15	-0.01	0.12	0.27	20.0	Large
	5	-0.08	0.06	0.25	0.15	0.04	-0.10	-0.20	0.16	0.27	0.48	20.0	Large
	6	-0.08	0.06	0.25	0.15	0.04	-0.10	-0.20	0.16	0.27	0.48	20.0	Large
Top Flange	7	0.03	0.00	0.04	-0.01	-0.01	0.01	0.05	0.00	0.02	0.04	20.0	Large
	8	0.03	0.00	0.04	-0.01	-0.01	0.01	0.05	0.00	0.02	0.04	20.0	Large
	9	-0.20	0.32	0.41	-0.02	0.30	0.00	0.67	-0.20	0.06	0.87	20.0	Large
	10	-0.20	0.32	0.41	-0.02	0.30	0.00	0.67	-0.20	0.06	0.87	20.0	Large
Inner Shell	11	-0.04	0.42	0.80	-0.03	0.61	0.02	1.25	-0.07	0.00	1.32	20.0	Large
	12	-0.04	0.42	0.80	-0.03	0.61	0.02	1.25	-0.07	0.00	1.32	20.0	Large
	13	-0.11	0.59	-0.11	0.02	0.27	0.04	0.68	-0.22	-0.10	0.90	20.0	Large
	14	-0.11	0.59	-0.11	0.02	0.27	0.04	0.68	-0.22	-0.10	0.90	20.0	Large
	15	-0.06	0.51	1.33	0.01	-0.46	0.00	1.54	-0.06	0.30	1.59	20.0	Large
	16	-0.06	0.51	1.33	0.01	-0.46	0.00	1.54	-0.06	0.30	1.59	20.0	Large
	17	-0.08	0.47	1.43	0.00	0.00	0.00	1.43	-0.08	0.47	1.51	20.0	Large
	18	-0.08	0.47	1.43	0.00	0.00	0.00	1.43	-0.08	0.47	1.51	20.0	Large
	19	-0.06	0.50	1.41	-0.01	0.48	0.00	1.62	-0.06	0.29	1.67	20.0	Large
	20	-0.06	0.50	1.41	-0.01	0.48	0.00	1.62	-0.06	0.29	1.67	20.0	Large
	21	-0.11	0.59	-0.10	-0.01	-0.22	0.04	0.65	-0.18	-0.10	0.83	20.0	Large
	22	-0.11	0.59	-0.10	-0.01	-0.22	0.04	0.65	-0.18	-0.10	0.83	20.0	Large
	23	-0.07	0.41	-0.04	0.15	-0.57	0.01	0.81	-0.45	-0.06	1.26	20.0	Large
	24	-0.07	0.41	-0.04	0.15	-0.57	0.01	0.81	-0.45	-0.06	1.26	20.0	Large
	25	0.24	0.14	-0.10	0.07	-0.13	-0.21	-0.22	0.11	0.39	0.61	20.0	Large
	26	0.24	0.14	-0.10	0.07	-0.13	-0.21	-0.22	0.11	0.39	0.61	20.0	Large
Outer Shell	27	-0.11	0.17	0.28	-0.02	0.44	-0.06	0.68	-0.23	-0.11	0.91	20.0	Large
	28	-0.11	0.17	0.28	-0.02	0.44	-0.06	0.68	-0.23	-0.11	0.91	20.0	Large
	29	-0.42	0.26	-1.31	0.13	0.12	-0.04	-1.32	-0.44	0.29	1.62	20.0	Large
	30	-0.42	0.26	-1.31	0.13	0.12	-0.04	-1.32	-0.44	0.29	1.62	20.0	Large
	31	-0.03	0.18	0.03	0.03	-0.50	0.00	0.61	-0.40	-0.03	1.01	20.0	Large
	32	-0.03	0.18	0.03	0.03	-0.50	0.00	0.61	-0.40	-0.03	1.01	20.0	Large
	33	-0.04	0.08	0.14	0.00	-0.01	-0.01	-0.04	0.08	0.14	0.19	20.0	Large
	34	-0.04	0.08	0.14	0.00	-0.01	-0.01	-0.04	0.08	0.14	0.19	20.0	Large
	35	-0.03	0.17	0.10	-0.03	0.47	-0.01	0.61	-0.34	-0.03	0.95	20.0	Large
	36	-0.03	0.17	0.10	-0.03	0.47	-0.01	0.61	-0.34	-0.03	0.95	20.0	Large
	37	-0.41	0.26	-1.31	-0.13	-0.14	-0.03	-1.32	-0.43	0.29	1.61	20.0	Large
	38	-0.41	0.26	-1.31	-0.13	-0.14	-0.03	-1.32	-0.43	0.29	1.61	20.0	Large
	39	0.16	0.05	-0.08	0.04	-0.35	-0.05	-0.37	0.14	0.36	0.73	20.0	Large
	40	0.16	0.05	-0.08	0.04	-0.35	-0.05	-0.37	0.14	0.36	0.73	20.0	Large
Bottom Forging	41	0.26	0.05	0.20	-0.04	-0.09	-0.12	-0.02	0.17	0.36	0.38	20.0	Large
	42	0.26	0.05	0.20	-0.04	-0.09	-0.12	-0.02	0.17	0.36	0.38	20.0	Large
	43	-0.02	0.03	0.15	-0.07	0.00	-0.13	-0.12	0.06	0.22	0.34	20.0	Large
	44	-0.02	0.03	0.15	-0.07	0.00	-0.13	-0.12	0.06	0.22	0.34	20.0	Large
	45	-0.04	-0.14	-0.29	-0.05	0.02	-0.13	0.04	-0.34	-0.16	0.38	20.0	Large
	46	-0.04	-0.14	-0.29	-0.05	0.02	-0.13	0.04	-0.34	-0.16	0.38	20.0	Large
Ram Access Cover Plate	47	-0.05	0.01	0.04	-0.06	-0.01	-0.08	-0.12	0.03	0.09	0.21	31.4	Large
	48	-0.05	0.01	0.04	-0.06	-0.01	-0.08	-0.12	0.03	0.09	0.21	31.4	Large
	49	-0.03	0.00	-0.01	-0.03	0.00	-0.09	-0.11	-0.01	0.08	0.19	31.4	Large
	50	-0.03	0.00	-0.01	-0.03	0.00	-0.09	-0.11	-0.01	0.08	0.19	31.4	Large
	51	0.02	-0.02	0.00	0.00	0.00	-0.03	0.05	-0.02	-0.02	0.07	31.4	Large
	52	0.02	-0.02	0.00	0.00	0.00	-0.03	0.05	-0.02	-0.02	0.07	31.4	Large

nct_sar.xls, vib+t-40+ip50

Table 2.6.13-6
Vibration + Thermal (-40°F) + 50 psig Internal Pressure - Pm @ 90° Azimuth

Cask Component	Stress Point	Stress Components (ksi)						Principal Stresses (ksi)			SI (ksi)	Stress Limit	M.S.
		S_X	S_Y	S_Z	S_{XY}	S_{YZ}	S_{XZ}	S_1	S_2	S_3			
Top Cover	1	0.07	-0.02	-0.03	0.00	0.00	0.01	0.08	-0.03	-0.01	0.10	20.0	Large
	2	0.07	-0.02	-0.03	0.00	0.00	0.01	0.08	-0.03	-0.01	0.10	20.0	Large
	3	0.07	-0.02	-0.13	0.06	0.00	-0.01	0.10	-0.13	-0.05	0.23	20.0	Large
	4	0.07	-0.02	-0.13	0.06	0.00	-0.01	0.10	-0.13	-0.05	0.23	20.0	Large
	5	-0.06	0.18	0.13	0.15	0.00	-0.02	-0.13	0.13	0.25	0.38	20.0	Large
	6	-0.06	0.18	0.13	0.15	0.00	-0.02	-0.13	0.13	0.25	0.38	20.0	Large
Top Flange	7	0.04	-0.02	-0.09	0.00	0.04	-0.02	-0.10	0.00	0.04	0.15	20.0	Large
	8	0.04	-0.02	-0.09	0.00	0.04	-0.02	-0.10	0.00	0.04	0.15	20.0	Large
	9	-0.29	0.32	-0.02	-0.04	0.03	0.04	0.32	-0.30	-0.01	0.63	20.0	Large
	10	-0.29	0.32	-0.02	-0.04	0.03	0.04	0.32	-0.30	-0.01	0.63	20.0	Large
Inner Shell	11	-0.05	0.34	0.41	-0.08	0.05	0.01	-0.07	0.33	0.43	0.50	20.0	Large
	12	-0.05	0.34	0.41	-0.08	0.05	0.01	-0.07	0.33	0.43	0.50	20.0	Large
	13	-0.06	0.75	1.28	0.00	-0.06	0.00	-0.06	0.74	1.29	1.36	20.0	Large
	14	-0.06	0.75	1.28	0.00	-0.06	0.00	-0.06	0.74	1.29	1.36	20.0	Large
	15	-0.02	0.79	1.29	0.00	-0.16	0.00	-0.02	0.75	1.34	1.36	20.0	Large
	16	-0.02	0.79	1.29	0.00	-0.16	0.00	-0.02	0.75	1.34	1.36	20.0	Large
	17	0.00	0.57	1.28	0.00	0.00	0.00	1.28	0.00	0.57	1.27	20.0	Large
	18	0.00	0.57	1.28	0.00	0.00	0.00	1.28	0.00	0.57	1.27	20.0	Large
	19	-0.02	0.84	1.28	0.00	0.16	0.00	-0.02	0.79	1.33	1.35	20.0	Large
	20	-0.02	0.84	1.28	0.00	0.16	0.00	-0.02	0.79	1.33	1.35	20.0	Large
	21	-0.06	0.84	1.31	0.00	0.05	0.00	-0.06	0.84	1.32	1.38	20.0	Large
	22	-0.06	0.84	1.31	0.00	0.05	0.00	-0.06	0.84	1.32	1.38	20.0	Large
	23	-0.05	0.36	-0.40	0.22	-0.05	0.01	0.46	-0.41	-0.15	0.87	20.0	Large
	24	-0.05	0.36	-0.40	0.22	-0.05	0.01	0.46	-0.41	-0.15	0.87	20.0	Large
	25	0.35	0.10	-0.39	0.11	-0.03	0.02	-0.39	0.06	0.39	0.78	20.0	Large
	26	0.35	0.10	-0.39	0.11	-0.03	0.02	-0.39	0.06	0.39	0.78	20.0	Large
Outer Shell	27	-0.08	0.36	0.10	-0.05	0.01	0.00	0.37	-0.09	0.10	0.46	20.0	Large
	28	-0.08	0.36	0.10	-0.05	0.01	0.00	0.37	-0.09	0.10	0.46	20.0	Large
	29	-0.02	0.58	0.06	0.00	-0.06	0.01	0.59	-0.03	0.06	0.61	20.0	Large
	30	-0.02	0.58	0.06	0.00	-0.06	0.01	0.59	-0.03	0.06	0.61	20.0	Large
	31	0.00	0.57	0.01	0.00	-0.10	0.01	0.59	-0.02	0.00	0.60	20.0	Large
	32	0.00	0.57	0.01	0.00	-0.10	0.01	0.59	-0.02	0.00	0.60	20.0	Large
	33	0.02	0.28	-0.05	0.00	0.00	0.00	0.28	-0.05	0.02	0.33	20.0	Large
	34	0.02	0.28	-0.05	0.00	0.00	0.00	0.28	-0.05	0.02	0.33	20.0	Large
	35	0.00	0.53	0.01	0.00	0.11	0.00	0.55	-0.01	0.00	0.57	20.0	Large
	36	0.00	0.53	0.01	0.00	0.11	0.00	0.55	-0.01	0.00	0.57	20.0	Large
	37	-0.03	0.54	0.07	0.00	0.06	0.01	0.55	-0.03	0.06	0.57	20.0	Large
	38	-0.03	0.54	0.07	0.00	0.06	0.01	0.55	-0.03	0.06	0.57	20.0	Large
	39	0.18	0.15	-0.34	0.05	-0.03	0.00	-0.34	0.11	0.23	0.57	20.0	Large
	40	0.18	0.15	-0.34	0.05	-0.03	0.00	-0.34	0.11	0.23	0.57	20.0	Large
Bottom Forging	41	0.32	0.15	0.07	-0.04	-0.01	-0.02	0.33	0.07	0.14	0.26	20.0	Large
	42	0.32	0.15	0.07	-0.04	-0.01	-0.02	0.33	0.07	0.14	0.26	20.0	Large
	43	0.03	0.03	0.01	-0.06	0.00	-0.02	0.10	-0.03	0.01	0.13	20.0	Large
	44	0.03	0.03	0.01	-0.06	0.00	-0.02	0.10	-0.03	0.01	0.13	20.0	Large
	45	0.00	-0.13	-0.47	-0.03	0.01	-0.01	-0.47	-0.13	0.00	0.47	20.0	Large
	46	0.00	-0.13	-0.47	-0.03	0.01	-0.01	-0.47	-0.13	0.00	0.47	20.0	Large
Ram Access Cover Plate	47	0.02	0.01	-0.07	-0.06	0.00	-0.01	0.08	-0.07	-0.05	0.14	31.4	Large
	48	0.02	0.01	-0.07	-0.06	0.00	-0.01	0.08	-0.07	-0.05	0.14	31.4	Large
	49	0.01	-0.01	-0.09	-0.03	0.00	-0.01	0.03	-0.09	-0.03	0.12	31.4	Large
	50	0.01	-0.01	-0.09	-0.03	0.00	-0.01	0.03	-0.09	-0.03	0.12	31.4	Large
	51	0.05	-0.02	-0.03	0.00	0.00	0.01	0.05	-0.03	-0.02	0.08	31.4	Large
	52	0.05	-0.02	-0.03	0.00	0.00	0.01	0.05	-0.03	-0.02	0.08	31.4	Large

nct_sar.xls, vib+t-40+ip50

Table 2.6.13-7
Vibration + Thermal (-40°F) + 50 psig Internal Pressure - Pm @ 135° Azimuth

Cask Component	Stress Point	Stress Components (ksi)						Principal Stresses (ksi)			SI (ksi)	Stress Limit	M.S.
		S_X	S_Y	S_Z	S_{XY}	S_{YZ}	S_{XZ}	S_1	S_2	S_3			
Top Cover	1	0.01	-0.02	0.03	0.00	0.00	0.05	0.08	-0.03	-0.01	0.11	20.0	Large
	2	0.01	-0.02	0.03	0.00	0.00	0.05	0.08	-0.03	-0.01	0.11	20.0	Large
	3	-0.02	-0.02	-0.05	0.07	-0.01	0.10	-0.15	-0.02	0.08	0.24	20.0	Large
	4	-0.02	-0.02	-0.05	0.07	-0.01	0.10	-0.15	-0.02	0.08	0.24	20.0	Large
	5	-0.07	0.06	0.17	0.15	-0.03	0.04	-0.18	0.16	0.18	0.36	20.0	Large
	6	-0.07	0.06	0.17	0.15	-0.03	0.04	-0.18	0.16	0.18	0.36	20.0	Large
Top Flange	7	0.03	0.00	-0.02	-0.01	0.00	-0.02	0.04	-0.03	0.00	0.07	20.0	Large
	8	0.03	0.00	-0.02	-0.01	0.00	-0.02	0.04	-0.03	0.00	0.07	20.0	Large
	9	-0.21	0.33	0.27	-0.02	-0.15	0.01	-0.21	0.15	0.45	0.66	20.0	Large
	10	-0.21	0.33	0.27	-0.02	-0.15	0.01	-0.21	0.15	0.45	0.66	20.0	Large
Inner Shell	11	-0.04	0.41	0.68	-0.03	-0.22	-0.01	0.80	-0.04	0.29	0.85	20.0	Large
	12	-0.04	0.41	0.68	-0.03	-0.22	-0.01	0.80	-0.04	0.29	0.85	20.0	Large
	13	-0.02	0.44	1.23	0.00	-0.21	0.00	1.28	-0.02	0.39	1.30	20.0	Large
	14	-0.02	0.44	1.23	0.00	-0.21	0.00	1.28	-0.02	0.39	1.30	20.0	Large
	15	-0.02	0.39	1.23	0.00	-0.11	0.00	1.25	-0.02	0.38	1.27	20.0	Large
	16	-0.02	0.39	1.23	0.00	-0.11	0.00	1.25	-0.02	0.38	1.27	20.0	Large
	17	-0.03	0.39	1.24	0.00	-0.01	0.00	1.24	-0.03	0.39	1.27	20.0	Large
	18	-0.03	0.39	1.24	0.00	-0.01	0.00	1.24	-0.03	0.39	1.27	20.0	Large
	19	-0.02	0.39	1.23	0.00	0.08	0.00	1.24	-0.02	0.38	1.26	20.0	Large
	20	-0.02	0.39	1.23	0.00	0.08	0.00	1.24	-0.02	0.38	1.26	20.0	Large
	21	-0.02	0.45	1.24	0.00	0.17	0.00	1.28	-0.02	0.41	1.30	20.0	Large
	22	-0.02	0.45	1.24	0.00	0.17	0.00	1.28	-0.02	0.41	1.30	20.0	Large
	23	-0.07	0.41	-0.15	0.14	0.23	-0.01	0.52	-0.25	-0.07	0.77	20.0	Large
	24	-0.07	0.41	-0.15	0.14	0.23	-0.01	0.52	-0.25	-0.07	0.77	20.0	Large
	25	0.23	0.15	-0.19	0.07	0.05	0.12	-0.22	0.11	0.30	0.53	20.0	Large
	26	0.23	0.15	-0.19	0.07	0.05	0.12	-0.22	0.11	0.30	0.53	20.0	Large
Outer Shell	27	-0.12	0.13	0.19	0.02	-0.20	0.03	0.36	-0.14	-0.03	0.49	20.0	Large
	28	-0.12	0.13	0.19	0.02	-0.20	0.03	0.36	-0.14	-0.03	0.49	20.0	Large
	29	0.02	0.05	-0.04	0.00	-0.12	0.00	-0.12	0.02	0.13	0.25	20.0	Large
	30	0.02	0.05	-0.04	0.00	-0.12	0.00	-0.12	0.02	0.13	0.25	20.0	Large
	31	0.01	0.00	-0.04	0.00	-0.04	0.00	-0.06	0.01	0.03	0.09	20.0	Large
	32	0.01	0.00	-0.04	0.00	-0.04	0.00	-0.06	0.01	0.03	0.09	20.0	Large
	33	0.00	0.03	-0.04	0.00	0.00	0.01	-0.04	0.00	0.03	0.08	20.0	Large
	34	0.00	0.03	-0.04	0.00	0.00	0.01	-0.04	0.00	0.03	0.08	20.0	Large
	35	0.00	0.00	-0.03	0.00	0.05	0.00	-0.07	0.00	0.04	0.11	20.0	Large
	36	0.00	0.00	-0.03	0.00	0.05	0.00	-0.07	0.00	0.04	0.11	20.0	Large
	37	0.02	0.05	-0.04	-0.01	0.13	0.00	-0.13	0.02	0.15	0.28	20.0	Large
	38	0.02	0.05	-0.04	-0.01	0.13	0.00	-0.13	0.02	0.15	0.28	20.0	Large
	39	0.15	0.01	-0.17	0.01	0.17	0.02	-0.27	0.11	0.16	0.43	20.0	Large
	40	0.15	0.01	-0.17	0.01	0.17	0.02	-0.27	0.11	0.16	0.43	20.0	Large
Bottom Forging	41	0.26	0.05	0.12	-0.03	0.04	0.06	0.29	0.02	0.13	0.27	20.0	Large
	42	0.26	0.05	0.12	-0.03	0.04	0.06	0.29	0.02	0.13	0.27	20.0	Large
	43	-0.02	0.03	0.07	-0.07	0.00	0.09	-0.10	0.05	0.14	0.24	20.0	Large
	44	-0.02	0.03	0.07	-0.07	0.00	0.09	-0.10	0.05	0.14	0.24	20.0	Large
	45	-0.04	-0.13	-0.33	-0.06	-0.01	0.12	-0.38	-0.15	0.02	0.40	20.0	Large
	46	-0.04	-0.13	-0.33	-0.06	-0.01	0.12	-0.38	-0.15	0.02	0.40	20.0	Large
Ram Access Cover Plate	47	-0.05	0.00	0.01	-0.06	0.01	0.07	-0.12	0.02	0.07	0.19	31.4	Large
	48	-0.05	0.00	0.01	-0.06	0.01	0.07	-0.12	0.02	0.07	0.19	31.4	Large
	49	-0.03	0.00	-0.02	-0.03	0.00	0.08	-0.11	0.00	0.07	0.18	31.4	Large
	50	-0.03	0.00	-0.02	-0.03	0.00	0.08	-0.11	0.00	0.07	0.18	31.4	Large
	51	0.01	-0.02	0.01	0.00	0.00	0.03	0.04	-0.02	-0.02	0.07	31.4	Large
	52	0.01	-0.02	0.01	0.00	0.00	0.03	0.04	-0.02	-0.02	0.07	31.4	Large

nct_sar.xls, vib+t-40+ip50

Table 2.6.13-8
Vibration + Thermal (-40°F) + 50 psig Internal Pressure - Pm @ 180° Azimuth

Cask Component	Stress Point	Stress Components (ksi)						Principal Stresses (ksi)			SI (ksi)	Stress Limit	M.S.
		S_X	S_Y	S_Z	S_{XY}	S_{YZ}	S_{XZ}	S_1	S_2	S_3			
Top Cover	1	-0.03	-0.02	0.08	0.00	0.00	-0.01	0.08	-0.03	-0.01	0.11	20.0	Large
	2	-0.03	-0.02	0.08	0.00	0.00	-0.01	0.08	-0.03	-0.01	0.11	20.0	Large
	3	-0.15	-0.02	0.06	0.08	0.00	0.00	-0.18	0.02	0.06	0.24	20.0	Large
	4	-0.15	-0.02	0.06	0.08	0.00	0.00	-0.18	0.02	0.06	0.24	20.0	Large
	5	-0.16	-0.11	0.25	0.17	-0.02	0.02	-0.31	0.03	0.25	0.56	20.0	Large
	6	-0.16	-0.11	0.25	0.17	-0.02	0.02	-0.31	0.03	0.25	0.56	20.0	Large
Top Flange	7	-0.23	0.07	-0.07	-0.04	0.03	-0.01	-0.23	-0.07	0.08	0.31	20.0	Large
	8	-0.23	0.07	-0.07	-0.04	0.03	-0.01	-0.23	-0.07	0.08	0.31	20.0	Large
	9	-0.09	0.35	0.66	0.03	-0.04	0.04	-0.09	0.34	0.67	0.76	20.0	Large
	10	-0.09	0.35	0.66	0.03	-0.04	0.04	-0.09	0.34	0.67	0.76	20.0	Large
Inner Shell	11	-0.06	0.57	0.94	0.04	-0.07	-0.05	-0.07	0.56	0.95	1.02	20.0	Large
	12	-0.06	0.57	0.94	0.04	-0.07	-0.05	-0.07	0.56	0.95	1.02	20.0	Large
	13	-0.08	0.31	1.08	0.00	-0.04	0.04	1.08	-0.08	0.31	1.16	20.0	Large
	14	-0.08	0.31	1.08	0.00	-0.04	0.04	1.08	-0.08	0.31	1.16	20.0	Large
	15	-0.04	0.22	1.20	0.00	-0.03	0.01	1.20	-0.04	0.21	1.24	20.0	Large
	16	-0.04	0.22	1.20	0.00	-0.03	0.01	1.20	-0.04	0.21	1.24	20.0	Large
	17	-0.04	0.04	1.22	0.00	0.00	0.01	1.22	-0.04	0.04	1.26	20.0	Large
	18	-0.04	0.04	1.22	0.00	0.00	0.01	1.22	-0.04	0.04	1.26	20.0	Large
	19	-0.04	0.15	1.22	0.00	0.02	0.01	1.22	-0.04	0.15	1.26	20.0	Large
	20	-0.04	0.15	1.22	0.00	0.02	0.01	1.22	-0.04	0.15	1.26	20.0	Large
	21	-0.08	0.21	1.09	0.00	0.02	0.04	1.09	-0.08	0.20	1.18	20.0	Large
	22	-0.08	0.21	1.09	0.00	0.02	0.04	1.09	-0.08	0.20	1.18	20.0	Large
	23	-0.12	0.50	0.06	0.03	0.07	-0.05	0.51	-0.13	0.07	0.64	20.0	Large
	24	-0.12	0.50	0.06	0.03	0.07	-0.05	0.51	-0.13	0.07	0.64	20.0	Large
	25	-0.06	0.20	-0.01	-0.04	0.00	0.00	0.20	-0.07	-0.01	0.27	20.0	Large
	26	-0.06	0.20	-0.01	-0.04	0.00	0.00	0.20	-0.07	-0.01	0.27	20.0	Large
Outer Shell	27	-0.24	-0.13	0.16	0.18	-0.06	0.02	-0.38	-0.01	0.17	0.56	20.0	Large
	28	-0.24	-0.13	0.16	0.18	-0.06	0.02	-0.38	-0.01	0.17	0.56	20.0	Large
	29	-0.05	-0.35	-0.16	-0.04	0.00	0.05	-0.36	-0.18	-0.03	0.32	20.0	Large
	30	-0.05	-0.35	-0.16	-0.04	0.00	0.05	-0.36	-0.18	-0.03	0.32	20.0	Large
	31	-0.01	-0.33	-0.03	0.00	-0.01	0.01	-0.33	-0.03	-0.01	0.32	20.0	Large
	32	-0.01	-0.33	-0.03	0.00	-0.01	0.01	-0.33	-0.03	-0.01	0.32	20.0	Large
	33	-0.01	-0.40	-0.04	0.00	0.00	0.01	-0.40	-0.04	0.00	0.39	20.0	Large
	34	-0.01	-0.40	-0.04	0.00	0.00	0.01	-0.40	-0.04	0.00	0.39	20.0	Large
	35	-0.01	-0.31	-0.03	0.00	0.01	0.01	-0.31	-0.04	-0.01	0.30	20.0	Large
	36	-0.01	-0.31	-0.03	0.00	0.01	0.01	-0.31	-0.04	-0.01	0.30	20.0	Large
	37	-0.06	-0.32	-0.16	0.03	0.01	0.05	-0.32	-0.17	-0.04	0.28	20.0	Large
	38	-0.06	-0.32	-0.16	0.03	0.01	0.05	-0.32	-0.17	-0.04	0.28	20.0	Large
	39	0.03	-0.14	-0.04	-0.14	0.05	-0.02	-0.22	-0.05	0.12	0.34	20.0	Large
	40	0.03	-0.14	-0.04	-0.14	0.05	-0.02	-0.22	-0.05	0.12	0.34	20.0	Large
Bottom Forging	41	0.10	-0.13	0.17	-0.04	0.01	0.01	-0.13	0.10	0.17	0.30	20.0	Large
	42	0.10	-0.13	0.17	-0.04	0.01	0.01	-0.13	0.10	0.17	0.30	20.0	Large
	43	-0.12	0.03	0.18	-0.09	0.00	0.01	-0.16	0.07	0.18	0.34	20.0	Large
	44	-0.12	0.03	0.18	-0.09	0.00	0.01	-0.16	0.07	0.18	0.34	20.0	Large
	45	-0.09	-0.14	-0.17	-0.08	0.00	0.01	-0.03	-0.20	-0.17	0.17	20.0	Large
	46	-0.09	-0.14	-0.17	-0.08	0.00	0.01	-0.03	-0.20	-0.17	0.17	20.0	Large
Ram Access Cover Plate	47	-0.13	0.00	0.11	-0.05	0.00	0.00	-0.15	0.02	0.11	0.26	31.4	Large
	48	-0.13	0.00	0.11	-0.05	0.00	0.00	-0.15	0.02	0.11	0.26	31.4	Large
	49	-0.11	0.01	0.06	-0.03	0.00	0.01	-0.11	0.01	0.06	0.18	31.4	Large
	50	-0.11	0.01	0.06	-0.03	0.00	0.01	-0.11	0.01	0.06	0.18	31.4	Large
	51	-0.02	-0.02	0.04	0.00	0.00	-0.01	0.04	-0.02	-0.02	0.06	31.4	Large
	52	-0.02	-0.02	0.04	0.00	0.00	-0.01	0.04	-0.02	-0.02	0.06	31.4	Large

nct_sar.xls, vib+t-40+ip50

Table 2.6.13-9
Vibration + Thermal (-40°F) + 50 psig Internal Pressure - Pm + Pb @ 0° Azimuth

Cask Component	Stress Point	Stress Components (ksi)						Principal Stresses (ksi)			SI (ksi)	Stress Limit	M.S.
		S_X	S_Y	S_Z	S_{XY}	S_{YZ}	S_{XZ}	S_1	S_2	S_3			
Top Cover	1	-0.04	-2.06	-1.93	-0.01	0.00	-0.01	-0.04	-2.06	-1.93	2.01	30.0	Large
	2	-0.02	2.03	2.08	0.01	0.00	0.00	-0.02	2.03	2.08	2.10	30.0	Large
	3	-0.22	-1.59	-1.60	0.07	0.00	0.00	-0.22	-1.60	-1.60	1.38	30.0	Large
	4	-0.02	1.55	1.84	0.07	0.00	0.00	-0.02	1.56	1.84	1.87	30.0	Large
	5	-0.39	-0.42	-0.46	0.15	0.00	0.00	-0.26	-0.55	-0.46	0.29	30.0	Large
	6	0.14	0.36	1.26	0.16	0.01	0.00	1.26	0.06	0.44	1.21	30.0	Large
Top Flange	7	-0.30	-0.54	0.09	-0.10	-0.02	0.05	0.09	-0.57	-0.28	0.67	30.0	Large
	8	-0.09	0.67	0.35	0.01	0.09	0.07	-0.10	0.33	0.70	0.79	30.0	Large
	9	-0.24	0.26	0.84	-0.12	0.02	0.07	0.85	-0.27	0.28	1.12	30.0	Large
	10	-0.29	0.18	0.81	0.02	0.06	0.11	0.83	-0.30	0.17	1.13	30.0	Large
Inner Shell	11	-0.12	-0.63	0.99	-0.05	0.06	0.06	1.00	-0.64	-0.12	1.64	30.0	Large
	12	-0.08	1.23	1.64	0.09	0.11	0.13	-0.10	1.20	1.68	1.78	30.0	Large
	13	-0.18	1.96	-1.21	0.04	0.05	-0.17	1.96	-1.24	-0.15	3.19	30.0	8.39
	14	-0.18	-2.41	-2.34	0.03	0.05	-0.26	-0.15	-2.44	-2.34	2.29	30.0	Large
	15	-0.12	-0.56	1.00	0.00	-0.11	0.03	1.01	-0.57	-0.12	1.58	30.0	Large
	16	-0.05	0.61	1.82	0.00	-0.08	0.10	1.83	-0.06	0.60	1.89	30.0	Large
	17	-0.11	0.49	0.89	0.00	0.00	0.02	-0.11	0.49	0.89	1.00	30.0	Large
	18	-0.05	0.96	2.14	0.00	0.00	0.13	2.15	-0.05	0.96	2.20	30.0	Large
	19	-0.11	-0.48	1.19	-0.01	0.11	0.04	1.20	-0.48	-0.11	1.68	30.0	Large
	20	-0.05	0.53	2.00	0.00	0.08	0.12	2.01	-0.06	0.53	2.07	30.0	Large
	21	-0.18	1.83	-1.21	-0.04	-0.04	-0.17	1.83	-1.24	-0.15	3.07	30.0	.88
	22	-0.18	-2.48	-2.34	-0.03	-0.04	-0.26	-0.15	-2.50	-2.35	2.35	30.0	Large
	23	-0.13	0.78	0.51	0.16	-0.05	0.06	-0.16	0.51	0.81	0.97	30.0	Large
	24	-0.20	-0.06	0.38	0.00	-0.12	0.12	0.43	-0.23	-0.08	0.66	30.0	Large
	25	0.39	0.75	0.45	0.13	-0.02	0.02	0.79	0.34	0.45	0.45	30.0	Large
	26	0.00	-0.39	0.07	0.04	-0.04	0.04	-0.40	-0.01	0.09	0.49	30.0	Large
Outer Shell	27	-0.18	-1.63	0.17	0.05	0.07	0.01	-1.64	-0.18	0.18	1.81	30.0	Large
	28	-0.13	1.41	1.09	-0.05	0.11	0.07	-0.14	1.06	1.45	1.58	30.0	Large
	29	-0.71	4.46	-1.63	0.32	0.00	-0.07	4.48	-1.63	-0.73	6.12	30.0	3.91
	30	-1.32	-5.75	-4.65	0.36	0.00	-0.28	-1.27	-5.78	-4.67	4.51	30.0	5.65
	31	-0.01	-1.51	-0.53	0.02	-0.13	-0.01	-1.53	-0.51	-0.01	1.52	30.0	Large
	32	0.01	0.63	0.71	0.02	-0.07	0.10	0.00	0.60	0.76	0.76	30.0	Large
	33	-0.01	-0.03	-0.58	0.00	0.00	-0.01	-0.58	-0.03	-0.01	0.57	30.0	Large
	34	0.01	0.64	1.14	0.00	0.00	0.14	-0.01	0.64	1.16	1.17	30.0	Large
	35	-0.01	-1.26	-0.35	-0.03	0.13	0.01	-1.28	-0.33	-0.01	1.27	30.0	Large
	36	0.01	0.53	0.84	-0.02	0.07	0.11	-0.01	0.51	0.87	0.87	30.0	Large
	37	-0.69	4.28	-1.68	-0.32	0.00	-0.07	4.31	-1.68	-0.71	5.99	30.0	4.01
	38	-1.25	-5.55	-4.57	-0.36	0.00	-0.28	-1.19	-5.58	-4.60	4.39	30.0	5.84
	39	0.53	-0.11	0.28	0.01	-0.07	0.00	-0.12	0.29	0.53	0.65	30.0	Large
	40	0.03	-0.08	0.28	0.08	-0.10	0.05	0.31	-0.15	0.07	0.46	30.0	Large
Bottom Forging	41	0.96	0.10	0.32	0.02	-0.01	0.01	0.96	0.10	0.32	0.86	30.0	Large
	42	-0.02	-0.15	0.44	-0.03	0.00	-0.01	0.44	-0.16	-0.02	0.60	30.0	Large
	43	-0.17	-0.14	-0.28	-0.08	0.00	0.00	-0.08	-0.28	-0.23	0.20	30.0	Large
	44	0.03	0.21	0.83	-0.08	0.00	0.00	0.83	0.00	0.24	0.83	30.0	Large
	45	-0.06	-0.32	-0.80	-0.07	0.00	-0.01	-0.80	-0.34	-0.04	0.76	30.0	Large
	46	-0.06	0.02	0.58	-0.08	0.00	0.00	0.58	-0.11	0.07	0.69	30.0	Large
Ram Access Cover Plate	47	-0.26	-0.20	-0.04	-0.04	0.00	0.00	-0.04	-0.28	-0.18	0.24	47.1	Large
	48	-0.01	0.22	0.29	-0.07	0.00	0.00	-0.03	0.24	0.29	0.32	47.1	Large
	49	-0.20	-0.33	-0.21	-0.01	0.00	-0.01	-0.33	-0.21	-0.20	0.13	47.1	Large
	50	-0.01	0.33	0.35	-0.03	0.00	0.00	-0.02	0.33	0.35	0.36	47.1	Large
	51	-0.05	-0.34	-0.27	0.00	0.00	-0.01	-0.05	-0.34	-0.27	0.30	47.1	Large
	52	0.00	0.30	0.35	0.01	0.00	0.00	0.00	0.30	0.35	0.35	47.1	Large

nct_sar.xls, vib+t-40+ip50

Table 2.6.13-10
Vibration + Thermal (-40°F) + 50 psig Internal Pressure - Pm + Pb @ 45° Azimuth

Cask Component	Stress Point	Stress Components (ksi)						Principal Stresses (ksi)			SI (ksi)	Stress Limit	M.S.
		S_X	S_Y	S_Z	S_{XY}	S_{YZ}	S_{XZ}	S_1	S_2	S_3			
Top Cover	1	0.04	-2.06	-2.01	-0.01	-0.01	-0.08	0.05	-2.06	-2.01	2.10	30.0	Large
	2	0.02	2.03	2.05	0.01	0.00	-0.03	0.01	2.03	2.05	2.04	30.0	Large
	3	-0.02	-1.59	-1.76	0.07	0.01	-0.19	0.01	-1.78	-1.59	1.79	30.0	Large
	4	-0.03	1.55	1.76	0.07	0.01	-0.05	-0.04	1.55	1.76	1.80	30.0	Large
	5	-0.11	-0.31	-0.58	0.15	0.02	-0.25	0.05	-0.71	-0.34	0.75	30.0	Large
	6	-0.07	0.43	1.08	0.15	0.07	0.06	1.09	-0.11	0.46	1.20	30.0	Large
Top Flange	7	0.06	0.05	0.06	-0.01	0.08	0.01	-0.03	0.06	0.14	0.17	30.0	Large
	8	0.01	-0.04	0.02	-0.01	-0.10	0.00	-0.11	0.01	0.09	0.20	30.0	Large
	9	-0.13	0.67	0.55	-0.03	0.46	0.08	1.07	-0.15	0.17	1.22	30.0	Large
	10	-0.31	-0.03	0.27	-0.02	0.15	-0.08	0.34	-0.32	-0.09	0.66	30.0	Large
Inner Shell	11	-0.05	0.28	0.77	-0.05	0.79	0.01	1.36	-0.31	-0.04	1.66	30.0	Large
	12	-0.04	0.56	0.83	-0.02	0.43	0.02	1.14	-0.04	0.25	1.18	30.0	Large
	13	-0.15	1.26	0.03	0.02	0.39	-0.01	1.38	-0.15	-0.09	1.52	30.0	Large
	14	-0.07	-0.09	-0.25	0.02	0.16	0.08	-0.36	-0.09	0.04	0.39	30.0	Large
	15	-0.08	0.31	1.39	0.01	-0.56	-0.02	1.63	-0.08	0.07	1.71	30.0	Large
	16	-0.04	0.71	1.27	0.01	-0.36	0.02	1.45	-0.04	0.53	1.48	30.0	Large
	17	-0.10	0.59	1.83	0.00	0.00	-0.01	1.83	-0.10	0.59	1.92	30.0	Large
	18	-0.06	0.34	1.03	0.00	0.00	0.01	1.03	-0.06	0.34	1.09	30.0	Large
	19	-0.08	0.35	1.50	-0.01	0.56	-0.02	1.73	-0.08	0.12	1.81	30.0	Large
	20	-0.04	0.65	1.31	-0.01	0.40	0.02	1.50	-0.04	0.46	1.54	30.0	Large
	21	-0.15	1.25	0.04	-0.01	-0.34	-0.01	1.34	-0.15	-0.05	1.49	30.0	Large
	22	-0.07	-0.08	-0.23	-0.01	-0.11	0.08	-0.31	-0.09	0.01	0.32	30.0	Large
	23	-0.03	1.58	0.31	0.15	-0.73	0.00	1.92	-0.10	0.03	2.01	30.0	Large
	24	-0.14	-0.74	-0.38	0.15	-0.41	0.03	-1.02	-0.18	-0.06	0.97	30.0	Large
	25	0.48	0.92	0.16	0.06	-0.24	-0.24	0.00	0.55	1.03	1.03	30.0	Large
	26	0.02	-0.62	-0.36	0.07	-0.02	-0.18	0.10	-0.63	-0.43	0.73	30.0	Large
Outer Shell	27	-0.17	-0.39	0.12	-0.03	0.77	-0.07	0.68	-0.95	-0.18	1.63	30.0	Large
	28	-0.06	0.72	0.44	-0.02	0.12	-0.05	-0.06	0.40	0.77	0.83	30.0	Large
	29	-0.33	1.92	-0.89	0.12	0.34	-0.11	1.97	-0.96	-0.31	2.93	30.0	9.24
	30	-0.51	-1.40	-1.73	0.14	-0.09	0.04	-0.49	-1.75	-1.39	1.26	30.0	Large
	31	-0.02	-0.24	0.06	0.03	-0.67	-0.03	-0.78	-0.03	0.60	1.38	30.0	Large
	32	-0.03	0.59	0.00	0.04	-0.33	0.02	0.74	-0.16	-0.02	0.90	30.0	Large
	33	-0.03	0.29	0.71	0.00	-0.01	-0.03	0.71	-0.03	0.29	0.74	30.0	Large
	34	-0.06	-0.12	-0.43	0.00	-0.01	0.01	-0.43	-0.12	-0.06	0.37	30.0	Large
	35	-0.02	-0.12	0.19	-0.03	0.62	-0.03	0.67	-0.60	-0.03	1.28	30.0	Large
	36	-0.03	0.46	0.01	-0.04	0.33	0.02	0.63	-0.18	-0.03	0.81	30.0	Large
	37	-0.33	1.80	-0.93	-0.13	-0.36	-0.11	1.85	-1.00	-0.31	2.85	30.0	9.53
	38	-0.49	-1.29	-1.68	-0.14	0.07	0.04	-0.46	-1.69	-1.30	1.23	30.0	Large
	39	0.53	0.77	0.14	0.04	-0.57	-0.06	-0.19	0.52	1.11	1.31	30.0	Large
	40	0.08	-0.66	-0.30	0.03	-0.14	-0.04	-0.70	-0.26	0.09	0.79	30.0	Large
Bottom Forging	41	1.05	0.29	0.05	-0.03	-0.20	-0.26	1.12	-0.11	0.39	1.23	30.0	Large
	42	0.00	-0.19	0.35	-0.04	0.02	0.02	0.36	-0.20	0.01	0.56	30.0	Large
	43	-0.01	-0.14	-0.53	-0.07	0.00	-0.23	-0.62	-0.16	0.09	0.72	30.0	Large
	44	-0.03	0.21	0.83	-0.07	0.00	-0.02	0.83	-0.05	0.23	0.88	30.0	Large
	45	-0.02	-0.30	-1.05	-0.05	0.01	-0.19	-1.08	-0.31	0.02	1.10	30.0	Large
	46	-0.03	0.02	0.47	-0.05	0.03	-0.08	0.49	-0.07	0.04	0.56	30.0	Large
Ram Access Cover Plate	47	-0.09	-0.20	-0.19	-0.06	0.01	-0.15	0.04	-0.30	-0.20	0.34	47.1	Large
	48	-0.03	0.22	0.26	-0.06	-0.03	-0.01	-0.04	0.22	0.28	0.32	47.1	Large
	49	-0.06	-0.33	-0.31	-0.03	0.01	-0.14	0.01	-0.38	-0.33	0.38	47.1	Large
	50	-0.01	0.32	0.30	-0.03	0.00	-0.03	-0.02	0.30	0.32	0.34	47.1	Large
	51	0.00	-0.34	-0.32	0.00	0.00	-0.04	0.01	-0.34	-0.33	0.35	47.1	Large
	52	0.03	0.30	0.32	0.00	0.01	-0.03	0.03	0.30	0.33	0.30	47.1	Large

Table 2.6.13-11
Vibration + Thermal (-40°F) + 50 psig Internal Pressure - Pm + Pb @ 90° Azimuth

Cask Component	Stress Point	Stress Components (ksi)						Principal Stresses (ksi)			SI (ksi)	Stress Limit	M.S.
		S_X	S_Y	S_Z	S_{XY}	S_{YZ}	S_{XZ}	S_1	S_2	S_3			
Top Cover	1	0.11	-2.06	-2.08	0.00	-0.01	0.01	0.11	-2.08	-2.05	2.19	30.0	Large
	2	0.04	2.03	2.03	0.00	0.01	0.00	0.04	2.02	2.03	1.99	30.0	Large
	3	0.18	-1.59	-1.93	0.06	0.00	-0.01	0.18	-1.93	-1.59	2.11	30.0	Large
	4	-0.03	1.55	1.67	0.06	0.00	-0.02	-0.03	1.55	1.67	1.70	30.0	Large
	5	0.16	-0.16	-0.68	0.15	0.00	0.00	-0.68	-0.22	0.22	0.90	30.0	Large
	6	-0.29	0.53	0.93	0.14	0.00	-0.04	-0.32	0.55	0.94	1.25	30.0	Large
Top Flange	7	0.08	0.03	-0.08	0.00	0.01	-0.03	-0.09	0.03	0.09	0.18	30.0	Large
	8	0.01	-0.06	-0.09	0.00	0.06	-0.01	-0.14	-0.02	0.01	0.15	30.0	Large
	9	-0.14	0.94	0.16	0.03	-0.01	0.00	0.94	-0.14	0.16	1.08	30.0	Large
	10	-0.48	-0.29	-0.19	-0.10	0.07	0.08	-0.55	-0.25	-0.15	0.40	30.0	Large
Inner Shell	11	-0.05	0.67	0.47	-0.05	-0.01	0.01	-0.05	0.47	0.67	0.72	30.0	Large
	12	-0.06	0.00	0.35	-0.12	0.11	0.02	0.38	-0.16	0.07	0.54	30.0	Large
	13	-0.09	0.60	1.12	0.00	-0.07	0.02	-0.09	0.59	1.13	1.22	30.0	Large
	14	-0.04	0.90	1.45	0.00	-0.06	-0.02	-0.04	0.89	1.46	1.49	30.0	Large
	15	-0.05	0.67	1.04	0.00	-0.10	0.01	-0.05	0.65	1.07	1.12	30.0	Large
	16	0.01	0.92	1.53	0.00	-0.22	-0.01	0.01	0.85	1.60	1.60	30.0	Large
	17	-0.03	0.46	0.92	0.00	0.00	-0.01	-0.03	0.46	0.92	0.95	30.0	Large
	18	0.03	0.69	1.63	0.00	0.00	0.01	1.63	0.03	0.69	1.60	30.0	Large
	19	-0.05	0.71	1.02	0.00	0.09	0.01	-0.05	0.69	1.05	1.09	30.0	Large
	20	0.01	0.96	1.53	0.00	0.22	-0.01	0.01	0.89	1.61	1.60	30.0	Large
	21	-0.09	0.70	1.14	0.00	0.05	0.02	-0.09	0.69	1.15	1.25	30.0	Large
	22	-0.03	0.98	1.48	0.00	0.05	-0.02	-0.04	0.98	1.48	1.52	30.0	Large
	23	0.01	2.04	0.07	0.16	0.01	0.01	2.06	0.00	0.07	2.06	30.0	Large
	24	-0.16	-1.30	-0.88	0.29	-0.12	0.02	-0.09	-1.40	-0.85	1.31	30.0	Large
	25	0.70	1.18	-0.03	0.06	-0.01	0.01	-0.03	0.69	1.19	1.22	30.0	Large
	26	0.04	-0.98	-0.74	0.15	-0.05	0.03	0.06	-1.01	-0.73	1.07	30.0	Large
Outer Shell	27	-0.15	0.47	0.07	-0.10	-0.07	0.00	0.50	-0.17	0.06	0.66	30.0	Large
	28	-0.01	0.24	0.12	0.00	0.09	0.00	0.29	-0.01	0.08	0.30	30.0	Large
	29	-0.05	0.35	-0.21	0.00	-0.07	0.03	0.36	-0.22	-0.04	0.58	30.0	Large
	30	0.00	0.81	0.33	0.00	-0.05	-0.01	0.81	0.00	0.33	0.81	30.0	Large
	31	-0.01	0.35	-0.39	0.00	0.00	0.02	-0.39	-0.01	0.35	0.75	30.0	Large
	32	0.01	0.78	0.41	0.00	-0.20	-0.01	0.87	0.01	0.32	0.86	30.0	Large
	33	0.01	0.11	-0.61	0.00	0.00	-0.01	-0.61	0.01	0.11	0.72	30.0	Large
	34	0.03	0.46	0.51	0.00	0.00	0.00	0.03	0.46	0.51	0.48	30.0	Large
	35	-0.01	0.33	-0.40	0.00	0.00	0.02	-0.40	-0.01	0.33	0.74	30.0	Large
	36	0.01	0.73	0.42	0.00	0.21	-0.01	0.84	0.01	0.32	0.83	30.0	Large
	37	-0.05	0.24	-0.23	0.00	0.06	0.03	0.25	-0.24	-0.04	0.49	30.0	Large
	38	0.00	0.84	0.36	0.00	0.06	-0.01	0.84	0.00	0.35	0.85	30.0	Large
	39	0.55	1.54	0.05	0.10	0.02	0.00	1.55	0.05	0.54	1.50	30.0	Large
	40	0.12	-1.22	-0.72	0.01	-0.08	0.00	0.12	-1.24	-0.71	1.35	30.0	Large
Bottom Forging	41	1.25	0.55	-0.15	-0.03	-0.01	0.01	1.25	-0.15	0.55	1.40	30.0	Large
	42	-0.08	-0.25	0.29	-0.05	0.00	-0.05	0.30	-0.27	-0.07	0.56	30.0	Large
	43	0.14	-0.14	-0.78	-0.06	0.00	0.00	-0.78	-0.16	0.16	0.93	30.0	Large
	44	-0.08	0.21	0.80	-0.06	0.00	-0.04	0.80	-0.09	0.23	0.89	30.0	Large
	45	0.00	-0.28	-1.30	-0.04	0.00	0.00	-1.30	-0.28	0.01	1.30	30.0	Large
	46	0.01	0.03	0.36	-0.03	0.01	-0.02	0.36	-0.01	0.05	0.37	30.0	Large
Ram Access Cover Plate	47	0.07	-0.19	-0.35	-0.08	0.00	-0.01	0.09	-0.35	-0.21	0.43	47.1	Large
	48	-0.05	0.21	0.21	-0.05	0.00	-0.01	-0.06	0.21	0.22	0.28	47.1	Large
	49	0.05	-0.33	-0.42	-0.04	0.00	0.00	0.05	-0.42	-0.34	0.47	47.1	Large
	50	-0.03	0.31	0.24	-0.02	0.00	-0.01	-0.03	0.24	0.31	0.34	47.1	Large
	51	0.04	-0.34	-0.36	0.00	0.00	0.01	0.04	-0.36	-0.34	0.40	47.1	Large
	52	0.05	0.30	0.30	0.00	0.01	0.00	0.05	0.29	0.31	0.26	47.1	Large

nct_sar.xls, vib+t-40+ip50

Table 2.6.13-12
Vibration + Thermal (-40°F) + 50 psig Internal Pressure - Pm + Pb @ 135° Azimuth

Cask Component	Stress Point	Stress Components (ksi)						Principal Stresses (ksi)			SI (ksi)	Stress Limit	M.S.
		S_X	S_Y	S_Z	S_{XY}	S_{YZ}	S_{XZ}	S_1	S_2	S_3			
Top Cover	1	0.02	-2.06	-1.99	0.01	-0.01	0.08	0.03	-2.06	-2.00	2.08	30.0	Large
	2	0.01	2.03	2.06	0.00	0.01	0.03	0.01	2.03	2.06	2.06	30.0	Large
	3	-0.05	-1.59	-1.82	0.07	-0.01	0.16	-0.03	-1.83	-1.59	1.81	30.0	Large
	4	0.00	1.55	1.72	0.07	-0.01	0.03	0.00	1.55	1.72	1.72	30.0	Large
	5	-0.12	-0.31	-0.68	0.15	-0.01	0.16	-0.01	-0.73	-0.37	0.71	30.0	Large
	6	-0.04	0.43	1.02	0.15	-0.05	-0.07	1.03	-0.09	0.47	1.11	30.0	Large
Top Flange	7	0.06	0.06	0.00	-0.01	-0.06	-0.04	-0.05	0.07	0.10	0.15	30.0	Large
	8	0.01	-0.06	-0.04	-0.01	0.06	-0.01	-0.12	0.00	0.02	0.14	30.0	Large
	9	-0.12	0.73	0.40	-0.01	-0.22	-0.04	0.84	-0.13	0.29	0.96	30.0	Large
	10	-0.32	-0.06	0.13	-0.03	-0.07	0.05	0.16	-0.33	-0.08	0.49	30.0	Large
Inner Shell	11	-0.05	0.42	0.68	-0.03	-0.29	-0.01	0.87	-0.05	0.24	0.92	30.0	Large
	12	-0.04	0.40	0.68	-0.03	-0.15	-0.01	0.75	-0.04	0.33	0.79	30.0	Large
	13	-0.05	0.44	1.22	0.00	-0.27	0.00	1.31	-0.05	0.36	1.35	30.0	Large
	14	0.00	0.45	1.23	0.00	-0.14	0.00	1.25	0.00	0.42	1.25	30.0	Large
	15	-0.04	0.41	1.27	0.00	-0.17	0.00	1.30	-0.04	0.38	1.34	30.0	Large
	16	0.00	0.37	1.20	0.00	-0.06	-0.01	1.20	0.00	0.37	1.20	30.0	Large
	17	-0.06	0.37	1.23	0.00	-0.01	0.01	1.23	-0.06	0.37	1.29	30.0	Large
	18	-0.01	0.41	1.24	0.00	0.00	-0.02	1.24	-0.01	0.41	1.25	30.0	Large
	19	-0.04	0.41	1.27	0.00	0.13	0.00	1.29	-0.04	0.39	1.33	30.0	Large
	20	0.00	0.37	1.19	0.00	0.02	-0.01	1.19	0.00	0.36	1.20	30.0	Large
	21	-0.05	0.45	1.24	0.00	0.23	-0.01	1.30	-0.05	0.38	1.35	30.0	Large
	22	0.01	0.45	1.25	0.00	0.11	0.00	1.27	0.01	0.44	1.26	30.0	Large
	23	-0.03	1.62	0.21	0.14	0.29	-0.01	1.69	-0.05	0.16	1.74	30.0	Large
	24	-0.14	-0.79	-0.50	0.14	0.17	-0.01	-0.89	-0.43	-0.11	0.78	30.0	Large
	25	0.47	0.93	0.06	0.07	0.11	0.14	0.01	0.49	0.95	0.94	30.0	Large
	26	0.02	-0.61	-0.44	0.07	0.00	0.10	0.04	-0.62	-0.46	0.67	30.0	Large
Outer Shell	27	-0.18	-0.37	0.03	0.02	-0.34	0.04	0.23	-0.57	-0.18	0.80	30.0	Large
	28	-0.06	0.61	0.35	0.02	-0.05	0.03	-0.07	0.34	0.62	0.69	30.0	Large
	29	0.01	0.08	-0.07	0.00	-0.22	-0.01	-0.23	0.01	0.24	0.46	30.0	Large
	30	0.03	0.02	-0.01	0.00	-0.02	0.00	-0.01	0.03	0.03	0.05	30.0	Large
	31	0.01	0.04	-0.02	0.00	-0.13	0.01	-0.13	0.01	0.14	0.27	30.0	Large
	32	0.00	-0.03	-0.06	0.00	0.05	-0.01	-0.10	0.00	0.01	0.10	30.0	Large
	33	-0.01	0.00	-0.09	0.00	0.00	0.03	-0.09	0.00	0.00	0.10	30.0	Large
	34	0.00	0.06	0.00	0.00	0.00	-0.01	0.06	-0.02	0.01	0.08	30.0	Large
	35	0.01	0.04	-0.01	0.00	0.14	0.01	0.16	-0.13	0.01	0.29	30.0	Large
	36	0.00	-0.04	-0.06	0.00	-0.04	-0.01	-0.09	-0.01	0.00	0.09	30.0	Large
	37	0.01	-0.01	-0.10	-0.01	0.24	-0.01	-0.30	0.01	0.19	0.48	30.0	Large
	38	0.03	0.11	0.03	-0.01	0.03	0.00	0.12	0.01	0.03	0.10	30.0	Large
	39	0.52	0.69	0.03	0.01	0.27	0.03	-0.06	0.51	0.79	0.85	30.0	Large
	40	0.07	-0.65	-0.37	0.01	0.08	0.02	0.07	-0.67	-0.35	0.74	30.0	Large
Bottom Forging	41	1.04	0.29	-0.05	-0.03	0.09	0.15	1.06	-0.10	0.31	1.16	30.0	Large
	42	0.01	-0.19	0.30	-0.04	-0.01	-0.04	0.30	-0.20	0.02	0.50	30.0	Large
	43	-0.05	-0.14	-0.62	-0.07	0.00	0.19	-0.67	-0.17	0.03	0.71	30.0	Large
	44	0.01	0.21	0.76	-0.07	0.00	-0.01	0.76	-0.01	0.23	0.77	30.0	Large
	45	-0.05	-0.29	-1.10	-0.06	-0.01	0.18	-1.13	-0.30	-0.01	1.12	30.0	Large
	46	-0.02	0.04	0.44	-0.06	-0.02	0.06	0.45	-0.06	0.07	0.51	30.0	Large
Ram Access Cover Plate	47	-0.10	-0.20	-0.21	-0.06	-0.01	0.15	0.02	-0.32	-0.21	0.34	47.1	Large
	48	-0.02	0.21	0.24	-0.06	0.04	0.00	-0.03	0.19	0.27	0.30	47.1	Large
	49	-0.07	-0.32	-0.33	-0.03	0.00	0.14	0.00	-0.39	-0.32	0.38	47.1	Large
	50	0.00	0.33	0.29	-0.03	0.00	0.03	-0.01	0.30	0.33	0.33	47.1	Large
	51	-0.01	-0.34	-0.31	0.00	0.00	0.04	-0.01	-0.34	-0.31	0.34	47.1	Large
	52	0.02	0.30	0.33	-0.01	0.00	0.03	0.02	0.30	0.33	0.31	47.1	Large

nct_sar.xls, vib+t-40+ip50

Table 2.6.13-13
Vibration + Thermal (-40°F) + 50 psig Internal Pressure - Pm + Pb @ 180° Azimuth

Cask Component	Stress Point	Stress Components (ksi)						Principal Stresses (ksi)			SI (ksi)	Stress Limit	M.S.
		S_X	S_Y	S_Z	S_{XY}	S_{YZ}	S_{XZ}	S_1	S_2	S_3			
Top Cover	1	-0.04	-2.06	-1.93	0.01	0.00	-0.01	-0.04	-2.06	-1.93	2.01	30.0	Large
	2	-0.02	2.03	2.08	-0.01	0.00	0.00	-0.02	2.03	2.08	2.10	30.0	Large
	3	-0.28	-1.59	-1.69	0.08	0.00	0.00	-0.27	-1.69	-1.60	1.42	30.0	Large
	4	-0.02	1.55	1.81	0.08	0.00	0.01	-0.02	1.56	1.81	1.83	30.0	Large
	5	-0.60	-0.53	-0.67	0.16	-0.01	0.03	-0.40	-0.74	-0.66	0.33	30.0	Large
	6	0.26	0.30	1.17	0.18	-0.03	0.01	1.17	0.10	0.46	1.07	30.0	Large
Top Flange	7	-0.30	-0.19	-0.09	-0.05	0.03	-0.01	-0.32	-0.18	-0.08	0.24	30.0	Large
	8	-0.13	0.33	-0.04	-0.02	0.03	-0.01	0.33	-0.14	-0.04	0.47	30.0	Large
	9	-0.13	0.44	0.81	-0.05	-0.09	0.01	-0.13	0.42	0.83	0.96	30.0	Large
	10	-0.08	0.26	0.52	0.12	0.01	0.06	-0.12	0.30	0.52	0.65	30.0	Large
Inner Shell	11	-0.10	0.30	0.99	0.00	-0.12	-0.06	1.01	-0.10	0.28	1.12	30.0	Large
	12	-0.03	0.84	0.89	0.07	-0.01	-0.04	-0.04	0.84	0.89	0.93	30.0	Large
	13	-0.09	0.47	1.38	0.00	-0.03	0.00	1.38	-0.09	0.47	1.47	30.0	Large
	14	-0.06	0.14	0.78	0.00	-0.04	0.07	0.79	-0.07	0.14	0.86	30.0	Large
	15	-0.07	0.28	1.44	0.00	-0.03	-0.02	1.44	-0.07	0.28	1.51	30.0	Large
	16	-0.02	0.15	0.96	0.00	-0.02	0.04	0.96	-0.02	0.15	0.98	30.0	Large
	17	-0.06	0.17	1.58	0.00	0.00	-0.03	1.58	-0.06	0.17	1.64	30.0	Large
	18	-0.02	-0.09	0.87	0.00	0.00	0.05	0.87	-0.09	-0.03	0.96	30.0	Large
	19	-0.06	0.22	1.47	0.00	0.02	-0.02	1.47	-0.06	0.22	1.53	30.0	Large
	20	-0.02	0.08	0.97	0.00	0.01	0.04	0.97	-0.02	0.08	0.99	30.0	Large
	21	-0.10	0.37	1.40	0.00	0.02	0.00	1.40	-0.10	0.36	1.50	30.0	Large
	22	-0.07	0.05	0.79	0.00	0.03	0.07	0.80	-0.07	0.04	0.87	30.0	Large
	23	-0.14	1.19	0.36	0.11	0.13	-0.04	1.22	-0.16	0.34	1.38	30.0	Large
	24	-0.13	-0.18	-0.23	-0.04	0.01	-0.05	-0.09	-0.25	-0.20	0.16	30.0	Large
	25	0.02	0.49	0.10	0.02	0.03	0.00	0.49	0.02	0.09	0.47	30.0	Large
	26	-0.12	-0.07	-0.12	-0.09	-0.04	0.00	0.01	-0.19	-0.12	0.20	30.0	Large
Outer Shell	27	-0.29	-1.41	-0.08	0.26	-0.14	0.04	-1.48	-0.24	-0.06	1.42	30.0	Large
	28	-0.20	1.14	0.40	0.11	0.02	-0.01	1.14	-0.21	0.40	1.35	30.0	Large
	29	-0.06	-0.03	0.28	-0.03	0.02	-0.01	0.28	-0.08	-0.01	0.36	30.0	Large
	30	-0.05	-0.67	-0.60	-0.04	-0.02	0.10	-0.03	-0.68	-0.61	0.65	30.0	Large
	31	-0.01	-0.25	0.29	0.00	-0.01	-0.04	0.29	-0.25	-0.01	0.54	30.0	Large
	32	-0.01	-0.42	-0.35	0.00	0.00	0.05	0.00	-0.42	-0.36	0.41	30.0	Large
	33	0.01	-0.19	0.45	0.00	0.00	-0.05	0.46	-0.19	0.00	0.65	30.0	Large
	34	-0.02	-0.60	-0.53	0.00	0.00	0.07	-0.01	-0.60	-0.54	0.60	30.0	Large
	35	-0.01	-0.20	0.30	0.00	0.02	-0.04	0.31	-0.20	-0.01	0.51	30.0	Large
	36	-0.01	-0.42	-0.37	0.00	0.01	0.05	0.00	-0.42	-0.37	0.41	30.0	Large
	37	-0.07	-0.09	0.27	0.02	-0.02	-0.01	0.27	-0.10	-0.05	0.37	30.0	Large
	38	-0.05	-0.54	-0.58	0.03	0.03	0.10	-0.03	-0.61	-0.54	0.57	30.0	Large
	39	0.40	-0.49	-0.05	-0.22	0.11	0.01	-0.57	-0.03	0.45	1.02	30.0	Large
	40	-0.04	0.22	-0.04	-0.06	-0.02	-0.06	0.23	-0.11	0.02	0.34	30.0	Large
Bottom Forging	41	0.61	-0.15	-0.01	-0.07	0.03	0.01	0.62	-0.16	0.00	0.78	30.0	Large
	42	0.11	-0.10	0.34	-0.02	0.00	0.01	0.35	-0.11	0.11	0.45	30.0	Large
	43	-0.29	-0.14	-0.44	-0.08	0.00	0.01	-0.10	-0.44	-0.33	0.33	30.0	Large
	44	0.05	0.21	0.80	-0.09	0.00	0.02	0.80	0.01	0.24	0.79	30.0	Large
	45	-0.09	-0.32	-0.89	-0.08	0.00	0.02	-0.89	-0.34	-0.07	0.83	30.0	Large
	46	-0.07	0.03	0.54	-0.09	0.00	0.00	0.54	-0.12	0.08	0.66	30.0	Large
Ram Access Cover Plate	47	-0.28	-0.21	-0.07	-0.04	-0.01	0.00	-0.07	-0.30	-0.19	0.23	47.1	Large
	48	0.01	0.21	0.29	-0.07	0.01	0.00	-0.01	0.23	0.29	0.30	47.1	Large
	49	-0.22	-0.32	-0.22	-0.01	0.00	0.01	-0.32	-0.23	-0.21	0.11	47.1	Large
	50	0.00	0.33	0.35	-0.04	0.00	0.01	-0.01	0.34	0.35	0.36	47.1	Large
	51	-0.05	-0.34	-0.27	0.00	0.00	-0.01	-0.05	-0.34	-0.27	0.30	47.1	Large
	52	0.00	0.30	0.35	-0.01	0.00	0.00	0.00	0.30	0.35	0.35	47.1	Large

nct_sar.xls, vib+t-40+ip50

Table 2.6.13-14
Vibration + Thermal (-40°F) + 50 psig Internal Pressure - Total Stresses @ 0° Azimuth

Cask Component	Stress Point	Stress Components (ksi)						Principal Stresses (ksi)			SI (ksi)	Stress Limit	M.S.
		S_X	S_Y	S_Z	S_{XY}	S_{YZ}	S_{XZ}	S_1	S_2	S_3			
Top Cover	1	-0.08	-4.70	-4.58	-0.01	0.00	-0.01	-0.08	-4.70	-4.58	4.63	60.0	Large
	2	-0.05	-1.24	-1.18	0.00	0.00	-0.01	-0.05	-1.24	-1.18	1.18	60.0	Large
	3	-0.21	-3.51	-2.31	-0.08	0.00	0.00	-0.21	-3.51	-2.31	3.30	60.0	Large
	4	-0.01	-0.98	0.52	0.09	0.00	0.00	-0.99	0.00	0.52	1.51	60.0	Large
	5	0.59	-0.14	4.31	0.25	-0.01	0.01	4.31	-0.22	0.67	4.52	60.0	Large
	6	0.00	-0.39	4.87	-0.10	0.00	0.00	4.87	-0.41	0.03	5.28	60.0	Large
Top Flange	7	-2.84	-4.15	3.44	-1.07	-0.01	0.04	3.44	-4.75	-2.24	8.19	60.0	6.33
	8	-0.68	4.90	6.61	-0.20	0.10	0.06	-0.69	4.90	6.61	7.30	60.0	7.22
	9	-0.64	1.87	-3.21	0.28	0.01	0.07	1.90	-3.21	-0.67	5.11	60.0	Large
	10	-2.69	-7.36	-5.96	-0.85	0.05	0.11	-2.54	-7.51	-5.96	4.97	60.0	Large
Inner Shell	11	-0.54	5.26	-4.82	-0.28	0.06	0.06	5.28	-4.82	-0.56	10.10	60.0	4.94
	12	-1.01	-18.01	-10.88	-2.65	0.10	0.13	-0.60	-18.41	-10.88	17.81	60.0	2.37
	13	-0.19	-5.81	-1.05	0.10	0.05	-0.17	-5.81	-1.08	-0.16	5.66	60.0	9.61
	14	-0.17	-9.12	-1.42	0.09	0.05	-0.26	-9.13	-1.47	-0.12	9.01	60.0	5.66
	15	-0.12	-8.18	0.60	0.00	-0.11	0.03	-8.18	-0.12	0.60	8.78	60.0	5.83
	16	-0.06	-6.25	2.18	-0.01	-0.08	0.10	-6.25	-0.06	2.19	8.44	60.0	6.11
	17	-0.11	-7.29	0.42	0.00	0.00	0.02	-7.29	-0.11	0.42	7.71	60.0	6.79
	18	-0.05	-5.75	2.56	0.00	0.00	0.13	-5.75	-0.06	2.56	8.31	60.0	6.22
	19	-0.11	-8.17	0.78	0.00	0.11	0.04	-8.17	-0.12	0.79	8.96	60.0	5.70
	20	-0.06	-6.26	2.40	0.00	0.08	0.12	-6.26	-0.06	2.41	8.66	60.0	5.93
	21	-0.18	-5.42	-1.18	-0.06	-0.04	-0.17	-5.42	-1.21	-0.15	5.27	60.0	Large
	22	-0.18	-9.71	-1.82	-0.05	-0.04	-0.26	-9.71	-1.86	-0.13	9.57	60.0	5.27
	23	-0.43	-0.51	-1.66	0.12	-0.05	0.06	-1.66	-0.59	-0.35	1.31	60.0	Large
	24	-0.46	-11.83	-4.34	1.33	-0.11	0.13	-11.98	-4.34	-0.30	11.69	60.0	4.13
	25	-3.15	-1.32	-1.09	-0.39	-0.01	0.02	-3.23	-1.24	-1.09	2.14	60.0	Large
	26	-5.03	-3.29	-1.14	1.39	-0.03	0.04	-5.80	-2.53	-1.14	4.66	60.0	Large
Outer Shell	27	1.33	6.03	2.18	-0.38	0.08	0.01	6.06	1.30	2.18	4.76	60.0	Large
	28	0.48	-0.54	0.61	0.28	0.11	0.07	-0.62	0.48	0.68	1.30	60.0	Large
	29	-0.01	8.14	-0.11	1.05	0.00	-0.07	8.27	-0.19	-0.05	8.47	60.0	6.09
	30	1.76	-2.75	-0.96	0.89	0.00	-0.28	1.96	-2.93	-0.99	4.88	60.0	Large
	31	-0.07	-0.09	-1.52	-0.03	-0.13	-0.01	-1.53	-0.10	-0.05	1.48	60.0	Large
	32	-0.05	4.41	1.29	-0.03	-0.07	0.10	4.41	-0.06	1.30	4.47	60.0	Large
	33	-0.08	1.74	-0.95	0.00	0.00	-0.01	1.74	-0.95	-0.08	2.69	60.0	Large
	34	-0.04	4.07	2.17	0.00	0.00	0.14	-0.05	2.18	4.07	4.12	60.0	Large
	35	-0.06	-0.15	-1.40	0.01	0.13	0.01	-1.41	-0.14	-0.06	1.35	60.0	Large
	36	-0.05	4.60	1.61	0.02	0.07	0.11	4.60	-0.06	1.61	4.66	60.0	Large
	37	-0.01	8.55	0.26	-1.05	0.00	-0.07	8.68	-0.15	0.27	8.83	60.0	5.80
	38	1.71	-3.04	-0.81	-0.92	0.00	-0.28	1.91	-3.22	-0.84	5.12	60.0	Large
	39	-2.16	1.63	1.62	0.55	-0.02	0.01	-2.24	1.62	1.71	3.95	60.0	Large
	40	0.04	3.86	3.58	-0.14	-0.10	0.05	0.03	3.55	3.90	3.87	60.0	Large
Bottom Forging	41	-1.09	-3.39	-1.09	0.14	-0.01	0.02	-3.40	-1.10	-1.07	2.32	60.0	Large
	42	-0.17	2.62	7.31	-0.02	0.00	-0.01	7.31	-0.17	2.62	7.48	60.0	7.02
	43	-0.15	-5.26	-5.38	0.16	0.00	0.00	-0.14	-5.38	-5.27	5.24	60.0	Large
	44	0.04	1.96	4.86	0.09	0.00	0.00	4.86	0.03	1.96	4.82	60.0	Large
	45	-0.12	-3.75	-10.43	0.64	0.00	-0.01	-10.43	-3.86	-0.01	10.41	60.0	4.76
	46	-0.42	-1.20	-2.03	-0.11	-0.01	0.00	-2.03	-1.21	-0.41	1.62	60.0	Large
Ram Access Cover Plate	47	-0.29	-0.49	0.24	-0.06	0.01	0.00	0.24	-0.51	-0.28	0.75	94.2	Large
	48	-0.02	0.12	0.32	-0.02	0.00	0.00	0.32	-0.02	0.12	0.34	94.2	Large
	49	0.43	-0.14	0.58	-0.46	0.00	-0.01	-0.40	0.58	0.69	1.09	94.2	Large
	50	-0.07	-0.05	-0.20	0.06	0.00	0.00	0.00	-0.20	-0.12	0.20	94.2	Large
	51	-0.09	-4.51	-4.55	0.00	0.00	-0.01	-0.09	-4.55	-4.51	4.47	94.2	Large
	52	0.05	-0.76	-0.81	0.01	0.00	0.00	0.05	-0.81	-0.76	0.86	94.2	Large

nct_sar.xls, vib+t-40+ip50

Table 2.6.13-15
Vibration + Thermal (-40°F) + 50 psig Internal Pressure - Total Stresses @ 45° Azimuth

Cask Component	Stress Point	Stress Components (ksi)						Principal Stresses (ksi)			SI (ksi)	Stress Limit	M.S.
		S_X	S_Y	S_Z	S_{XY}	S_{YZ}	S_{XZ}	S_1	S_2	S_3			
Top Cover	1	0.00	-4.70	-4.66	-0.01	-0.01	-0.07	0.01	-4.71	-4.66	4.71	60.0	Large
	2	-0.02	-1.24	-1.21	0.00	0.00	-0.02	-0.02	-1.24	-1.21	1.21	60.0	Large
	3	0.00	-3.51	-2.47	-0.08	0.01	-0.19	0.01	-3.51	-2.49	3.53	60.0	Large
	4	-0.02	-0.98	0.44	0.08	0.01	-0.05	-0.98	-0.02	0.45	1.43	60.0	Large
	5	0.88	-0.05	4.18	0.26	-0.01	-0.29	4.20	-0.12	0.92	4.32	60.0	Large
	6	-0.21	-0.32	4.68	-0.11	0.05	0.04	4.68	-0.39	-0.14	5.07	60.0	Large
Top Flange	7	-2.47	-3.56	3.42	-0.98	0.08	0.01	3.42	-4.14	-1.90	7.56	60.0	6.93
	8	-0.58	4.17	6.28	-0.21	-0.10	0.00	-0.59	4.18	6.29	6.88	60.0	7.72
	9	-0.54	2.30	-3.49	0.36	0.45	0.06	2.38	-3.52	-0.58	5.90	60.0	9.16
	10	-2.71	-7.56	-6.49	-0.89	0.14	-0.10	-2.55	-7.73	-6.48	5.18	60.0	Large
Inner Shell	11	-0.48	6.18	-5.03	-0.29	0.80	0.01	6.25	-5.09	-0.49	11.34	60.0	4.29
	12	-0.97	-18.67	-11.70	-2.77	0.43	0.02	-0.55	-19.12	-11.67	18.57	60.0	2.23
	13	-0.16	-6.50	0.18	0.07	0.39	-0.01	-6.53	-0.16	0.21	6.73	60.0	7.91
	14	-0.07	-6.81	0.67	0.07	0.16	0.08	-6.81	-0.07	0.68	7.49	60.0	7.01
	15	-0.08	-7.31	0.99	0.00	-0.56	-0.02	-7.35	-0.08	1.03	8.38	60.0	6.16
	16	-0.04	-6.15	1.62	0.01	-0.36	0.02	-6.16	-0.04	1.64	7.80	60.0	6.69
	17	-0.10	-7.18	1.36	0.00	0.00	-0.01	-7.18	-0.10	1.36	8.54	60.0	6.03
	18	-0.07	-6.37	1.45	0.00	0.00	0.01	-6.37	-0.07	1.45	7.81	60.0	6.68
	19	-0.08	-7.34	1.10	-0.01	0.56	-0.02	-7.38	-0.08	1.14	8.52	60.0	6.05
	20	-0.04	-6.14	1.71	-0.01	0.40	0.02	-6.16	-0.04	1.73	7.89	60.0	6.60
	21	-0.15	-6.00	0.07	-0.03	-0.34	-0.01	-6.01	-0.15	0.09	6.10	60.0	8.83
	22	-0.07	-7.31	0.28	-0.03	-0.11	0.08	-7.31	-0.09	0.30	7.61	60.0	6.88
	23	-0.34	0.28	-1.86	0.14	-0.73	0.00	-2.09	-0.36	0.52	2.61	60.0	Large
	24	-0.40	-12.52	-5.10	1.51	-0.41	0.02	-12.72	-5.08	-0.21	12.51	60.0	3.80
	25	-3.06	-1.10	-1.36	-0.45	-0.23	-0.26	-3.21	-1.38	-0.93	2.28	60.0	Large
	26	-5.01	-3.48	-1.55	1.42	-0.01	-0.20	-5.87	-2.64	-1.53	4.33	60.0	Large
Outer Shell	27	1.35	7.37	2.15	-0.46	0.84	-0.07	7.54	1.31	2.02	6.22	60.0	8.64
	28	0.55	-1.13	-0.01	0.32	0.18	-0.05	-1.21	0.02	0.61	1.82	60.0	Large
	29	0.37	5.64	0.63	0.85	0.34	-0.11	5.79	0.18	0.67	5.61	60.0	9.69
	30	2.57	1.64	1.96	0.68	-0.09	0.04	2.92	1.27	1.98	1.65	60.0	Large
	31	-0.08	1.18	-0.93	-0.02	-0.67	-0.03	1.38	-1.12	-0.08	2.50	60.0	Large
	32	-0.10	4.37	0.58	-0.01	-0.33	0.02	4.40	-0.10	0.55	4.49	60.0	Large
	33	-0.11	2.06	0.34	0.00	-0.01	-0.03	2.06	-0.11	0.34	2.17	60.0	Large
	34	-0.10	3.31	0.60	0.00	-0.01	0.01	3.31	-0.10	0.60	3.41	60.0	Large
	35	-0.08	0.99	-0.85	0.02	0.62	-0.03	1.18	-1.04	-0.07	2.22	60.0	Large
	36	-0.09	4.53	0.78	0.01	0.33	0.02	4.56	-0.09	0.75	4.65	60.0	Large
	37	0.36	6.10	1.00	-0.85	-0.35	-0.11	6.24	0.20	1.01	6.04	60.0	8.94
	38	2.47	1.26	2.08	-0.71	0.07	0.04	0.93	2.09	2.79	1.86	60.0	Large
	39	-2.21	1.53	1.20	0.58	0.14	-0.28	-2.32	1.20	1.64	3.96	60.0	Large
	40	0.09	3.35	3.02	-0.20	-0.17	-0.04	0.07	2.95	3.43	3.36	60.0	Large
Bottom Forging	41	-0.99	-3.17	-1.36	0.07	-0.23	-0.26	-3.20	-1.48	-0.84	2.35	60.0	Large
	42	-0.14	2.62	7.23	-0.04	-0.01	0.02	7.23	-0.14	2.62	7.37	60.0	7.14
	43	0.00	-5.27	-5.63	0.16	0.00	-0.24	0.02	-5.64	-5.27	5.66	60.0	9.61
	44	-0.02	1.96	4.86	0.10	0.00	-0.02	4.86	-0.02	1.97	4.88	60.0	Large
	45	-0.09	-3.74	-10.67	0.66	0.01	-0.19	-10.68	-3.85	0.03	10.70	60.0	4.61
	46	-0.41	-1.22	-2.15	-0.08	0.02	-0.08	-2.15	-1.23	-0.40	1.75	60.0	Large
Ram Access Cover Plate	47	-0.16	-0.48	0.09	-0.09	0.04	-0.14	0.16	-0.51	-0.21	0.67	94.2	Large
	48	-0.05	0.12	0.29	-0.01	-0.03	0.00	0.29	-0.05	0.12	0.34	94.2	Large
	49	0.61	-0.13	0.49	-0.51	0.02	-0.16	-0.39	0.45	0.92	1.32	94.2	Large
	50	-0.07	-0.05	-0.25	0.06	0.00	-0.04	-0.26	-0.11	0.00	0.26	94.2	Large
	51	-0.05	-4.51	-4.59	0.00	0.00	-0.03	-0.05	-4.59	-4.51	4.54	94.2	Large
	52	0.07	-0.76	-0.83	0.00	0.01	-0.02	0.07	-0.83	-0.76	0.90	94.2	Large

nct_sar.xls, vib+t-40+ip50

Table 2.6.13-16
Vibration + Thermal (-40°F) + 50 psig Internal Pressure - Total Stresses @ 90° Azimuth

Cask Component	Stress Point	Stress Components (ksi)						Principal Stresses (ksi)			SI (ksi)	Stress Limit	M.S.
		S_X	S_Y	S_Z	S_{XY}	S_{YZ}	S_{XZ}	S_1	S_2	S_3			
Top Cover	1	0.07	-4.70	-4.72	0.00	-0.01	0.01	0.07	-4.73	-4.70	4.79	60.0	Large
	2	0.00	-1.24	-1.23	0.00	0.00	0.01	0.00	-1.24	-1.23	1.23	60.0	Large
	3	0.19	-3.51	-2.64	-0.09	0.00	-0.01	0.19	-3.52	-2.64	3.71	60.0	Large
	4	-0.02	-0.98	0.35	0.07	0.00	-0.02	-0.98	-0.02	0.35	1.33	60.0	Large
	5	1.17	0.07	4.08	0.28	0.00	0.00	4.08	0.00	1.24	4.08	60.0	Large
	6	-0.42	-0.24	4.54	-0.11	0.00	-0.04	4.54	-0.47	-0.19	5.01	60.0	Large
Top Flange	7	-2.44	-3.59	3.27	-0.98	0.01	-0.03	3.27	-4.15	-1.88	7.42	60.0	7.08
	8	-0.57	4.15	6.18	-0.21	0.06	-0.01	-0.58	4.16	6.18	6.76	60.0	7.88
	9	-0.56	2.56	-3.89	0.41	-0.01	0.01	-3.89	-0.61	2.61	6.50	60.0	8.23
	10	-2.90	-7.82	-6.96	-0.98	0.07	0.08	-2.71	-8.02	-6.95	5.31	60.0	Large
Inner Shell	11	-0.48	6.56	-5.34	-0.31	-0.01	0.01	6.58	-5.34	-0.49	11.91	60.0	4.04
	12	-1.00	-19.23	-12.18	-2.88	0.11	0.02	-0.56	-19.67	-12.18	19.12	60.0	2.14
	13	-0.11	-7.17	1.28	0.06	-0.07	0.02	-7.17	-0.11	1.28	8.45	60.0	6.10
	14	-0.03	-5.82	2.38	0.05	-0.06	-0.02	-5.82	-0.03	2.38	8.20	60.0	6.32
	15	-0.05	-6.95	0.65	0.00	-0.10	0.01	-6.95	-0.05	0.65	7.60	60.0	6.90
	16	0.00	-5.94	1.89	-0.01	-0.22	-0.01	-5.95	0.00	1.90	7.85	60.0	6.65
	17	-0.03	-7.32	0.45	0.00	0.00	-0.01	-7.32	-0.03	0.45	7.77	60.0	6.72
	18	0.03	-6.02	2.05	0.00	0.00	0.01	-6.02	0.03	2.05	8.07	60.0	6.44
	19	-0.05	-6.98	0.62	0.00	0.09	0.01	-6.98	-0.05	0.62	7.60	60.0	6.89
	20	0.01	-5.83	1.93	0.00	0.22	-0.01	-5.83	0.01	1.94	7.77	60.0	6.72
	21	-0.10	-6.55	1.18	-0.02	0.05	0.02	-6.55	-0.10	1.18	7.73	60.0	6.76
	22	-0.03	-6.24	1.99	-0.01	0.05	-0.02	-6.24	-0.03	1.99	8.23	60.0	6.29
	23	-0.31	0.72	-2.11	0.16	0.01	0.01	-2.11	-0.33	0.75	2.86	60.0	Large
	24	-0.42	-13.11	-5.60	1.66	-0.12	0.02	-13.32	-5.60	-0.21	13.11	60.0	3.57
	25	-2.83	-0.79	-1.53	-0.45	-0.01	0.01	-2.93	-1.53	-0.69	2.24	60.0	Large
	26	-4.99	-3.78	-1.92	1.52	-0.05	0.04	-6.02	-2.75	-1.92	4.10	60.0	Large
Outer Shell	27	1.37	8.30	2.13	-0.53	-0.08	0.00	8.34	1.33	2.13	7.01	60.0	7.56
	28	0.60	-1.54	-0.31	0.33	0.08	0.00	-1.59	-0.31	0.65	2.24	60.0	Large
	29	0.65	4.09	1.31	0.72	-0.07	0.03	4.23	0.51	1.32	3.73	60.0	Large
	30	3.08	3.87	4.02	0.53	-0.05	-0.01	2.81	4.00	4.16	1.34	60.0	Large
	31	-0.07	1.77	-1.38	-0.05	0.00	0.02	1.78	-1.38	-0.07	3.16	60.0	Large
	32	-0.06	4.55	0.99	-0.05	-0.20	-0.01	4.56	-0.06	0.98	4.62	60.0	Large
	33	-0.06	1.89	-0.98	0.00	0.00	-0.01	1.89	-0.98	-0.06	2.86	60.0	Large
	34	-0.02	3.88	1.54	0.00	0.00	0.00	3.88	-0.02	1.54	3.90	60.0	Large
	35	-0.06	1.45	-1.45	0.04	0.00	0.02	1.45	-1.45	-0.06	2.90	60.0	Large
	36	-0.05	4.81	1.20	0.04	0.21	-0.01	4.82	-0.05	1.18	4.87	60.0	Large
	37	0.63	4.56	1.71	-0.73	0.06	0.03	4.69	0.50	1.71	4.19	60.0	Large
	38	2.95	3.40	4.12	-0.57	0.06	-0.01	2.57	3.78	4.13	1.56	60.0	Large
	39	-2.23	1.43	0.87	0.59	-0.02	0.02	-2.33	0.87	1.53	3.85	60.0	Large
	40	0.12	2.83	2.62	-0.21	-0.08	0.00	0.11	2.59	2.87	2.77	60.0	Large
Bottom Forging	41	-0.77	-2.85	-1.53	0.08	-0.01	0.01	-2.85	-1.53	-0.77	2.08	60.0	Large
	42	-0.20	2.62	7.19	-0.04	0.00	-0.05	7.19	-0.20	2.62	7.39	60.0	7.12
	43	0.16	-5.27	-5.88	0.17	0.00	0.00	0.17	-5.88	-5.27	6.04	60.0	8.93
	44	-0.07	1.96	4.83	0.10	0.00	-0.04	4.83	-0.07	1.97	4.90	60.0	Large
	45	-0.07	-3.72	-10.93	0.67	0.00	0.00	-10.93	-3.84	0.05	10.98	60.0	4.47
	46	-0.39	-1.24	-2.27	-0.05	0.01	-0.02	-2.28	-1.24	-0.38	1.89	60.0	Large
Ram Access Cover Plate	47	-0.05	-0.48	-0.08	-0.13	0.00	0.00	-0.51	-0.08	-0.01	0.50	94.2	Large
	48	-0.08	0.12	0.24	0.00	0.00	-0.01	-0.08	0.12	0.24	0.32	94.2	Large
	49	0.76	-0.12	0.41	-0.55	0.00	0.00	-0.38	0.41	1.02	1.40	94.2	Large
	50	-0.07	-0.06	-0.30	0.06	0.00	-0.01	-0.30	-0.13	0.00	0.30	94.2	Large
	51	-0.03	-4.51	-4.61	0.00	0.00	0.01	-0.03	-4.61	-4.51	4.57	94.2	Large
	52	0.09	-0.76	-0.84	0.00	0.01	0.00	0.09	-0.84	-0.76	0.93	94.2	Large

nct_sar.xls, vib+t-40+ip50

Table 2.6.13-17
Vibration + Thermal (-40°F) + 50 psig Internal Pressure - Total Stresses @ 135° Azimuth

Cask Component	Stress Point	Stress Components (ksi)						Principal Stresses (ksi)			SI (ksi)	Stress Limit	M.S.
		S_X	S_Y	S_Z	S_{XY}	S_{YZ}	S_{XZ}	S_1	S_2	S_3			
Top Cover	1	-0.02	-4.70	-4.64	0.01	-0.01	0.07	-0.02	-4.71	-4.64	4.69	60.0	Large
	2	-0.03	-1.24	-1.20	0.00	0.00	0.02	-0.03	-1.24	-1.20	1.20	60.0	Large
	3	-0.04	-3.51	-2.53	-0.08	-0.01	0.16	-0.02	-3.51	-2.54	3.49	60.0	Large
	4	0.01	-0.98	0.40	0.08	-0.01	0.03	-0.98	0.02	0.40	1.38	60.0	Large
	5	0.87	-0.05	4.08	0.26	0.01	0.18	4.09	-0.12	0.93	4.22	60.0	Large
	6	-0.18	-0.32	4.62	-0.11	-0.03	-0.06	4.62	-0.39	-0.12	5.00	60.0	Large
Top Flange	7	-2.47	-3.56	3.36	-0.98	-0.06	-0.04	3.36	-4.13	-1.89	7.50	60.0	7.00
	8	-0.58	4.15	6.22	-0.21	0.07	-0.01	-0.59	4.16	6.23	6.82	60.0	7.80
	9	-0.54	2.36	-3.64	0.38	-0.22	-0.03	-3.64	-0.58	2.41	6.05	60.0	8.91
	10	-2.72	-7.58	-6.63	-0.90	-0.07	0.06	-2.56	-7.75	-6.63	5.18	60.0	Large
Inner Shell	11	-0.48	6.32	-5.12	-0.28	-0.29	-0.01	6.33	-5.13	-0.49	11.46	60.0	4.23
	12	-0.97	-18.84	-11.85	-2.79	-0.16	-0.01	-0.55	-19.26	-11.85	18.72	60.0	2.21
	13	-0.06	-7.33	1.38	0.06	-0.27	0.00	-7.34	-0.06	1.39	8.73	60.0	5.88
	14	0.01	-6.27	2.15	0.06	-0.14	0.00	-6.27	0.01	2.15	8.43	60.0	6.12
	15	-0.05	-7.21	0.87	0.00	-0.17	0.00	-7.21	-0.05	0.87	8.08	60.0	6.42
	16	0.00	-6.49	1.55	0.00	-0.06	-0.01	-6.49	0.00	1.55	8.04	60.0	6.46
	17	-0.06	-7.41	0.76	0.00	-0.01	0.01	-7.41	-0.06	0.76	8.16	60.0	6.35
	18	-0.01	-6.30	1.66	0.00	0.00	-0.02	-6.30	-0.01	1.66	7.96	60.0	6.54
	19	-0.05	-7.29	0.87	0.00	0.13	0.00	-7.29	-0.05	0.87	8.16	60.0	6.35
	20	0.00	-6.42	1.59	0.00	0.02	-0.01	-6.42	0.00	1.59	8.01	60.0	6.49
	21	-0.05	-6.81	1.27	-0.02	0.23	-0.01	-6.81	-0.05	1.28	8.09	60.0	6.42
	22	0.01	-6.77	1.76	-0.02	0.11	0.00	-6.77	0.01	1.76	8.54	60.0	6.03
	23	-0.34	0.32	-1.97	0.13	0.29	-0.01	-2.00	-0.36	0.38	2.38	60.0	Large
	24	-0.40	-12.57	-5.21	1.50	0.17	-0.01	-12.76	-5.21	-0.22	12.54	60.0	3.78
	25	-3.07	-1.10	-1.46	-0.45	0.11	0.15	-3.18	-1.45	-0.99	2.19	60.0	Large
	26	-5.02	-3.47	-1.64	1.43	0.00	0.12	-5.87	-2.62	-1.63	4.24	60.0	Large
Outer Shell	27	1.33	7.38	2.06	-0.42	-0.37	0.04	7.44	1.30	2.04	6.13	60.0	8.79
	28	0.54	-1.25	-0.11	0.35	-0.08	0.03	-1.32	-0.10	0.61	1.93	60.0	Large
	29	0.71	3.82	1.46	0.73	-0.22	-0.01	4.00	0.55	1.44	3.45	60.0	Large
	30	3.11	3.09	3.69	0.54	-0.02	0.00	2.56	3.63	3.69	1.13	60.0	Large
	31	-0.05	1.46	-1.01	-0.05	-0.13	0.01	1.47	-1.02	-0.05	2.48	60.0	Large
	32	-0.07	3.74	0.53	-0.05	0.05	-0.01	3.74	-0.07	0.53	3.81	60.0	Large
	33	-0.08	1.78	-0.45	0.00	0.00	0.03	1.78	-0.46	-0.08	2.24	60.0	Large
	34	-0.05	3.49	1.03	0.00	0.00	-0.01	3.49	-0.05	1.03	3.54	60.0	Large
	35	-0.04	1.16	-1.06	0.04	0.14	0.01	1.17	-1.07	-0.05	2.24	60.0	Large
	36	-0.06	4.03	0.71	0.04	-0.04	-0.01	4.03	-0.06	0.71	4.09	60.0	Large
	37	0.70	4.31	1.84	-0.74	0.24	-0.01	4.48	0.55	1.82	3.93	60.0	Large
	38	2.98	2.67	3.79	-0.57	0.03	0.00	2.23	3.42	3.80	1.56	60.0	Large
	39	-2.20	1.55	1.14	0.57	-0.07	0.15	-2.30	1.14	1.64	3.94	60.0	Large
	40	0.08	3.34	2.95	-0.21	0.10	0.02	0.06	2.93	3.38	3.32	60.0	Large
Bottom Forging	41	-1.01	-3.16	-1.46	0.08	0.11	0.15	-3.17	-1.50	-0.96	2.21	60.0	Large
	42	-0.13	2.62	7.17	-0.03	0.01	-0.04	7.17	-0.13	2.62	7.30	60.0	7.22
	43	-0.03	-5.26	-5.72	0.16	0.00	0.19	-0.02	-5.72	-5.27	5.70	60.0	9.52
	44	0.02	1.96	4.79	0.10	0.00	-0.01	4.79	0.02	1.96	4.77	60.0	Large
	45	-0.12	-3.73	-10.73	0.65	0.00	0.18	-10.73	-3.84	0.00	10.74	60.0	4.59
	46	-0.40	-1.21	-2.18	-0.09	-0.01	0.06	-2.19	-1.22	-0.39	1.80	60.0	Large
Ram Access Cover Plate	47	-0.17	-0.48	0.06	-0.09	-0.04	0.14	0.14	-0.51	-0.22	0.65	94.2	Large
	48	-0.03	0.11	0.27	-0.01	0.03	0.00	0.27	-0.03	0.11	0.31	94.2	Large
	49	0.60	-0.13	0.47	-0.51	-0.01	0.15	-0.39	0.43	0.91	1.30	94.2	Large
	50	-0.05	-0.05	-0.25	0.05	0.00	0.03	-0.26	-0.10	0.01	0.27	94.2	Large
	51	-0.07	-4.51	-4.57	0.00	0.00	0.03	-0.07	-4.57	-4.51	4.50	94.2	Large
	52	0.07	-0.76	-0.82	-0.01	0.00	0.02	0.07	-0.82	-0.76	0.89	94.2	Large

nct_sar.xls, vib+t-40+ip50

Table 2.6.13-18
Vibration + Thermal (-40°F) + 50 psig Internal Pressure - Total Stresses @ 180° Azimuth

Cask Component	Stress Point	Stress Components (ksi)						Principal Stresses (ksi)			SI (ksi)	Stress Limit	M.S.
		S_X	S_Y	S_Z	S_{XY}	S_{YZ}	S_{XZ}	S_1	S_2	S_3			
Top Cover	1	-0.08	-4.70	-4.58	0.01	0.00	-0.01	-0.08	-4.70	-4.58	4.63	60.0	Large
	2	-0.05	-1.24	-1.18	0.00	0.00	-0.01	-0.05	-1.24	-1.18	1.18	60.0	Large
	3	-0.27	-3.51	-2.41	-0.07	0.00	0.00	-0.27	-3.51	-2.41	3.25	60.0	Large
	4	-0.01	-0.98	0.49	0.09	0.00	0.01	-0.99	0.00	0.49	1.48	60.0	Large
	5	0.36	-0.23	4.09	0.25	0.00	0.02	4.09	-0.32	0.45	4.41	60.0	Large
	6	0.11	-0.43	4.77	-0.09	-0.02	0.01	4.77	-0.45	0.12	5.22	60.0	Large
Top Flange	7	-2.84	-3.81	3.26	-1.02	0.02	-0.01	3.26	-4.46	-2.20	7.72	60.0	6.77
	8	-0.73	4.54	6.22	-0.22	0.03	-0.01	-0.74	4.55	6.22	6.96	60.0	7.62
	9	-0.52	2.09	-3.21	0.35	-0.10	0.02	2.14	-3.21	-0.57	5.35	60.0	Large
	10	-2.47	-7.24	-6.22	-0.75	0.00	0.07	-2.35	-7.35	-6.22	5.00	60.0	Large
Inner Shell	11	-0.53	6.20	-4.81	-0.24	-0.12	-0.05	6.21	-4.81	-0.53	11.02	60.0	4.45
	12	-0.96	-18.39	-11.64	-2.68	-0.01	-0.04	-0.56	-18.79	-11.64	18.23	60.0	2.29
	13	-0.10	-7.29	1.53	0.06	-0.03	0.00	-7.29	-0.10	1.53	8.83	60.0	5.80
	14	-0.06	-6.58	1.70	0.05	-0.04	0.07	-6.58	-0.06	1.70	8.28	60.0	6.25
	15	-0.07	-7.34	1.05	0.00	-0.03	-0.02	-7.34	-0.07	1.05	8.39	60.0	6.15
	16	-0.02	-6.71	1.31	0.00	-0.02	0.04	-6.71	-0.02	1.32	8.02	60.0	6.48
	17	-0.06	-7.61	1.11	0.00	0.00	-0.03	-7.61	-0.06	1.11	8.72	60.0	5.88
	18	-0.03	-6.80	1.28	0.00	0.00	0.05	-6.80	-0.03	1.28	8.08	60.0	6.42
	19	-0.07	-7.47	1.06	0.00	0.02	-0.02	-7.47	-0.07	1.06	8.54	60.0	6.03
	20	-0.02	-6.70	1.36	0.00	0.01	0.04	-6.70	-0.02	1.36	8.07	60.0	6.44
	21	-0.10	-6.89	1.43	-0.02	0.02	0.00	-6.89	-0.10	1.43	8.32	60.0	6.21
	22	-0.06	-7.18	1.30	-0.01	0.03	0.07	-7.18	-0.07	1.30	8.48	60.0	6.07
	23	-0.44	-0.07	-1.80	0.07	0.13	-0.04	-1.81	-0.45	-0.05	1.76	60.0	Large
	24	-0.38	-11.93	-4.93	1.29	0.01	-0.05	-12.07	-4.93	-0.23	11.84	60.0	4.07
	25	-3.54	-1.62	-1.45	-0.50	0.04	0.01	-3.66	-1.51	-1.43	2.23	60.0	Large
	26	-5.17	-3.00	-1.34	1.26	-0.03	0.01	-5.74	-2.42	-1.33	4.41	60.0	Large
Outer Shell	27	1.22	6.22	1.92	-0.17	-0.14	0.05	6.24	1.21	1.92	5.03	60.0	Large
	28	0.40	-0.83	-0.09	0.44	0.01	0.00	-0.97	-0.09	0.54	1.52	60.0	Large
	29	0.64	3.71	1.81	0.69	0.02	-0.01	3.86	0.49	1.81	3.37	60.0	Large
	30	3.03	2.39	3.10	0.50	-0.02	0.10	2.12	3.08	3.33	1.21	60.0	Large
	31	-0.07	1.17	-0.70	-0.05	-0.01	-0.04	1.17	-0.70	-0.07	1.87	60.0	Large
	32	-0.08	3.36	0.23	-0.04	0.00	0.05	3.36	-0.09	0.24	3.45	60.0	Large
	33	-0.07	1.58	0.09	0.00	0.00	-0.05	1.58	-0.09	0.10	1.67	60.0	Large
	34	-0.07	2.82	0.50	0.00	0.00	0.07	2.82	-0.07	0.51	2.90	60.0	Large
	35	-0.06	0.91	-0.75	0.04	0.02	-0.04	0.91	-0.75	-0.06	1.66	60.0	Large
	36	-0.07	3.66	0.40	0.04	0.01	0.05	3.66	-0.08	0.41	3.74	60.0	Large
	37	0.62	4.23	2.21	-0.70	-0.02	-0.01	4.37	0.49	2.21	3.88	60.0	Large
	38	2.90	2.02	3.19	-0.53	0.03	0.10	1.77	3.10	3.26	1.49	60.0	Large
	39	-2.30	1.69	1.39	0.61	0.03	0.06	-2.39	1.39	1.78	4.18	60.0	Large
	40	-0.05	4.12	3.25	-0.29	-0.01	-0.05	-0.07	3.25	4.14	4.21	60.0	Large
Bottom Forging	41	-1.48	-3.68	-1.45	0.02	0.04	0.01	-3.68	-1.48	-1.44	2.24	60.0	Large
	42	-0.07	2.63	7.19	-0.03	0.00	0.01	7.19	-0.07	2.63	7.26	60.0	7.26
	43	-0.28	-5.26	-5.54	0.15	0.00	0.01	-0.27	-5.54	-5.27	5.27	60.0	Large
	44	0.06	1.96	4.83	0.08	0.00	0.02	4.83	0.06	1.96	4.77	60.0	Large
	45	-0.16	-3.74	-10.52	0.63	0.00	0.02	-10.52	-3.85	-0.05	10.47	60.0	4.73
	46	-0.44	-1.19	-2.07	-0.12	0.01	0.00	-2.07	-1.21	-0.42	1.65	60.0	Large
Ram Access Cover Plate	47	-0.31	-0.49	0.21	-0.06	-0.01	0.00	0.21	-0.51	-0.29	0.72	94.2	Large
	48	0.00	0.11	0.32	-0.02	0.01	0.00	0.32	0.00	0.12	0.32	94.2	Large
	49	0.41	-0.14	0.56	-0.46	0.01	0.01	-0.40	0.56	0.67	1.07	94.2	Large
	50	-0.07	-0.05	-0.20	0.05	0.00	0.01	0.00	-0.20	-0.11	0.20	94.2	Large
	51	-0.09	-4.51	-4.55	0.00	0.00	-0.01	-0.09	-4.55	-4.51	4.47	94.2	Large
	52	0.05	-0.76	-0.81	-0.01	0.00	0.00	0.05	-0.81	-0.76	0.86	94.2	Large

nct_sar.xls, vib+t-40+ip50

Table 2.6.13-19
Vibration + Thermal (100°F) + 50 psig Internal Pressure - Pm @ 0° Azimuth

Cask Component	Stress Point	Stress Components (ksi)						Principal Stresses (ksi)			SI (ksi)	Stress Limit	M.S.
		S_X	S_Y	S_Z	S_{XY}	S_{YZ}	S_{XZ}	S_1	S_2	S_3			
Top Cover	1	-0.03	-0.02	0.08	0.00	0.00	-0.01	0.08	-0.03	-0.01	0.11	20.0	Large
	2	-0.03	-0.02	0.08	0.00	0.00	-0.01	0.08	-0.03	-0.01	0.11	20.0	Large
	3	-0.12	-0.02	0.12	0.07	0.00	0.00	-0.16	0.02	0.12	0.28	20.0	Large
	4	-0.12	-0.02	0.12	0.07	0.00	0.00	-0.16	0.02	0.12	0.28	20.0	Large
	5	-0.11	-0.03	0.40	0.15	0.00	0.00	-0.23	0.09	0.40	0.64	20.0	Large
	6	-0.11	-0.03	0.40	0.15	0.00	0.00	-0.23	0.09	0.40	0.64	20.0	Large
Top Flange	7	-0.20	0.07	0.22	-0.04	0.04	0.06	-0.22	0.07	0.23	0.45	20.0	Large
	8	-0.20	0.07	0.22	-0.04	0.04	0.06	-0.22	0.07	0.23	0.45	20.0	Large
	9	-0.25	0.21	0.83	-0.05	0.04	0.09	0.83	-0.26	0.22	1.10	20.0	Large
	10	-0.25	0.21	0.83	-0.05	0.04	0.09	0.83	-0.26	0.22	1.10	20.0	Large
Inner Shell	11	-0.10	0.30	1.32	0.02	0.08	0.09	1.33	-0.11	0.29	1.44	20.0	Large
	12	-0.10	0.30	1.32	0.02	0.08	0.09	1.33	-0.11	0.29	1.44	20.0	Large
	13	-0.18	-0.23	-1.78	0.03	0.05	-0.22	-1.81	-0.23	-0.14	1.67	20.0	Large
	14	-0.18	-0.23	-1.78	0.03	0.05	-0.22	-1.81	-0.23	-0.14	1.67	20.0	Large
	15	-0.08	0.02	1.41	0.00	-0.09	0.06	1.42	-0.09	0.02	1.51	20.0	Large
	16	-0.08	0.02	1.41	0.00	-0.09	0.06	1.42	-0.09	0.02	1.51	20.0	Large
	17	-0.08	0.72	1.52	0.00	0.00	0.07	-0.08	0.72	1.52	1.60	20.0	Large
	18	-0.08	0.72	1.52	0.00	0.00	0.07	-0.08	0.72	1.52	1.60	20.0	Large
	19	-0.08	0.03	1.59	0.00	0.10	0.08	1.60	-0.09	0.02	1.69	20.0	Large
	20	-0.08	0.03	1.59	0.00	0.10	0.08	1.60	-0.09	0.02	1.69	20.0	Large
	21	-0.18	-0.33	-1.77	-0.04	-0.04	-0.22	-1.80	-0.33	-0.14	1.66	20.0	Large
	22	-0.18	-0.33	-1.77	-0.04	-0.04	-0.22	-1.80	-0.33	-0.14	1.66	20.0	Large
	23	-0.15	0.35	0.45	0.08	-0.09	0.09	-0.18	0.33	0.50	0.68	20.0	Large
	24	-0.15	0.35	0.45	0.08	-0.09	0.09	-0.18	0.33	0.50	0.68	20.0	Large
	25	0.18	0.17	0.26	0.08	-0.03	0.03	0.08	0.26	0.27	0.19	20.0	Large
	26	0.18	0.17	0.26	0.08	-0.03	0.03	0.08	0.26	0.27	0.19	20.0	Large
Outer Shell	27	-0.16	-0.11	0.63	0.00	0.09	0.04	0.65	-0.16	-0.12	0.81	20.0	Large
	28	-0.16	-0.11	0.63	0.00	0.09	0.04	0.65	-0.16	-0.12	0.81	20.0	Large
	29	-1.02	-0.65	-3.14	0.34	0.00	-0.17	-3.15	-1.21	-0.44	2.71	20.0	6.37
	30	-1.02	-0.65	-3.14	0.34	0.00	-0.17	-3.15	-1.21	-0.44	2.71	20.0	6.37
	31	0.00	-0.44	0.09	0.02	-0.10	0.05	-0.46	-0.01	0.13	0.58	20.0	Large
	32	0.00	-0.44	0.09	0.02	-0.10	0.05	-0.46	-0.01	0.13	0.58	20.0	Large
	33	0.00	0.31	0.28	0.00	0.00	0.07	-0.01	0.30	0.31	0.32	20.0	Large
	34	0.00	0.31	0.28	0.00	0.00	0.07	-0.01	0.30	0.31	0.32	20.0	Large
	35	0.00	-0.37	0.24	-0.03	0.10	0.06	-0.39	-0.01	0.27	0.66	20.0	Large
	36	0.00	-0.37	0.24	-0.03	0.10	0.06	-0.39	-0.01	0.27	0.66	20.0	Large
	37	-0.97	-0.63	-3.13	-0.34	0.00	-0.18	-3.14	-1.17	-0.42	2.72	20.0	6.35
	38	-0.97	-0.63	-3.13	-0.34	0.00	-0.18	-3.14	-1.17	-0.42	2.72	20.0	6.35
	39	0.14	-0.10	0.28	0.05	-0.09	0.02	-0.13	0.14	0.30	0.43	20.0	Large
	40	0.14	-0.10	0.28	0.05	-0.09	0.02	-0.13	0.14	0.30	0.43	20.0	Large
Bottom Forging	41	0.21	-0.03	0.38	0.00	-0.01	0.00	-0.03	0.21	0.38	0.41	20.0	Large
	42	0.21	-0.03	0.38	0.00	-0.01	0.00	-0.03	0.21	0.38	0.41	20.0	Large
	43	-0.07	0.03	0.27	-0.08	0.00	0.00	0.27	-0.11	0.07	0.38	20.0	Large
	44	-0.07	0.03	0.27	-0.08	0.00	0.00	0.27	-0.11	0.07	0.38	20.0	Large
	45	-0.07	-0.15	-0.11	-0.08	0.00	0.00	-0.02	-0.20	-0.11	0.17	20.0	Large
	46	-0.07	-0.15	-0.11	-0.08	0.00	0.00	-0.02	-0.20	-0.11	0.17	20.0	Large
Ram Access Cover Plate	47	-0.12	0.01	0.13	-0.06	0.00	0.00	-0.14	0.03	0.13	0.27	31.4	Large
	48	-0.12	0.01	0.13	-0.06	0.00	0.00	-0.14	0.03	0.13	0.27	31.4	Large
	49	-0.10	0.00	0.07	-0.02	0.00	0.00	-0.11	0.00	0.07	0.18	31.4	Large
	50	-0.10	0.00	0.07	-0.02	0.00	0.00	-0.11	0.00	0.07	0.18	31.4	Large
	51	-0.02	-0.02	0.04	0.00	0.00	-0.01	0.04	-0.02	-0.02	0.06	31.4	Large
	52	-0.02	-0.02	0.04	0.00	0.00	-0.01	0.04	-0.02	-0.02	0.06	31.4	Large

nct_sar.xls, vib+t100+ip50

Table 2.6.13-20
Vibration + Thermal (100°F) + 50 psig Internal Pressure - Pm @ 45° Azimuth

Cask Component	Stress Point	Stress Components (ksi)						Principal Stresses (ksi)			SI (ksi)	Stress Limit	M.S.
		S_X	S_Y	S_Z	S_{XY}	S_{YZ}	S_{XZ}	S_1	S_2	S_3			
Top Cover	1	0.03	-0.02	0.02	0.00	0.00	-0.05	0.08	-0.03	-0.01	0.11	20.0	Large
	2	0.03	-0.02	0.02	0.00	0.00	-0.05	0.08	-0.03	-0.01	0.11	20.0	Large
	3	-0.02	-0.02	0.00	0.07	0.01	-0.12	-0.15	-0.01	0.12	0.27	20.0	Large
	4	-0.02	-0.02	0.00	0.07	0.01	-0.12	-0.15	-0.01	0.12	0.27	20.0	Large
	5	-0.08	0.06	0.25	0.15	0.04	-0.10	-0.20	0.16	0.27	0.48	20.0	Large
	6	-0.08	0.06	0.25	0.15	0.04	-0.10	-0.20	0.16	0.27	0.48	20.0	Large
Top Flange	7	0.03	0.00	0.04	-0.01	-0.01	0.01	0.05	0.00	0.02	0.04	20.0	Large
	8	0.03	0.00	0.04	-0.01	-0.01	0.01	0.05	0.00	0.02	0.04	20.0	Large
	9	-0.20	0.32	0.41	-0.02	0.30	0.00	0.67	-0.20	0.06	0.87	20.0	Large
	10	-0.20	0.32	0.41	-0.02	0.30	0.00	0.67	-0.20	0.06	0.87	20.0	Large
Inner Shell	11	-0.04	0.42	0.80	-0.03	0.61	0.02	1.25	-0.07	0.00	1.32	20.0	Large
	12	-0.04	0.42	0.80	-0.03	0.61	0.02	1.25	-0.07	0.00	1.32	20.0	Large
	13	-0.11	0.59	-0.11	0.02	0.27	0.04	0.68	-0.22	-0.10	0.90	20.0	Large
	14	-0.11	0.59	-0.11	0.02	0.27	0.04	0.68	-0.22	-0.10	0.90	20.0	Large
	15	-0.06	0.51	1.33	0.01	-0.46	0.00	1.54	-0.06	0.30	1.59	20.0	Large
	16	-0.06	0.51	1.33	0.01	-0.46	0.00	1.54	-0.06	0.30	1.59	20.0	Large
	17	-0.08	0.47	1.43	0.00	0.00	0.00	1.43	-0.08	0.47	1.51	20.0	Large
	18	-0.08	0.47	1.43	0.00	0.00	0.00	1.43	-0.08	0.47	1.51	20.0	Large
	19	-0.06	0.50	1.41	-0.01	0.48	0.00	1.62	-0.06	0.29	1.67	20.0	Large
	20	-0.06	0.50	1.41	-0.01	0.48	0.00	1.62	-0.06	0.29	1.67	20.0	Large
	21	-0.11	0.59	-0.10	-0.01	-0.22	0.04	0.65	-0.18	-0.10	0.83	20.0	Large
	22	-0.11	0.59	-0.10	-0.01	-0.22	0.04	0.65	-0.18	-0.10	0.83	20.0	Large
	23	-0.07	0.41	-0.04	0.15	-0.57	0.01	0.81	-0.45	-0.06	1.26	20.0	Large
	24	-0.07	0.41	-0.04	0.15	-0.57	0.01	0.81	-0.45	-0.06	1.26	20.0	Large
	25	0.24	0.14	-0.10	0.07	-0.13	-0.21	-0.22	0.11	0.39	0.61	20.0	Large
	26	0.24	0.14	-0.10	0.07	-0.13	-0.21	-0.22	0.11	0.39	0.61	20.0	Large
Outer Shell	27	-0.11	0.17	0.28	-0.02	0.44	-0.06	0.68	-0.23	-0.11	0.91	20.0	Large
	28	-0.11	0.17	0.28	-0.02	0.44	-0.06	0.68	-0.23	-0.11	0.91	20.0	Large
	29	-0.42	0.26	-1.31	0.13	0.12	-0.04	-1.32	-0.44	0.29	1.62	20.0	Large
	30	-0.42	0.26	-1.31	0.13	0.12	-0.04	-1.32	-0.44	0.29	1.62	20.0	Large
	31	-0.03	0.18	0.03	0.03	-0.50	0.00	0.61	-0.40	-0.03	1.01	20.0	Large
	32	-0.03	0.18	0.03	0.03	-0.50	0.00	0.61	-0.40	-0.03	1.01	20.0	Large
	33	-0.04	0.08	0.14	0.00	-0.01	-0.01	-0.04	0.08	0.14	0.19	20.0	Large
	34	-0.04	0.08	0.14	0.00	-0.01	-0.01	-0.04	0.08	0.14	0.19	20.0	Large
	35	-0.03	0.17	0.10	-0.03	0.47	-0.01	0.61	-0.34	-0.03	0.95	20.0	Large
	36	-0.03	0.17	0.10	-0.03	0.47	-0.01	0.61	-0.34	-0.03	0.95	20.0	Large
	37	-0.41	0.26	-1.31	-0.13	-0.14	-0.03	-1.32	-0.43	0.29	1.61	20.0	Large
	38	-0.41	0.26	-1.31	-0.13	-0.14	-0.03	-1.32	-0.43	0.29	1.61	20.0	Large
	39	0.16	0.05	-0.08	0.04	-0.35	-0.05	-0.37	0.14	0.36	0.73	20.0	Large
	40	0.16	0.05	-0.08	0.04	-0.35	-0.05	-0.37	0.14	0.36	0.73	20.0	Large
Bottom Forging	41	0.26	0.05	0.20	-0.04	-0.09	-0.12	-0.02	0.17	0.36	0.38	20.0	Large
	42	0.26	0.05	0.20	-0.04	-0.09	-0.12	-0.02	0.17	0.36	0.38	20.0	Large
	43	-0.02	0.03	0.15	-0.07	0.00	-0.13	-0.12	0.06	0.22	0.34	20.0	Large
	44	-0.02	0.03	0.15	-0.07	0.00	-0.13	-0.12	0.06	0.22	0.34	20.0	Large
	45	-0.04	-0.14	-0.29	-0.05	0.02	-0.13	0.04	-0.34	-0.16	0.38	20.0	Large
	46	-0.04	-0.14	-0.29	-0.05	0.02	-0.13	0.04	-0.34	-0.16	0.38	20.0	Large
Ram Access Cover Plate	47	-0.05	0.01	0.04	-0.06	-0.01	-0.08	-0.12	0.03	0.09	0.21	31.4	Large
	48	-0.05	0.01	0.04	-0.06	-0.01	-0.08	-0.12	0.03	0.09	0.21	31.4	Large
	49	-0.03	0.00	-0.01	-0.03	0.00	-0.09	-0.11	-0.01	0.08	0.19	31.4	Large
	50	-0.03	0.00	-0.01	-0.03	0.00	-0.09	-0.11	-0.01	0.08	0.19	31.4	Large
	51	0.02	-0.02	0.00	0.00	0.00	-0.03	0.05	-0.02	-0.02	0.07	31.4	Large
	52	0.02	-0.02	0.00	0.00	0.00	-0.03	0.05	-0.02	-0.02	0.07	31.4	Large

nct_sar.xls, vib+t100+ip50

Table 2.6.13-21
Vibration + Thermal (100°F) + 50 psig Internal Pressure - Pm @ 90° Azimuth

Cask Component	Stress Point	Stress Components (ksi)						Principal Stresses (ksi)			SI (ksi)	Stress Limit	M.S.
		S_X	S_Y	S_Z	S_{XY}	S_{YZ}	S_{XZ}	S_1	S_2	S_3			
Top Cover	1	0.07	-0.02	-0.03	0.00	0.00	0.01	0.08	-0.03	-0.01	0.10	20.0	Large
	2	0.07	-0.02	-0.03	0.00	0.00	0.01	0.08	-0.03	-0.01	0.10	20.0	Large
	3	0.07	-0.02	-0.13	0.06	0.00	-0.01	0.10	-0.13	-0.05	0.23	20.0	Large
	4	0.07	-0.02	-0.13	0.06	0.00	-0.01	0.10	-0.13	-0.05	0.23	20.0	Large
	5	-0.06	0.18	0.13	0.15	0.00	-0.02	-0.13	0.13	0.25	0.38	20.0	Large
	6	-0.06	0.18	0.13	0.15	0.00	-0.02	-0.13	0.13	0.25	0.38	20.0	Large
Top Flange	7	0.04	-0.02	-0.09	0.00	0.04	-0.02	-0.10	0.00	0.04	0.15	20.0	Large
	8	0.04	-0.02	-0.09	0.00	0.04	-0.02	-0.10	0.00	0.04	0.15	20.0	Large
	9	-0.29	0.32	-0.02	-0.04	0.03	0.04	0.32	-0.30	-0.01	0.63	20.0	Large
	10	-0.29	0.32	-0.02	-0.04	0.03	0.04	0.32	-0.30	-0.01	0.63	20.0	Large
Inner Shell	11	-0.05	0.34	0.41	-0.08	0.05	0.01	-0.07	0.33	0.43	0.50	20.0	Large
	12	-0.05	0.34	0.41	-0.08	0.05	0.01	-0.07	0.33	0.43	0.50	20.0	Large
	13	-0.06	0.75	1.28	0.00	-0.06	0.00	-0.06	0.74	1.29	1.36	20.0	Large
	14	-0.06	0.75	1.28	0.00	-0.06	0.00	-0.06	0.74	1.29	1.36	20.0	Large
	15	-0.02	0.79	1.29	0.00	-0.16	0.00	-0.02	0.75	1.34	1.36	20.0	Large
	16	-0.02	0.79	1.29	0.00	-0.16	0.00	-0.02	0.75	1.34	1.36	20.0	Large
	17	0.00	0.57	1.28	0.00	0.00	0.00	1.28	0.00	0.57	1.27	20.0	Large
	18	0.00	0.57	1.28	0.00	0.00	0.00	1.28	0.00	0.57	1.27	20.0	Large
	19	-0.02	0.84	1.28	0.00	0.16	0.00	-0.02	0.79	1.33	1.35	20.0	Large
	20	-0.02	0.84	1.28	0.00	0.16	0.00	-0.02	0.79	1.33	1.35	20.0	Large
	21	-0.06	0.84	1.31	0.00	0.05	0.00	-0.06	0.84	1.32	1.38	20.0	Large
	22	-0.06	0.84	1.31	0.00	0.05	0.00	-0.06	0.84	1.32	1.38	20.0	Large
	23	-0.05	0.36	-0.40	0.22	-0.05	0.01	0.46	-0.41	-0.15	0.87	20.0	Large
	24	-0.05	0.36	-0.40	0.22	-0.05	0.01	0.46	-0.41	-0.15	0.87	20.0	Large
	25	0.35	0.10	-0.39	0.11	-0.03	0.02	-0.39	0.06	0.39	0.78	20.0	Large
	26	0.35	0.10	-0.39	0.11	-0.03	0.02	-0.39	0.06	0.39	0.78	20.0	Large
Outer Shell	27	-0.08	0.36	0.10	-0.05	0.01	0.00	0.37	-0.09	0.10	0.46	20.0	Large
	28	-0.08	0.36	0.10	-0.05	0.01	0.00	0.37	-0.09	0.10	0.46	20.0	Large
	29	-0.02	0.58	0.06	0.00	-0.06	0.01	0.59	-0.03	0.06	0.61	20.0	Large
	30	-0.02	0.58	0.06	0.00	-0.06	0.01	0.59	-0.03	0.06	0.61	20.0	Large
	31	0.00	0.57	0.01	0.00	-0.10	0.01	0.59	-0.02	0.00	0.60	20.0	Large
	32	0.00	0.57	0.01	0.00	-0.10	0.01	0.59	-0.02	0.00	0.60	20.0	Large
	33	0.02	0.28	-0.05	0.00	0.00	0.00	0.28	-0.05	0.02	0.33	20.0	Large
	34	0.02	0.28	-0.05	0.00	0.00	0.00	0.28	-0.05	0.02	0.33	20.0	Large
	35	0.00	0.53	0.01	0.00	0.11	0.00	0.55	-0.01	0.00	0.57	20.0	Large
	36	0.00	0.53	0.01	0.00	0.11	0.00	0.55	-0.01	0.00	0.57	20.0	Large
	37	-0.03	0.54	0.07	0.00	0.06	0.01	0.55	-0.03	0.06	0.57	20.0	Large
	38	-0.03	0.54	0.07	0.00	0.06	0.01	0.55	-0.03	0.06	0.57	20.0	Large
	39	0.18	0.15	-0.34	0.05	-0.03	0.00	-0.34	0.11	0.23	0.57	20.0	Large
	40	0.18	0.15	-0.34	0.05	-0.03	0.00	-0.34	0.11	0.23	0.57	20.0	Large
Bottom Forging	41	0.32	0.15	0.07	-0.04	-0.01	-0.02	0.33	0.07	0.14	0.26	20.0	Large
	42	0.32	0.15	0.07	-0.04	-0.01	-0.02	0.33	0.07	0.14	0.26	20.0	Large
	43	0.03	0.03	0.01	-0.06	0.00	-0.02	0.10	-0.03	0.01	0.13	20.0	Large
	44	0.03	0.03	0.01	-0.06	0.00	-0.02	0.10	-0.03	0.01	0.13	20.0	Large
	45	0.00	-0.13	-0.47	-0.03	0.01	-0.01	-0.47	-0.13	0.00	0.47	20.0	Large
	46	0.00	-0.13	-0.47	-0.03	0.01	-0.01	-0.47	-0.13	0.00	0.47	20.0	Large
Ram Access Cover Plate	47	0.02	0.01	-0.07	-0.06	0.00	-0.01	0.08	-0.07	-0.05	0.14	31.4	Large
	48	0.02	0.01	-0.07	-0.06	0.00	-0.01	0.08	-0.07	-0.05	0.14	31.4	Large
	49	0.01	-0.01	-0.09	-0.03	0.00	-0.01	0.03	-0.09	-0.03	0.12	31.4	Large
	50	0.01	-0.01	-0.09	-0.03	0.00	-0.01	0.03	-0.09	-0.03	0.12	31.4	Large
	51	0.05	-0.02	-0.03	0.00	0.00	0.01	0.05	-0.03	-0.02	0.08	31.4	Large
	52	0.05	-0.02	-0.03	0.00	0.00	0.01	0.05	-0.03	-0.02	0.08	31.4	Large

nct_sar.xls, vib+1100+ip50

Table 2.6.13-22
Vibration + Thermal (100°F) + 50 psig Internal Pressure - Pm @ 135° Azimuth

Cask Component	Stress Point	Stress Components (ksi)						Principal Stresses (ksi)			SI (ksi)	Stress Limit	M.S.
		S_X	S_Y	S_Z	S_{XY}	S_{YZ}	S_{XZ}	S_1	S_2	S_3			
Top Cover	1	0.01	-0.02	0.03	0.00	0.00	0.05	0.08	-0.03	-0.01	0.11	20.0	Large
	2	0.01	-0.02	0.03	0.00	0.00	0.05	0.08	-0.03	-0.01	0.11	20.0	Large
	3	-0.02	-0.02	-0.05	0.07	-0.01	0.10	-0.15	-0.02	0.08	0.24	20.0	Large
	4	-0.02	-0.02	-0.05	0.07	-0.01	0.10	-0.15	-0.02	0.08	0.24	20.0	Large
	5	-0.07	0.06	0.17	0.15	-0.03	0.04	-0.18	0.16	0.18	0.36	20.0	Large
	6	-0.07	0.06	0.17	0.15	-0.03	0.04	-0.18	0.16	0.18	0.36	20.0	Large
Top Flange	7	0.03	0.00	-0.02	-0.01	0.00	-0.02	0.04	-0.03	0.00	0.07	20.0	Large
	8	0.03	0.00	-0.02	-0.01	0.00	-0.02	0.04	-0.03	0.00	0.07	20.0	Large
	9	-0.21	0.33	0.27	-0.02	-0.15	0.01	-0.21	0.15	0.45	0.66	20.0	Large
	10	-0.21	0.33	0.27	-0.02	-0.15	0.01	-0.21	0.15	0.45	0.66	20.0	Large
Inner Shell	11	-0.04	0.41	0.68	-0.03	-0.22	-0.01	0.80	-0.04	0.29	0.85	20.0	Large
	12	-0.04	0.41	0.68	-0.03	-0.22	-0.01	0.80	-0.04	0.29	0.85	20.0	Large
	13	-0.02	0.44	1.23	0.00	-0.21	0.00	1.28	-0.02	0.39	1.30	20.0	Large
	14	-0.02	0.44	1.23	0.00	-0.21	0.00	1.28	-0.02	0.39	1.30	20.0	Large
	15	-0.02	0.39	1.23	0.00	-0.11	0.00	1.25	-0.02	0.38	1.27	20.0	Large
	16	-0.02	0.39	1.23	0.00	-0.11	0.00	1.25	-0.02	0.38	1.27	20.0	Large
	17	-0.03	0.39	1.24	0.00	-0.01	0.00	1.24	-0.03	0.39	1.27	20.0	Large
	18	-0.03	0.39	1.24	0.00	-0.01	0.00	1.24	-0.03	0.39	1.27	20.0	Large
	19	-0.02	0.39	1.23	0.00	0.08	0.00	1.24	-0.02	0.38	1.26	20.0	Large
	20	-0.02	0.39	1.23	0.00	0.08	0.00	1.24	-0.02	0.38	1.26	20.0	Large
	21	-0.02	0.45	1.24	0.00	0.17	0.00	1.28	-0.02	0.41	1.30	20.0	Large
	22	-0.02	0.45	1.24	0.00	0.17	0.00	1.28	-0.02	0.41	1.30	20.0	Large
	23	-0.07	0.41	-0.15	0.14	0.23	-0.01	0.52	-0.25	-0.07	0.77	20.0	Large
	24	-0.07	0.41	-0.15	0.14	0.23	-0.01	0.52	-0.25	-0.07	0.77	20.0	Large
	25	0.23	0.15	-0.19	0.07	0.05	0.12	-0.22	0.11	0.30	0.53	20.0	Large
	26	0.23	0.15	-0.19	0.07	0.05	0.12	-0.22	0.11	0.30	0.53	20.0	Large
Outer Shell	27	-0.12	0.13	0.19	0.02	-0.20	0.03	0.36	-0.14	-0.03	0.49	20.0	Large
	28	-0.12	0.13	0.19	0.02	-0.20	0.03	0.36	-0.14	-0.03	0.49	20.0	Large
	29	0.02	0.05	-0.04	0.00	-0.12	0.00	-0.12	0.02	0.13	0.25	20.0	Large
	30	0.02	0.05	-0.04	0.00	-0.12	0.00	-0.12	0.02	0.13	0.25	20.0	Large
	31	0.01	0.00	-0.04	0.00	-0.04	0.00	-0.06	0.01	0.03	0.09	20.0	Large
	32	0.01	0.00	-0.04	0.00	-0.04	0.00	-0.06	0.01	0.03	0.09	20.0	Large
	33	0.00	0.03	-0.04	0.00	0.00	0.01	-0.04	0.00	0.03	0.08	20.0	Large
	34	0.00	0.03	-0.04	0.00	0.00	0.01	-0.04	0.00	0.03	0.08	20.0	Large
	35	0.00	0.00	-0.03	0.00	0.05	0.00	-0.07	0.00	0.04	0.11	20.0	Large
	36	0.00	0.00	-0.03	0.00	0.05	0.00	-0.07	0.00	0.04	0.11	20.0	Large
	37	0.02	0.05	-0.04	-0.01	0.13	0.00	-0.13	0.02	0.15	0.28	20.0	Large
	38	0.02	0.05	-0.04	-0.01	0.13	0.00	-0.13	0.02	0.15	0.28	20.0	Large
	39	0.15	0.01	-0.17	0.01	0.17	0.02	-0.27	0.11	0.16	0.43	20.0	Large
	40	0.15	0.01	-0.17	0.01	0.17	0.02	-0.27	0.11	0.16	0.43	20.0	Large
Bottom Forging	41	0.26	0.05	0.12	-0.03	0.04	0.06	0.29	0.02	0.13	0.27	20.0	Large
	42	0.26	0.05	0.12	-0.03	0.04	0.06	0.29	0.02	0.13	0.27	20.0	Large
	43	-0.02	0.03	0.07	-0.07	0.00	0.09	-0.10	0.05	0.14	0.24	20.0	Large
	44	-0.02	0.03	0.07	-0.07	0.00	0.09	-0.10	0.05	0.14	0.24	20.0	Large
	45	-0.04	-0.13	-0.33	-0.06	-0.01	0.12	-0.38	-0.15	0.02	0.40	20.0	Large
	46	-0.04	-0.13	-0.33	-0.06	-0.01	0.12	-0.38	-0.15	0.02	0.40	20.0	Large
Ram Access Cover Plate	47	-0.05	0.00	0.01	-0.06	0.01	0.07	-0.12	0.02	0.07	0.19	31.4	Large
	48	-0.05	0.00	0.01	-0.06	0.01	0.07	-0.12	0.02	0.07	0.19	31.4	Large
	49	-0.03	0.00	-0.02	-0.03	0.00	0.08	-0.11	0.00	0.07	0.18	31.4	Large
	50	-0.03	0.00	-0.02	-0.03	0.00	0.08	-0.11	0.00	0.07	0.18	31.4	Large
	51	0.01	-0.02	0.01	0.00	0.00	0.03	0.04	-0.02	-0.02	0.07	31.4	Large
	52	0.01	-0.02	0.01	0.00	0.00	0.03	0.04	-0.02	-0.02	0.07	31.4	Large

nct_sar.xls, vib+t100+ip50

Table 2.6.13-23
Vibration + Thermal (100°F) + 50 psig Internal Pressure - Pm @ 180° Azimuth

Cask Component	Stress Point	Stress Components (ksi)						Principal Stresses (ksi)			SI (ksi)	Stress Limit	M.S.
		S_X	S_Y	S_Z	S_{XY}	S_{YZ}	S_{XZ}	S_1	S_2	S_3			
Top Cover	1	-0.03	-0.02	0.08	0.00	0.00	-0.01	0.08	-0.03	-0.01	0.11	20.0	Large
	2	-0.03	-0.02	0.08	0.00	0.00	-0.01	0.08	-0.03	-0.01	0.11	20.0	Large
	3	-0.15	-0.02	0.06	0.08	0.00	0.00	-0.18	0.02	0.06	0.24	20.0	Large
	4	-0.15	-0.02	0.06	0.08	0.00	0.00	-0.18	0.02	0.06	0.24	20.0	Large
	5	-0.16	-0.11	0.25	0.17	-0.02	0.02	-0.31	0.03	0.25	0.56	20.0	Large
	6	-0.16	-0.11	0.25	0.17	-0.02	0.02	-0.31	0.03	0.25	0.56	20.0	Large
Top Flange	7	-0.23	0.07	-0.07	-0.04	0.03	-0.01	-0.23	-0.07	0.08	0.31	20.0	Large
	8	-0.23	0.07	-0.07	-0.04	0.03	-0.01	-0.23	-0.07	0.08	0.31	20.0	Large
	9	-0.09	0.35	0.66	0.03	-0.04	0.04	-0.09	0.34	0.67	0.76	20.0	Large
	10	-0.09	0.35	0.66	0.03	-0.04	0.04	-0.09	0.34	0.67	0.76	20.0	Large
Inner Shell	11	-0.06	0.57	0.94	0.04	-0.07	-0.05	-0.07	0.56	0.95	1.02	20.0	Large
	12	-0.06	0.57	0.94	0.04	-0.07	-0.05	-0.07	0.56	0.95	1.02	20.0	Large
	13	-0.08	0.31	1.08	0.00	-0.04	0.04	1.08	-0.08	0.31	1.16	20.0	Large
	14	-0.08	0.31	1.08	0.00	-0.04	0.04	1.08	-0.08	0.31	1.16	20.0	Large
	15	-0.04	0.22	1.20	0.00	-0.03	0.01	1.20	-0.04	0.21	1.24	20.0	Large
	16	-0.04	0.22	1.20	0.00	-0.03	0.01	1.20	-0.04	0.21	1.24	20.0	Large
	17	-0.04	0.04	1.22	0.00	0.00	0.01	1.22	-0.04	0.04	1.26	20.0	Large
	18	-0.04	0.04	1.22	0.00	0.00	0.01	1.22	-0.04	0.04	1.26	20.0	Large
	19	-0.04	0.15	1.22	0.00	0.02	0.01	1.22	-0.04	0.15	1.26	20.0	Large
	20	-0.04	0.15	1.22	0.00	0.02	0.01	1.22	-0.04	0.15	1.26	20.0	Large
	21	-0.08	0.21	1.09	0.00	0.02	0.04	1.09	-0.08	0.20	1.18	20.0	Large
	22	-0.08	0.21	1.09	0.00	0.02	0.04	1.09	-0.08	0.20	1.18	20.0	Large
	23	-0.12	0.50	0.06	0.03	0.07	-0.05	0.51	-0.13	0.07	0.64	20.0	Large
	24	-0.12	0.50	0.06	0.03	0.07	-0.05	0.51	-0.13	0.07	0.64	20.0	Large
	25	-0.06	0.20	-0.01	-0.04	0.00	0.00	0.20	-0.07	-0.01	0.27	20.0	Large
	26	-0.06	0.20	-0.01	-0.04	0.00	0.00	0.20	-0.07	-0.01	0.27	20.0	Large
Outer Shell	27	-0.24	-0.13	0.16	0.18	-0.06	0.02	-0.38	-0.01	0.17	0.56	20.0	Large
	28	-0.24	-0.13	0.16	0.18	-0.06	0.02	-0.38	-0.01	0.17	0.56	20.0	Large
	29	-0.05	-0.35	-0.16	-0.04	0.00	0.05	-0.36	-0.18	-0.03	0.32	20.0	Large
	30	-0.05	-0.35	-0.16	-0.04	0.00	0.05	-0.36	-0.18	-0.03	0.32	20.0	Large
	31	-0.01	-0.33	-0.03	0.00	-0.01	0.01	-0.33	-0.03	-0.01	0.32	20.0	Large
	32	-0.01	-0.33	-0.03	0.00	-0.01	0.01	-0.33	-0.03	-0.01	0.32	20.0	Large
	33	-0.01	-0.40	-0.04	0.00	0.00	0.01	-0.40	-0.04	0.00	0.39	20.0	Large
	34	-0.01	-0.40	-0.04	0.00	0.00	0.01	-0.40	-0.04	0.00	0.39	20.0	Large
	35	-0.01	-0.31	-0.03	0.00	0.01	0.01	-0.31	-0.04	-0.01	0.30	20.0	Large
	36	-0.01	-0.31	-0.03	0.00	0.01	0.01	-0.31	-0.04	-0.01	0.30	20.0	Large
	37	-0.06	-0.32	-0.16	0.03	0.01	0.05	-0.32	-0.17	-0.04	0.28	20.0	Large
	38	-0.06	-0.32	-0.16	0.03	0.01	0.05	-0.32	-0.17	-0.04	0.28	20.0	Large
	39	0.03	-0.14	-0.04	-0.14	0.05	-0.02	-0.22	-0.05	0.12	0.34	20.0	Large
	40	0.03	-0.14	-0.04	-0.14	0.05	-0.02	-0.22	-0.05	0.12	0.34	20.0	Large
Bottom Forging	41	0.10	-0.13	0.17	-0.04	0.01	0.01	-0.13	0.10	0.17	0.30	20.0	Large
	42	0.10	-0.13	0.17	-0.04	0.01	0.01	-0.13	0.10	0.17	0.30	20.0	Large
	43	-0.12	0.03	0.18	-0.09	0.00	0.01	-0.16	0.07	0.18	0.34	20.0	Large
	44	-0.12	0.03	0.18	-0.09	0.00	0.01	-0.16	0.07	0.18	0.34	20.0	Large
	45	-0.09	-0.14	-0.17	-0.08	0.00	0.01	-0.03	-0.20	-0.17	0.17	20.0	Large
	46	-0.09	-0.14	-0.17	-0.08	0.00	0.01	-0.03	-0.20	-0.17	0.17	20.0	Large
Ram Access Cover Plate	47	-0.13	0.00	0.11	-0.05	0.00	0.00	-0.15	0.02	0.11	0.26	31.4	Large
	48	-0.13	0.00	0.11	-0.05	0.00	0.00	-0.15	0.02	0.11	0.26	31.4	Large
	49	-0.11	0.01	0.06	-0.03	0.00	0.01	-0.11	0.01	0.06	0.18	31.4	Large
	50	-0.11	0.01	0.06	-0.03	0.00	0.01	-0.11	0.01	0.06	0.18	31.4	Large
	51	-0.02	-0.02	0.04	0.00	0.00	-0.01	0.04	-0.02	-0.02	0.06	31.4	Large
	52	-0.02	-0.02	0.04	0.00	0.00	-0.01	0.04	-0.02	-0.02	0.06	31.4	Large

nct_sar.xls, vib+t100+ip50

Table 2.6.13-24
Vibration + Thermal (100°F) + 50 psig Internal Pressure - Pm + Pb @ 0° Azimuth

Cask Component	Stress Point	Stress Components (ksi)						Principal Stresses (ksi)			SI (ksi)	Stress Limit	M.S.
		S_X	S_Y	S_Z	S_{XY}	S_{YZ}	S_{XZ}	S_1	S_2	S_3			
Top Cover	1	-0.04	-2.06	-1.93	-0.01	0.00	-0.01	-0.04	-2.06	-1.93	2.01	30.0	Large
	2	-0.02	2.03	2.08	0.01	0.00	0.00	-0.02	2.03	2.08	2.10	30.0	Large
	3	-0.22	-1.59	-1.60	0.07	0.00	0.00	-0.22	-1.60	-1.60	1.38	30.0	Large
	4	-0.02	1.55	1.84	0.07	0.00	0.00	-0.02	1.56	1.84	1.87	30.0	Large
	5	-0.39	-0.42	-0.46	0.15	0.00	0.00	-0.26	-0.55	-0.46	0.29	30.0	Large
	6	0.14	0.36	1.26	0.16	0.01	0.00	1.26	0.06	0.44	1.21	30.0	Large
Top Flange	7	-0.30	-0.54	0.09	-0.10	-0.02	0.05	0.09	-0.57	-0.28	0.67	30.0	Large
	8	-0.09	0.67	0.35	0.01	0.09	0.07	-0.10	0.33	0.70	0.79	30.0	Large
	9	-0.24	0.26	0.84	-0.12	0.02	0.07	0.85	-0.27	0.28	1.12	30.0	Large
	10	-0.29	0.18	0.81	0.02	0.06	0.11	0.83	-0.30	0.17	1.13	30.0	Large
Inner Shell	11	-0.12	-0.63	0.99	-0.05	0.06	0.06	1.00	-0.64	-0.12	1.64	30.0	Large
	12	-0.08	1.23	1.64	0.09	0.11	0.13	-0.10	1.20	1.68	1.78	30.0	Large
	13	-0.18	1.96	-1.21	0.04	0.05	-0.17	1.96	-1.24	-0.15	3.19	30.0	8.39
	14	-0.18	-2.41	-2.34	0.03	0.05	-0.26	-0.15	-2.44	-2.34	2.29	30.0	Large
	15	-0.12	-0.56	1.00	0.00	-0.11	0.03	1.01	-0.57	-0.12	1.58	30.0	Large
	16	-0.05	0.61	1.82	0.00	-0.08	0.10	1.83	-0.06	0.60	1.89	30.0	Large
	17	-0.11	0.49	0.89	0.00	0.00	0.02	-0.11	0.49	0.89	1.00	30.0	Large
	18	-0.05	0.96	2.14	0.00	0.00	0.13	2.15	-0.05	0.96	2.20	30.0	Large
	19	-0.11	-0.48	1.19	-0.01	0.11	0.04	1.20	-0.48	-0.11	1.68	30.0	Large
	20	-0.05	0.53	2.00	0.00	0.08	0.12	2.01	-0.06	0.53	2.07	30.0	Large
	21	-0.18	1.83	-1.21	-0.04	-0.04	-0.17	1.83	-1.24	-0.15	3.07	30.0	8.78
	22	-0.18	-2.48	-2.34	-0.03	-0.04	-0.26	-0.15	-2.50	-2.35	2.35	30.0	Large
	23	-0.13	0.78	0.51	0.16	-0.05	0.06	-0.16	0.51	0.81	0.97	30.0	Large
	24	-0.20	-0.06	0.38	0.00	-0.12	0.12	0.43	-0.23	-0.08	0.66	30.0	Large
	25	0.39	0.75	0.45	0.13	-0.02	0.02	0.79	0.34	0.45	0.45	30.0	Large
	26	0.00	-0.39	0.07	0.04	-0.04	0.04	-0.40	-0.01	0.09	0.49	30.0	Large
Outer Shell	27	-0.18	-1.63	0.17	0.05	0.07	0.01	-1.64	-0.18	0.18	1.81	30.0	Large
	28	-0.13	1.41	1.09	-0.05	0.11	0.07	-0.14	1.06	1.45	1.58	30.0	Large
	29	-0.71	4.46	-1.63	0.32	0.00	-0.07	4.48	-1.63	-0.73	6.12	30.0	3.91
	30	-1.32	-5.75	-4.65	0.36	0.00	-0.28	-1.27	-5.78	-4.67	4.51	30.0	5.65
	31	-0.01	-1.51	-0.53	0.02	-0.13	-0.01	-1.53	-0.51	-0.01	1.52	30.0	Large
	32	0.01	0.63	0.71	0.02	-0.07	0.10	0.00	0.60	0.76	0.76	30.0	Large
	33	-0.01	-0.03	-0.58	0.00	0.00	-0.01	-0.58	-0.03	-0.01	0.57	30.0	Large
	34	0.01	0.64	1.14	0.00	0.00	0.14	-0.01	0.64	1.16	1.17	30.0	Large
	35	-0.01	-1.26	-0.35	-0.03	0.13	0.01	-1.28	-0.33	-0.01	1.27	30.0	Large
	36	0.01	0.53	0.84	-0.02	0.07	0.11	-0.01	0.51	0.87	0.87	30.0	Large
	37	-0.69	4.28	-1.68	-0.32	0.00	-0.07	4.31	-1.68	-0.71	5.99	30.0	4.01
	38	-1.25	-5.55	-4.57	-0.36	0.00	-0.28	-1.19	-5.58	-4.60	4.39	30.0	5.84
	39	0.53	-0.11	0.28	0.01	-0.07	0.00	-0.12	0.29	0.53	0.65	30.0	Large
	40	0.03	-0.08	0.28	0.08	-0.10	0.05	0.31	-0.15	0.07	0.46	30.0	Large
Bottom Forging	41	0.96	0.10	0.32	0.02	-0.01	0.01	0.96	0.10	0.32	0.86	30.0	Large
	42	-0.02	-0.15	0.44	-0.03	0.00	-0.01	0.44	-0.16	-0.02	0.60	30.0	Large
	43	-0.17	-0.14	-0.28	-0.08	0.00	0.00	-0.08	-0.28	-0.23	0.20	30.0	Large
	44	0.03	0.21	0.83	-0.08	0.00	0.00	0.83	0.00	0.24	0.83	30.0	Large
	45	-0.06	-0.32	-0.80	-0.07	0.00	-0.01	-0.80	-0.34	-0.04	0.76	30.0	Large
	46	-0.06	0.02	0.58	-0.08	0.00	0.00	0.58	-0.11	0.07	0.69	30.0	Large
Ram Access Cover Plate	47	-0.26	-0.20	-0.04	-0.04	0.00	0.00	-0.04	-0.28	-0.18	0.24	47.1	Large
	48	-0.01	0.22	0.29	-0.07	0.00	0.00	-0.03	0.24	0.29	0.32	47.1	Large
	49	-0.20	-0.33	-0.21	-0.01	0.00	-0.01	-0.33	-0.21	-0.20	0.13	47.1	Large
	50	-0.01	0.33	0.35	-0.03	0.00	0.00	-0.02	0.33	0.35	0.36	47.1	Large
	51	-0.05	-0.34	-0.27	0.00	0.00	-0.01	-0.05	-0.34	-0.27	0.30	47.1	Large
	52	0.00	0.30	0.35	0.01	0.00	0.00	0.00	0.30	0.35	0.35	47.1	Large

nct_sar.xls, vib+t100+ip50

Table 2.6.13-25
Vibration + Thermal (100°F) + 50 psig Internal Pressure - Pm + Pb @ 45° Azimuth

Cask Component	Stress Point	Stress Components (ksi)						Principal Stresses (ksi)			SI (ksi)	Stress Limit	M.S.
		S_X	S_Y	S_Z	S_{XY}	S_{YZ}	S_{XZ}	S_1	S_2	S_3			
Top Cover	1	0.04	-2.06	-2.01	-0.01	-0.01	-0.08	0.05	-2.06	-2.01	2.10	30.0	Large
	2	0.02	2.03	2.05	0.01	0.00	-0.03	0.01	2.03	2.05	2.04	30.0	Large
	3	-0.02	-1.59	-1.76	0.07	0.01	-0.19	0.01	-1.78	-1.59	1.79	30.0	Large
	4	-0.03	1.55	1.76	0.07	0.01	-0.05	-0.04	1.55	1.76	1.80	30.0	Large
	5	-0.11	-0.31	-0.58	0.15	0.02	-0.25	0.05	-0.71	-0.34	0.75	30.0	Large
	6	-0.07	0.43	1.08	0.15	0.07	0.06	1.09	-0.11	0.46	1.20	30.0	Large
Top Flange	7	0.06	0.05	0.06	-0.01	0.08	0.01	-0.03	0.06	0.14	0.17	30.0	Large
	8	0.01	-0.04	0.02	-0.01	-0.10	0.00	-0.11	0.01	0.09	0.20	30.0	Large
	9	-0.13	0.67	0.55	-0.03	0.46	0.08	1.07	-0.15	0.17	1.22	30.0	Large
	10	-0.31	-0.03	0.27	-0.02	0.15	-0.08	0.34	-0.32	-0.09	0.66	30.0	Large
Inner Shell	11	-0.05	0.28	0.77	-0.05	0.79	0.01	1.36	-0.31	-0.04	1.66	30.0	Large
	12	-0.04	0.56	0.83	-0.02	0.43	0.02	1.14	-0.04	0.25	1.18	30.0	Large
	13	-0.15	1.26	0.03	0.02	0.39	-0.01	1.38	-0.15	-0.09	1.52	30.0	Large
	14	-0.07	-0.09	-0.25	0.02	0.16	0.08	-0.36	-0.09	0.04	0.39	30.0	Large
	15	-0.08	0.31	1.39	0.01	-0.56	-0.02	1.63	-0.08	0.07	1.71	30.0	Large
	16	-0.04	0.71	1.27	0.01	-0.36	0.02	1.45	-0.04	0.53	1.48	30.0	Large
	17	-0.10	0.59	1.83	0.00	0.00	-0.01	1.83	-0.10	0.59	1.92	30.0	Large
	18	-0.06	0.34	1.03	0.00	0.00	0.01	1.03	-0.06	0.34	1.09	30.0	Large
	19	-0.08	0.35	1.50	-0.01	0.56	-0.02	1.73	-0.08	0.12	1.81	30.0	Large
	20	-0.04	0.65	1.31	-0.01	0.40	0.02	1.50	-0.04	0.46	1.54	30.0	Large
	21	-0.15	1.25	0.04	-0.01	-0.34	-0.01	1.34	-0.15	-0.05	1.49	30.0	Large
	22	-0.07	-0.08	-0.23	-0.01	-0.11	0.08	-0.31	-0.09	0.01	0.32	30.0	Large
	23	-0.03	1.58	0.31	0.15	-0.73	0.00	1.92	-0.10	0.03	2.01	30.0	Large
	24	-0.14	-0.74	-0.38	0.15	-0.41	0.03	-1.02	-0.18	-0.06	0.97	30.0	Large
	25	0.48	0.92	0.16	0.06	-0.24	-0.24	0.00	0.55	1.03	1.03	30.0	Large
	26	0.02	-0.62	-0.36	0.07	-0.02	-0.18	0.10	-0.63	-0.43	0.73	30.0	Large
Outer Shell	27	-0.17	-0.39	0.12	-0.03	0.77	-0.07	0.68	-0.95	-0.18	1.63	30.0	Large
	28	-0.06	0.72	0.44	-0.02	0.12	-0.05	-0.06	0.40	0.77	0.83	30.0	Large
	29	-0.33	1.92	-0.89	0.12	0.34	-0.11	1.97	-0.96	-0.31	2.93	30.0	9.24
	30	-0.51	-1.40	-1.73	0.14	-0.09	0.04	-0.49	-1.75	-1.39	1.26	30.0	Large
	31	-0.02	-0.24	0.06	0.03	-0.67	-0.03	-0.78	-0.03	0.60	1.38	30.0	Large
	32	-0.03	0.59	0.00	0.04	-0.33	0.02	0.74	-0.16	-0.02	0.90	30.0	Large
	33	-0.03	0.29	0.71	0.00	-0.01	-0.03	0.71	-0.03	0.29	0.74	30.0	Large
	34	-0.06	-0.12	-0.43	0.00	-0.01	0.01	-0.43	-0.12	-0.06	0.37	30.0	Large
	35	-0.02	-0.12	0.19	-0.03	0.62	-0.03	0.67	-0.60	-0.03	1.28	30.0	Large
	36	-0.03	0.46	0.01	-0.04	0.33	0.02	0.63	-0.18	-0.03	0.81	30.0	Large
	37	-0.33	1.80	-0.93	-0.13	-0.36	-0.11	1.85	-1.00	-0.31	2.85	30.0	9.53
	38	-0.49	-1.29	-1.68	-0.14	0.07	0.04	-0.46	-1.69	-1.30	1.23	30.0	Large
	39	0.53	0.77	0.14	0.04	-0.57	-0.06	-0.19	0.52	1.11	1.31	30.0	Large
	40	0.08	-0.66	-0.30	0.03	-0.14	-0.04	-0.70	-0.26	0.09	0.79	30.0	Large
Bottom Forging	41	1.05	0.29	0.05	-0.03	-0.20	-0.26	1.12	-0.11	0.39	1.23	30.0	Large
	42	0.00	-0.19	0.35	-0.04	0.02	0.02	0.36	-0.20	0.01	0.56	30.0	Large
	43	-0.01	-0.14	-0.53	-0.07	0.00	-0.23	-0.62	-0.16	0.09	0.72	30.0	Large
	44	-0.03	0.21	0.83	-0.07	0.00	-0.02	0.83	-0.05	0.23	0.88	30.0	Large
	45	-0.02	-0.30	-1.05	-0.05	0.01	-0.19	-1.08	-0.31	0.02	1.10	30.0	Large
	46	-0.03	0.02	0.47	-0.05	0.03	-0.08	0.49	-0.07	0.04	0.56	30.0	Large
Ram Access Cover Plate	47	-0.09	-0.20	-0.19	-0.06	0.01	-0.15	0.04	-0.30	-0.20	0.34	47.1	Large
	48	-0.03	0.22	0.26	-0.06	-0.03	-0.01	-0.04	0.22	0.28	0.32	47.1	Large
	49	-0.06	-0.33	-0.31	-0.03	0.01	-0.14	0.01	-0.38	-0.33	0.38	47.1	Large
	50	-0.01	0.32	0.30	-0.03	0.00	-0.03	-0.02	0.30	0.32	0.34	47.1	Large
	51	0.00	-0.34	-0.32	0.00	0.00	-0.04	0.01	-0.34	-0.33	0.35	47.1	Large
	52	0.03	0.30	0.32	0.00	0.01	-0.03	0.03	0.30	0.33	0.30	47.1	Large

nct_sar.xls, vib+t100+ip50

Table 2.6.13-26
Vibration + Thermal (100°F) + 50 psig Internal Pressure - Pm + Pb @ 90° Azimuth

Cask Component	Stress Point	Stress Components (ksi)						Principal Stresses (ksi)			SI (ksi)	Stress Limit	M.S.
		S_X	S_Y	S_Z	S_{XY}	S_{YZ}	S_{XZ}	S_1	S_2	S_3			
Top Cover	1	0.11	-2.06	-2.08	0.00	-0.01	0.01	0.11	-2.08	-2.05	2.19	30.0	Large
	2	0.04	2.03	2.03	0.00	0.01	0.00	0.04	2.02	2.03	1.99	30.0	Large
	3	0.18	-1.59	-1.93	0.06	0.00	-0.01	0.18	-1.93	-1.59	2.11	30.0	Large
	4	-0.03	1.55	1.67	0.06	0.00	-0.02	-0.03	1.55	1.67	1.70	30.0	Large
	5	0.16	-0.16	-0.68	0.15	0.00	0.00	-0.68	-0.22	0.22	0.90	30.0	Large
	6	-0.29	0.53	0.93	0.14	0.00	-0.04	-0.32	0.55	0.94	1.25	30.0	Large
Top Flange	7	0.08	0.03	-0.08	0.00	0.01	-0.03	-0.09	0.03	0.09	0.18	30.0	Large
	8	0.01	-0.06	-0.09	0.00	0.06	-0.01	-0.14	-0.02	0.01	0.15	30.0	Large
	9	-0.14	0.94	0.16	0.03	-0.01	0.00	0.94	-0.14	0.16	1.08	30.0	Large
	10	-0.48	-0.29	-0.19	-0.10	0.07	0.08	-0.55	-0.25	-0.15	0.40	30.0	Large
Inner Shell	11	-0.05	0.67	0.47	-0.05	-0.01	0.01	-0.05	0.47	0.67	0.72	30.0	Large
	12	-0.06	0.00	0.35	-0.12	0.11	0.02	0.38	-0.16	0.07	0.54	30.0	Large
	13	-0.09	0.60	1.12	0.00	-0.07	0.02	-0.09	0.59	1.13	1.22	30.0	Large
	14	-0.04	0.90	1.45	0.00	-0.06	-0.02	-0.04	0.89	1.46	1.49	30.0	Large
	15	-0.05	0.67	1.04	0.00	-0.10	0.01	-0.05	0.65	1.07	1.12	30.0	Large
	16	0.01	0.92	1.53	0.00	-0.22	-0.01	0.01	0.85	1.60	1.60	30.0	Large
	17	-0.03	0.46	0.92	0.00	0.00	-0.01	-0.03	0.46	0.92	0.95	30.0	Large
	18	0.03	0.69	1.63	0.00	0.00	0.01	1.63	0.03	0.69	1.60	30.0	Large
	19	-0.05	0.71	1.02	0.00	0.09	0.01	-0.05	0.69	1.05	1.09	30.0	Large
	20	0.01	0.96	1.53	0.00	0.22	-0.01	0.01	0.89	1.61	1.60	30.0	Large
	21	-0.09	0.70	1.14	0.00	0.05	0.02	-0.09	0.69	1.15	1.25	30.0	Large
	22	-0.03	0.98	1.48	0.00	0.05	-0.02	-0.04	0.98	1.48	1.52	30.0	Large
	23	0.01	2.04	0.07	0.16	0.01	0.01	2.06	0.00	0.07	2.06	30.0	Large
	24	-0.16	-1.30	-0.88	0.29	-0.12	0.02	-0.09	-1.40	-0.85	1.31	30.0	Large
	25	0.70	1.18	-0.03	0.06	-0.01	0.01	-0.03	0.69	1.19	1.22	30.0	Large
	26	0.04	-0.98	-0.74	0.15	-0.05	0.03	0.06	-1.01	-0.73	1.07	30.0	Large
Outer Shell	27	-0.15	0.47	0.07	-0.10	-0.07	0.00	0.50	-0.17	0.06	0.66	30.0	Large
	28	-0.01	0.24	0.12	0.00	0.09	0.00	0.29	-0.01	0.08	0.30	30.0	Large
	29	-0.05	0.35	-0.21	0.00	-0.07	0.03	0.36	-0.22	-0.04	0.58	30.0	Large
	30	0.00	0.81	0.33	0.00	-0.05	-0.01	0.81	0.00	0.33	0.81	30.0	Large
	31	-0.01	0.35	-0.39	0.00	0.00	0.02	-0.39	-0.01	0.35	0.75	30.0	Large
	32	0.01	0.78	0.41	0.00	-0.20	-0.01	0.87	0.01	0.32	0.86	30.0	Large
	33	0.01	0.11	-0.61	0.00	0.00	-0.01	-0.61	0.01	0.11	0.72	30.0	Large
	34	0.03	0.46	0.51	0.00	0.00	0.00	0.03	0.46	0.51	0.48	30.0	Large
	35	-0.01	0.33	-0.40	0.00	0.00	0.02	-0.40	-0.01	0.33	0.74	30.0	Large
	36	0.01	0.73	0.42	0.00	0.21	-0.01	0.84	0.01	0.32	0.83	30.0	Large
	37	-0.05	0.24	-0.23	0.00	0.06	0.03	0.25	-0.24	-0.04	0.49	30.0	Large
	38	0.00	0.84	0.36	0.00	0.06	-0.01	0.84	0.00	0.35	0.85	30.0	Large
	39	0.55	1.54	0.05	0.10	0.02	0.00	1.55	0.05	0.54	1.50	30.0	Large
	40	0.12	-1.22	-0.72	0.01	-0.08	0.00	0.12	-1.24	-0.71	1.35	30.0	Large
Bottom Forging	41	1.25	0.55	-0.15	-0.03	-0.01	0.01	1.25	-0.15	0.55	1.40	30.0	Large
	42	-0.08	-0.25	0.29	-0.05	0.00	-0.05	0.30	-0.27	-0.07	0.56	30.0	Large
	43	0.14	-0.14	-0.78	-0.06	0.00	0.00	-0.78	-0.16	0.16	0.93	30.0	Large
	44	-0.08	0.21	0.80	-0.06	0.00	-0.04	0.80	-0.09	0.23	0.89	30.0	Large
	45	0.00	-0.28	-1.30	-0.04	0.00	0.00	-1.30	-0.28	0.01	1.30	30.0	Large
	46	0.01	0.03	0.36	-0.03	0.01	-0.02	0.36	-0.01	0.05	0.37	30.0	Large
Ram Access Cover Plate	47	0.07	-0.19	-0.35	-0.08	0.00	-0.01	0.09	-0.35	-0.21	0.43	47.1	Large
	48	-0.05	0.21	0.21	-0.05	0.00	-0.01	-0.06	0.21	0.22	0.28	47.1	Large
	49	0.05	-0.33	-0.42	-0.04	0.00	0.00	0.05	-0.42	-0.34	0.47	47.1	Large
	50	-0.03	0.31	0.24	-0.02	0.00	-0.01	-0.03	0.24	0.31	0.34	47.1	Large
	51	0.04	-0.34	-0.36	0.00	0.00	0.01	0.04	-0.36	-0.34	0.40	47.1	Large
	52	0.05	0.30	0.30	0.00	0.01	0.00	0.05	0.29	0.31	0.26	47.1	Large

nct_sar.xls, vib+t100+ip50

Table 2.6.13-27
Vibration + Thermal (100°F) + 50 psig Internal Pressure - Pm + Pb @ 135° Azimuth

Cask Component	Stress Point	Stress Components (ksi)						Principal Stresses (ksi)			SI (ksi)	Stress Limit	M.S.
		S_X	S_Y	S_Z	S_{XY}	S_{YZ}	S_{XZ}	S_1	S_2	S_3			
Top Cover	1	0.02	-2.06	-1.99	0.01	-0.01	0.08	0.03	-2.06	-2.00	2.08	30.0	Large
	2	0.01	2.03	2.06	0.00	0.01	0.03	0.01	2.03	2.06	2.06	30.0	Large
	3	-0.05	-1.59	-1.82	0.07	-0.01	0.16	-0.03	-1.83	-1.59	1.81	30.0	Large
	4	0.00	1.55	1.72	0.07	-0.01	0.03	0.00	1.55	1.72	1.72	30.0	Large
	5	-0.12	-0.31	-0.68	0.15	-0.01	0.16	-0.01	-0.73	-0.37	0.71	30.0	Large
	6	-0.04	0.43	1.02	0.15	-0.05	-0.07	1.03	-0.09	0.47	1.11	30.0	Large
Top Flange	7	0.06	0.06	0.00	-0.01	-0.06	-0.04	-0.05	0.07	0.10	0.15	30.0	Large
	8	0.01	-0.06	-0.04	-0.01	0.06	-0.01	-0.12	0.00	0.02	0.14	30.0	Large
	9	-0.12	0.73	0.40	-0.01	-0.22	-0.04	0.84	-0.13	0.29	0.96	30.0	Large
	10	-0.32	-0.06	0.13	-0.03	-0.07	0.05	0.16	-0.33	-0.08	0.49	30.0	Large
Inner Shell	11	-0.05	0.42	0.68	-0.03	-0.29	-0.01	0.87	-0.05	0.24	0.92	30.0	Large
	12	-0.04	0.40	0.68	-0.03	-0.15	-0.01	0.75	-0.04	0.33	0.79	30.0	Large
	13	-0.05	0.44	1.22	0.00	-0.27	0.00	1.31	-0.05	0.36	1.35	30.0	Large
	14	0.00	0.45	1.23	0.00	-0.14	0.00	1.25	0.00	0.42	1.25	30.0	Large
	15	-0.04	0.41	1.27	0.00	-0.17	0.00	1.30	-0.04	0.38	1.34	30.0	Large
	16	0.00	0.37	1.20	0.00	-0.06	-0.01	1.20	0.00	0.37	1.20	30.0	Large
	17	-0.06	0.37	1.23	0.00	-0.01	0.01	1.23	-0.06	0.37	1.29	30.0	Large
	18	-0.01	0.41	1.24	0.00	0.00	-0.02	1.24	-0.01	0.41	1.25	30.0	Large
	19	-0.04	0.41	1.27	0.00	0.13	0.00	1.29	-0.04	0.39	1.33	30.0	Large
	20	0.00	0.37	1.19	0.00	0.02	-0.01	1.19	0.00	0.36	1.20	30.0	Large
	21	-0.05	0.45	1.24	0.00	0.23	-0.01	1.30	-0.05	0.38	1.35	30.0	Large
	22	0.01	0.45	1.25	0.00	0.11	0.00	1.27	0.01	0.44	1.26	30.0	Large
	23	-0.03	1.62	0.21	0.14	0.29	-0.01	1.69	-0.05	0.16	1.74	30.0	Large
	24	-0.14	-0.79	-0.50	0.14	0.17	-0.01	-0.89	-0.43	-0.11	0.78	30.0	Large
	25	0.47	0.93	0.06	0.07	0.11	0.14	0.01	0.49	0.95	0.94	30.0	Large
	26	0.02	-0.61	-0.44	0.07	0.00	0.10	0.04	-0.62	-0.46	0.67	30.0	Large
Outer Shell	27	-0.18	-0.37	0.03	0.02	-0.34	0.04	0.23	-0.57	-0.18	0.80	30.0	Large
	28	-0.06	0.61	0.35	0.02	-0.05	0.03	-0.07	0.34	0.62	0.69	30.0	Large
	29	0.01	0.08	-0.07	0.00	-0.22	-0.01	-0.23	0.01	0.24	0.46	30.0	Large
	30	0.03	0.02	-0.01	0.00	-0.02	0.00	-0.01	0.03	0.03	0.05	30.0	Large
	31	0.01	0.04	-0.02	0.00	-0.13	0.01	-0.13	0.01	0.14	0.27	30.0	Large
	32	0.00	-0.03	-0.06	0.00	0.05	-0.01	-0.10	0.00	0.01	0.10	30.0	Large
	33	-0.01	0.00	-0.09	0.00	0.00	0.03	-0.09	0.00	0.00	0.10	30.0	Large
	34	0.00	0.06	0.00	0.00	0.00	-0.01	0.06	-0.02	0.01	0.08	30.0	Large
	35	0.01	0.04	-0.01	0.00	0.14	0.01	0.16	-0.13	0.01	0.29	30.0	Large
	36	0.00	-0.04	-0.06	0.00	-0.04	-0.01	-0.09	-0.01	0.00	0.09	30.0	Large
	37	0.01	-0.01	-0.10	-0.01	0.24	-0.01	-0.30	0.01	0.19	0.48	30.0	Large
	38	0.03	0.11	0.03	-0.01	0.03	0.00	0.12	0.01	0.03	0.10	30.0	Large
	39	0.52	0.69	0.03	0.01	0.27	0.03	-0.06	0.51	0.79	0.85	30.0	Large
	40	0.07	-0.65	-0.37	0.01	0.08	0.02	0.07	-0.67	-0.35	0.74	30.0	Large
Bottom Forging	41	1.04	0.29	-0.05	-0.03	0.09	0.15	1.06	-0.10	0.31	1.16	30.0	Large
	42	0.01	-0.19	0.30	-0.04	-0.01	-0.04	0.30	-0.20	0.02	0.50	30.0	Large
	43	-0.05	-0.14	-0.62	-0.07	0.00	0.19	-0.67	-0.17	0.03	0.71	30.0	Large
	44	0.01	0.21	0.76	-0.07	0.00	-0.01	0.76	-0.01	0.23	0.77	30.0	Large
	45	-0.05	-0.29	-1.10	-0.06	-0.01	0.18	-1.13	-0.30	-0.01	1.12	30.0	Large
	46	-0.02	0.04	0.44	-0.06	-0.02	0.06	0.45	-0.06	0.07	0.51	30.0	Large
Ram Access Cover Plate	47	-0.10	-0.20	-0.21	-0.06	-0.01	0.15	0.02	-0.32	-0.21	0.34	47.1	Large
	48	-0.02	0.21	0.24	-0.06	0.04	0.00	-0.03	0.19	0.27	0.30	47.1	Large
	49	-0.07	-0.32	-0.33	-0.03	0.00	0.14	0.00	-0.39	-0.32	0.38	47.1	Large
	50	0.00	0.33	0.29	-0.03	0.00	0.03	-0.01	0.30	0.33	0.33	47.1	Large
	51	-0.01	-0.34	-0.31	0.00	0.00	0.04	-0.01	-0.34	-0.31	0.34	47.1	Large
	52	0.02	0.30	0.33	-0.01	0.00	0.03	0.02	0.30	0.33	0.31	47.1	Large

nct_sar.xls, vib+t100+ip50

Table 2.6.13-28
Vibration + Thermal (100°F) + 50 psig Internal Pressure - Pm + Pb @ 180° Azimuth

Cask Component	Stress Point	Stress Components (ksi)						Principal Stresses (ksi)			SI (ksi)	Stress Limit	M.S.
		S_X	S_Y	S_Z	S_{XY}	S_{YZ}	S_{XZ}	S_1	S_2	S_3			
Top Cover	1	-0.04	-2.06	-1.93	0.01	0.00	-0.01	-0.04	-2.06	-1.93	2.01	30.0	Large
	2	-0.02	2.03	2.08	-0.01	0.00	0.00	-0.02	2.03	2.08	2.10	30.0	Large
	3	-0.28	-1.59	-1.69	0.08	0.00	0.00	-0.27	-1.69	-1.60	1.42	30.0	Large
	4	-0.02	1.55	1.81	0.08	0.00	0.01	-0.02	1.56	1.81	1.83	30.0	Large
	5	-0.60	-0.53	-0.67	0.16	-0.01	0.03	-0.40	-0.74	-0.66	0.33	30.0	Large
	6	0.26	0.30	1.17	0.18	-0.03	0.01	1.17	0.10	0.46	1.07	30.0	Large
Top Flange	7	-0.30	-0.19	-0.09	-0.05	0.03	-0.01	-0.32	-0.18	-0.08	0.24	30.0	Large
	8	-0.13	0.33	-0.04	-0.02	0.03	-0.01	0.33	-0.14	-0.04	0.47	30.0	Large
	9	-0.13	0.44	0.81	-0.05	-0.09	0.01	-0.13	0.42	0.83	0.96	30.0	Large
	10	-0.08	0.26	0.52	0.12	0.01	0.06	-0.12	0.30	0.52	0.65	30.0	Large
Inner Shell	11	-0.10	0.30	0.99	0.00	-0.12	-0.06	1.01	-0.10	0.28	1.12	30.0	Large
	12	-0.03	0.84	0.89	0.07	-0.01	-0.04	-0.04	0.84	0.89	0.93	30.0	Large
	13	-0.09	0.47	1.38	0.00	-0.03	0.00	1.38	-0.09	0.47	1.47	30.0	Large
	14	-0.06	0.14	0.78	0.00	-0.04	0.07	0.79	-0.07	0.14	0.86	30.0	Large
	15	-0.07	0.28	1.44	0.00	-0.03	-0.02	1.44	-0.07	0.28	1.51	30.0	Large
	16	-0.02	0.15	0.96	0.00	-0.02	0.04	0.96	-0.02	0.15	0.98	30.0	Large
	17	-0.06	0.17	1.58	0.00	0.00	-0.03	1.58	-0.06	0.17	1.64	30.0	Large
	18	-0.02	-0.09	0.87	0.00	0.00	0.05	0.87	-0.09	-0.03	0.96	30.0	Large
	19	-0.06	0.22	1.47	0.00	0.02	-0.02	1.47	-0.06	0.22	1.53	30.0	Large
	20	-0.02	0.08	0.97	0.00	0.01	0.04	0.97	-0.02	0.08	0.99	30.0	Large
	21	-0.10	0.37	1.40	0.00	0.02	0.00	1.40	-0.10	0.36	1.50	30.0	Large
	22	-0.07	0.05	0.79	0.00	0.03	0.07	0.80	-0.07	0.04	0.87	30.0	Large
	23	-0.14	1.19	0.36	0.11	0.13	-0.04	1.22	-0.16	0.34	1.38	30.0	Large
	24	-0.13	-0.18	-0.23	-0.04	0.01	-0.05	-0.09	-0.25	-0.20	0.16	30.0	Large
	25	0.02	0.49	0.10	0.02	0.03	0.00	0.49	0.02	0.09	0.47	30.0	Large
	26	-0.12	-0.07	-0.12	-0.09	-0.04	0.00	0.01	-0.19	-0.12	0.20	30.0	Large
Outer Shell	27	-0.29	-1.41	-0.08	0.26	-0.14	0.04	-1.48	-0.24	-0.06	1.42	30.0	Large
	28	-0.20	1.14	0.40	0.11	0.02	-0.01	1.14	-0.21	0.40	1.35	30.0	Large
	29	-0.06	-0.03	0.28	-0.03	0.02	-0.01	0.28	-0.08	-0.01	0.36	30.0	Large
	30	-0.05	-0.67	-0.60	-0.04	-0.02	0.10	-0.03	-0.68	-0.61	0.65	30.0	Large
	31	-0.01	-0.25	0.29	0.00	-0.01	-0.04	0.29	-0.25	-0.01	0.54	30.0	Large
	32	-0.01	-0.42	-0.35	0.00	0.00	0.05	0.00	-0.42	-0.36	0.41	30.0	Large
	33	0.01	-0.19	0.45	0.00	0.00	-0.05	0.46	-0.19	0.00	0.65	30.0	Large
	34	-0.02	-0.60	-0.53	0.00	0.00	0.07	-0.01	-0.60	-0.54	0.60	30.0	Large
	35	-0.01	-0.20	0.30	0.00	0.02	-0.04	0.31	-0.20	-0.01	0.51	30.0	Large
	36	-0.01	-0.42	-0.37	0.00	0.01	0.05	0.00	-0.42	-0.37	0.41	30.0	Large
	37	-0.07	-0.09	0.27	0.02	-0.02	-0.01	0.27	-0.10	-0.05	0.37	30.0	Large
	38	-0.05	-0.54	-0.58	0.03	0.03	0.10	-0.03	-0.61	-0.54	0.57	30.0	Large
	39	0.40	-0.49	-0.05	-0.22	0.11	0.01	-0.57	-0.03	0.45	1.02	30.0	Large
	40	-0.04	0.22	-0.04	-0.06	-0.02	-0.06	0.23	-0.11	0.02	0.34	30.0	Large
Bottom Forging	41	0.61	-0.15	-0.01	-0.07	0.03	0.01	0.62	-0.16	0.00	0.78	30.0	Large
	42	0.11	-0.10	0.34	-0.02	0.00	0.01	0.35	-0.11	0.11	0.45	30.0	Large
	43	-0.29	-0.14	-0.44	-0.08	0.00	0.01	-0.10	-0.44	-0.33	0.33	30.0	Large
	44	0.05	0.21	0.80	-0.09	0.00	0.02	0.80	0.01	0.24	0.79	30.0	Large
	45	-0.09	-0.32	-0.89	-0.08	0.00	0.02	-0.89	-0.34	-0.07	0.83	30.0	Large
	46	-0.07	0.03	0.54	-0.09	0.00	0.00	0.54	-0.12	0.08	0.66	30.0	Large
Ram Access Cover Plate	47	-0.28	-0.21	-0.07	-0.04	-0.01	0.00	-0.07	-0.30	-0.19	0.23	47.1	Large
	48	0.01	0.21	0.29	-0.07	0.01	0.00	-0.01	0.23	0.29	0.30	47.1	Large
	49	-0.22	-0.32	-0.22	-0.01	0.00	0.01	-0.32	-0.23	-0.21	0.11	47.1	Large
	50	0.00	0.33	0.35	-0.04	0.00	0.01	-0.01	0.34	0.35	0.36	47.1	Large
	51	-0.05	-0.34	-0.27	0.00	0.00	-0.01	-0.05	-0.34	-0.27	0.30	47.1	Large
	52	0.00	0.30	0.35	-0.01	0.00	0.00	0.00	0.30	0.35	0.35	47.1	Large

nct_sar.xls, vib+t100+ip50

Table 2.6.13-29
Vibration + Thermal (100°F) + 50 psig Internal Pressure - Total Stresses @ 0° Azimuth

Cask Component	Stress Point	Stress Components (ksi)						Principal Stresses (ksi)			SI (ksi)	Stress Limit	M.S.
		S_X	S_Y	S_Z	S_{XY}	S_{YZ}	S_{XZ}	S_1	S_2	S_3			
Top Cover	1	-0.08	-4.60	-4.48	-0.01	0.00	-0.01	-0.08	-4.60	-4.48	4.53	60.0	Large
	2	-0.05	-1.12	-1.07	0.00	0.00	-0.01	-0.05	-1.12	-1.07	1.07	60.0	Large
	3	-0.21	-3.44	-2.28	-0.07	0.00	0.00	-0.21	-3.44	-2.28	3.23	60.0	Large
	4	-0.01	-0.89	0.56	0.08	0.00	0.00	-0.90	0.00	0.56	1.47	60.0	Large
	5	0.53	-0.19	4.11	0.24	-0.01	0.01	4.11	-0.26	0.61	4.37	60.0	Large
	6	0.00	-0.37	4.75	-0.09	0.00	0.00	4.75	-0.39	0.03	5.14	60.0	Large
Top Flange	7	-2.70	-4.09	3.31	-1.02	-0.01	0.04	3.31	-4.63	-2.16	7.94	60.0	6.56
	8	-0.63	4.79	6.44	-0.21	0.10	0.06	-0.64	4.80	6.45	7.09	60.0	7.46
	9	-0.68	2.24	-3.06	0.24	0.01	0.07	2.26	-3.07	-0.70	5.33	60.0	Large
	10	-2.97	-7.30	-5.98	-0.57	0.05	0.11	-2.89	-7.38	-5.98	4.48	60.0	Large
Inner Shell	11	-0.53	5.24	-4.54	-0.27	0.06	0.06	5.25	-4.55	-0.54	9.80	60.0	5.12
	12	-0.98	-16.63	-10.23	-2.49	0.10	0.13	-0.59	-17.02	-10.23	16.43	60.0	2.65
	13	-0.19	-5.01	-1.04	0.09	0.05	-0.17	-5.02	-1.07	-0.16	4.86	60.0	Large
	14	-0.17	-8.44	-1.46	0.08	0.05	-0.26	-8.44	-1.51	-0.12	8.32	60.0	6.21
	15	-0.12	-7.43	0.62	0.00	-0.11	0.03	-7.43	-0.12	0.62	8.06	60.0	6.45
	16	-0.06	-5.52	2.18	-0.01	-0.08	0.10	-5.52	-0.06	2.18	7.70	60.0	6.79
	17	-0.11	-6.54	0.43	0.00	0.00	0.02	-6.54	-0.11	0.43	6.97	60.0	7.61
	18	-0.05	-5.01	2.54	0.00	0.00	0.13	-5.01	-0.06	2.55	7.56	60.0	6.94
	19	-0.11	-7.44	0.80	0.00	0.11	0.04	-7.44	-0.12	0.80	8.24	60.0	6.28
	20	-0.05	-5.50	2.40	0.00	0.08	0.12	-5.50	-0.06	2.40	7.91	60.0	6.59
	21	-0.19	-4.65	-1.18	-0.05	-0.04	-0.17	-4.65	-1.20	-0.16	4.50	60.0	Large
	22	-0.18	-8.99	-1.85	-0.05	-0.04	-0.26	-8.99	-1.89	-0.14	8.86	60.0	5.77
	23	-0.41	-0.36	-1.34	0.10	-0.05	0.06	-1.35	-0.48	-0.28	1.07	60.0	Large
	24	-0.44	-10.66	-3.76	1.21	-0.11	0.13	-10.80	-3.76	-0.29	10.51	60.0	4.71
	25	-2.89	-1.13	-0.79	-0.37	-0.01	0.02	-2.96	-1.06	-0.79	2.17	60.0	Large
	26	-4.63	-3.13	-0.86	1.27	-0.03	0.04	-5.35	-2.41	-0.86	4.50	60.0	Large
Outer Shell	27	1.77	6.50	4.02	-0.38	0.08	0.01	6.53	1.74	4.02	4.79	60.0	Large
	28	0.71	-0.72	2.09	0.51	0.11	0.07	-0.89	0.87	2.10	2.99	60.0	Large
	29	-0.05	7.72	0.71	0.98	0.00	-0.07	7.84	-0.18	0.72	8.02	60.0	6.48
	30	1.61	-1.96	0.00	0.87	0.00	-0.28	-2.16	-0.04	1.85	4.01	60.0	Large
	31	-0.12	0.00	-0.54	-0.02	-0.13	-0.01	-0.57	-0.12	0.04	0.61	60.0	Large
	32	-0.05	4.39	2.09	-0.02	-0.07	0.10	4.40	-0.06	2.10	4.45	60.0	Large
	33	-0.13	1.83	-0.12	0.00	0.00	-0.01	1.83	-0.13	-0.12	1.96	60.0	Large
	34	-0.04	4.06	2.85	0.00	0.00	0.14	-0.05	2.86	4.06	4.11	60.0	Large
	35	-0.11	-0.15	-0.59	0.01	0.13	0.01	-0.63	-0.13	-0.10	0.53	60.0	Large
	36	-0.05	4.68	2.32	0.02	0.07	0.11	-0.05	2.32	4.68	4.74	60.0	Large
	37	-0.11	8.43	0.73	-1.04	0.00	-0.07	8.56	-0.24	0.74	8.80	60.0	5.82
	38	1.52	-2.91	-0.43	-0.88	0.00	-0.28	-3.08	-0.47	1.72	4.80	60.0	Large
	39	-1.55	1.86	2.02	0.85	-0.02	0.01	-1.75	2.01	2.07	3.83	60.0	Large
	40	0.12	3.17	3.56	-0.16	-0.10	0.05	0.11	3.15	3.59	3.48	60.0	Large
Bottom Forging	41	-0.90	-3.12	-0.79	0.13	-0.01	0.02	-3.12	-0.90	-0.79	2.33	60.0	Large
	42	-0.16	2.37	6.92	-0.02	0.00	-0.01	6.92	-0.16	2.37	7.08	60.0	7.47
	43	-0.15	-4.94	-4.96	0.14	0.00	0.00	-0.15	-4.96	-4.94	4.82	60.0	Large
	44	0.04	1.74	4.49	0.08	0.00	0.00	4.49	0.03	1.74	4.46	60.0	Large
	45	-0.21	-3.57	-9.84	0.57	0.00	-0.01	-9.84	-3.66	-0.12	9.72	60.0	5.17
	46	-0.44	-1.19	-2.08	-0.08	-0.01	0.00	-2.08	-1.20	-0.43	1.65	60.0	Large
Ram Access Cover Plate	47	-0.30	-0.50	0.22	-0.06	0.01	0.00	0.22	-0.52	-0.28	0.74	94.2	Large
	48	-0.02	0.10	0.36	-0.02	0.00	0.00	0.36	-0.03	0.11	0.38	94.2	Large
	49	0.24	-0.28	0.31	-0.34	0.00	-0.01	-0.45	0.31	0.41	0.86	94.2	Large
	50	-0.06	-0.03	-0.12	0.04	0.00	0.00	-0.01	-0.12	-0.08	0.11	94.2	Large
	51	-0.08	-3.33	-3.35	0.00	0.00	-0.01	-0.08	-3.35	-3.33	3.27	94.2	Large
	52	0.03	-0.59	-0.61	0.01	0.00	0.00	0.03	-0.61	-0.59	0.64	94.2	Large

nct_sar.xls, vib+t100+ip50

Table 2.6.13-30
Vibration + Thermal (100°F) + 50 psig Internal Pressure - Total Stresses @ 45° Azimuth

Cask Component	Stress Point	Stress Components (ksi)						Principal Stresses (ksi)			SI (ksi)	Stress Limit	M.S.
		S_X	S_Y	S_Z	S_{XY}	S_{YZ}	S_{XZ}	S_1	S_2	S_3			
Top Cover	1	0.01	-4.60	-4.56	-0.01	-0.01	-0.07	0.01	-4.60	-4.56	4.61	60.0	Large
	2	-0.02	-1.12	-1.10	0.00	0.00	-0.02	-0.02	-1.12	-1.10	1.10	60.0	Large
	3	0.00	-3.44	-2.44	-0.08	0.01	-0.19	0.01	-3.44	-2.45	3.45	60.0	Large
	4	-0.02	-0.89	0.48	0.08	0.01	-0.05	-0.90	-0.02	0.49	1.39	60.0	Large
	5	0.81	-0.10	3.98	0.26	-0.01	-0.29	4.01	-0.17	0.86	4.18	60.0	Large
	6	-0.20	-0.31	4.55	-0.10	0.05	0.04	4.56	-0.37	-0.14	4.92	60.0	Large
Top Flange	7	-2.33	-3.51	3.30	-0.92	0.08	0.01	3.30	-4.01	-1.82	7.31	60.0	7.21
	8	-0.53	4.07	6.12	-0.23	-0.10	0.00	-0.54	4.08	6.13	6.66	60.0	8.00
	9	-0.58	2.67	-3.35	0.32	0.45	0.06	2.73	-3.38	-0.61	6.11	60.0	8.82
	10	-2.99	-7.50	-6.50	-0.61	0.14	-0.10	-2.91	-7.59	-6.49	4.69	60.0	Large
Inner Shell	11	-0.47	6.15	-4.76	-0.28	0.80	0.01	6.22	-4.82	-0.48	11.04	60.0	4.43
	12	-0.94	-17.29	-11.05	-2.62	0.43	0.02	-0.53	-17.73	-11.02	17.20	60.0	2.49
	13	-0.16	-5.71	0.19	0.07	0.39	-0.01	-5.74	-0.16	0.22	5.95	60.0	9.08
	14	-0.07	-6.12	0.63	0.07	0.16	0.08	-6.12	-0.08	0.65	6.77	60.0	7.86
	15	-0.08	-6.56	1.01	0.00	-0.56	-0.02	-6.61	-0.08	1.05	7.66	60.0	6.84
	16	-0.04	-5.41	1.62	0.01	-0.36	0.02	-5.43	-0.04	1.64	7.07	60.0	7.49
	17	-0.10	-6.44	1.37	0.00	0.00	-0.01	-6.44	-0.10	1.37	7.80	60.0	6.69
	18	-0.07	-5.63	1.43	0.00	0.00	0.01	-5.63	-0.07	1.43	7.06	60.0	7.50
	19	-0.08	-6.61	1.11	0.00	0.56	-0.02	-6.65	-0.08	1.15	7.81	60.0	6.69
	20	-0.04	-5.38	1.71	-0.01	0.40	0.02	-5.41	-0.04	1.73	7.14	60.0	7.41
	21	-0.16	-5.23	0.07	-0.03	-0.34	-0.01	-5.25	-0.16	0.09	5.34	60.0	Large
	22	-0.07	-6.59	0.25	-0.03	-0.11	0.08	-6.59	-0.09	0.27	6.87	60.0	7.74
	23	-0.32	0.43	-1.54	0.12	-0.73	0.00	-1.79	-0.33	0.69	2.47	60.0	Large
	24	-0.38	-11.35	-4.52	1.38	-0.41	0.02	-11.54	-4.50	-0.21	11.34	60.0	4.29
	25	-2.79	-0.91	-1.06	-0.43	-0.23	-0.26	-2.93	-1.11	-0.72	2.22	60.0	Large
	26	-4.61	-3.31	-1.27	1.30	-0.01	-0.20	-5.42	-2.51	-1.25	4.17	60.0	Large
Outer Shell	27	1.79	7.84	4.00	-0.47	0.84	-0.07	8.05	1.75	3.82	6.30	60.0	8.53
	28	0.79	-1.31	1.47	0.54	0.18	-0.05	-1.46	0.92	1.48	2.94	60.0	Large
	29	0.33	5.22	1.45	0.78	0.34	-0.11	5.36	0.19	1.44	5.18	60.0	Large
	30	2.42	2.44	2.93	0.65	-0.09	0.04	1.77	2.92	3.09	1.32	60.0	Large
	31	-0.13	1.28	0.05	-0.01	-0.67	-0.03	1.57	-0.26	-0.12	1.83	60.0	Large
	32	-0.09	4.35	1.38	0.00	-0.33	0.02	4.39	-0.09	1.35	4.48	60.0	Large
	33	-0.15	2.15	1.17	0.00	-0.01	-0.03	-0.16	1.17	2.15	2.30	60.0	Large
	34	-0.11	3.30	1.29	0.00	-0.01	0.01	3.30	-0.11	1.29	3.41	60.0	Large
	35	-0.13	0.99	-0.05	0.01	0.62	-0.03	1.27	-0.34	-0.12	1.62	60.0	Large
	36	-0.09	4.61	1.49	0.00	0.33	0.02	4.64	-0.09	1.45	4.74	60.0	Large
	37	0.26	5.98	1.47	-0.84	-0.35	-0.11	6.12	0.12	1.47	6.00	60.0	8.99
	38	2.28	1.39	2.46	-0.66	0.07	0.04	1.03	2.47	2.63	1.60	60.0	Large
	39	-1.60	1.76	1.60	0.88	0.14	-0.28	-1.84	1.61	1.99	3.83	60.0	Large
	40	0.17	2.66	3.00	-0.21	-0.17	-0.04	0.15	2.60	3.08	2.93	60.0	Large
Bottom Forging	41	-0.81	-2.89	-1.06	0.07	-0.23	-0.26	-2.92	-1.21	-0.63	2.30	60.0	Large
	42	-0.13	2.36	6.84	-0.03	-0.01	0.02	6.84	-0.13	2.36	6.97	60.0	7.60
	43	0.00	-4.94	-5.21	0.15	0.00	-0.24	0.02	-5.22	-4.95	5.24	60.0	Large
	44	-0.02	1.74	4.49	0.08	0.00	-0.02	4.49	-0.02	1.74	4.51	60.0	Large
	45	-0.18	-3.56	-10.09	0.59	0.01	-0.19	-10.09	-3.66	-0.08	10.01	60.0	4.99
	46	-0.43	-1.22	-2.19	-0.05	0.02	-0.08	-2.20	-1.22	-0.42	1.77	60.0	Large
Ram Access Cover Plate	47	-0.16	-0.49	0.07	-0.09	0.04	-0.14	0.14	-0.52	-0.22	0.66	94.2	Large
	48	-0.05	0.11	0.32	-0.01	-0.03	0.00	0.33	-0.06	0.10	0.38	94.2	Large
	49	0.42	-0.26	0.23	-0.39	0.02	-0.16	-0.45	0.18	0.65	1.09	94.2	Large
	50	-0.05	-0.03	-0.16	0.04	0.00	-0.04	-0.17	-0.07	0.00	0.17	94.2	Large
	51	-0.04	-3.33	-3.38	0.00	0.00	-0.03	-0.04	-3.38	-3.33	3.34	94.2	Large
	52	0.05	-0.59	-0.63	0.00	0.01	-0.02	0.05	-0.63	-0.58	0.68	94.2	Large

nct_sar.xls, vib+t100+ip50

Table 2.6.13-31

Vibration + Thermal (100°F) + 50 psig Internal Pressure - Total Stresses @ 90° Azimuth

Cask Component	Stress Point	Stress Components (ksi)						Principal Stresses (ksi)			SI (ksi)	Stress Limit	M.S.
		S_X	S_Y	S_Z	S_{XY}	S_{YZ}	S_{XZ}	S_1	S_2	S_3			
Top Cover	1	0.07	-4.60	-4.62	0.00	-0.01	0.01	0.07	-4.63	-4.60	4.69	60.0	Large
	2	0.00	-1.12	-1.12	0.00	0.00	0.01	0.00	-1.13	-1.11	1.12	60.0	Large
	3	0.19	-3.44	-2.61	-0.09	0.00	-0.01	0.19	-3.44	-2.61	3.63	60.0	Large
	4	-0.02	-0.89	0.39	0.07	0.00	-0.02	-0.90	-0.01	0.39	1.29	60.0	Large
	5	1.11	0.02	3.88	0.27	0.00	0.00	3.88	-0.05	1.17	3.93	60.0	Large
	6	-0.42	-0.22	4.41	-0.10	0.00	-0.04	4.41	-0.46	-0.18	4.88	60.0	Large
Top Flange	7	-2.30	-3.54	3.15	-0.92	0.01	-0.03	3.15	-4.02	-1.81	7.17	60.0	7.37
	8	-0.52	4.04	6.01	-0.23	0.06	-0.01	-0.53	4.05	6.02	6.54	60.0	8.17
	9	-0.60	2.92	-3.74	0.37	-0.01	0.01	2.96	-3.74	-0.64	6.71	60.0	7.95
	10	-3.18	-7.76	-6.97	-0.70	0.07	0.08	-3.07	-7.87	-6.97	4.80	60.0	Large
Inner Shell	11	-0.47	6.54	-5.07	-0.30	-0.01	0.01	6.55	-5.07	-0.48	11.62	60.0	4.16
	12	-0.97	-17.85	-11.53	-2.72	0.11	0.02	-0.54	-18.28	-11.53	17.74	60.0	2.38
	13	-0.11	-6.37	1.28	0.05	-0.07	0.02	-6.37	-0.11	1.29	7.66	60.0	6.83
	14	-0.03	-5.13	2.34	0.05	-0.06	-0.02	-5.14	-0.03	2.34	7.47	60.0	7.03
	15	-0.05	-6.20	0.67	0.00	-0.10	0.01	-6.20	-0.05	0.67	6.87	60.0	7.73
	16	0.01	-5.21	1.89	-0.01	-0.22	-0.01	-5.21	0.01	1.89	7.11	60.0	7.44
	17	-0.03	-6.57	0.46	0.00	0.00	-0.01	-6.57	-0.03	0.46	7.03	60.0	7.53
	18	0.03	-5.29	2.03	0.00	0.00	0.01	-5.29	0.03	2.03	7.32	60.0	7.20
	19	-0.05	-6.25	0.63	0.00	0.09	0.01	-6.26	-0.05	0.63	6.88	60.0	7.72
	20	0.01	-5.07	1.93	0.00	0.22	-0.01	-5.08	0.01	1.94	7.02	60.0	7.55
	21	-0.10	-5.78	1.18	-0.02	0.05	0.02	-5.78	-0.10	1.18	6.96	60.0	7.62
	22	-0.03	-5.53	1.96	-0.01	0.05	-0.02	-5.53	-0.03	1.96	7.49	60.0	7.01
	23	-0.28	0.88	-1.79	0.15	0.01	0.01	-1.79	-0.30	0.90	2.69	60.0	Large
	24	-0.40	-11.94	-5.02	1.54	-0.12	0.02	-12.14	-5.02	-0.20	11.94	60.0	4.03
	25	-2.57	-0.59	-1.23	-0.43	-0.01	0.01	-2.66	-1.23	-0.51	2.15	60.0	Large
	26	-4.58	-3.61	-1.63	1.40	-0.05	0.04	-5.58	-2.62	-1.63	3.95	60.0	Large
Outer Shell	27	1.81	8.77	3.98	-0.53	-0.08	0.00	8.81	1.77	3.98	7.04	60.0	7.52
	28	0.84	-1.72	1.17	0.56	0.08	0.00	-1.84	0.95	1.18	3.02	60.0	Large
	29	0.61	3.66	2.14	0.65	-0.07	0.03	3.80	0.47	2.13	3.33	60.0	Large
	30	2.93	4.66	4.98	0.51	-0.05	-0.01	2.79	4.79	5.00	2.21	60.0	Large
	31	-0.12	1.87	-0.41	-0.04	0.00	0.02	1.87	-0.41	-0.12	2.28	60.0	Large
	32	-0.06	4.54	1.79	-0.04	-0.20	-0.01	4.55	-0.06	1.77	4.61	60.0	Large
	33	-0.11	1.97	-0.15	0.00	0.00	-0.01	1.97	-0.15	-0.11	2.13	60.0	Large
	34	-0.02	3.88	2.23	0.00	0.00	0.00	-0.02	2.23	3.88	3.90	60.0	Large
	35	-0.11	1.45	-0.65	0.04	0.00	0.02	1.45	-0.65	-0.11	2.09	60.0	Large
	36	-0.05	4.89	1.90	0.04	0.21	-0.01	4.90	-0.05	1.89	4.95	60.0	Large
	37	0.53	4.44	2.18	-0.72	0.06	0.03	4.57	0.41	2.18	4.16	60.0	Large
	38	2.76	3.53	4.50	-0.53	0.06	-0.01	2.49	3.79	4.50	2.01	60.0	Large
	39	-1.62	1.67	1.27	0.89	-0.02	0.02	-1.85	1.27	1.89	3.74	60.0	Large
	40	0.20	2.14	2.59	-0.22	-0.08	0.00	0.18	2.15	2.61	2.43	60.0	Large
Bottom Forging	41	-0.59	-2.58	-1.23	0.07	-0.01	0.01	-2.58	-1.23	-0.58	2.00	60.0	Large
	42	-0.19	2.36	6.80	-0.04	0.00	-0.05	6.80	-0.19	2.36	6.99	60.0	7.58
	43	0.16	-4.94	-5.46	0.15	0.00	0.00	0.17	-5.46	-4.95	5.62	60.0	9.67
	44	-0.07	1.74	4.46	0.09	0.00	-0.04	4.46	-0.07	1.75	4.53	60.0	Large
	45	-0.16	-3.54	-10.34	0.61	0.00	0.00	-10.34	-3.64	-0.06	10.29	60.0	4.83
	46	-0.40	-1.23	-2.32	-0.02	0.01	-0.02	-2.32	-1.23	-0.40	1.92	60.0	Large
Ram Access Cover Plate	47	-0.06	-0.49	-0.10	-0.13	0.00	0.00	-0.52	-0.10	-0.02	0.50	94.2	Large
	48	-0.08	0.10	0.27	0.00	0.00	-0.01	-0.09	0.10	0.27	0.36	94.2	Large
	49	0.56	-0.25	0.15	-0.43	0.00	0.00	0.75	-0.44	0.15	1.18	94.2	Large
	50	-0.06	-0.04	-0.21	0.04	0.00	-0.01	-0.21	-0.09	-0.01	0.21	94.2	Large
	51	-0.02	-3.33	-3.40	0.00	0.00	0.01	-0.02	-3.40	-3.33	3.38	94.2	Large
	52	0.06	-0.59	-0.64	0.00	0.01	0.00	0.06	-0.64	-0.58	0.70	94.2	Large

nct_sar.xls, vib+t100+ip50

Table 2.6.13-32
Vibration + Thermal (100°F) + 50 psig Internal Pressure - Total Stresses @ 135° Azimuth

Cask Component	Stress Point	Stress Components (ksi)						Principal Stresses (ksi)			SI (ksi)	Stress Limit	M.S.
		S_X	S_Y	S_Z	S_{XY}	S_{YZ}	S_{XZ}	S_1	S_2	S_3			
Top Cover	1	-0.01	-4.60	-4.54	0.01	-0.01	0.07	-0.01	-4.61	-4.54	4.59	60.0	Large
	2	-0.03	-1.12	-1.09	0.00	0.00	0.02	-0.03	-1.12	-1.09	1.09	60.0	Large
	3	-0.04	-3.44	-2.50	-0.08	-0.01	0.16	-0.02	-3.44	-2.51	3.42	60.0	Large
	4	0.01	-0.89	0.44	0.08	-0.01	0.03	-0.90	0.02	0.44	1.34	60.0	Large
	5	0.80	-0.10	3.89	0.26	0.01	0.18	3.90	-0.17	0.86	4.07	60.0	Large
	6	-0.18	-0.31	4.49	-0.10	-0.03	-0.06	4.50	-0.37	-0.12	4.86	60.0	Large
Top Flange	7	-2.32	-3.50	3.24	-0.92	-0.06	-0.04	3.24	-4.01	-1.82	7.24	60.0	7.28
	8	-0.53	4.05	6.06	-0.23	0.07	-0.01	-0.54	4.06	6.07	6.60	60.0	8.09
	9	-0.58	2.72	-3.49	0.34	-0.22	-0.03	2.76	-3.50	-0.61	6.26	60.0	8.58
	10	-3.01	-7.52	-6.64	-0.62	-0.07	0.06	-2.92	-7.61	-6.64	4.69	60.0	Large
Inner Shell	11	-0.46	6.29	-4.85	-0.27	-0.29	-0.01	6.31	-4.86	-0.47	11.17	60.0	4.37
	12	-0.94	-17.46	-11.20	-2.63	-0.16	-0.01	-0.53	-17.87	-11.19	17.34	60.0	2.46
	13	-0.06	-6.53	1.39	0.06	-0.27	0.00	-6.54	-0.06	1.40	7.94	60.0	6.56
	14	0.01	-5.58	2.11	0.06	-0.14	0.00	-5.59	0.01	2.12	7.70	60.0	6.79
	15	-0.05	-6.46	0.89	-0.01	-0.17	0.00	-6.47	-0.05	0.89	7.36	60.0	7.16
	16	0.00	-5.76	1.55	0.00	-0.06	-0.01	-5.76	0.00	1.55	7.30	60.0	7.21
	17	-0.06	-6.66	0.77	0.00	-0.01	0.01	-6.66	-0.06	0.77	7.43	60.0	7.08
	18	-0.01	-5.57	1.64	0.00	0.00	-0.02	-5.57	-0.01	1.64	7.21	60.0	7.32
	19	-0.05	-6.56	0.88	0.00	0.13	0.00	-6.56	-0.05	0.88	7.44	60.0	7.06
	20	0.00	-5.67	1.59	0.00	0.02	-0.01	-5.67	0.00	1.59	7.26	60.0	7.27
	21	-0.06	-6.04	1.27	-0.02	0.23	-0.01	-6.05	-0.06	1.28	7.32	60.0	7.19
	22	0.01	-6.06	1.73	-0.02	0.11	0.00	-6.06	0.01	1.73	7.80	60.0	6.70
	23	-0.32	0.48	-1.65	0.11	0.29	-0.01	-1.69	-0.33	0.53	2.22	60.0	Large
	24	-0.38	-11.40	-4.64	1.37	0.17	-0.01	-11.58	-4.63	-0.21	11.36	60.0	4.28
	25	-2.80	-0.91	-1.16	-0.43	0.11	0.15	-2.91	-1.16	-0.80	2.11	60.0	Large
	26	-4.61	-3.30	-1.35	1.31	0.00	0.12	-5.42	-2.50	-1.35	4.08	60.0	Large
Outer Shell	27	1.77	7.85	3.91	-0.42	-0.37	0.04	7.92	1.74	3.87	6.17	60.0	8.72
	28	0.78	-1.43	1.38	0.58	-0.08	0.03	-1.58	0.92	1.38	2.95	60.0	Large
	29	0.67	3.40	2.28	0.66	-0.22	-0.01	0.52	2.24	3.58	3.07	60.0	Large
	30	2.96	3.88	4.65	0.51	-0.02	0.00	2.73	4.11	4.65	1.92	60.0	Large
	31	-0.10	1.55	-0.04	-0.04	-0.13	0.01	1.56	-0.10	-0.05	1.66	60.0	Large
	32	-0.06	3.73	1.33	-0.04	0.05	-0.01	3.73	-0.06	1.33	3.79	60.0	Large
	33	-0.13	1.87	0.37	0.00	0.00	0.03	1.87	-0.13	0.38	2.00	60.0	Large
	34	-0.05	3.48	1.71	0.00	0.00	-0.01	-0.05	1.71	3.48	3.53	60.0	Large
	35	-0.09	1.15	-0.25	0.04	0.14	0.01	1.17	-0.27	-0.10	1.44	60.0	Large
	36	-0.06	4.11	1.42	0.04	-0.04	-0.01	4.11	-0.06	1.42	4.17	60.0	Large
	37	0.59	4.19	2.31	-0.72	0.24	-0.01	4.36	0.45	2.29	3.91	60.0	Large
	38	2.79	2.80	4.17	-0.53	0.03	0.00	2.26	3.33	4.17	1.91	60.0	Large
	39	-1.59	1.79	1.54	0.87	-0.07	0.15	-1.81	1.54	2.00	3.81	60.0	Large
	40	0.16	2.65	2.93	-0.23	0.10	0.02	0.14	2.64	2.96	2.83	60.0	Large
Bottom Forging	41	-0.82	-2.89	-1.16	0.07	0.11	0.15	-2.90	-1.21	-0.76	2.14	60.0	Large
	42	-0.12	2.36	6.78	-0.03	0.01	-0.04	6.78	-0.12	2.36	6.90	60.0	7.69
	43	-0.03	-4.94	-5.30	0.15	0.00	0.19	-0.02	-5.31	-4.94	5.28	60.0	Large
	44	0.02	1.74	4.42	0.08	0.00	-0.01	4.42	0.02	1.74	4.40	60.0	Large
	45	-0.21	-3.55	-10.15	0.59	0.00	0.18	-10.15	-3.65	-0.10	10.05	60.0	4.97
	46	-0.41	-1.20	-2.23	-0.05	-0.01	0.06	-2.23	-1.21	-0.41	1.82	60.0	Large
Ram Access Cover Plate	47	-0.17	-0.49	0.04	-0.09	-0.04	0.14	0.12	-0.52	-0.23	0.64	94.2	Large
	48	-0.04	0.09	0.30	-0.01	0.03	0.00	0.31	-0.04	0.09	0.35	94.2	Large
	49	0.41	-0.27	0.21	-0.39	-0.01	0.15	-0.45	0.16	0.63	1.08	94.2	Large
	50	-0.04	-0.03	-0.17	0.03	0.00	0.03	-0.18	-0.06	0.00	0.18	94.2	Large
	51	-0.06	-3.33	-3.37	0.00	0.00	0.03	-0.06	-3.37	-3.33	3.31	94.2	Large
	52	0.04	-0.59	-0.62	-0.01	0.00	0.02	0.05	-0.62	-0.59	0.67	94.2	Large

nct_sar.xls, vib+t100+ip50

Table 2.6.13-33

Vibration + Thermal (100°F) + 50 psig Internal Pressure - Total Stresses @ 180° Azimuth

Cask Component	Stress Point	Stress Components (ksi)						Principal Stresses (ksi)			SI (ksi)	Stress Limit	M.S.
		S_X	S_Y	S_Z	S_{XY}	S_{YZ}	S_{XZ}	S_1	S_2	S_3			
Top Cover	1	-0.08	-4.60	-4.48	0.01	0.00	-0.01	-0.08	-4.60	-4.48	4.53	60.0	Large
	2	-0.05	-1.12	-1.07	0.00	0.00	-0.01	-0.05	-1.12	-1.07	1.07	60.0	Large
	3	-0.27	-3.44	-2.37	-0.07	0.00	0.00	-0.27	-3.44	-2.37	3.18	60.0	Large
	4	0.00	-0.89	0.53	0.09	0.00	0.01	-0.90	0.00	0.53	1.44	60.0	Large
	5	0.29	-0.28	3.89	0.24	0.00	0.02	3.89	-0.37	0.38	4.26	60.0	Large
	6	0.11	-0.42	4.65	-0.08	-0.02	0.01	4.65	-0.43	0.12	5.08	60.0	Large
Top Flange	7	-2.70	-3.76	3.13	-0.96	0.02	-0.01	3.13	-4.33	-2.13	7.46	60.0	7.04
	8	-0.68	4.44	6.06	-0.24	0.03	-0.01	-0.69	4.45	6.06	6.75	60.0	7.89
	9	-0.56	2.46	-3.07	0.31	-0.10	0.02	2.49	-3.07	-0.59	5.56	60.0	9.80
	10	-2.75	-7.18	-6.24	-0.47	0.00	0.07	-2.70	-7.23	-6.24	4.52	60.0	Large
Inner Shell	11	-0.51	6.17	-4.54	-0.24	-0.12	-0.05	6.18	-4.54	-0.52	10.72	60.0	4.60
	12	-0.93	-17.01	-10.99	-2.52	-0.01	-0.04	-0.55	-17.40	-10.99	16.85	60.0	2.56
	13	-0.11	-6.50	1.54	0.05	-0.03	0.00	-6.50	-0.10	1.54	8.04	60.0	6.46
	14	-0.06	-5.89	1.66	0.05	-0.04	0.07	-5.89	-0.06	1.66	7.55	60.0	6.94
	15	-0.07	-6.59	1.07	0.00	-0.03	-0.02	-6.59	-0.07	1.07	7.66	60.0	6.83
	16	-0.02	-5.97	1.31	0.00	-0.02	0.04	-5.97	-0.02	1.31	7.28	60.0	7.24
	17	-0.06	-6.86	1.12	0.00	0.00	-0.03	-6.86	-0.06	1.12	7.98	60.0	6.52
	18	-0.02	-6.06	1.26	0.00	0.00	0.05	-6.06	-0.03	1.27	7.33	60.0	7.19
	19	-0.07	-6.74	1.07	0.00	0.02	-0.02	-6.74	-0.07	1.07	7.82	60.0	6.67
	20	-0.02	-5.95	1.36	0.00	0.01	0.04	-5.95	-0.02	1.36	7.31	60.0	7.21
	21	-0.11	-6.12	1.43	-0.02	0.02	0.00	-6.12	-0.11	1.43	7.55	60.0	6.95
	22	-0.06	-6.47	1.27	-0.01	0.03	0.07	-6.47	-0.07	1.27	7.74	60.0	6.75
	23	-0.42	0.08	-1.49	0.06	0.13	-0.04	-1.50	-0.42	0.10	1.60	60.0	Large
	24	-0.36	-10.76	-4.35	1.17	0.01	-0.05	-10.89	-4.35	-0.23	10.66	60.0	4.63
	25	-3.27	-1.42	-1.15	-0.48	0.04	0.01	-3.39	-1.31	-1.14	2.25	60.0	Large
	26	-4.76	-2.84	-1.05	1.14	-0.03	0.01	-5.29	-2.31	-1.05	4.24	60.0	Large
Outer Shell	27	1.66	6.70	3.76	-0.18	-0.14	0.05	6.71	1.65	3.76	5.06	60.0	Large
	28	0.64	-1.02	1.39	0.67	0.01	0.00	-1.25	0.87	1.39	2.65	60.0	Large
	29	0.60	3.29	2.63	0.62	0.02	-0.01	0.46	2.63	3.43	2.97	60.0	Large
	30	2.88	3.19	4.07	0.47	-0.02	0.10	2.53	3.53	4.08	1.54	60.0	Large
	31	-0.12	1.26	0.28	-0.04	-0.01	-0.04	1.27	-0.12	0.28	1.39	60.0	Large
	32	-0.07	3.34	1.03	-0.04	0.00	0.05	3.35	-0.08	1.03	3.42	60.0	Large
	33	-0.12	1.67	0.92	0.00	0.00	-0.05	-0.12	0.92	1.67	1.79	60.0	Large
	34	-0.07	2.82	1.18	0.00	0.00	0.07	2.82	-0.07	1.19	2.89	60.0	Large
	35	-0.11	0.91	0.06	0.04	0.02	-0.04	0.91	-0.12	0.07	1.03	60.0	Large
	36	-0.07	3.74	1.11	0.04	0.01	0.05	3.74	-0.07	1.11	3.81	60.0	Large
	37	0.52	4.12	2.69	-0.69	-0.02	-0.01	0.39	2.68	4.24	3.85	60.0	Large
	38	2.71	2.15	3.57	-0.49	0.03	0.10	1.86	2.99	3.59	1.72	60.0	Large
	39	-1.69	1.92	1.79	0.91	0.03	0.06	-1.91	1.78	2.14	4.05	60.0	Large
	40	0.04	3.43	3.23	-0.30	-0.01	-0.05	0.01	3.23	3.46	3.45	60.0	Large
Bottom Forging	41	-1.29	-3.41	-1.15	0.01	0.04	0.01	-3.41	-1.29	-1.15	2.26	60.0	Large
	42	-0.07	2.37	6.80	-0.02	0.00	0.01	6.80	-0.07	2.37	6.87	60.0	7.74
	43	-0.28	-4.94	-5.12	0.13	0.00	0.01	-0.27	-5.12	-4.94	4.85	60.0	Large
	44	0.06	1.74	4.46	0.07	0.00	0.02	4.46	0.06	1.74	4.40	60.0	Large
	45	-0.25	-3.56	-9.93	0.57	0.00	0.02	-9.93	-3.66	-0.15	9.78	60.0	5.13
	46	-0.45	-1.19	-2.11	-0.08	0.01	0.00	-2.11	-1.20	-0.44	1.67	60.0	Large
Ram Access Cover Plate	47	-0.31	-0.50	0.19	-0.06	-0.01	0.00	0.19	-0.52	-0.30	0.71	94.2	Large
	48	-0.01	0.10	0.35	-0.02	0.01	0.00	0.35	-0.01	0.10	0.36	94.2	Large
	49	0.21	-0.28	0.29	-0.34	0.01	0.01	-0.45	0.29	0.39	0.84	94.2	Large
	50	-0.05	-0.03	-0.11	0.03	0.00	0.01	-0.01	-0.12	-0.07	0.11	94.2	Large
	51	-0.08	-3.33	-3.35	0.00	0.00	-0.01	-0.08	-3.35	-3.33	3.27	94.2	Large
	52	0.03	-0.59	-0.61	-0.01	0.00	0.00	0.03	-0.61	-0.59	0.64	94.2	Large

nct_sar.xls, vib+t100+ip50

Table 2.6.13-34
1' Drop + Thermal (100°F) + 50 psig Internal Pressure - Pm @ 0° Azimuth

Cask Component	Stress Point	Stress Components (ksi)						Principal Stresses (ksi)			SI (ksi)	Stress Limit	M.S.
		S_X	S_Y	S_Z	S_{XY}	S_{YZ}	S_{XZ}	S_1	S_2	S_3			
Top Cover	1	-0.15	0.06	0.48	0.06	0.04	-0.16	0.52	-0.21	0.08	0.72	20.0	Large
	2	-0.15	0.06	0.48	0.06	0.04	-0.16	0.52	-0.21	0.08	0.72	20.0	Large
	3	-2.82	-0.02	-0.28	0.27	0.01	-0.04	-2.85	-0.28	0.01	2.85	20.0	601%
	4	-2.82	-0.02	-0.28	0.27	0.01	-0.04	-2.85	-0.28	0.01	2.85	20.0	601%
	5	-1.81	-2.40	-0.94	0.34	0.06	-0.13	-2.56	-1.67	-0.92	1.64	20.0	Large
	6	-1.81	-2.40	-0.94	0.34	0.06	-0.13	-2.56	-1.67	-0.92	1.64	20.0	Large
Top Flange	7	-7.36	1.49	-5.30	-0.76	0.00	0.10	1.56	-7.43	-5.29	8.99	20.0	123%
	8	-7.36	1.49	-5.30	-0.76	0.00	0.10	1.56	-7.43	-5.29	8.99	20.0	123%
	9	-0.45	1.21	-5.93	0.29	0.49	-0.66	-6.04	-0.40	1.28	7.32	20.0	173%
	10	-0.45	1.21	-5.93	0.29	0.49	-0.66	-6.04	-0.40	1.28	7.32	20.0	173%
Inner Shell	11	-0.23	1.74	-8.13	0.36	0.27	-0.61	-8.18	-0.24	1.81	9.99	20.0	100%
	12	-0.23	1.74	-8.13	0.36	0.27	-0.61	-8.18	-0.24	1.81	9.99	20.0	100%
	13	-0.41	2.47	-3.58	-0.11	-0.54	-0.40	-3.68	-0.36	2.52	6.20	20.0	223%
	14	-0.41	2.47	-3.58	-0.11	-0.54	-0.40	-3.68	-0.36	2.52	6.20	20.0	223%
	15	-0.22	5.58	4.51	0.00	-0.53	0.31	-0.24	4.31	5.81	6.04	20.0	231%
	16	-0.22	5.58	4.51	0.00	-0.53	0.31	-0.24	4.31	5.81	6.04	20.0	231%
	17	-0.21	10.38	4.83	0.00	0.00	0.33	10.38	-0.23	4.86	10.61	20.0	89%
	18	-0.21	10.38	4.83	0.00	0.00	0.33	10.38	-0.23	4.86	10.61	20.0	89%
	19	-0.21	5.41	4.62	0.00	0.56	0.31	-0.23	4.34	5.71	5.94	20.0	237%
	20	-0.21	5.41	4.62	0.00	0.56	0.31	-0.23	4.34	5.71	5.94	20.0	237%
	21	-0.38	1.84	-4.06	0.13	0.49	-0.44	-4.16	-0.33	1.88	6.04	20.0	231%
	22	-0.38	1.84	-4.06	0.13	0.49	-0.44	-4.16	-0.33	1.88	6.04	20.0	231%
	23	-0.61	0.99	-4.53	-0.42	-0.08	-0.32	-4.55	-0.69	1.10	5.65	20.0	254%
	24	-0.61	0.99	-4.53	-0.42	-0.08	-0.32	-4.55	-0.69	1.10	5.65	20.0	254%
	25	-5.08	0.38	-4.25	0.03	-0.11	-0.07	0.38	-5.08	-4.24	5.47	20.0	266%
	26	-5.08	0.38	-4.25	0.03	-0.11	-0.07	0.38	-5.08	-4.24	5.47	20.0	266%
Outer Shell	27	-2.19	-2.34	-9.21	2.63	-0.01	-0.68	0.39	-9.29	-4.84	9.68	20.0	107%
	28	-2.19	-2.34	-9.21	2.63	-0.01	-0.68	0.39	-9.29	-4.84	9.68	20.0	107%
	29	-0.75	-0.42	-8.74	-1.42	-0.74	-0.72	-8.89	-1.86	0.85	9.74	20.0	105%
	30	-0.75	-0.42	-8.74	-1.42	-0.74	-0.72	-8.89	-1.86	0.85	9.74	20.0	105%
	31	-0.10	3.80	5.20	0.17	-0.87	0.47	-0.16	3.42	5.64	5.80	20.0	245%
	32	-0.10	3.80	5.20	0.17	-0.87	0.47	-0.16	3.42	5.64	5.80	20.0	245%
	33	-0.11	10.09	4.06	0.00	-0.02	0.38	10.09	-0.15	4.09	10.24	20.0	95%
	34	-0.11	10.09	4.06	0.00	-0.02	0.38	10.09	-0.15	4.09	10.24	20.0	95%
	35	-0.10	4.61	5.19	-0.13	0.79	0.47	-0.15	4.09	5.76	5.91	20.0	239%
	36	-0.10	4.61	5.19	-0.13	0.79	0.47	-0.15	4.09	5.76	5.91	20.0	239%
	37	-0.78	0.17	-8.70	1.32	0.68	-0.70	-8.83	-1.58	1.11	9.94	20.0	101%
	38	-0.78	0.17	-8.70	1.32	0.68	-0.70	-8.83	-1.58	1.11	9.94	20.0	101%
	39	-2.23	-0.99	-4.67	-3.17	-0.05	-0.17	1.62	-4.94	-4.57	6.56	20.0	205%
	40	-2.23	-0.99	-4.67	-3.17	-0.05	-0.17	1.62	-4.94	-4.57	6.56	20.0	205%
Bottom Forging	41	-2.46	-0.20	-1.97	-0.17	-0.08	-0.09	-0.19	-2.49	-1.96	2.30	20.0	768%
	42	-2.46	-0.20	-1.97	-0.17	-0.08	-0.09	-0.19	-2.49	-1.96	2.30	20.0	768%
	43	-2.37	0.03	-1.12	-0.24	-0.01	-0.10	-2.40	-1.12	0.06	2.46	20.0	714%
	44	-2.37	0.03	-1.12	-0.24	-0.01	-0.10	-2.40	-1.12	0.06	2.46	20.0	714%
	45	-1.50	-0.73	-1.43	-0.37	0.08	-0.16	-0.56	-1.71	-1.39	1.14	20.0	Large
	46	-1.50	-0.73	-1.43	-0.37	0.08	-0.16	-0.56	-1.71	-1.39	1.14	20.0	Large
Ram Access Cover Plate	47	-1.69	0.04	0.85	-0.11	-0.04	-0.02	-1.70	0.05	0.85	2.55	31.4	Large
	48	-1.69	0.04	0.85	-0.11	-0.04	-0.02	-1.70	0.05	0.85	2.55	31.4	Large
	49	-1.41	0.21	0.72	-0.11	0.02	-0.08	-1.42	0.22	0.72	2.14	31.4	Large
	50	-1.41	0.21	0.72	-0.11	0.02	-0.08	-1.42	0.22	0.72	2.14	31.4	Large
	51	-0.09	-0.05	0.47	-0.13	-0.06	-0.13	0.50	-0.23	0.06	0.73	31.4	Large
	52	-0.09	-0.05	0.47	-0.13	-0.06	-0.13	0.50	-0.23	0.06	0.73	31.4	Large
nct-com3.xls, (1.110)drop+t100+ip50										Minimum Margin of Safety			89%

Table 2.6.13-35
1' Drop + Thermal (100°F) + 50 psig Internal Pressure - Pm @ 45° Azimuth

Cask Component	Stress Point	Stress Components (ksi)						Principal Stresses (ksi)			SI (ksi)	Stress Limit	M.S.
		S_X	S_Y	S_Z	S_{XY}	S_{YZ}	S_{XZ}	S_1	S_2	S_3			
Top Cover	1	0.32	0.06	0.01	0.02	0.07	-0.31	0.5	-0.2	0.1	0.7	20.0	Large
	2	0.32	0.06	0.01	0.02	0.07	-0.31	0.5	-0.2	0.1	0.7	20.0	Large
	3	-0.96	-0.02	-1.60	0.11	0.17	-1.31	-2.6	0.0	0.1	2.7	20.0	635%
	4	-0.96	-0.02	-1.60	0.11	0.17	-1.31	-2.6	0.0	0.1	2.7	20.0	635%
	5	-0.78	-0.56	-1.78	0.15	0.56	-0.76	-2.4	-0.5	-0.2	2.1	20.0	838%
	6	-0.78	-0.56	-1.78	0.15	0.56	-0.76	-2.4	-0.5	-0.2	2.1	20.0	838%
Top Flange	7	-4.09	0.75	-4.02	-0.46	-0.36	0.21	0.8	-4.3	-3.9	5.1	20.0	293%
	8	-4.09	0.75	-4.02	-0.46	-0.36	0.21	0.8	-4.3	-3.9	5.1	20.0	293%
	9	-1.52	1.43	-5.76	0.14	0.91	-0.32	-5.9	-1.5	1.6	7.4	20.0	169%
	10	-1.52	1.43	-5.76	0.14	0.91	-0.32	-5.9	-1.5	1.6	7.4	20.0	169%
Inner Shell	11	-0.56	1.74	-5.93	-0.23	0.45	0.06	-6.0	-0.6	1.8	7.8	20.0	158%
	12	-0.56	1.74	-5.93	-0.23	0.45	0.06	-6.0	-0.6	1.8	7.8	20.0	158%
	13	-0.30	3.12	-1.24	-0.05	-3.55	0.08	5.1	-3.2	-0.3	8.3	20.0	140%
	14	-0.30	3.12	-1.24	-0.05	-3.55	0.08	5.1	-3.2	-0.3	8.3	20.0	140%
	15	-0.07	4.20	3.56	0.02	-3.70	-0.02	7.6	-0.1	0.2	7.7	20.0	161%
	16	-0.07	4.20	3.56	0.02	-3.70	-0.02	7.6	-0.1	0.2	7.7	20.0	161%
	17	-0.01	5.78	3.73	0.00	-0.02	-0.04	0.0	3.7	5.8	5.8	20.0	245%
	18	-0.01	5.78	3.73	0.00	-0.02	-0.04	0.0	3.7	5.8	5.8	20.0	245%
	19	-0.08	4.33	3.61	-0.02	3.77	-0.03	7.8	-0.1	0.2	7.8	20.0	155%
	20	-0.08	4.33	3.61	-0.02	3.77	-0.03	7.8	-0.1	0.2	7.8	20.0	155%
	21	-0.34	3.01	-1.19	0.06	3.66	0.08	5.1	-3.3	-0.3	8.4	20.0	137%
	22	-0.34	3.01	-1.19	0.06	3.66	0.08	5.1	-3.3	-0.3	8.4	20.0	137%
	23	-0.50	1.62	-3.86	-0.04	-0.76	0.04	-4.0	-0.5	1.7	5.7	20.0	251%
	24	-0.50	1.62	-3.86	-0.04	-0.76	0.04	-4.0	-0.5	1.7	5.7	20.0	251%
	25	-2.26	0.46	-3.64	0.05	-0.27	-1.04	-4.2	-1.7	0.5	4.7	20.0	326%
	26	-2.26	0.46	-3.64	0.05	-0.27	-1.04	-4.2	-1.7	0.5	4.7	20.0	326%
Outer Shell	27	-1.18	0.56	-5.82	1.14	0.64	-0.08	-5.9	-1.7	1.2	7.1	20.0	183%
	28	-1.18	0.56	-5.82	1.14	0.64	-0.08	-5.9	-1.7	1.2	7.1	20.0	183%
	29	-0.62	2.18	-4.56	-0.77	-6.11	0.06	-8.2	-0.7	5.9	14.0	20.0	42%
	30	-0.62	2.18	-4.56	-0.77	-6.11	0.06	-8.2	-0.7	5.9	14.0	20.0	42%
	31	-0.04	3.57	3.10	0.15	-5.59	-0.03	8.9	-2.3	0.0	11.2	20.0	79%
	32	-0.04	3.57	3.10	0.15	-5.59	-0.03	8.9	-2.3	0.0	11.2	20.0	79%
	33	0.01	5.22	2.46	0.00	-0.14	-0.01	5.2	0.0	2.5	5.2	20.0	283%
	34	0.01	5.22	2.46	0.00	-0.14	-0.01	5.2	0.0	2.5	5.2	20.0	283%
	35	-0.05	3.67	3.12	-0.11	5.19	-0.04	8.6	-1.8	0.0	10.4	20.0	92%
	36	-0.05	3.67	3.12	-0.11	5.19	-0.04	8.6	-1.8	0.0	10.4	20.0	92%
	37	-0.67	1.99	-4.64	0.74	5.97	0.05	-8.2	-0.7	5.6	13.7	20.0	45%
	38	-0.67	1.99	-4.64	0.74	5.97	0.05	-8.2	-0.7	5.6	13.7	20.0	45%
	39	-1.06	0.10	-3.94	-1.49	-1.40	-0.09	1.4	-4.5	-1.8	5.8	20.0	243%
	40	-1.06	0.10	-3.94	-1.49	-1.40	-0.09	1.4	-4.5	-1.8	5.8	20.0	243%
Bottom Forging	41	-1.08	0.24	-2.22	-0.09	-0.38	-0.68	-2.6	-0.8	0.3	2.9	20.0	593%
	42	-1.08	0.24	-2.22	-0.09	-0.38	-0.68	-2.6	-0.8	0.3	2.9	20.0	593%
	43	-1.12	0.04	-1.89	-0.10	-0.15	-1.02	-2.6	-0.4	0.0	2.7	20.0	653%
	44	-1.12	0.04	-1.89	-0.10	-0.15	-1.02	-2.6	-0.4	0.0	2.7	20.0	653%
	45	-0.82	-0.09	-2.55	-0.11	0.23	-1.09	-3.1	-0.4	0.0	3.1	20.0	539%
	46	-0.82	-0.09	-2.55	-0.11	0.23	-1.09	-3.1	-0.4	0.0	3.1	20.0	539%
Ram Access Cover Plate	47	-0.40	-0.16	-0.76	0.01	-0.20	-1.32	-1.9	-0.2	0.8	2.7	31.4	Large
	48	-0.40	-0.16	-0.76	0.01	-0.20	-1.32	-1.9	-0.2	0.8	2.7	31.4	Large
	49	-0.11	0.15	-0.70	-0.07	-0.01	-1.48	-1.9	0.2	1.1	3.0	31.4	937%
	50	-0.11	0.15	-0.70	-0.07	-0.01	-1.48	-1.9	0.2	1.1	3.0	31.4	937%
	51	0.33	-0.05	0.06	-0.06	-0.13	-0.28	0.5	-0.2	0.1	0.7	31.4	Large
	52	0.33	-0.05	0.06	-0.06	-0.13	-0.28	0.5	-0.2	0.1	0.7	31.4	Large
										Minimum Margin of Safety			42%

nct-com3.xls, (1.110)drop+t100+ip50

Table 2.6.13-36
1' Drop + Thermal (100°F) + 50 psig Internal Pressure - Pm @ 90° Azimuth

Cask Component	Stress Point	Stress Components (ksi)						Principal Stresses (ksi)			SI (ksi)	Stress Limit	M.S.
		S_X	S_Y	S_Z	S_{XY}	S_{YZ}	S_{XZ}	S_1	S_2	S_3			
Top Cover	1	0.48	0.06	-0.15	-0.04	0.06	0.16	0.5	-0.2	0.1	0.7	20.0	Large
	2	0.48	0.06	-0.15	-0.04	0.06	0.16	0.5	-0.2	0.1	0.7	20.0	Large
	3	0.64	-0.02	-2.12	-0.04	0.06	0.49	-2.2	0.0	0.7	2.9	20.0	581%
	4	0.64	-0.02	-2.12	-0.04	0.06	0.49	-2.2	0.0	0.7	2.9	20.0	581%
	5	0.24	0.91	-1.52	-0.01	-0.20	0.90	-1.9	0.6	0.9	2.9	20.0	601%
	6	0.24	0.91	-1.52	-0.01	-0.20	0.90	-1.9	0.6	0.9	2.9	20.0	601%
Top Flange	7	0.32	-0.18	-1.34	0.07	-0.46	0.43	-1.6	0.0	0.4	2.0	20.0	884%
	8	0.32	-0.18	-1.34	0.07	-0.46	0.43	-1.6	0.0	0.4	2.0	20.0	884%
	9	-0.78	1.21	-2.85	0.03	-0.72	0.20	-3.0	-0.8	1.3	4.3	20.0	362%
	10	-0.78	1.21	-2.85	0.03	-0.72	0.20	-3.0	-0.8	1.3	4.3	20.0	362%
Inner Shell	11	-0.14	1.57	-1.60	-0.18	-1.69	0.00	2.3	-2.3	-0.2	4.7	20.0	330%
	12	-0.14	1.57	-1.60	-0.18	-1.69	0.00	2.3	-2.3	-0.2	4.7	20.0	330%
	13	0.02	2.01	1.80	0.03	-3.61	0.01	5.5	-1.7	0.0	7.2	20.0	177%
	14	0.02	2.01	1.80	0.03	-3.61	0.01	5.5	-1.7	0.0	7.2	20.0	177%
	15	0.01	0.89	2.13	0.03	-3.20	-0.01	4.8	-1.8	0.0	6.5	20.0	206%
	16	0.01	0.89	2.13	0.03	-3.20	-0.01	4.8	-1.8	0.0	6.5	20.0	206%
	17	-0.05	-0.84	2.00	0.00	-0.04	-0.01	2.0	-0.8	-0.1	2.8	20.0	602%
	18	-0.05	-0.84	2.00	0.00	-0.04	-0.01	2.0	-0.8	-0.1	2.8	20.0	602%
	19	0.01	1.05	2.11	-0.03	3.12	-0.01	4.7	-1.6	0.0	6.3	20.0	216%
	20	0.01	1.05	2.11	-0.03	3.12	-0.01	4.7	-1.6	0.0	6.3	20.0	216%
	21	0.03	2.53	2.04	-0.03	3.56	0.01	5.9	-1.3	0.0	7.1	20.0	180%
	22	0.03	2.53	2.04	-0.03	3.56	0.01	5.9	-1.3	0.0	7.1	20.0	180%
	23	-0.12	1.63	-1.86	0.39	1.59	-0.02	2.3	-2.5	-0.2	4.8	20.0	318%
	24	-0.12	1.63	-1.86	0.39	1.59	-0.02	2.3	-2.5	-0.2	4.8	20.0	318%
	25	1.23	0.50	-1.83	0.15	0.40	0.95	-2.1	0.5	1.6	3.7	20.0	440%
	26	1.23	0.50	-1.83	0.15	0.40	0.95	-2.1	0.5	1.6	3.7	20.0	440%
Outer Shell	27	0.10	1.69	-1.31	-0.58	-3.77	0.45	4.4	-3.9	0.0	8.2	20.0	143%
	28	0.10	1.69	-1.31	-0.58	-3.77	0.45	4.4	-3.9	0.0	8.2	20.0	143%
	29	-0.01	2.18	-0.58	0.11	-5.31	0.06	6.3	-4.7	0.0	11.0	20.0	82%
	30	-0.01	2.18	-0.58	0.11	-5.31	0.06	6.3	-4.7	0.0	11.0	20.0	82%
	31	0.03	0.43	-0.11	0.07	-4.41	-0.03	4.6	-4.3	0.0	8.8	20.0	127%
	32	0.03	0.43	-0.11	0.07	-4.41	-0.03	4.6	-4.3	0.0	8.8	20.0	127%
	33	-0.02	-2.03	-0.10	0.00	-0.10	-0.06	-2.0	-0.1	0.0	2.0	20.0	880%
	34	-0.02	-2.03	-0.10	0.00	-0.10	-0.06	-2.0	-0.1	0.0	2.0	20.0	880%
	35	0.03	0.06	-0.13	-0.06	4.24	-0.03	-4.3	0.0	4.2	8.5	20.0	136%
	36	0.03	0.06	-0.13	-0.06	4.24	-0.03	-4.3	0.0	4.2	8.5	20.0	136%
	37	0.00	2.01	-0.68	-0.11	5.19	0.07	6.0	-4.7	0.0	10.7	20.0	86%
	38	0.00	2.01	-0.68	-0.11	5.19	0.07	6.0	-4.7	0.0	10.7	20.0	86%
	39	0.42	0.73	-1.86	0.74	3.03	0.43	-3.9	0.1	3.0	6.9	20.0	191%
	40	0.42	0.73	-1.86	0.74	3.03	0.43	-3.9	0.1	3.0	6.9	20.0	191%
Bottom Forging	41	0.63	0.64	-1.34	0.04	0.27	0.90	-1.7	0.6	1.0	2.7	20.0	629%
	42	0.63	0.64	-1.34	0.04	0.27	0.90	-1.7	0.6	1.0	2.7	20.0	629%
	43	0.21	0.04	-1.83	0.03	-0.03	0.68	-2.0	0.0	0.4	2.5	20.0	714%
	44	0.21	0.04	-1.83	0.03	-0.03	0.68	-2.0	0.0	0.4	2.5	20.0	714%
	45	-0.12	0.45	-3.08	0.13	-0.12	0.28	-3.1	-0.1	0.5	3.6	20.0	458%
	46	-0.12	0.45	-3.08	0.13	-0.12	0.28	-3.1	-0.1	0.5	3.6	20.0	458%
Ram Access Cover Plate	47	0.63	-0.30	-2.03	0.09	-0.09	0.17	-2.0	-0.3	0.7	2.7	31.4	Large
	48	0.63	-0.30	-2.03	0.09	-0.09	0.17	-2.0	-0.3	0.7	2.7	31.4	Large
	49	0.49	0.00	-1.96	0.04	-0.05	0.12	-2.0	0.0	0.5	2.5	31.4	Large
	50	0.49	0.00	-1.96	0.04	-0.05	0.12	-2.0	0.0	0.5	2.5	31.4	Large
	51	0.48	-0.05	-0.10	0.06	-0.13	0.13	0.5	-0.2	0.1	0.8	31.4	Large
	52	0.48	-0.05	-0.10	0.06	-0.13	0.13	0.5	-0.2	0.1	0.8	31.4	Large
nct-com3.xls, (1.110)drop+t100+ip50										Minimum Margin of Safety			82%

Table 2.6.13-37
1' Drop + Thermal (100°F) + 50 psig Internal Pressure - Pm @ 135° Azimuth

Cask Component	Stress Point	Stress Components (ksi)						Principal Stresses (ksi)			SI (ksi)	Stress Limit	M.S.
		S_X	S_Y	S_Z	S_{XY}	S_{YZ}	S_{XZ}	S_1	S_2	S_3			
Top Cover	1	0.01	0.06	0.32	-0.07	0.02	0.31	0.5	-0.2	0.1	0.7	20.0	Large
	2	0.01	0.06	0.32	-0.07	0.02	0.31	0.5	-0.2	0.1	0.7	20.0	Large
	3	-0.59	-0.02	0.06	0.03	-0.03	1.43	-1.7	0.0	1.2	2.9	20.0	579%
	4	-0.59	-0.02	0.06	0.03	-0.03	1.43	-1.7	0.0	1.2	2.9	20.0	579%
	5	-0.34	-0.15	1.16	0.15	-0.34	1.28	1.9	-1.2	-0.1	3.1	20.0	550%
	6	-0.34	-0.15	1.16	0.15	-0.34	1.28	1.9	-1.2	-0.1	3.1	20.0	550%
Top Flange	7	-0.41	0.01	0.65	-0.09	-0.66	0.44	1.2	-0.6	-0.3	1.8	20.0	Large
	8	-0.41	0.01	0.65	-0.09	-0.66	0.44	1.2	-0.6	-0.3	1.8	20.0	Large
	9	-0.56	0.49	0.72	0.01	-1.05	-0.01	1.7	-0.6	-0.5	2.2	20.0	801%
	10	-0.56	0.49	0.72	0.01	-1.05	-0.01	1.7	-0.6	-0.5	2.2	20.0	801%
Inner Shell	11	-0.04	0.13	1.26	-0.23	-1.61	-0.11	2.4	-1.1	0.0	3.5	20.0	475%
	12	-0.04	0.13	1.26	-0.23	-1.61	-0.11	2.4	-1.1	0.0	3.5	20.0	475%
	13	-0.02	-1.15	1.79	0.02	-1.92	0.00	2.7	-2.1	0.0	4.8	20.0	313%
	14	-0.02	-1.15	1.79	0.02	-1.92	0.00	2.7	-2.1	0.0	4.8	20.0	313%
	15	-0.03	-2.14	1.37	0.01	-1.56	-0.01	-2.7	0.0	2.0	4.7	20.0	325%
	16	-0.03	-2.14	1.37	0.01	-1.56	-0.01	-2.7	0.0	2.0	4.7	20.0	325%
	17	0.01	-3.57	0.91	0.00	-0.04	-0.01	-3.6	0.0	0.9	4.5	20.0	346%
	18	0.01	-3.57	0.91	0.00	-0.04	-0.01	-3.6	0.0	0.9	4.5	20.0	346%
	19	-0.04	-2.23	1.37	-0.01	1.46	-0.01	-2.7	0.0	1.9	4.6	20.0	332%
	20	-0.04	-2.23	1.37	-0.01	1.46	-0.01	-2.7	0.0	1.9	4.6	20.0	332%
	21	-0.02	-1.23	1.82	-0.01	1.97	0.00	2.8	-2.2	0.0	5.0	20.0	302%
	22	-0.02	-1.23	1.82	-0.01	1.97	0.00	2.8	-2.2	0.0	5.0	20.0	302%
	23	-0.04	0.27	0.86	0.23	1.74	-0.10	2.3	-1.2	0.0	3.6	20.0	460%
	24	-0.04	0.27	0.86	0.23	1.74	-0.10	2.3	-1.2	0.0	3.6	20.0	460%
	25	-0.40	0.13	0.44	0.08	0.58	1.08	1.4	-1.2	0.0	2.6	20.0	671%
	26	-0.40	0.13	0.44	0.08	0.58	1.08	1.4	-1.2	0.0	2.6	20.0	671%
Outer Shell	27	-0.42	-0.97	0.29	0.61	-3.76	0.42	-4.3	-0.3	3.5	7.8	20.0	158%
	28	-0.42	-0.97	0.29	0.61	-3.76	0.42	-4.3	-0.3	3.5	7.8	20.0	158%
	29	0.04	-2.86	-1.80	-0.01	-2.96	-0.03	-5.3	0.0	0.7	6.0	20.0	233%
	30	0.04	-2.86	-1.80	-0.01	-2.96	-0.03	-5.3	0.0	0.7	6.0	20.0	233%
	31	0.01	-3.90	-1.63	0.00	-2.01	-0.02	-5.1	-0.5	0.0	5.1	20.0	293%
	32	0.01	-3.90	-1.63	0.00	-2.01	-0.02	-5.1	-0.5	0.0	5.1	20.0	293%
	33	0.05	-5.40	-1.53	0.00	-0.03	-0.01	-5.4	-1.5	0.1	5.4	20.0	267%
	34	0.05	-5.40	-1.53	0.00	-0.03	-0.01	-5.4	-1.5	0.1	5.4	20.0	267%
	35	0.01	-3.96	-1.60	0.00	1.94	-0.02	-5.0	-0.5	0.0	5.1	20.0	296%
	36	0.01	-3.96	-1.60	0.00	1.94	-0.02	-5.0	-0.5	0.0	5.1	20.0	296%
	37	0.04	-2.80	-1.68	-0.01	2.87	-0.03	-5.2	0.0	0.7	5.9	20.0	242%
	38	0.04	-2.80	-1.68	-0.01	2.87	-0.03	-5.2	0.0	0.7	5.9	20.0	242%
	39	-0.19	-0.68	0.64	-0.66	3.60	0.44	-3.8	0.0	3.6	7.5	20.0	167%
	40	-0.19	-0.68	0.64	-0.66	3.60	0.44	-3.8	0.0	3.6	7.5	20.0	167%
Bottom Forging	41	-0.05	0.20	1.11	-0.08	0.39	1.20	1.9	-0.9	0.2	2.8	20.0	619%
	42	-0.05	0.20	1.11	-0.08	0.39	1.20	1.9	-0.9	0.2	2.8	20.0	619%
	43	-0.47	0.03	0.48	-0.05	0.04	1.31	-1.4	0.0	1.4	2.8	20.0	617%
	44	-0.47	0.03	0.48	-0.05	0.04	1.31	-1.4	0.0	1.4	2.8	20.0	617%
	45	-0.45	-0.21	-1.07	-0.05	-0.32	1.11	-1.9	-0.3	0.5	2.4	20.0	726%
	46	-0.45	-0.21	-1.07	-0.05	-0.32	1.11	-1.9	-0.3	0.5	2.4	20.0	726%
Ram Access Cover Plate	47	-0.28	-0.02	-0.11	-0.01	0.05	1.35	-1.6	0.0	1.2	2.7	31.4	Large
	48	-0.28	-0.02	-0.11	-0.01	0.05	1.35	-1.6	0.0	1.2	2.7	31.4	Large
	49	-0.04	0.05	-0.43	-0.02	-0.06	1.49	-1.7	0.1	1.3	3.0	31.4	945%
	50	-0.04	0.05	-0.43	-0.02	-0.06	1.49	-1.7	0.1	1.3	3.0	31.4	945%
	51	0.07	-0.05	0.32	0.13	-0.06	0.28	0.5	-0.2	0.1	0.7	31.4	Large
	52	0.07	-0.05	0.32	0.13	-0.06	0.28	0.5	-0.2	0.1	0.7	31.4	Large
nct-com3.xls, (1.110)drop+t100+ip50										Minimum Margin of Safety			158%

Table 2.6.13-38
1' Drop + Thermal (100°F) + 50 psig Internal Pressure - Pm @ 180° Azimuth

Cask Component	Stress Point	Stress Components (ksi)						Principal Stresses (ksi)			SI (ksi)	Stress Limit	M.S.
		S_X	S_Y	S_Z	S_{XY}	S_{YZ}	S_{XZ}	S_1	S_2	S_3			
Top Cover	1	-0.15	0.06	0.48	-0.06	-0.04	-0.16	0.5	-0.2	0.1	0.7	20.0	Large
	2	-0.15	0.06	0.48	-0.06	-0.04	-0.16	0.5	-0.2	0.1	0.7	20.0	Large
	3	-1.52	-0.02	1.39	0.07	-0.01	-0.05	-1.5	0.0	1.4	2.9	20.0	586%
	4	-1.52	-0.02	1.39	0.07	-0.01	-0.05	-1.5	0.0	1.4	2.9	20.0	586%
	5	-0.86	-0.36	2.54	0.20	-0.03	-0.05	2.5	-0.9	-0.3	3.5	20.0	476%
	6	-0.86	-0.36	2.54	0.20	-0.03	-0.05	2.5	-0.9	-0.3	3.5	20.0	476%
Top Flange	7	-3.08	0.94	1.17	-0.33	-0.11	-0.59	-3.2	1.0	1.3	4.5	20.0	349%
	8	-3.08	0.94	1.17	-0.33	-0.11	-0.59	-3.2	1.0	1.3	4.5	20.0	349%
	9	-0.55	0.06	1.05	-0.09	-0.19	-0.17	1.1	-0.6	0.0	1.7	20.0	Large
	10	-0.55	0.06	1.05	-0.09	-0.19	-0.17	1.1	-0.6	0.0	1.7	20.0	Large
Inner Shell	11	-0.02	-0.73	1.36	-0.39	-0.30	-0.10	1.4	-0.9	0.1	2.4	20.0	750%
	12	-0.02	-0.73	1.36	-0.39	-0.30	-0.10	1.4	-0.9	0.1	2.4	20.0	750%
	13	0.01	-1.89	1.78	0.02	-0.31	-0.06	-1.9	0.0	1.8	3.7	20.0	437%
	14	0.01	-1.89	1.78	0.02	-0.31	-0.06	-1.9	0.0	1.8	3.7	20.0	437%
	15	-0.01	-2.98	1.13	0.01	-0.28	0.02	-3.0	0.0	1.1	4.1	20.0	383%
	16	-0.01	-2.98	1.13	0.01	-0.28	0.02	-3.0	0.0	1.1	4.1	20.0	383%
	17	-0.08	-4.68	0.61	0.00	-0.01	0.09	-4.7	-0.1	0.6	5.3	20.0	277%
	18	-0.08	-4.68	0.61	0.00	-0.01	0.09	-4.7	-0.1	0.6	5.3	20.0	277%
	19	-0.01	-3.23	1.06	-0.01	0.27	0.03	-3.3	0.0	1.1	4.3	20.0	362%
	20	-0.01	-3.23	1.06	-0.01	0.27	0.03	-3.3	0.0	1.1	4.3	20.0	362%
	21	0.00	-1.96	1.63	-0.01	0.34	-0.04	-2.0	0.0	1.7	3.6	20.0	448%
	22	0.00	-1.96	1.63	-0.01	0.34	-0.04	-2.0	0.0	1.7	3.6	20.0	448%
	23	-0.05	-0.46	1.24	0.35	0.32	-0.19	1.3	-0.7	0.1	2.0	20.0	880%
	24	-0.05	-0.46	1.24	0.35	0.32	-0.19	1.3	-0.7	0.1	2.0	20.0	880%
	25	-0.94	-0.12	0.99	0.16	0.13	-0.12	1.0	-1.0	-0.1	2.0	20.0	902%
	26	-0.94	-0.12	0.99	0.16	0.13	-0.12	1.0	-1.0	-0.1	2.0	20.0	902%
Outer Shell	27	-0.54	-0.94	0.81	0.88	-0.67	-0.09	-1.7	-0.1	1.1	2.9	20.0	595%
	28	-0.54	-0.94	0.81	0.88	-0.67	-0.09	-1.7	-0.1	1.1	2.9	20.0	595%
	29	0.06	-3.70	-2.73	-0.01	-0.56	0.37	0.1	-4.0	-2.5	4.1	20.0	391%
	30	0.06	-3.70	-2.73	-0.01	-0.56	0.37	0.1	-4.0	-2.5	4.1	20.0	391%
	31	0.03	-5.17	-2.27	0.02	-0.37	0.30	-5.2	-2.3	0.1	5.3	20.0	278%
	32	0.03	-5.17	-2.27	0.02	-0.37	0.30	-5.2	-2.3	0.1	5.3	20.0	278%
	33	-0.02	-6.89	-1.88	0.00	-0.01	0.26	-6.9	-1.9	0.0	6.9	20.0	189%
	34	-0.02	-6.89	-1.88	0.00	-0.01	0.26	-6.9	-1.9	0.0	6.9	20.0	189%
	35	0.03	-5.30	-2.19	-0.02	0.35	0.29	-5.3	-2.2	0.1	5.4	20.0	270%
	36	0.03	-5.30	-2.19	-0.02	0.35	0.29	-5.3	-2.2	0.1	5.4	20.0	270%
	37	0.05	-3.76	-2.48	0.00	0.52	0.33	0.1	-3.9	-2.3	4.0	20.0	395%
	38	0.05	-3.76	-2.48	0.00	0.52	0.33	0.1	-3.9	-2.3	4.0	20.0	395%
	39	-0.28	-1.23	1.37	-0.86	0.47	-0.14	-1.8	0.1	1.5	3.3	20.0	509%
	40	-0.28	-1.23	1.37	-0.86	0.47	-0.14	-1.8	0.1	1.5	3.3	20.0	509%
Bottom Forging	41	0.00	0.23	2.21	-0.18	0.08	-0.14	2.2	-0.1	0.3	2.3	20.0	762%
	42	0.00	0.23	2.21	-0.18	0.08	-0.14	2.2	-0.1	0.3	2.3	20.0	762%
	43	-0.68	0.03	1.56	-0.10	0.01	-0.02	1.6	-0.7	0.0	2.3	20.0	786%
	44	-0.68	0.03	1.56	-0.10	0.01	-0.02	1.6	-0.7	0.0	2.3	20.0	786%
	45	-0.66	-0.72	0.19	-0.21	-0.09	0.10	0.2	-0.9	-0.5	1.1	20.0	Large
	46	-0.66	-0.72	0.19	-0.21	-0.09	0.10	0.2	-0.9	-0.5	1.1	20.0	Large
Ram Access Cover Plate	47	-1.25	0.17	1.38	-0.08	0.06	-0.01	-1.2	0.2	1.4	2.6	31.4	Large
	48	-1.25	0.17	1.38	-0.08	0.06	-0.01	-1.2	0.2	1.4	2.6	31.4	Large
	49	-1.11	0.04	0.92	-0.01	-0.03	0.11	-1.1	0.0	0.9	2.0	31.4	Large
	50	-1.11	0.04	0.92	-0.01	-0.03	0.11	-1.1	0.0	0.9	2.0	31.4	Large
	51	-0.09	-0.05	0.47	0.13	0.06	-0.13	0.5	-0.2	0.1	0.7	31.4	Large
	52	-0.09	-0.05	0.47	0.13	0.06	-0.13	0.5	-0.2	0.1	0.7	31.4	Large
nct-com3.xls, (1.110)drop+t100+ip50										Minimum Margin of Safety			189%

Table 2.6.13-39
1' Drop + Thermal (100°F) + 50 psig Internal Pressure - Pm + Pb @ 0° Azimuth

Cask Component	Stress Point	Stress Components (ksi)						Principal Stresses (ksi)			SI (ksi)	Stress Limit	M.S.
		S_X	S_Y	S_Z	S_{XY}	S_{YZ}	S_{XZ}	S_1	S_2	S_3			
Top Cover	1	-0.33	-2.38	-3.55	-0.11	0.07	-0.21	-0.3	-3.6	-2.4	3.3	30.0	823%
	2	0.03	2.50	4.51	0.24	0.00	-0.10	0.0	2.5	4.5	4.5	30.0	566%
	3	-5.37	-1.59	-4.72	0.27	0.01	-0.02	-1.6	-5.4	-4.7	3.8	30.0	686%
	4	-0.26	1.56	4.16	0.27	0.01	-0.06	4.2	-0.3	1.6	4.5	30.0	572%
	5	-8.81	-3.54	-5.72	-0.02	0.11	-0.11	-8.8	-5.7	-3.5	5.3	30.0	468%
	6	5.18	-1.25	3.85	0.70	0.01	-0.14	-1.3	3.8	5.3	6.6	30.0	355%
Top Flange	7	-10.19	-10.50	-9.09	-1.36	0.07	-0.03	-11.7	-9.1	-8.9	2.8	30.0	983%
	8	-4.52	13.48	-1.51	-0.17	-0.08	0.23	13.5	-4.5	-1.5	18.0	30.0	66%
	9	-0.25	1.57	-5.01	0.06	0.78	-0.57	-5.2	-0.2	1.7	6.8	30.0	339%
	10	-0.68	0.87	-6.84	0.52	0.20	-0.75	-6.9	-0.7	1.0	8.0	30.0	277%
Inner Shell	11	-0.21	2.54	-7.20	0.28	0.52	-0.51	-7.3	-0.2	2.6	9.9	30.0	204%
	12	-0.26	0.95	-9.05	0.44	0.01	-0.71	-9.1	-0.3	1.1	10.2	30.0	194%
	13	-0.45	2.50	-3.01	-0.10	-0.65	-0.34	2.6	-3.1	-0.4	5.7	30.0	426%
	14	-0.36	2.44	-4.16	-0.12	-0.43	-0.45	-4.2	-0.3	2.5	6.7	30.0	347%
	15	-0.25	4.62	4.10	0.00	-0.58	0.27	-0.3	3.7	5.0	5.3	30.0	469%
	16	-0.18	6.54	4.93	0.00	-0.49	0.34	-0.2	4.8	6.7	6.9	30.0	336%
	17	-0.25	9.47	3.45	0.00	0.00	0.21	9.5	-0.3	3.5	9.7	30.0	208%
	18	-0.17	11.28	6.22	0.00	0.00	0.46	-0.2	6.2	11.3	11.5	30.0	161%
	19	-0.24	4.63	4.05	0.00	0.60	0.26	-0.3	3.7	5.0	5.3	30.0	470%
	20	-0.18	6.20	5.18	0.01	0.52	0.36	-0.2	5.0	6.4	6.6	30.0	353%
	21	-0.40	2.60	-3.74	0.13	0.54	-0.41	-3.8	-0.3	2.7	6.5	30.0	362%
	22	-0.37	1.07	-4.38	0.12	0.44	-0.46	-4.5	-0.3	1.1	5.6	30.0	437%
	23	-0.62	-1.76	-5.20	0.10	-0.17	-0.40	-5.2	-1.8	-0.6	4.7	30.0	543%
	24	-0.64	3.76	-3.85	-0.94	0.00	-0.23	3.9	-3.9	-0.8	7.8	30.0	284%
	25	-4.44	0.25	-4.08	0.29	-0.19	-0.11	0.3	-4.5	-4.1	4.8	30.0	530%
	26	-5.68	0.53	-4.42	-0.23	-0.03	-0.04	0.5	-5.7	-4.4	6.2	30.0	381%
Outer Shell	27	-1.29	-12.68	-11.46	3.62	0.21	-0.95	-0.2	-13.8	-11.4	13.7	30.0	120%
	28	-3.09	7.99	-6.97	1.64	-0.23	-0.41	8.2	-7.0	-3.3	15.3	30.0	97%
	29	-0.61	1.98	-7.27	-1.43	-0.98	-0.61	-7.5	-1.1	2.7	10.1	30.0	197%
	30	-0.88	-2.82	-10.21	-1.41	-0.50	-0.83	-10.3	-3.5	-0.1	10.2	30.0	193%
	31	-0.13	0.53	4.14	0.18	-0.96	0.38	4.4	-0.3	0.4	4.7	30.0	541%
	32	-0.07	7.07	6.26	0.16	-0.77	0.56	-0.1	5.8	7.5	7.7	30.0	291%
	33	-0.14	8.50	2.05	0.00	-0.03	0.20	8.5	-0.2	2.1	8.7	30.0	246%
	34	-0.08	11.67	6.07	0.00	-0.02	0.55	-0.1	6.1	11.7	11.8	30.0	154%
	35	-0.12	2.23	4.09	-0.14	0.86	0.38	4.4	-0.2	1.9	4.6	30.0	549%
	36	-0.08	6.99	6.28	-0.12	0.72	0.57	-0.1	5.9	7.4	7.6	30.0	296%
	37	-0.65	2.01	-7.88	1.33	0.89	-0.64	-8.0	-1.1	2.6	10.6	30.0	182%
	38	-0.91	-1.67	-9.53	1.31	0.47	-0.75	-9.6	-2.6	0.1	9.7	30.0	208%
	39	-1.19	-17.06	-8.88	-4.44	-0.20	-0.60	-18.2	-8.9	0.0	18.2	30.0	65%
	40	-2.97	15.10	-0.47	-1.89	0.10	0.25	15.3	-3.2	-0.4	18.5	30.0	62%
Bottom Forging	41	-4.80	-0.70	-4.59	0.03	-0.15	-0.10	-0.7	-4.8	-4.6	4.1	30.0	624%
	42	0.40	0.29	0.64	-0.36	-0.01	-0.08	0.0	0.6	0.7	0.8	30.0	Large
	43	-4.47	-0.15	-3.73	-0.24	-0.01	-0.08	-0.1	-4.5	-3.7	4.4	30.0	589%
	44	-0.27	0.21	1.49	-0.24	-0.01	-0.12	1.5	-0.4	0.3	1.9	30.0	Large
	45	-0.91	-0.82	-3.12	-0.33	0.00	-0.26	-3.2	-1.2	-0.5	2.6	30.0	Large
	46	-2.07	-0.64	0.27	-0.41	0.16	-0.07	-2.2	-0.6	0.3	2.5	30.0	Large
Ram Access Cover Plate	47	-4.14	-0.35	-0.79	0.23	0.01	-0.01	-4.2	-0.8	-0.3	3.8	47.1	Large
	48	0.74	0.44	2.50	-0.45	-0.09	-0.04	2.5	0.1	1.1	2.4	47.1	Large
	49	-2.66	0.00	-0.70	0.15	-0.02	-0.07	-2.7	-0.7	0.0	2.7	47.1	Large
	50	-0.17	0.42	2.14	-0.37	0.05	-0.09	2.1	-0.3	0.6	2.5	47.1	Large
	51	-0.36	-0.82	-1.34	-0.16	-0.07	-0.17	-1.4	-0.8	-0.3	1.1	47.1	Large
	52	0.18	0.71	2.29	-0.11	-0.04	-0.09	2.3	0.1	0.7	2.1	47.1	Large
											Minimum Margin of Safety		62%

nct-com3.xls, (1.110)drop+t100+ip50

Table 2.6.13-40
1' Drop + Thermal (100°F) + 50 psig Internal Pressure - Pm + Pb @ 45° Azimuth

Cask Component	Stress Point	Stress Components (ksi)						Principal Stresses (ksi)			SI (ksi)	Stress Limit	M.S.
		S_X	S_Y	S_Z	S_{XY}	S_{YZ}	S_{XZ}	S_1	S_2	S_3			
Top Cover	1	-0.72	-2.38	-3.17	-0.13	-0.03	0.59	-0.6	-3.3	-2.4	2.7	30.0	999%
	2	1.35	2.50	3.19	0.17	0.17	-1.22	0.7	2.5	3.8	3.1	30.0	873%
	3	-2.88	-1.59	-4.90	0.11	0.17	-1.18	-5.5	-2.3	-1.6	3.9	30.0	673%
	4	0.96	1.55	1.71	0.11	0.17	-1.44	-0.2	1.6	2.8	3.0	30.0	901%
	5	-3.29	-1.24	-4.46	-0.04	0.40	-1.92	-5.9	-2.0	-1.1	4.8	30.0	527%
	6	1.72	0.12	0.89	0.34	0.73	0.39	-0.3	1.0	2.1	2.4	30.0	Large
Top Flange	7	-5.60	-5.98	-6.28	-0.81	-0.21	0.24	-4.9	-6.6	-6.3	1.7	30.0	Large
	8	-2.56	7.49	-1.77	-0.11	-0.51	0.17	7.5	-2.6	-1.8	10.1	30.0	197%
	9	-0.60	4.19	-4.86	0.53	1.57	0.24	4.5	-5.1	-0.7	9.6	30.0	211%
	10	-2.47	-1.32	-6.66	-0.26	0.25	-0.88	-6.8	-2.4	-1.2	5.6	30.0	434%
Inner Shell	11	-0.42	3.87	-5.44	-0.09	0.89	0.08	-5.5	-0.4	4.0	9.5	30.0	216%
	12	-0.70	-0.38	-6.43	-0.37	0.00	0.04	-6.4	-0.9	-0.1	6.3	30.0	377%
	13	-0.30	3.16	-1.31	-0.05	-4.20	0.05	5.7	-3.8	-0.3	9.5	30.0	215%
	14	-0.29	3.07	-1.16	-0.05	-2.89	0.10	4.5	-2.6	-0.3	7.2	30.0	318%
	15	-0.10	3.67	3.42	0.02	-4.19	-0.01	7.7	-0.6	-0.1	8.4	30.0	258%
	16	-0.03	4.72	3.70	0.02	-3.20	-0.03	7.5	0.0	1.0	7.5	30.0	301%
	17	-0.03	5.75	4.02	0.00	-0.03	0.02	0.0	4.0	5.8	5.8	30.0	419%
	18	0.00	5.81	3.44	0.00	-0.01	-0.09	0.0	3.4	5.8	5.8	30.0	416%
	19	-0.11	3.96	3.62	-0.02	4.25	-0.01	8.0	-0.5	-0.1	8.5	30.0	253%
	20	-0.04	4.71	3.61	-0.02	3.29	-0.04	7.5	0.0	0.8	7.5	30.0	298%
	21	-0.35	3.09	-1.04	0.06	4.37	0.04	5.9	-3.8	-0.4	9.7	30.0	211%
	22	-0.33	2.94	-1.34	0.07	2.94	0.11	4.4	-2.8	-0.3	7.3	30.0	312%
	23	-0.42	1.99	-3.71	0.11	-1.35	0.05	-4.0	-0.4	2.3	6.3	30.0	375%
	24	-0.62	1.26	-4.01	-0.18	-0.18	0.02	-4.0	-0.6	1.3	5.3	30.0	465%
	25	-1.68	1.39	-3.27	0.14	-0.65	-1.02	1.5	-3.8	-1.2	5.3	30.0	464%
	26	-2.82	-0.45	-4.02	-0.04	0.11	-1.06	-4.6	-2.2	-0.4	4.2	30.0	614%
Outer Shell	27	-0.80	-2.60	-6.63	1.49	2.69	-0.09	-8.1	-2.3	0.3	8.4	30.0	258%
	28	-1.55	3.70	-5.02	0.80	-1.42	-0.07	4.0	-5.2	-1.7	9.3	30.0	223%
	29	-0.59	2.28	-4.42	-0.76	-8.15	0.00	-9.9	-0.6	7.8	17.7	30.0	70%
	30	-0.64	2.08	-4.70	-0.78	-4.08	0.12	-6.6	-0.8	4.1	10.7	30.0	180%
	31	-0.07	1.69	2.66	0.15	-6.51	-0.02	8.7	-4.4	-0.1	13.1	30.0	130%
	32	0.00	5.45	3.54	0.14	-4.68	-0.05	9.3	-0.3	0.0	9.6	30.0	214%
	33	0.02	5.13	2.93	0.00	-0.17	0.07	0.0	2.9	5.1	5.1	30.0	485%
	34	0.00	5.31	2.00	0.00	-0.12	-0.09	5.3	0.0	2.0	5.3	30.0	464%
	35	-0.07	2.42	3.02	-0.12	6.04	-0.03	8.8	-3.3	-0.1	12.1	30.0	148%
	36	-0.02	4.91	3.22	-0.11	4.33	-0.05	8.5	-0.4	0.0	8.8	30.0	240%
	37	-0.65	2.18	-4.18	0.74	8.10	-0.02	-9.7	-0.7	7.7	17.5	30.0	72%
	38	-0.69	1.79	-5.10	0.75	3.85	0.13	-6.8	-0.8	3.6	10.5	30.0	187%
	39	-0.41	-5.58	-5.33	-2.04	-3.33	-0.10	-9.1	-2.8	0.5	9.6	30.0	213%
	40	-1.43	5.79	-2.56	-0.95	0.52	-0.07	5.9	-2.6	-1.6	8.5	30.0	251%
Bottom Forging	41	-1.62	0.53	-3.58	-0.01	-0.62	-1.18	-4.2	-1.1	0.6	4.8	30.0	520%
	42	-0.01	-0.05	-0.86	-0.17	-0.15	-0.19	-0.9	-0.1	0.1	1.1	30.0	Large
	43	-2.30	-0.14	-3.76	-0.10	-0.15	-1.07	-4.3	-1.7	-0.1	4.2	30.0	615%
	44	0.07	0.21	-0.02	-0.10	-0.15	-0.98	-1.0	0.2	1.0	2.0	30.0	Large
	45	-0.97	-0.25	-4.15	-0.09	0.03	-0.89	-4.4	-0.8	-0.2	4.1	30.0	623%
	46	-0.65	0.07	-0.96	-0.12	0.44	-1.29	-2.1	-0.1	0.7	2.9	30.0	946%
Ram Access Cover Plate	47	-1.65	-0.36	-2.00	0.09	0.13	-1.79	-3.6	-0.4	0.0	3.6	47.1	Large
	48	0.83	0.05	0.48	-0.08	-0.53	-0.84	1.6	-0.6	0.4	2.1	47.1	Large
	49	-1.14	-0.15	-1.78	0.07	0.00	-1.47	-3.0	-0.2	0.1	3.0	47.1	Large
	50	0.91	0.45	0.38	-0.20	-0.01	-1.50	2.2	-0.9	0.5	3.1	47.1	Large
	51	-0.52	-0.82	-1.18	-0.06	-0.16	0.34	-1.4	-0.8	-0.4	1.0	47.1	Large
	52	1.17	0.71	1.29	-0.05	-0.11	-0.91	2.1	0.3	0.7	1.8	47.1	Large
nct-com3.xls, (1.110)drop+t100+ip50										Minimum Margin of Safety			70%

Table 2.6.13-41
1' Drop + Thermal (100°F) + 50 psig Internal Pressure - Pm + Pb @ 90° Azimuth

Cask Component	Stress Point	Stress Components (ksi)						Principal Stresses (ksi)			SI (ksi)	Stress Limit	M.S.
		S_X	S_Y	S_Z	S_{XY}	S_{YZ}	S_{XZ}	S_1	S_2	S_3			
Top Cover	1	-1.51	-2.38	-2.37	-0.07	-0.11	0.21	-1.5	-2.5	-2.3	1.0	30.0	Large
	2	2.46	2.50	2.07	0.00	0.24	0.10	1.9	2.5	2.6	0.7	30.0	Large
	3	-0.29	-1.59	-4.34	-0.04	0.06	0.23	-4.4	-1.6	-0.3	4.1	30.0	636%
	4	1.58	1.55	0.10	-0.04	0.06	0.76	-0.2	1.6	1.9	2.1	30.0	Large
	5	1.70	0.67	-2.14	-0.01	-0.16	1.02	-2.4	0.7	2.0	4.4	30.0	589%
	6	-1.23	1.15	-0.90	-0.02	-0.25	0.78	-1.9	-0.3	1.2	3.1	30.0	883%
Top Flange	7	0.60	0.40	-1.41	0.12	-0.51	0.71	-1.8	0.5	0.8	2.6	30.0	Large
	8	0.06	-0.75	-1.28	0.02	-0.41	0.16	-1.5	-0.5	0.1	1.6	30.0	Large
	9	-0.28	2.90	-2.78	0.29	-0.96	-0.09	3.1	-2.9	-0.3	6.0	30.0	399%
	10	-1.31	-0.46	-2.93	-0.22	-0.48	0.49	-3.1	-1.3	-0.3	2.9	30.0	949%
Inner Shell	11	-0.08	2.11	-1.82	-0.14	-1.84	0.06	2.8	-2.5	-0.1	5.4	30.0	456%
	12	-0.20	1.03	-1.39	-0.22	-1.55	-0.07	1.8	-2.2	-0.2	4.0	30.0	659%
	13	-0.04	1.42	1.36	0.02	-3.65	0.04	5.0	-2.3	0.0	7.3	30.0	311%
	14	0.08	2.59	2.24	0.04	-3.57	-0.02	6.0	-1.2	0.1	7.1	30.0	320%
	15	0.00	1.03	2.47	0.02	-3.03	-0.03	4.9	-1.4	0.0	6.2	30.0	382%
	16	0.02	0.75	1.79	0.03	-3.38	0.00	4.7	-2.2	0.0	6.8	30.0	338%
	17	-0.05	-0.31	3.16	0.00	-0.03	-0.08	3.2	-0.3	-0.1	3.5	30.0	764%
	18	-0.06	-1.38	0.84	0.00	-0.04	0.05	-1.4	-0.1	0.8	2.2	30.0	Large
	19	0.01	1.22	2.45	-0.02	2.93	-0.03	4.8	-1.2	0.0	6.0	30.0	402%
	20	0.02	0.89	1.77	-0.03	3.31	0.01	4.7	-2.0	0.0	6.7	30.0	349%
	21	-0.03	1.86	1.47	-0.02	3.57	0.05	5.2	-1.9	0.0	7.2	30.0	319%
	22	0.10	3.20	2.60	-0.03	3.55	-0.03	6.5	-0.7	0.1	7.1	30.0	321%
	23	0.11	4.97	-1.09	0.17	1.68	0.05	5.4	-1.5	0.1	6.9	30.0	333%
	24	-0.38	-1.69	-2.64	0.61	1.50	-0.08	-3.8	-0.9	0.0	3.8	30.0	690%
	25	1.64	2.44	-1.33	0.09	0.64	0.88	-1.7	1.8	2.6	4.3	30.0	603%
	26	0.84	-1.42	-2.33	0.21	0.16	1.02	1.2	-2.6	-1.4	3.8	30.0	690%
Outer Shell	27	0.04	4.87	-0.96	-0.86	-5.11	0.54	8.0	-3.9	-0.1	11.9	30.0	152%
	28	0.16	-1.50	-1.66	-0.30	-2.43	0.36	-4.0	-0.1	1.1	5.1	30.0	489%
	29	-0.05	0.58	-1.95	0.11	-5.48	0.18	-6.3	0.0	4.9	11.3	30.0	166%
	30	0.03	3.78	0.78	0.11	-5.14	-0.05	7.6	-3.1	0.0	10.7	30.0	180%
	31	0.06	0.58	0.13	0.06	-4.08	-0.02	4.4	-3.7	0.1	8.2	30.0	267%
	32	-0.01	0.28	-0.36	0.08	-4.74	-0.04	-4.8	0.0	4.7	9.5	30.0	216%
	33	0.02	-1.19	1.37	0.00	-0.08	-0.13	1.4	-1.2	0.0	2.6	30.0	Large
	34	-0.06	-2.86	-1.56	0.00	-0.11	0.01	-0.1	-2.9	-1.6	2.8	30.0	969%
	35	0.07	0.32	0.14	-0.05	3.89	-0.03	4.1	-3.7	0.1	7.8	30.0	286%
	36	0.00	-0.20	-0.40	-0.07	4.59	-0.03	-4.9	0.0	4.3	9.2	30.0	227%
	37	-0.03	0.37	-2.24	-0.11	5.28	0.19	-6.4	0.0	4.5	10.9	30.0	176%
	38	0.04	3.66	0.88	-0.11	5.11	-0.05	7.6	-3.0	0.0	10.6	30.0	183%
	39	0.91	6.11	-0.65	1.06	4.12	0.54	8.2	-2.6	0.7	10.8	30.0	177%
	40	0.23	-4.63	-3.08	0.42	1.95	0.33	-6.0	-1.9	0.4	6.3	30.0	375%
Bottom Forging	41	2.20	1.72	-1.45	0.04	0.54	0.98	-1.8	1.7	2.5	4.3	30.0	604%
	42	-0.42	-0.44	-1.23	0.04	0.01	0.82	-1.7	-0.4	0.1	1.8	30.0	Large
	43	0.11	-0.13	-2.93	0.03	-0.03	0.55	-3.0	-0.1	0.2	3.2	30.0	827%
	44	0.31	0.20	-0.74	0.04	-0.03	0.81	-1.2	0.2	0.8	1.9	30.0	Large
	45	-0.86	0.23	-4.52	0.12	-0.06	0.15	-4.5	-0.9	0.2	4.8	30.0	530%
	46	0.65	0.67	-1.64	0.14	-0.17	0.40	-1.7	0.6	0.8	2.5	30.0	Large
Ram Access Cover Plate	47	0.54	-0.35	-2.85	-0.08	-0.08	0.13	-2.9	-0.4	0.6	3.4	47.1	Large
	48	0.71	-0.25	-1.22	0.25	-0.11	0.21	0.8	-1.3	-0.3	2.0	47.1	Large
	49	-0.22	-0.37	-2.61	0.07	-0.04	0.05	-2.6	-0.4	-0.2	2.4	47.1	Large
	50	1.18	0.37	-1.31	0.01	-0.07	0.19	-1.3	0.4	1.2	2.5	47.1	Large
	51	-1.03	-0.82	-0.67	0.07	-0.16	0.17	-1.2	-0.8	-0.5	0.6	47.1	Large
	52	1.99	0.71	0.48	0.04	-0.11	0.09	2.0	0.4	0.8	1.6	47.1	Large
											Minimum Margin of Safety		152%

nct-com3.xls, (1.110)drop+t100+ip50

Table 2.6.13-42
1' Drop + Thermal (100°F) + 50 psig Internal Pressure - Pm + Pb @ 135° Azimuth

Cask Component	Stress Point	Stress Components (ksi)						Principal Stresses (ksi)			SI (ksi)	Stress Limit	M.S.
		S_X	S_Y	S_Z	S_{XY}	S_{YZ}	S_{XZ}	S_1	S_2	S_3			
Top Cover	1	-1.13	-2.38	-2.75	0.03	-0.13	-0.59	-0.9	-3.0	-2.4	2.0	30.0	Large
	2	1.14	2.50	3.39	-0.17	0.17	1.22	0.6	2.5	3.9	3.3	30.0	796%
	3	-1.10	-1.60	-2.58	0.03	-0.03	1.06	-3.1	-1.6	-0.5	2.6	30.0	Large
	4	-0.08	1.55	2.71	0.03	-0.03	1.81	-1.0	1.6	3.6	4.6	30.0	557%
	5	-0.86	-0.57	-0.14	0.11	-0.23	1.63	1.2	-2.2	-0.5	3.4	30.0	789%
	6	0.15	0.27	2.47	0.18	-0.45	0.92	2.8	-0.3	0.4	3.2	30.0	840%
Top Flange	7	-0.63	-0.62	0.54	-0.11	-0.77	0.69	1.2	-1.2	-0.7	2.3	30.0	Large
	8	-0.16	0.63	0.77	-0.08	-0.56	0.19	1.3	-0.2	0.2	1.5	30.0	Large
	9	-0.23	1.89	1.36	0.23	-1.21	-0.18	2.9	-0.3	0.4	3.1	30.0	855%
	10	-0.91	-0.91	0.09	-0.20	-0.89	0.17	0.7	-1.4	-0.9	2.1	30.0	Large
Inner Shell	11	-0.05	0.97	1.63	-0.12	-1.53	-0.05	2.9	-0.3	0.0	3.2	30.0	842%
	12	-0.03	-0.72	0.88	-0.34	-1.69	-0.17	-1.9	0.0	2.0	3.8	30.0	685%
	13	-0.02	-0.76	2.18	0.02	-1.87	-0.01	3.1	-1.7	0.0	4.8	30.0	531%
	14	-0.02	-1.54	1.40	0.01	-1.97	0.02	-2.5	0.0	2.4	4.9	30.0	509%
	15	-0.05	-2.00	1.47	0.01	-1.50	-0.01	-2.6	-0.1	2.0	4.6	30.0	554%
	16	-0.01	-2.28	1.27	0.00	-1.62	0.00	-2.9	0.0	1.9	4.8	30.0	523%
	17	-0.02	-3.65	0.36	0.00	-0.04	-0.01	-3.7	0.0	0.4	4.0	30.0	648%
	18	0.05	-3.49	1.46	0.00	-0.04	-0.02	-3.5	0.1	1.5	5.0	30.0	506%
	19	-0.06	-2.08	1.46	-0.01	1.41	-0.01	-2.6	-0.1	1.9	4.5	30.0	563%
	20	-0.02	-2.37	1.28	0.00	1.51	0.00	-2.9	0.0	1.8	4.7	30.0	533%
	21	-0.02	-0.86	2.24	-0.01	1.92	-0.02	3.2	-1.8	0.0	4.9	30.0	508%
	22	-0.02	-1.60	1.39	-0.01	2.01	0.02	-2.6	0.0	2.4	5.0	30.0	498%
	23	-0.04	1.36	1.25	0.19	1.62	-0.02	2.9	-0.4	0.0	3.3	30.0	806%
	24	-0.08	-0.80	0.47	0.27	1.85	-0.19	-2.2	0.0	1.8	4.0	30.0	657%
	25	0.01	1.28	0.81	0.06	0.82	1.09	-0.8	0.8	2.2	3.0	30.0	894%
	26	-0.77	-1.01	0.07	0.10	0.34	1.07	0.9	-1.5	-1.0	2.4	30.0	Large
Outer Shell	27	-0.42	-5.18	-0.81	0.89	-4.77	0.50	-8.4	-0.3	2.3	10.6	30.0	182%
	28	-0.42	3.24	1.39	0.33	-2.74	0.34	5.2	-1.0	0.0	6.2	30.0	385%
	29	0.08	-1.96	-1.19	-0.01	-2.87	-0.05	-4.5	0.1	1.3	5.8	30.0	418%
	30	0.00	-3.75	-2.41	-0.01	-3.05	-0.01	-6.2	0.0	0.0	6.2	30.0	380%
	31	0.02	-3.57	-1.47	0.00	-1.90	-0.03	-4.7	-0.4	0.0	4.7	30.0	536%
	32	0.00	-4.23	-1.79	-0.01	-2.13	-0.01	-5.5	-0.6	0.0	5.5	30.0	450%
	33	0.03	-5.45	-2.35	0.00	-0.03	0.00	-5.5	-2.4	0.0	5.5	30.0	447%
	34	0.07	-5.34	-0.71	0.00	-0.03	-0.02	-5.3	-0.7	0.1	5.4	30.0	454%
	35	0.02	-3.62	-1.47	0.00	1.84	-0.03	-4.7	-0.4	0.0	4.7	30.0	539%
	36	0.00	-4.29	-1.74	0.01	2.03	-0.01	-5.4	-0.6	0.0	5.4	30.0	454%
	37	0.08	-2.20	-1.09	-0.01	2.80	-0.06	-4.5	0.1	1.2	5.7	30.0	426%
	38	0.00	-3.41	-2.27	-0.01	2.95	0.00	-5.8	0.0	0.2	6.0	30.0	399%
	39	0.14	-4.39	-0.37	-0.94	4.45	0.57	-7.4	0.3	2.5	9.9	30.0	202%
	40	-0.22	3.05	1.64	-0.38	2.74	0.32	5.2	-0.9	0.2	6.0	30.0	398%
Bottom Forging	41	0.38	0.60	0.60	-0.05	0.70	1.22	-0.9	0.6	1.9	2.8	30.0	962%
	42	0.05	-0.20	1.62	-0.10	0.07	1.18	2.2	-0.6	-0.2	2.9	30.0	946%
	43	-0.80	-0.15	-0.83	-0.05	0.04	1.04	-1.9	-0.2	0.2	2.1	30.0	Large
	44	-0.13	0.22	1.78	-0.05	0.04	1.58	2.7	-1.0	0.2	3.7	30.0	710%
	45	-0.41	-0.34	-2.38	-0.05	-0.09	0.76	-2.6	-0.4	-0.1	2.5	30.0	Large
	46	-0.48	-0.08	0.23	-0.05	-0.55	1.47	1.5	-1.7	-0.2	3.2	30.0	832%
Ram Access Cover Plate	47	-1.03	-0.28	-1.05	0.05	-0.20	1.69	-2.7	-0.3	0.7	3.4	47.1	Large
	48	0.45	0.24	0.82	-0.06	0.30	1.01	1.7	-0.5	0.3	2.2	47.1	Large
	49	-0.70	-0.25	-1.33	0.05	-0.05	1.38	-2.4	-0.3	0.4	2.8	47.1	Large
	50	0.61	0.36	0.48	-0.09	-0.07	1.60	2.1	-1.1	0.4	3.2	47.1	Large
	51	-0.87	-0.82	-0.84	0.16	-0.06	-0.34	-0.5	-1.2	-0.9	0.8	47.1	Large
	52	0.99	0.71	1.48	0.11	-0.05	0.91	2.2	0.3	0.7	1.9	47.1	Large
nct-com3.xls, (1.110)drop+t100+ip50											Minimum Margin of Safety		182%

Table 2.6.13-43
1' Drop + Thermal (100°F) + 50 psig Internal Pressure - Pm + Pb @ 180° Azimuth

Cask Component	Stress Point	Stress Components (ksi)						Principal Stresses (ksi)			SI (ksi)	Stress Limit	M.S.
		S_X	S_Y	S_Z	S_{XY}	S_{YZ}	S_{XZ}	S_1	S_2	S_3			
Top Cover	1	-0.33	-2.38	-3.55	0.11	-0.07	-0.21	-0.3	-3.6	-2.4	3.3	30.0	823%
	2	0.03	2.50	4.51	-0.24	0.00	-0.10	0.0	2.5	4.5	4.5	30.0	566%
	3	-1.96	-1.60	-1.65	0.07	-0.01	-0.03	-2.0	-1.7	-1.6	0.4	30.0	Large
	4	-1.08	1.56	4.44	0.07	-0.01	-0.08	4.4	-1.1	1.6	5.5	30.0	444%
	5	-2.25	-0.89	0.64	0.07	-0.03	-0.01	0.6	-2.3	-0.9	2.9	30.0	938%
	6	0.51	0.17	4.45	0.33	-0.03	-0.08	4.5	0.0	0.7	4.5	30.0	570%
Top Flange	7	-5.03	-8.04	-1.14	-0.88	0.47	-0.37	-1.1	-8.3	-4.9	7.2	30.0	315%
	8	-1.11	9.91	3.48	0.22	-0.68	-0.82	10.0	-1.3	3.5	11.2	30.0	167%
	9	-0.17	1.84	1.75	0.23	-0.14	-0.19	-0.2	1.6	2.0	2.2	30.0	Large
	10	-0.95	-1.71	0.35	-0.41	-0.23	-0.15	0.4	-1.9	-0.8	2.3	30.0	Large
Inner Shell	11	-0.02	0.97	1.82	-0.17	-0.24	-0.14	-0.1	0.9	1.9	2.0	30.0	Large
	12	-0.03	-2.43	0.90	-0.60	-0.36	-0.06	-2.6	0.1	0.9	3.6	30.0	744%
	13	-0.02	-1.71	1.65	0.02	-0.31	-0.04	-1.7	0.0	1.7	3.4	30.0	779%
	14	0.04	-2.08	1.91	0.01	-0.31	-0.08	-2.1	0.0	1.9	4.0	30.0	642%
	15	-0.04	-2.96	0.92	0.01	-0.29	0.05	-3.0	0.0	0.9	3.9	30.0	665%
	16	0.02	-3.00	1.34	0.01	-0.27	-0.01	-3.0	0.0	1.4	4.4	30.0	587%
	17	-0.10	-4.56	0.60	0.00	-0.01	0.10	-4.6	-0.1	0.6	5.2	30.0	480%
	18	-0.06	-4.81	0.61	0.00	-0.01	0.09	-4.8	-0.1	0.6	5.4	30.0	452%
	19	-0.04	-3.18	0.85	-0.01	0.28	0.06	-3.2	0.0	0.9	4.1	30.0	636%
	20	0.02	-3.29	1.27	-0.01	0.26	0.00	-3.3	0.0	1.3	4.6	30.0	554%
	21	-0.03	-1.86	1.44	-0.01	0.34	-0.01	-1.9	0.0	1.5	3.4	30.0	789%
	22	0.04	-2.05	1.81	-0.01	0.34	-0.07	-2.1	0.0	1.8	3.9	30.0	665%
	23	0.00	1.21	1.74	0.24	0.28	-0.20	-0.1	1.2	1.9	1.9	30.0	Large
	24	-0.12	-2.13	0.74	0.45	0.36	-0.19	-2.3	0.0	0.8	3.1	30.0	874%
	25	-0.39	1.31	1.45	0.04	0.14	-0.13	-0.4	1.2	1.5	1.9	30.0	Large
	26	-1.47	-1.53	0.54	0.28	0.11	-0.12	0.5	-1.8	-1.2	2.3	30.0	Large
Outer Shell	27	-0.52	-6.66	-0.81	1.29	-0.69	0.13	-7.0	-0.7	-0.3	6.7	30.0	346%
	28	-0.55	4.76	2.44	0.48	-0.65	-0.31	-0.6	2.3	5.0	5.6	30.0	436%
	29	0.08	-3.06	-2.87	-0.01	-0.55	0.39	0.1	-3.5	-2.4	3.7	30.0	715%
	30	0.03	-4.34	-2.59	-0.01	-0.57	0.34	0.1	-4.5	-2.5	4.6	30.0	554%
	31	0.02	-5.03	-2.58	0.02	-0.39	0.34	0.1	-5.1	-2.6	5.2	30.0	482%
	32	0.04	-5.31	-1.96	0.02	-0.35	0.26	-5.3	-2.0	0.1	5.4	30.0	453%
	33	-0.01	-6.61	-1.88	0.00	-0.01	0.26	-6.6	-1.9	0.0	6.6	30.0	352%
	34	-0.02	-7.17	-1.87	0.00	0.00	0.26	-7.2	-1.9	0.0	7.2	30.0	318%
	35	0.02	-5.08	-2.47	-0.02	0.38	0.33	-5.1	-2.5	0.1	5.2	30.0	477%
	36	0.04	-5.52	-1.90	-0.02	0.33	0.25	-5.6	-1.9	0.1	5.6	30.0	434%
	37	0.07	-3.56	-2.75	0.00	0.50	0.37	0.1	-3.8	-2.6	3.9	30.0	664%
	38	0.03	-3.97	-2.21	0.00	0.53	0.29	0.1	-4.1	-2.1	4.2	30.0	616%
	39	0.09	-6.30	-0.04	-1.20	0.52	0.11	-6.6	0.0	0.3	6.9	30.0	337%
	40	-0.36	3.85	2.78	-0.53	0.41	-0.40	-0.5	2.7	4.1	4.5	30.0	560%
Bottom Forging	41	-0.20	0.62	1.18	-0.10	0.12	-0.11	-0.2	0.6	1.2	1.4	30.0	Large
	42	0.72	-0.17	3.24	-0.25	0.04	-0.17	3.3	-0.2	0.8	3.5	30.0	759%
	43	-1.14	-0.16	-0.09	-0.10	0.01	-0.02	-1.1	-0.2	-0.1	1.1	30.0	Large
	44	-0.22	0.23	3.22	-0.11	0.01	-0.02	3.2	-0.2	0.3	3.5	30.0	767%
	45	0.05	-0.78	-1.06	-0.20	0.00	0.17	0.1	-1.1	-0.8	1.2	30.0	Large
	46	-1.35	-0.66	1.43	-0.22	-0.17	0.02	1.4	-1.4	-0.6	2.9	30.0	948%
Ram Access Cover Plate	47	-2.73	-0.24	0.19	0.15	0.01	-0.02	-2.7	-0.2	0.2	2.9	47.1	Large
	48	0.22	0.59	2.56	-0.31	0.10	0.00	2.6	0.0	0.8	2.5	47.1	Large
	49	-1.84	-0.20	-0.22	0.15	0.00	0.11	-1.9	-0.2	-0.2	1.7	47.1	Large
	50	-0.38	0.28	2.06	-0.16	-0.05	0.12	2.1	-0.4	0.3	2.5	47.1	Large
	51	-0.36	-0.82	-1.34	0.16	0.07	-0.17	-1.4	-0.8	-0.3	1.1	47.1	Large
	52	0.18	0.71	2.29	0.11	0.04	-0.09	2.3	0.1	0.7	2.1	47.1	Large
										Minimum Margin of Safety			167%

nct-com3.xls, (1.110)drop+t100+ip50

Table 2.6.13-44
1' Drop + Thermal (100°F) + 50 psig Internal Pressure - Total Stresses @ 0° Azimuth

Cask Component	Stress Point	Stress Components (ksi)						Principal Stresses (ksi)			SI (ksi)	Stress Limit	M.S.
		S_X	S_Y	S_Z	S_{XY}	S_{YZ}	S_{XZ}	S_1	S_2	S_3			
Top Cover	1	-0.32	-4.94	-6.21	-0.15	0.08	-0.22	-0.3	-6.2	-4.9	5.9	60.0	913%
	2	0.05	-0.67	1.24	0.20	0.00	-0.12	1.3	-0.7	0.1	2.0	60.0	Large
	3	-5.37	-3.44	-5.40	0.12	0.01	-0.02	-3.4	-5.4	-5.4	2.0	60.0	Large
	4	-0.25	-0.89	2.89	0.28	0.01	-0.06	2.9	-1.0	-0.1	3.9	60.0	Large
	5	-8.43	-2.84	-1.13	-0.23	0.31	-0.11	-8.4	-2.9	-1.1	7.4	60.0	715%
	6	4.77	-1.74	7.35	0.29	0.11	-0.14	-1.8	4.8	7.4	9.1	60.0	559%
Top Flange	7	-12.78	-14.37	-6.00	-2.30	0.07	-0.03	-6.0	-16.0	-11.1	10.0	60.0	500%
	8	-5.26	17.30	4.46	-0.41	-0.09	0.23	17.3	-5.3	4.5	22.6	60.0	166%
	9	-0.73	3.60	-8.86	0.45	0.81	-0.59	-9.0	-0.7	3.7	12.6	60.0	374%
	10	-3.40	-6.57	-13.57	-0.04	0.24	-0.77	-13.6	-6.6	-3.3	10.3	60.0	483%
Inner Shell	11	-0.63	8.45	-12.71	0.05	0.52	-0.52	-12.7	-0.6	8.5	21.2	60.0	183%
	12	-1.16	-16.86	-20.90	-2.16	0.02	-0.72	-0.8	-20.9	-17.1	20.1	60.0	199%
	13	-0.47	-4.47	-2.84	-0.05	-0.65	-0.34	-0.4	-4.7	-2.7	4.3	60.0	Large
	14	-0.36	-3.59	-3.28	-0.06	-0.43	-0.45	-0.3	-3.9	-3.0	3.6	60.0	Large
	15	-0.26	-2.25	3.72	0.00	-0.58	0.27	3.8	-2.3	-0.3	6.1	60.0	883%
	16	-0.18	0.42	5.28	-0.01	-0.49	0.34	5.3	-0.2	0.4	5.6	60.0	980%
	17	-0.25	2.44	2.99	0.00	0.00	0.21	-0.3	2.4	3.0	3.3	60.0	Large
	18	-0.17	5.31	6.62	0.00	0.00	0.46	-0.2	5.3	6.6	6.8	60.0	776%
	19	-0.24	-2.34	3.66	0.00	0.60	0.26	3.7	-2.4	-0.3	6.1	60.0	877%
	20	-0.18	0.17	5.58	0.01	0.52	0.36	5.7	-0.2	0.1	5.9	60.0	925%
	21	-0.41	-3.88	-3.71	0.11	0.54	-0.41	-0.4	-4.4	-3.3	4.0	60.0	Large
	22	-0.37	-5.44	-3.90	0.11	0.44	-0.46	-0.3	-5.6	-3.8	5.3	60.0	Large
	23	-0.86	-2.71	-7.00	-0.09	-0.15	-0.40	-7.0	-2.7	-0.8	6.2	60.0	868%
	24	-0.83	-6.67	-7.93	0.13	0.02	-0.23	-0.8	-7.9	-6.7	7.1	60.0	743%
	25	-8.22	-2.16	-5.62	-0.31	-0.18	-0.11	-2.1	-8.2	-5.6	6.1	60.0	881%
	26	-10.82	-2.73	-5.65	0.89	-0.02	-0.04	-10.9	-5.7	-2.6	8.3	60.0	624%
Outer Shell	27	0.64	-6.13	-8.10	3.19	0.25	-0.99	2.0	-8.5	-7.1	10.5	60.0	473%
	28	-2.28	4.30	-6.47	2.20	-0.19	-0.45	5.0	-6.5	-2.9	11.5	60.0	422%
	29	0.05	5.31	-4.90	-0.77	-0.98	-0.61	5.5	-5.1	0.0	10.6	60.0	467%
	30	2.05	1.05	-5.53	-0.90	-0.49	-0.83	-5.7	0.6	2.6	8.3	60.0	625%
	31	-0.24	2.04	4.13	0.14	-0.96	0.38	4.5	-0.3	1.7	4.8	60.0	Large
	32	-0.13	10.83	7.65	0.12	-0.77	0.56	-0.2	7.5	11.0	11.2	60.0	436%
	33	-0.27	10.36	2.51	0.00	-0.03	0.20	10.4	-0.3	2.5	10.6	60.0	464%
	34	-0.13	15.10	7.79	-0.01	-0.02	0.55	-0.2	7.8	15.1	15.3	60.0	293%
	35	-0.22	3.34	3.85	-0.09	0.86	0.38	-0.3	2.7	4.5	4.8	60.0	Large
	36	-0.14	11.14	7.77	-0.08	0.72	0.57	-0.2	7.7	11.3	11.5	60.0	423%
	37	-0.06	6.22	-5.45	0.62	0.88	-0.64	6.3	-5.6	0.0	11.9	60.0	402%
	38	1.85	1.03	-5.37	0.79	0.47	-0.75	-5.5	0.7	2.4	7.9	60.0	664%
	39	-6.33	0.93	-2.91	2.74	-0.05	-0.22	1.9	-7.3	-2.9	9.1	60.0	558%
	40	-2.98	17.05	2.36	-2.01	0.02	0.21	17.3	-3.2	2.4	20.4	60.0	194%
Bottom Forging	41	-6.24	-4.14	-5.62	0.18	-0.18	-0.11	-4.1	-6.3	-5.6	2.2	60.0	Large
	42	0.69	2.59	7.20	-0.30	-0.03	-0.10	7.2	0.6	2.6	6.6	60.0	814%
	43	-4.46	-4.95	-8.42	-0.02	-0.01	-0.08	-8.4	-4.9	-4.5	4.0	60.0	Large
	44	-0.27	1.74	5.14	-0.09	-0.01	-0.12	5.1	-0.3	1.7	5.4	60.0	Large
	45	-1.12	-4.10	-12.19	0.31	0.02	-0.25	-12.2	-4.1	-1.1	11.1	60.0	440%
	46	-2.60	-1.96	-2.48	-0.41	0.24	-0.03	-1.7	-2.8	-2.5	1.1	60.0	Large
Ram Access Cover Plate	47	-2.53	-0.63	0.09	0.56	0.05	-0.05	-2.7	-0.5	0.1	2.8	94.2	Large
	48	1.10	0.33	2.71	-0.33	-0.08	-0.05	2.7	0.2	1.2	2.5	94.2	Large
	49	-2.98	-0.37	-0.75	0.44	-0.07	-0.10	-3.1	-0.8	-0.3	2.8	94.2	Large
	50	-0.38	-0.03	1.55	-0.16	0.04	-0.10	1.6	-0.5	0.0	2.0	94.2	Large
	51	-0.32	-3.83	-4.60	-0.12	-0.07	-0.18	-0.3	-4.6	-3.8	4.3	94.2	Large
	52	0.25	-0.18	1.23	-0.09	-0.04	-0.10	1.2	-0.2	0.3	1.4	94.2	Large
nct-com3.xls, (1.110)drop+t100+ip50										Minimum Margin of Safety			166%

Table 2.6.13-45
1' Drop + Thermal (100°F) + 50 psig Internal Pressure - Total Stresses @ 45° Azimuth

Cask Component	Stress Point	Stress Components (ksi)						Principal Stresses (ksi)			SI (ksi)	Stress Limit	M.S.
		S_X	S_Y	S_Z	S_{XY}	S_{YZ}	S_{XZ}	S_1	S_2	S_3			
Top Cover	1	-0.77	-4.94	-5.76	-0.16	-0.05	0.68	-0.7	-5.8	-4.9	5.2	60.0	Large
	2	1.29	-0.67	-0.01	0.14	0.15	-1.13	1.9	-0.9	-0.5	2.8	60.0	Large
	3	-2.88	-3.44	-5.58	-0.04	0.17	-1.18	-6.0	-3.4	-2.4	3.6	60.0	Large
	4	0.98	-0.89	0.43	0.12	0.17	-1.44	2.2	-1.0	-0.6	3.2	60.0	Large
	5	-2.54	-0.93	0.10	-0.02	0.14	-2.19	-3.8	-0.9	1.3	5.1	60.0	Large
	6	1.49	-0.57	4.37	0.04	0.59	0.26	4.5	-0.6	1.5	5.1	60.0	Large
Top Flange	7	-8.06	-9.75	-3.13	-1.77	-0.19	0.21	-10.9	-7.0	-3.1	7.8	60.0	674%
	8	-3.17	11.40	4.25	-0.37	-0.48	0.14	-3.2	4.2	11.4	14.6	60.0	310%
	9	-1.21	5.99	-8.86	0.85	1.55	0.15	-9.0	-1.3	6.2	15.3	60.0	293%
	10	-5.31	-8.98	-13.54	-0.88	0.22	-0.98	-13.7	-9.2	-5.0	8.7	60.0	592%
Inner Shell	11	-0.85	9.79	-10.96	-0.37	0.90	0.07	9.8	-11.0	-0.9	20.8	60.0	188%
	12	-1.62	-18.19	-18.29	-3.01	0.01	0.03	-1.1	-18.7	-18.3	17.6	60.0	240%
	13	-0.31	-3.81	-1.15	0.00	-4.20	0.05	-6.9	-0.3	1.9	8.8	60.0	580%
	14	-0.29	-2.96	-0.28	0.00	-2.89	0.10	-4.8	-0.3	1.6	6.4	60.0	840%
	15	-0.10	-3.20	3.05	0.01	-4.19	-0.01	5.2	-5.3	-0.1	10.5	60.0	474%
	16	-0.04	-1.41	4.05	0.01	-3.20	-0.03	5.5	-2.9	0.0	8.4	60.0	613%
	17	-0.03	-1.28	3.56	0.00	-0.03	0.02	3.6	-1.3	0.0	4.8	60.0	Large
	18	0.00	-0.16	3.84	0.00	-0.01	-0.09	3.8	-0.2	0.0	4.0	60.0	Large
	19	-0.11	-3.01	3.23	-0.02	4.25	-0.01	5.4	-5.2	-0.1	10.5	60.0	469%
	20	-0.05	-1.33	4.00	-0.01	3.29	-0.04	5.6	-2.9	0.0	8.5	60.0	609%
	21	-0.36	-3.39	-1.01	0.04	4.37	0.04	-6.7	-0.4	2.3	9.1	60.0	563%
	22	-0.32	-3.58	-0.86	0.05	2.94	0.11	-5.5	-0.3	1.0	6.5	60.0	824%
	23	-0.69	0.91	-5.55	0.05	-1.35	0.04	-5.8	-0.7	1.2	7.0	60.0	757%
	24	-0.85	-9.29	-8.13	1.02	-0.18	0.01	-0.7	-9.4	-8.1	8.7	60.0	589%
	25	-5.22	-0.67	-4.62	-0.38	-0.69	-1.13	-0.5	-6.2	-3.8	5.6	60.0	963%
	26	-7.71	-3.36	-5.07	1.17	0.08	-1.18	-8.4	-4.7	-3.0	5.4	60.0	Large
Outer Shell	27	1.13	5.19	-2.89	1.07	2.98	-0.09	6.4	-3.9	1.0	10.3	60.0	485%
	28	-0.74	1.23	-4.14	1.37	-1.14	-0.07	2.1	-4.4	-1.4	6.5	60.0	824%
	29	0.06	5.60	-2.07	-0.10	-8.17	-0.01	10.8	-7.3	0.1	18.0	60.0	232%
	30	2.29	5.94	-0.04	-0.26	-4.10	0.12	8.0	-2.1	2.3	10.2	60.0	491%
	31	-0.18	3.20	2.65	0.11	-6.51	-0.02	9.4	-3.6	-0.2	13.0	60.0	360%
	32	-0.07	9.21	4.93	0.10	-4.68	-0.05	12.2	-0.1	1.9	12.3	60.0	389%
	33	-0.10	6.99	3.39	0.00	-0.17	0.07	7.0	-0.1	3.4	7.1	60.0	745%
	34	-0.06	8.72	3.71	0.00	-0.12	-0.09	8.7	-0.1	3.7	8.8	60.0	583%
	35	-0.18	3.54	2.77	-0.08	6.04	-0.03	9.2	-2.9	-0.2	12.1	60.0	396%
	36	-0.08	9.06	4.70	-0.07	4.33	-0.05	11.7	-0.1	2.0	11.8	60.0	408%
	37	-0.07	6.39	-1.76	0.02	8.12	-0.02	11.4	-6.8	-0.1	18.2	60.0	230%
	38	2.07	4.49	-0.95	0.22	3.87	0.12	-3.0	2.1	6.5	9.5	60.0	534%
	39	-4.17	1.29	-2.35	1.90	0.59	-1.42	-5.5	-1.6	1.9	7.4	60.0	712%
	40	-1.41	8.57	0.56	-1.15	0.32	-0.10	8.7	-1.5	0.5	10.3	60.0	485%
Bottom Forging	41	-3.23	-2.65	-4.62	0.11	-0.69	-1.13	-5.4	-3.0	-2.1	3.2	60.0	Large
	42	0.11	2.51	5.69	-0.14	-0.21	-0.14	5.7	0.1	2.5	5.6	60.0	969%
	43	-2.29	-4.94	-8.44	0.12	-0.15	-1.07	-8.6	-4.9	-2.1	6.5	60.0	819%
	44	0.08	1.74	3.64	0.05	-0.15	-0.98	3.9	-0.2	1.7	4.1	60.0	Large
	45	-1.15	-3.54	-13.22	0.53	0.07	-0.89	-13.3	-3.6	-1.0	12.3	60.0	387%
	46	-1.13	-1.32	-3.75	-0.17	0.61	-1.27	-4.3	-1.4	-0.4	3.9	60.0	Large
Ram Access Cover Plate	47	-1.12	-0.51	-1.35	0.17	0.42	-1.54	-2.9	-0.5	0.3	3.2	94.2	Large
	48	0.94	-0.04	0.64	-0.01	-0.47	-0.79	1.6	-0.4	0.3	2.1	94.2	Large
	49	-1.02	-0.37	-1.55	0.00	0.07	-1.63	-2.9	-0.4	0.4	3.3	94.2	Large
	50	0.80	0.03	-0.15	-0.07	0.01	-1.54	1.9	-1.3	0.0	3.2	94.2	Large
	51	-0.61	-3.83	-4.30	-0.03	-0.13	0.48	-0.6	-4.4	-3.8	3.8	94.2	Large
	52	1.17	-0.18	0.31	-0.04	-0.09	-0.83	1.7	-0.3	-0.1	2.0	94.2	Large
											Minimum Margin of Safety		188%

ncl-com3.xls, (1.110)drop+t100+ip50

Table 2.6.13-46
1' Drop + Thermal (100°F) + 50 psig Internal Pressure - Total Stresses @ 90° Azimuth

Cask Component	Stress Point	Stress Components (ksi)						Principal Stresses (ksi)			SI (ksi)	Stress Limit	M.S.
		S_X	S_Y	S_Z	S_{XY}	S_{YZ}	S_{XZ}	S_1	S_2	S_3			
Top Cover	1	-1.67	-4.94	-4.86	-0.08	-0.15	0.22	-1.7	-5.1	-4.8	3.4	60.0	Large
	2	2.31	-0.67	-1.02	0.00	0.20	0.12	2.3	-1.1	-0.6	3.4	60.0	Large
	3	-0.28	-3.44	-5.02	-0.18	0.06	0.23	-0.3	-5.0	-3.4	4.8	60.0	Large
	4	1.59	-0.89	-1.18	-0.03	0.06	0.76	1.8	-1.4	-0.9	3.2	60.0	Large
	5	2.76	0.67	2.41	0.20	-0.09	1.17	3.8	0.6	1.5	3.1	60.0	Large
	6	-1.30	0.30	2.58	-0.22	-0.22	0.86	2.8	-1.5	0.3	4.3	60.0	Large
Top Flange	7	-1.73	-3.18	1.84	-0.82	-0.53	0.71	2.1	-3.6	-1.6	5.6	60.0	968%
	8	-0.42	3.35	4.84	-0.22	-0.42	0.17	-0.4	3.2	5.0	5.4	60.0	Large
	9	-0.81	4.70	-6.79	0.61	-0.90	-0.02	-6.9	-0.9	4.8	11.7	60.0	413%
	10	-4.08	-8.12	-9.83	-0.84	-0.43	0.56	-3.8	-10.0	-8.2	6.1	60.0	882%
Inner Shell	11	-0.51	8.03	-7.35	-0.40	-1.85	0.06	8.3	-7.6	-0.5	15.8	60.0	279%
	12	-1.11	-16.78	-13.26	-2.84	-1.56	-0.06	-0.6	-17.8	-12.7	17.2	60.0	249%
	13	-0.06	-5.55	1.53	0.07	-3.65	0.04	-7.1	-0.1	3.1	10.2	60.0	490%
	14	0.08	-3.43	3.13	0.09	-3.57	-0.02	-5.0	0.1	4.7	9.7	60.0	519%
	15	0.00	-5.84	2.09	0.01	-3.03	-0.03	-6.9	0.0	3.1	10.0	60.0	501%
	16	0.01	-5.38	2.14	0.03	-3.38	0.00	-6.7	0.0	3.4	10.1	60.0	493%
	17	-0.05	-7.34	2.70	0.00	-0.03	-0.08	-7.3	-0.1	2.7	10.0	60.0	497%
	18	-0.06	-7.35	1.24	0.00	-0.04	0.05	-7.4	-0.1	1.2	8.6	60.0	598%
	19	0.00	-5.75	2.06	-0.01	2.93	-0.03	-6.7	0.0	3.0	9.8	60.0	515%
	20	0.02	-5.15	2.16	-0.03	3.31	0.01	-6.4	0.0	3.4	9.9	60.0	509%
	21	-0.04	-4.62	1.50	-0.04	3.57	0.05	-6.3	0.0	3.1	9.4	60.0	538%
	22	0.10	-3.32	3.09	-0.05	3.55	-0.03	-4.9	0.1	4.7	9.6	60.0	527%
	23	-0.21	3.74	-2.98	0.22	1.68	0.05	4.2	-3.4	-0.2	7.5	60.0	697%
	24	-0.65	-12.40	-6.81	1.92	1.51	-0.08	-13.1	-6.4	-0.3	12.7	60.0	372%
	25	-1.58	0.78	-2.49	-0.36	0.61	0.98	-3.2	-1.0	0.9	4.1	60.0	Large
	26	-3.73	-3.93	-3.18	1.49	0.14	1.11	-5.5	-3.6	-1.7	3.8	60.0	Large
Outer Shell	27	2.04	13.66	3.10	-1.30	-5.53	0.54	16.2	0.7	1.9	15.4	60.0	289%
	28	1.04	-2.98	-0.46	0.25	-2.84	0.36	-4.9	1.0	1.5	6.3	60.0	851%
	29	0.61	3.89	0.38	0.76	-5.49	0.18	7.9	-3.7	0.7	11.6	60.0	415%
	30	2.97	7.64	5.42	0.61	-5.15	-0.05	11.8	1.2	3.0	10.6	60.0	464%
	31	-0.05	2.09	0.12	0.01	-4.08	-0.02	5.3	-3.1	0.0	8.4	60.0	615%
	32	-0.07	4.04	1.02	0.04	-4.74	-0.04	7.5	-2.4	-0.1	9.9	60.0	504%
	33	-0.10	0.67	1.83	0.00	-0.08	-0.13	1.8	-0.1	0.7	2.0	60.0	Large
	34	-0.11	0.56	0.15	0.00	-0.11	0.01	0.6	-0.1	0.1	0.7	60.0	Large
	35	-0.04	1.43	-0.10	-0.01	3.89	-0.03	4.6	-3.3	0.0	7.9	60.0	657%
	36	-0.06	3.95	1.08	-0.03	4.59	-0.03	7.3	-2.3	-0.1	9.6	60.0	523%
	37	0.55	4.56	0.15	-0.82	5.28	0.20	8.1	-3.5	0.6	11.6	60.0	418%
	38	2.80	6.34	5.00	-0.63	5.12	-0.05	10.9	0.4	2.8	10.4	60.0	476%
	39	-1.14	1.84	-0.41	0.69	-0.66	1.67	-2.7	0.9	2.0	4.7	60.0	Large
	40	0.35	-0.94	0.36	0.18	2.22	0.35	-2.6	0.3	2.1	4.7	60.0	Large
Bottom Forging	41	0.40	-1.21	-2.49	0.14	0.61	0.98	-3.0	-1.1	0.8	3.7	60.0	Large
	42	-0.50	2.38	5.31	0.05	0.08	0.81	5.4	-0.6	2.4	6.0	60.0	895%
	43	0.14	-4.93	-7.61	0.25	-0.03	0.55	0.2	-7.6	-4.9	7.8	60.0	666%
	44	0.33	1.73	2.93	0.19	-0.03	0.81	0.1	1.8	3.2	3.1	60.0	Large
	45	-1.02	-3.07	-13.58	0.74	-0.07	0.15	-13.6	-3.3	-0.8	12.8	60.0	368%
	46	0.21	-0.78	-4.44	0.04	-0.24	0.40	-4.5	-0.8	0.2	4.7	60.0	Large
Ram Access Cover Plate	47	-0.11	-0.46	-2.55	-0.25	-0.04	0.06	-2.6	-0.6	0.0	2.6	94.2	Large
	48	0.56	-0.33	-1.14	0.27	-0.10	0.19	0.6	-1.2	-0.4	1.8	94.2	Large
	49	0.47	-0.38	-1.90	-0.35	-0.03	0.05	-1.9	-0.5	0.6	2.5	94.2	Large
	50	1.19	0.00	-1.73	0.06	-0.07	0.19	-1.7	0.0	1.2	3.0	94.2	Large
	51	-1.27	-3.83	-3.65	0.07	-0.12	0.18	-1.3	-3.9	-3.6	2.6	94.2	Large
	52	1.90	-0.18	-0.42	0.04	-0.09	0.10	1.9	-0.5	-0.2	2.4	94.2	Large
nct-com3.xls, (1.110)drop+t100+ip50										Minimum Margin of Safety			249%

Table 2.6.13-47
1' Drop + Thermal (100°F) + 50 psig Internal Pressure - Total Stresses @ 135° Azimuth

Cask Component	Stress Point	Stress Components (ksi)						Principal Stresses (ksi)			SI (ksi)	Stress Limit	M.S.
		S_X	S_Y	S_Z	S_{XY}	S_{YZ}	S_{XZ}	S_1	S_2	S_3			
Top Cover	1	-1.21	-4.94	-5.32	0.05	-0.16	-0.68	-1.1	-5.5	-4.9	4.4	60.0	Large
	2	1.06	-0.67	0.23	-0.15	0.14	1.13	1.8	-0.8	-0.4	2.7	60.0	Large
	3	-1.09	-3.45	-3.26	-0.12	-0.03	1.06	-0.7	-3.7	-3.4	3.0	60.0	Large
	4	-0.07	-0.89	1.43	0.04	-0.03	1.81	2.6	-1.3	-0.9	3.9	60.0	Large
	5	0.01	-0.32	4.41	0.20	-0.05	1.83	5.1	-0.8	-0.2	5.8	60.0	929%
	6	-0.01	-0.45	5.94	-0.08	-0.36	1.03	6.1	-0.5	-0.2	6.6	60.0	808%
Top Flange	7	-3.03	-4.22	3.74	-1.02	-0.81	0.70	3.9	-4.8	-2.6	8.7	60.0	587%
	8	-0.71	4.71	6.85	-0.30	-0.60	0.20	-0.7	4.6	7.0	7.8	60.0	674%
	9	-0.70	3.87	-2.53	0.56	-1.16	-0.12	4.1	-2.7	-0.8	6.9	60.0	772%
	10	-3.62	-8.38	-6.68	-0.81	-0.85	0.23	-3.4	-8.8	-6.4	5.4	60.0	Large
Inner Shell	11	-0.48	6.85	-3.90	-0.39	-1.54	-0.05	7.1	-4.1	-0.5	11.2	60.0	435%
	12	-0.94	-18.57	-10.99	-2.96	-1.71	-0.17	-0.5	-19.4	-10.6	18.9	60.0	217%
	13	-0.04	-7.73	2.35	0.07	-1.87	-0.01	-8.1	0.0	2.7	10.7	60.0	458%
	14	-0.01	-7.57	2.29	0.07	-1.97	0.02	-8.0	0.0	2.7	10.6	60.0	465%
	15	-0.05	-8.87	1.09	0.01	-1.50	-0.01	-9.1	-0.1	1.3	10.4	60.0	477%
	16	-0.01	-8.41	1.62	0.00	-1.62	0.00	-8.7	0.0	1.9	10.5	60.0	469%
	17	-0.02	-10.68	-0.10	0.00	-0.04	-0.01	-10.7	-0.1	0.0	10.7	60.0	463%
	18	0.05	-9.46	1.86	0.00	-0.04	-0.02	-9.5	0.0	1.9	11.3	60.0	430%
	19	-0.06	-9.05	1.07	0.00	1.41	-0.01	-9.2	-0.1	1.3	10.5	60.0	471%
	20	-0.02	-8.40	1.68	0.00	1.51	0.00	-8.6	0.0	1.9	10.5	60.0	470%
	21	-0.03	-7.34	2.27	-0.03	1.92	-0.02	-7.7	0.0	2.6	10.4	60.0	479%
	22	-0.02	-8.12	1.88	-0.03	2.01	0.02	-8.5	0.0	2.3	10.8	60.0	457%
	23	-0.33	0.21	-0.61	0.18	1.63	-0.02	1.5	-1.9	-0.3	3.4	60.0	Large
	24	-0.33	-11.41	-3.68	1.52	1.86	-0.19	-12.0	-3.3	-0.1	11.9	60.0	404%
	25	-3.35	-0.55	-0.43	-0.44	0.79	1.21	-3.9	-0.8	0.4	4.3	60.0	Large
	26	-5.48	-3.69	-0.86	1.33	0.31	1.19	-6.3	-3.2	-0.4	5.9	60.0	918%
Outer Shell	27	1.52	2.54	2.91	0.45	-5.14	0.50	7.9	-2.5	1.6	10.4	60.0	477%
	28	0.41	0.69	2.26	0.89	-3.11	0.34	4.7	-2.1	0.7	6.8	60.0	786%
	29	0.74	1.36	1.17	0.65	-2.87	-0.05	4.2	-1.7	0.7	5.9	60.0	920%
	30	2.93	0.11	2.26	0.50	-3.05	-0.01	-2.1	2.9	4.5	6.6	60.0	815%
	31	-0.09	-2.05	-1.49	-0.04	-1.90	-0.03	-3.7	-0.1	0.2	3.8	60.0	Large
	32	-0.07	-0.47	-0.40	-0.05	-2.13	-0.01	-2.6	-0.1	1.7	4.3	60.0	Large
	33	-0.09	-3.59	-1.89	0.00	-0.03	0.00	-0.1	-3.6	-1.9	3.5	60.0	Large
	34	0.02	-1.93	1.00	0.00	-0.03	-0.02	-1.9	0.0	1.0	2.9	60.0	Large
	35	-0.09	-2.51	-1.71	0.04	1.84	-0.03	-4.0	-0.2	-0.1	3.9	60.0	Large
	36	-0.06	-0.14	-0.26	0.05	2.03	-0.01	-2.2	-0.1	1.8	4.1	60.0	Large
	37	0.67	2.01	1.33	-0.72	2.80	-0.06	4.6	-1.2	0.7	5.8	60.0	931%
	38	2.76	-0.71	1.88	-0.53	2.95	0.00	-2.7	2.7	3.9	6.6	60.0	815%
	39	-1.97	1.82	2.57	1.02	-0.67	1.91	-3.0	2.1	3.3	6.3	60.0	853%
	40	-0.15	5.97	4.81	-0.60	3.03	0.34	8.5	-0.3	2.5	8.8	60.0	583%
Bottom Forging	41	-1.36	-2.53	-0.43	0.05	0.79	1.21	0.6	-2.9	-2.0	3.5	60.0	Large
	42	0.03	2.41	8.18	-0.08	0.16	1.17	8.3	-0.1	2.4	8.5	60.0	607%
	43	-0.79	-4.95	-5.51	0.17	0.04	1.04	-0.6	-5.7	-5.0	5.2	60.0	Large
	44	-0.13	1.74	5.44	0.11	0.04	1.59	5.9	-0.6	1.7	6.4	60.0	835%
	45	-0.60	-3.62	-11.44	0.59	-0.14	0.75	-11.5	-3.7	-0.4	11.1	60.0	443%
	46	-0.96	-1.43	-2.50	-0.06	-0.77	1.45	-3.6	-1.4	0.1	3.6	60.0	Large
Ram Access Cover Plate	47	-0.78	-0.52	-0.60	0.07	-0.40	1.43	-2.2	-0.5	0.8	3.0	94.2	Large
	48	0.50	0.14	0.93	0.00	0.26	0.95	1.7	-0.3	0.2	2.0	94.2	Large
	49	-0.42	-0.33	-0.96	-0.14	-0.11	1.51	-2.2	-0.4	0.9	3.1	94.2	Large
	50	0.52	-0.03	-0.02	0.01	-0.08	1.63	1.9	-1.4	0.0	3.3	94.2	Large
	51	-0.98	-3.83	-3.94	0.13	-0.03	-0.48	-0.9	-4.0	-3.8	3.1	94.2	Large
	52	0.98	-0.18	0.50	0.09	-0.04	0.83	1.6	-0.2	-0.1	1.8	94.2	Large
											Minimum Margin of Safety		217%

nct-com3.xls, (1.110)drop+t100+ip50

Table 2.6.13-48

1' Drop + Thermal (100°F) + 50 psig Internal Pressure - Total Stresses @ 180° Azimuth

Cask Component	Stress Point	Stress Components (ksi)						Principal Stresses (ksi)			SI (ksi)	Stress Limit	M.S.
		S_X	S_Y	S_Z	S_{XY}	S_{YZ}	S_{XZ}	S_1	S_2	S_3			
Top Cover	1	-0.32	-4.94	-6.21	0.15	-0.08	-0.22	-0.3	-6.2	-4.9	5.9	60.0	913%
	2	0.05	-0.67	1.24	-0.20	0.00	-0.12	1.3	-0.7	0.1	2.0	60.0	Large
	3	-1.95	-3.45	-2.33	-0.08	-0.01	-0.03	-3.4	-2.3	-1.9	1.5	60.0	Large
	4	-1.06	-0.89	3.16	0.08	-0.01	-0.08	3.2	-1.1	-0.9	4.3	60.0	Large
	5	-1.39	-0.60	5.20	0.09	-0.12	-0.05	5.2	-1.4	-0.6	6.6	60.0	809%
	6	0.34	-0.52	7.93	0.03	-0.08	-0.10	7.9	-0.5	0.3	8.5	60.0	610%
Top Flange	7	-7.47	-11.55	2.03	-1.88	0.39	-0.31	2.1	-12.3	-6.8	14.3	60.0	318%
	8	-1.70	14.08	9.52	-0.08	-0.76	-0.76	-1.8	9.5	14.2	16.0	60.0	276%
	9	-0.64	3.87	-2.15	0.56	-0.15	-0.19	3.9	-2.2	-0.7	6.1	60.0	881%
	10	-3.65	-9.15	-6.43	-1.03	-0.23	-0.15	-9.4	-6.4	-3.5	5.9	60.0	918%
Inner Shell	11	-0.45	6.82	-3.72	-0.46	-0.25	-0.15	6.9	-3.7	-0.5	10.6	60.0	467%
	12	-0.95	-20.30	-10.98	-3.25	-0.37	-0.06	-0.4	-20.8	-11.0	20.4	60.0	194%
	13	-0.03	-8.68	1.81	0.07	-0.31	-0.04	-8.7	0.0	1.8	10.5	60.0	471%
	14	0.04	-8.11	2.80	0.07	-0.31	-0.08	-8.1	0.0	2.8	10.9	60.0	449%
	15	-0.04	-9.83	0.54	0.01	-0.29	0.05	-9.8	0.0	0.5	10.4	60.0	477%
	16	0.02	-9.12	1.69	0.01	-0.27	-0.01	-9.1	0.0	1.7	10.8	60.0	454%
	17	-0.10	-11.59	0.14	0.00	-0.01	0.10	-11.6	-0.1	0.2	11.8	60.0	410%
	18	-0.06	-10.78	1.01	0.00	-0.01	0.09	-10.8	-0.1	1.0	11.8	60.0	408%
	19	-0.04	-10.15	0.46	-0.01	0.28	0.06	-10.2	0.0	0.5	10.6	60.0	464%
	20	0.02	-9.32	1.67	-0.01	0.26	0.00	-9.3	0.0	1.7	11.0	60.0	446%
	21	-0.04	-8.35	1.48	-0.03	0.34	-0.01	-8.4	0.0	1.5	9.8	60.0	509%
	22	0.04	-8.56	2.29	-0.03	0.34	-0.07	-8.6	0.0	2.3	10.9	60.0	452%
	23	-0.30	0.06	-0.12	0.23	0.28	-0.20	-0.6	0.0	0.3	0.9	60.0	Large
	24	-0.37	-12.76	-3.41	1.70	0.36	-0.19	-13.0	-3.4	-0.1	12.9	60.0	366%
	25	-3.79	-0.50	0.20	-0.47	0.13	-0.12	-3.9	-0.5	0.2	4.1	60.0	Large
	26	-6.22	-4.20	-0.40	1.50	0.11	-0.11	-7.0	-3.4	-0.4	6.6	60.0	806%
Outer Shell	27	1.42	0.81	2.82	0.84	-0.72	0.16	0.0	1.9	3.1	3.0	60.0	Large
	28	0.27	1.97	3.23	1.04	-0.68	-0.28	-0.2	2.0	3.7	3.9	60.0	Large
	29	0.74	0.25	-0.52	0.64	-0.55	0.39	-1.1	0.3	1.2	2.2	60.0	Large
	30	2.96	-0.48	2.07	0.50	-0.57	0.34	-0.7	2.1	3.1	3.8	60.0	Large
	31	-0.09	-3.51	-2.60	-0.02	-0.39	0.34	0.0	-3.7	-2.5	3.6	60.0	Large
	32	-0.02	-1.55	-0.57	-0.02	-0.35	0.26	-1.7	-0.6	0.1	1.8	60.0	Large
	33	-0.13	-4.75	-1.42	0.00	-0.01	0.26	-4.7	-1.5	-0.1	4.7	60.0	Large
	34	-0.08	-3.75	-0.16	0.00	0.00	0.26	-3.8	-0.4	0.1	3.9	60.0	Large
	35	-0.08	-3.96	-2.72	0.02	0.38	0.33	0.0	-4.1	-2.7	4.0	60.0	Large
	36	-0.02	-1.37	-0.42	0.02	0.33	0.25	-1.5	-0.5	0.1	1.6	60.0	Large
	37	0.65	0.64	-0.34	-0.71	0.50	0.37	-0.8	0.4	1.4	2.2	60.0	Large
	38	2.79	-1.28	1.93	-0.52	0.53	0.30	-1.4	2.0	2.9	4.4	60.0	Large
	39	-2.35	1.80	3.38	1.20	-0.38	0.32	-2.7	2.1	3.5	6.2	60.0	874%
	40	-0.27	6.71	5.93	-0.75	0.43	-0.37	-0.4	5.7	7.0	7.4	60.0	715%
Bottom Forging	41	-1.81	-2.49	0.20	0.03	0.13	-0.12	0.2	-2.5	-1.8	2.7	60.0	Large
	42	0.84	2.46	9.86	-0.21	0.05	-0.17	9.9	0.8	2.5	9.0	60.0	563%
	43	-1.13	-4.96	-4.78	0.12	0.01	-0.02	-1.1	-5.0	-4.8	3.8	60.0	Large
	44	-0.22	1.76	6.87	0.05	0.01	-0.02	6.9	-0.2	1.8	7.1	60.0	746%
	45	-0.16	-4.05	-10.12	0.45	-0.03	0.16	-10.1	-4.1	-0.1	10.0	60.0	499%
	46	-1.89	-1.95	-1.29	-0.17	-0.26	-0.01	-1.2	-2.2	-1.8	1.0	60.0	Large
Ram Access Cover Plate	47	-1.86	-0.61	0.73	0.35	-0.03	0.03	-2.0	-0.5	0.7	2.7	94.2	Large
	48	0.41	0.46	2.69	-0.21	0.09	0.01	2.7	0.2	0.6	2.5	94.2	Large
	49	-1.85	-0.33	0.01	0.17	0.03	0.13	-1.9	-0.3	0.0	1.9	94.2	Large
	50	-0.53	-0.11	1.52	-0.01	-0.04	0.12	1.5	-0.5	-0.1	2.1	94.2	Large
	51	-0.32	-3.83	-4.60	0.12	0.07	-0.18	-0.3	-4.6	-3.8	4.3	94.2	Large
	52	0.25	-0.18	1.23	0.09	0.04	-0.10	1.2	-0.2	0.3	1.4	94.2	Large
											Minimum Margin of Safety		194%

nct-com3.xls, (1.110)drop+t100+ip50

Table 2.6.13-49
1' Drop + Thermal (-40°F) + 50 psig Internal Pressure - Pm @ 0° Azimuth

Cask Component	Stress Point	Stress Components (ksi)						Principal Stresses (ksi)			SI (ksi)	Stress Limit	M.S.
		S_X	S_Y	S_Z	S_{XY}	S_{YZ}	S_{XZ}	S_1	S_2	S_3			
Top Cover	1	-0.2	0.1	0.5	0.1	0.0	-0.2	0.5	-0.2	0.1	0.7	20.0	Large
	2	-0.2	0.1	0.5	0.1	0.0	-0.2	0.5	-0.2	0.1	0.7	20.0	Large
	3	-2.8	0.0	-0.3	0.3	0.0	0.0	-2.8	-0.3	0.0	2.9	20.0	601%
	4	-2.8	0.0	-0.3	0.3	0.0	0.0	-2.8	-0.3	0.0	2.9	20.0	601%
	5	-1.8	-2.4	-0.9	0.3	0.1	-0.1	-2.6	-1.7	-0.9	1.6	20.0	Large
	6	-1.8	-2.4	-0.9	0.3	0.1	-0.1	-2.6	-1.7	-0.9	1.6	20.0	Large
Top Flange	7	-7.4	1.5	-5.3	-0.8	0.0	0.1	1.6	-7.4	-5.3	9.0	20.0	123%
	8	-7.4	1.5	-5.3	-0.8	0.0	0.1	1.6	-7.4	-5.3	9.0	20.0	123%
	9	-0.4	1.2	-5.9	0.3	0.5	-0.7	-6.0	-0.4	1.3	7.3	20.0	173%
	10	-0.4	1.2	-5.9	0.3	0.5	-0.7	-6.0	-0.4	1.3	7.3	20.0	173%
Inner Shell	11	-0.2	1.7	-8.1	0.4	0.3	-0.6	-8.2	-0.2	1.8	10.0	20.0	100%
	12	-0.2	1.7	-8.1	0.4	0.3	-0.6	-8.2	-0.2	1.8	10.0	20.0	100%
	13	-0.4	2.5	-3.6	-0.1	-0.5	-0.4	-3.7	-0.4	2.5	6.2	20.0	223%
	14	-0.4	2.5	-3.6	-0.1	-0.5	-0.4	-3.7	-0.4	2.5	6.2	20.0	223%
	15	-0.2	5.6	4.5	0.0	-0.5	0.3	-0.2	4.3	5.8	6.0	20.0	231%
	16	-0.2	5.6	4.5	0.0	-0.5	0.3	-0.2	4.3	5.8	6.0	20.0	231%
	17	-0.2	10.4	4.8	0.0	0.0	0.3	10.4	-0.2	4.9	10.6	20.0	89%
	18	-0.2	10.4	4.8	0.0	0.0	0.3	10.4	-0.2	4.9	10.6	20.0	89%
	19	-0.2	5.4	4.6	0.0	0.6	0.3	-0.2	4.3	5.7	5.9	20.0	237%
	20	-0.2	5.4	4.6	0.0	0.6	0.3	-0.2	4.3	5.7	5.9	20.0	237%
	21	-0.4	1.8	-4.1	0.1	0.5	-0.4	-4.2	-0.3	1.9	6.0	20.0	231%
	22	-0.4	1.8	-4.1	0.1	0.5	-0.4	-4.2	-0.3	1.9	6.0	20.0	231%
	23	-0.6	1.0	-4.5	-0.4	-0.1	-0.3	-4.6	-0.7	1.1	5.7	20.0	254%
	24	-0.6	1.0	-4.5	-0.4	-0.1	-0.3	-4.6	-0.7	1.1	5.7	20.0	254%
	25	-5.1	0.4	-4.2	0.0	-0.1	-0.1	0.4	-5.1	-4.2	5.5	20.0	266%
	26	-5.1	0.4	-4.2	0.0	-0.1	-0.1	0.4	-5.1	-4.2	5.5	20.0	266%
Outer Shell	27	-2.2	-2.3	-9.2	2.6	0.0	-0.7	0.4	-9.3	-4.8	9.7	20.0	107%
	28	-2.2	-2.3	-9.2	2.6	0.0	-0.7	0.4	-9.3	-4.8	9.7	20.0	107%
	29	-0.7	-0.4	-8.7	-1.4	-0.7	-0.7	-8.9	-1.9	0.8	9.7	20.0	105%
	30	-0.7	-0.4	-8.7	-1.4	-0.7	-0.7	-8.9	-1.9	0.8	9.7	20.0	105%
	31	-0.1	3.8	5.2	0.2	-0.9	0.5	-0.2	3.4	5.6	5.8	20.0	245%
	32	-0.1	3.8	5.2	0.2	-0.9	0.5	-0.2	3.4	5.6	5.8	20.0	245%
	33	-0.1	10.1	4.1	0.0	0.0	0.4	10.1	-0.1	4.1	10.2	20.0	95%
	34	-0.1	10.1	4.1	0.0	0.0	0.4	10.1	-0.1	4.1	10.2	20.0	95%
	35	-0.1	4.6	5.2	-0.1	0.8	0.5	-0.2	4.1	5.8	5.9	20.0	239%
	36	-0.1	4.6	5.2	-0.1	0.8	0.5	-0.2	4.1	5.8	5.9	20.0	239%
	37	-0.8	0.2	-8.7	1.3	0.7	-0.7	-8.8	-1.6	1.1	9.9	20.0	101%
	38	-0.8	0.2	-8.7	1.3	0.7	-0.7	-8.8	-1.6	1.1	9.9	20.0	101%
	39	-2.2	-1.0	-4.7	-3.2	-0.1	-0.2	1.6	-4.9	-4.6	6.6	20.0	205%
	40	-2.2	-1.0	-4.7	-3.2	-0.1	-0.2	1.6	-4.9	-4.6	6.6	20.0	205%
Bottom Forging	41	-2.5	-0.2	-2.0	-0.2	-0.1	-0.1	-0.2	-2.5	-2.0	2.3	20.0	768%
	42	-2.5	-0.2	-2.0	-0.2	-0.1	-0.1	-0.2	-2.5	-2.0	2.3	20.0	768%
	43	-2.4	0.0	-1.1	-0.2	0.0	-0.1	-2.4	-1.1	0.1	2.5	20.0	714%
	44	-2.4	0.0	-1.1	-0.2	0.0	-0.1	-2.4	-1.1	0.1	2.5	20.0	714%
	45	-1.5	-0.7	-1.4	-0.4	0.1	-0.2	-0.6	-1.7	-1.4	1.1	20.0	Large
	46	-1.5	-0.7	-1.4	-0.4	0.1	-0.2	-0.6	-1.7	-1.4	1.1	20.0	Large
Ram Access Cover Plate	47	-1.7	0.0	0.9	-0.1	0.0	0.0	-1.7	0.0	0.9	2.6	31.4	Large
	48	-1.7	0.0	0.9	-0.1	0.0	0.0	-1.7	0.0	0.9	2.6	31.4	Large
	49	-1.4	0.2	0.7	-0.1	0.0	-0.1	-1.4	0.2	0.7	2.1	31.4	Large
	50	-1.4	0.2	0.7	-0.1	0.0	-0.1	-1.4	0.2	0.7	2.1	31.4	Large
	51	-0.1	-0.1	0.5	-0.1	-0.1	-0.1	0.5	-0.2	0.1	0.7	31.4	Large
	52	-0.1	-0.1	0.5	-0.1	-0.1	-0.1	0.5	-0.2	0.1	0.7	31.4	Large
nct-com3.xls, (1.110)drop+t-40+ip50											Minimum Margin of Safety		89%

Table 2.6.13-50
1' Drop + Thermal (-40°F) + 50 psig Internal Pressure - Pm @ 45° Azimuth

Cask Component	Stress Point	Stress Components (ksi)						Principal Stresses (ksi)			SI (ksi)	Stress Limit	M.S.
		S_X	S_Y	S_Z	S_{XY}	S_{YZ}	S_{XZ}	S_1	S_2	S_3			
Top Cover	1	0.3	0.1	0.0	0.0	0.1	-0.3	0.5	-0.2	0.1	0.7	20.0	Large
	2	0.3	0.1	0.0	0.0	0.1	-0.3	0.5	-0.2	0.1	0.7	20.0	Large
	3	-1.0	0.0	-1.6	0.1	0.2	-1.3	-2.6	0.0	0.1	2.7	20.0	635%
	4	-1.0	0.0	-1.6	0.1	0.2	-1.3	-2.6	0.0	0.1	2.7	20.0	635%
	5	-0.8	-0.6	-1.8	0.1	0.6	-0.8	-2.4	-0.5	-0.2	2.1	20.0	838%
	6	-0.8	-0.6	-1.8	0.1	0.6	-0.8	-2.4	-0.5	-0.2	2.1	20.0	838%
Top Flange	7	-4.1	0.8	-4.0	-0.5	-0.4	0.2	0.8	-4.3	-3.9	5.1	20.0	293%
	8	-4.1	0.8	-4.0	-0.5	-0.4	0.2	0.8	-4.3	-3.9	5.1	20.0	293%
	9	-1.5	1.4	-5.8	0.1	0.9	-0.3	-5.9	-1.5	1.6	7.4	20.0	169%
	10	-1.5	1.4	-5.8	0.1	0.9	-0.3	-5.9	-1.5	1.6	7.4	20.0	169%
Inner Shell	11	-0.6	1.7	-5.9	-0.2	0.4	0.1	-6.0	-0.6	1.8	7.8	20.0	158%
	12	-0.6	1.7	-5.9	-0.2	0.4	0.1	-6.0	-0.6	1.8	7.8	20.0	158%
	13	-0.3	3.1	-1.2	-0.1	-3.5	0.1	5.1	-3.2	-0.3	8.3	20.0	140%
	14	-0.3	3.1	-1.2	-0.1	-3.5	0.1	5.1	-3.2	-0.3	8.3	20.0	140%
	15	-0.1	4.2	3.6	0.0	-3.7	0.0	7.6	-0.1	0.2	7.7	20.0	161%
	16	-0.1	4.2	3.6	0.0	-3.7	0.0	7.6	-0.1	0.2	7.7	20.0	161%
	17	0.0	5.8	3.7	0.0	0.0	0.0	0.0	3.7	5.8	5.8	20.0	245%
	18	0.0	5.8	3.7	0.0	0.0	0.0	0.0	3.7	5.8	5.8	20.0	245%
	19	-0.1	4.3	3.6	0.0	3.8	0.0	7.8	-0.1	0.2	7.8	20.0	155%
	20	-0.1	4.3	3.6	0.0	3.8	0.0	7.8	-0.1	0.2	7.8	20.0	155%
	21	-0.3	3.0	-1.2	0.1	3.7	0.1	5.1	-3.3	-0.3	8.4	20.0	137%
	22	-0.3	3.0	-1.2	0.1	3.7	0.1	5.1	-3.3	-0.3	8.4	20.0	137%
	23	-0.5	1.6	-3.9	0.0	-0.8	0.0	-4.0	-0.5	1.7	5.7	20.0	251%
	24	-0.5	1.6	-3.9	0.0	-0.8	0.0	-4.0	-0.5	1.7	5.7	20.0	251%
	25	-2.3	0.5	-3.6	0.1	-0.3	-1.0	-4.2	-1.7	0.5	4.7	20.0	326%
	26	-2.3	0.5	-3.6	0.1	-0.3	-1.0	-4.2	-1.7	0.5	4.7	20.0	326%
Outer Shell	27	-1.2	0.6	-5.8	1.1	0.6	-0.1	-5.9	-1.7	1.2	7.1	20.0	183%
	28	-1.2	0.6	-5.8	1.1	0.6	-0.1	-5.9	-1.7	1.2	7.1	20.0	183%
	29	-0.6	2.2	-4.6	-0.8	-6.1	0.1	-8.2	-0.7	5.9	14.0	20.0	42%
	30	-0.6	2.2	-4.6	-0.8	-6.1	0.1	-8.2	-0.7	5.9	14.0	20.0	42%
	31	0.0	3.6	3.1	0.1	-5.6	0.0	8.9	-2.3	0.0	11.2	20.0	79%
	32	0.0	3.6	3.1	0.1	-5.6	0.0	8.9	-2.3	0.0	11.2	20.0	79%
	33	0.0	5.2	2.5	0.0	-0.1	0.0	5.2	0.0	2.5	5.2	20.0	283%
	34	0.0	5.2	2.5	0.0	-0.1	0.0	5.2	0.0	2.5	5.2	20.0	283%
	35	0.0	3.7	3.1	-0.1	5.2	0.0	8.6	-1.8	0.0	10.4	20.0	92%
	36	0.0	3.7	3.1	-0.1	5.2	0.0	8.6	-1.8	0.0	10.4	20.0	92%
	37	-0.7	2.0	-4.6	0.7	6.0	0.1	-8.2	-0.7	5.6	13.7	20.0	45%
	38	-0.7	2.0	-4.6	0.7	6.0	0.1	-8.2	-0.7	5.6	13.7	20.0	45%
	39	-1.1	0.1	-3.9	-1.5	-1.4	-0.1	1.4	-4.5	-1.8	5.8	20.0	243%
	40	-1.1	0.1	-3.9	-1.5	-1.4	-0.1	1.4	-4.5	-1.8	5.8	20.0	243%
Bottom Forging	41	-1.1	0.2	-2.2	-0.1	-0.4	-0.7	-2.6	-0.8	0.3	2.9	20.0	593%
	42	-1.1	0.2	-2.2	-0.1	-0.4	-0.7	-2.6	-0.8	0.3	2.9	20.0	593%
	43	-1.1	0.0	-1.9	-0.1	-0.1	-1.0	-2.6	-0.4	0.0	2.7	20.0	653%
	44	-1.1	0.0	-1.9	-0.1	-0.1	-1.0	-2.6	-0.4	0.0	2.7	20.0	653%
	45	-0.8	-0.1	-2.6	-0.1	0.2	-1.1	-3.1	-0.4	0.0	3.1	20.0	539%
	46	-0.8	-0.1	-2.6	-0.1	0.2	-1.1	-3.1	-0.4	0.0	3.1	20.0	539%
Ram Access Cover Plate	47	-0.4	-0.2	-0.8	0.0	-0.2	-1.3	-1.9	-0.2	0.8	2.7	31.4	Large
	48	-0.4	-0.2	-0.8	0.0	-0.2	-1.3	-1.9	-0.2	0.8	2.7	31.4	Large
	49	-0.1	0.2	-0.7	-0.1	0.0	-1.5	-1.9	0.2	1.1	3.0	31.4	937%
	50	-0.1	0.2	-0.7	-0.1	0.0	-1.5	-1.9	0.2	1.1	3.0	31.4	937%
	51	0.3	-0.1	0.1	-0.1	-0.1	-0.3	0.5	-0.2	0.1	0.7	31.4	Large
	52	0.3	-0.1	0.1	-0.1	-0.1	-0.3	0.5	-0.2	0.1	0.7	31.4	Large
nct-com3.xls, (1.110)drop+t-40+ip50										Minimum Margin of Safety			42%

Table 2.6.13-51
1' Drop + Thermal (-40°F) + 50 psig Internal Pressure - Pm @ 90° Azimuth

Cask Component	Stress Point	Stress Components (ksi)						Principal Stresses (ksi)			SI (ksi)	Stress Limit	M.S.
		S_X	S_Y	S_Z	S_{XY}	S_{YZ}	S_{XZ}	S_1	S_2	S_3			
Top Cover	1	0.5	0.1	-0.1	0.0	0.1	0.2	0.5	-0.2	0.1	0.7	20.0	Large
	2	0.5	0.1	-0.1	0.0	0.1	0.2	0.5	-0.2	0.1	0.7	20.0	Large
	3	0.6	0.0	-2.1	0.0	0.1	0.5	-2.2	0.0	0.7	2.9	20.0	581%
	4	0.6	0.0	-2.1	0.0	0.1	0.5	-2.2	0.0	0.7	2.9	20.0	581%
	5	0.2	0.9	-1.5	0.0	-0.2	0.9	-1.9	0.6	0.9	2.9	20.0	601%
	6	0.2	0.9	-1.5	0.0	-0.2	0.9	-1.9	0.6	0.9	2.9	20.0	601%
Top Flange	7	0.3	-0.2	-1.3	0.1	-0.5	0.4	-1.6	0.0	0.4	2.0	20.0	884%
	8	0.3	-0.2	-1.3	0.1	-0.5	0.4	-1.6	0.0	0.4	2.0	20.0	884%
	9	-0.8	1.2	-2.9	0.0	-0.7	0.2	-3.0	-0.8	1.3	4.3	20.0	362%
	10	-0.8	1.2	-2.9	0.0	-0.7	0.2	-3.0	-0.8	1.3	4.3	20.0	362%
Inner Shell	11	-0.1	1.6	-1.6	-0.2	-1.7	0.0	2.3	-2.3	-0.2	4.7	20.0	330%
	12	-0.1	1.6	-1.6	-0.2	-1.7	0.0	2.3	-2.3	-0.2	4.7	20.0	330%
	13	0.0	2.0	1.8	0.0	-3.6	0.0	5.5	-1.7	0.0	7.2	20.0	177%
	14	0.0	2.0	1.8	0.0	-3.6	0.0	5.5	-1.7	0.0	7.2	20.0	177%
	15	0.0	0.9	2.1	0.0	-3.2	0.0	4.8	-1.8	0.0	6.5	20.0	206%
	16	0.0	0.9	2.1	0.0	-3.2	0.0	4.8	-1.8	0.0	6.5	20.0	206%
	17	-0.1	-0.8	2.0	0.0	0.0	0.0	2.0	-0.8	-0.1	2.8	20.0	602%
	18	-0.1	-0.8	2.0	0.0	0.0	0.0	2.0	-0.8	-0.1	2.8	20.0	602%
	19	0.0	1.1	2.1	0.0	3.1	0.0	4.7	-1.6	0.0	6.3	20.0	216%
	20	0.0	1.1	2.1	0.0	3.1	0.0	4.7	-1.6	0.0	6.3	20.0	216%
	21	0.0	2.5	2.0	0.0	3.6	0.0	5.9	-1.3	0.0	7.1	20.0	180%
	22	0.0	2.5	2.0	0.0	3.6	0.0	5.9	-1.3	0.0	7.1	20.0	180%
	23	-0.1	1.6	-1.9	0.4	1.6	0.0	2.3	-2.5	-0.2	4.8	20.0	318%
	24	-0.1	1.6	-1.9	0.4	1.6	0.0	2.3	-2.5	-0.2	4.8	20.0	318%
	25	1.2	0.5	-1.8	0.2	0.4	1.0	-2.1	0.5	1.6	3.7	20.0	440%
	26	1.2	0.5	-1.8	0.2	0.4	1.0	-2.1	0.5	1.6	3.7	20.0	440%
Outer Shell	27	0.1	1.7	-1.3	-0.6	-3.8	0.5	4.4	-3.9	0.0	8.2	20.0	143%
	28	0.1	1.7	-1.3	-0.6	-3.8	0.5	4.4	-3.9	0.0	8.2	20.0	143%
	29	0.0	2.2	-0.6	0.1	-5.3	0.1	6.3	-4.7	0.0	11.0	20.0	82%
	30	0.0	2.2	-0.6	0.1	-5.3	0.1	6.3	-4.7	0.0	11.0	20.0	82%
	31	0.0	0.4	-0.1	0.1	-4.4	0.0	4.6	-4.3	0.0	8.8	20.0	127%
	32	0.0	0.4	-0.1	0.1	-4.4	0.0	4.6	-4.3	0.0	8.8	20.0	127%
	33	0.0	-2.0	-0.1	0.0	-0.1	-0.1	-2.0	-0.1	0.0	2.0	20.0	880%
	34	0.0	-2.0	-0.1	0.0	-0.1	-0.1	-2.0	-0.1	0.0	2.0	20.0	880%
	35	0.0	0.1	-0.1	-0.1	4.2	0.0	-4.3	0.0	4.2	8.5	20.0	136%
	36	0.0	0.1	-0.1	-0.1	4.2	0.0	-4.3	0.0	4.2	8.5	20.0	136%
	37	0.0	2.0	-0.7	-0.1	5.2	0.1	6.0	-4.7	0.0	10.7	20.0	86%
	38	0.0	2.0	-0.7	-0.1	5.2	0.1	6.0	-4.7	0.0	10.7	20.0	86%
	39	0.4	0.7	-1.9	0.7	3.0	0.4	-3.9	0.1	3.0	6.9	20.0	191%
	40	0.4	0.7	-1.9	0.7	3.0	0.4	-3.9	0.1	3.0	6.9	20.0	191%
Bottom Forging	41	0.6	0.6	-1.3	0.0	0.3	0.9	-1.7	0.6	1.0	2.7	20.0	629%
	42	0.6	0.6	-1.3	0.0	0.3	0.9	-1.7	0.6	1.0	2.7	20.0	629%
	43	0.2	0.0	-1.8	0.0	0.0	0.7	-2.0	0.0	0.4	2.5	20.0	714%
	44	0.2	0.0	-1.8	0.0	0.0	0.7	-2.0	0.0	0.4	2.5	20.0	714%
	45	-0.1	0.4	-3.1	0.1	-0.1	0.3	-3.1	-0.1	0.5	3.6	20.0	458%
	46	-0.1	0.4	-3.1	0.1	-0.1	0.3	-3.1	-0.1	0.5	3.6	20.0	458%
Ram Access Cover Plate	47	0.6	-0.3	-2.0	0.1	-0.1	0.2	-2.0	-0.3	0.7	2.7	31.4	Large
	48	0.6	-0.3	-2.0	0.1	-0.1	0.2	-2.0	-0.3	0.7	2.7	31.4	Large
	49	0.5	0.0	-2.0	0.0	-0.1	0.1	-2.0	0.0	0.5	2.5	31.4	Large
	50	0.5	0.0	-2.0	0.0	-0.1	0.1	-2.0	0.0	0.5	2.5	31.4	Large
	51	0.5	-0.1	-0.1	0.1	-0.1	0.1	0.5	-0.2	0.1	0.8	31.4	Large
	52	0.5	-0.1	-0.1	0.1	-0.1	0.1	0.5	-0.2	0.1	0.8	31.4	Large
nct-com3.xls, (1.110)drop+t-40+ip50											Minimum Margin of Safety		82%

Table 2.6.13-52
1' Drop + Thermal (-40°F) + 50 psig Internal Pressure - Pm @ 135° Azimuth

Cask Component	Stress Point	Stress Components (ksi)						Principal Stresses (ksi)			SI (ksi)	Stress Limit	M.S.
		S_X	S_Y	S_Z	S_{XY}	S_{YZ}	S_{XZ}	S_1	S_2	S_3			
Top Cover	1	0.0	0.1	0.3	-0.1	0.0	0.3	0.5	-0.2	0.1	0.7	20.0	Large
	2	0.0	0.1	0.3	-0.1	0.0	0.3	0.5	-0.2	0.1	0.7	20.0	Large
	3	-0.6	0.0	0.1	0.0	0.0	1.4	-1.7	0.0	1.2	2.9	20.0	579%
	4	-0.6	0.0	0.1	0.0	0.0	1.4	-1.7	0.0	1.2	2.9	20.0	579%
	5	-0.3	-0.2	1.2	0.1	-0.3	1.3	1.9	-1.2	-0.1	3.1	20.0	550%
	6	-0.3	-0.2	1.2	0.1	-0.3	1.3	1.9	-1.2	-0.1	3.1	20.0	550%
Top Flange	7	-0.4	0.0	0.7	-0.1	-0.7	0.4	1.2	-0.6	-0.3	1.8	20.0	Large
	8	-0.4	0.0	0.7	-0.1	-0.7	0.4	1.2	-0.6	-0.3	1.8	20.0	Large
	9	-0.6	0.5	0.7	0.0	-1.1	0.0	1.7	-0.6	-0.5	2.2	20.0	801%
	10	-0.6	0.5	0.7	0.0	-1.1	0.0	1.7	-0.6	-0.5	2.2	20.0	801%
Inner Shell	11	0.0	0.1	1.3	-0.2	-1.6	-0.1	2.4	-1.1	0.0	3.5	20.0	475%
	12	0.0	0.1	1.3	-0.2	-1.6	-0.1	2.4	-1.1	0.0	3.5	20.0	475%
	13	0.0	-1.2	1.8	0.0	-1.9	0.0	2.7	-2.1	0.0	4.8	20.0	313%
	14	0.0	-1.2	1.8	0.0	-1.9	0.0	2.7	-2.1	0.0	4.8	20.0	313%
	15	0.0	-2.1	1.4	0.0	-1.6	0.0	-2.7	0.0	2.0	4.7	20.0	325%
	16	0.0	-2.1	1.4	0.0	-1.6	0.0	-2.7	0.0	2.0	4.7	20.0	325%
	17	0.0	-3.6	0.9	0.0	0.0	0.0	-3.6	0.0	0.9	4.5	20.0	346%
	18	0.0	-3.6	0.9	0.0	0.0	0.0	-3.6	0.0	0.9	4.5	20.0	346%
	19	0.0	-2.2	1.4	0.0	1.5	0.0	-2.7	0.0	1.9	4.6	20.0	332%
	20	0.0	-2.2	1.4	0.0	1.5	0.0	-2.7	0.0	1.9	4.6	20.0	332%
	21	0.0	-1.2	1.8	0.0	2.0	0.0	2.8	-2.2	0.0	5.0	20.0	302%
	22	0.0	-1.2	1.8	0.0	2.0	0.0	2.8	-2.2	0.0	5.0	20.0	302%
	23	0.0	0.3	0.9	0.2	1.7	-0.1	2.3	-1.2	0.0	3.6	20.0	460%
	24	0.0	0.3	0.9	0.2	1.7	-0.1	2.3	-1.2	0.0	3.6	20.0	460%
	25	-0.4	0.1	0.4	0.1	0.6	1.1	1.4	-1.2	0.0	2.6	20.0	671%
	26	-0.4	0.1	0.4	0.1	0.6	1.1	1.4	-1.2	0.0	2.6	20.0	671%
Outer Shell	27	-0.4	-1.0	0.3	0.6	-3.8	0.4	-4.3	-0.3	3.5	7.8	20.0	158%
	28	-0.4	-1.0	0.3	0.6	-3.8	0.4	-4.3	-0.3	3.5	7.8	20.0	158%
	29	0.0	-2.9	-1.8	0.0	-3.0	0.0	-5.3	0.0	0.7	6.0	20.0	233%
	30	0.0	-2.9	-1.8	0.0	-3.0	0.0	-5.3	0.0	0.7	6.0	20.0	233%
	31	0.0	-3.9	-1.6	0.0	-2.0	0.0	-5.1	-0.5	0.0	5.1	20.0	293%
	32	0.0	-3.9	-1.6	0.0	-2.0	0.0	-5.1	-0.5	0.0	5.1	20.0	293%
	33	0.1	-5.4	-1.5	0.0	0.0	0.0	-5.4	-1.5	0.1	5.4	20.0	267%
	34	0.1	-5.4	-1.5	0.0	0.0	0.0	-5.4	-1.5	0.1	5.4	20.0	267%
	35	0.0	-4.0	-1.6	0.0	1.9	0.0	-5.0	-0.5	0.0	5.1	20.0	296%
	36	0.0	-4.0	-1.6	0.0	1.9	0.0	-5.0	-0.5	0.0	5.1	20.0	296%
	37	0.0	-2.8	-1.7	0.0	2.9	0.0	-5.2	0.0	0.7	5.9	20.0	242%
	38	0.0	-2.8	-1.7	0.0	2.9	0.0	-5.2	0.0	0.7	5.9	20.0	242%
	39	-0.2	-0.7	0.6	-0.7	3.6	0.4	-3.8	0.0	3.6	7.5	20.0	167%
	40	-0.2	-0.7	0.6	-0.7	3.6	0.4	-3.8	0.0	3.6	7.5	20.0	167%
Bottom Forging	41	0.0	0.2	1.1	-0.1	0.4	1.2	1.9	-0.9	0.2	2.8	20.0	619%
	42	0.0	0.2	1.1	-0.1	0.4	1.2	1.9	-0.9	0.2	2.8	20.0	619%
	43	-0.5	0.0	0.5	0.0	0.0	1.3	-1.4	0.0	1.4	2.8	20.0	617%
	44	-0.5	0.0	0.5	0.0	0.0	1.3	-1.4	0.0	1.4	2.8	20.0	617%
	45	-0.5	-0.2	-1.1	0.0	-0.3	1.1	-1.9	-0.3	0.5	2.4	20.0	726%
	46	-0.5	-0.2	-1.1	0.0	-0.3	1.1	-1.9	-0.3	0.5	2.4	20.0	726%
Ram Access Cover Plate	47	-0.3	0.0	-0.1	0.0	0.1	1.3	-1.6	0.0	1.2	2.7	31.4	Large
	48	-0.3	0.0	-0.1	0.0	0.1	1.3	-1.6	0.0	1.2	2.7	31.4	Large
	49	0.0	0.1	-0.4	0.0	-0.1	1.5	-1.7	0.1	1.3	3.0	31.4	945%
	50	0.0	0.1	-0.4	0.0	-0.1	1.5	-1.7	0.1	1.3	3.0	31.4	945%
	51	0.1	-0.1	0.3	0.1	-0.1	0.3	0.5	-0.2	0.1	0.7	31.4	Large
	52	0.1	-0.1	0.3	0.1	-0.1	0.3	0.5	-0.2	0.1	0.7	31.4	Large
nct-com3.xls, (1.110)drop+t-40+ip50										Minimum Margin of Safety			158%

Table 2.6.13-53
1' Drop + Thermal (-40°F) + 50 psig Internal Pressure - Pm @ 180° Azimuth

Cask Component	Stress Point	Stress Components (ksi)						Principal Stresses (ksi)			SI (ksi)	Stress Limit	M.S.
		S_X	S_Y	S_Z	S_{XY}	S_{YZ}	S_{XZ}	S_1	S_2	S_3			
Top Cover	1	-0.2	0.1	0.5	-0.1	0.0	-0.2	0.5	-0.2	0.1	0.7	20.0	Large
	2	-0.2	0.1	0.5	-0.1	0.0	-0.2	0.5	-0.2	0.1	0.7	20.0	Large
	3	-1.5	0.0	1.4	0.1	0.0	-0.1	-1.5	0.0	1.4	2.9	20.0	586%
	4	-1.5	0.0	1.4	0.1	0.0	-0.1	-1.5	0.0	1.4	2.9	20.0	586%
	5	-0.9	-0.4	2.5	0.2	0.0	0.0	2.5	-0.9	-0.3	3.5	20.0	476%
	6	-0.9	-0.4	2.5	0.2	0.0	0.0	2.5	-0.9	-0.3	3.5	20.0	476%
Top Flange	7	-3.1	0.9	1.2	-0.3	-0.1	-0.6	-3.2	1.0	1.3	4.5	20.0	349%
	8	-3.1	0.9	1.2	-0.3	-0.1	-0.6	-3.2	1.0	1.3	4.5	20.0	349%
	9	-0.5	0.1	1.0	-0.1	-0.2	-0.2	1.1	-0.6	0.0	1.7	20.0	Large
	10	-0.5	0.1	1.0	-0.1	-0.2	-0.2	1.1	-0.6	0.0	1.7	20.0	Large
Inner Shell	11	0.0	-0.7	1.4	-0.4	-0.3	-0.1	1.4	-0.9	0.1	2.4	20.0	750%
	12	0.0	-0.7	1.4	-0.4	-0.3	-0.1	1.4	-0.9	0.1	2.4	20.0	750%
	13	0.0	-1.9	1.8	0.0	-0.3	-0.1	-1.9	0.0	1.8	3.7	20.0	437%
	14	0.0	-1.9	1.8	0.0	-0.3	-0.1	-1.9	0.0	1.8	3.7	20.0	437%
	15	0.0	-3.0	1.1	0.0	-0.3	0.0	-3.0	0.0	1.1	4.1	20.0	383%
	16	0.0	-3.0	1.1	0.0	-0.3	0.0	-3.0	0.0	1.1	4.1	20.0	383%
	17	-0.1	-4.7	0.6	0.0	0.0	0.1	-4.7	-0.1	0.6	5.3	20.0	277%
	18	-0.1	-4.7	0.6	0.0	0.0	0.1	-4.7	-0.1	0.6	5.3	20.0	277%
	19	0.0	-3.2	1.1	0.0	0.3	0.0	-3.3	0.0	1.1	4.3	20.0	362%
	20	0.0	-3.2	1.1	0.0	0.3	0.0	-3.3	0.0	1.1	4.3	20.0	362%
	21	0.0	-2.0	1.6	0.0	0.3	0.0	-2.0	0.0	1.7	3.6	20.0	448%
	22	0.0	-2.0	1.6	0.0	0.3	0.0	-2.0	0.0	1.7	3.6	20.0	448%
	23	0.0	-0.5	1.2	0.3	0.3	-0.2	1.3	-0.7	0.1	2.0	20.0	880%
	24	0.0	-0.5	1.2	0.3	0.3	-0.2	1.3	-0.7	0.1	2.0	20.0	880%
	25	-0.9	-0.1	1.0	0.2	0.1	-0.1	1.0	-1.0	-0.1	2.0	20.0	902%
	26	-0.9	-0.1	1.0	0.2	0.1	-0.1	1.0	-1.0	-0.1	2.0	20.0	902%
Outer Shell	27	-0.5	-0.9	0.8	0.9	-0.7	-0.1	-1.7	-0.1	1.1	2.9	20.0	595%
	28	-0.5	-0.9	0.8	0.9	-0.7	-0.1	-1.7	-0.1	1.1	2.9	20.0	595%
	29	0.1	-3.7	-2.7	0.0	-0.6	0.4	0.1	-4.0	-2.5	4.1	20.0	391%
	30	0.1	-3.7	-2.7	0.0	-0.6	0.4	0.1	-4.0	-2.5	4.1	20.0	391%
	31	0.0	-5.2	-2.3	0.0	-0.4	0.3	-5.2	-2.3	0.1	5.3	20.0	278%
	32	0.0	-5.2	-2.3	0.0	-0.4	0.3	-5.2	-2.3	0.1	5.3	20.0	278%
	33	0.0	-6.9	-1.9	0.0	0.0	0.3	-6.9	-1.9	0.0	6.9	20.0	189%
	34	0.0	-6.9	-1.9	0.0	0.0	0.3	-6.9	-1.9	0.0	6.9	20.0	189%
	35	0.0	-5.3	-2.2	0.0	0.4	0.3	-5.3	-2.2	0.1	5.4	20.0	270%
	36	0.0	-5.3	-2.2	0.0	0.4	0.3	-5.3	-2.2	0.1	5.4	20.0	270%
	37	0.0	-3.8	-2.5	0.0	0.5	0.3	0.1	-3.9	-2.3	4.0	20.0	395%
	38	0.0	-3.8	-2.5	0.0	0.5	0.3	0.1	-3.9	-2.3	4.0	20.0	395%
	39	-0.3	-1.2	1.4	-0.9	0.5	-0.1	-1.8	0.1	1.5	3.3	20.0	509%
	40	-0.3	-1.2	1.4	-0.9	0.5	-0.1	-1.8	0.1	1.5	3.3	20.0	509%
Bottom Forging	41	0.0	0.2	2.2	-0.2	0.1	-0.1	2.2	-0.1	0.3	2.3	20.0	762%
	42	0.0	0.2	2.2	-0.2	0.1	-0.1	2.2	-0.1	0.3	2.3	20.0	762%
	43	-0.7	0.0	1.6	-0.1	0.0	0.0	1.6	-0.7	0.0	2.3	20.0	786%
	44	-0.7	0.0	1.6	-0.1	0.0	0.0	1.6	-0.7	0.0	2.3	20.0	786%
	45	-0.7	-0.7	0.2	-0.2	-0.1	0.1	0.2	-0.9	-0.5	1.1	20.0	Large
	46	-0.7	-0.7	0.2	-0.2	-0.1	0.1	0.2	-0.9	-0.5	1.1	20.0	Large
Ram Access Cover Plate	47	-1.2	0.2	1.4	-0.1	0.1	0.0	-1.2	0.2	1.4	2.6	31.4	Large
	48	-1.2	0.2	1.4	-0.1	0.1	0.0	-1.2	0.2	1.4	2.6	31.4	Large
	49	-1.1	0.0	0.9	0.0	0.0	0.1	-1.1	0.0	0.9	2.0	31.4	Large
	50	-1.1	0.0	0.9	0.0	0.0	0.1	-1.1	0.0	0.9	2.0	31.4	Large
	51	-0.1	-0.1	0.5	0.1	0.1	-0.1	0.5	-0.2	0.1	0.7	31.4	Large
	52	-0.1	-0.1	0.5	0.1	0.1	-0.1	0.5	-0.2	0.1	0.7	31.4	Large
nct-com3.xls, (1.110)drop+t-40+ip50											Minimum Margin of Safety		189%

Table 2.6.13-54
1' Drop + Thermal (-40°F) + 50 psig Internal Pressure - Pm + Pb @ 0° Azimuth

Cask Component	Stress Point	Stress Components (ksi)						Principal Stresses (ksi)			SI (ksi)	Stress Limit	M.S.
		S_X	S_Y	S_Z	S_{XY}	S_{YZ}	S_{XZ}	S_1	S_2	S_3			
Top Cover	1	-0.3	-2.4	-3.5	-0.1	0.1	-0.2	-0.3	-3.6	-2.4	3.3	30.0	823%
	2	0.0	2.5	4.5	0.2	0.0	-0.1	0.0	2.5	4.5	4.5	30.0	566%
	3	-5.4	-1.6	-4.7	0.3	0.0	0.0	-1.6	-5.4	-4.7	3.8	30.0	686%
	4	-0.3	1.6	4.2	0.3	0.0	-0.1	4.2	-0.3	1.6	4.5	30.0	572%
	5	-8.8	-3.5	-5.7	0.0	0.1	-0.1	-8.8	-5.7	-3.5	5.3	30.0	468%
	6	5.2	-1.3	3.9	0.7	0.0	-0.1	-1.3	3.8	5.3	6.6	30.0	355%
Top Flange	7	-10.2	-10.5	-9.1	-1.4	0.1	0.0	-11.7	-9.1	-8.9	2.8	30.0	983%
	8	-4.5	13.5	-1.5	-0.2	-0.1	0.2	13.5	-4.5	-1.5	18.0	30.0	66%
	9	-0.2	1.6	-5.0	0.1	0.8	-0.6	-5.2	-0.2	1.7	6.8	30.0	339%
	10	-0.7	0.9	-6.8	0.5	0.2	-0.8	-6.9	-0.7	1.0	8.0	30.0	277%
Inner Shell	11	-0.2	2.5	-7.2	0.3	0.5	-0.5	-7.3	-0.2	2.6	9.9	30.0	204%
	12	-0.3	1.0	-9.1	0.4	0.0	-0.7	-9.1	-0.3	1.1	10.2	30.0	194%
	13	-0.5	2.5	-3.0	-0.1	-0.6	-0.3	2.6	-3.1	-0.4	5.7	30.0	426%
	14	-0.4	2.4	-4.2	-0.1	-0.4	-0.4	-4.2	-0.3	2.5	6.7	30.0	347%
	15	-0.3	4.6	4.1	0.0	-0.6	0.3	-0.3	3.7	5.0	5.3	30.0	469%
	16	-0.2	6.5	4.9	0.0	-0.5	0.3	-0.2	4.8	6.7	6.9	30.0	336%
	17	-0.3	9.5	3.5	0.0	0.0	0.2	9.5	-0.3	3.5	9.7	30.0	208%
	18	-0.2	11.3	6.2	0.0	0.0	0.5	-0.2	6.2	11.3	11.5	30.0	161%
	19	-0.2	4.6	4.1	0.0	0.6	0.3	-0.3	3.7	5.0	5.3	30.0	470%
	20	-0.2	6.2	5.2	0.0	0.5	0.4	-0.2	5.0	6.4	6.6	30.0	353%
	21	-0.4	2.6	-3.7	0.1	0.5	-0.4	-3.8	-0.3	2.7	6.5	30.0	362%
	22	-0.4	1.1	-4.4	0.1	0.4	-0.5	-4.5	-0.3	1.1	5.6	30.0	437%
	23	-0.6	-1.8	-5.2	0.1	-0.2	-0.4	-5.2	-1.8	-0.6	4.7	30.0	543%
	24	-0.6	3.8	-3.9	-0.9	0.0	-0.2	3.9	-3.9	-0.8	7.8	30.0	284%
	25	-4.4	0.3	-4.1	0.3	-0.2	-0.1	0.3	-4.5	-4.1	4.8	30.0	530%
	26	-5.7	0.5	-4.4	-0.2	0.0	0.0	0.5	-5.7	-4.4	6.2	30.0	381%
Outer Shell	27	-1.3	-12.7	-11.5	3.6	0.2	-0.9	-0.2	-13.8	-11.4	13.7	30.0	120%
	28	-3.1	8.0	-7.0	1.6	-0.2	-0.4	8.2	-7.0	-3.3	15.3	30.0	97%
	29	-0.6	2.0	-7.3	-1.4	-1.0	-0.6	-7.5	-1.1	2.7	10.1	30.0	197%
	30	-0.9	-2.8	-10.2	-1.4	-0.5	-0.8	-10.3	-3.5	-0.1	10.2	30.0	193%
	31	-0.1	0.5	4.1	0.2	-1.0	0.4	4.4	-0.3	0.4	4.7	30.0	541%
	32	-0.1	7.1	6.3	0.2	-0.8	0.6	-0.1	5.8	7.5	7.7	30.0	291%
	33	-0.1	8.5	2.1	0.0	0.0	0.2	8.5	-0.2	2.1	8.7	30.0	246%
	34	-0.1	11.7	6.1	0.0	0.0	0.5	-0.1	6.1	11.7	11.8	30.0	154%
	35	-0.1	2.2	4.1	-0.1	0.9	0.4	4.4	-0.2	1.9	4.6	30.0	549%
	36	-0.1	7.0	6.3	-0.1	0.7	0.6	-0.1	5.9	7.4	7.6	30.0	296%
	37	-0.6	2.0	-7.9	1.3	0.9	-0.6	-8.0	-1.1	2.6	10.6	30.0	182%
	38	-0.9	-1.7	-9.5	1.3	0.5	-0.8	-9.6	-2.6	0.1	9.7	30.0	208%
	39	-1.2	-17.1	-8.9	-4.4	-0.2	-0.6	-18.2	-8.9	0.0	18.2	30.0	65%
	40	-3.0	15.1	-0.5	-1.9	0.1	0.3	15.3	-3.2	-0.4	18.5	30.0	62%
Bottom Forging	41	-4.8	-0.7	-4.6	0.0	-0.2	-0.1	-0.7	-4.8	-4.6	4.1	30.0	624%
	42	0.4	0.3	0.6	-0.4	0.0	-0.1	0.0	0.6	0.7	0.8	30.0	Large
	43	-4.5	-0.1	-3.7	-0.2	0.0	-0.1	-0.1	-4.5	-3.7	4.4	30.0	589%
	44	-0.3	0.2	1.5	-0.2	0.0	-0.1	1.5	-0.4	0.3	1.9	30.0	Large
	45	-0.9	-0.8	-3.1	-0.3	0.0	-0.3	-3.2	-1.2	-0.5	2.6	30.0	Large
	46	-2.1	-0.6	0.3	-0.4	0.2	-0.1	-2.2	-0.6	0.3	2.5	30.0	Large
Ram Access Cover Plate	47	-4.1	-0.4	-0.8	0.2	0.0	0.0	-4.2	-0.8	-0.3	3.8	47.1	Large
	48	0.7	0.4	2.5	-0.5	-0.1	0.0	2.5	0.1	1.1	2.4	47.1	Large
	49	-2.7	0.0	-0.7	0.2	0.0	-0.1	-2.7	-0.7	0.0	2.7	47.1	Large
	50	-0.2	0.4	2.1	-0.4	0.1	-0.1	2.1	-0.3	0.6	2.5	47.1	Large
	51	-0.4	-0.8	-1.3	-0.2	-0.1	-0.2	-1.4	-0.8	-0.3	1.1	47.1	Large
	52	0.2	0.7	2.3	-0.1	0.0	-0.1	2.3	0.1	0.7	2.1	47.1	Large
nct-com3.xls, (1.110)drop+t-40+ip50										Minimum Margin of Safety			62%

Table 2.6.13-55
1' Drop + Thermal (-40°F) + 50 psig Internal Pressure - Pm + Pb @ 45° Azimuth

Cask Component	Stress Point	Stress Components (ksi)						Principal Stresses (ksi)			SI (ksi)	Stress Limit	M.S.
		S_X	S_Y	S_Z	S_{XY}	S_{YZ}	S_{XZ}	S_1	S_2	S_3			
Top Cover	1	-0.7	-2.4	-3.2	-0.1	0.0	0.6	-0.6	-3.3	-2.4	2.7	30.0	999%
	2	1.3	2.5	3.2	0.2	0.2	-1.2	0.7	2.5	3.8	3.1	30.0	873%
	3	-2.9	-1.6	-4.9	0.1	0.2	-1.2	-5.5	-2.3	-1.6	3.9	30.0	673%
	4	1.0	1.6	1.7	0.1	0.2	-1.4	-0.2	1.6	2.8	3.0	30.0	901%
	5	-3.3	-1.2	-4.5	0.0	0.4	-1.9	-5.9	-2.0	-1.1	4.8	30.0	527%
	6	1.7	0.1	0.9	0.3	0.7	0.4	-0.3	1.0	2.1	2.4	30.0	Large
Top Flange	7	-5.6	-6.0	-6.3	-0.8	-0.2	0.2	-4.9	-6.6	-6.3	1.7	30.0	Large
	8	-2.6	7.5	-1.8	-0.1	-0.5	0.2	7.5	-2.6	-1.8	10.1	30.0	197%
	9	-0.6	4.2	-4.9	0.5	1.6	0.2	4.5	-5.1	-0.7	9.6	30.0	211%
	10	-2.5	-1.3	-6.7	-0.3	0.2	-0.9	-6.8	-2.4	-1.2	5.6	30.0	434%
Inner Shell	11	-0.4	3.9	-5.4	-0.1	0.9	0.1	-5.5	-0.4	4.0	9.5	30.0	216%
	12	-0.7	-0.4	-6.4	-0.4	0.0	0.0	-6.4	-0.9	-0.1	6.3	30.0	377%
	13	-0.3	3.2	-1.3	-0.1	-4.2	0.1	5.7	-3.8	-0.3	9.5	30.0	215%
	14	-0.3	3.1	-1.2	-0.1	-2.9	0.1	4.5	-2.6	-0.3	7.2	30.0	318%
	15	-0.1	3.7	3.4	0.0	-4.2	0.0	7.7	-0.6	-0.1	8.4	30.0	258%
	16	0.0	4.7	3.7	0.0	-3.2	0.0	7.5	0.0	1.0	7.5	30.0	301%
	17	0.0	5.8	4.0	0.0	0.0	0.0	0.0	4.0	5.8	5.8	30.0	419%
	18	0.0	5.8	3.4	0.0	0.0	-0.1	0.0	3.4	5.8	5.8	30.0	416%
	19	-0.1	4.0	3.6	0.0	4.2	0.0	8.0	-0.5	-0.1	8.5	30.0	253%
	20	0.0	4.7	3.6	0.0	3.3	0.0	7.5	0.0	0.8	7.5	30.0	298%
	21	-0.4	3.1	-1.0	0.1	4.4	0.0	5.9	-3.8	-0.4	9.7	30.0	211%
	22	-0.3	2.9	-1.3	0.1	2.9	0.1	4.4	-2.8	-0.3	7.3	30.0	312%
	23	-0.4	2.0	-3.7	0.1	-1.4	0.1	-4.0	-0.4	2.3	6.3	30.0	375%
	24	-0.6	1.3	-4.0	-0.2	-0.2	0.0	-4.0	-0.6	1.3	5.3	30.0	465%
	25	-1.7	1.4	-3.3	0.1	-0.7	-1.0	1.5	-3.8	-1.2	5.3	30.0	464%
	26	-2.8	-0.4	-4.0	0.0	0.1	-1.1	-4.6	-2.2	-0.4	4.2	30.0	614%
Outer Shell	27	-0.8	-2.6	-6.6	1.5	2.7	-0.1	-8.1	-2.3	0.3	8.4	30.0	258%
	28	-1.6	3.7	-5.0	0.8	-1.4	-0.1	4.0	-5.2	-1.7	9.3	30.0	223%
	29	-0.6	2.3	-4.4	-0.8	-8.1	0.0	-9.9	-0.6	7.8	17.7	30.0	70%
	30	-0.6	2.1	-4.7	-0.8	-4.1	0.1	-6.6	-0.8	4.1	10.7	30.0	180%
	31	-0.1	1.7	2.7	0.2	-6.5	0.0	8.7	-4.4	-0.1	13.1	30.0	130%
	32	0.0	5.5	3.5	0.1	-4.7	0.0	9.3	-0.3	0.0	9.6	30.0	214%
	33	0.0	5.1	2.9	0.0	-0.2	0.1	0.0	2.9	5.1	5.1	30.0	485%
	34	0.0	5.3	2.0	0.0	-0.1	-0.1	5.3	0.0	2.0	5.3	30.0	464%
	35	-0.1	2.4	3.0	-0.1	6.0	0.0	8.8	-3.3	-0.1	12.1	30.0	148%
	36	0.0	4.9	3.2	-0.1	4.3	-0.1	8.5	-0.4	0.0	8.8	30.0	240%
	37	-0.6	2.2	-4.2	0.7	8.1	0.0	-9.7	-0.7	7.7	17.5	30.0	72%
	38	-0.7	1.8	-5.1	0.8	3.8	0.1	-6.8	-0.8	3.6	10.5	30.0	187%
	39	-0.4	-5.6	-5.3	-2.0	-3.3	-0.1	-9.1	-2.8	0.5	9.6	30.0	213%
	40	-1.4	5.8	-2.6	-1.0	0.5	-0.1	5.9	-2.6	-1.6	8.5	30.0	251%
Bottom Forging	41	-1.6	0.5	-3.6	0.0	-0.6	-1.2	-4.2	-1.1	0.6	4.8	30.0	520%
	42	0.0	-0.1	-0.9	-0.2	-0.1	-0.2	-0.9	-0.1	0.1	1.1	30.0	Large
	43	-2.3	-0.1	-3.8	-0.1	-0.2	-1.1	-4.3	-1.7	-0.1	4.2	30.0	615%
	44	0.1	0.2	0.0	-0.1	-0.1	-1.0	-1.0	0.2	1.0	2.0	30.0	Large
	45	-1.0	-0.3	-4.1	-0.1	0.0	-0.9	-4.4	-0.8	-0.2	4.1	30.0	623%
	46	-0.7	0.1	-1.0	-0.1	0.4	-1.3	-2.1	-0.1	0.7	2.9	30.0	946%
Ram Access Cover Plate	47	-1.6	-0.4	-2.0	0.1	0.1	-1.8	-3.6	-0.4	0.0	3.6	47.1	Large
	48	0.8	0.0	0.5	-0.1	-0.5	-0.8	1.6	-0.6	0.4	2.1	47.1	Large
	49	-1.1	-0.1	-1.8	0.1	0.0	-1.5	-3.0	-0.2	0.1	3.0	47.1	Large
	50	0.9	0.5	0.4	-0.2	0.0	-1.5	2.2	-0.9	0.5	3.1	47.1	Large
	51	-0.5	-0.8	-1.2	-0.1	-0.2	0.3	-1.4	-0.8	-0.4	1.0	47.1	Large
	52	1.2	0.7	1.3	-0.1	-0.1	-0.9	2.1	0.3	0.7	1.8	47.1	Large
nct-com3.xls, (1.110)drop+t-40+ip50										Minimum Margin of Safety			70%

Table 2.6.13-56
1' Drop + Thermal (-40°F) + 50 psig Internal Pressure - Pm + Pb @ 90° Azimuth

Cask Component	Stress Point	Stress Components (ksi)						Principal Stresses (ksi)			SI (ksi)	Stress Limit	M.S.
		S_X	S_Y	S_Z	S_{XY}	S_{YZ}	S_{XZ}	S_1	S_2	S_3			
Top Cover	1	-1.5	-2.4	-2.4	-0.1	-0.1	0.2	-1.5	-2.5	-2.3	1.0	30.0	Large
	2	2.5	2.5	2.1	0.0	0.2	0.1	1.9	2.5	2.6	0.7	30.0	Large
	3	-0.3	-1.6	-4.3	0.0	0.1	0.2	-4.4	-1.6	-0.3	4.1	30.0	636%
	4	1.6	1.6	0.1	0.0	0.1	0.8	-0.2	1.6	1.9	2.1	30.0	Large
	5	1.7	0.7	-2.1	0.0	-0.2	1.0	-2.4	0.7	2.0	4.4	30.0	589%
	6	-1.2	1.1	-0.9	0.0	-0.2	0.8	-1.9	-0.3	1.2	3.1	30.0	883%
Top Flange	7	0.6	0.4	-1.4	0.1	-0.5	0.7	-1.8	0.5	0.8	2.6	30.0	Large
	8	0.1	-0.8	-1.3	0.0	-0.4	0.2	-1.5	-0.5	0.1	1.6	30.0	Large
	9	-0.3	2.9	-2.8	0.3	-1.0	-0.1	3.1	-2.9	-0.3	6.0	30.0	399%
	10	-1.3	-0.5	-2.9	-0.2	-0.5	0.5	-3.1	-1.3	-0.3	2.9	30.0	949%
Inner Shell	11	-0.1	2.1	-1.8	-0.1	-1.8	0.1	2.8	-2.5	-0.1	5.4	30.0	456%
	12	-0.2	1.0	-1.4	-0.2	-1.5	-0.1	1.8	-2.2	-0.2	4.0	30.0	659%
	13	0.0	1.4	1.4	0.0	-3.6	0.0	5.0	-2.3	0.0	7.3	30.0	311%
	14	0.1	2.6	2.2	0.0	-3.6	0.0	6.0	-1.2	0.1	7.1	30.0	320%
	15	0.0	1.0	2.5	0.0	-3.0	0.0	4.9	-1.4	0.0	6.2	30.0	382%
	16	0.0	0.8	1.8	0.0	-3.4	0.0	4.7	-2.2	0.0	6.8	30.0	338%
	17	-0.1	-0.3	3.2	0.0	0.0	-0.1	3.2	-0.3	-0.1	3.5	30.0	764%
	18	-0.1	-1.4	0.8	0.0	0.0	0.1	-1.4	-0.1	0.8	2.2	30.0	Large
	19	0.0	1.2	2.4	0.0	2.9	0.0	4.8	-1.2	0.0	6.0	30.0	402%
	20	0.0	0.9	1.8	0.0	3.3	0.0	4.7	-2.0	0.0	6.7	30.0	349%
	21	0.0	1.9	1.5	0.0	3.6	0.0	5.2	-1.9	0.0	7.2	30.0	319%
	22	0.1	3.2	2.6	0.0	3.6	0.0	6.5	-0.7	0.1	7.1	30.0	321%
	23	0.1	5.0	-1.1	0.2	1.7	0.1	5.4	-1.5	0.1	6.9	30.0	333%
	24	-0.4	-1.7	-2.6	0.6	1.5	-0.1	-3.8	-0.9	0.0	3.8	30.0	690%
	25	1.6	2.4	-1.3	0.1	0.6	0.9	-1.7	1.8	2.6	4.3	30.0	603%
	26	0.8	-1.4	-2.3	0.2	0.2	1.0	1.2	-2.6	-1.4	3.8	30.0	690%
Outer Shell	27	0.0	4.9	-1.0	-0.9	-5.1	0.5	8.0	-3.9	-0.1	11.9	30.0	152%
	28	0.2	-1.5	-1.7	-0.3	-2.4	0.4	-4.0	-0.1	1.1	5.1	30.0	489%
	29	-0.1	0.6	-1.9	0.1	-5.5	0.2	-6.3	0.0	4.9	11.3	30.0	166%
	30	0.0	3.8	0.8	0.1	-5.1	0.0	7.6	-3.1	0.0	10.7	30.0	180%
	31	0.1	0.6	0.1	0.1	-4.1	0.0	4.4	-3.7	0.1	8.2	30.0	267%
	32	0.0	0.3	-0.4	0.1	-4.7	0.0	-4.8	0.0	4.7	9.5	30.0	216%
	33	0.0	-1.2	1.4	0.0	-0.1	-0.1	1.4	-1.2	0.0	2.6	30.0	Large
	34	-0.1	-2.9	-1.6	0.0	-0.1	0.0	-0.1	-2.9	-1.6	2.8	30.0	969%
	35	0.1	0.3	0.1	0.0	3.9	0.0	4.1	-3.7	0.1	7.8	30.0	286%
	36	0.0	-0.2	-0.4	-0.1	4.6	0.0	-4.9	0.0	4.3	9.2	30.0	227%
	37	0.0	0.4	-2.2	-0.1	5.3	0.2	-6.4	0.0	4.5	10.9	30.0	176%
	38	0.0	3.7	0.9	-0.1	5.1	0.0	7.6	-3.0	0.0	10.6	30.0	183%
	39	0.9	6.1	-0.6	1.1	4.1	0.5	8.2	-2.6	0.7	10.8	30.0	177%
	40	0.2	-4.6	-3.1	0.4	1.9	0.3	-6.0	-1.9	0.4	6.3	30.0	375%
Bottom Forging	41	2.2	1.7	-1.4	0.0	0.5	1.0	-1.8	1.7	2.5	4.3	30.0	604%
	42	-0.4	-0.4	-1.2	0.0	0.0	0.8	-1.7	-0.4	0.1	1.8	30.0	Large
	43	0.1	-0.1	-2.9	0.0	0.0	0.5	-3.0	-0.1	0.2	3.2	30.0	827%
	44	0.3	0.2	-0.7	0.0	0.0	0.8	-1.2	0.2	0.8	1.9	30.0	Large
	45	-0.9	0.2	-4.5	0.1	-0.1	0.2	-4.5	-0.9	0.2	4.8	30.0	530%
	46	0.6	0.7	-1.6	0.1	-0.2	0.4	-1.7	0.6	0.8	2.5	30.0	Large
Ram Access Cover Plate	47	0.5	-0.3	-2.8	-0.1	-0.1	0.1	-2.9	-0.4	0.6	3.4	47.1	Large
	48	0.7	-0.3	-1.2	0.3	-0.1	0.2	0.8	-1.3	-0.3	2.0	47.1	Large
	49	-0.2	-0.4	-2.6	0.1	0.0	0.1	-2.6	-0.4	-0.2	2.4	47.1	Large
	50	1.2	0.4	-1.3	0.0	-0.1	0.2	-1.3	0.4	1.2	2.5	47.1	Large
	51	-1.0	-0.8	-0.7	0.1	-0.2	0.2	-1.2	-0.8	-0.5	0.6	47.1	Large
	52	2.0	0.7	0.5	0.0	-0.1	0.1	2.0	0.4	0.8	1.6	47.1	Large
nct-com3.xls, (1.110)drop+t-40+ip50										Minimum Margin of Safety			152%

Table 2.6.13-57
1' Drop + Thermal (-40°F) + 50 psig Internal Pressure - Pm + Pb @ 135° Azimuth

Cask Component	Stress Point	Stress Components (ksi)						Principal Stresses (ksi)			SI (ksi)	Stress Limit	M.S.
		S_X	S_Y	S_Z	S_{XY}	S_{YZ}	S_{XZ}	S_1	S_2	S_3			
Top Cover	1	-1.1	-2.4	-2.8	0.0	-0.1	-0.6	-0.9	-3.0	-2.4	2.0	30.0	Large
	2	1.1	2.5	3.4	-0.2	0.2	1.2	0.6	2.5	3.9	3.3	30.0	796%
	3	-1.1	-1.6	-2.6	0.0	0.0	1.1	-3.1	-1.6	-0.5	2.6	30.0	Large
	4	-0.1	1.6	2.7	0.0	0.0	1.8	-1.0	1.6	3.6	4.6	30.0	557%
	5	-0.9	-0.6	-0.1	0.1	-0.2	1.6	1.2	-2.2	-0.5	3.4	30.0	789%
	6	0.2	0.3	2.5	0.2	-0.4	0.9	2.8	-0.3	0.4	3.2	30.0	840%
Top Flange	7	-0.6	-0.6	0.5	-0.1	-0.8	0.7	1.2	-1.2	-0.7	2.3	30.0	Large
	8	-0.2	0.6	0.8	-0.1	-0.6	0.2	1.3	-0.2	0.2	1.5	30.0	Large
	9	-0.2	1.9	1.4	0.2	-1.2	-0.2	2.9	-0.3	0.4	3.1	30.0	855%
	10	-0.9	-0.9	0.1	-0.2	-0.9	0.2	0.7	-1.4	-0.9	2.1	30.0	Large
Inner Shell	11	-0.1	1.0	1.6	-0.1	-1.5	0.0	2.9	-0.3	0.0	3.2	30.0	842%
	12	0.0	-0.7	0.9	-0.3	-1.7	-0.2	-1.9	0.0	2.0	3.8	30.0	685%
	13	0.0	-0.8	2.2	0.0	-1.9	0.0	3.1	-1.7	0.0	4.8	30.0	531%
	14	0.0	-1.5	1.4	0.0	-2.0	0.0	-2.5	0.0	2.4	4.9	30.0	509%
	15	-0.1	-2.0	1.5	0.0	-1.5	0.0	-2.6	-0.1	2.0	4.6	30.0	554%
	16	0.0	-2.3	1.3	0.0	-1.6	0.0	-2.9	0.0	1.9	4.8	30.0	523%
	17	0.0	-3.7	0.4	0.0	0.0	0.0	-3.7	0.0	0.4	4.0	30.0	648%
	18	0.1	-3.5	1.5	0.0	0.0	0.0	-3.5	0.1	1.5	5.0	30.0	506%
	19	-0.1	-2.1	1.5	0.0	1.4	0.0	-2.6	-0.1	1.9	4.5	30.0	563%
	20	0.0	-2.4	1.3	0.0	1.5	0.0	-2.9	0.0	1.8	4.7	30.0	533%
	21	0.0	-0.9	2.2	0.0	1.9	0.0	3.2	-1.8	0.0	4.9	30.0	508%
	22	0.0	-1.6	1.4	0.0	2.0	0.0	-2.6	0.0	2.4	5.0	30.0	498%
	23	0.0	1.4	1.2	0.2	1.6	0.0	2.9	-0.4	0.0	3.3	30.0	806%
	24	-0.1	-0.8	0.5	0.3	1.9	-0.2	-2.2	0.0	1.8	4.0	30.0	657%
	25	0.0	1.3	0.8	0.1	0.8	1.1	-0.8	0.8	2.2	3.0	30.0	894%
	26	-0.8	-1.0	0.1	0.1	0.3	1.1	0.9	-1.5	-1.0	2.4	30.0	Large
Outer Shell	27	-0.4	-5.2	-0.8	0.9	-4.8	0.5	-8.4	-0.3	2.3	10.6	30.0	182%
	28	-0.4	3.2	1.4	0.3	-2.7	0.3	5.2	-1.0	0.0	6.2	30.0	385%
	29	0.1	-2.0	-1.2	0.0	-2.9	0.0	-4.5	0.1	1.3	5.8	30.0	418%
	30	0.0	-3.8	-2.4	0.0	-3.1	0.0	-6.2	0.0	0.0	6.2	30.0	380%
	31	0.0	-3.6	-1.5	0.0	-1.9	0.0	-4.7	-0.4	0.0	4.7	30.0	536%
	32	0.0	-4.2	-1.8	0.0	-2.1	0.0	-5.5	-0.6	0.0	5.5	30.0	450%
	33	0.0	-5.5	-2.4	0.0	0.0	0.0	-5.5	-2.4	0.0	5.5	30.0	447%
	34	0.1	-5.3	-0.7	0.0	0.0	0.0	-5.3	-0.7	0.1	5.4	30.0	454%
	35	0.0	-3.6	-1.5	0.0	1.8	0.0	-4.7	-0.4	0.0	4.7	30.0	539%
	36	0.0	-4.3	-1.7	0.0	2.0	0.0	-5.4	-0.6	0.0	5.4	30.0	454%
	37	0.1	-2.2	-1.1	0.0	2.8	-0.1	-4.5	0.1	1.2	5.7	30.0	426%
	38	0.0	-3.4	-2.3	0.0	2.9	0.0	-5.8	0.0	0.2	6.0	30.0	399%
	39	0.1	-4.4	-0.4	-0.9	4.5	0.6	-7.4	0.3	2.5	9.9	30.0	202%
	40	-0.2	3.0	1.6	-0.4	2.7	0.3	5.2	-0.9	0.2	6.0	30.0	398%
Bottom Forging	41	0.4	0.6	0.6	-0.1	0.7	1.2	-0.9	0.6	1.9	2.8	30.0	962%
	42	0.0	-0.2	1.6	-0.1	0.1	1.2	2.2	-0.6	-0.2	2.9	30.0	946%
	43	-0.8	-0.2	-0.8	0.0	0.0	1.0	-1.9	-0.2	0.2	2.1	30.0	Large
	44	-0.1	0.2	1.8	0.0	0.0	1.6	2.7	-1.0	0.2	3.7	30.0	710%
	45	-0.4	-0.3	-2.4	-0.1	-0.1	0.8	-2.6	-0.4	-0.1	2.5	30.0	Large
	46	-0.5	-0.1	0.2	0.0	-0.6	1.5	1.5	-1.7	-0.2	3.2	30.0	832%
Ram Access Cover Plate	47	-1.0	-0.3	-1.0	0.0	-0.2	1.7	-2.7	-0.3	0.7	3.4	47.1	Large
	48	0.4	0.2	0.8	-0.1	0.3	1.0	1.7	-0.5	0.3	2.2	47.1	Large
	49	-0.7	-0.3	-1.3	0.1	-0.1	1.4	-2.4	-0.3	0.4	2.8	47.1	Large
	50	0.6	0.4	0.5	-0.1	-0.1	1.6	2.1	-1.1	0.4	3.2	47.1	Large
	51	-0.9	-0.8	-0.8	0.2	-0.1	-0.3	-0.5	-1.2	-0.9	0.8	47.1	Large
	52	1.0	0.7	1.5	0.1	-0.1	0.9	2.2	0.3	0.7	1.9	47.1	Large
nct-com3.xls, (1.110)drop+t-40+ip50										Minimum Margin of Safety			182%

Table 2.6.13-58
1' Drop + Thermal (-40°F) + 50 psig Internal Pressure - Pm + Pb @ 180° Azimuth

Cask Component	Stress Point	Stress Components (ksi)						Principal Stresses (ksi)			SI (ksi)	Stress Limit	M.S.
		S_X	S_Y	S_Z	S_{XY}	S_{YZ}	S_{XZ}	S_1	S_2	S_3			
Top Cover	1	-0.3	-2.4	-3.5	0.1	-0.1	-0.2	-0.3	-3.6	-2.4	3.3	30.0	823%
	2	0.0	2.5	4.5	-0.2	0.0	-0.1	0.0	2.5	4.5	4.5	30.0	566%
	3	-2.0	-1.6	-1.7	0.1	0.0	0.0	-2.0	-1.7	-1.6	0.4	30.0	Large
	4	-1.1	1.6	4.4	0.1	0.0	-0.1	4.4	-1.1	1.6	5.5	30.0	444%
	5	-2.2	-0.9	0.6	0.1	0.0	0.0	0.6	-2.3	-0.9	2.9	30.0	938%
	6	0.5	0.2	4.5	0.3	0.0	-0.1	4.5	0.0	0.7	4.5	30.0	570%
Top Flange	7	-5.0	-8.0	-1.1	-0.9	0.5	-0.4	-1.1	-8.3	-4.9	7.2	30.0	315%
	8	-1.1	9.9	3.5	0.2	-0.7	-0.8	10.0	-1.3	3.5	11.2	30.0	167%
	9	-0.2	1.8	1.7	0.2	-0.1	-0.2	-0.2	1.6	2.0	2.2	30.0	Large
	10	-1.0	-1.7	0.3	-0.4	-0.2	-0.1	0.4	-1.9	-0.8	2.3	30.0	Large
Inner Shell	11	0.0	1.0	1.8	-0.2	-0.2	-0.1	-0.1	0.9	1.9	2.0	30.0	Large
	12	0.0	-2.4	0.9	-0.6	-0.4	-0.1	-2.6	0.1	0.9	3.6	30.0	744%
	13	0.0	-1.7	1.6	0.0	-0.3	0.0	-1.7	0.0	1.7	3.4	30.0	779%
	14	0.0	-2.1	1.9	0.0	-0.3	-0.1	-2.1	0.0	1.9	4.0	30.0	642%
	15	0.0	-3.0	0.9	0.0	-0.3	0.1	-3.0	0.0	0.9	3.9	30.0	665%
	16	0.0	-3.0	1.3	0.0	-0.3	0.0	-3.0	0.0	1.4	4.4	30.0	587%
	17	-0.1	-4.6	0.6	0.0	0.0	0.1	-4.6	-0.1	0.6	5.2	30.0	480%
	18	-0.1	-4.8	0.6	0.0	0.0	0.1	-4.8	-0.1	0.6	5.4	30.0	452%
	19	0.0	-3.2	0.9	0.0	0.3	0.1	-3.2	0.0	0.9	4.1	30.0	636%
	20	0.0	-3.3	1.3	0.0	0.3	0.0	-3.3	0.0	1.3	4.6	30.0	554%
	21	0.0	-1.9	1.4	0.0	0.3	0.0	-1.9	0.0	1.5	3.4	30.0	789%
	22	0.0	-2.1	1.8	0.0	0.3	-0.1	-2.1	0.0	1.8	3.9	30.0	665%
	23	0.0	1.2	1.7	0.2	0.3	-0.2	-0.1	1.2	1.9	1.9	30.0	Large
	24	-0.1	-2.1	0.7	0.5	0.4	-0.2	-2.3	0.0	0.8	3.1	30.0	874%
	25	-0.4	1.3	1.4	0.0	0.1	-0.1	-0.4	1.2	1.5	1.9	30.0	Large
	26	-1.5	-1.5	0.5	0.3	0.1	-0.1	0.5	-1.8	-1.2	2.3	30.0	Large
Outer Shell	27	-0.5	-6.7	-0.8	1.3	-0.7	0.1	-7.0	-0.7	-0.3	6.7	30.0	346%
	28	-0.6	4.8	2.4	0.5	-0.7	-0.3	-0.6	2.3	5.0	5.6	30.0	436%
	29	0.1	-3.1	-2.9	0.0	-0.6	0.4	0.1	-3.5	-2.4	3.7	30.0	715%
	30	0.0	-4.3	-2.6	0.0	-0.6	0.3	0.1	-4.5	-2.5	4.6	30.0	554%
	31	0.0	-5.0	-2.6	0.0	-0.4	0.3	0.1	-5.1	-2.6	5.2	30.0	482%
	32	0.0	-5.3	-2.0	0.0	-0.4	0.3	-5.3	-2.0	0.1	5.4	30.0	453%
	33	0.0	-6.6	-1.9	0.0	0.0	0.3	-6.6	-1.9	0.0	6.6	30.0	352%
	34	0.0	-7.2	-1.9	0.0	0.0	0.3	-7.2	-1.9	0.0	7.2	30.0	318%
	35	0.0	-5.1	-2.5	0.0	0.4	0.3	-5.1	-2.5	0.1	5.2	30.0	477%
	36	0.0	-5.5	-1.9	0.0	0.3	0.3	-5.6	-1.9	0.1	5.6	30.0	434%
	37	0.1	-3.6	-2.8	0.0	0.5	0.4	0.1	-3.8	-2.6	3.9	30.0	664%
	38	0.0	-4.0	-2.2	0.0	0.5	0.3	0.1	-4.1	-2.1	4.2	30.0	616%
	39	0.1	-6.3	0.0	-1.2	0.5	0.1	-6.6	0.0	0.3	6.9	30.0	337%
	40	-0.4	3.9	2.8	-0.5	0.4	-0.4	-0.5	2.7	4.1	4.5	30.0	560%
Bottom Forging	41	-0.2	0.6	1.2	-0.1	0.1	-0.1	-0.2	0.6	1.2	1.4	30.0	Large
	42	0.7	-0.2	3.2	-0.3	0.0	-0.2	3.3	-0.2	0.8	3.5	30.0	759%
	43	-1.1	-0.2	-0.1	-0.1	0.0	0.0	-1.1	-0.2	-0.1	1.1	30.0	Large
	44	-0.2	0.2	3.2	-0.1	0.0	0.0	3.2	-0.2	0.3	3.5	30.0	767%
	45	0.1	-0.8	-1.1	-0.2	0.0	0.2	0.1	-1.1	-0.8	1.2	30.0	Large
	46	-1.4	-0.7	1.4	-0.2	-0.2	0.0	1.4	-1.4	-0.6	2.9	30.0	948%
Ram Access Cover Plate	47	-2.7	-0.2	0.2	0.2	0.0	0.0	-2.7	-0.2	0.2	2.9	47.1	Large
	48	0.2	0.6	2.6	-0.3	0.1	0.0	2.6	0.0	0.8	2.5	47.1	Large
	49	-1.8	-0.2	-0.2	0.1	0.0	0.1	-1.9	-0.2	-0.2	1.7	47.1	Large
	50	-0.4	0.3	2.1	-0.2	0.0	0.1	2.1	-0.4	0.3	2.5	47.1	Large
	51	-0.4	-0.8	-1.3	0.2	0.1	-0.2	-1.4	-0.8	-0.3	1.1	47.1	Large
	52	0.2	0.7	2.3	0.1	0.0	-0.1	2.3	0.1	0.7	2.1	47.1	Large
nct-com3.xls, (1.110)drop+t-40+ip50										Minimum Margin of Safety			167%

Table 2.6.13-59
1' Drop + Thermal (-40°F) + 50 psig Internal Pressure - Total Stresses @ 0° Azimuth

Cask Component	Stress Point	Stress Components (ksi)						Principal Stresses (ksi)			SI (ksi)	Stress Limit	M.S.
		S_X	S_Y	S_Z	S_{XY}	S_{YZ}	S_{XZ}	S_1	S_2	S_3			
Top Cover	1	-0.3	-5.0	-6.3	-0.1	0.1	-0.2	-0.3	-6.3	-5.0	6.0	60.0	897%
	2	0.0	-0.8	1.1	0.2	0.0	-0.1	1.1	-0.8	0.1	2.0	60.0	Large
	3	-5.4	-3.5	-5.4	0.1	0.0	0.0	-3.5	-5.4	-5.4	1.9	60.0	Large
	4	-0.3	-1.0	2.8	0.3	0.0	-0.1	2.8	-1.1	-0.2	3.9	60.0	Large
	5	-8.4	-2.8	-0.9	-0.2	0.3	-0.1	-8.4	-2.8	-0.9	7.5	60.0	701%
	6	4.8	-1.8	7.5	0.3	0.1	-0.1	-1.8	4.8	7.5	9.2	60.0	549%
Top Flange	7	-12.9	-14.4	-5.9	-2.4	0.1	0.0	-5.9	-16.1	-11.2	10.3	60.0	484%
	8	-5.3	17.4	4.6	-0.4	-0.1	0.2	17.4	-5.3	4.6	22.7	60.0	164%
	9	-0.7	3.2	-9.0	0.5	0.8	-0.6	-9.1	-0.7	3.3	12.4	60.0	383%
	10	-3.1	-6.6	-13.6	-0.3	0.2	-0.8	-13.6	-6.7	-3.0	10.6	60.0	467%
Inner Shell	11	-0.6	8.5	-13.0	0.0	0.5	-0.5	-13.0	-0.6	8.5	21.5	60.0	179%
	12	-1.2	-18.2	-21.6	-2.3	0.0	-0.7	-0.9	-21.6	-18.5	20.7	60.0	190%
	13	-0.5	-5.3	-2.8	0.0	-0.6	-0.3	-5.4	-2.7	-0.4	5.0	60.0	Large
	14	-0.4	-4.3	-3.2	-0.1	-0.4	-0.4	-0.3	-4.4	-3.1	4.2	60.0	Large
	15	-0.3	-3.0	3.7	0.0	-0.6	0.3	3.8	-3.1	-0.3	6.8	60.0	779%
	16	-0.2	-0.3	5.3	0.0	-0.5	0.3	5.3	-0.4	-0.2	5.7	60.0	950%
	17	-0.3	1.7	3.0	0.0	0.0	0.2	-0.3	1.7	3.0	3.3	60.0	Large
	18	-0.2	4.6	6.6	0.0	0.0	0.5	-0.2	4.6	6.7	6.9	60.0	774%
	19	-0.2	-3.1	3.6	0.0	0.6	0.3	3.7	-3.1	-0.3	6.8	60.0	777%
	20	-0.2	-0.6	5.6	0.0	0.5	0.4	5.6	-0.6	-0.2	6.3	60.0	856%
	21	-0.4	-4.6	-3.7	0.1	0.5	-0.4	-0.4	-4.9	-3.5	4.6	60.0	Large
	22	-0.4	-6.2	-3.9	0.1	0.4	-0.5	-0.3	-6.2	-3.8	5.9	60.0	911%
	23	-0.9	-2.9	-7.3	-0.1	-0.2	-0.4	-7.3	-2.9	-0.9	6.5	60.0	825%
	24	-0.8	-7.8	-8.5	0.3	0.0	-0.2	-0.8	-8.5	-7.8	7.7	60.0	681%
	25	-8.5	-2.3	-5.9	-0.3	-0.2	-0.1	-2.3	-8.5	-5.9	6.2	60.0	869%
	26	-11.2	-2.9	-5.9	1.0	0.0	0.0	-11.3	-5.9	-2.8	8.6	60.0	600%
Outer Shell	27	0.2	-6.6	-9.9	3.2	0.3	-1.0	1.5	-10.2	-7.7	11.7	60.0	414%
	28	-2.5	4.5	-8.0	2.0	-0.2	-0.5	5.0	-8.0	-3.0	13.0	60.0	361%
	29	0.1	5.7	-5.7	-0.7	-1.0	-0.6	-5.9	0.1	5.9	11.8	60.0	410%
	30	2.2	0.3	-6.5	-0.9	-0.5	-0.8	-6.6	0.0	2.6	9.2	60.0	552%
	31	-0.2	1.9	3.2	0.1	-1.0	0.4	3.7	-0.3	1.5	4.0	60.0	Large
	32	-0.1	10.8	6.8	0.1	-0.8	0.6	-0.2	6.7	11.0	11.2	60.0	437%
	33	-0.2	10.3	1.7	0.0	0.0	0.2	10.3	-0.2	1.7	10.5	60.0	471%
	34	-0.1	15.1	7.1	0.0	0.0	0.5	15.1	-0.2	7.1	15.3	60.0	293%
	35	-0.2	3.3	3.0	-0.1	0.9	0.4	-0.2	2.4	4.1	4.3	60.0	Large
	36	-0.1	11.1	7.1	-0.1	0.7	0.6	-0.2	7.0	11.2	11.4	60.0	428%
	37	0.0	6.3	-5.9	0.6	0.9	-0.6	6.5	-6.1	0.1	12.5	60.0	379%
	38	2.0	0.9	-5.8	0.7	0.5	-0.8	-5.9	0.6	2.4	8.3	60.0	622%
	39	-6.9	0.7	-3.3	2.4	0.0	-0.2	1.4	-7.7	-3.3	9.1	60.0	561%
	40	-3.1	17.7	2.4	-2.0	0.0	0.2	17.9	-3.3	2.4	21.2	60.0	183%
Bottom Forging	41	-6.4	-4.4	-5.9	0.2	-0.2	-0.1	-4.4	-6.5	-5.9	2.1	60.0	Large
	42	0.7	2.9	7.6	-0.3	0.0	-0.1	7.6	0.6	2.9	7.0	60.0	762%
	43	-4.5	-5.3	-8.8	0.0	0.0	-0.1	-8.8	-5.3	-4.5	4.4	60.0	Large
	44	-0.3	2.0	5.5	-0.1	0.0	-0.1	5.5	-0.3	2.0	5.8	60.0	937%
	45	-1.0	-4.3	-12.8	0.4	0.0	-0.3	-12.8	-4.3	-1.0	11.8	60.0	408%
	46	-2.6	-2.0	-2.4	-0.4	0.2	0.0	-1.7	-2.8	-2.5	1.2	60.0	Large
Ram Access Cover Plate	47	-2.5	-0.6	0.1	0.6	0.0	0.0	-2.7	-0.5	0.1	2.8	94.2	Large
	48	1.1	0.3	2.7	-0.3	-0.1	0.0	2.7	0.2	1.2	2.5	94.2	Large
	49	-2.8	-0.2	-0.5	0.3	-0.1	-0.1	-2.8	-0.5	-0.2	2.7	94.2	Large
	50	-0.4	-0.1	1.5	-0.1	0.0	-0.1	1.5	-0.5	0.0	1.9	94.2	Large
	51	-0.3	-5.0	-5.8	-0.1	-0.1	-0.2	-0.3	-5.8	-5.0	5.5	94.2	Large
	52	0.3	-0.4	1.0	-0.1	0.0	-0.1	1.0	-0.4	0.3	1.4	94.2	Large
											Minimum Margin of Safety		164%

nct-com3.xls, (1.110)drop+t-40+ip50

Table 2.6.13-60
1' Drop + Thermal (-40°F) + 50 psig Internal Pressure - Total Stresses @ 45° Azimuth

Cask Component	Stress Point	Stress Components (ksi)						Principal Stresses (ksi)			SI (ksi)	Stress Limit	M.S.
		S_X	S_Y	S_Z	S_{XY}	S_{YZ}	S_{XZ}	S_1	S_2	S_3			
Top Cover	1	-0.8	-5.0	-5.9	-0.2	0.0	0.7	-0.7	-5.9	-5.0	5.3	60.0	Large
	2	1.3	-0.8	-0.1	0.1	0.1	-1.1	1.9	-1.0	-0.6	2.9	60.0	Large
	3	-2.9	-3.5	-5.6	0.0	0.2	-1.2	-6.1	-3.5	-2.4	3.6	60.0	Large
	4	1.0	-1.0	0.4	0.1	0.2	-1.4	2.2	-1.1	-0.7	3.3	60.0	Large
	5	-2.5	-0.9	0.3	0.0	0.1	-2.2	-3.7	-0.9	1.5	5.2	60.0	Large
	6	1.5	-0.6	4.5	0.0	0.6	0.3	4.6	-0.7	1.5	5.2	60.0	Large
Top Flange	7	-8.2	-9.8	-3.0	-1.8	-0.2	0.2	-3.0	-11.0	-7.0	8.0	60.0	649%
	8	-3.2	11.5	4.4	-0.4	-0.5	0.1	-3.2	4.4	11.5	14.8	60.0	306%
	9	-1.2	5.6	-9.0	0.9	1.5	0.1	-9.2	-1.3	5.9	15.1	60.0	298%
	10	-5.0	-9.0	-13.5	-1.2	0.2	-1.0	-4.6	-13.6	-9.4	9.0	60.0	564%
Inner Shell	11	-0.9	9.8	-11.2	-0.4	0.9	0.1	9.9	-11.3	-0.9	21.1	60.0	184%
	12	-1.7	-19.6	-18.9	-3.2	0.0	0.0	-1.1	-20.1	-18.9	19.0	60.0	216%
	13	-0.3	-4.6	-1.2	0.0	-4.2	0.1	-7.4	-0.3	1.7	9.1	60.0	560%
	14	-0.3	-3.6	-0.2	0.0	-2.9	0.1	-5.3	-0.3	1.4	6.7	60.0	793%
	15	-0.1	-3.9	3.0	0.0	-4.2	0.0	-5.9	-0.1	5.0	10.9	60.0	450%
	16	0.0	-2.1	4.1	0.0	-3.2	0.0	5.4	-3.5	0.0	8.9	60.0	573%
	17	0.0	-2.0	3.5	0.0	0.0	0.0	3.6	-2.0	0.0	5.6	60.0	976%
	18	0.0	-0.9	3.9	0.0	0.0	-0.1	3.9	-0.9	0.0	4.8	60.0	Large
	19	-0.1	-3.7	3.2	0.0	4.2	0.0	-5.8	-0.1	5.2	11.0	60.0	446%
	20	0.0	-2.1	4.0	0.0	3.3	0.0	5.4	-3.5	0.0	9.0	60.0	570%
	21	-0.4	-4.2	-1.0	0.0	4.4	0.0	-7.2	-0.4	2.1	9.3	60.0	546%
	22	-0.3	-4.3	-0.8	0.0	2.9	0.1	-6.0	-0.3	0.9	6.8	60.0	777%
	23	-0.7	0.8	-5.9	0.1	-1.4	0.0	-6.1	-0.7	1.0	7.1	60.0	739%
	24	-0.9	-10.5	-8.7	1.1	-0.2	0.0	-0.7	-10.6	-8.7	9.9	60.0	508%
	25	-5.5	-0.9	-4.9	-0.4	-0.7	-1.1	-0.7	-6.5	-4.1	5.7	60.0	946%
	26	-8.1	-3.5	-5.4	1.3	0.1	-1.2	-8.8	-5.0	-3.2	5.7	60.0	958%
Outer Shell	27	0.7	4.7	-4.7	1.1	3.0	-0.1	-5.6	0.5	5.8	11.4	60.0	427%
	28	-1.0	1.4	-5.6	1.1	-1.1	-0.1	-5.8	-1.4	2.0	7.8	60.0	666%
	29	0.1	6.0	-2.9	0.0	-8.2	0.0	10.9	-7.7	0.1	18.6	60.0	222%
	30	2.4	5.1	-1.0	-0.2	-4.1	0.1	-3.1	2.4	7.2	10.3	60.0	485%
	31	-0.1	3.1	1.7	0.1	-6.5	0.0	8.9	-4.2	-0.1	13.1	60.0	358%
	32	-0.1	9.2	4.1	0.1	-4.7	0.0	12.0	-0.1	1.3	12.1	60.0	397%
	33	-0.1	6.9	2.6	0.0	-0.2	0.1	6.9	-0.1	2.6	7.0	60.0	761%
	34	-0.1	8.7	3.0	0.0	-0.1	-0.1	8.7	-0.1	3.0	8.8	60.0	583%
	35	-0.1	3.5	2.0	-0.1	6.0	0.0	8.8	-3.3	-0.1	12.2	60.0	392%
	36	-0.1	9.0	4.0	-0.1	4.3	-0.1	11.5	-0.1	1.5	11.6	60.0	418%
	37	0.0	6.5	-2.2	0.0	8.1	0.0	11.4	-7.1	0.0	18.4	60.0	225%
	38	2.3	4.4	-1.3	0.2	3.9	0.1	-3.3	2.2	6.3	9.6	60.0	524%
	39	-4.8	1.1	-2.7	1.6	0.6	-1.4	-5.9	-2.0	1.5	7.4	60.0	712%
	40	-1.5	9.3	0.6	-1.1	0.3	-0.1	9.4	-1.6	0.6	11.0	60.0	445%
Bottom Forging	41	-3.4	-2.9	-4.9	0.1	-0.7	-1.1	-5.6	-3.2	-2.4	3.3	60.0	Large
	42	0.1	2.8	6.1	-0.1	-0.2	-0.1	6.1	0.1	2.8	6.0	60.0	899%
	43	-2.3	-5.3	-8.9	0.1	-0.2	-1.1	-9.0	-5.3	-2.1	6.9	60.0	766%
	44	0.1	2.0	4.0	0.1	-0.1	-1.0	4.3	-0.2	1.9	4.4	60.0	Large
	45	-1.1	-3.7	-13.8	0.6	0.1	-0.9	-13.9	-3.8	-0.9	13.0	60.0	362%
	46	-1.1	-1.3	-3.7	-0.2	0.6	-1.3	-4.3	-1.4	-0.4	3.9	60.0	Large
Ram Access Cover Plate	47	-1.1	-0.5	-1.3	0.2	0.4	-1.5	-2.8	-0.5	0.4	3.2	94.2	Large
	48	0.9	0.0	0.6	0.0	-0.5	-0.8	1.6	-0.4	0.3	2.0	94.2	Large
	49	-0.8	-0.2	-1.3	-0.1	0.1	-1.6	-2.7	-0.3	0.6	3.3	94.2	Large
	50	0.8	0.0	-0.2	-0.1	0.0	-1.5	1.9	-1.3	0.0	3.2	94.2	Large
	51	-0.6	-5.0	-5.5	0.0	-0.1	0.5	-0.6	-5.6	-5.0	5.0	94.2	Large
	52	1.2	-0.4	0.1	0.0	-0.1	-0.8	1.6	-0.5	-0.3	2.1	94.2	Large
nct-com3.xls, (1.110)drop+t-40+ip50											Minimum Margin of Safety		184%

Table 2.6.13-61

1' Drop + Thermal (-40°F) + 50 psig Internal Pressure - Total Stresses @ 90° Azimuth

Cask Component	Stress Point	Stress Components (ksi)						Principal Stresses (ksi)			SI (ksi)	Stress Limit	M.S.
		S_X	S_Y	S_Z	S_{XY}	S_{YZ}	S_{XZ}	S_1	S_2	S_3			
Top Cover	1	-1.7	-5.0	-5.0	-0.1	-0.1	0.2	-1.7	-5.2	-4.9	3.5	60.0	Large
	2	2.3	-0.8	-1.1	0.0	0.2	0.1	2.3	-1.2	-0.7	3.5	60.0	Large
	3	-0.3	-3.5	-5.1	-0.2	0.1	0.2	-0.3	-5.1	-3.5	4.8	60.0	Large
	4	1.6	-1.0	-1.2	0.0	0.1	0.8	1.8	-1.4	-1.0	3.2	60.0	Large
	5	2.8	0.7	2.6	0.2	-0.1	1.2	3.9	0.7	1.6	3.2	60.0	Large
	6	-1.3	0.3	2.7	-0.2	-0.2	0.9	2.9	-1.5	0.3	4.4	60.0	Large
Top Flange	7	-1.9	-3.2	2.0	-0.9	-0.5	0.7	2.2	-3.7	-1.7	5.8	60.0	926%
	8	-0.5	3.5	5.0	-0.2	-0.4	0.2	-0.5	3.4	5.1	5.6	60.0	969%
	9	-0.8	4.3	-6.9	0.7	-0.9	0.0	-7.0	-0.9	4.5	11.5	60.0	422%
	10	-3.8	-8.2	-9.8	-1.1	-0.4	0.6	-3.5	-9.9	-8.4	6.5	60.0	827%
Inner Shell	11	-0.5	8.1	-7.6	-0.4	-1.9	0.1	8.3	-7.8	-0.5	16.1	60.0	272%
	12	-1.1	-18.2	-13.9	-3.0	-1.6	-0.1	-0.6	-19.1	-13.4	18.5	60.0	224%
	13	-0.1	-6.3	1.5	0.1	-3.6	0.0	-7.8	-0.1	2.9	10.7	60.0	459%
	14	0.1	-4.1	3.2	0.1	-3.6	0.0	-5.6	0.1	4.6	10.2	60.0	488%
	15	0.0	-6.6	2.1	0.0	-3.0	0.0	-7.5	0.0	3.0	10.6	60.0	468%
	16	0.0	-6.1	2.1	0.0	-3.4	0.0	-7.3	0.0	3.4	10.7	60.0	462%
	17	-0.1	-8.1	2.7	0.0	0.0	-0.1	-8.1	-0.1	2.7	10.8	60.0	457%
	18	-0.1	-8.1	1.3	0.0	0.0	0.1	-8.1	-0.1	1.3	9.3	60.0	542%
	19	0.0	-6.5	2.0	0.0	2.9	0.0	-7.4	0.0	3.0	10.3	60.0	480%
	20	0.0	-5.9	2.2	0.0	3.3	0.0	-7.1	0.0	3.3	10.4	60.0	475%
	21	0.0	-5.4	1.5	0.0	3.6	0.0	-6.9	0.0	3.0	9.9	60.0	505%
	22	0.1	-4.0	3.1	-0.1	3.6	0.0	-5.5	0.1	4.6	10.1	60.0	496%
	23	-0.2	3.6	-3.3	0.2	1.7	0.1	4.0	-3.7	-0.3	7.7	60.0	682%
	24	-0.7	-13.6	-7.4	2.0	1.5	-0.1	-14.2	-7.1	-0.4	13.9	60.0	333%
	25	-1.8	0.6	-2.8	-0.4	0.6	1.0	-3.5	-1.2	0.7	4.2	60.0	Large
	26	-4.1	-4.1	-3.5	1.6	0.1	1.1	-5.9	-3.8	-1.9	4.0	60.0	Large
Outer Shell	27	1.6	13.2	1.3	-1.3	-5.5	0.5	15.5	-0.9	1.5	16.4	60.0	266%
	28	0.8	-2.8	-1.9	0.0	-2.8	0.4	-5.2	0.4	1.0	6.2	60.0	867%
	29	0.6	4.3	-0.4	0.8	-5.5	0.2	8.0	-4.1	0.7	12.1	60.0	396%
	30	3.1	6.8	4.5	0.6	-5.2	0.0	11.0	0.3	3.1	10.7	60.0	463%
	31	0.0	2.0	-0.9	0.0	-4.1	0.0	4.9	-3.7	0.0	8.6	60.0	595%
	32	-0.1	4.1	0.2	0.0	-4.7	0.0	7.2	-3.0	-0.1	10.2	60.0	487%
	33	-0.1	0.6	1.0	0.0	-0.1	-0.1	-0.1	0.6	1.0	1.1	60.0	Large
	34	-0.1	0.6	-0.5	0.0	-0.1	0.0	0.6	-0.5	-0.1	1.1	60.0	Large
	35	0.0	1.4	-0.9	0.0	3.9	0.0	4.3	-3.8	0.0	8.1	60.0	639%
	36	-0.1	3.9	0.4	0.0	4.6	0.0	7.0	-2.8	-0.1	9.8	60.0	510%
	37	0.7	4.7	-0.3	-0.8	5.3	0.2	8.1	-3.8	0.7	11.8	60.0	407%
	38	3.0	6.2	4.6	-0.7	5.1	0.0	10.6	0.2	3.0	10.5	60.0	474%
	39	-1.8	1.6	-0.8	0.4	-0.7	1.7	-3.1	0.4	1.8	4.9	60.0	Large
	40	0.3	-0.3	0.4	0.2	2.2	0.3	-2.2	0.2	2.4	4.6	60.0	Large
Bottom Forging	41	0.2	-1.5	-2.8	0.1	0.6	1.0	0.6	-3.3	-1.4	3.8	60.0	Large
	42	-0.5	2.6	5.7	0.0	0.1	0.8	-0.6	2.6	5.8	6.4	60.0	835%
	43	0.1	-5.3	-8.0	0.3	0.0	0.5	0.2	-8.1	-5.3	8.2	60.0	627%
	44	0.3	2.0	3.3	0.2	0.0	0.8	0.1	2.0	3.5	3.4	60.0	Large
	45	-0.9	-3.3	-14.2	0.8	-0.1	0.2	-14.2	-3.5	-0.7	13.5	60.0	345%
	46	0.2	-0.8	-4.4	0.0	-0.2	0.4	-4.4	-0.8	0.3	4.7	60.0	Large
Ram Access Cover Plate	47	-0.1	-0.4	-2.5	-0.3	0.0	0.1	-2.5	-0.6	0.0	2.6	94.2	Large
	48	0.6	-0.3	-1.2	0.3	-0.1	0.2	0.7	-1.2	-0.4	1.9	94.2	Large
	49	0.7	-0.2	-1.6	-0.5	0.0	0.0	0.9	-1.6	-0.4	2.5	94.2	Large
	50	1.2	0.0	-1.8	0.1	-0.1	0.2	-1.8	0.0	1.2	3.0	94.2	Large
	51	-1.3	-5.0	-4.8	0.1	-0.1	0.2	-1.3	-5.1	-4.8	3.8	94.2	Large
	52	1.9	-0.4	-0.6	0.0	-0.1	0.1	1.9	-0.7	-0.3	2.6	94.2	Large
nct-com3.xls, (1.110)drop+t-40+ip50										Minimum Margin of Safety			224%

Table 2.6.13-62
1' Drop + Thermal (-40°F) + 50 psig Internal Pressure - Total Stresses @ 135° Azimuth

Cask Component	Stress Point	Stress Components (ksi)						Principal Stresses (ksi)			SI (ksi)	Stress Limit	M.S.
		S_X	S_Y	S_Z	S_{XY}	S_{YZ}	S_{XZ}	S_1	S_2	S_3			
Top Cover	1	-1.2	-5.0	-5.4	0.0	-0.2	-0.7	-1.1	-5.6	-5.0	4.5	60.0	Large
	2	1.1	-0.8	0.1	-0.1	0.1	1.1	1.8	-0.9	-0.5	2.7	60.0	Large
	3	-1.1	-3.5	-3.3	-0.1	0.0	1.1	-0.7	-3.7	-3.5	3.1	60.0	Large
	4	-0.1	-1.0	1.4	0.0	0.0	1.8	2.6	-1.3	-1.0	3.9	60.0	Large
	5	0.1	-0.3	4.6	0.2	-0.1	1.8	5.3	-0.7	-0.2	5.9	60.0	910%
	6	0.0	-0.5	6.1	-0.1	-0.4	1.0	6.3	-0.5	-0.2	6.7	60.0	790%
Top Flange	7	-3.2	-4.3	3.9	-1.1	-0.8	0.7	4.0	-4.9	-2.7	9.0	60.0	568%
	8	-0.8	4.8	7.0	-0.3	-0.6	0.2	-0.8	4.7	7.2	8.0	60.0	654%
	9	-0.7	3.5	-2.7	0.6	-1.2	-0.1	3.8	-2.9	-0.7	6.7	60.0	798%
	10	-3.3	-8.4	-6.7	-1.1	-0.8	0.2	-3.1	-8.9	-6.4	5.9	60.0	921%
Inner Shell	11	-0.5	6.9	-4.2	-0.4	-1.5	0.0	7.1	-4.4	-0.5	11.5	60.0	422%
	12	-1.0	-19.9	-11.6	-3.1	-1.7	-0.2	-0.5	-20.8	-11.3	20.3	60.0	196%
	13	0.0	-8.5	2.3	0.1	-1.9	0.0	-8.8	0.0	2.7	11.5	60.0	422%
	14	0.0	-8.3	2.3	0.1	-2.0	0.0	-8.6	0.0	2.7	11.3	60.0	431%
	15	-0.1	-9.6	1.1	0.0	-1.5	0.0	-9.8	-0.1	1.3	11.1	60.0	441%
	16	0.0	-9.1	1.6	0.0	-1.6	0.0	-9.4	0.0	1.9	11.3	60.0	433%
	17	0.0	-11.4	-0.1	0.0	0.0	0.0	-11.4	-0.1	0.0	11.4	60.0	426%
	18	0.0	-10.2	1.9	0.0	0.0	0.0	-10.2	0.0	1.9	12.1	60.0	397%
	19	-0.1	-9.8	1.1	0.0	1.4	0.0	-10.0	-0.1	1.2	11.2	60.0	436%
	20	0.0	-9.2	1.7	0.0	1.5	0.0	-9.4	0.0	1.9	11.2	60.0	433%
	21	0.0	-8.1	2.3	0.0	1.9	0.0	-8.5	0.0	2.6	11.1	60.0	442%
	22	0.0	-8.8	1.9	0.0	2.0	0.0	-9.2	0.0	2.3	11.5	60.0	423%
	23	-0.3	0.1	-0.9	0.2	1.6	0.0	-2.1	-0.4	1.3	3.4	60.0	Large
	24	-0.3	-12.6	-4.3	1.6	1.9	-0.2	-13.2	-3.9	-0.1	13.1	60.0	359%
	25	-3.6	-0.7	-0.7	-0.5	0.8	1.2	-4.2	-1.0	0.1	4.3	60.0	Large
	26	-5.9	-3.9	-1.1	1.4	0.3	1.2	-6.8	-3.4	-0.7	6.1	60.0	889%
Outer Shell	27	1.1	2.1	1.1	0.5	-5.1	0.5	6.7	-3.7	1.2	10.4	60.0	476%
	28	0.2	0.9	0.8	0.7	-3.1	0.3	4.0	-2.5	0.3	6.4	60.0	834%
	29	0.8	1.8	0.3	0.7	-2.9	-0.1	4.1	-2.0	0.7	6.1	60.0	887%
	30	3.1	-0.7	1.3	0.5	-3.1	0.0	-2.9	2.9	3.7	6.6	60.0	807%
	31	0.0	-2.1	-2.5	0.0	-1.9	0.0	-4.2	-0.4	0.0	4.2	60.0	Large
	32	-0.1	-0.5	-1.2	-0.1	-2.1	0.0	-3.0	-0.1	1.3	4.3	60.0	Large
	33	0.0	-3.7	-2.7	0.0	0.0	0.0	0.0	-3.7	-2.7	3.6	60.0	Large
	34	0.0	-1.9	0.3	0.0	0.0	0.0	-1.9	0.0	0.3	2.2	60.0	Large
	35	0.0	-2.5	-2.5	0.0	1.8	0.0	-4.4	-0.7	0.0	4.3	60.0	Large
	36	-0.1	-0.2	-1.0	0.1	2.0	0.0	-2.7	-0.1	1.5	4.1	60.0	Large
	37	0.8	2.1	0.9	-0.7	2.8	-0.1	4.5	-1.5	0.7	5.9	60.0	914%
	38	3.0	-0.8	1.5	-0.6	2.9	0.0	-2.9	2.8	3.7	6.5	60.0	817%
	39	-2.6	1.6	2.2	0.7	-0.7	1.9	-3.4	1.6	3.0	6.4	60.0	840%
	40	-0.2	6.7	4.8	-0.6	3.0	0.3	8.9	-0.4	2.7	9.3	60.0	546%
Bottom Forging	41	-1.6	-2.8	-0.7	0.1	0.8	1.2	0.3	-3.2	-2.2	3.5	60.0	Large
	42	0.0	2.7	8.6	-0.1	0.2	1.2	8.7	-0.1	2.7	8.9	60.0	577%
	43	-0.8	-5.3	-5.9	0.2	0.0	1.0	-0.6	-6.1	-5.3	5.6	60.0	979%
	44	-0.1	2.0	5.8	0.1	0.0	1.6	6.2	-0.5	2.0	6.7	60.0	791%
	45	-0.5	-3.8	-12.0	0.7	-0.1	0.8	-12.1	-3.9	-0.3	11.7	60.0	411%
	46	-0.9	-1.4	-2.5	-0.1	-0.8	1.5	-3.5	-1.4	0.1	3.6	60.0	Large
Ram Access Cover Plate	47	-0.8	-0.5	-0.6	0.1	-0.4	1.4	-2.2	-0.5	0.8	3.0	94.2	Large
	48	0.5	0.2	0.9	0.0	0.3	1.0	1.7	-0.3	0.2	2.0	94.2	Large
	49	-0.2	-0.2	-0.7	-0.3	-0.1	1.5	-2.0	-0.2	1.1	3.1	94.2	Large
	50	0.5	0.0	-0.1	0.0	-0.1	1.6	1.9	-1.5	0.0	3.3	94.2	Large
	51	-1.0	-5.0	-5.1	0.1	0.0	-0.5	-0.9	-5.2	-5.0	4.3	94.2	Large
	52	1.0	-0.4	0.3	0.1	0.0	0.8	1.5	-0.4	-0.2	2.0	94.2	Large
nct-com3.xls, (1.110)drop+t-40+ip50										Minimum Margin of Safety			196%

Table 2.6.13-63
1' Drop + Thermal (-40°F) + 50 psig Internal Pressure - Total Stresses @ 180° Azimuth

Cask Component	Stress Point	Stress Components (ksi)						Principal Stresses (ksi)			SI (ksi)	Stress Limit	M.S.
		S_X	S_Y	S_Z	S_{XY}	S_{YZ}	S_{XZ}	S_1	S_2	S_3			
Top Cover	1	-0.3	-5.0	-6.3	0.1	-0.1	-0.2	-0.3	-6.3	-5.0	6.0	60.0	897%
	2	0.0	-0.8	1.1	-0.2	0.0	-0.1	1.1	-0.8	0.1	2.0	60.0	Large
	3	-1.9	-3.5	-2.4	-0.1	0.0	0.0	-3.5	-2.4	-1.9	1.6	60.0	Large
	4	-1.1	-1.0	3.1	0.1	0.0	-0.1	3.1	-1.1	-0.9	4.2	60.0	Large
	5	-1.3	-0.5	5.4	0.1	-0.1	0.0	5.4	-1.3	-0.5	6.7	60.0	791%
	6	0.3	-0.5	8.1	0.0	-0.1	-0.1	8.1	-0.5	0.3	8.6	60.0	598%
Top Flange	7	-7.6	-11.6	2.2	-1.9	0.4	-0.3	2.2	-12.4	-6.9	14.6	60.0	312%
	8	-1.8	14.2	9.7	-0.1	-0.8	-0.8	-1.8	9.6	14.3	16.1	60.0	272%
	9	-0.6	3.5	-2.3	0.6	-0.1	-0.2	3.6	-2.3	-0.7	5.9	60.0	916%
	10	-3.4	-9.2	-6.4	-1.3	-0.2	-0.1	-3.1	-9.5	-6.4	6.4	60.0	834%
Inner Shell	11	-0.5	6.8	-4.0	-0.5	-0.3	-0.1	6.9	-4.0	-0.5	10.9	60.0	451%
	12	-1.0	-21.7	-11.6	-3.4	-0.4	-0.1	-0.4	-22.2	-11.6	21.8	60.0	175%
	13	0.0	-9.5	1.8	0.1	-0.3	0.0	-9.5	0.0	1.8	11.3	60.0	431%
	14	0.0	-8.8	2.8	0.1	-0.3	-0.1	-8.8	0.0	2.8	11.6	60.0	415%
	15	0.0	-10.6	0.5	0.0	-0.3	0.1	-10.6	0.0	0.5	11.1	60.0	440%
	16	0.0	-9.9	1.7	0.0	-0.3	0.0	-9.9	0.0	1.7	11.6	60.0	419%
	17	-0.1	-12.3	0.1	0.0	0.0	0.1	-12.3	-0.1	0.2	12.5	60.0	380%
	18	-0.1	-11.5	1.0	0.0	0.0	0.1	-11.5	-0.1	1.0	12.6	60.0	378%
	19	0.0	-10.9	0.5	0.0	0.3	0.1	-10.9	0.0	0.5	11.3	60.0	429%
	20	0.0	-10.1	1.7	0.0	0.3	0.0	-10.1	0.0	1.7	11.8	60.0	411%
	21	0.0	-9.1	1.5	0.0	0.3	0.0	-9.1	0.0	1.5	10.6	60.0	465%
	22	0.0	-9.3	2.3	0.0	0.3	-0.1	-9.3	0.0	2.3	11.6	60.0	416%
	23	-0.3	-0.1	-0.4	0.2	0.3	-0.2	-0.8	-0.2	0.1	0.9	60.0	Large
	24	-0.4	-13.9	-4.0	1.8	0.4	-0.2	-14.2	-4.0	-0.1	14.0	60.0	327%
	25	-4.1	-0.7	-0.1	-0.5	0.1	-0.1	-4.1	-0.7	-0.1	4.1	60.0	Large
	26	-6.6	-4.4	-0.7	1.6	0.1	-0.1	-7.5	-3.5	-0.7	6.8	60.0	784%
Outer Shell	27	1.0	0.3	1.0	0.8	-0.7	0.2	-0.6	1.1	1.7	2.3	60.0	Large
	28	0.0	2.2	1.7	0.8	-0.7	-0.3	2.9	-0.2	1.3	3.1	60.0	Large
	29	0.8	0.7	-1.3	0.7	-0.6	0.4	-1.6	0.3	1.4	3.1	60.0	Large
	30	3.1	-1.3	1.1	0.5	-0.6	0.3	-1.5	1.2	3.2	4.7	60.0	Large
	31	0.0	-3.6	-3.6	0.0	-0.4	0.3	0.0	-4.0	-3.2	4.0	60.0	Large
	32	0.0	-1.5	-1.4	0.0	-0.4	0.3	0.0	-1.8	-1.1	1.9	60.0	Large
	33	-0.1	-4.8	-2.2	0.0	0.0	0.3	-4.8	-2.3	-0.1	4.8	60.0	Large
	34	-0.1	-3.7	-0.8	0.0	0.0	0.3	-3.7	-0.9	0.0	3.8	60.0	Large
	35	0.0	-4.0	-3.5	0.0	0.4	0.3	0.0	-4.2	-3.3	4.2	60.0	Large
	36	0.0	-1.4	-1.1	0.0	0.3	0.3	0.0	-1.7	-1.0	1.7	60.0	Large
	37	0.8	0.8	-0.8	-0.7	0.5	0.4	-1.1	0.4	1.5	2.6	60.0	Large
	38	3.0	-1.4	1.6	-0.6	0.5	0.3	-1.6	1.6	3.1	4.7	60.0	Large
	39	-3.0	1.6	3.0	0.9	-0.4	0.3	-3.2	1.7	3.1	6.2	60.0	863%
	40	-0.4	7.4	6.0	-0.7	0.4	-0.4	-0.4	5.8	7.6	8.0	60.0	647%
Bottom Forging	41	-2.0	-2.8	-0.1	0.0	0.1	-0.1	-0.1	-2.8	-2.0	2.7	60.0	Large
	42	0.8	2.7	10.2	-0.2	0.0	-0.2	10.3	0.8	2.7	9.4	60.0	535%
	43	-1.1	-5.3	-5.2	0.1	0.0	0.0	-1.1	-5.3	-5.2	4.2	60.0	Large
	44	-0.2	2.0	7.2	0.1	0.0	0.0	7.2	-0.2	2.0	7.5	60.0	704%
	45	-0.1	-4.2	-10.7	0.5	0.0	0.2	-10.7	-4.3	0.0	10.7	60.0	460%
	46	-1.9	-2.0	-1.2	-0.2	-0.3	0.0	-1.2	-2.2	-1.8	1.0	60.0	Large
Ram Access Cover Plate	47	-1.9	-0.6	0.8	0.3	0.0	0.0	-1.9	-0.5	0.8	2.7	94.2	Large
	48	0.4	0.5	2.7	-0.2	0.1	0.0	2.7	0.2	0.7	2.4	94.2	Large
	49	-1.7	-0.2	0.3	0.1	0.0	0.1	-1.7	-0.2	0.3	1.9	94.2	Large
	50	-0.5	-0.1	1.4	0.0	0.0	0.1	1.4	-0.5	-0.1	2.0	94.2	Large
	51	-0.3	-5.0	-5.8	0.1	0.1	-0.2	-0.3	-5.8	-5.0	5.5	94.2	Large
	52	0.3	-0.4	1.0	0.1	0.0	-0.1	1.0	-0.4	0.3	1.4	94.2	Large
nct-com3.xls, (1.110)drop+t-40+ip50										Minimum Margin of Safety			175%

Table 2.6.13-64
5.3 psig External Pressure + Thermal (-40°F) - Pm @ All Azimuths

Cask Component	Stress Point	Stress Components (ksi)						Principal Stresses (ksi)			SI (ksi)	Stress Limit	M.S.
		S_X	S_Y	S_Z	S_{XY}	S_{YZ}	S_{XZ}	S_1	S_2	S_3			
Top Cover	1	0.00	0.00	0.00	0.00	0.00	0.00	0.00	0.00	0.00	0.00	20.0	Large
	2	0.00	0.00	0.00	0.00	0.00	0.00	0.00	0.00	0.00	0.00	20.0	Large
	3	0.00	0.00	0.00	0.01	0.00	0.00	-0.01	0.00	0.01	0.01	20.0	Large
	4	0.00	0.00	0.00	0.01	0.00	0.00	-0.01	0.00	0.01	0.01	20.0	Large
	5	0.00	-0.01	-0.02	0.01	0.00	0.00	0.01	-0.02	-0.02	0.03	20.0	Large
	6	0.00	-0.01	-0.02	0.01	0.00	0.00	0.01	-0.02	-0.02	0.03	20.0	Large
Top Flange	7	-0.01	0.00	-0.05	0.00	0.00	0.00	-0.05	-0.01	0.00	0.05	20.0	Large
	8	-0.01	0.00	-0.05	0.00	0.00	0.00	-0.05	-0.01	0.00	0.05	20.0	Large
	9	0.01	-0.03	-0.04	0.00	0.00	0.00	0.01	-0.04	-0.03	0.05	20.0	Large
	10	0.01	-0.03	-0.04	0.00	0.00	0.00	0.01	-0.04	-0.03	0.05	20.0	Large
Inner Shell	11	0.00	-0.03	-0.05	0.00	0.00	0.00	0.00	-0.05	-0.03	0.05	20.0	Large
	12	0.00	-0.03	-0.05	0.00	0.00	0.00	0.00	-0.05	-0.03	0.05	20.0	Large
	13	0.00	-0.04	-0.06	0.00	0.00	0.00	0.00	-0.06	-0.04	0.06	20.0	Large
	14	0.00	-0.04	-0.06	0.00	0.00	0.00	0.00	-0.06	-0.04	0.06	20.0	Large
	15	0.00	-0.04	-0.06	0.00	0.00	0.00	0.00	-0.06	-0.04	0.06	20.0	Large
	16	0.00	-0.04	-0.06	0.00	0.00	0.00	0.00	-0.06	-0.04	0.06	20.0	Large
	17	0.00	-0.04	-0.06	0.00	0.00	0.00	0.00	-0.06	-0.04	0.06	20.0	Large
	18	0.00	-0.04	-0.06	0.00	0.00	0.00	0.00	-0.06	-0.04	0.06	20.0	Large
	19	0.00	-0.04	-0.06	0.00	0.00	0.00	0.00	-0.06	-0.04	0.06	20.0	Large
	20	0.00	-0.04	-0.06	0.00	0.00	0.00	0.00	-0.06	-0.04	0.06	20.0	Large
	21	0.00	-0.04	-0.06	0.00	0.00	0.00	0.00	-0.06	-0.04	0.06	20.0	Large
	22	0.00	-0.04	-0.06	0.00	0.00	0.00	0.00	-0.06	-0.04	0.06	20.0	Large
	23	0.00	-0.03	0.02	-0.01	0.00	0.00	-0.04	0.00	0.02	0.06	20.0	Large
	24	0.00	-0.03	0.02	-0.01	0.00	0.00	-0.04	0.00	0.02	0.06	20.0	Large
	25	-0.03	-0.01	0.01	-0.01	0.00	0.00	-0.03	-0.01	0.01	0.05	20.0	Large
	26	-0.03	-0.01	0.01	-0.01	0.00	0.00	-0.03	-0.01	0.01	0.05	20.0	Large
Outer Shell	27	0.00	-0.02	-0.04	0.00	0.00	0.00	-0.04	-0.02	0.00	0.03	20.0	Large
	28	0.00	-0.02	-0.04	0.00	0.00	0.00	-0.04	-0.02	0.00	0.03	20.0	Large
	29	0.00	-0.02	-0.04	0.00	0.00	0.00	-0.04	-0.02	0.00	0.04	20.0	Large
	30	0.00	-0.02	-0.04	0.00	0.00	0.00	-0.04	-0.02	0.00	0.04	20.0	Large
	31	0.00	-0.02	-0.04	0.00	0.00	0.00	-0.04	-0.02	0.00	0.04	20.0	Large
	32	0.00	-0.02	-0.04	0.00	0.00	0.00	-0.04	-0.02	0.00	0.04	20.0	Large
	33	0.00	-0.02	-0.04	0.00	0.00	0.00	-0.04	-0.02	0.00	0.04	20.0	Large
	34	0.00	-0.02	-0.04	0.00	0.00	0.00	-0.04	-0.02	0.00	0.04	20.0	Large
	35	0.00	-0.02	-0.04	0.00	0.00	0.00	-0.04	-0.02	0.00	0.04	20.0	Large
	36	0.00	-0.02	-0.04	0.00	0.00	0.00	-0.04	-0.02	0.00	0.04	20.0	Large
	37	0.00	-0.02	-0.04	0.00	0.00	0.00	-0.04	-0.02	0.00	0.04	20.0	Large
	38	0.00	-0.02	-0.04	0.00	0.00	0.00	-0.04	-0.02	0.00	0.04	20.0	Large
	39	-0.01	0.00	0.01	0.00	0.00	0.00	-0.01	0.00	0.01	0.03	20.0	Large
	40	-0.01	0.00	0.01	0.00	0.00	0.00	-0.01	0.00	0.01	0.03	20.0	Large
Bottom Forging	41	-0.01	-0.03	-0.02	-0.01	0.00	0.00	-0.01	-0.03	-0.02	0.02	20.0	Large
	42	-0.01	-0.03	-0.02	-0.01	0.00	0.00	-0.01	-0.03	-0.02	0.02	20.0	Large
	43	-0.01	0.00	-0.02	-0.01	0.00	0.00	0.00	-0.02	-0.01	0.02	20.0	Large
	44	-0.01	0.00	-0.02	-0.01	0.00	0.00	0.00	-0.02	-0.01	0.02	20.0	Large
	45	0.01	0.00	0.03	-0.01	0.00	0.00	0.00	0.01	0.03	0.03	20.0	Large
	46	0.01	0.00	0.03	-0.01	0.00	0.00	0.00	0.01	0.03	0.03	20.0	Large
Ram Access Cover Plate	47	0.00	0.00	0.00	-0.01	0.00	0.00	0.01	-0.01	0.00	0.01	31.4	Large
	48	0.00	0.00	0.00	-0.01	0.00	0.00	0.01	-0.01	0.00	0.01	31.4	Large
	49	0.00	0.00	0.00	0.00	0.00	0.00	0.00	0.00	0.00	0.01	31.4	Large
	50	0.00	0.00	0.00	0.00	0.00	0.00	0.00	0.00	0.00	0.01	31.4	Large
	51	0.00	0.00	0.00	0.00	0.00	0.00	0.00	0.00	0.00	0.01	31.4	Large
	52	0.00	0.00	0.00	0.00	0.00	0.00	0.00	0.00	0.00	0.01	31.4	Large

nct_sar.xls, 5.3ep+t-40

Table 2.6.13-65
5.3 psig External Pressure + Thermal (-40°F) - Pm + Pb @ All Azimuths

Cask Component	Stress Point	Stress Components (ksi)						Principal Stresses (ksi)			SI (ksi)	Stress Limit	M.S.
		S_X	S_Y	S_Z	S_{XY}	S_{YZ}	S_{XZ}	S_1	S_2	S_3			
Top Cover	1	0.22	0.00	0.22	0.00	0.00	0.00	0.00	0.22	0.22	0.22	30.0	Large
	2	-0.21	0.00	-0.21	0.00	0.00	0.00	0.00	-0.21	-0.21	0.21	30.0	Large
	3	0.17	0.00	0.19	0.01	0.00	0.00	0.00	0.17	0.19	0.19	30.0	Large
	4	-0.16	0.00	-0.18	0.01	0.00	0.00	0.00	-0.18	-0.16	0.18	30.0	Large
	5	0.03	0.00	0.08	0.02	0.00	0.00	-0.01	0.04	0.08	0.08	30.0	Large
	6	-0.04	-0.01	-0.11	0.01	0.00	0.00	-0.11	-0.04	-0.01	0.10	30.0	Large
Top Flange	7	-0.01	-0.01	-0.06	0.00	0.00	0.00	-0.06	-0.01	-0.01	0.05	30.0	Large
	8	0.00	0.01	-0.04	0.00	0.00	0.00	-0.04	0.00	0.01	0.05	30.0	Large
	9	0.00	-0.05	-0.05	-0.01	0.00	0.00	0.00	-0.05	-0.05	0.06	30.0	Large
	10	0.01	0.00	-0.03	0.00	0.00	0.00	-0.03	0.00	0.01	0.05	30.0	Large
Inner Shell	11	0.00	-0.04	-0.05	0.00	0.00	0.00	0.00	-0.05	-0.04	0.05	30.0	Large
	12	0.00	-0.03	-0.05	0.00	0.00	0.00	0.00	-0.05	-0.03	0.04	30.0	Large
	13	0.00	-0.03	-0.06	0.00	0.00	0.00	0.00	-0.06	-0.03	0.06	30.0	Large
	14	0.00	-0.04	-0.06	0.00	0.00	0.00	0.00	-0.06	-0.04	0.05	30.0	Large
	15	0.00	-0.03	-0.06	0.00	0.00	0.00	0.00	-0.06	-0.03	0.06	30.0	Large
	16	0.00	-0.04	-0.06	0.00	0.00	0.00	0.00	-0.06	-0.04	0.06	30.0	Large
	17	0.00	-0.04	-0.06	0.00	0.00	0.00	0.00	-0.06	-0.04	0.06	30.0	Large
	18	0.00	-0.04	-0.06	0.00	0.00	0.00	0.00	-0.06	-0.04	0.06	30.0	Large
	19	0.00	-0.04	-0.06	0.00	0.00	0.00	0.00	-0.06	-0.04	0.06	30.0	Large
	20	0.00	-0.04	-0.06	0.00	0.00	0.00	0.00	-0.06	-0.04	0.06	30.0	Large
	21	0.00	-0.03	-0.06	0.00	0.00	0.00	0.00	-0.06	-0.03	0.06	30.0	Large
	22	0.00	-0.04	-0.06	0.00	0.00	0.00	0.00	-0.06	-0.04	0.06	30.0	Large
	23	0.00	-0.10	0.00	0.00	0.00	0.00	-0.10	0.00	0.00	0.10	30.0	Large
	24	0.00	0.04	0.04	-0.02	0.00	0.00	-0.01	0.04	0.05	0.06	30.0	Large
	25	-0.05	-0.09	-0.01	-0.01	0.00	0.00	-0.01	-0.09	-0.05	0.08	30.0	Large
	26	0.00	0.06	0.04	-0.01	0.00	0.00	0.00	0.04	0.06	0.07	30.0	Large
Outer Shell	27	0.00	-0.05	-0.05	0.00	0.00	0.00	0.00	-0.05	-0.05	0.05	30.0	Large
	28	0.00	0.02	-0.03	0.00	0.00	0.00	-0.03	0.00	0.02	0.04	30.0	Large
	29	0.00	-0.01	-0.04	0.00	0.00	0.00	-0.04	-0.01	0.00	0.04	30.0	Large
	30	0.00	-0.02	-0.04	0.00	0.00	0.00	0.00	-0.04	-0.02	0.04	30.0	Large
	31	0.00	-0.01	-0.04	0.00	0.00	0.00	-0.04	-0.01	0.00	0.04	30.0	Large
	32	0.00	-0.02	-0.04	0.00	0.00	0.00	-0.04	-0.02	0.00	0.04	30.0	Large
	33	0.00	-0.02	-0.04	0.00	0.00	0.00	-0.04	-0.02	0.00	0.04	30.0	Large
	34	0.00	-0.02	-0.04	0.00	0.00	0.00	-0.04	-0.02	0.00	0.04	30.0	Large
	35	0.00	-0.02	-0.04	0.00	0.00	0.00	-0.04	-0.02	0.00	0.04	30.0	Large
	36	0.00	-0.02	-0.04	0.00	0.00	0.00	-0.04	-0.02	0.00	0.04	30.0	Large
	37	0.00	-0.01	-0.04	0.00	0.00	0.00	-0.04	-0.01	0.00	0.04	30.0	Large
	38	0.00	-0.02	-0.04	0.00	0.00	0.00	-0.04	-0.02	0.00	0.04	30.0	Large
	39	-0.03	-0.06	-0.01	-0.01	0.00	0.00	-0.06	-0.02	-0.01	0.05	30.0	Large
	40	0.00	0.06	0.03	0.01	0.00	0.00	-0.01	0.03	0.07	0.07	30.0	Large
Bottom Forging	41	-0.03	-0.07	0.00	-0.01	0.00	0.00	-0.07	-0.03	0.00	0.07	30.0	Large
	42	0.01	0.01	-0.05	0.00	0.00	0.00	-0.05	0.01	0.01	0.06	30.0	Large
	43	0.01	0.00	0.06	-0.01	0.00	0.00	0.06	0.00	0.02	0.06	30.0	Large
	44	-0.03	-0.01	-0.10	-0.01	0.00	0.00	-0.10	-0.03	0.00	0.09	30.0	Large
	45	0.03	0.00	0.11	0.00	0.00	0.00	0.11	0.00	0.03	0.11	30.0	Large
	46	-0.01	0.00	-0.06	-0.01	0.00	0.00	-0.06	-0.02	0.00	0.06	30.0	Large
Ram Access Cover Plate	47	0.03	0.01	0.03	-0.01	0.00	0.00	0.00	0.03	0.03	0.03	47.1	Large
	48	-0.03	0.00	-0.03	0.00	0.00	0.00	0.00	-0.03	-0.03	0.03	47.1	Large
	49	0.04	0.01	0.03	-0.01	0.00	0.00	0.00	0.03	0.04	0.04	47.1	Large
	50	-0.04	-0.01	-0.04	0.00	0.00	0.00	-0.01	-0.04	-0.04	0.03	47.1	Large
	51	0.04	0.00	0.04	0.00	0.00	0.00	0.00	0.04	0.04	0.04	47.1	Large
	52	-0.03	-0.01	-0.03	0.00	0.00	0.00	-0.01	-0.03	-0.03	0.03	47.1	Large

nct_sar.xls, 5.3ep+t-40

Table 2.6.13-66
5.3 psig External Pressure + Thermal (-40°F) - Total Stresses @ All Azimuths

Cask Component	Stress Point	Stress Components (ksi)						Principal Stresses (ksi)			SI (ksi)	Stress Limit	M.S.
		S_X	S_Y	S_Z	S_{XY}	S_{YZ}	S_{XZ}	S_1	S_2	S_3			
Top Cover	1	0.18	-2.65	-2.43	0.00	0.00	0.00	0.18	-2.65	-2.43	2.83	60.0	Large
	2	-0.25	-3.27	-3.47	0.00	0.00	0.00	-0.25	-3.47	-3.27	3.22	60.0	Large
	3	0.18	-1.92	-0.53	-0.07	0.00	0.00	-1.92	-0.53	0.18	2.10	60.0	Large
	4	-0.15	-2.53	-1.51	0.09	0.00	0.00	-0.15	-2.54	-1.51	2.39	60.0	Large
	5	0.99	0.31	4.72	0.08	0.00	0.00	4.72	0.30	1.00	4.42	60.0	Large
	6	-0.18	-0.73	3.50	-0.20	0.00	0.00	3.50	-0.80	-0.11	4.30	60.0	Large
Top Flange	7	-2.55	-3.62	3.30	-0.96	0.00	0.00	3.30	-4.18	-1.98	7.48	60.0	7.02
	8	-0.60	4.23	6.22	-0.21	0.00	0.00	-0.61	4.24	6.22	6.83	60.0	7.79
	9	-0.41	1.63	-4.07	0.37	0.00	0.00	-4.07	-0.47	1.70	5.77	60.0	9.40
	10	-2.40	-7.48	-6.75	-0.85	0.00	0.00	-2.27	-7.62	-6.75	5.35	60.0	Large
Inner Shell	11	-0.43	5.84	-5.86	-0.25	0.00	0.00	5.85	-5.86	-0.44	11.71	60.0	4.12
	12	-0.94	-19.28	-12.58	-2.75	0.00	0.00	-0.53	-19.68	-12.58	19.15	60.0	2.13
	13	-0.01	-7.80	0.10	0.06	0.00	0.00	-7.80	-0.01	0.10	7.90	60.0	6.59
	14	0.00	-6.75	0.87	0.06	0.00	0.00	-6.75	0.00	0.87	7.62	60.0	6.87
	15	0.00	-7.66	-0.46	-0.01	0.00	0.00	-7.66	-0.46	0.00	7.65	60.0	6.84
	16	0.00	-6.90	0.30	0.00	0.00	0.00	-6.90	0.00	0.30	7.20	60.0	7.34
	17	0.00	-7.81	-0.53	0.00	0.00	0.00	-7.81	-0.53	0.00	7.81	60.0	6.68
	18	-0.01	-6.74	0.36	0.00	0.00	0.00	-6.74	-0.01	0.36	7.10	60.0	7.45
	19	0.00	-7.73	-0.46	0.00	0.00	0.00	-7.73	-0.46	0.00	7.73	60.0	6.76
	20	-0.01	-6.82	0.34	0.00	0.00	0.00	-6.82	-0.01	0.34	7.16	60.0	7.38
	21	-0.01	-7.28	-0.03	-0.02	0.00	0.00	-7.28	-0.03	-0.01	7.28	60.0	7.25
	22	0.00	-7.26	0.45	-0.02	0.00	0.00	-7.26	0.00	0.45	7.72	60.0	6.77
	23	-0.31	-1.36	-2.16	0.07	0.00	0.00	-0.31	-2.16	-1.36	1.85	60.0	Large
	24	-0.26	-11.70	-4.66	1.17	0.00	0.00	-11.82	-4.66	-0.14	11.67	60.0	4.14
	25	-3.60	-2.24	-1.57	-0.39	0.00	0.00	-3.70	-2.13	-1.57	2.13	60.0	Large
	26	-5.03	-2.91	-1.20	1.19	0.00	0.00	-5.57	-2.38	-1.20	4.37	60.0	Large
Outer Shell	27	1.52	7.76	2.04	-0.45	0.00	0.00	7.79	1.48	2.04	6.31	60.0	8.51
	28	0.61	-1.84	-0.48	0.35	0.00	0.00	-1.89	-0.48	0.66	2.55	60.0	Large
	29	0.71	3.74	1.53	0.72	0.00	0.00	3.90	0.54	1.53	3.36	60.0	Large
	30	3.08	3.04	3.66	0.54	0.00	0.00	2.53	3.60	3.66	1.13	60.0	Large
	31	-0.06	1.42	-0.99	-0.05	0.00	0.00	1.42	-0.99	-0.06	2.41	60.0	Large
	32	-0.07	3.76	0.54	-0.05	0.00	0.00	3.76	-0.07	0.54	3.83	60.0	Large
	33	-0.07	1.77	-0.37	0.00	0.00	0.00	1.77	-0.37	-0.07	2.14	60.0	Large
	34	-0.05	3.41	0.99	0.00	0.00	0.00	3.41	-0.05	0.99	3.46	60.0	Large
	35	-0.05	1.10	-1.09	0.04	0.00	0.00	1.10	-1.09	-0.05	2.19	60.0	Large
	36	-0.06	4.06	0.73	0.04	0.00	0.00	4.06	-0.06	0.73	4.12	60.0	Large
	37	0.69	4.32	1.94	-0.72	0.00	0.00	4.46	0.55	1.94	3.91	60.0	Large
	38	2.95	2.55	3.73	-0.57	0.00	0.00	2.15	3.35	3.73	1.58	60.0	Large
	39	-2.75	1.02	1.06	0.26	0.00	0.00	-2.77	1.04	1.06	3.83	60.0	Large
	40	0.00	4.09	3.36	-0.19	0.00	0.00	-0.01	3.36	4.10	4.10	60.0	Large
Bottom Forging	41	-2.10	-3.73	-1.57	0.09	0.00	0.00	-3.74	-2.10	-1.57	2.16	60.0	Large
	42	-0.13	2.78	6.75	-0.03	0.00	0.00	6.75	-0.13	2.78	6.89	60.0	7.71
	43	0.03	-5.12	-5.04	0.18	0.00	0.00	0.04	-5.13	-5.04	5.16	60.0	Large
	44	-0.02	1.74	3.93	0.11	0.00	0.00	3.93	-0.02	1.75	3.95	60.0	Large
	45	-0.04	-3.42	-9.51	0.63	0.00	0.00	-9.51	-3.54	0.07	9.58	60.0	5.26
	46	-0.38	-1.25	-2.62	-0.03	0.00	0.00	-2.62	-1.25	-0.38	2.25	60.0	Large
Ram Access Cover Plate	47	-0.05	-0.24	0.31	-0.03	0.00	0.00	0.31	-0.24	-0.04	0.55	94.2	Large
	48	-0.04	-0.08	0.00	0.02	0.00	0.00	-0.09	-0.03	0.00	0.09	94.2	Large
	49	0.71	0.22	0.82	-0.46	0.00	0.00	-0.05	0.82	0.98	1.04	94.2	Large
	50	-0.09	-0.37	-0.59	0.05	0.00	0.00	-0.08	-0.59	-0.38	0.51	94.2	Large
	51	0.00	-4.16	-4.20	0.00	0.00	0.00	0.00	-4.20	-4.16	4.19	94.2	Large
	52	0.02	-1.08	-1.18	0.00	0.00	0.00	0.02	-1.18	-1.08	1.20	94.2	Large

nct_sar.xls, 5.3ep+t-40

2.6.13.2 FO- and FC-DSC Load Combinations

The FC-DSC basket assembly components are evaluated for the NCT load combinations defined in Table 2.1.2-4 in the following sections. The load combinations evaluations consider the stresses due the applicable NCT load conditions in addition to stresses resulting from fabrication. Stress evaluations are performed using a combination of hand calculations and finite element analysis.

2.6.13.2.1 Spacer Disc Stress Analysis - Vibration Plus Thermal

The spacer disc stresses resulting from the -20°F thermal condition, from Section 2.6.11.2.2, are superimposed with the stresses due to the 2g vertical vibration load, from Section 2.6.11.3.1, to evaluate the vibration plus thermal load combination. The resulting stress intensities at selected ligament nodes are summarized in Table 2.6.13-67. The 20 maximum spacer disc stress intensities resulting from this load combination are reported in Table 2.6.13-68 and the corresponding node locations are shown in Figure 2.6.13-1.

The spacer disc stresses due to the vibration plus normal thermal load combination are classified as primary plus secondary and, as such, are limited to 3.0 S_m for normal condition. The design stress intensity, S_m, for ASME SA-537, Class 2 carbon steel at the edge of the spacer disc (highest stressed area) at 350°F is 26.55 ksi. Therefore, the allowable primary plus secondary stress intensity is 79.6 ksi. For nodes interior to the spacer disc the allowable primary plus secondary stress conservatively taken at temperature 620°F and is equal to 79.2 ksi. The minimum margin of safety in the spacer disc due to the vibration plus normal thermal load combination is +0.07. Therefore, the spacer disc meets the applicable stress acceptance criteria for the vibration plus normal thermal load combinations.

Table 2.6.13-67
FC-DSC Spacer Disc Ligament S.I. for Vibration + Thermal

Node	Stress Components (ksi)						SINT	Stress Type	Stress Limit	Margin of Safety
	SX	SY	SZ	SXY	SYZ	SXZ				
105	-.4	-32.1	0.0	0.4	0.0	0.0	32.1	$P_1 + P_b + Q$	79.2	1.47
104	-.14	-31.5	0.0	-0.35	0.0	0.0	31.5	$P_1 + P_b + Q$	79.2	1.52
496	27.9	0.44	0.0	-3.3	0.0	0.0	28.3	$P_1 + P_b + Q$	79.2	1.80
178	-.1	15.9	0.0	-2.4	0.0	0.0	16.8	$P_1 + P_b + Q$	79.2	3.71
534	5.8	3.8	0.0	-7.1	0.0	0.0	14.3	$P_1 + P_b + Q$	79.2	4.54
78	0.9	-13.3	0.0	0.23	0.0	0.0	14.2	$P_1 + P_b + Q$	79.2	4.58
904	-13.6	-0.02	0.0	0.37	0.0	0.0	13.6	$P_1 + P_b + Q$	79.2	4.83
82	-0.06	-13.1	0.0	0.0	0.0	0.0	13.1	$P_1 + P_b + Q$	79.2	5.04
83	0.11	-12.9	0.0	0.04	0.0	0.0	12.9	$P_1 + P_b + Q$	79.2	5.14
46	-12.5	-0.08	0.0	0.08	0.0	0.0	12.5	$P_1 + P_b + Q$	79.2	Large
10	-11.5	-0.07	0.0	-0.12	0.0	0.0	11.5	$P_1 + P_b + Q$	79.2	Large
25	-8.6	-11.3	0.0	0.12	0.0	0.0	11.3	$P_1 + P_b + Q$	79.2	Large
1028	4.7	5.3	0.0	5.7	0.0	0.0	11.3	$P_1 + P_b + Q$	79.2	Large
558	4.2	4.5	0.0	-5.4	0.0	0.0	10.9	$P_1 + P_b + Q$	79.2	Large
64	-9.9	0.82	0.0	-0.52	0.0	0.0	10.8	$P_1 + P_b + Q$	79.2	Large
706	-5.3	-4.9	0.0	0.31	0.0	0.0	5.5	$P_1 + P_b + Q$	79.2	Large
553	1.0	0.9	0.0	-1.8	0.0	0.0	3.6	$P_1 + P_b + Q$	79.2	Large
378	2.3	1.3	0.0	-0.11	0.0	0.0	2.3	$P_1 + P_b + Q$	79.2	Large

Notes:

(1) All stresses reported are in units of ksi.

(2) Thermal stress intensities are classified as secondary.

(3) The node locations corresponding to the reported ligament stress intensities are shown in Figure 2.6.11-5.

Table 2.6.13-68
Top 20 FC-DSC Spacer Disc S.I. for Vibration + Thermal

Node	Stress Components (ksi)						SINT	Stress Type	Stress Limit	Margin of Safety
	SX	SY	SZ	SXY	SYZ	SXZ				
498	71.5	-0.32	0.0	-9.1	0.0	0.0	74.1	$P_1 + P_b + Q$	79.6	.07
823	-0.32	67.8	0.0	8.2	0.0	0.0	70.0	$P_1 + P_b + Q$	79.6	.14
169	-0.33	67.8	0.0	-8.1	0.0	0.0	70.0	$P_1 + P_b + Q$	79.6	.14
1287	64.3	0.53	0.0	6.9	0.0	0.0	65.3	$P_1 + P_b + Q$	79.6	.22
466	57.2	-0.7	0.0	-10.4	0.0	0.0	61.6	$P_1 + P_b + Q$	79.2	.28
167	-1.3	55.8	0.0	-10.9	0.0	0.0	61.0	$P_1 + P_b + Q$	79.2	.30
821	-1.2	55.8	0.0	10.9	0.0	0.0	61.0	$P_1 + P_b + Q$	79.2	.30
1189	49.9	-5.1	0.0	9.5	0.0	0.0	58.1	$P_1 + P_b + Q$	79.2	.36
1308	41.8	4.1	0.0	12.2	0.0	0.0	45.4	$P_1 + P_b + Q$	79.2	.74
488	43.6	-1.4	0.0	-0.8	0.0	0.0	44.9	$P_1 + P_b + Q$	79.2	.76
267	0.00	36.9	0.0	-12.4	0.0	0.0	44.4	$P_1 + P_b + Q$	79.2	.78
921	-0.04	36.8	0.0	12.3	0.0	0.0	44.3	$P_1 + P_b + Q$	79.2	.79
1289	41.1	0.25	0.0	7.9	0.0	0.0	43.8	$P_1 + P_b + Q$	79.2	.80
486	42.4	-1.2	0.0	-1.7	0.0	0.0	43.7	$P_1 + P_b + Q$	79.2	.81
266	5.9	34.9	0.0	-16.2	0.0	0.0	43.5	$P_1 + P_b + Q$	79.2	.82
920	5.9	34.9	0.0	16.1	0.0	0.0	43.3	$P_1 + P_b + Q$	79.2	.82
519	0.9	35.6	0.0	-12.9	0.0	0.0	43.2	$P_1 + P_b + Q$	79.2	.83
497	42.6	1.2	0.0	-4.5	0.0	0.0	43.0	$P_1 + P_b + Q$	79.2	.84
1286	42.7	0.6	0.0	3.6	0.0	0.0	43.0	$P_1 + P_b + Q$	79.2	.84
940	0.8	35.2	0.0	12.7	0.0	0.0	42.9	$P_1 + P_b + Q$	79.2	.84

Notes:

(1) All stresses reported are in units of ksi.

(2) Thermal stress intensities are classified as secondary.

(3) The node locations corresponding to the 20 highest spacer disc stress intensities due to the vibration + thermal load combination are shown in Figure 2.6.13-1.

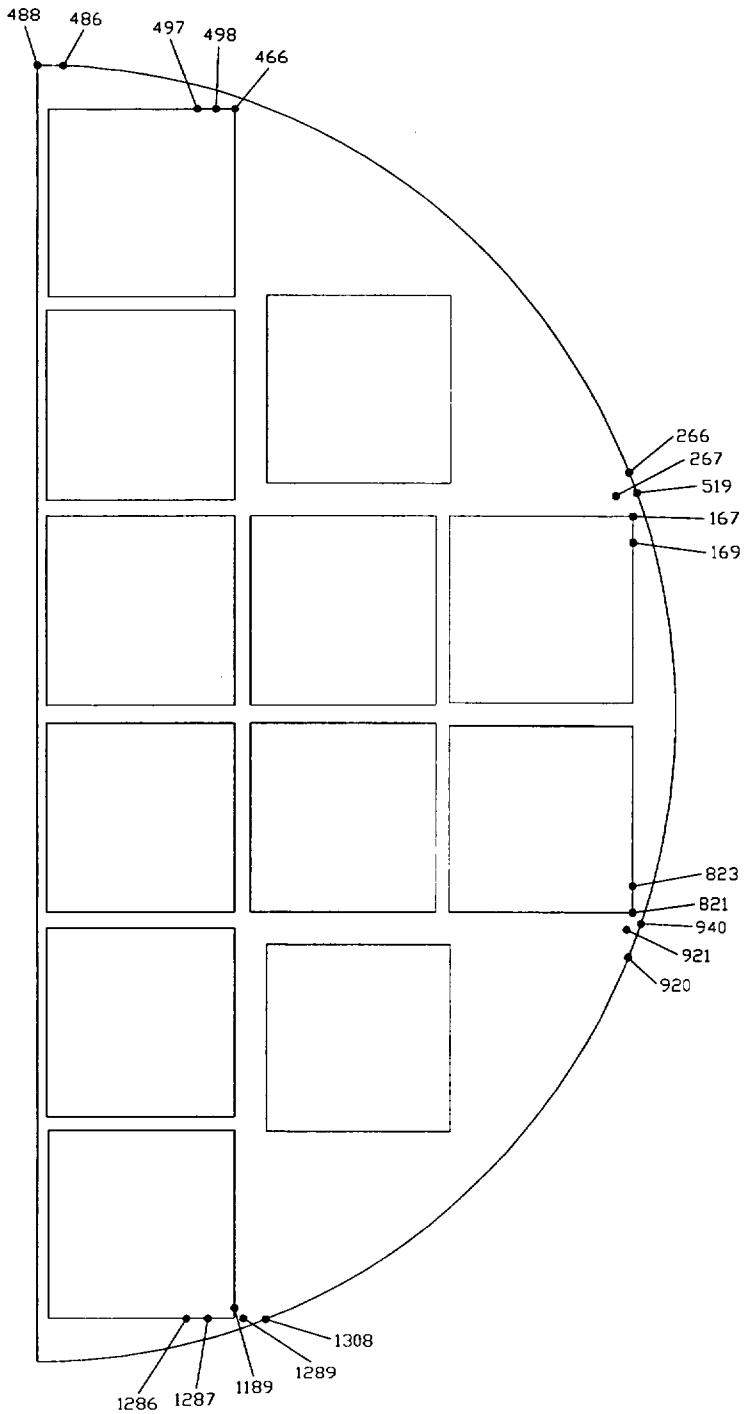

Figure 2.6.13-1
Location of Top 20 FC-DSC Spacer Disc S.I. for Vibration + Thermal

2.6.13.2.2 Support Rod Stress Analysis - Vibration Plus Thermal

The support rod stresses due to the normal thermal and vibration load conditions are calculated in Sections 2.6.11.2.4 and 2.6.11.3.2, respectively. The normal thermal load condition results in an axial tensile stress in the support rods of 4.0 ksi. The vibration load condition results in a bending stress in the support rod of 0.6 ksi. In addition to vibration and normal thermal, the support rod stresses due to preload applied during fabrication are included in the load combination. The axial tensile stress in the support rods due to the preload is 31.8 ksi. Therefore, the combined support rod stresses due to the vibration plus thermal are:

σ_a = 35.8 ksi

σ_b = 0.6 ksi

The resulting primary membrane, membrane plus bending, and primary plus secondary stress intensities in the support rods due to the vibration plus normal thermal load combination are:

P_m = 35.8 ksi

$P_l + P_b$ = 36.4 ksi

$P_l + P_b + Q$ = 36.4 ksi

The allowable primary membrane, membrane plus bending, and primary plus secondary stress intensities for ASME SA-564, Type 630 stainless steel at 500°F are 42.8 ksi, 64.2 ksi, and 128.4 ksi, respectively. The minimum margin of safety in the guide sleeves due to the vibration plus normal thermal load condition is +0.66 for membrane plus bending stress intensity.

2.6.13.2.3 Guide Sleeve Stress Analysis - Vibration Plus Thermal

As discussed in Section 2.6.11.2.6, the guide sleeves do not experience any significant stresses due to the normal thermal conditions. Therefore, the guide sleeve stresses for the vibration plus normal thermal load combination are equal to the stresses due to vibration. As discussed in

Section 2.6.11.3.3 and Section 2.6.11.4.3, the maximum primary membrane, membrane plus bending, and primary plus secondary guide sleeve stress intensities due to vibration are 0.16 ksi, 1.82 ksi, and 1.82 ksi, respectively. The allowable primary membrane, membrane plus bending, and primary plus secondary stress intensities for ASME SA-240, Type 304 stainless steel at 700°F are 16.0 ksi, 24.0 ksi, and 48.0 ksi, respectively. The minimum margin of safety in the guide sleeves due to the vibration plus normal thermal load condition is +12.2 for membrane plus bending stress intensity.

2.6.13.2.4 Spacer Disc Stress Analysis - 1-Foot Drop Plus Thermal

The spacer disc stresses resulting from the -20°F thermal condition, from Section 2.6.11.2.2, are superimposed with the stresses due to the 25.1g 1-foot side drop load, from Section 2.6.12.3.1, to evaluate the 1-foot drop plus normal thermal load combination. The resulting stress intensities at selected ligament nodes are summarized in Table 2.6.13-69. The 20 maximum spacer disc stress intensities resulting from this load combination are reported in Table 2.6.13-70 and the corresponding node locations are shown in Figure 2.6.13-2.

The spacer disc stresses due to the 1-foot drop plus normal thermal load combination are classified as primary plus secondary, and as such are limited to $3.0S_m$ for normal conditions. The design stress intensity, S_m, for ASME SA-537, Class 2 carbon steel at the edge of the spacer disc (highest stressed area) at 350°F is 26.55 ksi. Therefore, the allowable primary plus secondary stress intensity is 79.6 ksi. For nodes interior to spacer disc the allowable primary plus secondary stress conservatively taken at temperature 620°F and is equal to 79.2 ksi. The minimum margin of safety in the spacer disc due to the 1-foot drop plus normal thermal load combination is +0.01. Therefore, the spacer disc meets the applicable stress acceptance criteria for the 1-foot drop plus normal thermal load combination.

Table 2.6.13-69
FC-DSC Spacer Disc Ligament S.I. for 1-Foot Drop + Thermal

Node	Stress Components (ksi)						SINT	Stress Type	Stress Limit	Margin of Safety
	SX	SY	SZ	SXY	SYZ	SXZ				
105	-.41	-37.7	0.0	0.01	0.0	0.0	37.7	$P_1 + P_b + Q$	79.2	1.1
104	-.18	-36.7	0.0	-0.45	0.0	0.0	36.7	$P_1 + P_b + Q$	79.2	1.2
496	27.0	0.45	0.0	-3.6	0.0	0.0	27.5	$P_1 + P_b + Q$	79.2	1.9
78	-.18	-19.0	0.0	0.22	0.0	0.0	19.0	$P_1 + P_b + Q$	79.2	3.1
82	0.07	-18.5	0.0	-0.02	0.0	0.0	18.5	$P_1 + P_b + Q$	79.2	Large
83	0.15	-18.2	0.0	0.06	0.0	0.0	18.4	$P_1 + P_b + Q$	79.2	Large
178	-0.07	15.5	0.0	-2.3	0.0	0.0	16.3	$P_1 + P_b + Q$	79.2	Large
46	-14.8	-0.21	0.0	-0.27	0.0	0.0	14.9	$P_1 + P_b + Q$	79.2	Large
534	5.9	4.1	0.0	-7.2	0.0	0.0	14.5	$P_1 + P_b + Q$	79.2	Large
25	-7.9	-13.8	0.0	0.02	0.0	0.0	13.8	$P_1 + P_b + Q$	79.2	Large
1028	4.7	6.3	0.0	6.2	0.0	0.0	12.4	$P_1 + P_b + Q$	79.2	Large
904	-11.9	-0.12	0.0	0.16	0.0	0.0	11.9	$P_1 + P_b + Q$	79.2	Large
10	-11.2	-0.17	0.0	-0.29	0.0	0.0	11.2	$P_1 + P_b + Q$	79.2	Large
588	4.3	4.5	0.0	-5.4	0.0	0.0	10.8	$P_1 + P_b + Q$	79.2	Large
64	-7.9	0.41	0.0	0.07	0.0	0.0	8.3	$P_1 + P_b + Q$	79.2	Large
706	-7.5	-6.6	0.0	0.47	0.0	0.0	7.7	$P_1 + P_b + Q$	79.2	Large
378	-3.1	1.5	0.0	0.83	0.0	0.0	4.9	$P_1 + P_b + Q$	79.2	Large
553	1.1	1.4	0.0	-1.8	0.0	0.0	3.7	$P_1 + P_b + Q$	79.2	Large

Notes:

(1) All stresses reported are in units of ksi.

(2) Thermal stress intensities are classified as secondary.

(3) The node locations corresponding to the reported ligament stress intensities are shown in Figure 2.6.11-5.

Table 2.6.13-70
Top 20 FC-DSC Spacer Disc S.I. for 1-Foot Drop + Thermal

Node	Stress Components (ksi)						SINT	Stress Type	Stress Limit	Margin of Safety
	SX	SY	SZ	SXY	SYZ	SXZ				
498	75.9	-0.73	0.0	-10.0	0.0	0.0	79.3	$P_1 + P_b + Q$	79.6	0.01
169	-0.34	66.5	0.0	-7.8	0.0	0.0	68.6	$P_1 + P_b + Q$	79.6	0.16
823	-0.3	64.5	0.0	8.0	0.0	0.0	66.7	$P_1 + P_b + Q$	79.6	0.19
466	61.5	1.2	0.0	-11.0	0.0	0.0	64.2	$P_1 + P_b + Q$	79.2	0.24
167	-1.7	54.3	0.0	-10.7	0.0	0.0	59.9	$P_1 + P_b + Q$	79.2	0.32
821	-0.65	53.5	0.0	10.5	0.0	0.0	58.1	$P_1 + P_b + Q$	79.2	0.36
1287	51.5	2.5	0.0	1.0	0.0	0.0	49.2	$P_1 + P_b + Q$	79.6	0.62
1189	28.7	-22.9	0.0	3.8	0.0	0.0	52.1	$P_1 + P_b + Q$	79.2	0.52
1286	49.2	-1.5	0.0	2.5	0.0	0.0	51.0	$P_1 + P_b + Q$	79.2	0.55
191	-48.1	2.7	0.0	-1.8	0.0	0.0	50.9	$P_1 + P_b + Q$	79.2	0.55
488	49.1	-1.4	0.0	-0.81	0.0	0.0	50.5	$P_1 + P_b + Q$	79.2	0.57
486	47.8	-1.2	0.0	-1.7	0.0	0.0	49.1	$P_1 + P_b + Q$	79.2	0.61
1308	40.5	2.25	0.0	15.1	0.0	0.0	48.7	$P_1 + P_b + Q$	79.2	0.62
1289	35.1	-10.4	0.0	5.2	0.0	0.0	46.7	$P_1 + P_b + Q$	79.2	0.69
509	44.7	-0.96	0.0	-3.6	0.0	0.0	46.3	$P_1 + P_b + Q$	79.2	0.71
106	3.8	-41.5	0.0	-0.84	0.0	0.0	45.4	$P_1 + P_b + Q$	79.2	0.74
117	1.3	-42.8	0.0	-0.8	0.0	0.0	44.2	$P_1 + P_b + Q$	79.2	0.79
467	36.2	-0.08	0.0	-12.5	0.0	0.0	44.2	$P_1 + P_b + Q$	79.2	0.79
497	43.3	1.5	0.0	-4.9	0.0	0.0	43.9	$P_1 + P_b + Q$	79.2	0.80
267	0.1	36.3	0.0	-12.2	0.0	0.0	43.7	$P_1 + P_b + Q$	79.2	0.81

Notes:

(1) All stresses reported are in units of ksi.

(2) Thermal stress intensities are classified as secondary.

(3) The node locations corresponding to the 20 highest spacer disc stress intensities due to the 1-foot side drop + thermal load combination are shown in Figure 2.6.13-2.

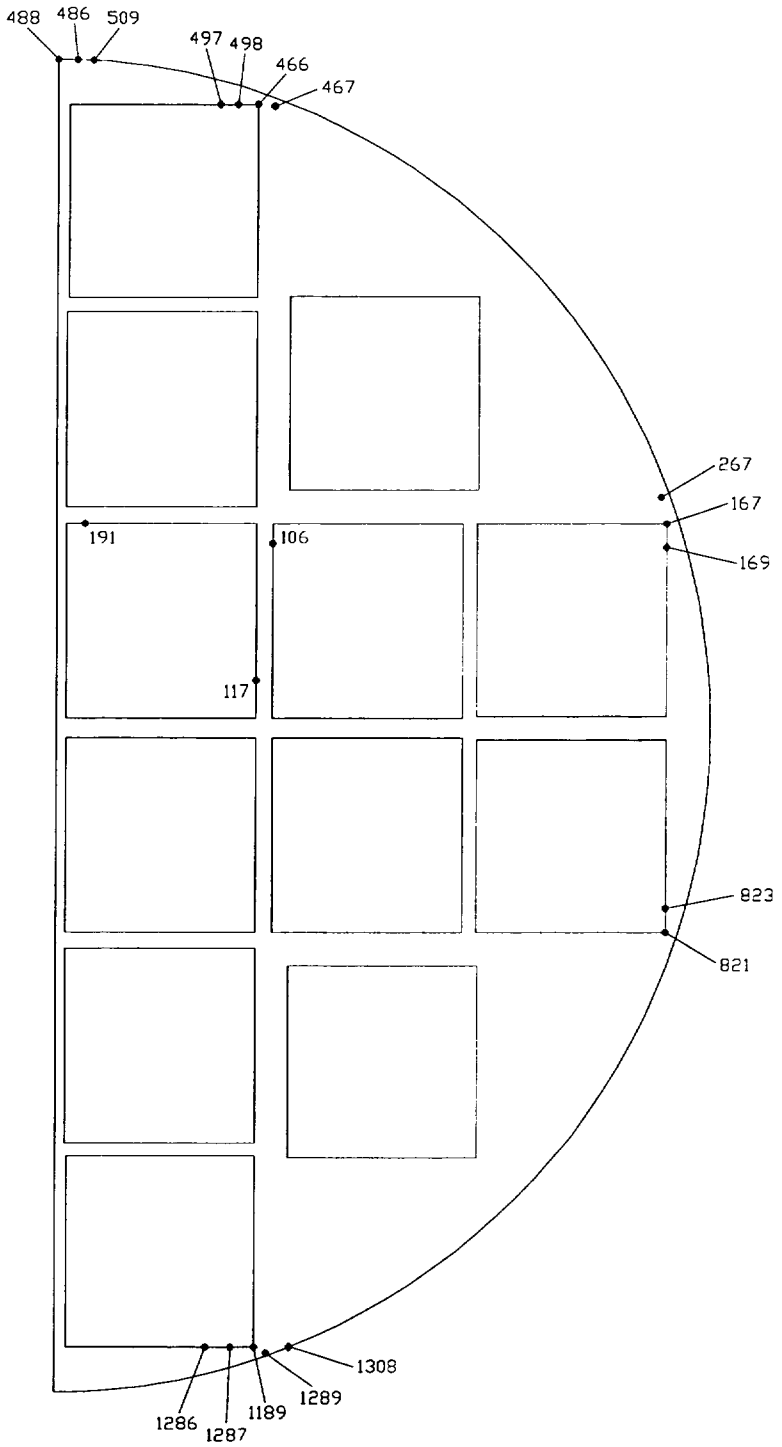

Figure 2.6.13-2
Location of Top 20 FC-DSC Spacer Disc S.I. for 1-Foot Drop + Thermal

2.6.13.2.5 Support Rod Stress Analysis - 1-Foot Drop Plus Thermal

The support rod stresses due to the normal thermal and 1-foot drop load conditions are calculated in Sections 2.6.11.2.4 and 2.6.11.4.2, respectively. The normal thermal load condition results in an axial tensile stress in the support rods of 4.0 ksi. The 1-foot drop load condition results in shear and bending stresses in the support rod of 0.3 ksi and 7.0 ksi, respectively. In addition to 1-foot drop and normal thermal, the support rod stresses due to preload applied during fabrication are included in the load combination. The axial tensile stress in the support rods due to the preload is 31.8 ksi. Therefore, the combined support rod stresses due to the vibration plus thermal are:

σ_v = 0.3 ksi

σ_a = 31.8 ksi

σ_b = 7.0 ksi

The resulting primary membrane, membrane plus bending, and primary plus secondary stress intensities in the support rods due to the vibration plus normal thermal load combination are:

P_m = 31.8 ksi

$P_l + P_b$ = 38.8 ksi

$P_l + P_b + Q$ = 38.8 ksi

The allowable primary membrane, membrane plus bending, and primary plus secondary stress intensities for ASME SA-564, Type 630 stainless steel at 500°F are 42.8 ksi, 64.2 ksi, and 128.4 ksi, respectively. The minimum margin of safety in the support rod due to the 1-foot drop plus normal thermal load condition is +0.35 for primary membrane stress intensity.

2.6.13.2.6 Guide Sleeve Stress Analysis - 1-Foot Drop Plus Thermal

As discussed in Section 2.6.11.2.6, the guide sleeves do not experience any significant stresses due to the normal thermal conditions. Therefore, the guide sleeve stresses for the 1-foot drop plus normal thermal load combination are equal to the stresses due to 1-foot drop. As discussed in Section 2.6.11.4.3, the maximum primary membrane, membrane plus bending, and primary plus secondary guide sleeve stress intensities due to 1-foot drop are 1.9 ksi, 23.4 ksi, and 23.4 ksi, respectively. The allowable primary membrane, membrane plus bending, and primary plus secondary stress intensities for ASME SA-240, Type 304 stainless steel at 700°F are 16.0 ksi, 24.0 ksi, and 48.0 ksi, respectively. The minimum margin of safety in the guide sleeves due to the 1-foot drop plus normal thermal load condition is +.02 for membrane plus bending stress intensity.

2.6.13.3 FF-DSC Load Combinations

The FF-DSC basket assembly components are evaluated for the NCT load combinations in the following sections. The load combination evaluations consider the stress due to the applicable NCT load conditions. A summary of the stress results for each of the individual load conditions discussed above and their combinations for the normal load combinations are reported in Table 2.6.13-71. Each load combination is discussed in the following sections. The minimum margin of safety due to normal conditions of transport load combinations is +1.3.

The analyses of the FF-DSC that are provided in this section are based on the SA-537, Class 2 carbon steel basket option. Appendix 2.10.13 provides an evaluation of the SM-19 basket design option for the FF-DSC which addresses the alternate basket assembly material (SA-240, Type XM-19 austenitic stainless steel) as well as other configuration modifications.

Table 2.6.13-71
Combined Load Stress Intensities - Normal Conditions of Transport

Basket Component	Stress Type	Load Combination Stress (ksi)		Stress Limit (ksi)	Factor of Safety	
		1' Drop + Thermal	Vibration + Thermal		1' Drop + Thermal	Vibration + Thermal
Spacer Disc	P_m	11.8	1.8	26.4	1.3	Large
	P_1+P_b	11.8	1.8	39.6	2.4	Large
	P_1+P_b+Q	32.4	33.9	79.2	1.4	1.3
Support Plate	P_m	0.2	0.0	26.5	Large	Large
	P_1+P_b	1.9	0.0	39.7	Large	Large
	P_1+P_b+Q	20.4	18.5	79.5	2.9	3.3
Fuel Can Body	P_m	1.7	0.0	18.6	Large	Large
	P_1+P_b	1.7	0.0	27.9	Large	Large
	P_1+P_b+Q	1.7	0.0	55.8	Large	Large

2.6.13.3.1 Spacer Disc Stress Analysis - Vibration Plus Thermal

The results of the thermal evaluation from Section 2.6.12.1.2 were combined with those from the normal vibration loads evaluated in Section 2.6.12.2.1 to produce the resultant stress intensities reported in Table 2.6.13-72, and the stress points are shown in Figure 2.6.13-3.

The spacer disc stress due to the vibration plus normal thermal load combination are classified as primary plus secondary, and are limited to $3.0S_m$. The design stress intensity for the spacer discs is 79.2 ksi. The minimum margin of safety in the spacer disc due to the vibration plus normal thermal load combination is +1.3. Therefore, the spacer disc meets the applicable stress acceptance criteria for the vibration plus normal thermal load combination.

Table 2.6.13-72
Spacer Disc Top 20 S.I. - Vibration plus Normal Thermal

NODE	SX	SY	SZ	SXY	SYZ	SXZ	SINT	Allowable S.I.	Stress Type
714(3)	0.5	33.4	0	3.8	0	0	33.9(4)	79.2	P_l+P_b+Q
1105	31.9	1.2	0	4.7	0	0	32.6	79.2	P_l+P_b+Q
615	1.1	26.5	0	2.4	0	0	26.7	79.2	P_l+P_b+Q
713	1.4	22.1	0	7.2	0	0	25.3	79.2	P_l+P_b+Q
545	23.8	0.73	0	-3.03	0	0	24.2	79.2	P_l+P_b+Q
1045	20.8	0.59	0	6.7	0	0	24.2	79.2	P_l+P_b+Q
881	2.7	18.2	0	8.6	0	0	23.2	79.2	P_l+P_b+Q
886	-2.5	16.1	0	6.7	0	0	22.9	79.2	P_l+P_b+Q
882	5.2	17.3	0	9.3	0	0	22.4	79.2	P_l+P_b+Q
715	0.79	21.7	0	1.5	0	0	21.8	79.2	P_l+P_b+Q
724	-0.9	20.4	0	2.3	0	0	21.7	79.2	P_l+P_b+Q
152	-0.92	21.1	0	-2.0	0	0	21.3	79.2	P_l+P_b+Q
1078	14.9	3.9	0	8.8	0	0	20.7	79.2	P_l+P_b+Q
1092	20.5	0.9	0	1.0	0	0	20.5	79.2	P_l+P_b+Q
1093	19.4	-1.0	0	0.6	0	0	20.4	79.2	P_l+P_b+Q
1079	16.7	3.7	0	7.6	0	0	20.2	79.2	P_l+P_b+Q
1083	13.5	-2.3	0	6.1	0	0	19.9	79.2	P_l+P_b+Q
1104	19.1	0.59	0	2.38	0	0	19.4	79.2	P_l+P_b+Q
725	0.19	18.73	0	2.70	0	0	19.3	79.2	P_l+P_b+Q
1113	17.3	-1.21	0	1.76	0	0	18.9	79.2	P_l+P_b+Q

Notes:

(1) Thermal stresses are classified as primary plus secondary. The allowable service level A primary plus secondary stress intensities for ASME SA-537, Class 2 carbon steel at 400°F is 79.2 ksi.
(2) All stress results are reported in units of ksi.
(3) For node numbers see Figure 2.6.13-3.
(4) The minimum margin of safety M.S. = (79.2/33.9)-1 = 1.33 (133% margin)

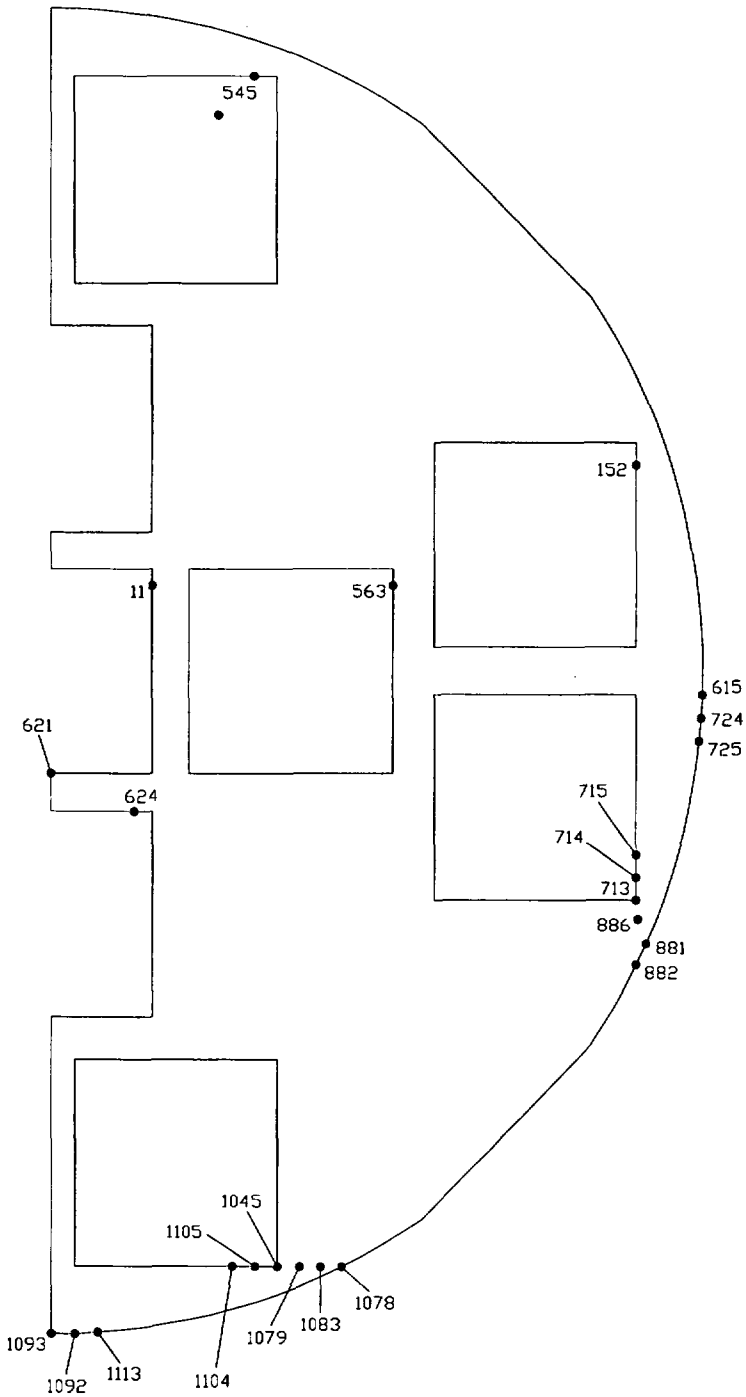

Figure 2.6.13-3
Node Locations of 20 Highest S.I. - Vibration + Thermal

2.6.13.3.2 Support Plate Stress Analysis - Vibration Plus Thermal

The vibration plus the thermal load combination is bounded by the 1-foot drop plus the thermal results report above.

2.6.13.3.3 Fuel Can Stress Analysis - Vibration Plus Thermal

The fuel can is not subjected to any thermal stress, therefore vibration plus thermal results are the same as the vibration load results. In addition, as described in Section 2.6.12.2.3, vibration loads are bounded by the 1-foot drop loads of Section 2.6.12.3. See Section 2.6.13.3.6 for combined thermal and 1-foot drop loads.

2.6.13.3.4 Spacer Disc Stress Analysis - 1-Foot Drop Plus Thermal

The results of the thermal evaluation from Section 2.6.12.1.2 were combined with the 1-foot drop loads evaluated in Section 2.6.12.3.1 to produce the resultant stress intensities reported in Table 2.6.13-73, the stress points are shown in Figure 2.6.13-4.

The spacer disc stress due to the 1-foot side drop plus normal thermal load combination are classified as primary plus secondary, and as such are limited to $3.0S_m$. Therefore, the design stress intensity, the spacer discs is 79.2 ksi. The minimum margin of safety in the spacer disc due to the 1-foot side drop plus normal thermal load combination is +1.3. Therefore, the spacer disc meets the applicable stress acceptance criteria for the 1-foot side drop plus normal thermal load combination.

Table 2.6.13-73
Spacer Disc Top 20 S.I. - 1-Foot Side Drop + Normal Thermal

NODE	SX	SY	SZ	SXY	SYZ	SXZ	SINT	Allowable S.I.	Stress Type
714(3)	0.49	32.0	0	3.7	0	0	32.4(4)	79.2	P_l+P_b+Q
1105	31.3	0.8	0	4.4	0	0	31.9	79.2	P_l+P_b+Q
615	1.11	26.8	0	2.3	0	0	26.7	79.2	P_l+P_b+Q
1045	19.1	-4.1	0	5.2	0	0	25.4	79.2	P_l+P_b+Q
545	24.1	0.76	0	-3.0	0	0	24.4	79.2	P_l+P_b+Q
713	1.26	21.1	0	7.0	0	0	24.2	79.2	P_l+P_b+Q
881	2.7	17.7	0	8.4	0	0	22.5	79.2	P_l+P_b+Q
886	-2.4	15.5	0	6.5	0	0	22.1	79.2	P_l+P_b+Q
724	-0.9	20.5	0	2.3	0	0	21.8	79.2	P_l+P_b+Q
152	0.91	21.6	0	-2.1	0	0	21.8	79.2	P_l+P_b+Q
882	5.1	16.7	0	9.0	0	0	21.6	79.2	P_l+P_b+Q
1092	20.9	0.9	0	0.9	0	0	20.9	79.2	P_l+P_b+Q
715	0.8	20.5	0	1.5	0	0	20.6	79.2	P_l+P_b+Q
1093	19.7	-0.9	0	0.5	0	0	20.6	79.2	P_l+P_b+Q
1078	12.4	1.2	0	8.4	0	0	20.2	79.2	P_l+P_b+Q
1083	10.5	-6.5	0	4.8	0	0	19.5	79.2	P_l+P_b+Q
1113	17.9	-1.3	0	1.8	0	0	19.5	79.2	P_l+P_b+Q
725	0.2	18.9	0	2.7	0	0	19.5	79.2	P_l+P_b+Q
510	14.8	2.42	0	-7.2	0	0	18.9	79.2	P_l+P_b+Q
1050	8.3	-6.7	0	5.7	0	0	18.8	79.2	P_l+P_b+Q

Notes:

(1) Thermal stresses are classified as primary plus secondary. The allowable service level A primary plus secondary stress intensities for ASME SA-537, Class 2 carbon steel at 400°F is 79.2 ksi.
(2) All stress results are reported in units of ksi.
(3) For node numbers see Figure 2.6.13-4
(4) The minimum margin of safety M.S. = (79.2/32.4) -1 = 1.44 (144% margin)

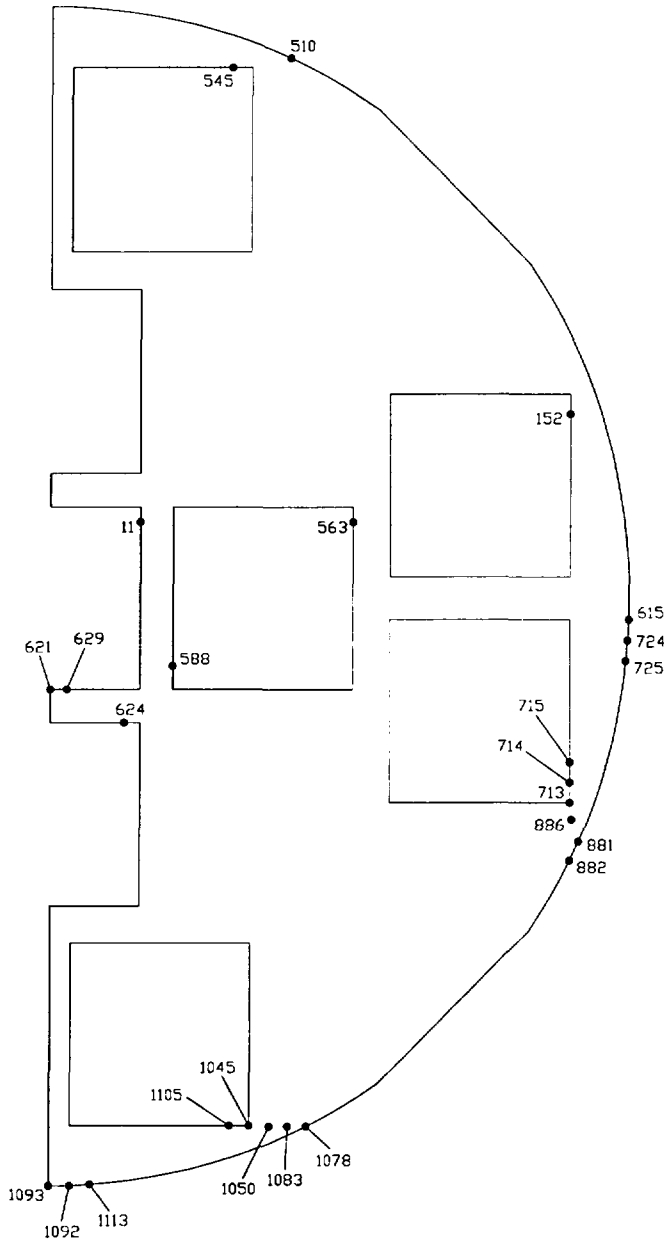

Figure 2.6.13-4
Node Locations of 20 Highest S.I. - 1-Foot Side Drop + Thermal

2.6.13.3.5 Support Plate Stress Analysis - 1-Foot Drop Plus Thermal

The support plate stresses due to the normal thermal and 1-foot drop load conditions are calculated in Sections 2.6.12.1.4 and 2.6.12.3.2, respectively. The normal thermal load condition results in a bending stress in the support plates of 18.4 ksi. For the bounding 25.1g side drop load, the maximum support plate bending stress is $\sigma_{b2} = 0.1$ ksi, and the maximum support plate shear stress is $\tau_{max2} = 0.1$ ksi. Therefore,

$$\sigma_b = 18.4 + 0.1$$

$$= 18.5 \text{ ksi}$$

$$\tau_{max} = 0.06 \text{ ksi}$$

Conservatively assuming that the combined maximum shear and bending stresses occur in the same location, the support plate side drop maximum stress intensity is:

$$\text{S.I. } (P_1 + P_b) = 2[(18.5/2)^2]^{1/2}$$

$$= 18.5 \text{ ksi}$$

The allowable primary membrane plus bending stress intensity for ASME SA-537, Class 2 Carbon Steel @ 400°F is 3.0 x 26.4 ksi, or 79.2 ksi. Therefore, the margin of safety for the fuel cans for the 1-foot drop condition is:

$$\text{M.S.} = 79.2/18.5\text{-}1 = +3.3$$

2.6.13.3.6 Fuel Can Stress Analysis - 1-Foot Drop Plus Thermal

The fuel can is not subjected to any thermal stress, therefore 1-foot side drop plus thermal is equal to the 1-foot drop stresses described in Section 2.6.12.3.3.

2.7 Hypothetical Accident Conditions

The NUHOMS®-MP187 cask, when subjected to hypothetical accident conditions as specified in 10CFR71.73 [2.1], meets the performance requirements specified in Subpart E of 10CFR71 [2.1]. This is demonstrated in the following subsections where each accident condition is addressed and shown to meet the applicable design criteria previously discussed in Section 0.

The results of the hypothetical accident condition analyses for the MP187 are addressed in Sections 2.7.1 through 2.7.5 and 2.7.8. The results of the DSC hypothetical accident condition analyses are addressed in Sections 2.7.6, 2.7.7 and 2.7.8.

2.7.1 Free Drop

The Part 71 regulations [2.1] include a hypothetical accident drop condition consisting of "a free drop of the specimen through a distance of 9 meter (30 ft) free drop onto a flat, essentially unyielding, horizontal surface, striking the surface in a position for which maximum damage is expected". The NUHOMS®-MP187 transportation package is analyzed for a variety of drop orientations and conditions, as described in Appendix 2.10.9. The cask is evaluated for each of the postulated accident drop conditions using the following steps:

1.) Static analyses are performed for the package using the equivalent static g-loads shown in Table 2.7.1-1. The equivalent static g-loads used in the analysis are equal to, or greater than, the product of the peak acceleration loads determined in the drop analysis, included in Appendix 2.10.9, and the dynamic load factors, calculated in Appendix 2.10.10. The controlling equivalent static g-loads are used to determine the stresses in the cask due to the most limiting drop conditions.

2.) The stresses in the cask body due to the drop loads are determined using finite element methods and hand calculations and are reported at selected cask stress points. A total of 52 cask stress points are selected, as shown in Figure 2.7.1-1,

which encompass all of the critical cask locations. Stress points are located at both ends of the cask shell transitions, the quarter points, third points and the mid-length, on both the inner and outer faces at each section.

3.) The elastic and plastic stability of the cask shells is evaluated for the drop conditions in accordance with Code Case N-284 of the ASME Code [2.2]. The detailed buckling evaluation is presented in Appendix 2.10.6. The effects of lateral pressure on the shells due to lead slump is considered in the cask shell buckling analysis. The analysis results demonstrate that the cask shells will remain stable for the postulated 30-foot drop conditions.

4.) The bolts and seals are evaluated for each drop condition. The detailed bolt evaluation, contained in Appendix 2.10.5, is performed in accordance with NUREG/CR-6007 [2.20]. The bolt analysis results show that all surfaces remain elastic (below yield), and that the bolts maintain a clamping force for all post drop conditions which exceeds the minimum clamping force required to maintain a leak tight seal.

5.) Other conditions which may adversely affect the cask integrity, such as lead slump, are evaluated as required.

Quasi-static drop loads are commonly used for the drop evaluation of transportation packages. The quasi-static g-loads are calculated by equating the total kinetic energy for the drop condition to the strain energy of the impact limiter (area under the impact limiter force-deflection curve) for the corresponding impact orientation. The peak force from this curve, F_{max}, is used to calculate the quasi-static g-load, G_q, as follows:

$$G_q = F_{max}/W - 1$$

where the weight of the package, W, corresponds to the drop orientation/event and 1g is subtracted to account for the package dead weight to provide a consistent comparison with the drop analysis results which use the same methodology. For example, the minimum package

FIGURE WITHHELD UNDER 10 CFR 2.390

Table 2.7.1-1
Cask Drop Equivalent Static G-Loads

Drop Case	Condition	Peak Accelerations (g)		DLFs		Equivalent Static G's	
		Longitudinal	Tangential	Longitudinal	Tangential	Longitudinal	Tangential
End Drop	Cold	38.9	0.0	1.06	1.00	41.2	0.0
	Hot	23.5	0.0	1.04	1.00	24.4	0.0
	Special	25.5	0.0	1.03	0.00	26.3	0.0
Side Drop	Flat Side/Cold	0.0	61.1	1.00	1.47	0.0	89.8
	Flat Side/Hot	0.0	39.6	1.00	1.46	0.0	57.8
	Corner/Cold	0.0	44.6	1.00	1.39	0.0	62.0
	Corner/Hot	0.0	30.6	1.00	1.29	0.0	39.5
C.G. over Flat	Flat/Cold	35.7	11.6	1.02	1.08	36.4	12.5
	Flat/Hot	21.9	7.1	1.02	1.04	22.3	7.4
C.G. over Corner	Corner/Cold	34.2	11.1	1.01	1.07	34.5	11.9
	Corner/Hot	20.0	6.5	1.02	1.05	20.4	6.8
Oblique Primary Impact	30° Flat Side/Cold	15.3	28.5	1.11	1.19	17.0	33.9
	30° Flat Side/Hot	16.5	16.5	1.07	1.12	17.7	18.5
	30° Corner/Cold	9.8	19.7	1.03	1.03	10.1	20.3
	30° Corner/Hot	14.8	14.9	1.01	1.03	14.9	15.3
	60° Flat Side/Cold	28.2	18.4	1.03	1.04	29.0	19.1
	60° Flat Side/Hot	25.4	7.9	1.01	1.01	25.7	8.0
	60° Corner/Cold	20.4	13.9	1.02	1.10	20.8	15.3
	60° Corner/Hot	20.3	6.4	1.02	1.05	20.7	6.7
Oblique Slapdown Impact	30° Flat Side/Cold	3.6	29.8	1.31	1.62	4.7	48.3
	30° Flat Side/Hot	0.6	19.3	1.35	1.65	0.8	31.8
	30° Corner/Cold	2.1	24.5	1.32	1.35	2.8	33.1
	30° Corner/Hot	1.2	16.9	1.24	1.26	1.5	21.3
Hori. 1' Flat Side	Cold	0.0	21.0	1.00	1.63	0.0	34.2
	Hot	0.0	13.9	0.00	1.65	0.0	22.9

Notes:

(1) The peak rigid body g-loads in the transverse and longitudinal directions are developed in Appendix 2.10.9.

(2) Dynamic Load Factors (DLFs) are developed in Appendix 2.10.10.

(3) Equivalent static g-loads are equal to the product of the peak g-load times the corresponding DLF.

Table 2.7.1-1a
Comparison of Analyzed and Predicted Static G-Loads

Drop Orientation	Condition	Analyzed (g's)		Predicted (g's)[1]		Ratio[2]		
		Trans.	Long.	Trans.	Long.	Trans.	Long.	Maximum
Flatside Horizontal Side Drop	Cold	81.7	0.0	89.8	0.0	1.099	n/a	1.099
	Hot	52.3	0.0	57.8	0.0	1.105	n/a	1.105
Corner Horizontal Side Drop	Cold	62.1	0.0	62.0	0.0	0.998	n/a	< 1.0
	Hot	40.5	0.0	39.5	0.0	0.975	n/a	< 1.0
Flatside 30° Primary Impact	Cold	34.5	17.4	33.9	17.0	0.983	0.977	< 1.0
	Hot	18.0	17.9	18.5	17.7	1.028	0.989	1.028
Corner 30° Primary Impact	Cold	20.7	10.3	20.3	10.1	0.981	0.981	< 1.0
	Hot	14.0	14.0	15.3	14.9	1.093	1.064	1.093
Flatside 60° Primary Impact	Cold	19.2	29.3	19.1	29.0	0.995	0.990	< 1.0
	Hot	9.7	30.5	8.0	25.7	0.825	0.843	< 1.0
Corner 60° Primary Impact	Cold	14.9	21.2	15.3	20.8	1.027	0.981	1.027
	Hot	6.7	20.8	6.7	20.7	1.000	0.995	1.000
CG / Corner (72°) Drop	Cold	12.1	35.4	11.9	34.5	0.983	0.975	< 1.0
	Hot	6.9	20.6	6.8	20.4	0.986	0.990	< 1.0
CG / Flatside (72°) Drop	Cold	12.1	35.4	12.5	36.4	1.033	1.028	1.033
	Hot	6.9	20.6	7.4	22.3	1.072	1.083	1.083
End Drop (90°)	Cold	0.0	43.0	0.0	41.2	n/a	0.958	< 1.0
	Hot	0.0	24.8	0.0	24.4	n/a	0.984	< 1.0
Flatside Slapdown	Cold	43.5	4.9	48.3	4.7	1.110	0.959	1.110
	Hot	28.5	0.8	31.8	0.8	1.116	1.000	1.116
Corner Slapdown	Cold	33.0	2.8	33.1	2.8	1.003	1.000	1.003
	Hot	22.1	1.3	21.3	1.5	0.964	1.154	1.154
1' Side Drop	Cold	30.8	0.0	34.2	0.0	1.110	n/a	1.110
	Hot	21.0	0.0	22.9	0.0	1.090	n/a	1.090

Notes: 1. Ratio = Predicted / Calculated, if less than 1.00, the predicted stresses/loads are conservative. SAR-buck2.xl
2. G Loads from Table 2.7.1-1 (Appendices 2.10.9 and 2.10.10)

weight is used for the cold drop conditions and the maximum package weight for the hot drop conditions. The impact energy for each of the drop conditions is obtained from the drop analysis presented in Appendix 2.10.9. These values, along with the resulting quasi-static g-loads are summarized in Table 2.7.1-2. Figure 2.7.1-2 shows the impact limiter strain energy for the flatside horizontal side drop condition. The peak force for this drop condition, as shown in Figure 2.7.1-2 is 7,990 kips. The package weight used for this drop condition is 257 kips, or 128.5 kips per impact limiter. Therefore, the quasi-static g-load for the flatside horizontal side drop is:

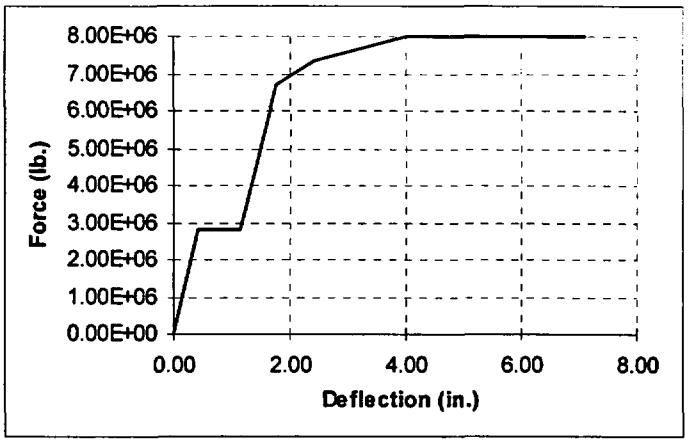

Figure 2.7.1-2
Cold Flatside Horizontal Drop Strain Energy Curve

$$G_q = 7{,}990/128.5 - 1$$
$$= 61.3 \text{ g's}$$

In addition to the quasi-static g-loads, the equivalent static g-loads for each of the drop conditions are presented in Table 2.7.1-2. Comparison of the quasi-static g-loads to the equivalent static g-loads shows that in all cases, the equivalent static g-loads used for the package analysis are bounding. In some cases, such as the slapdown impacts, the equivalent static g-loads are as much as 50% higher than the corresponding quasi-static g-loads. Therefore, the use of equivalent static g-loads for the drop analysis is more conservative than methods typically used for the evaluation of transportation packages.

The drop analyses are performed for the extreme initial ambient heat (100°F ambient) and cold (-20°F ambient) conditions assuming worst case impact limiter crush strength properties to provide bounding results.

Table 2.7.1-2
Comparison of Cask Equivalent Static and Quasi-Static G-Loads

Drop Condition		Impact Energy (in-lb.)	Peak Force (lb.)	Package Weight (lb.)	Quasi Static G-load	Resultant Eq. Static G-load(1)	Difference(2)
Horizontal Side Drop - Flatside	Cold	4.722E+07	7.97E+06	2.57E+05	61.1	89.8	47%
	Hot	5.187E+07	5.69E+06	2.77E+05	40.0	57.8	44%
30° Primary Impact - Flatside	Cold	4.552E+07	8.56E+06	2.57E+05	32.4	37.9	17%
	Hot	6.476E+07	6.50E+06	2.77E+05	22.4	25.6	14%
60° Primary Impact - Flatside	Cold	7.040E+07	8.88E+06	2.57E+05	33.6	34.8	4%
	Hot	9.545E+07	7.49E+06	2.77E+05	26.0	26.9	3%
CG / Flatside (72°) Drop	Cold	9.718E+07	9.92E+06	2.57E+05	37.7	38.5	2%
	Hot	1.092E+08	6.73E+06	2.77E+05	23.3	23.5	1%
End Drop	Cold	9.570E+07	1.02E+07	2.57E+05	38.9	41.2	6%
	Hot	1.076E+08	6.85E+06	2.77E+05	23.7	24.4	3%
CG / Corner (72°) Drop	Cold	9.813E+07	9.48E+06	2.57E+05	36.0	36.5	2%
	Hot	1.103E+08	6.16E+06	2.77E+05	21.2	21.5	1%
60° Primary Impact - Corner	Cold	7.050E+07	6.59E+06	2.57E+05	24.7	25.8	5%
	Hot	9.657E+07	6.00E+06	2.77E+05	20.6	21.8	6%
30° Primary Impact - Corner	Cold	4.624E+07	5.90E+06	2.57E+05	22.0	22.7	3%
	Hot	6.512E+07	5.85E+06	2.77E+05	20.1	21.4	7%
Horizontal Side Drop - Corner	Cold	4.778E+07	5.86E+06	2.57E+05	44.7	62.0	39%
	Hot	5.303E+07	4.43E+06	2.77E+05	31.0	39.5	28%
Flatside Slapdown	Cold	4.552E+07	7.97E+06	2.57E+05	30.0	48.5	61%
	Hot	4.966E+07	5.69E+06	2.77E+05	19.5	31.9	63%
Corner Slapdown	Cold	4.624E+07	7.12E+06	2.57E+05	26.8	33.2	24%
	Hot	5.062E+07	5.08E+06	2.77E+05	17.3	21.3	23%
Cold 1' Side Drop	Cold	1.640E+06	2.83E+06	2.57E+05	21.0	34.2	63%
	Hot	1.830E+06	2.08E+06	2.77E+05	14.0	22.9	64%

fdcurve3.xls

Notes:
(1) The equivalent static g-loads reported are calculated as the SRSS of the equivalent static transverse and longitudinal g-loads.
(2) The values listed represent the percent which the equivalent static g-loads are greater than the quasi-static g-loads.

The Package components are analyzed for the applicable design criteria, discussed in Section 2.1.2, for the postulated vertical end drop [2.7.1.1], side drop [0], corner drop [2.7.1.2] and oblique drop [2.7.1.3] conditions. Where possible, the analyses of the Package components are limited to the controlling drop conditions. The cask drop analyses are performed using the following assumptions:

1. The cask body is evaluated for all drop conditions. Finite Element Methods are used to determine the stresses in the cask components for each drop condition.

The stresses are determined for the major cask structural components (i.e. top closure plate, top flange, inner shell, structural shell, bottom end closure, ram closure plate, and closure bolts.)

2. Linear-elastic behavior is assumed for all cask materials except lead. The effects of lead slump are determined for the end drop conditions using both conservative hand calculations and finite element analysis.

3. As discussed above, equivalent static g-loads are used for the cask free drop structural evaluation. For those cases where the analyzed equivalent static g load is less than that listed in Appendix 2.10.10, the calculated stresses are ratioed using the factors listed in Table 2.7.1-1a. For those cases where the factor of predicted/calculated acceleration is less than 1.0, the more conservative value is reported.

4. The most adverse conditions are considered for each drop condition. These include ambient temperature, fuel decay heat load, solar insolation, internal pressure, package weight, and mass moment of inertia. In general, the controlling free drop loads are determined assuming the minimum ambient temperature (-20°F), no fuel decay heat load, no solar insolation, and minimum package mass properties. The structural analyses are then performed using the maximum equivalent static drop loads with maximum package mass properties and stress limits based on the maximum cask design temperature (300°F.) The cask fabrication stresses are negligible as shown in Section 2.6.10.

The cask stresses due to each of the postulated accident free drop conditions are determined and ratioed using Table 2.7.1-1a values in the following sections. The load combination evaluation, presented in Section 2.7.8, demonstrates the structural adequacy of the cask for the hypothetical accident conditions specified in 10CFR71.73 [2.1]. The buckling evaluation of the cask shells, presented in Appendix 2.10.6, demonstrates that the cask will remain stable for all hypothetical accident conditions specified in 10CFR71.73 [2.1].

2.7.1.1 End Drop

The hypothetical 30-foot end drop condition postulates that the package, consisting of the MP187 cask loaded with a DSC and with impact limiters attached, falls 30 feet vertically onto an essentially unyielding surface. The MP187 cask components are analyzed for the postulated 30-foot end drop condition using a combination of hand calculations and finite element analyses. Per Regulatory Guide 7.8 [2.3], the following initial conditions are considered in combination with the 30-foot end drop condition:

1. 100°F ambient air, maximum fuel decay heat load, maximum solar insolation. This condition results in the lowest impact loads and the highest cask temperatures. The lead gamma shield material experiences a significant reduction in strength at elevated temperature which maximizes the lateral pressure load on the cask shells due to lead slump.

2. -20°F ambient air, maximum fuel decay heat load, no solar insolation. This condition results in higher impact loads, medium cask temperatures and, in general, is the controlling drop condition for lead slump.

3. -20°F ambient air, no fuel decay heat load, no solar insolation. This condition results in the highest impact loads at a uniform cask temperature of -20°F. The strength of the lead gamma shield material under these conditions is relatively high. The lead gamma shield is primarily supported by the cask inner shell until friction forces are overcome.

To limit the number of end drop evaluations, the maximum end drop impact loads resulting from condition 3 are combined with the minimum lead strength properties corresponding to condition 1. This condition maximizes the axial loads on the cask body due to the inertial load and the lateral pressure load due to lead slump.

The cask is evaluated for the end drop condition using the axisymmetric finite element model discussed in Section 2.10.2.1.2. The model includes all of the cask major structural components except the trunnions, shear key, and neutron shield support angles. The mass of these components are accounted for by adjusting the density used for the cask outer shell but taking no structural credit for these components. As shown in Chapter 3, the temperature of the cask body for the 100°F ambient condition with maximum fuel decay heat load and maximum solar insolation ranges from 172°F to 302°F, with an average of 250°F. The temperature of the lead for this condition varies from 247°F to 300°F. The lead material is modeled using the elastic-plastic material properties at 250°F which is discussed in Section 2.3.4, assuming multi-linear kinematic hardening behavior. For the end drop conditions, the lead column yields at the impacting end. The temperature of the lead at each end of the lead column is approximately 250°F. The steel cask component materials are modeled using linear elastic material properties at 250°F.

As shown in Table 2.7.1-1, the maximum end drop equivalent static g-load is 43.0g. Free body diagrams for the top and bottom end drops are shown in Figure 2.7.1-3 and Figure 2.7.1-4, respectively. The cask is loaded by the inertial load of the secondary impact limiter [opposite the impact end] (F_{IL}), the DSC inertial load (F_{DSC}), the cask inertial load (F_{CASK}), and the impact reaction load ($F_{REACTION}$). The cask inertial load is accounted for by applying a vertical acceleration of 43g to the cask finite element model. The inertial load due to the secondary impact limiter is applied as a uniform pressure load on the end of the cask as follows:

$$q_{IL} = F_{IL}/A$$

where;

$$F_{IL} = W_{IL}G$$

$$= 15{,}800 \times 43g$$

$$= 679{,}400 \text{ lb.}$$

$$A = \pi(41.75)^2$$

$= \quad 5{,}476 \text{ in}^2$

Therefore,

$q_{IL} = 679{,}400/5{,}476$

$= 124 \text{ psi}$

The secondary impact limiter inertial load is applied to the bottom end of the cask for the top end drop and on the top end of the cask for the bottom end drop.

Figure 2.7.1-3
Top End Drop Free Body Diagram

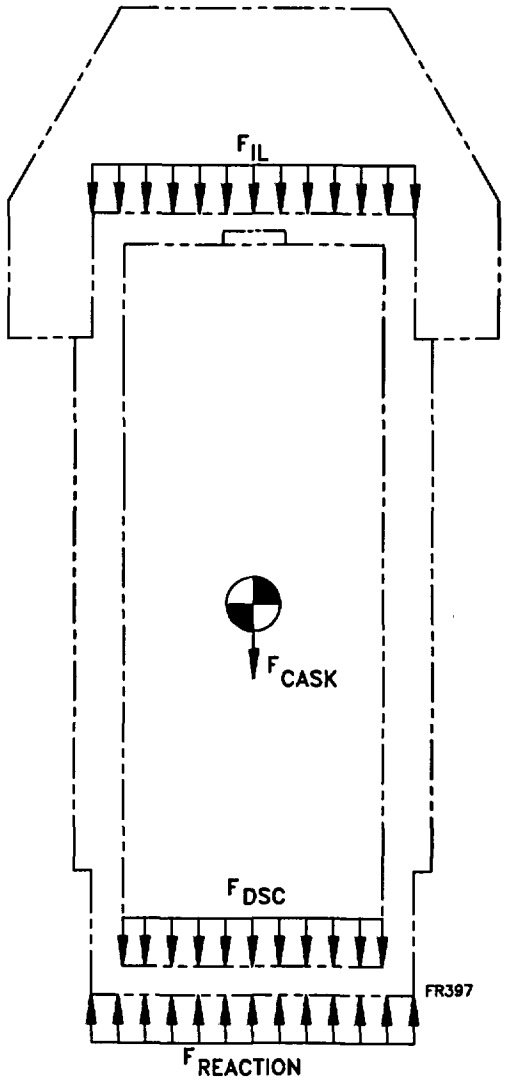

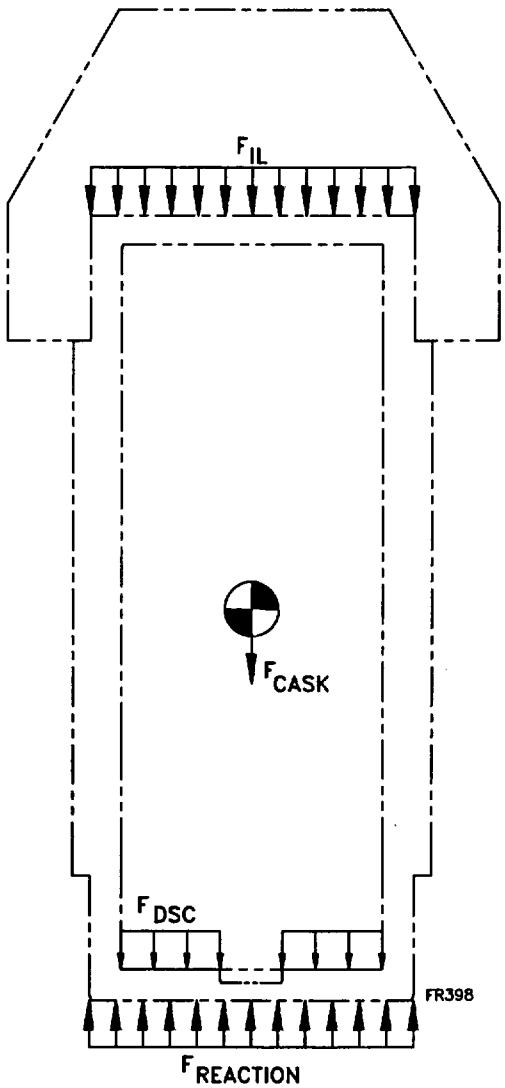

Figure 2.7.1-4

Bottom End Drop Free Body Diagram

The impact reaction load, which is applied as a uniform pressure load on the impacting end of the cask, is calculated as follows:

$$q_{IL} = F_{REACTION}/A$$

where;

$$F_{REACTION} = (W_{IL} + W_{DSC} + W_{CASK})(G)$$

$$= (15{,}800 + 79{,}400 + 157{,}800) \times 43g$$

$$= 10{,}880{,}000 \text{ lb.}$$

$$A = \pi(41.75)^2$$

$$= 5{,}476 \text{ in}^2$$

Therefore,

$$q_{IL} = 10{,}880{,}000/5{,}476$$

$$= 1{,}987 \text{ psi}$$

The end drop impact reaction pressure load is applied to the top end of the cask for the top end drop and the bottom end of the cask for the bottom end drop.

The DSC inertial load, which is applied as a uniform pressure load on the inner surface of the cask cavity at the end of the impact, calculated assuming a DSC weight of 79.4 kips as follows:

$$q_{IL} = F_{DSC}/A$$

where;

$$F_{DSC} = W_{DSC}G$$

$$= 79{,}400 \times 43g$$

$$= 3{,}414{,}200 \text{ lb.}$$

A = DSC contact area

= $\pi(34.50)^2$

= 3,739 in^2, for a top end impact

= $\pi[(34.00)^2 - (8.50)^2]$

= 3,405 in^2, for a bottom end impact

Therefore, the DSC inertial pressure load due to a top end drop, acting on the inner surface of the top closure plate, is 913 psi. For a bottom end drop, the DSC inertial pressure load acting on the inner surface of the bottom forging, is 1,003 psi.

In addition to the applied pressure loads from the DSC inertia, impact limiter inertia and impact reactions, a vertical acceleration load of 43.0g is applied to the cask model to account for the cask inertia load. The model is pinned at the corner node of the cask opposite impact end to prevent rigid body motion. The vertical reaction load at this node for the top end drop condition is 1692 pounds due to a slight unbalance in the applied inertia loads and reaction loads. The load unbalance represents 0.02% of the total impact load, which is insignificant. The vertical reaction load for the bottom end drop condition is 740 pounds. This load unbalance represents 0.01% of the total impact load, which is insignificant. Therefore, the applied forces and reactions applied to the finite element model are essentially balanced.

The cask body primary membrane and membrane plus bending stresses resulting from the top end drop are summarized for the 52 cask stress points shown in Figure 2.7.1-1 in Table 2.7.1-3 and Table 2.7.1-4, respectively. The maximum primary membrane stress intensity resulting from the top end drop is 23.7 ksi, occurring in the cask inner shell (stress points 13 and 14). The membrane stress intensity in the top cover plate is due to shear stress. The allowable primary membrane stress intensity in the cask inner shell is 46.2 ksi for a design temperature of 300°F. Therefore, the minimum margin of safety in the cask body for primary membrane stress intensity due to the top end drop is:

M.S. = (46.2/23.7) - 1

$= \quad +0.95$

The maximum membrane plus bending stress intensity resulting from the top end drop is 38.8 ksi, occurring at the top of the cask inner shell (stress point 9). The allowable membrane plus bending stress intensity in the cask top closure plate and inner shell is 66.0 ksi for a design temperature of 300°F. Therefore, the minimum margin of safety in the cask body for membrane plus bending stress intensity due to the top end drop is:

$$M.S. = (66.0/38.8) - 1$$

$$= +0.70$$

The cask body primary membrane and membrane plus bending stresses resulting from the bottom end drop are summarized for the 52 cask stress points shown in Figure 2.7.1-1 in Table 2.7.1-5 and Table 2.7.1-6, respectively. The maximum primary membrane stress intensity resulting from the bottom end drop is 23.0 ksi, occurring near the bottom end of the cask inner shell (stress point 22). The allowable primary membrane stress intensity in the cask inner shell is 46.2 ksi for a design temperature of 300°F. Therefore, the minimum margin of safety in the cask body for primary membrane stress intensity due to the bottom end drop is:

$$M.S. = (46.2/23.0) - 1$$

$$= +1.01$$

Table 2.7.1-3
Cask 30-Foot Top End Drop Primary Membrane Stress Summary

	Stress Point	Node Point	Stress Components (ksi)				Principal Stresses (ksi)			Stress Intensity
			S_x	S_y	S_z	S_{xy}	S_1	S_2	S_3	
Top Cover	1	830	-1.45	-1.35	-1.35	0.00	-1.35	-1.35	-1.45	0.10
	2	886	-1.45	-1.35	-1.35	0.00	-1.35	-1.35	-1.45	0.10
	3	838	-1.45	-1.34	-1.33	-1.35	-0.05	-1.33	-2.74	2.69
	4	894	-1.45	-1.34	-1.33	-1.35	-0.05	-1.33	-2.74	2.69
	5	809	-8.19	0.29	-4.58	-2.24	0.85	-4.58	-8.75	9.60
	6	901	-8.19	0.29	-4.58	-2.24	0.85	-4.58	-8.75	9.60
Top Flange	7	815	1.45	0.05	2.73	-0.58	2.73	1.66	-0.16	2.89
	8	817	1.45	0.05	2.73	-0.58	2.73	1.66	-0.16	2.89
Inner Shell	9	772	8.43	-10.38	7.71	1.83	8.61	7.71	-10.56	19.17
	10	774	8.43	-10.38	7.71	1.83	8.61	7.71	-10.56	19.17
	11	754	0.39	-7.69	-1.08	3.51	1.70	-1.08	-9.00	10.70
	12	756	0.39	-7.69	-1.08	3.51	1.70	-1.08	-9.00	10.70
	13	674	-0.42	-8.27	-24.08	-0.07	-0.42	-8.27	-24.08	23.66
	14	675	-0.42	-8.27	-24.08	-0.07	-0.42	-8.27	-24.08	23.66
	15	621	-0.38	-8.07	-20.81	0.00	-0.38	-8.07	-20.81	20.43
	16	622	-0.38	-8.07	-20.81	0.00	-0.38	-8.07	-20.81	20.43
	17	471	-0.25	-7.44	-13.69	0.00	-0.25	-7.44	-13.69	13.44
	18	472	-0.25	-7.44	-13.69	0.00	-0.25	-7.44	-13.69	13.44
	19	321	-0.12	-6.81	-6.62	0.00	-0.12	-6.62	-6.81	6.69
	20	322	-0.12	-6.81	-6.62	0.00	-0.12	-6.62	-6.81	6.69
	21	261	-0.07	-6.58	-4.11	0.00	-0.07	-4.11	-6.58	6.51
	22	262	-0.07	-6.58	-4.11	0.00	-0.07	-4.11	-6.58	6.51
	23	164	-0.01	-5.70	-0.74	0.01	-0.01	-0.74	-5.70	5.69
	24	166	-0.01	-5.70	-0.74	0.01	-0.01	-0.74	-5.70	5.69
	25	156	-1.88	-2.22	-0.31	0.37	-0.31	-1.65	-2.45	2.15
	26	158	-1.88	-2.22	-0.31	0.37	-0.31	-1.65	-2.45	2.15
Outer Shell	27	780	1.48	-2.83	8.05	-1.64	8.05	2.03	-3.38	11.43
	28	782	1.48	-2.83	8.05	-1.64	8.05	2.03	-3.38	11.43
	29	678	-1.25	-1.71	11.58	0.21	11.58	-1.16	-1.79	13.37
	30	680	-1.25	-1.71	11.58	0.21	11.58	-1.16	-1.79	13.37
	31	625	-0.41	-1.43	11.77	0.03	11.77	-0.41	-1.43	13.20
	32	626	-0.41	-1.43	11.77	0.03	11.77	-0.41	-1.43	13.20
	33	475	-0.27	-0.80	7.70	0.00	7.70	-0.27	-0.80	8.49
	34	476	-0.27	-0.80	7.70	0.00	7.70	-0.27	-0.80	8.49
	35	325	-0.13	-0.17	3.57	0.00	3.57	-0.13	-0.17	3.74
	36	326	-0.13	-0.17	3.57	0.00	3.57	-0.13	-0.17	3.74
	37	265	-0.12	0.41	2.12	0.04	2.12	0.41	-0.13	2.25
	38	267	-0.12	0.41	2.12	0.04	2.12	0.41	-0.13	2.25
	39	173	-0.23	0.82	0.73	-0.03	0.82	0.73	-0.24	1.06
	40	175	-0.23	0.82	0.73	-0.03	0.82	0.73	-0.24	1.06
Bottom Cover	41	156	-1.37	0.04	-0.36	0.16	0.05	-0.36	-1.39	1.45
	42	66	-1.37	0.04	-0.36	0.16	0.05	-0.36	-1.39	1.45
	43	151	-0.06	-0.03	-0.01	0.31	0.27	-0.01	-0.36	0.62
	44	61	-0.06	-0.03	-0.01	0.31	0.27	-0.01	-0.36	0.62
	45	146	-0.73	0.17	1.29	0.09	1.29	0.18	-0.74	2.03
	46	43	-0.73	0.17	1.29	0.09	1.29	0.18	-0.74	2.03
Ram Access Cover Plate	47	37	0.32	-0.92	-0.91	0.26	0.37	-0.91	-0.98	1.35
	48	8	0.32	-0.92	-0.91	0.26	0.37	-0.91	-0.98	1.35
	49	48	-0.02	-0.77	-0.79	0.09	-0.01	-0.78	-0.79	0.78
	50	5	-0.02	-0.77	-0.79	0.09	-0.01	-0.78	-0.79	0.78
	51	52	-0.09	-0.57	-0.57	0.00	-0.09	-0.57	-0.57	0.48
	52	1	-0.09	-0.57	-0.57	0.00	-0.09	-0.57	-0.57	0.48

ted.xls

Table 2.7.1-4
Cask 30-Foot Top End Drop Membrane Plus Bending Stress Summary

	Stress Point	Node Point	Stress Components (ksi)				Principal Stresses (ksi)			Stress Intensity
			S_x	S_y	S_z	S_{xy}	S_1	S_2	S_3	
Top Cover	1	830	-1.18	23.24	23.24	0.00	23.24	23.24	-1.18	24.42
	2	886	-1.72	-25.94	-25.94	0.00	-1.72	-25.94	-25.94	24.23
	3	838	-1.20	13.88	17.81	-1.35	17.81	14.00	-1.32	19.13
	4	894	-1.70	-16.56	-20.48	-1.35	-1.58	-16.68	-20.48	18.90
	5	809	-13.00	-8.74	-2.57	-2.24	-2.57	-7.77	-13.96	11.39
	6	901	-5.93	9.32	-6.58	-2.24	9.65	-6.25	-6.58	16.23
Top Flange	7	815	2.27	4.54	4.32	-0.58	4.68	4.32	2.13	2.54
	8	817	0.55	-4.35	1.13	-0.58	1.13	0.62	-4.41	5.55
Inner Shell	9	772	3.55	-35.05	-0.89	1.83	3.64	-0.89	-35.14	38.77
	10	774	14.91	13.76	16.31	1.83	16.31	16.25	12.41	3.90
	11	754	0.16	-25.32	-6.34	3.51	0.63	-6.34	-25.79	26.43
	12	756	1.06	9.73	4.18	3.51	10.97	4.18	-0.18	11.15
	13	674	0.00	-8.30	-24.52	-0.07	0.00	-8.30	-24.52	24.52
	14	675	-0.85	-8.23	-23.65	-0.07	-0.85	-8.23	-23.65	22.80
	15	621	-0.01	-8.15	-21.20	0.00	-0.01	-8.15	-21.20	21.20
	16	622	-0.74	-7.98	-20.42	0.00	-0.74	-7.98	-20.42	19.67
	17	471	0.00	-7.44	-13.93	0.00	0.00	-7.44	-13.93	13.93
	18	472	-0.49	-7.44	-13.45	0.00	-0.49	-7.44	-13.45	12.96
	19	321	0.00	-6.84	-6.75	0.00	0.00	-6.75	-6.84	6.83
	20	322	-0.24	-6.78	-6.49	0.00	-0.24	-6.49	-6.78	6.54
	21	261	0.00	-6.57	-4.18	0.00	0.00	-4.18	-6.57	6.57
	22	262	-0.15	-6.59	-4.04	0.00	-0.15	-4.04	-6.59	6.44
	23	164	-0.18	-6.86	-1.15	0.01	-0.18	-1.15	-6.86	6.69
	24	166	0.22	-4.55	-0.33	0.01	0.22	-0.33	-4.55	4.77
	25	156	-2.09	-4.22	-0.81	0.37	-0.81	-2.03	-4.28	3.47
	26	158	-1.87	-0.27	0.19	0.37	0.19	-0.19	-1.95	2.14
Outer Shell	27	780	1.93	-1.07	8.94	-1.64	8.94	2.65	-1.79	10.73
	28	782	1.02	-4.55	7.15	-1.64	7.15	1.47	-5.00	12.14
	29	678	-1.22	1.43	13.00	0.21	13.00	1.45	-1.23	14.23
	30	680	-1.31	-4.78	10.15	0.21	10.15	-1.30	-4.79	14.94
	31	625	-0.79	-1.84	12.03	0.03	12.03	-0.79	-1.84	13.87
	32	626	-0.04	-1.02	11.51	0.03	11.51	-0.04	-1.02	12.53
	33	475	-0.52	-0.80	7.94	0.00	7.94	-0.52	-0.80	8.74
	34	476	-0.02	-0.79	7.45	0.00	7.45	-0.02	-0.79	8.25
	35	325	-0.24	-0.32	3.64	0.00	3.64	-0.24	-0.32	3.96
	36	326	-0.02	-0.01	3.50	0.00	3.50	-0.01	-0.02	3.52
	37	265	-0.13	0.14	2.13	0.04	2.13	0.15	-0.14	2.27
	38	267	-0.12	0.66	2.11	0.04	2.11	0.67	-0.12	2.23
	39	173	-1.36	-0.01	0.48	-0.03	0.48	-0.01	-1.36	1.84
	40	175	-0.09	1.64	0.98	-0.03	1.64	0.98	-0.09	1.73
Bottom Cover	41	156	-4.38	-1.52	-0.39	0.16	-0.39	-1.51	-4.39	4.00
	42	66	-0.25	1.59	-0.33	0.16	1.61	-0.26	-0.33	1.94
	43	151	-0.01	0.40	2.03	0.31	2.03	0.56	-0.18	2.21
	44	61	-0.11	-0.45	-2.05	0.31	0.07	-0.64	-2.05	2.12
	45	146	-0.21	2.07	3.82	0.09	3.82	2.07	-0.21	4.03
	46	43	-0.95	-1.73	-1.24	0.09	-0.94	-1.24	-1.74	0.80
Ram Access Cover Plate	47	37	0.43	-0.24	0.10	0.26	0.52	0.10	-0.33	0.85
	48	8	0.16	-1.61	-1.91	0.26	0.19	-1.65	-1.91	2.11
	49	48	0.14	0.77	0.71	0.09	0.78	0.71	0.13	0.65
	50	5	-0.19	-2.32	-2.29	0.09	-0.18	-2.29	-2.32	2.14
	51	52	-0.03	1.10	1.10	0.00	1.10	1.10	-0.03	1.14
	52	1	-0.13	-2.25	-2.25	0.00	-0.13	-2.25	-2.25	2.11

ted.xls

Table 2.7.1-5
Cask 30-Foot Bottom End Drop Primary Membrane Stress Summary

	Stress Point	Node Point	Stress Components(ksi)				Principal Stresses (ksi)			Stress Intensity
			S_x	S_y	S_z	S_{xy}	S_1	S_2	S_3	
Top Cover	1	830	-0.06	0.03	0.03	0.00	0.03	0.03	-0.06	0.10
	2	886	-0.06	0.03	0.03	0.00	0.03	0.03	-0.06	0.10
	3	838	-0.06	0.03	0.03	-0.28	0.27	0.03	-0.29	0.56
	4	894	-0.06	0.03	0.03	-0.28	0.27	0.03	-0.29	0.56
	5	809	-1.82	0.49	-0.60	-0.42	0.56	-0.60	-1.89	2.45
	6	901	-1.82	0.49	-0.60	-0.42	0.56	-0.60	-1.89	2.45
Top Flange	7	815	0.71	0.66	0.84	-0.40	1.08	0.84	0.29	0.79
	8	817	0.71	0.66	0.84	-0.40	1.08	0.84	0.29	0.79
Inner Shell	9	772	0.57	-4.25	-0.75	0.06	0.57	-0.75	-4.25	4.83
	10	774	0.57	-4.25	-0.75	0.06	0.57	-0.75	-4.25	4.83
	11	754	-0.10	-6.42	-2.42	-0.31	-0.09	-2.42	-6.44	6.35
	12	756	-0.10	-6.42	-2.42	-0.31	-0.09	-2.42	-6.44	6.35
	13	674	-0.07	-7.29	-3.65	0.00	-0.07	-3.65	-7.29	7.22
	14	675	-0.07	-7.29	-3.65	0.00	-0.07	-3.65	-7.29	7.22
	15	621	-0.11	-7.49	-5.95	0.00	-0.11	-5.95	-7.49	7.38
	16	622	-0.11	-7.49	-5.95	0.00	-0.11	-5.95	-7.49	7.38
	17	471	-0.23	-8.12	-13.00	0.00	-0.23	-8.12	-13.00	12.76
	18	472	-0.23	-8.12	-13.00	0.00	-0.23	-8.12	-13.00	12.76
	19	321	-0.36	-8.75	-20.10	-0.01	-0.36	-8.75	-20.10	19.74
	20	322	-0.36	-8.75	-20.10	-0.01	-0.36	-8.75	-20.10	19.74
	21	261	-0.42	-8.98	-23.40	-0.01	-0.42	-8.98	-23.40	22.98
	22	262	-0.42	-8.98	-23.40	-0.01	-0.42	-8.98	-23.40	22.98
	23	164	0.12	-8.30	1.36	-3.97	1.70	1.36	-9.87	11.57
	24	166	0.12	-8.30	1.36	-3.97	1.70	1.36	-9.87	11.57
	25	156	-1.16	-3.77	5.91	-1.54	5.91	-0.45	-4.48	10.40
	26	158	-1.16	-3.77	5.91	-1.54	5.91	-0.45	-4.48	10.40
Outer Shell	27	780	0.10	0.98	0.69	0.08	0.99	0.69	0.10	0.90
	28	782	0.10	0.98	0.69	0.08	0.99	0.69	0.10	0.90
	29	678	-0.06	0.69	1.92	-0.02	1.92	0.69	-0.06	1.98
	30	680	-0.06	0.69	1.92	-0.02	1.92	0.69	-0.06	1.98
	31	625	-0.11	0.17	3.12	-0.01	3.12	0.17	-0.12	3.24
	32	626	-0.11	0.17	3.12	-0.01	3.12	0.17	-0.12	3.24
	33	475	-0.26	-0.46	7.30	0.00	7.30	-0.26	-0.46	7.76
	34	476	-0.26	-0.46	7.30	0.00	7.30	-0.26	-0.46	7.76
	35	325	-0.40	-1.09	11.40	-0.02	11.40	-0.40	-1.10	12.49
	36	326	-0.40	-1.09	11.40	-0.02	11.40	-0.40	-1.10	12.49
	37	265	-1.13	-1.38	11.25	-0.13	11.25	-1.07	-1.44	12.69
	38	267	-1.13	-1.38	11.25	-0.13	11.25	-1.07	-1.44	12.69
	39	173	0.98	-2.67	5.95	1.74	5.95	1.68	-3.37	9.32
	40	175	0.98	-2.67	5.95	1.74	5.95	1.68	-3.37	9.32
Bottom Cover	41	156	-8.42	-0.38	-2.48	0.35	-0.36	-2.48	-8.44	8.07
	42	66	-8.42	-0.38	-2.48	0.35	-0.36	-2.48	-8.44	8.07
	43	151	-1.48	-0.74	-0.67	1.48	0.41	-0.67	-2.64	3.05
	44	61	-1.48	-0.74	-0.67	1.48	0.41	-0.67	-2.64	3.05
	45	146	-6.12	0.56	8.06	0.64	8.06	0.62	-6.18	14.24
	46	43	-6.12	0.56	8.06	0.64	8.06	0.62	-6.18	14.24
Ram Access Cover Plate	47	37	0.60	-6.82	-7.26	2.43	1.32	-7.26	-7.55	8.87
	48	8	0.60	-6.82	-7.26	2.43	1.32	-7.26	-7.55	8.87
	49	48	-0.57	-5.90	-6.04	0.99	-0.39	-6.04	-6.07	5.68
	50	5	-0.57	-5.90	-6.04	0.99	-0.39	-6.04	-6.07	5.68
	51	52	-1.24	-4.33	-4.33	0.00	-1.24	-4.33	-4.33	3.09
	52	1	-1.24	-4.33	-4.33	0.00	-1.24	-4.33	-4.33	3.09

bcd.xls

Table 2.7.1-6
Cask 30-Foot Bottom End Drop Membrane Plus Bending Stress Summary

	Stress Point	Node Point	Stress Components (ksi)				Principal Stresses (ksi)			Stress Intensity
			S_x	S_y	S_z	S_{xy}	S_1	S_2	S_3	
Top Cover	1	830	-0.03	4.45	4.45	0.00	4.45	4.45	-0.03	4.49
	2	886	-0.09	-4.39	-4.39	0.00	-0.09	-4.39	-4.39	4.29
	3	838	-0.03	2.54	3.34	-0.28	3.34	2.57	-0.06	3.41
	4	894	-0.09	-2.47	-3.28	-0.28	-0.06	-2.50	-3.28	3.22
	5	809	-3.19	-1.85	-0.74	-0.42	-0.74	-1.73	-3.31	2.57
	6	901	-1.23	2.83	-0.47	-0.42	2.87	-0.47	-1.27	4.14
Top Flange	7	815	1.19	1.88	1.33	-0.40	2.06	1.33	1.01	1.05
	8	817	0.27	-0.52	0.35	-0.40	0.43	0.35	-0.69	1.12
Inner Shell	9	772	0.33	-5.96	-1.34	0.06	0.33	-1.34	-5.96	6.30
	10	774	0.91	-2.58	-0.15	0.06	0.91	-0.15	-2.58	3.49
	11	754	-0.13	-4.45	-1.91	-0.31	-0.11	-1.91	-4.47	4.36
	12	756	-0.10	-8.37	-2.93	-0.31	-0.08	-2.93	-8.38	8.30
	13	674	0.00	-7.34	-3.73	0.00	0.00	-3.73	-7.34	7.34
	14	675	-0.13	-7.24	-3.57	0.00	-0.13	-3.57	-7.24	7.10
	15	621	0.00	-7.50	-6.06	0.00	0.00	-6.06	-7.50	7.50
	16	622	-0.21	-7.47	-5.84	0.00	-0.21	-5.84	-7.47	7.26
	17	471	0.00	-8.12	-13.23	0.00	0.00	-8.12	-13.23	13.22
	18	472	-0.47	-8.12	-12.77	0.00	-0.47	-8.12	-12.77	12.30
	19	321	-0.01	-8.84	-20.48	-0.01	-0.01	-8.84	-20.48	20.48
	20	322	-0.72	-8.66	-19.72	-0.01	-0.72	-8.66	-19.72	19.00
	21	261	-0.01	-8.95	-23.81	-0.01	-0.01	-8.95	-23.81	23.80
	22	262	-0.84	-9.00	-22.99	-0.01	-0.84	-9.00	-22.99	22.16
	23	164	-0.81	-32.37	-5.96	-3.97	-0.32	-5.96	-32.86	32.54
	24	166	1.87	15.49	8.68	-3.97	16.56	8.68	0.80	15.76
	25	156	-9.03	-24.52	-1.82	-1.54	-1.82	-8.88	-24.67	22.86
	26	158	7.94	16.47	13.65	-1.54	16.74	13.65	7.67	9.07
Outer Shell	27	780	0.13	1.37	0.83	0.08	1.37	0.83	0.12	1.25
	28	782	0.08	0.61	0.55	0.08	0.62	0.55	0.07	0.56
	29	678	-0.10	0.25	1.86	-0.02	1.86	0.26	-0.10	1.96
	30	680	-0.01	1.12	1.98	-0.02	1.98	1.12	-0.02	1.99
	31	625	-0.21	0.04	3.19	-0.01	3.19	0.04	-0.21	3.40
	32	626	-0.02	0.29	3.06	-0.01	3.06	0.29	-0.02	3.07
	33	475	-0.49	-0.46	7.53	0.00	7.53	-0.46	-0.49	8.02
	34	476	-0.02	-0.46	7.06	0.00	7.06	-0.02	-0.46	7.53
	35	325	-0.76	-1.43	11.66	-0.02	11.66	-0.76	-1.43	13.09
	36	326	-0.03	-0.77	11.13	-0.02	11.13	-0.03	-0.77	11.89
	37	265	-1.19	2.12	12.73	-0.13	12.73	2.12	-1.20	13.93
	38	267	-1.10	-4.81	9.77	-0.13	9.77	-1.09	-4.81	14.58
	39	173	8.76	-5.03	5.66	1.74	8.98	5.66	-5.25	14.23
	40	175	0.50	-0.35	6.25	1.74	6.25	1.87	-1.72	7.97
Bottom Cover	41	156	-27.68	-2.92	1.73	0.35	1.73	-2.91	-27.68	29.41
	42	66	-2.23	2.16	-6.69	0.35	2.19	-2.26	-6.69	8.88
	43	151	-1.08	4.45	14.20	1.48	14.20	4.82	-1.46	15.65
	44	61	-1.89	-5.93	-15.54	1.48	-1.40	-6.41	-15.54	14.14
	45	146	-2.54	13.77	25.34	0.64	25.34	13.79	-2.57	27.90
	46	43	-7.64	-12.65	-9.22	0.64	-7.56	-9.22	-12.73	5.18
Ram Access Cover Plate	47	37	1.56	-3.19	-0.28	2.43	2.58	-0.28	-4.21	6.79
	48	8	-0.36	-10.45	-14.24	2.43	0.20	-11.01	-14.24	14.43
	49	48	1.11	6.33	6.05	0.99	6.51	6.05	0.93	5.58
	50	5	-2.22	-18.12	-18.11	0.99	-2.16	-18.11	-18.19	16.03
	51	52	-0.37	9.43	9.43	0.00	9.43	9.43	-0.37	9.80
	52	1	-1.89	-18.09	-18.09	0.00	-1.89	-18.09	-18.09	16.20

bed.xls

The maximum membrane plus bending stress intensity resulting from the bottom end drop is 32.5 ksi, occurring near the bottom end of the cask inner shell (stress point 23). The allowable membrane plus bending stress intensity in the cask top closure plate and inner shell is 66.0 ksi for a design temperature of 300°F. Therefore, the minimum margin of safety in the cask body for membrane plus bending stress intensity due to the top end drop is:

$$\text{M.S.} = (66.0/32.5) - 1$$

$$= +1.0$$

The results of the cask end drop finite element analyses demonstrate that the cask body meets the stress acceptance criteria for the 30-foot end drop condition. The highest shell stresses result from the bottom end drop. This is due to the relative stiffness of the top and bottom end regions of the shells. The highest bending stresses occur in the top closure plate for the top end drop. These stresses result from the DSC inertial loading on the inner surface of the top closure plate. The end drop stresses are combined with the stresses resulting from other loading conditions in accordance with Regulatory Guide 7.8 [2.3]. The accident condition load combination evaluation is presented in Section 2.7.8.1.

In addition to the analysis described above, confirmatory hand calculations are used to check the validity of the finite element solution results. Both top and bottom end impacts are considered and the most limiting conditions evaluated as follows.

1. Determine the cask shell stresses due to a 1g end drop load, assuming the cask inner and structural shells act as parallel beams. For this condition, the thrust loads, including the weight of the lead gamma shield, are assumed to be supported by both the inner and structural shells.

2. Determine the cask shell stresses resulting from a 1g end drop for the lead adherence condition. This condition assumes the lead gamma shield is supported solely by the cask inner shell. This condition results in the highest axial compressive stresses in the cask inner shell.

3. Determine the cask shell stresses resulting from a 1g end drop for the hydrostatic condition. This analysis assumes the lead gamma shield acts as a quasi-liquid, unable to support its own weight, and is initially supported only at its base. As the end drop load is applied, friction forces develop between the lead column and cask inner and structural shells, providing additional support to the lead column. This condition results in the highest hoop compressive stresses in the cask inner shell.

4. Determine the ram closure plate stresses due to a 1g end drop.

5. Determine the bottom end closure stresses due to a 1g bottom end drop. The bottom end closure is loaded by the weight of the DSC, ram closure plate, and its own self weight for the bottom end drop. No credit is taken for support provided by the bottom end impact limiter.

6. Determine the top closure plate stresses due to a 1g top end drop. The top cover plate is loaded by the weight of the DSC and its own self weight for the top end drop. No credit is taken for support provided by the top end impact limiter.

7. Summarize the controlling cask body stresses due to the 30-foot end drop condition. These stresses are determined by scaling the stresses due to the 1g end drop load by the controlling 30-foot end drop equivalent static g-load. The stresses are provided at the 52 cask stress points shown in Figure 2.7.1-1.

8. Determine the stresses in the top closure bolts due to the top end drop condition, conservatively taking no credit for support provided by the top end impact limiter.

9. Determine the stresses in the bottom closure bolts due to the bottom end drop condition, conservatively taking no credit for support provided by the bottom end impact limiter.

Deleted

(See Figure 2.7.1-1)

Figure 2.7.1-5
Cask Stress Point Locations

2.7.1.1.1 Cask Shells Analysis - Parallel Beams

The cask shell shear and moment diagrams for a 1g end drop condition are shown in Figure 2.7.1-6. The derivation of the end drop axial force (thrust) distribution is presented in the following paragraphs.

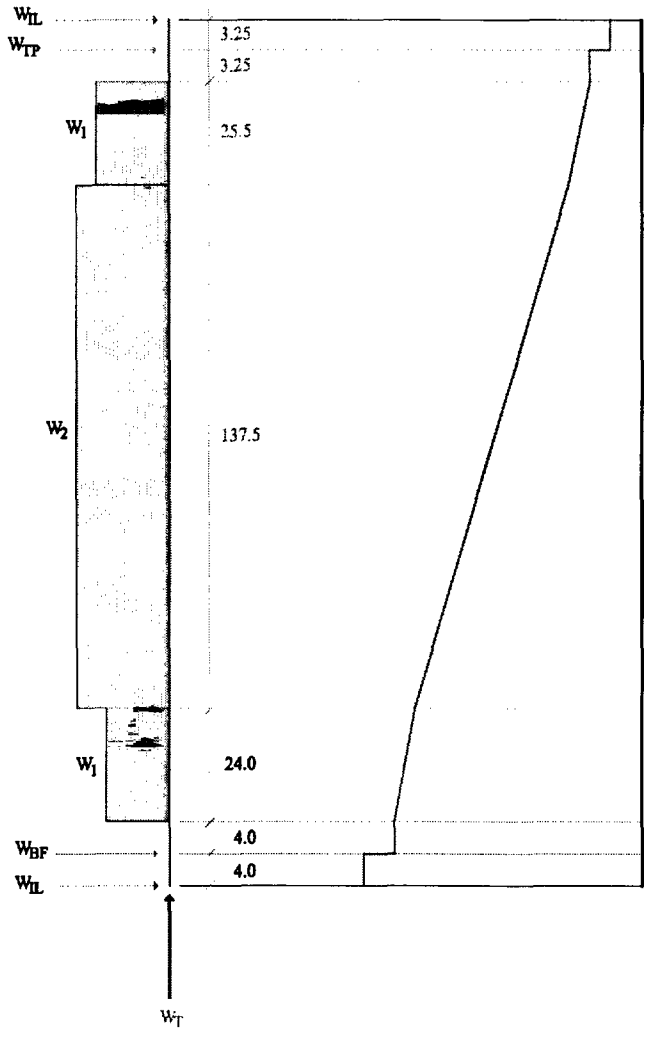

Figure 2.7.1-6
Cask Shell End Drop Axial Force Diagram

For an end drop, the axial load at any point will be equal to the weight of material above that point. Since either end can be loaded, the resultant axial diagram will be the envelope of the diagrams for top and bottom loading.

Loads

W_C	=	Weight of Cask assembly	=	140,830 lb
W_{NS}	=	Weight of Neutron Shield (including jacket)	=	16,109 lb
W_{TR}	=	Weight of Trunnions	=	2,680 lb
W_{BF}	=	Weight of bottom forging	=	12,498 lb
W_{TP}	=	Weight of Top Cover Plate	=	10,155 lb
W_{IL}	=	Weight of one Impact Limiter	=	15,794 lb
W_g	=	$W_c - W_{BF} - W_{TP}$	=	118,177 lb
W_L	=	Weight of Lead Shielding	=	69,684 lb
W_1	=	W_S/187 in.	=	632.0 lb/in
W_2	=	$W_1 + (W_{NS}+W_{TR})/137.5$	=	768.6 lb/in

The total load for a 1g end drop is:

$$W_T = W_C + W_{NS} + W_{TR} + W_{IL} \quad = \quad 175{,}413 \text{ lb}$$

The weight of the DSC will be carried by either the top or bottom plates. The bending stresses in these components due to a 1g end drop load are computed in Sections 2.7.1.1.4 through 2.7.1.1.6.

Bottom End Drop Loading

Referring to Figure 2.7.1-6, the axial loads at given points for bottom end loading are:

T_1	=	W_T	=	175,413 lb
T_2	=	$T_1 - W_{BF}$	=	162,915 lb
T_3	=	$T_2 - W_1 \times 24$	=	147,748 lb
T_4	=	$T_3 - W_2 \times 137.5$	=	42,064 lb

$T_5 = T_4 - W_1 \times 25.5 = 25{,}949$ lb

$T_6 = T_5 - W_{TP} = 15{,}796$ lb

$T_{END} = T_6 - W_{IL} = 0$ lb

Referring to Figure 2.7.1-6, the axial thrust loads at cask shell stress report points 9 through 40 (shown in Figure 2.7.1-1) due to a 1g bottom end drop are:

@Y = 8 inches (stress points 25, 26, 39, and 40):

$T = T_2 = 162{,}915$ lb

@Y = 12 inches (stress points 23 and 24):

$T = T_2 - W_1 \times 4$ in. $= 160{,}387$ lb

@Y=32 inches (stress points 21, 22, 37, and 38):

$T = T_3 = 147{,}748$ lb

@Y=50 inches (stress points 19, 20, 35, and 36):

$T = T_3 - W_2 \times 18$ in. $= 133{,}913$ lb

@Y=101 inches (stress points 17, 18, 33, and 34):

$T = T_3 - W_2 \times 69$ in. $= 94{,}714$ lb

@Y=152 inches (stress points 15, 16, 31, and 32):

$T = T_3 - W_2 \times 120$ in. $= 55{,}515$ lb

@Y=169.5 inches (stress points 13, 14, 29, and 30):

$T = T_4 = 42{,}064$ lb

@Y=187 inches (stress points 11 and 12):

$T = T_4 - W_1 \times 17.5$ in. $= 31{,}005$ lb

@Y=190 inches (stress points 9, 10, 27, and 28):

$T = T_4 - W_1 \times 20.5 \text{ in.} = 29{,}109 \text{ lb}$

Top End Drop Loading

The axial thrust loads at given points for top end loading are:

$T_1 = W_{IL} = 15{,}794 \text{ lb}$

$T_2 = T_1 + W_{BF} = 28{,}292 \text{ lb}$

$T_3 = T_2 + W_1 \times 24 \text{ in.} = 43{,}459 \text{ lb}$

$T_4 = T_3 + W_2 \times 137.5 \text{ in.} = 149{,}143 \text{ lb}$

$T_5 = T_4 + W_1 \times 25.5 \text{ in.} = 165{,}258 \text{ lb}$

$T_6 = T_5 + W_{TP} = 175{,}413 \text{ lb}$

The axial thrust loads in the cask shells due to a 1g top end drop at stress report points 9 through 40 are:

@Y=8 inches (stress points 25, 26, 39, and 40):

$T = T_2 = 28{,}292 \text{ lb}$

@Y=12 inches (stress points 23 and 24):

$T = T_2 + W_1 \times 4 \text{ in.} = 30{,}820 \text{ lb}$

@Y=32 inches (stress points 21, 22, 37, and 38):

$T = T_3 = 43{,}459 \text{ lb}$

@Y=50 inches (stress points 19, 20, 35, and 36):

$T = T_3 + W_2 \times 18.0 \text{ in.} = 57{,}294 \text{ lb}$

@Y=101 inches (stress points 17, 18, 33, and 34):

$$T = T_3 + W_2 \times 69 \text{ in.} = 96{,}493 \text{ lb}$$

@Y=152 inches (stress points 15, 16, 31, and 32):

$$T = T_3 + W_2 \times 120 \text{ in.} = 135{,}692 \text{ lb}$$

@Y=169 inches (stress points 13, 14, 29, and 30):

$$T = T_4 = 149{,}143 \text{ lb}$$

@Y=187 inches (stress points 11 and 12):

$$T = T_4 + W_1 \times 17.5 \text{ in.} = 160{,}202 \text{ lb}$$

@Y=190 inches (stress points 9, 10, 27, and 28):

$$T = T_4 + W_1 \times 20.5 \text{ in.} = 162{,}098 \text{ lb}$$

The nominal axial stress, σ_a, at each stress point is computed by dividing the maximum axial load by the section area. The areas of the cask shells at each of the stress points are determined in Section 2.6.4. The nominal axial stresses, σ_a, at the cask stress points for a 1g end drop, assuming the lead weight is supported by both the inner and outer shells, are summarized in Table 2.7.1-7.

2.7.1.1.2 Cask Shells Analysis - Lead Adherence

.Under extreme cold ambient conditions (-20°F) combined with no fuel decay heat load, the temperature of the cask body will be -20°F throughout. Under these conditions, the higher coefficient of thermal expansion will cause the lead gamma shield to try to contract more than the cask inner shell. This results in the lead adhering more tightly to the cask inner shell. Thus, conservatively assuming the static friction forces developed between the lead and inner shell are sufficient to withstand the end drop loading, the entire weight of the lead gamma shield will be supported by the cask inner shell for the postulated end drop.

In the hand calculations presented above, the weight of the lead column is incorporated into the weight of the cask shells; the weight of the lead column is therefore carried by the inner and

outer shells in proportion to their section area. Therefore, assuming lead adherence to the inner shell, the weight transferred from the outer shell to the inner shell is:

$$W_{LI} = W_L \times A_O/(A_O+A_I)$$
$$= W_L \times 636.2/(636.2+271.9)$$
$$= 0.70 \times W_L$$
$$= 48{,}816 \text{ lb}$$

The additional load acting on the inner shell due to the lead column is represented by W_3, where:

$$W_3 = W_{LI}/182 \text{ in.} = 268.2 \text{ lb/in}$$

For bottom end loading T_{LB}, the additional axial load on the inner shell due to the lead column is equal to:

$$T_{LB} = W_{LI}/182(190 \text{ in.}-Y)$$

For top end loading T_{LT}, the additional axial load is:

$$T_{LT} = W_{LI}/182(Y-8 \text{ in.})$$

Therefore, the additional axial loads at the stress report points on the inner shell are:

@Y=8 inches (stress points 25 and 26):

T_{LB} = 48,816 lb

T_{LT} = 0 lb

@Y=12 inches (stress points 23 and 24):

T_{LB} = 47,744 lb

T_{LT} = 1,073 lb

@Y=32 inches (stress points 21,22):

T_{LB} = 42,379 lb

T_{LT} = 6,437 lb

@Y=50 inches (stress points 19 and 20):

T_{LB} = 33,551 lb

T_{LT} = 11,265 lb

@Y=101 inches (stress points 17 and 18):

T_{LB} = 23,872 lb

T_{LT} = 24,945 lb

@Y=152 inches (stress points 15 and 16):

T_{LB} = 10,192 lb

T_{LT} = 38,624 lb

@Y=169.5 inches (stress points 13 and 14):

T_{LB} = 5,499 lb

T_{LT} = 43,318 lb

@Y=187 inches (stress points 11 and 12):

T_{LB} = 805 lb

T_{LT} = 48,012 lb

@Y=190 inches (stress points 9 and 10):

T_{LB} = 0 lb

T_{LT} = 48,816 lb

The maximum force at each point is added to the force computed above. The resulting forces and stresses are shown in Table 2.7.1-7.

2.7.1.1.3 Cask Shell Lead Slump Analysis - Hydrostatic Condition

For this load condition, the lead column is treated as a quasi-liquid. The column is assumed to have no strength to carry its own weight due to vertical loading. Under vertical loading, the lead is assumed to slump laterally against the inner surface of the structural shell and the outer surface of the inner shell. These lateral forces in turn produce friction forces that support the vertical load of the lead. The magnitudes of the lateral forces are determined from the required friction force.

Given that inner diameter of the structural shell is 78.5 inches and the outer diameter of the inner shell is 70.5 inches, the mean diameter of the lead column, D_L, is 74.5 inches. Defining the linear weight of the column as the weight divided by the mean circumference:

$$w_L = W_L / D_L$$

$$= 69{,}700/(\pi \times 74.5)$$

$$= 298 \text{ lb/in}$$

Assuming that the lateral forces between the lead column and the surfaces of the shells follows a triangular distribution proportional to the height of the lead column:

$$q_L = q_{MAX}(190-Y)/H_L \quad \text{for bottom end loading}$$

$$= q_{MAX}(Y-8)/H_L \quad \text{for top end loading}$$

Where q_{MAX} represents the maximum lateral pressure. The vertical pressure resulting from the lateral pressure is:

$$f_L = q_L \times \mu$$

Per Reference [2.22], the coefficient of friction, μ, is 0.95 for lead and steel; however, a conservative value of 0.5 is used for this analysis to be consistent with previous applications. The total linear vertical force acting on one of the shell surfaces is:

$F_L = \frac{1}{2} \times q_{MAX} \times H_L \times \mu$

This force acts against the surfaces of both shells. Therefore:

$w_L = 2F_L$

$W_L / D_L = q_{MAX} \times H_L \times \mu$

$q_{MAX} = W_L/(\pi \times D_L \times H_L \times \mu)$

$= 69{,}700/(\pi \times 74.5 \times 182 \times 0.5)$

$= 3.28$ psi

The resulting hoop stress is:

$\sigma_H = qD/2t$

For the inner shell, D=70.5 inches (outside diameter) and t = 1.25 inches. Therefore, the hoop stress at each stress point on the inner shell due to lead slump is:

$\sigma_{H\text{-}MAX} = q_{MAX} \times D/2t$

$= 3.28 \times 70.5/(2 \times 1.25)$

$= 92.5$ psi

$\sigma_H = 92.5(190\text{-}Y)/182.0$ for bottom end loading

$= 92.5(Y\text{-}8)/182.0$ for top end loading

For the outer shell, D=78.5 inches (inside diameter) and t = 2.5 inches. Therefore:

$\sigma_{H\text{-}MAX} = q_{MAX} \times D/2t$

$= 3.28 \times 78.5/(2 \times 2.5)$

$= 51.4$ psi

σ_H = 51.4(190-Y)/182.0 for bottom end loading

= 51.4(Y-8)/182.0 for top end loading

The hoop stresses in the inner shell will be compressive; the hoop stresses in the outer shell will be tensile.

The computed hoop stresses, σ_H, due to the effects of the lead column are listed in Table 2.7.1-7. For the inner shell, the additional stress due to lead adherence is greater than the hoop stress. For the outer shell, only additional hoop stress applies.

Table 2.7.1-7
Cask Nominal Shell Stresses - 30' End Drop

Cask Component	Stress Point	Area (in^2)	T (lb.)	σ_a (psi)	T' (lb.)	σ'_a (psi)	σ_H (psi)
Inner Shell	9	1132.7	162098	-143.1	48816	-179.5	92.26
	10	1132.7	162098	-143.1	48816	-179.5	92.26
	11	908.1	160202	-176.4	48012	-176.6	90.74
	12	908.1	160202	-176.4	48012	-176.6	90.74
	13	908.1	149143	-164.2	43318	-159.3	81.87
	14	908.1	149143	-164.2	43318	-159.3	81.87
	15	992.1	135692	-136.8	38624	-142.0	73.00
	16	992.1	135692	-136.8	38624	-142.0	73.00
	17	992.1	96493	-97.3	24945	-91.7	47.15
	18	992.1	96493	-97.3	24945	-91.7	47.15
	19	992.1	133913	-135.0	37551	-138.1	70.97
	20	992.1	133913	-135.0	37551	-138.1	70.97
	21	908.1	147748	-162.7	42379	-155.8	80.10
	22	908.1	147748	-162.7	42379	-155.8	80.10
	23	908.1	160387	-176.6	47744	-175.6	90.24
	24	908.1	160387	-176.6	47744	-175.6	90.24
	25	1170.2	162915	-139.2	48816	-179.5	92.26
	26	1170.2	162915	-139.2	48816	-179.5	92.26
Outer Shell	27	1132.7	162098	-143.1	0	0	51.37
	28	1132.7	162098	-143.1	0	0	51.37
	29	908.1	149143	-164.2	0	0	45.58
	30	908.1	149143	-164.2	0	0	45.58
	31	992.1	135692	-136.8	0	0	40.64
	32	992.1	135692	-136.8	0	0	40.64
	33	992.1	96493	-97.3	0	0	26.25
	34	992.1	96493	-97.3	0	0	26.25
	35	992.1	133913	-135.0	0	0	39.51
	36	992.1	133913	-135.0	0	0	39.51
	37	908.1	147748	-162.7	0	0	44.59
	38	908.1	147748	-162.7	0	0	44.59
	39	1170.2	162915	-139.2	0	0	51.37
	40	1170.2	162915	-139.2	0	0	51.37

2.7.1.1.4 Ram Closure Plate End Drop Analysis

The ram closure plate supports its self weight for the end drop conditions. The shear and bending stresses in the ram closure plate are calculated for a unit (1g) end drop using hand calculations at stress points 47 through 52, Figure 2.7.1-7. The average shear stress in the ram closure plate at a radius r, is:

$$\sigma_v = V/A$$

$$= q\pi r^2/2\pi rt$$

$$= qr/2t$$

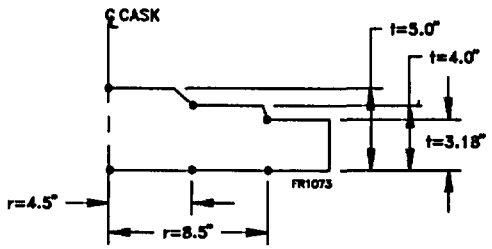

Figure 2.7.1-7
Ram Closure Plate Stress Points

where,

q	=	uniform pressure load due to plate self weight, conservatively based on maximum thickness
r	=	radius at stress point of interest
t	=	thickness of ram closure plate, varies with radius

The maximum bending stress in the ram closure plate due to a 1g end drop loading is calculated for a simply supported circular plate under a uniform pressure load as follows:

$$\sigma_b = 6M/t^2 \qquad \text{([2.7], Table 24)}$$

where;

M	=	Maximum bending moment per unit of circumference length
t	=	Plate thickness

The radial bending moment, M_r, is calculated as follows:

$$M_r = q[a^2 L_{17} - r^2 G_{17}] \qquad \text{([2.7], Table 24, case 2)}$$

where;

$$L_{17} = \frac{1}{4}\left[1 - \frac{1-\upsilon}{4}\left(1 - \left(\frac{b}{a}\right)^4\right)\right]$$

$$G_{17} = \frac{1}{4}\left[1 - \frac{1-\upsilon}{4}\left(1 - \left(\frac{b}{r}\right)^4\right) - \left(\frac{b}{r}\right)^2\left(1 + (1+\upsilon)\ln\left(\frac{r}{b}\right)\right)\right]$$

a = 11.14 in., radius of plate at bolt circle

b = 0 in., Inner radius of plate

q = (1 g)(5.0 in.)(0.2853 lb/in^3)

= 1.43 psi/g

The shear and bending stresses in the ram closure plate resulting from a 1g end drop are calculated and presented in Table 2.7.1-8.

Table 2.7.1-8
Ram Closure Plate Stresses Due to 1g End Drop

Stress Point	Radius, r (in.)	Thickness, t (in.)	Bending Moment, M_r (in-lb/in.)	Shear Stress, σ_v (psi)	Bending Stress, σ_b (psi)
47 & 48	8.5	3.18	15.29	1.9	9.1
49 & 50	4.5	4.00	30.63	0.8	11.5
51 & 52	0.0	5.00	36.60	0.0	8.8

2.7.1.1.5 Cask Bottom End Closure End Drop Analysis

The bottom end closure is analyzed for the end drop as a fixed edge annular plate subjected to a uniform pressure load. The bottom end closure is loaded by its own self weight, the weight of the ram closure plate and the weight of the DSC. The uniform support provided by the impact limiter counteracts the uniform pressure load due to the DSC weight, and is conservatively ignored. The surface contact, shear, and bending stresses in the bottom end closure are evaluated at stress points 41 through 46, Figure 2.7.1-8. The surface contact stress on the inner surface of the bottom end closure is equal to the uniform pressure load due to the DSC weight. The weight of the heaviest DSC is 81,300 pounds (FC-DSC). Therefore, the surface contact stress is:

$$\sigma_n = P/A$$

$$= 81{,}300/[\pi(34.0^2 - 8.5^2)]$$

$$= 23.9 \text{ psi/g}$$

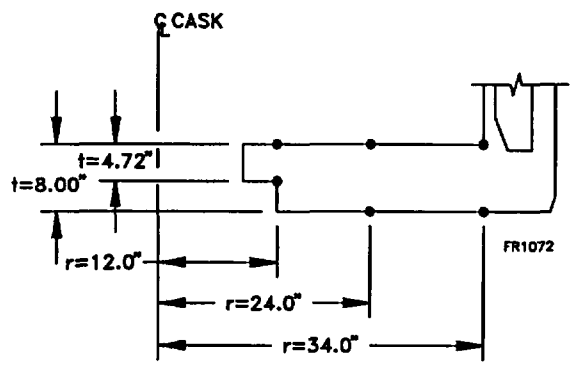

Figure 2.7.1-8
Bottom End Closure Stress Points

The shear stress in the bottom end closure results from the weight of the ram access cover plate and the load due to the DSC and bottom end closure self weight. The shear stress, σ_{v1}, due to the weight of the ram access cover (475 pounds) is:

$$\sigma_{v1} = 475/(2\pi r)$$

$$= 75.60/r$$

The average shear stress, σ_{v2}, in the bottom end closure due to the weight of the bottom end closure and heaviest DSC is:

$$\sigma_{v2} = [(8\text{ in})(0.2853\text{ lb/in}^3) + 23.9\text{ psi}]\pi(r^2 - 8.5^2)/(2\pi rt)$$
$$= (1.85 + 23.9\text{ psi})\pi\,(r^2 - 8.5^2)/(2\pi rt)$$
$$= 13.1(r^2 - 8.5^2)/rt$$

Therefore, the total shear stress in the bottom end closure due to a 1g bottom end drop is:

$$\sigma_v = \sigma_{v1} + \sigma_{v2}$$
$$= [75.60 + 13.1(r^2 - 8.5^2)/t]/r$$

The radial bending stress in the bottom end closure due to the cold end drop loading is calculated as follows:

$$\sigma_b = 6M_r/t^2 \qquad \text{([2.7], Table 24)}$$

where;

M_r = Maximum radial bending moment per unit of circumference length

$$= \theta_b \frac{D}{r} F_7 - qr^2 G_{17}$$

$\theta = qa^3L_{14}/DC_4$ (for fixed edges)

$D = Et^3/[12(1-\upsilon^2)]$

$C_4 = [(1+\upsilon)(b/a) + (1-\upsilon)(a/b)]/2$

$F_7 = (1-\upsilon^2)[(r/b) - (b/r)]/2$

$L_{14} = [1 - (b/a)^4 - 4(b/a)^2\ln(a/b)]/16$

$$G_{17} = \frac{1}{4}\left[1 - \frac{1-\upsilon}{4}\left(1 - \left(\frac{b}{a}\right)^4\right) - \left(\frac{b}{r}\right)^2\left(1 + (1+\upsilon)\ln\left(\frac{r}{b}\right)\right)\right]$$

q = 23.9 psi + (8 in)(0.2853 lb/in^3)

= 26.2 psi/g

a = 34.0 in., outer radius of bottom end closure plate

b = 8.5 in., inner radius of bottom end closure plate

t = Plate thickness, varies with radius

The bottom end closure stresses due to a 1g bottom end drop are summarized in Table 2.7.1-9.

Table 2.7.1-9
Bottom End Closure Stresses due to 1g Bottom End Drop

Stress Point	Radius, r (in.)	Thickness, t (in.)	Bending Moment, M_r (in-lb/in.)	Surface Contact Stress, σ_n (psi)	Shear Stress, σ_v (psi)	Bending Stress, σ_b (psi)
41 & 42	34.00	8.00	3,600	23.9	54	340
43 & 44	24.00	8.00	750	23.9	38	70
45 & 46	12.00	4.72	620	23.9	23	170

2.7.1.1.6 Top Closure Plate End Drop Analysis

The top closure plate supports its own self weight and the weight of the DSC for the top end drop. The impact limiter reaction load is conservatively ignored. The surface contact, shear, and bending stresses in the top closure plate at stress points 1 through 6, Figure 2.7.1-9, are determined using hand calculations. The surface contact stress on the inner surface of the top closure plate due to a 1g top end drop is equal to the uniform pressure load from the weight of the DSC. The weight of

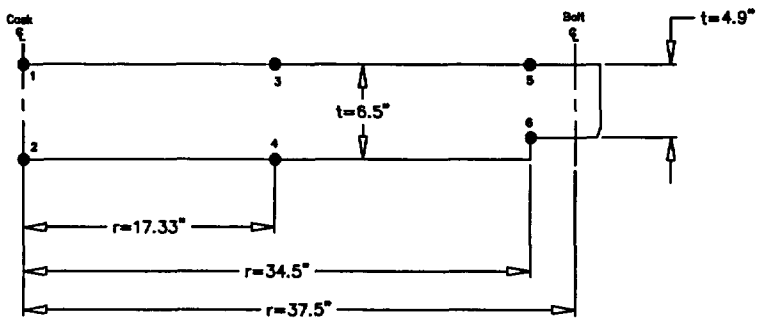

Figure 2.7.1-9
Top Closure Plate Stress Points

the heaviest DSC is 81,300 pounds (FC-DSC). Therefore, the surface contact stress due to a 1g top end drop load is:

$$\sigma_n = P/A$$

$$= 81{,}300/[\pi(33.6)^2]$$

$$= 22.9 \text{ psi/g}$$

The shear and bending stresses are determined using the equations presented in Section 2.7.1.1.4. The total load on the top closure plate is equal to the load from the DSC and the self weight of the top closure plate. Therefore, the uniform pressure load due to the 1g top end drop is:

$$q = 22.9 \text{ psi} + (6.5 \text{ in.})(0.2853 \text{ lb/in}^3)$$

$$= 24.8 \text{ psi/g}$$

The top closure plate stresses due to a 1g top end drop are summarized in Table 2.7.1-10.

Table 2.7.1-10
Top Cover Plate Stresses due to 1g Top End Drop

Stress Point	Radius, r (in.)	Thickness, t (in.)	Bending Moment, M_r (in-lb/in.)	Surface Contact Stress, σ_n (psi)	Shear Stress, σ_v (psi)	Bending Stress, σ_b (psi)
1 & 2	0.00	6.50	7,200	22.9	0.0	1,000
3 & 4	17.33	6.50	5,700	22.9	33	800
5 & 6	34.50	4.90	1,100	22.9	87	280

2.7.1.1.7 Cask Body End Drop Stress Summary

As shown in Table 2.7.1-1, the maximum equivalent static g-loads for the cold and hot end drop conditions are 41.2g and 24.4g, respectively. The cask stresses due to the bounding cold and hot end drop loads are conservatively determined by factoring the stresses due to the calculated 1g end drop results by 43.0 and 24.8, respectively. The resulting cask cold and hot end drop stresses at the 52 stress points shown in Figure 2.7.1-1 are provided in Table 2.7.1-11 and Table 2.7.1-12. The resulting cask body stresses determined using the hand calculations are in

excellent agreement with the finite element solution stress results. The maximum bending stress in the top closure plate due to a cold top end drop is calculated to be 43 ksi with hand calculations and 41.2 ksi (= 43.0 - 1.8) with the finite element solution. The maximum membrane stress intensity in the cask inner shell due to the end drop condition is calculated to be 15.2 ksi using hand calculations and 17.7 ksi using finite element methods. In general, the stresses from the finite element solution are slightly higher than those determined using hand calculations. The hand calculation confirm the accuracy of the finite element solution.

Table 2.7.1-11
Cask Primary Membrane S.I. Summary - Cold 30-foot End Drop

Cask Component	Stress Point	Stress Components (ksi)				Principal Stresses (ksi)			SI (ksi)
		SX	SY	SZ	SXY	S1	S2	S3	
Top Cover	1	35.12	-0.77	0.00	0.00	35.12	0.00	-0.77	35.90
	2	35.12	-0.77	0.00	0.00	35.12	0.00	-0.77	35.90
	3	27.62	-0.77	1.14	0.00	27.67	0.00	-0.82	28.49
	4	27.62	-0.77	1.14	0.00	27.67	0.00	-0.82	28.49
	5	9.49	-0.77	3.00	0.00	10.31	0.00	-1.59	11.89
	6	9.49	-0.77	3.00	0.00	10.31	0.00	-1.59	11.89
Top Flange	7	0.00	0.00	0.00	0.00	0.00	0.00	0.00	0.00
	8	0.00	0.00	0.00	0.00	0.00	0.00	0.00	0.00
	9	0.00	-13.88	-3.97	0.00	0.00	0.00	-13.88	13.88
	10	0.00	-13.88	-3.97	0.00	0.00	0.00	-13.88	13.88
Inner Shell	11	0.00	-15.18	-3.90	0.00	0.00	0.00	-15.18	15.18
	12	0.00	-15.18	-3.90	0.00	0.00	0.00	-15.18	15.18
	13	0.00	-13.92	-3.52	0.00	0.00	0.00	-13.92	13.92
	14	0.00	-13.92	-3.52	0.00	0.00	0.00	-13.92	13.92
	15	0.00	-11.99	-3.14	0.00	0.00	0.00	-11.99	11.99
	16	0.00	-11.99	-3.14	0.00	0.00	0.00	-11.99	11.99
	17	0.00	-8.13	-2.03	0.00	0.00	0.00	-8.13	8.13
	18	0.00	-8.13	-2.03	0.00	0.00	0.00	-8.13	8.13
	19	0.00	-11.75	-3.05	0.00	0.00	0.00	-11.75	11.75
	20	0.00	-11.75	-3.05	0.00	0.00	0.00	-11.75	11.75
	21	0.00	-13.70	-3.45	0.00	0.00	0.00	-13.70	13.70
	22	0.00	-13.70	-3.45	0.00	0.00	0.00	-13.70	13.70
	23	0.00	-15.15	-3.88	0.00	0.00	0.00	-15.15	15.15
	24	0.00	-15.15	-3.88	0.00	0.00	0.00	-15.15	15.15
	25	0.00	-13.71	-3.97	0.00	0.00	0.00	-13.71	13.71
	26	0.00	-13.71	-3.97	0.00	0.00	0.00	-13.71	13.71
Outer Shell	27	0.00	-6.16	2.21	2.21	2.21	0.00	-6.16	8.36
	28	0.00	-6.16	2.21	2.21	2.21	0.00	-6.16	8.36
	29	0.00	-7.06	1.96	1.96	1.96	0.00	-7.06	9.02
	30	0.00	-7.06	1.96	1.96	1.96	0.00	-7.06	9.02
	31	0.00	-5.88	1.75	1.75	1.75	0.00	-5.88	7.63
	32	0.00	-5.88	1.75	1.75	1.75	0.00	-5.88	7.63
	33	0.00	-4.18	1.13	1.13	1.13	0.00	-4.18	5.31
	34	0.00	-4.18	1.13	1.13	1.13	0.00	-4.18	5.31
	35	0.00	-5.81	1.70	1.70	1.70	0.00	-5.81	7.51
	36	0.00	-5.81	1.70	1.70	1.70	0.00	-5.81	7.51
	37	0.00	-7.00	1.92	1.92	1.92	0.00	-7.00	8.92
	38	0.00	-7.00	1.92	1.92	1.92	0.00	-7.00	8.92
	39	0.00	-5.99	2.21	2.21	2.21	0.00	-5.99	8.20
	40	0.00	-5.99	2.21	2.21	2.21	0.00	-5.99	8.20
Bottom Forging	41	14.12	1.00	2.29	0.00	14.51	0.61	0.00	14.51
	42	14.12	1.00	2.29	0.00	14.51	0.61	0.00	14.51
	43	2.99	1.00	1.79	0.00	4.04	0.00	-0.05	4.09
	44	2.99	1.00	1.79	0.00	4.04	0.00	-0.05	4.09
	45	6.56	1.00	1.67	0.00	7.02	0.54	0.00	7.02
	46	6.56	1.00	1.67	0.00	7.02	0.54	0.00	7.02
Ram Access Cover Plate	47	0.39	0.00	0.08	0.00	0.41	0.00	-0.02	0.42
	48	0.39	0.00	0.08	0.00	0.41	0.00	-0.02	0.42
	49	0.49	0.00	0.03	0.00	0.50	0.00	0.00	0.50
	50	0.49	0.00	0.03	0.00	0.50	0.00	0.00	0.50
	51	0.38	0.00	0.00	0.00	0.38	0.00	0.00	0.38
	52	0.38	0.00	0.00	0.00	0.38	0.00	0.00	0.38

Table 2.7.1-12
Cask Primary Membrane S.I. Summary - Hot 30-foot End Drop

Cask Component	Stress Point	Stress Components (ksi) SX	SY	SZ	SXY	Principal Stresses (ksi) S1	S2	S3	SI (ksi)
Top Cover	1	21.69	-0.48	0.00	0.00	21.69	0.00	-0.48	22.17
	2	21.69	-0.48	0.00	0.00	21.69	0.00	-0.48	22.17
	3	17.06	-0.48	0.70	0.00	17.09	0.00	-0.51	17.59
	4	17.06	-0.48	0.70	0.00	17.09	0.00	-0.51	17.59
	5	5.86	-0.48	1.85	0.00	6.37	0.00	-0.98	7.34
	6	5.86	-0.48	1.85	0.00	6.37	0.00	-0.98	7.34
Top Flange	7	0.00	0.00	0.00	0.00	0.00	0.00	0.00	0.00
	8	0.00	0.00	0.00	0.00	0.00	0.00	0.00	0.00
	9	0.00	-8.57	-2.45	0.00	0.00	-2.45	-8.57	8.57
	10	0.00	-8.57	-2.45	0.00	0.00	-2.45	-8.57	8.57
Inner Shell	11	0.00	-9.38	-2.41	0.00	0.00	-2.41	-9.38	9.38
	12	0.00	-9.38	-2.41	0.00	0.00	-2.41	-9.38	9.38
	13	0.00	-8.59	-2.17	0.00	0.00	-2.17	-8.59	8.59
	14	0.00	-8.59	-2.17	0.00	0.00	-2.17	-8.59	8.59
	15	0.00	-7.41	-1.94	0.00	0.00	-1.94	-7.41	7.41
	16	0.00	-7.41	-1.94	0.00	0.00	-1.94	-7.41	7.41
	17	0.00	-5.02	-1.25	0.00	0.00	-1.25	-5.02	5.02
	18	0.00	-5.02	-1.25	0.00	0.00	-1.25	-5.02	5.02
	19	0.00	-7.25	-1.89	0.00	0.00	-1.89	-7.25	7.25
	20	0.00	-7.25	-1.89	0.00	0.00	-1.89	-7.25	7.25
	21	0.00	-8.46	-2.13	0.00	0.00	-2.13	-8.46	8.46
	22	0.00	-8.46	-2.13	0.00	0.00	-2.13	-8.46	8.46
	23	0.00	-9.36	-2.40	0.00	0.00	-2.40	-9.36	9.36
	24	0.00	-9.36	-2.40	0.00	0.00	-2.40	-9.36	9.36
	25	0.00	-8.47	-2.45	0.00	0.00	-2.45	-8.47	8.47
	26	0.00	-8.47	-2.45	0.00	0.00	-2.45	-8.47	8.47
Outer Shell	27	0.00	-3.80	1.36	1.36	1.36	1.36	-3.80	5.17
	28	0.00	-3.80	1.36	1.36	1.36	1.36	-3.80	5.17
	29	0.00	-4.36	1.21	1.21	1.21	1.21	-4.36	5.57
	30	0.00	-4.36	1.21	1.21	1.21	1.21	-4.36	5.57
	31	0.00	-3.63	1.08	1.08	1.08	1.08	-3.63	4.71
	32	0.00	-3.63	1.08	1.08	1.08	1.08	-3.63	4.71
	33	0.00	-2.58	0.70	0.70	0.70	0.70	-2.58	3.28
	34	0.00	-2.58	0.70	0.70	0.70	0.70	-2.58	3.28
	35	0.00	-3.59	1.05	1.05	1.05	1.05	-3.59	4.64
	36	0.00	-3.59	1.05	1.05	1.05	1.05	-3.59	4.64
	37	0.00	-4.32	1.18	1.18	1.18	1.18	-4.32	5.51
	38	0.00	-4.32	1.18	1.18	1.18	1.18	-4.32	5.51
	39	0.00	-3.70	1.36	1.36	1.36	1.36	-3.70	5.06
	40	0.00	-3.70	1.36	1.36	1.36	1.36	-3.70	5.06
Bottom Forging	41	8.72	0.62	1.41	0.00	8.96	0.38	0.00	8.96
	42	8.72	0.62	1.41	0.00	8.96	0.38	0.00	8.96
	43	1.85	0.62	1.10	0.00	2.50	0.00	-0.03	2.53
	44	1.85	0.62	1.10	0.00	2.50	0.00	-0.03	2.53
	45	4.05	0.62	1.03	0.00	4.34	0.33	0.00	4.34
	46	4.05	0.62	1.03	0.00	4.34	0.33	0.00	4.34
Ram Access Cover Plate	47	0.24	0.00	0.05	0.00	0.25	0.00	-0.01	0.26
	48	0.24	0.00	0.05	0.00	0.25	0.00	-0.01	0.26
	49	0.31	0.00	0.02	0.00	0.31	0.00	0.00	0.31
	50	0.31	0.00	0.02	0.00	0.31	0.00	0.00	0.31
	51	0.23	0.00	0.00	0.00	0.23	0.00	0.00	0.23
	52	0.23	0.00	0.00	0.00	0.23	0.00	0.00	0.23

2.7.1.1.8 Top End Closure Bolt Analysis

A detailed evaluation of the top end closure bolts is presented in Appendix 2.10.5 in accordance with NUREG/CR-6007 [2.20]. As discussed in Appendix 2.10.5, the end drop condition results in the highest stresses in the top closure bolts.

2.7.1.1.9 Bottom End Closure Bolt End Drop Analysis

A detailed evaluation of the bottom end closure bolts is performed in Appendix 2.10.5 in accordance with NUREG/CR-6007 [2.20].

2.7.1.2 Side Drop

The hypothetical 30-foot side drop condition postulates that the package, consisting of the MP187 cask loaded with a DSC, impact limiters attached, free falls 30 feet onto an unyielding surface. The package top and bottom impact limiters impact the target at exactly the same time. Two 30-foot horizontal side drop orientations are considered: 1) a horizontal impact on the large flat side facet of the impact limiters, referred to as the "flatside" horizontal side drop, and 2) a horizontal impact on the corner facet of the impact limiters, referred to as the "corner" horizontal side drop. As shown in Table 2.7.1-1, the equivalent static g-loads for the flatside horizontal side drop under hot and cold conditions are 57.8g and 89.8g, respectively. These bound the hot and cold corner horizontal side drop equivalent static g-loads, which are 39.5g and 62.0g, respectively. The cask is evaluated for the horizontal side drop load of 81.7g and the results factored for the bounding 89.8g acceleration as shown in Table 2.7.1-1a. The stainless steel and lead material properties used for the cask model are based on the cask temperatures for the hot ambient condition.

For the 30-foot flatside horizontal side drop, the cask is supported by the top and bottom impact limiters along the lower surface of the cask structural shell, outside the region of the neutron shield. The cask is loaded by its self weight and the weight of the DSC. Figure 2.6.6-1 shows the free body diagram of the cask for the 30-foot horizontal side drop condition.

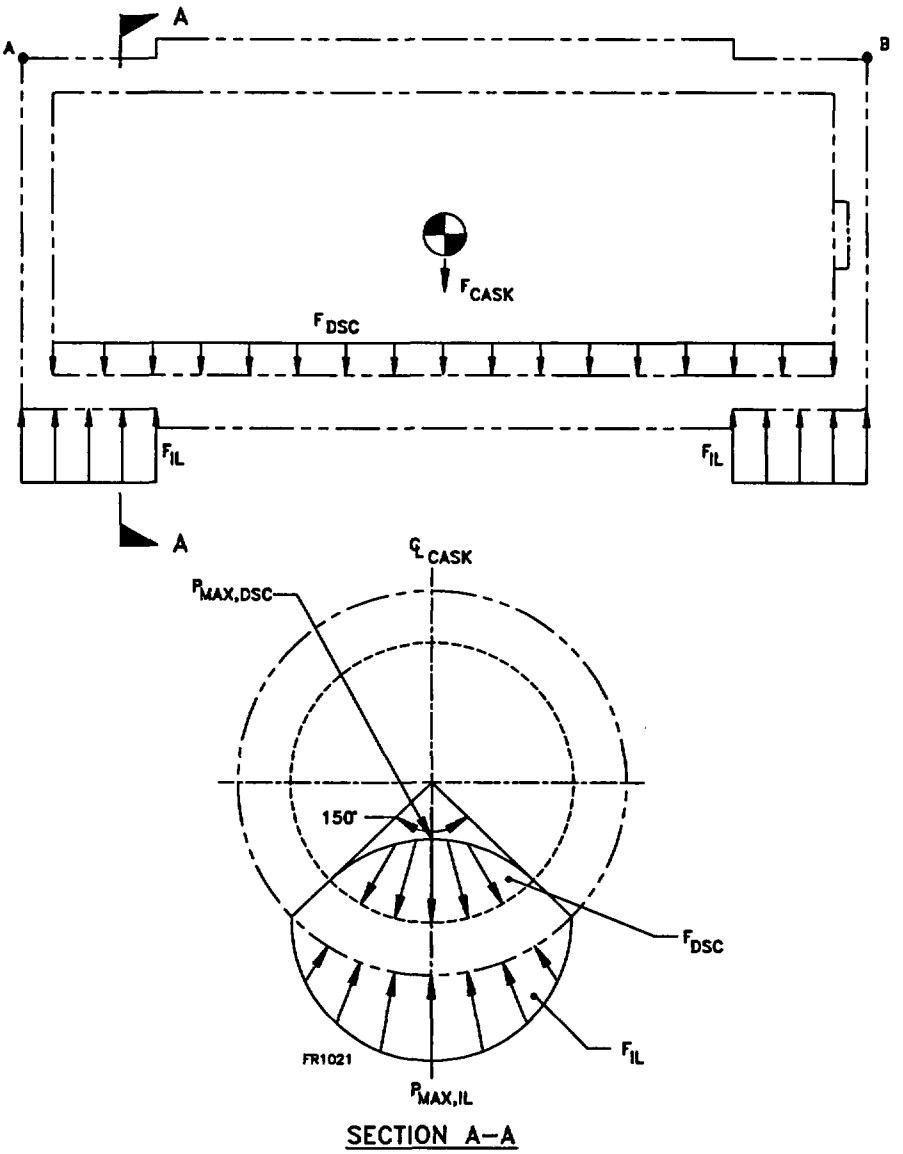

Figure 2.7.1-10
Cask Free Body Diagram for 30-Foot Side Drop

The 30-foot side drop stress analysis is performed using the half symmetry three dimensional finite element model described in Section 2.10.2.1.3. The cask loads due to the 30-foot side drop include the DSC inertial load, the cask inertial load, and the impact reaction loads. The maximum package decelerations resulting from the cold drop condition correspond to the minimum package weight (i.e. cask, DSC, and impact limiters) of 256.6 kips. The weight of the

DSC used for the evaluation is calculated as the total package weight, less the weight of the impact limiters and the cask model (77.3 x 2 = 154.6 kips), as follows:

$$W_{DSC} = 256.6 - 2(15.8) - 154.6$$

$$= 70.4 \text{ kips}$$

The applied loads from the DSC and the impact limiter reactions are assumed to have cosine distributions, as shown in Figure 2.6.6-1, spread over a 75 degree half angle of contact between the DSC and cask inner surface, and the impact limiters and cask outer surface, respectively. The angle of contact between the impact limiters and cask outer surface is dependent upon the crush area of the impact limiters. For the flatside horizontal drop condition, the impact limiter experiences inside-out crush behavior since the contact area between the cask and target is larger than the projected area of the cask onto the impact limiter. This causes the cask to thrust through the impact limiter from the inside, resulting in a contact angle close to 180 degrees. Therefore, the assumed contact angle of 150 degrees (i.e. 75 degree half angle of contact) is conservative. The pressure load acting on the inner surface of the cask, assuming a uniform distribution of the DSC weight over the length of the cask cavity (L = 187 inches), is determined using the formula derived in Section 2.10.2.1.3.1, as follows:

$$P_i = \frac{F_{DSC}}{LR}\left[\frac{\sin\left(\frac{\pi}{2}+\theta\right)}{\left(\frac{\pi}{2\theta}\right)+1} + \frac{\sin\left(\frac{\pi}{2}-\theta\right)}{\left(\frac{\pi}{2\theta}\right)-1}\right]^{-1} \cos\left(\frac{\pi\theta_i}{2\theta}\right)$$

where;

L	=	187 in., Length of DSC cavity
R	=	34.0 in., Radius of cask cavity
F_{DSC}	=	W_{DSC} G, Inertial load due to DSC
W_{DSC}	=	70,400 lb., Weight of DSC
G	=	81.7g, Equivalent static cold 30-foot side drop g-load

θ = 75° (1.309 radians), Half angle of contact

The resulting pressure distribution around the circumference of the cask inner shell, applied uniformly over the length of the cask cavity, is summarized below:

Circumferential Location	Pressure Load (psi)
0°	641
10°	627
20°	585
30°	518
45°	377
60°	198
75°	0

The impact loads are reacted by the impact limiters at each end of the cask. The total reaction load at each impact limiter, F_{IL}, is calculated as follows:

$$F_{IL} = [W_{CASK} + W_{DSC}](G)/21.7)/2$$

$$= [154{,}600 + 70{,}400]\ (81.7)/2$$

$$= 9.191 \times 10^6 \text{ lb.}$$

The loading on the outer surface of the cask due to the impact reaction load is assumed to be uniform along the length of the 32 inch overhang region and vary with a cosine distribution around the circumference of the cask (R = 41.75 inches). The resulting cosine pressure load distribution is calculated as discussed above, assuming a 75 degree half angle of contact between the impact limiter and cask outer surface, and summarized below:

Circumferential Location	Pressure Load (psi)
0°	4,873
10°	4,767
20°	4,452
30°	3,942
45°	2,864
60°	1,506
75°	0

In addition to the applied pressure loads from the DSC and impact limiter reactions, a vertical acceleration load of 81.7g is applied to the cask model to account for the cask inertial load. The model is pinned at the nodes on each end of the cask (points A and B in Figure 2.6.6-1) to prevent rigid body motion. The total vertical reaction load at these nodes for the 30-foot side drop condition is 23,448 pounds due to a slight unbalance in the applied inertial loads and reaction loads. The load unbalance represents 0.25% of the total impact load which is considered negligable.

The cask stress components, principal stresses, and stress intensities at the 52 stress points shown in Figure 2.7.1-1 due to an 89.8g 30-foot side drop load are summarized in Table 2.6.6-1 through Table 2.7.1-22. The maximum primary membrane stress intensity in the cask due to the 30-foot side drop, occurs in the cask outer shell at the 45 degree azimuth near the ends of the neutron shield (stress points 29 and 30) is 37.0 ksi. The allowable accident condition primary membrane stress intensity at 300°F is 46.2 ksi for SA-240, Type 304 stainless steel. Therefore, the minimum margin of safety in the cask for primary membrane stress intenstiy due to the 30-foot side drop is:

$$\text{M.S.} = (46.2/37.0) - 1$$

$$= +0.24$$

Note that the maximum primary membrane stress intensity of 37.0 ksi occurs in the upper section of the outer shell which is made of SA240, Type XM-19 stainless steel, which has a higher allowable than Type 304 stainless steel; therefore, using the allowable of Type 304 stainless steel is conservative.

The maximum membrane plus bending stress intensity in the cask due to the 30-foot side drop, occuring on the 0 degree azimuth at the junction of the outer shell and bottom end forging (stress point 40), is 50.6 ksi. The allowable accident condition membrane plus bending stress intensity in the cask outer shell at the design temperature of 300°F is limited to 66.0 ksi. Therefore, the minimum margin of safety in the cask for membrane plus bending stress intensity due to the 30-foot side drop is:

$$\text{M.S.} = (66.0/50.6) - 1$$

$$= +0.30$$

Therefore, the cask body meets the stress acceptance criteria for the 30- foot side drop condition. The side drop stresses are combined with stresses due to other loading conditions in accordance with Regulatory Guide 7.8 [2.3]. The accident condition cask load combination evaluation is presented in Section 2.7.8.1.

Table 2.7.1-13
Cask 30-Foot Side Drop Membrane Shell Stresses Summary, 0° Azimuth

Cask Component	Stress Point	Node Number	Stress Components (ksi)						Principal Stresses (ksi)			SI (ksi)
			SX	SY	SZ	SXY	SYZ	SXZ	S1	S2	S3	
Top Cover	1	730	-0.34	0.22	1.32	0.17	0.10	-0.41	1.42	0.26	-0.48	1.90
	2	771	-0.34	0.22	1.32	0.17	0.10	-0.41	1.42	0.26	-0.48	1.90
	3	738	-7.38	0.00	-0.68	0.53	0.03	-0.10	0.04	-0.68	-7.42	7.46
	4	779	-7.38	0.00	-0.68	0.53	0.03	-0.10	0.04	-0.68	-7.42	7.46
	5	746	-4.56	-6.47	-3.05	0.49	0.16	-0.33	-2.98	-4.50	-6.60	3.63
	6	786	-4.56	-6.47	-3.05	0.49	0.16	-0.33	-2.98	-4.50	-6.60	3.63
Top Flange	7	711	-19.51	3.93	-14.02	-2.00	-0.01	0.26	4.10	-14.01	-19.69	23.79
	8	713	-19.51	3.93	-14.02	-2.00	-0.01	0.26	4.10	-14.01	-19.69	23.79
Inner Shell	9	672	-0.67	2.34	-16.58	0.81	1.29	-1.74	2.59	-0.62	-16.86	19.45
	10	674	-0.67	2.34	-16.58	0.81	1.29	-1.74	2.59	-0.62	-16.86	19.45
	11	654	-0.52	3.51	-23.45	1.03	0.70	-1.62	3.77	-0.63	-23.59	27.36
	12	656	-0.52	3.51	-23.45	1.03	0.70	-1.62	3.77	-0.63	-23.59	27.36
	13	574	-1.01	5.31	-12.91	-0.30	-1.43	-1.04	5.43	-0.92	-13.11	18.53
	14	576	-1.01	5.31	-12.91	-0.30	-1.43	-1.04	5.43	-0.92	-13.11	18.53
	15	521	-0.50	13.54	8.52	0.00	-1.41	0.81	13.91	8.21	-0.58	14.49
	16	522	-0.50	13.54	8.52	0.00	-1.41	0.81	13.91	8.21	-0.58	14.49
	17	371	-0.48	26.20	9.36	0.00	0.00	0.88	26.20	9.43	-0.56	26.76
	18	372	-0.48	26.20	9.36	0.00	0.00	0.88	26.20	9.43	-0.56	26.76
	19	221	-0.48	13.09	8.79	0.01	1.48	0.83	13.56	8.40	-0.56	14.12
	20	222	-0.48	13.09	8.79	0.01	1.48	0.83	13.56	8.40	-0.56	14.12
	21	161	-0.94	3.65	-14.22	0.34	1.29	-1.16	3.75	-0.86	-14.42	18.17
	22	162	-0.94	3.65	-14.22	0.34	1.29	-1.16	3.75	-0.86	-14.42	18.17
	23	62	-1.45	1.54	-11.71	-1.48	-0.22	-0.83	2.14	-1.98	-11.78	13.93
	24	64	-1.45	1.54	-11.71	-1.48	-0.22	-0.83	2.14	-1.98	-11.78	13.93
	25	54	-13.99	0.62	-10.83	-0.07	-0.29	-0.19	0.62	-10.82	-14.00	14.62
	26	56	-13.99	0.62	-10.83	-0.07	-0.29	-0.19	0.62	-10.82	-14.00	14.62
Outer Shell	27	680	-5.46	-6.51	-24.93	6.89	-0.02	-1.80	0.99	-12.77	-25.12	26.10
	28	682	-5.46	-6.51	-24.93	6.89	-0.02	-1.80	0.99	-12.77	-25.12	26.10
	29	578	-2.01	-1.33	-23.12	-3.75	-1.96	-1.91	2.10	-5.03	-23.53	25.62
	30	580	-2.01	-1.33	-23.12	-3.75	-1.96	-1.91	2.10	-5.03	-23.53	25.62
	31	525	-0.26	9.81	13.72	0.45	-2.29	1.25	14.84	8.85	-0.42	15.26
	32	526	-0.26	9.81	13.72	0.45	-2.29	1.25	14.84	8.85	-0.42	15.26
	33	375	-0.30	26.43	10.70	-0.01	-0.06	0.99	26.43	10.79	-0.38	26.81
	34	376	-0.30	26.43	10.70	-0.01	-0.06	0.99	26.43	10.79	-0.38	26.81
	35	225	-0.26	11.96	13.68	-0.34	2.09	1.25	15.12	10.65	-0.40	15.51
	36	226	-0.26	11.96	13.68	-0.34	2.09	1.25	15.12	10.65	-0.40	15.51
	37	165	-2.09	0.24	-23.03	3.51	1.79	-1.84	2.79	-4.28	-23.38	26.17
	38	167	-2.09	0.24	-23.03	3.51	1.79	-1.84	2.79	-4.28	-23.38	26.17
	39	73	-6.28	-2.65	-12.01	-8.37	-0.14	-0.46	4.11	-11.85	-13.19	17.30
	40	75	-6.28	-2.65	-12.01	-8.37	-0.14	-0.46	4.11	-11.85	-13.19	17.30
Bottom Cover	41	54	-7.17	-0.64	-5.65	-0.35	-0.21	-0.24	-0.61	-5.62	-7.23	6.62
	42	21	-7.17	-0.64	-5.65	-0.35	-0.21	-0.24	-0.61	-5.62	-7.23	6.62
	43	51	-6.19	0.00	-3.27	-0.44	-0.03	-0.26	0.03	-3.25	-6.25	6.27
	44	18	-6.19	0.00	-3.27	-0.44	-0.03	-0.26	0.03	-3.25	-6.25	6.27
	45	48	-3.85	-1.59	-2.95	-0.83	0.21	-0.43	-1.25	-2.92	-4.22	2.97
	46	10	-3.85	-1.59	-2.95	-0.83	0.21	-0.43	-1.25	-2.92	-4.22	2.97
Ram Access Cover Plate	47	12	-4.33	0.10	2.17	-0.15	-0.10	-0.06	2.17	0.10	-4.33	6.51
	48	4	-4.33	0.10	2.17	-0.15	-0.10	-0.06	2.17	0.10	-4.33	6.51
	49	11	-3.60	0.56	1.89	-0.21	0.05	-0.22	1.90	0.56	-3.62	5.52
	50	3	-3.60	0.56	1.89	-0.21	0.05	-0.22	1.90	0.56	-3.62	5.52
	51	13	-0.18	-0.07	1.32	-0.36	-0.15	-0.35	1.40	0.22	-0.56	1.96
	52	1	-0.18	-0.07	1.32	-0.36	-0.15	-0.35	1.40	0.22	-0.56	1.96

(1.105)*Pm, hsd30-3.xls

Table 2.7.1-14
Cask 30-Foot Side Drop Membrane Stress Summary, 45° Azimuth

Cask Component	Stress Point	Node Number	Stress Components (ksi)						Principal Stresses (ksi)			SI (ksi)
			SX	SY	SZ	SXY	SYZ	SXZ	S1	S2	S3	
Top Cover	1	4730	0.90	0.22	0.08	0.05	0.19	-0.83	1.42	0.26	-0.48	1.90
	2	4771	0.90	0.22	0.08	0.05	0.19	-0.83	1.42	0.26	-0.48	1.90
	3	4738	-2.47	0.00	-4.16	0.11	0.45	-3.47	0.36	-0.08	-6.91	7.27
	4	4779	-2.47	0.00	-4.16	0.11	0.45	-3.47	0.36	-0.08	-6.91	7.27
	5	4746	-1.83	-1.62	-5.29	0.00	1.49	-2.02	-0.45	-1.70	-6.59	6.14
	6	4786	-1.83	-1.62	-5.29	0.00	1.49	-2.02	-0.45	-1.70	-6.59	6.14
Top Flange	7	4711	-10.87	1.98	-10.66	-1.20	-0.94	0.54	2.17	-10.39	-11.33	13.49
	8	4713	-10.87	1.98	-10.66	-1.20	-0.94	0.54	2.17	-10.39	-11.33	13.49
Inner Shell	9	4672	-3.50	2.92	-16.13	0.40	2.40	-0.84	3.23	-3.45	-16.50	19.72
	10	4674	-3.50	2.92	-16.13	0.40	2.40	-0.84	3.23	-3.45	-16.50	19.72
	11	4654	-1.38	3.51	-17.66	-0.53	1.18	0.15	3.63	-1.43	-17.72	21.35
	12	4656	-1.38	3.51	-17.66	-0.53	1.18	0.15	3.63	-1.43	-17.72	21.35
	13	4574	-0.71	7.03	-6.71	-0.15	-9.37	0.20	11.79	-0.71	-11.47	23.25
	14	4576	-0.71	7.03	-6.71	-0.15	-9.37	0.20	11.79	-0.71	-11.47	23.25
	15	4521	-0.11	9.88	6.00	0.05	-9.76	-0.06	17.89	-0.11	-2.01	19.90
	16	4522	-0.11	9.88	6.00	0.05	-9.76	-0.06	17.89	-0.11	-2.01	19.90
	17	4371	0.03	14.07	6.45	0.00	-0.05	-0.10	14.07	6.45	0.03	14.03
	18	4372	0.03	14.07	6.45	0.00	-0.05	-0.10	14.07	6.45	0.03	14.03
	19	4221	-0.13	10.23	6.13	-0.05	9.95	-0.07	18.34	-0.13	-1.98	20.32
	20	4222	-0.13	10.23	6.13	-0.05	9.95	-0.07	18.34	-0.13	-1.98	20.32
	21	4161	-0.83	6.75	-6.64	0.17	9.65	0.21	11.81	-0.83	-11.69	23.50
	22	4162	-0.83	6.75	-6.64	0.17	9.65	0.21	11.81	-0.83	-11.69	23.50
	23	4062	-1.16	3.19	-9.95	-0.46	-2.02	0.10	3.54	-1.21	-10.26	13.80
	24	4064	-1.16	3.19	-9.95	-0.46	-2.02	0.10	3.54	-1.21	-10.26	13.80
	25	4054	-6.55	0.82	-9.24	-0.02	-0.71	-2.75	0.88	-4.86	-10.99	11.87
	26	4056	-6.55	0.82	-9.24	-0.02	-0.71	-2.75	0.88	-4.86	-10.99	11.87
Outer Shell	27	4680	-2.79	1.14	-15.97	2.96	1.68	-0.22	2.83	-4.29	-16.16	18.98
	28	4682	-2.79	1.14	-15.97	2.96	1.68	-0.22	2.83	-4.29	-16.16	18.98
	29	4578	-1.66	5.53	-12.09	-2.03	-16.14	0.16	15.30	-1.82	-21.70	37.02
	30	4580	-1.66	5.53	-12.09	-2.03	-16.14	0.16	15.30	-1.82	-21.70	37.02
	31	4525	-0.10	9.21	8.18	0.39	-14.77	-0.09	23.48	-0.10	-6.09	29.58
	32	4526	-0.10	9.21	8.18	0.39	-14.77	-0.09	23.48	-0.10	-6.09	29.58
	33	4375	0.02	13.56	6.48	0.00	-0.38	-0.03	13.58	6.46	0.02	13.56
	34	4376	0.02	13.56	6.48	0.00	-0.38	-0.03	13.58	6.46	0.02	13.56
	35	4225	-0.12	9.46	8.22	-0.30	13.70	-0.10	22.55	-0.12	-4.88	27.44
	36	4226	-0.12	9.46	8.22	-0.30	13.70	-0.10	22.55	-0.12	-4.88	27.44
	37	4165	-1.80	5.04	-12.29	1.98	15.78	0.14	14.57	-1.96	-21.66	36.23
	38	4167	-1.80	5.04	-12.29	1.98	15.78	0.14	14.57	-1.96	-21.66	36.23
	39	4073	-3.20	0.22	-10.08	-3.96	-3.71	-0.22	3.50	-5.01	-11.56	15.06
	40	4075	-3.20	0.22	-10.08	-3.96	-3.71	-0.22	3.50	-5.01	-11.56	15.06
Bottom Cover	41	4054	-3.52	0.53	-6.30	-0.13	-1.01	-1.80	0.68	-2.67	-7.30	7.98
	42	4021	-3.52	0.53	-6.30	-0.13	-1.01	-1.80	0.68	-2.67	-7.30	7.98
	43	4051	-2.88	0.00	-5.30	-0.08	-0.39	-2.70	0.04	-1.15	-7.07	7.11
	44	4018	-2.88	0.00	-5.30	-0.08	-0.39	-2.70	0.04	-1.15	-7.07	7.11
	45	4048	-2.05	0.11	-5.93	-0.14	0.62	-2.89	0.34	-0.71	-7.50	7.84
	46	4010	-2.05	0.11	-5.93	-0.14	0.62	-2.89	0.34	-0.71	-7.50	7.84
Ram Access Cover Plate	47	4012	-0.92	-0.43	-2.09	0.17	-0.53	-3.48	2.11	-0.49	-5.04	7.15
	48	4004	-0.92	-0.43	-2.09	0.17	-0.53	-3.48	2.11	-0.49	-5.04	7.15
	49	4011	-0.17	0.41	-1.86	-0.11	-0.02	-3.92	2.99	0.41	-5.02	8.01
	50	4003	-0.17	0.41	-1.86	-0.11	-0.02	-3.92	2.99	0.41	-5.02	8.01
	51	4013	0.92	-0.07	0.22	-0.15	-0.35	-0.75	1.40	0.22	-0.56	1.96
	52	4001	0.92	-0.07	0.22	-0.15	-0.35	-0.75	1.40	0.22	-0.56	1.96

(1.105)*Pm, hsd30-3.xls

Table 2.7.1-15
Cask 30-Foot Side Drop Membrane Stress Summary, 90° Azimuth

Cask Component	Stress Point	Node Number	Stress Components (ksi)						Principal Stresses (ksi)			SI (ksi)
			SX	SY	SZ	SXY	SYZ	SXZ	S1	S2	S3	
Top Cover	1	7730	1.32	0.22	-0.34	-0.10	0.17	0.41	1.42	0.26	-0.48	1.90
	2	7771	1.32	0.22	-0.34	-0.10	0.17	0.41	1.42	0.26	-0.48	1.90
	3	7738	1.76	0.00	-5.54	-0.27	0.16	1.31	2.02	-0.02	-5.78	7.80
	4	7779	1.76	0.00	-5.54	-0.27	0.16	1.31	2.02	-0.02	-5.78	7.80
	5	7746	0.86	2.25	-4.58	-0.44	-0.54	2.38	2.66	1.36	-5.49	8.15
	6	7786	0.86	2.25	-4.58	-0.44	-0.54	2.38	2.66	1.36	-5.49	8.15
Top Flange	7	7711	0.78	-0.47	-3.58	0.20	-1.22	1.15	1.07	-0.08	-4.26	5.34
	8	7713	0.78	-0.47	-3.58	0.20	-1.22	1.15	1.07	-0.08	-4.26	5.34
Inner Shell	9	7672	-1.54	2.34	-8.46	0.13	-1.90	0.53	2.67	-1.49	-8.82	11.49
	10	7674	-1.54	2.34	-8.46	0.13	-1.90	0.53	2.67	-1.49	-8.82	11.49
	11	7654	-0.28	3.06	-6.22	-0.40	-4.47	-0.01	4.89	-0.30	-8.03	12.92
	12	7656	-0.28	3.06	-6.22	-0.40	-4.47	-0.01	4.89	-0.30	-8.03	12.92
	13	7574	0.11	4.09	1.31	0.07	-9.52	0.03	12.32	0.11	-6.92	19.25
	14	7576	0.11	4.09	1.31	0.07	-9.52	0.03	12.32	0.11	-6.92	19.25
	15	7521	0.09	1.14	2.22	0.07	-8.46	-0.04	10.16	0.09	-6.80	16.95
	16	7522	0.09	1.14	2.22	0.07	-8.46	-0.04	10.16	0.09	-6.80	16.95
	17	7371	-0.07	-3.44	1.88	0.00	-0.09	-0.03	1.88	-0.07	-3.44	5.32
	18	7372	-0.07	-3.44	1.88	0.00	-0.09	-0.03	1.88	-0.07	-3.44	5.32
	19	7221	0.11	1.58	2.16	-0.07	8.23	-0.03	10.10	0.11	-6.37	16.48
	20	7222	0.11	1.58	2.16	-0.07	8.23	-0.03	10.10	0.11	-6.37	16.48
	21	7161	0.15	5.47	1.89	-0.07	9.40	0.03	13.25	0.15	-5.89	19.14
	22	7162	0.15	5.47	1.89	-0.07	9.40	0.03	13.25	0.15	-5.89	19.14
	23	7062	-0.14	3.23	-4.66	0.67	4.20	-0.04	5.11	-0.20	-6.50	11.61
	24	7064	-0.14	3.23	-4.66	0.67	4.20	-0.04	5.11	-0.20	-6.50	11.61
	25	7054	2.65	0.94	-4.44	0.24	1.06	2.51	3.57	0.95	-5.38	8.95
	26	7056	2.65	0.94	-4.44	0.24	1.06	2.51	3.57	0.95	-5.38	8.95
Outer Shell	27	7680	0.59	4.12	-4.06	-1.58	-9.95	1.20	11.17	0.22	-10.73	21.90
	28	7682	0.59	4.12	-4.06	-1.58	-9.95	1.20	11.17	0.22	-10.73	21.90
	29	7578	-0.07	5.53	-1.58	0.28	-14.03	0.17	16.45	-0.06	-12.51	28.95
	30	7580	-0.07	5.53	-1.58	0.28	-14.03	0.17	16.45	-0.06	-12.51	28.95
	31	7525	0.07	0.91	-0.31	0.18	-11.64	-0.07	11.96	0.07	-11.35	23.30
	32	7526	0.07	0.91	-0.31	0.18	-11.64	-0.07	11.96	0.07	-11.35	23.30
	33	7375	-0.05	-5.58	-0.28	0.00	-0.25	-0.15	0.02	-0.34	-5.59	5.61
	34	7376	-0.05	-5.58	-0.28	0.00	-0.25	-0.15	0.02	-0.34	-5.59	5.61
	35	7225	0.09	-0.07	-0.36	-0.16	11.19	-0.09	10.98	0.09	-11.41	22.40
	36	7226	0.09	-0.07	-0.36	-0.16	11.19	-0.09	10.98	0.09	-11.41	22.40
	37	7165	-0.02	5.10	-1.84	-0.27	13.71	0.19	15.77	-0.02	-12.52	28.29
	38	7167	-0.02	5.10	-1.84	-0.27	13.71	0.19	15.77	-0.02	-12.52	28.29
	39	7073	0.71	1.89	-4.59	1.94	8.01	1.14	7.98	0.02	-9.99	17.98
	40	7075	0.71	1.89	-4.59	1.94	8.01	1.14	7.98	0.02	-9.99	17.98
Bottom Cover	41	7054	0.98	1.58	-3.98	0.21	0.72	2.38	2.27	1.30	-4.99	7.26
	42	7021	0.98	1.58	-3.98	0.21	0.72	2.38	2.27	1.30	-4.99	7.26
	43	7051	0.63	0.01	-5.15	0.28	-0.07	1.79	1.19	-0.04	-5.66	6.85
	44	7018	0.63	0.01	-5.15	0.28	-0.07	1.79	1.19	-0.04	-5.66	6.85
	45	7048	-0.20	1.53	-7.31	0.49	-0.31	0.73	1.67	-0.24	-7.40	9.06
	46	7010	-0.20	1.53	-7.31	0.49	-0.31	0.73	1.67	-0.24	-7.40	9.06
Ram Access Cover Plate	47	7012	1.82	-0.81	-5.45	0.38	-0.24	0.45	1.89	-0.84	-5.49	7.38
	48	7004	1.82	-0.81	-5.45	0.38	-0.24	0.45	1.89	-0.84	-5.49	7.38
	49	7011	1.41	0.00	-5.19	0.18	-0.13	0.32	1.44	-0.01	-5.20	6.65
	50	7003	1.41	0.00	-5.19	0.18	-0.13	0.32	1.44	-0.01	-5.20	6.65
	51	7013	1.32	-0.07	-0.18	0.15	-0.36	0.35	1.40	0.22	-0.56	1.96
	52	7001	1.32	-0.07	-0.18	0.15	-0.36	0.35	1.40	0.22	-0.56	1.96

(1.105)*Pm, hsd30-3.xls

Table 2.7.1-16
Cask 30-Foot Side Drop Membrane Stress Summary, 135° Azimuth

Cask Component	Stress Point	Node Number	Stress Components (ksi)						Principal Stresses (ksi)			SI (ksi)
			SX	SY	SZ	SXY	SYZ	SXZ	S1	S2	S3	
Top Cover	1	10730	0.08	0.22	0.90	-0.19	0.05	0.83	1.42	0.26	-0.48	1.90
	2	10771	0.08	0.22	0.90	-0.19	0.05	0.83	1.42	0.26	-0.48	1.90
	3	10738	-1.50	-0.01	0.22	-0.10	-0.08	3.79	3.25	-0.01	-4.52	7.77
	4	10779	-1.50	-0.01	0.22	-0.10	-0.08	3.79	3.25	-0.01	-4.52	7.77
	5	10746	-0.69	-0.55	2.49	-0.02	-0.90	3.37	4.74	-0.56	-2.92	7.67
	6	10786	-0.69	-0.55	2.49	-0.02	-0.90	3.37	4.74	-0.56	-2.92	7.67
Top Flange	7	10711	-1.14	0.01	1.69	-0.23	-1.75	1.17	3.08	-0.82	-1.71	4.79
	8	10713	-1.14	0.01	1.69	-0.23	-1.75	1.17	3.08	-0.82	-1.71	4.79
Inner Shell	9	10672	-0.96	0.42	0.98	0.07	-2.77	-0.02	3.49	-0.96	-2.09	5.58
	10	10674	-0.96	0.42	0.98	0.07	-2.77	-0.02	3.49	-0.96	-2.09	5.58
	11	10654	-0.01	-0.76	1.33	-0.53	-4.25	-0.29	4.66	0.07	-4.18	8.84
	12	10656	-0.01	-0.76	1.33	-0.53	-4.25	-0.29	4.66	0.07	-4.18	8.84
	13	10574	0.01	-4.24	1.30	0.03	-5.07	0.01	4.30	0.01	-7.25	11.56
	14	10576	0.01	-4.24	1.30	0.03	-5.07	0.01	4.30	0.01	-7.25	11.56
	15	10521	-0.02	-6.86	0.21	0.02	-4.13	-0.02	2.11	-0.02	-8.75	10.86
	16	10522	-0.02	-6.86	0.21	0.02	-4.13	-0.02	2.11	-0.02	-8.75	10.86
	17	10371	0.11	-10.63	-1.01	0.00	-0.11	-0.03	0.11	-1.01	-10.64	10.74
	18	10372	0.11	-10.63	-1.01	0.00	-0.11	-0.03	0.11	-1.01	-10.64	10.74
	19	10221	-0.03	-7.09	0.21	-0.01	3.85	-0.02	1.87	-0.03	-8.74	10.61
	20	10222	-0.03	-7.09	0.21	-0.01	3.85	-0.02	1.87	-0.03	-8.74	10.61
	21	10161	0.01	-4.46	1.31	-0.02	5.19	0.00	4.36	0.01	-7.51	11.88
	22	10162	0.01	-4.46	1.31	-0.02	5.19	0.00	4.36	0.01	-7.51	11.88
	23	10062	0.05	-0.37	2.51	0.25	4.58	-0.27	5.88	0.09	-3.76	9.64
	24	10064	0.05	-0.37	2.51	0.25	4.58	-0.27	5.88	0.09	-3.76	9.64
	25	10054	-1.63	-0.05	1.55	0.06	1.53	2.85	3.72	-0.38	-3.47	7.19
	26	10056	-1.63	-0.05	1.55	0.06	1.53	2.85	3.72	-0.38	-3.47	7.19
Outer Shell	27	10680	-0.80	-2.88	0.18	1.56	-9.91	1.12	8.69	-0.47	-11.71	20.40
	28	10682	-0.80	-2.88	0.18	1.56	-9.91	1.12	8.69	-0.47	-11.71	20.40
	29	10578	0.07	-7.77	-4.79	-0.02	-7.81	-0.08	1.67	0.07	-14.23	15.91
	30	10580	0.07	-7.77	-4.79	-0.02	-7.81	-0.08	1.67	0.07	-14.23	15.91
	31	10525	0.03	-10.51	-4.31	-0.01	-5.32	-0.06	0.03	-1.26	-13.57	13.59
	32	10526	0.03	-10.51	-4.31	-0.01	-5.32	-0.06	0.03	-1.26	-13.57	13.59
	33	10375	0.13	-14.48	-4.07	0.00	-0.08	-0.03	0.13	-4.06	-14.48	14.61
	34	10376	0.13	-14.48	-4.07	0.00	-0.08	-0.03	0.13	-4.06	-14.48	14.61
	35	10225	0.02	-10.68	-4.25	0.01	5.11	-0.05	0.02	-1.43	-13.50	13.53
	36	10226	0.02	-10.68	-4.25	0.01	5.11	-0.05	0.02	-1.43	-13.50	13.53
	37	10165	0.07	-7.62	-4.49	0.00	7.59	-0.08	1.69	0.07	-13.80	15.49
	38	10167	0.07	-7.62	-4.49	0.00	7.59	-0.08	1.69	0.07	-13.80	15.49
	39	10073	-0.89	-1.83	2.01	-1.76	9.49	1.17	9.78	-0.41	-10.07	19.86
	40	10075	-0.89	-1.83	2.01	-1.76	9.49	1.17	9.78	-0.41	-10.07	19.86
Bottom Cover	41	10054	-0.81	0.43	2.50	-0.10	1.03	3.16	4.58	0.38	-2.84	7.42
	42	10021	-0.81	0.43	2.50	-0.10	1.03	3.16	4.58	0.38	-2.84	7.42
	43	10051	-1.17	-0.01	0.95	0.06	0.11	3.47	3.52	-0.01	-3.73	7.25
	44	10018	-1.17	-0.01	0.95	0.06	0.11	3.47	3.52	-0.01	-3.73	7.25
	45	10048	-1.09	-0.20	-2.02	0.02	-0.84	2.94	1.59	-0.27	-4.63	6.21
	46	10010	-1.09	-0.20	-2.02	0.02	-0.84	2.94	1.59	-0.27	-4.63	6.21
Ram Access Cover Plate	47	10012	-0.61	-0.06	-0.37	0.13	0.14	3.56	3.09	-0.07	-4.06	7.15
	48	10004	-0.61	-0.06	-0.37	0.13	0.14	3.56	3.09	-0.07	-4.06	7.15
	49	10011	0.01	0.14	-1.14	0.03	-0.16	3.93	3.41	0.15	-4.55	7.95
	50	10003	0.01	0.14	-1.14	0.03	-0.16	3.93	3.41	0.15	-4.55	7.95
	51	10013	0.22	-0.07	0.92	0.35	-0.15	0.75	1.40	0.22	-0.56	1.96
	52	10001	0.22	-0.07	0.92	0.35	-0.15	0.75	1.40	0.22	-0.56	1.96

(1.105)*Pm, hsd30-3.xls

Table 2.7.1-17
Cask 30-Foot Side Drop Membrane Stress Summary, 180° Azimuth

Cask Component	Stress Point	Node Number	Stress Components (ksi)						Principal Stresses (ksi)			SI (ksi)
			SX	SY	SZ	SXY	SYZ	SXZ	S1	S2	S3	
Top Cover	1	13730	-0.34	0.22	1.32	-0.17	-0.10	-0.41	1.42	0.26	-0.48	1.90
	2	13771	-0.34	0.22	1.32	-0.17	-0.10	-0.41	1.42	0.26	-0.48	1.90
	3	13738	-3.94	0.00	3.73	0.01	-0.02	-0.13	3.73	0.00	-3.94	7.68
	4	13779	-3.94	0.00	3.73	0.01	-0.02	-0.13	3.73	0.00	-3.94	7.68
	5	13746	-2.06	-1.09	6.14	0.12	-0.09	-0.12	6.14	-1.08	-2.08	8.22
	6	13786	-2.06	-1.09	6.14	0.12	-0.09	-0.12	6.14	-1.08	-2.08	8.22
Top Flange	7	13711	-8.22	2.47	3.06	-0.85	-0.29	-1.57	3.31	2.50	-8.51	11.81
	8	13713	-8.22	2.47	3.06	-0.85	-0.29	-1.57	3.31	2.50	-8.51	11.81
Inner Shell	9	13672	-0.93	-0.70	1.84	-0.19	-0.49	-0.45	1.99	-0.61	-1.18	3.17
	10	13674	-0.93	-0.70	1.84	-0.19	-0.49	-0.45	1.99	-0.61	-1.18	3.17
	11	13654	0.04	-3.03	1.61	-0.94	-0.79	-0.26	1.75	0.30	-3.43	5.18
	12	13656	0.04	-3.03	1.61	-0.94	-0.79	-0.26	1.75	0.30	-3.43	5.18
	13	13574	0.09	-6.20	1.26	0.03	-0.82	-0.16	1.37	0.07	-6.29	7.66
	14	13576	0.09	-6.20	1.26	0.03	-0.82	-0.16	1.37	0.07	-6.29	7.66
	15	13521	0.04	-9.07	-0.43	0.04	-0.73	0.05	0.05	-0.37	-9.13	9.17
	16	13522	0.04	-9.07	-0.43	0.04	-0.73	0.05	0.05	-0.37	-9.13	9.17
	17	13371	-0.14	-13.57	-1.81	0.00	-0.03	0.24	-0.11	-1.84	-13.57	13.46
	18	13372	-0.14	-13.57	-1.81	0.00	-0.03	0.24	-0.11	-1.84	-13.57	13.46
	19	13221	0.04	-9.74	-0.60	-0.04	0.71	0.08	0.05	-0.55	-9.80	9.85
	20	13222	0.04	-9.74	-0.60	-0.04	0.71	0.08	0.05	-0.55	-9.80	9.85
	21	13161	0.08	-6.37	0.81	-0.02	0.90	-0.11	0.93	0.07	-6.48	7.42
	22	13162	0.08	-6.37	0.81	-0.02	0.90	-0.11	0.93	0.07	-6.48	7.42
	23	13062	0.04	-2.31	3.52	0.55	0.84	-0.51	3.69	0.14	-2.57	6.27
	24	13064	0.04	-2.31	3.52	0.55	0.84	-0.51	3.69	0.14	-2.57	6.27
	25	13054	-3.08	-0.71	3.00	0.27	0.33	-0.32	3.05	-0.70	-3.13	6.17
	26	13056	-3.08	-0.71	3.00	0.27	0.33	-0.32	3.05	-0.70	-3.13	6.17
Outer Shell	27	13680	-1.10	-2.81	1.55	2.28	-1.78	-0.23	2.52	-0.19	-4.69	7.21
	28	13682	-1.10	-2.81	1.55	2.28	-1.78	-0.23	2.52	-0.19	-4.69	7.21
	29	13578	0.12	-10.00	-7.25	-0.04	-1.48	0.96	0.25	-6.72	-10.66	10.91
	30	13580	0.12	-10.00	-7.25	-0.04	-1.48	0.96	0.25	-6.72	-10.66	10.91
	31	13525	0.08	-13.87	-6.01	0.05	-0.99	0.80	0.18	-5.99	-13.99	14.18
	32	13526	0.08	-13.87	-6.01	0.05	-0.99	0.80	0.18	-5.99	-13.99	14.18
	33	13375	-0.04	-18.41	-4.97	0.00	-0.01	0.69	0.05	-5.07	-18.41	18.46
	34	13376	-0.04	-18.41	-4.97	0.00	-0.01	0.69	0.05	-5.07	-18.41	18.46
	35	13225	0.08	-14.21	-5.80	-0.05	0.94	0.77	0.18	-5.79	-14.32	14.50
	36	13226	0.08	-14.21	-5.80	-0.05	0.94	0.77	0.18	-5.79	-14.32	14.50
	37	13165	0.10	-10.15	-6.60	0.02	1.36	0.88	0.22	-6.25	-10.62	10.83
	38	13167	0.10	-10.15	-6.60	0.02	1.36	0.88	0.22	-6.25	-10.62	10.83
	39	13073	-1.14	-3.28	3.95	-2.30	1.23	-0.38	4.28	0.08	-4.82	9.10
	40	13075	-1.14	-3.28	3.95	-2.30	1.23	-0.38	4.28	0.08	-4.82	9.10
Bottom Cover	41	13054	-0.67	0.49	5.39	-0.37	0.21	-0.37	5.43	0.58	-0.79	6.22
	42	13021	-0.67	0.49	5.39	-0.37	0.21	-0.37	5.43	0.58	-0.79	6.22
	43	13051	-1.73	0.00	3.82	-0.08	0.03	-0.06	3.82	0.00	-1.73	5.55
	44	13018	-1.73	0.00	3.82	-0.08	0.03	-0.06	3.82	0.00	-1.73	5.55
	45	13048	-1.63	-1.55	1.31	-0.40	-0.23	0.26	1.36	-1.23	-2.00	3.36
	46	13010	-1.63	-1.55	1.31	-0.40	-0.23	0.26	1.36	-1.23	-2.00	3.36
Ram Access Cover Plate	47	13012	-3.15	0.45	3.56	-0.06	0.15	-0.02	3.57	0.44	-3.15	6.72
	48	13004	-3.15	0.45	3.56	-0.06	0.15	-0.02	3.57	0.44	-3.15	6.72
	49	13011	-2.81	0.11	2.41	0.06	-0.07	0.29	2.43	0.11	-2.82	5.26
	50	13003	-2.81	0.11	2.41	0.06	-0.07	0.29	2.43	0.11	-2.82	5.26
	51	13013	-0.18	-0.07	1.32	0.36	0.15	-0.35	1.40	0.22	-0.56	1.96
	52	13001	-0.18	-0.07	1.32	0.36	0.15	-0.35	1.40	0.22	-0.56	1.96

(1.105)*Pm, hsd30-3.xls

Table 2.7.1-18
Cask 30-Foot Side Drop Membrane Plus Bending Stress Summary, 0° Azimuth

Cask Component	Stress Point	Node Number	Stress Components (ksi)						Principal Stresses (ksi)			SI (ksi)
			SX	SY	SZ	SXY	SYZ	SXZ	S1	S2	S3	
Top Cover	1	730	-0.78	-0.81	-3.89	-0.29	0.20	-0.55	-0.42	-1.07	-3.99	3.57
	2	771	0.11	1.25	6.53	0.63	-0.01	-0.27	6.55	1.52	-0.19	6.73
	3	738	-14.10	0.00	-7.74	0.53	0.03	-0.06	0.02	-7.74	-14.12	14.13
	4	779	-0.66	0.01	6.38	0.53	0.03	-0.15	6.38	0.30	-0.95	7.33
	5	746	-22.92	-8.51	-13.46	-0.46	0.28	-0.29	-8.48	-13.47	-22.94	14.45
	6	786	13.79	-4.43	7.36	1.45	0.03	-0.37	13.92	7.34	-4.54	18.46
Top Flange	7	711	-27.05	-27.88	-24.10	-3.57	0.20	-0.08	-23.77	-24.20	-31.06	7.30
	8	713	-11.97	35.74	-3.96	-0.44	-0.21	0.59	35.74	-3.92	-12.01	47.75
Inner Shell	9	672	-0.33	2.28	-14.54	0.21	2.05	-1.50	2.52	-0.17	-14.94	17.47
	10	674	-1.00	2.41	-18.60	1.41	0.54	-1.98	2.92	-1.27	-18.84	21.77
	11	654	-0.44	5.55	-21.07	0.83	1.37	-1.35	5.72	-0.44	-21.24	26.95
	12	656	-0.60	1.47	-25.83	1.24	0.04	-1.89	2.07	-1.06	-25.98	28.04
	13	574	-1.07	5.38	-11.45	-0.28	-1.71	-0.91	5.55	-0.99	-11.70	17.25
	14	576	-0.95	5.24	-14.35	-0.32	-1.15	-1.18	5.32	-0.85	-14.53	19.85
	15	521	-0.54	11.00	7.36	0.01	-1.54	0.71	11.57	6.85	-0.60	12.17
	16	522	-0.47	16.07	9.67	-0.01	-1.28	0.90	16.32	9.50	-0.55	16.87
	17	371	-0.53	23.80	5.64	0.00	-0.01	0.56	23.80	5.69	-0.58	24.39
	18	372	-0.43	28.59	13.07	0.00	0.00	1.21	28.59	13.18	-0.54	29.13
	19	221	-0.51	11.02	7.24	0.00	1.59	0.69	11.60	6.72	-0.57	12.17
	20	222	-0.46	15.17	10.34	0.01	1.38	0.96	15.54	10.06	-0.55	16.09
	21	161	-0.91	5.65	-13.45	0.34	1.42	-1.09	5.76	-0.82	-13.65	19.41
	22	162	-0.98	1.65	-14.99	0.33	1.16	-1.22	1.75	-0.89	-15.18	16.93
	23	62	-1.56	-8.91	-14.45	-0.10	-0.45	-1.06	-1.48	-8.88	-14.57	13.09
	24	64	-1.34	11.99	-8.96	-2.85	0.01	-0.61	12.57	-1.87	-9.01	21.59
	25	54	-12.93	-1.73	-11.03	0.62	-0.50	-0.29	-1.67	-11.03	-12.99	11.33
	26	56	-15.05	2.96	-10.63	-0.77	-0.08	-0.10	3.00	-10.62	-15.08	18.08
Outer Shell	27	680	-2.93	-32.50	-30.44	9.50	0.56	-2.51	0.03	-30.30	-35.59	35.63
	28	682	-7.99	19.47	-19.40	4.27	-0.61	-1.08	20.13	-8.55	-19.51	39.65
	29	578	-1.63	4.90	-19.26	-3.77	-2.59	-1.62	6.73	-2.96	-19.76	26.50
	30	580	-2.39	-7.56	-26.97	-3.74	-1.32	-2.20	-0.37	-9.25	-27.32	26.95
	31	525	-0.34	1.19	10.93	0.47	-2.55	1.01	11.61	0.93	-0.77	12.39
	32	526	-0.18	18.44	16.52	0.42	-2.04	1.49	19.75	15.37	-0.33	20.08
	33	375	-0.38	22.23	5.39	0.00	-0.07	0.53	22.23	5.44	-0.43	22.66
	34	376	-0.21	30.62	16.01	-0.01	-0.05	1.45	30.62	16.14	-0.34	30.96
	35	225	-0.32	5.67	10.78	-0.36	2.28	1.00	11.70	4.89	-0.46	12.17
	36	226	-0.21	18.23	16.58	-0.33	1.89	1.50	19.48	15.47	-0.36	19.83
	37	165	-1.71	5.21	-20.81	3.54	2.34	-1.70	6.78	-2.86	-21.23	28.01
	38	167	-2.46	-4.72	-25.25	3.49	1.25	-1.99	0.10	-7.00	-25.54	25.65
	39	73	-4.52	-46.81	-23.64	-11.75	-0.53	-1.59	-1.39	-23.70	-49.89	48.50
	40	75	-8.04	41.51	-0.38	-5.01	0.25	0.67	42.01	-0.32	-8.60	50.61
Bottom Cover	41	54	-15.37	-2.55	-12.09	0.17	-0.41	-0.25	-2.53	-12.09	-15.39	12.86
	42	21	1.03	1.28	0.79	-0.86	-0.02	-0.22	2.04	0.83	0.23	1.80
	43	51	-11.68	-0.01	-8.33	-0.43	-0.03	-0.22	0.00	-8.31	-11.71	11.71
	44	18	-0.70	0.01	1.78	-0.45	-0.02	-0.30	1.82	0.22	-0.95	2.77
	45	48	-2.30	-1.39	-5.38	-0.72	0.00	-0.70	-0.97	-2.56	-5.53	4.56
	46	10	-5.41	-1.78	-0.52	-0.94	0.43	-0.17	-0.34	-1.72	-5.64	5.30
Ram Access Cover Plate	47	12	-10.66	-0.40	-1.57	0.74	0.02	-0.02	-0.35	-1.57	-10.71	10.36
	48	4	2.00	0.60	5.90	-1.05	-0.23	-0.10	5.91	2.57	0.03	5.89
	49	11	-6.78	0.86	-1.05	0.48	-0.05	-0.18	0.89	-1.05	-6.81	7.70
	50	3	-0.42	0.25	4.83	-0.91	0.14	-0.25	4.85	0.87	-1.05	5.90
	51	13	-0.84	-1.25	-2.61	-0.41	-0.19	-0.45	-0.54	-1.38	-2.77	2.23
	52	1	0.47	1.11	5.25	-0.30	-0.10	-0.24	5.27	1.22	0.34	4.93

(1.105)*Pm+Pb, hsd30-3.xls

Table 2.7.1-19
Cask 30-Foot Side Drop Membrane Plus Bending Stress Summary, 45° Azimuth

Cask Component	Stress Point	Node Number	Stress Components (ksi)						Principal Stresses (ksi)			SI (ksi)
			SX	SY	SZ	SXY	SYZ	SXZ	S1	S2	S3	
Top Cover	1	4730	-1.79	-0.81	-2.88	-0.35	-0.07	1.56	-0.42	-1.07	-3.99	3.57
	2	4771	3.59	1.25	3.05	0.45	0.44	-3.21	6.55	1.52	-0.19	6.73
	3	4738	-7.52	0.01	-8.21	0.11	0.45	-3.13	0.03	-4.73	-11.03	11.06
	4	4779	2.58	0.00	-0.12	0.11	0.45	-3.80	5.27	0.06	-2.87	8.14
	5	4746	-8.32	-2.43	-10.12	-0.50	1.06	-5.07	-1.89	-4.59	-14.39	12.51
	6	4786	4.65	-0.81	-0.45	0.50	1.92	1.04	4.99	0.97	-2.58	7.57
Top Flange	7	4711	-14.94	-15.92	-16.66	-2.13	-0.55	0.63	-13.05	-16.86	-17.62	4.57
	8	4713	-6.79	19.89	-4.65	-0.27	-1.33	0.46	19.97	-4.63	-6.89	26.85
Inner Shell	9	4672	-1.28	9.20	-14.14	1.44	4.14	0.64	10.12	-1.47	-14.87	25.00
	10	4674	-5.73	-3.35	-18.13	-0.65	0.65	-2.32	-3.08	-5.56	-18.56	15.49
	11	4654	-0.98	9.09	-16.41	-0.16	2.35	0.21	9.30	-0.98	-16.63	25.92
	12	4656	-1.77	-2.06	-18.90	-0.90	0.01	0.09	-1.00	-2.83	-18.90	17.89
	13	4574	-0.66	7.13	-6.99	-0.15	-11.11	0.14	13.24	-0.66	-13.08	26.32
	14	4576	-0.76	6.93	-6.44	-0.15	-7.64	0.26	10.41	-0.76	-9.91	20.32
	15	4521	-0.13	8.50	5.56	0.05	-11.07	-0.03	18.20	-0.13	-4.13	22.33
	16	4522	-0.08	11.26	6.44	0.05	-8.45	-0.09	17.64	0.07	-0.09	17.72
	17	4371	0.05	13.99	7.15	0.00	-0.08	0.05	13.99	7.15	0.05	13.93
	18	4372	0.01	14.13	5.75	0.00	-0.02	-0.25	14.13	5.76	0.00	14.13
	19	4221	-0.15	9.24	6.08	-0.05	11.23	-0.04	18.99	-0.16	-3.67	22.66
	20	4222	-0.11	11.22	6.18	-0.04	8.68	-0.10	17.75	-0.10	-0.35	18.09
	21	4161	-0.80	6.93	-6.32	0.16	11.54	0.12	13.61	-0.80	-12.99	26.61
	22	4162	-0.85	6.58	-6.96	0.18	7.77	0.30	10.12	-0.86	-10.50	20.63
	23	4062	-1.02	0.98	-10.51	-0.08	-3.57	0.14	2.00	-1.03	-11.54	13.54
	24	4064	-1.29	5.40	-9.40	-0.85	-0.47	0.06	5.52	-1.40	-9.41	14.93
	25	4054	-5.63	1.28	-8.89	0.22	-1.72	-2.70	1.62	-4.29	-10.58	12.20
	26	4056	-7.48	0.37	-9.58	-0.26	0.30	-2.81	0.40	-5.55	-11.54	11.93
Outer Shell	27	4680	-1.63	-5.85	-17.69	3.87	7.12	-0.25	1.45	-5.40	-21.22	22.66
	28	4682	-3.95	8.13	-14.24	2.05	-3.75	-0.19	9.07	-4.27	-14.86	23.93
	29	4578	-1.58	5.69	-11.75	-2.00	-21.51	-0.01	20.31	-1.66	-26.30	46.61
	30	4580	-1.74	5.37	-12.42	-2.05	-10.77	0.32	10.76	-2.04	-17.51	28.28
	31	4525	-0.19	4.26	7.02	0.40	-17.19	-0.05	22.90	-0.19	-11.61	34.51
	32	4526	-0.01	14.17	9.34	0.38	-12.35	-0.12	24.34	0.01	-0.86	25.19
	33	4375	0.05	13.33	7.70	0.00	-0.44	0.18	13.36	7.67	0.05	13.32
	34	4376	-0.01	13.79	5.25	0.00	-0.31	-0.24	13.80	5.25	-0.02	13.81
	35	4225	-0.19	6.18	7.94	-0.31	15.96	-0.07	23.04	-0.19	-8.93	31.97
	36	4226	-0.05	12.75	8.49	-0.29	11.45	-0.14	22.27	-0.05	-1.03	23.29
	37	4165	-1.72	5.66	-11.05	1.96	21.39	-0.05	20.39	-1.78	-25.72	46.11
	38	4167	-1.89	4.43	-13.53	2.00	10.16	0.33	9.35	-2.21	-18.12	27.48
	39	4073	-2.44	-16.48	-14.25	-5.39	-8.80	-0.26	0.04	-8.16	-25.05	25.08
	40	4075	-3.97	16.92	-5.91	-2.53	1.38	-0.19	17.29	-4.28	-5.99	23.29
Bottom Cover	41	4054	-6.98	0.69	-9.42	0.07	-1.64	-3.11	0.99	-5.03	-11.68	12.67
	42	4021	-0.05	0.36	-3.17	-0.34	-0.38	-0.50	0.56	-0.12	-3.30	3.86
	43	4051	-5.95	0.01	-8.39	-0.08	-0.40	-2.82	0.02	-4.11	-10.26	10.28
	44	4018	0.20	0.00	-2.21	-0.09	-0.39	-2.58	1.86	0.03	-3.89	5.74
	45	4048	-2.45	0.12	-8.08	-0.10	0.07	-2.36	0.13	-1.60	-8.94	9.07
	46	4010	-1.66	0.11	-3.77	-0.17	1.17	-3.41	1.42	-0.34	-6.40	7.82
Ram Access Cover Plate	47	4012	-4.06	-0.41	-4.76	0.39	0.36	-4.72	0.33	-0.38	-9.17	9.50
	48	4004	2.23	-0.44	0.58	-0.06	-1.41	-2.23	3.92	0.41	-1.96	5.88
	49	4011	-2.78	0.47	-3.89	0.25	-0.01	-3.87	0.73	0.32	-7.25	7.98
	50	4003	2.44	0.34	0.18	-0.46	-0.02	-3.96	5.45	0.35	-2.83	8.28
	51	4013	-1.27	-1.25	-2.18	-0.16	-0.42	0.89	-0.54	-1.38	-2.77	2.23
	52	4001	3.11	1.11	2.62	-0.14	-0.29	-2.39	5.27	1.22	0.34	4.93

(1.105)*Pm+Pb, hsd30-3.xls

Table 2.7.1-20
Cask 30-Foot Side Drop Membrane Plus Bending Stress Summary, 90° Azimuth

Cask Component	Stress Point	Node Number	Stress Components (ksi)						Principal Stresses (ksi)			SI (ksi)
			SX	SY	SZ	SXY	SYZ	SXZ	S1	S2	S3	
Top Cover	1	7730	-3.89	-0.81	-0.78	-0.20	-0.29	0.55	-0.42	-1.07	-3.99	3.57
	2	7771	6.53	1.25	0.11	0.01	0.63	0.27	6.55	1.52	-0.19	6.73
	3	7738	-0.67	0.00	-6.73	-0.27	0.16	0.61	0.10	-0.70	-6.79	6.89
	4	7779	4.20	0.00	-4.36	-0.27	0.16	2.00	4.65	0.00	-4.81	9.47
	5	7746	4.84	2.60	-4.00	-0.41	-0.42	2.69	5.68	2.53	-4.76	10.44
	6	7786	-3.12	1.90	-5.17	-0.46	-0.66	2.07	2.05	-1.98	-6.47	8.52
Top Flange	7	7711	1.43	0.91	-3.81	0.33	-1.36	1.87	2.04	1.24	-4.75	6.79
	8	7713	0.13	-1.86	-3.35	0.08	-1.08	0.43	0.18	-1.30	-3.96	4.14
Inner Shell	9	7672	-0.41	5.78	-8.63	0.80	-2.52	-0.23	6.31	-0.52	-9.06	15.37
	10	7674	-2.66	-1.09	-8.28	-0.55	-1.27	1.30	-0.57	-2.72	-8.74	8.16
	11	7654	-0.10	4.44	-6.84	-0.30	-4.86	0.16	6.26	-0.11	-8.65	14.91
	12	7656	-0.46	1.68	-5.59	-0.51	-4.09	-0.18	3.55	-0.48	-7.44	10.99
	13	7574	0.01	2.52	0.08	0.05	-9.63	0.10	11.00	0.02	-8.40	19.40
	14	7576	0.20	5.66	2.55	0.09	-9.42	-0.05	13.65	0.20	-5.44	19.09
	15	7521	0.13	1.51	3.06	0.05	-7.99	-0.08	10.31	0.13	-5.74	16.04
	16	7522	0.05	0.77	1.38	0.08	-8.93	0.01	10.01	0.05	-7.86	17.87
	17	7371	0.00	-2.03	4.88	0.00	-0.07	-0.21	4.89	-0.01	-2.03	6.92
	18	7372	-0.15	-4.85	-1.12	0.00	-0.12	0.14	-0.13	-1.14	-4.86	4.73
	19	7221	0.15	2.02	3.00	-0.05	7.73	-0.09	10.25	0.15	-5.23	15.48
	20	7222	0.07	1.13	1.32	-0.09	8.73	0.02	9.96	0.07	-7.51	17.47
	21	7161	0.05	3.69	0.32	-0.05	9.43	0.13	11.58	0.05	-7.57	19.15
	22	7162	0.26	7.25	3.45	-0.08	9.38	-0.07	14.92	0.26	-4.21	19.14
	23	7062	0.36	8.86	-3.58	0.09	4.43	0.14	10.28	0.36	-5.00	15.27
	24	7064	-0.65	-2.40	-5.75	1.24	3.97	-0.22	0.83	-1.15	-8.48	9.32
	25	7054	3.12	4.05	-3.78	0.09	1.68	2.33	4.70	3.47	-4.78	9.48
	26	7056	2.18	-2.17	-5.11	0.40	0.43	2.69	3.12	-2.20	-6.01	9.13
Outer Shell	27	7680	0.60	13.86	-2.74	-2.32	-13.50	1.44	21.76	0.25	-10.29	32.05
	28	7682	0.59	-5.61	-5.38	-0.85	-6.41	0.96	2.04	-0.54	-11.90	13.95
	29	7578	-0.16	1.20	-5.21	0.28	-14.48	0.46	12.83	-0.14	-16.85	29.67
	30	7580	0.03	9.87	2.05	0.28	-13.58	-0.12	20.09	0.02	-8.17	28.27
	31	7525	0.17	1.32	0.34	0.15	-10.76	-0.05	11.60	0.17	-9.94	21.55
	32	7526	-0.03	0.51	-0.97	0.21	-12.51	-0.09	12.30	-0.03	-12.76	25.05
	33	7375	0.06	-3.38	3.60	0.00	-0.22	-0.33	3.64	0.03	-3.38	7.02
	34	7376	-0.16	-7.78	-4.16	0.00	-0.29	0.03	-0.16	-4.14	-7.80	7.64
	35	7225	0.17	0.61	0.35	-0.13	10.26	-0.08	10.75	0.17	-9.79	20.53
	36	7226	0.00	-0.75	-1.07	-0.19	12.13	-0.09	11.22	0.00	-13.04	24.27
	37	7165	-0.09	0.87	-5.91	-0.27	13.92	0.51	11.81	-0.07	-16.87	28.69
	38	7167	0.04	9.34	2.22	-0.27	13.49	-0.13	19.74	0.04	-8.17	27.90
	39	7073	1.02	14.37	-1.90	2.78	10.88	1.41	20.32	0.52	-7.35	27.67
	40	7075	0.40	-10.58	-7.28	1.10	5.14	0.86	0.82	-3.94	-14.34	15.16
Bottom Cover	41	7054	3.12	3.82	-3.79	0.21	1.42	2.60	4.64	3.36	-4.85	9.48
	42	7021	-1.15	-0.66	-4.17	0.21	0.02	2.15	0.03	-0.71	-5.29	5.32
	43	7051	0.42	0.03	-6.20	0.27	-0.07	1.45	0.80	-0.05	-6.51	7.31
	44	7018	0.84	-0.02	-4.09	0.29	-0.08	2.14	1.67	-0.05	-4.89	6.56
	45	7048	-2.16	1.38	-9.06	0.47	-0.16	0.40	1.44	-2.20	-9.09	10.53
	46	7010	1.77	1.69	-5.56	0.51	-0.46	1.06	2.27	1.37	-5.74	8.02
Ram Access Cover Plate	47	7012	1.71	-0.39	-6.99	-0.06	-0.20	0.35	1.73	-0.38	-7.01	8.74
	48	7004	1.92	-1.23	-3.90	0.82	-0.28	0.55	2.16	-1.37	-4.00	6.16
	49	7011	-0.34	-0.12	-6.09	0.26	-0.09	0.14	0.05	-0.50	-6.10	6.14
	50	7003	3.15	0.13	-4.28	0.10	-0.17	0.49	3.18	0.13	-4.32	7.50
	51	7013	-2.61	-1.25	-0.84	0.19	-0.41	0.45	-0.54	-1.38	-2.77	2.23
	52	7001	5.25	1.11	0.47	0.10	-0.30	0.24	5.27	1.22	0.34	4.93

(1.105)*Pm+Pb, hsd30-3.xls

Table 2.7.1-21
Cask 30-Foot Side Drop Membrane Plus Bending Stress Summary, 135° Azimuth

Cask Component	Stress Point	Node Number	Stress Components (ksi)						Principal Stresses (ksi)			SI (ksi)
			SX	SY	SZ	SXY	SYZ	SXZ	S1	S2	S3	
Top Cover	1	10730	-2.88	-0.81	-1.79	0.07	-0.35	-1.56	-0.42	-1.07	-3.99	3.57
	2	10771	3.05	1.25	3.59	-0.44	0.45	3.21	6.55	1.52	-0.19	6.73
	3	10738	-2.82	-0.02	-2.08	-0.10	-0.08	2.80	0.42	-0.05	-5.28	5.69
	4	10779	-0.18	0.00	2.53	-0.10	-0.08	4.77	6.14	0.00	-3.79	9.92
	5	10746	-1.90	-0.68	1.27	-0.10	-0.60	4.30	4.33	-0.72	-4.92	9.25
	6	10786	0.52	-0.42	3.71	0.07	-1.19	2.44	5.22	-0.08	-1.33	6.54
Top Flange	7	10711	-1.83	-1.78	1.32	-0.27	-2.03	1.83	2.97	-2.07	-3.18	6.15
	8	10713	-0.45	1.80	2.06	-0.20	-1.47	0.51	3.47	0.49	-0.56	4.03
Inner Shell	9	10672	-0.29	3.11	2.28	0.63	-3.19	-0.47	6.01	-0.36	-0.54	6.55
	10	10674	-1.62	-2.27	-0.31	-0.49	-2.36	0.44	1.40	-1.75	-3.86	5.26
	11	10654	-0.02	1.42	2.26	-0.25	-4.04	-0.12	5.90	0.01	-2.25	8.14
	12	10656	0.00	-2.95	0.39	-0.81	-4.47	-0.45	3.49	0.14	-6.18	9.68
	13	10574	0.07	-3.22	2.25	0.04	-4.93	-0.04	5.15	0.07	-6.12	11.27
	14	10576	-0.05	-5.26	0.34	0.03	-5.21	0.05	3.46	-0.05	-8.38	11.83
	15	10521	0.00	-6.47	0.41	0.03	-3.96	-0.04	2.22	0.00	-8.28	10.50
	16	10522	-0.03	-7.24	0.01	0.01	-4.29	0.00	2.00	-0.03	-9.22	11.23
	17	10371	0.07	-10.84	-2.52	0.00	-0.12	-0.02	0.07	-2.52	-10.85	10.92
	18	10372	0.14	-10.42	0.51	0.00	-0.11	-0.05	0.51	0.13	-10.42	10.94
	19	10221	-0.02	-6.71	0.38	-0.03	3.72	-0.04	1.97	-0.02	-8.30	10.27
	20	10222	-0.04	-7.46	0.04	0.00	3.98	0.00	1.76	-0.04	-9.18	10.94
	21	10161	0.08	-3.50	2.36	-0.03	5.07	-0.06	5.29	0.08	-6.43	11.71
	22	10162	-0.05	-5.42	0.26	-0.02	5.31	0.05	3.44	-0.05	-8.60	12.04
	23	10062	-0.01	-0.70	2.59	0.14	4.28	-0.05	5.53	-0.01	-3.64	9.17
	24	10064	0.12	-0.04	2.43	0.35	4.89	-0.49	6.24	0.20	-3.93	10.17
	25	10054	-1.17	0.99	1.87	0.01	2.16	2.88	4.61	0.32	-3.24	7.85
	26	10056	-2.08	-1.10	1.23	0.11	0.90	2.82	3.01	-1.22	-3.75	6.76
Outer Shell	27	10680	-0.64	-12.66	-2.32	2.29	-12.59	1.33	6.12	-0.31	-21.44	27.56
	28	10682	-0.95	6.91	2.69	0.83	-7.24	0.90	12.34	-0.34	-3.35	15.69
	29	10578	0.21	-5.52	-3.21	-0.02	-7.57	-0.13	3.29	0.21	-12.02	15.32
	30	10580	-0.06	-10.02	-6.37	-0.02	-8.06	-0.02	0.06	-0.06	-16.45	16.52
	31	10525	0.06	-9.63	-3.90	0.01	-5.02	-0.09	0.07	-0.99	-12.54	12.62
	32	10526	-0.01	-11.39	-4.73	-0.02	-5.62	-0.03	-0.01	-1.53	-14.59	14.59
	33	10375	0.08	-14.63	-6.24	0.00	-0.08	-0.01	0.08	-6.24	-14.63	14.71
	34	10376	0.19	-14.33	-1.89	0.00	-0.07	-0.05	0.19	-1.89	-14.33	14.52
	35	10225	0.05	-9.79	-3.90	-0.01	4.86	-0.08	0.05	-1.17	-12.53	12.59
	36	10226	0.00	-11.56	-4.61	0.03	5.37	-0.02	0.00	-1.69	-14.48	14.48
	37	10165	0.21	-5.91	-2.89	0.00	7.38	-0.16	3.14	0.20	-11.95	15.08
	38	10167	-0.06	-9.32	-6.09	0.00	7.79	-0.01	0.25	-0.06	-15.66	15.90
	39	10073	-1.01	-13.34	-1.16	-2.49	11.76	1.50	5.99	-0.58	-20.92	26.91
	40	10075	-0.77	9.68	5.18	-1.03	7.23	0.83	15.01	0.86	-1.78	16.78
Bottom Cover	41	10054	-1.70	0.88	1.63	-0.04	1.86	3.21	4.32	0.36	-3.88	8.20
	42	10021	0.09	-0.02	3.37	-0.16	0.20	3.11	5.25	0.01	-1.82	7.07
	43	10051	-1.99	-0.03	-0.66	0.06	0.11	2.75	1.51	-0.04	-4.15	5.66
	44	10018	-0.34	0.01	2.56	0.06	0.10	4.18	5.54	0.01	-3.32	8.86
	45	10048	-0.98	-0.11	-3.41	0.01	-0.23	2.00	0.18	-0.14	-4.54	4.72
	46	10010	-1.20	-0.29	-0.62	0.02	-1.45	3.88	3.31	-0.39	-5.02	8.33
Ram Access Cover Plate	47	10012	-2.44	-0.21	-2.23	0.27	-0.52	4.46	2.14	-0.17	-6.84	8.98
	48	10004	1.22	0.09	1.48	-0.01	0.80	2.67	4.11	0.20	-1.52	5.63
	49	10011	-1.61	0.19	-2.73	0.21	-0.14	3.64	1.52	0.20	-5.86	7.38
	50	10003	1.62	0.10	0.44	-0.16	-0.18	4.22	5.30	0.09	-3.23	8.54
	51	10013	-2.18	-1.25	-1.27	0.42	-0.16	-0.89	-0.54	-1.38	-2.77	2.23
	52	10001	2.62	1.11	3.11	0.29	-0.14	2.39	5.27	1.22	0.34	4.93

(1.105)*Pm+Pb, hsd30-3.xls

Table 2.7.1-22
Cask 30-Foot Side Drop Membrane Plus Bending Stress Summary, 180° Azimuth

Cask Component	Stress Point	Node Number	Stress Components (ksi)						Principal Stresses (ksi)			SI (ksi)
			SX	SY	SZ	SXY	SYZ	SXZ	S1	S2	S3	
Top Cover	1	13730	-0.78	-0.81	-3.89	0.29	-0.20	-0.55	-0.42	-1.07	-3.99	3.57
	2	13771	0.11	1.25	6.53	-0.63	0.01	-0.27	6.55	1.52	-0.19	6.73
	3	13738	-5.08	-0.01	0.36	0.01	-0.02	-0.07	0.36	-0.01	-5.08	5.44
	4	13779	-2.81	0.01	7.09	0.01	-0.02	-0.20	7.10	0.01	-2.81	9.91
	5	13746	-5.58	-1.52	3.33	-0.22	-0.09	-0.04	3.34	-1.51	-5.59	8.93
	6	13786	1.46	-0.67	8.95	0.46	-0.08	-0.20	8.95	1.55	-0.76	9.72
Top Flange	7	13711	-13.48	-21.43	-3.11	-2.31	1.24	-0.97	-2.91	-13.01	-22.10	19.18
	8	13713	-2.97	26.37	9.23	0.61	-1.81	-2.17	26.58	9.39	-3.35	29.92
Inner Shell	9	13672	-0.14	2.99	3.30	0.66	-0.38	-0.51	3.72	2.75	-0.32	4.04
	10	13674	-1.72	-4.40	0.38	-1.04	-0.61	-0.39	0.49	-1.38	-4.85	5.34
	11	13654	0.07	1.41	2.77	-0.37	-0.64	-0.38	3.04	1.34	-0.13	3.17
	12	13656	0.01	-7.46	0.46	-1.51	-0.95	-0.15	0.57	0.29	-7.86	8.44
	13	13574	0.08	-5.73	0.84	0.04	-0.81	-0.11	0.95	0.06	-5.83	6.79
	14	13576	0.11	-6.67	1.68	0.03	-0.83	-0.22	1.79	0.08	-6.75	8.54
	15	13521	0.02	-9.02	-1.05	0.04	-0.76	0.13	0.04	-1.00	-9.09	9.13
	16	13522	0.06	-9.12	0.19	0.04	-0.71	-0.03	0.25	0.05	-9.17	9.42
	17	13371	-0.13	-13.24	-1.89	0.00	-0.03	0.25	-0.10	-1.92	-13.24	13.14
	18	13372	-0.15	-13.90	-1.72	0.00	-0.03	0.23	-0.11	-1.76	-13.90	13.78
	19	13221	0.02	-9.60	-1.21	-0.03	0.74	0.16	0.04	-1.16	-9.67	9.71
	20	13222	0.05	-9.89	0.01	-0.04	0.68	0.00	0.06	0.05	-9.93	9.99
	21	13161	0.06	-6.15	0.25	-0.03	0.89	-0.04	0.38	0.05	-6.27	6.65
	22	13162	0.10	-6.60	1.36	-0.02	0.91	-0.18	1.48	0.08	-6.70	8.18
	23	13062	0.07	-1.07	3.89	0.27	0.73	-0.52	4.06	0.10	-1.26	5.32
	24	13064	0.02	-3.55	3.15	0.83	0.95	-0.49	3.33	0.17	-3.89	7.22
	25	13054	-2.23	1.06	3.55	-0.04	0.37	-0.34	3.62	1.01	-2.25	5.87
	26	13056	-3.92	-2.48	2.46	0.58	0.30	-0.31	2.49	-2.28	-4.15	6.64
Outer Shell	27	13680	-0.90	-16.55	-2.35	3.34	-1.83	0.35	-0.22	-2.12	-17.47	17.25
	28	13682	-1.30	10.93	5.46	1.22	-1.72	-0.81	11.58	4.99	-1.48	13.06
	29	13578	0.21	-8.43	-7.65	-0.04	-1.46	1.03	0.35	-6.62	-9.59	9.93
	30	13580	0.02	-11.58	-6.85	-0.04	-1.50	0.90	0.15	-6.54	-12.02	12.17
	31	13525	0.06	-13.48	-6.83	0.05	-1.04	0.91	0.17	-6.79	-13.65	13.81
	32	13526	0.11	-14.25	-5.18	0.06	-0.93	0.69	0.19	-5.17	-14.34	14.54
	33	13375	-0.02	-17.67	-4.98	0.00	-0.02	0.69	0.07	-5.08	-17.67	17.75
	34	13376	-0.06	-19.16	-4.96	0.00	-0.01	0.69	0.03	-5.06	-19.16	19.19
	35	13225	0.06	-13.62	-6.56	-0.05	1.00	0.87	0.17	-6.53	-13.77	13.95
	36	13226	0.10	-14.80	-5.04	-0.06	0.87	0.67	0.19	-5.05	-14.87	15.06
	37	13165	0.17	-9.50	-7.28	0.02	1.33	0.98	0.30	-6.77	-10.14	10.44
	38	13167	0.02	-10.80	-5.92	0.02	1.39	0.78	0.13	-5.65	-11.17	11.29
	39	13073	-1.13	-18.38	-0.29	-3.18	1.38	0.29	-0.18	-0.57	-19.05	18.87
	40	13075	-1.15	11.82	8.20	-1.42	1.08	-1.05	12.32	7.94	-1.40	13.72
Bottom Cover	41	13054	-3.21	0.93	3.13	-0.17	0.32	-0.30	3.19	0.89	-3.23	6.43
	42	13021	1.87	0.05	7.66	-0.57	0.09	-0.44	7.69	2.00	-0.11	7.80
	43	13051	-2.88	-0.05	1.29	-0.08	0.03	-0.06	1.29	-0.05	-2.89	4.18
	44	13018	-0.57	0.05	6.35	-0.09	0.02	-0.05	6.35	0.06	-0.58	6.93
	45	13048	0.25	-1.27	0.07	-0.37	-0.01	0.46	0.67	-0.25	-1.37	2.04
	46	13010	-3.51	-1.83	2.55	-0.44	-0.45	0.06	2.60	-1.77	-3.62	6.21
Ram Access Cover Plate	47	13012	-6.92	-0.10	1.04	0.55	0.03	-0.04	1.04	-0.06	-6.96	8.00
	48	13004	0.62	1.00	6.08	-0.67	0.27	0.01	6.09	1.50	0.11	5.98
	49	13011	-4.63	0.32	0.22	0.46	-0.01	0.28	0.37	0.24	-4.69	5.05
	50	13003	-0.98	-0.10	4.60	-0.35	-0.13	0.31	4.63	0.01	-1.12	5.74
	51	13013	-0.84	-1.25	-2.61	0.41	0.19	-0.45	-0.54	-1.38	-2.77	2.23
	52	13001	0.47	1.11	5.25	0.30	0.10	-0.24	5.27	1.22	0.34	4.93

(1.105)*Pm+Pb, hsd30-3.xls

2.7.1.3 Corner Drops

The NUHOMS®-MP187 transportation package is analyzed for a 30-foot drop with the package center of gravity located directly above the initial point of impact (72° from horizontal). Drop analyses are performed for both hot and cold ambient conditions to determine the worst case corner drop loads. Stress analyses are performed using finite element methods for the Package structural components using equivalent static g-loads. Both top and bottom end impacts are considered and the most limiting conditions are evaluated.

The following analyses are performed to demonstrate the structural adequacy of the cask for the 30-foot corner drop condition:

1. Determine the cask stresses at the 52 cask stress points (Figure 2.7.1-1) for the corner drop equivalent static g-loads. The cask stresses are determined using the half symmetry three dimensional cask finite element model described in Section 2.10.2.1.3.

2. Determine the stresses in the top closure bolts due to the top corner drop conditions, conservatively taking no credit for support provided by the top end impact limiter.

3. Determine the stresses in the bottom closure bolts due to the bottom corner drop conditions, conservatively taking no credit for support provided by the bottom end impact limiter.

Stress analyses are performed for both hot and cold conditions for the top and bottom end corner drop conditions. The highest drop loads result from the cold ambient condition. The stress allowables used for each corner drop stress analysis are conservatively based on the maximum design temperature of 300°F, irrespective of the thermal condition.

The corner drop analyses are performed conservatively for the bounding equivalent static cold g-loads. The stainless steel and lead material properties used for the cask model are conservatively based on the cask temperatures resulting from the hot ambient condition.

In the event of a 30-foot corner impact, the cask is supported by the primary impact limiter [at the impacting end] along the lower surface of the cask structural shell, outside the region of the neutron shield. The cask is loaded by its self weight, the weight of the DSC, and the weight of the secondary impact limiter.

The cask 30-foot corner drops stress analysis is performed using the half symmetry three dimensional finite element model described in Section 2.10.2.1.3. The loads induced by the 30-foot corner drop include the DSC inertial load, the cask inertial load, the inertial load of the secondary impact limiter, and the primary impact reaction load. Free body diagrams of the cask for the 30-foot top end corner drop and 30-foot bottom end corner drop conditions are shown in Figure 2.7.1-11 and Figure 2.7.1-12, respectively.

The equivalent static package drop loads applied to the model are calculated as follows:

a_t = 11.4g, Peak tangential acceleration at package C.G.

a_l = 35.0g, Peak longitudinal acceleration at package C.G.

DLF_T = 1.06, Tangential Dynamic Load Factor

DLF_L = 1.01, Longitudinal Dynamic Load Factor

G_T = Equivalent static tangential acceleration at package C.G.

= 11.4g x 1.04

= 12.1g

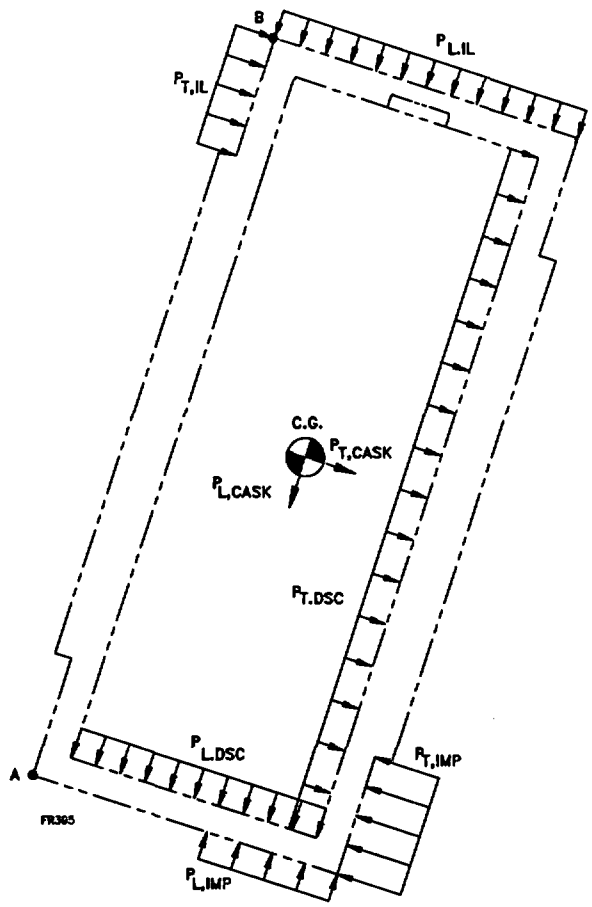

Figure 2.7.1-11
Cask 30-Foot Top End Corner Drop Free Body Diagram

G_L = Equivalent static longitudinal acceleration at package C.G.

= 35.0g x 1.01

= 35.4g

The mass properties of the various package components used for the c.g. over corner drops evaluation are:

W_{PKG} = 256,600 lb., Weight of package corresponding to cold drop conditions

W_{CASK} = 154,600 lb., Weight of cask finite element model

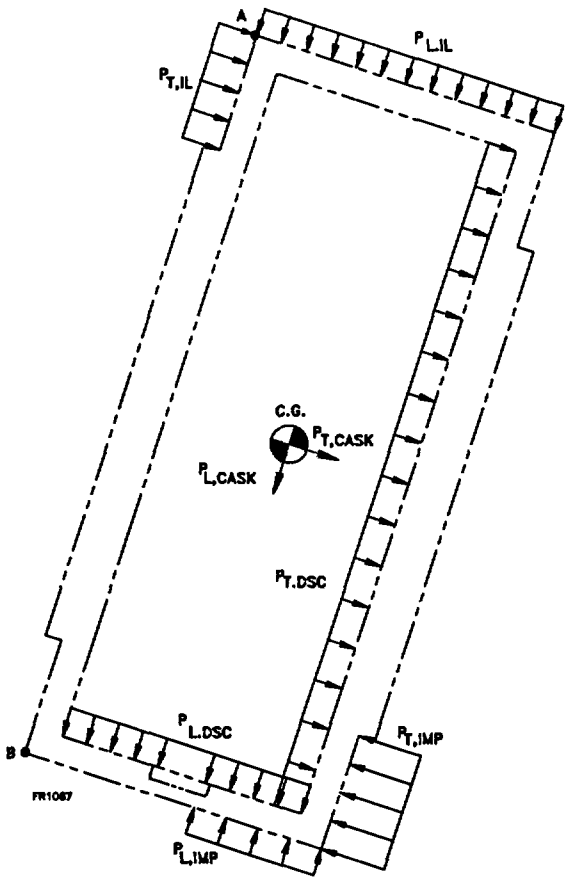

Figure 2.7.1-12
Cask 30-Foot Bottom End Corner Drop Free Body Diagram

W_{IL} = 15,800 lb., Weight of each impact limiter

W_{DSC} = Adjusted weight of DSC to preserve package weight

= 256.6 - 2(15.8) - 154.6

= 70.4 kips

The cask loads from the DSC and the impact limiters in the tangential direction are assumed to have cosine distributions spread over a 75 degree half angle of contact between the DSC and cask inner surface, and the impact limiters and cask outer surface, respectively. The angle of contact between the impact limiters and cask outer surface is dependent upon the crush area of the impact limiters. For the corner drop condition, the impact limiter crush area is larger than the projected area of the cask onto the impact limiter. Thus, the resulting contact angle will be close

to 180 degrees. Therefore, the assumed contact angle of 150 degrees (i.e. 75 degree half angle of contact) is conservative. The pressure load acting on the inner surface of the cask due to the DSC inertial load in the tangential direction is calculated assuming a uniform distribution over the length of the cask cavity (L = 187 inches) and a cosine distribution around the circumference. The tangential load distribution from the DSC is determined using the formula derived in Section 2.10.2.1.3.1, as follows:

$$P_i = \frac{F_{T.DSC}}{LR}\left[\frac{\sin\left(\frac{\pi}{2}+\theta\right)}{\left(\frac{\pi}{2\theta}\right)+1}+\frac{\sin\left(\frac{\pi}{2}-\theta\right)}{\left(\frac{\pi}{2\theta}\right)-1}\right]^{-1}\cos\left(\frac{\pi\theta_i}{2\theta}\right)$$

where;

L	=	187 in., Length of DSC cavity
R	=	34.0 in., Radius of cask cavity
$F_{T.DSC}$	=	$W_{DSC}\ G_T$, Inertial load due to DSC
	=	(70,400)(12.1)
	=	852,000 lb.
θ	=	75° (1.309 radians), Half angle of contact

The resulting pressure distribution around the circumference of the cask inner shell, applied uniformly over the length of the cask cavity, is summarized below:

Circumferential Location	Pressure Load (psi)
0°	95
10°	93
20°	87
30°	77
45°	56
60°	29
75°	0

The longitudinal load from the DSC inertia load, $F_{L,DSC}$, due to the longitudinal acceleration, G_L, is modeled as a uniform pressure acting on the inner surface of the cask impact end. The longitudinal pressure load is calculated as follows:

$$q_{L,DSC} = F_{L,DSC}/A$$

where;

$F_{L,DSC}$ = $W_{DSC}G_L$, Longitudinal inertia force of DSC

= (70,400)(35.4)

= 2.492×10^6 lb.

A = Area of cask end inner surface

= $\pi(34)^2$ for top end corner drop

= 3,632 in^2

= $\pi[(34.00)^2 - (8.50)^2]$ for bottom end corner drop

= 3,405 in^2

Therefore,

$q_{L,DSC}$ = $2.492 \times 10^6/3{,}632 = 666$ psi, for top end corner drop

$q_{L,DSC}$ = $2.492 \times 10^6/3{,}405 = 732$ psi, for bottom end corner drop

The loading on the outer surface of the cask due to the secondary impact limiter inertial load acts in both the tangential and longitudinal directions. The longitudinal load, $F_{L,IL}$, is modeled as a uniform pressure acting on the outer surface of the cask end. The longitudinal pressure load is calculated as follows:

$$q_{L,IL} = F_{L,IL}/A$$

where;

$F_{L,IL}$ = $W_{IL}G_L$, Longitudinal inertial force of secondary impact limiter

= (15,800)(35.4)

= 559,000 lb.

A = $\pi(41.75)^2$, Area of cask end

= 5,476 in^2

Therefore,

$q_{L,IL}$ = 559,000/5,476

= 102 psi

The tangential component of the secondary impact limiter inertial load, $F_{T,IL}$, is calculated as follows:

$F_{T,IL}$ = $W_{IL}G_T$

= (15,800)(12.1)

= 119,000 lb.

The tangential load, $F_{T,IL}$, is assumed to be uniform along the length of the 32 inch overhang region and vary with a cosine distribution around the circumference of the cask (R = 41.75 inches). The resulting cosine pressure load distribution is calculated as discussed above, assuming a 75 degree half angle of contact between the impact limiter and cask outer surface, and summarized below:

Circumferential Location	Pressure Load (psi)
0°	101
15°	96
30°	82
45°	60
60°	31
75°	0

The impact loads are reacted at the primary impact end of the cask. The longitudinal component of the impact reaction load, $F_{L,IMP}$, is calculated based on the laws of static equilibrium as follows:

$$F_{L,IMP} = [W_{CASK} + W_{DSC} + W_{IL}](G_L)$$

$$= [154{,}600 + 70{,}400 + 15{,}800](12.1)$$

$$= 8.524 \times 10^6 \text{ lb.}$$

The longitudinal impact reaction load is applied as a uniform pressure load to the outer surface of the cask end. To maintain a balanced forces and moments in the cask model, for the top end corner drop, the impact reaction pressure in the longitudinal direction is assumed to be distributed over the top flange only. Therefore, the top closure plate is loaded only with the internal DSC pressure load, maximizing the stresses in the plate and the bending stresses at the cask top flange/outer shell junction. The impact pressure is applied over the top flange and spans an angle of 150 degrees (half angle of 75 degrees to each side of the impact corner). The magnitude of the longitudinal impact pressure load is:

$$q_{L,IMP} = F_{L.IMP}/(R^2-r^2)\square$$

$$= 8.524 \times 10^6/(41.75^2-39.25^2)(1.309)$$

$$= 32{,}200\text{psi}$$

Similarly, for the bottom end corner drop, the impact reaction pressure in the longitudinal direction is distributed over a circular sector corresponding to the thickness of the cask shell, and spans an angle of 150 degrees (half angle of 75 degrees to each side of the impact corner). The bottom closure plate is loaded with the internal DSC pressure load, maximizing the stresses in the bottom closure plate and the bending stresses at the cask bottom forging/cask shell junction. The magnitude of the longitudinal impact pressure load is:

$$q_{L,IMP} = F_{L.IMP}/(R^2-r^2)\square$$

$$= 8.524 \times 10^6/(41.75^2-34^2)(1.047)$$

$$= 13{,}900 \text{ psi}$$

The tangential impact reaction load is calculated based on the laws of static equilibrium as follows:

$$F_{T,IMP} = [W_{CASK} + W_{DSC} + W_{IL}](G_T)$$

$$= [154{,}600 + 70{,}400 + 15{,}800](35.4)$$

$$= 2.914 \times 10^6 \text{ lb.}$$

The loading on the outer surface of the cask due to the tangential impact reaction load is assumed to be uniform along the length of the 32 inch overhang region and vary with a cosine distribution around the circumference of the cask (R = 41.75 inches). The resulting cosine pressure load distribution is calculated as discussed above, assuming a 75 degree half angle of contact between the impact limiter and cask outer surface, and summarized below:

Circumferential Location	Pressure Load (psi)
0°	1,545
10°	1,511
20°	1,411
30°	1,250
45°	908
60°	477
75°	0

In addition to the applied pressure loads from the DSC inertia, secondary impact limiter inertia, and impact reactions, linear acceleration loads of 12.1g and 35.4g in the tangential and longitudinal directions, respectively, are applied to the cask model to account for the cask inertia load. The model is pinned at nodes points A and B, Figure 2.7.1-11 and Figure 2.7.1-12, to prevent rigid body motion. The total tangential and longitudinal reaction loads at these nodes for the top end corner drop condition are 10,080 pounds and 21,665 pounds, respectively, due to a slight unbalance in the applied inertia loads and reaction loads. The load unbalance represents 0.03% of the total impact loads, which are insignificant. The total tangential and longitudinal reaction loads for the bottom end corner drop condition are 10,079 pounds and 21,335 pounds, respectively. This load unbalance represents 0.03% of the total impact loads, which are insignificant. Therefore, the finite element model applied forces and reactions are balanced.

The cask body primary membrane and membrane plus bending stresses resulting from the top end c.g. over flatside drop bound the c.g. over corner and c.g. over flatside hot and cold drops. As described in Table 2.7.1-1a, these values are factored by the ratio of analyzed/predicted (= 1.033) to determine the controlling drop stresses and, for the 52 cask stress points shown in Figure 2.7.1-1, are summarized in Table 2.7.1-23 through Table 2.7.1-32. The maximum primary membrane stress intensity resulting from the top end flatside drop is 32.6 ksi, occurring on the 0 degree azimuth in the inner shell near the top flange (stress points 11 and 12). The allowable primary membrane stress intensity in the cask inner shell is 46.2 ksi for SA-240, Type

304 stainless steel at design temperature of 300°F. Therefore, the minimum margin of safety in the cask body for primary membrane stress intensity due to the top end c.g. over corner drop is:

$$M.S. = (46.2/32.6) - 1$$
$$= +0.42$$

The maximum membrane plus bending stress intensity resulting from the cold top end c.g. over flatside drop is 55.5 ksi, occurring on the 45 degree azimuth at the junction of the cask outer shell and top flange (stress point 28). The allowable membrane plus bending stress intensity is 66.0 ksi at the design temperature of 300°F. Therefore, the minimum margin of safety in the cask body for membrane plus bending stress intensity due to the top end c.g. over corner drop is:

$$M.S. = (66.0/55.5) - 1$$
$$= +0.19$$

The cask body primary membrane and membrane plus bending stresses resulting from the factored (1.033) bottom end cold c.g. over flatside drop are summarized for the 52 cask stress points shown in Figure 2.7.1-1 in Table 2.7.1-33 through Table 2.7.1-42. The maximum primary membrane stress intensity resulting from the bottom end corner drop is 31.4 ksi, occurring on the 0 degree azimuth in the outer shell (stress points 35 and 36). The allowable primary membrane stress intensity in the cask inner shell is 46.2 ksi for SA-240, Type 304 stainless steel at design temperature of 300°F. Therefore, the minimum margin of safety in the cask body for primary membrane stress intensity due to the bottom end c.g. over corner drop is:

$$M.S. = (46.2/31.4) - 1$$
$$= +0.47$$

The maximum membrane plus bending stress intensity resulting from the cold bottom end c.g. over flatside drop is 47.7 ksi, occurring on the 90 degree azimuth at the junction of the cask outer shell and bottom forging (stress point 39). The allowable membrane plus bending stress

intensity is 66.0 ksi at the design temperature of 300°F. Therefore, the minimum margin of safety in the cask body for membrane plus bending stress intensity due to the cold bottom end c.g. over flatside drop is:

$$M.S. = (66.0/47.7) - 1$$

$$= +0.38$$

The results of the cask c.g. over flatside drop finite element analyses demonstrate that the cask body meets the stress acceptance criteria for the 30-foot corner drop conditions. The 30-foot c.g. over flatside drop stresses are combined with the stresses resulting from other loading conditions in accordance with Regulatory Guide 7.8 [2.3]. The accident condition load combination evaluation is presented in Section 2.7.8.1.

Table 2.7.1-23
Cask 30-Foot C.G. Over Top Flatside Drop Membrane Stress Summary, 0° Azimuth

Cask Component	Stress Point	Node Number	Stress Components (ksi)						Principal Stresses (ksi)			SI (ksi)
			SX	SY	SZ	SXY	SYZ	SXZ	S1	S2	S3	
Top Cover	1	730	0.05	-0.38	3.27	0.75	0.46	0.07	3.33	0.58	-0.98	4.31
	2	771	0.05	-0.38	3.27	0.75	0.46	0.07	3.33	0.58	-0.98	4.31
	3	738	0.82	-0.34	3.65	-0.70	0.11	0.00	3.65	1.15	-0.67	4.32
	4	779	0.82	-0.34	3.65	-0.70	0.11	0.00	3.65	1.15	-0.67	4.32
	5	746	1.71	-0.45	6.62	-1.73	-0.01	0.17	6.62	2.66	-1.41	8.03
	6	786	1.71	-0.45	6.62	-1.73	-0.01	0.17	6.62	2.66	-1.41	8.03
Top Flange	7	711	-2.45	-27.62	-9.34	-2.06	0.30	-0.62	-2.23	-9.39	-27.79	25.57
	8	713	-2.45	-27.62	-9.34	-2.06	0.30	-0.62	-2.23	-9.39	-27.79	25.57
Inner Shell	9	672	2.18	-10.39	-20.25	-1.64	1.23	-1.77	2.55	-10.51	-20.51	23.06
	10	674	2.18	-10.39	-20.25	-1.64	1.23	-1.77	2.55	-10.51	-20.51	23.06
	11	654	-1.57	-16.41	-33.68	-0.48	0.05	-2.87	-1.30	-16.42	-33.93	32.63
	12	656	-1.57	-16.41	-33.68	-0.48	0.05	-2.87	-1.30	-16.42	-33.93	32.63
	13	574	-0.65	-18.27	-23.18	-0.02	-0.27	-1.98	-0.48	-18.25	-23.37	22.89
	14	576	-0.65	-18.27	-23.18	-0.02	-0.27	-1.98	-0.48	-18.25	-23.37	22.89
	15	521	-0.48	-16.05	-15.70	0.01	-0.43	-1.33	-0.36	-15.50	-16.37	16.01
	16	522	-0.48	-16.05	-15.70	0.01	-0.43	-1.33	-0.36	-15.50	-16.37	16.01
	17	371	-0.35	-8.81	-9.81	-0.01	-0.33	-0.83	-0.28	-8.72	-9.98	9.70
	18	372	-0.35	-8.81	-9.81	-0.01	-0.33	-0.83	-0.28	-8.72	-9.98	9.70
	19	221	-0.20	-4.09	-3.94	0.00	-0.15	-0.33	-0.17	-3.87	-4.19	4.02
	20	222	-0.20	-4.09	-3.94	0.00	-0.15	-0.33	-0.17	-3.87	-4.19	4.02
	21	161	-0.15	-3.21	-1.77	0.00	-0.07	-0.14	-0.13	-1.78	-3.21	3.08
	22	162	-0.15	-3.21	-1.77	0.00	-0.07	-0.14	-0.13	-1.78	-3.21	3.08
	23	62	0.00	-2.60	1.46	-0.11	0.02	0.12	1.47	-0.01	-2.60	4.07
	24	64	0.00	-2.60	1.46	-0.11	0.02	0.12	1.47	-0.01	-2.60	4.07
	25	54	-0.51	-0.94	1.05	0.02	0.02	0.11	1.06	-0.51	-0.95	2.00
	26	56	-0.51	-0.94	1.05	0.02	0.02	0.11	1.06	-0.51	-0.95	2.00
Outer Shell	27	680	-0.17	-19.75	-19.20	-3.40	0.73	-1.74	0.58	-19.20	-20.48	21.06
	28	682	-0.17	-19.75	-19.20	-3.40	0.73	-1.74	0.58	-19.20	-20.48	21.06
	29	578	-0.80	-19.35	3.25	-0.79	-0.40	0.37	3.29	-0.80	-19.39	22.67
	30	580	-0.80	-19.35	3.25	-0.79	-0.40	0.37	3.29	-0.80	-19.39	22.67
	31	525	-0.24	-16.32	12.41	0.15	-0.66	1.14	12.52	-0.34	-16.34	28.86
	32	526	-0.24	-16.32	12.41	0.15	-0.66	1.14	12.52	-0.34	-16.34	28.86
	33	375	-0.18	-7.23	8.21	-0.02	-0.45	0.74	8.29	-0.25	-7.24	15.53
	34	376	-0.18	-7.23	8.21	-0.02	-0.45	0.74	8.29	-0.25	-7.24	15.53
	35	225	-0.11	-1.79	4.63	-0.01	-0.18	0.42	4.67	-0.14	-1.79	6.46
	36	226	-0.11	-1.79	4.63	-0.01	-0.18	0.42	4.67	-0.14	-1.79	6.46
	37	165	-0.08	-0.86	3.20	0.00	-0.08	0.29	3.23	-0.10	-0.87	4.10
	38	167	-0.08	-0.86	3.20	0.00	-0.08	0.29	3.23	-0.10	-0.87	4.10
	39	73	-0.06	-0.34	1.05	-0.09	-0.01	0.10	1.06	-0.05	-0.37	1.43
	40	75	-0.06	-0.34	1.05	-0.09	-0.01	0.10	1.06	-0.05	-0.37	1.43
Bottom Cover	41	54	-0.07	-0.90	-0.13	-0.17	0.03	-0.01	-0.04	-0.13	-0.94	0.90
	42	21	-0.07	-0.90	-0.13	-0.17	0.03	-0.01	-0.04	-0.13	-0.94	0.90
	43	51	-0.03	-0.06	0.04	-0.23	0.03	0.01	0.19	0.05	-0.28	0.47
	44	18	-0.03	-0.06	0.04	-0.23	0.03	0.01	0.19	0.05	-0.28	0.47
	45	48	0.44	-1.16	1.32	0.00	-0.05	0.06	1.32	0.43	-1.16	2.48
	46	10	0.44	-1.16	1.32	0.00	-0.05	0.06	1.32	0.43	-1.16	2.48
Ram Access Cover Plate	47	12	-0.57	0.63	-0.75	-0.29	0.08	-0.01	0.70	-0.63	-0.75	1.45
	48	4	-0.57	0.63	-0.75	-0.29	0.08	-0.01	0.70	-0.63	-0.75	1.45
	49	11	-0.50	-0.26	-1.10	0.03	-0.05	-0.05	-0.26	-0.50	-1.11	0.85
	50	3	-0.50	-0.26	-1.10	0.03	-0.05	-0.05	-0.26	-0.50	-1.11	0.85
	51	13	-0.04	-0.15	-0.68	0.18	0.10	-0.04	0.10	-0.26	-0.70	0.80
	52	1	-0.04	-0.15	-0.68	0.18	0.10	-0.04	0.10	-0.26	-0.70	0.80

(1.033)*Pm, cc72t-3.xls

Table 2.7.1-24
Cask 30-Foot C.G. Over Top Flatside Drop Membrane Stress Summary, 45° Azimuth

Cask Component	Stress Point	Node Number	Stress Components (ksi)						Principal Stresses (ksi)			SI (ksi)
			SX	SY	SZ	SXY	SYZ	SXZ	S1	S2	S3	
Top Cover	1	4730	1.59	-0.38	1.73	0.21	0.86	-1.61	3.33	0.58	-0.98	4.31
	2	4771	1.59	-0.38	1.73	0.21	0.86	-1.61	3.33	0.58	-0.98	4.31
	3	4738	2.30	-0.34	2.14	-0.88	0.24	-1.33	3.72	1.00	-0.62	4.33
	4	4779	2.30	-0.34	2.14	-0.88	0.24	-1.33	3.72	1.00	-0.62	4.33
	5	4746	2.56	0.74	4.49	-1.84	0.74	-1.11	5.49	2.70	-0.40	5.88
	6	4786	2.56	0.74	4.49	-1.84	0.74	-1.11	5.49	2.70	-0.40	5.88
Top Flange	7	4711	0.95	-27.95	-9.55	-1.55	0.46	0.25	1.04	-9.54	-28.05	29.09
	8	4713	0.95	-27.95	-9.55	-1.55	0.46	0.25	1.04	-9.54	-28.05	29.09
Inner Shell	9	4672	2.30	-9.84	-16.40	-1.35	1.68	-0.07	2.45	-9.58	-16.81	19.26
	10	4674	2.30	-9.84	-16.40	-1.35	1.68	-0.07	2.45	-9.58	-16.81	19.26
	11	4654	-1.82	-14.45	-28.79	-0.31	1.03	0.14	-1.81	-14.39	-28.86	27.05
	12	4656	-1.82	-14.45	-28.79	-0.31	1.03	0.14	-1.81	-14.39	-28.86	27.05
	13	4574	-1.04	-13.86	-20.65	0.00	-2.87	0.07	-1.04	-12.81	-21.69	20.66
	14	4576	-1.04	-13.86	-20.65	0.00	-2.87	0.07	-1.04	-12.81	-21.69	20.66
	15	4521	-0.80	-11.85	-15.82	0.00	-3.52	0.00	-0.80	-9.79	-17.87	17.08
	16	4522	-0.80	-11.85	-15.82	0.00	-3.52	0.00	-0.80	-9.79	-17.87	17.08
	17	4371	-0.48	-7.34	-10.14	0.00	-2.47	-0.01	-0.48	-5.90	-11.58	11.10
	18	4372	-0.48	-7.34	-10.14	0.00	-2.47	-0.01	-0.48	-5.90	-11.58	11.10
	19	4221	-0.22	-4.43	-4.32	0.00	-1.21	-0.01	-0.22	-3.17	-5.58	5.36
	20	4222	-0.22	-4.43	-4.32	0.00	-1.21	-0.01	-0.22	-3.17	-5.58	5.36
	21	4161	-0.14	-3.66	-2.25	0.00	-0.70	-0.01	-0.14	-1.95	-3.95	3.82
	22	4162	-0.14	-3.66	-2.25	0.00	-0.70	-0.01	-0.14	-1.95	-3.95	3.82
	23	4062	0.04	-2.67	1.36	-0.20	-0.03	0.00	1.36	0.06	-2.68	4.05
	24	4064	0.04	-2.67	1.36	-0.20	-0.03	0.00	1.36	0.06	-2.68	4.05
	25	4054	-0.68	-0.94	1.01	0.00	0.00	-0.02	1.01	-0.68	-0.94	1.95
	26	4056	-0.68	-0.94	1.01	0.00	0.00	-0.02	1.01	-0.68	-0.94	1.95
Outer Shell	27	4680	0.48	-17.62	-16.04	-4.33	1.62	-0.18	1.48	-15.33	-19.33	20.80
	28	4682	0.48	-17.62	-16.04	-4.33	1.62	-0.18	1.48	-15.33	-19.33	20.80
	29	4578	-0.77	-13.87	7.59	-0.39	-5.13	0.07	8.76	-0.76	-15.04	23.80
	30	4580	-0.77	-13.87	7.59	-0.39	-5.13	0.07	8.76	-0.76	-15.04	23.80
	31	4525	-0.29	-10.78	11.85	0.08	-5.51	-0.02	13.12	-0.29	-12.06	25.17
	32	4526	-0.29	-10.78	11.85	0.08	-5.51	-0.02	13.12	-0.29	-12.06	25.17
	33	4375	-0.16	-5.11	7.62	-0.01	-3.31	-0.02	8.43	-0.16	-5.91	14.34
	34	4376	-0.16	-5.11	7.62	-0.01	-3.31	-0.02	8.43	-0.16	-5.91	14.34
	35	4225	-0.07	-1.74	4.04	-0.01	-1.38	-0.01	4.36	-0.07	-2.05	6.41
	36	4226	-0.07	-1.74	4.04	-0.01	-1.38	-0.01	4.36	-0.07	-2.05	6.41
	37	4165	-0.05	-0.99	2.67	0.00	-0.75	-0.01	2.82	-0.05	-1.14	3.96
	38	4167	-0.05	-0.99	2.67	0.00	-0.75	-0.01	2.82	-0.05	-1.14	3.96
	39	4073	-0.09	-0.35	1.02	-0.16	-0.19	-0.03	1.04	-0.02	-0.45	1.49
	40	4075	-0.09	-0.35	1.02	-0.16	-0.19	-0.03	1.04	-0.02	-0.45	1.49
Bottom Cover	41	4054	-0.13	-1.03	-0.18	-0.15	0.01	-0.04	-0.09	-0.20	-1.06	0.97
	42	4021	-0.13	-1.03	-0.18	-0.15	0.01	-0.04	-0.09	-0.20	-1.06	0.97
	43	4051	-0.09	-0.06	0.05	-0.24	0.02	-0.02	0.17	0.04	-0.31	0.49
	44	4018	-0.09	-0.06	0.05	-0.24	0.02	-0.02	0.17	0.04	-0.31	0.49
	45	4048	0.38	-1.17	1.27	-0.03	0.02	-0.02	1.27	0.38	-1.17	2.45
	46	4010	0.38	-1.17	1.27	-0.03	0.02	-0.02	1.27	0.38	-1.17	2.45
Ram Access Cover Plate	47	4012	-0.66	0.60	-0.70	-0.33	0.03	0.01	0.68	-0.69	-0.75	1.43
	48	4004	-0.66	0.60	-0.70	-0.33	0.03	0.01	0.68	-0.69	-0.75	1.43
	49	4011	-0.67	-0.19	-1.05	-0.08	-0.05	-0.01	-0.17	-0.69	-1.06	0.89
	50	4003	-0.67	-0.19	-1.05	-0.08	-0.05	-0.01	-0.17	-0.69	-1.06	0.89
	51	4013	-0.32	-0.15	-0.39	0.06	0.20	0.32	0.10	-0.26	-0.70	0.80
	52	4001	-0.32	-0.15	-0.39	0.06	0.20	0.32	0.10	-0.26	-0.70	0.80

(1.033)*Pm, cc72t-3.xls

Table 2.7.1-25
Cask 30-Foot C.G. Over Top Flatside Drop Membrane Stress Summary, 90° Azimuth

Cask Component	Stress Point	Node Number	Stress Components (ksi)						Principal Stresses (ksi)			SI (ksi)
			SX	SY	SZ	SXY	SYZ	SXZ	S1	S2	S3	
Top Cover	1	7730	3.27	-0.38	0.05	-0.46	0.75	-0.07	3.33	0.58	-0.98	4.31
	2	7771	3.27	-0.38	0.05	-0.46	0.75	-0.07	3.33	0.58	-0.98	4.31
	3	7738	3.12	-0.35	1.08	-1.14	0.18	0.10	3.46	1.10	-0.71	4.17
	4	7779	3.12	-0.35	1.08	-1.14	0.18	0.10	3.46	1.10	-0.71	4.17
	5	7746	0.61	4.68	4.49	-1.82	0.08	0.57	5.40	4.54	-0.15	5.55
	6	7786	0.61	4.68	4.49	-1.82	0.08	0.57	5.40	4.54	-0.15	5.55
Top Flange	7	7711	-1.49	0.75	-3.32	0.64	-1.32	0.57	1.22	-1.35	-3.93	5.14
	8	7713	-1.49	0.75	-3.32	0.64	-1.32	0.57	1.22	-1.35	-3.93	5.14
Inner Shell	9	7672	1.45	-1.36	-17.21	0.08	-0.16	-0.53	1.47	-1.36	-17.22	18.70
	10	7674	1.45	-1.36	-17.21	0.08	-0.16	-0.53	1.47	-1.36	-17.22	18.70
	11	7654	-0.89	-1.12	-24.18	0.62	-1.98	-0.14	-0.29	-1.55	-24.35	24.06
	12	7656	-0.89	-1.12	-24.18	0.62	-1.98	-0.14	-0.29	-1.55	-24.35	24.06
	13	7574	-0.46	-1.71	-18.26	0.06	-4.23	0.01	-0.45	-0.70	-19.29	18.84
	14	7576	-0.46	-1.71	-18.26	0.06	-4.23	0.01	-0.45	-0.70	-19.29	18.84
	15	7521	-0.44	-2.38	-16.38	0.02	-4.06	0.00	-0.44	-1.29	-17.48	17.03
	16	7522	-0.44	-2.38	-16.38	0.02	-4.06	0.00	-0.44	-1.29	-17.48	17.03
	17	7371	-0.35	-3.99	-10.74	0.01	-2.85	0.00	-0.35	-2.95	-11.79	11.44
	18	7372	-0.35	-3.99	-10.74	0.01	-2.85	0.00	-0.35	-2.95	-11.79	11.44
	19	7221	-0.17	-4.32	-4.89	0.00	-1.64	0.00	-0.17	-2.94	-6.27	6.11
	20	7222	-0.17	-4.32	-4.89	0.00	-1.64	0.00	-0.17	-2.94	-6.27	6.11
	21	7161	-0.10	-4.08	-2.86	0.00	-1.26	0.00	-0.10	-2.07	-4.87	4.78
	22	7162	-0.10	-4.08	-2.86	0.00	-1.26	0.00	-0.10	-2.07	-4.87	4.78
	23	7062	0.06	-3.27	0.44	-0.15	-0.60	0.01	0.54	0.06	-3.37	3.91
	24	7064	0.06	-3.27	0.44	-0.15	-0.60	0.01	0.54	0.06	-3.37	3.91
	25	7054	-0.79	-1.16	0.46	0.04	-0.13	-0.11	0.48	-0.80	-1.17	1.65
	26	7056	-0.79	-1.16	0.46	0.04	-0.13	-0.11	0.48	-0.80	-1.17	1.65
Outer Shell	27	7680	1.98	7.20	-8.14	-5.55	-3.34	0.12	11.16	-1.17	-8.95	20.10
	28	7682	1.98	7.20	-8.14	-5.55	-3.34	0.12	11.16	-1.17	-8.95	20.10
	29	7578	-0.02	4.43	11.20	0.35	-5.94	0.04	14.65	1.07	-0.11	14.76
	30	7580	-0.02	4.43	11.20	0.35	-5.94	0.04	14.65	1.07	-0.11	14.76
	31	7525	-0.01	2.26	9.92	0.06	-5.61	-0.03	12.89	-0.01	-0.71	13.59
	32	7526	-0.01	2.26	9.92	0.06	-5.61	-0.03	12.89	-0.01	-0.71	13.59
	33	7375	-0.07	-0.64	6.49	0.02	-3.67	-0.03	8.04	-0.07	-2.19	10.23
	34	7376	-0.07	-0.64	6.49	0.02	-3.67	-0.03	8.04	-0.07	-2.19	10.23
	35	7225	-0.03	-0.85	3.00	0.00	-1.86	-0.03	3.75	-0.03	-1.61	5.36
	36	7226	-0.03	-0.85	3.00	0.00	-1.86	-0.03	3.75	-0.03	-1.61	5.36
	37	7165	-0.02	-0.55	1.69	0.00	-1.25	-0.03	2.24	-0.02	-1.11	3.35
	38	7167	-0.02	-0.55	1.69	0.00	-1.25	-0.03	2.24	-0.02	-1.11	3.35
	39	7073	-0.07	-0.18	0.64	-0.12	-0.38	-0.05	0.79	-0.02	-0.38	1.16
	40	7075	-0.07	-0.18	0.64	-0.12	-0.38	-0.05	0.79	-0.02	-0.38	1.16
Bottom Cover	41	7054	-0.13	-1.13	-0.32	-0.16	-0.05	-0.13	-0.05	-0.36	-1.16	1.11
	42	7021	-0.13	-1.13	-0.32	-0.16	-0.05	-0.13	-0.05	-0.36	-1.16	1.11
	43	7051	-0.09	-0.06	-0.05	-0.25	0.03	-0.09	0.21	-0.07	-0.34	0.54
	44	7018	-0.09	-0.06	-0.05	-0.25	0.03	-0.09	0.21	-0.07	-0.34	0.54
	45	7048	0.34	-1.16	1.15	-0.05	0.06	-0.02	1.15	0.34	-1.17	2.32
	46	7010	0.34	-1.16	1.15	-0.05	0.06	-0.02	1.15	0.34	-1.17	2.32
Ram Access Cover Plate	47	7012	-0.80	0.53	-0.68	-0.38	0.03	-0.02	0.63	-0.68	-0.90	1.53
	48	7004	-0.80	0.53	-0.68	-0.38	0.03	-0.02	0.63	-0.68	-0.90	1.53
	49	7011	-1.09	-0.12	-1.03	-0.24	0.02	-0.01	-0.06	-1.03	-1.14	1.08
	50	7003	-1.09	-0.12	-1.03	-0.24	0.02	-0.01	-0.06	-1.03	-1.14	1.08
	51	7013	-0.68	-0.15	-0.04	-0.10	0.18	0.04	0.10	-0.26	-0.70	0.80
	52	7001	-0.68	-0.15	-0.04	-0.10	0.18	0.04	0.10	-0.26	-0.70	0.80

(1.033)*Pm, cc72t-3.xls

Table 2.7.1-26
Cask 30-Foot C.G. Over Top Flatside Drop Membrane Stress Summary, 135° Azimuth

Cask Component	Stress Point	Node Number	Stress Components (ksi)						Principal Stresses (ksi)			SI (ksi)
			SX	SY	SZ	SXY	SYZ	SXZ	S1	S2	S3	
Top Cover	1	10730	1.73	-0.38	1.59	-0.86	0.21	1.61	3.33	0.58	-0.98	4.31
	2	10771	1.73	-0.38	1.59	-0.86	0.21	1.61	3.33	0.58	-0.98	4.31
	3	10738	1.93	-0.34	1.95	-1.12	0.02	0.82	2.97	1.42	-0.85	3.82
	4	10779	1.93	-0.34	1.95	-1.12	0.02	0.82	2.97	1.42	-0.85	3.82
	5	10746	0.26	3.66	4.11	-1.81	-0.15	0.24	4.57	4.00	-0.53	5.09
	6	10786	0.26	3.66	4.11	-1.81	-0.15	0.24	4.57	4.00	-0.53	5.09
Top Flange	7	10711	-1.15	-0.50	-1.87	0.16	0.31	-0.19	-0.41	-1.11	-2.00	1.58
	8	10713	-1.15	-0.50	-1.87	0.16	0.31	-0.19	-0.41	-1.11	-2.00	1.58
Inner Shell	9	10672	1.84	0.44	-8.70	0.54	-0.68	0.50	2.03	0.33	-8.78	10.81
	10	10674	1.84	0.44	-8.70	0.54	-0.68	0.50	2.03	0.33	-8.78	10.81
	11	10654	-0.79	3.38	-15.43	1.38	-1.22	0.05	3.87	-1.20	-15.52	19.38
	12	10656	-0.79	3.38	-15.43	1.38	-1.22	0.05	3.87	-1.20	-15.52	19.38
	13	10574	-0.73	2.76	-18.40	0.04	-2.42	-0.01	3.04	-0.73	-18.68	21.71
	14	10576	-0.73	2.76	-18.40	0.04	-2.42	-0.01	3.04	-0.73	-18.68	21.71
	15	10521	-0.64	1.70	-16.80	0.01	-2.12	-0.02	1.94	-0.64	-17.03	18.98
	16	10522	-0.64	1.70	-16.80	0.01	-2.12	-0.02	1.94	-0.64	-17.03	18.98
	17	10371	-0.35	-1.42	-11.12	0.01	-1.48	-0.02	-0.35	-1.20	-11.33	10.98
	18	10372	-0.35	-1.42	-11.12	0.01	-1.48	-0.02	-0.35	-1.20	-11.33	10.98
	19	10221	-0.16	-3.35	-5.17	0.01	-1.09	-0.01	-0.16	-2.84	-5.67	5.52
	20	10222	-0.16	-3.35	-5.17	0.01	-1.09	-0.01	-0.16	-2.84	-5.67	5.52
	21	10161	-0.11	-3.78	-3.27	0.01	-0.90	-0.01	-0.11	-2.59	-4.46	4.35
	22	10162	-0.11	-3.78	-3.27	0.01	-0.90	-0.01	-0.11	-2.59	-4.46	4.35
	23	10062	0.03	-3.73	-0.10	-0.07	-0.54	0.06	0.08	-0.07	-3.81	3.89
	24	10064	0.03	-3.73	-0.10	-0.07	-0.54	0.06	0.08	-0.07	-3.81	3.89
	25	10054	-1.24	-1.39	-0.04	0.12	-0.22	0.17	0.02	-1.17	-1.51	1.52
	26	10056	-1.24	-1.39	-0.04	0.12	-0.22	0.17	0.02	-1.17	-1.51	1.52
Outer Shell	27	10680	1.43	7.09	-4.17	-4.32	-1.83	0.35	9.65	-0.82	-4.48	14.14
	28	10682	1.43	7.09	-4.17	-4.32	-1.83	0.35	9.65	-0.82	-4.48	14.14
	29	10578	-0.19	6.41	11.48	0.20	-2.17	0.03	12.27	5.62	-0.20	12.48
	30	10580	-0.19	6.41	11.48	0.20	-2.17	0.03	12.27	5.62	-0.20	12.48
	31	10525	-0.17	5.58	9.71	0.00	-1.96	0.03	10.50	4.81	-0.17	10.66
	32	10526	-0.17	5.58	9.71	0.00	-1.96	0.03	10.50	4.81	-0.17	10.66
	33	10375	-0.05	2.40	5.99	0.02	-1.74	0.02	6.69	1.70	-0.05	6.74
	34	10376	-0.05	2.40	5.99	0.02	-1.74	0.02	6.69	1.70	-0.05	6.74
	35	10225	-0.01	0.64	2.47	0.01	-1.24	0.01	3.09	0.02	-0.02	3.11
	36	10226	-0.01	0.64	2.47	0.01	-1.24	0.01	3.09	0.02	-0.02	3.11
	37	10165	-0.04	0.32	0.83	0.06	-0.98	0.00	1.58	-0.04	-0.45	2.03
	38	10167	-0.04	0.32	0.83	0.06	-0.98	0.00	1.58	-0.04	-0.45	2.03
	39	10073	-0.15	0.15	0.28	-0.27	-0.32	-0.02	0.58	0.07	-0.37	0.96
	40	10075	-0.15	0.15	0.28	-0.27	-0.32	-0.02	0.58	0.07	-0.37	0.96
Bottom Cover	41	10054	-0.17	-1.14	-0.58	-0.16	-0.06	-0.10	-0.12	-0.59	-1.18	1.05
	42	10021	-0.17	-1.14	-0.58	-0.16	-0.06	-0.10	-0.12	-0.59	-1.18	1.05
	43	10051	-0.14	-0.06	-0.17	-0.27	0.03	-0.08	0.19	-0.18	-0.39	0.58
	44	10018	-0.14	-0.06	-0.17	-0.27	0.03	-0.08	0.19	-0.18	-0.39	0.58
	45	10048	0.30	-1.04	1.07	-0.07	0.08	0.00	1.08	0.30	-1.05	2.12
	46	10010	0.30	-1.04	1.07	-0.07	0.08	0.00	1.08	0.30	-1.05	2.12
Ram Access Cover Plate	47	10012	-0.64	0.51	-0.74	-0.32	0.01	-0.05	0.59	-0.69	-0.77	1.36
	48	10004	-0.64	0.51	-0.74	-0.32	0.01	-0.05	0.59	-0.69	-0.77	1.36
	49	10011	-0.66	-0.15	-1.05	-0.10	0.07	-0.01	-0.12	-0.67	-1.06	0.94
	50	10003	-0.66	-0.15	-1.05	-0.10	0.07	-0.01	-0.12	-0.67	-1.06	0.94
	51	10013	-0.39	-0.15	-0.32	-0.20	0.06	-0.32	0.10	-0.26	-0.70	0.80
	52	10001	-0.39	-0.15	-0.32	-0.20	0.06	-0.32	0.10	-0.26	-0.70	0.80

(1.033)*Pm, cc72t-3.xls

Table 2.7.1-27
Cask 30-Foot C.G. Over Top Flatside Drop Membrane Stress Summary, 180° Azimuth

Cask Component	Stress Point	Node Number	Stress Components (ksi)						Principal Stresses (ksi)			SI (ksi)
			SX	SY	SZ	SXY	SYZ	SXZ	S1	S2	S3	
Top Cover	1	13730	0.05	-0.38	3.27	-0.75	-0.46	0.07	3.33	0.58	-0.98	4.31
	2	13771	0.05	-0.38	3.27	-0.75	-0.46	0.07	3.33	0.58	-0.98	4.31
	3	13738	1.06	-0.34	2.65	-1.07	-0.16	0.00	2.67	1.63	-0.92	3.59
	4	13779	1.06	-0.34	2.65	-1.07	-0.16	0.00	2.67	1.63	-0.92	3.59
	5	13746	-0.22	2.96	4.21	-1.73	0.01	-0.36	4.27	3.68	-1.00	5.27
	6	13786	-0.22	2.96	4.21	-1.73	0.01	-0.36	4.27	3.68	-1.00	5.27
Top Flange	7	13711	-3.90	0.49	-2.16	-0.06	0.10	-0.34	0.49	-2.10	-3.96	4.46
	8	13713	-3.90	0.49	-2.16	-0.06	0.10	-0.34	0.49	-2.10	-3.96	4.46
Inner Shell	9	13672	2.47	0.40	-6.35	0.51	-0.57	1.08	2.68	0.37	-6.54	9.23
	10	13674	2.47	0.40	-6.35	0.51	-0.57	1.08	2.68	0.37	-6.54	9.23
	11	13654	-0.53	3.67	-12.86	1.63	0.35	1.62	4.27	-0.92	-13.07	17.34
	12	13656	-0.53	3.67	-12.86	1.63	0.35	1.62	4.27	-0.92	-13.07	17.34
	13	13574	-0.64	2.75	-18.55	0.05	-0.43	2.40	2.76	-0.33	-18.87	21.63
	14	13576	-0.64	2.75	-18.55	0.05	-0.43	2.40	2.76	-0.33	-18.87	21.63
	15	13521	-0.63	1.45	-17.04	0.02	-0.37	2.21	1.46	-0.33	-17.34	18.80
	16	13522	-0.63	1.45	-17.04	0.02	-0.37	2.21	1.46	-0.33	-17.34	18.80
	17	13371	-0.49	-1.11	-11.16	0.01	-0.22	1.45	-0.30	-1.11	-11.35	11.05
	18	13372	-0.49	-1.11	-11.16	0.01	-0.22	1.45	-0.30	-1.11	-11.35	11.05
	19	13221	-0.23	-2.89	-5.21	0.00	-0.19	0.67	-0.14	-2.87	-5.31	5.17
	20	13222	-0.23	-2.89	-5.21	0.00	-0.19	0.67	-0.14	-2.87	-5.31	5.17
	21	13161	-0.14	-3.39	-3.52	0.01	-0.14	0.46	-0.08	-3.31	-3.66	3.58
	22	13162	-0.14	-3.39	-3.52	0.01	-0.14	0.46	-0.08	-3.31	-3.66	3.58
	23	13062	0.06	-3.07	0.04	-0.18	-0.02	-0.02	0.08	0.03	-3.08	3.16
	24	13064	0.06	-3.07	0.04	-0.18	-0.02	-0.02	0.08	0.03	-3.08	3.16
	25	13054	-1.58	-1.07	-0.23	-0.07	0.06	-0.21	-0.19	-1.07	-1.62	1.43
	26	13056	-1.58	-1.07	-0.23	-0.07	0.06	-0.21	-0.19	-1.07	-1.62	1.43
Outer Shell	27	13680	1.21	6.39	-3.18	-3.89	-0.99	0.63	8.59	-0.87	-3.30	11.89
	28	13682	1.21	6.39	-3.18	-3.89	-0.99	0.63	8.59	-0.87	-3.30	11.89
	29	13578	-0.10	4.90	11.03	0.21	-0.38	-1.49	11.25	4.88	-0.31	11.56
	30	13580	-0.10	4.90	11.03	0.21	-0.38	-1.49	11.25	4.88	-0.31	11.56
	31	13525	-0.13	4.09	9.61	0.02	-0.29	-1.29	9.80	4.08	-0.29	10.09
	32	13526	-0.13	4.09	9.61	0.02	-0.29	-1.29	9.80	4.08	-0.29	10.09
	33	13375	-0.14	2.59	6.04	0.00	-0.24	-0.80	6.16	2.57	-0.25	6.41
	34	13376	-0.14	2.59	6.04	0.00	-0.24	-0.80	6.16	2.57	-0.25	6.41
	35	13225	-0.07	1.21	2.42	-0.01	-0.22	-0.32	2.49	1.18	-0.11	2.60
	36	13226	-0.07	1.21	2.42	-0.01	-0.22	-0.32	2.49	1.18	-0.11	2.60
	37	13165	-0.07	0.79	0.42	0.07	-0.16	-0.06	0.85	0.37	-0.08	0.93
	38	13167	-0.07	0.79	0.42	0.07	-0.16	-0.06	0.85	0.37	-0.08	0.93
	39	13073	-0.19	0.85	0.37	-0.46	-0.02	-0.13	1.02	0.39	-0.39	1.40
	40	13075	-0.19	0.85	0.37	-0.46	-0.02	-0.13	1.02	0.39	-0.39	1.40
Bottom Cover	41	13054	0.39	-1.05	-0.77	-0.32	0.03	-0.05	0.46	-0.77	-1.12	1.59
	42	13021	0.39	-1.05	-0.77	-0.32	0.03	-0.05	0.46	-0.77	-1.12	1.59
	43	13051	0.07	-0.05	-0.37	-0.31	-0.04	-0.02	0.32	-0.28	-0.39	0.71
	44	13018	0.07	-0.05	-0.37	-0.31	-0.04	-0.02	0.32	-0.28	-0.39	0.71
	45	13048	0.34	-0.92	1.01	-0.07	0.08	-0.08	1.03	0.33	-0.93	1.96
	46	13010	0.34	-0.92	1.01	-0.07	0.08	-0.08	1.03	0.33	-0.93	1.96
Ram Access Cover Plate	47	13012	-0.53	0.49	-0.82	-0.26	-0.11	0.02	0.56	-0.59	-0.83	1.40
	48	13004	-0.53	0.49	-0.82	-0.26	-0.11	0.02	0.56	-0.59	-0.83	1.40
	49	13011	-0.47	-0.19	-1.10	-0.01	0.07	0.07	-0.18	-0.47	-1.11	0.92
	50	13003	-0.47	-0.19	-1.10	-0.01	0.07	0.07	-0.18	-0.47	-1.11	0.92
	51	13013	-0.04	-0.15	-0.68	-0.18	-0.10	-0.04	0.10	-0.26	-0.70	0.80
	52	13001	-0.04	-0.15	-0.68	-0.18	-0.10	-0.04	0.10	-0.26	-0.70	0.80

(1.033)*Pm, cc72t-3.xls

Table 2.7.1-28
Cask 30-Foot C.G. Over Top Flatside Drop Membrane Plus Bending Stress Summary, 0° Azimuth

Cask Component	Stress Point	Node Number	Stress Components (ksi)						Principal Stresses (ksi)			SI (ksi)
			SX	SY	SZ	SXY	SYZ	SXZ	S1	S2	S3	
Top Cover	1	730	-2.63	-6.15	-22.10	0.83	0.44	-1.39	-2.36	-6.31	-22.21	19.84
	2	771	2.73	5.39	28.63	0.68	0.48	1.53	28.73	5.52	2.49	26.24
	3	738	-16.96	-0.56	-15.80	-0.70	0.11	-0.13	-0.53	-15.79	-17.00	16.48
	4	779	18.59	-0.13	23.10	-0.70	0.11	0.13	23.10	18.62	-0.16	23.26
	5	746	-1.80	-0.87	-1.98	-2.04	0.17	-0.28	0.79	-2.00	-3.44	4.23
	6	786	5.21	-0.02	15.21	-1.43	-0.19	0.62	15.26	5.53	-0.39	15.64
Top Flange	7	711	-2.74	-28.29	-9.74	-4.22	0.45	-0.66	-2.00	-9.80	-28.98	26.98
	8	713	-2.16	-26.95	-8.93	0.10	0.16	-0.58	-2.11	-8.98	-26.95	24.84
Inner Shell	9	672	0.57	-13.41	-21.70	-1.36	1.47	-1.75	0.86	-13.35	-22.05	22.91
	10	674	3.79	-7.37	-18.79	-1.92	0.98	-1.79	4.27	-7.65	-18.99	23.25
	11	654	-1.37	1.00	-29.17	1.16	-0.08	-2.52	1.50	-1.65	-29.40	30.91
	12	656	-1.77	-33.81	-38.18	-2.11	0.19	-3.22	-1.34	-33.95	-38.46	37.12
	13	574	-0.66	-19.02	-23.99	-0.02	-0.29	-2.05	-0.48	-19.01	-24.18	23.71
	14	576	-0.65	-17.52	-22.37	-0.02	-0.26	-1.91	-0.49	-17.51	-22.56	22.08
	15	521	-0.49	-16.36	-16.32	0.01	-0.43	-1.39	-0.37	-15.98	-16.83	16.47
	16	522	-0.47	-15.74	-15.07	0.01	-0.43	-1.28	-0.36	-14.96	-15.97	15.61
	17	371	-0.35	-8.84	-10.07	-0.01	-0.34	-0.85	-0.27	-8.75	-10.23	9.96
	18	372	-0.35	-8.78	-9.55	-0.01	-0.32	-0.81	-0.28	-8.67	-9.73	9.45
	19	221	-0.20	-4.27	-4.28	0.00	-0.15	-0.36	-0.17	-4.14	-4.44	4.27
	20	222	-0.20	-3.90	-3.60	0.00	-0.15	-0.30	-0.17	-3.56	-3.97	3.80
	21	161	-0.15	-3.35	-2.01	0.00	-0.07	-0.16	-0.13	-2.02	-3.35	3.22
	22	162	-0.14	-3.07	-1.53	0.00	-0.07	-0.12	-0.13	-1.53	-3.07	2.94
	23	62	-0.14	-4.81	0.78	0.09	0.01	0.07	0.79	-0.14	-4.81	5.60
	24	64	0.13	-0.38	2.13	-0.30	0.02	0.17	2.15	0.26	-0.53	2.67
	25	54	-0.60	-2.13	0.81	-0.04	0.03	0.09	0.82	-0.61	-2.13	2.95
	26	56	-0.41	0.24	1.28	0.08	0.01	0.13	1.29	0.25	-0.43	1.72
Outer Shell	27	680	-1.19	11.25	-11.08	-5.07	0.88	-1.06	13.11	-2.94	-11.20	24.32
	28	682	0.85	-50.74	-27.31	-1.74	0.58	-2.43	1.12	-27.52	-50.81	51.94
	29	578	-0.85	-20.59	3.10	-0.79	-0.54	0.35	3.14	-0.85	-20.63	23.77
	30	580	-0.75	-18.11	3.40	-0.79	-0.27	0.39	3.44	-0.75	-18.14	21.59
	31	525	-0.25	-17.48	12.19	0.15	-0.67	1.12	12.30	-0.35	-17.50	29.80
	32	526	-0.22	-15.16	12.62	0.15	-0.65	1.15	12.74	-0.32	-15.19	27.92
	33	375	-0.18	-7.05	8.50	-0.02	-0.47	0.77	8.58	-0.25	-7.07	15.65
	34	376	-0.19	-7.40	7.92	-0.02	-0.42	0.72	8.00	-0.25	-7.41	15.41
	35	225	-0.11	-2.04	4.43	-0.01	-0.18	0.40	4.47	-0.15	-2.05	6.52
	36	226	-0.10	-1.53	4.82	-0.01	-0.17	0.44	4.87	-0.14	-1.53	6.40
	37	165	-0.13	-1.03	3.03	0.00	-0.08	0.28	3.05	-0.15	-1.03	4.08
	38	167	-0.03	-0.70	3.38	0.00	-0.09	0.30	3.41	-0.05	-0.70	4.11
	39	73	-0.03	-1.95	0.62	-0.18	-0.02	0.06	0.62	-0.02	-1.97	2.59
	40	75	-0.10	1.27	1.49	0.00	-0.01	0.13	1.50	1.27	-0.11	1.61
Bottom Cover	41	54	-0.43	-1.90	0.94	-0.12	0.03	0.09	0.94	-0.42	-1.91	2.85
	42	21	0.28	0.09	-1.20	-0.21	0.02	-0.11	0.43	-0.05	-1.21	1.64
	43	51	1.19	-0.03	2.72	-0.23	0.03	0.11	2.72	1.23	-0.07	2.80
	44	18	-1.25	-0.09	-2.63	-0.24	0.03	-0.09	-0.05	-1.29	-2.63	2.59
	45	48	1.85	-0.96	3.84	-0.04	0.03	0.15	3.85	1.84	-0.96	4.81
	46	10	-0.98	-1.35	-1.21	0.03	-0.14	-0.02	-0.97	-1.14	-1.43	0.46
Ram Access Cover Plate	47	12	0.09	0.51	0.58	-0.15	0.08	0.02	0.64	0.50	0.03	0.60
	48	4	-1.22	0.75	-2.08	-0.43	0.09	-0.04	0.84	-1.31	-2.08	2.92
	49	11	0.58	-0.16	0.61	-0.06	-0.04	0.00	0.61	0.58	-0.16	0.77
	50	3	-1.57	-0.36	-2.81	0.11	-0.05	-0.09	-0.35	-1.58	-2.82	2.46
	51	13	0.19	0.38	1.55	0.18	0.09	0.08	1.57	0.48	0.09	1.48
	52	1	-0.27	-0.69	-2.91	0.18	0.10	-0.16	-0.20	-0.75	-2.92	2.73

(1.033)*Pm+Pb, cc72t-3.xls

Table 2.7.1-29
Cask 30-Foot C.G. Over Top Flatside Drop Membrane Plus Bending Stress Summary, 45° Azimuth

Cask Component	Stress Point	Node Number	Stress Components (ksi)						Principal Stresses (ksi)			SI (ksi)
			SX	SY	SZ	SXY	SYZ	SXZ	S1	S2	S3	
Top Cover	1	4730	-10.97	-6.15	-13.76	0.27	0.90	9.73	-2.36	-6.31	-22.21	19.84
	2	4771	14.15	5.39	17.21	0.14	0.82	-12.95	28.73	5.52	2.49	26.24
	3	4738	-14.48	-0.57	-16.04	-0.88	0.24	-1.96	-0.51	-13.21	-17.38	16.88
	4	4779	19.09	-0.12	20.33	-0.88	0.24	-0.70	20.66	18.80	-0.16	20.81
	5	4746	2.32	0.65	-1.21	-1.98	0.48	-2.69	4.73	-0.21	-2.76	7.50
	6	4786	2.81	0.84	10.19	-1.70	1.00	0.47	10.30	3.78	-0.26	10.56
Top Flange	7	4711	2.14	-23.10	-8.06	-3.37	0.56	0.33	2.59	-8.04	-23.56	26.16
	8	4713	-0.23	-32.81	-11.03	0.28	0.36	0.18	-0.22	-11.03	-32.82	32.59
Inner Shell	9	4672	0.35	-13.56	-17.83	-1.26	2.54	0.49	0.46	-12.45	-19.06	19.52
	10	4674	4.24	-6.12	-14.97	-1.44	0.81	-0.62	4.47	-6.25	-15.05	19.52
	11	4654	-1.61	1.76	-24.03	1.13	1.63	0.17	2.20	-1.95	-24.13	26.33
	12	4656	-2.02	-30.66	-33.54	-1.75	0.44	0.11	-1.91	-30.70	-33.61	31.70
	13	4574	-1.00	-14.66	-20.23	0.00	-3.04	0.04	-1.00	-13.32	-21.57	20.57
	14	4576	-1.07	-13.07	-21.06	-0.01	-2.69	0.09	-1.07	-12.25	-21.88	20.81
	15	4521	-0.79	-11.72	-15.22	0.00	-3.66	-0.02	-0.79	-9.41	-17.53	16.73
	16	4522	-0.80	-11.97	-16.40	-0.01	-3.39	0.01	-0.80	-10.14	-18.24	17.44
	17	4371	-0.47	-7.23	-9.84	0.00	-2.62	-0.01	-0.47	-5.60	-11.47	10.99
	18	4372	-0.48	-7.46	-10.44	-0.01	-2.31	-0.02	-0.48	-6.20	-11.70	11.22
	19	4221	-0.22	-4.39	-4.14	0.00	-1.27	0.00	-0.22	-2.99	-5.54	5.32
	20	4222	-0.23	-4.48	-4.49	-0.01	-1.14	-0.02	-0.23	-3.34	-5.63	5.40
	21	4161	-0.13	-3.61	-2.13	0.00	-0.72	0.00	-0.13	-1.84	-3.90	3.77
	22	4162	-0.14	-3.71	-2.36	-0.01	-0.69	-0.02	-0.14	-2.07	-4.00	3.86
	23	4062	-0.14	-5.46	0.56	0.07	0.06	-0.01	0.56	-0.14	-5.46	6.02
	24	4064	0.23	0.12	2.16	-0.46	-0.13	0.01	2.17	0.63	-0.30	2.47
	25	4054	-0.87	-2.46	0.67	-0.02	0.02	-0.02	0.67	-0.87	-2.46	3.13
	26	4056	-0.49	0.58	1.35	0.03	-0.02	-0.03	1.35	0.58	-0.50	1.85
Outer Shell	27	4680	-0.87	18.28	-6.13	-6.45	3.74	-0.20	20.75	-2.64	-6.82	27.57
	28	4682	1.83	-53.53	-25.95	-2.20	-0.50	-0.15	1.92	-25.94	-53.62	55.54
	29	4578	-0.90	-15.44	9.23	-0.38	-6.19	0.02	10.69	-0.90	-16.92	27.61
	30	4580	-0.63	-12.29	5.96	-0.39	-4.08	0.12	6.83	-0.62	-13.17	20.01
	31	4525	-0.27	-10.81	13.68	0.09	-5.81	-0.04	14.99	-0.27	-12.11	27.10
	32	4526	-0.31	-10.76	10.02	0.07	-5.20	0.00	11.25	-0.31	-11.99	23.24
	33	4375	-0.14	-4.72	8.78	0.00	-3.60	-0.02	9.68	-0.14	-5.61	15.30
	34	4376	-0.17	-5.50	6.45	-0.01	-3.02	-0.02	7.18	-0.17	-6.22	13.39
	35	4225	-0.06	-1.60	4.64	-0.01	-1.49	0.00	4.98	-0.06	-1.94	6.92
	36	4226	-0.08	-1.88	3.45	-0.01	-1.27	-0.02	3.73	-0.08	-2.17	5.90
	37	4165	-0.08	-0.81	3.07	0.00	-0.78	0.00	3.22	-0.08	-0.96	4.18
	38	4167	-0.01	-1.18	2.27	0.00	-0.72	-0.02	2.41	-0.01	-1.32	3.74
	39	4073	-0.07	-2.60	0.44	-0.29	-0.17	-0.03	0.45	-0.04	-2.64	3.08
	40	4075	-0.11	1.89	1.59	-0.04	-0.21	-0.02	2.00	1.49	-0.11	2.11
Bottom Cover	41	4054	-0.69	-2.22	0.80	-0.11	0.02	-0.02	0.80	-0.68	-2.23	3.03
	42	4021	0.42	0.16	-1.15	-0.19	0.01	-0.07	0.52	0.06	-1.15	1.67
	43	4051	1.01	-0.03	2.62	-0.24	0.02	-0.03	2.62	1.06	-0.08	2.70
	44	4018	-1.18	-0.09	-2.52	-0.24	0.02	-0.01	-0.04	-1.23	-2.52	2.48
	45	4048	1.83	-0.98	3.72	-0.05	0.02	-0.05	3.72	1.83	-0.98	4.70
	46	4010	-1.06	-1.37	-1.17	-0.01	0.01	0.00	-1.06	-1.17	-1.37	0.30
Ram Access Cover Plate	47	4012	0.06	0.48	0.61	-0.18	0.03	-0.02	0.62	0.53	0.00	0.63
	48	4004	-1.38	0.72	-2.00	-0.49	0.02	0.04	0.83	-1.49	-2.00	2.83
	49	4011	0.77	-0.04	0.69	-0.18	-0.06	0.01	0.81	0.70	-0.08	0.90
	50	4003	-2.12	-0.33	-2.80	0.01	-0.05	-0.03	-0.33	-2.12	-2.81	2.47
	51	4013	0.79	0.38	0.96	0.06	0.19	-0.68	1.57	0.48	0.09	1.48
	52	4001	-1.43	-0.69	-1.75	0.06	0.20	1.32	-0.20	-0.75	-2.92	2.73

(1.033)*Pm+Pb, cc72t-3.xls

Table 2.7.1-30
Cask 30-Foot C.G. Over Top Flatside Drop Membrane Plus Bending Stress Summary, 90° Azimuth

Cask Component	Stress Point	Node Number	Stress Components (ksi)						Principal Stresses (ksi)			SI (ksi)
			SX	SY	SZ	SXY	SYZ	SXZ	S1	S2	S3	
Top Cover	1	7730	-22.10	-6.15	-2.63	-0.44	0.83	1.39	-2.36	-6.31	-22.21	19.84
	2	7771	28.63	5.39	2.73	-0.48	0.68	-1.53	28.73	5.52	2.49	26.24
	3	7738	-10.21	-0.55	-16.66	-1.14	0.18	-0.76	-0.41	-10.26	-16.76	16.34
	4	7779	16.46	-0.15	18.83	-1.14	0.18	0.95	19.17	16.20	-0.23	19.40
	5	7746	8.61	5.23	0.06	-2.11	-0.06	-0.60	9.66	4.24	0.01	9.64
	6	7786	-7.38	4.14	8.92	-1.53	0.21	1.73	9.11	4.34	-7.77	16.87
Top Flange	7	7711	-2.31	-2.61	-4.23	1.01	0.04	0.91	-1.26	-3.23	-4.66	3.41
	8	7713	-0.67	4.10	-2.41	0.27	-2.68	0.22	5.07	-0.64	-3.40	8.47
Inner Shell	9	7672	0.68	-3.90	-19.70	-0.42	0.61	0.05	0.72	-3.92	-19.72	20.44
	10	7674	2.22	1.18	-14.71	0.57	-0.94	-1.11	2.58	0.94	-14.83	17.42
	11	7654	-0.70	4.57	-24.28	0.92	-1.65	-0.06	4.81	-0.85	-24.37	29.18
	12	7656	-1.07	-6.81	-24.09	0.33	-2.30	-0.22	-1.05	-6.53	-24.40	23.35
	13	7574	-0.54	-4.45	-21.25	0.06	-4.24	0.00	-0.54	-3.44	-22.26	21.71
	14	7576	-0.38	1.04	-15.29	0.06	-4.23	0.01	2.07	-0.38	-16.31	18.39
	15	7521	-0.47	-3.09	-18.45	0.01	-4.00	-0.04	-0.47	-2.12	-19.43	18.96
	16	7522	-0.41	-1.67	-14.32	0.02	-4.12	0.04	-0.40	-0.45	-15.55	15.14
	17	7371	-0.37	-4.29	-11.76	0.01	-2.92	-0.05	-0.37	-3.28	-12.76	12.40
	18	7372	-0.33	-3.70	-9.74	0.01	-2.78	0.05	-0.33	-2.61	-10.83	10.50
	19	7221	-0.17	-4.35	-5.18	0.00	-1.73	-0.04	-0.17	-2.99	-6.54	6.37
	20	7222	-0.16	-4.29	-4.61	0.00	-1.55	0.03	-0.16	-2.89	-6.01	5.85
	21	7161	-0.10	-4.08	-3.01	0.00	-1.37	-0.03	-0.10	-2.07	-5.02	4.92
	22	7162	-0.09	-4.09	-2.72	0.00	-1.15	0.03	-0.09	-2.07	-4.74	4.64
	23	7062	-0.12	-5.41	-0.22	0.06	-0.72	0.00	-0.11	-0.13	-5.51	5.40
	24	7064	0.24	-1.13	1.10	-0.36	-0.49	0.03	1.22	0.30	-1.31	2.53
	25	7054	-1.00	-2.68	0.09	-0.05	-0.18	-0.14	0.12	-1.01	-2.70	2.81
	26	7056	-0.59	0.36	0.84	0.12	-0.07	-0.09	0.85	0.36	-0.61	1.46
Outer Shell	27	7680	0.29	46.44	0.91	-8.50	-3.54	0.12	48.21	0.78	-1.34	49.56
	28	7682	3.67	-32.04	-17.19	-2.59	-3.14	0.13	3.87	-16.58	-32.86	36.72
	29	7578	-0.24	-1.27	7.09	0.35	-6.07	0.08	10.28	-0.22	-4.48	14.76
	30	7580	0.20	10.14	15.31	0.34	-5.81	0.00	19.08	6.37	0.19	18.89
	31	7525	-0.04	1.50	7.87	0.05	-5.51	-0.07	11.05	-0.04	-1.68	12.73
	32	7526	0.01	3.01	11.97	0.06	-5.72	0.01	14.76	0.24	-0.01	14.76
	33	7375	-0.08	-0.88	5.64	0.01	-3.81	-0.10	7.39	-0.08	-2.64	10.02
	34	7376	-0.05	-0.39	7.34	0.03	-3.54	0.03	8.72	-0.05	-1.76	10.48
	35	7225	-0.03	-0.80	2.83	0.00	-2.02	-0.07	3.73	-0.03	-1.70	5.43
	36	7226	-0.04	-0.91	3.16	0.01	-1.71	0.02	3.78	-0.04	-1.53	5.31
	37	7165	-0.05	-0.46	1.58	0.00	-1.43	-0.06	2.31	-0.05	-1.20	3.51
	38	7167	0.01	-0.64	1.80	0.01	-1.07	0.00	2.20	0.01	-1.04	3.24
	39	7073	-0.04	-1.76	0.20	-0.20	-0.49	-0.06	0.32	-0.02	-1.90	2.22
	40	7075	-0.10	1.41	1.08	-0.03	-0.26	-0.04	1.55	0.94	-0.10	1.65
Bottom Cover	41	7054	-0.80	-2.39	0.23	-0.13	-0.14	-0.14	0.25	-0.80	-2.41	2.67
	42	7021	0.54	0.14	-0.86	-0.18	0.04	-0.11	0.62	0.07	-0.87	1.49
	43	7051	0.92	-0.03	2.19	-0.25	0.03	-0.05	2.19	0.98	-0.09	2.28
	44	7018	-1.10	-0.10	-2.28	-0.26	0.03	-0.13	-0.03	-1.15	-2.30	2.27
	45	7048	1.80	-0.97	3.46	-0.07	0.04	0.03	3.46	1.80	-0.97	4.43
	46	7010	-1.13	-1.36	-1.15	-0.03	0.08	-0.07	-1.05	-1.21	-1.39	0.34
Ram Access Cover Plate	47	7012	-0.01	0.43	0.60	-0.21	0.02	0.00	0.61	0.51	-0.10	0.70
	48	7004	-1.58	0.63	-1.96	-0.55	0.04	-0.04	0.76	-1.71	-1.96	2.72
	49	7011	0.89	0.11	0.83	-0.34	0.01	0.01	1.02	0.83	-0.02	1.04
	50	7003	-3.07	-0.35	-2.89	-0.13	0.02	-0.03	-0.34	-2.88	-3.08	2.74
	51	7013	1.55	0.38	0.19	-0.09	0.18	-0.08	1.57	0.48	0.09	1.48
	52	7001	-2.91	-0.69	-0.27	-0.10	0.18	0.16	-0.20	-0.75	-2.92	2.73

(1.033)*Pm+Pb, cc72t-3.xls

Table 2.7.1-31
Cask 30-Foot C.G. Over Top Flatside Drop Membrane Plus Bending Stress Summary, 135° Azimuth

Cask Component	Stress Point	Node Number	Stress Components (ksi)						Principal Stresses (ksi)			SI (ksi)
			SX	SY	SZ	SXY	SYZ	SXZ	S1	S2	S3	
Top Cover	1	10730	-13.76	-6.15	-10.97	-0.90	0.27	-9.73	-2.36	-6.31	-22.21	19.84
	2	10771	17.21	5.39	14.15	-0.82	0.14	12.95	28.73	5.52	2.49	26.24
	3	10738	-10.97	-0.57	-14.83	-1.12	0.02	1.21	-0.45	-10.73	-15.19	14.74
	4	10779	14.83	-0.12	18.74	-1.12	0.02	0.44	18.79	14.88	-0.20	19.00
	5	10746	6.17	3.89	1.08	-2.15	-0.02	1.16	7.62	2.78	0.75	6.87
	6	10786	-5.65	3.44	7.14	-1.47	-0.28	-0.67	7.19	3.66	-5.92	13.11
Top Flange	7	10711	-1.70	-2.67	-2.48	0.15	-0.31	-0.36	-1.50	-2.45	-2.91	1.41
	8	10713	-0.60	1.67	-1.26	0.16	0.92	-0.01	1.95	-0.61	-1.53	3.48
Inner Shell	9	10672	0.37	-4.18	-10.51	-0.66	-1.44	-0.14	0.47	-3.95	-10.82	11.28
	10	10674	3.31	5.05	-6.90	1.74	0.07	1.13	6.16	2.33	-7.03	13.19
	11	10654	-0.72	3.58	-15.48	1.02	-2.03	0.01	4.02	-0.94	-15.69	19.71
	12	10656	-0.85	3.18	-15.38	1.75	-0.40	0.10	3.84	-1.50	-15.39	19.23
	13	10574	-0.73	1.57	-18.79	0.04	-2.75	0.03	1.93	-0.73	-19.15	21.09
	14	10576	-0.73	3.96	-18.02	0.04	-2.09	-0.05	4.16	-0.73	-18.21	22.36
	15	10521	-0.65	1.54	-17.16	0.01	-2.25	0.04	1.80	-0.65	-17.43	19.23
	16	10522	-0.63	1.86	-16.42	0.00	-2.00	-0.08	2.08	-0.63	-16.64	18.72
	17	10371	-0.37	-1.71	-11.91	0.01	-1.33	0.04	-0.37	-1.54	-12.08	11.71
	18	10372	-0.33	-1.13	-10.32	0.01	-1.62	-0.08	-0.33	-0.85	-10.60	10.26
	19	10221	-0.17	-3.50	-5.62	0.01	-0.96	0.02	-0.17	-3.13	-5.99	5.83
	20	10222	-0.15	-3.20	-4.71	0.01	-1.21	-0.04	-0.15	-2.52	-5.39	5.24
	21	10161	-0.11	-3.82	-3.52	0.01	-0.81	0.01	-0.11	-2.85	-4.49	4.38
	22	10162	-0.11	-3.73	-3.03	0.01	-1.00	-0.03	-0.10	-2.32	-4.44	4.34
	23	10062	-0.14	-5.31	-0.60	0.08	-0.39	0.03	-0.14	-0.57	-5.35	5.21
	24	10064	0.19	-2.15	0.41	-0.22	-0.69	0.09	0.63	0.16	-2.34	2.98
	25	10054	-1.35	-2.70	-0.31	-0.05	-0.15	0.10	-0.29	-1.36	-2.71	2.42
	26	10056	-1.12	-0.08	0.24	0.28	-0.30	0.25	0.42	-0.12	-1.26	1.67
Outer Shell	27	10680	-0.06	36.88	3.84	-6.76	-3.51	0.41	38.43	3.49	-1.27	39.70
	28	10682	2.91	-22.70	-12.18	-1.89	-0.16	0.29	3.06	-12.18	-22.84	25.90
	29	10578	-0.37	4.23	11.88	0.20	-2.80	0.09	12.80	3.33	-0.38	13.18
	30	10580	-0.02	8.59	11.06	0.20	-1.53	-0.03	11.80	7.86	-0.02	11.83
	31	10525	-0.17	5.70	10.31	0.01	-2.17	0.13	11.18	4.84	-0.17	11.34
	32	10526	-0.17	5.47	9.12	-0.01	-1.74	-0.06	9.81	4.78	-0.17	9.98
	33	10375	-0.06	2.16	5.53	0.02	-1.50	0.11	6.10	1.59	-0.07	6.17
	34	10376	-0.04	2.64	6.45	0.02	-1.98	-0.06	7.29	1.80	-0.04	7.33
	35	10225	-0.02	0.51	2.13	0.01	-1.02	0.05	2.62	0.03	-0.04	2.66
	36	10226	-0.01	0.77	2.81	0.01	-1.46	-0.03	3.57	0.02	-0.01	3.58
	37	10165	-0.06	0.39	0.68	0.06	-0.87	0.02	1.41	-0.04	-0.36	1.77
	38	10167	-0.02	0.25	0.97	0.06	-1.09	-0.03	1.76	-0.02	-0.54	2.31
	39	10073	-0.13	-2.09	-0.32	-0.40	-0.06	-0.02	-0.05	-0.32	-2.17	2.12
	40	10075	-0.18	2.40	0.88	-0.15	-0.59	-0.01	2.61	0.68	-0.20	2.81
Bottom Cover	41	10054	-1.24	-2.39	-0.18	-0.13	-0.11	0.15	-0.15	-1.25	-2.41	2.26
	42	10021	0.91	0.11	-0.99	-0.19	-0.01	-0.34	1.01	0.07	-1.05	2.06
	43	10051	0.51	-0.02	1.99	-0.27	0.02	0.18	2.02	0.60	-0.14	2.16
	44	10018	-0.79	-0.10	-2.34	-0.27	0.03	-0.35	0.00	-0.81	-2.42	2.42
	45	10048	1.57	-0.87	3.31	-0.08	0.04	0.14	3.32	1.56	-0.88	4.20
	46	10010	-0.97	-1.20	-1.16	-0.05	0.12	-0.14	-0.86	-1.16	-1.31	0.45
Ram Access Cover Plate	47	10012	-0.02	0.42	0.51	-0.16	0.00	0.01	0.51	0.47	-0.07	0.59
	48	10004	-1.27	0.60	-1.98	-0.47	0.03	-0.11	0.71	-1.36	-2.00	2.71
	49	10011	0.68	-0.01	0.63	-0.17	0.07	0.00	0.72	0.64	-0.06	0.78
	50	10003	-1.99	-0.28	-2.74	-0.02	0.07	-0.02	-0.27	-1.99	-2.74	2.47
	51	10013	0.96	0.38	0.79	-0.19	0.06	0.68	1.57	0.48	0.09	1.48
	52	10001	-1.75	-0.69	-1.43	-0.20	0.06	-1.32	-0.20	-0.75	-2.92	2.73

(1.033)*Pm+Pb, cc72t-3.xls

Table 2.7.1-32
Cask 30-Foot C.G. Over Top Flatside Drop Membrane Plus Bending Stress Summary, 180° Azimuth

Cask Component	Stress Point	Node Number	Stress Components (ksi)						Principal Stresses (ksi)			SI (ksi)
			SX	SY	SZ	SXY	SYZ	SXZ	S1	S2	S3	
Top Cover	1	13730	-2.63	-6.15	-22.10	-0.83	-0.44	-1.39	-2.36	-6.31	-22.21	19.84
	2	13771	2.73	5.39	28.63	-0.68	-0.48	1.53	28.73	5.52	2.49	26.24
	3	13738	-12.52	-0.56	-13.38	-1.07	-0.16	0.35	-0.47	-12.49	-13.51	13.04
	4	13779	14.64	-0.12	18.69	-1.07	-0.16	-0.34	18.72	14.68	-0.20	18.91
	5	13746	3.71	2.97	1.10	-2.18	-0.18	0.55	5.61	1.30	0.86	4.75
	6	13786	-4.15	2.95	7.33	-1.28	0.20	-1.28	7.49	3.14	-4.50	11.99
Top Flange	7	13711	-6.25	-10.42	-4.93	-0.67	0.71	-0.13	-4.81	-6.19	-10.61	5.80
	8	13713	-1.54	11.40	0.62	0.54	-0.51	-0.55	11.46	0.71	-1.69	13.14
Inner Shell	9	13672	0.55	-5.52	-8.44	-0.99	-0.96	1.14	0.89	-5.50	-8.80	9.68
	10	13674	4.38	6.33	-4.27	2.01	-0.19	1.03	7.60	3.24	-4.41	12.01
	11	13654	-0.53	1.65	-13.47	1.07	0.20	1.71	2.13	-0.79	-13.70	15.83
	12	13656	-0.52	5.69	-12.25	2.19	0.49	1.52	6.43	-1.07	-12.45	18.88
	13	13574	-0.64	1.99	-18.35	0.04	-0.49	2.37	2.00	-0.33	-18.67	20.67
	14	13576	-0.65	3.51	-18.76	0.05	-0.36	2.42	3.52	-0.33	-19.08	22.60
	15	13521	-0.60	1.92	-16.05	0.01	-0.41	2.08	1.93	-0.33	-16.33	18.26
	16	13522	-0.65	0.98	-18.04	0.03	-0.32	2.34	0.99	-0.34	-18.36	19.34
	17	13371	-0.47	-0.74	-9.90	0.01	-0.21	1.28	-0.30	-0.73	-10.08	9.78
	18	13372	-0.51	-1.48	-12.40	0.00	-0.23	1.61	-0.30	-1.48	-12.62	12.32
	19	13221	-0.22	-2.76	-4.65	0.01	-0.17	0.60	-0.14	-2.75	-4.74	4.60
	20	13222	-0.24	-3.02	-5.76	0.00	-0.21	0.75	-0.14	-3.00	-5.88	5.74
	21	13161	-0.13	-3.26	-3.21	0.01	-0.12	0.42	-0.08	-3.14	-3.39	3.31
	22	13162	-0.14	-3.52	-3.83	0.01	-0.17	0.50	-0.08	-3.46	-3.96	3.89
	23	13062	-0.14	-5.52	-0.71	0.07	0.04	0.06	-0.13	-0.71	-5.52	5.38
	24	13064	0.26	-0.62	0.78	-0.43	-0.08	-0.10	0.80	0.42	-0.80	1.60
	25	13054	-1.61	-2.54	-0.52	-0.10	0.05	-0.17	-0.49	-1.63	-2.55	2.06
	26	13056	-1.55	0.39	0.06	-0.03	0.08	-0.25	0.41	0.08	-1.59	2.00
Outer Shell	27	13680	-0.20	32.07	3.82	-6.06	-1.25	-0.34	33.22	3.84	-1.36	34.57
	28	13682	2.62	-19.30	-10.18	-1.72	-0.73	1.60	2.96	-10.35	-19.47	22.44
	29	13578	-0.24	3.73	12.34	0.22	-0.53	-1.69	12.60	3.70	-0.47	13.07
	30	13580	0.04	6.07	9.72	0.21	-0.24	-1.30	9.91	6.06	-0.14	10.05
	31	13525	-0.06	5.32	12.22	0.01	-0.36	-1.64	12.45	5.30	-0.28	12.73
	32	13526	-0.19	2.87	7.01	0.03	-0.22	-0.95	7.14	2.85	-0.31	7.46
	33	13375	-0.10	3.36	8.61	0.01	-0.21	-1.14	8.76	3.36	-0.24	9.00
	34	13376	-0.19	1.81	3.48	0.00	-0.27	-0.46	3.58	1.78	-0.25	3.83
	35	13225	-0.05	1.46	3.57	0.00	-0.17	-0.47	3.65	1.44	-0.11	3.76
	36	13226	-0.08	0.96	1.26	-0.02	-0.26	-0.17	1.42	0.82	-0.11	1.53
	37	13165	-0.07	1.15	1.13	0.08	-0.10	-0.16	1.26	1.05	-0.10	1.35
	38	13167	-0.06	0.42	-0.28	0.07	-0.22	0.03	0.49	-0.06	-0.35	0.84
	39	13073	-0.10	-2.67	-0.57	-0.57	0.10	-0.01	0.03	-0.57	-2.80	2.82
	40	13075	-0.29	4.36	1.31	-0.34	-0.15	-0.24	4.39	1.34	-0.35	4.75
Bottom Cover	41	13054	-1.58	-2.33	-0.45	-0.25	0.05	-0.18	-0.42	-1.54	-2.41	1.99
	42	13021	2.37	0.23	-1.09	-0.40	0.02	0.07	2.44	0.16	-1.09	3.54
	43	13051	0.37	-0.01	1.86	-0.31	-0.04	-0.17	1.88	0.52	-0.19	2.07
	44	13018	-0.23	-0.10	-2.59	-0.31	-0.04	0.13	0.15	-0.48	-2.60	2.75
	45	13048	1.43	-0.79	3.26	-0.08	-0.03	-0.19	3.27	1.42	-0.79	4.07
	46	13010	-0.76	-1.05	-1.23	-0.07	0.20	0.03	-0.74	-0.93	-1.37	0.63
Ram Access Cover Plate	47	13012	0.01	0.42	0.43	-0.13	-0.11	-0.02	0.55	0.35	-0.04	0.58
	48	13004	-1.07	0.56	-2.08	-0.39	-0.12	0.06	0.66	-1.15	-2.09	2.75
	49	13011	0.47	-0.11	0.52	-0.06	0.07	0.00	0.53	0.47	-0.12	0.65
	50	13003	-1.41	-0.27	-2.71	0.05	0.06	0.13	-0.27	-1.40	-2.73	2.46
	51	13013	0.19	0.38	1.55	-0.18	-0.09	0.08	1.57	0.48	0.09	1.48
	52	13001	-0.27	-0.69	-2.91	-0.18	-0.10	-0.16	-0.20	-0.75	-2.92	2.73

(1.033)*Pm+Pb, cc72t-3.xls

Table 2.7.1-33
Cask 30-Foot C.G. Over Bottom Flatside Drop Membrane Stress Summary, 0° Azimuth

Cask Component	Stress Point	Node Number	Stress Components (ksi)						Principal Stresses (ksi)			SI (ksi)
			SX	SY	SZ	SXY	SYZ	SXZ	S1	S2	S3	
Top Cover	1	730	-0.01	0.01	-0.08	-0.15	-0.08	-0.02	0.17	-0.04	-0.20	0.36
	2	771	-0.01	0.01	-0.08	-0.15	-0.08	-0.02	0.17	-0.04	-0.20	0.36
	3	738	-0.24	-0.05	-0.03	0.22	-0.02	0.01	0.09	-0.03	-0.38	0.47
	4	779	-0.24	-0.05	-0.03	0.22	-0.02	0.01	0.09	-0.03	-0.38	0.47
	5	746	0.19	-1.05	-0.61	0.36	0.01	-0.06	0.29	-0.61	-1.15	1.43
	6	786	0.19	-1.05	-0.61	0.36	0.01	-0.06	0.29	-0.61	-1.15	1.43
Top Flange	7	711	0.36	0.12	0.68	-0.13	0.00	0.04	0.69	0.41	0.07	0.62
	8	713	0.36	0.12	0.68	-0.13	0.00	0.04	0.69	0.41	0.07	0.62
Inner Shell	9	672	0.46	-1.71	2.01	-0.25	-0.01	0.11	2.02	0.48	-1.74	3.76
	10	674	0.46	-1.71	2.01	-0.25	-0.01	0.11	2.02	0.48	-1.74	3.76
	11	654	0.01	-2.24	1.83	0.08	0.01	0.18	1.85	-0.01	-2.25	4.10
	12	656	0.01	-2.24	1.83	0.08	0.01	0.18	1.85	-0.01	-2.25	4.10
	13	574	-0.13	-3.11	-1.21	0.00	0.13	-0.09	-0.12	-1.21	-3.11	2.99
	14	576	-0.13	-3.11	-1.21	0.00	0.13	-0.09	-0.12	-1.21	-3.11	2.99
	15	521	-0.18	-4.22	-3.16	0.01	0.21	-0.26	-0.16	-3.14	-4.26	4.10
	16	522	-0.18	-4.22	-3.16	0.01	0.21	-0.26	-0.16	-3.14	-4.26	4.10
	17	371	-0.34	-10.27	-8.83	0.02	0.44	-0.75	-0.27	-8.77	-10.39	10.13
	18	372	-0.34	-10.27	-8.83	0.02	0.44	-0.75	-0.27	-8.77	-10.39	10.13
	19	221	-0.46	-20.51	-14.66	0.00	0.66	-1.25	-0.35	-14.69	-20.58	20.23
	20	222	-0.46	-20.51	-14.66	0.00	0.66	-1.25	-0.35	-14.69	-20.58	20.23
	21	161	-0.63	-24.34	-23.05	0.05	0.44	-1.97	-0.46	-23.06	-24.49	24.04
	22	162	-0.63	-24.34	-23.05	0.05	0.44	-1.97	-0.46	-23.06	-24.49	24.04
	23	62	-0.67	-22.03	-21.86	-0.88	0.12	-1.86	-0.47	-21.99	-22.10	21.63
	24	64	-0.67	-22.03	-21.86	-0.88	0.12	-1.86	-0.47	-21.99	-22.10	21.63
	25	54	1.87	-9.90	-7.05	0.41	-0.37	-0.79	1.95	-7.09	-9.95	11.91
	26	56	1.87	-9.90	-7.05	0.41	-0.37	-0.79	1.95	-7.09	-9.95	11.91
Outer Shell	27	680	-0.13	-0.60	1.78	0.23	0.01	0.17	1.79	-0.05	-0.69	2.48
	28	682	-0.13	-0.60	1.78	0.23	0.01	0.17	1.79	-0.05	-0.69	2.48
	29	578	-0.07	-1.26	2.97	0.00	0.12	0.27	2.99	-0.09	-1.26	4.26
	30	580	-0.07	-1.26	2.97	0.00	0.12	0.27	2.99	-0.09	-1.26	4.26
	31	525	-0.09	-2.31	4.22	0.02	0.21	0.38	4.26	-0.12	-2.32	6.58
	32	526	-0.09	-2.31	4.22	0.02	0.21	0.38	4.26	-0.12	-2.32	6.58
	33	375	-0.16	-8.50	7.81	0.03	0.52	0.69	7.88	-0.22	-8.52	16.40
	34	376	-0.16	-8.50	7.81	0.03	0.52	0.69	7.88	-0.22	-8.52	16.40
	35	225	-0.22	-19.31	11.99	-0.11	0.82	1.08	12.11	-0.31	-19.33	31.43
	36	226	-0.22	-19.31	11.99	-0.11	0.82	1.08	12.11	-0.31	-19.33	31.43
	37	165	-0.79	-23.45	2.82	0.89	0.51	0.33	2.86	-0.78	-23.49	26.35
	38	167	-0.79	-23.45	2.82	0.89	0.51	0.33	2.86	-0.78	-23.49	26.35
	39	73	-0.23	-23.16	-8.61	0.82	-0.53	-0.73	-0.13	-8.65	-23.20	23.07
	40	75	-0.23	-23.16	-8.61	0.82	-0.53	-0.73	-0.13	-8.65	-23.20	23.07
Bottom Cover	41	54	-1.41	-10.34	-2.77	2.06	-0.35	-0.29	-0.89	-2.83	-10.81	9.91
	42	21	-1.41	-10.34	-2.77	2.06	-0.35	-0.29	-0.89	-2.83	-10.81	9.91
	43	51	-0.68	-0.38	0.55	1.07	-0.11	-0.06	0.67	0.43	-1.61	2.28
	44	18	-0.68	-0.38	0.55	1.07	-0.11	-0.06	0.67	0.43	-1.61	2.28
	45	48	-2.61	5.33	-4.04	-0.40	0.30	-0.31	5.36	-2.57	-4.11	9.48
	46	10	-2.61	5.33	-4.04	-0.40	0.30	-0.31	5.36	-2.57	-4.11	9.48
Ram Access Cover Plate	47	12	2.27	-3.83	3.70	1.28	-0.28	0.03	3.71	2.53	-4.10	7.81
	48	4	2.27	-3.83	3.70	1.28	-0.28	0.03	3.71	2.53	-4.10	7.81
	49	11	2.03	1.43	5.46	-0.28	0.16	0.19	5.48	2.14	1.31	4.17
	50	3	2.03	1.43	5.46	-0.28	0.16	0.19	5.48	2.14	1.31	4.17
	51	13	0.13	0.37	3.72	-0.66	-0.30	0.15	3.76	0.88	-0.42	4.18
	52	1	0.13	0.37	3.72	-0.66	-0.30	0.15	3.76	0.88	-0.42	4.18

(1.033)*Pm, cc72b-3.xls

Table 2.7.1-34
Cask 30-Foot C.G. Over Bottom Flatside Drop Membrane Stress Summary, 45° Azimuth

Cask Component	Stress Point	Node Number	Stress Components (ksi)						Principal Stresses (ksi)			SI (ksi)
			SX	SY	SZ	SXY	SYZ	SXZ	S1	S2	S3	
Top Cover	1	4730	-0.02	0.01	-0.06	-0.05	-0.17	0.04	0.17	-0.04	-0.20	0.36
	2	4771	-0.02	0.01	-0.06	-0.05	-0.17	0.04	0.17	-0.04	-0.20	0.36
	3	4738	-0.20	-0.05	-0.06	0.22	-0.01	-0.09	0.13	-0.06	-0.37	0.50
	4	4779	-0.20	-0.05	-0.06	0.22	-0.01	-0.09	0.13	-0.06	-0.37	0.50
	5	4746	0.17	-1.01	-0.46	0.37	-0.01	0.00	0.28	-0.46	-1.12	1.39
	6	4786	0.17	-1.01	-0.46	0.37	-0.01	0.00	0.28	-0.46	-1.12	1.39
Top Flange	7	4711	0.32	0.12	0.67	-0.13	-0.07	0.04	0.69	0.37	0.05	0.64
	8	4713	0.32	0.12	0.67	-0.13	-0.07	0.04	0.69	0.37	0.05	0.64
Inner Shell	9	4672	0.51	-1.93	1.40	-0.28	0.10	-0.08	1.41	0.53	-1.97	3.38
	10	4674	0.51	-1.93	1.40	-0.28	0.10	-0.08	1.41	0.53	-1.97	3.38
	11	4654	0.01	-2.65	0.95	0.06	0.27	-0.01	0.97	0.01	-2.67	3.64
	12	4656	0.01	-2.65	0.95	0.06	0.27	-0.01	0.97	0.01	-2.67	3.64
	13	4574	-0.13	-3.62	-1.73	0.00	1.13	-0.01	-0.13	-1.20	-4.15	4.02
	14	4576	-0.13	-3.62	-1.73	0.00	1.13	-0.01	-0.13	-1.20	-4.15	4.02
	15	4521	-0.21	-4.42	-3.57	0.00	1.61	-0.01	-0.21	-2.33	-5.66	5.46
	16	4522	-0.21	-4.42	-3.57	0.00	1.61	-0.01	-0.21	-2.33	-5.66	5.46
	17	4371	-0.46	-7.63	-9.34	0.00	3.11	-0.01	-0.46	-5.26	-11.71	11.25
	18	4372	-0.46	-7.63	-9.34	0.00	3.11	-0.01	-0.46	-5.26	-11.71	11.25
	19	4221	-0.78	-12.27	-15.03	0.00	4.90	0.00	-0.78	-8.57	-18.74	17.96
	20	4222	-0.78	-12.27	-15.03	0.00	4.90	0.00	-0.78	-8.57	-18.74	17.96
	21	4161	-1.08	-14.89	-20.20	0.03	4.48	0.07	-1.08	-12.33	-22.75	21.67
	22	4162	-1.08	-14.89	-20.20	0.03	4.48	0.07	-1.08	-12.33	-22.75	21.67
	23	4062	-1.19	-17.55	-20.87	-0.26	1.08	-0.23	-1.18	-17.24	-21.19	20.01
	24	4064	-1.19	-17.55	-20.87	-0.26	1.08	-0.23	-1.18	-17.24	-21.19	20.01
	25	4054	2.87	-9.34	-6.68	0.61	0.89	-1.40	3.09	-6.55	-9.69	12.78
	26	4056	2.87	-9.34	-6.68	0.61	0.89	-1.40	3.09	-6.55	-9.69	12.78
Outer Shell	27	4680	-0.09	-0.55	1.39	0.19	0.34	-0.06	1.45	-0.03	-0.68	2.13
	28	4682	-0.09	-0.55	1.39	0.19	0.34	-0.06	1.45	-0.03	-0.68	2.13
	29	4578	-0.05	-1.18	2.40	0.00	1.01	-0.02	2.67	-0.05	-1.45	4.11
	30	4580	-0.05	-1.18	2.40	0.00	1.01	-0.02	2.67	-0.05	-1.45	4.11
	31	4525	-0.08	-1.94	3.59	0.01	1.60	-0.02	4.02	-0.08	-2.37	6.38
	32	4526	-0.08	-1.94	3.59	0.01	1.60	-0.02	4.02	-0.08	-2.37	6.38
	33	4375	-0.17	-5.24	7.10	0.00	3.62	-0.04	8.08	-0.17	-6.22	14.31
	34	4376	-0.17	-5.24	7.10	0.00	3.62	-0.04	8.08	-0.17	-6.22	14.31
	35	4225	-0.30	-9.99	11.13	-0.07	5.98	-0.07	12.71	-0.30	-11.57	24.27
	36	4226	-0.30	-9.99	11.13	-0.07	5.98	-0.07	12.71	-0.30	-11.57	24.27
	37	4165	-0.84	-12.83	7.03	0.51	6.00	0.00	8.70	-0.83	-14.52	23.22
	38	4167	-0.84	-12.83	7.03	0.51	6.00	0.00	8.70	-0.83	-14.52	23.22
	39	4073	0.80	-19.10	-6.91	2.31	0.38	0.11	1.06	-6.90	-19.38	20.44
	40	4075	0.80	-19.10	-6.91	2.31	0.38	0.11	1.06	-6.90	-19.38	20.44
Bottom Cover	41	4054	-0.31	-9.34	-2.89	2.49	0.28	-0.45	0.37	-2.90	-10.00	10.37
	42	4021	-0.31	-9.34	-2.89	2.49	0.28	-0.45	0.37	-2.90	-10.00	10.37
	43	4051	0.19	-0.38	-0.13	1.19	0.19	-0.89	1.38	-0.04	-1.66	3.04
	44	4018	0.19	-0.38	-0.13	1.19	0.19	-0.89	1.38	-0.04	-1.66	3.04
	45	4048	-2.23	5.47	-6.15	-0.07	0.40	-1.49	5.49	-1.73	-6.66	12.15
	46	4010	-2.23	5.47	-6.15	-0.07	0.40	-1.49	5.49	-1.73	-6.66	12.15
Ram Access Cover Plate	47	4012	3.35	-3.67	3.04	1.36	-0.11	-0.40	3.82	2.83	-3.93	7.74
	48	4004	3.35	-3.67	3.04	1.36	-0.11	-0.40	3.82	2.83	-3.93	7.74
	49	4011	3.31	1.14	4.97	0.01	0.29	-0.32	5.05	3.25	1.12	3.93
	50	4003	3.31	1.14	4.97	0.01	0.29	-0.32	5.05	3.25	1.12	3.93
	51	4013	1.77	0.37	2.08	-0.25	-0.68	-1.80	3.76	0.88	-0.42	4.18
	52	4001	1.77	0.37	2.08	-0.25	-0.68	-1.80	3.76	0.88	-0.42	4.18

(1.033)*Pm, cc72b-3.xls

Table 2.7.1-35
Cask 30-Foot C.G. Over Bottom Flatside Drop Membrane Stress Summary, 90° Azimuth

Cask Component	Stress Point	Node Number	Stress Components (ksi)						Principal Stresses (ksi)			SI (ksi)
			SX	SY	SZ	SXY	SYZ	SXZ	S1	S2	S3	
Top Cover	1	7730	-0.08	0.01	-0.01	0.08	-0.15	0.02	0.17	-0.04	-0.20	0.36
	2	7771	-0.08	0.01	-0.01	0.08	-0.15	0.02	0.17	-0.04	-0.20	0.36
	3	7738	-0.08	-0.05	-0.22	0.22	-0.01	-0.10	0.17	-0.19	-0.33	0.50
	4	7779	-0.08	-0.05	-0.22	0.22	-0.01	-0.10	0.17	-0.19	-0.33	0.50
	5	7746	0.22	-0.89	-0.37	0.37	0.02	-0.15	0.36	-0.39	-1.00	1.37
	6	7786	0.22	-0.89	-0.37	0.37	0.02	-0.15	0.36	-0.39	-1.00	1.37
Top Flange	7	7711	0.28	0.11	0.60	-0.15	0.05	-0.07	0.63	0.34	0.02	0.61
	8	7713	0.28	0.11	0.60	-0.15	0.05	-0.07	0.63	0.34	0.02	0.61
Inner Shell	9	7672	0.44	-2.38	-0.12	-0.35	0.32	0.07	0.49	-0.07	-2.46	2.95
	10	7674	0.44	-2.38	-0.12	-0.35	0.32	0.07	0.49	-0.07	-2.46	2.95
	11	7654	-0.03	-3.54	-0.92	-0.10	0.83	0.03	-0.02	-0.68	-3.78	3.76
	12	7656	-0.03	-3.54	-0.92	-0.10	0.83	0.03	-0.02	-0.68	-3.78	3.76
	13	7574	-0.07	-4.04	-2.41	-0.01	1.53	0.00	-0.07	-1.49	-4.96	4.89
	14	7576	-0.07	-4.04	-2.41	-0.01	1.53	0.00	-0.07	-1.49	-4.96	4.89
	15	7521	-0.12	-3.96	-4.19	-0.01	1.89	0.00	-0.12	-2.18	-5.97	5.85
	16	7522	-0.12	-3.96	-4.19	-0.01	1.89	0.00	-0.12	-2.18	-5.97	5.85
	17	7371	-0.29	-2.78	-10.12	-0.01	3.22	-0.01	-0.29	-1.57	-11.33	11.04
	18	7372	-0.29	-2.78	-10.12	-0.01	3.22	-0.01	-0.29	-1.57	-11.33	11.04
	19	7221	-0.40	0.37	-15.94	-0.02	4.56	-0.01	1.56	-0.40	-17.13	18.69
	20	7222	-0.40	0.37	-15.94	-0.02	4.56	-0.01	1.56	-0.40	-17.13	18.69
	21	7161	-0.44	2.23	-17.66	-0.06	4.62	0.00	3.25	-0.44	-18.69	21.93
	22	7162	-0.44	2.23	-17.66	-0.06	4.62	0.00	3.25	-0.44	-18.69	21.93
	23	7062	-1.08	2.63	-21.75	-0.31	1.97	0.07	2.81	-1.11	-21.92	24.73
	24	7064	-1.08	2.63	-21.75	-0.31	1.97	0.07	2.81	-1.11	-21.92	24.73
	25	7054	3.45	0.89	-9.37	0.15	0.14	1.62	3.66	0.89	-9.57	13.23
	26	7056	3.45	0.89	-9.37	0.15	0.14	1.62	3.66	0.89	-9.57	13.23
Outer Shell	27	7680	0.01	-0.13	0.66	0.04	0.59	-0.07	0.98	0.02	-0.46	1.44
	28	7682	0.01	-0.13	0.66	0.04	0.59	-0.07	0.98	0.02	-0.46	1.44
	29	7578	-0.01	-0.32	1.40	-0.01	1.35	-0.03	2.14	-0.01	-1.06	3.20
	30	7580	-0.01	-0.32	1.40	-0.01	1.35	-0.03	2.14	-0.01	-1.06	3.20
	31	7525	-0.02	-0.47	2.53	-0.01	1.91	-0.03	3.46	-0.02	-1.40	4.86
	32	7526	-0.02	-0.47	2.53	-0.01	1.91	-0.03	3.46	-0.02	-1.40	4.86
	33	7375	-0.04	0.41	6.03	-0.03	3.55	-0.02	7.75	-0.04	-1.31	9.06
	34	7376	-0.04	0.41	6.03	-0.03	3.55	-0.02	7.75	-0.04	-1.31	9.06
	35	7225	0.00	3.98	9.43	-0.05	4.96	0.00	12.37	1.05	0.00	12.37
	36	7226	0.00	3.98	9.43	-0.05	4.96	0.00	12.37	1.05	0.00	12.37
	37	7165	-0.04	6.55	10.84	-0.21	4.83	0.10	13.99	3.42	-0.06	14.04
	38	7167	-0.04	6.55	10.84	-0.21	4.83	0.10	13.99	3.42	-0.06	14.04
	39	7073	2.83	7.37	-3.85	5.08	1.38	0.47	10.81	-0.43	-4.02	14.82
	40	7075	2.83	7.37	-3.85	5.08	1.38	0.47	10.81	-0.43	-4.02	14.82
Bottom Cover	41	7054	1.23	-0.12	0.30	1.32	0.22	0.44	2.17	0.17	-0.93	3.10
	42	7021	1.23	-0.12	0.30	1.32	0.22	0.44	2.17	0.17	-0.93	3.10
	43	7051	1.10	-0.35	-0.29	1.00	0.12	0.41	1.70	-0.37	-0.87	2.57
	44	7018	1.10	-0.35	-0.29	1.00	0.12	0.41	1.70	-0.37	-0.87	2.57
	45	7048	-1.77	5.67	-8.23	0.13	0.24	0.29	5.68	-1.76	-8.25	13.92
	46	7010	-1.77	5.67	-8.23	0.13	0.24	0.29	5.68	-1.76	-8.25	13.92
Ram Access Cover Plate	47	7012	4.56	-3.47	2.81	1.44	0.08	0.12	4.82	2.80	-3.72	8.54
	48	7004	4.56	-3.47	2.81	1.44	0.08	0.12	4.82	2.80	-3.72	8.54
	49	7011	5.60	0.93	4.77	0.53	0.04	0.12	5.68	4.76	0.87	4.80
	50	7003	5.60	0.93	4.77	0.53	0.04	0.12	5.68	4.76	0.87	4.80
	51	7013	3.72	0.37	0.13	0.30	-0.66	-0.15	3.76	0.88	-0.42	4.18
	52	7001	3.72	0.37	0.13	0.30	-0.66	-0.15	3.76	0.88	-0.42	4.18

(1.033)*Pm, cc72b-3.xls

Table 2.7.1-36
Cask 30-Foot C.G. Over Bottom Flatside Drop Membrane Stress Summary, 135° Azimuth

Cask Component	Stress Point	Node Number	Stress Components (ksi)						Principal Stresses (ksi)			SI (ksi)
			SX	SY	SZ	SXY	SYZ	SXZ	S1	S2	S3	
Top Cover	1	10730	-0.06	0.01	-0.02	0.17	-0.05	-0.04	0.17	-0.04	-0.20	0.36
	2	10771	-0.06	0.01	-0.02	0.17	-0.05	-0.04	0.17	-0.04	-0.20	0.36
	3	10738	-0.16	-0.05	-0.30	0.24	-0.02	0.04	0.14	-0.28	-0.37	0.51
	4	10779	-0.16	-0.05	-0.30	0.24	-0.02	0.04	0.14	-0.28	-0.37	0.51
	5	10746	0.30	-1.16	-0.81	0.36	0.01	-0.21	0.42	-0.84	-1.26	1.67
	6	10786	0.30	-1.16	-0.81	0.36	0.01	-0.21	0.42	-0.84	-1.26	1.67
Top Flange	7	10711	0.24	0.26	0.17	-0.23	0.35	-0.22	0.76	0.04	-0.13	0.90
	8	10713	0.24	0.26	0.17	-0.23	0.35	-0.22	0.76	0.04	-0.13	0.90
Inner Shell	9	10672	0.32	-2.43	-0.35	-0.34	0.23	0.34	0.48	-0.43	-2.51	2.99
	10	10674	0.32	-2.43	-0.35	-0.34	0.23	0.34	0.48	-0.43	-2.51	2.99
	11	10654	-0.05	-3.60	-1.22	-0.14	0.61	0.09	-0.04	-1.07	-3.75	3.71
	12	10656	-0.05	-3.60	-1.22	-0.14	0.61	0.09	-0.04	-1.07	-3.75	3.71
	13	10574	-0.09	-3.59	-2.86	-0.01	0.75	-0.01	-0.09	-2.39	-4.06	3.97
	14	10576	-0.09	-3.59	-2.86	-0.01	0.75	-0.01	-0.09	-2.39	-4.06	3.97
	15	10521	-0.14	-3.12	-4.52	-0.01	0.97	-0.01	-0.14	-2.62	-5.02	4.88
	16	10522	-0.14	-3.12	-4.52	-0.01	0.97	-0.01	-0.14	-2.62	-5.02	4.88
	17	10371	-0.36	-0.89	-10.53	-0.01	1.49	-0.02	-0.35	-0.67	-10.75	10.39
	18	10372	-0.36	-0.89	-10.53	-0.01	1.49	-0.02	-0.35	-0.67	-10.75	10.39
	19	10221	-0.66	2.33	-16.23	-0.01	2.12	-0.02	2.56	-0.66	-16.47	19.04
	20	10222	-0.66	2.33	-16.23	-0.01	2.12	-0.02	2.56	-0.66	-16.47	19.04
	21	10161	-0.71	3.41	-17.76	-0.05	2.53	-0.01	3.71	-0.71	-18.06	21.75
	22	10162	-0.71	3.41	-17.76	-0.05	2.53	-0.01	3.71	-0.71	-18.06	21.75
	23	10062	-0.88	4.27	-14.93	-1.13	1.78	-0.03	4.66	-1.11	-15.09	19.75
	24	10064	-0.88	4.27	-14.93	-1.13	1.78	-0.03	4.66	-1.11	-15.09	19.75
	25	10054	0.86	1.53	-5.29	-0.13	0.25	1.70	1.56	1.28	-5.74	7.30
	26	10056	0.86	1.53	-5.29	-0.13	0.25	1.70	1.56	1.28	-5.74	7.30
Outer Shell	27	10680	-0.11	0.12	0.22	0.24	0.35	0.02	0.57	-0.01	-0.33	0.90
	28	10682	-0.11	0.12	0.22	0.24	0.35	0.02	0.57	-0.01	-0.33	0.90
	29	10578	-0.04	0.27	0.53	-0.06	0.84	0.00	1.25	-0.03	-0.46	1.71
	30	10580	-0.04	0.27	0.53	-0.06	0.84	0.00	1.25	-0.03	-0.46	1.71
	31	10525	-0.01	0.51	2.08	-0.01	1.08	0.01	2.62	-0.01	-0.05	2.67
	32	10526	-0.01	0.51	2.08	-0.01	1.08	0.01	2.62	-0.01	-0.05	2.67
	33	10375	-0.07	2.19	5.67	-0.01	1.47	0.03	6.21	1.65	-0.07	6.28
	34	10376	-0.07	2.19	5.67	-0.01	1.47	0.03	6.21	1.65	-0.07	6.28
	35	10225	-0.19	4.69	9.37	0.01	1.86	0.03	10.01	4.04	-0.19	10.20
	36	10226	-0.19	4.69	9.37	0.01	1.86	0.03	10.01	4.04	-0.19	10.20
	37	10165	-0.17	5.42	11.20	-0.12	2.23	0.01	11.96	4.66	-0.18	12.14
	38	10167	-0.17	5.42	11.20	-0.12	2.23	0.01	11.96	4.66	-0.18	12.14
	39	10073	2.18	6.27	-0.55	3.50	1.89	0.34	8.63	0.46	-1.20	9.84
	40	10075	2.18	6.27	-0.55	3.50	1.89	0.34	8.63	0.46	-1.20	9.84
Bottom Cover	41	10054	0.52	-0.88	1.04	1.44	0.33	0.61	1.96	0.52	-1.78	3.74
	42	10021	0.52	-0.88	1.04	1.44	0.33	0.61	1.96	0.52	-1.78	3.74
	43	10051	0.38	-0.34	1.06	0.96	0.00	0.89	1.83	0.41	-1.14	2.97
	44	10018	0.38	-0.34	1.06	0.96	0.00	0.89	1.83	0.41	-1.14	2.97
	45	10048	-2.43	6.11	-5.77	-0.29	0.00	1.54	6.12	-1.83	-6.38	12.49
	46	10010	-2.43	6.11	-5.77	-0.29	0.00	1.54	6.12	-1.83	-6.38	12.49
Ram Access Cover Plate	47	10012	3.44	-4.02	3.59	1.41	0.21	0.38	4.06	3.24	-4.28	8.34
	48	10004	3.44	-4.02	3.59	1.41	0.21	0.38	4.06	3.24	-4.28	8.34
	49	10011	3.37	1.31	5.33	-0.04	-0.25	0.33	5.39	3.31	1.30	4.10
	50	10003	3.37	1.31	5.33	-0.04	-0.25	0.33	5.39	3.31	1.30	4.10
	51	10013	2.08	0.37	1.77	0.68	-0.25	1.80	3.76	0.88	-0.42	4.18
	52	10001	2.08	0.37	1.77	0.68	-0.25	1.80	3.76	0.88	-0.42	4.18

(1.033)*Pm, cc72b-3.xls

Table 2.7.1-37
Cask 30-Foot C.G. Over Bottom Flatside Drop Membrane Stress Summary, 180° Azimuth

Cask Component	Stress Point	Node Number	Stress Components (ksi)						Principal Stresses (ksi)			SI (ksi)
			SX	SY	SZ	SXY	SYZ	SXZ	S1	S2	S3	
Top Cover	1	13730	-0.01	0.01	-0.08	0.15	0.08	-0.02	0.17	-0.04	-0.20	0.36
	2	13771	-0.01	0.01	-0.08	0.15	0.08	-0.02	0.17	-0.04	-0.20	0.36
	3	13738	-0.31	-0.05	-0.27	0.25	0.03	0.01	0.10	-0.27	-0.47	0.57
	4	13779	-0.31	-0.05	-0.27	0.25	0.03	0.01	0.10	-0.27	-0.47	0.57
	5	13746	0.31	-1.51	-1.22	0.36	-0.02	0.14	0.39	-1.22	-1.58	1.98
	6	13786	0.31	-1.51	-1.22	0.36	-0.02	0.14	0.39	-1.22	-1.58	1.98
Top Flange	7	13711	0.22	0.42	-0.22	-0.27	0.06	0.01	0.61	0.03	-0.22	0.83
	8	13713	0.22	0.42	-0.22	-0.27	0.06	0.01	0.61	0.03	-0.22	0.83
Inner Shell	9	13672	0.41	-2.22	0.41	-0.28	0.00	0.11	0.53	0.31	-2.25	2.78
	10	13674	0.41	-2.22	0.41	-0.28	0.00	0.11	0.53	0.31	-2.25	2.78
	11	13654	-0.01	-3.02	-0.42	-0.02	0.13	0.02	0.00	-0.42	-3.03	3.03
	12	13656	-0.01	-3.02	-0.42	-0.02	0.13	0.02	0.00	-0.42	-3.03	3.03
	13	13574	-0.14	-3.23	-3.10	0.00	0.10	0.40	-0.09	-3.09	-3.29	3.21
	14	13576	-0.14	-3.23	-3.10	0.00	0.10	0.40	-0.09	-3.09	-3.29	3.21
	15	13521	-0.22	-2.99	-4.61	0.00	0.14	0.60	-0.14	-2.97	-4.70	4.56
	16	13522	-0.22	-2.99	-4.61	0.00	0.14	0.60	-0.14	-2.97	-4.70	4.56
	17	13371	-0.46	-1.55	-10.59	-0.01	0.21	1.37	-0.28	-1.55	-10.78	10.50
	18	13372	-0.46	-1.55	-10.59	-0.01	0.21	1.37	-0.28	-1.55	-10.78	10.50
	19	13221	-0.58	1.07	-16.51	-0.02	0.38	2.14	1.08	-0.30	-16.80	17.88
	20	13222	-0.58	1.07	-16.51	-0.02	0.38	2.14	1.08	-0.30	-16.80	17.88
	21	13161	-0.63	2.66	-18.09	-0.06	0.47	2.34	2.67	-0.33	-18.40	21.07
	22	13162	-0.63	2.66	-18.09	-0.06	0.47	2.34	2.67	-0.33	-18.40	21.07
	23	13062	-0.82	3.91	-12.77	-1.36	-0.37	1.63	4.31	-1.00	-13.00	17.30
	24	13064	-0.82	3.91	-12.77	-1.36	-0.37	1.63	4.31	-1.00	-13.00	17.30
	25	13054	-0.41	1.49	-3.96	-0.06	0.27	0.75	1.50	-0.26	-4.12	5.63
	26	13056	-0.41	1.49	-3.96	-0.06	0.27	0.75	1.50	-0.26	-4.12	5.63
Outer Shell	27	13680	-0.27	0.03	0.17	0.48	0.12	-0.06	0.40	0.17	-0.64	1.04
	28	13682	-0.27	0.03	0.17	0.48	0.12	-0.06	0.40	0.17	-0.64	1.04
	29	13578	-0.07	0.11	0.17	-0.07	0.12	-0.03	0.28	0.03	-0.10	0.38
	30	13580	-0.07	0.11	0.17	-0.07	0.12	-0.03	0.28	0.03	-0.10	0.38
	31	13525	-0.06	0.31	2.08	0.02	0.17	-0.27	2.12	0.29	-0.10	2.23
	32	13526	-0.06	0.31	2.08	0.02	0.17	-0.27	2.12	0.29	-0.10	2.23
	33	13375	-0.13	1.15	5.71	0.00	0.19	-0.75	5.81	1.14	-0.22	6.03
	34	13376	-0.13	1.15	5.71	0.00	0.19	-0.75	5.81	1.14	-0.22	6.03
	35	13225	-0.10	2.57	9.14	-0.03	0.32	-1.24	9.32	2.56	-0.27	9.58
	36	13226	-0.10	2.57	9.14	-0.03	0.32	-1.24	9.32	2.56	-0.27	9.58
	37	13165	-0.11	3.62	10.77	-0.12	0.39	-1.46	10.98	3.60	-0.31	11.29
	38	13167	-0.11	3.62	10.77	-0.12	0.39	-1.46	10.98	3.60	-0.31	11.29
	39	13073	1.99	4.42	0.50	3.23	0.47	0.30	6.70	0.45	-0.24	6.94
	40	13075	1.99	4.42	0.50	3.23	0.47	0.30	6.70	0.45	-0.24	6.94
Bottom Cover	41	13054	0.58	-1.20	1.47	1.36	0.37	-0.07	1.56	1.26	-1.97	3.53
	42	13021	0.58	-1.20	1.47	1.36	0.37	-0.07	1.56	1.26	-1.97	3.53
	43	13051	0.24	-0.33	1.64	0.87	0.14	-0.02	1.65	0.86	-0.96	2.61
	44	13018	0.24	-0.33	1.64	0.87	0.14	-0.02	1.65	0.86	-0.96	2.61
	45	13048	-2.65	6.37	-3.88	-0.60	-0.41	0.41	6.43	-2.58	-4.01	10.44
	46	13010	-2.65	6.37	-3.88	-0.60	-0.41	0.41	6.43	-2.58	-4.01	10.44
Ram Access Cover Plate	47	13012	2.67	-4.39	4.10	1.40	0.46	-0.08	4.13	2.94	-4.68	8.81
	48	13004	2.67	-4.39	4.10	1.40	0.46	-0.08	4.13	2.94	-4.68	8.81
	49	13011	2.32	1.64	5.75	-0.32	-0.24	-0.32	5.79	2.43	1.48	4.30
	50	13003	2.32	1.64	5.75	-0.32	-0.24	-0.32	5.79	2.43	1.48	4.30
	51	13013	0.13	0.37	3.72	0.66	0.30	0.15	3.76	0.88	-0.42	4.18
	52	13001	0.13	0.37	3.72	0.66	0.30	0.15	3.76	0.88	-0.42	4.18

(1.033)*Pm, cc72b-3.xls

Table 2.7.1-38
Cask 30-Foot C.G. Over Bottom Flatside Drop Membrane Plus Bending Stress Summary, 0° Azimuth

Cask Component	Stress Point	Node Number	Stress Components (ksi)						Principal Stresses (ksi)			SI (ksi)
			SX	SY	SZ	SXY	SYZ	SXZ	S1	S2	S3	
Top Cover	1	730	0.49	1.08	4.92	-0.16	-0.08	0.23	4.93	1.11	0.45	4.48
	2	771	-0.51	-1.06	-5.07	-0.15	-0.09	-0.27	-0.46	-1.09	-5.09	4.64
	3	738	2.14	-0.02	3.48	0.22	-0.02	0.05	3.49	2.15	-0.04	3.52
	4	779	-2.61	-0.09	-3.54	0.22	-0.02	-0.03	-0.07	-2.63	-3.54	3.47
	5	746	-1.29	-1.10	0.09	0.46	-0.03	0.07	0.09	-0.73	-1.67	1.76
	6	786	1.66	-0.99	-1.31	0.26	0.05	-0.19	1.70	-1.00	-1.34	3.04
Top Flange	7	711	0.53	0.73	0.93	-0.18	0.01	0.06	0.94	0.84	0.42	0.52
	8	713	0.19	-0.49	0.43	-0.07	-0.02	0.02	0.44	0.19	-0.50	0.93
Inner Shell	9	672	0.01	-3.54	1.42	-0.56	0.00	0.09	1.43	0.09	-3.63	5.06
	10	674	0.92	0.12	2.59	0.06	-0.03	0.13	2.61	0.91	0.12	2.49
	11	654	-0.07	-3.94	1.40	0.00	0.02	0.14	1.41	-0.08	-3.94	5.35
	12	656	0.08	-0.55	2.27	0.16	-0.01	0.21	2.28	0.10	-0.59	2.87
	13	574	-0.13	-3.09	-1.04	0.00	0.15	-0.08	-0.13	-1.03	-3.11	2.98
	14	576	-0.13	-3.12	-1.38	0.00	0.12	-0.11	-0.12	-1.39	-3.12	3.00
	15	521	-0.18	-4.20	-2.84	0.01	0.23	-0.23	-0.16	-2.82	-4.24	4.08
	16	522	-0.18	-4.24	-3.49	0.01	0.19	-0.29	-0.16	-3.46	-4.28	4.13
	17	371	-0.32	-9.80	-7.61	0.01	0.47	-0.65	-0.27	-7.57	-9.90	9.63
	18	372	-0.35	-10.73	-10.06	0.02	0.41	-0.86	-0.27	-9.93	-10.94	10.67
	19	221	-0.44	-19.87	-13.38	0.00	0.64	-1.14	-0.34	-13.42	-19.94	19.60
	20	222	-0.48	-21.12	-15.93	0.00	0.68	-1.36	-0.36	-15.96	-21.21	20.85
	21	161	-0.61	-23.42	-22.36	0.05	0.41	-1.91	-0.44	-22.36	-23.57	23.14
	22	162	-0.65	-25.27	-23.72	0.04	0.47	-2.02	-0.47	-23.75	-25.42	24.95
	23	62	-1.54	-19.21	-21.66	-0.88	0.06	-1.82	-1.33	-19.27	-21.82	20.48
	24	64	0.21	-24.84	-22.05	-0.89	0.18	-1.90	0.40	-22.21	-24.88	25.29
	25	54	-1.70	-18.96	-11.51	0.75	-0.41	-0.92	-1.58	-11.58	-19.01	17.42
	26	56	5.44	-0.84	-2.60	0.08	-0.33	-0.67	5.49	-0.79	-2.71	8.20
Outer Shell	27	680	-0.07	-3.09	1.19	0.38	0.03	0.11	1.20	-0.03	-3.14	4.34
	28	682	-0.20	1.90	2.37	0.08	-0.01	0.22	2.39	1.91	-0.22	2.61
	29	578	-0.11	-1.19	3.38	0.00	0.16	0.31	3.41	-0.14	-1.20	4.61
	30	580	-0.02	-1.33	2.55	0.00	0.09	0.23	2.58	-0.04	-1.33	3.91
	31	525	-0.09	-2.27	4.96	0.02	0.25	0.44	5.00	-0.13	-2.28	7.29
	32	526	-0.09	-2.34	3.48	0.02	0.17	0.31	3.51	-0.12	-2.35	5.86
	33	375	-0.14	-7.59	10.24	0.03	0.58	0.90	10.33	-0.22	-7.61	17.94
	34	376	-0.19	-9.41	5.37	0.04	0.46	0.48	5.43	-0.23	-9.43	14.85
	35	225	-0.18	-18.59	14.67	-0.11	0.80	1.31	14.80	-0.29	-18.61	33.41
	36	226	-0.25	-20.02	9.32	-0.12	0.84	0.84	9.42	-0.33	-20.04	29.46
	37	165	-0.80	-20.89	5.22	0.90	0.51	0.53	5.28	-0.81	-20.94	26.22
	38	167	-0.77	-26.00	0.42	0.89	0.51	0.13	0.45	-0.75	-26.03	26.49
	39	73	0.78	-14.34	-5.94	0.70	-0.57	-0.65	0.88	-5.97	-14.40	15.29
	40	75	-1.24	-31.97	-11.27	0.94	-0.50	-0.81	-1.14	-11.33	-32.01	30.87
Bottom Cover	41	54	0.13	-17.01	-10.61	0.90	-0.37	-0.95	0.27	-10.68	-17.08	17.33
	42	21	-2.96	-3.67	5.07	3.23	-0.33	0.37	5.09	-0.06	-6.58	11.67
	43	51	-7.36	-0.46	-10.92	1.06	-0.11	-0.40	-0.30	-7.48	-10.97	10.67
	44	18	6.01	-0.29	12.02	1.08	-0.11	0.28	12.03	6.18	-0.47	12.51
	45	48	-9.87	4.09	-14.94	-0.13	-0.05	-0.76	4.09	-9.76	-15.05	19.14
	46	10	4.64	6.57	6.85	-0.66	0.65	0.14	7.41	6.26	4.39	3.01
Ram Access Cover Plate	47	12	-1.72	-2.83	-0.45	0.72	-0.17	-0.06	-0.43	-1.39	-3.18	2.76
	48	4	6.27	-4.83	7.85	1.85	-0.40	0.11	7.86	6.57	-5.14	13.01
	49	11	-3.53	0.87	-0.31	0.34	0.11	0.02	0.90	-0.32	-3.56	4.46
	50	3	7.60	2.00	11.23	-0.89	0.20	0.36	11.27	7.70	1.85	9.42
	51	13	-0.96	-1.62	-3.96	-0.69	-0.28	-0.36	-0.52	-1.96	-4.05	3.53
	52	1	1.22	2.36	11.39	-0.62	-0.33	0.66	11.46	2.60	0.93	10.53

(1.033)*Pm+Pb, cc72b-3.xls

Table 2.7.1-39
Cask 30-Foot C.G. Over Bottom Flatside Drop Membrane Plus Bending Stress Summary, 45° Azimuth

Cask Component	Stress Point	Node Number	Stress Components (ksi)						Principal Stresses (ksi)			SI (ksi)
			SX	SY	SZ	SXY	SYZ	SXZ	S1	S2	S3	
Top Cover	1	4730	2.47	1.08	2.94	-0.06	-0.17	-2.21	4.93	1.11	0.45	4.48
	2	4771	-2.52	-1.06	-3.06	-0.04	-0.17	2.28	-0.46	-1.09	-5.09	4.64
	3	4738	2.40	-0.02	3.16	0.22	0.00	-0.35	3.30	2.28	-0.04	3.34
	4	4779	-2.80	-0.09	-3.28	0.22	-0.01	0.16	-0.07	-2.76	-3.34	3.27
	5	4746	-1.18	-1.05	0.06	0.47	-0.04	-0.18	0.10	-0.68	-1.59	1.69
	6	4786	1.52	-0.97	-0.99	0.27	0.01	0.19	1.56	-0.99	-1.01	2.57
Top Flange	7	4711	0.47	0.61	0.86	-0.19	0.02	0.07	0.88	0.74	0.33	0.55
	8	4713	0.17	-0.37	0.47	-0.07	-0.16	0.01	0.50	0.18	-0.41	0.91
Inner Shell	9	4672	0.05	-3.76	0.79	-0.57	0.19	0.00	0.80	0.13	-3.85	4.65
	10	4674	0.97	-0.11	2.01	0.01	0.01	-0.17	2.04	0.95	-0.11	2.15
	11	4654	-0.06	-3.85	0.63	0.03	0.36	0.00	0.66	-0.06	-3.88	4.53
	12	4656	0.08	-1.45	1.27	0.09	0.19	-0.01	1.28	0.09	-1.47	2.75
	13	4574	-0.12	-3.56	-1.65	0.00	1.31	-0.01	-0.12	-0.98	-4.23	4.11
	14	4576	-0.13	-3.67	-1.80	0.00	0.96	-0.01	-0.13	-1.40	-4.08	3.95
	15	4521	-0.21	-4.39	-3.49	0.00	1.83	-0.01	-0.21	-2.05	-5.82	5.62
	16	4522	-0.21	-4.45	-3.66	0.00	1.39	0.00	-0.21	-2.61	-5.50	5.29
	17	4371	-0.47	-7.61	-9.38	0.00	3.39	-0.04	-0.47	-4.99	-12.00	11.53
	18	4372	-0.46	-7.66	-9.29	0.00	2.83	0.03	-0.46	-5.53	-11.42	10.96
	19	4221	-0.79	-12.40	-15.11	-0.01	4.98	-0.08	-0.79	-8.59	-18.91	18.13
	20	4222	-0.76	-12.16	-14.96	0.00	4.81	0.07	-0.76	-8.54	-18.57	17.81
	21	4161	-1.06	-14.97	-19.99	0.03	4.48	-0.03	-1.06	-12.34	-22.61	21.56
	22	4162	-1.10	-14.80	-20.41	0.04	4.48	0.18	-1.10	-12.32	-22.89	21.79
	23	4062	-1.77	-9.22	-18.68	-0.82	-0.46	-0.05	-1.68	-9.28	-18.71	17.02
	24	4064	-0.61	-25.89	-23.05	0.31	2.63	-0.40	-0.60	-21.48	-27.47	26.86
	25	4054	-0.55	-15.62	-10.38	0.51	0.22	-1.17	-0.39	-10.50	-15.65	15.26
	26	4056	6.28	-3.05	-2.98	0.71	1.56	-1.63	6.58	-1.51	-4.82	11.40
Outer Shell	27	4680	-0.06	-2.42	0.95	0.30	0.61	-0.07	1.06	-0.02	-2.56	3.62
	28	4682	-0.12	1.31	1.84	0.07	0.07	-0.05	1.85	1.31	-0.13	1.98
	29	4578	-0.08	-1.01	2.72	0.00	1.32	-0.02	3.14	-0.08	-1.43	4.57
	30	4580	-0.02	-1.35	2.09	0.00	0.69	-0.01	2.22	-0.02	-1.49	3.71
	31	4525	-0.07	-1.82	4.03	0.00	1.98	-0.03	4.64	-0.07	-2.43	7.06
	32	4526	-0.09	-2.05	3.15	0.01	1.22	-0.01	3.42	-0.09	-2.32	5.74
	33	4375	-0.16	-4.98	7.73	0.00	4.11	-0.10	8.94	-0.16	-6.19	15.13
	34	4376	-0.18	-5.49	6.46	0.00	3.13	0.02	7.23	-0.18	-6.27	13.50
	35	4225	-0.31	-10.21	11.98	-0.08	6.15	-0.19	13.57	-0.31	-11.80	25.37
	36	4226	-0.30	-9.77	10.27	-0.06	5.82	0.05	11.84	-0.30	-11.33	23.17
	37	4165	-0.99	-12.53	8.61	0.51	6.70	-0.16	10.56	-0.97	-14.49	25.05
	38	4167	-0.69	-13.14	5.44	0.52	5.30	0.16	6.86	-0.69	-14.55	21.41
	39	4073	1.38	2.79	-0.49	3.10	-1.54	0.17	5.47	0.20	-1.99	7.46
	40	4075	0.21	-41.00	-13.33	1.53	2.30	0.06	0.27	-13.14	-41.25	41.52
Bottom Cover	41	4054	1.23	-13.99	-9.21	0.81	0.19	-1.58	1.50	-9.43	-14.05	15.55
	42	4021	-1.86	-4.69	3.44	4.17	0.37	0.69	3.68	0.90	-7.68	11.36
	43	4051	-6.89	-0.59	-12.69	1.18	0.18	-2.57	-0.37	-6.11	-13.69	13.33
	44	4018	7.27	-0.17	12.43	1.19	0.20	0.79	12.55	7.33	-0.35	12.91
	45	4048	-9.79	4.34	-18.27	0.09	0.33	-2.53	4.35	-9.09	-18.98	23.33
	46	4010	5.33	6.60	5.98	-0.22	0.47	-0.45	6.96	5.84	5.11	1.85
Ram Access Cover Plate	47	4012	0.32	-2.73	-2.44	0.59	0.05	-1.39	0.98	-2.62	-3.20	4.18
	48	4004	6.37	-4.62	8.53	2.12	-0.27	0.60	8.69	6.62	-5.02	13.72
	49	4011	-2.41	0.50	-1.90	0.50	0.35	-1.54	0.59	-0.60	-3.80	4.39
	50	4003	9.03	1.79	11.85	-0.48	0.22	0.91	12.12	8.80	1.75	10.36
	51	4013	-2.10	-1.62	-2.82	-0.29	-0.69	1.50	-0.52	-1.96	-4.05	3.53
	52	4001	5.65	2.36	6.97	-0.21	-0.67	-5.09	11.46	2.60	0.93	10.53

(1.033)*Pm+Pb, cc72b-3.xls

Table 2.7.1-40
Cask 30-Foot C.G. Over Bottom Flatside Drop Membrane Plus Bending Stress Summary, 90° Azimuth

Cask Component	Stress Point	Node Number	Stress Components (ksi)						Principal Stresses (ksi)			SI (ksi)
			SX	SY	SZ	SXY	SYZ	SXZ	S1	S2	S3	
Top Cover	1	7730	4.92	1.08	0.49	0.08	-0.16	-0.23	4.93	1.11	0.45	4.48
	2	7771	-5.07	-1.06	-0.51	0.09	-0.15	0.27	-0.46	-1.09	-5.09	4.64
	3	7738	2.73	-0.02	2.65	0.22	-0.01	-0.08	2.79	2.61	-0.04	2.83
	4	7779	-2.90	-0.09	-3.09	0.22	-0.01	-0.12	-0.07	-2.85	-3.15	3.08
	5	7746	-0.82	-0.88	-0.13	0.48	0.00	-0.19	-0.05	-0.43	-1.35	1.30
	6	7786	1.27	-0.89	-0.62	0.26	0.03	-0.11	1.31	-0.62	-0.92	2.23
Top Flange	7	7711	0.42	0.41	0.69	-0.23	0.06	-0.12	0.80	0.54	0.18	0.62
	8	7713	0.14	-0.18	0.52	-0.08	0.04	-0.02	0.53	0.16	-0.20	0.73
Inner Shell	9	7672	0.11	-3.76	-0.71	-0.51	0.39	0.07	0.18	-0.66	-3.87	4.06
	10	7674	0.77	-1.00	0.48	-0.18	0.25	0.06	0.79	0.52	-1.06	1.85
	11	7654	-0.05	-3.21	-0.96	0.02	0.95	0.01	-0.05	-0.61	-3.56	3.51
	12	7656	0.00	-3.87	-0.88	-0.22	0.71	0.05	0.01	-0.72	-4.04	4.05
	13	7574	-0.08	-4.13	-2.85	0.00	1.63	-0.03	-0.08	-1.74	-5.25	5.17
	14	7576	-0.06	-3.95	-1.96	-0.01	1.43	0.02	-0.06	-1.21	-4.69	4.63
	15	7521	-0.13	-4.16	-4.95	0.00	1.96	-0.03	-0.13	-2.55	-6.55	6.42
	16	7522	-0.11	-3.77	-3.43	-0.01	1.83	0.03	-0.11	-1.76	-5.43	5.32
	17	7371	-0.33	-3.41	-12.03	-0.01	3.21	-0.03	-0.33	-2.35	-13.10	12.78
	18	7372	-0.26	-2.14	-8.20	-0.02	3.23	0.02	-0.26	-0.75	-9.60	9.34
	19	7221	-0.45	-0.78	-18.86	-0.02	4.44	0.01	0.25	-0.45	-19.89	20.14
	20	7222	-0.34	1.52	-13.02	-0.03	4.68	-0.03	2.90	-0.34	-14.39	17.29
	21	7161	-0.55	-0.25	-21.08	-0.07	4.65	0.08	0.74	-0.55	-22.08	22.81
	22	7162	-0.33	4.70	-14.26	-0.05	4.59	-0.07	5.76	-0.33	-15.30	21.06
	23	7062	-0.72	14.00	-19.48	-0.90	2.43	0.16	14.22	-0.77	-19.66	33.88
	24	7064	-1.45	-8.74	-24.04	0.29	1.52	-0.02	-1.44	-8.60	-24.18	22.75
	25	7054	1.45	0.54	-11.45	0.25	0.76	1.58	1.74	0.48	-11.68	13.42
	26	7056	5.44	1.25	-7.29	0.04	-0.49	1.67	5.66	1.28	-7.53	13.19
Outer Shell	27	7680	0.02	-0.19	0.54	0.06	0.78	-0.08	1.04	0.03	-0.69	1.73
	28	7682	0.00	-0.08	0.77	0.03	0.41	-0.05	0.94	0.00	-0.25	1.19
	29	7578	-0.04	-0.46	0.80	-0.01	1.51	-0.05	1.81	-0.04	-1.47	3.28
	30	7580	0.02	-0.18	2.00	-0.02	1.19	0.00	2.52	0.02	-0.70	3.22
	31	7525	-0.03	-0.69	1.62	-0.01	2.02	-0.06	2.79	-0.03	-1.87	4.66
	32	7526	-0.01	-0.25	3.44	-0.02	1.80	0.01	4.17	-0.01	-0.98	5.16
	33	7375	-0.08	-0.38	3.79	-0.02	3.55	-0.05	5.82	-0.08	-2.41	8.23
	34	7376	0.00	1.21	8.26	-0.03	3.56	0.01	9.75	0.00	-0.28	10.03
	35	7225	-0.07	2.46	6.10	-0.04	4.73	0.04	9.35	-0.06	-0.79	10.15
	36	7226	0.06	5.50	12.76	-0.05	5.18	-0.04	15.45	2.81	0.06	15.39
	37	7165	-0.28	2.18	6.41	-0.21	4.93	0.24	9.66	-0.17	-1.18	10.84
	38	7167	0.19	10.93	15.28	-0.20	4.74	-0.05	18.32	7.89	0.19	18.13
	39	7073	3.07	47.92	7.03	7.76	2.78	0.60	49.42	6.84	1.77	47.65
	40	7075	2.58	-33.19	-14.74	2.40	-0.02	0.34	2.74	-14.74	-33.35	36.09
Bottom Cover	41	7054	2.50	0.41	-11.22	0.72	0.62	1.85	2.99	0.19	-11.49	14.47
	42	7021	-0.03	-0.66	11.83	1.92	-0.18	-0.96	11.91	1.53	-2.30	14.21
	43	7051	-4.64	-0.50	-17.43	1.00	0.12	1.22	-0.26	-4.76	-17.54	17.27
	44	7018	6.85	-0.19	16.84	1.00	0.12	-0.39	16.86	6.97	-0.33	17.19
	45	7048	-9.24	4.72	-22.24	0.21	0.17	0.54	4.72	-9.23	-22.27	26.99
	46	7010	5.70	6.62	5.78	0.05	0.30	0.05	6.72	5.72	5.66	1.06
Ram Access Cover Plate	47	7012	2.22	-2.62	-4.33	0.50	0.02	0.22	2.28	-2.67	-4.34	6.62
	48	7004	6.91	-4.31	9.96	2.38	0.15	0.01	9.96	7.39	-4.80	14.76
	49	7011	-1.36	-0.03	-3.73	0.94	0.04	0.16	0.46	-1.83	-3.74	4.20
	50	7003	12.56	1.89	13.27	0.11	0.05	0.08	13.28	12.55	1.89	11.39
	51	7013	-3.96	-1.62	-0.96	0.28	-0.69	0.36	-0.52	-1.96	-4.05	3.53
	52	7001	11.39	2.36	1.22	0.33	-0.62	-0.66	11.46	2.60	0.93	10.53

(1.033)*Pm+Pb, cc72b-3.xls

Table 2.7.1-41
Cask 30-Foot C.G. Over Bottom Flatside Drop Membrane Plus Bending Stress Summary, 135° Azimuth

Cask Component	Stress Point	Node Number	Stress Components (ksi)						Principal Stresses (ksi)			SI (ksi)
			SX	SY	SZ	SXY	SYZ	SXZ	S1	S2	S3	
Top Cover	1	10730	2.94	1.08	2.47	0.17	-0.06	2.21	4.93	1.11	0.45	4.48
	2	10771	-3.06	-1.06	-2.52	0.17	-0.04	-2.28	-0.46	-1.09	-5.09	4.64
	3	10738	2.18	-0.02	2.74	0.24	-0.02	0.39	2.95	2.01	-0.04	2.99
	4	10779	-2.51	-0.09	-3.34	0.24	-0.02	-0.32	-0.06	-2.42	-3.45	3.39
	5	10746	-1.38	-1.22	-0.60	0.47	0.05	0.14	-0.54	-0.88	-1.78	1.24
	6	10786	1.97	-1.11	-1.02	0.25	-0.03	-0.57	2.09	-1.10	-1.14	3.24
Top Flange	7	10711	0.38	0.47	0.27	-0.35	0.11	-0.36	0.95	0.26	-0.09	1.04
	8	10713	0.09	0.06	0.07	-0.11	0.58	-0.08	0.67	0.06	-0.51	1.19
Inner Shell	9	10672	0.09	-3.58	-0.78	-0.47	-0.02	0.05	0.15	-0.78	-3.64	3.79
	10	10674	0.55	-1.29	0.08	-0.21	0.48	0.63	0.99	-0.13	-1.52	2.52
	11	10654	-0.07	-2.96	-1.09	0.01	0.30	0.04	-0.07	-1.05	-3.00	2.94
	12	10656	-0.03	-4.24	-1.34	-0.29	0.92	0.14	-0.01	-1.07	-4.53	4.52
	13	10574	-0.10	-3.62	-3.09	-0.01	0.51	0.02	-0.10	-2.77	-3.93	3.84
	14	10576	-0.09	-3.56	-2.63	-0.01	1.00	-0.04	-0.09	-2.00	-4.20	4.11
	15	10521	-0.15	-3.27	-4.91	-0.01	0.72	0.03	-0.15	-2.99	-5.18	5.04
	16	10522	-0.13	-2.97	-4.14	-0.01	1.22	-0.06	-0.13	-2.20	-4.90	4.77
	17	10371	-0.37	-1.10	-11.01	-0.01	1.34	0.05	-0.37	-0.93	-11.19	10.83
	18	10372	-0.34	-0.68	-10.04	-0.01	1.63	-0.10	-0.33	-0.41	-10.31	9.98
	19	10221	-0.66	2.33	-16.03	-0.01	2.40	0.04	2.64	-0.66	-16.34	18.99
	20	10222	-0.66	2.32	-16.42	0.00	1.84	-0.07	2.50	-0.66	-16.60	19.10
	21	10161	-0.68	3.01	-17.50	-0.05	3.05	0.00	3.46	-0.68	-17.94	21.40
	22	10162	-0.73	3.80	-18.01	-0.05	2.01	-0.03	3.99	-0.73	-18.19	22.18
	23	10062	-0.98	8.00	-14.06	-0.93	2.46	-0.03	8.37	-1.07	-14.33	22.70
	24	10064	-0.77	0.53	-15.79	-1.33	1.10	-0.03	1.41	-1.58	-15.87	17.27
	25	10054	-2.02	-1.67	-7.91	0.39	0.91	1.77	-0.93	-2.18	-8.49	7.56
	26	10056	3.74	4.73	-2.67	-0.66	-0.41	1.63	5.23	3.64	-3.06	8.29
Outer Shell	27	10680	-0.07	-1.09	-0.11	0.32	-0.20	0.03	0.04	-0.08	-1.22	1.25
	28	10682	-0.16	1.32	0.54	0.15	0.90	0.02	1.92	-0.02	-0.19	2.11
	29	10578	-0.05	0.36	0.39	-0.06	0.47	0.04	0.85	0.01	-0.15	1.00
	30	10580	-0.02	0.18	0.67	-0.06	1.21	-0.04	1.67	-0.03	-0.81	2.48
	31	10525	-0.02	0.32	1.78	0.00	0.66	0.08	2.04	0.07	-0.03	2.07
	32	10526	0.00	0.69	2.37	-0.01	1.49	-0.05	3.24	0.00	-0.18	3.43
	33	10375	-0.08	2.04	5.62	-0.01	1.23	0.14	6.00	1.66	-0.08	6.08
	34	10376	-0.06	2.33	5.73	-0.01	1.72	-0.08	6.45	1.62	-0.06	6.50
	35	10225	-0.16	5.05	10.71	0.00	2.33	0.11	11.55	4.21	-0.16	11.71
	36	10226	-0.21	4.33	8.02	0.01	1.38	-0.05	8.48	3.87	-0.21	8.69
	37	10165	-0.32	5.08	12.65	-0.12	3.13	0.03	13.77	3.96	-0.32	14.10
	38	10167	-0.03	5.75	9.75	-0.12	1.34	-0.01	10.16	5.35	-0.03	10.19
	39	10073	2.20	34.96	7.59	5.44	3.31	0.44	36.22	7.21	1.32	34.91
	40	10075	2.16	-22.42	-8.70	1.56	0.48	0.24	2.27	-8.69	-22.53	24.79
Bottom Cover	41	10054	-1.14	-1.89	-7.68	0.85	0.78	2.04	0.01	-2.41	-8.31	8.32
	42	10021	2.19	0.13	9.76	2.04	-0.13	-0.81	9.86	3.36	-1.13	10.99
	43	10051	-8.63	-0.49	-13.40	0.96	0.00	2.83	-0.37	-7.42	-14.73	14.36
	44	10018	9.38	-0.19	15.52	0.97	0.00	-1.04	15.69	9.31	-0.28	15.97
	45	10048	-10.77	4.83	-18.75	-0.08	-0.07	2.89	4.83	-9.84	-19.69	24.51
	46	10010	5.92	7.38	7.21	-0.49	0.07	0.20	7.53	7.24	5.74	1.79
Ram Access Cover Plate	47	10012	0.24	-2.99	-2.02	0.62	0.02	1.45	1.02	-2.59	-3.20	4.22
	48	10004	6.65	-5.05	9.21	2.21	0.40	-0.69	9.38	6.89	-5.47	14.85
	49	10011	-2.61	0.59	-1.77	0.50	-0.34	1.66	0.67	-0.48	-3.98	4.66
	50	10003	9.35	2.03	12.42	-0.58	-0.16	-1.00	12.72	9.10	1.98	10.74
	51	10013	-2.82	-1.62	-2.10	0.69	-0.29	-1.50	-0.52	-1.96	-4.05	3.53
	52	10001	6.97	2.36	5.65	0.67	-0.21	5.09	11.46	2.60	0.93	10.53

(1.033)*Pm+Pb, cc72b-3.xls

Table 2.7.1-42
Cask 30-Foot C.G. Over Bottom Flatside Drop Membrane Plus Bending Stress Summary, 180° Azimuth

Cask Component	Stress Point	Node Number	Stress Components (ksi)						Principal Stresses (ksi)			SI (ksi)
			SX	SY	SZ	SXY	SYZ	SXZ	S1	S2	S3	
Top Cover	1	13730	0.49	1.08	4.92	0.16	0.08	0.23	4.93	1.11	0.45	4.48
	2	13771	-0.51	-1.06	-5.07	0.15	0.09	-0.27	-0.46	-1.09	-5.09	4.64
	3	13738	1.56	-0.02	3.04	0.25	0.03	-0.06	3.04	1.60	-0.06	3.10
	4	13779	-2.19	-0.09	-3.57	0.25	0.03	0.08	-0.06	-2.22	-3.58	3.52
	5	13746	-2.14	-1.65	-0.92	0.46	0.05	-0.05	-0.92	-1.38	-2.42	1.50
	6	13786	2.77	-1.37	-1.51	0.26	-0.08	0.33	2.81	-1.33	-1.59	4.40
Top Flange	7	13711	0.37	0.60	-0.04	-0.42	0.00	-0.03	0.92	0.05	-0.04	0.97
	8	13713	0.07	0.24	-0.39	-0.12	0.11	0.05	0.31	0.02	-0.42	0.73
Inner Shell	9	13672	0.06	-3.75	0.04	-0.53	-0.08	0.10	0.21	-0.03	-3.82	4.03
	10	13674	0.76	-0.69	0.77	-0.02	0.07	0.12	0.88	0.65	-0.69	1.58
	11	13654	-0.08	-3.38	-0.37	0.03	0.07	-0.01	-0.08	-0.37	-3.38	3.31
	12	13656	0.06	-2.67	-0.48	-0.07	0.20	0.04	0.07	-0.46	-2.68	2.75
	13	13574	-0.13	-2.94	-2.45	-0.01	0.06	0.31	-0.09	-2.48	-2.95	2.86
	14	13576	-0.15	-3.52	-3.76	0.00	0.13	0.49	-0.09	-3.47	-3.87	3.78
	15	13521	-0.20	-2.71	-3.62	-0.01	0.11	0.47	-0.14	-2.70	-3.69	3.55
	16	13522	-0.24	-3.26	-5.61	0.01	0.18	0.73	-0.14	-3.25	-5.72	5.58
	17	13371	-0.43	-0.93	-8.79	-0.01	0.20	1.14	-0.28	-0.93	-8.94	8.67
	18	13372	-0.50	-2.17	-12.40	-0.01	0.22	1.61	-0.29	-2.16	-12.62	12.33
	19	13221	-0.56	1.57	-15.41	-0.02	0.44	1.99	1.59	-0.29	-15.69	17.27
	20	13222	-0.60	0.57	-17.60	-0.03	0.32	2.28	0.57	-0.30	-17.90	18.48
	21	13161	-0.63	2.37	-17.77	-0.05	0.53	2.30	2.38	-0.33	-18.09	20.47
	22	13162	-0.64	2.95	-18.40	-0.06	0.41	2.38	2.96	-0.32	-18.72	21.67
	23	13062	-1.00	5.18	-12.54	-0.89	-0.24	1.60	5.32	-0.92	-12.77	18.08
	24	13064	-0.64	2.65	-13.00	-1.83	-0.49	1.66	3.54	-1.31	-13.22	16.76
	25	13054	-3.47	-2.60	-6.80	0.48	0.47	0.74	-2.26	-3.62	-6.99	4.72
	26	13056	2.65	5.57	-1.12	-0.60	0.08	0.76	5.69	2.69	-1.27	6.96
Outer Shell	27	13680	-0.19	-3.30	-0.52	0.69	0.02	0.04	-0.04	-0.53	-3.44	3.41
	28	13682	-0.35	3.35	0.86	0.27	0.22	-0.16	3.39	0.86	-0.39	3.78
	29	13578	-0.07	0.83	1.38	-0.08	0.02	-0.19	1.40	0.83	-0.10	1.50
	30	13580	-0.08	-0.60	-1.05	-0.07	0.23	0.14	-0.06	-0.51	-1.16	1.11
	31	13525	-0.03	0.73	3.82	0.01	0.11	-0.50	3.89	0.73	-0.10	3.99
	32	13526	-0.09	-0.12	0.33	0.03	0.24	-0.04	0.44	-0.08	-0.24	0.67
	33	13375	-0.06	2.32	9.04	0.00	0.17	-1.19	9.20	2.31	-0.21	9.41
	34	13376	-0.20	-0.01	2.37	0.00	0.21	-0.31	2.43	-0.03	-0.24	2.67
	35	13225	-0.05	3.79	11.82	-0.02	0.41	-1.59	12.04	3.77	-0.25	12.30
	36	13226	-0.16	1.36	6.46	-0.04	0.23	-0.88	6.59	1.34	-0.28	6.87
	37	13165	-0.25	3.68	12.39	-0.12	0.53	-1.69	12.63	3.65	-0.47	13.11
	38	13167	0.02	3.55	9.16	-0.12	0.26	-1.22	9.33	3.54	-0.14	9.47
	39	13073	2.08	29.42	7.66	5.00	0.61	-0.49	30.33	7.70	1.14	29.18
	40	13075	1.89	-20.59	-6.67	1.44	0.33	1.08	2.12	-6.81	-20.68	22.81
Bottom Cover	41	13054	-2.87	-2.89	-6.66	0.87	0.45	0.82	-1.84	-3.73	-6.85	5.00
	42	13021	4.02	0.48	9.60	1.84	0.29	-0.95	9.76	4.69	-0.34	10.10
	43	13051	-9.97	-0.45	-11.48	0.86	0.14	0.56	-0.37	-9.86	-11.66	11.29
	44	13018	10.45	-0.20	14.75	0.87	0.14	-0.60	14.84	10.44	-0.28	15.11
	45	13048	-11.29	4.90	-15.84	-0.31	0.12	1.13	4.90	-11.02	-16.10	21.00
	46	13010	5.98	7.85	8.07	-0.90	-0.95	-0.31	8.97	7.48	5.45	3.52
Ram Access Cover Plate	47	13012	-1.30	-3.19	-0.11	0.73	0.27	0.06	-0.08	-1.07	-3.45	3.38
	48	13004	6.64	-5.59	8.32	2.07	0.65	-0.21	8.36	6.97	-5.96	14.32
	49	13011	-3.59	0.96	-0.23	0.35	-0.17	-0.05	1.01	-0.26	-3.61	4.63
	50	13003	8.22	2.31	11.72	-0.98	-0.31	-0.59	11.83	8.30	2.14	9.69
	51	13013	-0.96	-1.62	-3.96	0.69	0.28	-0.36	-0.52	-1.96	-4.05	3.53
	52	13001	1.22	2.36	11.39	0.62	0.33	0.66	11.46	2.60	0.93	10.53

(1.033)*Pm+Pb, cc72b-3.xls

2.7.1.3.1 Top Closure Bolts Corner Drop Analysis

The top closure plate design ensures that the tangential (shear) loads are carried directly into the top flange with no contact (shear) loading in the top closure bolts. Only the axially applied loads are carried by the top closure bolts. Therefore, the evaluation for the top and bottom end drops presented in Appendix 2.10.5 envelops the axial loads developed in the event of a c.g. over corner (72°) drop [43.0 vs. 35.4 g] and bounds the results for a corner drop.

2.7.1.3.2 Bottom Closure Bolts Corner Drop Analysis

The bottom closure plate design ensures that the tangential (shear) loads are carried directly into the bottom flange with no contact (shear) loading in the bottom closure bolts. Only the axially applied loads are carried by the bottom closure bolts. Therefore, the evaluation for the top and bottom end drops presented in Appendix 2.10.5 envelops the axial loads developed in the event of a c.g. over corner (72°) drop [43.0 vs. 35.4 g] and bounds the results for a corner drop.

2.7.1.4 Oblique Drops

The NUHOMS®-MP187 transportation package structural components are analyzed for a range of 30-foot oblique drop conditions. Analyses are performed for both primary and secondary (slapdown) impacts. The drop orientations considered in this analysis are:

1.) Flat Side 30° Drop (Primary & Slapdown)

2.) Corner 30° Drop (Primary & Slapdown)

3.) Flat Side 60° Drop (Primary only)

4.) Corner 60° Drop (Primary only)

The MP187 cask components are analyzed for the postulated 30-foot oblique drop condition using finite element methods. Both top and bottom end oblique drop impacts are considered and the most limiting conditions are evaluated. The following analyses are performed to demonstrate the structural adequacy of the cask for each of the 30-foot oblique drop conditions:

1. Determine the cask stresses at the 52 cask stress points (Figure 2.7.1-1) for the oblique drop equivalent static g-loads. The cask stresses are determined using the half symmetry three dimensional cask finite element model described in Section 2.10.2.1.3.

2. Determine the stresses in the top closure bolts due to the oblique drop conditions, taking no credit for support provided by the top end impact limiter.

3. Determine the stresses in the bottom closure bolts due to the oblique drop conditions, taking no credit for support provided by the bottom end impact limiter.

As shown in Section 2.7.1.4.1, the drop loads resulting from the flatside impacts bound those due to the corner impacts due to the unique shape of the MP187 impact limiters. Since the section properties of the cask do not vary with azimuth orientation, the stresses in the cask body will be highest for the flatside oblique drop conditions. Therefore, the oblique drop stress analyses are performed for the flatside oblique drops. Stress analyses are performed for both hot and cold conditions for each flatside oblique drop orientation. The highest drop loads result from the cold ambient condition. The stress allowables used for each flatside oblique drop stress analysis are based on the maximum design temperature of 300°F, irrespective of the thermal condition.

2.7.1.4.1 Cask Oblique Drop Analysis

2.7.1.4.1.1 Flatside 30° Primary Impact Drop Analysis

As shown in Table 2.7.1-2, the equivalent static g-loads for the flatside 30° primary impact under hot and cold conditions are 25.4g and 38.6g, respectively. These bound the hot and cold corner 30° primary impact equivalent static g-loads, which are 19.8g and 23.1g, respectively. The stainless steel and lead material properties used for the cask model are based on the cask temperatures resulting from the hot ambient condition.

In the event of a 30-foot flatside 30° primary impact, the cask is supported by the impact limiter at the end of the impact along the lower surface of the cask structural shell outside the region of the neutron shield. The cask is loaded by its self weight, the weight of the DSC, and the weight of the secondary impact limiter. Figure 2.7.1-13 shows a free body diagram of the cask for the 30-foot flatside 30° primary impact condition.

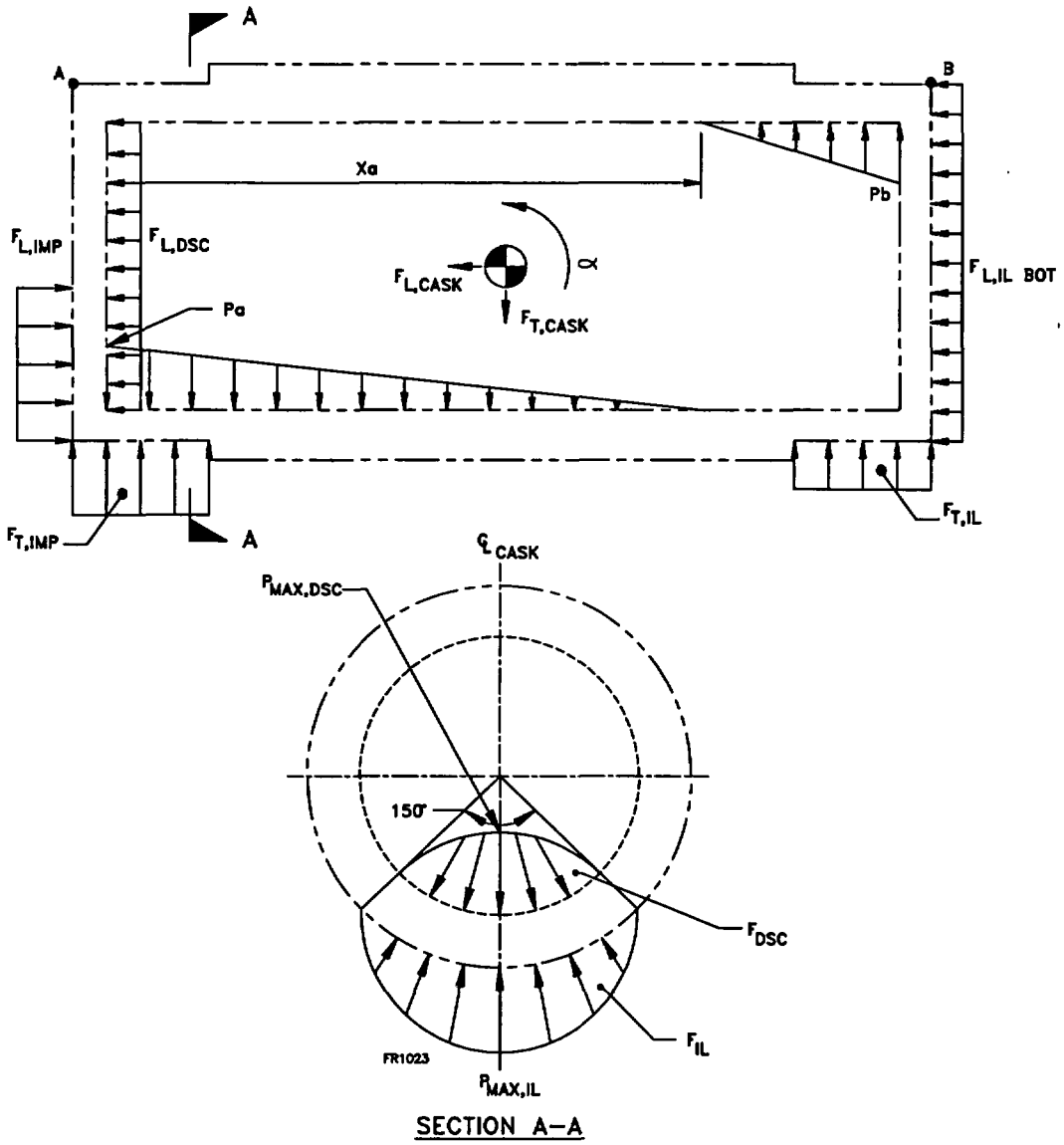

Figure 2.7.1-13
Cask Free Body Diagram for 30-Foot Flatside 30° Primary Impact

The cask 30-foot flatside 30° primary impact stress analysis is performed using the half symmetry three dimensional finite element model described in Section 2.10.2.1.3. The cask loads due to the 30-foot flatside 30° primary impact drop include the DSC inertial load, the cask inertial load, the inertial load of the secondary impact limiter, and the primary impact reaction load. The equivalent static package drop loads applied to the model are calculated as follows:

a_t = 28.5g, Peak tangential acceleration at package C.G.

a_l = 15.3g, Peak longitudinal acceleration at package C.G.

α = 184 rad/s^2, Peak angular acceleration at packag C.G.

DLF = 1.19, Maximum of tangential and longitudinal DLFs, conservatively applied to all peak rigid body loads

G_t = Equivalent static tangential acceleration at package C.G.

= 28.5g x 1.19

= 33.9g (a bounding value of 35.38g is used in the analysis)

G_l = Equivalent static longitudinal acceleration at package C.G.

= 15.3g x 1.19

= 18.2g (a bounding value of 18.97g is used in the analysis)

A = Equivalent static angular acceleration

= 184 x 1.19

= 219 rad/s^2

The mass properties of the various package components used for the flatside 30° primary impact evaluation are:

W_{PKG} = 256,600 lb., Weight of package corresponding to cold drop conditions

I_{PKG} = 3.57 x 10^6 lb-in-s^2, Package moment of inertia corresponding to cold drop

W_{CASK} = 154,600 lb., Weight of cask finite element model

I_{CASK} = 1.822 x 10^6 lb-in-s^2, Moment of inertia of cask from ANSYS model

W_{IL} = 15,800 lb., Weight of each impact limiter

I_{IL} = Moment of inertia of impact limiter about package C.G.

= $[4.48 \times 10^7 + (15{,}800)(201.5 \text{ in.}/2 + 1.54 \text{ in.})^2]/386.4$

$= 5.438 \times 10^5$ lb-in-s^2

W_{DSC} = Adjusted weight of DSC to preserve package weight

$= 256.6 - 2(15.8) - 154.6$

$= 70.4$ kips

I_{DSC} = DSC moment of inertia adjusted to preserve package M.O.I.

$= I_{PKG} - I_{CASK} - 2I_{IL}$

$= 6.605 \times 10^5$ lb-in-s^2

The cask loads from the DSC and the impact limiters in the tangential direction are assumed to have cosine distributions, as shown in Figure 2.7.1-13, spread over a 75 degree half angle of contact between the DSC and cask inner surface, and the impact limiters and cask outer surface, respectively. The angle of contact between the impact limiters and cask outer surface is dependent upon the crush area of the impact limiters. For the flatside 30° primary impact condition, the impact limiter crush area is larger than the projected area of the cask onto the impact limiter. Thus, the resulting contact angle will be close to 180 degrees. Therefore, the assumed contact angle of 150 degrees (i.e. 75 degree half angle of contact) is conservative. The pressure load acting on the inner surface of the cask due to the DSC inertial load in the tangential direction is calculated assuming a triangular distribution over the length of the cask cavity (L = 187 inches) and a cosine distribution around the circumference. The tangential load distribution from the DSC shown in Figure 2.7.1-13 is equal to the uniform line load due to the linear tangential acceleration, a_t, and the triangular line load due to the angular acceleration, α, of the package. The magnitude of the line load at the primary impact end, P_a, and the end opposite the primary impact, P_b, shown in Figure 2.7.1-13, are calculated as follows:

$P_a = (W_{DSC})(G_t)/L_{DSC} + 6(I_{DSC})(A)/L_{DSC}^2$

$= (70{,}400)(35.38)/187 + 6(6.605 \times 10^5)(220)/(187)^2$

$= 38{,}252$ lb/in.

$P_b = (W_{DSC})(G_t)/L_{DSC} - 6(I_{DSC})(A)/L_{DSC}^2$

$= \quad (70{,}400)(35.38)/187 - 6(6.605 \times 10^5)(220)/(187)^2$

$= \quad -11{,}613$ lb/in. (negative means acting upward)

The distance x_a shown in Figure 2.7.1-13 is calculated as follows:

$x_a = |Pa| \times L_{DSC}/(|P_a| + |P_b|)$

$= 143.45$ in.

The circumferential pressure distribution from the DSC inertial load is determined using the formula derived in Section 2.10.2.1.3.1, as follows:

$$P_i = \frac{P_x}{R}\left[\frac{\sin\left(\frac{\pi}{2}+\theta\right)}{\left(\frac{\pi}{2\theta}\right)+1} + \frac{\sin\left(\frac{\pi}{2}-\theta\right)}{\left(\frac{\pi}{2\theta}\right)-1}\right]^{-1} \cos\left(\frac{\pi\theta_i}{2\theta}\right)$$

where;

P_x = Line load at distance x from impact end of cask cavity (x varies between 0 in. and 187 in.)

$= |P_a - (P_a x)/x_a|$

$= \left|38{,}252\left(1-\frac{x}{143.45}\right)\right|$

R = 34.0 in., Radius of cask cavity

θ = 75° (1.309 radians), Half angle of contact

The resulting pressure distribution around the circumference of the cask inner shell is summarized below:

For distance x between x = 0 inches. and $x = x_a = 143.45$ inches

Circumferential Location	Pressure Load (psi)
0°	0.0208 x P_x
10°	0.0204 x P_x
20°	0.0190 x P_x
30°	0.0169 x P_x
45°	0.0122 x P_x
60°	0.0064 x P_x
75°	0

For distance x between $x = x_a = 143.45$ inches and $x = L_{DSC} = 187$ inches

Circumferential Location	Pressure Load (psi)
180°	0.0208 x P_x
165°	0.0198x P_x
150°	0.0169 x P_x
135°	0.0122 x P_x
120°	0.0064 x P_x
105°	0

The longitudinal load from the DSC inertia load, $F_{L,DSC}$, due to the longitudinal acceleration, G_L, is modeled as a uniform pressure acting on the inner surface of the cask impact end. The longitudinal pressure load is calculated as follows:

$$q_{L,DSC} = F_{L,DSC}/A$$

where;

$F_{L,DSC}$ = $W_{DSC}G_L$, Longitudinal inertia force of DSC

= (70,400)(18.97)

= 1,335,000 lb.

$A = \pi(34)^2$ Area of cask end inner surface

$= 3{,}632 \text{ in}^2$

Therefore,

$q_{L,DSC} = 1{,}335{,}000/3{,}632 = 367.8$ psi

The loading on the outer surface of the cask due to the impact limiter inertial load for the end opposite the impact acts in both the tangential and longitudinal directions. The longitudinal load, $F_{L,IL}$, is modeled as a uniform pressure acting on the outer surface of the cask end. The longitudinal pressure load is calculated as follows:

$q_{L,IL} = F_{L,IL}/A$

where;

$F_{L,IL} = W_{IL}G_L$, Longitudinal inertial force of impact limiter opposite impact end

$= (15{,}800)(18.97)$

$= 299{,}700$ lb.

$A = \pi(41.75)^2$, Area of cask end

$= 5{,}476 \text{ in}^2$

Therefore,

$q_{L,IL} = 292{,}700/5{,}476$

$= 54.7$ psi

The tangential component of the impact limiter inertial load, $F_{T,IL}$, is calculated as follows:

$F_{T,IL} = W_{IL}G_T - I_{IL}\alpha/e$

where;

$$e = (L_{CASK} - L_{IL})/2 \quad \text{, moment arm}$$

$$= 84.75 \text{ in.}$$

Therefore,

$$F_{T,IL} = (15{,}800)(35.38) - (5.438 \times 10^5)(220)/84.75$$

$$= -8.526 \times 10^5 \text{ lb. (negative means acting upward)}$$

The tangential load, $F_{T,IL}$, is assumed to be uniform along the length of the 32 inch overhang region and vary with a cosine distribution around the circumference of the cask (R = 41.75 inches). The resulting cosine pressure load distribution is calculated as discussed above, assuming a 75 degree half angle of contact between the impact limiter and cask outer surface, and summarized below:

Circumferential Location	Pressure Load (psi)
0°	452
10°	442
20°	413
30°	366
45°	266
60°	140
75°	0

The impact loads are reacted by the impact limiter at the primary impact end of the cask. The longitudinal component of the impact reaction load, $F_{L,IMP}$, is calculated based on the laws of static equilibrium, as follows:

$$F_{L,IMP} = [W_{CASK} + W_{DSC} + W_{IL}](G_L)$$

$$= [154{,}600 + 70{,}400 + 15{,}800](18.97)$$

$= \quad 4.568 \times 10^6$ lb.

The longitudinal impact reaction load is applied as a uniform pressure load to the outer surface of the cask end. The magnitude of the longitudinal impact pressure load is:

$q_{L,IMP} = \quad 4.568 \times 10^6/5{,}476$

$= \quad 834.2$ psi

The tangential impact reaction load is calculated based on the laws of static equilibrium and yields:

$F_{T,IMP} = \quad 7.110 \times 10^6$ lb.

The loading on the outer surface of the cask due to the tangential impact reaction load is assumed to be uniform along the length of the 32 inch overhang region and vary with a cosine distribution around the circumference of the cask (R = 41.75 inches). The resulting cosine pressure load distribution is calculated as discussed above, assuming a 75 degree half angle of contact between the impact limiter and cask outer surface, and summarized below:

Circumferential Location	Pressure Load (psi)
0°	3,770
10°	3,688
20°	3,444
30°	3,050
45°	2,216
60°	1,165
75°	0

In addition to the applied pressure loads from the DSC, impact limiter opposite the end of impact, and impact reaction, linear accelerations of 35.38g and 18.97g in the tangential and longitudinal directions, respectively, and an angular acceleration of 220 radians per second are

applied to the cask model to account for the cask inertial load. The model is pinned at the node points A and B, Figure 2.7.1-13, to prevent rigid body motion. The total tangential reaction load at these nodes for the 30-foot flatside 30° primary impact condition is 6,852 pounds due to a slight unbalance in the applied inertial loads and reaction loads. The load unbalance represents 0.1% of the total impact load, which is considered negligable.

The cask stress components, principal stresses, and stress intensities at the 52 stress points, Figure 2.7.1-1, due to the 30-foot flatside 30° primary impact drop load are summarized in Table 2.7.1-43 through Table 2.7.1-52. The maximum primary membrane stress intensity in the cask due to the 30-foot flatside 30° primary impact drop, occuring in the cask outer shell at the 45 degree azimuth near the ends of the neutron shield (stress points 29 and 30) is 19.5 ksi. The allowable accident condition primary membrane stress intensity at 300°F is 46.2 ksi for SA-240, Type 304 stainless steel. Therefore, the minimum margin of safety in the cask for primary membrane stress intenstiy due to the 30-foot flatside 30° primary impact drop is:

$$\text{M.S.} = (46.2/19.5) - 1$$

$$= +1.37$$

The maximum membrane plus bending stress intensity in the cask due to the 30-foot flatside 30° primary impact drop, occuring on the 0 degree azimuth at the junction of the outer shell and top flange (stress point 27), is 32.5 ksi. The allowable accident condition membrane plus bending stress intensity in the cask outer shell at the design temperature of 300°F is limited to 66.0 ksi. Therefore, the minimum margin of safety in the cask for membrane plus bending stress intensity due to the 30-foot flatside 30° primary impact drop is:

$$\text{M.S.} = (66.0/32.5) - 1$$

$$= +1.03$$

Therefore, the cask body meets the stress acceptance criteria for the 30-foot flatside 30° primary impact drop condition. The 30-foot flatside 30° primary impact drop stresses are combined with

stresses due to other loading conditions in accordance with Regulatory Guide 7.8 [2.3]. The accident condition cask load combination evaluation is presented in Section 2.7.8.1.

Table 2.7.1-43
Cask 30-Foot 30° Primary Impact Drop Membrane Shell Stresses Summary, 0° Azimuth

Cask Component	Stress Point	Node Number	Stress Components (ksi)						Principal Stresses (ksi)			SI (ksi)
			SX	SY	SZ	SXY	SYZ	SXZ	S1	S2	S3	
Top Cover	1	730	-0.29	-0.36	-0.03	-0.26	-0.16	-0.30	0.17	-0.11	-0.74	0.91
	2	771	-0.29	-0.36	-0.03	-0.26	-0.16	-0.30	0.17	-0.11	-0.74	0.91
	3	738	-5.43	-0.60	-1.24	0.87	-0.04	-0.05	-0.44	-1.25	-5.58	5.14
	4	779	-5.43	-0.60	-1.24	0.87	-0.04	-0.05	-0.44	-1.25	-5.58	5.14
	5	746	-2.93	-6.48	-3.99	1.39	0.08	-0.34	-2.40	-4.04	-6.97	4.57
	6	786	-2.93	-6.48	-3.99	1.39	0.08	-0.34	-2.40	-4.04	-6.97	4.57
Top Flange	7	711	-13.03	2.17	-8.00	-1.62	0.12	0.29	2.35	-7.98	-13.22	15.57
	8	713	-13.03	2.17	-8.00	-1.62	0.12	0.29	2.35	-7.98	-13.22	15.57
Inner Shell	9	672	-1.02	-1.96	-7.34	-0.15	0.45	-0.77	-0.89	-1.96	-7.46	6.58
	10	674	-1.02	-1.96	-7.34	-0.15	0.45	-0.77	-0.89	-1.96	-7.46	6.58
	11	654	-0.93	-2.81	-10.87	0.07	-0.09	-0.82	-0.86	-2.81	-10.93	10.08
	12	656	-0.93	-2.81	-10.87	0.07	-0.09	-0.82	-0.86	-2.81	-10.93	10.08
	13	574	-0.84	-1.00	-9.72	-0.23	-0.74	-0.78	-0.67	-1.04	-9.85	9.19
	14	576	-0.84	-1.00	-9.72	-0.23	-0.74	-0.78	-0.67	-1.04	-9.85	9.19
	15	521	-0.46	3.38	4.07	0.02	-0.72	0.41	4.55	2.94	-0.50	5.05
	16	522	-0.46	3.38	4.07	0.02	-0.72	0.41	4.55	2.94	-0.50	5.05
	17	371	-0.19	7.78	3.27	0.00	0.13	0.31	7.78	3.29	-0.22	8.00
	18	372	-0.19	7.78	3.27	0.00	0.13	0.31	7.78	3.29	-0.22	8.00
	19	221	0.06	2.39	2.12	0.01	0.38	0.18	2.66	1.86	0.04	2.62
	20	222	0.06	2.39	2.12	0.01	0.38	0.18	2.66	1.86	0.04	2.62
	21	161	0.03	0.31	0.54	0.04	0.27	0.05	0.72	0.13	0.03	0.69
	22	162	0.03	0.31	0.54	0.04	0.27	0.05	0.72	0.13	0.03	0.69
	23	62	-0.02	-0.38	-0.23	0.02	-0.08	-0.01	-0.02	-0.20	-0.41	0.39
	24	64	-0.02	-0.38	-0.23	0.02	-0.08	-0.01	-0.02	-0.20	-0.41	0.39
	25	54	-1.48	-0.18	-1.22	-0.03	-0.02	0.02	-0.18	-1.21	-1.48	1.30
	26	56	-1.48	-0.18	-1.22	-0.03	-0.02	0.02	-0.18	-1.21	-1.48	1.30
Outer Shell	27	680	-4.56	-6.54	-12.04	4.99	0.02	-0.68	-0.44	-10.50	-12.19	11.75
	28	682	-4.56	-6.54	-12.04	4.99	0.02	-0.68	-0.44	-10.50	-12.19	11.75
	29	578	-1.49	-4.09	-12.07	-2.57	-1.03	-0.94	0.09	-5.39	-12.35	12.45
	30	580	-1.49	-4.09	-12.07	-2.57	-1.03	-0.94	0.09	-5.39	-12.35	12.45
	31	525	-0.24	1.89	11.99	0.35	-1.22	1.09	12.22	1.84	-0.43	12.65
	32	526	-0.24	1.89	11.99	0.35	-1.22	1.09	12.22	1.84	-0.43	12.65
	33	375	-0.12	8.80	4.41	0.01	0.09	0.41	8.80	4.44	-0.16	8.96
	34	376	-0.12	8.80	4.41	0.01	0.09	0.41	8.80	4.44	-0.16	8.96
	35	225	0.02	3.65	-0.90	0.00	0.48	-0.07	3.70	0.03	-0.95	4.66
	36	226	0.02	3.65	-0.90	0.00	0.48	-0.07	3.70	0.03	-0.95	4.66
	37	165	-0.11	1.17	-5.09	0.33	0.40	-0.43	1.26	-0.13	-5.15	6.41
	38	167	-0.11	1.17	-5.09	0.33	0.40	-0.43	1.26	-0.13	-5.15	6.41
	39	73	-0.77	-0.49	-1.89	-1.12	0.17	-0.08	0.51	-1.74	-1.92	2.43
	40	75	-0.77	-0.49	-1.89	-1.12	0.17	-0.08	0.51	-1.74	-1.92	2.43
Bottom Cover	41	54	-0.67	-0.01	-1.22	-0.20	0.00	-0.05	0.05	-0.72	-1.22	1.27
	42	21	-0.67	-0.01	-1.22	-0.20	0.00	-0.05	0.05	-0.72	-1.22	1.27
	43	51	-0.58	-0.03	-0.86	-0.18	0.01	-0.04	0.02	-0.63	-0.87	0.89
	44	18	-0.58	-0.03	-0.86	-0.18	0.01	-0.04	0.02	-0.63	-0.87	0.89
	45	48	-0.08	-0.91	0.11	-0.07	-0.02	0.00	0.11	-0.07	-0.92	1.03
	46	10	-0.08	-0.91	0.11	-0.07	-0.02	0.00	0.11	-0.07	-0.92	1.03
Ram Access Cover Plate	47	12	-0.78	0.43	-0.49	-0.22	0.04	-0.02	0.47	-0.50	-0.81	1.29
	48	4	-0.78	0.43	-0.49	-0.22	0.04	-0.02	0.47	-0.50	-0.81	1.29
	49	11	-0.67	-0.10	-0.70	-0.02	-0.02	-0.05	-0.10	-0.63	-0.74	0.64
	50	3	-0.67	-0.10	-0.70	-0.02	-0.02	-0.05	-0.10	-0.63	-0.74	0.64
	51	13	-0.04	-0.12	-0.47	0.08	0.04	-0.06	0.01	-0.16	-0.49	0.50
	52	1	-0.04	-0.12	-0.47	0.08	0.04	-0.06	0.01	-0.16	-0.49	0.50

Table 2.7.1-44
Cask 30-Foot 30° Primary Impact Drop Membrane Stress Summary, 45° Azimuth

Cask Component	Stress Point	Node Number	Stress Components (ksi)						Principal Stresses (ksi)			SI (ksi)
			SX	SY	SZ	SXY	SYZ	SXZ	S1	S2	S3	
Top Cover	1	4730	0.14	-0.36	-0.47	-0.08	-0.30	-0.13	0.17	-0.11	-0.74	0.91
	2	4771	0.14	-0.36	-0.47	-0.08	-0.30	-0.13	0.17	-0.11	-0.74	0.91
	3	4738	-2.41	-0.60	-3.35	0.63	0.26	-2.20	-0.25	-0.90	-5.20	4.95
	4	4779	-2.41	-0.60	-3.35	0.63	0.26	-2.20	-0.25	-0.90	-5.20	4.95
	5	4746	-1.26	-3.91	-5.26	1.10	0.93	-1.36	-0.64	-3.47	-6.32	5.68
	6	4786	-1.26	-3.91	-5.26	1.10	0.93	-1.36	-0.64	-3.47	-6.32	5.68
Top Flange	7	4711	-7.06	1.01	-6.01	-0.98	-0.59	0.23	1.18	-6.04	-7.20	8.38
	8	4713	-7.06	1.01	-6.01	-0.98	-0.59	0.23	1.18	-6.04	-7.20	8.38
Inner Shell	9	4672	-0.21	-1.94	-5.53	-0.15	0.63	-1.06	0.03	-1.89	-5.82	5.85
	10	4674	-0.21	-1.94	-5.53	-0.15	0.63	-1.06	0.03	-1.89	-5.82	5.85
	11	4654	-0.76	-1.77	-7.66	0.32	-0.84	-0.10	-0.65	-1.76	-7.78	7.13
	12	4656	-0.76	-1.77	-7.66	0.32	-0.84	-0.10	-0.65	-1.76	-7.78	7.13
	13	4574	-0.68	-0.14	-6.43	-0.13	-5.50	0.09	3.06	-0.69	-9.63	12.68
	14	4576	-0.68	-0.14	-6.43	-0.13	-5.50	0.09	3.06	-0.69	-9.63	12.68
	15	4521	-0.21	1.53	1.87	0.03	-4.89	-0.05	6.59	-0.21	-3.20	9.79
	16	4522	-0.21	1.53	1.87	0.03	-4.89	-0.05	6.59	-0.21	-3.20	9.79
	17	4371	0.00	2.90	2.16	0.00	0.87	-0.04	3.48	1.59	0.00	3.47
	18	4372	0.00	2.90	2.16	0.00	0.87	-0.04	3.48	1.59	0.00	3.47
	19	4221	0.10	1.04	2.37	-0.01	2.62	0.00	4.40	0.10	-0.99	5.40
	20	4222	0.10	1.04	2.37	-0.01	2.62	0.00	4.40	0.10	-0.99	5.40
	21	4161	0.05	0.21	1.79	0.02	1.96	0.03	3.11	0.05	-1.11	4.22
	22	4162	0.05	0.21	1.79	0.02	1.96	0.03	3.11	0.05	-1.11	4.22
	23	4062	0.04	-0.23	0.94	0.13	-0.30	0.05	1.01	0.09	-0.35	1.36
	24	4064	0.04	-0.23	0.94	0.13	-0.30	0.05	1.01	0.09	-0.35	1.36
	25	4054	-0.97	-0.15	-0.52	0.01	-0.19	0.21	-0.07	-0.52	-1.06	0.99
	26	4056	-0.97	-0.15	-0.52	0.01	-0.19	0.21	-0.07	-0.52	-1.06	0.99
Outer Shell	27	4680	-2.62	-2.74	-7.02	2.38	2.08	-0.24	-0.05	-4.21	-8.12	8.07
	28	4682	-2.62	-2.74	-7.02	2.38	2.08	-0.24	-0.05	-4.21	-8.12	8.07
	29	4578	-1.24	-0.21	-5.18	-1.46	-9.28	0.09	7.09	-1.35	-12.36	19.45
	30	4580	-1.24	-0.21	-5.18	-1.46	-9.28	0.09	7.09	-1.35	-12.36	19.45
	31	4525	-0.12	1.97	7.94	0.26	-7.86	-0.07	13.36	-0.12	-3.46	16.82
	32	4526	-0.12	1.97	7.94	0.26	-7.86	-0.07	13.36	-0.12	-3.46	16.82
	33	4375	0.01	3.61	2.77	0.00	0.65	-0.01	3.96	2.42	0.01	3.95
	34	4376	0.01	3.61	2.77	0.00	0.65	-0.01	3.96	2.42	0.01	3.95
	35	4225	0.03	1.77	-1.09	-0.03	3.33	0.01	3.96	0.03	-3.29	7.25
	36	4226	0.03	1.77	-1.09	-0.03	3.33	0.01	3.96	0.03	-3.29	7.25
	37	4165	-0.11	0.71	-3.83	0.19	3.19	0.03	2.37	-0.12	-5.47	7.83
	38	4167	-0.11	0.71	-3.83	0.19	3.19	0.03	2.37	-0.12	-5.47	7.83
	39	4073	-0.61	-0.53	-1.29	-0.90	0.87	0.15	0.52	-0.80	-2.15	2.67
	40	4075	-0.61	-0.53	-1.29	-0.90	0.87	0.15	0.52	-0.80	-2.15	2.67
Bottom Cover	41	4054	-0.40	0.11	-1.06	-0.18	-0.11	0.12	0.19	-0.44	-1.09	1.28
	42	4021	-0.40	0.11	-1.06	-0.18	-0.11	0.12	0.19	-0.44	-1.09	1.28
	43	4051	-0.35	-0.03	-0.84	-0.15	-0.07	0.00	0.03	-0.41	-0.85	0.88
	44	4018	-0.35	-0.03	-0.84	-0.15	-0.07	0.00	0.03	-0.41	-0.85	0.88
	45	4048	0.06	-0.78	0.16	-0.04	-0.03	-0.06	0.19	0.03	-0.79	0.97
	46	4010	0.06	-0.78	0.16	-0.04	-0.03	-0.06	0.19	0.03	-0.79	0.97
Ram Access Cover Plate	47	4012	-0.58	0.37	-0.79	-0.21	-0.06	-0.25	0.41	-0.44	-0.98	1.39
	48	4004	-0.58	0.37	-0.79	-0.21	-0.06	-0.25	0.41	-0.44	-0.98	1.39
	49	4011	-0.52	-0.08	-0.99	-0.06	-0.06	-0.32	-0.07	-0.36	-1.16	1.09
	50	4003	-0.52	-0.08	-0.99	-0.06	-0.06	-0.32	-0.07	-0.36	-1.16	1.09
	51	4013	-0.19	-0.12	-0.32	0.03	0.09	0.21	0.01	-0.16	-0.49	0.50
	52	4001	-0.19	-0.12	-0.32	0.03	0.09	0.21	0.01	-0.16	-0.49	0.50

Table 2.7.1-45
Cask 30-Foot 30° Primary Impact Drop Membrane Stress Summary, 90° Azimuth

Cask Component	Stress Point	Node Number	Stress Components (ksi)						Principal Stresses (ksi)			SI (ksi)
			SX	SY	SZ	SXY	SYZ	SXZ	S1	S2	S3	
Top Cover	1	7730	-0.03	-0.36	-0.29	0.16	-0.26	0.30	0.17	-0.11	-0.74	0.91
	2	7771	-0.03	-0.36	-0.29	0.16	-0.26	0.30	0.17	-0.11	-0.74	0.91
	3	7738	0.36	-0.60	-4.24	0.39	0.07	0.79	0.63	-0.73	-4.37	5.00
	4	7779	0.36	-0.60	-4.24	0.39	0.07	0.79	0.63	-0.73	-4.37	5.00
	5	7746	0.69	-1.33	-4.85	0.76	-0.32	1.38	1.20	-1.45	-5.24	6.44
	6	7786	0.69	-1.33	-4.85	0.76	-0.32	1.38	1.20	-1.45	-5.24	6.44
Top Flange	7	7711	1.08	-0.65	-1.30	0.00	-0.64	0.63	1.25	-0.33	-1.79	3.04
	8	7713	1.08	-0.65	-1.30	0.00	-0.64	0.63	1.25	-0.33	-1.79	3.04
Inner Shell	9	7672	1.65	-2.27	-1.76	-0.29	-1.60	0.06	1.69	-0.42	-3.64	5.33
	10	7674	1.65	-2.27	-1.76	-0.29	-1.60	0.06	1.69	-0.42	-3.64	5.33
	11	7654	0.06	-1.41	-2.21	0.67	-3.58	-0.09	1.96	-0.08	-5.44	7.40
	12	7656	0.06	-1.41	-2.21	0.67	-3.58	-0.09	1.96	-0.08	-5.44	7.40
	13	7574	-0.05	-1.13	-3.10	0.03	-5.58	-0.01	3.55	-0.05	-7.78	11.33
	14	7576	-0.05	-1.13	-3.10	0.03	-5.58	-0.01	3.55	-0.05	-7.78	11.33
	15	7521	-0.03	-2.76	-1.57	0.04	-4.10	-0.04	1.98	-0.03	-6.31	8.29
	16	7522	-0.03	-2.76	-1.57	0.04	-4.10	-0.04	1.98	-0.03	-6.31	8.29
	17	7371	-0.05	-4.17	0.39	0.00	0.79	-0.01	0.52	-0.05	-4.30	4.82
	18	7372	-0.05	-4.17	0.39	0.00	0.79	-0.01	0.52	-0.05	-4.30	4.82
	19	7221	0.07	-2.18	2.73	-0.01	2.63	0.01	3.87	0.07	-3.32	7.19
	20	7222	0.07	-2.18	2.73	-0.01	2.63	0.01	3.87	0.07	-3.32	7.19
	21	7161	0.12	-1.48	3.80	0.00	2.01	0.03	4.48	0.12	-2.15	6.63
	22	7162	0.12	-1.48	3.80	0.00	2.01	0.03	4.48	0.12	-2.15	6.63
	23	7062	0.17	-0.87	2.98	0.35	-0.05	0.06	2.99	0.28	-0.98	3.96
	24	7064	0.17	-0.87	2.98	0.35	-0.05	0.06	2.99	0.28	-0.98	3.96
	25	7054	-0.33	-0.33	0.81	0.10	-0.08	0.52	1.01	-0.27	-0.59	1.60
	26	7056	-0.33	-0.33	0.81	0.10	-0.08	0.52	1.01	-0.27	-0.59	1.60
Outer Shell	27	7680	0.10	0.13	0.29	-1.18	-5.20	0.64	5.70	-0.17	-5.02	10.73
	28	7682	0.10	0.13	0.29	-1.18	-5.20	0.64	5.70	-0.17	-5.02	10.73
	29	7578	-0.06	1.50	1.37	0.17	-7.58	0.11	9.01	-0.05	-6.15	15.16
	30	7580	-0.06	1.50	1.37	0.17	-7.58	0.11	9.01	-0.05	-6.15	15.16
	31	7525	0.04	-1.28	1.63	0.11	-5.74	-0.05	6.10	0.04	-5.75	11.85
	32	7526	0.04	-1.28	1.63	0.11	-5.74	-0.05	6.10	0.04	-5.75	11.85
	33	7375	-0.03	-4.13	0.11	0.00	0.77	-0.06	0.26	-0.04	-4.27	4.53
	34	7376	-0.03	-4.13	0.11	0.00	0.77	-0.06	0.26	-0.04	-4.27	4.53
	35	7225	0.01	-2.31	-1.52	-0.03	3.34	-0.01	1.45	0.01	-5.28	6.73
	36	7226	0.01	-2.31	-1.52	-0.03	3.34	-0.01	1.45	0.01	-5.28	6.73
	37	7165	0.02	-1.43	-2.43	-0.01	3.32	0.03	1.42	0.02	-5.28	6.71
	38	7167	0.02	-1.43	-2.43	-0.01	3.32	0.03	1.42	0.02	-5.28	6.71
	39	7073	-0.47	-1.15	-0.04	-0.76	2.24	0.29	1.74	-0.27	-3.13	4.86
	40	7075	-0.47	-1.15	-0.04	-0.76	2.24	0.29	1.74	-0.27	-3.13	4.86
Bottom Cover	41	7054	-0.09	0.25	-0.29	-0.19	0.00	0.54	0.46	0.16	-0.75	1.22
	42	7021	-0.09	0.25	-0.29	-0.19	0.00	0.54	0.46	0.16	-0.75	1.22
	43	7051	-0.10	-0.03	-0.43	-0.12	-0.04	0.35	0.19	-0.10	-0.65	0.84
	44	7018	-0.10	-0.03	-0.43	-0.12	-0.04	0.35	0.19	-0.10	-0.65	0.84
	45	7048	0.23	-0.76	0.46	0.01	-0.12	0.10	0.50	0.19	-0.77	1.27
	46	7010	0.23	-0.76	0.46	0.01	-0.12	0.10	0.50	0.19	-0.77	1.27
Ram Access Cover Plate	47	7012	-0.49	0.35	-1.00	-0.22	-0.07	0.09	0.41	-0.54	-1.01	1.43
	48	7004	-0.49	0.35	-1.00	-0.22	-0.07	0.09	0.41	-0.54	-1.01	1.43
	49	7011	-0.72	-0.10	-1.26	-0.13	-0.04	0.05	-0.07	-0.75	-1.27	1.19
	50	7003	-0.72	-0.10	-1.26	-0.13	-0.04	0.05	-0.07	-0.75	-1.27	1.19
	51	7013	-0.47	-0.12	-0.04	-0.04	0.08	0.06	0.01	-0.16	-0.49	0.50
	52	7001	-0.47	-0.12	-0.04	-0.04	0.08	0.06	0.01	-0.16	-0.49	0.50

Table 2.7.1-46
Cask 30-Foot 30° Primary Impact Drop Membrane Stress Summary, 135° Azimuth

Cask Component	Stress Point	Node Number	Stress Components (ksi)						Principal Stresses (ksi)			SI (ksi)
			SX	SY	SZ	SXY	SYZ	SXZ	S1	S2	S3	
Top Cover	1	10730	-0.47	-0.36	0.14	0.30	-0.08	0.13	0.17	-0.11	-0.74	0.91
	2	10771	-0.47	-0.36	0.14	0.30	-0.08	0.13	0.17	-0.11	-0.74	0.91
	3	10738	-1.71	-0.61	-0.54	0.51	-0.08	2.29	1.28	-0.57	-3.55	4.83
	4	10779	-1.71	-0.61	-0.54	0.51	-0.08	2.29	1.28	-0.57	-3.55	4.83
	5	10746	-0.26	-3.22	-0.38	0.99	-0.59	2.06	1.76	-1.62	-4.00	5.76
	6	10786	-0.26	-3.22	-0.38	0.99	-0.59	2.06	1.76	-1.62	-4.00	5.76
Top Flange	7	10711	0.27	-0.15	1.98	-0.15	-1.02	0.58	2.55	0.13	-0.57	3.11
	8	10713	0.27	-0.15	1.98	-0.15	-1.02	0.58	2.55	0.13	-0.57	3.11
Inner Shell	9	10672	2.10	-3.17	4.03	-0.22	-2.05	-0.13	4.57	2.11	-3.72	8.30
	10	10674	2.10	-3.17	4.03	-0.22	-2.05	-0.13	4.57	2.11	-3.72	8.30
	11	10654	0.20	-2.86	2.03	0.81	-3.19	-0.22	3.70	0.19	-4.52	8.22
	12	10656	0.20	-2.86	2.03	0.81	-3.19	-0.22	3.70	0.19	-4.52	8.22
	13	10574	-0.17	-5.03	-4.36	0.01	-3.03	-0.01	-0.17	-1.65	-7.74	7.58
	14	10576	-0.17	-5.03	-4.36	0.01	-3.03	-0.01	-0.17	-1.65	-7.74	7.58
	15	10521	-0.14	-6.21	-3.46	0.01	-1.97	-0.02	-0.14	-2.44	-7.23	7.09
	16	10522	-0.14	-6.21	-3.46	0.01	-1.97	-0.02	-0.14	-2.44	-7.23	7.09
	17	10371	0.03	-6.95	-0.78	0.00	0.47	-0.01	0.03	-0.75	-6.98	7.01
	18	10372	0.03	-6.95	-0.78	0.00	0.47	-0.01	0.03	-0.75	-6.98	7.01
	19	10221	0.12	-4.65	2.84	-0.01	1.46	0.01	3.11	0.12	-4.93	8.04
	20	10222	0.12	-4.65	2.84	-0.01	1.46	0.01	3.11	0.12	-4.93	8.04
	21	10161	0.16	-3.56	5.42	0.00	0.94	0.03	5.51	0.16	-3.66	9.17
	22	10162	0.16	-3.56	5.42	0.00	0.94	0.03	5.51	0.16	-3.66	9.17
	23	10062	0.08	-2.41	3.86	0.85	-0.60	0.02	3.92	0.34	-2.73	6.65
	24	10064	0.08	-2.41	3.86	0.85	-0.60	0.02	3.92	0.34	-2.73	6.65
	25	10054	-0.30	-0.94	1.36	0.33	-0.11	0.17	1.38	-0.17	-1.09	2.47
	26	10056	-0.30	-0.94	1.36	0.33	-0.11	0.17	1.38	-0.17	-1.09	2.47
Outer Shell	27	10680	-0.62	-3.77	2.77	0.75	-5.82	0.66	6.18	-0.48	-7.32	13.50
	28	10682	-0.62	-3.77	2.77	0.75	-5.82	0.66	6.18	-0.48	-7.32	13.50
	29	10578	0.02	-5.91	-0.97	-0.03	-4.08	-0.05	1.34	0.02	-8.21	9.55
	30	10580	0.02	-5.91	-0.97	-0.03	-4.08	-0.05	1.34	0.02	-8.21	9.55
	31	10525	-0.01	-7.00	-1.16	-0.01	-2.30	-0.04	-0.01	-0.36	-7.79	7.79
	32	10526	-0.01	-7.00	-1.16	-0.01	-2.30	-0.04	-0.01	-0.36	-7.79	7.79
	33	10375	0.05	-7.56	-1.41	0.00	0.69	-0.01	0.05	-1.34	-7.64	7.69
	34	10376	0.05	-7.56	-1.41	0.00	0.69	-0.01	0.05	-1.34	-7.64	7.69
	35	10225	0.04	-4.93	-1.77	-0.01	1.80	-0.01	0.04	-0.96	-5.74	5.78
	36	10226	0.04	-4.93	-1.77	-0.01	1.80	-0.01	0.04	-0.96	-5.74	5.78
	37	10165	0.05	-3.59	-2.10	0.00	1.74	-0.01	0.05	-0.95	-4.74	4.78
	38	10167	0.05	-3.59	-2.10	0.00	1.74	-0.01	0.05	-0.95	-4.74	4.78
	39	10073	-0.67	-1.85	0.75	-1.13	1.62	0.18	1.59	-0.23	-3.12	4.71
	40	10075	-0.67	-1.85	0.75	-1.13	1.62	0.18	1.59	-0.23	-3.12	4.71
Bottom Cover	41	10054	-0.05	0.59	0.78	-0.29	-0.06	0.39	1.00	0.59	-0.28	1.28
	42	10021	-0.05	0.59	0.78	-0.29	-0.06	0.39	1.00	0.59	-0.28	1.28
	43	10051	-0.10	-0.03	0.25	-0.12	-0.02	0.34	0.47	-0.02	-0.34	0.81
	44	10018	-0.10	-0.03	0.25	-0.12	-0.02	0.34	0.47	-0.02	-0.34	0.81
	45	10048	0.29	-1.04	0.88	0.04	-0.13	0.17	0.94	0.25	-1.05	1.99
	46	10010	0.29	-1.04	0.88	0.04	-0.13	0.17	0.94	0.25	-1.05	1.99
Ram Access Cover Plate	47	10012	-0.58	0.55	-0.53	-0.24	-0.04	0.34	0.61	-0.25	-0.91	1.52
	48	10004	-0.58	0.55	-0.53	-0.24	-0.04	0.34	0.61	-0.25	-0.91	1.52
	49	10011	-0.52	-0.17	-0.91	-0.03	0.02	0.38	-0.17	-0.29	-1.14	0.97
	50	10003	-0.52	-0.17	-0.91	-0.03	0.02	0.38	-0.17	-0.29	-1.14	0.97
	51	10013	-0.32	-0.12	-0.19	-0.09	0.03	-0.21	0.01	-0.16	-0.49	0.50
	52	10001	-0.32	-0.12	-0.19	-0.09	0.03	-0.21	0.01	-0.16	-0.49	0.50

Table 2.7.1-47
Cask 30-Foot 30° Primary Impact Drop Membrane Stress Summary, 180° Azimuth

Cask Component	Stress Point	Node Number	Stress Components (ksi)						Principal Stresses (ksi)			SI (ksi)
			SX	SY	SZ	SXY	SYZ	SXZ	S1	S2	S3	
Top Cover	1	13730	-0.29	-0.36	-0.03	0.26	0.16	-0.30	0.17	-0.11	-0.74	0.91
	2	13771	-0.29	-0.36	-0.03	0.26	0.16	-0.30	0.17	-0.11	-0.74	0.91
	3	13738	-2.92	-0.60	1.47	0.59	0.07	-0.10	1.47	-0.46	-3.06	4.54
	4	13779	-2.92	-0.60	1.47	0.59	0.07	-0.10	1.47	-0.46	-3.06	4.54
	5	13746	-0.18	-3.90	1.73	0.94	-0.08	0.05	1.73	0.04	-4.12	5.85
	6	13786	-0.18	-3.90	1.73	0.94	-0.08	0.05	1.73	0.04	-4.12	5.85
Top Flange	7	13711	2.62	-0.98	4.54	-0.04	-0.31	-0.05	4.56	2.62	-1.00	5.56
	8	13713	2.62	-0.98	4.54	-0.04	-0.31	-0.05	4.56	2.62	-1.00	5.56
Inner Shell	9	13672	1.75	-3.23	4.27	-0.20	-0.58	-0.29	4.34	1.73	-3.29	7.63
	10	13674	1.75	-3.23	4.27	-0.20	-0.58	-0.29	4.34	1.73	-3.29	7.63
	11	13654	0.16	-3.51	1.75	0.61	-0.39	-0.26	1.83	0.20	-3.63	5.46
	12	13656	0.16	-3.51	1.75	0.61	-0.39	-0.26	1.83	0.20	-3.63	5.46
	13	13574	-0.14	-5.83	-4.90	0.01	-0.52	0.63	-0.06	-4.74	-6.07	6.02
	14	13576	-0.14	-5.83	-4.90	0.01	-0.52	0.63	-0.06	-4.74	-6.07	6.02
	15	13521	-0.11	-7.27	-4.13	0.02	-0.36	0.53	-0.04	-4.16	-7.31	7.27
	16	13522	-0.11	-7.27	-4.13	0.02	-0.36	0.53	-0.04	-4.16	-7.31	7.27
	17	13371	-0.07	-7.95	-1.12	-0.01	0.10	0.15	-0.05	-1.14	-7.95	7.91
	18	13372	-0.07	-7.95	-1.12	-0.01	0.10	0.15	-0.05	-1.14	-7.95	7.91
	19	13221	0.08	-5.13	2.88	-0.02	0.25	-0.37	2.93	0.03	-5.14	8.07
	20	13222	0.08	-5.13	2.88	-0.02	0.25	-0.37	2.93	0.03	-5.14	8.07
	21	13161	0.08	-4.14	6.36	0.00	0.10	-0.84	6.47	-0.03	-4.14	10.61
	22	13162	0.08	-4.14	6.36	0.00	0.10	-0.84	6.47	-0.03	-4.14	10.61
	23	13062	-0.12	-4.41	4.08	1.31	-0.09	-0.49	4.14	0.19	-4.78	8.91
	24	13064	-0.12	-4.41	4.08	1.31	-0.09	-0.49	4.14	0.19	-4.78	8.91
	25	13054	-1.02	-1.94	1.54	0.89	-0.28	0.06	1.56	-0.49	-2.50	4.06
	26	13056	-1.02	-1.94	1.54	0.89	-0.28	0.06	1.56	-0.49	-2.50	4.06
Outer Shell	27	13680	-0.68	-4.93	3.19	1.01	-0.85	-0.34	3.33	-0.52	-5.23	8.55
	28	13682	-0.68	-4.93	3.19	1.01	-0.85	-0.34	3.33	-0.52	-5.23	8.55
	29	13578	0.03	-7.66	-2.62	-0.05	-0.73	0.35	0.08	-2.56	-7.76	7.84
	30	13580	0.03	-7.66	-2.62	-0.05	-0.73	0.35	0.08	-2.56	-7.76	7.84
	31	13525	0.03	-9.13	-2.30	0.02	-0.42	0.30	0.07	-2.32	-9.15	9.22
	32	13526	0.03	-9.13	-2.30	0.02	-0.42	0.30	0.07	-2.32	-9.15	9.22
	33	13375	-0.02	-8.95	-1.78	-0.01	0.16	0.25	0.01	-1.81	-8.95	8.96
	34	13376	-0.02	-8.95	-1.78	-0.01	0.16	0.25	0.01	-1.81	-8.95	8.96
	35	13225	0.01	-5.41	-1.76	-0.02	0.30	0.24	0.04	-1.76	-5.44	5.48
	36	13226	0.01	-5.41	-1.76	-0.02	0.30	0.24	0.04	-1.76	-5.44	5.48
	37	13165	-0.01	-4.23	-1.80	0.01	0.22	0.25	0.02	-1.81	-4.25	4.27
	38	13167	-0.01	-4.23	-1.80	0.01	0.22	0.25	0.02	-1.81	-4.25	4.27
	39	13073	-0.75	-4.44	0.67	-1.08	-0.46	-0.03	0.72	-0.46	-4.77	5.48
	40	13075	-0.75	-4.44	0.67	-1.08	-0.46	-0.03	0.72	-0.46	-4.77	5.48
Bottom Cover	41	13054	-0.44	0.67	1.06	-0.26	-0.18	-0.02	1.13	0.66	-0.50	1.64
	42	13021	-0.44	0.67	1.06	-0.26	-0.18	-0.02	1.13	0.66	-0.50	1.64
	43	13051	-0.28	-0.04	0.61	-0.12	-0.01	0.00	0.61	0.01	-0.33	0.94
	44	13018	-0.28	-0.04	0.61	-0.12	-0.01	0.00	0.61	0.01	-0.33	0.94
	45	13048	0.25	-1.24	1.13	0.04	0.04	-0.05	1.13	0.25	-1.24	2.37
	46	13010	0.25	-1.24	1.13	0.04	0.04	-0.05	1.13	0.25	-1.24	2.37
Ram Access Cover Plate	47	13012	-0.74	0.67	-0.17	-0.24	-0.07	0.00	0.72	-0.18	-0.78	1.50
	48	13004	-0.74	0.67	-0.17	-0.24	-0.07	0.00	0.72	-0.18	-0.78	1.50
	49	13011	-0.65	-0.24	-0.60	0.04	0.04	0.08	-0.23	-0.56	-0.71	0.48
	50	13003	-0.65	-0.24	-0.60	0.04	0.04	0.08	-0.23	-0.56	-0.71	0.48
	51	13013	-0.04	-0.12	-0.47	-0.08	-0.04	-0.06	0.01	-0.16	-0.49	0.50
	52	13001	-0.04	-0.12	-0.47	-0.08	-0.04	-0.06	0.01	-0.16	-0.49	0.50

Table 2.7.1-48
Cask 30-Foot 30° Primary Impact Drop Membrane Plus Bending Stress Summary, 0° Azimuth

Cask Component	Stress Point	Node Number	Stress Components (ksi) SX	SY	SZ	SXY	SYZ	SXZ	Principal Stresses (ksi) S1	S2	S3	SI (ksi)
Top Cover	1	730	0.79	1.95	9.37	-0.70	-0.10	0.32	9.39	2.27	0.46	8.93
	2	771	-1.38	-2.66	-9.44	0.17	-0.21	-0.93	-1.25	-2.68	-9.55	8.30
	3	738	-2.38	-0.46	3.14	0.87	-0.04	0.08	3.15	-0.13	-2.72	5.86
	4	779	-8.47	-0.73	-5.63	0.87	-0.04	-0.19	-0.64	-5.62	-8.58	7.94
	5	746	-17.11	-7.71	-8.78	1.00	0.07	0.04	-7.60	-8.78	-17.22	9.62
	6	786	11.25	-5.26	0.80	1.77	0.08	-0.72	11.48	0.75	-5.45	16.93
Top Flange	7	711	-18.00	-18.97	-14.78	-2.79	0.19	0.04	-14.77	-15.66	-21.32	6.55
	8	713	-8.07	23.31	-1.22	-0.45	0.04	0.53	23.32	-1.18	-8.11	31.43
Inner Shell	9	672	-0.85	-2.36	-6.69	-0.38	0.62	-0.70	-0.65	-2.41	-6.84	6.20
	10	674	-1.19	-1.55	-7.99	0.09	0.27	-0.84	-1.08	-1.55	-8.10	7.03
	11	654	-0.85	-1.89	-10.20	0.17	-0.05	-0.75	-0.77	-1.92	-10.26	9.49
	12	656	-1.00	-3.72	-11.54	-0.02	-0.13	-0.88	-0.92	-3.72	-11.61	10.69
	13	574	-0.81	0.63	-9.08	-0.24	-0.82	-0.73	0.72	-0.77	-9.22	9.94
	14	576	-0.87	-2.64	-10.36	-0.23	-0.67	-0.84	-0.78	-2.59	-10.49	9.72
	15	521	-0.48	1.58	3.14	0.02	-0.78	0.33	3.48	1.27	-0.51	3.99
	16	522	-0.44	5.18	5.01	0.01	-0.67	0.49	5.79	4.44	-0.49	6.27
	17	371	-0.22	6.75	1.53	0.00	0.13	0.16	6.76	1.54	-0.23	6.99
	18	372	-0.17	8.80	5.01	0.00	0.13	0.46	8.81	5.05	-0.21	9.02
	19	221	0.05	2.17	1.38	0.00	0.41	0.12	2.35	1.21	0.04	2.30
	20	222	0.07	2.61	2.86	0.01	0.34	0.25	3.11	2.38	0.04	3.07
	21	161	0.03	0.46	0.31	0.04	0.30	0.03	0.70	0.08	0.03	0.67
	22	162	0.03	0.16	0.76	0.04	0.23	0.07	0.85	0.08	0.02	0.83
	23	62	-0.02	-1.19	-0.44	0.07	-0.08	-0.04	-0.02	-0.43	-1.20	1.18
	24	64	-0.03	0.43	-0.02	-0.04	-0.07	0.01	0.45	-0.03	-0.03	0.48
	25	54	-1.11	0.03	-0.92	-0.03	-0.03	0.01	0.03	-0.92	-1.11	1.14
	26	56	-1.85	-0.39	-1.51	-0.03	-0.02	0.03	-0.39	-1.50	-1.85	1.46
Outer Shell	27	680	-2.89	-31.94	-18.23	7.13	0.29	-1.36	-1.14	-18.30	-33.62	32.48
	28	682	-6.23	18.86	-5.84	2.84	-0.24	-0.01	19.18	-5.84	-6.55	25.74
	29	578	-1.28	0.13	-10.08	-2.58	-1.37	-0.80	2.13	-2.95	-10.41	12.54
	30	580	-1.70	-8.31	-14.05	-2.56	-0.68	-1.09	-0.77	-9.00	-14.30	13.52
	31	525	-0.29	-4.18	10.00	0.36	-1.33	0.92	10.20	-0.32	-4.35	14.55
	32	526	-0.19	7.95	13.98	0.33	-1.11	1.26	14.28	7.79	-0.32	14.60
	33	375	-0.16	7.02	1.92	0.01	0.08	0.19	7.02	1.94	-0.18	7.20
	34	376	-0.09	10.57	6.89	0.01	0.09	0.63	10.57	6.94	-0.14	10.71
	35	225	0.01	2.82	-2.23	-0.01	0.54	-0.19	2.87	0.02	-2.30	5.18
	36	226	0.04	4.49	0.43	0.00	0.42	0.04	4.53	0.40	0.03	4.50
	37	165	-0.03	1.59	-5.50	0.33	0.50	-0.48	1.68	-0.04	-5.58	7.26
	38	167	-0.19	0.74	-4.67	0.33	0.30	-0.39	0.85	-0.24	-4.73	5.58
	39	73	-0.61	-7.20	-3.74	-1.57	0.17	-0.23	-0.24	-3.76	-7.56	7.32
	40	75	-0.92	6.22	-0.04	-0.66	0.16	0.06	6.29	-0.04	-0.99	7.28
Bottom Cover	41	54	-1.43	-0.04	-1.06	-0.11	-0.02	0.02	-0.04	-1.06	-1.44	1.40
	42	21	0.10	0.02	-1.38	-0.30	0.01	-0.12	0.37	-0.23	-1.39	1.75
	43	51	-0.22	-0.02	0.15	-0.18	0.01	0.03	0.15	0.08	-0.33	0.48
	44	18	-0.95	-0.04	-1.88	-0.18	0.01	-0.11	-0.01	-0.97	-1.89	1.88
	45	48	1.03	-0.75	1.40	-0.08	0.01	0.03	1.41	1.04	-0.76	2.17
	46	10	-1.19	-1.07	-1.19	-0.05	-0.05	-0.04	-1.05	-1.15	-1.26	0.21
Ram Access Cover Plate	47	12	-0.90	0.30	-0.14	-0.04	0.04	0.00	0.30	-0.14	-0.90	1.21
	48	4	-0.65	0.56	-0.85	-0.39	0.03	-0.04	0.68	-0.76	-0.86	1.54
	49	11	-0.19	0.00	0.06	-0.02	-0.03	-0.02	0.08	-0.01	-0.19	0.27
	50	3	-1.15	-0.21	-1.46	-0.03	-0.01	-0.09	-0.20	-1.13	-1.48	1.28
	51	13	0.05	0.11	0.57	0.09	0.04	0.02	0.58	0.17	-0.01	0.59
	52	1	-0.14	-0.35	-1.51	0.08	0.05	-0.14	-0.10	-0.37	-1.53	1.43

Table 2.7.1-49
Cask 30-Foot 30° Primary Impact Drop Membrane Plus Bending Stress Summary, 45° Azimuth

Cask Component	Stress Point	Node Number	Stress Components (ksi)						Principal Stresses (ksi)			SI (ksi)
			SX	SY	SZ	SXY	SYZ	SXZ	S1	S2	S3	
Top Cover	1	4730	4.76	1.95	5.40	-0.42	-0.56	-4.29	9.39	2.27	0.46	8.93
	2	4771	-4.48	-2.66	-6.33	0.27	-0.03	4.03	-1.25	-2.68	-9.55	8.30
	3	4738	1.59	-0.46	2.76	0.63	0.26	-1.97	4.23	0.54	-0.89	5.12
	4	4779	-6.41	-0.74	-9.46	0.63	0.26	-2.42	-0.67	-5.11	-10.82	10.15
	5	4746	-8.75	-4.44	-6.72	1.01	0.67	-3.25	-4.20	-4.36	-11.34	7.15
	6	4786	6.22	-3.38	-3.81	1.20	1.20	0.53	6.42	-2.56	-4.82	11.24
Top Flange	7	4711	-9.69	-10.26	-9.72	-1.66	-0.49	0.19	-8.15	-9.83	-11.69	3.54
	8	4713	-4.44	12.29	-2.30	-0.30	-0.69	0.27	12.33	-2.30	-4.47	16.80
Inner Shell	9	4672	-0.64	-4.04	-6.28	-0.65	1.58	0.09	-0.51	-3.33	-7.12	6.61
	10	4674	0.21	0.17	-4.78	0.34	-0.33	-2.21	1.23	-0.01	-5.63	6.86
	11	4654	-0.74	-3.08	-8.02	0.19	-0.27	-0.05	-0.72	-3.08	-8.03	7.31
	12	4656	-0.77	-0.46	-7.30	0.44	-1.40	-0.14	0.07	-1.03	-7.58	7.65
	13	4574	-0.67	0.15	-6.34	-0.12	-6.59	0.04	4.25	-0.67	-10.44	14.69
	14	4576	-0.69	-0.44	-6.52	-0.13	-4.42	0.14	1.90	-0.71	-8.85	10.75
	15	4521	-0.23	0.60	1.61	0.04	-5.57	-0.04	6.70	-0.23	-4.49	11.18
	16	4522	-0.20	2.46	2.12	0.03	-4.21	-0.07	6.51	-0.20	-1.93	8.44
	17	4371	0.01	2.88	2.49	0.00	0.93	0.03	3.63	1.74	0.01	3.62
	18	4372	-0.01	2.92	1.84	0.00	0.81	-0.11	3.36	1.41	-0.01	3.37
	19	4221	0.10	1.08	2.57	-0.01	2.96	0.02	4.87	0.10	-1.23	6.10
	20	4222	0.10	1.01	2.16	-0.01	2.27	-0.02	3.93	0.10	-0.76	4.69
	21	4161	0.06	0.31	1.94	0.02	2.32	0.03	3.58	0.06	-1.33	4.91
	22	4162	0.05	0.11	1.64	0.02	1.59	0.04	2.64	0.05	-0.89	3.53
	23	4062	0.04	-0.89	0.81	0.13	-0.41	0.05	0.90	0.06	-1.01	1.91
	24	4064	0.04	0.43	1.06	0.12	-0.18	0.06	1.11	0.42	-0.01	1.12
	25	4054	-0.58	0.33	-0.12	-0.03	-0.20	0.08	0.41	-0.18	-0.59	1.00
	26	4056	-1.36	-0.63	-0.92	0.04	-0.18	0.34	-0.53	-0.83	-1.56	1.03
Outer Shell	27	4680	-1.97	-15.24	-10.09	3.36	5.97	-0.27	-0.98	-6.65	-19.67	18.69
	28	4682	-3.28	9.75	-3.95	1.39	-1.81	-0.20	10.13	-3.43	-4.18	14.31
	29	4578	-1.21	0.83	-4.13	-1.44	-12.84	-0.04	11.52	-1.24	-14.80	26.32
	30	4580	-1.26	-1.25	-6.23	-1.47	-5.72	0.21	2.94	-1.65	-10.02	12.96
	31	4525	-0.19	-1.40	7.44	0.27	-9.22	-0.05	13.24	-0.18	-7.21	20.45
	32	4526	-0.06	5.33	8.44	0.25	-6.50	-0.08	13.57	0.27	-0.13	13.70
	33	4375	0.02	3.53	3.34	0.00	0.69	0.09	4.13	2.74	0.02	4.11
	34	4376	0.00	3.68	2.20	0.00	0.60	-0.10	3.90	1.99	-0.01	3.90
	35	4225	0.03	1.49	-1.04	-0.03	3.91	0.04	4.34	0.03	-3.88	8.22
	36	4226	0.04	2.04	-1.15	-0.03	2.76	-0.03	3.63	0.04	-2.74	6.37
	37	4165	-0.06	0.87	-3.76	0.18	3.99	0.02	3.17	-0.07	-6.06	9.23
	38	4167	-0.15	0.55	-3.89	0.19	2.38	0.03	1.61	-0.17	-4.93	6.54
	39	4073	-0.53	-6.48	-2.91	-1.30	0.86	0.19	-0.26	-2.72	-6.95	6.68
	40	4075	-0.68	5.43	0.33	-0.51	0.88	0.10	5.62	0.22	-0.76	6.37
Bottom Cover	41	4054	-0.84	0.27	-0.22	-0.10	-0.17	0.12	0.34	-0.26	-0.87	1.21
	42	4021	0.05	-0.05	-1.90	-0.27	-0.05	0.12	0.28	-0.27	-1.91	2.19
	43	4051	0.14	-0.02	0.74	-0.15	-0.07	0.12	0.77	0.20	-0.11	0.88
	44	4018	-0.83	-0.04	-2.43	-0.15	-0.06	-0.12	-0.01	-0.85	-2.44	2.43
	45	4048	1.01	-0.66	1.69	-0.05	-0.05	0.05	1.70	1.00	-0.66	2.36
	46	4010	-0.89	-0.91	-1.37	-0.03	0.00	-0.17	-0.83	-0.92	-1.42	0.60
Ram Access Cover Plate	47	4012	-0.45	0.29	-0.14	-0.07	0.01	-0.28	0.31	0.01	-0.62	0.93
	48	4004	-0.71	0.45	-1.45	-0.34	-0.14	-0.22	0.55	-0.72	-1.53	2.08
	49	4011	0.16	0.02	0.02	-0.09	-0.07	-0.19	0.30	0.07	-0.18	0.47
	50	4003	-1.19	-0.18	-2.00	-0.04	-0.06	-0.45	-0.17	-0.99	-2.20	2.03
	51	4013	0.30	0.11	0.33	0.04	0.09	-0.26	0.58	0.17	-0.01	0.59
	52	4001	-0.68	-0.35	-0.96	0.02	0.09	0.69	-0.10	-0.37	-1.53	1.43

Table 2.7.1-50
Cask 30-Foot 30° Primary Impact Drop Membrane Plus Bending Stress Summary, 90° Azimuth

Cask Component	Stress Point	Node Number	Stress Components (ksi)						Principal Stresses (ksi)			SI (ksi)
			SX	SY	SZ	SXY	SYZ	SXZ	S1	S2	S3	
Top Cover	1	7730	9.37	1.95	0.79	0.10	-0.70	-0.32	9.39	2.27	0.46	8.93
	2	7771	-9.44	-2.66	-1.38	0.21	0.17	0.93	-1.25	-2.68	-9.55	8.30
	3	7738	5.77	-0.46	3.53	0.39	0.07	0.46	5.88	3.44	-0.49	6.37
	4	7779	-5.04	-0.74	-12.01	0.39	0.07	1.13	-0.70	-4.90	-12.18	11.49
	5	7746	0.16	-1.07	-2.98	1.03	-0.25	1.62	1.18	-1.25	-3.82	5.00
	6	7786	1.22	-1.59	-6.73	0.50	-0.40	1.15	1.45	-1.61	-6.93	8.38
Top Flange	7	7711	1.76	1.53	-1.04	0.04	-0.76	1.02	2.18	1.63	-1.55	3.72
	8	7713	0.40	-2.82	-1.56	-0.05	-0.51	0.24	0.43	-1.41	-3.01	3.44
Inner Shell	9	7672	0.27	-7.28	-4.52	-1.31	-2.04	-0.29	0.49	-3.47	-8.55	9.05
	10	7674	3.03	2.74	1.00	0.72	-1.16	0.40	3.72	2.80	0.24	3.47
	11	7654	-0.02	-6.11	-4.24	0.24	-3.89	0.04	-0.01	-1.19	-9.18	9.17
	12	7656	0.15	3.29	-0.18	1.09	-3.28	-0.21	5.47	0.01	-2.22	7.69
	13	7574	-0.12	-2.19	-4.10	0.02	-5.59	0.03	2.53	-0.12	-8.81	11.34
	14	7576	0.02	-0.08	-2.11	0.04	-5.57	-0.05	4.56	0.02	-6.75	11.32
	15	7521	0.00	-2.54	-1.24	0.03	-3.82	-0.08	1.98	0.00	-5.77	7.75
	16	7522	-0.05	-2.98	-1.89	0.05	-4.38	0.00	1.98	-0.05	-6.85	8.83
	17	7371	-0.02	-3.56	1.75	0.00	0.75	-0.09	1.85	-0.02	-3.66	5.52
	18	7372	-0.08	-4.78	-0.97	0.00	0.82	0.06	-0.08	-0.81	-4.95	4.88
	19	7221	0.07	-1.95	3.42	-0.01	2.54	0.00	4.43	0.07	-2.96	7.40
	20	7222	0.06	-2.40	2.03	-0.02	2.72	0.01	3.33	0.06	-3.69	7.02
	21	7161	0.13	-1.28	4.24	0.00	2.02	0.05	4.90	0.13	-1.94	6.84
	22	7162	0.12	-1.67	3.36	-0.01	1.99	0.01	4.05	0.12	-2.37	6.42
	23	7062	0.17	-1.14	3.01	0.23	-0.16	0.07	3.01	0.21	-1.18	4.20
	24	7064	0.17	-0.60	2.96	0.48	0.05	0.05	2.96	0.40	-0.83	3.79
	25	7054	0.17	0.63	1.39	-0.05	-0.04	0.32	1.47	0.63	0.08	1.39
	26	7056	-0.82	-1.29	0.23	0.25	-0.11	0.73	0.60	-0.97	-1.51	2.11
Outer Shell	27	7680	0.00	2.46	0.05	-1.57	-7.22	0.78	8.89	-0.29	-6.09	14.98
	28	7682	0.19	-2.21	0.53	-0.80	-3.18	0.51	2.90	-0.06	-4.34	7.24
	29	7578	-0.16	-0.98	-1.08	0.17	-7.83	0.31	6.80	-0.15	-8.87	15.67
	30	7580	0.04	3.98	3.82	0.17	-7.32	-0.09	11.23	0.03	-3.42	14.65
	31	7525	0.11	-1.04	1.85	0.09	-5.18	-0.04	5.79	0.11	-4.97	10.76
	32	7526	-0.03	-1.53	1.41	0.13	-6.30	-0.07	6.41	-0.03	-6.53	12.94
	33	7375	0.02	-3.17	1.93	0.00	0.79	-0.14	2.06	0.01	-3.29	5.34
	34	7376	-0.08	-5.09	-1.71	0.00	0.76	0.02	-0.08	-1.54	-5.26	5.18
	35	7225	0.03	-1.98	-0.68	-0.02	3.21	-0.02	1.94	0.03	-4.60	6.55
	36	7226	-0.01	-2.64	-2.37	-0.03	3.47	0.00	0.97	-0.01	-5.98	6.95
	37	7165	0.05	-1.35	-2.20	-0.01	3.33	0.06	1.58	0.05	-5.13	6.71
	38	7167	-0.02	-1.50	-2.66	-0.01	3.30	0.00	1.27	-0.02	-5.44	6.71
	39	7073	-0.46	-7.31	-1.79	-1.15	2.77	0.36	-0.25	-0.67	-8.64	8.39
	40	7075	-0.49	5.02	1.70	-0.38	1.70	0.21	5.75	1.06	-0.57	6.32
Bottom Cover	41	7054	-0.04	0.65	1.33	-0.11	-0.02	0.39	1.44	0.66	-0.16	1.60
	42	7021	-0.13	-0.16	-1.92	-0.28	0.02	0.68	0.26	-0.31	-2.15	2.41
	43	7051	0.76	-0.02	1.81	-0.12	-0.04	0.13	1.83	0.76	-0.04	1.87
	44	7018	-0.97	-0.04	-2.67	-0.12	-0.04	0.57	-0.02	-0.81	-2.85	2.83
	45	7048	1.15	-0.64	2.31	0.00	-0.07	-0.05	2.31	1.15	-0.64	2.95
	46	7010	-0.70	-0.87	-1.39	0.02	-0.18	0.25	-0.61	-0.83	-1.52	0.90
Ram Access Cover Plate	47	7012	-0.05	0.31	-0.02	-0.12	-0.05	0.05	0.36	-0.02	-0.10	0.46
	48	7004	-0.94	0.40	-1.97	-0.32	-0.09	0.13	0.48	-1.00	-1.99	2.47
	49	7011	0.41	0.05	0.11	-0.19	-0.03	0.01	0.49	0.11	-0.04	0.53
	50	7003	-1.86	-0.25	-2.63	-0.07	-0.05	0.10	-0.25	-1.85	-2.65	2.40
	51	7013	0.57	0.11	0.05	-0.04	0.09	-0.02	0.58	0.17	-0.01	0.59
	52	7001	-1.51	-0.35	-0.14	-0.05	0.08	0.14	-0.10	-0.37	-1.53	1.43

Table 2.7.1-51
Cask 30-Foot 30° Primary Impact Drop Membrane Plus Bending Stress Summary, 135° Azimuth

Cask Component	Stress Point	Node Number	Stress Components (ksi)						Principal Stresses (ksi)			SI (ksi)
			SX	SY	SZ	SXY	SYZ	SXZ	S1	S2	S3	
Top Cover	1	10730	5.40	1.95	4.76	0.56	-0.42	4.29	9.39	2.27	0.46	8.93
	2	10771	-6.33	-2.66	-4.48	0.03	0.27	-4.03	-1.25	-2.68	-9.55	8.30
	3	10738	4.06	-0.47	6.37	0.51	-0.08	1.79	7.35	3.15	-0.54	7.89
	4	10779	-7.47	-0.74	-7.44	0.51	-0.08	2.79	-0.70	-4.69	-10.27	9.57
	5	10746	-4.37	-3.29	0.21	1.18	-0.40	2.80	1.55	-2.77	-6.22	7.77
	6	10786	3.86	-3.15	-0.96	0.79	-0.79	1.31	4.24	-0.90	-3.59	7.83
Top Flange	7	10711	0.38	0.25	2.10	-0.25	-1.12	0.99	3.01	0.08	-0.37	3.38
	8	10713	0.17	-0.55	1.87	-0.04	-0.91	0.17	2.19	0.16	-0.86	3.05
Inner Shell	9	10672	0.37	-9.09	2.10	-1.50	-2.41	-0.39	2.60	0.61	-9.82	12.42
	10	10674	3.82	2.75	5.96	1.06	-1.69	0.14	6.72	4.26	1.55	5.17
	11	10654	-0.01	-7.87	0.78	0.37	-3.18	-0.11	1.85	-0.03	-8.93	10.78
	12	10656	0.41	2.15	3.29	1.24	-3.20	-0.33	6.16	0.66	-0.98	7.14
	13	10574	-0.13	-4.51	-3.91	0.01	-2.96	-0.04	-0.13	-1.24	-7.18	7.05
	14	10576	-0.20	-5.56	-4.82	0.00	-3.10	0.01	-0.20	-2.07	-8.30	8.10
	15	10521	-0.14	-6.03	-3.41	0.01	-1.87	-0.03	-0.14	-2.44	-7.01	6.87
	16	10522	-0.15	-6.38	-3.51	0.00	-2.06	-0.01	-0.15	-2.43	-7.46	7.31
	17	10371	0.02	-7.04	-1.42	0.00	0.52	-0.01	0.02	-1.37	-7.09	7.10
	18	10372	0.05	-6.86	-0.14	0.00	0.41	-0.01	0.05	-0.12	-6.88	6.93
	19	10221	0.13	-4.48	2.77	-0.01	1.44	-0.01	3.04	0.13	-4.76	7.80
	20	10222	0.12	-4.82	2.91	-0.01	1.48	0.02	3.18	0.12	-5.09	8.27
	21	10161	0.17	-3.29	5.51	0.00	0.90	0.01	5.60	0.17	-3.38	8.98
	22	10162	0.15	-3.84	5.32	0.00	0.98	0.06	5.43	0.15	-3.94	9.36
	23	10062	0.17	-0.54	4.46	0.38	-1.07	0.04	4.68	0.30	-0.90	5.57
	24	10064	-0.01	-4.29	3.26	1.32	-0.14	0.01	3.27	0.37	-4.67	7.93
	25	10054	0.75	1.48	2.45	-0.10	-0.25	0.01	2.51	1.43	0.74	1.77
	26	10056	-1.35	-3.36	0.27	0.76	0.03	0.33	0.34	-1.16	-3.61	3.95
Outer Shell	27	10680	-0.53	-13.20	0.38	1.23	-7.52	0.80	3.73	-0.42	-16.67	20.40
	28	10682	-0.70	5.67	5.16	0.26	-4.12	0.53	9.55	1.43	-0.85	10.40
	29	10578	0.08	-4.04	0.23	-0.03	-4.00	-0.08	2.63	0.08	-6.44	9.07
	30	10580	-0.03	-7.77	-2.17	-0.03	-4.17	-0.02	0.05	-0.03	-9.99	10.04
	31	10525	0.01	-6.47	-0.79	0.00	-2.12	-0.05	0.03	-0.11	-7.17	7.19
	32	10526	-0.03	-7.53	-1.53	-0.02	-2.49	-0.02	-0.03	-0.63	-8.42	8.40
	33	10375	0.03	-7.62	-2.31	0.00	0.83	-0.01	0.03	-2.18	-7.75	7.78
	34	10376	0.07	-7.51	-0.52	0.00	0.54	-0.02	0.07	-0.48	-7.55	7.62
	35	10225	0.05	-4.84	-2.08	-0.01	1.73	-0.03	0.05	-1.25	-5.68	5.72
	36	10226	0.04	-5.01	-1.47	-0.01	1.87	0.01	0.04	-0.66	-5.81	5.85
	37	10165	0.09	-3.46	-2.25	0.00	1.58	-0.04	0.09	-1.16	-4.55	4.63
	38	10167	0.01	-3.73	-1.95	0.00	1.90	0.02	0.01	-0.75	-4.93	4.94
	39	10073	-0.69	-9.63	-1.45	-1.65	1.71	0.24	-0.38	-1.12	-10.27	9.88
	40	10075	-0.65	5.94	2.95	-0.61	1.53	0.12	6.62	2.35	-0.72	7.34
Bottom Cover	41	10054	0.40	1.59	2.35	-0.17	-0.19	0.05	2.40	1.56	0.38	2.02
	42	10021	-0.51	-0.41	-0.80	-0.40	0.08	0.73	0.22	-0.44	-1.50	1.71
	43	10051	1.38	-0.04	2.35	-0.12	-0.02	-0.03	2.35	1.39	-0.05	2.40
	44	10018	-1.59	-0.03	-1.85	-0.12	-0.02	0.72	-0.02	-1.00	-2.45	2.43
	45	10048	1.61	-0.85	2.77	0.01	-0.05	-0.10	2.78	1.60	-0.85	3.63
	46	10010	-1.03	-1.24	-1.01	0.07	-0.22	0.44	-0.56	-1.14	-1.59	1.03
Ram Access Cover Plate	47	10012	-0.18	0.41	0.27	-0.10	-0.08	0.32	0.54	0.31	-0.35	0.89
	48	10004	-0.98	0.69	-1.33	-0.37	0.01	0.36	0.77	-0.81	-1.58	2.35
	49	10011	0.41	-0.05	0.23	-0.09	0.04	0.19	0.53	0.15	-0.09	0.62
	50	10003	-1.45	-0.30	-2.06	0.04	0.00	0.57	-0.29	-1.11	-2.40	2.11
	51	10013	0.33	0.11	0.30	-0.09	0.04	0.26	0.58	0.17	-0.01	0.59
	52	10001	-0.96	-0.35	-0.68	-0.09	0.02	-0.69	-0.10	-0.37	-1.53	1.43

Table 2.7.1-52
Cask 30-Foot 30° Primary Impact Drop Membrane Plus Bending Stress Summary, 180° Azimuth

Cask Component	Stress Point	Node Number	Stress Components (ksi)						Principal Stresses (ksi)			SI (ksi)
			SX	SY	SZ	SXY	SYZ	SXZ	S1	S2	S3	
Top Cover	1	13730	0.79	1.95	9.37	0.70	0.10	0.32	9.39	2.27	0.46	8.93
	2	13771	-1.38	-2.66	-9.44	-0.17	0.21	-0.93	-1.25	-2.68	-9.55	8.30
	3	13738	2.77	-0.47	7.65	0.59	0.07	-0.23	7.66	2.87	-0.57	8.23
	4	13779	-8.61	-0.73	-4.72	0.59	0.07	0.02	-0.68	-4.72	-8.66	7.97
	5	13746	-5.31	-4.00	1.47	1.19	0.03	-0.41	1.49	-3.31	-6.03	7.52
	6	13786	4.94	-3.79	1.99	0.70	-0.19	0.52	5.08	1.92	-3.85	8.93
Top Flange	7	13711	4.26	7.49	6.65	0.38	-1.05	-0.22	8.24	5.94	4.22	4.03
	8	13713	0.98	-9.46	2.43	-0.45	0.43	0.11	2.45	1.00	-9.50	11.95
Inner Shell	9	13672	0.42	-8.07	2.74	-1.25	-0.78	-0.24	2.81	0.59	-8.31	11.12
	10	13674	3.08	1.60	5.80	0.84	-0.38	-0.34	5.90	3.36	1.22	4.68
	11	13654	0.04	-6.80	0.87	0.34	-0.40	-0.12	0.91	0.04	-6.84	7.75
	12	13656	0.29	-0.21	2.63	0.88	-0.37	-0.41	2.79	0.79	-0.88	3.67
	13	13574	-0.15	-5.59	-5.15	0.01	-0.52	0.67	-0.06	-4.87	-5.96	5.90
	14	13576	-0.13	-6.07	-4.64	0.01	-0.52	0.60	-0.05	-4.55	-6.25	6.20
	15	13521	-0.12	-7.21	-4.45	0.02	-0.38	0.58	-0.04	-4.48	-7.26	7.22
	16	13522	-0.10	-7.33	-3.80	0.02	-0.35	0.49	-0.04	-3.83	-7.36	7.32
	17	13371	-0.07	-7.88	-1.31	0.00	0.10	0.17	-0.04	-1.33	-7.88	7.84
	18	13372	-0.07	-8.02	-0.93	-0.01	0.09	0.12	-0.05	-0.94	-8.03	7.98
	19	13221	0.07	-5.01	2.63	-0.02	0.25	-0.34	2.69	0.03	-5.02	7.70
	20	13222	0.09	-5.25	3.12	-0.02	0.25	-0.41	3.18	0.03	-5.25	8.44
	21	13161	0.07	-4.00	6.27	0.00	0.09	-0.83	6.38	-0.04	-4.00	10.39
	22	13162	0.08	-4.28	6.45	0.01	0.12	-0.85	6.56	-0.03	-4.28	10.84
	23	13062	0.04	-0.09	5.47	0.51	-0.22	-0.68	5.57	0.40	-0.55	6.12
	24	13064	-0.27	-8.73	2.68	2.11	0.04	-0.30	2.71	0.19	-9.22	11.93
	25	13054	0.30	1.63	3.00	-0.07	-0.31	-0.06	3.07	1.57	0.30	2.77
	26	13056	-2.35	-5.52	0.08	1.84	-0.25	0.19	0.10	-1.51	-6.38	6.48
Outer Shell	27	13680	-0.43	-15.46	0.40	1.60	-1.01	0.10	0.47	-0.26	-15.70	16.16
	28	13682	-0.93	5.60	5.97	0.42	-0.70	-0.79	6.61	5.07	-1.03	7.64
	29	13578	0.06	-5.99	-2.36	-0.05	-0.72	0.32	0.10	-2.27	-6.13	6.23
	30	13580	0.00	-9.32	-2.88	-0.05	-0.75	0.38	0.05	-2.84	-9.40	9.46
	31	13525	0.02	-8.71	-2.48	0.02	-0.44	0.33	0.06	-2.50	-8.74	8.80
	32	13526	0.03	-9.55	-2.13	0.02	-0.40	0.28	0.07	-2.14	-9.57	9.64
	33	13375	-0.02	-8.73	-1.99	-0.01	0.18	0.27	0.02	-2.02	-8.74	8.76
	34	13376	-0.02	-9.16	-1.57	-0.02	0.14	0.22	0.01	-1.60	-9.16	9.17
	35	13225	-0.01	-5.55	-2.34	-0.02	0.31	0.31	0.03	-2.36	-5.58	5.61
	36	13226	0.02	-5.28	-1.17	-0.02	0.29	0.16	0.05	-1.17	-5.30	5.34
	37	13165	0.00	-4.44	-2.23	0.01	0.18	0.31	0.04	-2.26	-4.45	4.49
	38	13167	-0.02	-4.03	-1.36	0.01	0.26	0.19	0.01	-1.36	-4.06	4.06
	39	13073	-0.84	-11.76	-1.34	-1.63	-0.50	0.25	-0.48	-1.45	-12.02	11.53
	40	13075	-0.66	2.88	2.69	-0.53	-0.42	-0.31	3.23	2.46	-0.77	4.00
Bottom Cover	41	13054	-0.40	1.83	2.88	-0.09	-0.27	-0.05	2.94	1.77	-0.41	3.35
	42	13021	-0.49	-0.48	-0.76	-0.43	-0.08	0.02	-0.04	-0.76	-0.93	0.89
	43	13051	1.26	-0.07	2.69	-0.12	-0.01	-0.07	2.70	1.27	-0.08	2.78
	44	13018	-1.81	-0.01	-1.48	-0.12	-0.01	0.06	0.00	-1.47	-1.83	1.83
	45	13048	1.79	-1.00	3.00	0.00	-0.03	-0.15	3.02	1.78	-1.00	4.02
	46	13010	-1.29	-1.47	-0.75	0.08	0.11	0.04	-0.73	-1.27	-1.51	0.78
Ram Access Cover Plate	47	13012	-0.48	0.46	0.43	-0.08	-0.06	-0.03	0.51	0.39	-0.48	1.00
	48	13004	-1.00	0.88	-0.78	-0.41	-0.08	0.04	0.97	-0.78	-1.09	2.06
	49	13011	0.15	-0.12	0.36	-0.01	0.04	0.03	0.36	0.15	-0.12	0.49
	50	13003	-1.45	-0.37	-1.57	0.10	0.04	0.13	-0.35	-1.37	-1.65	1.30
	51	13013	0.05	0.11	0.57	-0.09	-0.04	0.02	0.58	0.17	-0.01	0.59
	52	13001	-0.14	-0.35	-1.51	-0.08	-0.05	-0.14	-0.10	-0.37	-1.53	1.43

2.7.1.4.1.2 Flatside 60° Primary Impact Drop Analysis

As shown in Table 2.7.1-1, the equivalent static longitudinal g-loads for the flatside 60° primary impact under hot and cold conditions are 25.7g and 29.0g, respectively. These bound the hot and cold corner 60° primary impact equivalent static longitudinal g-loads, which are 20.7g and 20.8g, respectively. The stainless steel and lead material properties used for the cask model are based on the cask temperatures resulting from the hot ambient condition.

In the event of a 30-foot flatside 60° primary impact, the cask is supported by the primary impact limiter along the lower surface of the cask structural shell outside the region of the neutron shield. The cask is loaded by its self weight, the weight of the DSC, and the weight of the secondary impact limiter. Figure 2.7.1-14 shows a free body diagram of the cask for the 30-foot flatside 60° primary impact condition.

The cask 30-foot flatside 60° primary impact stress analysis is performed using the half symmetry three dimensional finite element model described in Section 2.10.2.1.3. The cask loads due to the 30-foot flatside 60° primary impact drop include the DSC inertial load, the cask inertial load, the inertial load of the secondary impact limiter, and the primary impact reaction load. The equivalent static package drop loads applied to the model are calculated as follows:

a_t = 18.4g, Peak tangential acceleration at package C.G.

a_l = 28.2g, Peak longitudinal acceleration at package C.G.

α = 118 rad/s^2, Peak angular acceleration at packag C.G.

DLF = 1.04, Maximum of tangential and longitudinal DLFs, conservatively applied to all peak rigid body loads

G_t = Equivalent static tangential acceleration at package C.G.

= 18.4g x 1.04

= 19.1g (a bounding value of 19.78g is used in the analysis)

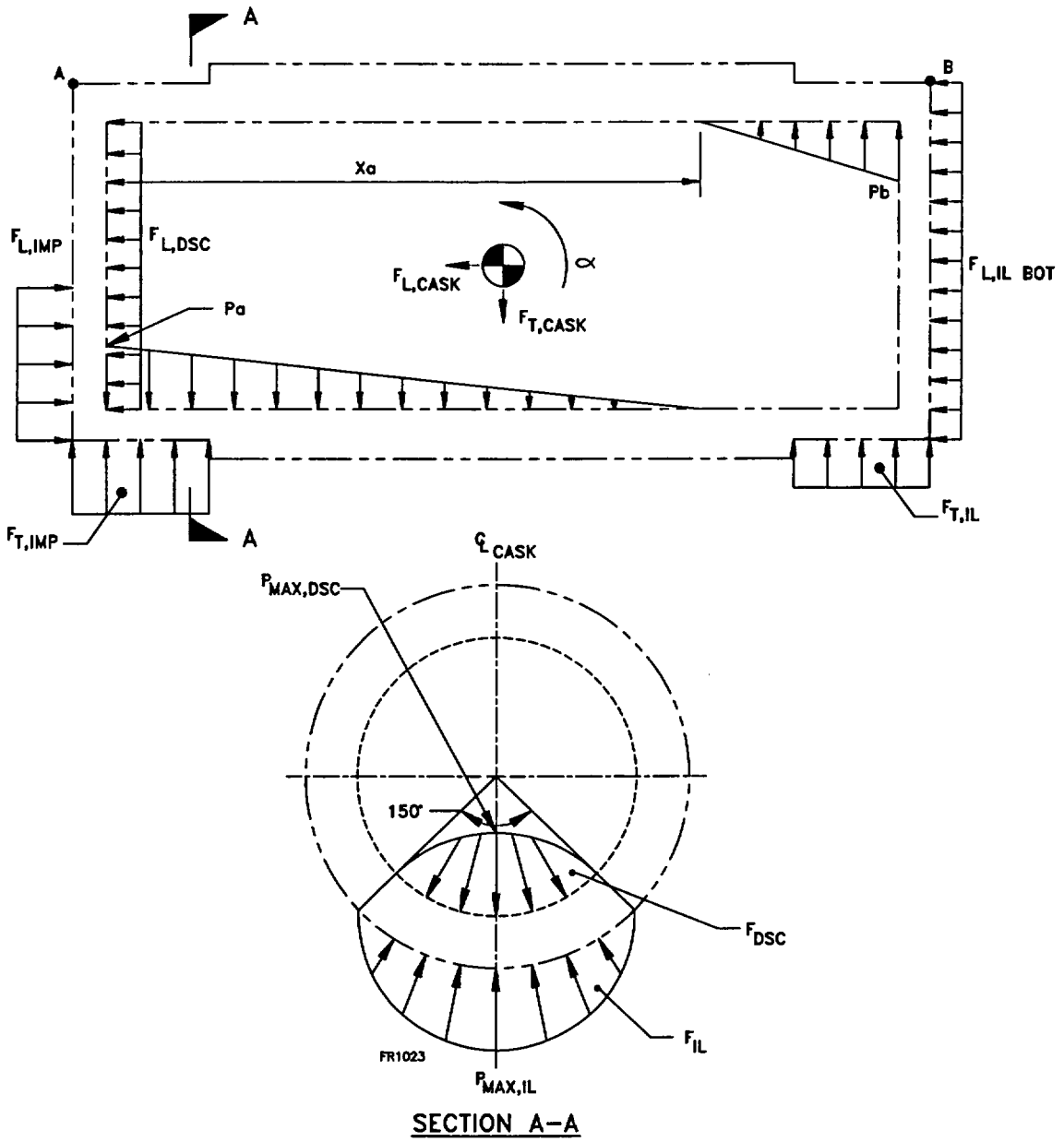

Figure 2.7.1-14
Cask Free Body Diagram for 30-Foot Flatside 60° Primary Impact

G_l = Equivalent static longitudinal acceleration at package C.G.

= 28.2g x 1.04

= 29.3g (a bounding value of 30.69g is used in the analysis)

A = Equivalent static angular acceleration

= 118 x 1.04

= 122.7 rad/s^2

The mass properties of the various package components used for the flatside 60° primary impact evaluation are:

W_{PKG} = 256,600 lb., Weight of package corresponding to cold drop conditions

I_{PKG} = 3.57 x 10^6 lb-in-s^2, Package moment of inertia corresponding to cold drop

W_{CASK} = 154,600 lb., Weight of cask finite element model

I_{CASK} = 1.822 x 10^6 lb-in-s^2, Moment of inertia of cask from ANSYS model

W_{IL} = 15,800 lb., Weight of each impact limiter

I_{IL} = Moment of inertia of impact limiter about package C.G.

= [4.48 x 10^7 + (15,800)(201.5 in./2 + 1.54 in.)^2]/386.4

= 5.438 x 10^5 lb-in-s^2

W_{DSC} = Adjusted weight of DSC to preserve package weight

= 256.6 - 2(15.8) - 154.6

= 70.4 kips

I_{DSC} = DSC moment of inertia adjusted to preserve package M.O.I.

= $I_{PKG} - I_{CASK} - 2I_{IL}$

= 6.605 x 10^5 lb-in-s^2

The cask loads from the DSC and the impact limiters in the tangential direction are assumed to have cosine distributions, as shown in Figure 2.7.1-14, spread over a 75 degree half angle of contact between the DSC and cask inner surface, and the impact limiters and cask outer surface, respectively. The angle of contact between the impact limiters and cask outer surface is dependent upon the crush area of the impact limiters. For the flatside 60° primary impact

condition, the impact limiter crush area is larger than the projected area of the cask onto the impact limiter. Thus, the resulting contact angle will be close to 180 degrees. Therefore, the assumed contact angle of 150 degrees (i.e. 75 degree half angle of contact) is conservative. The pressure load acting on the inner surface of the cask due to the DSC inertial load in the tangential direction is calculated assuming a triangular distribution over the length of the cask cavity (L = 187 inches) and a cosine distribution around the circumference. The tangential load distribution from the DSC shown in Figure 2.7.1-14 is equal to the uniform line load due to the linear tangential acceleration, a_t, and the triangular line load due to the angular acceleration, α, of the package. The magnitude of the line load at the primary impact end, P_a, and the end opposite the primary impact, P_b, shown in Figure 2.7.1-14, are calculated as follows:

$$P_a = (W_{DSC})(G_t)/L_{DSC} + 6(I_{DSC})(A)/L_{DSC}^2$$

$$= (70{,}400)(19.78)/187 + 6(6.605 \times 10^5)(122.7)/(187)^2$$

$$= 21{,}352 \text{ lb/in.}$$

$$P_b = (W_{DSC})(G_t)/L_{DSC} - 6(I_{DSC})(A)/L_{DSC}^2$$

$$= (70{,}400)(19.78)/187 - 6(6.605 \times 10^5)(122.7)/(187)^2$$

$$= -6{,}459 \text{ lb/in.} \quad \text{(negative means acting upward)}$$

The distance x_a shown in Figure 2.7.1-14 is calculated as follows:

$$x_a = |Pa| \times L_{DSC}/(|P_a| + |P_b|)$$

$$= 143.57 \text{ in.}$$

The circumferential pressure distribution from the DSC inertial load is determined using the formula derived in Section 2.10.2.1.3.1, as follows:

$$P_i = \frac{P_x}{R}\left[\frac{\sin\left(\frac{\pi}{2}+\theta\right)}{\left(\frac{\pi}{2\theta}\right)+1} + \frac{\sin\left(\frac{\pi}{2}-\theta\right)}{\left(\frac{\pi}{2\theta}\right)-1}\right]^{-1} \cos\left(\frac{\pi\theta_i}{2\theta}\right)$$

where;

P_x = Line load at distance x from impact end of cask cavity (x varies between 0 in. and 187 in.)

= $|P_a - (P_a x)/x_a|$

= $\left|21{,}352\left(1-\frac{x}{143.57}\right)\right|$

R = 34.0 in., Radius of cask cavity

θ = 75° (1.309 radians), Half angle of contact

The resulting pressure distribution around the circumference of the cask inner shell is summarized below:

For distance x between x = 0 inches and $x = x_a = 143.57$ inches

Circumferential Location	Pressure Load (psi)
0°	$0.0208 \times P_x$
10°	$0.0204 \times P_x$
20°	$0.0190 \times P_x$
30°	$0.0169 \times P_x$
45°	$0.0122 \times P_x$
60°	$0.0064 \times P_x$
75°	0

For distance x between $x = x_a = 143.57$ inches and $x = L_{DSC} = 187$ inches

Circumferential Location	Pressure Load (psi)
180°	$0.0208 \times P_x$
165°	$0.0198 \times P_x$
150°	$0.0169 \times P_x$
135°	$0.0122 \times P_x$
120°	$0.0064 \times P_x$
105°	0

The longitudinal load from the DSC inertia load, $F_{L,DSC}$, due to the longitudinal acceleration, G_L, is modeled as a uniform pressure acting on the inner surface of the cask impact end. The longitudinal pressure load is calculated as follows:

$$q_{L,DSC} = F_{L,DSC}/A$$

where;

$F_{L,DSC}$ = $W_{DSC}G_L$, Longitudinal inertia force of DSC

= (70,400)(30.69)

= 2,161,000 lb.

A = $\pi(34)^2$ Area of cask end inner surface

= 3,632 in^2

Therefore,

$q_{L,DSC}$ = 2,161,000/3,632 = 595 psi

The loading on the outer surface of the cask due to the secondary impact limiter inertial load acts in both the tangential and longitudinal directions. The longitudinal load, $F_{L,IL}$, is modeled as a

uniform pressure acting on the outer surface of the cask end. The longitudinal pressure load is calculated as follows:

$$q_{L,IL} = F_{L,IL}/A$$

where;

$F_{L,IL}$ = $W_{IL}G_L$, Longitudinal inertial force of secondary impact limiter

= (15,800)(30.69)

= 484,900 lb.

A = $\pi(41.75)^2$, Area of cask end

= 5,476 in^2

Therefore,

$q_{L,IL}$ = 484,900/5,476

= 88.6 psi

The tangential component of the secondary impact limiter inertial load, $F_{T,IL}$, is calculated as follows:

$$F_{T,IL} = W_{IL}G_T - I_{IL}\alpha/e$$

where;

e = $(L_{CASK} - L_{IL})/2$ = 84.75 in.

Therefore,

$F_{T,IL}$ = $(15{,}800)(19.78) - (5.438 \times 10^5)(122.7)/84.75$

= -474,783 lb. (negative means acting upward)

The tangential load, $F_{T,IL}$, is assumed to be uniform along the length of the 32 inch overhang region and vary with a cosine distribution around the circumference of the cask (R = 41.75 inches). The resulting cosine pressure load distribution is calculated as discussed above, assuming a 75 degree half angle of contact between the impact limiter and cask outer surface, and summarized below:

Circumferential Location	Pressure Load (psi)
0°	252
10°	246
20°	230
30°	204
45°	148
60°	78
75°	0

The impact loads are reacted by the primary impact limiter. The longitudinal component of the primary impact reaction load, $F_{L,IMP}$, is calculated based on the laws of static equilibrium, as follows:

$$F_{L,IMP} = [W_{CASK} + W_{DSC} + W_{IL}](G_L)$$

$$= [154{,}600 + 70{,}400 + 15{,}800](30.69)$$

$$= 7.390 \times 10^6 \text{ lb.}$$

The longitudinal impact reaction load is applied as a uniform pressure load to the outer surface of the cask end. The magnitude of the longitudinal impact pressure load is:

$$q_{L,IMP} = 7.390 \times 10^6/5{,}476$$

$$= 1350 \text{ psi}$$

The tangential impact reaction load is calculated based on the laws of static equilibrium and yields:

$F_{T,IMP}$ = 3.977×10^6 lb.

The loading on the outer surface of the cask due to the tangential impact reaction load is assumed to be uniform along the length of the 32 inch overhang region and vary with a cosine distribution around the circumference of the cask (R = 41.75 inches). The resulting cosine pressure load distribution is calculated as discussed above, assuming a 75 degree half angle of contact between the impact limiter and cask outer surface, and summarized below:

Circumferential Location	Pressure Load (psi)
0°	2,109
10°	2,063
20°	1,927
30°	1,706
45°	1,240
60°	652
75°	0

In addition to the applied pressure loads from the DSC, secondary impact limiter, and impact reaction, linear accelerations of 19.78g and 30.69g in the tangential and longitudinal directions, respectively, and an angular acceleration of 122.7 radians per second are applied to the cask model to account for the cask inertial load. The model is pinned at the node points A and B, Figure 2.7.1-14, to prevent rigid body motion. The total tangential reaction load at these nodes for the 30-foot flatside 60° primary impact condition is 47,709 pounds due to a slight imbalance in the applied inertial loads and reaction loads. The load imbalance represents 0.5% of the total impact load, which is considered negligible.

The cask stress components, principal stresses, and stress intensities at the 52 stress points, Figure 2.7.1-1, due to the 30-foot flatside 60° primary impact drop load are summarized in Table 2.7.1-53 through Table 2.7.1-62. The maximum primary membrane stress intensity in the cask due to the 30-foot flatside 60° primary impact drop, occurs in the cask inner shell at the 180 degree azimuth (stress points 21 and 22) is 12.6 ksi. The allowable accident condition primary membrane stress intensity at 300°F is 46.2 ksi for SA-240, Type 304 stainless steel. Therefore, the minimum margin of safety in the cask for primary membrane stress intenstiy due to the 30-foot flatside 60° primary impact drop is:

$$M.S. = (46.2/12.6) - 1$$
$$= +2.67$$

The maximum membrane plus bending stress intensity in the cask due to the 30-foot flatside 60° primary impact drop, occurs on the 0 degree azimuth at the junction of the outer shell and top flange (stress point 27), is 25.3 ksi. The allowable accident condition membrane plus bending stress intensity in the cask outer shell at the design temperature of 300°F is limited to 66.0 ksi. Therefore, the minimum margin of safety in the cask for membrane plus bending stress intensity due to the 30-foot flatside 60° primary impact drop is:

$$M.S. = (66.0/25.3) - 1$$
$$= +1.61$$

Therefore, the cask body meets the stress acceptance criteria for the 30-foot flatside 60° primary impact drop condition. The 30-foot flatside 60° primary impact drop stresses are combined with stresses due to other loading conditions in accordance with Regulatory Guide 7.8 [2.3]. The accident condition cask load combination evaluation is presented in Section 2.7.8.1.

Table 2.7.1-53
Cask 30-Foot 60° Primary Impact Drop Membrane Shell Stresses Summary, 0° Azimuth

Cask Component	Stress Point	Node Number	Stress Components (ksi)						Principal Stresses (ksi)			SI (ksi)
			SX	SY	SZ	SXY	SYZ	SXZ	S1	S2	S3	
Top Cover	1	730	-0.05	-0.03	-0.66	-0.59	-0.31	-0.22	0.56	-0.27	-1.03	1.59
	2	771	-0.05	-0.03	-0.66	-0.59	-0.31	-0.22	0.56	-0.27	-1.03	1.59
	3	738	-3.84	-0.97	-1.48	1.09	-0.08	-0.03	-0.60	-1.49	-4.21	3.61
	4	779	-3.84	-0.97	-1.48	1.09	-0.08	-0.03	-0.60	-1.49	-4.21	3.61
	5	746	-1.51	-6.61	-4.33	1.89	0.06	-0.37	-0.85	-4.35	-7.25	6.40
	6	786	-1.51	-6.61	-4.33	1.89	0.06	-0.37	-0.85	-4.35	-7.25	6.40
Top Flange	7	711	-6.70	0.86	-3.43	-1.05	0.08	0.22	1.00	-3.41	-6.86	7.86
	8	713	-6.70	0.86	-3.43	-1.05	0.08	0.22	1.00	-3.41	-6.86	7.86
Inner Shell	9	672	2.19	-4.88	0.23	-0.45	0.24	-0.27	2.26	0.20	-4.92	7.17
	10	674	2.19	-4.88	0.23	-0.45	0.24	-0.27	2.26	0.20	-4.92	7.17
	11	654	-0.27	-4.69	-3.71	1.08	-0.22	-0.25	0.00	-3.71	-4.96	4.96
	12	656	-0.27	-4.69	-3.71	1.08	-0.22	-0.25	0.00	-3.71	-4.96	4.96
	13	574	-0.58	-3.86	-9.99	-0.15	-0.42	-0.83	-0.51	-3.84	-10.09	9.59
	14	576	-0.58	-3.86	-9.99	-0.15	-0.42	-0.83	-0.51	-3.84	-10.09	9.59
	15	521	-0.35	-1.32	-1.20	0.01	-0.40	-0.07	-0.34	-0.86	-1.67	1.33
	16	522	-0.35	-1.32	-1.20	0.01	-0.40	-0.07	-0.34	-0.86	-1.67	1.33
	17	371	-0.12	1.44	1.43	0.00	0.07	0.14	1.51	1.37	-0.13	1.64
	18	372	-0.12	1.44	1.43	0.00	0.07	0.14	1.51	1.37	-0.13	1.64
	19	221	0.10	-1.18	3.89	0.00	0.20	0.34	3.93	0.08	-1.19	5.12
	20	222	0.10	-1.18	3.89	0.00	0.20	0.34	3.93	0.08	-1.19	5.12
	21	161	0.12	-2.17	4.06	0.03	0.14	0.35	4.10	0.09	-2.18	6.28
	22	162	0.12	-2.17	4.06	0.03	0.14	0.35	4.10	0.09	-2.18	6.28
	23	62	0.10	-2.15	2.35	0.51	-0.16	0.21	2.37	0.19	-2.27	4.64
	24	64	0.10	-2.15	2.35	0.51	-0.16	0.21	2.37	0.19	-2.27	4.64
	25	54	-1.52	0.49	-1.87	-0.24	-0.06	-0.03	0.52	-1.55	-1.87	2.39
	26	56	-1.52	0.49	-1.87	-0.24	-0.06	-0.03	0.52	-1.55	-1.87	2.39
Outer Shell	27	680	-2.92	-6.55	-3.42	2.75	0.02	-0.06	-1.44	-3.42	-8.03	6.60
	28	682	-2.92	-6.55	-3.42	2.75	0.02	-0.06	-1.44	-3.42	-8.03	6.60
	29	578	-0.89	-4.88	-4.06	-1.46	-0.57	-0.28	-0.42	-3.80	-5.61	5.20
	30	580	-0.89	-4.88	-4.06	-1.46	-0.57	-0.28	-0.42	-3.80	-5.61	5.20
	31	525	-0.18	-1.42	8.73	0.19	-0.68	0.79	8.84	-0.20	-1.51	10.35
	32	526	-0.18	-1.42	8.73	0.19	-0.68	0.79	8.84	-0.20	-1.51	10.35
	33	375	-0.07	2.91	2.65	0.00	0.04	0.25	2.92	2.66	-0.09	3.01
	34	376	-0.07	2.91	2.65	0.00	0.04	0.25	2.92	2.66	-0.09	3.01
	35	225	0.05	0.60	-2.19	0.00	0.26	-0.19	0.62	0.07	-2.23	2.85
	36	226	0.05	0.60	-2.19	0.00	0.26	-0.19	0.62	0.07	-2.23	2.85
	37	165	0.00	-0.60	-5.33	0.20	0.21	-0.47	0.09	-0.64	-5.38	5.47
	38	167	0.00	-0.60	-5.33	0.20	0.21	-0.47	0.09	-0.64	-5.38	5.47
	39	73	-0.91	-1.26	-0.97	-1.46	0.15	0.00	0.39	-0.96	-2.57	2.96
	40	75	-0.91	-1.26	-0.97	-1.46	0.15	0.00	0.39	-0.96	-2.57	2.96
Bottom Cover	41	54	-0.45	0.17	-0.63	-0.33	0.03	-0.02	0.32	-0.59	-0.63	0.95
	42	21	-0.45	0.17	-0.63	-0.33	0.03	-0.02	0.32	-0.59	-0.63	0.95
	43	51	-0.42	-0.05	-0.50	-0.25	0.02	-0.02	0.07	-0.49	-0.55	0.62
	44	18	-0.42	-0.05	-0.50	-0.25	0.02	-0.02	0.07	-0.49	-0.55	0.62
	45	48	0.21	-1.37	0.96	-0.05	-0.05	0.03	0.97	0.21	-1.37	2.33
	46	10	0.21	-1.37	0.96	-0.05	-0.05	0.03	0.97	0.21	-1.37	2.33
Ram Access Cover Plate	47	12	-0.94	0.70	-0.72	-0.32	0.07	-0.02	0.77	-0.73	-1.00	1.76
	48	4	-0.94	0.70	-0.72	-0.32	0.07	-0.02	0.77	-0.73	-1.00	1.76
	49	11	-0.82	-0.23	-1.11	0.01	-0.04	-0.07	-0.23	-0.80	-1.13	0.89
	50	3	-0.82	-0.23	-1.11	0.01	-0.04	-0.07	-0.23	-0.80	-1.13	0.89
	51	13	-0.05	-0.16	-0.70	0.16	0.09	-0.07	0.07	-0.25	-0.72	0.79
	52	1	-0.05	-0.16	-0.70	0.16	0.09	-0.07	0.07	-0.25	-0.72	0.79

Table 2.7.1-54
Cask 30-Foot 60° Primary Impact Drop Membrane Stress Summary, 45° Azimuth

Cask Component	Stress Point	Node Number	Stress Components (ksi)						Principal Stresses (ksi)			SI (ksi)
			SX	SY	SZ	SXY	SYZ	SXZ	S1	S2	S3	
Top Cover	1	4730	-0.13	-0.03	-0.58	-0.20	-0.64	0.31	0.56	-0.27	-1.03	1.59
	2	4771	-0.13	-0.03	-0.58	-0.20	-0.64	0.31	0.56	-0.27	-1.03	1.59
	3	4738	-2.16	-0.97	-2.67	0.96	0.15	-1.25	-0.31	-1.61	-3.87	3.56
	4	4779	-2.16	-0.97	-2.67	0.96	0.15	-1.25	-0.31	-1.61	-3.87	3.56
	5	4746	-0.59	-5.19	-5.04	1.73	0.53	-0.77	0.06	-4.62	-6.26	6.31
	6	4786	-0.59	-5.19	-5.04	1.73	0.53	-0.77	0.06	-4.62	-6.26	6.31
Top Flange	7	4711	-3.34	0.22	-2.32	-0.70	-0.32	0.13	0.39	-2.36	-3.48	3.87
	8	4713	-3.34	0.22	-2.32	-0.70	-0.32	0.13	0.39	-2.36	-3.48	3.87
Inner Shell	9	4672	2.67	-4.86	1.24	-0.45	0.36	-0.59	2.92	1.03	-4.91	7.83
	10	4674	2.67	-4.86	1.24	-0.45	0.36	-0.59	2.92	1.03	-4.91	7.83
	11	4654	-0.16	-4.09	-1.95	1.22	-0.47	-0.05	0.20	-1.89	-4.51	4.72
	12	4656	-0.16	-4.09	-1.95	1.22	-0.47	-0.05	0.20	-1.89	-4.51	4.72
	13	4574	-0.55	-3.38	-8.16	-0.08	-3.08	0.05	-0.54	-1.88	-9.67	9.13
	14	4576	-0.55	-3.38	-8.16	-0.08	-3.08	0.05	-0.54	-1.88	-9.67	9.13
	15	4521	-0.25	-2.34	-2.44	0.02	-2.75	-0.03	0.36	-0.25	-5.14	5.49
	16	4522	-0.25	-2.34	-2.44	0.02	-2.75	-0.03	0.36	-0.25	-5.14	5.49
	17	4371	-0.01	-1.21	0.83	0.00	0.45	-0.02	0.92	-0.02	-1.30	2.22
	18	4372	-0.01	-1.21	0.83	0.00	0.45	-0.02	0.92	-0.02	-1.30	2.22
	19	4221	0.16	-1.86	4.04	-0.01	1.38	0.00	4.35	0.16	-2.17	6.52
	20	4222	0.16	-1.86	4.04	-0.01	1.38	0.00	4.35	0.16	-2.17	6.52
	21	4161	0.17	-2.18	4.77	0.02	1.00	0.02	4.91	0.17	-2.32	7.23
	22	4162	0.17	-2.18	4.77	0.02	1.00	0.02	4.91	0.17	-2.32	7.23
	23	4062	0.17	-2.06	2.96	0.58	-0.23	0.03	2.98	0.31	-2.21	5.19
	24	4064	0.17	-2.06	2.96	0.58	-0.23	0.03	2.98	0.31	-2.21	5.19
	25	4054	-0.87	0.53	-1.02	-0.20	-0.31	0.16	0.62	-0.84	-1.14	1.76
	26	4056	-0.87	0.53	-1.02	-0.20	-0.31	0.16	0.62	-0.84	-1.14	1.76
Outer Shell	27	4680	-1.81	-4.45	-0.63	1.29	1.20	-0.14	-0.24	-1.37	-5.27	5.03
	28	4682	-1.81	-4.45	-0.63	1.29	1.20	-0.14	-0.24	-1.37	-5.27	5.03
	29	4578	-0.73	-2.72	-0.19	-0.83	-5.17	0.05	3.93	-0.73	-6.85	10.78
	30	4580	-0.73	-2.72	-0.19	-0.83	-5.17	0.05	3.93	-0.73	-6.85	10.78
	31	4525	-0.10	-1.35	6.48	0.15	-4.39	-0.04	8.45	-0.10	-3.32	11.77
	32	4526	-0.10	-1.35	6.48	0.15	-4.39	-0.04	8.45	-0.10	-3.32	11.77
	33	4375	0.00	0.10	1.74	0.00	0.32	0.00	1.80	0.05	0.00	1.80
	34	4376	0.00	0.10	1.74	0.00	0.32	0.00	1.80	0.05	0.00	1.80
	35	4225	0.04	-0.37	-2.28	-0.02	1.78	0.00	0.69	0.04	-3.34	4.03
	36	4226	0.04	-0.37	-2.28	-0.02	1.78	0.00	0.69	0.04	-3.34	4.03
	37	4165	-0.02	-0.79	-4.61	0.12	1.68	0.02	0.05	-0.23	-5.24	5.29
	38	4167	-0.02	-0.79	-4.61	0.12	1.68	0.02	0.05	-0.23	-5.24	5.29
	39	4073	-0.81	-1.28	-0.66	-1.33	0.38	0.07	0.34	-0.64	-2.45	2.79
	40	4075	-0.81	-1.28	-0.66	-1.33	0.38	0.07	0.34	-0.64	-2.45	2.79
Bottom Cover	41	4054	-0.29	0.26	-0.56	-0.32	-0.07	0.03	0.41	-0.43	-0.57	0.97
	42	4021	-0.29	0.26	-0.56	-0.32	-0.07	0.03	0.41	-0.43	-0.57	0.97
	43	4051	-0.29	-0.05	-0.52	-0.23	-0.04	-0.06	0.08	-0.38	-0.56	0.64
	44	4018	-0.29	-0.05	-0.52	-0.23	-0.04	-0.06	0.08	-0.38	-0.56	0.64
	45	4048	0.28	-1.28	0.91	-0.03	-0.01	-0.12	0.93	0.26	-1.28	2.22
	46	4010	0.28	-1.28	0.91	-0.03	-0.01	-0.12	0.93	0.26	-1.28	2.22
Ram Access Cover Plate	47	4012	-0.82	0.65	-0.96	-0.34	-0.04	-0.23	0.72	-0.69	-1.16	1.89
	48	4004	-0.82	0.65	-0.96	-0.34	-0.04	-0.23	0.72	-0.69	-1.16	1.89
	49	4011	-0.77	-0.17	-1.34	-0.09	-0.07	-0.31	-0.16	-0.64	-1.48	1.33
	50	4003	-0.77	-0.17	-1.34	-0.09	-0.07	-0.31	-0.16	-0.64	-1.48	1.33
	51	4013	-0.30	-0.16	-0.44	0.05	0.17	0.32	0.07	-0.25	-0.72	0.79
	52	4001	-0.30	-0.16	-0.44	0.05	0.17	0.32	0.07	-0.25	-0.72	0.79

Table 2.7.1-55
Cask 30-Foot 60° Primary Impact Drop Membrane Stress Summary, 90° Azimuth

Cask Component	Stress Point	Node Number	Stress Components (ksi)						Principal Stresses (ksi)			SI (ksi)
			SX	SY	SZ	SXY	SYZ	SXZ	S1	S2	S3	
Top Cover	1	7730	-0.66	-0.03	-0.05	0.31	-0.59	0.22	0.56	-0.27	-1.03	1.59
	2	7771	-0.66	-0.03	-0.05	0.31	-0.59	0.22	0.56	-0.27	-1.03	1.59
	3	7738	-0.60	-0.97	-3.20	0.83	0.04	0.43	0.11	-1.60	-3.27	3.38
	4	7779	-0.60	-0.97	-3.20	0.83	0.04	0.43	0.11	-1.60	-3.27	3.38
	5	7746	0.51	-3.71	-4.86	1.55	-0.17	0.78	1.10	-4.04	-5.12	6.21
	6	7786	0.51	-3.71	-4.86	1.55	-0.17	0.78	1.10	-4.04	-5.12	6.21
Top Flange	7	7711	1.23	-0.76	0.32	-0.15	-0.38	0.36	1.38	0.28	-0.88	2.26
	8	7713	1.23	-0.76	0.32	-0.15	-0.38	0.36	1.38	0.28	-0.88	2.26
Inner Shell	9	7672	3.71	-5.03	3.40	-0.53	-0.89	0.01	3.75	3.48	-5.16	8.91
	10	7674	3.71	-5.03	3.40	-0.53	-0.89	0.01	3.75	3.48	-5.16	8.91
	11	7654	0.29	-3.83	1.16	1.41	-2.04	-0.05	2.07	0.45	-4.89	6.96
	12	7656	0.29	-3.83	1.16	1.41	-2.04	-0.05	2.07	0.45	-4.89	6.96
	13	7574	-0.18	-3.80	-6.29	0.00	-3.16	-0.01	-0.18	-1.65	-8.45	8.26
	14	7576	-0.18	-3.80	-6.29	0.00	-3.16	-0.01	-0.18	-1.65	-8.45	8.26
	15	7521	-0.14	-4.60	-4.35	0.02	-2.34	-0.02	-0.14	-2.13	-6.82	6.68
	16	7522	-0.14	-4.60	-4.35	0.02	-2.34	-0.02	-0.14	-2.13	-6.82	6.68
	17	7371	-0.04	-5.04	-0.15	0.00	0.35	-0.01	-0.04	-0.13	-5.07	5.03
	18	7372	-0.04	-5.04	-0.15	0.00	0.35	-0.01	-0.04	-0.13	-5.07	5.03
	19	7221	0.13	-3.59	4.26	-0.01	1.36	0.00	4.48	0.13	-3.81	8.30
	20	7222	0.13	-3.59	4.26	-0.01	1.36	0.00	4.48	0.13	-3.81	8.30
	21	7161	0.20	-3.09	5.90	0.01	1.00	0.02	6.01	0.20	-3.20	9.21
	22	7162	0.20	-3.09	5.90	0.01	1.00	0.02	6.01	0.20	-3.20	9.21
	23	7062	0.23	-2.41	4.00	0.70	-0.11	0.03	4.00	0.41	-2.59	6.59
	24	7064	0.23	-2.41	4.00	0.70	-0.11	0.03	4.00	0.41	-2.59	6.59
	25	7054	0.02	0.30	0.57	-0.07	-0.19	0.52	0.95	0.24	-0.30	1.25
	26	7056	0.02	0.30	0.57	-0.07	-0.19	0.52	0.95	0.24	-0.30	1.25
Outer Shell	27	7680	-0.28	-2.78	3.51	-0.72	-2.91	0.35	4.72	-0.27	-4.00	8.72
	28	7682	-0.28	-2.78	3.51	-0.72	-2.91	0.35	4.72	-0.27	-4.00	8.72
	29	7578	-0.07	-1.60	3.51	0.07	-4.28	0.06	5.93	-0.06	-4.03	9.96
	30	7580	-0.07	-1.60	3.51	0.07	-4.28	0.06	5.93	-0.06	-4.03	9.96
	31	7525	-0.01	-3.00	2.97	0.06	-3.27	-0.03	4.41	-0.01	-4.44	8.85
	32	7526	-0.01	-3.00	2.97	0.06	-3.27	-0.03	4.41	-0.01	-4.44	8.85
	33	7375	-0.02	-4.06	0.27	0.00	0.33	-0.03	0.30	-0.02	-4.09	4.39
	34	7376	-0.02	-4.06	0.27	0.00	0.33	-0.03	0.30	-0.02	-4.09	4.39
	35	7225	0.02	-2.52	-2.51	-0.02	1.74	0.00	0.02	-0.77	-4.26	4.28
	36	7226	0.02	-2.52	-2.51	-0.02	1.74	0.00	0.02	-0.77	-4.26	4.28
	37	7165	0.04	-1.90	-3.80	0.01	1.72	0.01	0.04	-0.89	-4.82	4.85
	38	7167	0.04	-1.90	-3.80	0.01	1.72	0.01	0.04	-0.89	-4.82	4.85
	39	7073	-0.72	-1.60	-0.02	-1.24	1.12	0.14	0.76	-0.26	-2.84	3.60
	40	7075	-0.72	-1.60	-0.02	-1.24	1.12	0.14	0.76	-0.26	-2.84	3.60
Bottom Cover	41	7054	-0.11	0.34	-0.18	-0.33	-0.01	0.25	0.54	-0.03	-0.46	1.00
	42	7021	-0.11	0.34	-0.18	-0.33	-0.01	0.25	0.54	-0.03	-0.46	1.00
	43	7051	-0.13	-0.05	-0.37	-0.21	-0.03	0.14	0.14	-0.25	-0.45	0.59
	44	7018	-0.13	-0.05	-0.37	-0.21	-0.03	0.14	0.14	-0.25	-0.45	0.59
	45	7048	0.39	-1.26	0.93	0.01	-0.07	0.01	0.93	0.39	-1.26	2.19
	46	7010	0.39	-1.26	0.93	0.01	-0.07	0.01	0.93	0.39	-1.26	2.19
Ram Access Cover Plate	47	7012	-0.79	0.60	-1.20	-0.38	-0.04	0.03	0.70	-0.89	-1.20	1.90
	48	7004	-0.79	0.60	-1.20	-0.38	-0.04	0.03	0.70	-0.89	-1.20	1.90
	49	7011	-1.14	-0.16	-1.62	-0.22	-0.02	0.01	-0.12	-1.18	-1.62	1.50
	50	7003	-1.14	-0.16	-1.62	-0.22	-0.02	0.01	-0.12	-1.18	-1.62	1.50
	51	7013	-0.70	-0.16	-0.05	-0.09	0.16	0.07	0.07	-0.25	-0.72	0.79
	52	7001	-0.70	-0.16	-0.05	-0.09	0.16	0.07	0.07	-0.25	-0.72	0.79

Table 2.7.1-56
Cask 30-Foot 60° Primary Impact Drop Membrane Stress Summary, 135° Azimuth

Cask Component	Stress Point	Node Number	Stress Components (ksi)						Principal Stresses (ksi)			SI (ksi)
			SX	SY	SZ	SXY	SYZ	SXZ	S1	S2	S3	
Top Cover	1	10730	-0.58	-0.03	-0.13	0.64	-0.20	-0.31	0.56	-0.27	-1.03	1.59
	2	10771	-0.58	-0.03	-0.13	0.64	-0.20	-0.31	0.56	-0.27	-1.03	1.59
	3	10738	-1.77	-0.98	-1.14	0.89	-0.05	1.29	0.15	-0.99	-3.05	3.20
	4	10779	-1.77	-0.98	-1.14	0.89	-0.05	1.29	0.15	-0.99	-3.05	3.20
	5	10746	-0.06	-4.74	-2.38	1.68	-0.32	1.13	0.79	-2.54	-5.43	6.22
	6	10786	-0.06	-4.74	-2.38	1.68	-0.32	1.13	0.79	-2.54	-5.43	6.22
Top Flange	7	10711	0.63	-0.17	2.18	-0.20	-0.50	0.32	2.35	0.58	-0.29	2.65
	8	10713	0.63	-0.17	2.18	-0.20	-0.50	0.32	2.35	0.58	-0.29	2.65
Inner Shell	9	10672	3.96	-5.42	6.71	-0.47	-1.13	-0.04	6.82	3.99	-5.55	12.36
	10	10674	3.96	-5.42	6.71	-0.47	-1.13	-0.04	6.82	3.99	-5.55	12.36
	11	10654	0.38	-4.43	3.67	1.52	-1.79	-0.12	4.10	0.72	-5.19	9.29
	12	10656	0.38	-4.43	3.67	1.52	-1.79	-0.12	4.10	0.72	-5.19	9.29
	13	10574	-0.25	-5.80	-7.00	-0.01	-1.74	-0.01	-0.25	-4.55	-8.24	7.99
	14	10576	-0.25	-5.80	-7.00	-0.01	-1.74	-0.01	-0.25	-4.55	-8.24	7.99
	15	10521	-0.20	-6.38	-5.40	0.00	-1.15	-0.01	-0.20	-4.64	-7.14	6.94
	16	10522	-0.20	-6.38	-5.40	0.00	-1.15	-0.01	-0.20	-4.64	-7.14	6.94
	17	10371	0.01	-6.59	-0.79	0.00	0.18	-0.01	0.01	-0.78	-6.59	6.60
	18	10372	0.01	-6.59	-0.79	0.00	0.18	-0.01	0.01	-0.78	-6.59	6.60
	19	10221	0.18	-5.10	4.32	-0.01	0.69	0.00	4.37	0.18	-5.15	9.52
	20	10222	0.18	-5.10	4.32	-0.01	0.69	0.00	4.37	0.18	-5.15	9.52
	21	10161	0.24	-4.38	6.79	0.01	0.38	0.02	6.80	0.24	-4.39	11.19
	22	10162	0.24	-4.38	6.79	0.01	0.38	0.02	6.80	0.24	-4.39	11.19
	23	10062	0.15	-3.33	4.29	1.00	-0.42	0.01	4.31	0.41	-3.62	7.93
	24	10064	0.15	-3.33	4.29	1.00	-0.42	0.01	4.31	0.41	-3.62	7.93
	25	10054	0.13	-0.48	1.17	0.22	-0.23	0.05	1.20	0.19	-0.58	1.78
	26	10056	0.13	-0.48	1.17	0.22	-0.23	0.05	1.20	0.19	-0.58	1.78
Outer Shell	27	10680	-0.68	-4.70	4.98	0.37	-3.21	0.38	5.96	-0.65	-5.71	11.67
	28	10682	-0.68	-4.70	4.98	0.37	-3.21	0.38	5.96	-0.65	-5.71	11.67
	29	10578	-0.02	-5.54	2.24	-0.04	-2.31	-0.03	2.87	-0.02	-6.17	9.05
	30	10580	-0.02	-5.54	2.24	-0.04	-2.31	-0.03	2.87	-0.02	-6.17	9.05
	31	10525	-0.03	-6.02	1.44	-0.01	-1.34	-0.02	1.68	-0.03	-6.25	7.93
	32	10526	-0.03	-6.02	1.44	-0.01	-1.34	-0.02	1.68	-0.03	-6.25	7.93
	33	10375	0.03	-5.96	-0.56	0.00	0.28	-0.01	0.03	-0.55	-5.97	6.00
	34	10376	0.03	-5.96	-0.56	0.00	0.28	-0.01	0.03	-0.55	-5.97	6.00
	35	10225	0.05	-4.09	-2.65	-0.01	0.85	0.00	0.05	-2.25	-4.48	4.53
	36	10226	0.05	-4.09	-2.65	-0.01	0.85	0.00	0.05	-2.25	-4.48	4.53
	37	10165	0.07	-3.17	-3.62	0.02	0.81	0.00	0.07	-2.56	-4.23	4.30
	38	10167	0.07	-3.17	-3.62	0.02	0.81	0.00	0.07	-2.56	-4.23	4.30
	39	10073	-0.85	-2.01	0.34	-1.41	0.82	0.08	0.72	-0.13	-3.10	3.83
	40	10075	-0.85	-2.01	0.34	-1.41	0.82	0.08	0.72	-0.13	-3.10	3.83
Bottom Cover	41	10054	-0.07	0.54	0.34	-0.38	-0.04	0.19	0.75	0.34	-0.29	1.04
	42	10021	-0.07	0.54	0.34	-0.38	-0.04	0.19	0.75	0.34	-0.29	1.04
	43	10051	-0.09	-0.05	-0.09	-0.21	-0.02	0.24	0.24	-0.09	-0.39	0.64
	44	10018	-0.09	-0.05	-0.09	-0.21	-0.02	0.24	0.24	-0.09	-0.39	0.64
	45	10048	0.44	-1.44	1.19	0.02	-0.10	0.21	1.25	0.39	-1.44	2.69
	46	10010	0.44	-1.44	1.19	0.02	-0.10	0.21	1.25	0.39	-1.44	2.69
Ram Access Cover Plate	47	10012	-0.81	0.75	-0.88	-0.36	-0.01	0.29	0.83	-0.60	-1.17	2.00
	48	10004	-0.81	0.75	-0.88	-0.36	-0.01	0.29	0.83	-0.60	-1.17	2.00
	49	10011	-0.76	-0.23	-1.34	-0.06	0.05	0.35	-0.22	-0.60	-1.50	1.28
	50	10003	-0.76	-0.23	-1.34	-0.06	0.05	0.35	-0.22	-0.60	-1.50	1.28
	51	10013	-0.44	-0.16	-0.30	-0.17	0.05	-0.32	0.07	-0.25	-0.72	0.79
	52	10001	-0.44	-0.16	-0.30	-0.17	0.05	-0.32	0.07	-0.25	-0.72	0.79

Table 2.7.1-57
Cask 30-Foot 60° Primary Impact Drop Membrane Stress Summary, 180° Azimuth

Cask Component	Stress Point	Node Number	Stress Components (ksi)						Principal Stresses (ksi)			SI (ksi)
			SX	SY	SZ	SXY	SYZ	SXZ	S1	S2	S3	
Top Cover	1	13730	-0.05	-0.03	-0.66	0.59	0.31	-0.22	0.56	-0.27	-1.03	1.59
	2	13771	-0.05	-0.03	-0.66	0.59	0.31	-0.22	0.56	-0.27	-1.03	1.59
	3	13738	-2.48	-0.97	0.00	0.92	0.13	-0.05	0.02	-0.55	-2.92	2.94
	4	13779	-2.48	-0.97	0.00	0.92	0.13	-0.05	0.02	-0.55	-2.92	2.94
	5	13746	-0.11	-5.09	-1.20	1.66	-0.07	0.30	0.44	-1.24	-5.60	6.04
	6	13786	-0.11	-5.09	-1.20	1.66	-0.07	0.30	0.44	-1.24	-5.60	6.04
Top Flange	7	13711	1.44	-0.15	3.52	-0.14	-0.17	-0.21	3.55	1.43	-0.17	3.71
	8	13713	1.44	-0.15	3.52	-0.14	-0.17	-0.21	3.55	1.43	-0.17	3.71
Inner Shell	9	13672	3.81	-5.40	6.88	-0.45	-0.29	-0.44	6.95	3.77	-5.43	12.37
	10	13674	3.81	-5.40	6.88	-0.45	-0.29	-0.44	6.95	3.77	-5.43	12.37
	11	13654	0.39	-4.67	3.60	1.44	0.04	-0.49	3.67	0.70	-5.05	8.72
	12	13656	0.39	-4.67	3.60	1.44	0.04	-0.49	3.67	0.70	-5.05	8.72
	13	13574	-0.23	-6.16	-7.31	-0.01	-0.30	0.95	-0.11	-6.09	-7.50	7.39
	14	13576	-0.23	-6.16	-7.31	-0.01	-0.30	0.95	-0.11	-6.09	-7.50	7.39
	15	13521	-0.19	-6.91	-5.77	0.01	-0.21	0.75	-0.09	-5.83	-6.95	6.87
	16	13522	-0.19	-6.91	-5.77	0.01	-0.21	0.75	-0.09	-5.83	-6.95	6.87
	17	13371	-0.05	-7.17	-0.96	0.00	0.04	0.13	-0.04	-0.98	-7.17	7.13
	18	13372	-0.05	-7.17	-0.96	0.00	0.04	0.13	-0.04	-0.98	-7.17	7.13
	19	13221	0.13	-5.59	4.37	-0.01	0.11	-0.57	4.44	0.05	-5.59	10.03
	20	13222	0.13	-5.59	4.37	-0.01	0.11	-0.57	4.44	0.05	-5.59	10.03
	21	13161	0.15	-5.13	7.37	0.01	0.00	-0.96	7.49	0.03	-5.13	12.62
	22	13162	0.15	-5.13	7.37	0.01	0.00	-0.96	7.49	0.03	-5.13	12.62
	23	13062	-0.05	-5.59	4.68	1.32	-0.13	-0.55	4.76	0.18	-5.89	10.65
	24	13064	-0.05	-5.59	4.68	1.32	-0.13	-0.55	4.76	0.18	-5.89	10.65
	25	13054	0.90	-1.66	1.75	0.95	-0.43	0.20	1.81	1.21	-2.03	3.84
	26	13056	0.90	-1.66	1.75	0.95	-0.43	0.20	1.81	1.21	-2.03	3.84
Outer Shell	27	13680	-0.72	-5.07	5.28	0.54	-0.51	-0.72	5.40	-0.75	-5.16	10.55
	28	13682	-0.72	-5.07	5.28	0.54	-0.51	-0.72	5.40	-0.75	-5.16	10.55
	29	13578	-0.01	-6.40	1.32	-0.04	-0.43	-0.18	1.37	-0.03	-6.43	7.79
	30	13580	-0.01	-6.40	1.32	-0.04	-0.43	-0.18	1.37	-0.03	-6.43	7.79
	31	13525	-0.01	-7.14	0.81	0.01	-0.25	-0.12	0.84	-0.03	-7.14	7.98
	32	13526	-0.01	-7.14	0.81	0.01	-0.25	-0.12	0.84	-0.03	-7.14	7.98
	33	13375	-0.02	-6.75	-0.75	-0.01	0.07	0.11	0.00	-0.76	-6.75	6.75
	34	13376	-0.02	-6.75	-0.75	-0.01	0.07	0.11	0.00	-0.76	-6.75	6.75
	35	13225	0.01	-4.65	-2.59	-0.01	0.12	0.35	0.06	-2.63	-4.65	4.71
	36	13226	0.01	-4.65	-2.59	-0.01	0.12	0.35	0.06	-2.63	-4.65	4.71
	37	13165	0.00	-4.11	-3.38	0.03	0.04	0.47	0.06	-3.44	-4.11	4.17
	38	13167	0.00	-4.11	-3.38	0.03	0.04	0.47	0.06	-3.44	-4.11	4.17
	39	13073	-1.01	-5.46	0.09	-1.36	-0.80	0.02	0.25	-0.69	-5.94	6.19
	40	13075	-1.01	-5.46	0.09	-1.36	-0.80	0.02	0.25	-0.69	-5.94	6.19
Bottom Cover	41	13054	-1.06	0.31	0.38	-0.20	-0.26	0.11	0.63	0.09	-1.09	1.72
	42	13021	-1.06	0.31	0.38	-0.20	-0.26	0.11	0.63	0.09	-1.09	1.72
	43	13051	-0.53	-0.07	0.26	-0.20	-0.03	0.05	0.27	0.00	-0.61	0.88
	44	13018	-0.53	-0.07	0.26	-0.20	-0.03	0.05	0.27	0.00	-0.61	0.88
	45	13048	0.32	-1.59	1.53	0.01	0.08	-0.06	1.54	0.31	-1.59	3.13
	46	13010	0.32	-1.59	1.53	0.01	0.08	-0.06	1.54	0.31	-1.59	3.13
Ram Access Cover Plate	47	13012	-0.97	0.85	-0.55	-0.34	-0.12	0.02	0.92	-0.56	-1.03	1.95
	48	13004	-0.97	0.85	-0.55	-0.34	-0.12	0.02	0.92	-0.56	-1.03	1.95
	49	13011	-0.84	-0.31	-1.05	0.04	0.07	0.11	-0.29	-0.81	-1.10	0.81
	50	13003	-0.84	-0.31	-1.05	0.04	0.07	0.11	-0.29	-0.81	-1.10	0.81
	51	13013	-0.05	-0.16	-0.70	-0.16	-0.09	-0.07	0.07	-0.25	-0.72	0.79
	52	13001	-0.05	-0.16	-0.70	-0.16	-0.09	-0.07	0.07	-0.25	-0.72	0.79

Table 2.7.1-58
Cask 30-Foot 60° Primary Impact Drop Membrane Plus Bending Stress Summary, 0° Azimuth

Cask Component	Stress Point	Node Number	Stress Components (ksi) SX	SY	SZ	SXY	SYZ	SXZ	Principal Stresses (ksi) S1	S2	S3	SI (ksi)
Top Cover	1	730	1.97	4.12	18.12	-0.62	-0.29	0.89	18.17	4.27	1.77	16.41
	2	771	-2.07	-4.17	-19.44	-0.57	-0.34	-1.33	-1.84	-4.29	-19.55	17.71
	3	738	5.31	-0.75	10.20	1.09	-0.08	0.16	10.20	5.50	-0.94	11.14
	4	779	-13.00	-1.19	-13.16	1.09	-0.08	-0.22	-1.10	-12.92	-13.35	12.25
	5	746	-12.83	-7.28	-5.31	1.95	-0.04	0.19	-5.31	-6.67	-13.45	8.15
	6	786	9.83	-5.95	-3.35	1.84	0.16	-0.93	10.10	-3.38	-6.19	16.28
Top Flange	7	711	-9.24	-9.60	-6.74	-1.75	0.12	0.12	-6.74	-7.66	-11.18	4.45
	8	713	-4.17	11.32	-0.11	-0.36	0.03	0.32	11.32	-0.08	-4.20	15.52
Inner Shell	9	672	0.07	-12.77	-2.19	-2.14	0.43	-0.33	0.48	-2.24	-13.13	13.61
	10	674	4.30	3.01	2.65	1.24	0.06	-0.20	5.07	2.70	2.20	2.87
	11	654	-0.43	-10.58	-5.18	0.56	-0.14	-0.37	-0.37	-5.20	-10.61	10.24
	12	656	-0.11	1.21	-2.24	1.61	-0.30	-0.14	2.31	-1.19	-2.26	4.57
	13	574	-0.57	-2.97	-9.74	-0.15	-0.46	-0.81	-0.49	-2.94	-9.84	9.34
	14	576	-0.60	-4.75	-10.25	-0.14	-0.37	-0.85	-0.52	-4.73	-10.35	9.83
	15	521	-0.36	-2.35	-1.81	0.01	-0.43	-0.12	-0.35	-1.58	-2.59	2.24
	16	522	-0.34	-0.30	-0.60	0.01	-0.38	-0.02	-0.04	-0.34	-0.85	0.81
	17	371	-0.13	0.88	0.47	0.00	0.07	0.06	0.89	0.47	-0.14	1.02
	18	372	-0.11	2.00	2.40	0.00	0.07	0.22	2.43	1.99	-0.13	2.55
	19	221	0.10	-1.28	3.56	0.00	0.22	0.31	3.60	0.08	-1.29	4.88
	20	222	0.11	-1.08	4.22	0.00	0.18	0.36	4.26	0.08	-1.09	5.35
	21	161	0.12	-1.91	4.08	0.03	0.15	0.35	4.11	0.09	-1.92	6.03
	22	162	0.12	-2.44	4.05	0.03	0.12	0.35	4.09	0.09	-2.44	6.52
	23	62	0.11	-1.80	2.52	0.30	-0.15	0.22	2.54	0.14	-1.86	4.40
	24	64	0.08	-2.49	2.18	0.73	-0.18	0.20	2.20	0.26	-2.69	4.89
	25	54	-0.57	0.50	0.79	-0.09	0.02	0.10	0.80	0.50	-0.59	1.39
	26	56	-2.21	-2.19	-0.87	0.45	-0.02	0.10	-0.86	-1.75	-2.66	1.80
Outer Shell	27	680	-2.05	-25.94	-8.24	4.12	0.16	-0.54	-1.32	-8.28	-26.63	25.31
	28	682	-3.80	12.83	1.40	1.38	-0.12	0.43	12.95	1.43	-3.95	16.90
	29	578	-0.82	-1.99	-2.69	-1.46	-0.76	-0.18	0.20	-2.11	-3.59	3.79
	30	580	-0.97	-7.78	-5.42	-1.45	-0.37	-0.39	-0.65	-5.37	-8.15	7.50
	31	525	-0.21	-4.81	7.69	0.20	-0.74	0.70	7.79	-0.26	-4.87	12.66
	32	526	-0.15	1.97	9.76	0.19	-0.61	0.88	9.88	1.95	-0.26	10.14
	33	375	-0.09	1.94	1.30	0.00	0.04	0.13	1.94	1.31	-0.10	2.05
	34	376	-0.05	3.87	3.99	0.00	0.05	0.36	4.04	3.86	-0.09	4.13
	35	225	0.04	0.12	-2.98	-0.01	0.29	-0.26	0.15	0.06	-3.03	3.18
	36	226	0.06	1.08	-1.40	0.00	0.23	-0.12	1.10	0.07	-1.43	2.53
	37	165	0.08	-0.22	-5.60	0.21	0.26	-0.50	0.20	-0.29	-5.65	5.86
	38	167	-0.09	-0.97	-5.07	0.20	0.16	-0.44	-0.01	-1.00	-5.11	5.10
	39	73	-0.82	-10.99	-3.69	-2.10	0.14	-0.22	-0.39	-3.71	-11.41	11.02
	40	75	-1.01	8.47	1.76	-0.83	0.15	0.22	8.54	1.78	-1.10	9.64
Bottom Cover	41	54	-0.99	0.55	0.66	-0.20	0.03	0.11	0.67	0.57	-1.02	1.69
	42	21	0.09	-0.20	-1.91	-0.47	0.03	-0.15	0.44	-0.54	-1.92	2.36
	43	51	0.68	-0.04	1.97	-0.24	0.02	0.08	1.98	0.75	-0.12	2.10
	44	18	-1.52	-0.06	-2.97	-0.25	0.02	-0.12	-0.02	-1.55	-2.98	2.95
	45	48	1.88	-1.14	3.45	-0.08	0.02	0.11	3.45	1.88	-1.14	4.59
	46	10	-1.46	-1.59	-1.52	-0.02	-0.12	-0.04	-1.41	-1.47	-1.69	0.27
Ram Access Cover Plate	47	12	-0.69	0.52	0.32	-0.11	0.07	0.01	0.55	0.30	-0.70	1.25
	48	4	-1.18	0.88	-1.77	-0.54	0.07	-0.05	1.02	-1.31	-1.77	2.79
	49	11	0.12	-0.10	0.41	-0.03	-0.05	-0.02	0.42	0.12	-0.11	0.53
	50	3	-1.75	-0.37	-2.63	0.05	-0.04	-0.12	-0.36	-1.74	-2.64	2.28
	51	13	0.16	0.30	1.31	0.16	0.07	0.05	1.31	0.39	0.05	1.26
	52	1	-0.25	-0.63	-2.70	0.17	0.10	-0.19	-0.18	-0.68	-2.72	2.54

Table 2.7.1-59
Cask 30-Foot 60° Primary Impact Drop Membrane Plus Bending Stress Summary, 45° Azimuth

Cask Component	Stress Point	Node Number	Stress Components (ksi)						Principal Stresses (ksi)			SI (ksi)
			SX	SY	SZ	SXY	SYZ	SXZ	S1	S2	S3	
Top Cover	1	4730	9.16	4.12	10.93	-0.23	-0.64	-8.07	18.17	4.27	1.77	16.41
	2	4771	-9.42	-4.17	-12.08	-0.17	-0.64	8.69	-1.84	-4.29	-19.55	17.71
	3	4738	7.56	-0.74	9.95	0.96	0.15	-1.14	10.41	7.22	-0.86	11.27
	4	4779	-11.87	-1.20	-15.29	0.96	0.15	-1.35	-1.11	-11.47	-15.77	14.66
	5	4746	-8.16	-5.47	-4.18	1.94	0.39	-1.84	-3.37	-4.67	-9.77	6.40
	6	4786	6.99	-4.92	-5.91	1.52	0.68	0.29	7.19	-4.76	-6.27	13.46
Top Flange	7	4711	-4.56	-4.71	-3.92	-1.12	-0.27	0.10	-3.39	-4.04	-5.76	2.38
	8	4713	-2.13	5.14	-0.72	-0.29	-0.38	0.15	5.17	-0.74	-2.15	7.32
Inner Shell	9	4672	0.20	-13.74	-1.96	-2.29	0.89	0.05	0.57	-1.90	-14.17	14.75
	10	4674	5.14	4.01	4.44	1.39	-0.17	-1.23	6.66	4.10	2.83	3.83
	11	4654	-0.36	-11.22	-3.97	0.58	-0.16	-0.03	-0.33	-3.96	-11.25	10.92
	12	4656	0.04	3.05	0.06	1.87	-0.78	-0.07	4.08	0.01	-0.94	5.01
	13	4574	-0.54	-3.23	-8.18	-0.08	-3.68	0.02	-0.53	-1.28	-10.14	9.61
	14	4576	-0.55	-3.54	-8.14	-0.09	-2.48	0.08	-0.55	-2.46	-9.22	8.68
	15	4521	-0.26	-2.87	-2.62	0.02	-3.12	-0.02	0.38	-0.26	-5.87	6.24
	16	4522	-0.24	-1.82	-2.25	0.02	-2.37	-0.04	0.35	-0.24	-4.42	4.77
	17	4371	-0.01	-1.22	1.02	0.00	0.48	0.02	1.12	-0.01	-1.32	2.43
	18	4372	-0.02	-1.21	0.63	0.00	0.41	-0.06	0.73	-0.02	-1.29	2.02
	19	4221	0.16	-1.83	4.21	-0.01	1.57	0.01	4.59	0.16	-2.21	6.80
	20	4222	0.15	-1.89	3.87	-0.01	1.20	-0.01	4.11	0.15	-2.13	6.24
	21	4161	0.18	-1.96	4.97	0.02	1.20	0.02	5.17	0.18	-2.16	7.33
	22	4162	0.17	-2.39	4.57	0.02	0.81	0.02	4.67	0.17	-2.49	7.15
	23	4062	0.18	-1.59	3.18	0.32	-0.30	0.03	3.20	0.24	-1.66	4.86
	24	4064	0.15	-2.54	2.75	0.83	-0.15	0.03	2.76	0.38	-2.78	5.53
	25	4054	-0.23	0.70	1.21	-0.08	-0.14	-0.01	1.25	0.68	-0.24	1.48
	26	4056	-1.91	-2.37	-0.58	0.51	-0.10	0.14	-0.57	-1.59	-2.71	2.14
Outer Shell	27	4680	-1.51	-16.65	-3.70	2.02	3.39	-0.16	-1.21	-2.93	-17.73	16.53
	28	4682	-2.10	7.75	2.44	0.57	-1.00	-0.12	7.96	2.26	-2.13	10.10
	29	4578	-0.75	-1.57	0.70	-0.82	-7.16	-0.02	6.84	-0.73	-7.74	14.58
	30	4580	-0.70	-3.87	-1.09	-0.84	-3.19	0.12	1.18	-0.80	-6.03	7.21
	31	4525	-0.13	-3.20	6.34	0.15	-5.14	-0.03	8.58	-0.13	-5.45	14.03
	32	4526	-0.07	0.50	6.62	0.14	-3.64	-0.05	8.32	-0.06	-1.21	9.52
	33	4375	0.01	0.08	2.10	0.00	0.34	0.05	2.16	0.02	0.00	2.16
	34	4376	-0.01	0.13	1.39	0.00	0.29	-0.06	1.45	0.07	-0.01	1.46
	35	4225	0.04	-0.57	-2.34	-0.02	2.09	0.02	0.81	0.04	-3.72	4.53
	36	4226	0.05	-0.18	-2.23	-0.02	1.47	-0.02	0.58	0.05	-2.99	3.58
	37	4165	0.04	-0.60	-4.65	0.12	2.11	0.02	0.34	-0.01	-5.55	5.89
	38	4167	-0.09	-0.98	-4.56	0.12	1.24	0.01	-0.06	-0.62	-4.95	4.89
	39	4073	-0.77	-10.46	-3.22	-1.92	0.34	0.09	-0.41	-3.21	-10.85	10.44
	40	4075	-0.84	7.91	1.90	-0.73	0.42	0.05	8.00	1.87	-0.90	8.90
Bottom Cover	41	4054	-0.61	0.76	1.10	-0.19	-0.12	0.01	1.14	0.75	-0.64	1.78
	42	4021	0.03	-0.25	-2.22	-0.45	-0.02	0.05	0.36	-0.58	-2.22	2.58
	43	4051	0.90	-0.04	2.24	-0.22	-0.04	-0.03	2.24	0.95	-0.09	2.34
	44	4018	-1.47	-0.06	-3.28	-0.23	-0.04	-0.10	-0.03	-1.50	-3.29	3.26
	45	4048	1.87	-1.07	3.49	-0.06	-0.03	-0.08	3.50	1.86	-1.07	4.57
	46	4010	-1.30	-1.50	-1.67	-0.01	0.01	-0.16	-1.24	-1.50	-1.73	0.50
Ram Access Cover Plate	47	4012	-0.31	0.51	0.27	-0.15	0.03	-0.31	0.57	0.36	-0.46	1.04
	48	4004	-1.33	0.79	-2.18	-0.53	-0.11	-0.15	0.91	-1.42	-2.22	3.14
	49	4011	0.55	-0.02	0.37	-0.16	-0.08	-0.23	0.72	0.28	-0.10	0.82
	50	4003	-2.09	-0.33	-3.06	-0.01	-0.07	-0.38	-0.33	-1.96	-3.19	2.86
	51	4013	0.68	0.30	0.78	0.06	0.16	-0.57	1.31	0.39	0.05	1.26
	52	4001	-1.28	-0.63	-1.67	0.05	0.19	1.22	-0.18	-0.68	-2.72	2.54

Table 2.7.1-60
Cask 30-Foot 60° Primary Impact Drop Membrane Plus Bending Stress Summary, 90° Azimuth

Cask Component	Stress Point	Node Number	Stress Components (ksi) SX	SY	SZ	SXY	SYZ	SXZ	Principal Stresses (ksi) S1	S2	S3	SI (ksi)
Top Cover	1	7730	18.12	4.12	1.97	0.29	-0.62	-0.89	18.17	4.27	1.77	16.41
	2	7771	-19.44	-4.17	-2.07	0.34	-0.57	1.33	-1.84	-4.29	-19.55	17.71
	3	7738	9.92	-0.75	10.40	0.83	0.04	0.25	10.52	9.87	-0.81	11.33
	4	7779	-11.11	-1.20	-16.79	0.83	0.04	0.62	-1.13	-11.11	-16.86	15.74
	5	7746	-3.11	-3.55	-2.09	1.96	-0.14	0.88	-1.02	-2.28	-5.45	4.43
	6	7786	4.14	-3.88	-7.62	1.14	-0.21	0.67	4.33	-4.02	-7.68	12.01
Top Flange	7	7711	1.89	1.86	0.93	-0.17	-0.39	0.59	2.38	1.71	0.58	1.79
	8	7713	0.56	-3.38	-0.28	-0.13	-0.36	0.13	0.59	-0.26	-3.43	4.02
Inner Shell	9	7672	0.70	-15.54	-0.92	-2.67	-1.12	-0.16	1.13	-0.84	-16.05	17.18
	10	7674	6.71	5.47	7.72	1.60	-0.67	0.17	8.06	7.59	4.25	3.80
	11	7654	0.04	-12.90	-1.81	0.60	-2.20	0.02	0.07	-1.39	-13.34	13.41
	12	7656	0.55	5.24	4.13	2.23	-1.88	-0.13	7.19	3.15	-0.42	7.61
	13	7574	-0.23	-4.43	-6.98	0.00	-3.17	0.01	-0.23	-2.29	-9.12	8.90
	14	7576	-0.14	-3.18	-5.60	0.01	-3.16	-0.02	-0.14	-1.01	-7.77	7.63
	15	7521	-0.12	-4.51	-4.29	0.01	-2.19	-0.04	-0.12	-2.21	-6.59	6.46
	16	7522	-0.15	-4.69	-4.41	0.03	-2.50	0.00	-0.15	-2.04	-7.05	6.90
	17	7371	-0.02	-4.72	0.55	0.00	0.34	-0.05	0.57	-0.03	-4.74	5.32
	18	7372	-0.05	-5.36	-0.85	0.00	0.37	0.04	-0.05	-0.82	-5.39	5.34
	19	7221	0.14	-3.46	4.69	0.00	1.30	0.00	4.90	0.14	-3.66	8.56
	20	7222	0.12	-3.71	3.82	-0.01	1.41	0.01	4.07	0.12	-3.97	8.04
	21	7161	0.20	-2.81	6.28	0.01	1.00	0.03	6.39	0.20	-2.92	9.31
	22	7162	0.19	-3.37	5.51	0.00	1.01	0.01	5.63	0.19	-3.48	9.10
	23	7062	0.25	-1.62	4.33	0.37	-0.18	0.04	4.34	0.32	-1.70	6.04
	24	7064	0.21	-3.20	3.66	1.04	-0.03	0.03	3.66	0.50	-3.49	7.15
	25	7054	0.22	0.89	1.98	-0.11	-0.06	0.11	2.00	0.90	0.20	1.80
	26	7056	-1.59	-2.76	-0.02	0.62	-0.06	0.34	0.05	-1.39	-3.04	3.09
Outer Shell	27	7680	-0.40	-6.58	2.05	-0.77	-4.01	0.42	3.74	-0.47	-8.20	11.94
	28	7682	-0.16	1.02	4.96	-0.66	-1.82	0.28	5.71	0.63	-0.52	6.23
	29	7578	-0.16	-2.47	2.36	0.07	-4.42	0.17	4.98	-0.16	-5.09	10.07
	30	7580	0.03	-0.74	4.66	0.08	-4.13	-0.05	6.89	0.03	-2.98	9.88
	31	7525	0.03	-2.87	3.13	0.05	-2.96	-0.03	4.34	0.03	-4.08	8.43
	32	7526	-0.04	-3.12	2.81	0.07	-3.58	-0.04	4.49	-0.04	-4.80	9.29
	33	7375	0.01	-3.55	1.22	0.00	0.34	-0.08	1.25	0.00	-3.57	4.83
	34	7376	-0.04	-4.57	-0.68	0.00	0.32	0.01	-0.04	-0.65	-4.60	4.55
	35	7225	0.03	-2.40	-2.14	-0.01	1.67	-0.01	0.03	-0.60	-3.94	3.97
	36	7226	0.01	-2.64	-2.87	-0.02	1.82	0.00	0.02	-0.93	-4.58	4.60
	37	7165	0.09	-1.76	-3.73	0.02	1.71	0.03	0.09	-0.77	-4.72	4.81
	38	7167	-0.02	-2.03	-3.87	0.01	1.73	0.00	-0.02	-1.00	-4.91	4.89
	39	7073	-0.73	-10.76	-2.61	-1.82	1.37	0.18	-0.41	-2.39	-11.30	10.89
	40	7075	-0.72	7.56	2.56	-0.66	0.87	0.10	7.76	2.43	-0.78	8.54
Bottom Cover	41	7054	-0.13	0.99	1.90	-0.20	-0.04	0.14	1.91	1.03	-0.17	2.08
	42	7021	-0.08	-0.32	-2.26	-0.45	0.01	0.37	0.30	-0.64	-2.33	2.63
	43	7051	1.31	-0.04	2.72	-0.21	-0.03	-0.02	2.72	1.34	-0.07	2.80
	44	7018	-1.57	-0.06	-3.46	-0.21	-0.03	0.30	-0.03	-1.55	-3.51	3.47
	45	7048	1.95	-1.05	3.66	-0.02	-0.04	-0.09	3.67	1.95	-1.05	4.71
	46	7010	-1.18	-1.47	-1.81	0.03	-0.10	0.10	-1.16	-1.45	-1.85	0.69
Ram Access Cover Plate	47	7012	0.04	0.50	0.22	-0.22	-0.02	-0.01	0.59	0.22	-0.04	0.63
	48	7004	-1.63	0.71	-2.62	-0.54	-0.05	0.06	0.83	-1.74	-2.63	3.46
	49	7011	0.86	0.08	0.42	-0.33	-0.02	-0.02	0.98	0.42	-0.04	1.02
	50	7003	-3.13	-0.40	-3.65	-0.11	-0.03	0.04	-0.40	-3.13	-3.65	3.25
	51	7013	1.31	0.30	0.16	-0.07	0.16	-0.05	1.31	0.39	0.05	1.26
	52	7001	-2.70	-0.63	-0.25	-0.10	0.17	0.19	-0.18	-0.68	-2.72	2.54

Table 2.7.1-61
Cask 30-Foot 60° Primary Impact Drop Membrane Plus Bending Stress Summary, 135° Azimuth

Cask Component	Stress Point	Node Number	Stress Components (ksi)						Principal Stresses (ksi)			SI (ksi)
			SX	SY	SZ	SXY	SYZ	SXZ	S1	S2	S3	
Top Cover	1	10730	10.93	4.12	9.16	0.64	-0.23	8.07	18.17	4.27	1.77	16.41
	2	10771	-12.08	-4.17	-9.42	0.64	-0.17	-8.69	-1.84	-4.29	-19.55	17.71
	3	10738	8.96	-0.75	11.98	0.89	-0.05	1.03	12.30	8.72	-0.83	13.13
	4	10779	-12.49	-1.20	-14.25	0.89	-0.05	1.55	-1.13	-11.64	-15.17	14.04
	5	10746	-5.64	-4.76	-0.31	2.05	-0.21	1.56	0.14	-3.30	-7.55	7.69
	6	10786	5.52	-4.73	-4.45	1.31	-0.43	0.70	5.73	-4.14	-5.24	10.97
Top Flange	7	10711	0.89	1.00	2.58	-0.31	-0.63	0.54	2.98	0.86	0.63	2.35
	8	10713	0.38	-1.34	1.78	-0.10	-0.37	0.09	1.83	0.38	-1.39	3.22
Inner Shell	9	10672	0.76	-16.49	2.84	-2.77	-1.35	-0.21	2.93	1.20	-17.02	19.95
	10	10674	7.17	5.65	10.59	1.84	-0.91	0.13	10.76	8.33	4.31	6.45
	11	10654	0.05	-13.91	1.07	0.67	-1.81	-0.06	1.30	0.07	-14.16	15.46
	12	10656	0.72	5.06	6.27	2.37	-1.77	-0.18	7.91	4.52	-0.38	8.28
	13	10574	-0.24	-5.53	-6.86	-0.01	-1.71	-0.02	-0.24	-4.36	-8.03	7.79
	14	10576	-0.27	-6.06	-7.15	-0.01	-1.78	0.01	-0.27	-4.74	-8.46	8.19
	15	10521	-0.20	-6.31	-5.47	0.01	-1.11	-0.01	-0.20	-4.70	-7.07	6.87
	16	10522	-0.20	-6.45	-5.34	0.00	-1.20	-0.01	-0.20	-4.57	-7.21	7.01
	17	10371	0.00	-6.65	-1.18	0.00	0.20	0.00	0.00	-1.17	-6.66	6.65
	18	10372	0.02	-6.53	-0.40	0.00	0.15	-0.01	0.02	-0.40	-6.53	6.55
	19	10221	0.18	-5.02	4.28	-0.01	0.68	0.00	4.32	0.18	-5.06	9.39
	20	10222	0.17	-5.19	4.36	-0.01	0.69	0.01	4.41	0.17	-5.24	9.65
	21	10161	0.24	-4.10	6.88	0.01	0.38	0.00	6.89	0.24	-4.11	11.00
	22	10162	0.24	-4.65	6.70	0.00	0.38	0.03	6.71	0.24	-4.67	11.38
	23	10062	0.23	-1.22	4.96	0.46	-0.68	0.01	5.03	0.36	-1.42	6.45
	24	10064	0.07	-5.44	3.62	1.53	-0.16	0.01	3.62	0.47	-5.84	9.46
	25	10054	0.62	1.39	2.44	-0.14	-0.16	-0.03	2.46	1.39	0.60	1.86
	26	10056	-1.86	-4.01	-0.13	0.92	0.02	0.12	-0.12	-1.52	-4.35	4.23
Outer Shell	27	10680	-0.70	-15.23	2.29	0.80	-4.19	0.45	3.26	-0.67	-16.23	19.48
	28	10682	-0.65	5.83	7.68	-0.06	-2.24	0.30	9.18	4.33	-0.66	9.84
	29	10578	-0.03	-3.95	3.16	-0.04	-2.28	-0.04	3.83	-0.03	-4.62	8.45
	30	10580	-0.01	-7.12	1.31	-0.04	-2.35	-0.01	1.92	-0.01	-7.73	9.65
	31	10525	-0.02	-5.73	1.73	0.00	-1.25	-0.02	1.93	-0.02	-5.94	7.87
	32	10526	-0.05	-6.30	1.16	-0.01	-1.43	-0.01	1.42	-0.05	-6.56	7.99
	33	10375	0.02	-6.00	-1.09	0.00	0.35	0.00	0.02	-1.06	-6.02	6.04
	34	10376	0.04	-5.92	-0.04	0.00	0.21	-0.01	0.04	-0.03	-5.93	5.97
	35	10225	0.05	-4.11	-3.01	-0.01	0.82	-0.01	0.05	-2.57	-4.55	4.60
	36	10226	0.06	-4.06	-2.29	-0.01	0.88	0.01	0.06	-1.93	-4.42	4.48
	37	10165	0.13	-3.07	-3.91	0.02	0.75	-0.02	0.13	-2.63	-4.35	4.48
	38	10167	0.01	-3.26	-3.34	0.02	0.86	0.01	0.01	-2.44	-4.16	4.17
	39	10073	-0.87	-11.82	-2.43	-2.05	0.83	0.11	-0.50	-2.36	-12.27	11.77
	40	10075	-0.83	7.81	3.12	-0.76	0.80	0.05	8.01	3.00	-0.90	8.90
Bottom Cover	41	10054	0.21	1.55	2.34	-0.24	-0.12	-0.01	2.35	1.57	0.17	2.19
	42	10021	-0.34	-0.48	-1.66	-0.52	0.04	0.39	0.15	-0.84	-1.79	1.94
	43	10051	1.76	-0.05	2.91	-0.21	-0.02	0.07	2.91	1.78	-0.07	2.99
	44	10018	-1.95	-0.06	-3.09	-0.21	-0.02	0.40	-0.04	-1.85	-3.22	3.18
	45	10048	2.26	-1.18	3.98	-0.02	-0.04	0.09	3.98	2.26	-1.18	5.17
	46	10010	-1.38	-1.70	-1.59	0.06	-0.16	0.33	-1.13	-1.59	-1.94	0.81
Ram Access Cover Plate	47	10012	-0.14	0.58	0.41	-0.17	-0.07	0.36	0.73	0.46	-0.33	1.07
	48	10004	-1.48	0.92	-2.17	-0.55	0.04	0.23	1.04	-1.51	-2.25	3.30
	49	10011	0.70	-0.06	0.45	-0.16	0.06	0.24	0.86	0.35	-0.12	0.97
	50	10003	-2.22	-0.40	-3.12	0.04	0.04	0.45	-0.40	-2.04	-3.31	2.91
	51	10013	0.78	0.30	0.68	-0.16	0.06	0.57	1.31	0.39	0.05	1.26
	52	10001	-1.67	-0.63	-1.28	-0.19	0.05	-1.22	-0.18	-0.68	-2.72	2.54

Table 2.7.1-62
Cask 30-Foot 60° Primary Impact Drop Membrane Plus Bending Stress Summary, 180° Azimuth

Cask Component	Stress Point	Node Number	Stress Components (ksi)						Principal Stresses (ksi)			SI (ksi)
			SX	SY	SZ	SXY	SYZ	SXZ	S1	S2	S3	
Top Cover	1	13730	1.97	4.12	18.12	0.62	0.29	0.89	18.17	4.27	1.77	16.41
	2	13771	-2.07	-4.17	-19.44	0.57	0.34	-1.33	-1.84	-4.29	-19.55	17.71
	3	13738	8.20	-0.75	12.70	0.92	0.13	-0.29	12.72	8.27	-0.84	13.56
	4	13779	-13.15	-1.19	-12.70	0.92	0.13	0.19	-1.12	-12.65	-13.27	12.15
	5	13746	-6.28	-5.14	0.38	2.04	0.14	-0.47	0.41	-3.59	-7.85	8.27
	6	13786	6.06	-5.05	-2.78	1.28	-0.27	1.08	6.33	-2.83	-5.26	11.58
Top Flange	7	13711	2.21	3.85	4.60	-0.02	-0.48	-0.30	4.86	3.63	2.17	2.69
	8	13713	0.66	-4.15	2.44	-0.25	0.14	-0.12	2.45	0.67	-4.16	6.61
Inner Shell	9	13672	0.80	-15.95	3.19	-2.65	-0.52	-0.25	3.22	1.20	-16.37	19.59
	10	13674	6.82	5.15	10.57	1.75	-0.06	-0.64	10.70	7.80	4.04	6.67
	11	13654	0.10	-13.43	1.12	0.65	-0.04	-0.15	1.14	0.11	-13.46	14.60
	12	13656	0.68	4.09	6.08	2.21	0.13	-0.82	6.23	5.12	-0.50	6.73
	13	13574	-0.24	-6.05	-7.55	-0.01	-0.31	0.98	-0.11	-5.99	-7.73	7.62
	14	13576	-0.23	-6.27	-7.07	-0.01	-0.30	0.91	-0.11	-6.18	-7.27	7.17
	15	13521	-0.19	-6.90	-6.01	0.01	-0.22	0.78	-0.09	-6.05	-6.96	6.87
	16	13522	-0.18	-6.93	-5.53	0.01	-0.20	0.71	-0.09	-5.60	-6.96	6.87
	17	13371	-0.05	-7.11	-1.00	0.00	0.04	0.13	-0.04	-1.02	-7.11	7.07
	18	13372	-0.05	-7.23	-0.93	0.00	0.04	0.12	-0.04	-0.94	-7.23	7.19
	19	13221	0.13	-5.46	4.44	-0.01	0.10	-0.57	4.51	0.05	-5.46	9.97
	20	13222	0.13	-5.72	4.30	-0.01	0.11	-0.56	4.37	0.06	-5.72	10.09
	21	13161	0.16	-4.81	7.62	0.01	-0.01	-0.99	7.75	0.03	-4.81	12.56
	22	13162	0.15	-5.45	7.12	0.01	0.02	-0.93	7.24	0.03	-5.45	12.69
	23	13062	0.04	-1.93	6.01	0.56	-0.21	-0.75	6.11	0.08	-2.08	8.19
	24	13064	-0.13	-9.26	3.36	2.08	-0.04	-0.36	3.40	0.28	-9.71	13.11
	25	13054	-0.42	0.80	3.02	-0.02	-0.40	0.01	3.09	0.73	-0.43	3.51
	26	13056	-2.90	-5.73	0.08	2.16	-0.44	0.29	0.12	-1.73	-6.94	7.05
Outer Shell	27	13680	-0.66	-16.42	2.29	1.04	-0.57	-0.29	2.35	-0.63	-16.51	18.86
	28	13682	-0.78	6.28	8.27	0.04	-0.45	-1.14	8.50	6.19	-0.92	9.42
	29	13578	-0.03	-4.92	1.73	-0.04	-0.43	-0.24	1.79	-0.06	-4.95	6.74
	30	13580	0.01	-7.88	0.90	-0.04	-0.44	-0.12	0.94	-0.01	-7.90	8.84
	31	13525	-0.01	-6.90	0.84	0.01	-0.26	-0.12	0.87	-0.03	-6.91	7.78
	32	13526	-0.01	-7.37	0.79	0.01	-0.23	-0.11	0.81	-0.03	-7.38	8.19
	33	13375	-0.01	-6.60	-0.74	-0.01	0.08	0.10	0.00	-0.75	-6.60	6.60
	34	13376	-0.02	-6.90	-0.76	-0.01	0.06	0.11	0.00	-0.77	-6.90	6.90
	35	13225	0.01	-4.68	-2.79	-0.01	0.12	0.38	0.06	-2.84	-4.69	4.74
	36	13226	0.02	-4.61	-2.39	-0.01	0.12	0.33	0.07	-2.43	-4.62	4.69
	37	13165	0.04	-3.99	-3.44	0.03	0.02	0.48	0.11	-3.51	-3.99	4.10
	38	13167	-0.04	-4.22	-3.33	0.03	0.07	0.45	0.02	-3.38	-4.22	4.25
	39	13073	-1.18	-15.42	-2.60	-2.13	-0.86	0.38	-0.73	-2.68	-15.78	15.05
	40	13075	-0.85	4.51	2.78	-0.60	-0.73	-0.33	4.81	2.58	-0.96	5.77
Bottom Cover	41	13054	-1.17	1.09	2.93	-0.04	-0.35	0.03	2.99	1.02	-1.17	4.17
	42	13021	-0.95	-0.47	-2.18	-0.36	-0.16	0.20	-0.24	-1.14	-2.21	1.97
	43	13051	1.13	-0.09	3.50	-0.20	-0.03	-0.06	3.50	1.16	-0.12	3.62
	44	13018	-2.20	-0.04	-2.98	-0.20	-0.03	0.16	-0.02	-2.19	-3.01	2.99
	45	13048	2.25	-1.31	4.37	-0.03	-0.04	-0.18	4.39	2.24	-1.31	5.70
	46	13010	-1.62	-1.86	-1.31	0.05	0.20	0.07	-1.23	-1.63	-1.93	0.69
Ram Access Cover Plate	47	13012	-0.57	0.62	0.63	-0.12	-0.11	-0.03	0.74	0.52	-0.59	1.33
	48	13004	-1.36	1.09	-1.74	-0.56	-0.12	0.06	1.22	-1.48	-1.75	2.96
	49	13011	0.25	-0.16	0.57	-0.03	0.07	0.03	0.58	0.25	-0.17	0.75
	50	13003	-1.93	-0.45	-2.68	0.11	0.07	0.18	-0.44	-1.90	-2.72	2.28
	51	13013	0.16	0.30	1.31	-0.16	-0.07	0.05	1.31	0.39	0.05	1.26
	52	13001	-0.25	-0.63	-2.70	-0.17	-0.10	-0.19	-0.18	-0.68	-2.72	2.54

2.7.1.4.1.3 Flatside Slapdown Drop Analysis

As shown in Table 2.7.1-1, the equivalent static longitudinal g-loads for the flatside slapdown under hot and cold conditions are 31.8g and 48.3g, respectively. These bound the hot and cold corner slapdown equivalent static longitudinal g-loads, which are 21.3g and 33.1g, respectively. The stainless steel and lead material properties used for the cask model are based on the cask temperatures resulting from the hot ambient condition.

In the event of a 30-foot flatside slapdown, the cask is supported by the primary impact limiter along the lower surface of the cask structural shell outside the region of the neutron shield. The cask is loaded by its self weight, the weight of the DSC, and the weight of the secondary impact limiter. Figure 2.7.1-13 shows a free body diagram of the cask for the 30-foot flatside slapdown condition.

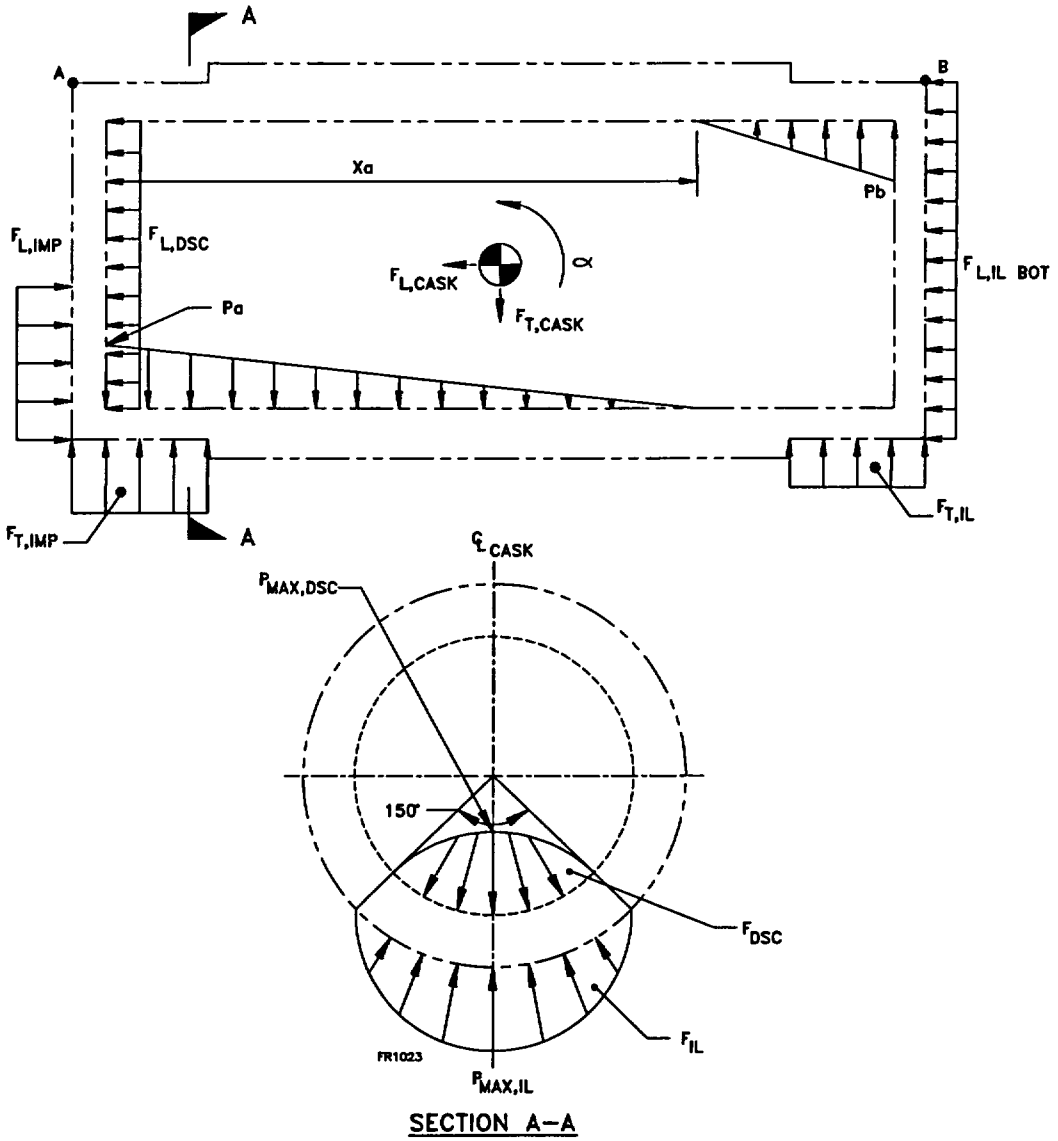

Figure 2.7.1-15
Cask Free Body Diagram for 30-Foot Flatside Slapdown

The cask 30-foot flatside slapdown stress analysis is performed using the half symmetry three dimensional finite element model described in Section 2.10.2.1.3. The cask loads due to the 30-foot flatside slapdown include the DSC inertial load, the cask inertial load, the inertial load of the secondary impact limiter, and the primary impact reaction load. The equivalent static package drop loads applied to the model are calculated as follows:

a_t = Peak tangential acceleration at package C.G.

a_l = Peak longitudinal acceleration at package C.G.

α = Peak angular acceleration at packag C.G.

DLF = Maximum of tangential and longitudinal DLFs, conservatively applied to all peak rigid body loads

G_t = Equivalent static tangential acceleration at package C.G.

= 48.3g (a value of 44.49g is used in the F. E. model analysis)

G_l = Equivalent static longitudinal acceleration at package C.G.

= 4.7g (a bounding value of 5.63g is used in the F. E. model analysis)

A = Equivalent static angular acceleration

The mass properties of the various package components used for the flatside slapdown evaluation are:

W_{PKG} = 256,600 lb., Weight of package corresponding to cold drop conditions

I_{PKG} = 3.57×10^6 lb-in-s^2, Package moment of inertia corresponding to cold drop

W_{CASK} = 154,600 lb., Weight of cask finite element model

I_{CASK} = 1.822×10^6 lb-in-s^2, Moment of inertia of cask from ANSYS model

W_{IL} = 15,800 lb., Weight of each impact limiter

I_{IL} = Moment of inertia of impact limiter about package C.G.

= $[4.48 \times 10^7 + (15{,}800)(201.5 \text{ in.}/2 + 1.54 \text{ in.})^2]/386.4$

= 5.438×10^5 lb-in-s^2

W_{DSC} = Adjusted weight of DSC to preserve package weight

= 256.6 - 2(15.8) - 154.6

= 70.4 kips

I_{DSC} = DSC moment of inertia adjusted to preserve package M.O.I.

= $I_{PKG} - I_{CASK} - 2I_{IL}$

= 6.605×10^5 lb-in-s^2

The cask loads from the DSC and the impact limiters in the tangential direction are assumed to have cosine distributions, as shown in Figure 2.7.1-13, spread over a 75 degree half angle of contact between the DSC and cask inner surface, and the impact limiters and cask outer surface, respectively. The angle of contact between the impact limiters and cask outer surface is dependent upon the crush area of the impact limiters. For the flatside slapdown condition, the impact limiter crush area is larger than the projected area of the cask onto the impact limiter. Thus, the resulting contact angle will be close to 180 degrees. Therefore, the assumed contact angle of 150 degrees (i.e. 75 degree half angle of contact) is conservative. The pressure load acting on the inner surface of the cask due to the DSC inertial load in the tangential direction is calculated assuming a triangular distribution over the length of the cask cavity (L = 187 inches) and a cosine distribution around the circumference. The tangential load distribution from the DSC shown in Figure 2.7.1-13 is equal to the uniform line load due to the linear tangential acceleration, a_t, and the triangular line load due to the angular acceleration, α, of the package. The magnitude of the line load at the primary impact end, P_a, and the end opposite the primary impact, P_b, shown in Figure 2.7.1-13, are calculated as follows:

P_a = $(W_{DSC})(G_t)/L_{DSC} + 6(I_{DSC})(A)/L_{DSC}^2$

= $(70{,}400)(44.49)/187 + 6(6.605 \times 10^5)(281.8)/(187)^2$

= 48,685 lb/in.

P_b = $(W_{DSC})(G_t)/L_{DSC} - 6(I_{DSC})(A)/L_{DSC}^2$

= $(70{,}400)(44.49)/187 - 6(6.605 \times 10^5)(281.8)/(187)^2$

= -15,187 lb/in. (negative means acting upward)

The distance x_a shown in Figure 2.7.1-13 is calculated as follows:

x_a = $|Pa| \times L_{DSC}/(|P_a| + |P_b|)$

= 142.54 in.

The circumferential pressure distribution from the DSC inertial load is determined using the formula derived in Section 2.10.2.1.3.1, as follows:

$$P_i = \frac{P_x}{R}\left[\frac{\sin\left(\frac{\pi}{2}+\theta\right)}{\left(\frac{\pi}{2\theta}\right)+1}+\frac{\sin\left(\frac{\pi}{2}-\theta\right)}{\left(\frac{\pi}{2\theta}\right)-1}\right]^{-1}\cos\left(\frac{\pi\theta_i}{2\theta}\right)$$

where;

P_x = Line load at distance x from impact end of cask cavity (x varies between 0 inches and 187 inches)

= $|P_a - (P_a x)/x_a|$

= $\left|48{,}685\left(1-\frac{x}{142.54}\right)\right|$

R = 34.0 in., Radius of cask cavity

θ = 75° (1.309 radians), Half angle of contact

The resulting pressure distribution around the circumference of the cask inner shell is summarized below:

For distance x between x = 0 inches and $x = x_a$ = 142.54 inches

Circumferential Location	Pressure Load (psi)
0°	0.0208 x P_x
10°	0.0204 x P_x
20°	0.0190 x P_x
30°	0.0169 x P_x
45°	0.0122 x P_x
60°	0.0064 x P_x
75°	0

For distance x between $x = x_a = 142.54$ inches and $x = L_{DSC} = 187$ inches

Circumferential Location	Pressure Load (psi)
180°	0.0208 x P_x
165°	0.0198x P_x
150°	0.0169 x P_x
135°	0.0122 x P_x
120°	0.0064 x P_x
105°	0

The longitudinal load from the DSC inertia load, $F_{L,DSC}$, due to the longitudinal acceleration, G_L, is modeled as a uniform pressure acting on the inner surface of the cask impact end. The longitudinal pressure load is calculated as follows:

$$q_{L,DSC} = F_{L,DSC}/A$$

where;

$F_{L,DSC}$ = $W_{DSC}G_L$, Longitudinal inertia force of DSC

= (70,400)(5.63)

= 396,000 lb.

$A = \pi(34)^2$ Area of cask end inner surface

$= 3{,}632 \text{ in}^2$

Therefore,

$q_{L,\,DSC} = 396{,}000/3{,}632 = 109$ psi

The loading on the outer surface of the cask due to the secondary impact limiter inertial load acts in both the tangential and longitudinal directions. The longitudinal load, $F_{L,IL}$, is modeled as a uniform pressure acting on the outer surface of the cask end. The longitudinal pressure load is calculated as follows:

$q_{L,IL} = F_{L,IL}/A$

where;

$F_{L,IL} = W_{IL}G_L$, Longitudinal inertial force of secondary impact limiter

$= (15{,}800)(5.63)$

$= 88{,}900$ lb.

$A = \pi(41.75)^2$, Area of cask end

$= 5{,}476 \text{ in}^2$

Therefore,

$q_{L,IL} = 88{,}900/5{,}476$

$= 16.2$ psi

The tangential component of the secondary impact limiter inertial load, $F_{T,IL}$, is calculated as follows:

$$F_{T,IL} = W_{IL}G_T - I_{IL}\alpha/e$$

where;

$$e = (L_{CASK} - L_{IL})/2, \text{ moment arm}$$

$$= 84.75 \text{ in.}$$

Therefore,

$$F_{T,IL} = (15{,}800)(44.49) - (5.438 \times 10^5)(281.8)/84.75$$

$$= -1.105 \times 10^6 \text{ lb. (negative means acting upward)}$$

The tangential load, $F_{T,IL}$, is assumed to be uniform along the length of the 32 inch overhang region and vary with a cosine distribution around the circumference of the cask (R = 41.75 inches). The resulting cosine pressure load distribution is calculated as discussed above, assuming a 75 degree half angle of contact between the impact limiter and cask outer surface, and summarized below:

Circumferential Location	Pressure Load (psi)
0°	586
10°	573
20°	535
30°	474
45°	344
60°	181
75°	0

The impact loads are reacted by the primary impact limiter. The longitudinal component of the impact reaction load, $F_{L,IMP}$, is calculated based on the laws of static equilibrium and yields:

$$F_{L,IMP} = 1.389 \times 10^6 \text{ lb.}$$

The longitudinal impact reaction load is applied as a uniform pressure load to the outer surface of the cask end. This pressure load is applied over half of the cask end surface closest to the impact, as opposed to the entire surface, in order to maintain balanced forces and moments in the cask model. This is conservative since the higher concentration of load will produce higher stresses in the cask. The magnitude of the longitudinal impact pressure load is:

$$q_{L,IMP} = 1.389 \times 10^6/(5{,}476/2)$$
$$= 507 \text{ psi}$$

The tangential impact reaction load is calculated based on the laws of static equilibrium and yields:

$$F_{T,IMP} = 9.062 \times 10^6 \text{ lb.}$$

The loading on the outer surface of the cask due to the tangential impact reaction load is assumed to be uniform along the length of the 32 inch overhang region and vary with a cosine distribution around the circumference of the cask (R = 41.75 inches). The resulting cosine pressure load distribution is calculated as discussed above, assuming a 75 degree half angle of contact between the impact limiter and cask outer surface, and summarized below:

Circumferential Location	Pressure Load (psi)
0°	4,805
10°	4,700
20°	4,389
30°	3,887
45°	2,824
60°	1,485
75°	0

In addition to the applied pressure loads from the DSC, secondary impact limiter, and impact reaction, linear accelerations of 44.49g and 5.63g in the tangential and longitudinal directions, respectively, and an angular acceleration of 281.8 radians per second are applied to the cask

model to account for the cask inertial load. The model is pinned at the node points A and B, Figure 2.7.1-13, to prevent rigid body motion. The total tangential reaction load at these nodes for the 30-foot flatside slapdown condition is 54,977 pounds due to a slight imbalance in the applied inertial loads and reaction loads. The load imbalance represents 0.7% of the total impact load, which is considered negligable.

The cask stress components, principal stresses, and stress intensities at the 52 stress points, Figure 2.7.1-1, due to the 30-foot flatside slapdown drop load are factored by the ratio of the predicted/analyzed tangential accelerations (1.1) and the results are summarized in Table 2.7.1-63 through Table 2.7.1-72. The maximum primary membrane stress intensity in the cask due to the 30-foot flatside slapdown drop, occurs in the cask outer shell at the 45 degree azimuth near the ends of the neutron shield (stress points 29 and 30) is 29.2 ksi. The allowable accident condition primary membrane stress intensity at 300°F is 46.2 ksi for SA-240, Type 304 stainless steel. Therefore, the minimum margin of safety in the cask for primary membrane stress intenstiy due to the 30-foot flatside slapdown drop is:

$$\text{M.S.} = (46.2/29.2) - 1$$
$$= +0.58$$

The maximum membrane plus bending stress intensity in the cask due to the 30-foot flatside slapdown drop, occurs on the 0 degree azimuth in the top flange (stress point 8), is 45.9 ksi. The allowable accident condition membrane plus bending stress intensity in the cask outer shell at the design temperature of 300°F is limited to 66.0 ksi. Therefore, the minimum margin of safety in the cask for membrane plus bending stress intensity due to the 30-foot flatside slapdown drop is:

$$\text{M.S.} = (66.0/45.9) - 1$$
$$= +0.44$$

Therefore, the cask body meets the stress acceptance criteria for the 30-foot flatside slapdown drop condition. The 30-foot flatside slapdown drop stresses are combined with stresses due to

other loading conditions in accordance with Regulatory Guide 7.8 [2.3]. The accident condition cask load combination evaluation is presented in Section 2.7.8.1.

Table 2.7.1-63
Cask 30-Foot Flatside Slapdown Drop Membrane Shell Stresses Summary, 0° Azimuth

Cask Component	Stress Point	Node Number	Stress Components (ksi)						Principal Stresses (ksi)			SI (ksi)
			SX	SY	SZ	SXY	SYZ	SXZ	S1	S2	S3	
Top Cover	1	730	-0.26	0.15	0.80	-0.01	-0.07	-0.37	0.92	0.15	-0.38	1.30
	2	771	-0.26	0.15	0.80	-0.01	-0.07	-0.37	0.92	0.15	-0.38	1.30
	3	738	-6.85	-0.34	-1.28	0.64	-0.01	-0.09	-0.28	-1.28	-6.92	6.64
	4	779	-6.85	-0.34	-1.28	0.64	-0.01	-0.09	-0.28	-1.28	-6.92	6.64
	5	746	-4.36	-6.70	-4.31	1.35	0.08	-0.36	-3.62	-4.42	-7.33	3.72
	6	786	-4.36	-6.70	-4.31	1.35	0.08	-0.36	-3.62	-4.42	-7.33	3.72
Top Flange	7	711	-18.89	3.18	-12.34	-2.15	0.16	0.34	3.39	-12.33	-19.11	22.50
	8	713	-18.89	3.18	-12.34	-2.15	0.16	0.34	3.39	-12.33	-19.11	22.50
Inner Shell	9	672	-3.92	-0.16	-14.01	-0.03	0.60	-1.21	-0.13	-3.78	-14.19	14.05
	10	674	-3.92	-0.16	-14.01	-0.03	0.60	-1.21	-0.13	-3.78	-14.19	14.05
	11	654	-1.52	-2.49	-17.04	-0.96	0.02	-1.30	-0.85	-3.05	-17.15	16.29
	12	656	-1.52	-2.49	-17.04	-0.96	0.02	-1.30	-0.85	-3.05	-17.15	16.29
	13	574	-1.07	0.26	-8.82	-0.32	-1.08	-0.68	0.42	-1.04	-9.02	9.44
	14	576	-1.07	0.26	-8.82	-0.32	-1.08	-0.68	0.42	-1.04	-9.02	9.44
	15	521	-0.56	6.52	9.54	0.02	-1.06	0.90	9.94	6.20	-0.64	10.58
	16	522	-0.56	6.52	9.54	0.02	-1.06	0.90	9.94	6.20	-0.64	10.58
	17	371	-0.27	12.92	5.03	0.01	0.15	0.48	12.93	5.07	-0.31	13.23
	18	372	-0.27	12.92	5.03	0.01	0.15	0.48	12.93	5.07	-0.31	13.23
	19	221	0.01	5.47	0.05	0.01	0.51	0.01	5.51	0.01	0.00	5.52
	20	222	0.01	5.47	0.05	0.01	0.51	0.01	5.51	0.01	0.00	5.52
	21	161	-0.06	2.58	-3.35	0.05	0.35	-0.29	2.60	-0.04	-3.39	6.00
	22	162	-0.06	2.58	-3.35	0.05	0.35	-0.29	2.60	-0.04	-3.39	6.00
	23	62	-0.14	1.47	-2.56	-0.56	-0.01	-0.22	1.64	-0.30	-2.58	4.23
	24	64	-0.14	1.47	-2.56	-0.56	-0.01	-0.22	1.64	-0.30	-2.58	4.23
	25	54	-1.69	0.54	-2.07	-0.27	-0.06	-0.04	0.58	-1.72	-2.08	2.66
	26	56	-1.69	0.54	-2.07	-0.27	-0.06	-0.04	0.58	-1.72	-2.08	2.66
Outer Shell	27	680	-6.23	-7.57	-19.84	7.34	0.00	-1.23	0.52	-14.15	-19.99	20.51
	28	682	-6.23	-7.57	-19.84	7.34	0.00	-1.23	0.52	-14.15	-19.99	20.51
	29	578	-2.05	-4.38	-20.04	-3.63	-1.46	-1.60	0.60	-6.69	-20.38	20.99
	30	580	-2.05	-4.38	-20.04	-3.63	-1.46	-1.60	0.60	-6.69	-20.38	20.99
	31	525	-0.29	3.95	14.72	0.49	-1.73	1.34	15.10	3.79	-0.50	15.60
	32	526	-0.29	3.95	14.72	0.49	-1.73	1.34	15.10	3.79	-0.50	15.60
	33	375	-0.17	13.44	5.97	0.01	0.10	0.56	13.44	6.02	-0.22	13.66
	34	376	-0.17	13.44	5.97	0.01	0.10	0.56	13.44	6.02	-0.22	13.66
	35	225	-0.01	6.02	0.47	0.00	0.65	0.05	6.09	0.40	-0.02	6.11
	36	226	-0.01	6.02	0.47	0.00	0.65	0.05	6.09	0.40	-0.02	6.11
	37	165	-0.21	2.50	-4.70	0.46	0.53	-0.39	2.61	-0.24	-4.78	7.38
	38	167	-0.21	2.50	-4.70	0.46	0.53	-0.39	2.61	-0.24	-4.78	7.38
	39	73	-0.64	0.23	-2.46	-0.80	0.13	-0.14	0.71	-1.11	-2.48	3.19
	40	75	-0.64	0.23	-2.46	-0.80	0.13	-0.14	0.71	-1.11	-2.48	3.19
Bottom Cover	41	54	-0.96	-0.28	-1.52	-0.06	-0.04	-0.07	-0.27	-0.96	-1.53	1.26
	42	21	-0.96	-0.28	-1.52	-0.06	-0.04	-0.07	-0.27	-0.96	-1.53	1.26
	43	51	-0.86	-0.01	-0.96	-0.13	0.00	-0.05	0.01	-0.86	-0.99	0.99
	44	18	-0.86	-0.01	-0.96	-0.13	0.00	-0.05	0.01	-0.86	-0.99	0.99
	45	48	-0.47	-0.55	-0.51	-0.14	0.02	-0.05	-0.35	-0.52	-0.66	0.31
	46	10	-0.47	-0.55	-0.51	-0.14	0.02	-0.05	-0.35	-0.52	-0.66	0.31
Ram Access Cover Plate	47	12	-0.88	0.18	0.01	-0.11	0.00	-0.02	0.19	0.01	-0.90	1.08
	48	4	-0.88	0.18	0.01	-0.11	0.00	-0.02	0.19	0.01	-0.90	1.08
	49	11	-0.76	0.04	-0.13	-0.05	0.00	-0.05	0.05	-0.12	-0.77	0.82
	50	3	-0.76	0.04	-0.13	-0.05	0.00	-0.05	0.05	-0.12	-0.77	0.82
	51	13	-0.04	-0.07	-0.10	-0.01	0.00	-0.08	0.01	-0.07	-0.16	0.17
	52	1	-0.04	-0.07	-0.10	-0.01	0.00	-0.08	0.01	-0.07	-0.16	0.17

(1.110)*Pm, fssd-3.xls

Table 2.7.1-64
Cask 30-Foot Flatside Slapdown Drop Membrane Stress Summary, 45° Azimuth

Cask Component	Stress Point	Node Number	Stress Components (ksi)						Principal Stresses (ksi)			SI (ksi)
			SX	SY	SZ	SXY	SYZ	SXZ	S1	S2	S3	
, Top Cover	1	4730	0.63	0.15	-0.10	0.05	-0.05	-0.53	0.92	0.15	-0.38	1.30
	2	4771	0.63	0.15	-0.10	0.05	-0.05	-0.53	0.92	0.15	-0.38	1.30
	3	4738	-2.63	-0.34	-4.13	0.26	0.21	-2.95	-0.25	-0.41	-6.44	6.19
	4	4779	-2.63	-0.34	-4.13	0.26	0.21	-2.95	-0.25	-0.41	-6.44	6.19
	5	4746	-1.99	-3.00	-6.04	0.90	1.33	-1.90	-1.15	-2.52	-7.36	6.21
	6	4786	-1.99	-3.00	-6.04	0.90	1.33	-1.90	-1.15	-2.52	-7.36	6.21
Top Flange	7	4711	-10.47	1.53	-9.57	-1.23	-0.79	0.27	1.71	-9.60	-10.63	12.34
	8	4713	-10.47	1.53	-9.57	-1.23	-0.79	0.27	1.71	-9.60	-10.63	12.34
Inner Shell	9	4672	-2.84	0.02	-11.49	-0.01	0.65	-1.48	0.06	-2.60	-11.78	11.83
	10	4674	-2.84	0.02	-11.49	-0.01	0.65	-1.48	0.06	-2.60	-11.78	11.83
	11	4654	-1.29	-0.80	-12.48	-0.62	-1.46	-0.15	-0.27	-1.63	-12.65	12.39
	12	4656	-1.29	-0.80	-12.48	-0.62	-1.46	-0.15	-0.27	-1.63	-12.65	12.39
	13	4574	-0.78	1.75	-4.18	-0.17	-8.06	0.13	7.38	-0.79	-9.80	17.18
	14	4576	-0.78	1.75	-4.18	-0.17	-8.06	0.13	7.38	-0.79	-9.80	17.18
	15	4521	-0.16	4.18	6.41	0.05	-7.19	-0.08	12.57	-0.16	-1.98	14.55
	16	4522	-0.16	4.18	6.41	0.05	-7.19	-0.08	12.57	-0.16	-1.98	14.55
	17	4371	0.02	6.23	3.46	0.00	1.00	-0.06	6.56	3.14	0.02	6.54
	18	4372	0.02	6.23	3.46	0.00	1.00	-0.06	6.56	3.14	0.02	6.54
	19	4221	0.03	3.66	0.40	-0.01	3.47	0.00	5.87	0.03	-1.81	7.67
	20	4222	0.03	3.66	0.40	-0.01	3.47	0.00	5.87	0.03	-1.81	7.67
	21	4161	-0.08	2.51	-1.56	0.02	2.53	0.05	3.72	-0.08	-2.78	6.49
	22	4162	-0.08	2.51	-1.56	0.02	2.53	0.05	3.72	-0.08	-2.78	6.49
	23	4062	-0.09	1.68	-0.96	-0.40	-0.64	0.09	1.92	-0.17	-1.11	3.03
	24	4064	-0.09	1.68	-0.96	-0.40	-0.64	0.09	1.92	-0.17	-1.11	3.03
	25	4054	-0.96	0.58	-1.13	-0.22	-0.34	0.18	0.69	-0.93	-1.27	1.96
	26	4056	-0.96	0.58	-1.13	-0.22	-0.34	0.18	0.69	-0.93	-1.27	1.96
Outer Shell	27	4680	-3.50	-2.12	-12.81	3.62	2.81	-0.28	1.17	-5.95	-13.64	14.82
	28	4682	-3.50	-2.12	-12.81	3.62	2.81	-0.28	1.17	-5.95	-13.64	14.82
	29	4578	-1.70	1.24	-10.27	-2.05	-13.21	0.13	10.17	-1.91	-18.98	29.15
	30	4580	-1.70	1.24	-10.27	-2.05	-13.21	0.13	10.17	-1.91	-18.98	29.15
	31	4525	-0.14	4.24	9.01	0.37	-11.22	-0.09	18.09	-0.13	-4.86	22.95
	32	4526	-0.14	4.24	9.01	0.37	-11.22	-0.09	18.09	-0.13	-4.86	22.95
	33	4375	0.02	6.30	3.67	0.00	0.75	-0.01	6.50	3.47	0.02	6.48
	34	4376	0.02	6.30	3.67	0.00	0.75	-0.01	6.50	3.47	0.02	6.48
	35	4225	0.02	3.48	0.21	-0.04	4.50	0.01	6.63	0.02	-2.95	9.58
	36	4226	0.02	3.48	0.21	-0.04	4.50	0.01	6.63	0.02	-2.95	9.58
	37	4165	-0.19	1.95	-2.87	0.25	4.26	0.04	4.45	-0.20	-5.36	9.81
	38	4167	-0.19	1.95	-2.87	0.25	4.26	0.04	4.45	-0.20	-5.36	9.81
	39	4073	-0.41	0.20	-1.64	-0.49	0.95	0.17	0.74	-0.47	-2.11	2.85
	40	4075	-0.41	0.20	-1.64	-0.49	0.95	0.17	0.74	-0.47	-2.11	2.85
Bottom Cover	41	4054	-0.56	-0.11	-1.37	-0.04	-0.20	0.05	-0.07	-0.57	-1.41	1.33
	42	4021	-0.56	-0.11	-1.37	-0.04	-0.20	0.05	-0.07	-0.57	-1.41	1.33
	43	4051	-0.50	-0.01	-1.04	-0.08	-0.10	-0.17	0.01	-0.46	-1.10	1.11
	44	4018	-0.50	-0.01	-1.04	-0.08	-0.10	-0.17	0.01	-0.46	-1.10	1.11
	45	4048	-0.26	-0.32	-0.60	-0.06	-0.01	-0.27	-0.09	-0.32	-0.76	0.66
	46	4010	-0.26	-0.32	-0.60	-0.06	-0.01	-0.27	-0.09	-0.32	-0.76	0.66
Ram Access Cover Plate	47	4012	-0.43	0.10	-0.63	-0.07	-0.12	-0.55	0.12	0.02	-1.10	1.22
	48	4004	-0.43	0.10	-0.63	-0.07	-0.12	-0.55	0.12	0.02	-1.10	1.22
	49	4011	-0.30	0.04	-0.74	-0.05	-0.05	-0.66	0.18	0.04	-1.22	1.40
	50	4003	-0.30	0.04	-0.74	-0.05	-0.05	-0.66	0.18	0.04	-1.22	1.40
	51	4013	0.01	-0.07	-0.15	0.00	-0.01	0.03	0.01	-0.07	-0.16	0.17
	52	4001	0.01	-0.07	-0.15	0.00	-0.01	0.03	0.01	-0.07	-0.16	0.17

(1.110)*Pm, fssd-3.xls

Table 2.7.1-65
Cask 30-Foot Flatside Slapdown Drop Membrane Stress Summary, 90° Azimuth

Cask Component	Stress Point	Node Number	Stress Components (ksi)						Principal Stresses (ksi)			SI (ksi)
			SX	SY	SZ	SXY	SYZ	SXZ	S1	S2	S3	
Top Cover	1	7730	0.80	0.15	-0.26	0.07	-0.01	0.37	0.92	0.15	-0.38	1.30
	2	7771	0.80	0.15	-0.26	0.07	-0.01	0.37	0.92	0.15	-0.38	1.30
	3	7738	1.27	-0.20	-5.08	-0.05	-0.37	1.27	1.52	-0.18	-5.35	6.87
	4	7779	1.27	-0.20	-5.08	-0.05	-0.37	1.27	1.52	-0.18	-5.35	6.87
	5	7746	0.85	1.09	-4.73	-0.04	-0.54	2.04	1.61	1.04	-5.43	7.04
	6	7786	0.85	1.09	-4.73	-0.04	-0.54	2.04	1.61	1.04	-5.43	7.04
Top Flange	7	7711	0.94	-0.54	-2.85	0.14	-1.01	0.84	1.13	-0.18	-3.39	4.52
	8	7713	0.94	-0.54	-2.85	0.14	-1.01	0.84	1.13	-0.18	-3.39	4.52
Inner Shell	9	7672	-0.52	0.60	-6.75	-0.04	-2.79	0.01	1.54	-0.52	-7.69	9.23
	10	7674	-0.52	0.60	-6.75	-0.04	-2.79	0.01	1.54	-0.52	-7.69	9.23
	11	7654	-0.18	1.07	-5.29	-0.13	-5.68	-0.19	4.40	-0.17	-8.63	13.03
	12	7656	-0.18	1.07	-5.29	-0.13	-5.68	-0.19	4.40	-0.17	-8.63	13.03
	13	7574	0.10	1.59	0.48	0.06	-8.34	-0.01	9.39	0.10	-7.33	16.72
	14	7576	0.10	1.59	0.48	0.06	-8.34	-0.01	9.39	0.10	-7.33	16.72
	15	7521	0.09	-0.83	1.51	0.05	-6.21	-0.05	6.66	0.09	-5.98	12.64
	16	7522	0.09	-0.83	1.51	0.05	-6.21	-0.05	6.66	0.09	-5.98	12.64
	17	7371	-0.06	-3.16	0.93	-0.01	0.79	-0.02	1.08	-0.06	-3.31	4.38
	18	7372	-0.06	-3.16	0.93	-0.01	0.79	-0.02	1.08	-0.06	-3.31	4.38
	19	7221	-0.01	-0.65	0.91	-0.02	3.37	0.01	3.59	-0.01	-3.33	6.92
	20	7222	-0.01	-0.65	0.91	-0.02	3.37	0.01	3.59	-0.01	-3.33	6.92
	21	7161	0.03	0.27	1.30	-0.01	2.47	0.04	3.31	0.03	-1.74	5.05
	22	7162	0.03	0.27	1.30	-0.01	2.47	0.04	3.31	0.03	-1.74	5.05
	23	7062	0.11	0.80	1.86	-0.06	-0.40	0.10	2.00	0.66	0.10	1.90
	24	7064	0.11	0.80	1.86	-0.06	-0.40	0.10	2.00	0.66	0.10	1.90
	25	7054	0.03	0.33	0.63	-0.08	-0.21	0.58	1.05	0.27	-0.33	1.38
	26	7056	0.03	0.33	0.63	-0.08	-0.21	0.58	1.05	0.27	-0.33	1.38
Outer Shell	27	7680	0.45	3.04	-2.89	-1.55	-7.83	1.01	8.86	0.04	-8.30	17.16
	28	7682	0.45	3.04	-2.89	-1.55	-7.83	1.01	8.86	0.04	-8.30	17.16
	29	7578	-0.05	4.64	-0.99	0.26	-10.91	0.15	13.09	-0.05	-9.45	22.53
	30	7580	-0.05	4.64	-0.99	0.26	-10.91	0.15	13.09	-0.05	-9.45	22.53
	31	7525	0.08	0.54	0.11	0.16	-8.32	-0.08	8.64	0.08	-8.00	16.64
	32	7526	0.08	0.54	0.11	0.16	-8.32	-0.08	8.64	0.08	-8.00	16.64
	33	7375	-0.04	-4.04	-0.06	0.00	0.86	-0.09	0.16	-0.07	-4.22	4.37
	34	7376	-0.04	-4.04	-0.06	0.00	0.86	-0.09	0.16	-0.07	-4.22	4.37
	35	7225	-0.01	-1.99	-0.37	-0.04	4.40	-0.01	3.29	-0.01	-5.66	8.95
	36	7226	-0.01	-1.99	-0.37	-0.04	4.40	-0.01	3.29	-0.01	-5.66	8.95
	37	7165	-0.01	-0.86	-0.82	-0.03	4.33	0.04	3.49	-0.01	-5.17	8.65
	38	7167	-0.01	-0.86	-0.82	-0.03	4.33	0.04	3.49	-0.01	-5.17	8.65
	39	7073	-0.19	-0.63	0.01	-0.23	2.77	0.35	2.48	-0.14	-3.15	5.64
	40	7075	-0.19	-0.63	0.01	-0.23	2.77	0.35	2.48	-0.14	-3.15	5.64
Bottom Cover	41	7054	-0.08	0.09	-0.48	-0.05	-0.06	0.61	0.39	0.08	-0.92	1.31
	42	7021	-0.08	0.09	-0.48	-0.05	-0.06	0.61	0.39	0.08	-0.92	1.31
	43	7051	-0.08	-0.01	-0.71	-0.04	-0.08	0.33	0.10	-0.05	-0.86	0.96
	44	7018	-0.08	-0.01	-0.71	-0.04	-0.08	0.33	0.10	-0.05	-0.86	0.96
	45	7048	0.07	-0.22	-0.53	0.06	-0.21	0.00	0.08	-0.13	-0.64	0.72
	46	7010	0.07	-0.22	-0.53	0.06	-0.21	0.00	0.08	-0.13	-0.64	0.72
Ram Access Cover Plate	47	7012	-0.07	0.11	-1.25	-0.07	-0.11	0.06	0.14	-0.09	-1.26	1.41
	48	7004	-0.07	0.11	-1.25	-0.07	-0.11	0.06	0.14	-0.09	-1.26	1.41
	49	7011	-0.24	-0.06	-1.39	-0.04	-0.06	0.02	-0.05	-0.25	-1.40	1.35
	50	7003	-0.24	-0.06	-1.39	-0.04	-0.06	0.02	-0.05	-0.25	-1.40	1.35
	51	7013	-0.10	-0.07	-0.04	0.00	-0.01	0.08	0.01	-0.07	-0.16	0.17
	52	7001	-0.10	-0.07	-0.04	0.00	-0.01	0.08	0.01	-0.07	-0.16	0.17

(1.11D)*Pm, fssd-3.xls

Table 2.7.1-66
Cask 30-Foot Flatside Slapdown Drop Membrane Stress Summary, 135° Azimuth

Cask Component	Stress Point	Node Number	Stress Components (ksi)						Principal Stresses (ksi)			SI (ksi)
			SX	SY	SZ	SXY	SYZ	SXZ	S1	S2	S3	
, Top Cover	1	10730	-0.10	0.15	0.63	0.05	0.05	0.53	0.92	0.15	-0.38	1.30
	2	10771	-0.10	0.15	0.63	0.05	0.05	0.53	0.92	0.15	-0.38	1.30
	3	10738	-1.57	-0.07	0.39	0.15	-0.27	3.20	2.76	-0.06	-3.96	6.72
	4	10779	-1.57	-0.07	0.39	0.15	-0.27	3.20	2.76	-0.06	-3.96	6.72
	5	10746	-0.39	-1.11	2.41	-0.19	-0.84	2.92	4.37	-1.15	-2.30	6.66
	6	10786	-0.39	-1.11	2.41	-0.19	-0.84	2.92	4.37	-1.15	-2.30	6.66
Top Flange	7	10711	0.01	0.52	2.02	0.08	-1.43	0.70	2.99	0.22	-0.66	3.65
	8	10713	0.01	0.52	2.02	0.08	-1.43	0.70	2.99	0.22	-0.66	3.65
Inner Shell	9	10672	-0.29	0.34	0.66	0.21	-3.16	-0.18	3.68	-0.31	-2.67	6.34
	10	10674	-0.29	0.34	0.66	0.21	-3.16	-0.18	3.68	-0.31	-2.67	6.34
	11	10654	-0.05	0.26	-0.01	0.01	-4.82	-0.34	4.96	-0.05	-4.71	9.67
	12	10656	-0.05	0.26	-0.01	0.01	-4.82	-0.34	4.96	-0.05	-4.71	9.67
	13	10574	-0.06	-2.63	-1.33	0.03	-4.53	-0.02	2.60	-0.06	-6.56	9.16
	14	10576	-0.06	-2.63	-1.33	0.03	-4.53	-0.02	2.60	-0.06	-6.56	9.16
	15	10521	-0.06	-4.54	-1.23	0.01	-3.03	-0.03	0.57	-0.07	-6.34	6.90
	16	10522	-0.06	-4.54	-1.23	0.01	-3.03	-0.03	0.57	-0.07	-6.34	6.90
	17	10371	0.06	-6.31	-0.74	0.00	0.45	-0.02	0.06	-0.70	-6.35	6.41
	18	10372	0.06	-6.31	-0.74	0.00	0.45	-0.02	0.06	-0.70	-6.35	6.41
	19	10221	0.06	-3.76	1.10	-0.01	1.83	0.01	1.71	0.06	-4.38	6.09
	20	10222	0.06	-3.76	1.10	-0.01	1.83	0.01	1.71	0.06	-4.38	6.09
	21	10161	0.07	-2.52	3.63	-0.01	1.05	0.05	3.81	0.07	-2.70	6.50
	22	10162	0.07	-2.52	3.63	-0.01	1.05	0.05	3.81	0.07	-2.70	6.50
	23	10062	0.00	-1.40	3.07	0.63	-1.17	0.05	3.36	0.20	-1.89	5.25
	24	10064	0.00	-1.40	3.07	0.63	-1.17	0.05	3.36	0.20	-1.89	5.25
	25	10054	0.14	-0.53	1.30	0.24	-0.25	0.06	1.33	0.22	-0.65	1.98
	26	10056	0.14	-0.53	1.30	0.24	-0.25	0.06	1.33	0.22	-0.65	1.98
Outer Shell	27	10680	-0.45	-1.27	0.19	0.99	-8.42	0.99	7.92	-0.22	-9.21	17.13
	28	10682	-0.45	-1.27	0.19	0.99	-8.42	0.99	7.92	-0.22	-9.21	17.13
	29	10578	0.07	-4.71	-4.30	-0.02	-5.78	-0.07	1.28	0.07	-10.29	11.57
	30	10580	0.07	-4.71	-4.30	-0.02	-5.78	-0.07	1.28	0.07	-10.29	11.57
	31	10525	0.02	-6.54	-3.83	-0.01	-3.29	-0.05	0.02	-1.63	-8.74	8.76
	32	10526	0.02	-6.54	-3.83	-0.01	-3.29	-0.05	0.02	-1.63	-8.74	8.76
	33	10375	0.08	-8.09	-2.19	0.00	0.85	-0.02	0.08	-2.07	-8.21	8.29
	34	10376	0.08	-8.09	-2.19	0.00	0.85	-0.02	0.08	-2.07	-8.21	8.29
	35	10225	0.03	-5.16	-0.67	-0.01	2.39	-0.01	0.36	0.03	-6.20	6.56
	36	10226	0.03	-5.16	-0.67	-0.01	2.39	-0.01	0.36	0.03	-6.20	6.56
	37	10165	0.02	-3.65	-0.26	-0.01	2.28	-0.01	0.89	0.02	-4.80	5.69
	38	10167	0.02	-3.65	-0.26	-0.01	2.28	-0.01	0.89	0.02	-4.80	5.69
	39	10073	-0.43	-1.59	1.01	-0.72	2.01	0.21	2.11	-0.23	-2.90	5.01
	40	10075	-0.43	-1.59	1.01	-0.72	2.01	0.21	2.11	-0.23	-2.90	5.01
Bottom Cover	41	10054	-0.05	0.55	0.72	-0.20	-0.15	0.49	1.06	0.46	-0.30	1.36
	42	10021	-0.05	0.55	0.72	-0.20	-0.15	0.49	1.06	0.46	-0.30	1.36
	43	10051	-0.03	-0.01	-0.04	-0.04	-0.08	0.61	0.59	-0.02	-0.64	1.23
	44	10018	-0.03	-0.01	-0.04	-0.04	-0.08	0.61	0.59	-0.02	-0.64	1.23
	45	10048	0.18	-0.80	0.14	0.09	-0.34	0.46	0.64	-0.16	-0.96	1.61
	46	10010	0.18	-0.80	0.14	0.09	-0.34	0.46	0.64	-0.16	-0.96	1.61
Ram Access Cover Plate	47	10012	-0.42	0.43	-0.47	-0.13	-0.04	0.70	0.49	0.19	-1.15	1.65
	48	10004	-0.42	0.43	-0.47	-0.13	-0.04	0.70	0.49	0.19	-1.15	1.65
	49	10011	-0.31	-0.14	-0.75	0.01	-0.03	0.75	0.25	-0.14	-1.32	1.57
	50	10003	-0.31	-0.14	-0.75	0.01	-0.03	0.75	0.25	-0.14	-1.32	1.57
	51	10013	-0.15	-0.07	0.01	0.01	0.00	-0.03	0.01	-0.07	-0.16	0.17
	52	10001	-0.15	-0.07	0.01	0.01	0.00	-0.03	0.01	-0.07	-0.16	0.17

(1.110)*Pm, fssd-3.xls

Table 2.7.1-67
Cask 30-Foot Flatside Slapdown Drop Membrane Stress Summary, 180° Azimuth

Cask Component	Stress Point	Node Number	Stress Components (ksi)						Principal Stresses (ksi)			SI (ksi)
			SX	SY	SZ	SXY	SYZ	SXZ	S1	S2	S3	
Top Cover	1	13730	-0.26	0.15	0.80	0.01	0.07	-0.37	0.92	0.15	-0.38	1.30
	2	13771	-0.26	0.15	0.80	0.01	0.07	-0.37	0.92	0.15	-0.38	1.30
	3	13738	-2.94	-0.05	3.07	0.22	-0.02	-0.18	3.07	-0.04	-2.96	6.03
	4	13779	-2.94	-0.05	3.07	0.22	-0.02	-0.18	3.07	-0.04	-2.96	6.03
	5	13746	0.55	-2.23	5.30	-0.41	-0.11	-0.39	5.33	0.58	-2.29	7.62
	6	13786	0.55	-2.23	5.30	-0.41	-0.11	-0.39	5.33	0.58	-2.29	7.62
Top Flange	7	13711	9.42	-2.83	7.15	0.70	-0.51	0.87	9.73	6.91	-2.90	12.63
	8	13713	9.42	-2.83	7.15	0.70	-0.51	0.87	9.73	6.91	-2.90	12.63
Inner Shell	9	13672	-1.24	0.82	0.57	0.37	-1.07	0.01	1.80	-0.32	-1.33	3.13
	10	13674	-1.24	0.82	0.57	0.37	-1.07	0.01	1.80	-0.32	-1.33	3.13
	11	13654	-0.17	-0.16	-0.89	-0.32	-0.96	0.06	0.62	-0.27	-1.56	2.18
	12	13656	-0.17	-0.16	-0.89	-0.32	-0.96	0.06	0.62	-0.27	-1.56	2.18
	13	13574	-0.05	-3.42	-2.11	0.03	-0.78	0.28	-0.01	-1.78	-3.79	3.79
	14	13576	-0.05	-3.42	-2.11	0.03	-0.78	0.28	-0.01	-1.78	-3.79	3.79
	15	13521	-0.04	-5.72	-2.19	0.03	-0.55	0.28	0.00	-2.14	-5.80	5.80
	16	13522	-0.04	-5.72	-2.19	0.03	-0.55	0.28	0.00	-2.14	-5.80	5.80
	17	13371	-0.08	-7.38	-1.21	-0.01	0.10	0.16	-0.06	-1.23	-7.38	7.32
	18	13372	-0.08	-7.38	-1.21	-0.01	0.10	0.16	-0.06	-1.23	-7.38	7.32
	19	13221	0.03	-4.07	1.17	-0.02	0.32	-0.16	1.21	0.01	-4.09	5.30
	20	13222	0.03	-4.07	1.17	-0.02	0.32	-0.16	1.21	0.01	-4.09	5.30
	21	13161	-0.01	-2.91	5.00	0.00	0.11	-0.67	5.09	-0.10	-2.92	8.01
	22	13162	-0.01	-2.91	5.00	0.00	0.11	-0.67	5.09	-0.10	-2.92	8.01
	23	13062	-0.19	-3.73	3.40	1.26	-0.32	-0.40	3.47	0.15	-4.14	7.61
	24	13064	-0.19	-3.73	3.40	1.26	-0.32	-0.40	3.47	0.15	-4.14	7.61
	25	13054	1.00	-1.84	1.94	1.05	-0.47	0.22	2.01	1.34	-2.25	4.26
	26	13056	1.00	-1.84	1.94	1.05	-0.47	0.22	2.01	1.34	-2.25	4.26
Outer Shell	27	13680	-0.45	-3.94	0.35	1.18	-1.03	0.25	0.58	-0.10	-4.53	5.11
	28	13682	-0.45	-3.94	0.35	1.18	-1.03	0.25	0.58	-0.10	-4.53	5.11
	29	13578	0.05	-7.37	-6.54	-0.04	-0.97	0.88	0.17	-5.99	-8.03	8.21
	30	13580	0.05	-7.37	-6.54	-0.04	-0.97	0.88	0.17	-5.99	-8.03	8.21
	31	13525	0.06	-9.44	-5.37	0.03	-0.57	0.72	0.15	-5.39	-9.52	9.67
	32	13526	0.06	-9.44	-5.37	0.03	-0.57	0.72	0.15	-5.39	-9.52	9.67
	33	13375	-0.02	-9.67	-2.69	-0.02	0.21	0.37	0.03	-2.73	-9.68	9.71
	34	13376	-0.02	-9.67	-2.69	-0.02	0.21	0.37	0.03	-2.73	-9.68	9.71
	35	13225	0.00	-5.30	-0.69	-0.03	0.42	0.09	0.01	-0.66	-5.34	5.35
	36	13226	0.00	-5.30	-0.69	-0.03	0.42	0.09	0.01	-0.66	-5.34	5.35
	37	13165	-0.02	-3.65	0.07	-0.01	0.36	-0.02	0.11	-0.02	-3.69	3.80
	38	13167	-0.02	-3.65	0.07	-0.01	0.36	-0.02	0.11	-0.02	-3.69	3.80
	39	13073	-0.73	-1.81	0.58	-0.81	0.28	-0.10	0.65	-0.35	-2.26	2.91
	40	13075	-0.73	-1.81	0.58	-0.81	0.28	-0.10	0.65	-0.35	-2.26	2.91
Bottom Cover	41	13054	-2.76	0.46	1.17	0.57	-0.39	0.42	1.35	0.43	-2.91	4.26
	42	13021	-2.76	0.46	1.17	0.57	-0.39	0.42	1.35	0.43	-2.91	4.26
	43	13051	-1.20	-0.04	0.90	0.11	-0.03	0.13	0.91	-0.03	-1.22	2.13
	44	13018	-1.20	-0.04	0.90	0.11	-0.03	0.13	0.91	-0.03	-1.22	2.13
	45	13048	-0.13	-1.32	0.95	0.08	-0.02	0.05	0.95	-0.13	-1.32	2.27
	46	13010	-0.13	-1.32	0.95	0.08	-0.02	0.05	0.95	-0.13	-1.32	2.27
Ram Access Cover Plate	47	13012	-0.99	0.66	0.37	-0.19	-0.03	0.01	0.68	0.37	-1.01	1.69
	48	13004	-0.99	0.66	0.37	-0.19	-0.03	0.01	0.68	0.37	-1.01	1.69
	49	13011	-0.84	-0.20	-0.07	0.06	0.01	0.09	-0.05	-0.20	-0.86	0.80
	50	13003	-0.84	-0.20	-0.07	0.06	0.01	0.09	-0.05	-0.20	-0.86	0.80
	51	13013	-0.04	-0.07	-0.10	0.01	0.00	-0.08	0.01	-0.07	-0.16	0.17
	52	13001	-0.04	-0.07	-0.10	0.01	0.00	-0.08	0.01	-0.07	-0.16	0.17

(1.110)*Pm, fssd-3.xls

Table 2.7.1-68
Cask 30-Foot Flatside Slapdown Drop Membrane Plus Bending Stress Summary, 0° Azimuth

Cask Component	Stress Point	Node Number	Stress Components (ksi)						Principal Stresses (ksi)			SI (ksi)
			SX	SY	SZ	SXY	SYZ	SXZ	S1	S2	S3	
Top Cover	1	730	-0.14	0.28	0.90	-0.34	0.01	-0.20	0.94	0.45	-0.35	1.30
	2	771	-0.38	0.02	0.70	0.33	-0.15	-0.53	0.99	0.03	-0.69	1.69
	3	738	-6.00	-0.23	-2.00	0.64	-0.01	-0.04	-0.16	-2.00	-6.07	5.92
	4	779	-7.70	-0.45	-0.56	0.64	-0.01	-0.13	-0.39	-0.56	-7.76	7.37
	5	746	-20.90	-8.33	-12.07	0.66	0.15	-0.09	-8.29	-12.07	-20.95	12.65
	6	786	12.19	-5.07	3.45	2.04	0.01	-0.63	12.47	3.41	-5.31	17.78
Top Flange	7	711	-26.10	-27.81	-22.33	-3.75	0.24	-0.04	-22.29	-23.14	-30.80	8.51
	8	713	-11.69	34.18	-2.36	-0.54	0.08	0.72	34.18	-2.31	-11.74	45.92
Inner Shell	9	672	-1.71	6.07	-10.66	1.10	0.75	-1.03	6.24	-1.72	-10.82	17.07
	10	674	-6.13	-6.38	-17.36	-1.15	0.45	-1.39	-4.96	-7.38	-17.54	12.59
	11	654	-1.26	4.82	-14.39	-0.24	0.01	-1.07	4.83	-1.18	-14.47	19.30
	12	656	-1.79	-9.79	-19.69	-1.69	0.02	-1.53	-1.33	-10.12	-19.81	18.49
	13	574	-1.03	2.63	-7.88	-0.32	-1.19	-0.60	2.78	-0.99	-8.07	10.85
	14	576	-1.10	-2.12	-9.77	-0.32	-0.98	-0.76	-0.98	-2.05	-9.96	8.98
	15	521	-0.58	3.97	8.19	0.03	-1.13	0.78	8.54	3.70	-0.66	9.19
	16	522	-0.53	9.06	10.89	0.01	-0.98	1.02	11.39	8.66	-0.62	12.01
	17	371	-0.30	11.47	2.50	0.01	0.15	0.26	11.47	2.52	-0.32	11.79
	18	372	-0.23	14.39	7.57	0.00	0.15	0.70	14.39	7.63	-0.30	14.69
	19	221	0.00	5.14	-1.09	0.01	0.56	-0.09	5.19	0.01	-1.15	6.34
	20	222	0.02	5.79	1.19	0.01	0.46	0.11	5.83	1.15	0.01	5.83
	21	161	-0.06	2.63	-3.81	0.05	0.40	-0.33	2.65	-0.03	-3.86	6.51
	22	162	-0.06	2.53	-2.89	0.05	0.30	-0.25	2.55	-0.04	-2.93	5.48
	23	62	-0.18	-1.02	-3.29	-0.16	-0.05	-0.28	-0.13	-1.04	-3.32	3.20
	24	64	-0.11	3.95	-1.83	-0.96	0.02	-0.15	4.17	-0.31	-1.85	6.01
	25	54	-1.87	-0.66	-2.42	0.06	-0.10	-0.07	-0.65	-1.86	-2.44	1.78
	26	56	-1.52	1.75	-1.72	-0.59	-0.02	0.00	1.85	-1.62	-1.72	3.58
Outer Shell	27	680	-3.72	-40.77	-27.94	10.38	0.36	-2.13	-0.87	-28.03	-43.53	42.67
	28	682	-8.73	25.63	-11.73	4.30	-0.36	-0.34	26.17	-9.23	-11.77	37.94
	29	578	-1.71	1.21	-17.56	-3.64	-1.95	-1.42	3.71	-3.80	-17.96	21.67
	30	580	-2.38	-9.98	-22.51	-3.61	-0.96	-1.77	-0.86	-11.21	-22.80	21.93
	31	525	-0.36	-4.66	11.66	0.51	-1.89	1.08	11.95	-0.36	-4.97	16.92
	32	526	-0.21	12.57	17.78	0.47	-1.57	1.61	18.33	12.19	-0.38	18.71
	33	375	-0.22	10.92	2.32	0.01	0.10	0.24	10.92	2.35	-0.24	11.17
	34	376	-0.12	15.97	9.61	0.01	0.10	0.87	15.97	9.69	-0.19	16.16
	35	225	-0.03	4.87	-1.38	-0.01	0.74	-0.11	4.95	-0.02	-1.48	6.43
	36	226	0.01	7.16	2.31	0.00	0.56	0.21	7.23	2.27	-0.01	7.24
	37	165	-0.14	3.04	-5.22	0.46	0.68	-0.44	3.15	-0.15	-5.32	8.47
	38	167	-0.28	1.96	-4.17	0.46	0.39	-0.34	2.07	-0.33	-4.23	6.30
	39	73	-0.41	-3.86	-3.54	-1.10	0.13	-0.23	-0.07	-3.55	-4.18	4.11
	40	75	-0.86	4.31	-1.39	-0.50	0.13	-0.05	4.36	-0.91	-1.40	5.76
Bottom Cover	41	54	-2.09	-0.87	-2.57	0.00	-0.08	-0.06	-0.87	-2.08	-2.58	1.71
	42	21	0.17	0.31	-0.48	-0.11	-0.01	-0.07	0.37	0.11	-0.49	0.86
	43	51	-1.38	0.00	-1.42	-0.12	0.00	-0.01	0.01	-1.39	-1.43	1.43
	44	18	-0.34	-0.02	-0.51	-0.13	0.00	-0.09	0.03	-0.34	-0.55	0.58
	45	48	0.19	-0.46	-0.36	-0.13	0.00	-0.06	0.22	-0.36	-0.49	0.71
	46	10	-1.14	-0.64	-0.66	-0.15	0.03	-0.03	-0.58	-0.68	-1.18	0.61
Ram Access Cover Plate	47	12	-1.72	0.06	-0.39	0.07	0.02	0.00	0.06	-0.39	-1.72	1.78
	48	4	-0.05	0.29	0.40	-0.30	-0.02	-0.03	0.47	0.40	-0.23	0.69
	49	11	-0.93	0.12	-0.20	0.05	-0.02	-0.03	0.12	-0.20	-0.93	1.06
	50	3	-0.59	-0.04	-0.05	-0.14	0.02	-0.08	0.02	-0.06	-0.64	0.65
	51	13	-0.08	-0.12	-0.15	-0.01	-0.01	-0.05	-0.05	-0.12	-0.18	0.13
	52	1	0.00	-0.02	-0.06	0.00	0.01	-0.10	0.08	-0.02	-0.13	0.21

(1.110)*Pm+Pb, fssd-3.xls

Table 2.7.1-69
Cask 30-Foot Flatside Slapdown Drop Membrane Plus Bending Stress Summary, 45° Azimuth

Cask Component	Stress Point	Node Number	Stress Components (ksi)						Principal Stresses (ksi)			SI (ksi)
			SX	SY	SZ	SXY	SYZ	SXZ	S1	S2	S3	
Top Cover	1	4730	0.58	0.28	0.18	-0.25	-0.23	-0.52	0.94	0.45	-0.35	1.30
	2	4771	0.69	0.02	-0.38	0.34	0.13	-0.54	0.99	0.03	-0.69	1.69
	3	4738	-1.42	-0.22	-2.59	0.26	0.21	-1.74	-0.09	-0.27	-3.87	3.78
	4	4779	-3.84	-0.45	-5.68	0.26	0.20	-4.15	-0.39	-0.56	-9.02	8.63
	5	4746	-9.09	-3.65	-9.13	0.61	1.03	-4.14	-3.45	-5.02	-13.39	9.93
	6	4786	5.11	-2.34	-2.96	1.19	1.63	0.35	5.34	-1.19	-4.34	9.68
Top Flange	7	4711	-14.37	-15.53	-15.22	-2.13	-0.75	0.18	-12.60	-15.24	-17.28	4.68
	8	4713	-6.57	18.58	-3.93	-0.32	-0.82	0.35	18.61	-3.91	-6.62	25.23
Inner Shell	9	4672	-1.42	3.98	-10.09	0.74	1.90	0.08	4.33	-1.52	-10.34	14.67
	10	4674	-4.25	-3.94	-12.90	-0.77	-0.60	-3.05	-2.96	-4.21	-13.93	10.98
	11	4654	-1.08	3.38	-11.28	-0.21	-0.70	-0.08	3.42	-1.09	-11.31	14.74
	12	4656	-1.49	-4.98	-13.66	-1.03	-2.23	-0.23	-1.20	-4.72	-14.22	13.02
	13	4574	-0.76	2.27	-3.92	-0.16	-9.61	0.06	9.28	-0.76	-10.92	20.20
	14	4576	-0.81	1.23	-4.44	-0.17	-6.51	0.20	5.51	-0.82	-8.71	14.22
	15	4521	-0.18	2.92	6.15	0.05	-8.16	-0.05	12.85	-0.18	-3.78	16.64
	16	4522	-0.14	5.45	6.66	0.04	-6.22	-0.11	12.31	-0.11	-0.21	12.52
	17	4371	0.04	6.22	3.94	0.00	1.08	0.04	6.66	3.51	0.04	6.62
	18	4372	0.01	6.24	2.99	0.00	0.91	-0.15	6.48	2.76	0.00	6.48
	19	4221	0.03	3.71	0.63	-0.01	3.96	0.03	6.42	0.03	-2.09	8.51
	20	4222	0.03	3.62	0.17	-0.01	2.98	-0.03	5.33	0.03	-1.55	6.89
	21	4161	-0.08	2.49	-1.46	0.02	3.05	0.05	4.14	-0.08	-3.12	7.27
	22	4162	-0.08	2.53	-1.67	0.02	2.01	0.05	3.33	-0.08	-2.48	5.81
	23	4062	-0.12	-0.56	-1.56	-0.09	-0.80	0.07	-0.01	-0.23	-2.00	1.99
	24	4064	-0.05	3.93	-0.37	-0.72	-0.49	0.11	4.11	-0.17	-0.43	4.53
	25	4054	-1.10	-0.24	-1.33	0.04	-0.39	-0.02	-0.12	-1.11	-1.46	1.34
	26	4056	-0.82	1.41	-0.94	-0.48	-0.30	0.38	1.57	-0.65	-1.27	2.83
Outer Shell	27	4680	-2.43	-16.76	-16.41	5.01	8.13	-0.31	-0.49	-9.76	-25.36	24.88
	28	4682	-4.56	12.53	-9.21	2.24	-2.51	-0.25	13.10	-4.85	-9.50	22.60
	29	4578	-1.62	2.38	-8.99	-2.03	-18.27	-0.04	15.98	-1.70	-22.51	38.49
	30	4580	-1.78	0.11	-11.54	-2.07	-8.15	0.30	4.89	-2.34	-15.76	20.66
	31	4525	-0.22	-0.48	8.24	0.39	-13.15	-0.06	17.75	-0.22	-9.99	27.73
	32	4526	-0.05	8.95	9.79	0.35	-9.28	-0.12	18.66	0.20	-0.17	18.84
	33	4375	0.04	6.22	4.48	0.00	0.82	0.13	6.54	4.16	0.04	6.50
	34	4376	0.00	6.38	2.86	0.01	0.68	-0.14	6.51	2.74	-0.01	6.51
	35	4225	0.01	3.14	0.39	-0.04	5.33	0.06	7.27	0.01	-3.74	11.01
	36	4226	0.03	3.82	0.02	-0.04	3.67	-0.04	6.05	0.03	-2.21	8.26
	37	4165	-0.16	2.11	-2.68	0.25	5.42	0.03	5.65	-0.17	-6.21	11.85
	38	4167	-0.22	1.79	-3.07	0.25	3.11	0.04	3.32	-0.23	-4.59	7.91
	39	4073	-0.29	-2.72	-2.38	-0.69	0.85	0.21	-0.11	-1.72	-3.56	3.45
	40	4075	-0.53	3.13	-0.91	-0.29	1.04	0.12	3.40	-0.49	-1.21	4.60
Bottom Cover	41	4054	-1.24	-0.43	-1.42	0.00	-0.33	0.03	-0.33	-1.24	-1.52	1.19
	42	4021	0.11	0.21	-1.33	-0.07	-0.07	0.07	0.25	0.07	-1.34	1.59
	43	4051	-0.84	0.00	-0.66	-0.08	-0.10	-0.01	0.02	-0.67	-0.85	0.87
	44	4018	-0.16	-0.02	-1.42	-0.08	-0.10	-0.33	0.02	-0.12	-1.51	1.53
	45	4048	0.09	-0.27	-0.13	-0.06	-0.07	-0.11	0.14	-0.13	-0.33	0.47
	46	4010	-0.60	-0.36	-1.07	-0.07	0.05	-0.43	-0.26	-0.44	-1.33	1.06
Ram Access Cover Plate	47	4012	-0.82	0.07	-0.62	0.03	0.03	-0.68	0.07	-0.03	-1.41	1.48
	48	4004	-0.05	0.13	-0.64	-0.17	-0.26	-0.42	0.24	0.15	-0.95	1.18
	49	4011	-0.36	0.08	-0.50	0.00	-0.05	-0.56	0.14	0.07	-1.00	1.14
	50	4003	-0.25	-0.01	-0.98	-0.09	-0.05	-0.77	0.25	-0.01	-1.47	1.71
	51	4013	-0.06	-0.12	-0.17	0.00	-0.02	0.04	-0.05	-0.12	-0.18	0.13
	52	4001	0.07	-0.02	-0.13	-0.01	0.00	0.03	0.08	-0.02	-0.13	0.21

(1.110)*Pm+Pb, fssd-3.xls

Table 2.7.1-70
Cask 30-Foot Flatside Slapdown Drop Membrane Plus Bending Stress Summary, 90° Azimuth

Cask Component	Stress Point	Node Number	Stress Components (ksi)						Principal Stresses (ksi)			SI (ksi)
			SX	SY	SZ	SXY	SYZ	SXZ	S1	S2	S3	
, Top Cover	1	7730	0.90	0.28	-0.14	-0.01	-0.34	0.20	0.94	0.45	-0.35	1.30
	2	7771	0.70	0.02	-0.38	0.15	0.33	0.53	0.99	0.03	-0.69	1.69
	3	7738	1.43	-0.15	-3.31	-0.05	-0.36	1.72	2.00	-0.13	-3.90	5.90
	4	7779	1.11	-0.25	-6.85	-0.05	-0.37	0.82	1.20	-0.23	-6.96	8.16
	5	7746	3.40	1.42	-3.78	0.06	-0.29	3.10	4.55	1.44	-4.95	9.50
	6	7786	-1.69	0.76	-5.68	-0.15	-0.79	0.98	0.88	-1.51	-5.99	6.87
Top Flange	7	7711	1.67	1.17	-2.95	0.24	-1.31	1.37	2.07	1.51	-3.69	5.76
	8	7713	0.22	-2.26	-2.75	0.04	-0.72	0.31	0.25	-1.76	-3.28	3.53
Inner Shell	9	7672	-0.19	1.41	-7.78	0.12	-3.48	-0.52	2.61	-0.19	-8.97	11.58
	10	7674	-0.86	-0.21	-5.72	-0.21	-2.10	0.55	0.60	-0.92	-6.47	7.07
	11	7654	-0.08	0.96	-6.28	-0.13	-6.03	0.02	4.38	-0.08	-9.70	14.07
	12	7656	-0.27	1.19	-4.30	-0.12	-5.33	-0.39	4.44	-0.25	-7.58	12.01
	13	7574	0.00	0.17	-0.74	0.04	-8.35	0.03	8.08	0.00	-8.65	16.73
	14	7576	0.19	3.00	1.70	0.07	-8.33	-0.06	10.71	0.19	-6.01	16.72
	15	7521	0.13	-0.46	2.13	0.04	-5.82	-0.11	6.80	0.13	-5.13	11.93
	16	7522	0.05	-1.19	0.88	0.07	-6.60	0.01	6.53	0.05	-6.84	13.36
	17	7371	-0.01	-2.26	2.94	0.00	0.72	-0.12	3.04	-0.02	-2.36	5.40
	18	7372	-0.10	-4.06	-1.07	-0.01	0.85	0.09	-0.10	-0.85	-4.28	4.19
	19	7221	0.00	-0.34	1.84	-0.01	3.23	0.00	4.16	0.00	-2.66	6.82
	20	7222	-0.02	-0.96	-0.01	-0.02	3.51	0.02	3.06	-0.02	-4.02	7.08
	21	7161	0.03	0.36	1.75	-0.01	2.50	0.07	3.66	0.03	-1.54	5.19
	22	7162	0.03	0.18	0.85	-0.02	2.44	0.01	2.98	0.03	-1.96	4.93
	23	7062	0.08	-0.84	1.47	0.07	-0.54	0.10	1.59	0.08	-0.97	2.56
	24	7064	0.14	2.44	2.25	-0.19	-0.27	0.10	2.65	2.06	0.12	2.53
	25	7054	0.04	0.21	0.70	0.02	-0.21	0.26	0.85	0.18	-0.09	0.94
	26	7056	0.01	0.46	0.57	-0.18	-0.21	0.90	1.32	0.37	-0.65	1.97
Outer Shell	27	7680	0.42	11.10	-1.98	-2.22	-10.91	1.24	17.66	0.04	-8.16	25.82
	28	7682	0.49	-5.02	-3.81	-0.88	-4.75	0.79	1.61	-0.74	-9.20	10.81
	29	7578	-0.15	0.66	-4.63	0.26	-11.23	0.42	9.56	-0.13	-13.54	23.10
	30	7580	0.04	8.61	2.65	0.26	-10.58	-0.13	16.63	0.04	-5.36	21.99
	31	7525	0.18	0.92	0.44	0.13	-7.53	-0.07	8.22	0.18	-6.86	15.08
	32	7526	-0.02	0.15	-0.22	0.18	-9.10	-0.09	9.07	-0.02	-9.13	18.20
	33	7375	0.03	-2.63	2.60	0.00	0.86	-0.20	2.75	0.02	-2.77	5.52
	34	7376	-0.11	-5.44	-2.72	0.00	0.87	0.02	-0.11	-2.47	-5.69	5.59
	35	7225	0.02	-1.46	0.92	-0.03	4.20	-0.02	4.10	0.02	-4.64	8.74
	36	7226	-0.04	-2.51	-1.67	-0.05	4.60	0.00	2.53	-0.04	-6.71	9.24
	37	7165	0.01	-0.85	-0.46	-0.03	4.35	0.09	3.70	0.01	-5.01	8.71
	38	7167	-0.02	-0.86	-1.19	-0.03	4.30	-0.01	3.28	-0.02	-5.33	8.60
	39	7073	-0.15	-3.56	-0.83	-0.39	3.45	0.44	1.52	-0.10	-5.96	7.48
	40	7075	-0.23	2.29	0.86	-0.07	2.09	0.26	3.79	-0.11	-0.76	4.55
Bottom Cover	41	7054	0.00	0.15	0.67	-0.01	-0.16	0.35	0.85	0.13	-0.16	1.01
	42	7021	-0.15	0.04	-1.63	-0.09	0.03	0.87	0.28	0.03	-2.04	2.31
	43	7051	0.19	0.00	0.67	-0.04	-0.08	-0.07	0.69	0.19	-0.02	0.71
	44	7018	-0.36	-0.02	-2.10	-0.04	-0.08	0.72	0.01	-0.13	-2.36	2.38
	45	7048	0.29	-0.19	0.39	0.05	-0.13	-0.26	0.63	0.08	-0.22	0.85
	46	7010	-0.15	-0.25	-1.46	0.06	-0.29	0.27	-0.10	-0.19	-1.58	1.48
Ram Access Cover Plate	47	7012	0.13	0.13	-0.83	-0.06	-0.06	-0.04	0.20	0.07	-0.84	1.04
	48	7004	-0.27	0.09	-1.66	-0.07	-0.16	0.17	0.12	-0.27	-1.70	1.82
	49	7011	0.11	0.00	-0.73	-0.06	-0.05	-0.07	0.14	-0.02	-0.74	0.87
	50	7003	-0.59	-0.12	-2.06	-0.02	-0.08	0.11	-0.12	-0.58	-2.07	1.95
	51	7013	-0.15	-0.12	-0.08	0.01	-0.01	0.05	-0.05	-0.12	-0.18	0.13
	52	7001	-0.06	-0.02	0.00	-0.01	0.00	0.10	0.08	-0.02	-0.13	0.21

(1.110)*Pm+Pb, fssd-3.xls

Table 2.7.1-71
Cask 30-Foot Flatside Slapdown Drop Membrane Plus Bending Stress Summary, 135° Azimuth

Cask Component	Stress Point	Node Number	Stress Components (ksi)						Principal Stresses (ksi)			SI (ksi)
			SX	SY	SZ	SXY	SYZ	SXZ	S1	S2	S3	
Top Cover	1	10730	0.18	0.28	0.58	0.23	-0.25	0.52	0.94	0.45	-0.35	1.30
	2	10771	-0.38	0.02	0.69	-0.13	0.34	0.54	0.99	0.03	-0.69	1.69
	3	10738	-3.90	-0.10	-1.16	0.15	-0.27	3.31	1.07	-0.11	-6.13	7.20
	4	10779	0.76	-0.04	1.93	0.15	-0.27	3.09	4.49	0.00	-1.84	6.33
	5	10746	-3.03	-1.35	0.84	-0.28	-0.48	4.40	3.77	-1.41	-5.90	9.67
	6	10786	2.25	-0.87	3.98	-0.10	-1.19	1.43	4.99	1.53	-1.16	6.15
Top Flange	7	10711	0.09	-0.37	1.53	-0.08	-1.53	1.30	2.89	-0.16	-1.48	4.37
	8	10713	-0.07	1.41	2.50	0.24	-1.33	0.10	3.39	0.61	-0.16	3.55
Inner Shell	9	10672	-0.11	0.97	1.19	0.19	-3.75	-0.60	4.89	-0.15	-2.70	7.59
	10	10674	-0.46	-0.30	0.12	0.24	-2.57	0.24	2.49	-0.41	-2.72	5.21
	11	10654	-0.09	0.47	0.29	0.02	-4.82	-0.18	5.20	-0.09	-4.44	9.64
	12	10656	-0.01	0.06	-0.31	0.00	-4.83	-0.50	4.73	-0.01	-4.98	9.72
	13	10574	-0.02	-1.95	-0.66	0.03	-4.44	-0.05	3.18	-0.02	-5.79	8.97
	14	10576	-0.11	-3.32	-2.00	0.02	-4.63	0.02	2.02	-0.11	-7.33	9.35
	15	10521	-0.06	-4.32	-1.16	0.02	-2.89	-0.04	0.56	-0.06	-6.03	6.59
	16	10522	-0.07	-4.76	-1.30	0.00	-3.17	-0.02	0.58	-0.07	-6.64	7.22
	17	10371	0.04	-6.46	-1.65	0.00	0.55	-0.02	0.04	-1.59	-6.52	6.56
	18	10372	0.08	-6.17	0.18	0.00	0.36	-0.02	0.20	0.08	-6.19	6.39
	19	10221	0.06	-3.52	1.01	-0.02	1.79	-0.02	1.63	0.06	-4.14	5.77
	20	10222	0.05	-4.01	1.20	-0.01	1.87	0.03	1.80	0.05	-4.61	6.41
	21	10161	0.08	-2.27	3.72	-0.01	0.97	0.01	3.88	0.08	-2.42	6.29
	22	10162	0.06	-2.78	3.53	-0.01	1.14	0.08	3.74	0.05	-2.98	6.72
	23	10062	0.08	-0.11	3.47	0.28	-1.84	0.06	4.25	0.16	-0.96	5.21
	24	10064	-0.09	-2.68	2.67	0.98	-0.50	0.04	2.72	0.23	-3.05	5.77
	25	10054	0.96	1.36	2.06	-0.06	-0.52	-0.19	2.35	1.17	0.86	1.49
	26	10056	-0.68	-2.43	0.53	0.54	0.01	0.30	0.61	-0.61	-2.58	3.19
Outer Shell	27	10680	-0.27	-7.69	-1.37	1.41	-10.96	1.20	6.87	-0.05	-16.15	23.02
	28	10682	-0.62	5.16	1.76	0.58	-5.89	0.79	9.59	-0.24	-3.06	12.65
	29	10578	0.19	-2.85	-3.04	-0.02	-5.66	-0.12	2.72	0.19	-8.60	11.32
	30	10580	-0.04	-6.57	-5.56	-0.02	-5.90	-0.03	-0.04	-0.14	-11.99	11.94
	31	10525	0.04	-5.87	-3.53	0.00	-3.01	-0.06	0.05	-1.47	-7.93	7.98
	32	10526	0.00	-7.20	-4.12	-0.02	-3.56	-0.04	0.00	-1.78	-9.54	9.54
	33	10375	0.05	-8.21	-3.49	0.00	1.08	-0.02	0.05	-3.26	-8.44	8.49
	34	10376	0.11	-7.98	-0.89	0.00	0.63	-0.02	0.11	-0.83	-8.03	8.14
	35	10225	0.03	-4.98	-0.91	-0.02	2.27	-0.05	0.13	0.00	-5.99	6.13
	36	10226	0.02	-5.34	-0.44	0.00	2.51	0.02	0.62	0.02	-6.40	7.02
	37	10165	0.04	-3.46	-0.23	-0.01	2.01	-0.05	0.74	0.04	-4.42	5.16
	38	10167	0.00	-3.83	-0.29	-0.01	2.56	0.03	1.05	0.00	-5.17	6.22
	39	10073	-0.44	-6.82	-0.49	-1.09	1.99	0.27	0.09	-0.27	-7.57	7.66
	40	10075	-0.42	3.64	2.51	-0.34	2.02	0.16	5.18	1.05	-0.50	5.68
Bottom Cover	41	10054	0.73	1.43	2.00	-0.10	-0.41	-0.16	2.22	1.27	0.68	1.54
	42	10021	-0.83	-0.34	-0.55	-0.29	0.10	1.14	0.47	-0.30	-1.88	2.36
	43	10051	1.39	-0.03	1.34	-0.04	-0.08	-0.10	1.46	1.27	-0.04	1.50
	44	10018	-1.44	0.00	-1.41	-0.04	-0.08	1.31	0.05	-0.16	-2.74	2.78
	45	10048	1.22	-0.63	1.29	0.06	-0.15	0.00	1.30	1.23	-0.64	1.94
	46	10010	-0.86	-0.97	-1.01	0.12	-0.54	0.92	0.07	-0.84	-2.07	2.13
Ram Access Cover Plate	47	10012	-0.34	0.30	-0.25	-0.03	-0.14	0.77	0.54	0.24	-1.07	1.61
	48	10004	-0.50	0.56	-0.68	-0.23	0.06	0.64	0.61	0.02	-1.26	1.87
	49	10011	0.09	-0.04	-0.28	-0.02	0.00	0.54	0.48	-0.04	-0.67	1.15
	50	10003	-0.71	-0.23	-1.23	0.04	-0.05	0.96	0.03	-0.23	-1.97	1.99
	51	10013	-0.17	-0.12	-0.06	0.02	0.00	-0.04	-0.05	-0.12	-0.18	0.13
	52	10001	-0.13	-0.02	0.07	0.00	-0.01	-0.03	0.08	-0.02	-0.13	0.21

(1.110)*Pm+Pb, fssd-3.xls

Table 2.7.1-72

Cask 30-Foot Flatside Slapdown Drop Membrane Plus Bending Stress Summary, 180° Azimuth

Cask Component	Stress Point	Node Number	Stress Components (ksi)						Principal Stresses (ksi)			SI (ksi)
			SX	SY	SZ	SXY	SYZ	SXZ	S1	S2	S3	
Top Cover	1	13730	-0.14	0.28	0.90	0.34	-0.01	-0.20	0.94	0.45	-0.35	1.30
	2	13771	-0.38	0.02	0.70	-0.33	0.15	-0.53	0.99	0.03	-0.69	1.69
	3	13738	-6.28	-0.08	0.35	0.22	-0.02	-0.23	0.36	-0.07	-6.30	6.66
	4	13779	0.41	-0.03	5.79	0.22	-0.02	-0.14	5.79	0.50	-0.12	5.91
	5	13746	-2.90	-2.37	2.68	-0.25	-0.15	-0.46	2.72	-2.27	-3.04	5.76
	6	13786	4.00	-2.08	7.93	-0.57	-0.07	-0.33	7.96	4.03	-2.14	10.09
Top Flange	7	13711	15.62	27.37	14.51	2.55	-3.06	0.26	28.52	15.54	13.44	15.07
	8	13713	3.21	-33.02	-0.20	-1.15	2.03	1.47	3.76	-0.59	-33.19	36.95
Inner Shell	9	13672	-0.12	3.81	2.07	0.85	-1.31	-0.18	4.66	1.40	-0.31	4.97
	10	13674	-2.35	-2.18	-0.93	-0.11	-0.83	0.19	-0.49	-2.38	-2.59	2.11
	11	13654	-0.02	3.38	0.32	-0.01	-0.90	-0.04	3.63	0.09	-0.03	3.66
	12	13656	-0.31	-3.70	-2.10	-0.62	-1.03	0.17	-0.13	-1.72	-4.26	4.12
	13	13574	-0.05	-3.07	-2.28	0.03	-0.78	0.30	-0.01	-1.83	-3.56	3.55
	14	13576	-0.04	-3.77	-1.95	0.03	-0.78	0.26	0.00	-1.69	-4.07	4.07
	15	13521	-0.05	-5.60	-2.48	0.03	-0.57	0.32	0.00	-2.42	-5.70	5.70
	16	13522	-0.03	-5.83	-1.89	0.03	-0.54	0.25	0.00	-1.85	-5.91	5.91
	17	13371	-0.08	-7.31	-1.51	-0.01	0.12	0.20	-0.06	-1.54	-7.31	7.26
	18	13372	-0.08	-7.45	-0.91	-0.01	0.09	0.12	-0.06	-0.93	-7.45	7.39
	19	13221	0.01	-3.99	0.60	-0.02	0.32	-0.08	0.64	0.00	-4.01	4.65
	20	13222	0.04	-4.16	1.74	-0.02	0.31	-0.23	1.78	0.01	-4.17	5.96
	21	13161	-0.02	-2.99	4.56	0.00	0.09	-0.61	4.64	-0.10	-2.99	7.64
	22	13162	0.01	-2.84	5.44	0.00	0.13	-0.73	5.54	-0.09	-2.84	8.38
	23	13062	-0.01	0.81	4.82	0.46	-0.52	-0.58	4.97	0.89	-0.23	5.20
	24	13064	-0.37	-8.27	1.98	2.07	-0.12	-0.21	2.01	0.11	-8.78	10.79
	25	13054	1.82	1.57	3.31	0.27	-0.55	0.12	3.47	1.97	1.26	2.21
	26	13056	0.17	-5.25	0.57	1.84	-0.40	0.31	0.86	0.48	-5.85	6.71
Outer Shell	27	13680	0.03	-10.29	-1.26	1.64	-1.40	0.63	0.40	-1.14	-10.77	11.17
	28	13682	-0.94	2.41	1.96	0.72	-0.66	-0.13	2.99	1.52	-1.08	4.07
	29	13578	0.13	-5.71	-6.33	-0.04	-0.94	0.87	0.25	-5.08	-7.07	7.32
	30	13580	-0.02	-9.03	-6.75	-0.04	-1.00	0.90	0.10	-6.48	-9.41	9.51
	31	13525	0.05	-8.83	-5.60	0.03	-0.60	0.75	0.15	-5.59	-8.94	9.08
	32	13526	0.06	-10.05	-5.15	0.03	-0.55	0.69	0.15	-5.17	-10.11	10.27
	33	13375	-0.02	-9.44	-3.06	-0.02	0.24	0.42	0.03	-3.11	-9.45	9.48
	34	13376	-0.03	-9.91	-2.32	-0.02	0.17	0.32	0.02	-2.36	-9.91	9.93
	35	13225	-0.03	-5.58	-1.66	-0.03	0.43	0.21	0.00	-1.64	-5.62	5.62
	36	13226	0.03	-5.02	0.28	-0.03	0.41	-0.04	0.32	0.02	-5.05	5.37
	37	13165	-0.04	-4.19	-0.76	-0.01	0.31	0.09	-0.03	-0.74	-4.22	4.19
	38	13167	0.01	-3.11	0.90	-0.01	0.41	-0.12	0.96	-0.01	-3.15	4.11
	39	13073	-1.06	-7.29	-0.92	-1.58	0.03	0.07	-0.67	-0.93	-7.66	7.00
	40	13075	-0.40	3.67	2.08	-0.05	0.53	-0.28	3.84	1.95	-0.43	4.27
Bottom Cover	41	13054	1.91	2.01	3.49	0.43	-0.51	0.11	3.65	2.32	1.43	2.22
	42	13021	-7.42	-1.09	-1.15	0.70	-0.27	0.73	-0.84	-1.23	-7.58	6.74
	43	13051	1.05	-0.08	2.59	0.11	-0.03	0.12	2.60	1.06	-0.09	2.69
	44	13018	-3.45	-0.01	-0.79	0.10	-0.03	0.15	0.00	-0.78	-3.46	3.46
	45	13048	1.51	-1.05	2.22	0.03	-0.03	0.01	2.22	1.51	-1.05	3.27
	46	13010	-1.76	-1.59	-0.32	0.13	-0.02	0.08	-0.32	-1.52	-1.83	1.52
Ram Access Cover Plate	47	13012	-1.36	0.37	0.37	0.03	-0.04	-0.01	0.41	0.34	-1.36	1.77
	48	13004	-0.61	0.95	0.37	-0.40	-0.01	0.03	1.05	0.37	-0.71	1.76
	49	13011	-0.51	-0.06	0.22	0.05	0.02	0.06	0.23	-0.06	-0.52	0.75
	50	13003	-1.17	-0.34	-0.35	0.06	0.01	0.13	-0.32	-0.35	-1.20	0.88
	51	13013	-0.08	-0.12	-0.15	0.01	0.01	-0.05	-0.05	-0.12	-0.18	0.13
	52	13001	0.00	-0.02	-0.06	0.00	-0.01	-0.10	0.08	-0.02	-0.13	0.21

(1.110)*Pm+Pb, fssd-3.xls

2.7.1.4.2 Top End Closure Bolt Oblique Drop Analysis

The top closure plate design ensures that the tangential (shear) loads are carried directly into the top flange with no contact (shear) loading in the top closure bolts. Only the axially applied loads are carried by the top closure bolts. Therefore, the evaluation for the top and bottom end drop bolt stresses presented in Appendix 2.10.5 envelops the bolt loads developed during any of the oblique drops discussed in this section.

2.7.1.4.3 Bottom End Closure Bolt Oblique Drop Analysis

The bottom closure plate design ensures that the tangential (shear) loads are carried directly into the bottom flange with no contact (shear) loading in the bottom closure bolts. Only the axially applied loads are carried by the bottom closure bolts. Therefore, the evaluation for the top and bottom end drop bolt stresses presented in Appendix 2.10.5 envelops the bolt loads developed during any of the oblique drops discussed in this section.

2.7.2 Puncture

The Part 71 regulations [2.1] include an accident puncture drop load, defined in Section 71.73(c)(2) as "a free drop of the specimen through a distance of one meter (40 in) in a position for which maximum damage is expected, onto the upper end of a solid, vertical, cylindrical, mild steel bar mounted on an essentially unyielding, horizontal surface. The bar must be 15 cm (6 in.) in diameter, with the top horizontal and its edge rounded to a radius of not more than six mm (¼ in) and of a length as to cause maximum damage to the package, but not less than 20 cm (8 in.) long. The long axis of the bar must be vertical." The puncture loading is to be applied to the external surfaces of the NUHOMS®-MP187 cask, and is not directly applicable to the DSC. However, it is required that no damage of the DSC results from deformation of the cask body. In addition, the cask must remain leak tight under the puncture loading.

Five drop positions, expected to be most damaging, are considered for the puncture load condition:

1) A vertical end drop onto the ram closure plate, impacting along the cask centerline

2) A vertical end drop onto the bottom end closure forging, impacting near the ram closure plate seal region

3) A vertical end drop onto the top closure plate, impacting along the cask centerline

4) A vertical end drop onto the top closure plate, impacting near the top closure seal region

5) A horizontal side drop onto the cask outer shell, impacting at the center of gravity of the cask.

These five puncture conditions are analyzed in the following sections.

2.7.2.1 Bottom End Center Puncture

The cask bottom end consists of a ram closure plate and a bottom end closure forging, as described in Chapter 1. The ram closure plate is bolted to the bottom end closure forging to allow its removal for DSC transfer operations. Two O-ring seals are provided between the ram closure plate and bottom end closure forging to provide a containment boundary. The position of the puncture load expected to cause maximum damage to the bottom end components is in the center of the ram closure plate. This will result in the highest bending stresses in the ram closure plate. Therefore, the bottom end cask components are analyzed for the puncture loading, assuming a vertical end drop onto the puncture bar, directly impacting the ram closure plate along the cask centerline, ignoring the protection afforded by the presence of the impact limiters.

The bottom end puncture analysis is performed using the axisymmetric finite element model described in Section 2.10.2.1.1. An initial strain is applied to the top and bottom end closure bolt beam elements to model the bolt preload. Under cold condition, the cask (including the bolts and ram closure plate) undergoes a change in temperature from 70° F to -20° F. The corresponding preload in the bolt is 22.2 kips/bolt (Table 2.10.5-12). Under hot condition, the

temperature in the bolt location(s) changes from 70° F to 283° F. The corresponding preload in the bolt is 34.9 kips/bolt (Table 2.10.5-12). Therefore, preloads of 22.2 kips/bolt and 34.9 kips/bolt are applied to the ram closure bolts under cold and hot conditions, respectively.

Two separate analyses are performed for the cask bottom end center puncture condition. Both of these analyses are performed for cold and hot conditions.

1) A linear elastic static analysis is performed to determine the maximum stresses in the cask components, and

2) A plastic analysis, assuming classical bi-linear kinematic hardening with a 5% tangent modulus, is performed to determine the maximum deformations in the cask seal regions.

The maximum possible puncture load that the cask can experience is that at which the puncture bar experiences dynamic flow or plastic collapse. The dynamic flow stress, σ_{flow}, of the mild steel (ASTM A-36 carbon steel) puncture bar is assumed to be the average of the yield strength and ultimate tensile strength, or:

$$\sigma_{flow} = (36{,}000 \text{ psi} + 58{,}000 \text{ psi})/2 = 47{,}000 \text{ psi}$$

Conservatively, a flow stress of 50.0 ksi is used in these evaluations. A pressure load of 50,000 psi is applied to the center of the ram closure plate over a 3.0 inch radius circle.

The load from the DSC acting on the inner surface of the bottom end closure forging is applied as a uniform pressure load. The pressure load is calculated as the weight of the loaded DSC multiplied by the g-load resulting from the bottom end center puncture. Based on static equilibrium, the g-load is calculated as follows:

$$G = F_p/W_c$$

where;

F_p = Force due to puncture loading

= (50,000 psi)(π (3.0 in)^2)

= 1.414 x 10^6 lbs.

W_c = Weight of lightest package configuration (i.e. cask + FF-DSC + impact limiters)

= 256,600 pounds (from Section 2.10.9)

Therefore,

G = 1.414 x 10^6 lb / 256,600 lb

= 5.5 g's

The pressure load due to the loaded DSC, conservatively calculated for the minimum DSC weight (70,400 lbs. for FF-DSC), is calculated as follows (where 8.5 in is the radius of the ram access opening):

P_{DSC} = $W_{DSC}G/A$

= (70,400)(5.5)/[π((34.0 in)^2 - (8.5 in)^2)]

= 114 psi

A pressure load of 114 psi is applied to elements 96 through 109 in the model.

A free body diagram for the axisymmetric bottom center puncture analysis is provided in Figure 2.7.2-1.

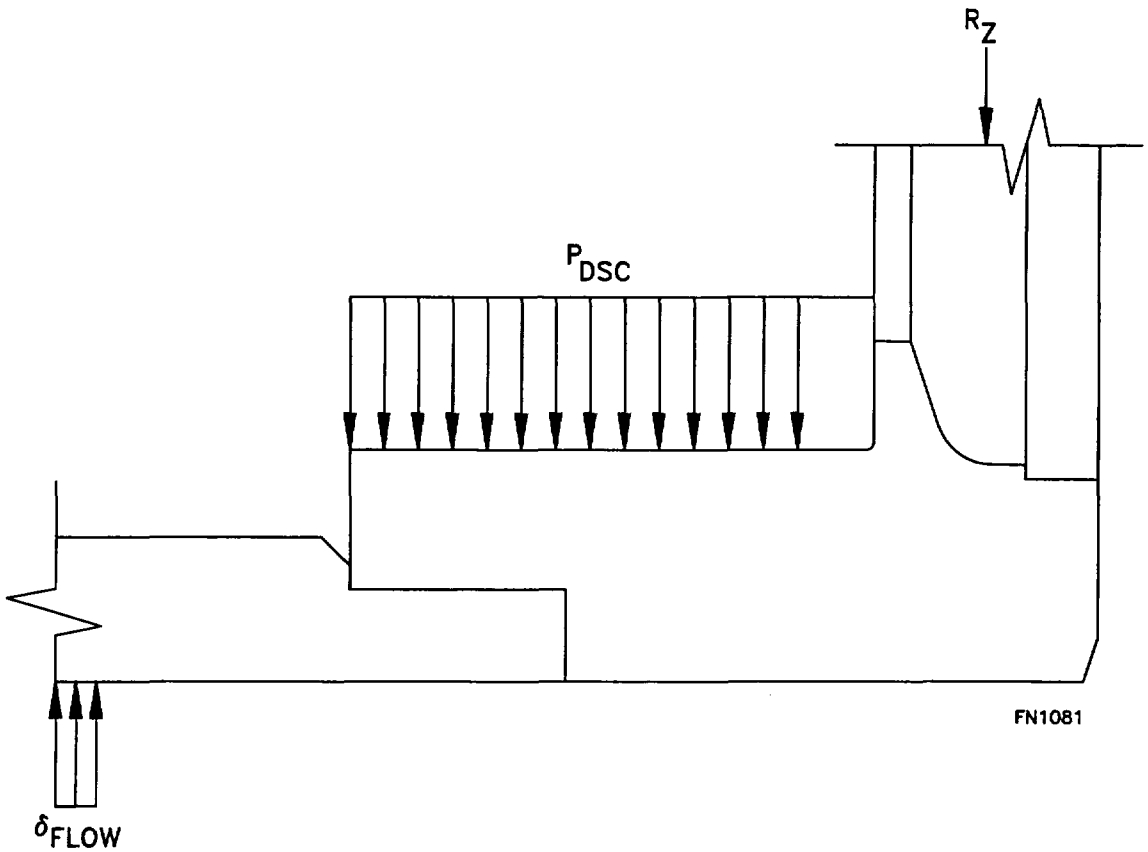

Force Balance

Load	Relationship	Magnitude
Puncture Pin, F_{pin}	$\sigma_{flow} \cdot A_{pin} = 50{,}000 \text{ psi} \cdot \pi(3.0 \text{ in})^2$	1,414 kips
DSC Pressure, P_{DSC}	$P_{DSC} \cdot A_{DSC} = 114 \text{ psi} \cdot \pi[(34.0 \text{ in})^2 (8.5 \text{ in})^2]$	-388.1 kips
ANSYS Reactions(1)	$2\pi \cdot [(-58502)_{1379}+(-79606)_{1380}+(-25119)_{1381}]$	-1,026 kips
TOTAL		0 kips

(1) ANSYS Version 4.4 Reactions are on a per radian basis.

The reactions are computed for cold condition.

Figure 2.7.2-1
Cask Free Body Diagram (Puncture)

Linear elastic static analyses are performed to determine the stresses in the cask bottom end components using the ANSYS program [2.6] for cold and hot drop conditions. The maximum stress intensities in the ram closure plate resulting from the puncture load are (See Figure 2.7.2-2):

P_m	=	29.4 ksi (Section at nodes 4 & 49)
$P_l + P_b$	=	84.9 ksi (Section at nodes 1 & 46)

The allowable service level D primary membrane stress intensity is the lesser of $2.4S_m$ or $0.7S_u$. The allowable stress, S_m, yield strength, S_y, and ultimate strength, S_u, of the ram closure plate SA-240, Type XM-19 at 400°F are 30.2 ksi, 40.8 ksi and 90.7 ksi, respectively. Therefore, the allowable service level D primary membrane stress intensity at 400°F is 63.5 ksi. The allowable service level D membrane plus bending stress intensity is the lesser of $3.6S_m$ and S_u, or 90.7 ksi. The maximum primary membrane and membrane plus bending stress intensities in the ram closure plate are within the allowable service level D stress intensities.

The maximum stress intensities in the bottom end closure forging, inner shell and outer shell resulting from the puncture loading are listed below (See Figure 2.7.2-3). Conservatively, the maximum membrane stresses are listed as P_m regardless of location.

Bottom End Closure Forging:

P_m	=	15.0 ksi (Section at nodes 135 & 85)
$P_l + P_b$	=	35.9 ksi (Section at nodes 135 & 85)

Inner Shell/Transition:

P_m	=	8.1 ksi (Section at nodes 153 & 155)
P_l	=	8.1 ksi (Section at nodes 153 & 155)
$P_l + P_b$	=	16.0 ksi (Section at nodes 153 & 155)

Outer Shell:

P_m	=	4.8 ksi (Section at nodes 173 & 175)
P_l	=	4.8 ksi (Section at nodes 173 & 175)
$P_l + P_b$	=	11.3 ksi (Section at nodes 173 & 175)

The allowable stress, S_m, yield strength, S_y, and the ultimate strength, S_u, of SA-240, Type 304 at 400°F are 18.7 ksi, 20.7 ksi and 64.4 ksi, respectively. The strength properties of SA-182, Type F304N are conservatively assumed to be equal to those of SA-240, Type 304. Therefore, the allowable primary membrane and membrane plus bending stress intensities are 44.9 ksi and 64.4 ksi, respectively. The maximum primary membrane and membrane plus bending stress intensities in the bottom end closure forging, inner shell and outer shell are within the ASME code allowables. Stress intensity contour plots, illustrating the stress distribution in the cask bottom end components, are included in Figure 2.7.2-2 and Figure 2.7.2-3.

The maximum stress intensities in the ram closure plate and bottom end closure forging exceed the material yield strengths. Consequently, some permanent deformation will result from the puncture loading. The plastic deformations due to center loading will be bounded by the plastic deformations caused by off-center loading, which are presented in Section 2.7.2.2.

2.7.2.2 Bottom End Off-Center Puncture

The NUHOMS®-MP187 cask is analyzed for a bottom end puncture, impacting in the region of the ram access penetration seals. This drop orientation is expected to cause the highest stresses in the region of the seals and consequently the greatest potential for damage to the containment boundary at that location.

The bottom end off-center puncture is performed using the half symmetry finite element model described in Section 2.10.2.1.4.

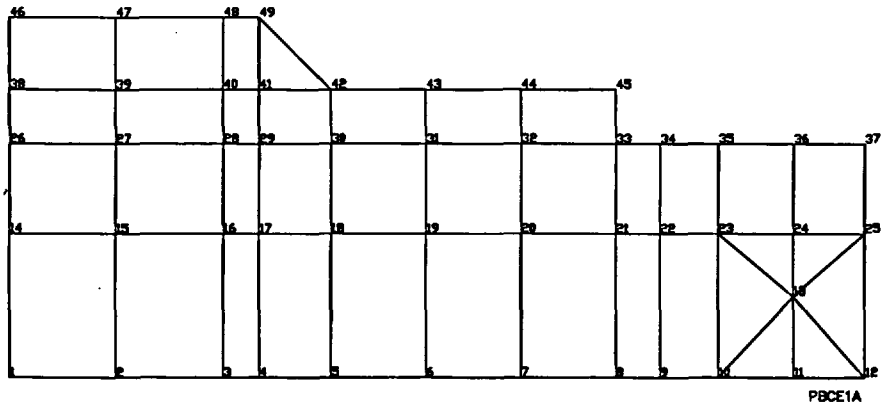

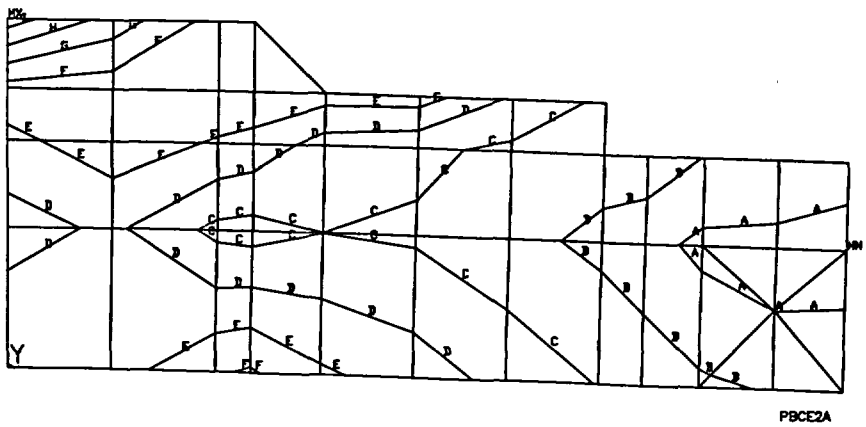

SI (AVG)
DMX =0.118023
SMN =4045
SMX =89182
A =8775
B =18235
C =27694
D =37154
E =46614
F =56073
G =65533
H =74993
I =84452

Figure 2.7.2-2
Bottom End Center Puncture Condition S.I. Contour Plot - Ram Access Cover Plate

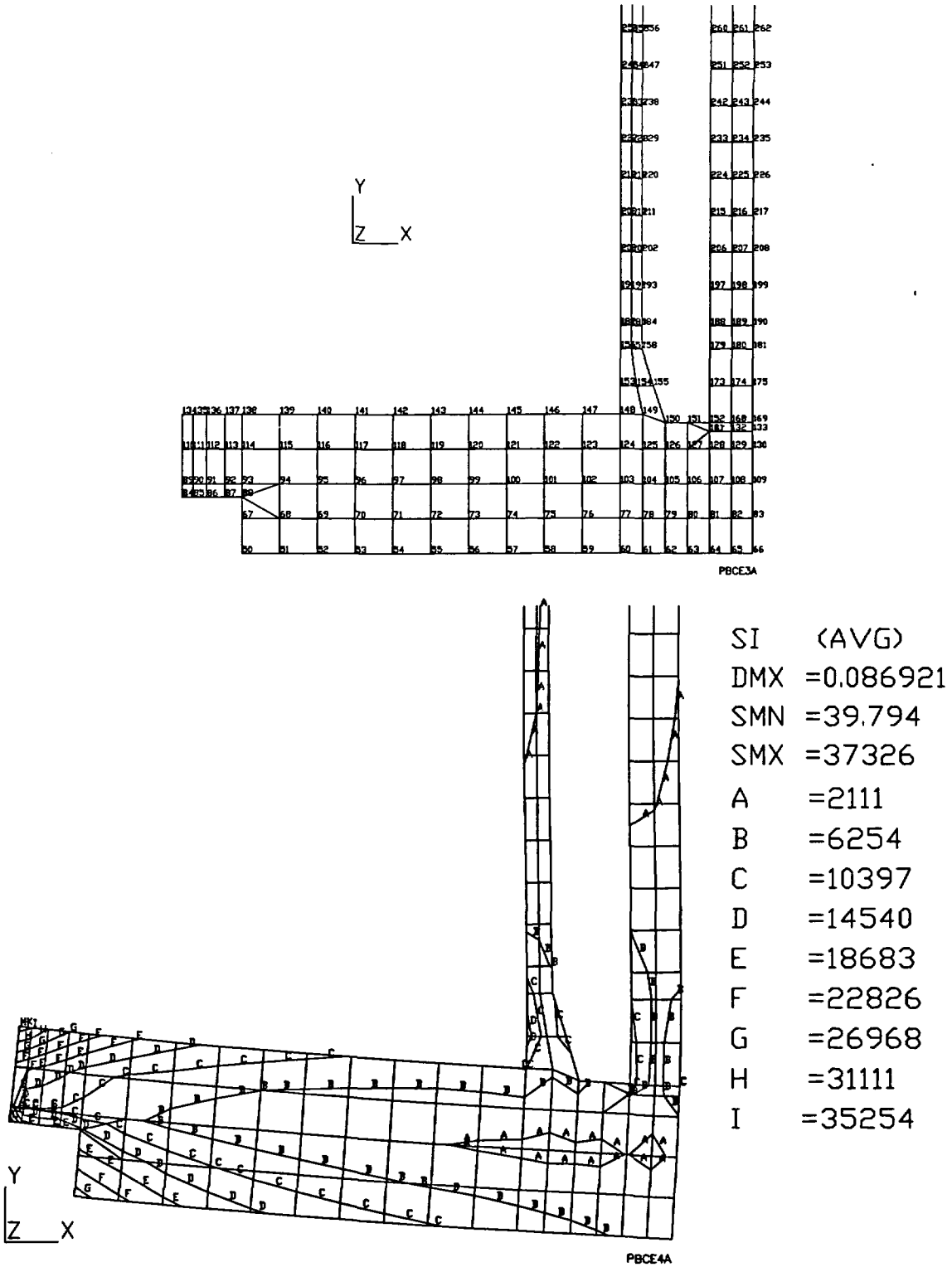

Figure 2.7.2-3
Bottom End Center Puncture Condition S.I. Contour Plot - Bottom Forging

The cask bottom end closure forging, inner shell and lower outer shell are manufactured from mild stainless steel. The ram closure plate is manufactured from high strength stainless steel. Two separate analyses are performed for the cask bottom end off-center puncture condition:

1) A linear elastic static analysis is performed to determine the maximum stresses in the cask components, and

2) A plastic analysis, assuming classical bi-linear kinematic hardening with a 5% tangent modulus, is performed to determine the maximum deformations in the cask seal regions.

Both the analyses are performed for the cold and hot conditions. The material properties of the mild and high strength stainless steel used in the analytical model are taken corresponding to the cold and hot condition temperatures.

The flow stress of the mild steel puncture bar is applied as the puncture load to the outer surface of the bottom end closure forging adjacent to the edge of the ram closure plate. The dynamic flow stress of the puncture bar is 50,000 psi, as discussed in Section 2.7.2.1. The puncture loading is applied to elements 482 through 484 which have a total area of 13.22 square inches, or 26.44 square inches due to the symmetry plane. The factored puncture pressure applied load is 53,460 psi.

The load due to the cask contents (DSC + fuel) is applied to the inner surface of the bottom end closure forging as a 114 psi uniform pressure load, as discussed in Section 2.7.2.1.

Linear elastic static analyses are performed using the ANSYS program [2.6] using cold and hot preloads in the bolts to determine the maximum stresses in the cask bottom end components due to the bottom end off-center puncture condition. The maximum primary membrane and membrane plus bending stress intensities are (See Figure 2.10.2-13 for node locations):

Ram Closure Plate:

P_m	=	9.2 ksi (Section at nodes 36 & 11)
$P_l + P_b$	=	30.1 ksi (Section at nodes 36 & 11)

Bottom End Closure Forging:

P_m	=	27.2 ksi (Section at nodes 138 & 93)
$P_l + P_b$	=	40.3 ksi (Section at nodes 138 & 93)

Inner Shell:

P_m	=	15.9 ksi (Section at nodes 156 & 158)
P_l	=	15.9 ksi (Section at nodes 156 & 158)
$P_l + P_b$	=	22.5 ksi (Section at nodes 156 & 158)

Outer Shell:

P_m	=	5.1 ksi (Section at nodes 173 & 175)
P_l	=	5.1 ksi (Section at nodes 173 & 175)
$P_l + P_b$	=	13.3 ksi (Section at nodes 152 & 169)

Stress intensity contour plots, showing the stress intensity distributions in the ram closure plate and bottom end closure forging resulting from the bottom end off-center puncture loading, are shown in Figure 2.7.2-4 and Figure 2.7.2-5, respectively.

The allowable primary membrane and membrane plus bending stress intensities for the ram closure plate high strength stainless steel conservatively taken at 400°F are 63.5 ksi and 90.7 ksi, respectively, as discussed in Section 2.7.2.1. The allowable primary membrane and membrane plus bending stress intensities for SA-240, Type 304 and SA-182, Type F304N at 400°F are 44.9 ksi and 64.4 ksi, respectively, as discussed in Section 2.7.2.1. Therefore, the stress acceptance criteria is met.

The maximum stress intensities in the bottom end closure forging exceed the material yield strength. Consequently, some permanent deformation will result from the puncture loading. Therefore, an elastic-plastic analysis is performed to ensure that the total elastic plus plastic

deformation of the cask bottom end does not result in damage to the DSC and that the O-ring seals between the ram closure plate and bottom end closure forging maintain the cask pressure boundary.

The elastic-plastic analysis is performed using the half symmetry finite element model described above. Classical bilinear kinematic hardening material properties, assuming 5% tangent moduli as recommended in the ANSYS documentation, are used in the analysis. The elastic limits of the mild and high strength stainless steels at cold condition, of 30 ksi and 55 ksi, respectively and hot condition of 22.5 ksi and 43.4 ksi respectively, are assumed.

The puncture load is applied incrementally over a series of load step. The load is then reduced to zero to determine the permanent deformation in the bottom end components. The maximum elastic plus plastic deflection of the bottom end closure and the maximum gap separation in the region of the bottom end closure seals during the bottom off-center puncture loading are provided in section 2.10.5.

The effect of the puncture on the bottom closure bolts is also evaluated in Section 2.10.5.

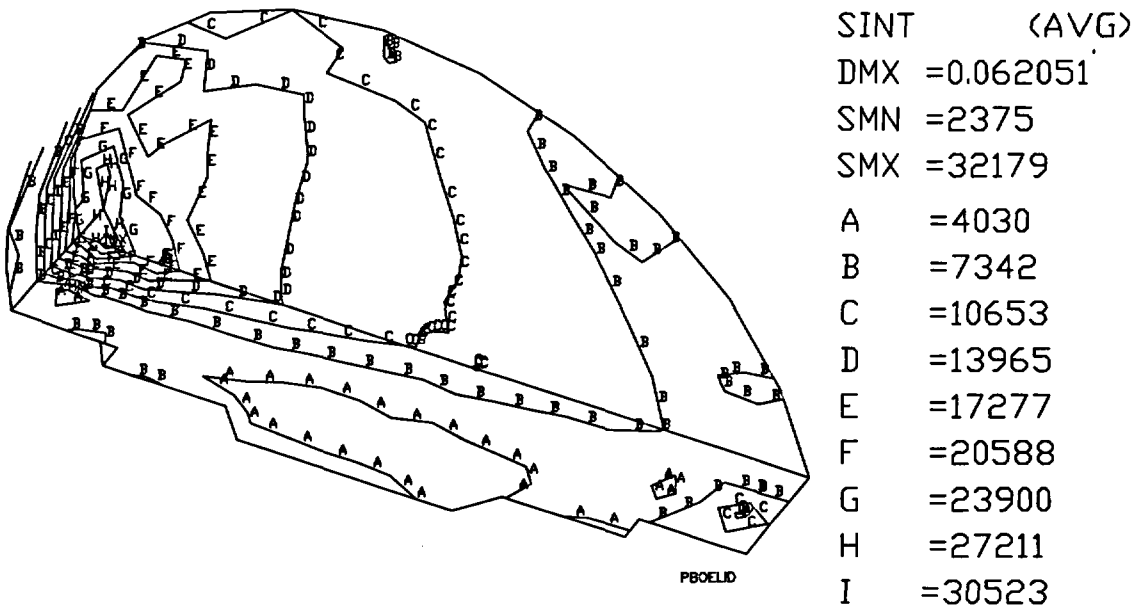

Figure 2.7.2-4
Bottom Off-Center Puncture Ram Closure Plate S.I. Contour Plot

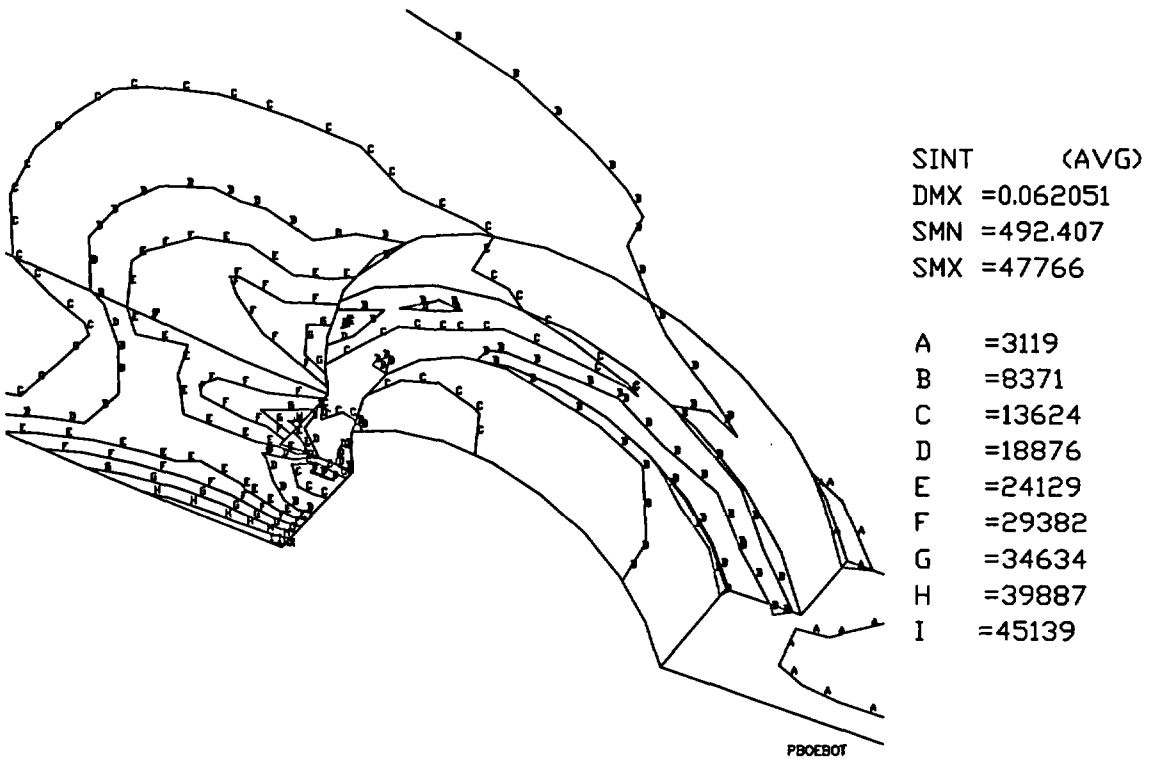

Figure 2.7.2-5
Bottom Off-Center Puncture Bottom End Closure Forging S.I. Contour Plot

2.7.2.3 Top End Center Puncture

As discussed in Chapter 1, the cask top end consists of a 6.50 inch thick top closure plate which is bolted to the top flange. Two O-ring seals between the top closure plate and the top flange are provided to maintain the containment boundary. The position of the puncture load which produces maximum damage to the top end components is in the center of the top closure plate. This will result in the highest bending stresses in the top closure plate and the most deformation in the region of the O-ring seals. Therefore, the top end cask components are analyzed for the puncture loading, assuming a vertical end drop onto the puncture bar, directly impacting the top closure plate along the cask centerline, ignoring the protection afforded by foam impact limiters.

The top end cask puncture analysis is performed using the axisymmetric finite element model described in Section 2.10.2.1.1. An initial strain is applied to the top and bottom end closure bolt beam elements to model the bolt preload. Under the cold condition, the cask (including the bolts and top closure plate) undergoes a change in temperature from 70°F to -20°F. The corresponding preload in the bolt is 111.4 kips/bolt (Table 2.10.5-7). Under hot condition, the temperature in the bolt location(s) changes from 70°F to 250°F. The corresponding preload in the bolt is 164.4 kips/bolt (Table 2.10.5-7). Therefore, preload of 111.4 kips/bolt and 164.4 kips/bolt are applied to the top closure bolts under cold and hot conditions, respectively.

A 50,000 psi puncture load, equal to the dynamic flow stress of the mild steel puncture bar calculated in Section 2.7.2.1, is applied to the center of the top closure plate over an area of a circle with a 3.0 inch radius. The load from the DSC acting on the inner surface of the top closure plate is applied as a uniform pressure load. The pressure load is calculated as the weight of the loaded DSC multiplied by the g-load resulting from the top end center puncture. Based on static equilibrium, the maximum g-load due to a puncture drop is 5.5 g's, as calculated in Section 2.7.2.1. The pressure load due to the loaded DSC, conservatively calculated for an arbitrary minimum DSC weight of 70,400 lbs, is calculated as follows:

$$P_{DSC} = W_{DSC}G/A$$

$$= (70{,}400)(5.5)/(\pi\,(34.5\text{ in})^2)$$

$$= 104\text{ psi}$$

Linear elastic static analyses are performed using the ANSYS program [2.6] to determine the stresses in the cask top end components for cold and hot drop conditions. The maximum stress intensities resulting from the puncture load are (See Figure 2.7.2-6 for node numbers):

Top Closure Plate:

P_m	=	21.2 ksi (Section at nodes 1390 & 1430)
$P_l + P_b$	=	64.2 ksi (Maximum SI at Plate Center, node 1390)

Top Flange:

P_m	=	4.1 ksi (Section at nodes 1362 & 1368)
$P_l + P_b$	=	4.9 ksi (Section at nodes 1362 & 1368)
Bearing	=	22.0 ksi (SY at node 1369)

Inner Shell:

P_m	=	6.5 ksi (Section at nodes 1325 & 1326)
P_l	=	6.5 ksi (Section at nodes 1325 & 1326)
$P_l + P_b$	=	8.6 ksi (Section at nodes 1325 & 1326)

Outer Shell:

P_m	=	3.0 ksi (Section at nodes 1331 & 1333)
P_l	=	3.0 ksi (Section at nodes 1331 & 1333)
$P_l + P_b$	=	9.3 ksi (Section at nodes 1340 & 1344)

A stress intensity contour plot, illustrating the stress distribution in the cask top end components, is shown in Figure 2.7.2-7. The allowable service level D primary membrane and membrane plus bending stress intensities of the top closure plate SA-240, Type 304 conservatively taken at 400°F are 44.9 ksi and 64.4 ksi, respectively, as shown in Section 2.7.2.1. The maximum stress intensities in the top closure plate are within the ASME code allowables.

The allowable bearing stress on sealing surfaces is limited to the material yield strength. The maximum bearing stress at the inner corner of the top flange is lower than the mild stainless steel top flange material yield strength of 22.5 ksi at 300° F. As discussed in Chapter 1, the top flange

design incorporates an Inconel overlay which provides a hardened surface in the region where the maximum bearing stresses occur. This provides additional assurance that no permanent deformation will occur on the sealing surface.

The maximum stress intensities in the top closure plate exceed the material yield strength. Consequently, some permanent deformation will result from the puncture loading.

Per Appendix 2.10.5, O-ring sealing (containment) integrity is maintained because the allowable seal forces are maintained under all service load and load combinations. The small amount of permanent deformation occurring in the top closure plate will not result in any damage to the DSC, nor compromise containment. Therefore, the cask is adequate to withstand a vertical top end off-center puncture load.

2.7.2.4 Top End Off-Center Puncture

The NUHOMS®-MP187 cask is analyzed for a top end puncture, impacting in the region of the top closure seals. This drop orientation is expected to cause the highest stresses in the region of the seals and consequently the greatest potential for damage to the containment boundary in that location.

The top end off-center puncture is performed using the half symmetry finite element model described in Section 2.10.2.1.4.

The cask top flange, inner shell and top closure plate are manufactured from SA-240, Type 304 and SA-479, Type F304N. The upper portion of the cask outer shell is manufactured from SA-240, Type XM-19. The material properties of the stainless steels used in the analytical model are conservatively taken at 300°F.

The flow stress of the mild steel puncture bar is applied as the puncture load to the outer surface of the top closure plate in the region of the seals. The dynamic flow stress of the puncture bar is 50,000 psi, as described in Section 2.7.2.1. The puncture loading is applied to the outer surface of the top closure plate in the region of the seals (elements 1079 and 1080) over a total area of

13.565 square inches, or 27.13 square inches due to the symmetry plane. The area of the 6.0 inch diameter puncture bar is 28.27 square inches. The dynamic flow stress of the puncture bar is factored by the ratio of the puncture bar area to the area of load application to apply the total puncture load. The factored puncture pressure is:

$$P = (50{,}000)(28.27/27.13)$$
$$= 52{,}101 \text{ psi}$$

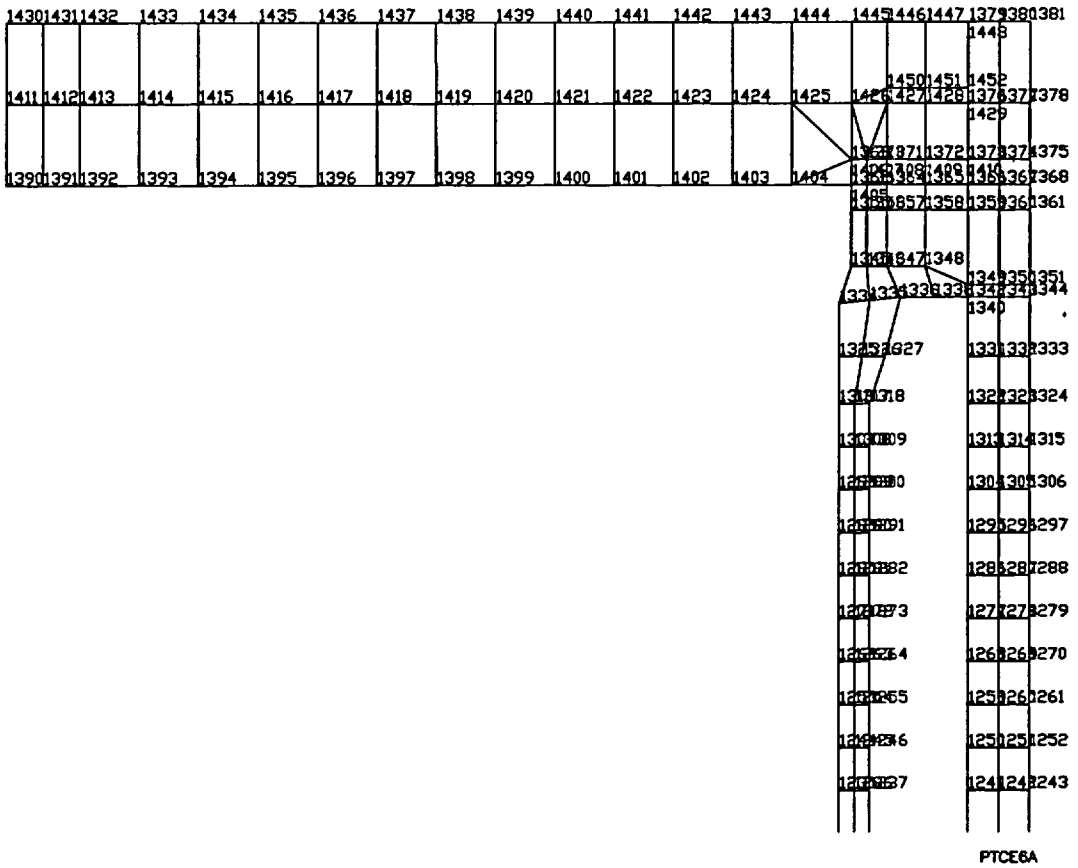

Figure 2.7.2-6
Cask Top End Center Puncture model Node Numbers

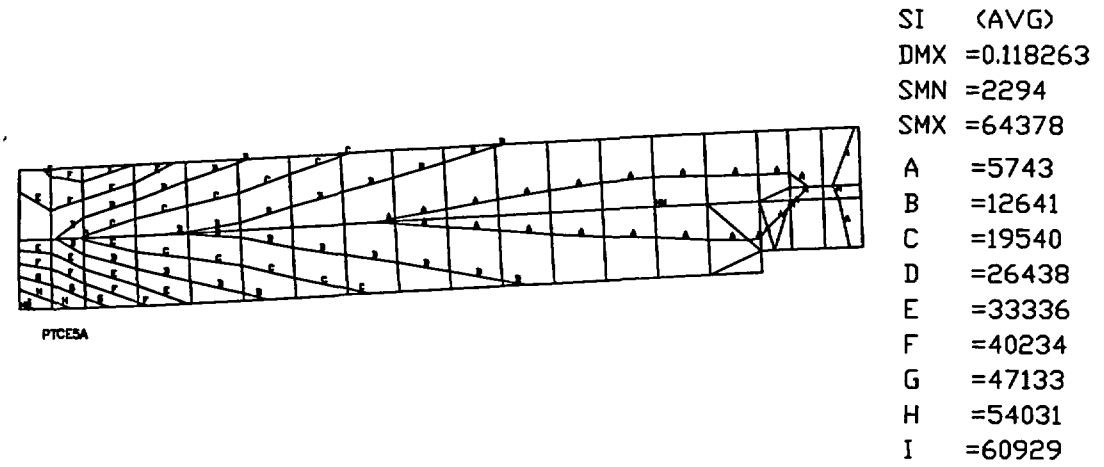

Top Cover Plate

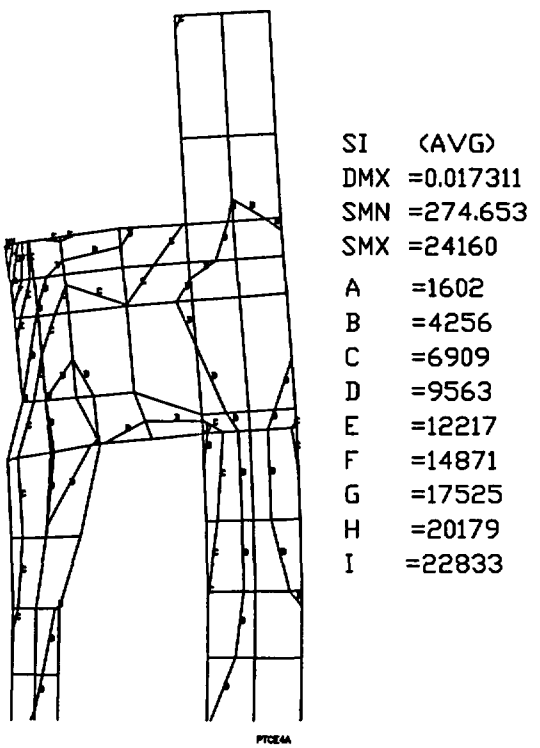

Top Forging and Shells

Figure 2.7.2-7
Cask Top End Center Puncture S.I. Contour Plot

The load due to the cask contents (DSC + fuel) is applied to the inner surface of the top closure plate as a 104 psi uniform pressure load, as discussed in Section 2.7.2.3.

Linear elastic static analyses are performed using the ANSYS program [2.6] to determine the maximum stresses in the cask top end components due to the top end off-center puncture load for cold and hot conditions. The maximum primary membrane and membrane plus bending stress intensities in the top closure plate, top flange, inner shell and outer shell are (See Figure 2.10.2-16 for nodal locations):

Top Closure Plate:

P_m	=	28.8 ksi	(Section at nodes 106 & 145)
$P_l + P_b$	=	45.5 ksi	(Section at nodes 109 & 147)

Top Flange:

P_m	=	8.7 ksi	(Section at nodes 55 & 60)
$P_l + P_b$	=	19.7 ksi	(Section at nodes 68 & 74)
Bearing	=	30.1 ksi	(SZ at node 75)

Inner Shell / Transition:

P_m	=	19.3 ksi	(Section at nodes 41 & 42)
P_l	=	19.3 ksi	(Section at nodes 41 & 42)
$P_l + P_b$	=	26.0 ksi	(Section at nodes 49 & 50))

Outer Shell:

P_m	=	11.9 ksi	(Section at nodes 47 & 48)
P_l	=	11.9 ksi	(Section at nodes 47 & 48)
$P_l + P_b$	=	24.4 ksi	(Section at nodes 52 & 54)

Stress intensity contour plots of the top flange region and top closure plate for the top end off-center puncture loading are shown in Figure 2.7.2-9 and Figure 2.7.2-10, respectively. The results show that the maximum stress intensity in the top flange, occurring in the region of the hardened surface, is very localized. The maximum bearing stress in the Inconel overlay due to the top end off-center puncture is 18.5 ksi, as shown in Figure 2.7.2-8. The maximum stress

intensity in the top flange base material just below the hardened surface is 13.9 ksi. The maximum bearing stress in the Inconel overlay and the top flange base material are much lower than the yield strength of either material. Therefore, stress acceptance criteria are satisfied.

The allowable primary membrane and membrane plus bending stress intensities for the top closure plate and top flange SA-182, Type F304N materials (conservatively taken at 400°F), are 44.9 ksi and 64.4 ksi, respectively, as discussed in Section 2.7.2.1. Therefore, the stress acceptance criteria is met.

The maximum stress intensities in the top closure plate exceed the material yield strength. Consequently, some permanent deformation will result from the top end off-center puncture loading.

Per Appendix 2.10.5, O-ring sealing (containment) integrity is maintained because allowable seal forces of seal are maintained under all service load and load combinations. The small amount of permanent deformation occurring in the top closure plate will not result in any damage to the DSC, nor compromise containment. Therefore, the cask is adequate to withstand a vertical top end off-center puncture load.

2.7.2.5 Cask Shell Puncture

The cask shell is analyzed for a puncture side drop event in which the cask/DSC package center of gravity is oriented directly above the point of impact. This drop orientation is expected to cause maximum damage to the cask shell since all of the cask kinetic energy will be absorbed upon impact with the puncture bar. The required shell thickness, $t_{req'd}$, for puncture integrity is calculated using Nelms equation for lead backed shells [2.16], which is given by:

THIS SECTION CONTAINS
PROPRIETARY INFORMATION

Figure 2.7.2-8

Top Flange Bearing Stress Due to Top End Off-Center Puncture

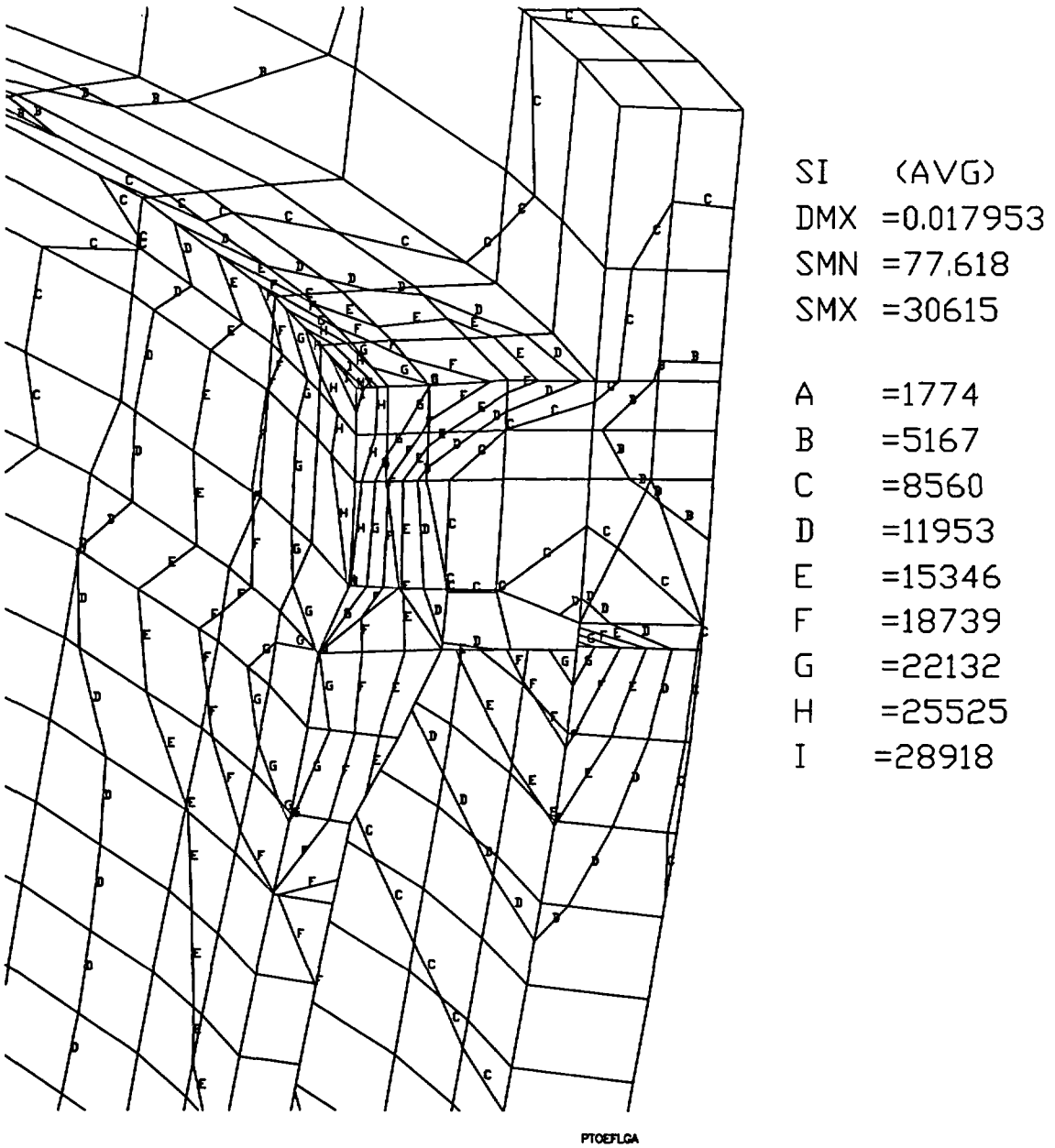

Figure 2.7.2-9
Top Off-Center Puncture Top Flange S.I. Contour Plot

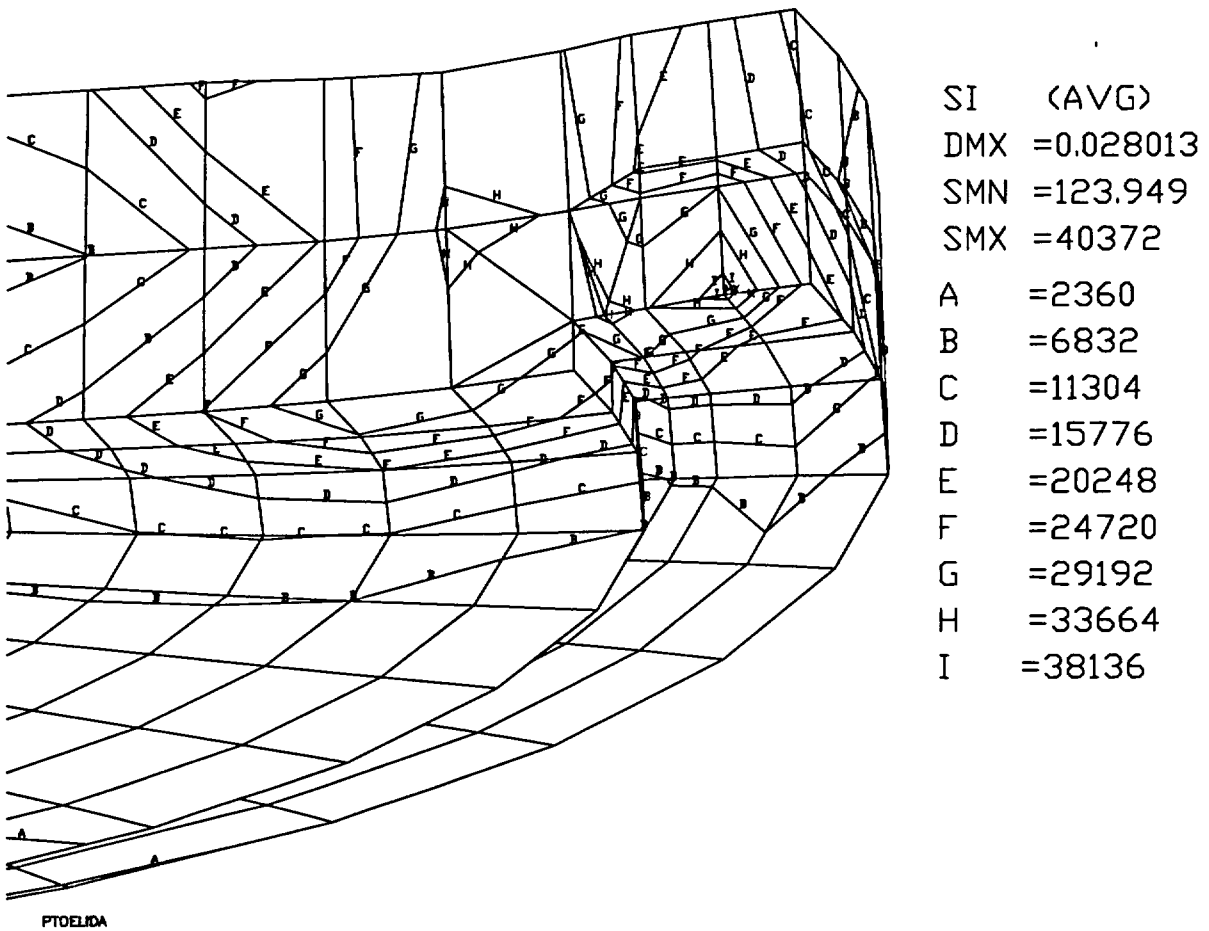

Figure 2.7.2-10
Top Off-Center Puncture Top Closure Plate S.I. Contour Plot

$T = 0.71\ (KE/\{2.4 \times S_u D^{1.6}\})^{1/2}$

where:

KE	=	$mV^2/2$
m	=	mass of heaviest package configuration (cask + FC-DSC + impact limiters = 271,200 pounds)
	=	271,200/386.4
	=	701.9 lb-s^2/in.
V	=	$(2gh)^{1/2}$
	=	$[(2)(386.4)(40)]^{1/2}$
	=	175.8 in/sec.
S_u	=	68,500 psi, Ultimate strength of the structural shell mild stainless steel material at 250°F
D	=	6.0 in., Diameter of puncture pin

Therefore,

$t_{req'd} = 0.71[\{(700.3)(175.8)^2/2\}/\{2.4(68{,}500)(6.0)^{1.6}]^{0.5}$

$= 1.38$ inches

The 2.5" thick cask structural shell is greater than the required shell thickness predicted using the empirical equation presented by Nelms. Therefore, the cask shell thickness is sufficient to provide puncture integrity for the postulated side drop puncture load.

The primary membrane and membrane plus bending stresses in the cask structural shell due to the side puncture load condition are calculated assuming the cask acts as a simple beam. A free body diagram showing the forces acting on the cask body for the side puncture condition is shown in Figure 2.7.2-11. The cask inner and outer shells are treated as parallel beams. Due to symmetry, the cask is analyzed as a cantilever beam with a uniformly distributed load, w, and a point load at the end, P. The total bending moment in the cask body, M, is calculated by the

superposition of these two solutions, as follows:

$$M = PL_c/2 + w(L_c/2)^2/2$$
$$= W_{IL}L_c/2 + (W_D + W_C)L_c/8$$

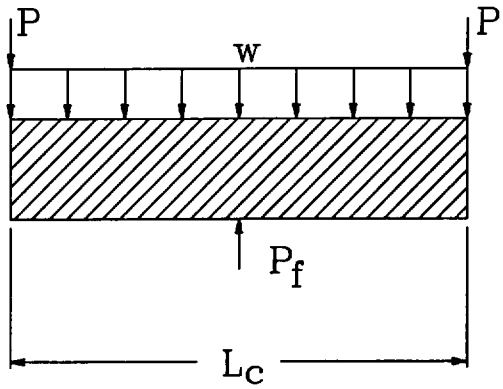

Figure 2.7.2-11
Side Puncture Free Body Diagram

where;

W_{IL} = Weight of impact limiter
= 15,800 lbs.

W_D = Weight of heaviest loaded DSC (FC)
= 81,300 lbs.

W_C = Weight of cask body
= 158, 600 lbs.

L_c = 201.5 inches, Length of cask

Therefore, the maximum bending moment due to a unit acceleration is:

$$M = [15{,}800(201.5)/2 + (81{,}300 + 159{,}600)(201.5)/8]$$
$$= 7.66 \times 10^6 \text{ in-lbs.}$$

The shell stresses for a unit acceleration are calculated as follows:

$$\sigma = Mc/I_T$$

where;

I_T = Moment of inertia of inner and outer cask shells
$= \pi[d_o^4 - d_i^4]/64$
$= \pi[(83.5)^4 - (78.5)^4]/64 + [(70.5)^4 - (68.0)^4]/64$
$= 685{,}300 \text{ in}^4$

c = distance to shell fiber

Therefore, the maximum membrane and membrane plus bending stresses in the cask inner and outer shells for a unit (1g) acceleration are:

$$\sigma_{mi} = (7.66 \times 10^6)(34.63)/685{,}300$$

$= 387$ psi/g

$\sigma_{bi} = (7.66 \times 10^6)(35.25)/685{,}300$

$= 394$ psi/g

$\sigma_{mo} = (7.66 \times 10^6)(40.5)/685{,}300$

$= 453$ psi/g

$\sigma_{bo} = (7.66 \times 10^6)(41.75)/685{,}300$

$= 467$ psi/g

The average puncture impact acceleration can be estimated from the area, A, and the dynamic flow stress, σ_f, of the puncture bar. The dynamic flow stress of the 6.0 inch diameter mild steel bar is assumed to be 50,000 psi. For the minimum package weight of 256,600 lbs., the average impact acceleration for the puncture drop is 5.5 g's, as shown in Section 2.7.2.1. The peak acceleration is conservatively assumed to be twice the average acceleration, or 11.0 g's. Therefore, the cask shell bending stresses due to the puncture load are:

$\sigma_{mi} = (387)(11.0)/1000 = 4.3$ ksi

$\sigma_{bi} = (394)(11.0)/1000 = 4.3$ ksi

$\sigma_{mo} = (453)(11.0)/1000 = 5.0$ ksi

$\sigma_{bo} = (467)(11.0)/1000 = 5.1$ ksi

2.7.2.6 Top End Closure Bolt Puncture Analysis

As described in Appendix 2.10.5, a detailed evaluation of the top end closure bolts, included in Appendix 2.10.5, is performed in accordance with NUREG/CR-6007 [2.20].

2.7.2.7 Bottom End Closure Bolt Puncture Analysis

A detailed evaluation of the bottom end closure bolts, included in Appendix 2.10.5, is performed in accordance with NUREG/CR-6007 [2.20].

2.7.3 Thermal

Section 71.73(c)(3) of the Part 71 regulations [2.1] requires that the package be designed to withstand a postulated 30 minute fire at 1475°F. The thermal analysis of the NUHOMS®-MP187 transportation package is presented in Chapter 3. The results from the accident fire thermal analysis show that the temperature of the DSC remains relatively constant during the 30 minute accident fire event due to the insulating properties of the neutron shielding material and the impact limiters. After the postulated 30 minute fire, the neutron shielding material is assumed to decompose and impact limiter foam becomes charred, thus increasing their insulating capabilities. This results in higher post-fire temperatures in the DSC and cask and lower thermal gradients in the package.

2.7.3.1 Summary of Pressures and Temperatures

The controlling design temperatures for the accident fire condition used in the structural analysis, based on the results from the transportation thermal analysis included in Chapter 3, are listed in Table 2.7-15. As shown in Table 3.6.6.2-1, the maximum cask internal pressure due to the accident fire condition is 52.9 psia (38.2 psig). A bounding design pressure of 50 psig is conservatively used for all cask normal and accident conditions.

2.7.3.2 Differential Thermal Expansion

As shown in Chapter 3, during the postulated accident fire conditions, the overall temperatures of the package components increase, while the thermal gradient from the fuel to the outside of the package decreases. Consequently, the relative thermal growth of the various package components is more uniform for the fire condition. As shown in Section 2.6.1.2, differential thermal expansion between the package components for the normal thermal conditions is not a concern. Therefore, differential thermal expansion between the package components for the fire condition is also not a concern.

The stresses in the cask body due to differential thermal expansion between the shielding materials and the surrounding steel are calculated in Section 2.7.3.3.1.

2.7.3.3 Stress Calculations

General thermal stresses are classified as secondary stresses per NB-3213.13(a) [2.2] and as such need not meet the stress acceptance criteria for accident conditions. Local thermal stresses need be considered only from the fatigue standpoint per NB-3213.13(b) [2.2]. The accident fire thermal stresses are evaluated in accordance with Section C.7 of Regulatory Guide 7.6 [2.4] for low cycle fatigue. Regulatory Guide 7.6 [2.4] states that the extreme total stress range for accident conditions should be less than the adjusted value of S_a at 10 cycles from the appropriate design fatigue curves.

2.7.3.3.1 Cask Accident Thermal Stress Analysis

2.7.3.3.1.1 Cask Body

The thermal analysis of the MP187 Cask for the accident fire condition is presented in Chapter 3. The stresses in the cask due to the accident fire condition are determined using the finite element model described in Section 2.6.1.3.1. The cask neutron shielding material may decompose as a result of the high temperatures resulting from the fire. In addition, the welds between the neutron shield panel and the NSP support rings are highly stressed and suffer yield deformation due to the high weld forces developed during the fire. Therefore, the elements representing the neutron shielding material and the NSP jacket and support rings are deleted from the model.

The stresses are calculated for the times at which the maximum stresses will occur in the cask body. The cask body thermal stresses result from both differential thermal expansion between the cask shells and the lead shielding and from local thermal gradients. The stresses due to differential thermal expansion of the cask shells and the lead shielding will be highest when the maximum temperature is reached in the lead shielding. The highest lead temperatures occur

during the post-fire steady state condition due to the charring of the impact limiter foam and potential decomposition of the neutron shielding material which result in greater insulation of the cask. The stresses due to thermal gradients will be highest when the maximum through-wall thermal gradients occur. The thermal gradient between the cask inner and outer (structural) shells at the mid-length of the cask is shown in Figure 2.7.3-1. The maximum through-wall thermal gradient occurs at 30 minutes (end of fire). Therefore, the accidental fire cask stresses are calculated for two conditions: 1) at the end of the 30 minute fire, and 2) during post-fire steady state conditions.

The temperature of the cask body at the end of the 30 minute fire, shown in Figure 2.7.3-2 and Figure 2.7.3-3, varies between 226° F and 596°F. The maximum temperatures in the cask body (not including the neutron shield) for this condition occur in the cask outer shell near the NSP support rings. A linear elastic static analysis is performed for the cask temperature distribution shown in Figure 2.7.3-2 and Figure 2.7.3-3 using the ANSYS program [2.6]. The stress intensities in the cask body at the end of the postulated 30 minute fire are summarized in Table 2.7.3-1 for the 52 cask stress points, shown in Figure 2.7.1-1. The maximum stress intensity in the cask at the end of the 30 minute fire is (42.6*1.5[1])=63.9 ksi, occurring in the top flange of

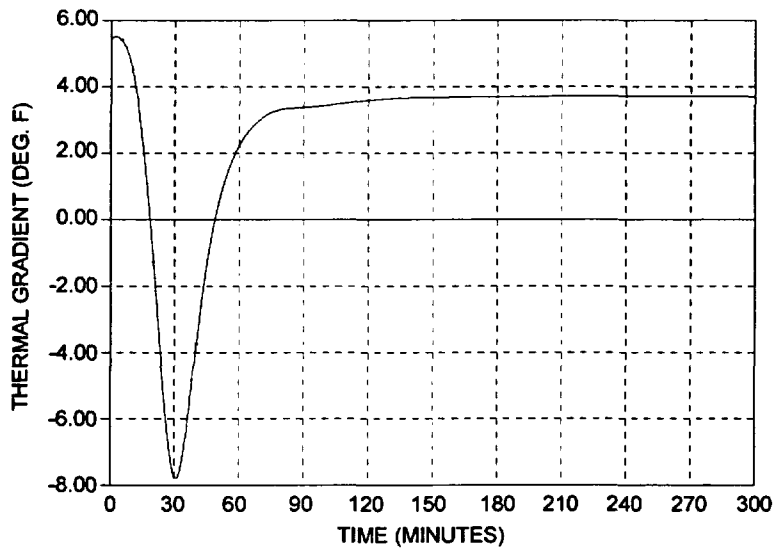

Figure 2.7.3-1
Cask Through-Wall Thermal Gradient

[1] The revised fire analysis presented in Chapter 3 resulted in an increase in the maximum predicted temperatures from 596°F to 639°F. This results in an increase in the calculated stresses of approximately 17%. Therefore, as noted above, the peak stresses reported in Table 2.7.3-1 and Table 2.7.3-2 are arbitrarily increased by 50% to demonstrate the structural acceptance of the cask to the postulated 30 minute fire.

the cask outer shell (node 1026). Similarly, the maximum radial expansion of the cask, occurring in the cask structural shell at the mid-length of the cask (node 965), is (0.148*1.5[1])=0.222 inches. The maximum axial expansion of the cask, occurring in the top flange (node 1145), is (0.424*1.5[1])=0.636 inches.

The temperature of the cask body (not including the neutron shield) for the post-fire steady state (600 minutes) condition ranges between 249°F and 347°F. The maximum cask temperatures for the post-fire steady state conditions occur in the cask shells at the cask mid-length. A linear elastic static

analysis is performed for the cask temperature distribution, Figure 2.7.3-4 and Figure 2.7.3-5 using the ANSYS program [2.6]. The stress intensities in the cask body for the post-fire steady-state condition are summarized in Table 2.7.3-2 for the 52 cask stress points, Figure 2.7.1-1. The maximum stress intensity in the cask due to the post-fire steady state condition is (13.9*1.5[1])=21 ksi, occurring in the bottom corner forging (node 160). The maximum radial expansion in the cask, occurring in the cask structural shell at the mid-length of the cask (node 541), is (0.137*1.5[1])=0.205 inches. The maximum thermal growth of the cask in the longitudinal direction is (0.477*1.5[1])=0.715 inches (node 1255).

As discussed previously, stresses resulting from the accident fire thermal condition are compared to the stress range limits for 10 cycles from the appropriate design fatigue curves given in the ASME Boiler and Pressure Vessel code Appendices [2.2]. The tabulated value of S_a for 10 cycles for austenitic stainless steel having a modulus of elasticity of 28.3 x 10^6 psi at room temperature is 708 ksi. The value of S_a is adjusted by the ratio of the modulus of elasticity used in the analysis (assumed at 600°F) to the modulus of elasticity upon which the design fatigue curve is based (28.3 x10^6 psi). The resulting value is :

$$S_a = [(25.3 \times 10^6)/(28.3 \times 10^6)]\,(708)$$
$$= 633 \text{ ksi}$$

The maximum stress intensity in the cask body due to the fire event is much less than S_a. Therefore, the accident thermal requirements of Regulatory Guide 7.6 [2.4] are satisfied.

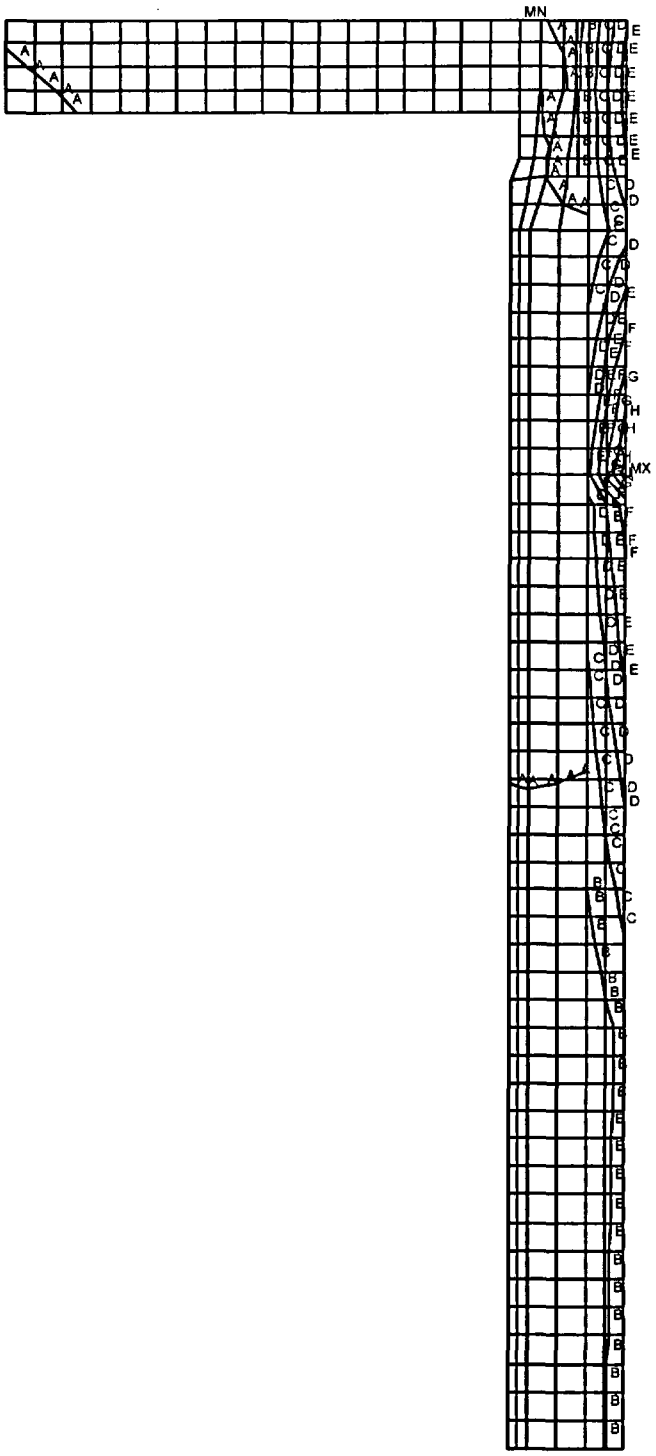

PLOT NO. 1
POST1 STRESS
STEP=1
ITER=5
TEMP
SMN =234.6
SMX =596.1

A =254.683
B =294.85
C =335.017
D =375.183
E =415.35
F =455.517
G =495.683
H =535.85
I =576.017

Figure 2.7.3-2
Cask Fire Top Half Temperature Distribution at 30 Minutes

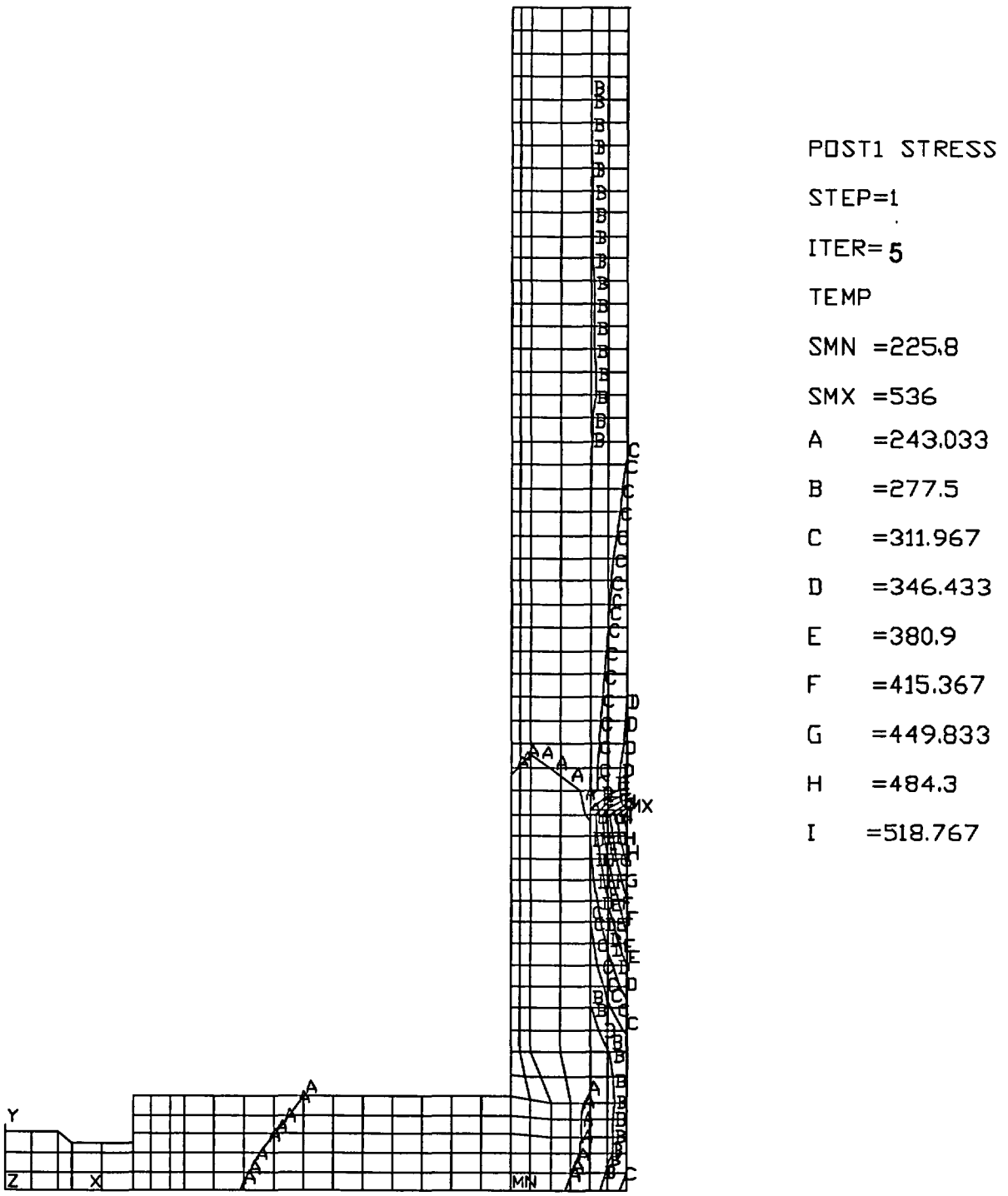

Figure 2.7.3-3
Cask Fire Bottom Half Temperature Distribution at 30 Minutes

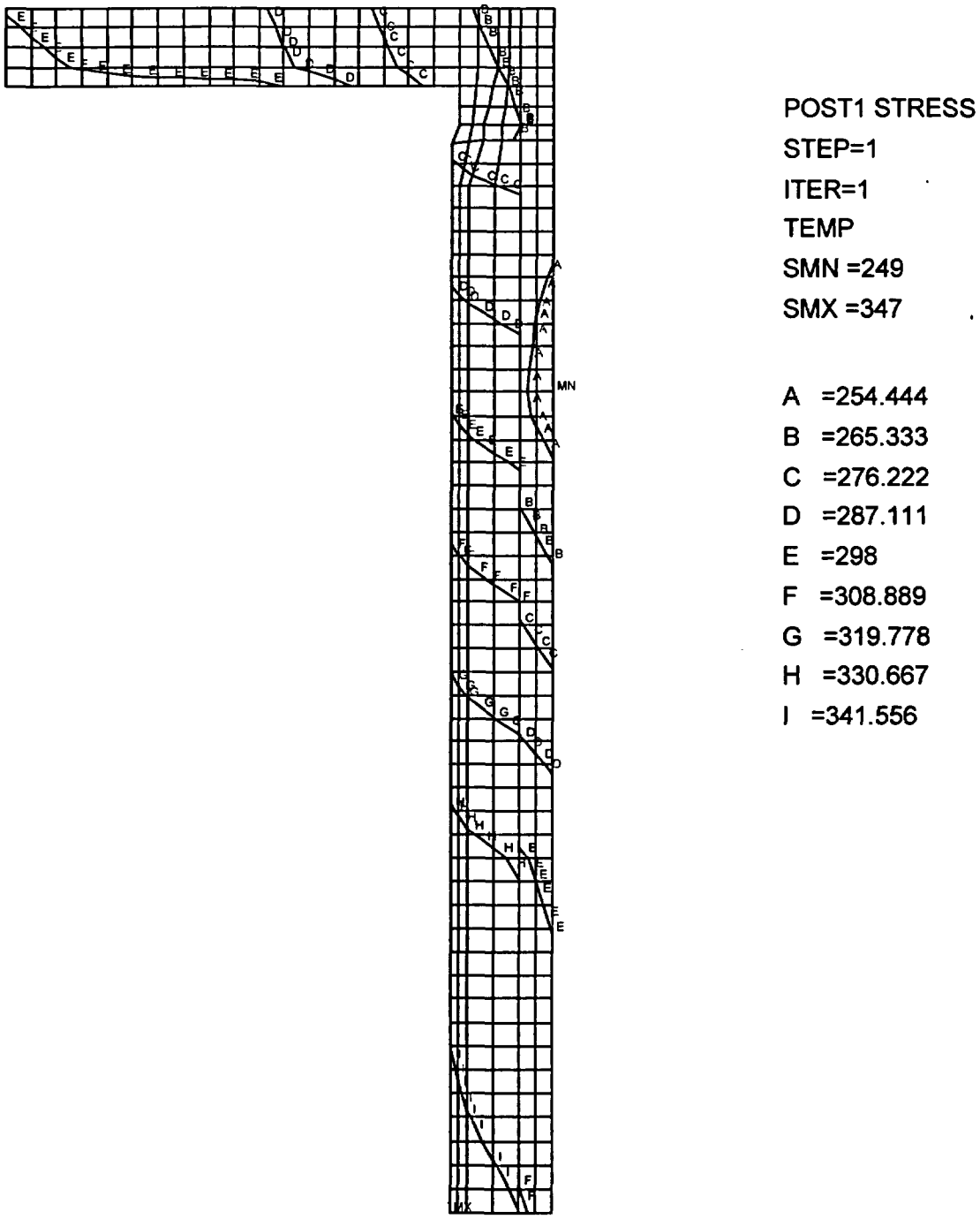

Figure 2.7.3-4
Cask Post-Fire Steady-State Top Half Temperature Distribution

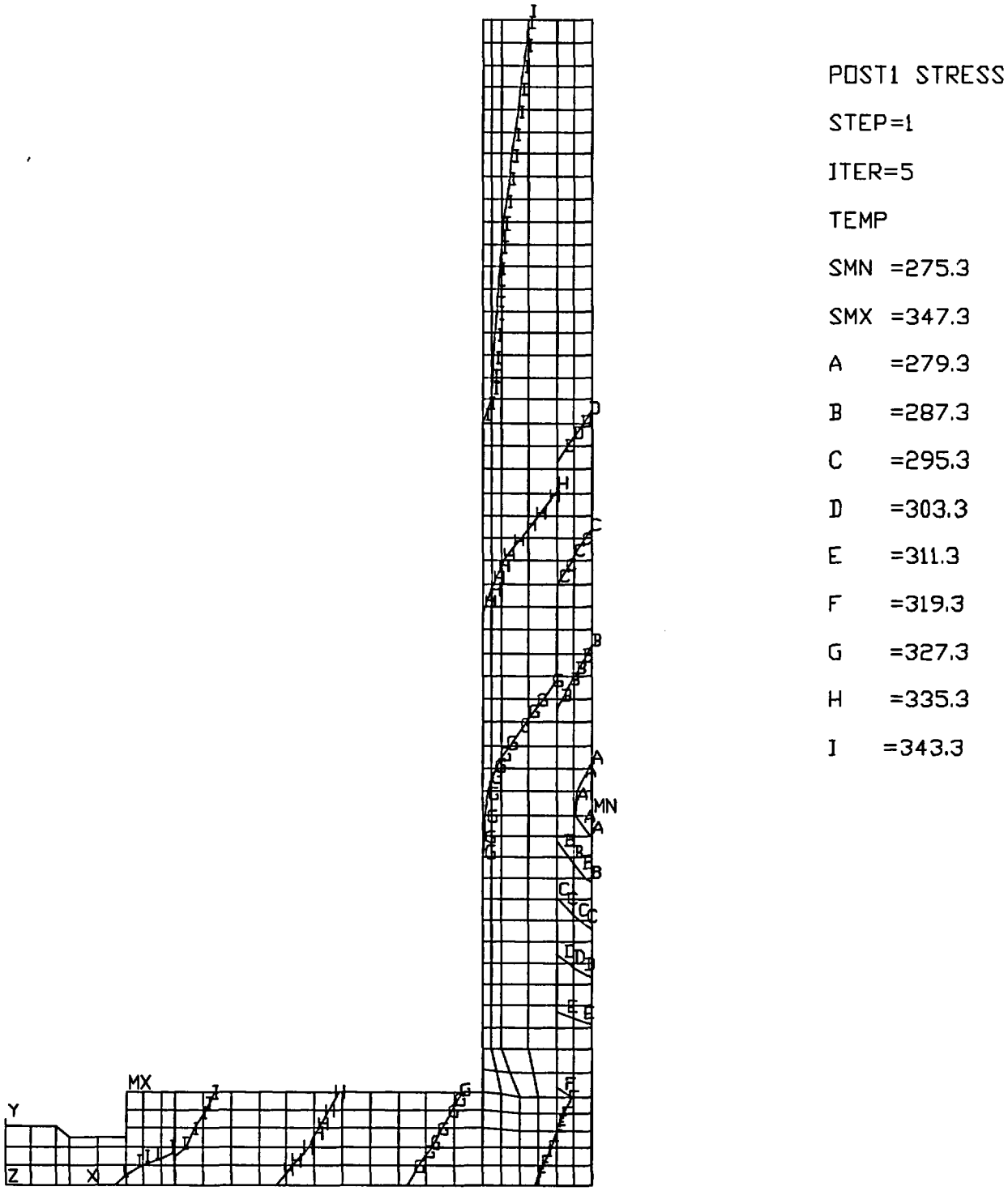

Figure 2.7.3-5
Cask Post-Fire Steady-State Bottom Half Temperature Distribution

Table 2.7.3-1
Cask Fire Thermal Stresses at 30 Minutes

Cask Component	Stress Point	Node Number	Stress Components (ksi) Sx	Sy	Sz	Sxy	Principal Stresses (ksi) S1	S2	S3	SI (ksi)
Top Cover	1	1302	-1.0	-0.1	-0.9	0.0	-0.1	-0.9	-1.0	1.0
	2	1322	-0.5	-0.1	-0.4	0.0	-0.1	-0.4	-0.5	0.4
	3	1311	-0.3	0.0	0.5	0.0	0.5	0.0	-0.3	0.8
	4	1323	0.1	0.0	0.9	0.0	0.9	0.1	0.0	0.9
	5	1173	-0.1	0.2	14.7	-0.3	14.7	0.3	-0.3	15.0
	6	1192	-1.8	0.4	1.9	-0.2	1.9	0.4	-1.9	3.7
Top Flange	7	1020	5.8	13.2	-3.0	3.7	14.9	4.1	-3.0	17.9
	8	1026	0.9	-14.1	-41.5	1.1	1.1	-14.3	-41.5	42.6
	9	999	1.4	-5.5	22.3	-1.1	22.3	2.0	-6.1	28.4
	10	997	0.9	-7.9	-4.0	-1.3	1.1	-4.0	-8.1	9.2
Inner Shell	11	412	-0.3	-0.5	24.7	1.3	24.7	2.8	-3.6	28.3
	12	403	0.9	31.6	32.9	5.5	34.0	31.5	-0.2	34.2
	13	401	0.0	18.6	9.4	-0.1	18.6	9.4	0.0	18.6
	14	400	0.3	15.5	8.4	-0.1	15.6	8.4	0.3	15.2
	15	371	0.0	16.9	9.7	0.0	16.9	9.7	0.0	16.9
	16	354	0.3	17.2	9.5	0.0	17.3	9.5	0.3	16.9
	17	264	0.0	16.5	9.6	0.0	16.5	9.6	0.0	16.5
	18	247	0.4	17.6	10.1	0.0	17.6	10.1	0.3	17.3
	19	223	0.0	16.8	9.5	0.0	16.8	9.5	0.0	16.8
	20	204	0.3	17.3	9.7	0.0	17.3	9.7	0.3	17.0
	21	171	0.0	17.3	9.3	0.0	17.3	9.3	0.0	17.3
	22	160	0.3	16.8	9.0	0.0	16.8	9.0	0.3	16.5
	23	156	0.1	5.0	12.8	-0.7	12.8	5.1	0.0	12.8
	24	154	0.4	25.9	18.4	-3.6	26.5	18.4	-0.2	26.6
	25	85	3.6	2.0	10.0	0.1	10.0	3.8	1.7	8.3
	26	136	5.6	8.5	10.3	-4.0	12.4	9.5	2.5	9.9
Outer Shell	27	993	0.0	-0.7	-2.0	-0.1	0.0	-0.7	-2.0	2.0
	28	991	0.6	-22.8	-25.6	1.1	0.7	-21.5	-26.9	27.6
	29	962	0.0	-3.2	-3.2	-0.1	0.0	-3.2	-3.2	3.2
	30	961	-4.6	-15.0	-40.2	0.7	-4.6	-15.1	-40.2	35.6
	31	932	0.0	-2.6	-2.9	0.0	0.0	-2.6	-2.9	2.9
	32	915	0.0	-18.5	-14.1	-0.2	0.0	-14.1	-18.5	18.5
	33	822	0.0	-2.5	-2.9	0.0	0.0	-2.5	-2.9	2.9
	34	805	0.0	-8.7	-5.7	0.0	0.0	-5.7	-8.7	8.7
	35	781	0.0	-2.6	-2.8	0.0	0.0	-2.6	-2.8	2.9
	36	762	0.0	-14.1	-9.9	0.2	0.0	-9.9	-14.1	14.1
	37	729	0.0	-2.8	-2.9	0.0	0.0	-2.8	-2.9	2.9
	38	718	-6.9	-15.0	-44.4	-1.1	-6.7	-15.2	-44.4	37.7
	39	142	2.8	8.6	5.6	0.5	8.9	5.6	2.5	6.5
	40	148	0.6	-18.6	-15.3	-0.6	0.6	-15.3	-18.7	19.3
Bottom Forging	41	85	3.6	2.0	10.0	0.1	10.0	3.8	1.7	8.3
	42	35	-8.2	0.3	-5.8	0.2	0.3	-5.8	-8.2	8.5
	43	92	5.2	0.0	9.1	0.2	9.1	5.2	0.0	9.1
	44	41	-5.9	0.0	-7.7	0.2	0.0	-5.9	-7.7	7.7
	45	82	2.9	-0.1	9.6	0.3	9.6	3.0	-0.1	9.7
	46	48	0.0	0.0	0.6	0.0	0.6	0.0	0.0	0.6
Ram Access Cover Plate	47	32	0.0	0.0	0.3	0.0	0.3	0.0	0.0	0.4
	48	13	-0.1	0.0	0.1	0.0	0.1	0.0	-0.2	0.3
	49	31	-0.1	0.0	-0.1	0.0	0.0	-0.1	-0.1	0.1
	50	10	-0.3	0.0	-0.2	0.0	0.0	-0.2	-0.3	0.3
	51	29	0.0	0.0	0.0	0.0	0.0	0.0	0.0	0.0
	52	1	-0.3	0.0	-0.3	0.0	0.0	-0.3	-0.3	0.3

Table 2.7.3-2
Cask Post-Fire Steady-State Stresses

Cask Component	Stress Point	Node Number	Stress Components (ksi)				Principal Stresses (ksi)			SI (ksi)
			Sx	Sy	Sz	Sxy	S1	S2	S3	
Top Cover	1	1302	-2.0	0.1	-1.9	0.0	0.1	-1.9	-2.0	2.1
	2	1322	-3.0	-0.1	-2.8	0.0	-0.1	-2.8	-3.0	2.9
	3	1311	-3.4	0.0	-3.0	0.1	0.0	-3.0	-3.4	3.4
	4	1323	-2.6	0.0	-1.7	0.0	0.0	-1.7	-2.6	2.6
	5	1173	0.2	0.3	4.1	0.3	4.1	0.6	-0.1	4.2
	6	1192	-0.6	0.0	3.0	0.1	3.0	0.0	-0.6	3.6
Top Flange	7	1020	-1.7	-3.6	3.6	-1.2	3.6	-1.0	-4.3	7.9
	8	1026	-0.4	4.0	6.7	-0.3	6.7	4.1	-0.4	7.1
	9	999	-0.7	9.9	-0.1	1.5	10.2	-0.1	-1.1	11.3
	10	997	3.2	-4.8	-3.6	-1.0	3.3	-3.6	-4.9	8.3
Inner Shell	11	412	-0.3	10.6	0.3	-0.2	10.7	0.3	-0.4	11.0
	12	403	-0.9	-8.4	-5.0	-1.7	-0.5	-5.0	-8.8	8.3
	13	401	0.0	-0.4	12.4	0.1	12.4	0.2	-0.6	13.0
	14	400	0.5	2.6	13.3	0.1	13.3	2.6	0.4	12.9
	15	371	0.0	0.8	12.8	0.0	12.8	1.0	-0.1	12.9
	16	354	0.5	1.3	13.0	0.0	13.0	1.5	0.3	12.7
	17	264	0.0	0.5	13.3	0.0	13.3	0.7	-0.2	13.5
	18	247	0.5	1.7	13.7	0.0	13.7	1.8	0.4	13.4
	19	223	0.0	0.7	13.3	0.0	13.3	0.9	-0.2	13.5
	20	204	0.5	1.4	13.6	0.0	13.6	1.5	0.3	13.2
	21	171	0.0	0.5	13.7	0.0	13.7	0.7	-0.2	13.9
	22	160	0.5	1.6	14.0	0.0	14.0	1.7	0.4	13.7
	23	156	-0.4	7.4	3.2	0.0	7.5	3.2	-0.5	8.0
	24	154	-1.2	-5.7	-0.6	1.2	-0.4	-1.2	-6.0	5.6
	25	85	-0.4	3.8	1.6	0.2	3.9	1.6	-0.5	4.4
	26	136	-5.8	-4.5	-1.7	0.2	-1.7	-3.0	-7.2	5.5
Outer Shell	27	993	0.8	-9.7	-5.8	-0.8	0.9	-5.8	-9.8	10.7
	28	991	-0.2	6.3	3.7	0.7	6.4	3.7	-0.3	6.7
	29	962	0.0	-4.8	-3.4	0.0	0.0	-3.4	-4.8	4.8
	30	961	0.0	6.8	0.8	0.0	6.8	0.8	0.0	6.8
	31	932	0.0	-5.2	-3.7	0.0	0.0	-3.7	-5.2	5.2
	32	915	0.0	8.0	0.7	0.0	8.0	0.7	0.0	8.0
	33	822	0.0	-5.0	-4.0	0.0	0.0	-4.0	-5.1	5.0
	34	805	0.0	8.2	0.5	0.0	8.2	0.5	0.0	8.2
	35	781	0.0	-5.1	-3.9	0.0	0.0	-3.9	-5.1	5.1
	36	762	0.0	7.9	0.6	0.0	7.9	0.6	0.0	7.9
	37	729	0.0	-5.1	-3.8	0.0	0.0	-3.8	-5.1	5.1
	38	718	0.2	5.9	1.7	0.0	5.9	1.7	0.2	5.7
	39	142	-4.7	1.5	0.6	1.3	2.0	0.6	-5.2	7.2
	40	148	-0.5	9.6	4.3	-0.1	9.7	4.3	-0.5	10.2
Bottom Forging	41	85	-0.4	3.8	1.6	0.2	3.9	1.6	-0.5	4.4
	42	35	3.0	0.0	5.2	-0.3	5.2	3.0	0.0	5.3
	43	92	-2.9	0.0	-2.1	-0.1	0.0	-2.1	-2.9	2.9
	44	41	1.4	0.0	3.4	-0.1	3.4	1.4	0.0	3.4
	45	82	-2.0	0.0	-6.0	-0.3	0.1	-2.0	-6.0	6.0
	46	48	0.0	0.0	0.3	0.0	0.3	0.0	0.0	0.3
Ram Access Cover Plate	47	32	0.0	0.0	0.3	0.0	0.3	0.0	0.0	0.4
	48	13	-0.2	0.0	0.1	0.0	0.1	0.0	-0.2	0.3
	49	31	-0.1	0.0	0.0	0.0	0.0	0.0	-0.1	0.1
	50	10	-0.2	0.0	-0.1	0.0	0.0	-0.1	-0.2	0.2
	51	29	0.0	0.0	0.0	0.0	0.0	0.0	0.0	0.0
	52	1	-0.3	0.0	-0.3	0.0	0.0	-0.3	-0.3	0.3

2.7.3.3.1.2 Top End Closure Bolts

A detailed evaluation of the top end closure bolts, presented in Appendix 2.10.5, is performed in accordance with NUREG/CR-6007 [2.20].

2.7.3.3.1.3 Ram closure Bolts

A detailed evaluation of the bottom end closure bolts, presented in Appendix 2.10.5, is performed in accordance with NUREG/CR-6007 [2.20].

2.7.3.4 Comparison with Allowable Stresses

As discussed in Section 2.7.6, the stresses in the Package structural components meet the applicable acceptance criteria for the accident load combinations including the postulated accident fire event.

2.7.4 Water Immersion

2.7.4.1 Immersion-Fissile Material

Water in leakage is assumed for the criticality analysis of the NUHOMS®-MP187 transportation package. Therefore, the immersion test for fissile materials of 10CFR71.73(c)(4) [2.1] is not applicable.

2.7.4.2 Immersion-All Packages

Section 71.73(c)(5) of the Regulations [2.1] requires that the package be subjected to an immersion load equivalent to a 50 foot head of water (21 psig) for a period of eight hours. The stresses in the cask components are conservatively calculated for an external pressure load of 284.3 psig, equivalent to a 200 meter head of water.

The MP187 cask is analyzed for a unit external pressure using the same finite element model used for the internal pressure analysis in Section 2.6.1.3.2. A 1 psig pressure load is applied to

the external surfaces of the cask containment boundary (i.e. ram closure plate, bottom end closure, inner shell, top flange and top closure plate) and a linear elastic static analysis is performed using the ANSYS program [2.6].

The stresses in the cask components due to the immersion load are calculated by factoring the stresses due to a 1 psig external pressure load by 284.3. The primary membrane and membrane plus bending stress intensities in the cask at the 52 stress points, shown in Figure 2.7.1-1, due to the 200 meter immersion load, are shown in Table 2.7.4-1 and Table 2.7.4-2, respectively. The maximum primary membrane stress intensity in the cask due to the 200 meter immersion load is 3.1 ksi in the inner shell. The maximum membrane plus bending stress intensity in the cask due to the 200 meter immersion load is 11.7 ksi at the center of the top closure plate.

Normal allowable membrane and membrane plus bending stress for SA-240, Type 304, stainless steel at 100°F are 20.0 ksi and 30.0 ksi, respectively. Therefore, the margins of safety for membrane and membrane plus bending stress, respectively, are:

Membrane:

$$MS = 20/3.1 - 1 = 5.45$$

Membrane Plus Bending

$$MS = 30/11.7 - 1 = 1.56$$

Table 2.7.4-1
Cask Primary Membrane S.I. Summary - 200m Immersion

Cask Component	Stress Point	Node Number	Stress Components (ksi)				Principal Stresses (ksi)			SI (ksi)
			SX	SY	SZ	SXY	S1	S2	S3	
Top Cover	1	1390	0.1	-0.1	0.1	0.0	0.1	0.1	-0.1	0.2
	2	1430	0.1	-0.1	0.1	0.0	0.1	0.1	-0.1	0.2
	3	1398	0.1	-0.1	0.1	0.4	0.4	0.1	-0.4	0.8
	4	1438	0.1	-0.1	0.1	0.4	0.4	0.1	-0.4	0.8
	5	1369	-0.1	-0.3	-0.9	0.8	0.6	-0.9	-1.0	1.6
	6	1445	-0.1	-0.3	-0.9	0.8	0.6	-0.9	-1.0	1.6
Top Flange	7	1373	-0.5	-0.1	-2.7	0.0	-0.1	-0.5	-2.7	2.6
	8	1375	-0.5	-0.1	-2.7	0.0	-0.1	-0.5	-2.7	2.6
	9	1334	0.4	-1.4	-2.4	-0.2	0.4	-1.4	-2.4	2.7
	10	1336	0.4	-1.4	-2.4	-0.2	0.4	-1.4	-2.4	2.7
Inner Shell	11	1316	-0.1	-1.7	-2.6	0.0	-0.1	-1.7	-2.6	2.6
	12	1318	-0.1	-1.7	-2.6	0.0	-0.1	-1.7	-2.6	2.6
	13	1235	-0.1	-1.9	-3.0	0.0	-0.1	-1.9	-3.0	3.0
	14	1237	-0.1	-1.9	-3.0	0.0	-0.1	-1.9	-3.0	3.0
	15	1092	-0.1	-1.9	-3.2	0.0	-0.1	-1.9	-3.2	3.1
	16	1094	-0.1	-1.9	-3.2	0.0	-0.1	-1.9	-3.2	3.1
	17	742	-0.1	-1.9	-3.2	0.0	-0.1	-1.9	-3.2	3.1
	18	744	-0.1	-1.9	-3.2	0.0	-0.1	-1.9	-3.2	3.1
	19	392	-0.1	-1.9	-3.2	0.0	-0.1	-1.9	-3.2	3.1
	20	394	-0.1	-1.9	-3.2	0.0	-0.1	-1.9	-3.2	3.1
	21	263	-0.1	-1.9	-3.1	0.0	-0.1	-1.9	-3.1	3.1
	22	265	-0.1	-1.9	-3.1	0.0	-0.1	-1.9	-3.1	3.1
	23	156	-0.2	-1.7	1.0	-0.7	1.0	0.1	-2.0	3.0
	24	158	-0.2	-1.7	1.0	-0.7	1.0	0.1	-2.0	3.0
	25	148	-1.4	-0.7	0.7	-0.5	0.7	-0.5	-1.7	2.5
	26	150	-1.4	-0.7	0.7	-0.5	0.7	-0.5	-1.7	2.5
Outer Shell	27	1342	-0.1	-0.9	-1.9	0.1	-0.1	-0.9	-1.9	1.9
	28	1344	-0.1	-0.9	-1.9	0.1	-0.1	-0.9	-1.9	1.9
	29	1241	0.1	-0.9	-2.0	0.0	0.1	-0.9	-2.0	2.1
	30	1243	0.1	-0.9	-2.0	0.0	0.1	-0.9	-2.0	2.1
	31	1098	0.1	-0.8	-2.1	0.0	0.1	-0.8	-2.1	2.2
	32	1100	0.1	-0.8	-2.1	0.0	0.1	-0.8	-2.1	2.2
	33	747	0.1	-0.8	-2.1	0.0	0.1	-0.8	-2.1	2.2
	34	750	0.1	-0.8	-2.1	0.0	0.1	-0.8	-2.1	2.2
	35	399	0.0	-0.9	-2.1	0.0	0.0	-0.9	-2.1	2.1
	36	400	0.0	-0.9	-2.1	0.0	0.0	-0.9	-2.1	2.1
	37	269	0.0	-0.8	-2.1	0.1	0.0	-0.8	-2.1	2.1
	38	271	0.0	-0.8	-2.1	0.1	0.0	-0.8	-2.1	2.1
	39	131	-0.8	0.2	0.6	0.1	0.6	0.3	-0.8	1.4
	40	133	-0.8	0.2	0.6	0.1	0.6	0.3	-0.8	1.4
Bottom Forging	41	148	-0.5	-1.6	-1.3	-0.3	-0.5	-1.3	-1.6	1.2
	42	60	-0.5	-1.6	-1.3	-0.3	-0.5	-1.3	-1.6	1.2
	43	143	-0.5	-0.1	-1.1	-0.4	0.1	-0.8	-1.1	1.2
	44	55	-0.5	-0.1	-1.1	-0.4	0.1	-0.8	-1.1	1.2
	45	138	0.5	-0.1	1.4	-0.3	1.4	0.6	-0.3	1.7
	46	88	0.5	-0.1	1.4	-0.3	1.4	0.6	-0.3	1.7
Ram Access Cover Plate	47	33	0.0	0.1	-0.2	-0.3	0.3	-0.2	-0.3	0.7
	48	8	0.0	0.1	-0.2	-0.3	0.3	-0.2	-0.3	0.7
	49	42	0.0	0.0	0.0	-0.2	0.2	0.0	-0.2	0.3
	50	5	0.0	0.0	0.0	-0.2	0.2	0.0	-0.2	0.3
	51	46	0.1	-0.2	0.1	0.0	0.1	0.1	-0.2	0.3
	52	1	0.1	-0.2	0.1	0.0	0.1	0.1	-0.2	0.3

Table 2.7.4-2
Cask Membrane Plus Bending S.I. Summary - 200m Immersion

Cask Component	Stress Point	Node Number	Stress Components (ksi) Sx	Sy	Sz	Sxy	Principal Stresses (ksi) S1	S2	S3	SI (ksi)
Top Cover	1	1390	11.6	-0.1	11.6	0.0	11.6	11.6	-0.1	11.7
	2	1430	-11.4	-0.2	-11.5	0.0	-0.2	-11.4	-11.5	11.3
	3	1398	8.9	-0.1	10.0	0.4	10.0	8.9	-0.1	10.1
	4	1438	-8.7	-0.2	-9.9	0.4	-0.2	-8.8	-9.9	9.7
	5	1369	1.7	0.2	4.1	1.0	4.1	2.1	-0.3	4.4
	6	1445	-1.9	-0.7	-5.9	0.6	-0.5	-2.2	-5.9	5.4
Top Flange	7	1373	-0.7	-0.5	-3.0	0.0	-0.5	-0.7	-3.0	2.5
	8	1375	-0.2	0.3	-2.4	-0.1	0.3	-0.2	-2.4	2.7
	9	1334	0.0	-2.5	-2.9	-0.3	0.1	-2.5	-2.9	3.0
	10	1336	0.7	-0.3	-1.8	0.0	0.7	-0.3	-1.8	2.5
Inner Shell	11	1316	0.0	-2.0	-2.8	0.0	0.0	-2.0	-2.8	2.7
	12	1318	-0.1	-1.4	-2.5	0.0	-0.1	-1.4	-2.5	2.4
	13	1235	0.0	-1.9	-3.1	0.0	0.0	-1.9	-3.1	3.1
	14	1237	-0.1	-1.9	-3.0	0.0	-0.1	-1.9	-3.0	2.9
	15	1092	0.0	-1.9	-3.2	0.0	0.0	-1.9	-3.2	3.2
	16	1094	-0.1	-1.9	-3.1	0.0	-0.1	-1.9	-3.1	3.0
	17	742	0.0	-1.9	-3.2	0.0	0.0	-1.9	-3.2	3.2
	18	744	-0.1	-1.9	-3.1	0.0	-0.1	-1.9	-3.1	3.0
	19	392	0.0	-1.9	-3.2	0.0	0.0	-1.9	-3.2	3.2
	20	394	-0.1	-1.9	-3.1	0.0	-0.1	-1.9	-3.1	3.0
	21	263	0.0	-1.8	-3.2	0.0	0.0	-1.8	-3.2	3.2
	22	265	-0.1	-2.0	-3.1	0.0	-0.1	-2.0	-3.1	3.0
	23	156	-0.2	-5.6	-0.1	-0.2	-0.1	-0.2	-5.6	5.5
	24	158	-0.1	2.1	2.1	-1.2	2.6	2.1	-0.6	3.3
	25	148	-2.8	-4.6	-0.6	-0.3	-0.6	-2.7	-4.7	4.1
	26	150	-0.1	3.1	2.0	-0.7	3.3	2.0	-0.2	3.5
Outer Shell	27	1342	0.0	-2.7	-2.4	0.2	0.0	-2.4	-2.7	2.7
	28	1344	-0.1	0.9	-1.4	0.0	0.9	-0.1	-1.4	2.3
	29	1241	0.1	-0.7	-2.0	0.0	0.1	-0.7	-2.0	2.1
	30	1243	0.0	-1.1	-2.0	0.0	0.0	-1.1	-2.0	2.1
	31	1098	0.1	-0.8	-2.1	0.0	0.1	-0.8	-2.1	2.2
	32	1100	0.0	-0.9	-2.1	0.0	0.0	-0.9	-2.1	2.1
	33	747	0.1	-0.8	-2.1	0.0	0.1	-0.8	-2.1	2.2
	34	750	0.0	-0.9	-2.1	0.0	0.0	-0.9	-2.1	2.1
	35	399	0.1	-0.8	-2.1	0.0	0.1	-0.8	-2.1	2.2
	36	400	0.0	-0.9	-2.0	0.0	0.0	-0.9	-2.0	2.1
	37	269	0.1	-0.7	-2.0	0.1	0.1	-0.7	-2.0	2.2
	38	271	-0.1	-1.0	-2.1	0.1	-0.1	-1.0	-2.1	2.0
	39	131	-1.4	-3.0	-0.5	-0.4	-0.5	-1.3	-3.0	2.6
	40	133	-0.2	3.4	1.6	0.6	3.5	1.6	-0.3	3.8
Bottom Forging	41	148	-1.7	-3.8	0.0	-0.5	0.0	-1.6	-3.9	3.9
	42	60	0.7	0.6	-2.6	-0.1	0.7	0.6	-2.6	3.3
	43	143	0.6	0.0	3.1	-0.4	3.1	0.8	-0.2	3.4
	44	55	-1.6	-0.3	-5.3	-0.4	-0.2	-1.7	-5.3	5.1
	45	138	1.5	-0.1	6.0	-0.1	6.0	1.5	-0.1	6.2
	46	88	-0.6	-0.1	-3.2	-0.5	0.2	-0.9	-3.2	3.4
Ram Access Cover Plate	47	33	1.4	0.3	1.3	-0.5	1.6	1.3	0.1	1.4
	48	8	-1.5	-0.2	-1.7	-0.2	-0.2	-1.5	-1.7	1.6
	49	42	2.1	0.3	1.9	-0.4	2.1	1.9	0.2	1.9
	50	5	-2.1	-0.3	-2.0	0.0	-0.3	-2.0	-2.1	1.8
	51	46	2.0	-0.1	2.0	0.0	2.0	2.0	-0.1	2.1
	52	1	-1.8	-0.3	-1.8	0.0	-0.3	-1.8	-1.8	1.5

2.7.5 Summary of Damage

This Section summarizes the condition of the package after being subjected to the normal conditions of transport and hypothetical accident conditions defined in the Part 71 Regulations [2.1].

The load combinations used in the NUHOMS®-MP187 transportation package analysis are developed in accordance with Regulatory Guide 7.8 [2.3] and discussed in Section 2.1.2.2. The condition of the package for the various transportation conditions is discussed in the following paragraphs.

2.7.5.1 Normal Conditions of Transport

The stresses in the package structural components due to normal conditions of transport all meet the applicable design criteria, as described in Section 2.1.2.

Condition of DSCs

The minimum margin of safety in the FO-, FC- and FF-DSC structural components for the normal condition load combinations, occurring in the FC-DSC spacer disc for 1-foot drop plus normal thermal load combination, is +0.01. The results show that the one foot drop does not cause any permanent deformation in any of the DSC structural components. The analyses of the FF-DSC summarized in Section 2.6.13.3 are based on the SA-537, Class 2 carbon steel basket option. Appendix 2.10.13 provides an evaluation of the XM-19 basket design option for the FF-DSC which addresses the alternate basket assembly material (SA-240, Type XM-19 austenitic stainless steel) as well as other configuration modifications. Margins of safety applicable to the XM-19 basket design option for the FF-DSC are bounded by the minimum margin noted above for the FC-DSC.

Condition of Cask

The minimum margin of the cask structural components for the normal condition load combinations is +0.58 for the primary membrane stress intensity in the cask structural shell for

the 1-foot drop plus normal thermal load combination. The results show that no permanent deformation occurs in any of the cask components due to the one foot drop condition.

The maximum interaction ratio for the top and ram closure bolts for the normal condition load combinations is 0.97 (internal pressure + normal thermal). The maximum allowable interaction ratio, per NUREG/CR-6007 [2.20] is 1.0. Therefore, the top and ram closure bolts meet the acceptance criteria for normal condition of transport. As shown in Appendix 2.10.5, the stresses in the bolts remain below yield for all normal conditions of transport. The package containment boundary remains leak tight for all normal conditions of transport.

2.7.5.2 Hypothetical Accident Conditions

The accident condition analysis results show that the stresses in all of the package structural components meet the applicable design criteria.

Condition of DSCs

The minimum margin of safety in any DSC component is +0.02 in the FC-DSC spacer discs for the flatside slapdown. The drop analysis results show that local yielding of the basket assemblies occurs for only the worst case drop conditions. The amount of permanent deformation of the DSC basket structures resulting from the worst case drop conditions is insignificant. The DSC basket structures will maintain the position of the fuel assemblies and poison material and maintain criticality control under the accident drop conditions. The analyses of the FF-DSC summarized in Section 2.7.7 are based on the SA-537, Class 2 carbon steel basket option. Appendix 2.10.13 provides an evaluation of the XM-19 basket design option for the FF-DSC which addresses the alternate basket assembly material (SA-240, Type XM-19 austenitic stainless steel) as well as other configuration modifications. Margins of safety applicable to the XM-19 basket design option for the FF-DSC are bounded by the minimum margin noted above for the FC-DSC.

Condition of Cask

The minimum margin of safety due to accident conditions is +0.13, occurs in the cask inner shell for the cold top end c.g. over flatside drop. The cask body protects the DSC and its contents

during the accident conditions. The cask inner shell buckling analysis, presented in Appendix 2.10.6, demonstrates that the cask shells do not buckle under normal or accident loading conditions. The cask containment boundary remains intact during and after all postulated accident conditions. The stresses in the cask top and ram closure bolts remain below yield for all postulated accident conditions, as shown in Appendix 2.10.5. In addition, the closure bolts meet the design criteria discussed in Section 2.1.2.

2.7.6 FO- and FC-DSC Analysis - Hypothetical Accident Conditions

The NUHOMS®-MP187 Fuel Only (FO) and Fuel with Control components (FC) Dry Shielded Canisters (DSCs) are both designed to accommodate 24 PWR fuel assemblies. The FO-DSC is used for fuel assemblies without control components attached, and the FC-DSC for fuel assemblies with control components. Each DSC consists of a shell assembly and a basket assembly. The DSC is a high integrity stainless steel welded pressure vessel that provides confinement of radioactive materials, encapsulates the fuel in an inert atmosphere, and provides biological shielding (in the axial direction). For transportation condition, no credit is taken for the containment provided by the DSC shell. The DSC shell is designed to ensure that no gross failure will result from the accident conditions which would result in potential damage to the DSC contents. Keys are provided between the DSC grapple ring and cask body and DSC shell and top spacer disc to ensure there are no unwanted rotations of the basket relative to the cask during transportation. The structural evaluation presented in the following sections concentrates on the basket assembly components which maintain the position of the fuel assemblies and provide criticality control.

As shown in Figure 2.7.6-1 and Figure 2.7.6-2, the construction of the FO and FC basket assemblies is identical except the FC support rods extend 6.00 inches further above the top spacer disc than the FO basket to accommodate the additional length of the control components. Also, the FC guide sleeves have 6.5 in. long angles welded to the top corners of the guide sleeves to limit movement of the guide sleeves. Each basket assembly consists of 26 spacer discs, four support rod assemblies, and 24 guide sleeve assemblies. Each support rod assembly consists of a 2.00 inch diameter support rod, threaded at each end, and ϕ2.08 inch I.D. x ϕ3.00

inch O.D. support rod sleeves, which are positioned between the spacer discs and on the top and bottom ends to maintain the longitudinal position of the spacer discs.

The spacer discs provide lateral support for the support rod assemblies, guide sleeve assemblies, and fuel assemblies. Each spacer disc is 1.25 inches thick. The spacer disc pitch is varied to distribute the maximum calculated drop loads as uniformly as possible, while providing sufficient support to the guide sleeve assemblies so that permanent deformation of the guide sleeves for the accident drop conditions is minimized to maintain criticality control.

The fuel weight carried by the FC basket is slightly heavier than that of the FO basket due to the added weight of the control components. Since the FO and FC basket assembly configurations are identical (with the exception of the support rod length and guide sleeve extensions) the FC basket assembly is the controlling design. As discussed in Section 2.1.1, the spacer disc distribution has been modified from previous layouts to provide a more uniform distribution of loads for the hypothetical accident drop conditions. This distribution is shown in Table 2.10.3-1 and results in a reduction in the maximum spacer disc dead load to 2,484 lbs.

As shown in Table 2.7.6-1, the structural analyses presented in this section are based loads which are greater than, or equal to, the loads determined for the spacer disc configuration shown in Figure 2.7.6-1. The DSC spacer disc loads described in the following sections are based on the more conservative load distribution given in Table 2.10.3-1a; this ensures that the stress results given envelop all postulated load conditions.

The following stress calculations are performed for the FC basket components only. The stresses in the FC basket assembly components bound those in the FO basket assembly components.

In addition, the revised configuration distributes the drop loads such that, for each drop orientation, the maximum disc loads are enveloped by the loads used in the disc analyses (see Table 2.7.6-1).

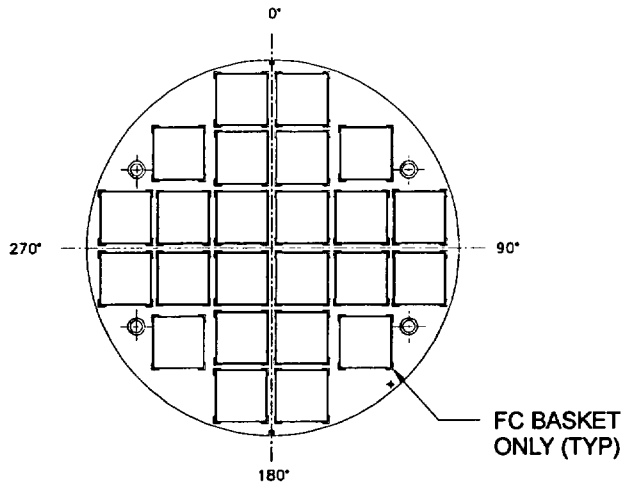

VIEW A–A

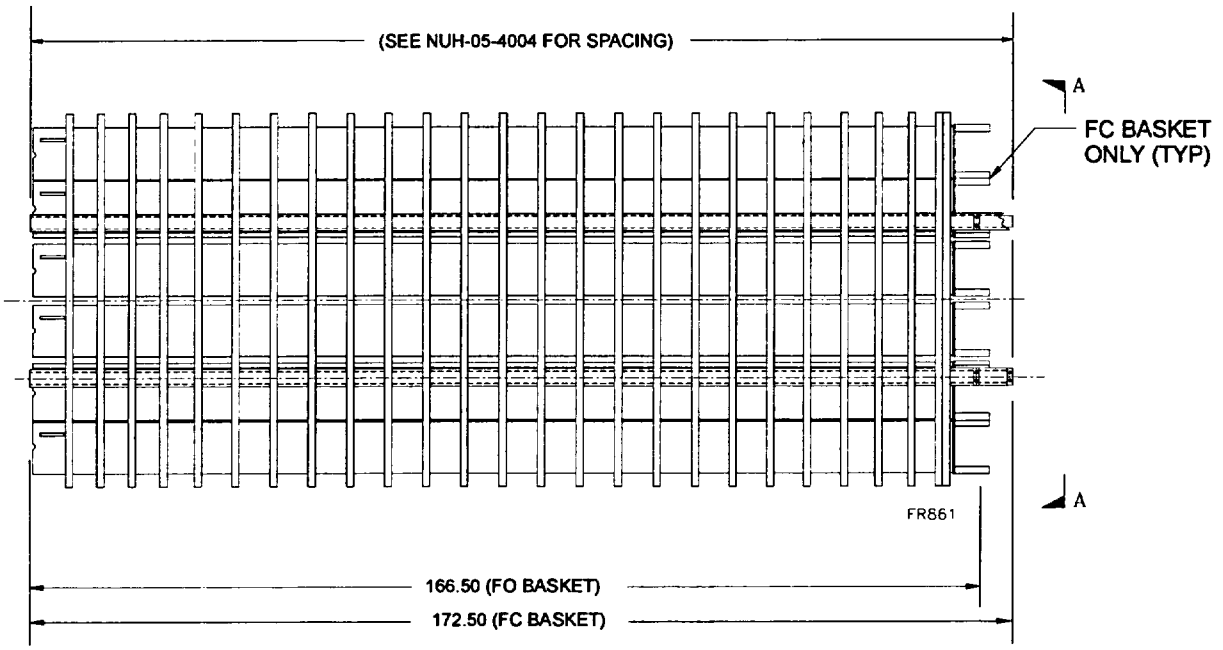

Figure 2.7.6-1
FO- and FC-DSC Basket Assembly Detail

FIGURE WITHHELD UNDER 10 CFR 2.390

2.7.6.1 Spacer Disc Stress Analysis

As discussed in Section 2.7.6, stress analyses are only performed for the FC spacer discs since the FO and FC spacer discs are identical and the FC spacer discs support higher fuel loads than the FO spacer discs. The FO/FC spacer discs are evaluated for the HAC loads in the following sections.

2.7.6.1.1 Free Drop

The Part 71 regulations [2.1] include a hypothetical accident drop condition consisting of "*a free drop of the specimen through a distance of nine m (30 ft) free drop onto a flat, essentially unyielding, horizontal surface, striking the surface in a position for which maximum damage is expected*". The NUHOMS®-MP187 transportation package is analyzed for a variety of drop orientations and conditions, as described in Appendix 2.10.9. The drop analyses are performed for the extreme initial ambient heat (100°F ambient) and cold (-20°F ambient) conditions assuming worst case impact limiter crush strength properties to provide bounding results.

For the analyzed configuration Tables 2.10.3-3a and 2.10.3-6a show that spacer disc #26 (top) was the critical disc for oblique drops. For the current design configuration Tables 2.10.3-3b and 2.10.3-6b show that disc #2 (second from bottom) carries the maximum (design basis) oblique loads. Table 2.7.6-1 provides a summary of the maximum disc loadings for each postulated cold drop orientation. The maximum calculated in-plane disc loads are easily enveloped by the analysis loads described below. The analysis loads presented in Section 2.7.6 provide additional conservatism to the design and are used for all stress, buckling, and displacement calculations.

The peak loads at the location of the most heavily loaded spacer discs are summarized in Table 2.7.6-1. The dynamic load factors are calculated for each drop condition and major structural component in Appendix 2.10.10. Equivalent static loads, calculated as the peak g-load times the corresponding DLF, are used to calculate the stresses in the structural components. The peak accelerations, DLFs, and equivalent static g-loads for the spacer discs are presented in Section 2.10.3. The equivalent static g-loads used for the spacer disc 30' drop analyses bound the quasi-static g-loads determined in Section 2.7.1. The use of quasi-static g-loads is typically used for

the structural evaluation of transportation packages and is the basis of the drop loads for several licensed transportation packages. Since the equivalent static g-loads used for the evaluation of the FO/FC basket structural components are bounding, the analysis results are conservative.

In order to limit the number of calculations, only the limiting cases are considered. The FO/FC spacer disc stress analyses for the various drop conditions are included in the following sections.

Table 2.7.6-1
Summary of Maximum Disc Loads and Comparison of Analyzed and Calculated Loads

Drop		Tangential (In-Plane) Loads			Longitudinal (Out-Of-Plane) Loads		
Description	Orientation	Analyzed	Calculated	Ratio	Analyzed	Calculated	Ratio
1' Drop	Flatside	65.6 kips	61.5 kips	0.939	0.0 g	n/a	n/a
30' End Drop	End	n/a	n/a	n/a	65.0 g	58.7 g	0.904
CG / Impact (72)	Corner	32.1 kips	30.6 kips	0.952	39.9 g	38.6 g	0.97
	Flatside	Note 2	31.9 kips	n/a	Note 2	40.3 g	n/a
60° Oblique Drop	Flatside	105.8 kips	88.6 kips	0.837	32.9 g	30.5 g	0.926
	Corner	87.3 kips	71.8 kips	0.823	27.4 g	24.3 g	0.886
30° Oblique Drop	Flatside	181.4 kips	150.9 kips	0.832	26.3 g	22.3 g	0.849
	Corner	118.5 kips	97.7 kips	0.825	14.1 g	11.1 g	0.785
Horizontal (0)	Flatside	179.7 kips	170.8 kips	0.950	n/a	n/a	n/a
Side Drop	Corner	Note 1	152.9 kips	Note 1	n/a	n/a	n/a
30° Slapdown	Flatside	214.9 kips	186.2 kips	0.867	12.7 g	6.7 g	0.530
	Corner	187.5 kips	156.3 kips	0.833	2.9 g	2.8 g	0.949
Buckling	Flatside	221.2 kips	186.2 kips	0.842	n/a	n/a	n/a
	Corner	195.9 kips	186.2 kips	0.951	n/a	n/a	n/a

trib_wt7.xls

Notes: 1. Loads from the horizontal corner drop are enveloped by the corner

2. Loads from the horizontal side drop are enveloped by the flatside

3. This drop is acceptable by comparrison with the 60° Flatside

2.7.6.1.1.1 End Drop

The spacer discs are evaluated for the end drop condition using the 1/4 symmetry finite element model described in Section 2.10.3.1. The bending support provided by the support rod assembly is represented by torsional spring elements having the same bending stiffness as the support rod sleeves, as discussed in Section 2.10.3.1.1.1. The spacer disc is loaded by its self weight for the end drop condition. A bounding end drop acceleration load of 65 g's is conservatively used for the spacer disc end drop analysis.

The longitudinal reaction load resulting from the 1/4 symmetry spacer disc 65g end drop finite element analysis is 6,909 pounds. The weight of the 1/4 symmetry disc finite element model is 106.3 pounds (or 425 pounds for a full spacer disc). Therefore, the longitudinal inertial load of the spacer disc for a 65g end drop spacer disc is 6,909 pounds. Since the spacer disc is only loaded by its self weight for the end drop condition, the finite element model is in equilibrium.

The 20 highest stress intensities in the spacer disc due to the 65g end drop load are reported in Table 2.7.6-2 and the corresponding node locations are shown in Figure 2.7.6-3. The maximum bending stress due to the end drop is 35.2 ksi at node 346. The allowable accident condition membrane plus bending stress intensity is limited to the lesser of $3.6S_m$ or S_u. The design stress intensity, S_m, and the ultimate strength, S_u, of SA-537, Class 2 at 600°F are 26.4 ksi and 79.3 ksi, respectively. Therefore, the allowable accident condition membrane plus bending stress intensity is 79.3 ksi. The minimum margin of safety in the spacer disc due to the 65g end drop is:

$$\text{M.S.} = (79.3/35.2) - 1$$

$$= +1.25$$

Therefore, the FO- and FC-DSC spacer discs meet the acceptance criteria for the end drop condition.

Table 2.7.6-2
Top 20 Spacer Disc S.I. (Extreme Fiber) - End Drop

Node	Stress Components (ksi)						SINT	Stress Type	Stress Limit	Margin of Safety
	SX	SY	SZ	SXY	SYZ	SXZ				
346	23.9	9.3	0.0	-16.0	0.0	0.0	35.2	$P_l + P_b$	79.3	125%
539	13.4	32.7	0.0	-5.5	0.0	0.0	34.2	$P_l + P_b$	79.3	132%
348	0.2	9.7	0.0	-15.2	0.0	0.0	31.9	$P_l + P_b$	79.3	149%
559	18.8	18.9	0.0	-11.4	0.0	0.0	30.2	$P_l + P_b$	79.3	162%
347	12.4	8.6	0.0	-14.9	0.0	0.0	30.1	$P_l + P_b$	79.3	164%
413	20.2	2.5	0.0	-11.6	0.0	0.0	29.1	$P_l + P_b$	79.3	172%
233	26.9	3.5	0.0	6.7	0.0	0.0	28.7	$P_l + P_b$	79.3	176%
573	-6.8	21.0	0.0	-2.4	0.0	0.0	28.3	$P_l + P_b$	79.3	181%
365	2.6	8.4	0.0	-13.4	0.0	0.0	27.4	$P_l + P_b$	79.3	190%
435	14.5	6.9	0.0	-12.6	0.0	0.0	26.3	$P_l + P_b$	79.3	202%
545	16.5	24.9	0.0	-0.3	0.0	0.0	24.9	$P_l + P_b$	79.3	219%
354	1.3	24.7	0.0	-0.2	0.0	0.0	24.7	$P_l + P_b$	79.3	221%
349	0.9	11.6	0.0	-11.1	0.0	0.0	24.6	$P_l + P_b$	79.3	222%
336	10.2	9.2	0.0	-12.1	0.0	0.0	24.3	$P_l + P_b$	79.3	226%
339	5.6	24.1	0.0	-0.1	0.0	0.0	24.1	$P_l + P_b$	79.3	229%
359	2.4	24.0	0.0	-0.2	0.0	0.0	24.0	$P_l + P_b$	79.3	230%
345	4.6	8.4	0.0	-11.9	0.0	0.0	24.0	$P_l + P_b$	79.3	230%
364	1.2	11.0	0.0	-10.8	0.0	0.0	23.8	$P_l + P_b$	79.3	233%

Notes:

(1) All stress results are reported in units of ksi.

(2) All spacer disc extreme fiber stress intensities are conservatively classified as membrane plus bending.

(3) The node locations of the top 20 spacer disc bending stresses due to the end drop are shown in Figure 2.7.6-3.

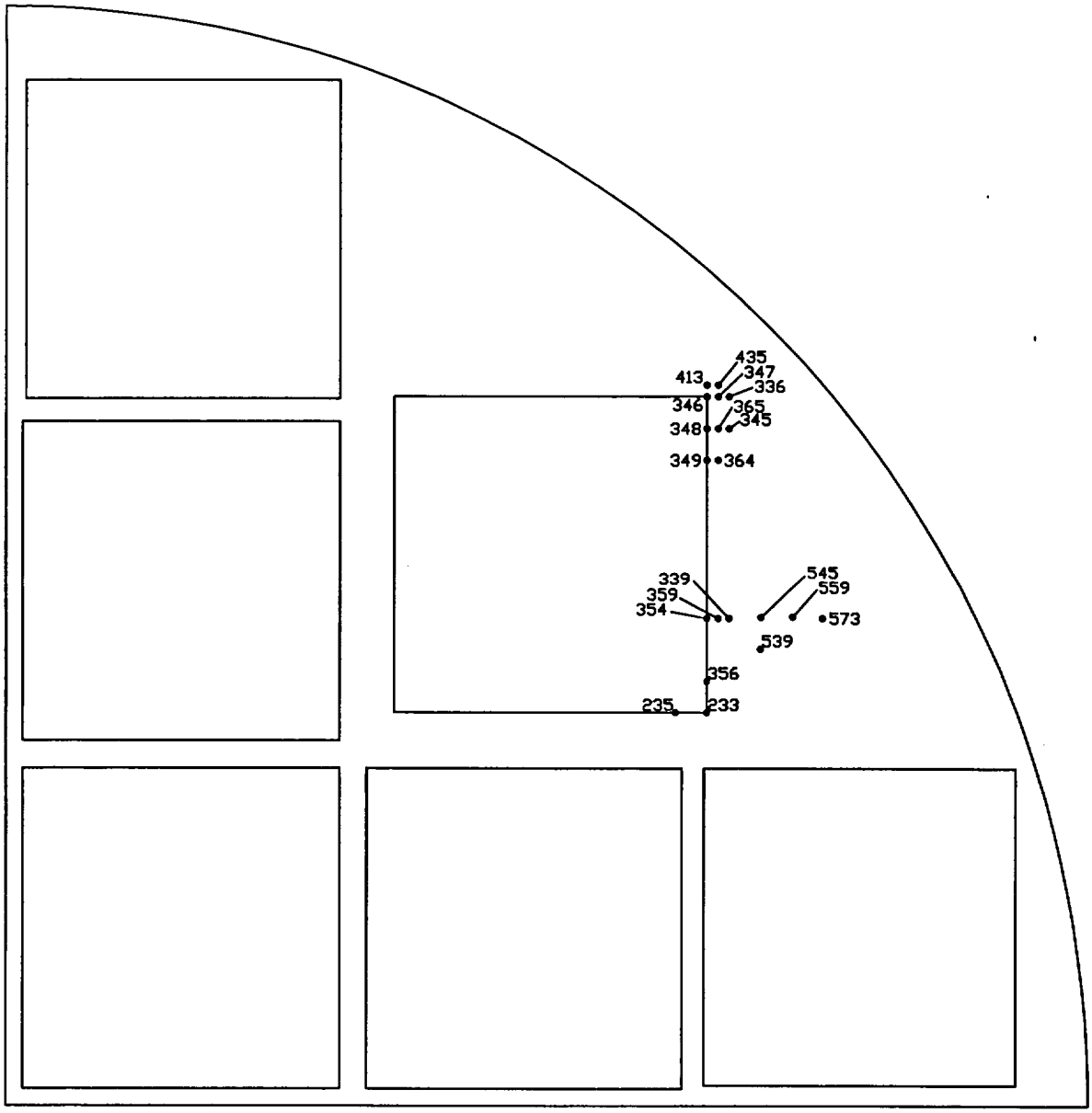

Figure 2.7.6-3
Top 20 FC Spacer Disc Extreme Fiber S.I. - End Drop

2.7.6.1.1.2 Side Drop

As shown in Table 2.7.6-1, the spacer disc loads for the horizontal corner and flatside drops are enveloped by the corresponding 30° slapdown drops.

For the flatside drop, the horizontal drop load of 171 kips is enveloped by the slapdown load of 215 kips. Therefore, no explicit evaluation of the horizontal flatside drop is required.

For the corner drop, the horizontal drop load of 153 kips is enveloped by the slapdown load of 187 kips. Thus, an explicit evaluation of the horizontal corner drop is not required.

2.7.6.1.1.3 Corner Drop

In the event of a c.g. over corner or c.g. over flatside (72° from horizontal) drop, the spacer discs are loaded by the weight of the fuel and guide sleeves in addition to their self weight in the tangential direction. The load from the fuel and guide sleeves due to the longitudinal component of acceleration is transferred directly through the DSC ends to the cask. Therefore, the spacer discs are only loaded by their self weight in the longitudinal direction. A free body diagram of the spacer disc for the c.g. over corner drop condition is shown in Figure 2.7.6-5.

In the event of a c.g. over corner or c.g. over flatside drop, the package is assumed to remain stable (i.e., no rotational acceleration). Thus, all spacer discs will experience the same peak acceleration load. The spacer disc equivalent static g-loads resulting from the cold c.g. over flatside drop bound those resulting from the hot c.g. over flatside drop and bound the c.g. over corner results. The spacer disc equivalent static tangential and longitudinal g-loads for the cold c.g. over corner 72° drop are 11.9 g's and 34.5 g's, respectively. The spacer disc equivalent static tangential and longitudinal g-loads for the cold c.g. over flatside drops are 12.5 g's and 36.4 g's, respectively. The maximum in-plane spacer disc load due to the cold c.g. over corner drop is 30.6 kips and 31.9 kips for the revised loading of the c.g. over flatside drop. The load in the longitudinal direction, due to the inertial load of the 425 pound spacer disc, is 17.0 kips for the c.g. over corner drop and 17.1 kips for the cold c.g. over flatside drop orientation.

The FC-DSC spacer discs are analyzed for the corner drop loading using the full spacer disc finite element model described in Section 2.10.3.1.4. A linear elastic static analysis was performed for the c.g. over corner loads using the ANSYS v5.0A program [2.39]. The total tangential (in-plane) and longitudinal reaction loads from the finite element analysis are 32.1 kips and 17.0 kips, respectively. Therefore, the spacer disc finite element model is in static equilibrium.

As discussed in Section 2.10.3.1.4, gap elements are used to model the interaction between the spacer disc, DSC shell, and cask inner shell. The gap elements, which are modeled around the entire circumference of the spacer disc, have zero stiffness when open and are nearly rigid when closed. The gap element loads and gap sizes resulting from the cold corner drop load condition are shown in Figure 2.7.6-4. The results show that the spacer disc contact angle resulting from the cold corner drop is approximately 124°. The gap element forces are highest in the region of the impact (i.e., 180° azimuth) and tend to concentrate in the most rigid sections of the spacer disc. The maximum gap force is 1,872 pounds. The tributary area of the gap element is 1.727 square inches. Therefore, the maximum bearing stress on the spacer disc due to the edge reactions is:

$$f_p = 1{,}872/1.727$$

$$= 1{,}084 \text{ psi}$$

Per F-1332.3 of the ASME Code [2.2], bearing stresses need only be considered for pinned or bolted joints for Service Level D conditions. The allowable bearing stress for pinned joints is limited to $2.1S_u$ per F-1336 [2.2]. Therefore, the allowable bearing stress in the spacer disc is 166.5 ksi at 600°F. The minimum margin of safety for bearing stress in the spacer disc due to the cold corner drop is:

$$\text{M.S.} = (166.5/1.1) - 1$$

$$= +150.4$$

The maximum gap separation is approximately 0.55 inches directly opposite the point of impact. This gap separation consists of 0.38 inches due to the nominal diametrical gap existing between the spacer discs and DSC shell plus 0.17 inches due to deformation of the spacer disc.

The resulting top 20 spacer disc stress intensities at the spacer disc middle, top, and bottom fibers are summarized in Table 2.7.6-4, Table 2.7.6-5, and Table 2.7.6-6, respectively. The spacer disc ligaments stresses at the critical node locations shown in Figure 2.7.6-6 are presented in Table 2.7.6-3.

1. An explicit evaluation was not performed for the c.g. over flatside drop. Acceptability of the c.g. over flatside drop demonstrated by comparison with the results from the 60° flatside drop and the end drop as follows:

   The results from the flatside 60° evaluation are used to address the effect of the in-plane loads. As shown below and in Table 2.7.6-1 the in-plane (transverse) flatside 60° loads envelop the c.g. over flatside loads by a factor of more than 3.0. However, the out-of-plane loads are not enveloped.

Loading Direction	**Drop Orientation**		Ratio
	60° Flatside	C.G. Over Flatside	
Transverse	105.8 kips [Table 2.7.6-2]	31.9 kips [Table 2.7.6-2]	3.32
Longitudinal	32.9g [Table 2.7.6-1]	41.8g [Table 2.7.6-1]	.787

2. The out-of-plane loads for the c.g. over flatside drop are not enveloped by the 60° flatside loads. However, since there are no non-linearities associated with out-of-plane loading, stresses from the end drop analyses can be scaled and applied to the c.g. over flatside drop. The out-of-plane loads impose only bending stresses on the spacer discs. Thus the membrane stresses from the 60° flatside drop can be applied directly to the c.g. over flatside drop (Note that since the loading for the 60° flatside drop are more than 3 times greater than

the loading for the c.g. over flatside drop, using the stresses from the 60° flatside drop is conservative):

$$(P_m)^{CG/Flatside} = (P_m)^{60° Flatside}$$
$$= 31.9 \text{ ksi}$$

The 65.0g end drop causes a bending stress of 35.2 ksi. Since the analysis is linear, this corresponds to:

$$\frac{35.2\ ksi}{65.0\ g} = .542\ ksi/g$$

The change in axial g-level from the 60° flatside to the c.g. over flatside is:

$$\Delta A_{AXIAL} = A_{AXIAL}^{CG\ over\ Flatside} - A_{AXIAL}^{60° Flatside}$$
$$= 41.8g - 32.9$$
$$= 8.90\ g$$

Scaling the bending stress per g and adding to membrane plus bending stress from the 60° Flatside drop:

$$(P_m + P_b)^{CG/Flatside} = (P_m + P_b)^{60° Flatside} + (.542\ ksi/g)\Delta A_{AXIAL}$$
$$= 54.0\ ksi + (.542\ ksi/g)8.90\ g$$
$$= 58.8\ ksi$$

The maximum primary membrane stress intensity in the spacer disc due to the cold c.g. over corner drop is 26.3 ksi (node 1, middle fiber), and is conservatively estimated to be 31.9g ksi for the c.g. over flatside drop. The allowable accident primary membrane stress intensity is 55.5 ksi for SA-537, Class 2 at 600°F. The minimum margin of safety for primary membrane stress intensity in the spacer disc due to the cold c.g. over flatside drop is:

M.S. = (55.5/31.9) - 1

= 0.74

The maximum membrane plus bending stress intensity in the spacer disc due to the cold c.g. over corner drop is 50.5 ksi, and 58.8 ksi for the cold c.g. over flatside drop. The allowable accident membrane plus bending stress intensity is 79.3 ksi for SA-537, Class 2 at 600°F. The minimum margin of safety for membrane plus bending stress intensity in the spacer disc due to the cold corner drop is:

$$\text{M.S.} = (79.3/58.8) - 1$$

$$= +0.35$$

Therefore, the spacer disc meets the stress acceptance criteria for the cold c.g. over flatside drop.

Component	Dead Load		72° Drop
F_P, FC Spacer Disk	425 #	–	5.23 k
F_F, Fuel	10.84 lb/in	1886. #	23.2 k
F_{GS}, Guide Sleeve	1.70 lb/in	296. #	3.64 k
$F_{Applied}$, Total Applied Load			32.1 k
$F_{Reaction}$, ANSYS Reaction Load*2			32.1 k
Ratio ($F_{Applied}/F_{Reaction}$)			1.00

Notes: disctabl.xls, cg/corner

1. Fuel & Guide Sleeve load based on 24 fuel elements and 7.25" disk spacing.
2. Acceleration for CG Over Corner Drop, 12.3 g.

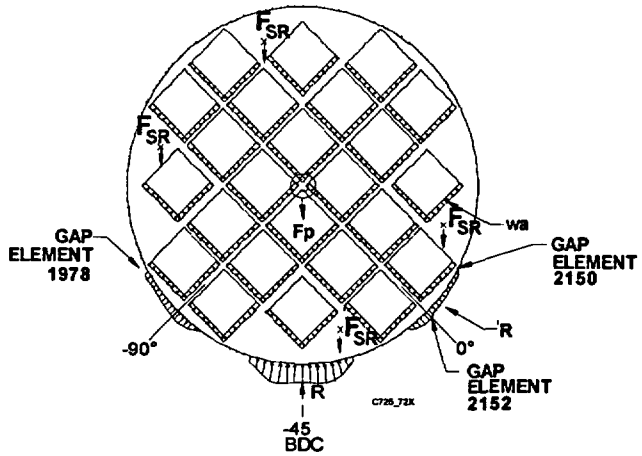

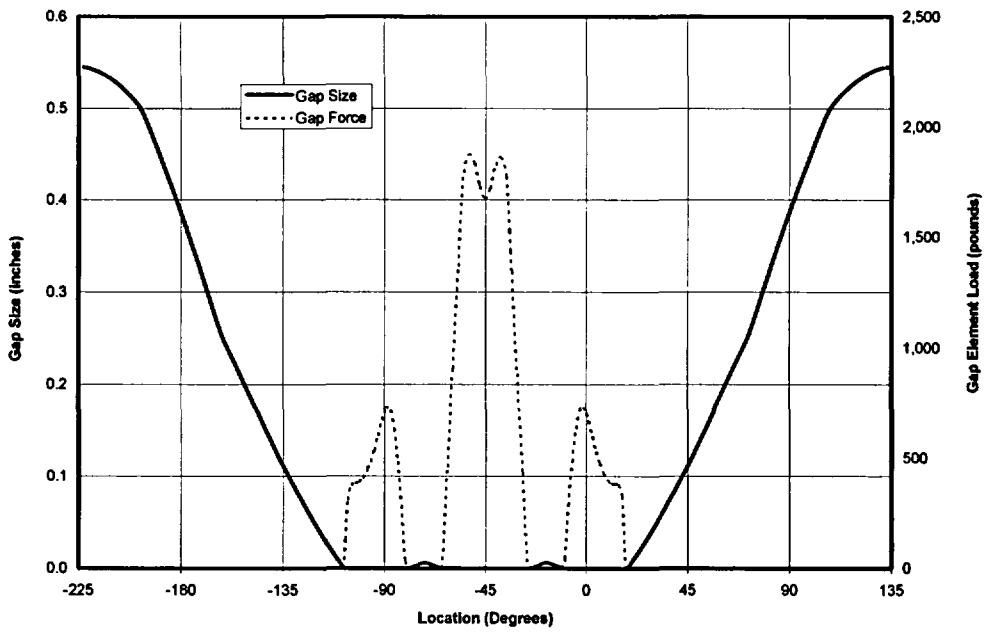

Figure 2.7.6-4
Gap Element Behavior for Cold Corner Drop

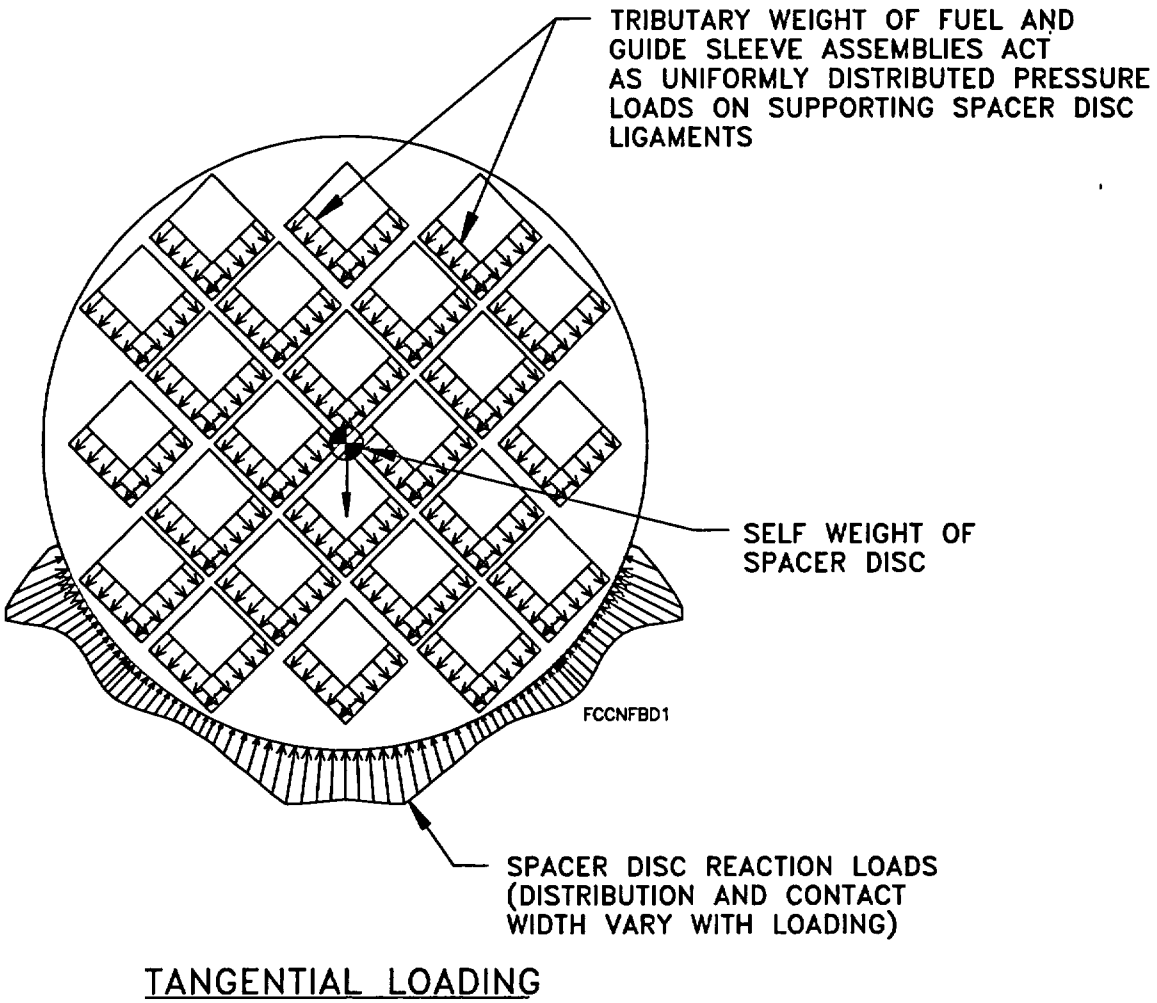

Figure 2.7.6-5
FC Spacer Disc Corner Drop Free Body Diagram

Table 2.7.6-3
Spacer Disc Ligament S.I. - Corner 72° Impact

Node	Stress Components (ksi)						SINT	Stress Type	Stress Limit	Margin of Safety
	SX	SY	SZ	SXY	SYZ	SXZ				
1	-1.4	-1.4	0.0	-13.1	0.0	0.0	26.3	P_m	55.5	111%
26	-2.3	-0.9	0.0	-9.4	0.0	0.0	18.8	P_m	55.5	195%
844	-0.9	-2.3	0.0	-9.4	0.0	0.0	18.8	P_m	55.5	196%
1334	-1.1	0.3	0.0	-9.2	0.0	0.0	18.5	P_m	55.5	200%
190	0.3	-1.1	0.0	-9.2	0.0	0.0	18.5	P_m	55.5	201%
50	-2.4	-3.0	0.0	-5.5	0.0	0.0	11.0	P_m	55.5	407%
1358	-0.5	0.4	0.0	-5.0	0.0	0.0	10.1	P_m	55.5	451%
369	0.4	-0.5	0.0	-5.0	0.0	0.0	10.0	P_m	55.5	454%
792	4.8	-4.9	0.0	-0.4	0.0	0.0	9.8	P_m	55.5	465%
1098	-4.9	4.8	0.0	-0.4	0.0	0.0	9.8	P_m	55.5	465%
762	3.6	-3.0	0.0	-3.3	0.0	0.0	9.3	P_m	55.5	500%
855	-3.0	3.6	0.0	-3.3	0.0	0.0	9.3	P_m	55.5	500%
2163	0.8	-5.5	0.0	-3.4	0.0	0.0	9.2	P_m	55.5	Large
108	-5.5	0.7	0.0	-3.4	0.0	0.0	9.2	P_m	55.5	Large
201	1.3	-3.9	0.0	-2.9	0.0	0.0	7.8	P_m	55.5	Large
1509	-0.9	4.2	0.0	-3.0	0.0	0.0	7.8	P_m	55.5	Large
1416	4.1	-0.9	0.0	-2.9	0.0	0.0	7.8	P_m	55.5	Large
2070	-3.8	1.3	0.0	-2.9	0.0	0.0	7.8	P_m	55.5	Large
2406	-2.2	-5.1	0.0	-1.4	0.0	0.0	5.7	P_m	55.5	Large
138	-5.1	-2.2	0.0	-1.4	0.0	0.0	5.7	P_m	55.5	Large
951	-0.4	-2.7	0.0	-2.4	0.0	0.0	5.4	P_m	55.5	Large
2100	-3.0	0.7	0.0	-1.1	0.0	0.0	4.3	P_m	55.5	Large
380	0.7	-3.0	0.0	-1.1	0.0	0.0	4.3	P_m	55.5	Large
1446	3.1	0.5	0.0	-1.2	0.0	0.0	3.6	P_m	55.5	Large
1752	0.5	3.1	0.0	-1.2	0.0	0.0	3.6	P_m	55.5	Large
53	-2.3	-0.5	0.0	-1.0	0.0	0.0	2.7	P_m	55.5	Large
1169	-0.5	-2.3	0.0	-1.0	0.0	0.0	2.7	P_m	55.5	Large
1361	0.0	-0.3	0.0	-1.2	0.0	0.0	2.4	P_m	55.5	Large
446	-0.3	0.0	0.0	-1.2	0.0	0.0	2.4	P_m	55.5	Large

Notes:
(1) All stress results are reported in units of ksi.
(2) All spacer disc ligament stress intensities are conservatively classified as primary membrane.
(3) The locations of the reported spacer disc ligament stresses due to the corner 72° impact are shown in Figure 2.7.6-6.

Table 2.7.6-4
FC Spacer Disc Top 20 S.I. (Middle Fiber) - Corner 72° Impact

Node	Stress Components (ksi)						SINT	Stress Type	Stress Limit	Margin of Safety
	SX	SY	SZ	SXY	SYZ	SXZ				
78	2.8	-38.7	0.0	1.8	0.0	0.0	41.6	$P_l + P_b$	79.3	90%
1986	-38.7	2.8	0.0	1.8	0.0	0.0	41.6	$P_l + P_b$	79.3	91%
740	2.2	-37.9	0.0	1.7	0.0	0.0	40.2	$P_l + P_b$	79.3	97%
670	-37.9	2.2	0.0	1.7	0.0	0.0	40.2	$P_l + P_b$	79.3	97%
1386	-3.1	35.8	0.0	1.8	0.0	0.0	39.0	$P_l + P_b$	79.3	103%
1332	35.8	-3.1	0.0	1.8	0.0	0.0	39.0	$P_l + P_b$	79.3	103%
1394	2.5	-36.0	0.0	1.4	0.0	0.0	38.5	$P_l + P_b$	79.3	106%
1324	-36.0	2.5	0.0	1.4	0.0	0.0	38.5	$P_l + P_b$	79.3	106%
24	-34.9	3.1	0.0	1.3	0.0	0.0	38.1	$P_l + P_b$	79.3	108%
2040	3.1	-34.9	0.0	1.3	0.0	0.0	38.1	$P_l + P_b$	79.3	108%
117	-3.3	32.9	0.0	1.5	0.0	0.0	36.3	$P_l + P_b$	79.3	118%
2153	32.9	-3.3	0.0	1.5	0.0	0.0	36.3	$P_l + P_b$	79.3	118%
2048	-2.7	33.4	0.0	1.8	0.0	0.0	36.3	$P_l + P_b$	79.3	119%
16	33.4	-2.7	0.0	1.8	0.0	0.0	36.3	$P_l + P_b$	79.3	119%
1425	3.3	-32.4	0.0	1.5	0.0	0.0	35.9	$P_l + P_b$	79.3	121%
1499	-32.4	3.3	0.0	1.5	0.0	0.0	35.8	$P_l + P_b$	79.3	121%
86	-2.0	33.0	0.0	1.2	0.0	0.0	35.1	$P_l + P_b$	79.3	126%
1978	32.9	-2.0	0.0	1.2	0.0	0.0	35.1	$P_l + P_b$	79.3	126%
760	0.8	-33.7	0.0	1.3	0.0	0.0	34.7	$P_l + P_b$	79.3	129%
856	-33.6	0.8	0.0	1.3	0.0	0.0	34.6	$P_l + P_b$	79.3	129%

Notes:
(1) All stress results are reported in units of ksi.
(2) The allowable membrane plus bending stress intensities is 79.3 ksi.
(3) The locations of the top 20 spacer disc middle fiber stress intensities due to the corner 72° impact are shown in Figure 2.7.6-7.

Table 2.7.6-5
FC Spacer Disc Top 20 S.I. (Top Fiber) - Corner 72° Impact

Node	Stress Components (ksi)						SINT	Stress Type	Stress Limit	Margin of Safety
	SX	SY	SZ	SXY	SYZ	SXZ				
1986	-47.8	2.7	0.0	1.4	0.0	0.0	50.5	$P_l + P_b$	79.3	57%
24	-44.0	3.0	0.0	0.8	0.0	0.0	47.0	$P_l + P_b$	79.3	69%
1499	-43.6	3.2	0.0	1.6	0.0	0.0	46.9	$P_l + P_b$	79.3	69%
2172	-44.5	0.5	0.0	0.2	0.0	0.0	45.0	$P_l + P_b$	79.3	76%
670	-42.6	2.1	0.0	1.7	0.0	0.0	44.8	$P_l + P_b$	79.3	77%
2415	-42.6	1.4	0.0	1.8	0.0	0.0	44.1	$P_l + P_b$	79.3	80%
845	-40.5	3.4	0.0	1.0	0.0	0.0	44.0	$P_l + P_b$	79.3	80%
1324	-40.7	2.4	0.0	1.3	0.0	0.0	43.1	$P_l + P_b$	79.3	84%
1386	-3.0	39.6	0.0	0.9	0.0	0.0	42.6	$P_l + P_b$	79.3	86%
856	-39.7	0.7	0.0	1.5	0.0	0.0	40.5	$P_l + P_b$	79.3	96%
2048	-2.7	37.0	0.0	0.8	0.0	0.0	39.7	$P_l + P_b$	79.3	100%
199	-36.5	2.3	0.0	0.6	0.0	0.0	38.8	$P_l + P_b$	79.3	105%
86	-2.0	36.5	0.0	0.3	0.0	0.0	38.6	$P_l + P_b$	79.3	106%
1099	-38.5	-0.4	0.0	0.1	0.0	0.0	38.5	$P_l + P_b$	79.3	106%
2161	-35.8	2.5	0.0	0.1	0.0	0.0	38.3	$P_l + P_b$	79.3	107%
78	2.9	-34.9	0.0	2.7	0.0	0.0	38.1	$P_l + P_b$	79.3	108%
128	1.5	-36.2	0.0	1.2	0.0	0.0	37.8	$P_l + P_b$	79.3	110%
1985	-37.6	-0.8	0.0	1.7	0.0	0.0	37.7	$P_l + P_b$	79.3	110%
210	-37.2	0.2	0.0	-0.5	0.0	0.0	37.4	$P_l + P_b$	79.3	112%
2068	-0.7	36.7	0.0	-0.5	0.0	0.0	37.4	$P_l + P_b$	79.3	112%

Notes:
(1) All stress results are reported in units of ksi.
(2) All spacer disc extreme fiber stress intensities are conservatively classified as membrane plus bending.
(3) The locations of the top 20 spacer disc top fiber stress intensities due to the corner 72° impact are shown in Figure 2.7.6-8.

Table 2.7.6-6
FC Spacer Disc Top 20 S.I. (Bottom Fiber) - Corner 72° Impact

Node	Stress Components (ksi)						SINT	Stress Type	Stress Limit	Margin of Safety
	SX	SY	SZ	SXY	SYZ	SXZ				
1332	44.9	-2.9	0.0	1.4	0.0	0.0	47.9	$P_l + P_b$	79.3	66%
2153	44.1	-3.2	0.0	1.6	0.0	0.0	47.4	$P_l + P_b$	79.3	67%
78	2.8	-42.4	0.0	0.9	0.0	0.0	45.2	$P_l + P_b$	79.3	75%
740	2.2	-41.4	0.0	0.8	0.0	0.0	43.6	$P_l + P_b$	79.3	82%
1518	43.2	-0.4	0.0	0.2	0.0	0.0	43.5	$P_l + P_b$	79.3	82%
2596	36.5	1.0	0.0	-11.4	0.0	0.0	42.1	$P_l + P_b$	79.3	88%
1394	2.5	-39.5	0.0	0.4	0.0	0.0	42.0	$P_l + P_b$	79.3	89%
2040	3.0	-38.7	0.0	0.4	0.0	0.0	41.7	$P_l + P_b$	79.3	90%
678	39.5	-2.1	0.0	0.7	0.0	0.0	41.7	$P_l + P_b$	79.3	90%
191	38.6	-2.8	0.0	0.9	0.0	0.0	41.4	$P_l + P_b$	79.3	92%
16	38.2	-2.6	0.0	1.7	0.0	0.0	40.9	$P_l + P_b$	79.3	94%
1761	38.8	-1.7	0.0	1.8	0.0	0.0	40.6	$P_l + P_b$	79.3	95%
1978	37.7	-1.9	0.0	1.2	0.0	0.0	39.7	$P_l + P_b$	79.3	100%
760	0.7	-39.0	0.0	-0.5	0.0	0.0	39.7	$P_l + P_b$	79.3	100%
202	37.4	-0.7	0.0	1.5	0.0	0.0	38.3	$P_l + P_b$	79.3	107%
2071	2.3	-35.6	0.0	2.3	0.0	0.0	38.2	$P_l + P_b$	79.3	108%
109	2.6	-34.9	0.0	1.8	0.0	0.0	37.6	$P_l + P_b$	79.3	111%
853	34.8	-2.4	0.0	0.6	0.0	0.0	37.3	$P_l + P_b$	79.3	113%
790	-0.2	-36.3	0.0	2.0	0.0	0.0	36.4	$P_l + P_b$	79.3	118%
117	-3.5	32.4	0.0	3.1	0.0	0.0	36.3	$P_l + P_b$	79.3	118%

Notes:
(1) All stress results are reported in units of ksi.
(2) All spacer disc extreme fiber stress intensities are conservatively classified as membrane plus bending.
(3) The locations of the top 20 spacer disc bottom fiber stress intensities due to the corner 72° impact are shown in Figure 2.7.6-9.

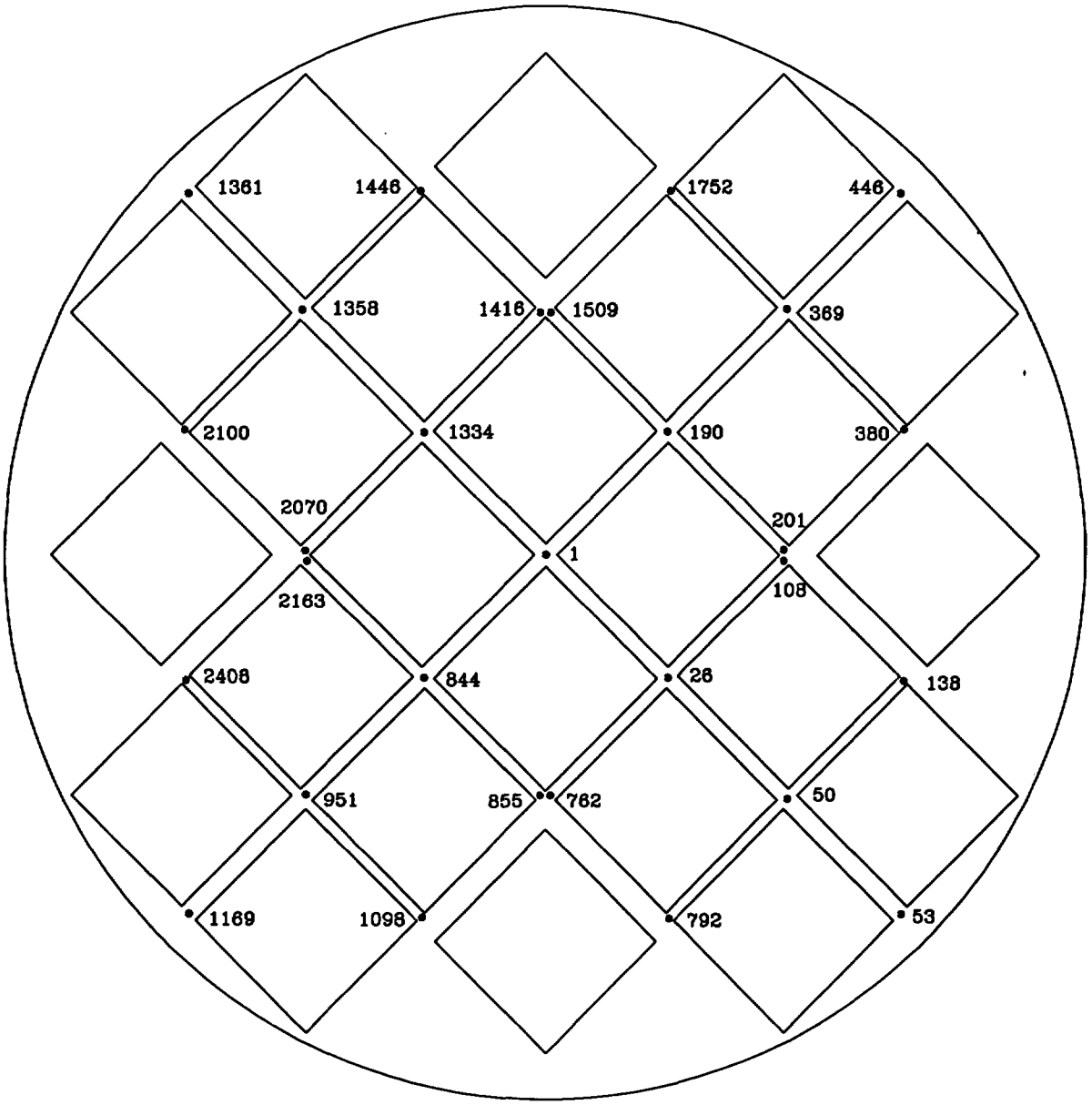

Figure 2.7.6-6
FC Spacer Disc Full Model Critical Ligament Node Locations

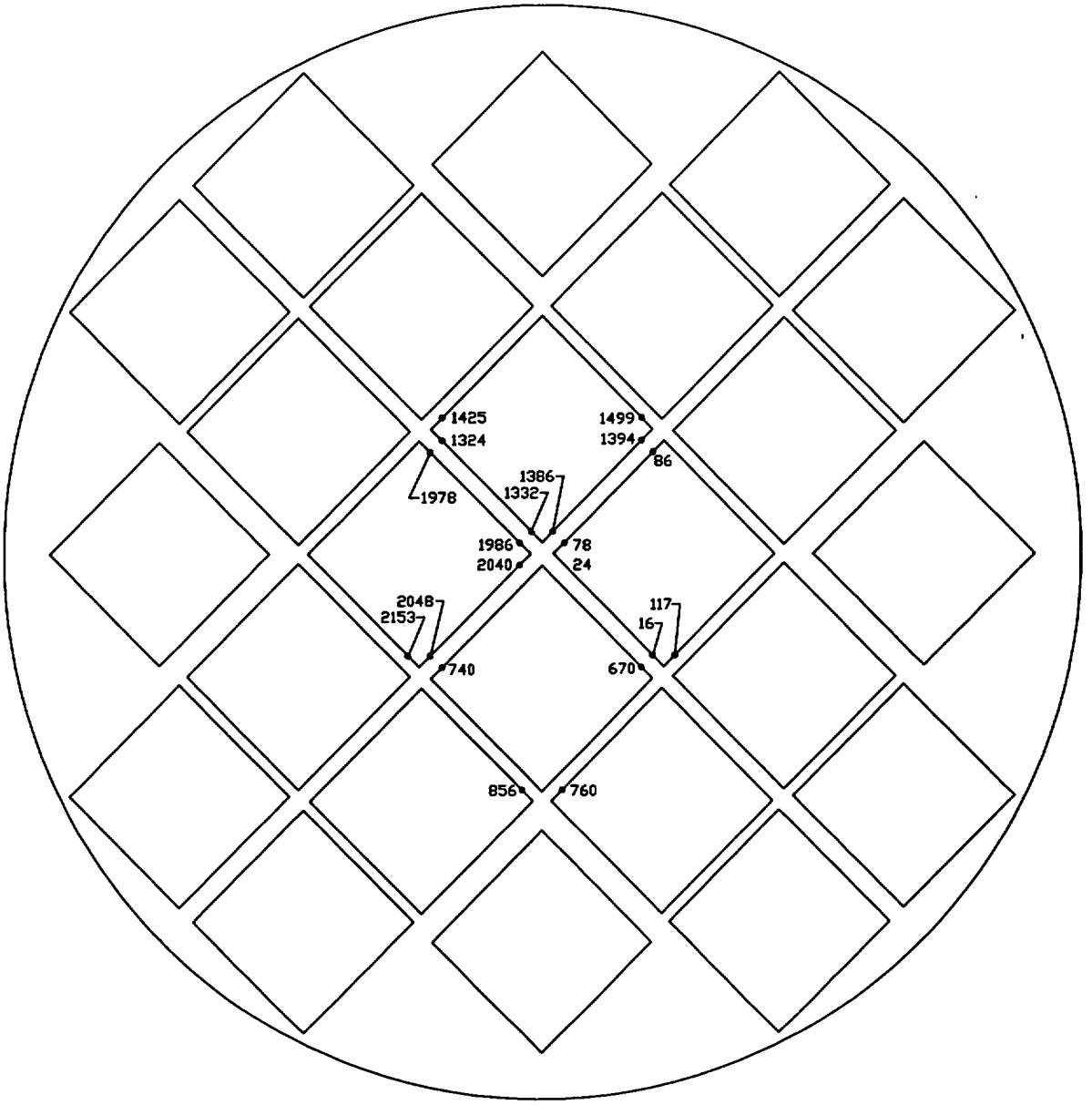

Figure 2.7.6-7
Location of Top 20 FC Spacer Disc S.I. (Middle Fiber) - Corner 72° Impact

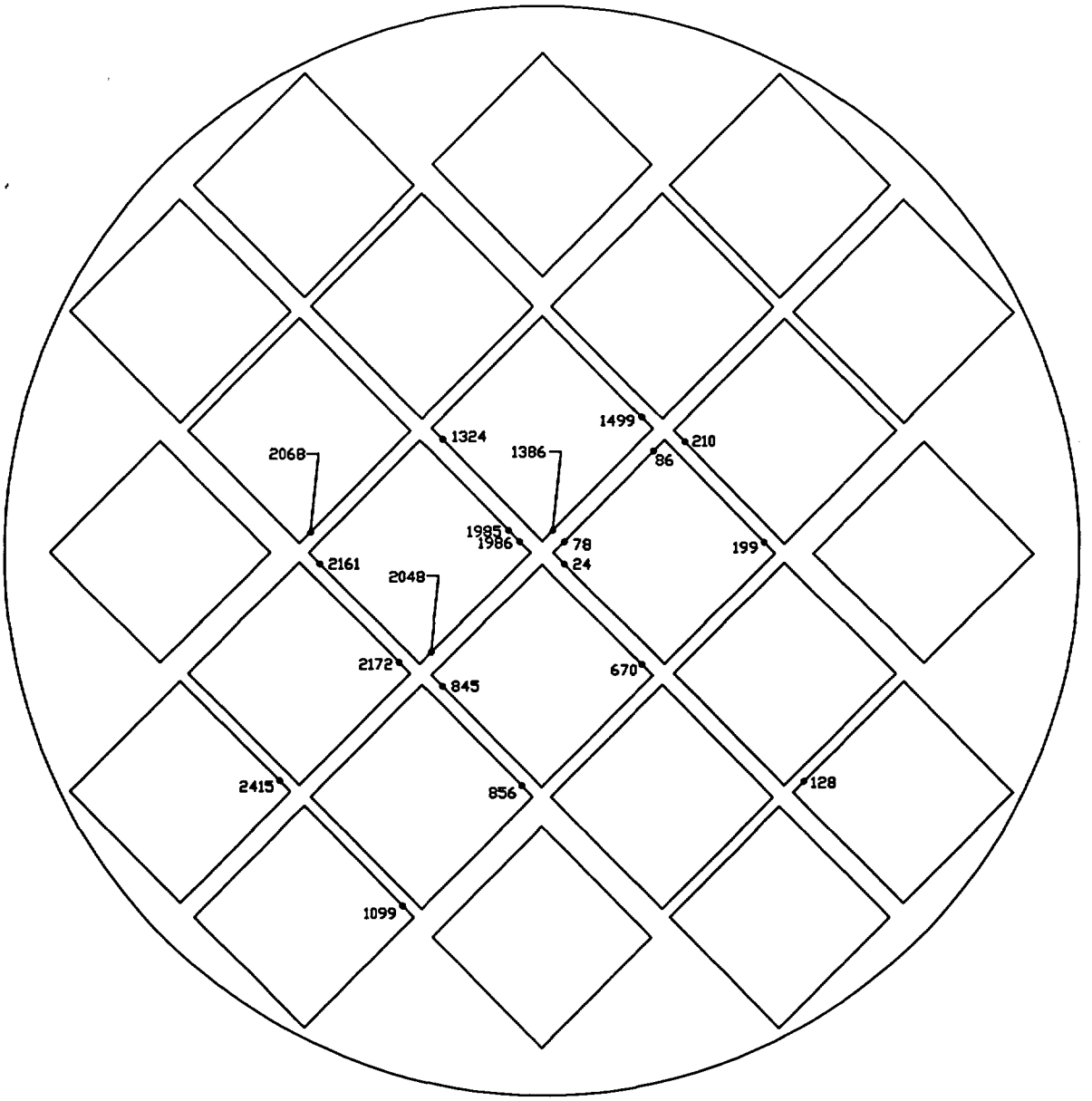

Figure 2.7.6-8
Location of Top 20 FC Spacer Disc S.I. (Top Fiber) - Corner 72° Impact

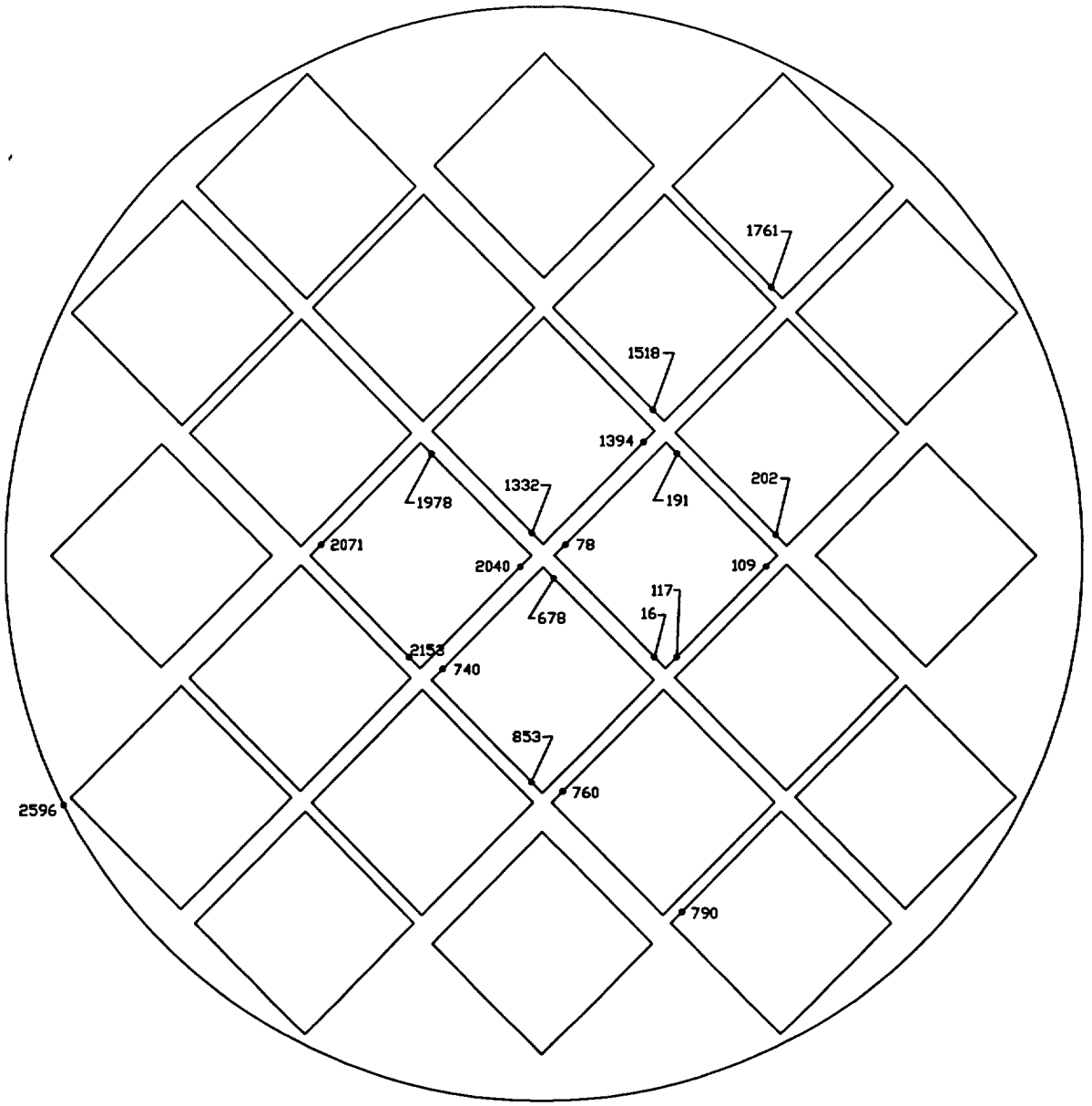

Figure 2.7.6-9
Location of Top 20 FC Spacer Disc S.I. (Bottom Fiber) - Corner 72° Impact

2.7.6.1.1.4 Oblique Drops

The FO-DSC and FC-DSC structural components are analyzed for a range of 30 foot oblique drop conditions. Analyses are performed for both primary and secondary (slapdown) impacts. The drop orientations considered in this analysis are:

1.) Flat Side 30° Drop (Primary & Slapdown)

2.) Corner 30° Drop (Primary & Slapdown)

3.) Flat Side 60° Drop

4.) Corner 60° Drop

In the event of an oblique drop, the entire kinetic energy of the package upon primary impact is transferred into strain energy of the impact limiter and rotational kinetic energy of the package. The rotational velocity and acceleration of the package results in longitudinal and tangential accelerations which are functions of the distance from the package center of gravity. Therefore, the analyses of the various NUHOMS® FO- and FC-DSC structural components must consider the longitudinal location of the components.

To determine the worst case loading for a particular component, both the tributary weight of the component and the acceleration loads at the location of the component must be considered. As shown in Table 2.10.3-3 and Table 2.10.3-6b, spacer disc #2 is the most heavily loaded spacer disc for the flatside and corner oblique drop conditions, respectively. The calculated load for spacer disc #2 is enveloped by the analytical load previously developed for spacer disc #26. Therefore, the spacer disc oblique drop analyses performed for spacer disc #26 provide conservative stresses for the FC-DSC spacer discs and are used for all further results.

The drop analysis results are summarized in Table 2.7.6-1 for the most heavily loaded spacer disc with the corresponding equivalent static drop decelerations. The g-loads for each drop orientation are significantly higher for the cold ambient condition than for the hot ambient condition. Therefore, the cold drop conditions control the design of these components.

For each drop angle, conservative analyses using the maximum spacer disc loads and accelerations from Table 2.7.6-1 are presented for impacts on the flatside and corner facets of the impact limiter. These drop orientations are chosen since impacts on the impact limiter facets result in the sharpest rise times for the acceleration time histories, and the highest dynamic amplification. Intermediate angles result in lower peak g-loads and slower rise times, and consequently, lower equivalents static g-loads. The flatside impacts result in the highest package g-loads. For this drop orientation, the spacer disc ligaments are oriented vertically, providing a direct load path for the spacer disc drop loads. In general, these drop conditions result in maximum membrane stresses in the vertical ligaments due to compression and maximum bending stresses in the horizontal ligaments. The corner impacts result in lower package g-loads than the flatside impact. Due to the orientation of the spacer disc for the corner impact, the load path is less direct than for the flatside impacts.

2.7.6.1.1.4.1 Flatside Oblique Impact Analysis

The flatside oblique drop orientation considered in the drop analyses (Appendix 2.10.9) include a drop at 30° with respect to horizontal with subsequent slapdown impact, and a drop at 60° with respect to horizontal. The critical FC-DSC spacer disc is analyzed for the conservative flat side oblique drop loads shown in Table 2.7.6-1 using the half symmetry finite element model described in Section 2.10.3.1.2. A free body diagram for the flatside oblique drop conditions is shown in Figure 2.7.6-10.

Linear elastic static analyses are performed for each of the flat side oblique drop conditions using the ANSYS v5.0A program [2.39]. The results of each flatside oblique drop analysis are discussed in the following sections.

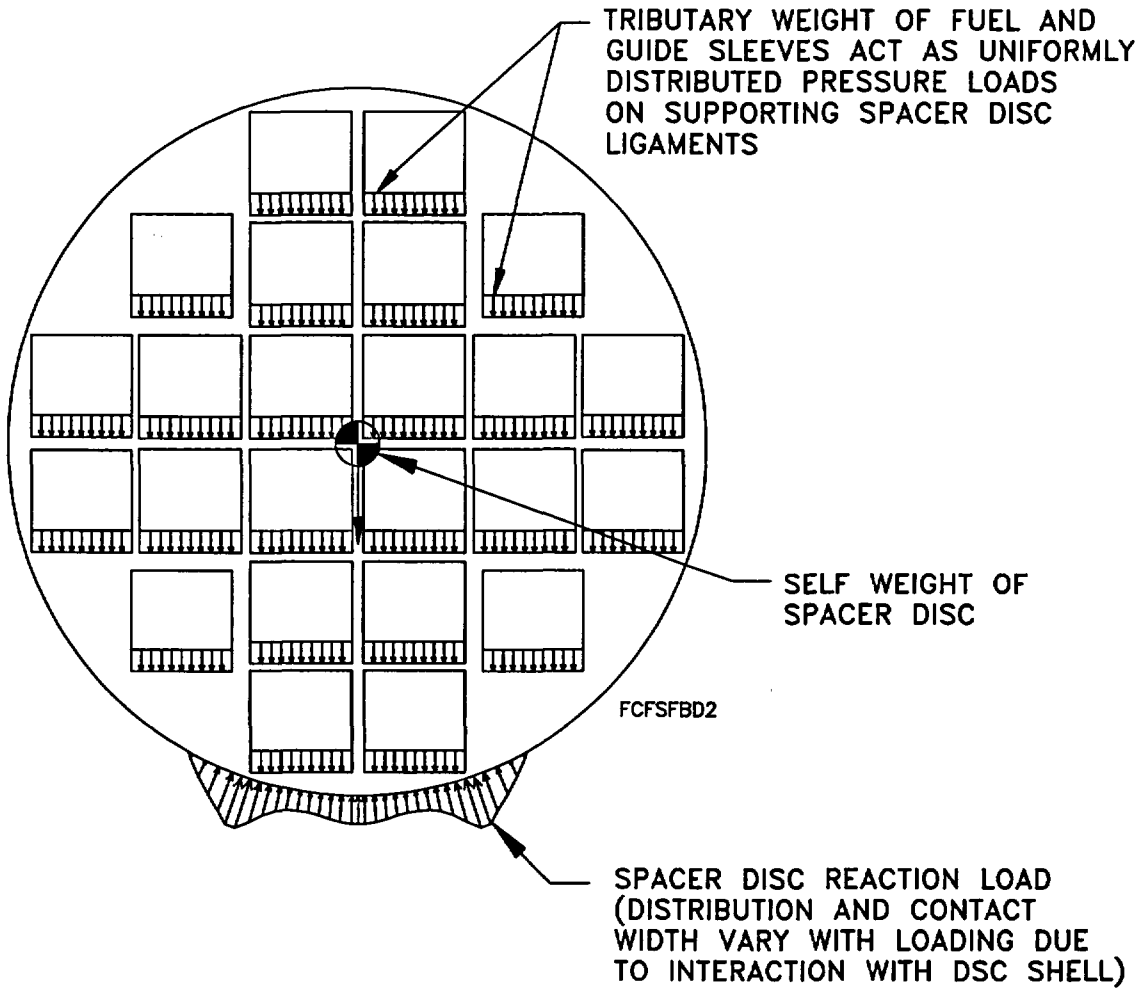

Figure 2.7.6-10
FC Spacer Disc Flatside Oblique Drop Free Body Diagram

2.7.6.1.1.4.1.1 Flatside 60° Impact Results

The equivalent static longitudinal and tangential loads used in the analysis of the flatside 60° primary impact are 105.8 kips tangential (in-plane) and 32.9 g's (14.0 kips) longitudinal, respectively. These values are 19% and 6%, respectively, greater than the calculated values for the revised spacer disc loads given in Figure 2.7.6-1. They are used for developing conservative estimates of the maximum stresses. The total reaction loads in the tangential and longitudinal

directions from the finite element analysis of the cold flatside 60° primary impact are 105.7 kips and 14.0 kips, respectively. The reaction loads from the finite element solution are less than 0.8% different from the applied spacer disc loads. Therefore, the spacer disc is in static equilibrium for the cold flatside 60° primary impact condition.

Gap elements are used to model the interaction between the spacer disc, DSC shell, and cask inner shell. The gap element loads and gap sizes resulting from the cold flatside 60° impact condition are shown in Figure 2.7.6-11. The results show that the spacer disc contact angle resulting from the cold flatside 60° impact is approximately 66°. The gap element forces are highest directly below the outer corner of the bottom fuel cell (i.e. -70° azimuth). This is due to the relatively rigid solid portion of the spacer disc just outboard of the two centermost columns of fuel cells. The bearing stresses at the edge of the spacer disc are calculated by dividing the gap forces by the bearing area tributary to each gap element. The gap force corresponding to the location of the highest bearing stress is 5.13 kips. The tributary area of the gap element is 1.100 square inches. Therefore, the maximum bearing stress on the spacer disc due to the edge reactions is:

$$f_p = 5.13/1.10$$

$$= 4.7 \text{ ksi}$$

Per F-1332.3 of the ASME Code [2.2], bearing stresses need only be considered for pinned or bolted joints for Service Level D conditions. The allowable bearing stress for pinned joints is limited to $2.1S_u$ per F-1336 [2.2]. Therefore, the allowable bearing stress in the spacer disc is 166.5 ksi at 600°F. The minimum margin of safety for bearing stress in the spacer disc due to the cold flatside 60° impact is:

$$M.S. = (166.5/4.7) - 1$$

$$= +34.4$$

The maximum gap separation is approximately 0.41 inches, occurring near the 74° azimuth. This gap separation consists of 0.38 inches due to the nominal diametrical gap existing between the spacer discs and DSC shell plus 0.03 inches due to deformation of the spacer disc.

The 20 highest stress intensities at the spacer disc middle, top, and bottom fibers resulting from the conservative loads used for the flatside 60° impact are shown in Table 2.7.6-8, Table 2.7.6-9, and Table 2.7.6-10, respectively. In addition, the ligament stresses at the node locations shown in Figure 2.7.6-14 are shown in Table 2.7.6-7.

The maximum primary membrane stress intensity, resulting from the cold flatside 60° impact is 31.9 ksi. The allowable service level D primary membrane stress intensity is limited to the lesser of $2.4S_m$ or $0.7S_u$. The design stress intensity, S_m, and the ultimate strength, S_u, for ASME SA-537, Class 2 carbon steel at 600°F are 26.4 ksi and 79.3 ksi, respectively. Therefore, the allowable service level D primary membrane stress intensity is 55.5 ksi. The minimum margin of safety for primary membrane stress intensity due to the oblique flatside 60° impact is:

$$\text{M.S.} = (55.5/31.9) - 1$$
$$= +0.74$$

The maximum membrane plus bending stress intensity, resulting from the cold flatside 60° impact is 54.0 ksi. The allowable service level D primary membrane plus bending stress intensity is limited to the lesser of $3.6S_m$ or S_u. Therefore, the allowable membrane plus bending stress intensity is 79.3 ksi. The minimum margin of safety for membrane plus bending stress intensity due to the flatside 60° impact is:

$$\text{M.S.} = (79.3/54.0) - 1$$
$$= +0.47$$

Therefore, the spacer disc meets the acceptance criteria for the flatside 60° impact condition.

2.7.6.1.1.4.1.2 Flatside 30° Impact Results

The equivalent static g-loads used in the analysis of the flatside 30° primary impact are 181.4 kips tangentially and 26.3 g (11.2) kips longitudinally. As shown in Table 2.7.6-3 these values are 20% and 14% greater than the calculated values for the revised spacer disc locations shown in Figure 2.7.6-1. Therefore, those loads are conservatively used for calculating the spacer disc stresses due to the flatside 30° primary impact. The total reaction loads in the longitudinal and tangential directions from the finite element analysis of the cold flatside 30° primary impact are 11.2 kips and 181.5 kips, respectively. The reaction loads from the finite element solution are less than 0.6% different from the applied spacer disc loads. Therefore, the spacer disc is in static equilibrium for the cold flatside 30° primary impact condition.

Gap elements are used to model the interaction between the spacer disc, DSC shell, and cask inner shell. The gap element loads and gap sizes resulting from the cold flatside 30° impact condition are shown in Figure 2.7.6-12. The results show that the spacer disc contact angle resulting from the cold flatside 30° impact is approximately 80°. The gap element forces are highest directly below the outer corner of the bottom fuel cell (i.e. -70° azimuth). This is due to the relatively rigid solid portion of the spacer disc just outboard of the two centermost columns of fuel cells. The bearing stresses at the edge of the spacer disc are calculated by dividing the gap forces by the bearing area tributary to each gap element. The gap force corresponding to the location of the highest bearing stress is 7.77 kips. The tributary area of the gap element is 1.100 square inches. Therefore, the maximum bearing stress on the spacer disc due to the edge reactions is:

$$f_p = 7.77/1.10$$
$$= 7.1 \text{ ksi}$$

Per F-1332.3 of the ASME Code [2.2], bearing stresses need only be considered for pinned or bolted joints for Service Level D conditions. The allowable bearing stress for pinned joints is limited to $2.1S_u$ per F-1336 [2.2]. Therefore, the allowable bearing stress in the spacer disc is 166.5 ksi at 600°F. The minimum margin of safety for bearing stress in the spacer disc due to the cold flatside 30° impact is:

M.S. = (166.5/7.1) - 1

= +22.5

The maximum gap separation is approximately 0.43 inches, occurring near the 74° azimuth. This gap separation consists of 0.38 inches due to the nominal diametrical gap existing between the spacer discs and DSC shell plus 0.05 inches due to deformation of the spacer disc.

The 20 highest stress intensities at the spacer disc middle, top, and bottom fibers resulting from the conservative loads used for the flatside 30° impact are shown in Table 2.7.6-12, Table 2.7.6-13, and Table 2.7.6-14, respectively. In addition, the ligament stresses at the node locations shown in Figure 2.7.6-14 are presented in Table 2.7.6-11.

The maximum primary membrane stress intensity, resulting from the cold flatside 30° impact is 48.0 ksi. The allowable service level D primary membrane stress intensity is 55.5 ksi. The minimum margin of safety for primary membrane stress intensity due to the oblique flatside 30° impact is:

M.S. = (55.5/48.0) - 1

= +0.16

The maximum membrane plus bending stress intensity, resulting from the cold flatside 30° impact is 74.6 ksi. The allowable service level D primary membrane plus bending stress intensity is 79.3 ksi. The minimum margin of safety for membrane plus bending stress intensity due to the flatside 30° primary impact is:

M.S. = (79.3/74.6) - 1

= +0.06

Therefore, the spacer disc meets the acceptance criteria for the flatside 30° impact condition.

2.7.6.1.1.4.1.3 Flatside Slapdown Impact Results

The equivalent static g-loads used in the analysis of the flatside slapdown impact are 215.0 kips tangentially (in-plane) and 12.7 g (5.4 kips) longitudinally. As shown in Table 2.7.6-3, these loads are 15% and 88% greater than the calculated values for the raised spacer disc locations shown in Figure 2.7.6-1. Therefore, these loads are conservatively used for calculating the spacer disc stresses due to the flatside slapdown. The total reaction loads in the longitudinal and tangential directions from the finite element analysis of the cold flatside slapdown impact are 5.4 kips and 214.6 kips, respectively. The tangential reaction loads from the finite element solution are less than 0.3% different from the applied spacer disc loads. Therefore, the spacer disc is in static equilibrium for the cold flatside slapdown impact condition.

Gap elements are used to model the interaction between the spacer disc, DSC shell, and cask inner shell. The gap element loads and gap sizes resulting from the cold flatside slapdown impact condition are shown in Figure 2.7.6-13. The results show that the spacer disc contact angle resulting from the cold flatside slapdown impact is approximately 85°. The gap element forces are highest directly below the outer corner of the bottom fuel cell (i.e. -70° azimuth). This is due to the relatively rigid solid portion of the spacer disc just outboard of the two centermost columns of fuel cells. The bearing stresses at the edge of the spacer disc are calculated by dividing the gap forces by the bearing area tributary to each gap element. The gap force corresponding to the location of the highest bearing stress is 8.84 kips. The tributary area of the gap element is 1.100 square inches. Therefore, the maximum bearing stress on the spacer disc due to the edge reactions is:

$$f_p = 8.84/1.10$$

$$= 8.0 \text{ ksi}$$

Per F-1332.3 of the ASME Code [2.2], bearing stresses need only be considered for pinned or bolted joints for Service Level D conditions. The allowable bearing stress for pinned joints is limited to $2.1S_u$ per F-1336 [2.2]. Therefore, the allowable bearing stress in the spacer disc is 166.5 ksi at 600°F. The minimum margin of safety for bearing stress in the spacer disc due to the cold flatside slapdown impact is:

M.S. = (166.5/8.4) - 1

= +18.8

The maximum gap separation is approximately 0.44 inches, occurring near the 74° azimuth. This gap separation consists of 0.38 inches due to the nominal diametrical gap existing between the spacer discs and DSC shell plus 0.06 inches due to deformation of the spacer disc.

The 20 highest stress intensities in the most heavily loaded spacer disc at the middle, top, and bottom fibers resulting from the conservative loads used for the flatside slapdown impact are presented in Table 2.7.6-16, Table 2.7.6-17, and Table 2.7.6-18, respectively. In addition, the ligament stresses at the node locations shown in Figure 2.7.6-14 are presented for flatside slapdown impact in Table 2.7.6-15.

The maximum primary membrane stress intensity, resulting from the cold flatside slapdown, is 54.5 ksi. The allowable service level D primary membrane stress intensity is 55.5 ksi. The minimum margin of safety for primary membrane stress intensity due to the oblique flatside slapdown impact is:

M.S. = (55.5/54.5) - 1

= +0.02

The maximum membrane plus bending stress intensity, resulting from the cold flatside slapdown, is 76.9 ksi. The allowable service level D primary membrane plus bending stress intensity is 79.3 ksi. The minimum margin of safety for membrane plus bending stress intensity due to the flatside slapdown impact is:

M.S. = (79.3/76.9) - 1

= +0.03

The maximum shear stresses in the spacer disc occur close to the perimeter near the impact location. The average shear across the critical section (nodes 1287, 1307, and 1290) due to the

flatside slapdown is approximately 18 ksi. The allowable average shear stress for accident conditions is limited to $0.42S_u$. Therefore, the allowable average shear stress for ASME SA-537, Class 2 carbon steel at 600°F is 33.3 ksi. The margin of safety against shear stress for the flatside slapdown is:

$$\begin{aligned} M.S. &= (33.3/18) - 1 \\ &= +0.85 \end{aligned}$$

Therefore, the spacer disc meets the acceptance criteria for the flatside slapdown impact condition.

Component	Dead Load		60° Drop
F_P, FC Spacer Disk	425 #	--	17.7 k
F_F, Fuel	10.84 lb/in	1821. #	75.9 k
F_{GS}, Guide Sleeve	1.70 lb/in	295.8 #	12.3 k
$F_{Applied}$, Total Applied Load			106. k
$F_{Reaction}$, ANSYS Reaction Load*2			106. k
Ratio ($F_{Applied}/F_{Reaction}$)			1.00

Notes: disctabl.xls, flat 60

1. Fuel & Guide Sleeve load based on 24 fuel elements and 7" disk spacing.
2. Acceleration for 60 Degree Drop, 41.7 g.

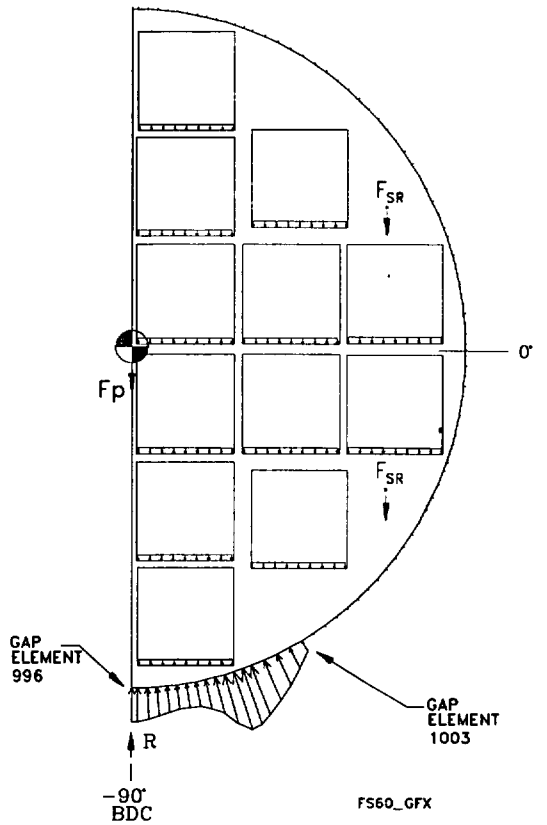

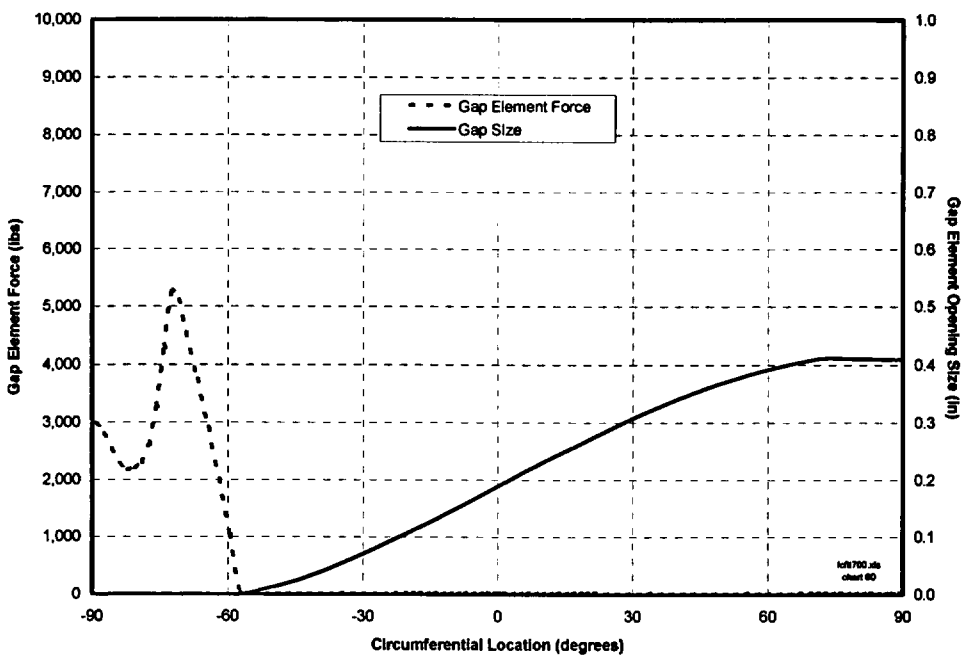

Figure 2.7.6-11
Gap Element Behavior for Flatside 60° Impact

Table 2.7.6-7
FC Spacer Disc Ligament S.I. - Flatside 60° Impact

Node	Stress Components (ksi)						SINT	Stress Type	Stress Limit	Margin of Safety
	SX	SY	SZ	SXY	SYZ	SXZ				
951	13.2	-18.7	0.0	0.9	0.0	0.0	31.9	P_m	55.5	74%
844	6.9	-16.1	0.0	0.7	0.0	0.0	23.0	P_m	55.5	142%
762	5.8	-9.7	0.0	0.8	0.0	0.0	15.6	P_m	55.5	256%
1169	-10.3	-12.3	0.0	1.9	0.0	0.0	13.5	P_m	55.5	312%
1	2.2	-11.1	0.0	0.3	0.0	0.0	13.3	P_m	55.5	317%
855	5.2	-6.7	0.0	0.7	0.0	0.0	12.0	P_m	55.5	361%
1098	6.5	-5.4	0.0	-0.9	0.0	0.0	12.0	P_m	55.5	362%
26	1.9	-8.0	0.0	1.4	0.0	0.0	10.3	P_m	55.5	439%
190	0.6	-7.8	0.0	0.6	0.0	0.0	8.5	P_m	55.5	Large
446	-6.0	-0.8	0.0	-0.4	0.0	0.0	6.0	P_m	55.5	Large
108	-3.8	-5.5	0.0	-0.5	0.0	0.0	5.6	P_m	55.5	Large
369	-2.1	-4.3	0.0	1.1	0.0	0.0	4.7	P_m	55.5	Large
792	-2.1	-3.3	0.0	0.9	0.0	0.0	3.7	P_m	55.5	Large
50	0.9	-1.9	0.0	-0.4	0.0	0.0	3.0	P_m	55.5	Large
380	-1.8	0.8	0.0	-0.2	0.0	0.0	2.7	P_m	55.5	Large
201	-0.1	-1.7	0.0	1.0	0.0	0.0	2.5	P_m	55.5	Large
138	-0.4	0.2	0.0	0.3	0.0	0.0	0.8	P_m	55.5	Large
53	0.2	0.4	0.0	0.2	0.0	0.0	0.5	P_m	55.5	Large

Notes:
(1) All stress results are reported in units of ksi.
(2) All spacer disc ligament stresses are conservatively classified as primary membrane. The allowable primary membrane stress intensities for ASME SA-537, Class 2 carbon steel at 600°F is 55.5 ksi..
(3) The locations of the reported spacer disc ligament stresses are shown in Figure 2.7.6-14.

Table 2.7.6-8
FC Spacer Disc Top 20 S.I. (Middle Fiber) - Flatside 60° Impact

Node	Stress Components (ksi)						SINT	Stress Type	Stress Limit	Margin of Safety
	SX	SY	SZ	SXY	SYZ	SXZ				
1189	-38.3	-28.4	0.0	-9.5	0.0	0.0	44.0	$P_l + P_b$	79.3	80%
1291	-40.5	-3.0	0.0	-10.3	0.0	0.0	43.2	$P_l + P_b$	79.3	84%
1292	-41.4	-3.1	0.0	-7.6	0.0	0.0	42.8	$P_l + P_b$	79.3	85%
1293	-37.3	-2.0	0.0	-5.3	0.0	0.0	38.1	$P_l + P_b$	79.3	108%
1287	-27.3	3.2	0.0	-10.4	0.0	0.0	36.9	$P_l + P_b$	79.3	115%
1088	34.8	1.0	0.0	-2.3	0.0	0.0	35.0	$P_l + P_b$	79.3	127%
941	23.3	-11.1	0.0	-0.1	0.0	0.0	34.4	$P_l + P_b$	79.3	130%
1294	-32.5	-1.7	0.0	-3.3	0.0	0.0	32.8	$P_l + P_b$	79.3	141%
951	13.2	-18.7	0.0	0.9	0.0	0.0	31.9	P_m	55.5	74%
1191	0.6	-24.8	0.0	-7.0	0.0	0.0	29.0	$P_l + P_b$	79.3	174%
1087	9.3	-19.2	0.0	2.3	0.0	0.0	28.9	P_m	55.5	92%
731	19.1	-9.1	0.0	-0.5	0.0	0.0	28.3	$P_l + P_b$	79.3	180%
1307	-20.3	-1.7	0.0	-10.6	0.0	0.0	28.2	P_m	55.5	97%
1295	-27.5	-1.4	0.0	-1.7	0.0	0.0	27.6	$P_l + P_b$	79.3	187%
741	12.0	-15.1	0.0	0.3	0.0	0.0	27.2	P_m	55.5	104%
370	-25.1	1.3	0.0	-1.8	0.0	0.0	26.6	$P_l + P_b$	79.3	198%
845	26.3	0.8	0.0	-1.9	0.0	0.0	26.4	$P_l + P_b$	79.3	200%
1102	25.7	-0.2	0.0	0.1	0.0	0.0	26.0	$P_l + P_b$	79.3	205%
1103	24.8	-0.2	0.0	-0.3	0.0	0.0	25.0	$P_l + P_b$	79.3	217%
1290	-16.7	-6.5	0.0	-10.7	0.0	0.0	23.7	$P_l + P_b$	79.3	235%

Notes:
(1) All stress results are reported in units of ksi.
(2) The allowable primary membrane and membrane plus bending stress intensities are 55.5 ksi and 79.3 ksi, respectively, for ASME SA-537, Class 2 carbon steel at 600°F.
(23) The locations of the top 20 spacer disc middle fiber stress intensities are shown in Figure 2.7.6-15.

Table 2.7.6-9
FC Spacer Disc Top 20 S.I. (Top Fiber) - Flatside 60° Impact

Node	Stress Components (ksi)						SINT	Stress Type	Stress Limit	Margin of Safety
	SX	SY	SZ	SXY	SYZ	SXZ				
1189	-47.3	-29.8	0.0	-12.7	0.0	0.0	54.0	$P_l + P_b$	79.3	47%
1291	-48.3	-2.9	0.0	-11.3	0.0	0.0	50.9	$P_l + P_b$	79.3	56%
1292	-48.5	-3.1	0.0	-8.4	0.0	0.0	50.0	$P_l + P_b$	79.3	59%
1287	-35.9	3.4	0.0	-10.8	0.0	0.0	44.9	$P_l + P_b$	79.3	77%
1293	-43.9	-2.0	0.0	-6.0	0.0	0.0	44.8	$P_l + P_b$	79.3	77%
1294	-38.8	-1.7	0.0	-3.9	0.0	0.0	39.2	$P_l + P_b$	79.3	102%
1307	-29.9	-1.6	0.0	-11.4	0.0	0.0	36.4	$P_l + P_b$	79.3	118%
370	-34.2	1.2	0.0	-1.0	0.0	0.0	35.5	$P_l + P_b$	79.3	124%
1295	-33.7	-1.3	0.0	-2.2	0.0	0.0	33.8	$P_l + P_b$	79.3	134%
1290	-26.0	-6.2	0.0	-11.8	0.0	0.0	31.5	$P_l + P_b$	79.3	151%
1191	0.3	-24.8	0.0	-9.4	0.0	0.0	31.3	$P_l + P_b$	79.3	153%
191	-27.7	1.6	0.0	-1.9	0.0	0.0	29.6	$P_l + P_b$	79.3	168%
1296	-28.5	-1.4	0.0	-0.7	0.0	0.0	28.5	$P_l + P_b$	79.3	178%
1107	-24.3	3.0	0.0	-2.8	0.0	0.0	27.9	$P_l + P_b$	79.3	185%
941	17.9	-9.7	0.0	0.4	0.0	0.0	27.6	$P_l + P_b$	79.3	187%
385	-27.2	-0.1	0.0	0.2	0.0	0.0	27.2	$P_l + P_b$	79.3	192%
1306	-25.5	-2.9	0.0	-5.7	0.0	0.0	26.9	$P_l + P_b$	79.3	195%
384	-26.8	-0.1	0.0	0.7	0.0	0.0	26.8	$P_l + P_b$	79.3	196%
951	9.4	-17.0	0.0	0.9	0.0	0.0	26.4	$P_l + P_b$	79.3	200%
1087	6.5	-19.2	0.0	2.3	0.0	0.0	26.1	$P_l + P_b$	79.3	204%

Notes:

(1) All stress results are reported in units of ksi.

(2) All extreme fiber stress intensities are classified as membrane plus bending. The allowable membrane plus bending stress intensities is 79.3 ksi for ASME SA-537, Class 2 carbon steel at 600°F.

(3) The locations of the top 20 spacer disc top fiber stress intensities are shown in Figure 2.7.6-16.

Table 2.7.6-10
FC Spacer Disc Top 20 S.I. (Bottom Fiber) - Flatside 60° Impact

Node	Stress Components (ksi)						SINT	Stress Type	Stress Limit	Margin of Safety
	SX	SY	SZ	SXY	SYZ	SXZ				
1088	44.0	1.1	0.0	-1.5	0.0	0.0	44.0	$P_l + P_b$	79.3	80%
941	28.7	-12.5	0.0	-0.6	0.0	0.0	41.2	$P_l + P_b$	79.3	92%
951	16.9	-20.5	0.0	1.0	0.0	0.0	37.4	$P_l + P_b$	79.3	112%
731	25.0	-10.6	0.0	-1.5	0.0	0.0	35.8	$P_l + P_b$	79.3	122%
1292	-34.3	-3.2	0.0	-6.8	0.0	0.0	35.7	$P_l + P_b$	79.3	122%
845	35.5	0.9	0.0	-2.0	0.0	0.0	35.6	$P_l + P_b$	79.3	123%
1291	-32.7	-3.1	0.0	-9.3	0.0	0.0	35.4	$P_l + P_b$	79.3	124%
1189	-29.3	-27.0	0.0	-6.3	0.0	0.0	34.5	$P_l + P_b$	79.3	130%
1102	33.4	-0.2	0.0	0.6	0.0	0.0	33.7	$P_l + P_b$	79.3	135%
741	16.1	-17.3	0.0	0.3	0.0	0.0	33.4	$P_l + P_b$	79.3	137%
1103	33.0	-0.2	0.0	0.1	0.0	0.0	33.1	$P_l + P_b$	79.3	139%
1001	-22.0	-18.6	0.0	-12.1	0.0	0.0	32.5	$P_l + P_b$	79.3	144%
1087	12.2	-19.3	0.0	2.2	0.0	0.0	31.8	$P_l + P_b$	79.3	149%
1293	-30.7	-2.1	0.0	-4.6	0.0	0.0	31.4	$P_l + P_b$	79.3	153%
1101	30.3	0.0	0.0	1.0	0.0	0.0	30.3	$P_l + P_b$	79.3	162%
1287	-18.6	3.1	0.0	-10.0	0.0	0.0	29.5	$P_l + P_b$	79.3	169%
1104	28.8	-0.2	0.0	-0.3	0.0	0.0	29.0	$P_l + P_b$	79.3	174%
389	27.8	-0.7	0.0	-2.4	0.0	0.0	28.9	$P_l + P_b$	79.3	174%
1089	27.6	-0.4	0.0	-1.1	0.0	0.0	28.0	$P_l + P_b$	79.3	183%
1003	1.0	-18.8	0.0	-9.5	0.0	0.0	27.5	$P_l + P_b$	79.3	188%

Notes:

(1) All stress results are reported in units of ksi.

(2) All extreme fiber stress intensities are classified as membrane plus bending. The allowable membrane plus bending stress intensities is 79.3 ksi for ASME SA-537, Class 2 carbon steel at 600°F..

(3) The locations of the top 20 spacer disc bottom fiber stress intensities are shown in Figure 2.7.6-17.

Component	Dead Load		30° Drop
F_P, FC Spacer Disk	425 #	--	30.4 k
F_F, Fuel	10.84 lb/in	1821. #	130. k
F_{GS}, Guide Sleeve	1.70 lb/in	286. #	20.4 k
$F_{Applied}$, Total Applied Load			181. k
$F_{Reaction}$, ANSYS Reaction Load*2			181. k
Ratio ($F_{Applied}/F_{Reaction}$)			1.00

Notes: disctabl.xls, flat 30

1. Fuel & Guide Sleeve load based on 24 fuel elements and 7.0" disk spacing.
2. Acceleration for 30 Degree Drop, 71.5 g.

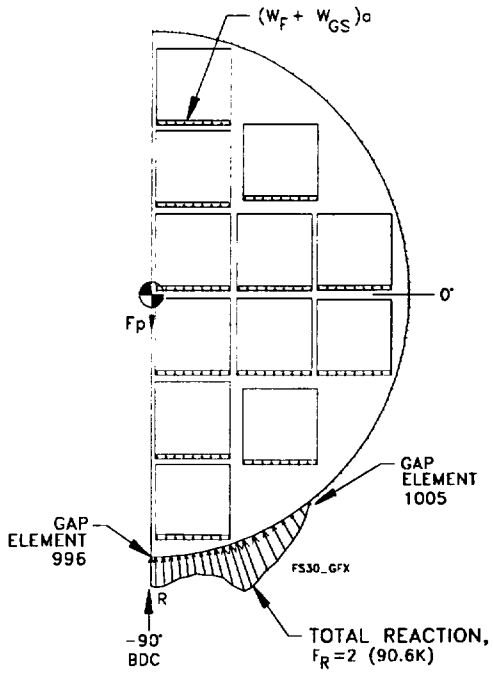

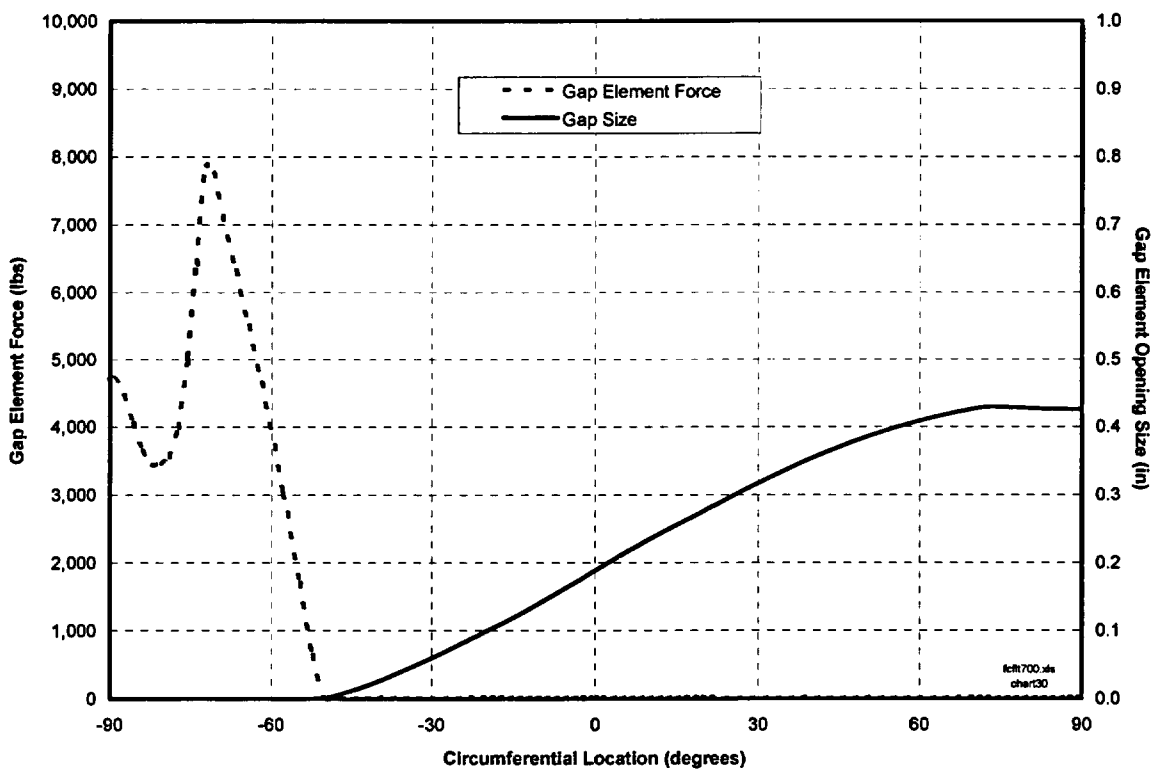

Figure 2.7.6-12
Gap Element Behavior for Flatside 30° Impact

Table 2.7.6-11
FC Spacer Disc Ligament S.I. - Flatside 30° Primary Impact

Node	Stress Components (ksi)						SINT	Stress Type	Stress Limit	Margin of Safety
	SX	SY	SZ	SXY	SYZ	SXZ				
951	18.6	-29.3	0.0	1.7	0.0	0.0	48.0	P_m	55.5	16%
844	10.8	-25.3	0.0	1.0	0.0	0.0	36.2	P_m	55.5	53%
762	10.8	-17.1	0.0	1.0	0.0	0.0	27.9	P_m	55.5	99%
1169	-18.7	-19.3	0.0	3.2	0.0	0.0	22.1	P_m	55.5	151%
1	3.5	-17.2	0.0	0.4	0.0	0.0	20.8	P_m	55.5	168%
855	8.3	-12.0	0.0	0.9	0.0	0.0	20.4	P_m	55.5	172%
26	3.3	-14.0	0.0	1.7	0.0	0.0	17.7	P_m	55.5	214%
1098	6.8	-9.3	0.0	-1.2	0.0	0.0	16.3	P_m	55.5	240%
190	0.9	-11.9	0.0	0.9	0.0	0.0	12.9	P_m	55.5	329%
108	-7.5	-9.6	0.0	-1.1	0.0	0.0	10.0	P_m	55.5	453%
792	-3.1	-6.5	0.0	1.6	0.0	0.0	7.2	P_m	55.5	Large
446	-7.1	-1.0	0.0	-0.5	0.0	0.0	7.1	P_m	55.5	Large
369	-3.0	-6.2	0.0	1.7	0.0	0.0	6.9	P_m	55.5	Large
50	1.7	-4.1	0.0	-0.5	0.0	0.0	6.0	P_m	55.5	Large
201	-0.1	-2.9	0.0	1.5	0.0	0.0	4.1	P_m	55.5	Large
380	-2.3	1.5	0.0	-0.3	0.0	0.0	3.8	P_m	55.5	Large
138	-1.1	-0.5	0.0	0.3	0.0	0.0	1.3	P_m	55.5	Large
53	0.4	0.6	0.0	0.3	0.0	0.0	0.8	P_m	55.5	Large

Notes:
(1) All stress results are reported in units of ksi.
(2) All spacer disc ligament stress intensities are conservatively classified as primary membrane. The allowable primary membrane stress intensities is 55.5 ksi for ASME SA-537, Class 2 carbon steel at 600°F.
(3) The locations of the reported spacer disc ligament stresses are shown in Figure 2.7.6-14.

Table 2.7.6-12
FC Spacer Disc Top 20 S.I. (Middle Fiber) - Flatside 30° Primary Impact

Node	Stress Components (ksi)						SINT	Stress Type	Stress Limit	Margin of Safety
	SX	SY	SZ	SXY	SYZ	SXZ				
1189	-58.6	-39.9	0.0	-14.6	0.0	0.0	66.6	$P_l + P_b$	79.3	19%
1291	-61.1	-4.5	0.0	-15.3	0.0	0.0	65.0	$P_l + P_b$	79.3	22%
1292	-61.6	-4.7	0.0	-11.2	0.0	0.0	63.8	$P_l + P_b$	79.3	24%
1287	-43.4	4.3	0.0	-15.2	0.0	0.0	56.6	$P_l + P_b$	79.3	40%
1293	-55.1	-3.1	0.0	-7.7	0.0	0.0	56.2	$P_l + P_b$	79.3	41%
941	33.2	-17.8	0.0	0.0	0.0	0.0	50.9	$P_l + P_b$	79.3	56%
1088	48.5	1.6	0.0	-3.7	0.0	0.0	48.8	$P_l + P_b$	79.3	63%
1294	-47.7	-2.6	0.0	-4.7	0.0	0.0	48.2	$P_l + P_b$	79.3	65%
951	18.6	-29.3	0.0	1.7	0.0	0.0	48.0	P_m	55.5	16%
1307	-33.4	-2.8	0.0	-15.7	0.0	0.0	43.9	P_m	55.5	27%
731	29.0	-14.3	0.0	-0.8	0.0	0.0	43.4	$P_l + P_b$	79.3	83%
741	18.4	-23.6	0.0	0.5	0.0	0.0	42.1	P_m	55.5	32%
1087	11.5	-29.9	0.0	3.4	0.0	0.0	41.9	P_m	55.5	33%
370	-38.2	2.0	0.0	-3.0	0.0	0.0	40.6	$P_l + P_b$	79.3	95%
1295	-40.0	-2.1	0.0	-2.2	0.0	0.0	40.1	$P_l + P_b$	79.3	98%
1191	0.9	-33.2	0.0	-10.3	0.0	0.0	39.8	$P_l + P_b$	79.3	99%
845	38.9	1.3	0.0	-3.1	0.0	0.0	39.1	$P_l + P_b$	79.3	103%
1290	-28.3	-9.8	0.0	-16.1	0.0	0.0	37.6	$P_l + P_b$	79.3	111%
1102	37.0	-0.4	0.0	0.4	0.0	0.0	37.4	$P_l + P_b$	79.3	112%
1103	36.8	-0.3	0.0	-0.4	0.0	0.0	37.1	$P_l + P_b$	79.3	114%

Notes:
(1) All stress results are reported in units of ksi.
(2) The allowable primary membrane and membrane plus bending stress intensities are 55.5 ksi and 79.3 ksi, respectively, for ASME SA-537, Class 2 carbon steel at 600°F.
(23) The locations of the top 20 spacer disc middle fiber stress intensities are shown in Figure 2.7.6-18.

Table 2.7.6-13
Spacer Disc Top 20 S.I. (Top Fiber) - Flatside 30° Primary Impact

Node	Stress Components (ksi)						SINT	Stress Type	Stress Limit	Margin of Safety
	SX	SY	SZ	SXY	SYZ	SXZ				
1189	-65.8	-41.0	0.0	-17.2	0.0	0.0	74.6	$P_l + P_b$	79.3	6%
1291	-67.3	-4.5	0.0	-16.0	0.0	0.0	71.2	$P_l + P_b$	79.3	11%
1292	-67.3	-4.6	0.0	-11.8	0.0	0.0	69.5	$P_l + P_b$	79.3	14%
1287	-50.3	4.4	0.0	-15.6	0.0	0.0	63.0	$P_l + P_b$	79.3	26%
1293	-60.4	-3.1	0.0	-8.2	0.0	0.0	61.6	$P_l + P_b$	79.3	29%
1294	-52.7	-2.6	0.0	-5.1	0.0	0.0	53.3	$P_l + P_b$	79.3	49%
1307	-41.0	-2.7	0.0	-16.4	0.0	0.0	50.5	$P_l + P_b$	79.3	57%
370	-45.5	1.9	0.0	-2.4	0.0	0.0	47.6	$P_l + P_b$	79.3	67%
941	28.8	-16.6	0.0	0.4	0.0	0.0	45.5	$P_l + P_b$	79.3	74%
1295	-44.9	-2.1	0.0	-2.6	0.0	0.0	45.1	$P_l + P_b$	79.3	76%
1290	-35.7	-9.6	0.0	-17.0	0.0	0.0	44.1	$P_l + P_b$	79.3	80%
951	15.6	-27.9	0.0	1.6	0.0	0.0	43.6	$P_l + P_b$	79.3	82%
1191	0.7	-33.2	0.0	-12.2	0.0	0.0	41.8	$P_l + P_b$	79.3	90%
1088	41.2	1.5	0.0	-4.3	0.0	0.0	41.7	$P_l + P_b$	79.3	90%
1087	9.2	-29.8	0.0	3.5	0.0	0.0	39.6	$P_l + P_b$	79.3	100%
1107	-33.8	4.8	0.0	-4.3	0.0	0.0	39.5	$P_l + P_b$	79.3	101%
385	-38.0	-0.2	0.0	0.1	0.0	0.0	38.0	$P_l + P_b$	79.3	109%
191	-34.6	2.5	0.0	-3.0	0.0	0.0	37.5	$P_l + P_b$	79.3	111%
731	24.3	-13.1	0.0	-0.1	0.0	0.0	37.4	$P_l + P_b$	79.3	112%
741	15.2	-21.9	0.0	0.5	0.0	0.0	37.1	$P_l + P_b$	79.3	114%

Notes:
(1) All stress results are reported in units of ksi.
(2) All extreme fiber stress intensities are classified as membrane plus bending. The allowable membrane plus bending stress intensities is 79.3 ksi for ASME SA-537, Class 2 carbon steel at 600°F.
(3) The locations of the top 20 spacer disc top fiber stress intensities are shown in Figure 2.7.6-19.

Table 2.7.6-14
Spacer Disc Top 20 S.I. (Bottom Fiber) - Flatside 30° Primary Impact

Node	Stress Components (ksi)						SINT	Stress Type	Stress Limit	Margin of Safety
	SX	SY	SZ	SXY	SYZ	SXZ				
1291	-54.9	-4.6	0.0	-14.5	0.0	0.0	58.8	$P_l + P_b$	79.3	35%
1189	-51.4	-38.8	0.0	-12.0	0.0	0.0	58.6	$P_l + P_b$	79.3	35%
1292	-56.0	-4.7	0.0	-10.5	0.0	0.0	58.1	$P_l + P_b$	79.3	37%
941	37.5	-18.9	0.0	-0.4	0.0	0.0	56.4	$P_l + P_b$	79.3	41%
1088	55.8	1.7	0.0	-3.1	0.0	0.0	56.0	$P_l + P_b$	79.3	42%
951	21.6	-30.7	0.0	1.7	0.0	0.0	52.4	$P_l + P_b$	79.3	51%
1293	-49.8	-3.1	0.0	-7.1	0.0	0.0	50.9	$P_l + P_b$	79.3	56%
1287	-36.5	4.2	0.0	-14.9	0.0	0.0	50.4	$P_l + P_b$	79.3	57%
731	33.7	-15.5	0.0	-1.6	0.0	0.0	49.4	$P_l + P_b$	79.3	61%
741	21.7	-25.4	0.0	0.5	0.0	0.0	47.1	$P_l + P_b$	79.3	68%
845	46.3	1.4	0.0	-3.2	0.0	0.0	46.5	$P_l + P_b$	79.3	71%
1087	13.7	-29.9	0.0	3.4	0.0	0.0	44.2	$P_l + P_b$	79.3	80%
1103	43.3	-0.3	0.0	0.0	0.0	0.0	43.6	$P_l + P_b$	79.3	82%
1102	43.2	-0.4	0.0	0.8	0.0	0.0	43.6	$P_l + P_b$	79.3	82%
1294	-42.6	-2.6	0.0	-4.2	0.0	0.0	43.1	$P_l + P_b$	79.3	84%
844	13.7	-25.9	0.0	1.0	0.0	0.0	39.6	$P_l + P_b$	79.3	100%
389	36.7	-1.3	0.0	-3.8	0.0	0.0	38.8	$P_l + P_b$	79.3	104%
1001	-24.4	-26.3	0.0	-12.9	0.0	0.0	38.3	$P_l + P_b$	79.3	107%
1191	1.1	-33.2	0.0	-8.4	0.0	0.0	38.2	$P_l + P_b$	79.3	108%
1307	-25.7	-2.8	0.0	-15.0	0.0	0.0	37.8	$P_l + P_b$	79.3	110%

Notes:

(1) All stress results are reported in units of ksi.

(2) All extreme fiber stress intensities are classified as membrane plus bending. The allowable membrane plus bending stress intensities is 79.3 ksi for ASME SA-537, Class 2 carbon steel at 600°F.

(3) The locations of the top 20 spacer disc bottom fiber stress intensities are shown in Figure 2.7.6-20.

Component	Dead Load		Slapdown
F_P, FC Spacer Disk	425 #	--	36.0 k
F_F, Fuel	10.84 lb/in	1821. #	154. k
F_{GS}, Guide Sleeve	1.70 lb/in	286. #	24.2 k
$F_{Applied}$, Total Applied Load			214. k
$F_{Reaction}$, ANSYS Reaction Load*2			215. k
Ratio ($F_{Applied}/F_{Reaction}$)			1.00

Notes: disctabl.xls, flat slap

1. Fuel & Guide Sleeve load based on 24 fuel elements and 7.0 inch disk spacing.
2. Acceleration for Flatside Slapdown, 84.7 g.

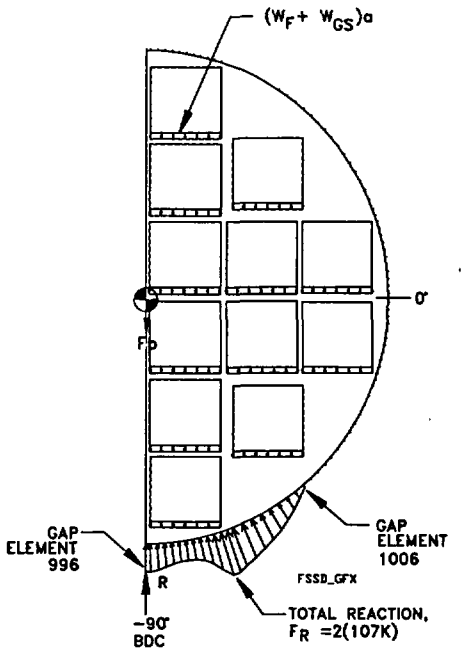

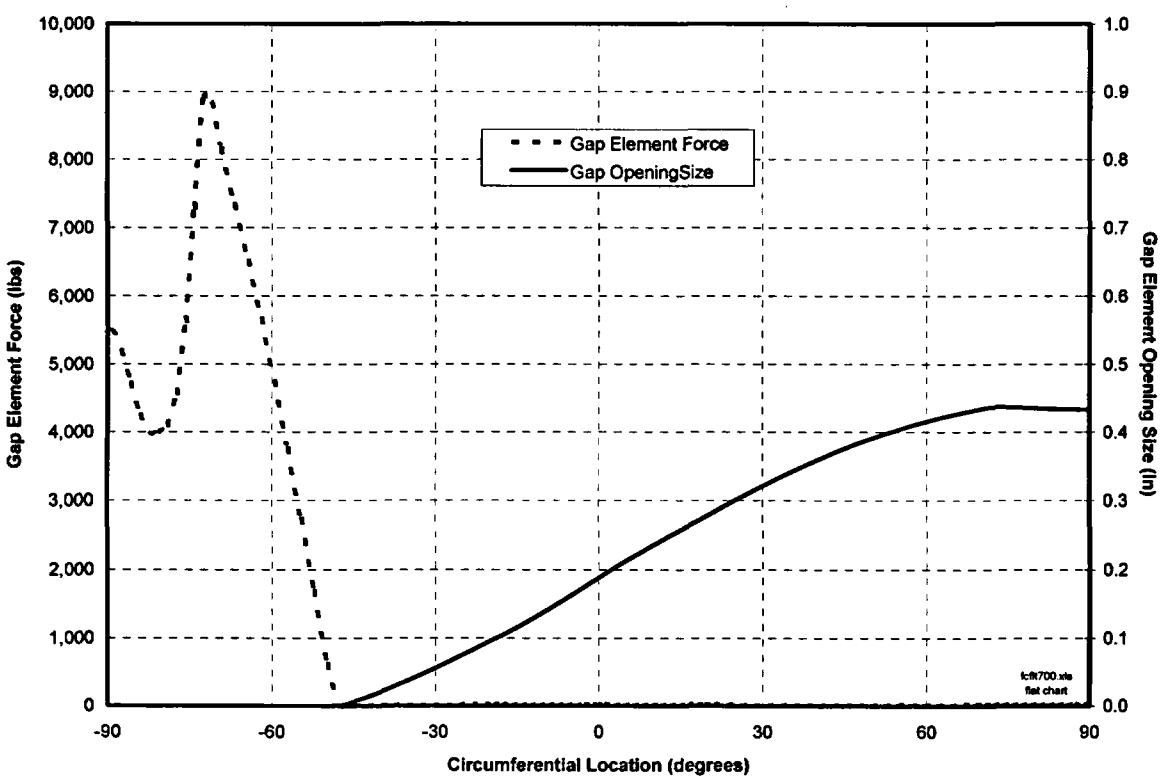

Figure 2.7.6-13
Gap Element Behavior for Flatside Slapdown

Table 2.7.6-15
FC Spacer Disc Ligament S.I. - Flatside Slapdown

Node	Stress Components (ksi)						SINT	Stress Type	Stress Limit	Margin of Safety
	SX	SY	SZ	SXY	SYZ	SXZ				
951	20.6	-33.7	0.0	2.0	0.0	0.0	54.5	P_m	55.5	2%
844	12.4	-29.2	0.0	1.1	0.0	0.0	41.7	P_m	55.5	33%
762	12.9	-20.2	0.0	1.1	0.0	0.0	33.2	P_m	55.5	67%
1169	-22.3	-22.3	0.0	3.7	0.0	0.0	25.9	P_m	55.5	114%
1	4.1	-19.9	0.0	0.4	0.0	0.0	23.9	P_m	55.5	132%
855	9.5	-14.3	0.0	0.9	0.0	0.0	23.9	P_m	55.5	132%
26	3.9	-16.6	0.0	1.9	0.0	0.0	20.8	P_m	55.5	166%
1098	6.3	-10.9	0.0	-1.2	0.0	0.0	17.4	P_m	55.5	220%
190	1.1	-13.6	0.0	1.0	0.0	0.0	14.8	P_m	55.5	274%
108	-9.1	-11.2	0.0	-1.4	0.0	0.0	11.9	P_m	55.5	365%
792	-3.4	-8.1	0.0	2.0	0.0	0.0	8.8	P_m	55.5	Large
369	-3.2	-7.0	0.0	2.0	0.0	0.0	7.8	P_m	55.5	Large
50	2.1	-5.3	0.0	-0.6	0.0	0.0	7.5	P_m	55.5	Large
446	-7.4	-1.1	0.0	-0.6	0.0	0.0	7.5	P_m	55.5	Large
201	0.0	-3.4	0.0	1.7	0.0	0.0	4.8	P_m	55.5	Large
380	-2.4	1.7	0.0	-0.4	0.0	0.0	4.2	P_m	55.5	Large
138	-1.6	-0.9	0.0	0.3	0.0	0.0	1.7	P_m	55.5	Large
53	0.5	0.7	0.0	0.4	0.0	0.0	1.0	P_m	55.5	Large

Notes:
(1) All stress results are reported in units of ksi.
(2) All spacer disc ligament stress intensities are conservatively classified as primary membrane. The allowable primary membrane stress intensities is 55.5 ksi for ASME SA-537, Class 2 carbon steel at 600°F.
(3) The locations of the reported spacer disc ligament stresses are shown in Figure 2.7.6-14.

Table 2.7.6-16
FC Spacer Disc Top 20 S.I. (Middle Fiber) - Flatside Slapdown

Node	Stress Components (ksi)						SINT	Stress Type	Stress Limit	Margin of Safety
	SX	SY	SZ	SXY	SYZ	SXZ				
1189	-67.0	-44.6	0.0	-16.7	0.0	0.0	75.9	$P_l + P_b$	79.3	4%
1291	-69.5	-5.2	0.0	-17.3	0.0	0.0	73.9	$P_l + P_b$	79.3	7%
1292	-69.9	-5.3	0.0	-12.6	0.0	0.0	72.3	$P_l + P_b$	79.3	10%
1287	-50.2	4.8	0.0	-17.2	0.0	0.0	64.9	$P_l + P_b$	79.3	22%
1293	-62.5	-3.5	0.0	-8.7	0.0	0.0	63.7	$P_l + P_b$	79.3	24%
941	36.8	-20.6	0.0	0.1	0.0	0.0	57.4	$P_l + P_b$	79.3	38%
1294	-53.9	-3.0	0.0	-5.3	0.0	0.0	54.5	$P_l + P_b$	79.3	46%
951	20.6	-33.7	0.0	2.0	0.0	0.0	54.5	P_m	55.5	2%
1088	53.4	1.9	0.0	-4.3	0.0	0.0	53.8	$P_l + P_b$	79.3	47%
1307	-38.8	-3.2	0.0	-17.8	0.0	0.0	50.4	P_m	55.5	10%
731	33.2	-16.6	0.0	-1.0	0.0	0.0	49.8	$P_l + P_b$	79.3	59%
741	21.1	-27.3	0.0	0.5	0.0	0.0	48.4	P_m	55.5	15%
1087	11.7	-34.3	0.0	3.9	0.0	0.0	46.7	P_m	55.5	19%
370	-43.6	2.3	0.0	-3.5	0.0	0.0	46.4	$P_l + P_b$	79.3	71%
1295	-45.1	-2.5	0.0	-2.5	0.0	0.0	45.3	$P_l + P_b$	79.3	75%
845	44.0	1.5	0.0	-3.6	0.0	0.0	44.4	$P_l + P_b$	79.3	79%
1191	1.0	-36.5	0.0	-11.7	0.0	0.0	44.2	$P_l + P_b$	79.3	79%
1290	-33.0	-11.1	0.0	-18.4	0.0	0.0	43.4	$P_l + P_b$	79.3	83%
844	12.4	-29.2	0.0	1.1	0.0	0.0	41.7	P_m	55.5	33%
1103	41.2	-0.4	0.0	-0.4	0.0	0.0	41.6	$P_l + P_b$	79.3	91%

Notes:

(1) All stress results are reported in units of ksi.

(2) The allowable primary membrane and membrane plus bending stress intensities are 55.5 ksi and 79.3 ksi, respectively, for ASME SA-537, Class 2 carbon steel at 600°F.

(3) The locations of the top 20 spacer disc middle fiber stress intensities are shown in Figure 2.7.6-21.

Table 2.7.6-17
FC Spacer Disc Top 20 S.I. (Top Fiber) - Flatside Slapdown

Node	Stress Components (ksi)						SINT	Stress Type	Stress Limit	Margin of Safety
	SX	SY	SZ	SXY	SYZ	SXZ				
1189	-70.5	-45.1	0.0	-17.9	0.0	0.0	79.8	$P_l + P_b + Q$	N/A	N/A
1291	-72.5	-5.1	0.0	-17.7	0.0	0.0	76.9	$P_l + P_b$	79.3	3%
1292	-72.7	-5.3	0.0	-13.0	0.0	0.0	75.1	$P_l + P_b$	79.3	6%
1287	-53.6	4.8	0.0	-17.4	0.0	0.0	68.0	$P_l + P_b$	79.3	17%
1293	-65.0	-3.5	0.0	-8.9	0.0	0.0	66.3	$P_l + P_b$	79.3	20%
1294	-56.4	-3.0	0.0	-5.5	0.0	0.0	56.9	$P_l + P_b$	79.3	39%
941	34.7	-20.1	0.0	0.3	0.0	0.0	54.8	$P_l + P_b$	79.3	45%
1307	-42.5	-3.2	0.0	-18.2	0.0	0.0	53.5	$P_l + P_b$	79.3	48%
951	19.1	-33.1	0.0	2.0	0.0	0.0	52.3	$P_l + P_b$	79.3	51%
1088	49.9	1.8	0.0	-4.6	0.0	0.0	50.3	$P_l + P_b$	79.3	58%
370	-47.2	2.2	0.0	-3.2	0.0	0.0	49.8	$P_l + P_b$	79.3	59%
1295	-47.5	-2.5	0.0	-2.7	0.0	0.0	47.7	$P_l + P_b$	79.3	66%
731	30.9	-16.0	0.0	-0.6	0.0	0.0	46.9	$P_l + P_b$	79.3	69%
1290	-36.6	-11.0	0.0	-18.8	0.0	0.0	46.5	$P_l + P_b$	79.3	71%
741	19.5	-26.4	0.0	0.5	0.0	0.0	46.0	$P_l + P_b$	79.3	72%
1087	10.6	-34.3	0.0	4.0	0.0	0.0	45.6	$P_l + P_b$	79.3	74%
1191	0.9	-36.5	0.0	-12.6	0.0	0.0	45.2	$P_l + P_b$	79.3	76%
1107	-35.8	5.5	0.0	-5.0	0.0	0.0	42.5	$P_l + P_b$	79.2	86%
845	40.5	1.5	0.0	-3.6	0.0	0.0	40.8	$P_l + P_b$	79.2	94%
385	-40.1	-0.3	0.0	-0.1	0.0	0.0	40.1	$P_l + P_b$	79.2	98%

Notes:

(1) All stress results are reported in units of ksi.

(2) All extreme fiber stress intensities are classified as membrane plus bending except as for node 1189 which is a peak stress occurring at the corner of the fuel cell opening. Secondary and peak stresses need not be considered for accident conditions. The allowable membrane plus bending stress intensities is 79.3 ksi for ASME SA-537, Class 2 carbon steel at 600°F.

(3) The locations of the top 20 spacer disc top fiber stress intensities are shown in Figure 2.7.6-22.

Table 2.7.6-18
FC Spacer Disc Top 20 S.I. (Bottom Fiber) - Flatside Slapdown

Node	Stress Components (ksi)						SINT	Stress Type	Stress Limit	Margin of Safety
	SX	SY	SZ	SXY	SYZ	SXZ				
1189	-63.5	-44.0	0.0	-15.5	0.0	0.0	72.1	$P_l + P_b$	79.3	10%
1291	-66.5	-5.2	0.0	-16.9	0.0	0.0	70.9	$P_l + P_b$	79.3	12%
1292	-67.2	-5.4	0.0	-12.3	0.0	0.0	69.6	$P_l + P_b$	79.3	14%
1287	-46.9	4.7	0.0	-17.1	0.0	0.0	61.9	$P_l + P_b$	79.3	28%
1293	-59.9	-3.6	0.0	-8.4	0.0	0.0	61.1	$P_l + P_b$	79.3	30%
941	38.9	-21.2	0.0	-0.1	0.0	0.0	60.1	$P_l + P_b$	79.3	32%
1088	56.9	1.9	0.0	-4.0	0.0	0.0	57.2	$P_l + P_b$	79.3	39%
951	22.0	-34.4	0.0	2.0	0.0	0.0	56.6	$P_l + P_b$	79.3	40%
731	35.4	-17.1	0.0	-1.4	0.0	0.0	52.7	$P_l + P_b$	79.3	51%
1294	-51.5	-3.0	0.0	-5.1	0.0	0.0	52.0	$P_l + P_b$	79.3	52%
741	22.7	-28.1	0.0	0.5	0.0	0.0	50.8	$P_l + P_b$	79.3	56%
845	47.6	1.5	0.0	-3.7	0.0	0.0	47.9	$P_l + P_b$	79.3	66%
1087	12.8	-34.3	0.0	3.9	0.0	0.0	47.8	$P_l + P_b$	79.3	66%
1307	-35.1	-3.3	0.0	-17.5	0.0	0.0	47.3	$P_l + P_b$	79.3	68%
1103	44.4	-0.4	0.0	-0.2	0.0	0.0	44.7	$P_l + P_b$	79.3	77%
1102	44.0	-0.4	0.0	0.7	0.0	0.0	44.4	$P_l + P_b$	79.3	78%
1191	1.1	-36.5	0.0	-10.8	0.0	0.0	43.4	$P_l + P_b$	79.3	83%
844	13.8	-29.5	0.0	1.1	0.0	0.0	43.4	$P_l + P_b$	79.3	83%
370	-40.1	2.3	0.0	-3.8	0.0	0.0	43.1	$P_l + P_b$	79.3	84%
1295	-42.8	-2.5	0.0	-2.3	0.0	0.0	42.9	$P_l + P_b$	79.3	85%

Notes:
(1) All stress results are reported in units of ksi.
(2) All extreme fiber stress intensities are classified as membrane plus bending. The allowable membrane plus bending stress intensities is 79.3 ksi for ASME SA-537, Class 2 carbon steel at 600°F.
(3) The locations of the top 20 spacer disc bottom fiber stress intensities due to the flatside slapdown impact are shown in Figure 2.7.6-23.

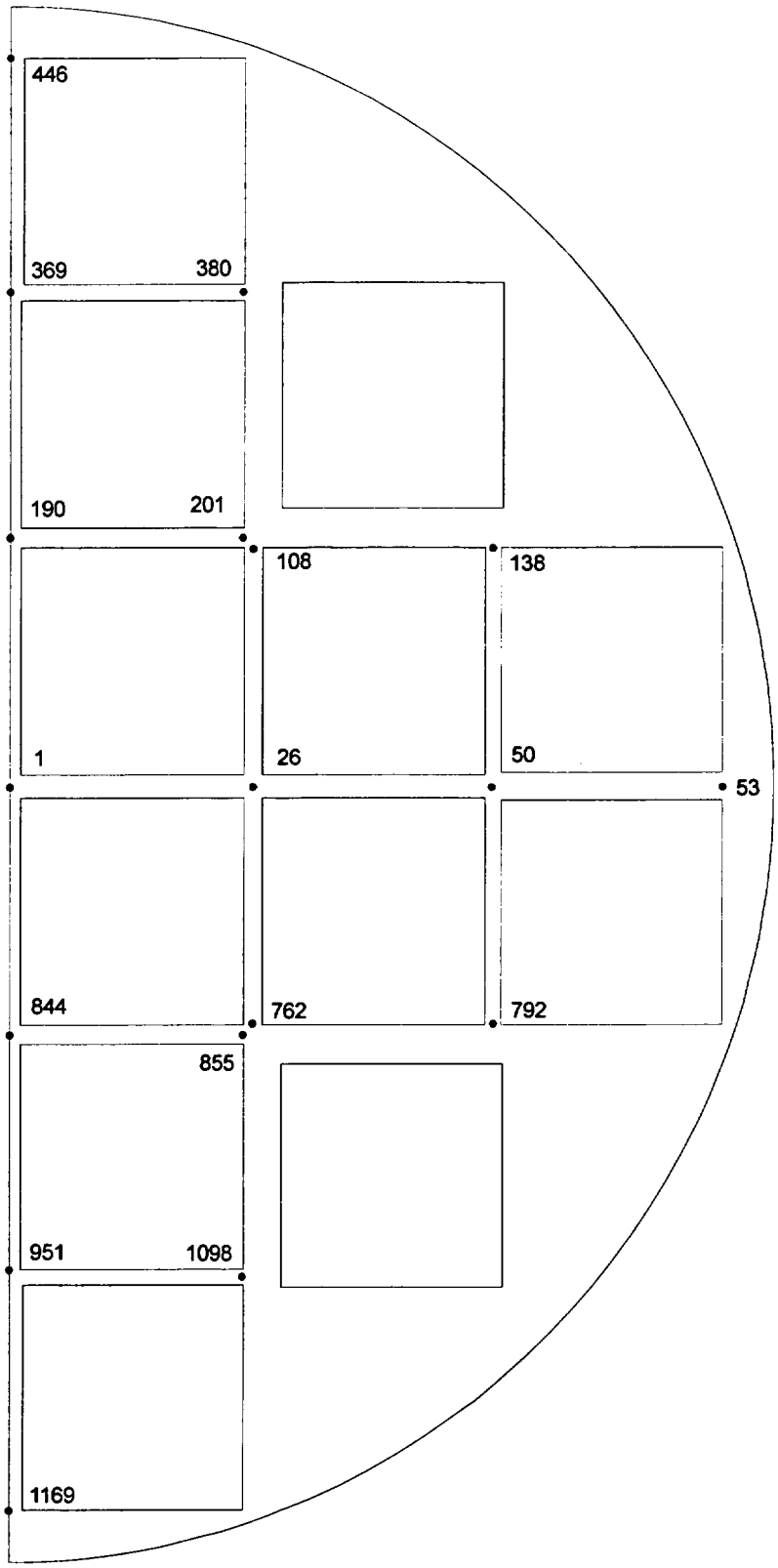

Figure 2.7.6-14
FC Spacer Disc 1/2 Symmetry Model Critical Ligament Node Locations

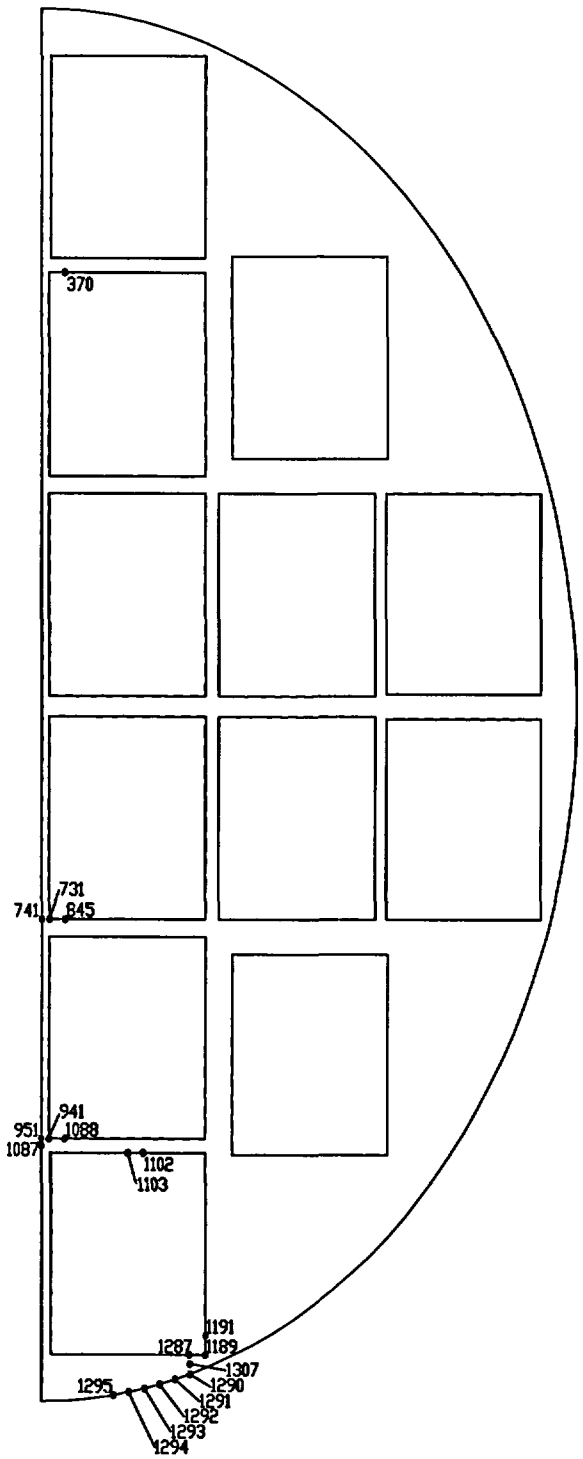

Figure 2.7.6-15
Location of Top 20 FC Spacer Disc S.I. (Middle Fiber) - Flatside 60° Impact

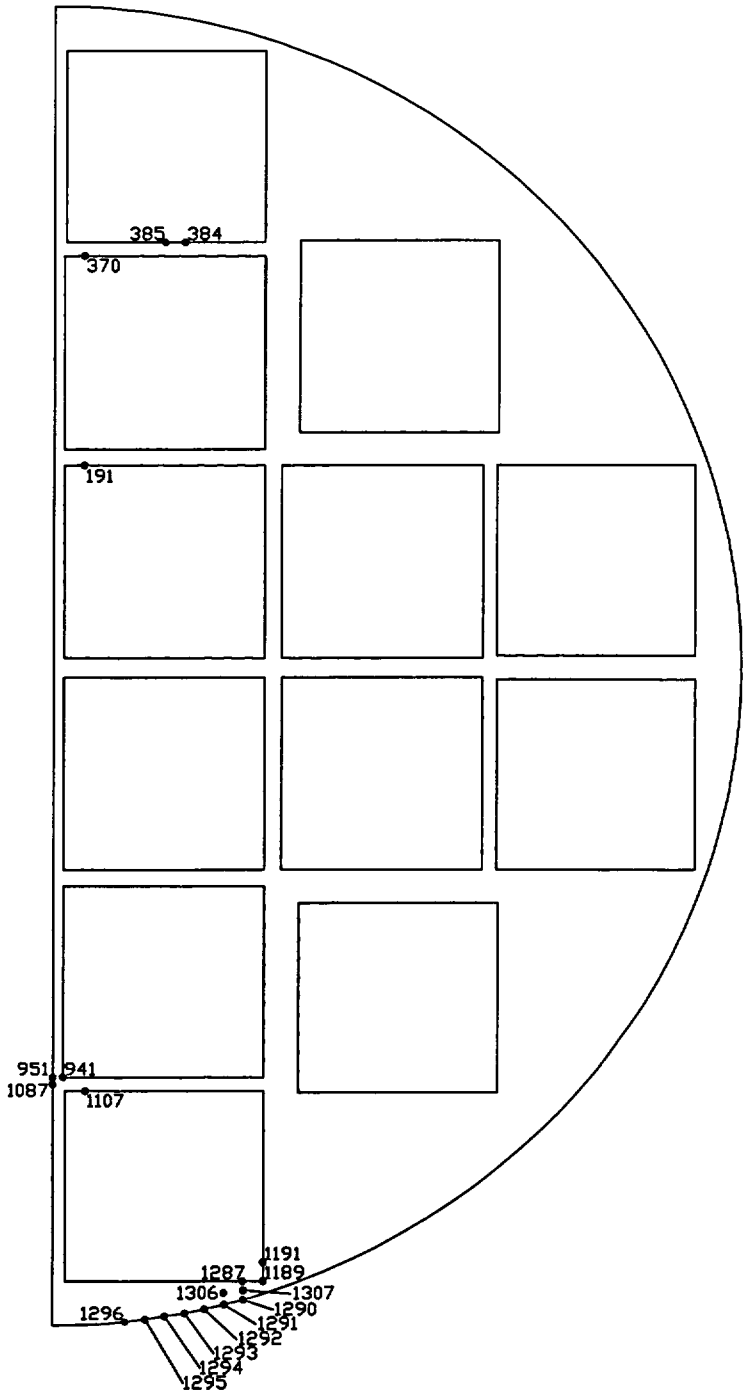

Figure 2.7.6-16
Location of Top 20 FC Spacer Disc S.I. (Top Fiber) - Flatside 60° Impact

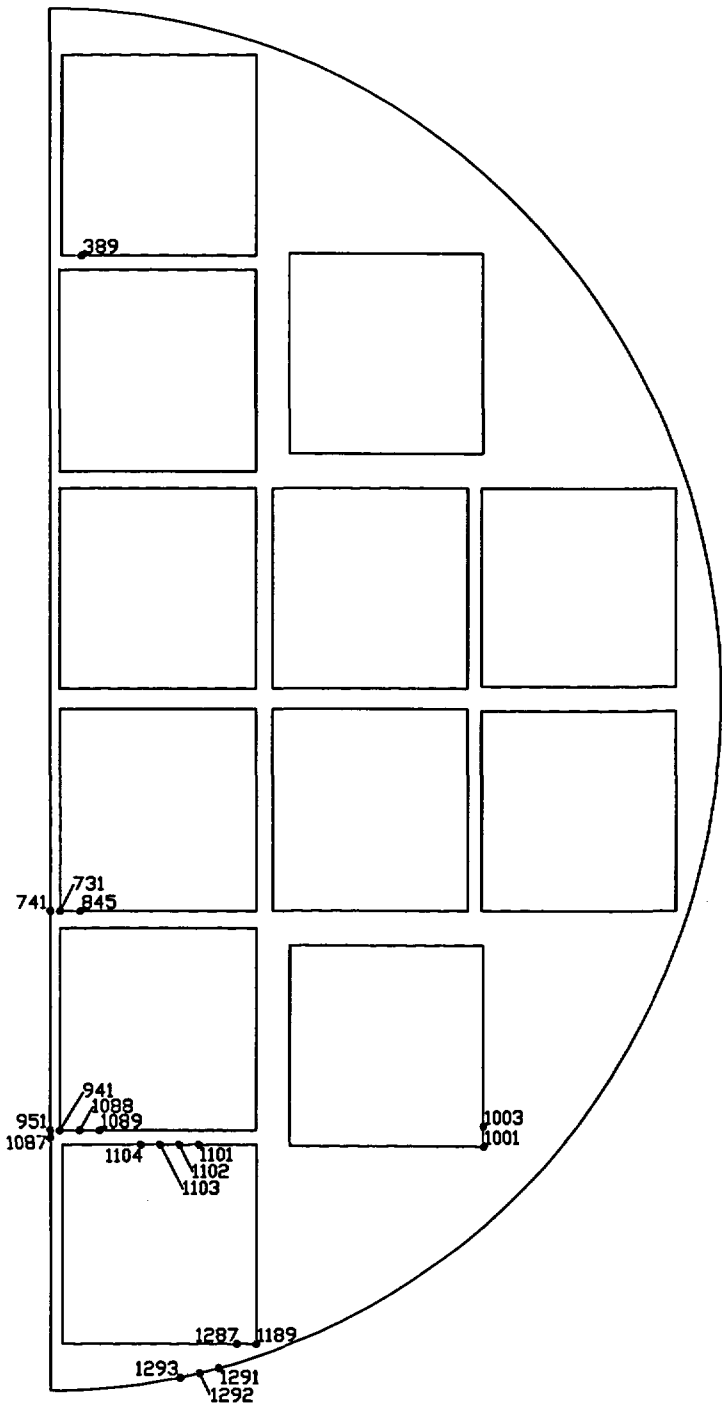

Figure 2.7.6-17
Location of Top 20 FC Spacer Disc S.I. (Bottom Fiber) - Flatside 60° Impact

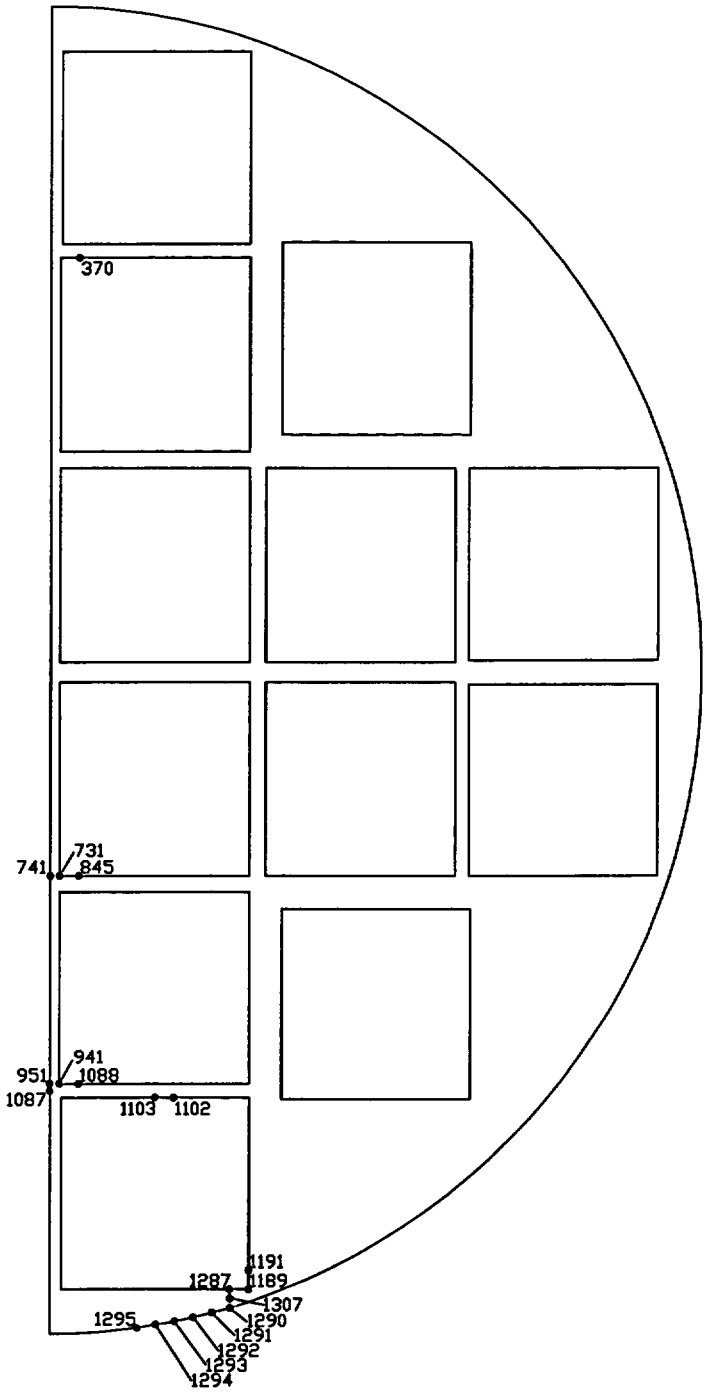

Figure 2.7.6-18
Location of Top 20 FC Spacer Disc S.I. (Middle Fiber) - Flatside 30° Primary Impact

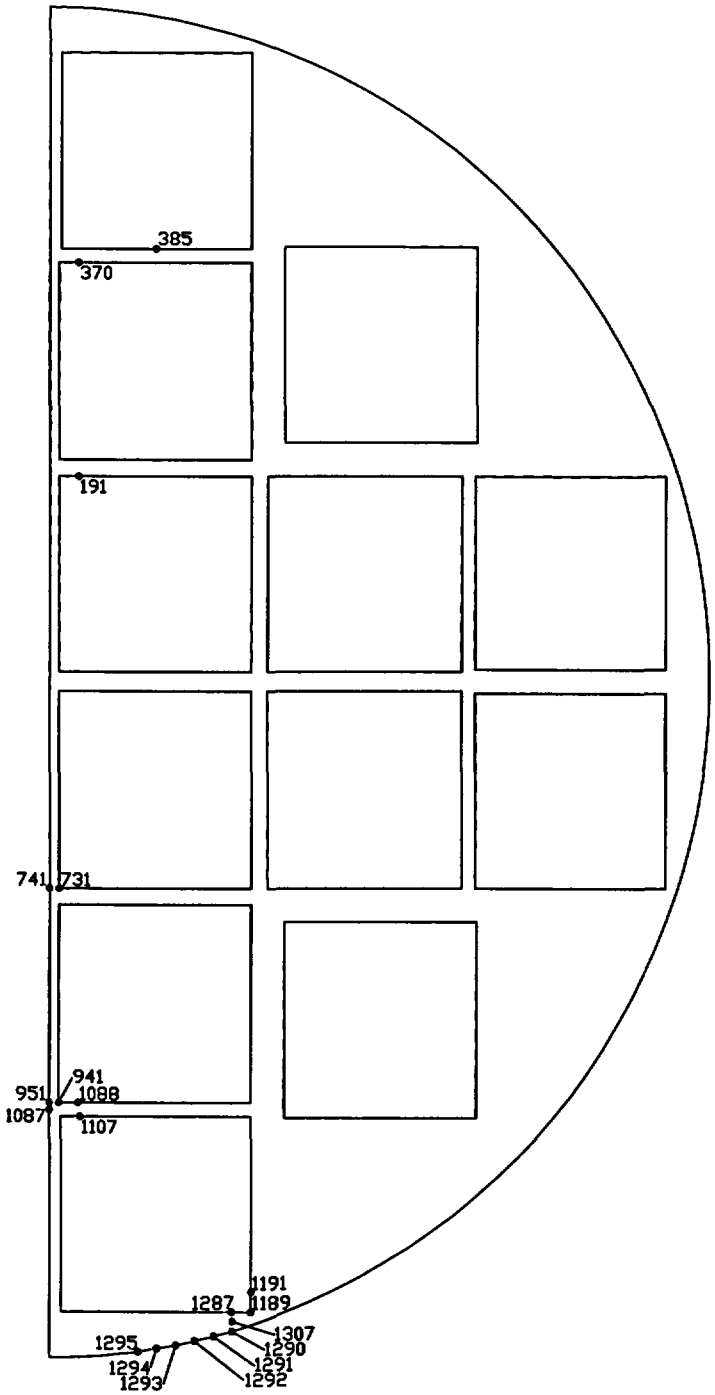

Figure 2.7.6-19
Location of Top 20 FC Spacer Disc S.I. (Top Fiber) - Flatside 30° Primary Impact

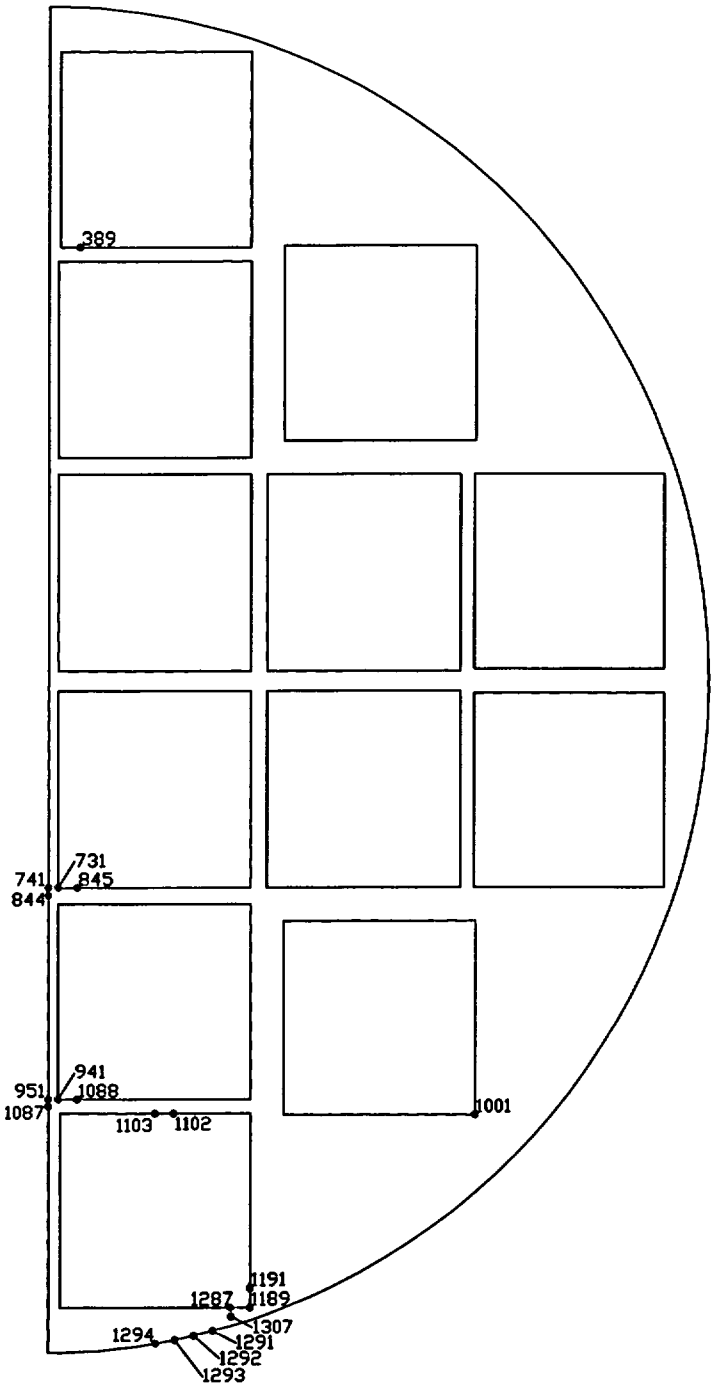

Figure 2.7.6-20
Location of Top 20 FC Spacer Disc S.I. (Bottom Fiber) - Flatside 30° Primary Impact

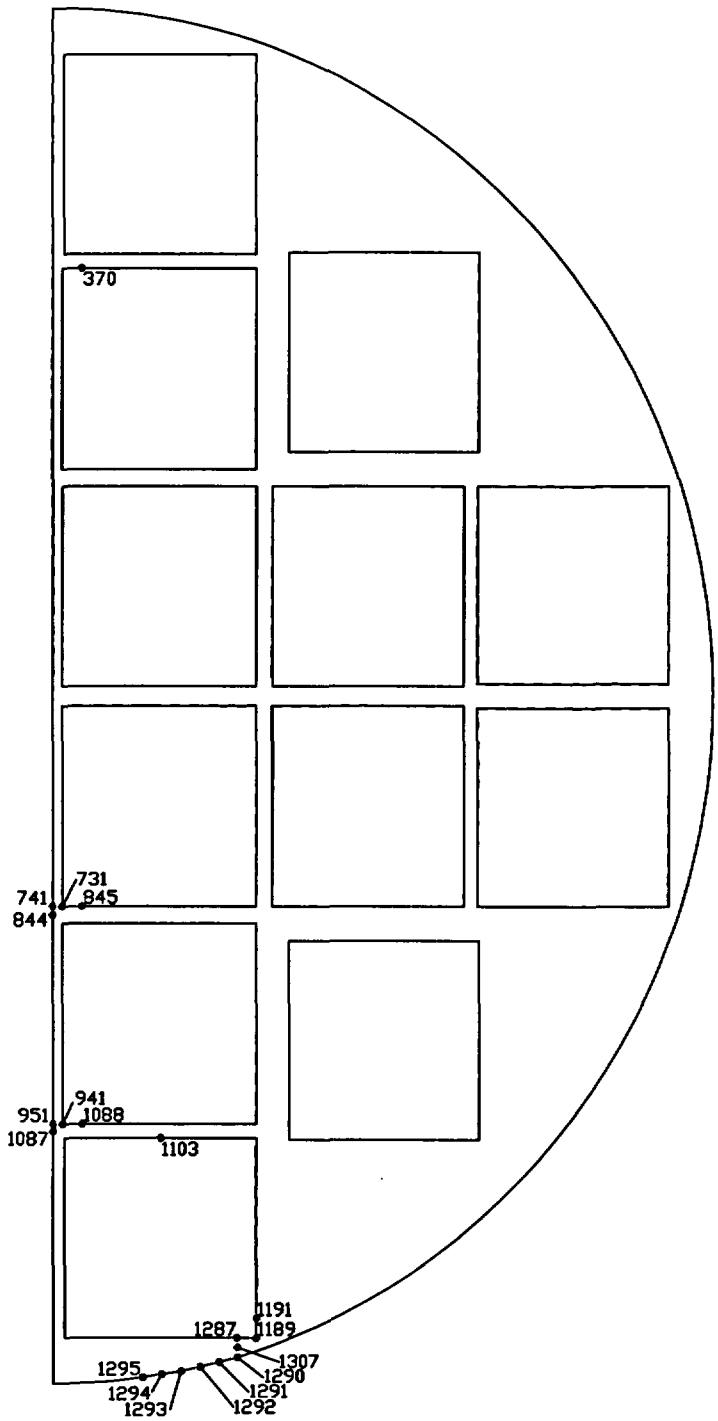

Figure 2.7.6-21
Location of Top 20 FC Spacer Disc S.I. (Middle Fiber) - Flatside Slapdown

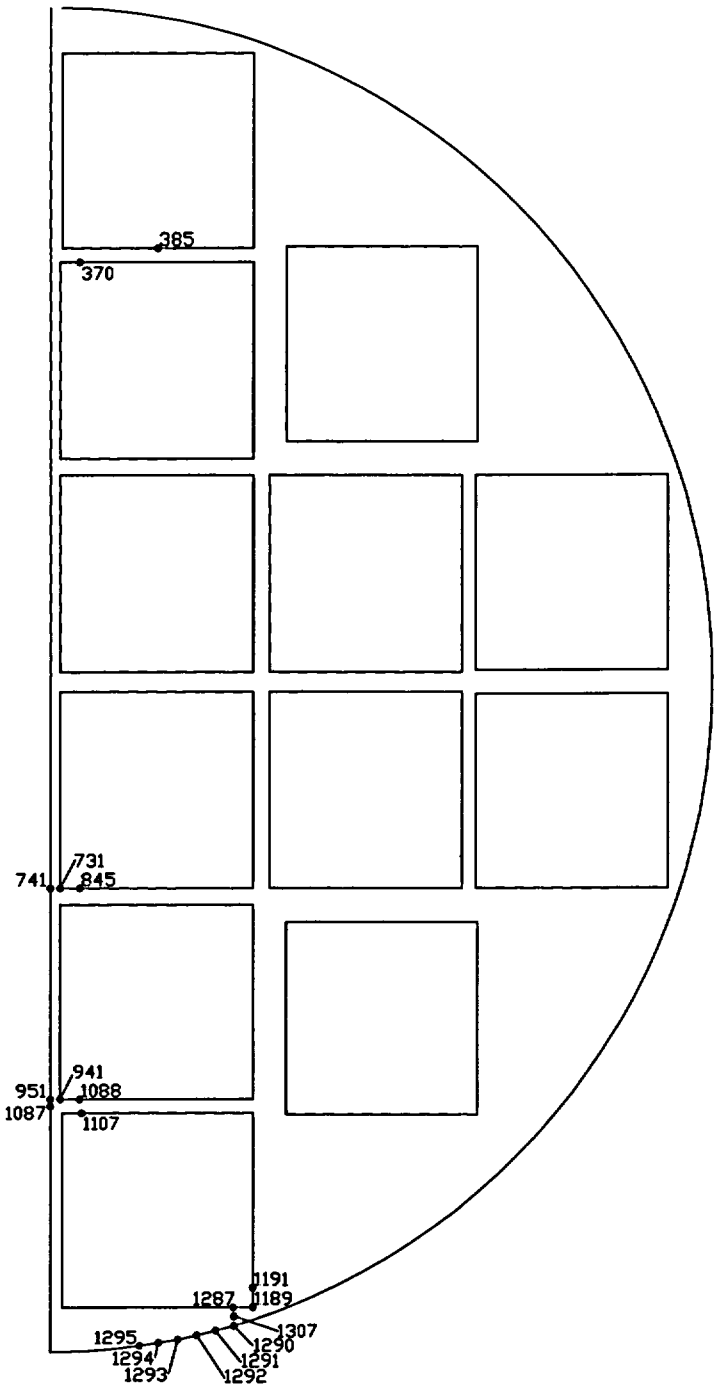

Figure 2.7.6-22
Location of Top 20 FC Spacer Disc S.I. (Top Fiber) - Flatside Slapdown

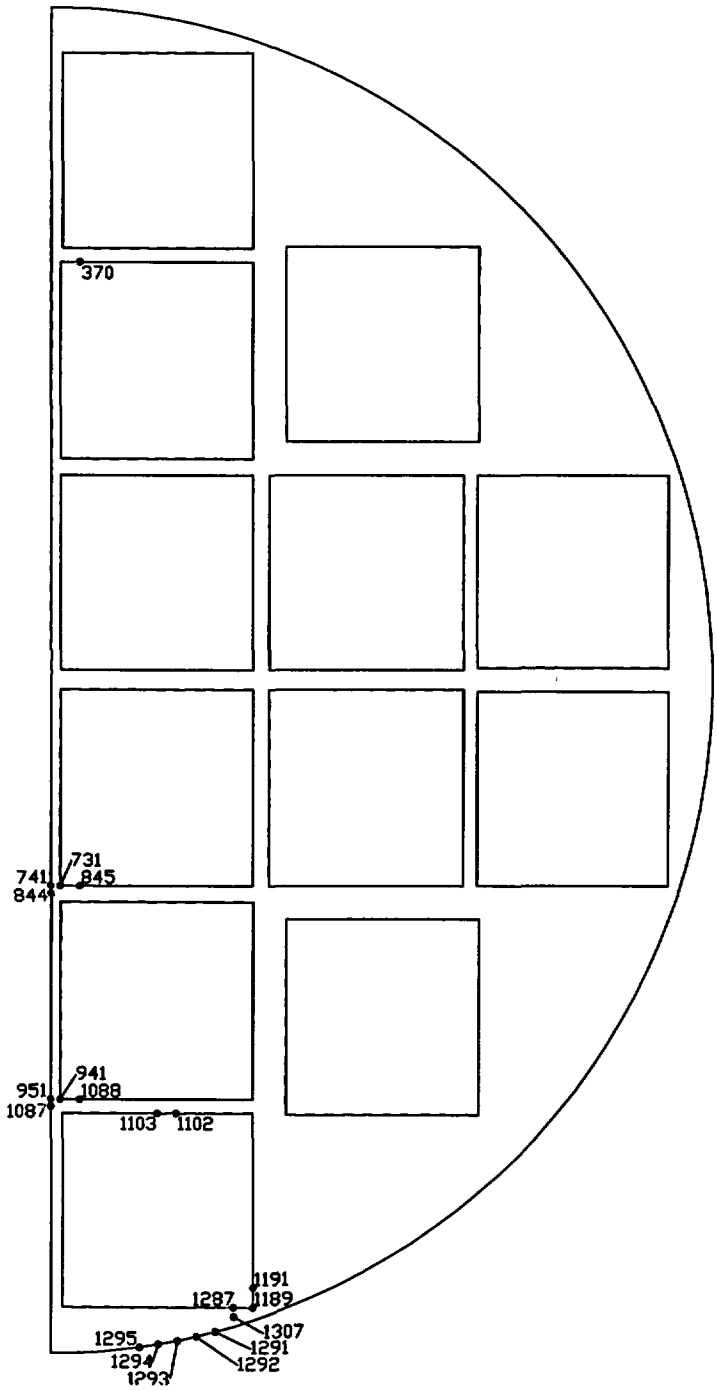

Figure 2.7.6-23
Location of Top 20 FC Spacer Disc S.I. (Bottom Fiber) - Flatside Slapdown

2.7.6.1.1.4.2 Corner Oblique Impact Analysis

The critical spacer disc is conservatively analyzed for the corner oblique drops using the full spacer disc finite element model described in Section 2.10.3.1.3. The corner oblique drop conditions analyzed include:

1.) Cold Corner 30° Primary Impact

2.) Cold Corner Slapdown

3.) Cold Corner 60° Impact

The spacer disc loading for each of the corner oblique drop conditions is developed using the methodology discussed in Sections 2.10.3.1.3 for the equivalent static g-loads corresponding to the location of the most heavily loaded spacer disc, as reported in Table 2.7.6-3. A free body diagram for the corner oblique drop condition is shown in Figure 2.7.6-24.

Linear elastic static analyses are performed for the corner oblique drop conditions using the ANSYS v5.0A program [2.39]. The results of each corner oblique drop analysis are discussed in the following sections.

2.7.6.1.1.4.2.1 Corner 60° Impact Results

The equivalent static g-loads used in the analysis of the corner 60° primary impact are 87.0 kips tangential (in-plane) and 27.4 g (11.6 kips) longitudinal. As shown in Table 2.7.6-3 these loads are 21% and 12% greater than the calculated loads for the revised spacer disc locations shown in Figure 2.7.6-1. Therefore, these loads are conservatively used for calculating the spacer disc stresses due to the corner 60° primary impact. The total reaction loads in the longitudinal and tangential directions from the finite element analysis of the cold corner 60° primary impact are 87.2 kips and 11.7 kips, respectively. The in-plane reaction loads from the finite element solution are less than 0.2% different from the applied spacer disc loads. Therefore, the spacer disc is in static equilibrium for the cold corner 60° primary impact condition.

Gap elements are used to model the interaction between the spacer disc, DSC shell, and cask inner shell. The gap element loads and gap sizes resulting from the cold corner 60° impact condition are shown in Figure 2.7.6-25. The results show that the spacer disc contact angle resulting from the cold corner 60° impact is approximately 132°. The gap element forces are highest in the region of the initial impact location and at the 18° and -108° azimuths. The locations of the highest gap forces correspond to the most rigid regions of the spacer disc. The bearing stresses at the edge of the spacer disc are calculated by dividing the gap forces by the bearing area tributary to each gap element. The gap force corresponding to the location of the highest bearing stress is 3.14 kips. The tributary area of the gap element is 1.15 square inches. Therefore, the maximum bearing stress on the spacer disc due to the edge reactions is:

$$f_p = 3.14/1.15$$

$$= 2.7 \text{ ksi}$$

Per F-1332.3 of the ASME Code [2.2], bearing stresses need only be considered for pinned or bolted joints for Service Level D conditions. The allowable bearing stress for pinned joints is limited to $2.1S_u$ per F-1336 [2.2]. Therefore, the allowable bearing stress in the spacer disc is 166.5 ksi at 600°F. The minimum margin of safety for bearing stress in the spacer disc due to the cold corner 60° impact is:

$$\text{M.S.} = (166.5/2.7) - 1$$

$$= +60.7 \text{ (Large Margin)}$$

The maximum gap separation is approximately 0.58 inches, occurring near the 135° azimuth. This gap separation consists of 0.38 inches due to the nominal diametrical gap existing between the spacer discs and DSC shell plus 0.20 inches due to deformation of the spacer disc.

The 20 highest stress intensities at the spacer disc middle, top, and bottom fibers resulting from the conservative loads used for the corner 60° impact are shown in Table 2.7.6-20, Table 2.7.6-21, and Table 2.7.6-22, respectively. In addition, the ligament stresses at the node locations shown in Figure 2.7.6-6 are shown in Table 2.7.6-19.

The maximum primary membrane stress intensity, resulting from the cold corner 60° impact is 30.5 ksi. The allowable service level D primary membrane stress intensity is limited to the lesser of $2.4S_m$ or $0.7S_u$. The design stress intensity, S_m, and the ultimate strength, S_u, for ASME SA-537, Class 2 carbon steel at 600°F are 26.4 ksi and 79.3 ksi, respectively. Therefore, the allowable service level D primary membrane stress intensity is 55.5 ksi. The minimum margin of safety for primary membrane stress intensity due to the oblique corner 60° impact is:

$$\text{M.S.} = (55.5/30.5) - 1$$

$$= +0.82 \text{ (82\% Margin)}$$

The maximum membrane plus bending stress intensity, resulting from the cold corner 60° impact is 62.0 ksi. The allowable service level D primary membrane plus bending stress intensity is limited to the lesser of $3.6S_m$ or S_u. Therefore, the allowable membrane plus bending stress intensity is 79.3 ksi. The minimum margin of safety for membrane plus bending stress intensity due to the corner 60° impact is:

$$\text{M.S.} = (79.3/62.0) - 1$$

$$= +0.28 \text{ (28\% Margin)}$$

Therefore, the spacer disc meets the acceptance criteria for the corner 60° impact condition.

2.7.6.1.1.4.2.2 Corner 30° Impact Results

The equivalent static g-loads used in the analysis of the corner 30° primary impact are 118.5 kips tangential (in-plane) and 14.1 g (6.0 kips) longitudinal. As shown in Table 2.7.6-3 these loads are 21% and 26% greater than the calculated loads for the revised spacer disc locations shown in Figure 2.7.6-1. Therefore, these loads are conservatively used for calculating the spacer disc stresses due to the corner 30° primary impact. The total reaction loads in the longitudinal and tangential directions from the finite element analysis of the cold corner 30° primary impact are 6.0 kips and 118.3 kips, respectively. The in-plane reaction loads from the finite element solution are less than 0.4% different from the applied spacer disc loads.

Therefore, the spacer disc is in static equilibrium for the cold corner 30° primary impact condition.

Gap elements are used to model the interaction between the spacer disc, DSC shell, and cask inner shell. The gap element loads and gap sizes resulting from the cold corner 30° impact condition are shown in Figure 2.7.6-25. The results show that the spacer disc contact angle resulting from the cold corner 30° impact is approximately 136°. The gap element forces are highest in the region of the initial impact location and near the 18° and -108° azimuths. The locations of the highest gap forces correspond to the most rigid spacer disc regions. The bearing stresses at the edge of the spacer disc are calculated by dividing the gap forces by the bearing area tributary to each gap element. The gap force corresponding to the location of the highest bearing stress is 4.44 kips. The tributary area of the gap element is 1.15 square inches. Therefore, the maximum bearing stress on the spacer disc due to the edge reactions is:

$$f_p = 4.44/1.15$$

$$= 3.9 \text{ ksi}$$

Per F-1332.3 of the ASME Code [2.2], bearing stresses need only be considered for pinned or bolted joints for Service Level D conditions. The allowable bearing stress for pinned joints is limited to $2.1S_u$ per F-1336 [2.2]. Therefore, the allowable bearing stress in the spacer disc is 166.5 ksi at 600°F. The minimum margin of safety for bearing stress in the spacer disc due to the cold corner 30° impact is:

$$\text{M.S.} = (166.5/3.9) - 1$$

$$= +41.7$$

The maximum gap separation is approximately 0.60 inches, occurring near the 135° azimuth. This gap separation consists of 0.38 inches due to the nominal diametrical gap existing between the spacer discs and DSC shell plus 0.22 inches due to deformation of the spacer disc.

The 20 highest stress intensities at the spacer disc middle, top, and bottom fibers resulting from the conservative loads used for the corner 30° impact are shown in Table 2.7.6-24, Table 2.7.6-25, and Table 2.7.6-26, respectively. In addition, the ligament stresses at the node locations shown in Figure 2.7.6-6 are presented in Table 2.7.6-23.

The maximum primary membrane stress intensity, resulting from the cold corner 30° impact is 30.5 ksi. The allowable service level D primary membrane stress intensity is 55.5 ksi. The minimum margin of safety for primary membrane stress intensity due to the oblique corner 30° impact is:

$$\text{M.S.} = (55.5/30.5) - 1$$
$$= +0.82$$

The maximum membrane plus bending stress intensity, resulting from the cold corner 30° impact is 62.0 ksi. The allowable service level D primary membrane plus bending stress intensity is 79.3 ksi. The minimum margin of safety for membrane plus bending stress intensity due to the corner 30° impact is:

$$\text{M.S.} = (79.3/62.0) - 1$$
$$= +0.28$$

Therefore, the spacer disc meets the acceptance criteria for the corner 30° impact condition.

2.7.6.1.1.4.2.3 Corner Slapdown Results

The equivalent static g-loads used in the analysis of the cold corner slapdown impact are 187.5 kips tangential (in-plane) and 2.9 kips longitudinal. As shown in Table 2.7.6-3 these loads are 20% and 1% greater than the calculated loads for the revised spacer disc locations shown in Figure 2.7.6-1. Therefore, these loads are conservatively used for calculating the spacer disc stresses due to the corner slapdown impact. The total reaction loads in the longitudinal and tangential directions from the finite element analysis of the cold corner slapdown impact are 187.2

kips and 1.2 kips, respectively. The in-plane reaction loads from the finite element solution are less than 0.3% different from the applied spacer disc loads. Therefore, the spacer disc is in static equilibrium for the cold corner slapdown impact condition.

Gap elements are used to model the interaction between the spacer disc, DSC shell, and cask inner shell. The gap element loads and gap sizes resulting from the cold corner slapdown condition are shown in Figure 2.7.6-27. The results show that the spacer disc contact angle resulting from the cold corner slapdown is approximately 142°. The gap element forces are highest in the region of the initial impact location and near the 18° and -108° azimuths. The locations of the highest gap forces correspond to the most rigid spacer disc regions. The bearing stresses at the edge of the spacer disc are calculated by dividing the gap forces by the bearing area tributary to each gap element. The gap force corresponding to the location of the highest bearing stress is 6.62 kips. The tributary area of the gap element is 1.10 square inches. Therefore, the maximum bearing stress on the spacer disc due to the edge reactions is:

$$f_p = 6.62/1.10$$

$$= 6.0 \text{ ksi}$$

Per F-1332.3 of the ASME Code [2.2], bearing stresses need only be considered for pinned or bolted joints for Service Level D conditions. The allowable bearing stress for pinned joints is limited to $2.1S_u$ per F-1336 [2.2]. Therefore, the allowable bearing stress in the spacer disc is 166.5 ksi at 600°F. The minimum margin of safety for bearing stress in the spacer disc due to the cold corner 30° impact is:

$$\text{M.S.} = (166.5/6.0) - 1$$

$$= +26.8$$

The maximum gap separation is approximately 0.632 inches, occurring near the 135° azimuth. This gap separation consists of 0.380 inches due to the nominal diametrical gap existing between the spacer discs and DSC shell plus 0.252 inches due to deformation of the spacer disc.

The 20 highest stress intensities at the spacer disc middle, top, and bottom fibers resulting from the conservative loads used to analyze the corner slapdown impact are presented in Table 2.7.6-28, Table 2.7.6-29, and Table 2.7.6-30, respectively. In addition, the ligament stresses at the node locations shown in Figure 2.7.6-6 are presented for the corner slapdown condition in Table 2.7.6-27.

The maximum primary membrane stress intensity due to the cold corner slapdown is 36.2 ksi. The allowable service level D primary membrane stress intensity is 55.5 ksi. The minimum margin of safety for primary membrane stress intensity due to the oblique corner drops is:

$$\text{M.S.} = (55.5/36.2) - 1$$

$$= +0.53$$

The maximum membrane plus bending stress intensity, resulting from the cold corner slapdown, is 77.3 ksi (node 1499, top fiber.) The allowable service level D primary membrane plus bending stress intensity is 79.3 ksi. The minimum margin of safety for membrane plus bending stress intensity due to the cold corner slapdown is:

$$\text{M.S.} = (79.3/77.3) - 1$$

$$= +0.03$$

Therefore, the spacer disc meets the acceptance criteria for the corner oblique drop conditions.

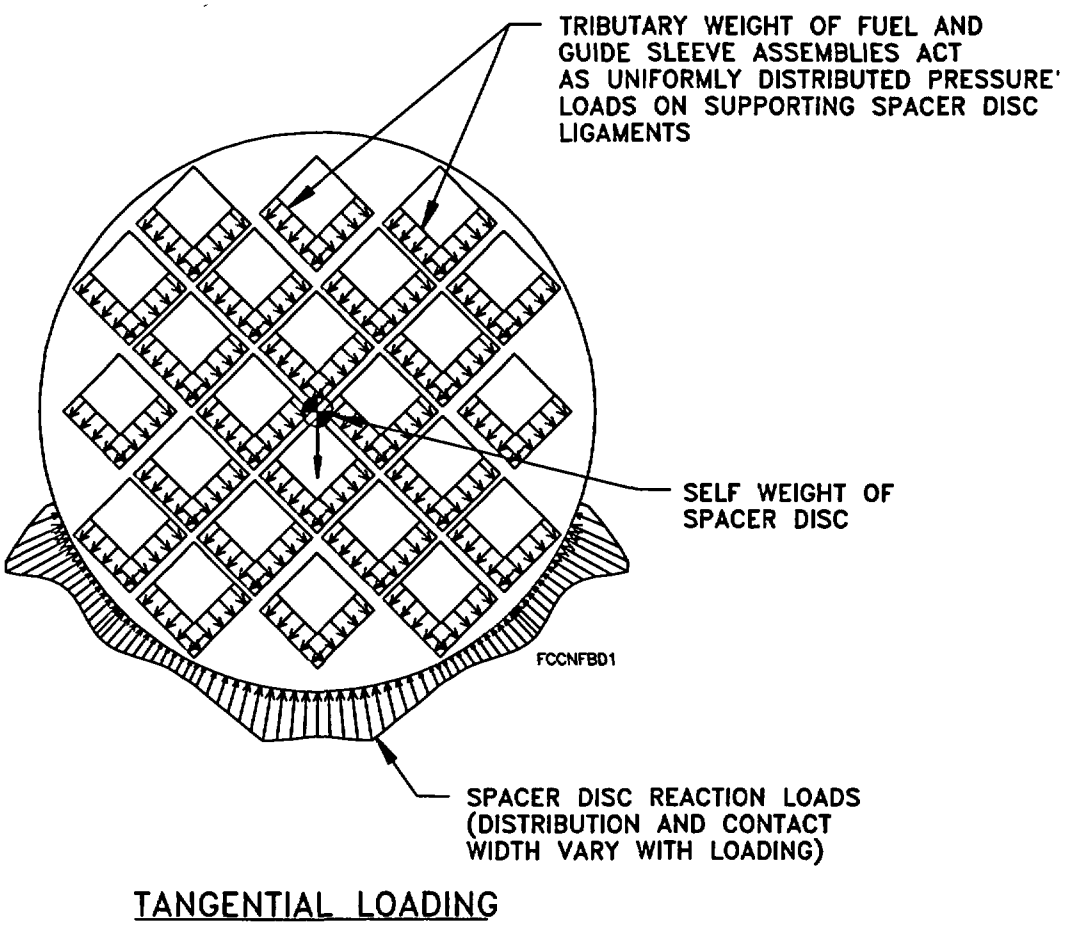

Figure 2.7.6-24
FC Spacer Disc Corner Oblique Drop Free Body Diagram

Component	Dead Load		60° Drop
F_P, FC Spacer Disk	425 #	--	14.6 k
F_F, Fuel	10.84 lb/in	1821. #	62.6 k
F_{GS}, Guide Sleeve	1.70 lb/in	286. #	9.8 k
$F_{Applied}$, Total Applied Load			87.1 k
$F_{Reaction}$, ANSYS Reaction Load*2			87.2 k
Ratio ($F_{Applied}/F_{Reaction}$)			1.00

Notes: disctabl.xls, 60 corner

1. Fuel & Guide Sleeve load based on 24 fuel elements and 7.0 inch disk spacing.
2. Acceleration for 60 Degree Coner Drop, 34.4 g.

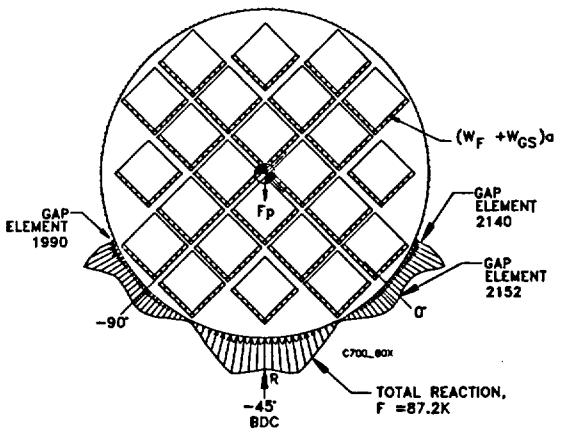

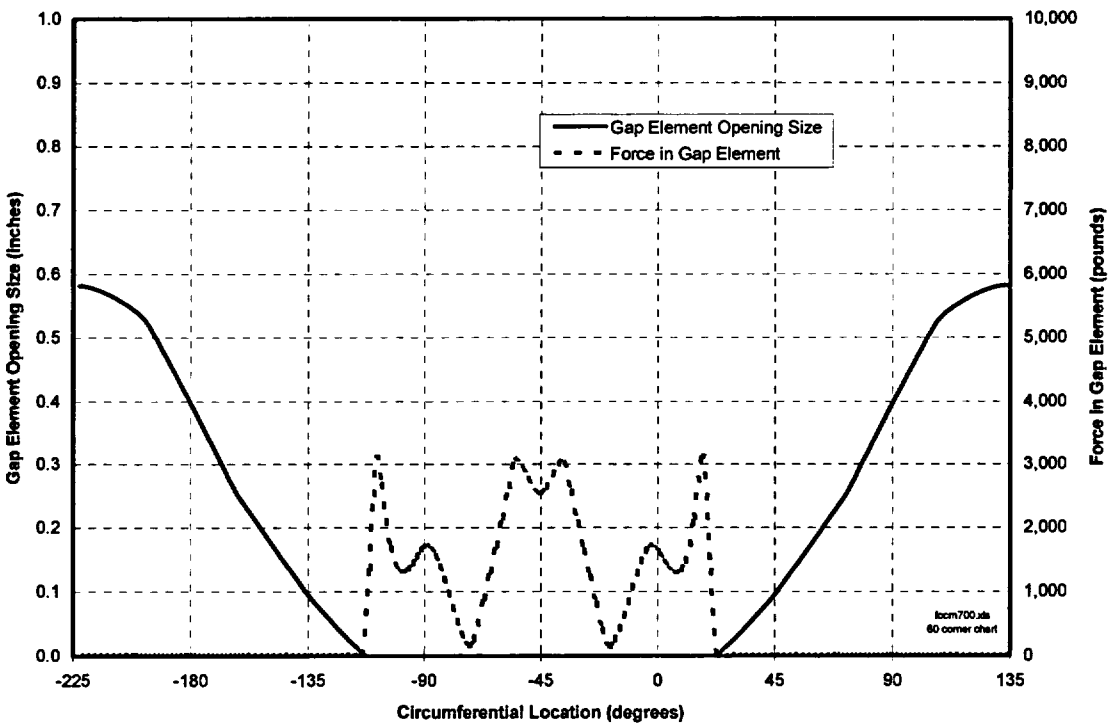

Figure 2.7.6-25
Gap Element Behavior for Corner 60° Impact

Table 2.7.6-19
FC Spacer Disc Ligament S.I. - Corner 60° Impact

Node	Stress Components (ksi)						SINT	Stress Type	Stress Limit	Margin of Safety
	SX	SY	SZ	SXY	SYZ	SXZ				
1	-4.3	-4.3	0.0	-15.3	0.0	0.0	30.5	P_m	55.5	82%
26	-7.2	-0.5	0.0	-10.8	0.0	0.0	22.7	P_m	55.5	144%
844	-0.4	-7.2	0.0	-10.8	0.0	0.0	22.7	P_m	55.5	145%
1334	-2.8	-2.7	0.0	-11.3	0.0	0.0	22.5	P_m	55.5	147%
190	-2.7	-2.8	0.0	-11.2	0.0	0.0	22.5	P_m	55.5	147%
2163	1.8	-10.1	0.0	-4.4	0.0	0.0	14.8	P_m	55.5	274%
108	-10.1	1.7	0.0	-4.4	0.0	0.0	14.8	P_m	55.5	275%
792	7.0	-7.2	0.0	-0.2	0.0	0.0	14.1	P_m	55.5	292%
1098	-7.2	7.0	0.0	-0.2	0.0	0.0	14.1	P_m	55.5	293%
50	-8.1	-2.9	0.0	-6.4	0.0	0.0	13.8	P_m	55.5	303%
951	2.3	-8.5	0.0	-2.6	0.0	0.0	12.0	P_m	55.5	364%
1358	-1.6	-0.3	0.0	-5.9	0.0	0.0	11.8	P_m	55.5	371%
369	-0.3	-1.6	0.0	-5.8	0.0	0.0	11.7	P_m	55.5	373%
762	4.1	-4.1	0.0	-3.8	0.0	0.0	11.2	P_m	55.5	395%
855	-4.1	4.1	0.0	-3.8	0.0	0.0	11.2	P_m	55.5	397%
2406	-1.6	-10.3	0.0	-1.5	0.0	0.0	10.5	P_m	55.5	429%
138	-10.2	-1.6	0.0	-1.5	0.0	0.0	10.5	P_m	55.5	429%
1509	-3.4	2.5	0.0	-3.6	0.0	0.0	9.4	P_m	55.5	493%
1416	2.5	-3.4	0.0	-3.6	0.0	0.0	9.3	P_m	55.5	495%
201	-2.4	-2.3	0.0	-3.6	0.0	0.0	7.2	P_m	55.5	Large
2070	-2.2	-2.4	0.0	-3.6	0.0	0.0	7.2	P_m	55.5	Large
1169	-4.9	-6.2	0.0	-0.9	0.0	0.0	6.7	P_m	55.5	Large
53	-6.2	-4.9	0.0	-0.9	0.0	0.0	6.7	P_m	55.5	Large
2100	-5.2	-0.1	0.0	-1.6	0.0	0.0	6.0	P_m	55.5	Large
380	-0.1	-5.2	0.0	-1.6	0.0	0.0	6.0	P_m	55.5	Large
1446	4.5	0.5	0.0	-1.5	0.0	0.0	5.0	P_m	55.5	Large
1752	0.5	4.5	0.0	-1.5	0.0	0.0	5.0	P_m	55.5	Large
1361	-0.1	-1.7	0.0	-1.4	0.0	0.0	3.3	P_m	55.5	Large
446	-1.7	-0.1	0.0	-1.4	0.0	0.0	3.3	P_m	55.5	Large

Notes:

(1) All stress results are reported in units of ksi.

(2) All spacer disc ligament stress intensities are conservatively classified as primary membrane. The allowable primary membrane stress intensities is 55.5 ksi for ASME SA-537, Class 2 carbon steel at 600°F.

(3) The locations of the reported spacer disc ligament stresses due to the corner 60° impact are shown in Figure 2.7.6-6.

Table 2.7.6-20
FC Spacer Disc Top 20 S.I. (Middle Fiber) - Corner 60° Impact

Node	Stress Components (ksi)						SINT	Stress Type	Stress Limit	Margin of Safety
	SX	SY	SZ	SXY	SYZ	SXZ				
78	3.3	-52.4	0.0	2.6	0.0	0.0	55.9	$P_l + P_b$	79.3	42%
1986	-52.4	3.3	0.0	2.6	0.0	0.0	55.9	$P_l + P_b$	79.3	42%
1425	4.1	-48.3	0.0	2.4	0.0	0.0	52.6	$P_l + P_b$	79.3	51%
1499	-48.3	4.1	0.0	2.4	0.0	0.0	52.5	$P_l + P_b$	79.3	51%
670	-48.2	1.9	0.0	2.3	0.0	0.0	50.3	$P_l + P_b$	79.3	58%
740	1.9	-48.1	0.0	2.3	0.0	0.0	50.3	$P_l + P_b$	79.3	58%
117	-3.7	44.7	0.0	2.4	0.0	0.0	48.6	$P_l + P_b$	79.3	63%
2153	44.7	-3.7	0.0	2.4	0.0	0.0	48.6	$P_l + P_b$	79.3	63%
1394	3.7	-44.0	0.0	1.4	0.0	0.0	47.7	$P_l + P_b$	79.3	66%
1324	-43.9	3.7	0.0	1.4	0.0	0.0	47.7	$P_l + P_b$	79.3	66%
1386	-4.0	43.3	0.0	2.6	0.0	0.0	47.6	$P_l + P_b$	79.3	67%
1332	43.3	-4.0	0.0	2.6	0.0	0.0	47.6	$P_l + P_b$	79.3	67%
98	1.4	-44.1	0.0	2.1	0.0	0.0	45.7	$P_l + P_b$	79.3	74%
2172	-44.0	1.4	0.0	2.1	0.0	0.0	45.6	$P_l + P_b$	79.3	74%
2071	2.3	-42.0	0.0	2.1	0.0	0.0	44.6	$P_l + P_b$	79.3	78%
199	-42.0	2.3	0.0	2.1	0.0	0.0	44.5	$P_l + P_b$	79.3	78%
24	-40.2	4.1	0.0	1.1	0.0	0.0	44.4	$P_l + P_b$	79.3	79%
2040	4.1	-40.2	0.0	1.1	0.0	0.0	44.4	$P_l + P_b$	79.3	79%
128	2.0	-42.1	0.0	2.4	0.0	0.0	44.3	$P_l + P_b$	79.3	79%
157	-5.8	33.2	0.0	-10.4	0.0	0.0	44.3	$P_l + P_b$	79.3	79%

Notes:

(1) All stress results are reported in units of ksi.

(2) The allowable primary membrane and membrane plus bending stress intensities are 55.5 ksi and 79.3 ksi, respectively, for ASME SA-537, Class 2 carbon steel at 600°F.

(3) The locations of the top 20 spacer disc middle fiber stress intensities due to the corner 60° impact are shown in Figure 2.7.6-28.

Table 2.7.6-21
FC Spacer Disc Top 20 S.I. (Top Fiber) - Corner 60° Impact

Node	Stress Components (ksi)						SINT	Stress Type	Stress Limit	Margin of Safety
	SX	SY	SZ	SXY	SYZ	SXZ				
1986	-58.6	3.2	0.0	2.3	0.0	0.0	62.0	$P_l + P_b$	79.3	28%
1499	-55.9	4.0	0.0	2.4	0.0	0.0	60.2	$P_l + P_b$	79.3	32%
78	3.3	-49.8	0.0	3.2	0.0	0.0	53.5	$P_l + P_b$	79.3	48%
670	-51.4	1.9	0.0	2.3	0.0	0.0	53.5	$P_l + P_b$	79.3	48%
2172	-51.6	1.3	0.0	1.4	0.0	0.0	53.0	$P_l + P_b$	79.3	50%
1425	4.2	-47.9	0.0	3.4	0.0	0.0	52.5	$P_l + P_b$	79.3	51%
2415	-49.4	1.9	0.0	2.6	0.0	0.0	51.6	$P_l + P_b$	79.3	54%
1324	-47.2	3.6	0.0	1.4	0.0	0.0	50.9	$P_l + P_b$	79.3	56%
24	-46.5	4.0	0.0	0.8	0.0	0.0	50.5	$P_l + P_b$	79.3	57%
1386	-3.9	45.9	0.0	2.0	0.0	0.0	50.0	$P_l + P_b$	79.3	58%
117	-3.6	45.1	0.0	1.3	0.0	0.0	48.8	$P_l + P_b$	79.3	63%
199	-46.4	2.2	0.0	1.6	0.0	0.0	48.7	$P_l + P_b$	79.3	63%
740	1.9	-45.7	0.0	2.9	0.0	0.0	48.0	$P_l + P_b$	79.3	65%
128	2.0	-45.1	0.0	2.2	0.0	0.0	47.3	$P_l + P_b$	79.3	68%
157	-5.7	35.3	0.0	-10.9	0.0	0.0	46.4	$P_l + P_b$	79.3	71%
856	-44.4	1.1	0.0	2.0	0.0	0.0	45.6	$P_l + P_b$	79.3	74%
1394	3.7	-41.5	0.0	2.0	0.0	0.0	45.4	$P_l + P_b$	79.3	75%
98	1.3	-43.7	0.0	1.1	0.0	0.0	45.0	$P_l + P_b$	79.3	76%
1985	-44.3	-1.0	0.0	2.4	0.0	0.0	44.4	$P_l + P_b$	79.3	78%
1742	-43.4	0.6	0.0	1.0	0.0	0.0	44.1	$P_l + P_b$	79.3	80%

Notes:

(1) All stress results are reported in units of ksi.

(2) All spacer disc extreme fiber stress intensities are conservatively classified as membrane plus bending. The allowable membrane plus bending stress intensity for ASME SA-537, Class 2 carbon steel at 600°F is 79.3 ksi.

(3) The locations of the top 20 spacer disc top fiber stress intensities due to the corner 60° impact are shown in Figure 2.7.6-29.

Table 2.7.6-22
FC Spacer Disc Top 20 S.I. (Bottom Fiber) - Corner 60° Impact

Node	Stress Components (ksi)						SINT	Stress Type	Stress Limit	Margin of Safety
	SX	SY	SZ	SXY	SYZ	SXZ				
78	3.3	-55.0	0.0	2.0	0.0	0.0	58.4	$P_l + P_b$	79.3	36%
2153	52.4	-3.7	0.0	2.5	0.0	0.0	56.2	$P_l + P_b$	79.3	41%
1332	49.6	-3.9	0.0	2.3	0.0	0.0	53.7	$P_l + P_b$	79.3	48%
1425	3.9	-48.7	0.0	1.3	0.0	0.0	52.7	$P_l + P_b$	79.3	50%
740	1.9	-50.6	0.0	1.7	0.0	0.0	52.6	$P_l + P_b$	79.3	51%
2596	39.3	-4.6	0.0	-12.9	0.0	0.0	50.9	$P_l + P_b$	79.3	56%
1394	3.7	-46.4	0.0	0.8	0.0	0.0	50.1	$P_l + P_b$	79.3	58%
1986	-46.1	3.4	0.0	2.9	0.0	0.0	49.8	$P_l + P_b$	79.3	59%
1518	48.7	-1.0	0.0	1.4	0.0	0.0	49.8	$P_l + P_b$	79.3	59%
1761	46.5	-2.5	0.0	2.7	0.0	0.0	49.3	$P_l + P_b$	79.3	61%
117	-3.8	44.3	0.0	3.4	0.0	0.0	48.6	$P_l + P_b$	79.3	63%
2071	2.3	-45.7	0.0	2.8	0.0	0.0	48.3	$P_l + P_b$	79.3	64%
670	-44.9	2.0	0.0	2.3	0.0	0.0	47.1	$P_l + P_b$	79.3	68%
2040	4.1	-42.8	0.0	0.5	0.0	0.0	46.9	$P_l + P_b$	79.3	69%
98	1.5	-44.5	0.0	3.1	0.0	0.0	46.4	$P_l + P_b$	79.3	71%
1386	-4.0	40.7	0.0	3.2	0.0	0.0	45.2	$P_l + P_b$	79.3	75%
1436	-2.6	42.2	0.0	2.3	0.0	0.0	45.0	$P_l + P_b$	79.3	76%
760	1.0	-43.9	0.0	0.7	0.0	0.0	45.0	$P_l + P_b$	79.3	76%
1499	-40.6	4.1	0.0	2.3	0.0	0.0	44.9	$P_l + P_b$	79.3	77%
1324	-40.7	3.7	0.0	1.4	0.0	0.0	44.5	$P_l + P_b$	79.3	78%

Notes:

(1) All stress results are reported in units of ksi.

(2) All spacer disc extreme fiber stress intensities are conservatively classified as membrane plus bending. The allowable membrane plus bending stress intensity for ASME SA-537, Class 2 carbon steel at 600°F is 79.3 ksi.

(3) The locations of the top 20 spacer disc bottom fiber stress intensities due to the corner 60° impact are shown in Figure 2.7.6-30.

Component	Dead Load		30° Drop
F_P, FC Spacer Disk	425 #	–	19.8 k
F_F, Fuel	10.84 lb/in	1821. #	85.0 k
F_{GS}, Guide Sleeve	1.70 lb/in	286. #	13.3 k
$F_{Applied}$, Total Applied Load			118. k
$F_{Reaction}$, ANSYS Reaction Load*2			118. k
Ratio ($F_{Applied}/F_{Reaction}$)			1.00

Notes: disctabl.xls, 30 corner

1. Fuel & Guide Sleeve load based on 24 fuel elements and 7.0 inch disk spacing.
2. Acceleration for 30 Degree Corner Drop, 46.7 g.

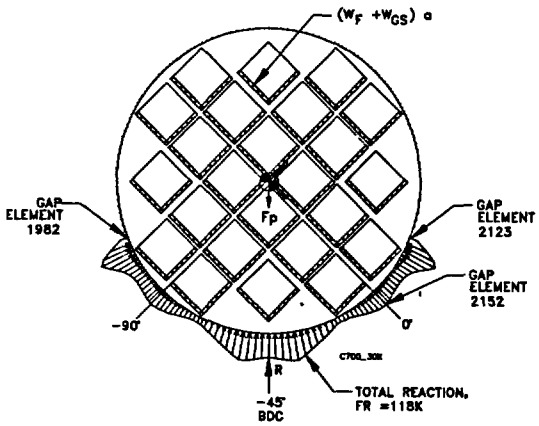

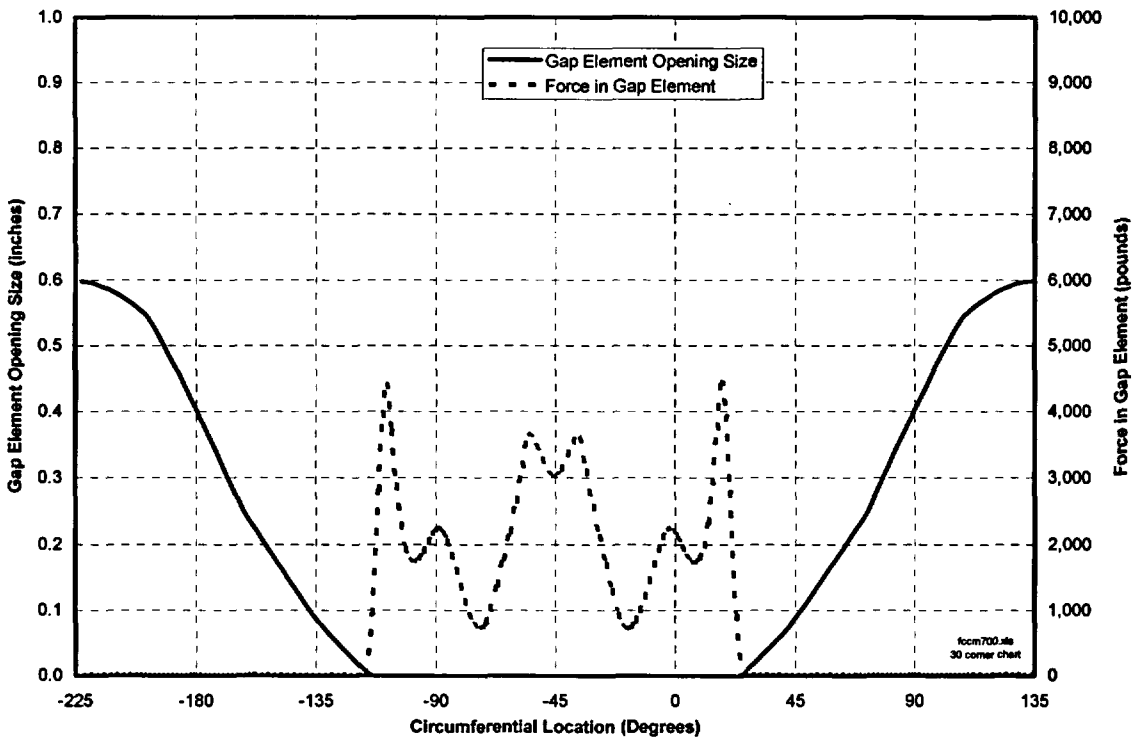

Figure 2.7.6-26
Gap Element Behavior for Corner 30° Impact

Table 2.7.6-23
FC Spacer Disc Ligament S.I. - Corner 30° Primary Impact

Node	Stress Components (ksi)						SINT	Stress Type	Stress Limit	Margin of Safety
	SX	SY	SZ	SXY	SYZ	SXZ				
1	-5.8	-5.8	0.0	-16.2	0.0	0.0	32.5	P_m	55.5	71%
844	-0.5	-9.6	0.0	-11.5	0.0	0.0	24.8	P_m	55.5	124%
26	-9.6	-0.5	0.0	-11.5	0.0	0.0	24.8	P_m	55.5	124%
1334	-3.6	-4.5	0.0	-12.1	0.0	0.0	24.3	P_m	55.5	128%
190	-4.5	-3.6	0.0	-12.1	0.0	0.0	24.3	P_m	55.5	129%
2163	2.1	-12.9	0.0	-5.0	0.0	0.0	18.1	P_m	55.5	207%
108	-12.9	2.1	0.0	-5.0	0.0	0.0	18.0	P_m	55.5	208%
951	3.7	-11.5	0.0	-2.6	0.0	0.0	16.0	P_m	55.5	246%
50	-11.1	-2.8	0.0	-6.8	0.0	0.0	15.9	P_m	55.5	248%
792	7.3	-8.2	0.0	-0.1	0.0	0.0	15.5	P_m	55.5	258%
1098	-8.2	7.3	0.0	-0.1	0.0	0.0	15.5	P_m	55.5	259%
2406	-1.2	-12.9	0.0	-1.4	0.0	0.0	13.0	P_m	55.5	326%
138	-12.9	-1.3	0.0	-1.4	0.0	0.0	13.0	P_m	55.5	326%
1358	-2.0	-0.8	0.0	-6.2	0.0	0.0	12.5	P_m	55.5	342%
369	-0.8	-2.0	0.0	-6.2	0.0	0.0	12.5	P_m	55.5	344%
762	4.5	-5.0	0.0	-4.1	0.0	0.0	12.5	P_m	55.5	345%
855	-4.9	4.4	0.0	-4.1	0.0	0.0	12.4	P_m	55.5	347%
1509	-4.8	1.3	0.0	-3.9	0.0	0.0	9.9	P_m	55.5	462%
1416	1.2	-4.8	0.0	-3.9	0.0	0.0	9.8	P_m	55.5	464%
53	-8.1	-7.7	0.0	-0.9	0.0	0.0	8.8	P_m	55.5	Large
1169	-7.7	-8.1	0.0	-0.9	0.0	0.0	8.8	P_m	55.5	Large
2070	-1.2	-4.6	0.0	-3.9	0.0	0.0	8.5	P_m	55.5	Large
201	-4.6	-1.2	0.0	-3.9	0.0	0.0	8.5	P_m	55.5	Large
2100	-6.2	-0.6	0.0	-1.8	0.0	0.0	6.7	P_m	55.5	Large
380	-0.6	-6.2	0.0	-1.8	0.0	0.0	6.7	P_m	55.5	Large
1446	5.2	0.4	0.0	-1.6	0.0	0.0	5.7	P_m	55.5	Large
1752	0.4	5.2	0.0	-1.6	0.0	0.0	5.7	P_m	55.5	Large
1361	-0.1	-2.0	0.0	-1.5	0.0	0.0	3.6	P_m	55.5	Large
446	-2.0	-0.1	0.0	-1.5	0.0	0.0	3.6	P_m	55.5	Large

Notes:

(1) All stress results are reported in units of ksi. Stress results for the corner 30° primary impact are from Run I.D. 95010411.51A, L.S. #3.

(2) All spacer disc ligament stress intensities are conservatively classified as primary membrane. The allowable primary membrane stress intensities is 55.5 ksi for ASME SA-537, Class 2 carbon steel at 600°F.

(3) The locations of the reported spacer disc ligament stresses are shown in Figure 2.7.6-6.

Table 2.7.6-24
FC Spacer Disc Top 20 S.I. (Middle Fiber) - Corner 30° Primary Impact

Node	Stress Components (ksi)						SINT	Stress Type	Stress Limit	Margin of Safety
	SX	SY	SZ	SXY	SYZ	SXZ				
78	3.5	-58.5	0.0	3.0	0.0	0.0	62.3	$P_l + P_b$	79.3	27%
1986	-58.5	3.5	0.0	3.0	0.0	0.0	62.3	$P_l + P_b$	79.3	27%
1425	4.3	-55.9	0.0	2.8	0.0	0.0	60.5	$P_l + P_b$	79.3	31%
1499	-55.8	4.3	0.0	2.8	0.0	0.0	60.4	$P_l + P_b$	79.3	31%
670	-53.8	1.9	0.0	2.7	0.0	0.0	55.9	$P_l + P_b$	79.3	42%
740	1.9	-53.8	0.0	2.7	0.0	0.0	55.9	$P_l + P_b$	79.3	42%
117	-4.0	49.7	0.0	2.8	0.0	0.0	54.1	$P_l + P_b$	79.3	47%
2153	49.7	-4.0	0.0	2.8	0.0	0.0	54.0	$P_l + P_b$	79.3	47%
1394	4.3	-47.0	0.0	1.3	0.0	0.0	51.4	$P_l + P_b$	79.3	54%
1324	-47.0	4.3	0.0	1.3	0.0	0.0	51.3	$P_l + P_b$	79.3	55%
2071	2.2	-48.8	0.0	2.6	0.0	0.0	51.3	$P_l + P_b$	79.3	55%
199	-48.8	2.2	0.0	2.6	0.0	0.0	51.3	$P_l + P_b$	79.3	55%
1386	-4.4	46.4	0.0	3.0	0.0	0.0	51.2	$P_l + P_b$	79.3	55%
1332	46.4	-4.4	0.0	3.0	0.0	0.0	51.2	$P_l + P_b$	79.3	55%
98	1.7	-49.1	0.0	2.5	0.0	0.0	51.1	$P_l + P_b$	79.3	55%
2172	-49.0	1.7	0.0	2.5	0.0	0.0	50.9	$P_l + P_b$	79.3	56%
128	2.3	-46.8	0.0	2.9	0.0	0.0	49.3	$P_l + P_b$	79.3	61%
2415	-46.6	2.3	0.0	2.9	0.0	0.0	49.2	$P_l + P_b$	79.3	61%
157	-8.2	34.6	0.0	-10.8	0.0	0.0	48.0	$P_l + P_b$	79.3	65%
1436	-3.0	44.5	0.0	3.0	0.0	0.0	47.9	$P_l + P_b$	79.3	65%

Notes:

(1) All stress results are reported in units of ksi.

(2) The allowable primary membrane and membrane plus bending stress intensities are 55.5 ksi and 79.3 ksi, respectively, for ASME SA-537, Class 2 carbon steel at 600°F.

(3) The locations of the top 20 spacer disc middle fiber stress intensities due to the corner 30° primary impact are shown in Figure 2.7.6-31.

Table 2.7.6-25
FC Spacer Disc Top 20 S.I. (Top Fiber) - Corner 30° Primary Impact

Node	Stress Components (ksi)						SINT	Stress Type	Stress Limit	Margin of Safety
	SX	SY	SZ	SXY	SYZ	SXZ				
1986	-61.7	3.5	0.0	2.8	0.0	0.0	65.4	$P_l + P_b$	79.3	21%
1499	-59.8	4.3	0.0	2.9	0.0	0.0	64.3	$P_l + P_b$	79.3	23%
78	3.5	-57.2	0.0	3.3	0.0	0.0	61.1	$P_l + P_b$	79.3	30%
1425	4.4	-55.7	0.0	3.4	0.0	0.0	60.4	$P_l + P_b$	79.3	31%
670	-55.5	1.8	0.0	2.7	0.0	0.0	57.5	$P_l + P_b$	79.3	38%
2172	-52.9	1.6	0.0	2.1	0.0	0.0	54.7	$P_l + P_b$	79.3	45%
740	1.9	-52.5	0.0	3.0	0.0	0.0	54.7	$P_l + P_b$	79.3	45%
117	-3.9	50.0	0.0	2.3	0.0	0.0	54.1	$P_l + P_b$	79.3	47%
199	-51.0	2.2	0.0	2.3	0.0	0.0	53.4	$P_l + P_b$	79.3	49%
2415	-50.5	2.2	0.0	3.0	0.0	0.0	53.0	$P_l + P_b$	79.3	50%
1324	-48.7	4.2	0.0	1.3	0.0	0.0	53.0	$P_l + P_b$	79.3	50%
1386	-4.4	47.8	0.0	2.7	0.0	0.0	52.4	$P_l + P_b$	79.3	51%
24	-46.3	4.6	0.0	0.9	0.0	0.0	50.9	$P_l + P_b$	79.3	56%
128	2.3	-48.3	0.0	2.8	0.0	0.0	50.8	$P_l + P_b$	79.3	56%
98	1.6	-48.9	0.0	2.0	0.0	0.0	50.7	$P_l + P_b$	79.3	56%
1394	4.3	-45.8	0.0	1.7	0.0	0.0	50.1	$P_l + P_b$	79.3	58%
2153	45.8	-4.0	0.0	2.8	0.0	0.0	50.1	$P_l + P_b$	79.3	58%
2071	2.2	-46.9	0.0	2.2	0.0	0.0	49.4	$P_l + P_b$	79.3	61%
157	-8.2	35.7	0.0	-11.1	0.0	0.0	49.1	$P_l + P_b$	79.3	61%
856	-46.8	1.2	0.0	2.3	0.0	0.0	48.3	$P_l + P_b$	79.3	64%

Notes:

(1) All stress results are reported in units of ksi. Stress results for the corner 30° primary impact are from Run I.D. 95010411.51A, L.S. #3.

(2) All spacer disc extreme fiber stress intensities are conservatively classified as membrane plus bending. The allowable membrane plus bending stress intensity for ASME SA-537, Class 2 carbon steel at 600°F is 79.3 ksi.

(3) The locations of the top 20 spacer disc top fiber stress intensities due to the corner 30° primary impact are shown in Figure 2.7.6-32.

Table 2.7.6-26
FC Spacer Disc Top 20 S.I. (Bottom Fiber) - Corner 30° Primary Impact

Node	Stress Components (ksi)						SINT	Stress Type	Stress Limit	Margin of Safety
	SX	SY	SZ	SXY	SYZ	SXZ				
78	3.5	-59.9	0.0	2.7	0.0	0.0	63.6	$P_l + P_b$	79.3	25%
1425	4.3	-56.1	0.0	2.3	0.0	0.0	60.5	$P_l + P_b$	79.3	31%
1986	-55.3	3.6	0.0	3.1	0.0	0.0	59.2	$P_l + P_b$	79.3	34%
2153	53.7	-4.0	0.0	2.9	0.0	0.0	58.0	$P_l + P_b$	79.3	37%
740	1.9	-55.0	0.0	2.3	0.0	0.0	57.1	$P_l + P_b$	79.3	39%
1499	-51.8	4.4	0.0	2.8	0.0	0.0	56.5	$P_l + P_b$	79.3	40%
1332	49.6	-4.4	0.0	2.8	0.0	0.0	54.3	$P_l + P_b$	79.3	46%
670	-52.1	1.9	0.0	2.7	0.0	0.0	54.3	$P_l + P_b$	79.3	46%
117	-4.1	49.5	0.0	3.4	0.0	0.0	54.0	$P_l + P_b$	79.3	47%
2071	2.2	-50.7	0.0	2.9	0.0	0.0	53.2	$P_l + P_b$	79.3	49%
1394	4.3	-48.3	0.0	1.0	0.0	0.0	52.6	$P_l + P_b$	79.3	51%
1761	48.2	-3.0	0.0	3.1	0.0	0.0	51.6	$P_l + P_b$	79.3	54%
98	1.8	-49.3	0.0	3.0	0.0	0.0	51.4	$P_l + P_b$	79.3	54%
2596	36.6	-7.1	0.0	-12.7	0.0	0.0	50.5	$P_l + P_b$	79.3	57%
1518	48.5	-1.4	0.0	2.1	0.0	0.0	50.1	$P_l + P_b$	79.3	58%
1386	-4.4	45.1	0.0	3.3	0.0	0.0	50.0	$P_l + P_b$	79.3	59%
1324	-45.3	4.3	0.0	1.3	0.0	0.0	49.7	$P_l + P_b$	79.3	60%
1436	-3.0	46.1	0.0	2.9	0.0	0.0	49.4	$P_l + P_b$	79.3	60%
199	-46.5	2.3	0.0	2.9	0.0	0.0	49.1	$P_l + P_b$	79.3	61%
2040	4.6	-44.4	0.0	0.7	0.0	0.0	49.0	$P_l + P_b$	79.3	62%

Notes:

(1) All stress results are reported in units of ksi. The stresses for the corner 30° primary impact are from Run I.D. 95010411.51A, L.S. #3.

(2) All spacer disc extreme fiber stress intensities are conservatively classified as membrane plus bending. The allowable membrane plus bending stress intensity for ASME SA-537, Class 2 carbon steel at 600°F is 79.3 ksi.

(3) The locations of the top 20 spacer disc bottom fiber stress intensities due to the corner 30° primary impact are shown in Figure 2.7.6-33.

Component	Dead Load		Slapdown
F_P, FC Spacer Disk	425 #	--	31.4 k
F_F, Fuel	10.84 lb/in	1821. #	134.6 k
F_{GS}, Guide Sleeve	1.70 lb/in	286. #	21.1 k
$F_{Applied}$, Total Applied Load			187.1 k
$F_{Reaction}$, ANSYS Reaction Load*2			187.2 k
Ratio ($F_{Applied}/F_{Reaction}$)			1.00

Notes: disctabl.xls, slap corn

1. Fuel & Guide Sleeve load based on 24 fuel elements and 7.0 inch disk spacing.
2. Acceleration for Corner Slapdown Drop, 73.9 g.

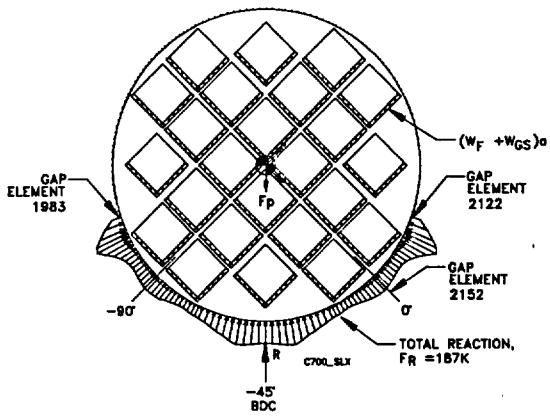

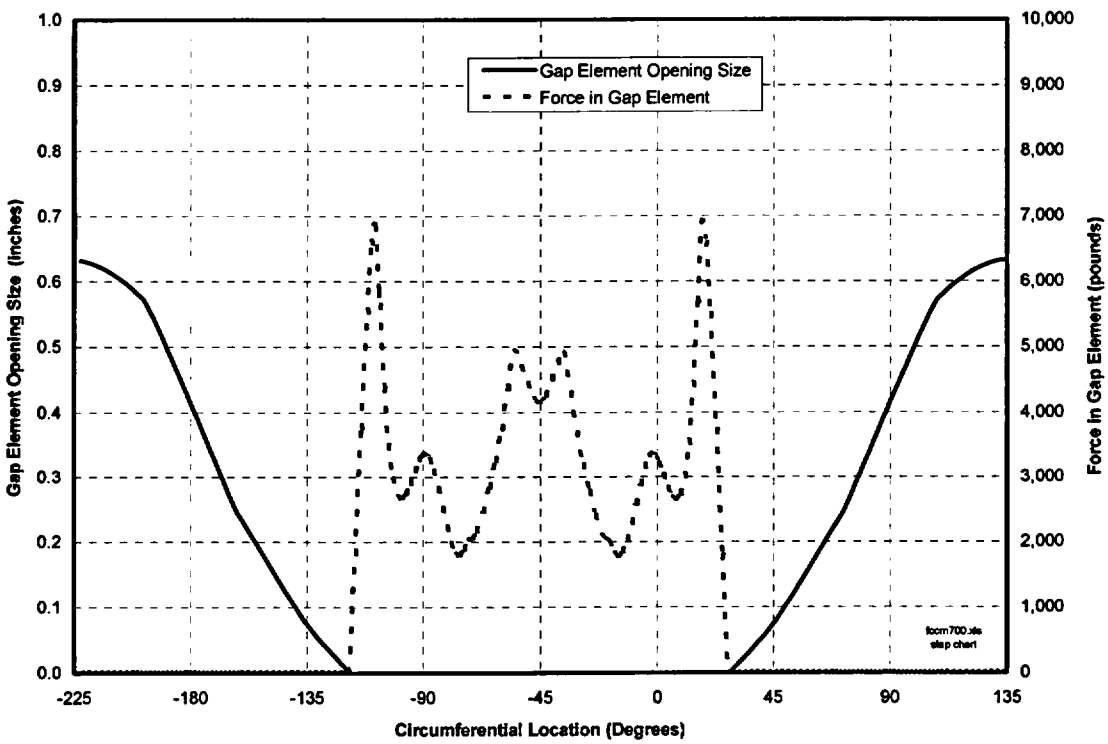

Figure 2.7.6-27
Gap Element Behavior for Corner Slapdown Impact

Table 2.7.6-27
FC Spacer Disc Ligament S.I. - Corner Slapdown

Node	Stress Components (ksi)						SINT	Stress Type	Stress Limit	Margin of Safety
	SX	SY	SZ	SXY	SYZ	SXZ				
1	-8.9	-8.9	0.0	-18.1	0.0	0.0	36.2	P_m	55.5	53%
844	-0.7	-14.8	0.0	-12.9	0.0	0.0	29.3	P_m	55.5	89%
26	-14.8	-0.8	0.0	-12.9	0.0	0.0	29.3	P_m	55.5	89%
1334	-5.2	-8.7	0.0	-13.8	0.0	0.0	27.9	P_m	55.5	99%
190	-8.7	-5.2	0.0	-13.8	0.0	0.0	27.9	P_m	55.5	99%
2163	2.7	-19.3	0.0	-6.1	0.0	0.0	25.2	P_m	55.5	120%
108	-19.3	2.7	0.0	-6.1	0.0	0.0	25.1	P_m	55.5	121%
951	6.3	-17.9	0.0	-2.6	0.0	0.0	24.8	P_m	55.5	124%
50	-17.4	-3.0	0.0	-7.6	0.0	0.0	21.0	P_m	55.5	165%
792	7.8	-10.8	0.0	0.1	0.0	0.0	18.6	P_m	55.5	198%
2406	-1.0	-18.5	0.0	-1.3	0.0	0.0	18.6	P_m	55.5	198%
138	-18.5	-1.0	0.0	-1.3	0.0	0.0	18.6	P_m	55.5	198%
1098	-10.7	7.8	0.0	0.1	0.0	0.0	18.6	P_m	55.5	199%
762	5.1	-7.0	0.0	-4.6	0.0	0.0	15.3	P_m	55.5	264%
855	-7.0	5.1	0.0	-4.6	0.0	0.0	15.2	P_m	55.5	265%
53	-12.3	-13.9	0.0	-0.8	0.0	0.0	14.2	P_m	55.5	291%
1169	-13.8	-12.3	0.0	-0.8	0.0	0.0	14.2	P_m	55.5	292%
2070	1.4	-9.5	0.0	-4.4	0.0	0.0	14.0	P_m	55.5	296%
1358	-2.8	-1.9	0.0	-7.0	0.0	0.0	14.0	P_m	55.5	296%
369	-1.9	-2.8	0.0	-7.0	0.0	0.0	14.0	P_m	55.5	297%
201	-9.5	1.3	0.0	-4.4	0.0	0.0	14.0	P_m	55.5	298%
1509	-7.9	-1.6	0.0	-4.3	0.0	0.0	10.7	P_m	55.5	418%
1416	-1.6	-7.9	0.0	-4.3	0.0	0.0	10.7	P_m	55.5	420%
2100	-8.3	-1.8	0.0	-2.5	0.0	0.0	9.1	P_m	55.5	Large
380	-1.8	-8.3	0.0	-2.5	0.0	0.0	9.1	P_m	55.5	Large
1446	6.5	0.2	0.0	-1.8	0.0	0.0	7.2	P_m	55.5	Large
1752	0.2	6.5	0.0	-1.8	0.0	0.0	7.2	P_m	55.5	Large
1361	-0.1	-2.4	0.0	-1.8	0.0	0.0	4.2	P_m	55.5	Large
446	-2.4	-0.1	0.0	-1.8	0.0	0.0	4.2	P_m	55.5	Large

Notes:

(1) All stress results are reported in units of ksi.

(2) All spacer disc ligament stress intensities are conservatively classified as primary membrane. The allowable primary membrane stress intensities is 55.5 ksi for ASME SA-537, Class 2 carbon steel at 600°F.

(3) The locations of the reported spacer disc ligament stresses due to the corner slapdown are shown in Figure 2.7.6-6.

Table 2.7.6-28
FC Spacer Disc Top 20 S.I. (Middle Fiber) - Corner Slapdown

Node	Stress Components (ksi)						SINT	Stress Type	Stress Limit	Margin of Safety
	SX	SY	SZ	SXY	SYZ	SXZ				
1425	4.8	-71.3	0.0	3.8	0.0	0.0	76.5	$P_l + P_b$	79.3	4%
1499	-71.3	4.8	0.0	3.8	0.0	0.0	76.5	$P_l + P_b$	79.3	4%
78	4.0	-70.7	0.0	3.8	0.0	0.0	75.1	$P_l + P_b$	79.3	6%
1986	-70.6	4.0	0.0	3.8	0.0	0.0	75.0	$P_l + P_b$	79.3	6%
670	-65.7	1.7	0.0	3.4	0.0	0.0	67.7	$P_l + P_b$	79.3	17%
740	1.7	-65.7	0.0	3.4	0.0	0.0	67.7	$P_l + P_b$	79.3	17%
2071	1.9	-63.5	0.0	3.5	0.0	0.0	65.8	$P_l + P_b$	79.3	21%
199	-63.5	1.9	0.0	3.5	0.0	0.0	65.8	$P_l + P_b$	79.3	21%
2153	59.7	-4.6	0.0	3.8	0.0	0.0	64.7	$P_l + P_b$	79.3	22%
117	-4.6	59.7	0.0	3.8	0.0	0.0	64.7	$P_l + P_b$	79.3	22%
98	2.2	-59.3	0.0	3.3	0.0	0.0	61.9	$P_l + P_b$	79.3	28%
2172	-59.1	2.2	0.0	3.3	0.0	0.0	61.7	$P_l + P_b$	79.3	28%
167	-39.0	-54.8	0.0	11.8	0.0	0.0	61.2	$P_l + P_b$	79.3	30%
2497	-52.1	-45.7	0.0	11.1	0.0	0.0	60.5	$P_l + P_b$	79.3	31%
128	2.8	-56.7	0.0	3.9	0.0	0.0	60.1	$P_l + P_b$	79.3	32%
1436	-4.0	55.4	0.0	4.2	0.0	0.0	60.0	$P_l + P_b$	79.3	32%
2415	-56.6	2.8	0.0	3.9	0.0	0.0	59.9	$P_l + P_b$	79.3	32%
1761	55.3	-4.0	0.0	4.2	0.0	0.0	59.9	$P_l + P_b$	79.3	32%
2101	4.1	-53.6	0.0	3.4	0.0	0.0	58.1	$P_l + P_b$	79.3	37%
378	-53.5	4.1	0.0	3.4	0.0	0.0	58.0	$P_l + P_b$	79.3	37%

Notes:

(1) All stress results are reported in units of ksi.

(2) The allowable primary membrane and membrane plus bending stress intensities are 55.5 ksi and 79.3 ksi, respectively, for ASME SA-537, Class 2 carbon steel at 600°F.

(3) The locations of the top 20 spacer disc middle fiber stress intensities due to the corner slapdown are shown in Figure 2.7.6-34.

Table 2.7.6-29
FC Spacer Disc Top 20 S.I. (Top Fiber) - Corner Slapdown

Node	Stress Components (ksi)						SINT	Stress Type	Stress Limit	Margin of Safety
	SX	SY	SZ	SXY	SYZ	SXZ				
1499	-72.1	4.8	0.0	3.8	0.0	0.0	77.3	$P_l + P_b$	79.3	3%
1425	4.8	-71.3	0.0	3.9	0.0	0.0	76.5	$P_l + P_b$	79.3	4%
1986	-71.3	4.0	0.0	3.8	0.0	0.0	75.7	$P_l + P_b$	79.3	5%
78	4.0	-70.4	0.0	3.9	0.0	0.0	74.8	$P_l + P_b$	79.3	6%
670	-66.0	1.7	0.0	3.4	0.0	0.0	68.1	$P_l + P_b$	79.3	16%
740	1.7	-65.4	0.0	3.5	0.0	0.0	67.5	$P_l + P_b$	79.3	18%
199	-63.9	1.9	0.0	3.4	0.0	0.0	66.2	$P_l + P_b$	79.3	20%
2071	1.9	-63.1	0.0	3.4	0.0	0.0	65.4	$P_l + P_b$	79.3	21%
117	-4.6	59.7	0.0	3.6	0.0	0.0	64.7	$P_l + P_b$	79.3	22%
2153	58.9	-4.6	0.0	3.7	0.0	0.0	63.9	$P_l + P_b$	79.3	24%
2172	-59.9	2.2	0.0	3.3	0.0	0.0	62.5	$P_l + P_b$	79.3	27%
98	2.2	-59.3	0.0	3.2	0.0	0.0	61.8	$P_l + P_b$	79.3	28%
2497	-52.9	-45.8	0.0	11.4	0.0	0.0	61.3	$P_l + P_b$	79.3	29%
167	-39.0	-54.6	0.0	11.7	0.0	0.0	60.9	$P_l + P_b$	79.3	30%
2415	-57.4	2.8	0.0	3.9	0.0	0.0	60.7	$P_l + P_b$	79.3	31%
128	2.8	-57.1	0.0	3.9	0.0	0.0	60.4	$P_l + P_b$	79.3	31%
1436	-4.0	55.1	0.0	4.2	0.0	0.0	59.7	$P_l + P_b$	79.3	33%
1761	54.5	-4.0	0.0	4.1	0.0	0.0	59.1	$P_l + P_b$	79.2	34%
378	-54.1	4.1	0.0	3.4	0.0	0.0	58.6	$P_l + P_b$	79.2	35%
1324	-52.8	5.5	0.0	1.2	0.0	0.0	58.3	$P_l + P_b$	79.2	36%

Notes:

(1) All stress results are reported in units of ksi.

(2) All spacer disc extreme fiber stress intensities are conservatively classified as membrane plus bending. The allowable membrane plus bending stress intensity for ASME SA-537, Class 2 carbon steel at 600°F is 79.3 ksi.

(3) The locations of the top 20 spacer disc top fiber stress intensities due to the corner slapdown are shown in Figure 2.7.6-35.

Table 2.7.6-30
FC Spacer Disc Top 20 S.I. (Bottom Fiber) - Corner Slapdown

Node	Stress Components (ksi)						SINT	Stress Type	Stress Limit	Margin of Safety
	SX	SY	SZ	SXY	SYZ	SXZ				
1425	4.8	-71.4	0.0	3.7	0.0	0.0	76.5	$P_l + P_b$	79.3	4%
1499	-70.4	4.8	0.0	3.8	0.0	0.0	75.6	$P_l + P_b$	79.3	5%
78	4.0	-71.0	0.0	3.7	0.0	0.0	75.3	$P_l + P_b$	79.3	5%
1986	-70.0	4.0	0.0	3.8	0.0	0.0	74.4	$P_l + P_b$	79.3	7%
740	1.7	-65.9	0.0	3.3	0.0	0.0	68.0	$P_l + P_b$	79.3	17%
670	-65.3	1.7	0.0	3.4	0.0	0.0	67.4	$P_l + P_b$	79.3	18%
2071	1.9	-63.9	0.0	3.5	0.0	0.0	66.2	$P_l + P_b$	79.3	20%
2153	60.5	-4.6	0.0	3.8	0.0	0.0	65.5	$P_l + P_b$	79.3	21%
199	-63.0	1.9	0.0	3.5	0.0	0.0	65.3	$P_l + P_b$	79.3	21%
117	-4.6	59.6	0.0	3.9	0.0	0.0	64.7	$P_l + P_b$	79.3	22%
98	2.3	-59.3	0.0	3.4	0.0	0.0	62.0	$P_l + P_b$	79.3	28%
167	-39.1	-55.1	0.0	12.0	0.0	0.0	61.5	$P_l + P_b$	79.3	29%
2172	-58.3	2.3	0.0	3.4	0.0	0.0	61.0	$P_l + P_b$	79.3	30%
1761	56.1	-4.0	0.0	4.2	0.0	0.0	60.7	$P_l + P_b$	79.3	31%
1436	-4.0	55.7	0.0	4.1	0.0	0.0	60.3	$P_l + P_b$	79.3	31%
128	2.8	-56.4	0.0	3.9	0.0	0.0	59.8	$P_l + P_b$	79.3	33%
2497	-51.3	-45.6	0.0	10.9	0.0	0.0	59.7	$P_l + P_b$	79.3	33%
2415	-55.8	2.8	0.0	3.9	0.0	0.0	59.1	$P_l + P_b$	79.3	34%
1332	52.8	-5.2	0.0	3.8	0.0	0.0	58.5	$P_l + P_b$	79.3	36%
2101	4.1	-53.9	0.0	3.5	0.0	0.0	58.5	$P_l + P_b$	79.3	36%

Notes:

(1) All stress results are reported in units of ksi. The stresses for the corner slapdown are from Run I.D. 95010411.51A, L.S. #4.

(2) All spacer disc extreme fiber stress intensities are conservatively classified as membrane plus bending. The allowable membrane plus bending stress intensity for ASME SA-537, Class 2 carbon steel at 600°F is 79.3 ksi.

(3) The locations of the top 20 spacer disc bottom fiber stress intensities due to the corner slapdown are shown in Figure 2.7.6-36.

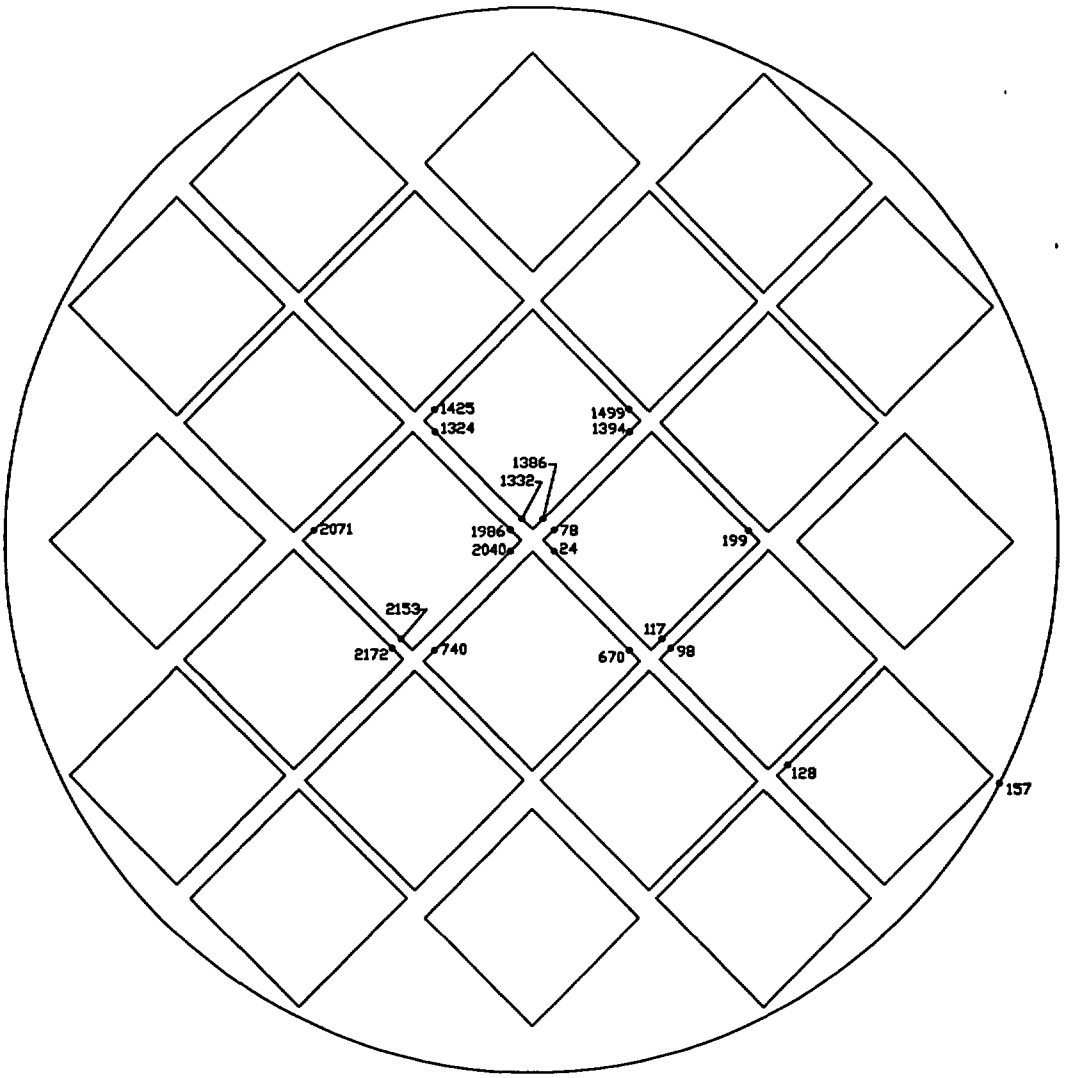

Figure 2.7.6-28
Location of Top 20 FC Spacer Disc S.I. (Middle Fiber) - Corner 60° Impact

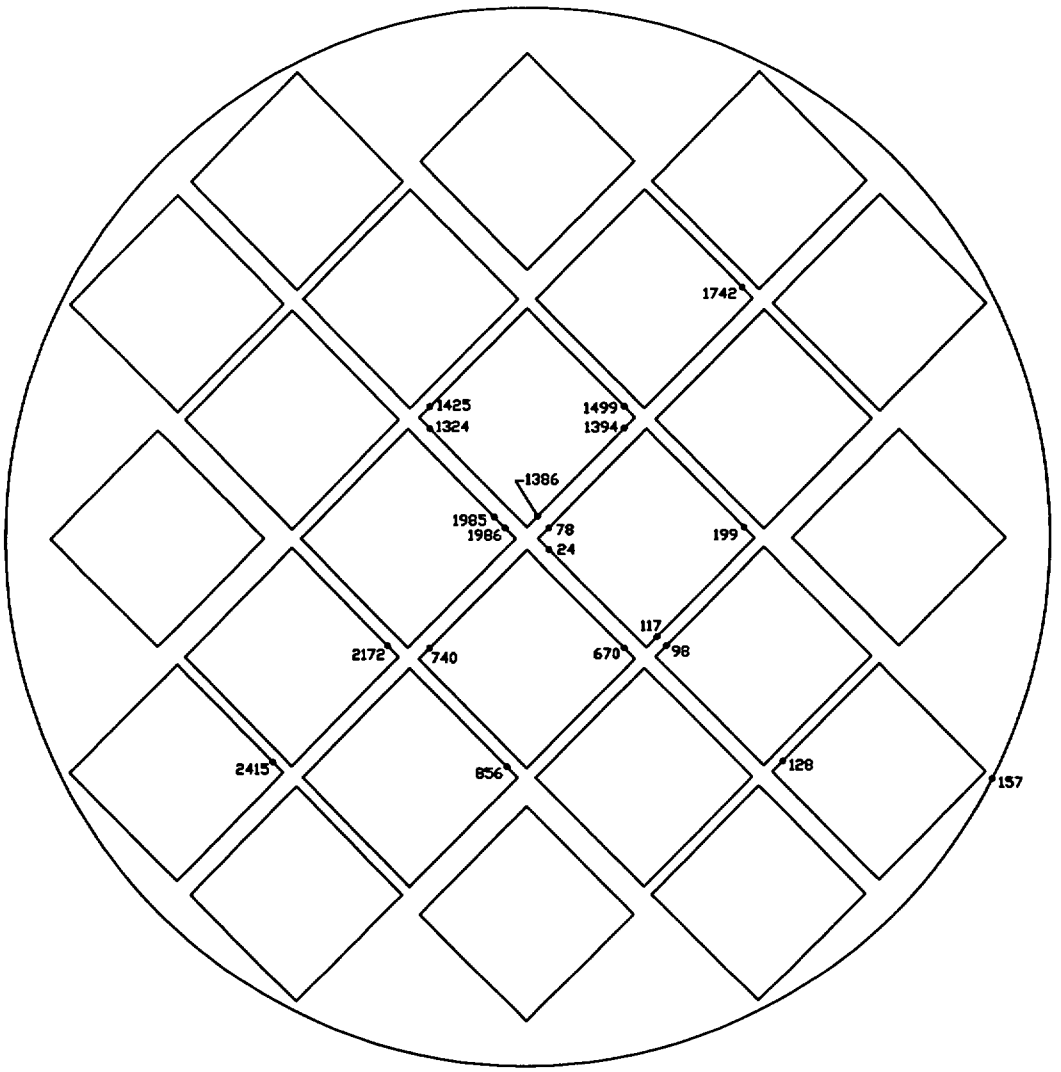

Figure 2.7.6-29
Location of Top 20 FC Spacer Disc S.I. (Top Fiber) - Corner 60° Impact

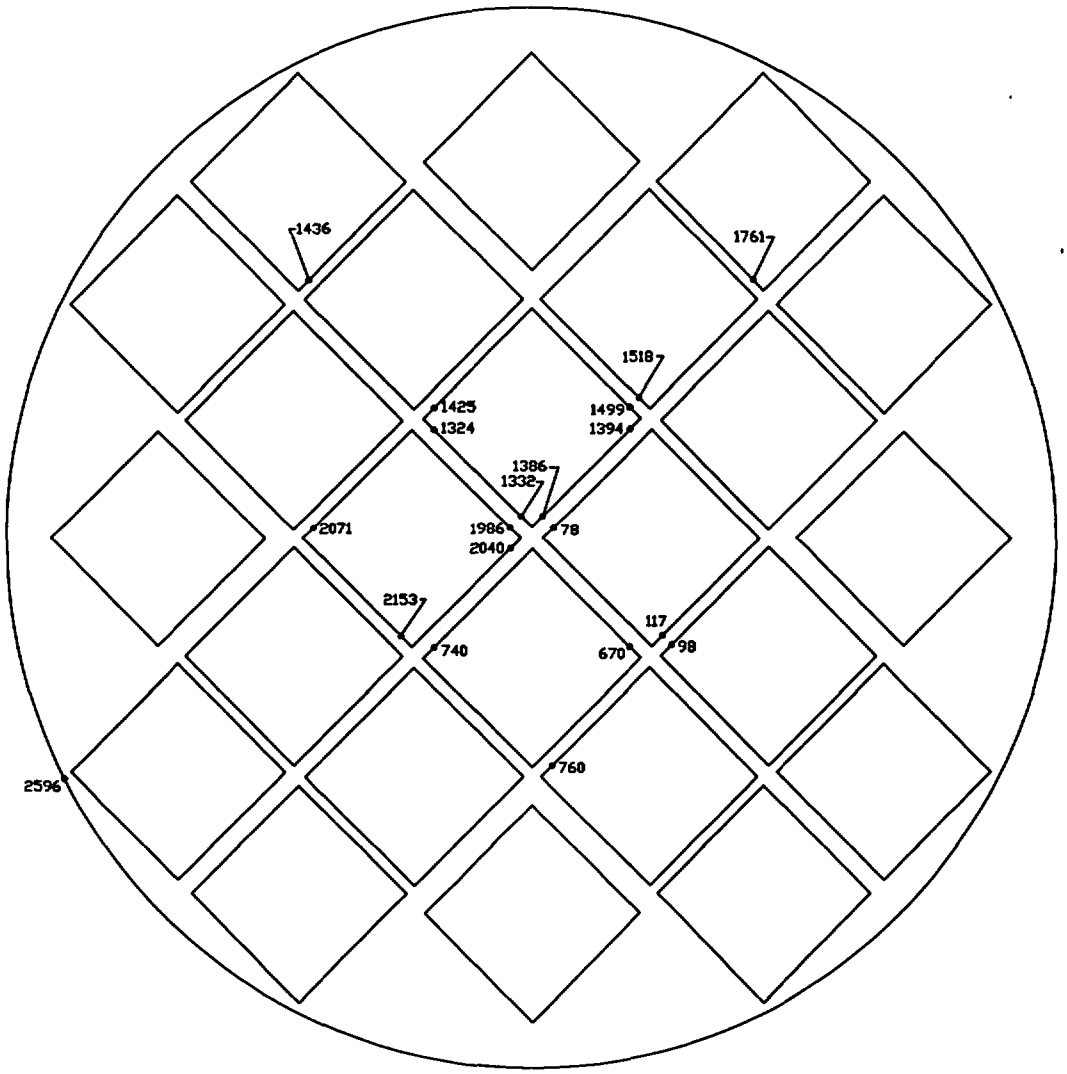

Figure 2.7.6-30
Location of Top 20 FC Spacer Disc S.I. (Bottom Fiber) - Corner 60° Impact

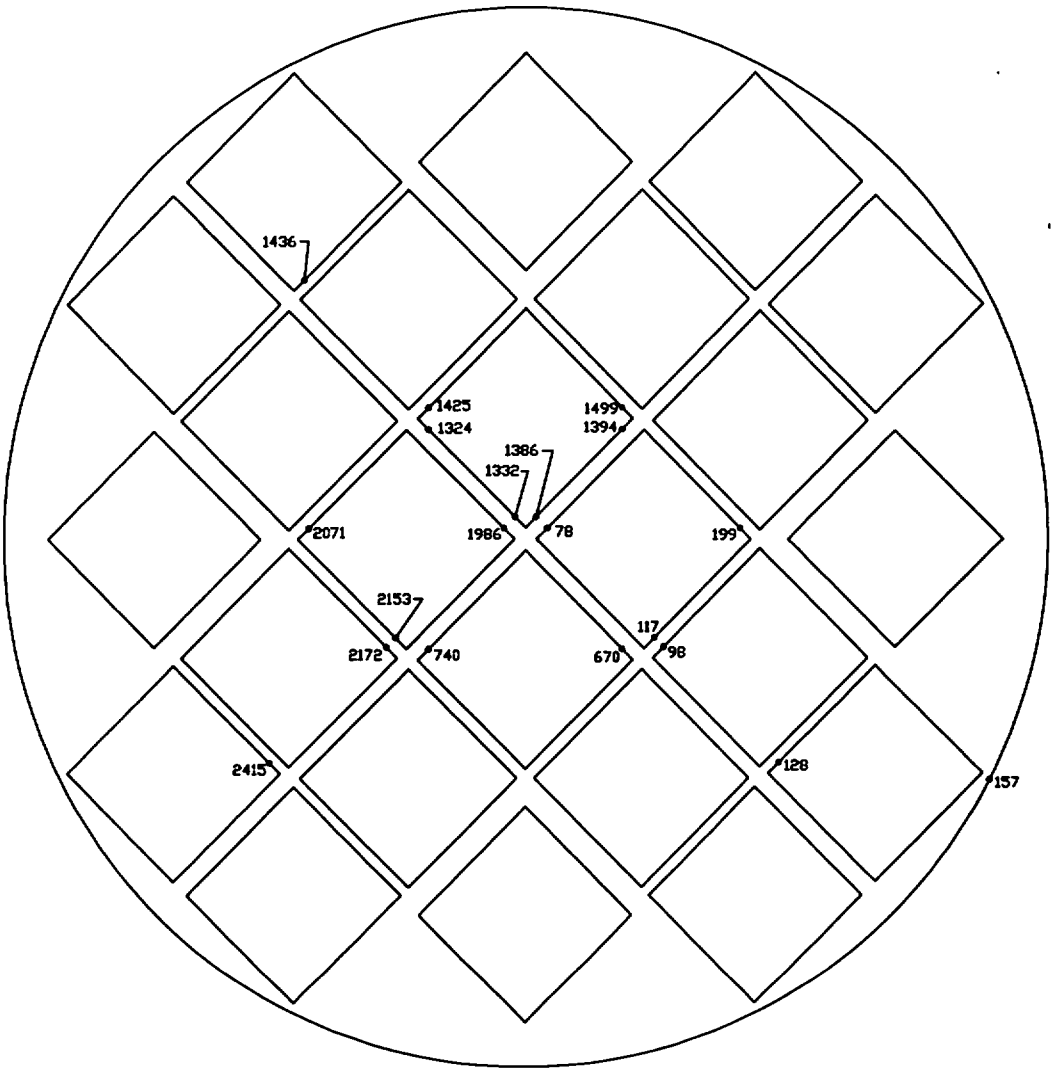

Figure 2.7.6-31
Location of Top 20 FC Spacer Disc S.I. (Middle Fiber) - Corner 30° Primary Impact

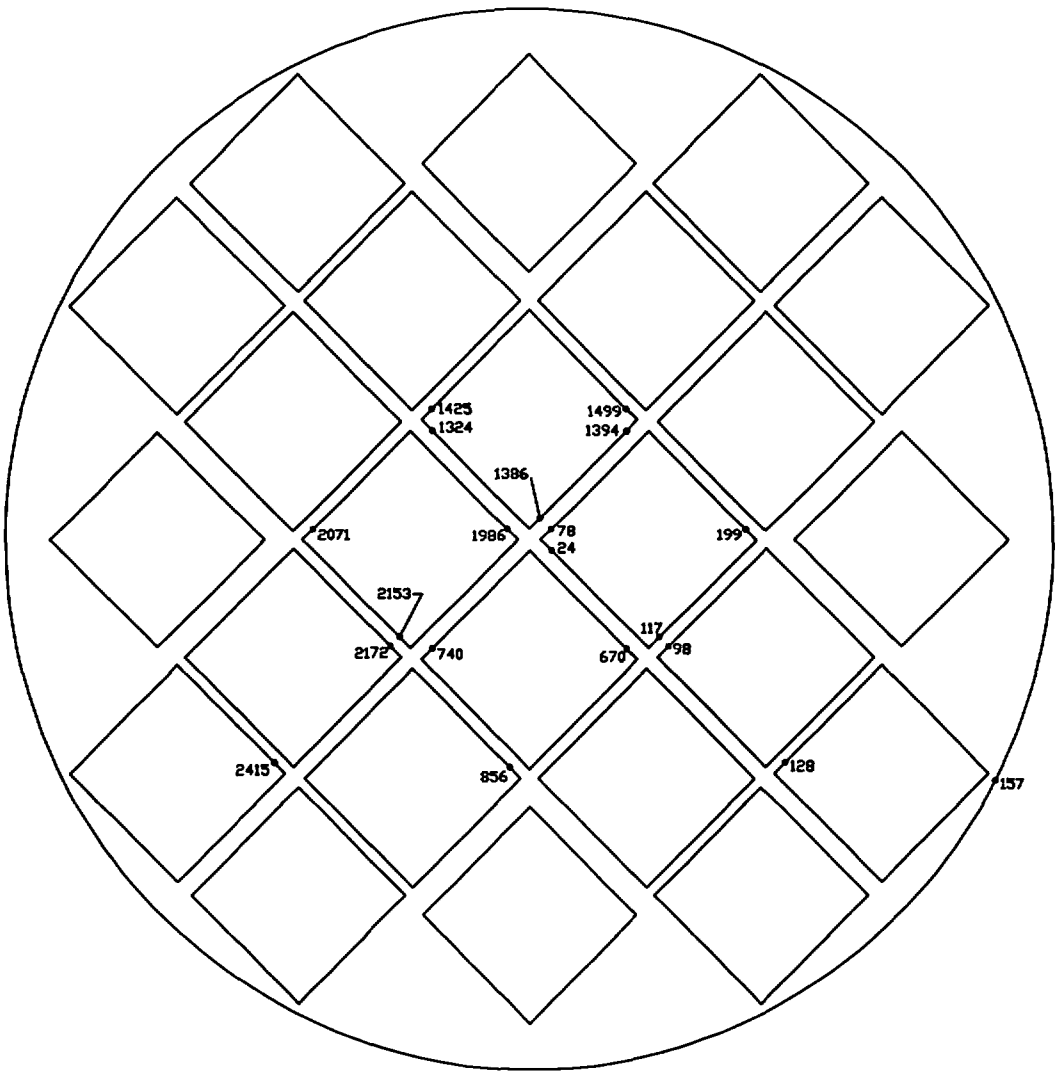

Figure 2.7.6-32
Location of Top 20 FC Spacer Disc S.I. (Top Fiber) - Corner 30° Primary Impact

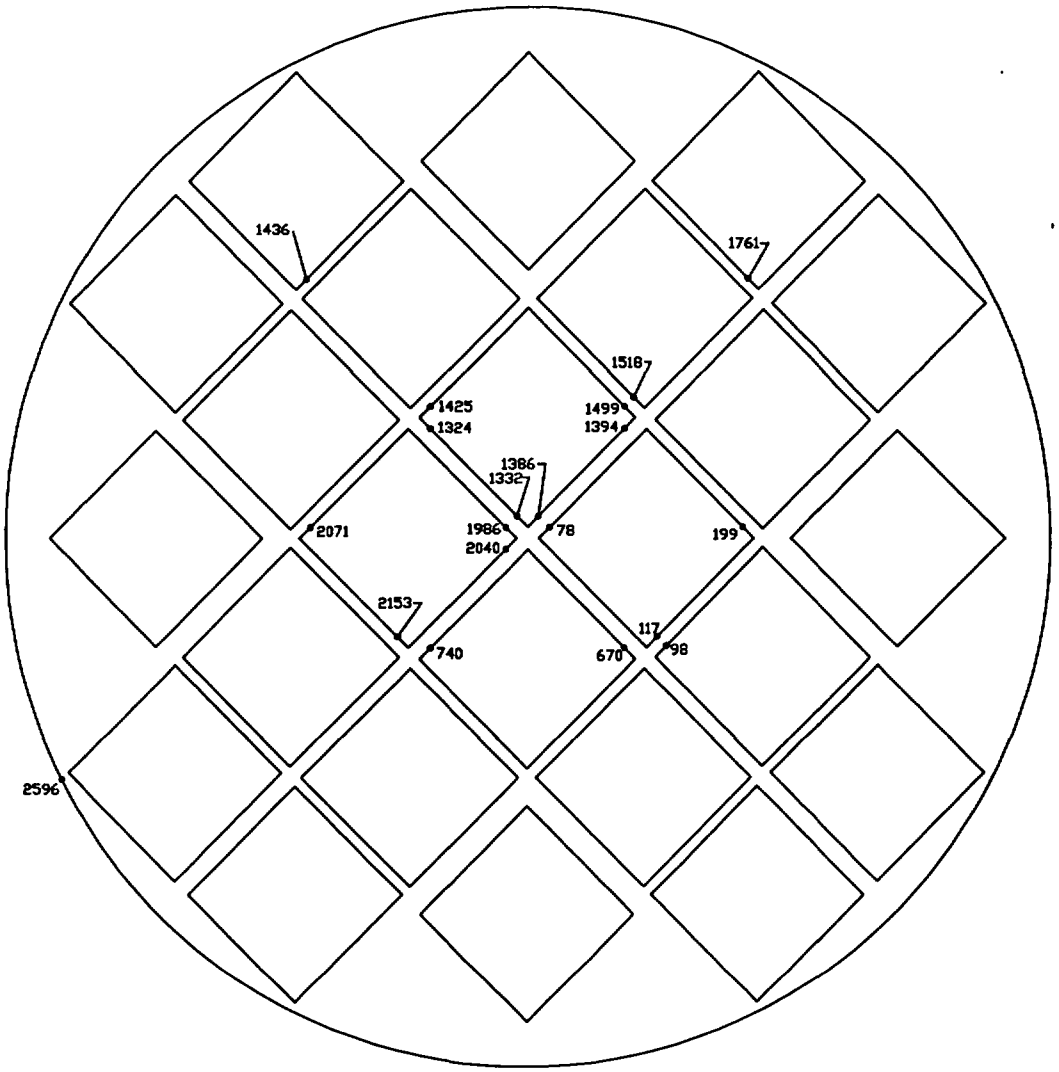

Figure 2.7.6-33
Location of Top 20 FC Spacer Disc S.I. (Bottom Fiber) - Corner 30° Primary Impact

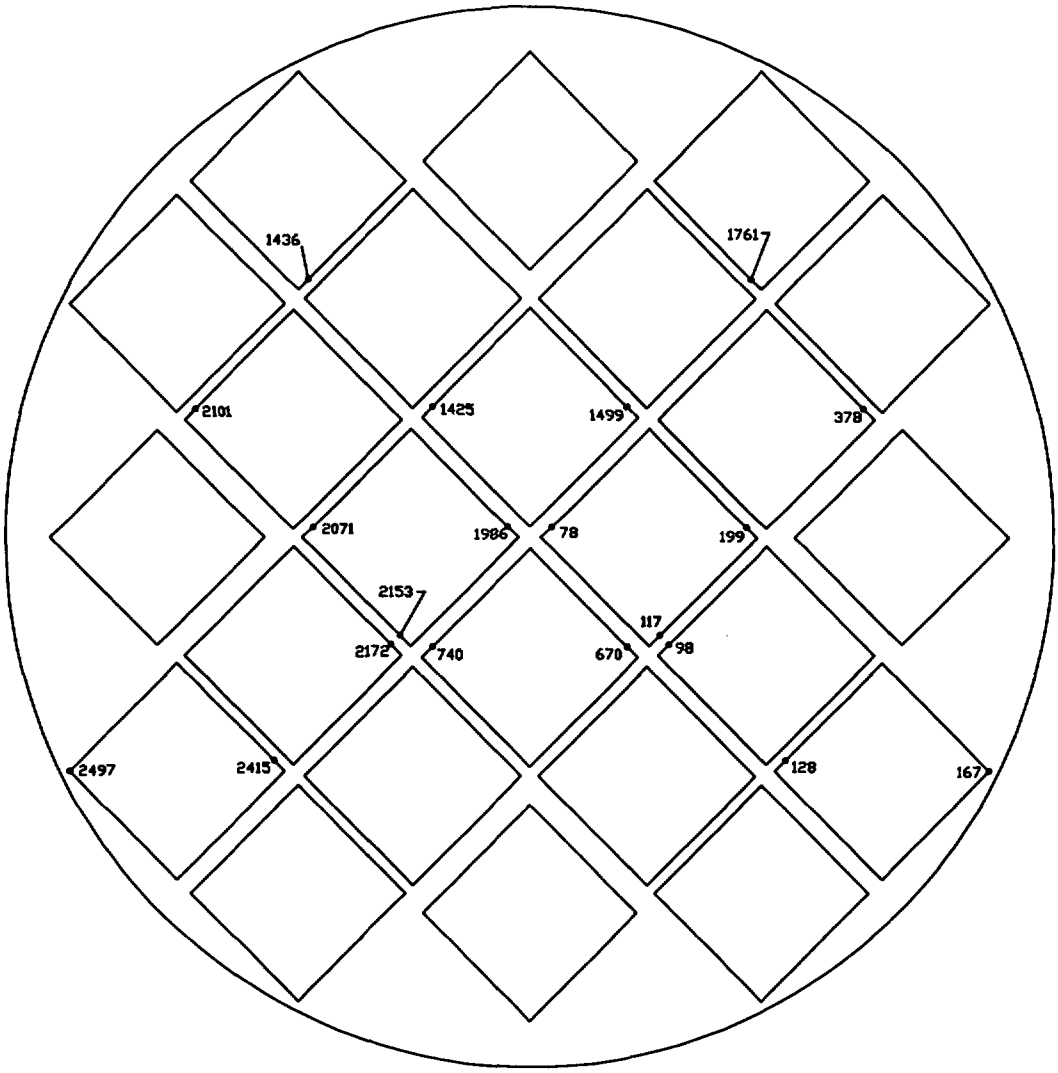

Figure 2.7.6-34
Location of Top 20 FC Spacer Disc S.I. (Middle Fiber) - Corner Slapdown

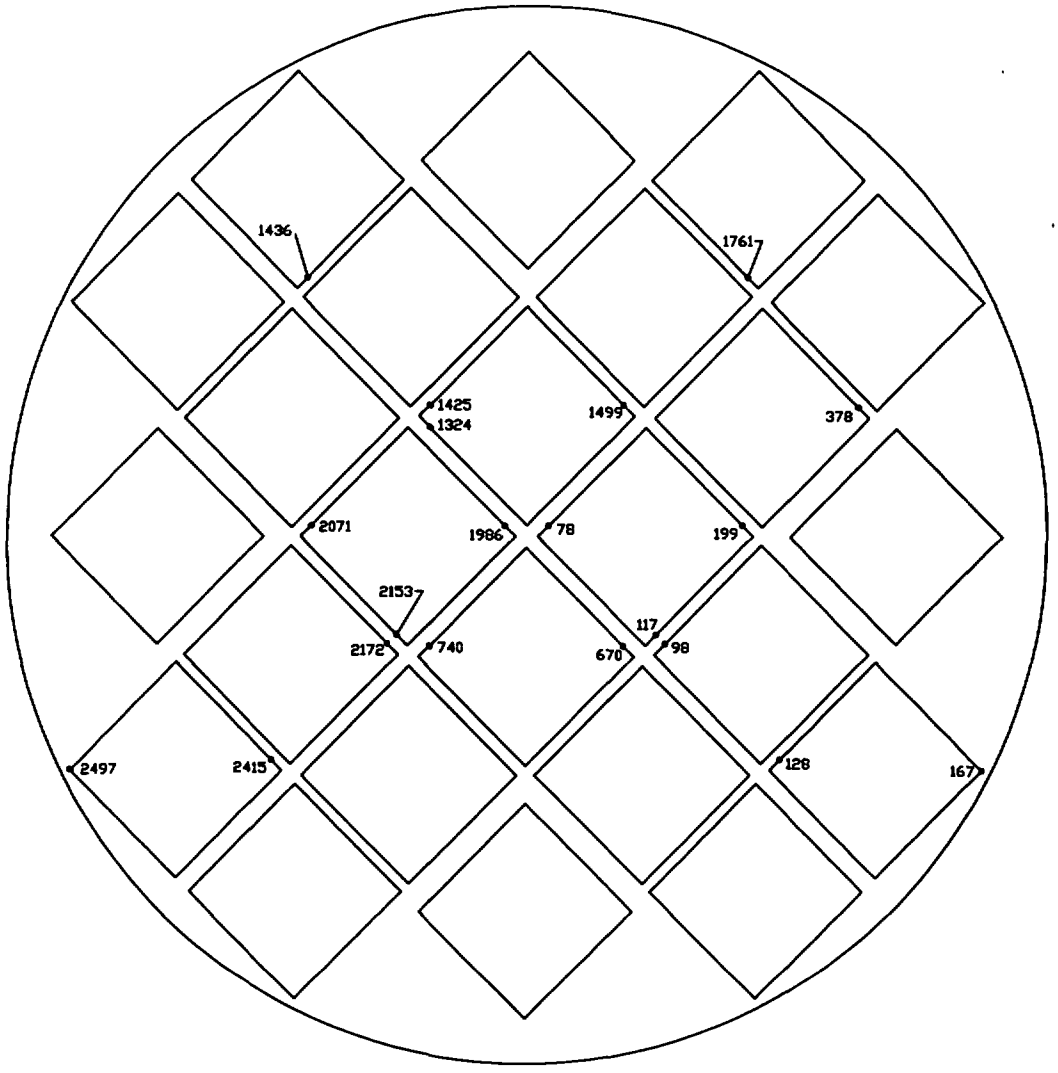

Figure 2.7.6-35
Location of Top 20 FC Spacer Disc S.I. (Top Fiber) - Corner Slapdown

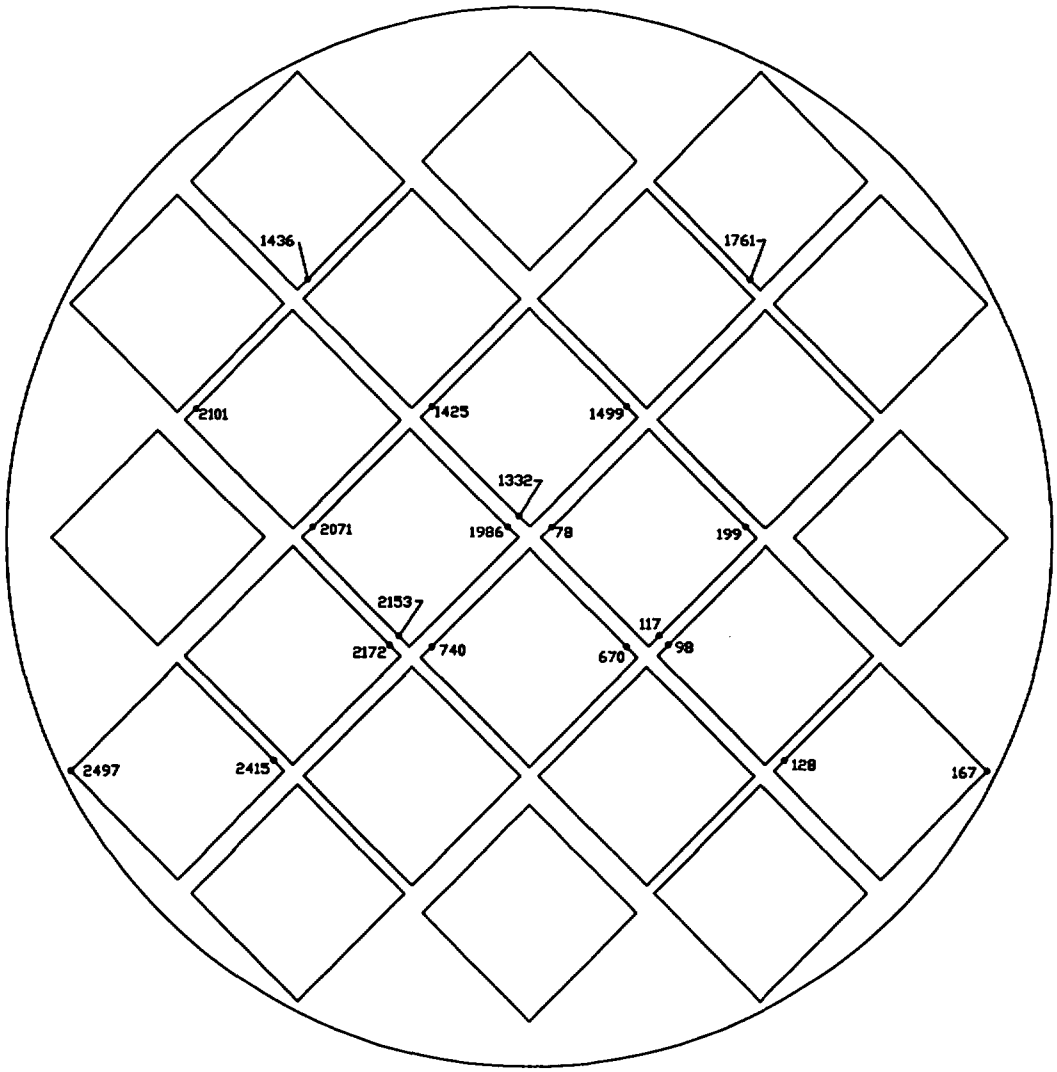

Figure 2.7.6-36
Location of Top 20 FC Spacer Disc S.I. (Bottom Fiber) - Corner Slapdown

2.7.6.1.2 Puncture

The NUHOMS®-MP187 Cask is evaluated for the puncture drop test of 10CFR71.73(c)(2) [2.1] in Section 2.7.3. The results of the cask puncture evaluation demonstrate that the cask will not puncture in the event of the postulated puncture drop condition. The drop deceleration loads which result from the puncture drop condition are much lower than those due to the 30' free drop. Therefore, the stresses in the FO-DSC and FC-DSC components resulting from the puncture drop condition are bounded by those due to the 30' free drop condition.

2.7.6.1.3 Thermal

Section 71.73(c)(3) of the Part 71 regulations [2.1] requires that the package be designed to withstand a postulated 30 minute fire at 1475°F. The thermal analysis of the NUHOMS®-MP187 transportation package is presented in Chapter 3. The results from the accident fire thermal analysis show that the temperature of the DSC remains relatively constant during the 30 minute accident fire event due to the insulating properties of the NS3 neutron shielding material and the impact limiter foam. After the postulated 30 minute fire, the neutron shielding material and the impact limiter foam become charred, thus increasing their insulating capabilities. This results in higher post-fire temperatures in the DSC and cask and lower thermal gradients in the DSC.

2.7.6.1.3.1 Differential Thermal Expansion

As discussed in Section 2.7.6.1.3, the accident fire condition results in higher overall temperatures throughout the DSC and lower thermal gradients. The temperature of the DSC shell increases approximately 150°F above the normal operating temperature. The temperature of the spacer disc will increase by approximately 50°F above its normal operating temperature. Therefore, the gap between the spacer disc and the shell will increase during the postulated fire event and the spacer disc will expand freely during the postulated accident fire conditions.

2.7.6.1.3.2 Thermal Stress Analysis

As discussed above, the accident fire condition results in higher overall temperatures throughout the DSC and lower thermal gradients. The stresses in the DSC basket assembly components are due entirely to thermal gradients since the components expand freely under the accident fire conditions. Therefore, the stresses in the FO- and FC-DSC components will be lower for the accident fire condition than for the normal conditions of transport. The stresses calculated for normal conditions of transport in Section 2.6.11.2 are conservatively used for the accident fire condition. The peak stress intensity in the spacer disc due to the normal thermal conditions is 63.6 ksi.

General thermal stresses are classified as secondary stresses per NG-3213.12(a) [2.2] and as such need not meet the stress acceptance criteria for accident conditions. Local thermal stresses need be considered only from the fatigue standpoint per NG-3213.12(b) [2.2]. The accident fire thermal stresses are evaluated in accordance with Section C.7 of Regulatory Guide 7.6 [2.4] for low cycle fatigue. Regulatory Guide 7.6 [2.4] states that the extreme total stress range for accident conditions should be less than the adjusted value of S_a at 10 cycles from the appropriate design fatigue curves.

From Figure I-9.1 of the ASME Appendices [2.2], the value of S_a for 10 cycles is approximately 380 ksi for ASME SA-537, Class 2 carbon steel and t. The modulus of elasticity of ASME SA-537, Class 2 carbon steel at 600°F is 26.7 x 10^6 psi. Therefore, the adjusted value of S_a is:

$$S_a = (380)(26.7Ee6/30.0Ee6)$$

$$= 338 \text{ ksi}$$

The extreme total stress intensity range of the spacer disc for accident thermal conditions is conservatively assumed equal to twice the peak stress, or 127 ksi. This is much lower than the adjusted value of S_a for 10 cycles from the design fatigue curves. Therefore, low cycle fatigue of the spacer disc due to the postulated accident fire event is not a concern.

2.7.6.2 Spacer Disc Buckling Analysis

The stability of the FO- and FC-DSC spacer discs is of primary importance for the postulated 30-foot drop conditions. Buckling of the spacer discs results from high compressive loads on the spacer disc ligaments. The 30-foot drop analysis results show that the maximum spacer disc ligament compressive stresses result from the slapdown impact conditions. This section addresses the stability of the spacer discs for the controlling 30-foot drop conditions. The two bounding drop conditions considered in the following sections are: 1) Cold flatside slapdown impact, and 2) Cold corner slapdown impact.

2.7.6.2.1 Spacer Disc Flat Side Slapdown Buckling Analysis

As shown in Table 2.7.6-1 the equivalent static g-load for the most heavily loaded spacer disc for the flatside slapdown impact condition is 186.2 kips in the plane of the disc and 3.9 kips (spacer disc self weight of 425 lbs x 9.2 g) in the longitudinal direction.

The elastic stability of the FO- and FC-DSC spacer discs is analyzed for the cold flat side slapdown condition using the 1/2 symmetry spacer disc finite element model described in Section 2.10.3.1.2 with modified boundary conditions. The results of the cold flat side slapdown spacer disc stress analysis show that the spacer disc is supported over a half angle of approximately 20°. Therefore, the spacer disc is supported in the radial direction (UX) over an angle of 40°. The spacer disc is supported in the longitudinal direction (UZ) only at the locations of the support rods, conservatively ignoring friction between the spacer disc and DSC shell. The bending stiffness of the support rods is modeled using torsional spring elements, as discussed in Section 2.10.3.1.2.

Bounding equivalent static tangential and longitudinal cold flat side slapdown spacer disc loads of 221.7 kips in the tangential direction and 6.4 kips in the longitudinal direction are applied to the model. The reaction loads from the finite element solution are 218.6 kips in the tangential direction and 6.4 kips in the longitudinal direction. The in-plane reaction load from the finite element solution is approximately 17% higher than the design basis spacer disc load.

In addition to the drop loads, the thermal stresses due to the -20°F ambient condition are applied to the spacer disc. The combination of thermal and drop conditions results in the highest compressive stresses throughout the spacer disc, and thus the lowest factor of safety against buckling. A bifurcation buckling analysis is performed using the ANSYS v5.0A program [2.39]. The resulting conservative load factor (eigenvalue), equal to the factor of safety against elastic buckling, is 1.64. The buckled mode shape is shown in Figure 2.7.6-39.

The maximum load permitted by ASME B&PV Code, Appendix A, F-1331.5 [2.2] is $0.67P_{cr}$, where P_{cr} is the critical elastic buckling load. Therefore, the required factor of safety, P_{cr}/P, is equal to 1/0.67 or 1.5. The 1.64 factor of safety against elastic buckling is greater than the required 1.5 factor of safety. Therefore, the FO- and FC-DSC spacer discs meet the elastic buckling acceptance criteria for the bounding flatside drop condition.

In addition to the buckling analysis performed above, the most heavily loaded spacer disc ligament is evaluated for both elastic and inelastic buckling using hand calculations. The spacer disc ligament buckling evaluations include the combined effects of axial, shear, and bending loads due to both mechanical (i.e. impact) and thermal load conditions. As discussed previously, the highest compressive stresses in the spacer disc ligaments result from the slapdown impact condition. The elastic stability of the spacer disc is controlled by the spacer disc closest to the point of impact, as shown in the finite element analysis. This is due in part to the lesser self constraint of the disc in the ligaments at the edge of the spacer disc and the high compressive stresses occurring in the centermost spacer disc ligament (i.e. located on the spacer disc centerline) nearest the point of impact.

The portion of fuel assembly and guide sleeve weight tributary to the critical spacer disc ligament is assumed to include half the weight of each fuel assembly and guide sleeve assembly adjacent to the center ligament above the critical ligament, or a total weight equivalent to the tributary weight of 5 fuel assemblies and guide sleeves. The tributary weight of five fuel assemblies and guide sleeves is 406 pounds. In addition to fuel and guide sleeves, the critical ligament supports that portion of the spacer disc self weight tributary to the centermost ligament, or 50 pounds. The in-plane loads acting on the critical spacer disc ligament are illustrated in

Figure 2.7.6-37. The axial compressive load on the critical spacer disc ligament due to a bounding 87g tangential acceleration load is:

$$P = 87(406 + 50)/1000$$

$$= 39.7 \text{ kips}$$

The resulting axial compressive stress in the ligament is:

$$f_a = P/A$$

$$= 39.7/(1.19" \times 1.25")$$

$$= 26.7 \text{ ksi}$$

This is slightly higher than the 22.3 ksi maximum axial compressive stress (SY) calculated in the critical spacer disc ligament for the 30-foot flatside slapdown analysis reported in Table 2.7.6-15, which indicates that the loads from the top portion of the spacer disc are being distributed further out than the center ligament.

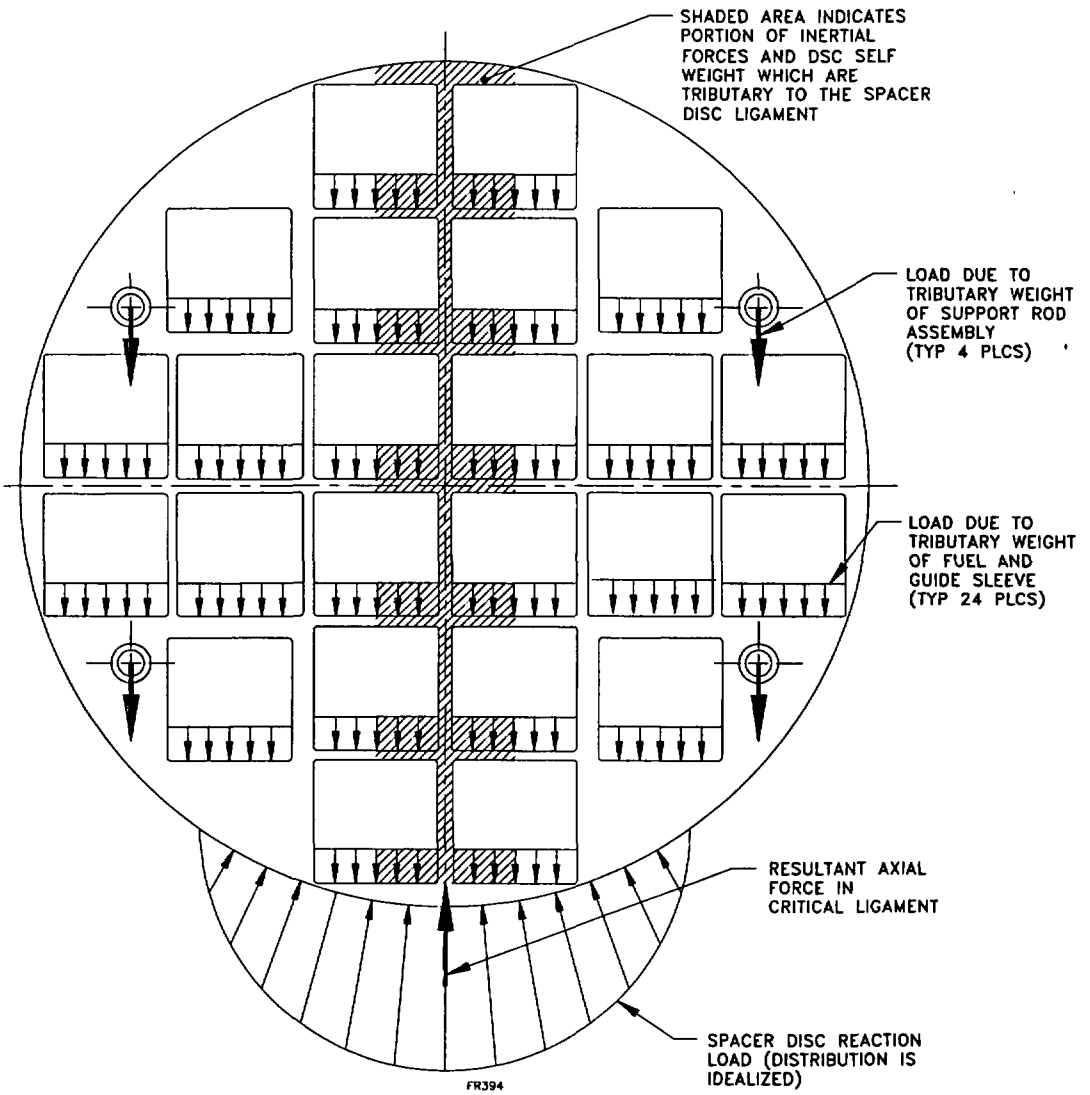

Figure 2.7.6-37
In-Plane Impact Loads Acting on Critical Ligament

In addition to the axial compressive load resulting from the flatside slapdown, the critical spacer disc ligament is also loaded in bending due to the longitudinal acceleration. The bending moments in the spacer disc ligament result from the ligament self weight. The end moments in the critical spacer disc ligament are determined by treating the critical ligament as a fixed ended beam loaded by the tributary out of plane force due to the longitudinal inertial force acting on the

ligament itself. The distributed weight of the critical ligament is calculated to be 0.432 lbs./in. The resulting inertial force, moments, and shears are:

$$M = wL^2/12$$

where;

w = Inertial line load of ligament for an assumed 15g longitudinal acceleration

= 15(1.190 x 1.25 x 0.2835)/1000

= 0.006 kips/in.

L = 9.47 inches, Max. ligament length

Therefore,

$$M = (0.006)(9.47)^2/12$$

$$= 0.04 \text{ in-kips}$$

The resulting bending stress in the spacer disc ligament is:

$$f_b = M/S$$

$$= (0.04)/[(1.19)(1.25)^2/6]$$

$$= 0.1 \text{ ksi}$$

The ligament end shear reactions due to the longitudinal inertial load of the ligament are:

$$V = wL/2$$

$$= (0.006)(9.47)/2$$

$$= 0.03 \text{ kips}$$

The resulting shear stress in the critical spacer disc ligament is:

$$f_v = V/A$$

$$= (0.03)/(1.19 \times 1.25)$$

$$= 0.02 \text{ ksi}$$

In addition to the effect of these conservative impact loads, the compressive stress in the critical ligament due to thermal loads is also considered. Although thermal stresses are secondary in nature, and thus need not be considered in the stress evaluation of accident conditions, these stresses, when compressive, reduce the buckling capacity of the spacer disc. Therefore, thermal stresses are considered in combination with the controlling impact stresses. The controlling thermal condition is the cold condition (i.e. -20°F ambient with maximum fuel decay heat), since it results in the largest thermal gradient in the spacer disc. The spacer disc temperature distribution resulting from this thermal condition is shown in Figure 2.6.11-3. The spacer disc temperature ranges from approximately 600°F at the center of the spacer disc to approximately 300°F at the edge of the spacer disc for this condition. As shown in the spacer disc thermal stress analysis (Section 2.6.11.2.2) the compressive stress in the critical spacer disc ligament is 4.3 ksi, corresponding to an axial compressive load of 6.4 kips. Therefore, the total compressive load on the critical spacer disc ligament due to the combined effects of thermal and impact loads is 46.1 kips. The resulting axial stress in the critical spacer disc ligament is 31.0 ksi. A free body diagram of the critical spacer disc ligament is shown in Figure 2.7.6-38.

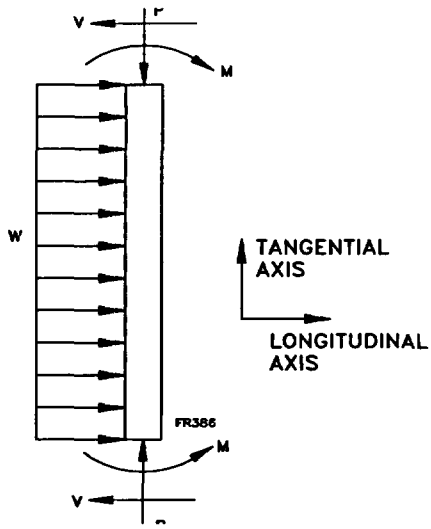

Figure 2.7.6-38
Free Body Diagram of Critical Spacer Disc Ligament

The spacer disc elastic stability analysis is performed in accordance with F-1334.5 of the ASME Code [2.2] for linear type component support subjected to combined axial compression and bending. Unless otherwise specified, the allowable stresses for service level D conditions are calculated by factoring the service level A allowable stress by the smaller of 2 or $1.167S_u/S_y$ if $S_u>1.2S_y$ in accordance with F-1334 [2.2]. For the spacer disc SA-537, Class 2 carbon steel, this factor is 1.56 at -20°F and 2.00 at 600°F. A lower bound value of 1.50 is used for this factor for the ligament buckling analysis. The stresses in the critical spacer disc ligament must satisfy equations 20, 21, and 22 of NF-3322.1(e)(1) which are:

Eq. 20: $$\frac{f_a}{F_a}+\frac{C_{mx}f_{bx}}{(1-f_a/F_{ex})F_{bx}}+\frac{C_{my}f_{by}}{(1-f_a/F_{ey})F_{by}}\leq 1.0$$

Eq. 21: $$\frac{f_a}{1.50x0.60S_y}+\frac{f_{bx}}{F_{bx}}+\frac{f_{by}}{F_{by}}\leq 1.0$$

Eq. 22: $$\frac{f_a}{F_a}+\frac{f_{bx}}{F_{bx}}+\frac{f_{by}}{F_{by}}\leq 1.0$$

where;

F_a = Axial compressive stress permitted in the absence of bending

F_b = Bending stress permitted in the absence of axial force

F'_e = Euler stress divided by factor of safety

C_m = Coefficient applied to bending term in interaction equation to account for column curvature

= 0.85 for compression members subject to sidesway per NF-3322.1(e)(1)(a)

The allowable compressive stress, F_a, is calculated in accordance with F-1334.5(a) of the ASME Code [2.2] as follows:

$$F_a = P/A$$

where the maximum allowable compressive load, P, calculated in accordance with F-1334.3(b)(1) of the ASME Code [2.2], is:

$$P = \left(\frac{1-\lambda^2/4}{1.11+0.50\lambda+0.17\lambda^2-0.28\lambda^3}\right)(S_yA) \text{ for } 0 \le \lambda \le 1$$

$$= \left(\frac{2}{3}\left(1-\lambda^2/4\right)\left(S_yA\right)\right) \text{ for } 1 \le \lambda \le 1.414$$

$$= \left(\frac{2}{3\lambda^2}\left(S_yA\right)\right) \text{ for } \lambda > 1.414$$

$$\lambda = \left(\frac{KL}{r}\right)\frac{1}{\pi}\sqrt{\frac{S_y}{E}}$$

K = 0.8, Effective length factor for fixed-pinned column, assuming ligament end at the edge of the disc is pinned

L = 9.47 in., Free span distance in plane of bending

I = $(1.19)(1.25)^3/12$, Moment of Inertial of critical ligament

= 0.194 in^4

A = 1.488 in^2, Area of critical ligament

r	=	$(0.194/1.488)^{1/2}$, Radius of gyration of critical ligament
	=	0.36 in.
S_y	=	46,000 psi, Yield strength of SA-537, Class 2 carbon steel at 600°F
E	=	26.7×10^6 psi, Elastic modulus of SA-537, Class 2 carbon steel at 600°F

Therefore,

$$\lambda = \left(\frac{0.8x9.47}{0.36}\right)\frac{1}{\pi}\sqrt{\frac{46{,}000}{26.7x10^6}} = 0.28$$

$$P = \left(\frac{1-0.44^2/4}{1.11+0.50(0.44)+0.17(0.44)^2-0.28(0.44)^3}\right)(46{,}000x1.488)$$

$$= 53{,}378 \text{ pounds}$$

$$F_a = 53{,}378/(1.488 \times 1000)$$

$$= 35.9 \text{ ksi}$$

Article F-1334.4(b) gives the allowable bending stress, F_b, for compact sections as fS_y, where f is the plastic section factor. For a rectangular section, f = 1.5 ([2.7], Table 1, case 2). Therefore, the allowable bending stress is:

$$F_b = 1.5 \times 46.0$$

$$= 69.0 \text{ ksi}$$

The Euler buckling stress, F'_e, is determined in accordance with F-1334.5(b) as follows:

$$F'_e = \frac{\pi^2 E}{(1.30(KL/r)^2)} = \frac{\pi^2(26{,}700)}{(1.30(21.0)^2)} = 460ksi$$

Interaction equations (20), (21), and (22) are calculated as follows:

Eq. 20: $$\frac{31.0}{35.9} + \frac{0.85x0.1}{(1-31.0/460)69.0} = 0.86 \le 1.0$$

Eq. 21: $$\frac{31.0}{1.50x0.60x46.0} + \frac{0.1}{69.0} = 0.75 \le 1.0$$

Eq. 22: $$\frac{31.0}{35.9} + \frac{0.1}{69.0} = 0.86 \le 1.0$$

Therefore, the most heavily loaded spacer disc satisfies the applicable interaction equations. The axial compressive stress in the critically loaded spacer disc ligament is less than the theoretical Euler buckling stress of 460 ksi. The margin of safety against Euler buckling of the critical spacer disc ligament is:

M.S. = (460/31) - 1

= +13.8

In addition to the preceding evaluations, the most heavily loaded spacer disc ligament is evaluated for inelastic buckling in accordance with the provisions of Article F-1334.6 of the ASME Code [2.2]. Per F-1334.6(a), the acceptability of a linear type structure may be demonstrated using the lower bound limit analysis criteria of NF-3342.2, in which the loads may not exceed 90% of the limit analysis collapse load using a yield strength equal to the greater of $1.2S_y$ or $1.5S_m$, but not larger than $0.7S_u$. Therefore, the yield strength used in the limit analysis for SA-537, Class 2 carbon steel for a temperature of 600°F is 1.2x46.0, or 55.2 ksi. The limit analysis evaluation includes the combined effects of axial, shear, and bending loads due to both mechanical (i.e. impact) and thermal load conditions. Per NF-3342.2(3), columns subjected to combined axial and bending loads must satisfy equations (6) and (7), which are given below:

$$\frac{P}{P_{cr}} + \frac{C_m M}{(1-P/P_e).M_m} \le 1.0 \qquad (6)$$

$$\frac{P}{P_y} + \frac{M}{1.18M_p} \le 1.0; M \le M_p \qquad (7)$$

where:

P = 46.1 kips, Applied axial load due to impact plus thermal loading

P_{cr} = $1.7A_gF_a$

$$F_a = \frac{\left(1-(KL/r)^2/2C_c^2\right)}{\frac{5}{3}+(3(KL/r)/8C_c)-((KL/r)^3/8C_c^3)}\cdot S_y \quad \text{[NF-3322.1(c)(1), Eq (4)]}$$

$$C_c = \sqrt{2\pi^2\frac{E}{S_y}} = \sqrt{2\pi^2\frac{26{,}700}{55.2}} = 97.7$$

$$\frac{KL/r}{C_c} = \frac{21.0}{97.7} = 0.215$$

$$\therefore F_a = \frac{\left(1-(0.215)^2/2\right)55.2}{\frac{5}{3}+\left(\frac{3}{8}(0.215)\right)-\left(\frac{1}{8}(0.215)^3\right)} = 30.9ksi$$

P_{cr} = 1.7(1.488)(30.9)

= 78.2 kips

P_y = A_gS_y

= 1.488(55.2)

= 82.1 kips

P_e = $1.92A_gF'_e$

= 1.92(1.488)(460)

= 1,314 kips

M = 0.04 in-kips, Applied moment

M_P = SyZ

$$Z = \frac{b\cdot t^2}{4} = \frac{1.250(1.19)^2}{4} = 0.443 \quad \text{([2.7], Table 1, case 2)}$$

Therefore,

M_P = 55.2(0.443)

= 24.5 in-kips

M_m = M_P for columns braced in the weak direction per NF-3342.2(b)(4)

Inserting the above values into equations (6) and (7) yields the following:

$$\frac{P}{P_{cr}} + \frac{C_M \cdot M}{(1 - P/P_e) \cdot M_M} = \frac{46.1}{78.2} + \frac{0.85(0.04)}{\left(1 - \frac{46.1}{1314}\right)24.5} = 0.59 < 1.0$$

$$\frac{P}{P_y} + \frac{M}{1.18 M_P} = \frac{46.1}{78.2} + \frac{0.04}{1.18(24.5)} = 0.59 < 1.0$$

The maximum interaction is only 59% of the limit analysis collapse load. Since this is lower than 90% of the limit analysis collapse load, the critical spacer disc ligament satisfies the limit analysis requirements of F-1334.6(a). The margin of safety against inelastic buckling is:

M.S. = 1.0/0.59 - 1

= +0.69

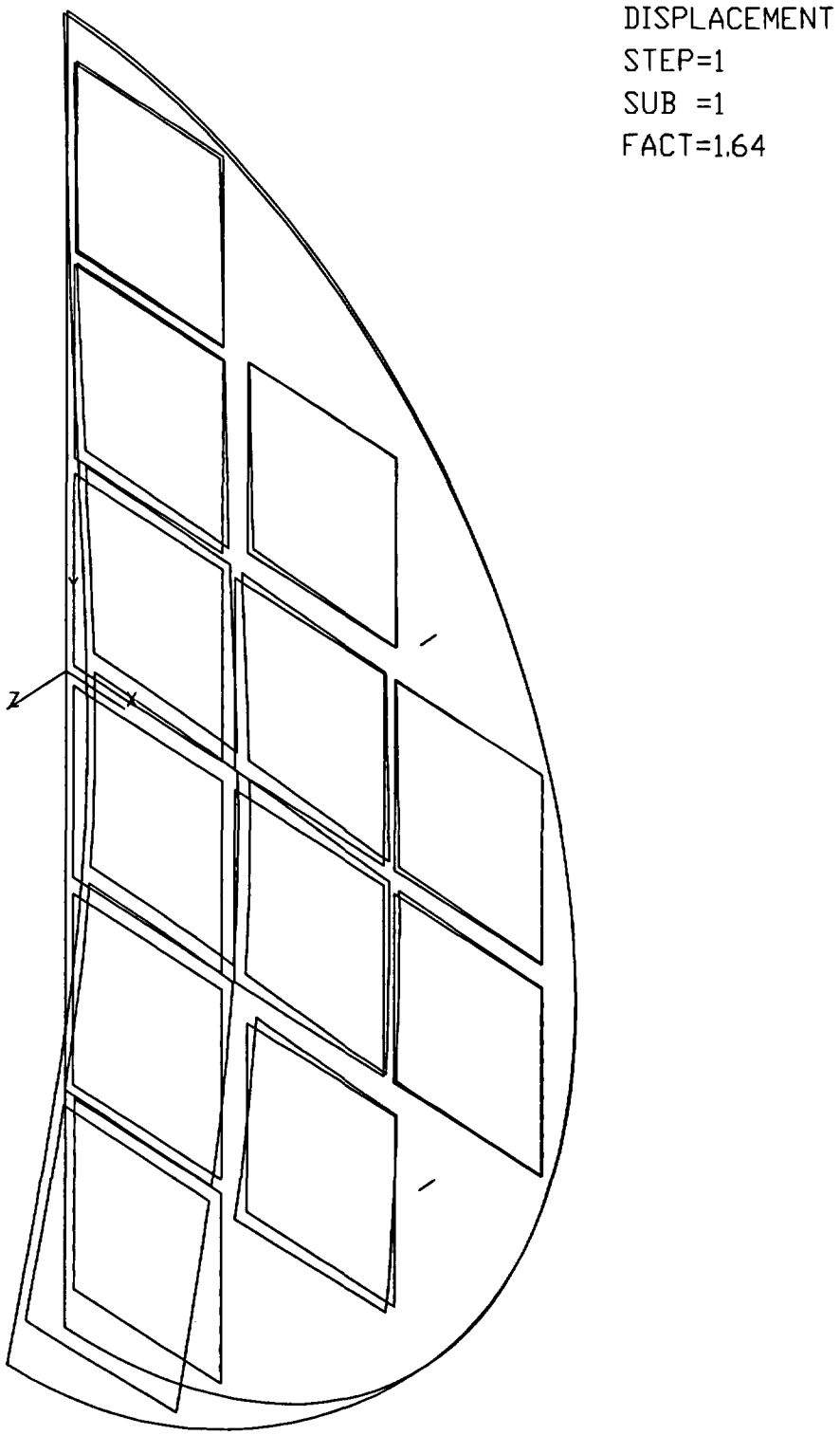

Figure 2.7.6-39
FC Spacer Disc Buckled Shape - Flatside Slapdown

2.7.6.2.2 Corner Slapdown Buckling Analysis

The elastic stability of the spacer disc for the cold corner slapdown condition is evaluated using a modified version of the full spacer disc finite element model described in Section 2.10.3.1.3. The non-linear gap elements used to model the interaction between the spacer disc and DSC shell are not applicable for buckling analyses, and consequently are eliminated from the model. Torsional spring elements (STIF14) are included in the model to account for the out-of-plane rotational stiffness provided to the spacer disc by the support rods.

The results of the cold corner slapdown spacer disc stress analysis show that the spacer disc gap elements close over a total angle of 126°. The spacer disc is supported in the radial direction (UX) over an angle of approximately 120° (60° on both sides of the initial point of contact.) The spacer disc is supported in the circumferential direction (UY) at the initial point of contact with the DSC shell and at the node on the opposite side of the disc. The spacer disc is supported in the longitudinal direction (UZ) only at the locations of the support rods, conservatively ignoring friction between the spacer disc and DSC shell.

As shown in Table 2.7.6-3, the highest corner impact spacer disc loads, resulting from the cold corner slapdown condition, are 2.9g (or 1.23 kips) in the longitudinal direction and 156.3 kips in the tangential direction. Bounding equivalent static spacer disc loads of 198.3 kips in the tangential direction and 6.4 kips in the longitudinal direction are applied to the model. The reaction loads from the finite element solution are 199.1 kips in the tangential direction and 6.4 kips in the longitudinal direction.

In addition to the drop loads, the thermal stresses due to the -20°F ambient condition are applied to the spacer disc. The combination of thermal and drop conditions results in the highest compressive stresses throughout the spacer disc, and thus the lowest factor of safety against buckling. A bifurcation buckling analysis is performed using the ANSYS v5.0A program [2.39]. The resulting conservative load factor (eigenvalue), equal to the factor of safety against elastic buckling, is 2.14. The buckled mode shape is shown in Figure 2.7.6-40.

The maximum load permitted by F-1331.5 [2.2] is $0.67P_{cr}$, where P_{cr} is the critical elastic buckling load. Therefore, the required factor of safety, P_{cr}/P, is equal to 1/0.67 or 1.5. The 2.14 factor of safety against elastic buckling is greater than the required 1.5 factor of safety. Therefore, the FO- and FC-DSC spacer discs meet the elastic buckling acceptance criteria for the corner slapdown condition.

The results of the bifurcation buckling analysis show that the margin of safety against buckling for the corner slapdown impact is greater than that for the flatside slapdown impact. This is due to the more severe impact loads resulting from the flatside slapdown condition as well as the direct spacer disc load path for the flatside orientation. Therefore, the flatside slapdown impact condition is the worst case for spacer disc buckling. Consequently, the alternate buckling analysis performed for the flatside impact condition need not be performed for the corner slapdown impact condition.

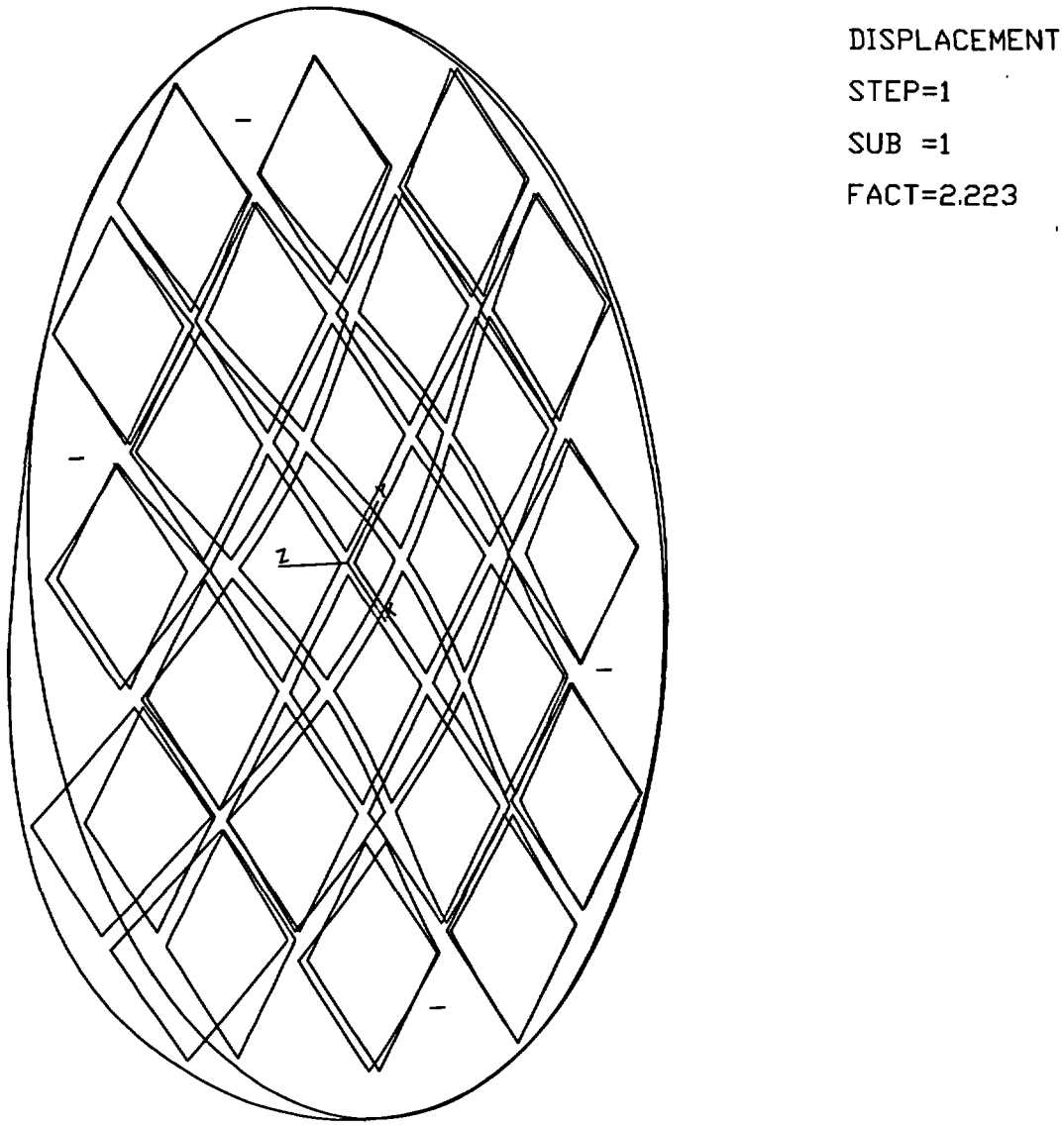

Figure 2.7.6-40
FC Spacer Disc Buckled Shape - Corner Slapdown

2.7.6.3 Support Rod Stress Analysis

The support rod assemblies are evaluated for the HAC loads in the following sections. As discussed in Section 2.7.6, stress analyses are only performed for the FC support rods since the FO and FC support rods are nearly identical and the FC support rods have higher loads than the FO support rods.

2.7.6.3.1 Free Drop

The Part 71 regulations [2.1] include a hypothetical accident drop condition consisting of "*a free drop of the specimen through a distance of nine m (30 ft) free drop onto a flat, essentially unyielding, horizontal surface, striking the surface in a position for which maximum damage is expected*". The NUHOMS®-MP187 transportation package is analyzed for a variety of drop orientations and conditions, as described in Appendix 2.10.9. The drop analyses are performed for the extreme initial ambient heat (100°F ambient) and cold (-20°F ambient) conditions assuming worst case impact limiter crush strength properties to provide bounding results.

The FO/FC-DSC support rod assemblies are analyzed for the drop conditions using equivalent static load methods. The dynamic load factors are calculated for each drop condition and major structural component in Appendix 2.10.10. The peak accelerations, DLFs, and equivalent static g-loads for the support rods are presented in Table 2.7.6-31. The equivalent static g-loads used for the support rod 30' drop analyses bound the quasi-static g-loads determined in Appendix 2.10.9. The use of quasi-static g-loads is typically used for the structural evaluation of transportation packages and is the basis of the drop loads for several licensed transportation packages. Since the equivalent static g-loads used for the evaluation of the FC basket structural components are bounding, the analysis results are conservative for the FO components.

To minimize the number of calculations, only the limiting drop cases are considered. The FO/FC support rod assembly stress analyses for the various drop conditions are included in the following sections.

Table 2.7.6-31
FO/FC Support Rod 30' Drop G-Loads

Drop Case	Condition	Peak Accelerations (g)		DLFs		Equivalent Static G's	
		Longitudinal	Tangential	Longitudinal	Tangential	Longitudinal	Tangential
End Drop	Cold	38.9	0.0	1.48	1.06	57.6	0.0
	Hot	23.5	0.0	1.26	1.04	29.6	0.0
	Special	25.5	0.0	1.30	1.03	33.2	0.0
Side Drop	Flat Side/Cold	0.0	61.1	1.76	1.12	0.0	68.4
	Flat Side/Hot	0.0	39.6	1.76	1.09	0.0	43.2
	Corner/Cold	0.0	44.6	1.43	1.32	0.0	58.9
	Corner/Hot	0.0	30.6	1.30	1.24	0.0	37.9
C.G. over Flat	Flat/Cold	35.7	11.6	1.15	1.02	41.1	11.8
	Flat/Hot	21.9	7.1	1.09	1.02	23.9	7.2
C.G. over Corner	Corner/Cold	34.2	11.1	1.11	1.01	38.0	11.2
	Corner/Hot	20.0	6.5	1.07	1.02	21.4	6.6
Oblique Primary Impact	30° Flat Side/Cold	17.6	66.7	1.43	1.11	25.1	74.0
	30° Flat Side/Hot	18.1	34.2	1.23	1.07	22.2	36.6
	30° Corner/Cold	12.6	46.4	1.11	1.03	14.0	47.8
	30° Corner/Hot	16.4	31.8	1.04	1.01	17.1	32.1
	60° Flat Side/Cold	30.4	42.8	1.04	1.03	31.6	44.1
	60° Flat Side/Hot	26.0	15.7	1.02	1.01	26.5	15.9
	60° Corner/Cold	22.7	32.8	1.17	1.02	26.6	33.4
	60° Corner/Hot	20.8	13.1	1.06	1.02	22.0	13.3
Oblique Slapdown Impact	30° Flat Side/Cold	6.9	70.0	1.85	1.31	12.7	91.7
	30° Flat Side/Hot	3.7	46.3	1.86	1.35	6.9	62.5
	30° Corner/Cold	2.1	57.7	1.38	1.32	2.9	76.2
	30° Corner/Hot	1.2	40.5	1.27	1.24	1.5	50.2
Hori. 1' Flat Side	Cold	0.0	21.0	1.87	1.18	0.0	24.8
	Hot	0.0	13.9	1.88	1.21	0.0	16.8

Notes:

(1) The peak rigid body accelerations are calculated in Appendix 2.10.9. The peak rigid body g-loads for the oblique drop conditions are taken at 80" from the package center of gravity, corresponding to the location of the critical support rod span.

(2) The DLFs are calculated in Appendix 2.10.10.

2.7.6.3.1.1 End Drop

As shown in Table 2.7.6-31, the support rod equivalent static cold end drop acceleration is 57.6g's. The support rod assemblies are conservatively evaluated for a bounding end drop load of 75g's. The support rod assemblies are evaluated for the end drop using the criteria of F-1334.5 of Reference [2.2] for linear type components subjected to combined compression and bending loads. Each support rod assembly consists of a ϕ2.00 rod and twenty six 3.00" O.D. x 2.08" I.D. sleeves. The support rod assemblies are tensioned with a nominal 80 kip preload during basket fabrication to apply a clamping force at each spacer disc and provide additional out-of-plane bending stiffness to the spacer discs. The magnitude of the preload was chosen to ensure that there are always resultant compressive loads in the support rod assembly for any load condition. Reduction of the preload results from compression of the support rod sleeves due to longitudinal impact loads. The clamping force at each spacer disc will be maintained with no separation of the support sleeves from the spacer discs provided the axial stress due to the combined effects of the impact load and residual preload is greater than the bending stress at the joint. A free body diagram for a typical spacer disc joint showing the applied joint loads, reactions, and the stress distribution around the circumference of the support rod sleeves is shown in Figure 2.7.6-41.

If the sleeve bending stress exceeds the combined axial compressive stress due to the end drop impact load and residual preload, the support rod sleeves will "lift-off" from the spacer disc on the tensile side since the support rod sleeves are not capable of transferring tensile loads across the joint. This produces a triangular stress distribution through the support rod sleeves, as shown in Figure 2.7.6-42. For joints in which "lift-off" occurs, the clamping force is maintained by that portion of the sleeve which remains in contact with the bearing surface of the spacer disc. The support rod preload is calculated to ensure that it does not completely relax for any load condition, and to ensure that "lift-off" of the support rod sleeves can not occur over more than one half the diameter of the support rod sleeve. The "lift-off" condition occurs at a small number of the spacer discs furthest from the impact end where the compressive loads due to impact are lowest.

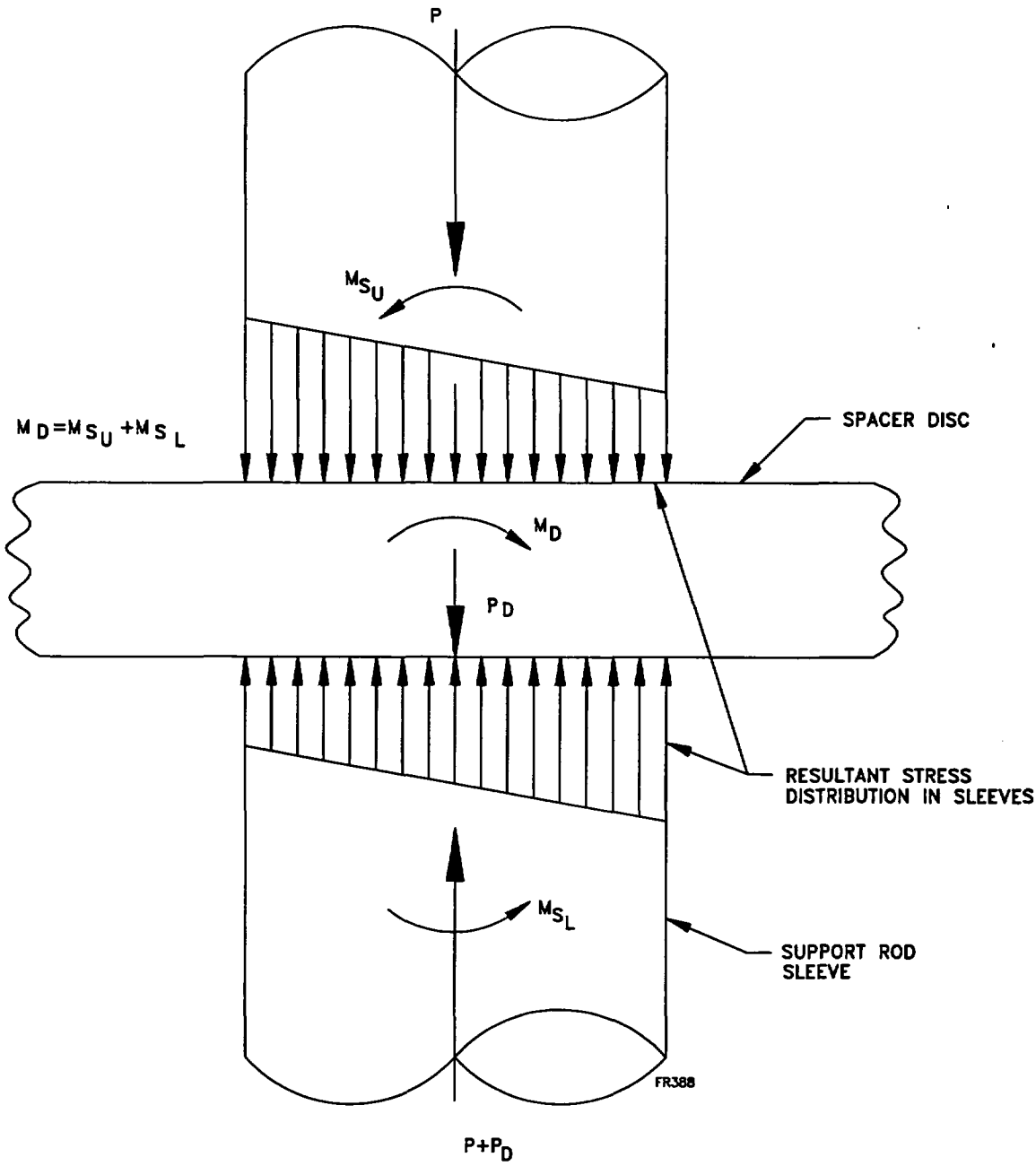

Figure 2.7.6-41
Joint Free Body Diagram for Fully Clamped Condition

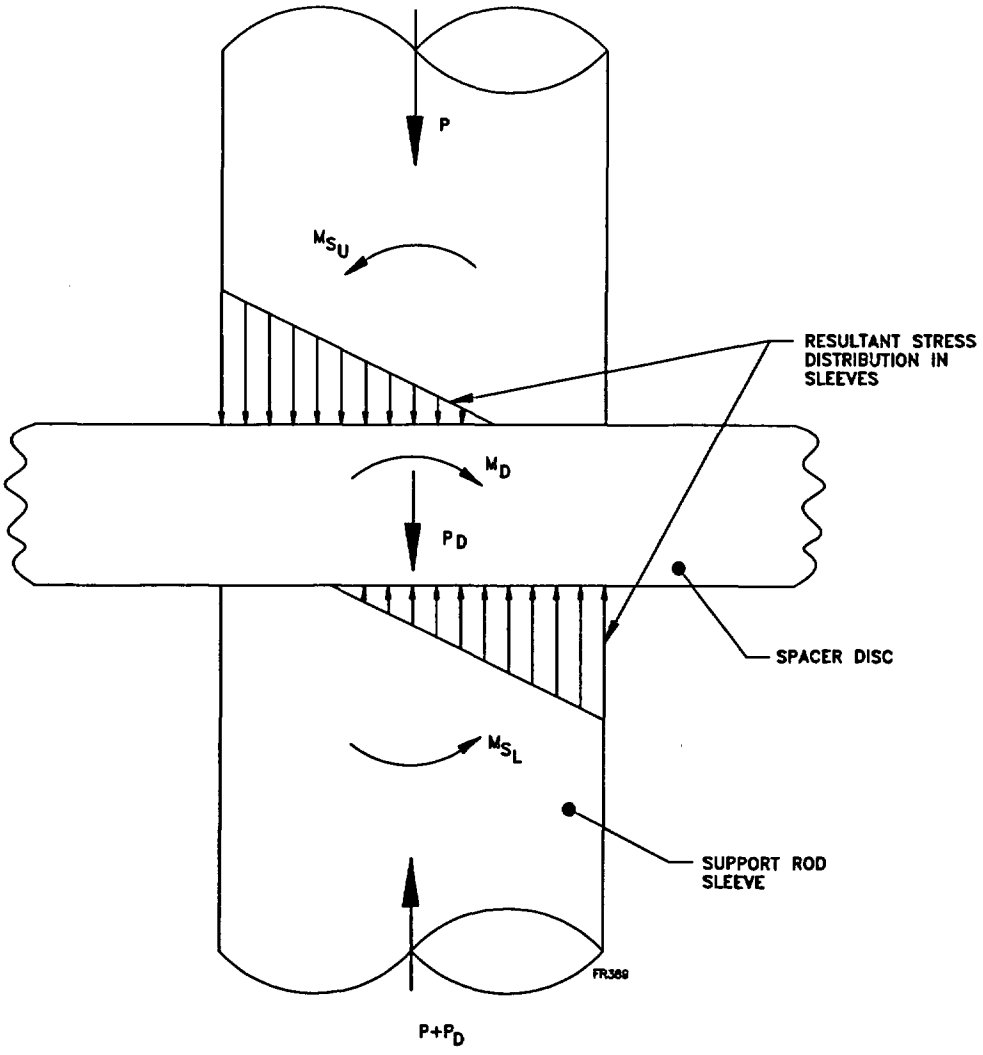

Figure 2.7.6-42
Joint Free Body Diagram for Lift-Off Condition

The residual tension force in the support rods under end drop impact conditions is determined as follows:

1. Calculate the elongation of the support rods corresponding to the initial fabrication condition, δ_o, for the range of allowable preload (i.e., 80 ± 5 kip preload at 70°F) as follows:

$$\delta_o = P_o L_o / AE$$

where:

P_o	=	Initial preload at fabrication
	=	75 kips minimum
	=	85 kips maximum
L_o	=	172.5 in., Length of support rods
A	=	3.142 in^2, Area of Support Rods
E	=	29.2 x 10^3 ksi, Elastic Modulus of SA-564, TP 630 Support Rod. at 70°F

Therefore, the elongation of the support rods during fabrication is:

$$\delta_{PRELOAD} = \frac{P_o\ L_o}{AE}$$

$$= \frac{(80\ \text{kips} - 5\ \text{kips})\ 172.5\ \text{in}}{(3.142\ \text{in}^2)(29.2 \cdot 10^3 \text{ksi})} = 0.1410\ \text{in (at minimum preload)}$$

$$= \frac{(80\ \text{kips} + 5\ \text{kips})\ 172.5\ \text{in}}{(3.142\ \text{in}^2)(29.2 \cdot 10^3 \text{ksi})} = 0.1598\ \text{in (at maximum preload)}$$

2. Calculate the differential thermal expansion of the support rod assemblies and spacer discs for pre-drop conditions, δ_t, assuming a uniform temperature of -20°F for cold conditions and 500°F for hot conditions, as follows:

$$\delta_t = (\alpha_d - \alpha_r)L(\Delta T)$$

where:

α_d	=	Minimum Coefficient of Thermal Expansion of Spacer Disc (SA-537 or SA-517)
	=	4.73 x 10^{-6} in/in-°F at -20°F (minimum α)
	=	6.05 x 10^{-6} in/in-°F at -20°F (maximum α)
	=	7.25 x 10^{-6} in/in-°F at 500°F

α_r = Coefficient of Thermal Expansion of Support Rod (SA-564, Type 630)

= 5.89×10^{-6} in/in-°F at -20°F

= 5.91×10^{-6} in/in-°F at 500°F

L = Total thickness of spacer disc material

= 26 x 1.25"

= 32.5 in.

Therefore, the differential thermal expansion at the extreme cold (-20°F) and hot (500°F) conditions is:

$$\begin{aligned}\Delta\delta_{THERMAL} &= \left(\alpha_{DISC} - \alpha_{ROD}\right)\cdot L \cdot \Delta T \\ &= \left(4.73\cdot 10^{-6\circ} F^{-1} - 5.89\cdot 10^{-6\circ} F^{-1}\right)\cdot 32.5\, in \cdot \left(-20^\circ F - 70^\circ F\right) = .00339\, in \text{ (min } \alpha_{DISC} \text{ at -20° F)} \\ &= \left(6.05\cdot 10^{-6\circ} F^{-1} - 5.89\cdot 10^{-6\circ} F^{-1}\right)\cdot 32.5\, in \cdot \left(-20^\circ F - 70^\circ F\right) = -.00047\, in \text{ (max } \alpha_{DISC} \text{ at -20° F)} \\ &= \left(7.25\cdot 10^{-6\circ} F^{-1} - 5.91\cdot 10^{-6\circ} F^{-1}\right)\cdot 32.5\, in \cdot \left(500^\circ F - 70^\circ F\right) = .01873\, in \text{ (at 500° F)}\end{aligned}$$

3. Calculate the total axial deflection of the support rod sleeves due to the end drop impact load, δ_I. The total axial deflection is calculated as the sum of the deflection of each sleeve as follows:

$$\delta_I = \sum_{i=1}^{27} \frac{P_i L_i}{AE}$$

where:

P_i = $[(W_{s,i})(i) + (W_{d,i})(i - 1)](G)$

$W_{s,i}$ = Self weight of support rods sleeves loading sleeve i

$W_{d,i}$ = Weight of discs loading sleeve i

= (424 lb/disc)/(4 supt. rods/disc) x (# discs above sleeve i)

G = 75g, Equivalent static end drop g-load

A = Area of support rod sleeve

$$= \frac{\pi}{4}\left[(3.00\text{in})^2 - (2.08\text{in})^2\right]$$

$$= 3.671 \text{ in}^2$$

E = Elastic Modulus of SA-564, Type 630 Support Rod at Temperature

$= 26.7 \times 10^3$ ksi at 500°F

$= 29.7 \times 10^3$ ksi at -20°F

The total deflection of the support rod sleeves due to the bounding 75g end drop load condition, assuming a maximum support rod temperature of 500°F, is -0.1562 inches, as calculated in Table 2.7.6-32.

Table 2.7.6-32
Support Rod Deflection Due to 75g End Drop Impact

Sleeve (i)	Sleeve Length (in.)	Spacer Sleeve Wt. $W_{s,i}$ (lb.)	Spacer Disc Wt. $W_{d,i}$ (lb.)	Sleeve Impact Load, P_I (kips)	Spacer Sleeve Deflection (inches)	
					-20°F	500°F
1	6.250	6.5	0.0	0.5	0.0000	0.0000
2	4.250	11.0	106.1	8.8	-0.0003	-0.0004
3	4.250	15.4	212.2	17.1	-0.0007	-0.0007
4	4.250	19.9	318.2	25.4	-0.0010	-0.0011
5	4.750	24.9	424.3	33.7	-0.0015	-0.0016
6	5.250	30.4	530.4	42.1	-0.0020	-0.0023
7	5.500	36.1	636.5	50.4	-0.0025	-0.0028
8	5.500	41.9	742.5	58.8	-0.0030	-0.0033
9	5.500	47.6	848.6	67.2	-0.0034	-0.0038
10	5.500	53.4	954.7	75.6	-0.0038	-0.0042
11	5.500	59.2	1060.8	84.0	-0.0042	-0.0047
12	5.500	64.9	1166.8	92.4	-0.0047	-0.0052
13	5.500	70.7	1272.9	100.8	-0.0051	-0.0057
14	5.500	76.4	1379.0	109.2	-0.0055	-0.0061
15	5.500	82.2	1485.1	117.5	-0.0059	-0.0066
16	5.500	88.0	1591.1	125.9	-0.0064	-0.0071
17	5.500	93.7	1697.2	134.3	-0.0068	-0.0075
18	5.500	99.5	1803.3	142.7	-0.0072	-0.0080
19	5.250	105.0	1909.4	151.1	-0.0073	-0.0081
20	5.250	110.5	2015.4	159.4	-0.0077	-0.0085
21	5.250	116.0	2121.5	167.8	-0.0081	-0.0090
22	5.250	121.5	2227.6	176.2	-0.0085	-0.0094
23	4.750	126.5	2333.7	184.5	-0.0080	-0.0089
24	4.500	131.2	2439.7	192.8	-0.0080	-0.0089
25	3.625	135.0	2545.8	201.1	-0.0067	-0.0074
26	11.125	146.6	2758.0*	217.8	-0.0222	-0.0247
TOTALS	140.00	146.6	2758.0	217.8	-0.1404	-0.1562

* Includes weight of 2 spacer discs.

srstress3.xls - end drop

4. Determine the tension force remaining in the support rod as follows:

P_{PT} = $\delta AE/L$

where:

$$\delta_{REMAIN} = \delta_{PRELOAD} + \delta_{THERMAL} + \delta_{END\ DROP}$$

$$= .1410\ in + .00339\ in + -.1404\ in = .00401\ in \quad (\text{Min. } \alpha_{DISC},\ -20°\text{F})$$

$$= .1410\ in - .00047\ in + -.1404\ in = .00015\ in \quad (\text{Max. } \alpha_{DISC},\ -20°\text{F})$$

$$= .1598\ in + .01873\ in + -.1562\ in = 0.0224\ in \quad (\text{Max Load During Drop, } 500°\text{F})$$

A = 3.142 in^2, Area of ϕ2.0" Support Rod

E = Elastic Modulus of SA-564, Type 630 Support Rod at Temperature

= 29.7 x 10^3 ksi at -20°F

= 26.7 x 10^3 ksi at 500°F

L = 172.5 inches, Length of support rod.

The minimum and maximum remaining preloads for a 75g end drop are:

$$P_{PT} = \frac{\delta_{REMAIN} A_{ROD} E}{L}$$

$$= \frac{(.00401\ in)(3.142\ in^2)(29.7 \cdot 10^3\ ksi)}{172.5\ in} = 2.17\ kips \quad (\text{cold, min. } \alpha_{DISC})$$

$$= \frac{(.00015\ in)(3.142\ in^2)(29.7 \cdot 10^3\ ksi)}{172.5\ in} = .08\ kips \quad (\text{cold, max. } \alpha_{DISC})$$

$$= \frac{(.0224\ in)(3.142\ in^2)(26.7 \cdot 10^3\ ksi)}{172.5\ in} = 10.88\ kips \quad (\text{hot})$$

These results show that the sleeves maintain a positive clamping force at all joints for the bounding 75g end drop impact load at both extreme cold and hot thermal conditions. Therefore, the support rod assembly will provide bending support to the spacer discs for all postulated end drop accidents.

The support rod sleeve stresses resulting from the end drop condition are evaluated assuming the basket assembly behaves as a beam-column system. The maximum preload remaining at impact is used for the support rod end drop stress evaluation. A free body diagram of a support rod assembly for the end drop loading is shown in Figure 2.7.6-43. The resulting forces and moments in a typical support rod sleeve are shown in Figure 2.7.6-44.

THIS SECTION CONTAINS
PROPRIETARY INFORMATION

Figure 2.7.6-43
Support Rod Assembly Free Body Diagram - End Drop

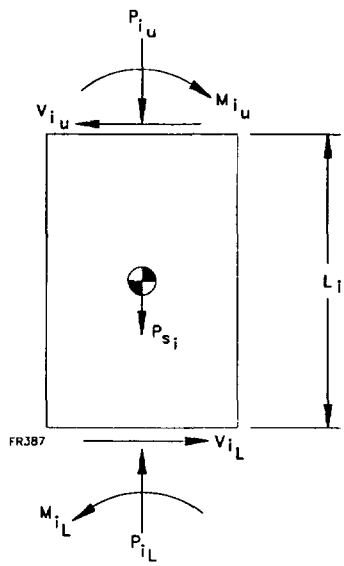

Figure 2.7.6-44
Free Body Diagram of a Typical Support Rod Sleeve - End Drop

The support rod end drop stress analysis is performed in accordance with F-1334.5 of the ASME Code [2.2] for linear type component supports subjected to combined axial compression and bending. Unless otherwise noted, the allowable stresses for service level D conditions are calculated by factoring the service level A allowable stresses by the smaller of 2 or $1.167S_u/S_y$, where $S_u>1.2S_y$, in accordance with F-1334 [2.2]. For the support rod sleeve SA-564, Type 630 steel, this factor is 1.50 at -20°F and 1.72 at 500°F. The stresses in each of the support rod sleeves must satisfy equations 20, 21, and 22 of NF-3322.1(e)(1), modified by the stress increase allowed by Appendix F for Level D [smaller of either 2.0 or $1.167S_u/S_y$ (1.72)] and assuming that $.6S_y$ is the normal axial allowable, equations 20, 21 and 22 become:

$$\text{Eq. 20:} \quad \frac{f_a}{F_a} + \frac{C_{mx} f_{bx}}{(1 - f_a / F'_{ex})F_{bx}} + \frac{C_{my} f_{by}}{(1 - f_a / F'_{ey})F_{by}} \leq 1.0$$

$$\text{Eq. 21:} \quad \frac{f_a}{1.72x0.60S_y} + \frac{f_{bx}}{F_{bx}} + \frac{f_{by}}{F_{by}} \leq 1.0$$

Eq. 22: $$\frac{f_a}{F_a} + \frac{f_{bx}}{F_{bx}} + \frac{f_{by}}{F_{by}} \leq 1.0$$

where the axial stress in the sleeve, f_a, is calculated as follows:

$$f_a = P_t/A$$

$$= (P_{In} + P_{PT})/A$$

where:

P_{In} = Total impact load on sleeve n

$$= \sum_{i=1}^{n} P_{si} + \sum_{i=1}^{n-1} P_{di}$$

P_{si} = Inertial load due to support rod sleeve i

P_{di} = Inertial load due to spacer disc i

P_{PT} = Residual preload at impact

A = 3.671 in^2, Area of support rod sleeve

The bending stress in the support rod sleeve, due to the moment reaction at the spacer disc locations, is:

$$f_b = M_{ij}/S$$

where:

M_{ij} = $(DF)_{ij}M_{dj}$, Moment distributed to sleeve i at joint j

$(DF)_{ij}$ = $\frac{R_{ij}}{\sum_{n=1}^{N} R_{in}}$, Moment distribution factor

R_{in} = Flexural rigidity of member n at joint i

= 4EI/L for fixed-fixed member

= 3EI/L for fixed-pinned member

M_{dj} = Moment reaction from spacer disc j for 75g end drop (scaled from 65g spacer disc end drop results)

$$M_{dj} = \frac{75\,g}{65\,g}\left(M_x^2 + M_y^2\right)^{1/2}$$

$$= \frac{75\,g}{65\,g}\left((23.92\,\text{in}\cdot\text{kip})^2 + (30.96\,\text{in}\cdot\text{kip})^2\right)^{1/2}$$

$$= 45.1\ \text{in}\cdot\text{kip}$$

S = $\pi(d_o^4 - d_i^4)/32d_o$, Section modulus of support rod sleeve

$$= \pi(3.00^4 - 2.08^4)/(32 \times 3.00)$$

$$= 2.04\ \text{in}^3$$

The maximum axial loads and bending moments acting on each support rod sleeve due to the bounding 75g hot end drop impact load conditions, including the maximum residual preload, are reported in Table 2.7.6-33.

Table 2.7.6-33
Support Rod Sleeve Forces and Moments - 75g End Drop

Sleeve (i)	Sleeve Impact Load, P_I (kips)	Residual Sleeve Preload, P_{PT} (kips)	Sleeve Axial Load, P_t (kips)	Moment Distribution Factors		Sleeve Moments (in-kips)	
				Upper	Lower	Upper	Lower
1	0.5	10.9	11.4	0.00	0.00	0.0	0.0
2	8.8	10.9	19.7	1.00	0.50	45.3	22.7
3	17.1	10.9	27.9	0.50	0.50	22.7	22.7
4	25.4	10.9	36.2	0.50	0.53	22.7	23.9
5	33.7	10.9	44.6	0.47	0.53	21.4	23.8
6	42.1	10.9	52.9	0.48	0.51	21.5	23.2
7	50.4	10.9	61.3	0.49	0.50	22.1	22.7
8	58.8	10.9	69.7	0.50	0.50	22.7	22.7
9	67.2	10.9	78.1	0.50	0.50	22.7	22.7
10	75.6	10.9	86.5	0.50	0.50	22.7	22.7
11	84.0	10.9	94.9	0.50	0.50	22.7	22.7
12	92.4	10.9	103.3	0.50	0.50	22.7	22.7
13	100.8	10.9	111.6	0.50	0.50	22.7	22.7
14	109.2	10.9	120.0	0.50	0.50	22.7	22.7
15	117.5	10.9	128.4	0.50	0.50	22.7	22.7
16	125.9	10.9	136.8	0.50	0.50	22.7	22.7
17	134.3	10.9	145.2	0.50	0.50	22.7	22.7
18	142.7	10.9	153.6	0.50	0.49	22.7	22.1
19	151.1	10.9	162.0	0.51	0.50	23.2	22.7
20	159.4	10.9	170.3	0.50	0.50	22.7	22.7
21	167.8	10.9	178.7	0.50	0.50	22.7	22.7
22	176.2	10.9	187.1	0.50	0.48	22.7	21.5
23	184.5	10.9	195.4	0.53	0.49	23.8	22.1
24	192.8	10.9	203.7	0.51	0.45	23.3	20.2
25	201.1	10.9	211.9	0.55	0.80	25.1	72.9*
26	217.8	10.9	228.7	0.20	0.00	17.8*	0.0

* Includes moment from 2 spacer discs.

srstress3.xls - end drop

The allowable compressive stress, F_a, is calculated in accordance with F-1334.5(a) of the ASME Code [2.2] as follows:

$$F_a = P/A$$

where the maximum allowable compressive load, P, calculated in accordance with F-1334.3(b)(1) of the ASME Code [2.2], is:

$$P = \left(\frac{1-\lambda^2/4}{1.11+0.50\lambda+0.17\lambda^2-0.28\lambda^3}\right)(S_y A) \quad \text{for } 0 \le \lambda \le 1$$

$$= \left(\frac{2}{3}\left(1-\lambda^2/4\right)\left(S_y A\right)\right) \text{ for } 1 \le \lambda \le 1.414$$

$$= \left(\frac{2}{3\lambda^2}\left(S_y A\right)\right) \text{ for } \lambda > 1.414$$

$$\lambda = \left(\frac{KL}{r}\right)\frac{1}{\pi}\sqrt{\frac{S_y}{E}}$$

K = Effective length factor

= 2.1 for fixed-free column (top end sleeve)

= 0.8 for fixed-pinned column (bottom end sleeve)

= 0.65 for fixed-fixed column (interior sleeves)

L = Free span distance in plane of bending

I = $\pi(3.00^4 - 2.08^4)/64$, Moment of Inertia of a single support rod sleeve

= 3.06 in^4

A = 3.67 in^2, Area of support rod sleeve

r = $(3.06/3.67)^{1/2}$, Radius of gyration of support rod sleeve

= 0.91 in.

S_y = 95.2 ksi, Yield strength of SA-564, Type 630 stainless steel at 500°F

E = 26.7 x 10^6 psi, Elastic modulus of SA-564, Type 630 stainless steel at 500°F

The allowable axial stress in each of the support rod sleeves is reported in Table 2.7.6-34.

F'_e is determined in accordance with F-1334.5(b) as follows:

$$F'_e = \pi^2 E/[1.30(Kl/r)^2]$$

The allowable bending stress, F_b, determined in accordance with F-1334.4(b) for compact sections, is equal to fS_y, where f is the plastic section factor for a hollow circular section, calculated as follows:

$$f = 1.698(R^4 - R_i^3R)/(R^4 - R_i^4) \quad \text{([2.78], Table 1, case 15)}$$

$$= 1.698[3.00^4 - (2.08^3)(3.00)]/(3.00^4 - 2.08^4)$$

$$= 1.472$$

Therefore, the allowable bending stress is:

$$F_b = 1.472\ (95.2\ \text{ksi})$$

$$= 140\ \text{ksi}$$

The allowable axial and bending stresses for each support rod sleeve are calculated and presented in Table 2.7.6-34. Interaction equations 20, 21, and 22 are calculated for each guide sleeve using the sleeve stresses and allowable stresses in Table 2.7.6-34. The results show that all interaction equations are satisfied for each support rod sleeve. The maximum interaction ratio is 0.94 (Eq. 22) for sleeve number 25 (i.e., second sleeve from impact end) for a 75g end drop acceleration. This reduces to 0.72 for the peak longitudinal acceleration of 57.6g calculated in Table 2.7.6-31. Therefore, the support rod assemblies meet the stress acceptance criteria of F-1334.5 of the ASME Code [2.2] for compression members subjected to combined axial compression and bending.

Table 2.7.6-34

Support Rod Sleeve Stresses - 75g End Drop

THIS SECTION CONTAINS
PROPRIETARY INFORMATION

$$\sum F_x = 0 = V_{iU} + V_{iL} \quad \rightarrow \quad V_{iU} = -V_{iL}$$

The peak shear stress in each support rod sleeve is calculated as follows:

$$f_v = 2V/A$$

The shear forces and stresses in each of the support rod sleeves are reported in Table 2.7.6-35. The allowable shear stress for accident conditions is limited to the smaller of $0.72S_y$ or $0.42S_u$ per F-1334.2 [2.2]. Therefore, the allowable shear stress for the support rod sleeves at 500°F is 55.9 ksi. As shown in Table 2.7.6-35, the support rod sleeve shear stresses are much lower than the allowable shear stress. The maximum shear stress in the support rod sleeves is 26% of the allowable shear stress. Therefore, the support rod sleeves meet the shear stress acceptance criteria for the end drop condition.

Bearing stresses in the support rod sleeves and spacer discs result from axial compression and bending loads due to the combined effects of end drop impact and residual preload. The maximum bearing stress is equal to the sum of the axial compressive stress and peak bending stress in a sleeve. The bearing stresses, reported in Table 2.7.6-35, apply to both the support rod sleeve and the corresponding spacer disc. The allowable bearing stress for pinned members is limited to $2.1S_u$ in accordance with F-1336 of the ASME Code [2.2] or 166.5 ksi and 269.9 ksi for the spacer discs and support rod sleeves, respectively. The spacer discs have a lower allowable bearing stress that the support rod sleeves due to their lower ultimate strength. Therefore, the bearing stress in the spacer disc is controlling. As shown in Table 2.7.6-35, the maximum bearing stress in the spacer discs is 56% of the allowable bearing stress. Therefore, the FO/FC spacer discs and support rod sleeves meet the bearing stress acceptance criteria for the end drop condition.

Table 2.7.6-35
Support Rod Sleeve Shear and Bearing Stresses - 75g End Drop

THIS SECTION CONTAINS
PROPRIETARY INFORMATION

Therefore, the FO/FC support rods will not fail due to elastic buckling for a 75g end drop condition.

The maximum combined axial compression and bending stress in the support rod assembly due to a 75g end drop is 93.5 ksi. The yield strength of the support rod assembly material at 500°F is 95.2 ksi. Therefore, the support rod assemblies will remain elastic for a 75g end drop load. Consequently, plastic instability of the support rod assemblies will not occur.

2.7.6.3.1.2 Side Drop

The peak g-loads resulting from the postulated 30-foot side drop are determined for horizontal drops on the impact limiter flat side and diagonal corner for both extreme cold and hot conditions in Appendix 2.10.9. The tangential equivalent static g-loads resulting from the cold and hot flatside horizontal side drop conditions are 68.4g and 43.2g, respectively. The tangential equivalent static g-loads resulting from the cold and hot corner horizontal side drop conditions are 58.9g and 37.9g, respectively. The support rod assemblies are evaluated for bounding oblique drop longitudinal and tangential g-loads of 45g and 95g, respectively, in Section 2.7.6.3.1.4.

2.7.6.3.1.3 Corner Drop

The equivalent static longitudinal and tangential g-loads resulting from the cold corner drop are 41.1g and 11.8g, respectively. The support rods are evaluated for bounding oblique drop longitudinal and tangential drop loads of 45g and 95g, respectively in Section 2.7.6.3.1.4. The results of the bounding oblique drop support rod analysis are conservatively used for the corner drop condition.

2.7.6.3.1.4 Oblique Drop

The FC-DSC support rods are evaluated for the 30' drop condition using bounding longitudinal and tangential oblique drop decelerations of 45 g's and 95 g's, respectively. The stresses in the

support rod assemblies due to the bounding oblique drop loads are determined using the methodology used for the end drop analysis, as described in Section 2.7.6.3.1.1. In order to determine the residual preload remaining in the support rod assembly due to the 45g longitudinal load, the axial shortening of the support rod sleeves is calculated as described in Step (3) of Section 2.7.6.3.1.1. The individual sleeve loads and resulting sleeve deflections are calculated for cold (-20°F) and hot (500°F) conditions as shown in Table 2.7.6-36.

Table 2.7.6-36
Support Rod Deflection Due to 45g Longitudinal Load

THIS SECTION CONTAINS
PROPRIETARY INFORMATION

The maximum and minimum residual preloads resulting from the 45g longitudinal impact load are calculated as described in Section 2.7.6.3.1.1, as follows:

$$\begin{aligned}
\delta_{REMAIN} &= \delta_{PRELOAD} + \delta_{THERMAL} + \delta_{OBLIQUE_DROP} \\
&= .1410\ in + .00339\ in + -.0843\ in = .06017\ in \quad (\text{Min. } \alpha_{DISC},\ -20°\text{F}) \\
&= .1410\ in - .00047\ in + -.0843\ in = .05631\ in \quad (\text{Max. } \alpha_{DISC},\ -20°\text{F}) \\
&= .1598\ in + .01873\ in + -.0937\ in = 0.08485\ in \quad (\text{Max Load During Drop, } 500°\text{F})
\end{aligned}$$

and:

$$\begin{aligned}
P_{PT} &= \frac{\delta_{REMAIN} A_{ROD} E}{L} \\
&= \frac{(.06017\ in)(3.142\ in^2)(29.7 \cdot 10^3\ ksi)}{172.5\ in} = 32.6\ kips \quad (\text{cold, min. } \alpha_{DISC}) \\
&= \frac{(.05631\ in)(3.142\ in^2)(29.7 \cdot 10^3\ ksi)}{172.5\ in} = 30.5\ kips \quad (\text{cold, max. } \alpha_{DISC}) \\
&= \frac{(.08485\ in)(3.142\ in^2)(26.7 \cdot 10^3\ ksi)}{172.5\ in} = 41.3\ kips \quad (\text{hot})
\end{aligned}$$

These results show that the sleeves maintain the clamping force at all joints for the bounding oblique drop impact load at both extreme cold and hot thermal conditions. Therefore, the support rod assembly will provide bending support to the spacer discs in the event of an oblique drop.

The axial, bending, and shear loads in each of the support rod sleeves resulting from the 45g longitudinal impact are calculated as discussed in Section 2.7.6.3.1.1. In addition to the support rod sleeve forces and moments resulting from the longitudinal load, the sleeves are loaded by their own inertial load due to the tangential load. The fixed end moment and shear end reactions of each support rod sleeve due to the 95g tangential load are calculated for the cantilever end sleeves and interior sleeves as follows:

End Sleeves:

M_A = $wl^2/2$, Moment reaction at base of cantilever, negative when acting in opposite direction of support rod moment reaction due to longitudinal load

V_A = wl, Shear reaction at base of cantilever

w = ρAG, Line load due the support rod inertia

= $0.2853\ lb/in^3(3.14\ in^2 + 3.67\ in^2)(95)$

= 175 lb/in.

l = Length of support rod sleeves

Interior Sleeves:

M_U = $wl^2/12$, Moment reaction at upper sleeve end

M_L = $-wl^2/12$, Moment reaction at lower sleeve end

V_A = V_B = wl/2

The combined axial and bending loads in each support rod sleeve due to the bounding oblique drop loads, including the maximum residual preload, are summarized in Table 2.7.6-37.

Table 2.7.6-37
Support Rod Sleeve Forces and Moments - Oblique Drop

Sleeve (i)	Sleeve Length (in.)	Sleeve Axial Impact Load, P_I (kips)	Residual Sleeve Preload, P_{PT} (kips)	Sleeve Axial Load, P_t (kips)	Moment Distribution Factors		Fixed Edge Moments (in-kips)		Total Sleeve Moments (in-kips)	
					Upper	Lower	Upper	Lower	Upper	Lower
1	6.25	0.3	41.3	41.6	0.00	0.00	0.00	-3.61	0.0	-3.6
2	4.25	5.3	41.3	46.5	1.00	0.50	0.28	-0.28	27.5	13.3
3	4.25	10.2	41.3	51.5	0.50	0.50	0.28	-0.28	13.9	13.3
4	4.25	15.2	41.3	56.5	0.50	0.53	0.28	-0.28	13.9	14.1
5	4.75	20.2	41.3	61.5	0.47	0.53	0.35	-0.35	13.2	13.9
6	5.25	25.2	41.3	66.5	0.48	0.51	0.42	-0.42	13.3	13.5
7	5.50	30.3	41.3	71.5	0.49	0.50	0.47	-0.47	13.8	13.1
8	5.50	35.3	41.3	76.6	0.50	0.50	0.47	-0.47	14.1	13.1
9	5.50	40.3	41.3	81.6	0.50	0.50	0.47	-0.47	14.1	13.1
10	5.50	45.4	41.3	86.6	0.50	0.50	0.47	-0.47	14.1	13.1
11	5.50	50.4	41.3	91.7	0.50	0.50	0.47	-0.47	14.1	13.1
12	5.50	55.4	41.3	96.7	0.50	0.50	0.47	-0.47	14.1	13.1
13	5.50	60.5	41.3	101.7	0.50	0.50	0.47	-0.47	14.1	13.1
14	5.50	65.5	41.3	106.8	0.50	0.50	0.47	-0.47	14.1	13.1
15	5.50	70.5	41.3	111.8	0.50	0.50	0.47	-0.47	14.1	13.1
16	5.50	75.6	41.3	116.8	0.50	0.50	0.47	-0.47	14.1	13.1
17	5.50	80.6	41.3	121.8	0.50	0.50	0.47	-0.47	14.1	13.1
18	5.50	85.6	41.3	126.9	0.50	0.49	0.47	-0.47	14.1	12.8
19	5.25	90.6	41.3	131.9	0.51	0.50	0.42	-0.42	14.3	13.2
20	5.25	95.7	41.3	136.9	0.50	0.50	0.42	-0.42	14.0	13.2
21	5.25	100.7	41.3	141.9	0.50	0.50	0.42	-0.42	14.0	13.2
22	5.25	105.7	41.3	147.0	0.50	0.48	0.42	-0.42	14.0	12.5
23	4.75	110.7	41.3	152.0	0.53	0.49	0.35	-0.35	14.6	12.9
24	4.50	115.7	41.3	156.9	0.51	0.45	0.31	-0.31	14.3	11.8
25	3.63	120.6	41.3	161.9	0.55	0.80	0.20	-0.20	15.3	43.5*
26	11.13	130.7	41.3	172.0	0.20	0.00	11.43	0.00	22.1*	0.0

* Includes moment from 2 spacer discs.

srstress3.xls - 30° oblique

The allowable axial and bending stresses for each support rod sleeve are calculated and presented in Table 2.7.6-38, along with the results of interaction equations 20, 21, and 22. The results demonstrate that the interaction equations are satisfied for all support rod sleeves. The maximum interaction ratio is 0.68 (Eq. 22) for sleeve numbers 25 and 26. Therefore, the support rod assemblies meet the stress acceptance criteria of F-1334.5 of the ASME Code [2.2] for compression members subjected to combined axial compression and bending.

Table 2.7.6-38
Support Rod Sleeve Stresses - Oblique Drop

Sleeve (i)	KL/R	λ	F'e (ksi)	Axial Stress fa (ksi)	Allow. Axial Stress, Fa (ksi)	fa/F'e	Bending Stress, fb (ksi)		Allow. Bending Stress, Fb (ksi)	Interaction Equations		
							Upper	Lower		Eq. 20	Eq. 21	Eq. 22
1	14.38	0.273	980	11.3	74.5	0.01	0.0	-1.8	140.2	0.15	0.12	0.15
2	3.03	0.0575	22,124	12.7	83.5	0.00	13.5	6.5	140.2	0.19	0.23	0.25
3	3.03	0.0575	22,124	14.0	83.5	0.00	6.8	6.5	140.2	0.19	0.20	0.22
4	3.03	0.0575	22,124	15.4	83.5	0.00	6.8	6.9	140.2	0.20	0.21	0.23
5	3.38	0.0643	17,711	16.7	83.2	0.00	6.5	6.8	140.2	0.22	0.23	0.25
6	3.74	0.0711	14,498	18.1	82.9	0.00	6.5	6.6	140.2	0.24	0.24	0.27
7	3.92	0.0745	13,210	19.5	82.8	0.00	6.7	6.4	140.2	0.25	0.26	0.28
8	3.92	0.0745	13,210	20.9	82.8	0.00	6.9	6.4	140.2	0.27	0.27	0.30
9	3.92	0.0745	13,210	22.2	82.8	0.00	6.9	6.4	140.2	0.29	0.29	0.32
10	3.92	0.0745	13,210	23.6	82.8	0.00	6.9	6.4	140.2	0.30	0.30	0.33
11	3.92	0.0745	13,210	25.0	82.8	0.00	6.9	6.4	140.2	0.32	0.32	0.35
12	3.92	0.0745	13,210	26.3	82.8	0.00	6.9	6.4	140.2	0.34	0.33	0.37
13	3.92	0.0745	13,210	27.7	82.8	0.00	6.9	6.4	140.2	0.35	0.35	0.38
14	3.92	0.0745	13,210	29.1	82.8	0.00	6.9	6.4	140.2	0.37	0.36	0.40
15	3.92	0.0745	13,210	30.5	82.8	0.00	6.9	6.4	140.2	0.39	0.38	0.42
16	3.92	0.0745	13,210	31.8	82.8	0.00	6.9	6.4	140.2	0.40	0.39	0.43
17	3.92	0.0745	13,210	33.2	82.8	0.00	6.9	6.4	140.2	0.42	0.41	0.45
18	3.92	0.0745	13,210	34.6	82.8	0.00	6.9	6.3	140.2	0.44	0.42	0.47
19	3.74	0.0711	14,498	35.9	82.9	0.00	7.0	6.5	140.2	0.45	0.44	0.48
20	3.74	0.0711	14,498	37.3	82.9	0.00	6.9	6.5	140.2	0.47	0.45	0.50
21	3.74	0.0711	14,498	38.7	82.9	0.00	6.9	6.5	140.2	0.49	0.46	0.52
22	3.74	0.0711	14,498	40.0	82.9	0.00	6.9	6.1	140.2	0.50	0.48	0.53
23	3.38	0.0643	17,711	41.4	83.2	0.00	7.2	6.3	140.2	0.52	0.49	0.55
24	3.21	0.0609	19,734	42.8	83.4	0.00	7.0	5.8	140.2	0.53	0.51	0.56
25	2.58	0.0491	30,410	44.1	83.8	0.00	7.5	21.4	140.2	0.60	0.63	0.68
26	9.75	0.185	2131	46.8	78.2	0.02	10.8	0.0	140.2	0.67	0.58	0.68

srstress3.xls - 30' oblique

In addition to axial and bending stresses, the support rod sleeve shear and bearing stresses are calculated for the oblique drop condition. The maximum shear forces at each end of each support rod sleeve are determined based on the laws of static equilibrium. The shear reactions at the upper and lower ends of each sleeve are determined as follows:

$$\sum M_A = 0 = M_A + M_B + V_B L \quad \rightarrow \quad V_B = \frac{-(M_A + M_B)}{L}$$

$$\sum F_x = 0 = V_A + V_B \quad \rightarrow \quad V_A = -V_B$$

The peak shear stress in each support rod sleeve is calculated as follows:

$$f_v = 2V/A$$

The shear forces and stresses in each of the support rod sleeves are reported in Table 2.7.6-39. The allowable shear stress for accident conditions is limited to the smaller of $0.72S_y$ or $0.42S_u$ per F-1334.3 [2.2]. Therefore, the allowable shear stress for the support rod sleeves at 500°F is 55.9 ksi. As shown in Table 2.7.6-39, the maximum support rod sleeve shear stress is 16% of the allowable shear stress. Therefore, the support rod sleeves meet the shear stress acceptance criteria for the oblique drop condition.

The maximum bearing stress is equal to the sum of the axial compressive stress and bending stress in a sleeve. The bearing stresses, reported in Table 2.7.6-39, apply to both the support rod sleeve and the corresponding spacer disc. The allowable bearing stress for pinned members is limited to $2.1S_u$ in accordance with F-1336 of the ASME Code [2.2] or 166.5 ksi and 279.7 ksi for the spacer discs and support rod sleeves, respectively. The spacer discs have a lower allowable bearing stress than the support rod sleeves and is controlling. As shown in Table 2.7.6-39, the maximum bearing stress in the spacer discs is 39% of the allowable bearing stress. Therefore, the FO/FC spacer discs and support rod sleeves meet the bearing stress acceptance criteria for the oblique drop condition.

Table 2.7.6-39
Support Rod Shear and Bearing Stresses - Oblique Drop

Sleeve (i)	Sleeve Shear Force (kips)	Shear Stress f_v (ksi)	Allow. Shear Stress, F_v (ksi)	f_v/F_v	Bearing Stress f_p (ksi)	Allow. Bearing Stress, F_p (ksi)	f_p/F_p
1	-0.6	-0.31	55.9	-0.01	11.3	166.5	0.07
2	9.6	5.23	55.9	0.09	26.2	166.5	0.16
3	6.4	3.49	55.9	0.06	20.8	166.5	0.13
4	6.6	3.58	55.9	0.06	22.3	166.5	0.13
5	5.7	3.11	55.9	0.06	23.6	166.5	0.14
6	5.1	2.79	55.9	0.05	24.7	166.5	0.15
7	4.9	2.66	55.9	0.05	26.2	166.5	0.16
8	4.9	2.70	55.9	0.05	27.8	166.5	0.17
9	4.9	2.70	55.9	0.05	29.1	166.5	0.17
10	4.9	2.70	55.9	0.05	30.5	166.5	0.18
11	4.9	2.70	55.9	0.05	31.9	166.5	0.19
12	4.9	2.70	55.9	0.05	33.2	166.5	0.20
13	4.9	2.70	55.9	0.05	34.6	166.5	0.21
14	4.9	2.70	55.9	0.05	36.0	166.5	0.22
15	4.9	2.70	55.9	0.05	37.4	166.5	0.22
16	4.9	2.70	55.9	0.05	38.7	166.5	0.23
17	4.9	2.70	55.9	0.05	40.1	166.5	0.24
18	4.9	2.66	55.9	0.05	41.5	166.5	0.25
19	5.2	2.86	55.9	0.05	43.0	166.5	0.26
20	5.2	2.82	55.9	0.05	44.2	166.5	0.27
21	5.2	2.82	55.9	0.05	45.6	166.5	0.27
22	5.1	2.75	55.9	0.05	46.9	166.5	0.28
23	5.8	3.16	55.9	0.06	48.6	166.5	0.29
24	5.8	3.16	55.9	0.06	49.8	166.5	0.30
25	16.2	8.84	55.9	0.16	65.5	166.5	0.39
26	2.0	1.08	55.9	0.02	57.7	166.5	0.35

srstress3.xls - 30' oblique

2.7.6.3.2 Puncture

The NUHOMS®-MP187 Cask is evaluated for the puncture drop of 10CFR71.73(c)(2) [2.1] in Section 2.7.2. The results of this evaluation demonstrated that the cask will not puncture in the event of the postulated puncture drop condition. The deceleration loads resulting from the puncture event are much lower than those due to the regulatory 30 foot free drop. Therefore, the stresses in the FO/FC-DSC components resulting from the postulated puncture loads are bounded by those due to the regulatory 30 foot free drop condition. No further analysis is required.

2.7.6.3.3 Thermal

Section 71.73(c)(3) of the Part 71 regulations [2.1] requires that the package be designed to withstand a postulated 30 minute fire at 1475°F. The thermal analysis of the NUHOMS®-MP187 transportation package is presented in Chapter 3. The results from the accident fire thermal analysis show that the temperature of the DSC remains relatively constant during the 30 minute accident fire event due to the insulating properties of the NS3 neutron shielding material and the impact limiter foam. During the postulated 30 minute fire, the neutron shielding material and impact limiter foam become charred, increasing their insulating capabilities. This results in higher post-fire temperatures in the DSC and cask and lower thermal gradients in the DSC.

2.7.6.3.3.1 Differential Thermal Expansion

The accident thermal design temperature of the support rods from Section 3.6.4.15 is 550°F. The nominal length of the FO/FC-DSC support rods is 172.5 inches. The coefficient of thermal expansion of the support rod ASME SA-564, Type 630 stainless steel at 550°F is 5.93×10^{-6} in/in°F. The maximum free thermal growth of a support rod, conservatively assuming a uniform temperature of 550°F along its entire length, is:

$$\delta_t = \alpha L \Delta T$$

$$= (5.93 \times 10^{-6})(172.5)(550 - 70)$$

$$= 0.49 \text{ inches}$$

Similarly, the free axial thermal growth of the FO/FC-DSC shell at 450°F is:

$$\delta_t = \alpha L \Delta T$$

$$= (9.95 \times 10^{-6})(173.0 \text{ in})(450 - 70)$$

$$= 0.65 \text{ inches}$$

Therefore the differential growth of the support rods is less than the DSC shell by 0.16 inches, and the support rods will expand freely under the accident fire conditions.

2.7.6.3.3.2 Thermal Stress Analysis

As shown in Section 2.7.6.3.3.1, the support rod assemblies experience free thermal expansion for the accident fire condition. The only thermal stresses that the support rods will experience due to thermal loading during the hypothetical accident fire are due to differential thermal growth between the spacer disc and support rod assembly materials.

The spacer disc material has a higher coefficient of thermal expansion than the support rod. Therefore, thermal loads will result in greater thermal growth in the spacer discs than in the support rod material in the same thickness. The total thickness of the 26 spacer discs is 32.5 inches. The support rods and support rod sleeves are all fabricated from SA-564, Type 630, which has a coefficient of thermal expansion of 5.93×10^{-6} in/in°F at a temperature of 550°F. The maximum coefficient of thermal expansion of the spacer disc materials at 550°F is 7.34×10^{-6} in/in°F. Therefore, the differential thermal expansion between the spacer discs and support rods is:

$$\delta_L = \Delta\alpha L \Delta T$$

$$= (7.34\times10^{-6} - 5.93\times10^{-6})(32.5 \text{ in})(550°F - 70°F)$$

$$= 0.022 \text{ inches}$$

The resulting axial tensile stress in the support rod due to the differential thermal expansion, assuming all of the differential thermal expansion is applied to the rod, is:

$$\sigma_a = E\varepsilon$$

$$= (26.4 \times 10^3)(0.036/172.5)$$

$$= 3.4 \text{ ksi}$$

General thermal stresses are classified as secondary stresses per NG-3213.12(a) [2.2] and as such need not meet the stress acceptance criteria for accident conditions. Local thermal stresses must be considered only from the fatigue standpoint per NG-3213.12(b) [2.2]. The accident thermal stresses are evaluated in accordance with Section C.7 of Regulatory Guide 7.6 [2.4] for low cycle fatigue. Regulatory Guide 7.6 [2.4] states that the extreme total stress range for accident conditions should be less than the adjusted value of S_a at 10 cycles from the appropriate design fatigue curves.

From Figure I-9.1 of the ASME Appendices [2.2], the value of S_a for 10 cycles is approximately 639 ksi for SA-564, Type 630 and the modulus of elasticity is 26.4×10^6 psi at 550°F. Therefore, the adjusted value of S_a is:

$$S_a = (639)(26.4 \times 10^6/30.0 \times 10^6)$$

$$= 562 \text{ ksi}$$

The extreme total stress intensity range of the support rods for accident thermal conditions is conservatively assumed equal to twice the peak stress, or 11.0 ksi. This is much lower than the adjusted value of S_a for 10 cycles from the design fatigue curves. Therefore, low cycle fatigue of the FO/FC support rods due to the postulated accident fire event is not a concern.

2.7.6.3.4 Alternate Support Rod Assembly

As an alternate to the 2.00-inch support rod assembly configuration, a reduced support rod diameter of 1.25 inches may be used along with spacer sleeves with an unchanged outer diameter of 3.00 inches. Support rods are preloaded to maintain the spacer disc spacing in the basket assembly and ensures that the spacer sleeves are effective in resisting compressive forces and bending moments due to end drops. The support rods are designed primarily to withstand the tensile forces due to pretensioning.

The 1.25-inch alternate rod configuration provides spacer sleeves with greater structural capacity, while increasing the effectiveness of the preload of the support rods. The alternate rod

assembly results in a greater sleeve area that reduces the stresses in the spacer sleeves due to end drop loading. Furthermore, the combination of increased sleeve area and increased flexibility of the support rod results in a significantly lower loss of preload for end drop loads. Therefore, a lower initial preload is required.

The spacer discs and the DSC shell provide lateral support for the support rod assembly during a side drop event. The support rod assembly, which can be represented by a multi-span continuous beam, is subjected to bending moments and shear forces. The longest span is the cantilever section at the top of the basket for the FC-DSC. The thicker-walled spacer sleeve ensures that support rod bending is within acceptable Code limits. In summary, it is concluded that the 1.25 inch support rod is a suitable alternative to the 2.00-inch rod assembly configuration.

2.7.6.4 Support Rod Buckling Analysis

Support rod buckling is addressed in Section 2.7.6.3.1, therefore, no further evaluation is required.

2.7.6.5 Guide Sleeve Stress Analysis

The guide sleeve assemblies are evaluated for the HAC loads in the following sections. As discussed in Section 2.7.6, stress analyses are only performed for the FC guide sleeves since the FO and FC guide sleeves are identical and the FC guide sleeves supports higher fuel loads than the FO guide sleeves.

2.7.6.5.1 Free Drop

The 10CFR Part 71 [2.1]regulations include a hypothetical accident drop condition consisting of "*a free drop of the specimen through a distance of nine m (30 ft) free drop onto a flat, essentially unyielding, horizontal surface, striking the surface in a position for which maximum damage is expected*". The NUHOMS®-MP187 transportation package is analyzed for a variety of drop orientations and conditions, as described in Appendix 2.10.9. The drop analyses are performed

for the extreme initial ambient heat (100°F ambient) and cold (-20°F ambient) conditions assuming worst case impact limiter crush strength properties to provide bounding results.

The FO/FC-DSC guide sleeves are analyzed for the drop conditions using equivalent static load methods. Dynamic load factors are calculated for each drop condition and major structural component in Appendix 2.10.10. Equivalent static loads, calculated as the peak g-load times the corresponding DLF, are used to calculate the stresses in the structural components. The peak accelerations, DLFs, and equivalent static g-loads for the guide sleeves are presented in Table 2.7.6-40. The equivalent static g-loads used for the guide sleeve 30' drop analyses bound the quasi-static g-loads determined in Section 2.7.1. The use of quasi-static g-loads is typically used for the structural evaluation of transportation packages and is the basis of the drop loads for several licensed transportation packages. Since the equivalent static g-loads used for the evaluation of the FC basket structural components are bounding, the analysis results are conservative.

To limit the number of calculations, only the limiting drop cases are considered. The guide sleeve assembly stress analyses for the various drop conditions are included in the following sections.

2.7.6.5.1.1 End Drop

Because there are no connections between the guide sleeves and bottom spacer disc, the guide sleeves will bear directly on the inner surface of the DSC end plug during the postulated 30-foot end drop. Sufficient clearance exists between the bottom spacer disc and the guide sleeve stop plates to prevent the guide sleeves from loading the disc in a top-end drop.

The guide sleeve stresses resulting from the postulated 30' top end drop condition are determined using hand calculations. As shown in Table 2.7.6-40, the maximum end drop equivalent static deceleration for the guide sleeves is 41.2 g's which is bound by the 43.0 g's used for calculation. The axial compressive stress in the guide sleeve and the FC guide sleeve extensions due to the end drop loading is:

f_a = P/A = WG/A

where:

W = 300 lb., Conservative Weight of Type "B" guide sleeve assembly

G = 43.0g

A = Cross section area of guide sleeve

= 4(8.90 + 0.12)(0.12)

= 4.33 in^2

and A' = Cross sectional area of FC angle extensions = 4(1¼ + 1¼) (¼) = 2.25 in^2

Table 2.7.6-40
FC Guide Sleeve 30' Drop G-Loads

Drop Case	Condition	Peak Accelerations (g)		DLFs		Equivalent Static G's	
		Longitudinal	Tangential	Longitudinal	Tangential	Longitudinal	Tangential
End Drop	Cold	38.9	0.0	1.06	1.06	41.2	0.0
	Hot	23.5	0.0	1.04	1.04	24.4	0.0
	Special	25.5	0.0	1.03	1.03	26.3	0.0
Side Drop	Flat Side/Cold	0.0	61.1	1.12	1.12	0.0	68.4
	Flat Side/Hot	0.0	39.6	1.09	1.09	0.0	43.2
	Corner/Cold	0.0	44.6	1.32	1.32	0.0	58.9
	Corner/Hot	0.0	30.6	1.24	1.24	0.0	37.9
C.G. over Flat	Flat/Cold	35.7	11.6	1.02	1.02	36.4	11.8
	Flat/Hot	21.9	7.1	1.02	1.02	22.3	7.2
C.G. over Corner	Corner/Cold	34.2	11.1	1.01	1.01	34.5	11.2
	Corner/Hot	20.0	6.5	1.02	1.02	20.4	6.6
Oblique Primary Impact	30° Flat Side/Cold	17.6	66.7	1.11	1.11	19.5	74.0
	30° Flat Side/Hot	18.1	34.2	1.07	1.07	19.4	36.6
	30° Corner/Cold	12.6	46.4	1.03	1.03	13.0	47.8
	30° Corner/Hot	16.4	31.8	1.01	1.01	16.6	32.1
	60° Flat Side/Cold	30.4	42.8	1.03	1.03	31.3	44.1
	60° Flat Side/Hot	26.0	15.7	1.01	1.01	26.3	15.9
	60° Corner/Cold	22.7	32.8	1.02	1.02	23.2	33.4
	60° Corner/Hot	20.8	13.1	1.02	1.02	21.2	13.3
Oblique Slapdown Impact	30° Flat Side/Cold	6.9	70.0	1.31	1.31	9.0	91.7
	30° Flat Side/Hot	3.7	46.3	1.35	1.35	5.0	62.5
	30° Corner/Cold	2.1	57.7	1.32	1.32	2.8	76.2
	30° Corner/Hot	1.2	40.5	1.24	1.24	1.5	50.2
1' Drop Flat	Cold	0.0	21.0	1.18	1.18	0.0	24.8
	Hot	0.0	13.9	1.21	1.21	0.0	16.8

Notes:

(1) The peak accelerations are developed in Appendix 2.10.9. The peak g-loads for the oblique drop conditions are taken at 80" from the package center of gravity, conservatively taken at a location further from the package c.g. than the critical guide sleeve span.

(2) The DLFs are calculated in Appendix 2.10.10.

Therefore,

f_a = (300 x 43.0)/(4.33 x 1000)

= 3 ksi (for guide sleeves)

fa' = (300 x 43)/(2.25 x 1000) = 6 ksi (for FC guide sleeve angle extensions)

The allowable primary membrane stress in the guide sleeves for accident conditions is limited to the lesser of $2.4S_m$ or $0.7S_u$. The design stress intensity, S_m, and ultimate strength, S_u, of ASME SA-240, Type 304 stainless steel at 700°F are 16.0 ksi and 63.5 ksi, respectively. Therefore, the allowable primary membrane stress intensity is 38.4 ksi. The resulting margin of safety in the FC guide sleeve angle extension for the 30-foot end drop is:

M.S. = (38.4/6) - 1 = +5.4

Therefore, the FO/FC guide sleeves meet the stress acceptance criteria for the 30-foot end drop.

2.7.6.5.1.2 Side Drop

The peak g-loads resulting from the postulated 30-foot side drop are determined for horizontal drops on the impact limiter flat side and diagonal corner for both extreme cold and hot conditions in Appendix 2.10.9. The guide sleeve equivalent static g-loads for side drop conditions are bound by the acceleration resulting from the slapdown drop conditions, as shown in Table 2.7.6-40, and consequently need not be analyzed.

2.7.6.5.1.3 C.G. Over Flat/Corner Drops

The guide sleeves are loaded in the longitudinal direction by their own self weight and in the tangential direction by the weight of the fuel assembly for the 72° drop conditions. The equivalent static g-loads for the cold flat 72° drop condition are 36.4g longitudinal and 11.8g tangential. The results of the guide sleeve flatside slapdown drop analysis and end drop analysis show that the most significant stresses result from the tangential loading due to the fuel assembly. Since the equivalent static g-loads for the cold 72° drop condition are significantly lower than the 30 foot flatside slapdown drop and end drop g-loads, the guide sleeve stresses due

to the cold 72° drop loading are also bounded. Therefore, the guide sleeves need not be analyzed for the 72° drop conditions.

2.7.6.5.1.4 Oblique Drop

In the event of a 30-foot oblique drop, the guide sleeve assemblies are supported laterally by the 26 spacer discs and longitudinally by the DSC end plates. The guide sleeves are only loaded in the longitudinal direction by their own self weight, since the fuel assemblies are supported by the DSC end plates. In the tangential direction, the load from the fuel assemblies must be supported in addition to the self weight of the guide sleeve, neutron absorber sheets, and oversleeves. The tangential loading controls the design of the guide sleeves and basket assembly since a sufficient gage thickness of the guide sleeve, in addition to close spacer disc pitches, is required to limit the permanent deformation of the guide sleeve panels during the postulated event. The maximum center to center spacing of the spacer discs is 6.75 inches, leaving an unsupported free-span distance of 5.50 inches between spacer discs. The load from the fuel assemblies is transferred in bearing through the guide sleeves directly to the supporting spacer disc ligaments. For the purpose of this analysis, the fuel assembly acts as a uniform pressure load normal to the surface of the supporting guide sleeve panel during the 30-foot drop.

The NUHOMS®-MP187 guide sleeves are analyzed for the 30-foot flatside slapdown drop conditions using the symmetry finite element model described in Section 2.10.3.1.6. A longitudinal section of the guide sleeve, from the centerline of a spacer disc to the middle of the span between the spacer discs, is modeled with boundary conditions. The guide sleeve is modeled using 3-D plastic shell elements having a uniform thickness of 0.12 inches. The weight of the poison plates and oversleeves are included in the mass of the guide sleeve; however, no credit is taken for the mechanical strengths of these plates.

As shown in Table 2.7.6-40, the most severe loading for the guide sleeves result from the cold flatside slapdown drop for which the maximum tangential equivalent static acceleration is 91.7g, at 80 inches from the package center of gravity. A design basis tangential acceleration load of 95g is used for the guide sleeve oblique drop analysis. The total tributary weight for a 6.75 inch

longitudinal segment of the guide sleeve assembly is 84.69 pounds. Therefore, the total tangential load on the symmetry periodic model of the guide sleeve assembly due to a 95g tangential load is 4,023 pounds. The total reaction load from the finite element solution is 4,023 pounds in the tangential direction.

Elastic-plastic analyses of the guide sleeve finite element model are performed in accordance with NG-3228.1(b) [2.2], assuming multilinear kinematic hardening material behavior, using the ANSYS version 5.0A program [2.39]. The elastic-plastic stress-strain data used for the plastic analysis of the guide sleeve is based on NUREG/CR-0481 [2.37]. The SA-240, Type 304 stainless steel material properties used for both the cold drop condition are based on a maximum guide sleeve design temperature of 700°F. The stress-strain curves at 700°F are shown in Figure 2.3.2-1.

The stresses in the guide sleeve at the middle, top, and bottom fibers of the plate resulting from the flatside slapdown condition are shown in Figure 2.7.6-45, Figure 2.7.6-46, and Figure 2.7.6-47, respectively. The maximum primary membrane stress intensity in the guide sleeve resulting from the bounding flatside slapdown load is 16.0 ksi (node 68, middle fiber.) The allowable primary membrane stress intensity for components evaluated on a plastic basis is limited to $0.7S_u$ ([2.2], F-1341.2(a).) The ultimate strength of Type 304 stainless steel at 700°F is 63.5 ksi. Therefore, the allowable primary membrane stress intensity is 44.5 ksi. The margin of safety in the guide sleeve for primary membrane stress intensity due to the flatside slapdown drop is:

$$\text{M.S.} = (44.5/16.0) - 1 = +1.78$$

The maximum membrane plus bending stress intensity in the guide sleeve resulting from the bounding flatside slapdown load is 29.1 ksi (node 65, bottom fiber.) The allowable membrane plus bending stress intensity for components evaluated on a plastic basis is limited to $0.9S_u$ ([2.2], F-1341.2(b).) Therefore, the allowable membrane plus bending stress intensity is 57.2 ksi. The margin of safety in the guide sleeve for membrane plus bending stress intensity due to the flatside slapdown drop is:

M.S. = (57.2/29.1) - 1 = +0.97

The maximum elastic plus plastic deformation of the guide sleeve is 0.168 inches at the center of the bottom panel (node 72). The deformed shape of the guide sleeve resulting from the flatside slapdown impact is shown in Figure 2.7.6-48. The maximum permanent deformation of the guide sleeve resulting from the flatside slapdown is 0.125 inches at the center of the bottom panel (node 72). The plastically deformed shape of the guide sleeve due to the flatside slapdown is illustrated in Figure 2.7.6-52. This permanent deformation is considered in the NUHOMS®-MP187 criticality evaluation.

The plastic strain in the guide sleeve, at the middle, top, and bottom fibers of the plate, due to the flatside slapdown are shown in Figure 2.7.6-49, Figure 2.7.6-50, and Figure 2.7.6-51, respectively. The maximum strain (EPTOINT) due to the cold flatside slapdown drop condition, shown in Figure 2.7.6-51, is 1.7% (node 65, bottom fiber). The maximum permanent strain (EPPLINT) due to the cold flatside slapdown drop condition is 1.4% (node 12, bottom fiber). Per NG-3228.1(b) [2.2], the maximum accumulated permanent strain can not exceed 5% (NG-3228.1(b)(2)). The permanent strain for the flatside slapdown drop condition is less than the 5% strain limit. Therefore, the criteria is satisfied.

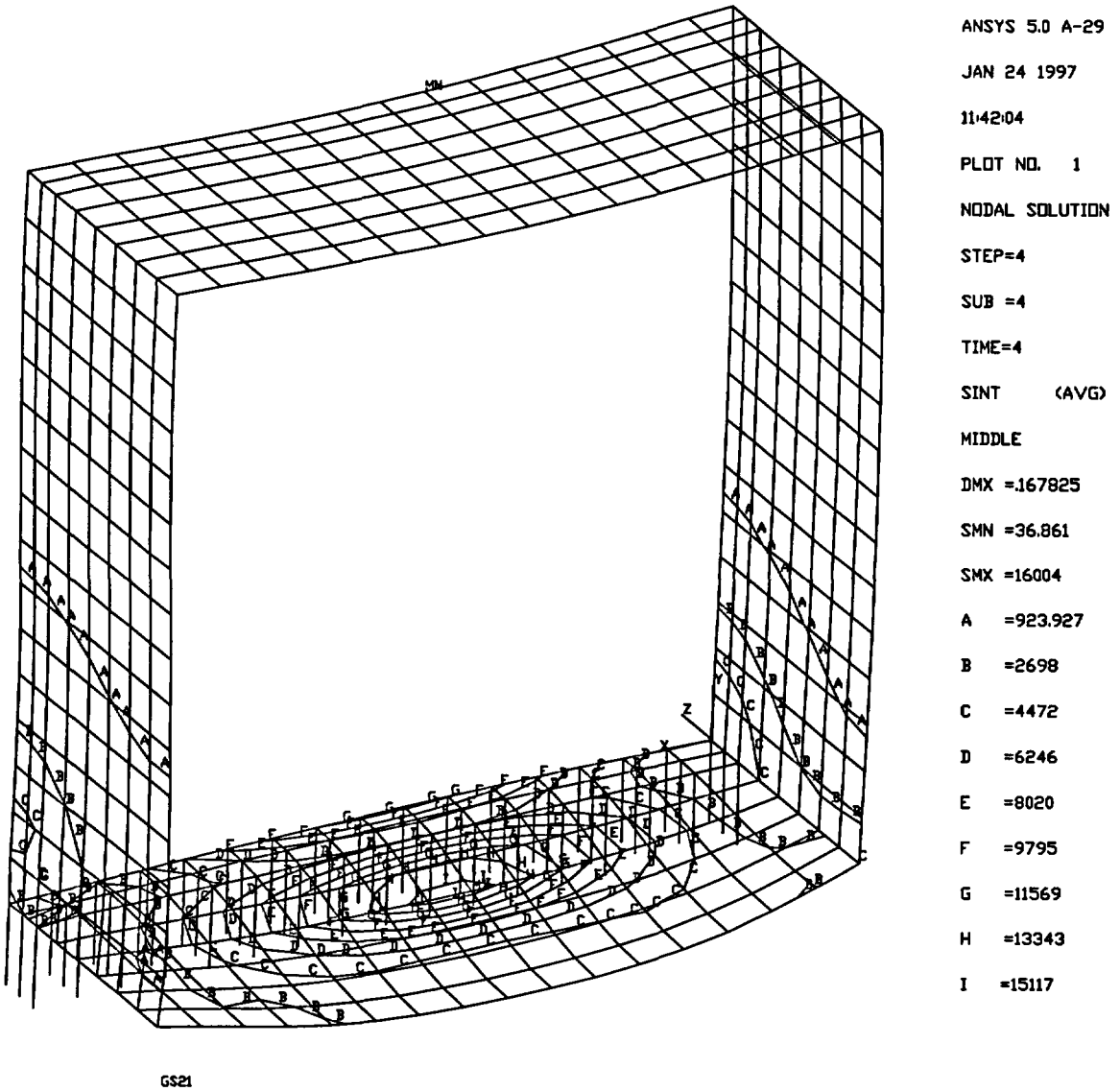

Figure 2.7.6-45
Guide Sleeve S.I. Contour Plot (Middle Fiber) - Flatside Slapdown

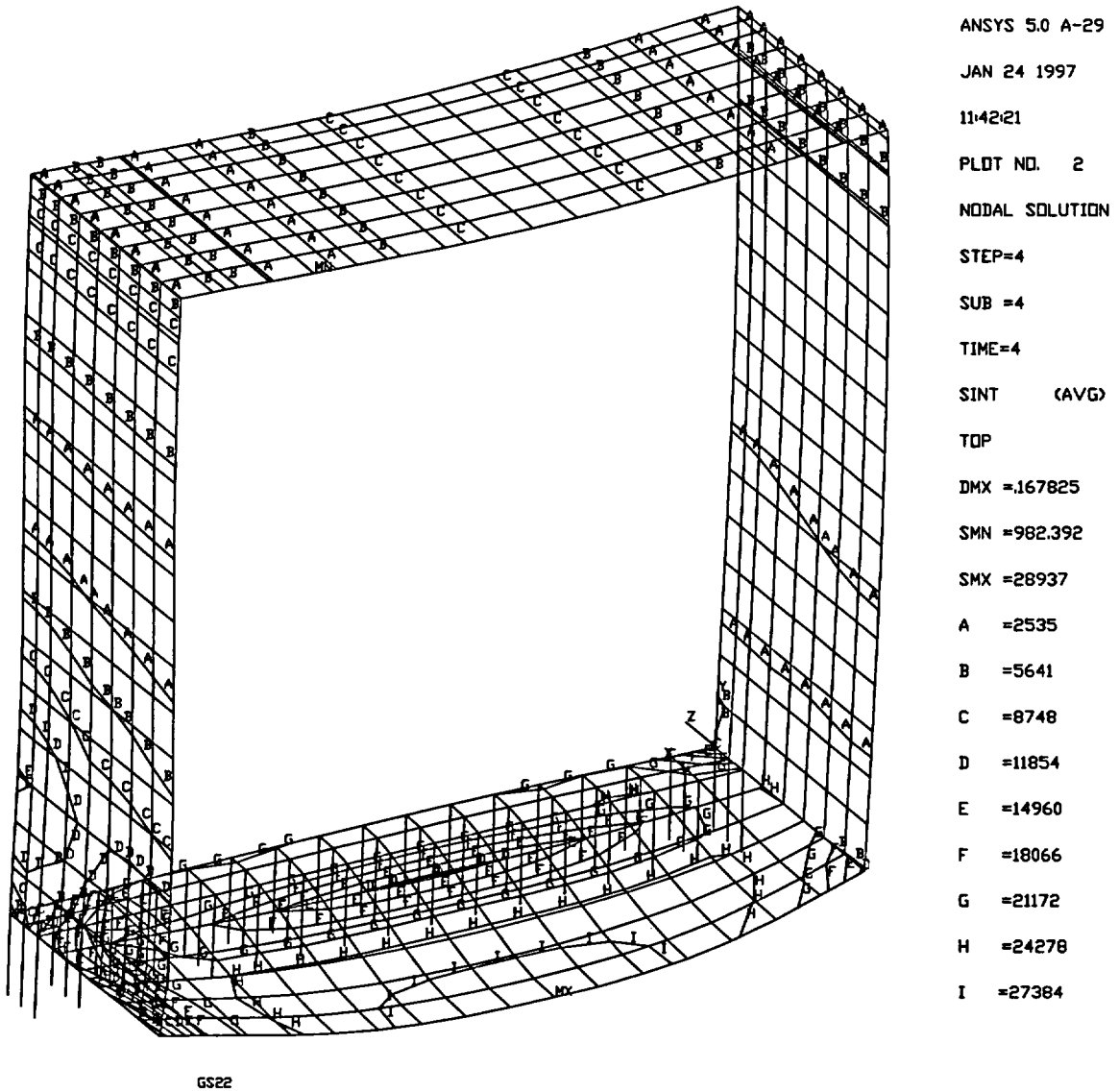

Figure 2.7.6-46
Guide Sleeve S.I. Contour Plot (Top Fiber) - Flatside Slapdown

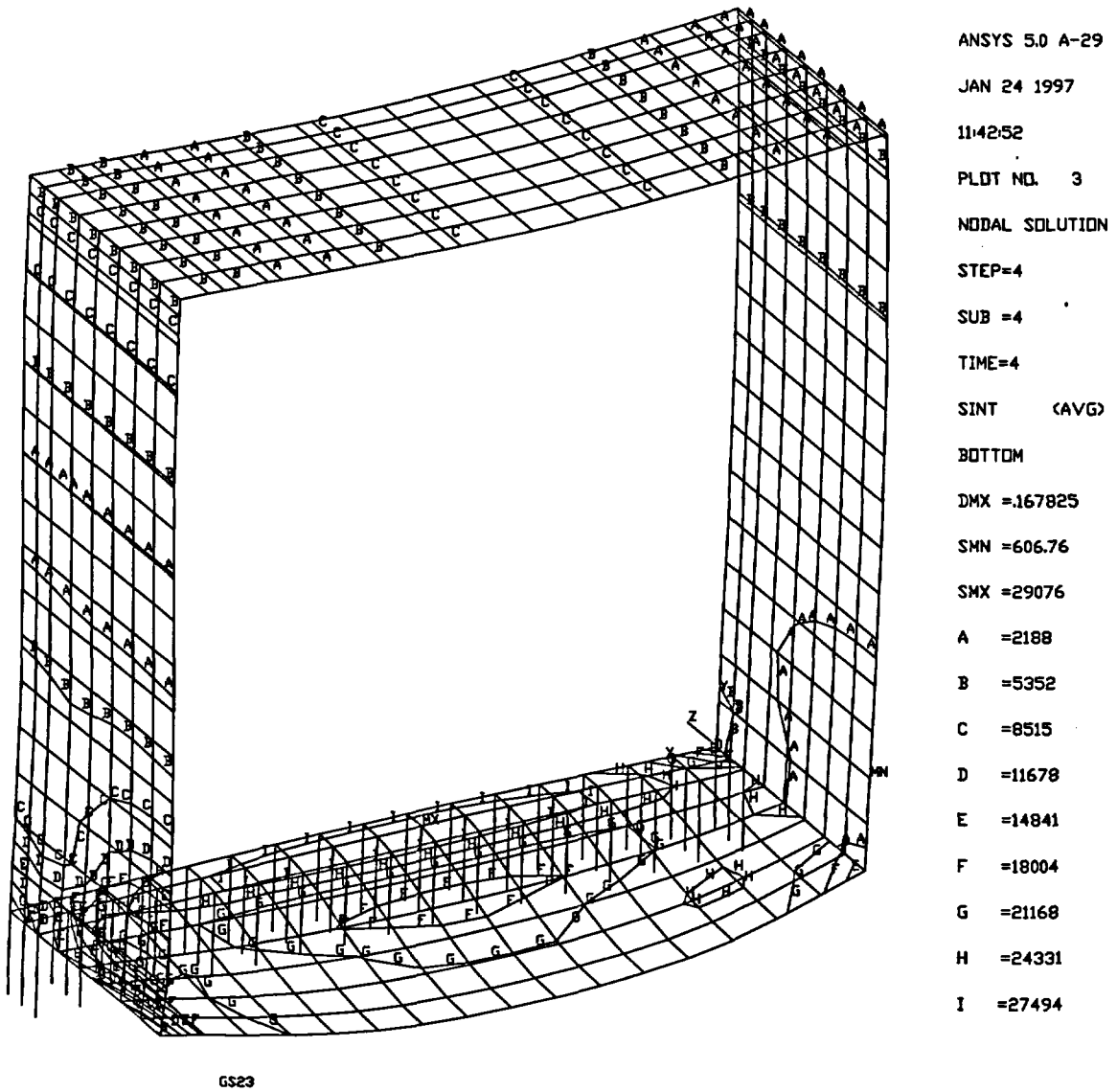

Figure 2.7.6-47
Guide Sleeve S.I. Contour Plot (Bottom Fiber) - Flatside Slapdown

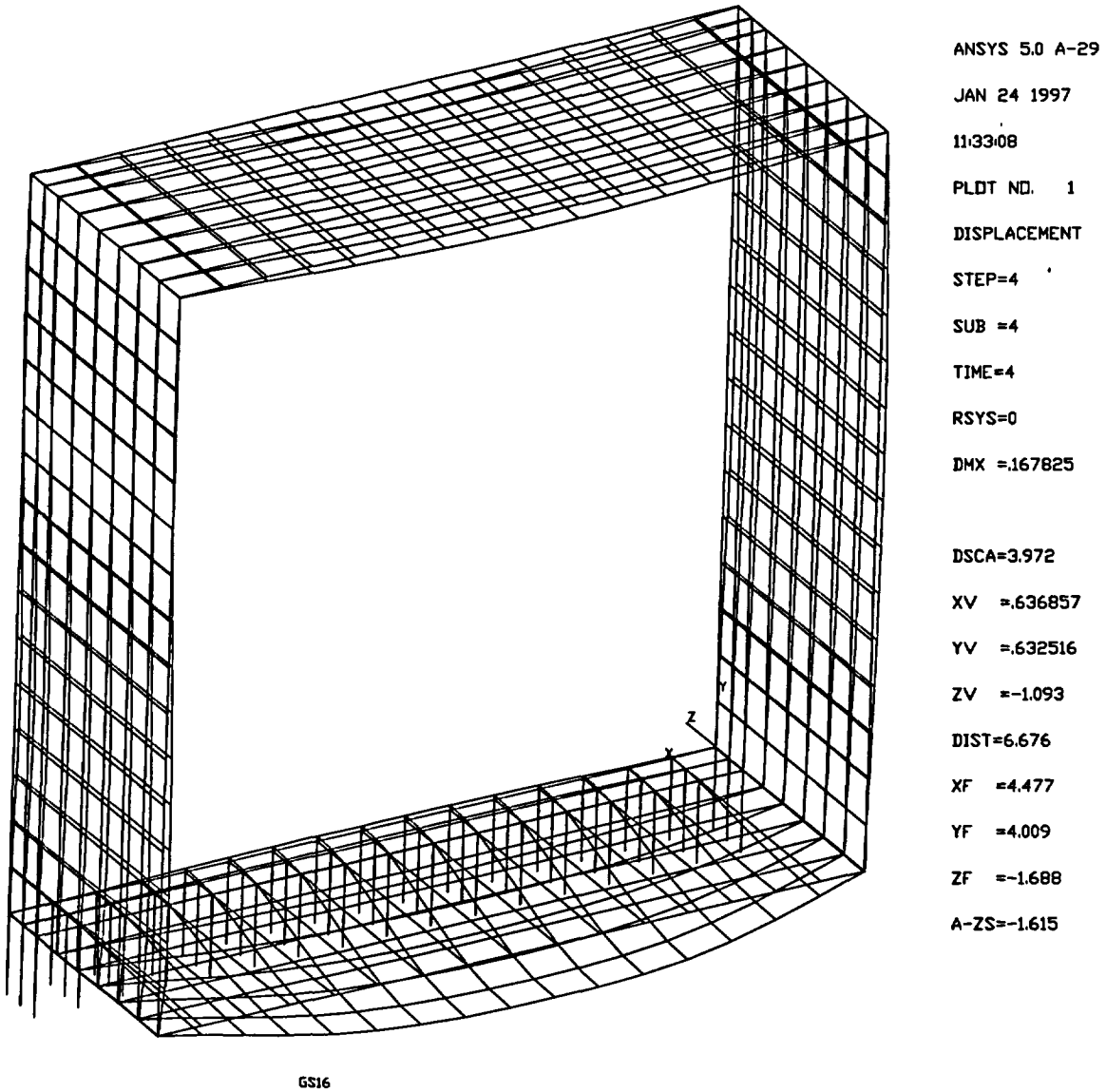

Figure 2.7.6-48
Guide Sleeve Displacement (UY) Plot - Flatside Slapdown

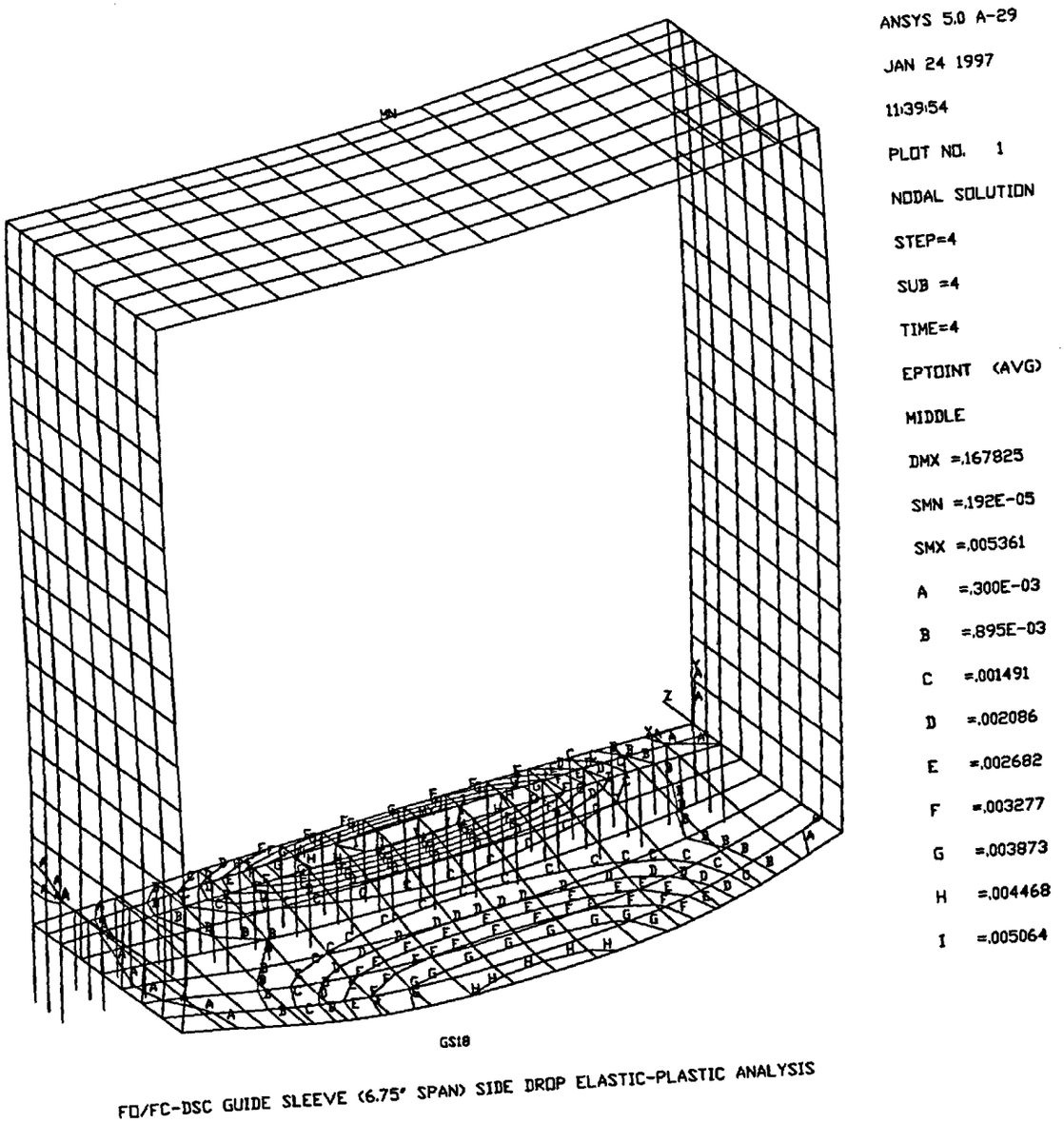

Figure 2.7.6-49
Guide Sleeve Plastic Strain (Middle Fiber) - Flatside Slapdown

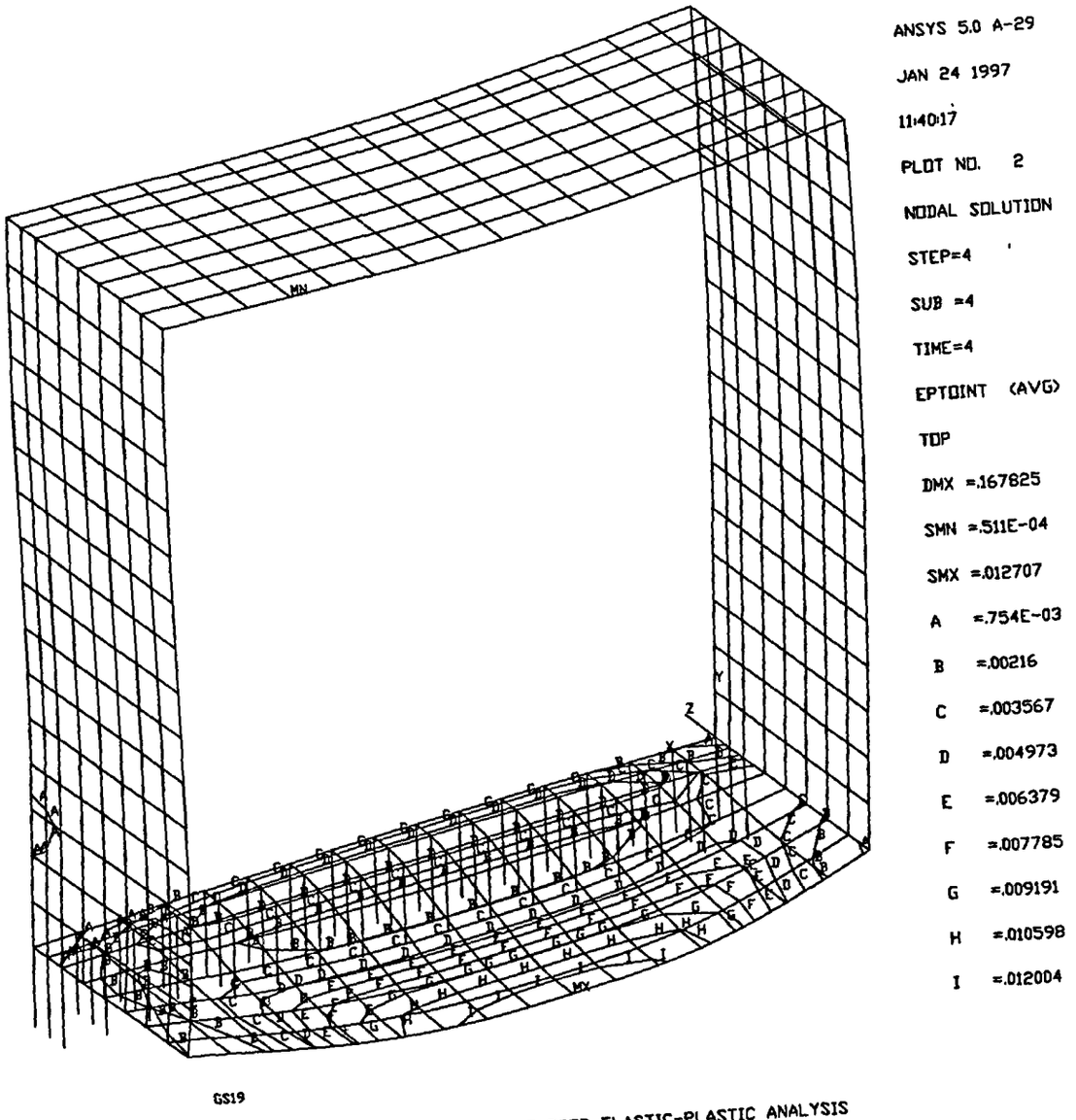

Figure 2.7.6-50
Guide Sleeve Plastic Strain (Top Fiber) - Flatside Slapdown

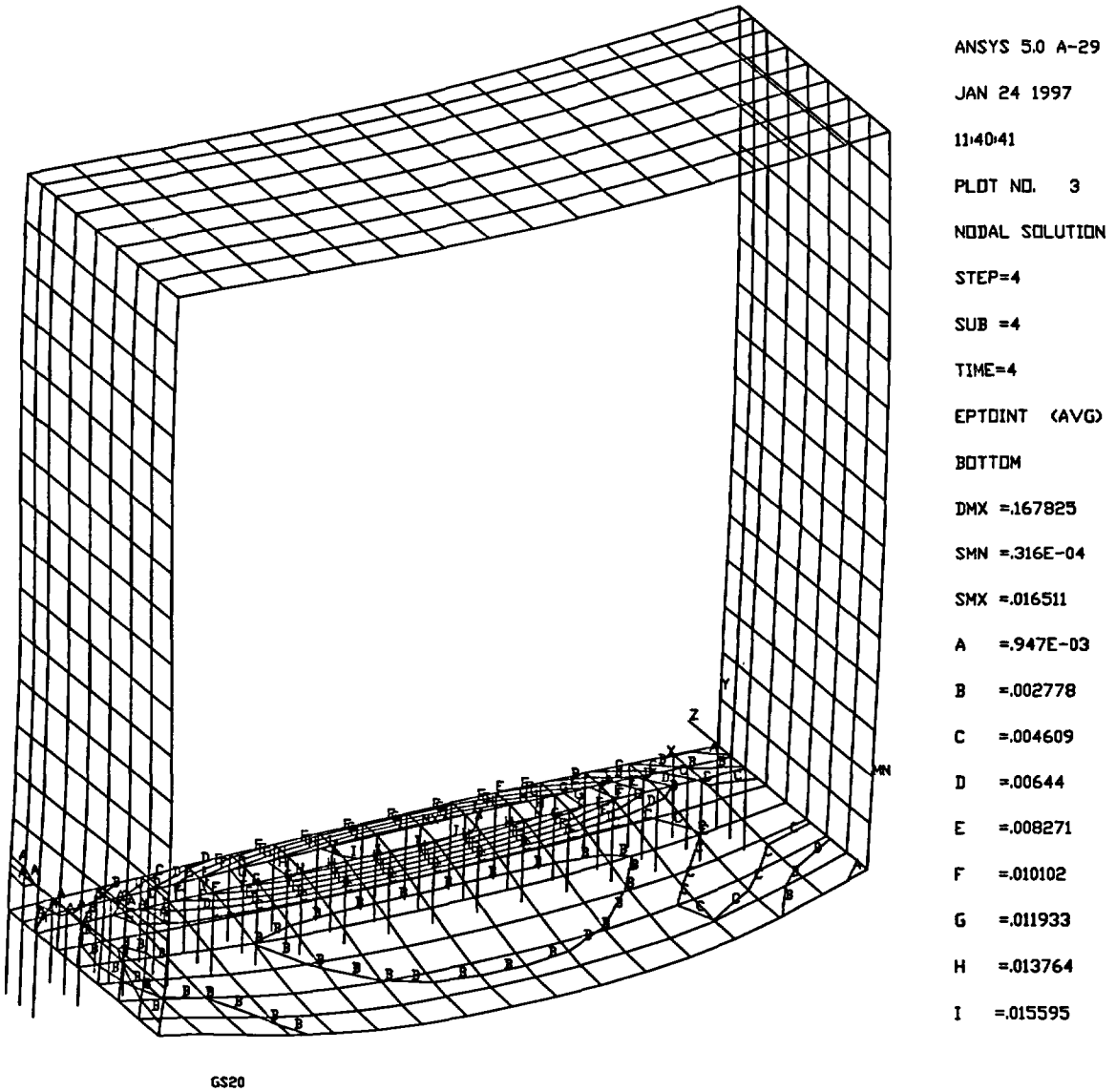

Figure 2.7.6-51
Guide Sleeve Plastic Strain (Bottom Fiber) - Flatside Slapdown

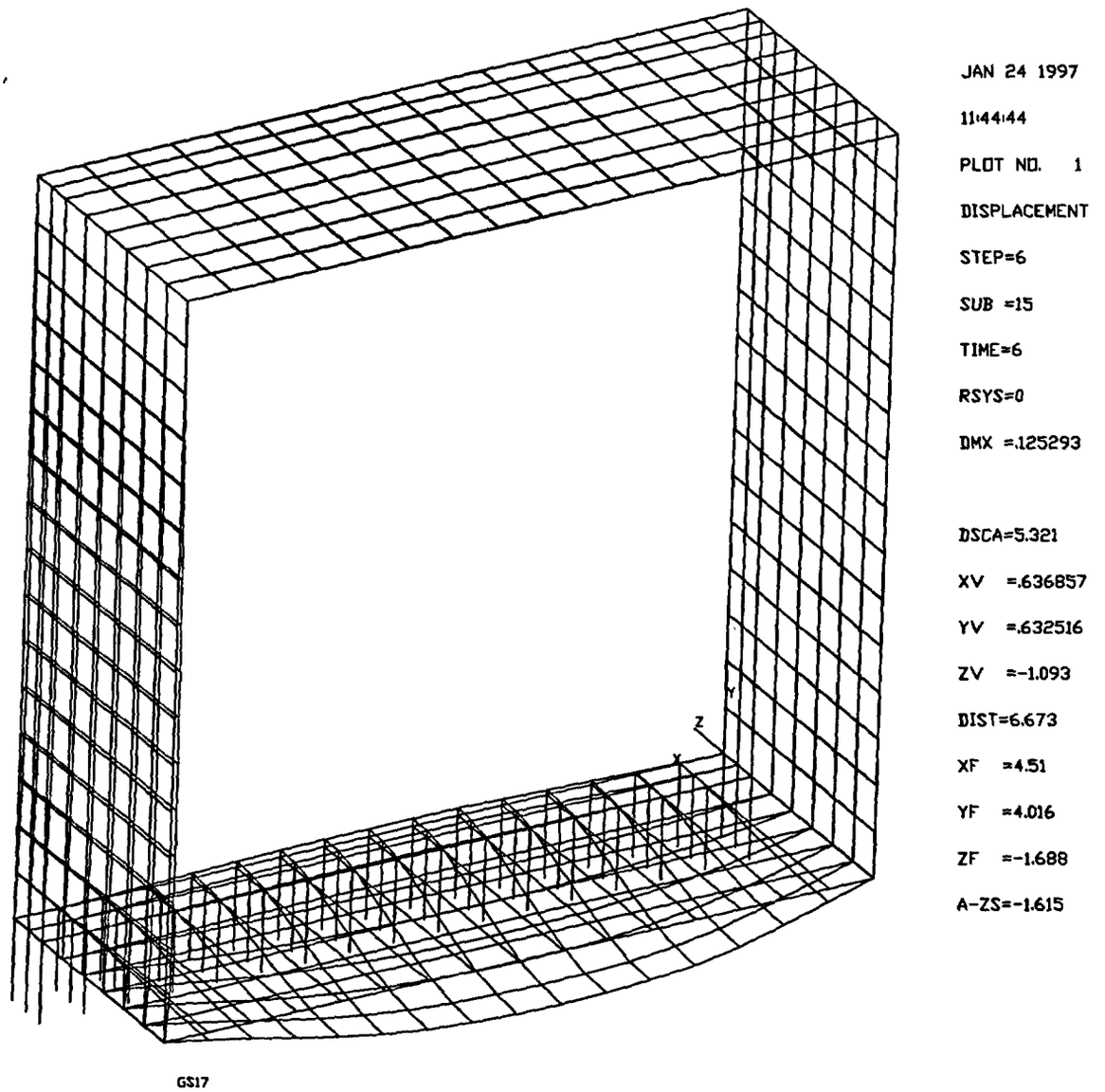

Figure 2.7.6-52
Guide Sleeve Permanent Deformation (UY) - Flatside Slapdown

2.7.6.5.2 Puncture

The NUHOMS®-MP187 Cask is evaluated for the puncture drop of 10CFR71.73(c)(2) [2.1] in Section 2.7.2. The results of the cask puncture evaluation demonstrate that the cask will not puncture in the event of the postulated puncture drop condition. The drop deceleration loads which result from the puncture drop condition are much lower than those due to the 30-foot free drop. Therefore, the stresses in the FO/FC-DSC components resulting from the puncture drop condition are bounded by those due to the 30-foot free drop condition.

2.7.6.5.3 Thermal

Section 71.73(c)(3) of the Part 71 regulations [2.1] requires that the package be designed to withstand a postulated 30 minute fire at 1475°F. The thermal analysis of the NUHOMS®-MP187 transportation package is presented in Chapter 3. The results from the accident fire thermal analysis show that the temperature of the DSC remains relatively constant during the 30 minute accident fire event due to the insulating properties of the NS3 neutron shielding material and the impact limiter foam. After the postulated 30 minute fire, the neutron shielding material and impact limiter foam become charred increasing their insulating capabilities. This results in higher post-fire temperatures in the DSC and cask and lower thermal gradients in the DSC.

2.7.6.5.3.1 Differential Thermal Expansion

Top of DSC

The maximum design temperature of the guide sleeve for the hypothetical fire condition is 800°F. The nominal length of the FC guide sleeve plus extension angles is 167.8 inches. The mean coefficient of thermal expansion of Type 304 stainless steel at 800°F is 9.82×10^{-6} in/in°F. The maximum thermal growth of the guide sleeve, conservatively assuming a uniform temperature of 800°F along its entire length, is:

$$\delta_t = \alpha L \Delta T$$
$$= (9.82 \times 10^{-6})(167.8)(800 - 70)$$
$$= 1.20 \text{ inches}$$

This is much smaller than the nominal gap of 3.95 inches provided between the top end of the guide sleeves and the FC-DSC shell top end shield plug. Therefore, the guide sleeve will expand freely under the accident fire conditions (Note that the FO gap is the same as FC with the shorter length, thus FC controls for thermal expansion). Therefore, the guide sleeves will expand freely in the upward direction under the accident fire thermal conditions.

Bottom of DSC

The guide sleeves are rigidly fastened only at the bottom end spacer disc. Considering tolerances, the maximum distance between the bottom spacer disc and the bottom end of the support rods is:

$$L_{max} = (6.25" \pm .25") = 6.50 \text{ inches}$$

The minimum gap between the end of the sleeves and the bottom cover (end of the support rods) is 0.25" (0.50"± 0.25").

Assuming a sleeve temperature of 800°F, the maximum longitudinal thermal expansion of the sleeves is:

$$\Delta L = \alpha\ L\ \Delta T_{max}$$
$$= (9.82 \times 10^{-6}\ in/in/°F)(6.50in)(800°F - 70°F)$$
$$= 0.0466\ inches$$

The increase in length is much less than the available gap, thus the sleeves are free to expand in the downward direction.

"Radial" Direction

In the plane of the spacer discs, the maximum nominal dimension of the guide sleeve is 9.346 inches. The minimum spacer disc opening is 9.450 inches. Assuming the sleeve is at 800°F:

$$\begin{aligned}\Delta L &= \alpha\, L\, \Delta T_{max} \\ &= \left(9.82\, x\, 10^{-6}\, in / in/^{o}F\right)\left(9.346\, in\right)\left(800^{o}F - 70^{o}F\right) \\ &= 0.067\ \ inches\end{aligned}$$

Compared to the nominal gap of:

$$Gap = 9.450\, in - 9.346\, in = .104\, in$$

The gap is approximately 1.55 times the maximum expansion. Therefore, sleeve is free to expand in the radial direction.

2.7.6.5.3.2 Thermal Stress Analysis

As shown in 2.7.6.5.3.1, the guide sleeve assemblies expand freely under the accident fire conditions. Therefore, the guide sleeves experience no stress due to the accident fire condition.

2.7.6.6 Guide Sleeve Buckling Analysis

The primary concern in the event of the postulated 30-foot end drop is the stability of the guide sleeve. To maintain criticality control the position of the guide sleeves must remain within defined locations. Due to the large width to thickness ratio of the guide sleeves, panel buckling will control the guide sleeve behavior rather than beam buckling behavior. An analysis is performed to determine the buckling stress of the guide sleeve panel.

The theoretical elastic buckling stress of the guide sleeve is determined using hand calculations. Conservatively treating a guide sleeve panel as a simply supported rectangular plate under equal

uniform compression on the top and bottom opposing edges, the theoretical buckling stress, σ‘, is:

$$\sigma' = K\frac{E}{1-\nu^2}\left(\frac{t}{b}\right)^2 \qquad \text{([2.7], Table 35, case 1a)}$$

where:

a	=	14.75 in., Largest guide sleeve free span (Should be 172.5”-160.13”-1.25” = 11.12”, longer span is conservatively used in the calculation)
b	=	8.90 in., Width of guide sleeve panel
K	=	3.45 for a/b = 1.6
t	=	0.12 in
E	=	24.8 x 10^6 psi, Elastic Modulus of Type 304 SS at 700°F
ν	=	0.29, Poisson’s ratio for stainless steel

Therefore,

$$\sigma' = 3.45\frac{24.8x10^6}{1-0.29^2}\left(\frac{0.12}{8.90}\right)^2$$

$$= 16.98 \text{ ksi}$$

Therefore, the factor of safety against buckling of the guide sleeve due to the end drop is:

F.S. = (16.98/3.0) - 1 = 4.66

Therefore, elastic buckling of the guide sleeve panels will not occur for the postulated 43g end drop loading and the required factor of safety of 1.5 against elastic buckling is satisfied.

2.7.6.7 Guide Sleeve Extension Angles Buckling Analysis

The guide sleeve extension angles will act as columns above the top of the FC guide sleeve. The allowable buckling load for the angles is established by Appendix F-1334 of:

$P_{applied}$ = (300 lbs/4 angles)(43 g) = 3225 lbs/angle

K = 2.1 (conservative)

l = 6.25 inches (maximum)

For 1¼" x 1¼" x ¼" angles ([2.51], p. 1-51):

A = .563 in^2

r = .243 in (Z-Z axis)

Using properties for SA-240 material at 700°F from Table 2.3.1-2:

S_y = 17.7 ksi

S_u = 63.5 ksi

E = 24.8 x 10^3 ksi

From F-1334.3, the accident condition allowable compressive load, P, is a function of λ where:

$$\lambda = \frac{KL}{r} \cdot \frac{1}{\pi}\sqrt{\frac{S_y}{E}}$$
$$= \frac{2.1(6.25\ in)}{.243\ in} \cdot \frac{1}{\pi}\sqrt{\frac{17.7\ ksi}{24{,}800\ ksi}}$$
$$= 0.459$$

For the calculated value of λ, the critical load is given as:

$$\frac{P}{P_y} = \frac{1-\lambda^2/4}{1.11+.50\lambda+.17\lambda^2-.28\lambda^3} = .703$$

Replacing P_y:

$$\begin{aligned} P &= .703\,P_y \\ &= .703\,S_y\,A \\ &= .703\,(17.7ksi)\,(.563in^2) \\ &= 7.01\,kips \end{aligned}$$

Comparing P with $P_{applied}$ and calculating the factor of safety:

FS = $P/P_{applied}$ - 1

= (7.01 kip/3.23 kip) - 1

= 1.17 <u>OK</u>

The stresses in the weld between the extension angle and the guide sleeve is calculated based on 1/8 inch fillets top and bottom.

Lw = 2(2 legs (1"))

= 4.0 in

Allowable stresses for the fillet welds are taken from Table NF-3324.5(a)-1. Using the base metal material properties listed for the extension angle, the normal (Level A) allowable stresses are:

$$F_w = 0.3\,S_u = 0.3\,(63.5\,ksi) = 19.1\,ksi \text{ (weld throat)}$$
$$F_w = 0.4\,S_y = 0.4\,(17.7\,ksi) = 7.08\,ksi \text{ (base metal shear)}$$

Per F-1334, the accident (Level D) allowables are the normal allowables increased by the lesser of 2.0 or $1.167S_u/S_y$. For this case, the normal allowables are increased by 2.0. The accident allowables become:

$$F_w = 2 \cdot 19.1\ ksi = 38.2\ ksi \text{ (weld throat)}$$
$$F_w = 2 \cdot 7.08\ ksi = 14.16\ ksi \text{ (base metal shear)}$$

The accident condition stresses are calculated as follows:

$$f_w = \frac{P_{applied}}{L_w \cdot t_w} = \frac{3225\ lb}{4.0\ in \cdot \frac{1}{8}\ in} = 6.9\ ksi \quad \text{(base metal shear)}$$

$$f_w = \frac{\sqrt{2} \cdot P_{applied}}{L_w \cdot t_w} = \frac{\sqrt{2} \cdot 3225\ lb}{4.0\ in \cdot \frac{1}{8}\ in} = 9.1\ ksi \quad \text{(weld throat)}$$

Comparing calculated to allowable stresses and calculating the factors of safety:

At the weld throat:

$$FS = \frac{F_w}{f_w} - 1 = \frac{38.2\ ksi}{6.9\ ksi} - 1 = 4.5 \quad OK$$

Base metal shear:

$$FS = \frac{F_w}{f_w} - 1 = \frac{14.16\ ksi}{9.1\ ksi} - 1 = .56 \quad OK$$

All stresses are within the Code allowables. Therefore, elastic buckling will not occur for the postulated 43g end drop loading

2.7.6.8 Over Sleeve Structural Evaluation

Oversleeve to Guide Sleeve Welds

As shown on the general arrangement drawing, NUH-05-4004 (Section 1.3.2), the edges of the oversleeve are attached to the guide sleeves with .08" plug welds at 2" centers. The welds at the ends of the oversleeves are .10" diameter at .75" centers.

Oversleeve Sides - The oversleeves are approximately 154" long. For weld spacing of 2", the number of welds per side is:

$$N_{side} = \frac{154"}{2"} + 1 = 78 \text{ welds / side}$$

and the weld area per side is:

$$\begin{aligned} A_w^{side} &= \frac{\pi}{4} D_{weld}^2 \cdot N_{side} \\ &= \frac{\pi}{4} (.08\ in)_{weld}^2 \cdot 78\ welds \\ &= .392\ in^2 \end{aligned}$$

Oversleeve Ends - The oversleeves are approximately 8.65" wide. For weld spacing of .75", the number of welds per end is:

$$N_{end} = \frac{8.65"}{.75"} + 1 = 12 \text{ welds / side}$$

and the weld area per end is:

$$\begin{aligned} A_w^{end} &= \frac{\pi}{4} D_{weld}^2 \cdot N_{end} \\ &= \frac{\pi}{4} (.10\ in)_{weld}^2 \cdot 12\ welds \\ &= .0942\ in^2 \end{aligned}$$

For the 95g side drop loads (Section 2.7.6.5.1.4), the poison panel/oversleeve on the bottom of the guide sleeve will be supported between the guide sleeve and the spacer disk. The poison panel/oversleeve on the top of the guide sleeve will be supported by bearing on the guide sleeve. Thus, the critical loading will be shear in the welds located on the sides of the guide sleeves. For this loading, the weight of the oversleeve is assumed to be uniformly distributed through the welds on both sides of the oversleeve. Weight of the neutron absorber is conservatively assumed resisted only by the welds on the bottom side of the oversleeve. Out of plane loads are resisted by bearing on either the guide sleeves or the spacer disks, thus no out of plane loads are applied to the welds.

The weight of the neutron absorber panels and oversleeves per panel is:

$$W_{absorber} = \rho_{al} A_{nas} L_{nas} / 4 \text{ panel}$$

$$W_{oversleeve} = \rho_{ss} A_{os} L_{os} / 4 \text{ panel}$$

where,

ρ_{ss} = 0.2853 lb/in^3, Density of Stainless Steel

ρ_{al} = 0.098 lb/in^3, Density of Aluminum

A_{os} = Area of Oversleeves

= 4(8.71 + 2(0.12 + 0.085))(0.0178)

= 0.65 in^2

A_{nas} = Area of Neutron Absorber Sheets

= 4(8.59)(0.085)

= 2.92 in^2

L_{os} = Length of of Oversleeves

= 154.38 in

L_{nas} = Length of Neutron Absorber Sheets

= 153.25 in

Therefore, the adjusted density of the guidesleeve is:

$$W_{absorber} = \frac{(0.098)(2.92)(153.25)lb}{4\ panels} = 10.96\ \text{lb/panel}\ \ (\text{nominal}) \Rightarrow \text{use 12 lb / panel}$$

$$W_{ovesleeve} = \frac{(0.2853)(0.65)(154.38)\ lb}{4\ sleeves} = 7.16\ \text{lb/sleeve}\ \ (\text{nominal}) \Rightarrow \text{use 8 lb / panel}$$

Stress in the welds from weight of the oversleeves:

$$\begin{aligned} f_w^{os} &= \frac{(95\ g)(W_{os})}{(2\ sides)(A_w^{sides})} \\ &= \frac{(95\ g)(8.0\ lb)}{(2\ sides)(.392\ in^2)} \\ &= 969\ psi \end{aligned}$$

Stress in the welds from weight of the absorber panels:

$$\begin{aligned} f_w^{panel} &= \frac{(95\ g)(W_{panel})}{(A_w^{sides})} \\ &= \frac{(95\ g)(12\ lb)}{(.392\ in^2)} \\ &= 2.91\ ksi \end{aligned}$$

Total stress in the plug welds resulting from the 95g side drop:

$$\begin{aligned} f_w^{side} &= f_w^{panel} + f_w^{os} \\ &= 969\ psi + 2.91\ ksi \\ &= 3.88\ ksi \end{aligned}$$

For the 43g end drop (Section 2.7.6.5.1.1), critical loading will be shear in the welds located on the end of the guide sleeves. For this loading, the weight of the oversleeve is assumed to be uniformly distributed through the welds on all four side of the oversleeve. Weight of the neutron absorber is conservatively assumed resisted only by the welds on one end. Weights are as determined above for the side drop:

Stress in the welds from weight of the oversleeves:

$$\begin{aligned} f_w^{os} &= \frac{(43\ g)(W_{os})}{(2\ sides)(A_w^{sides}) + (2\ ends)(A_w^{ends})} \\ &= \frac{(43\ g)(8.0\ lb)}{(2\ sides)(.392\ in^2) + (2\ ends)(.0942\ in^2)} \\ &= 354\ psi \end{aligned}$$

Stress in the welds from weight of the absorber panels:

$$\begin{aligned} f_w^{panel} &= \frac{(43\ g)(W_{panel})}{(A_w^{end})} \\ &= \frac{(43\ g)(12\ lb)}{(.0942\ in^2)} \\ &= 5.48\ ksi \end{aligned}$$

Total stress in the plug welds resulting from the 43g end drop:

$$\begin{aligned} f_w^{end} &= f_w^{panel} + f_w^{os} \\ &= 354\ psi + 5.48\ ksi \\ &= 5.83\ ksi \end{aligned}$$

Weld Allowable Stress

From NG-3352, the allowable weld stress is taken as the factor n times the allowable stress. From Table NG-3352-1, the plug welds are Type VIII welds with a minimum value of n of 0.3

(surface visual examination). The allowable weld stress for the drop (Level D) loading is taken as the Level D membrane stress allowable for elastic analysis (Section 2.7.6.5.1.1) at the maximum sleeve temperature of 700°F factored by n:

$$\begin{aligned} F_w &= 0.3P_m \\ &= 0.3(38.4\ ksi) \\ &= 11.5\ ksi \end{aligned}$$

Stress Check - comparing the calculated and allowable stresses for the plug welds:

Load Case	Stress		Ratio
	Calculated	Allowable	
95g Side Drop	3.88 ksi	11.5 ksi	0.343
43g End Drop	5.83 ksi	11.5 ksi	0.51

All stress ratios are less than 1.0, therefore the welds are qualified for the 95g side drop and 43g end drop loads.

Oversleeves

The purpose of the oversleeves is to maintain the position of the neutron absorber along the sides of the guide sleeves. The oversleeves are thin material such that large pressure loads are assumed to be carried by membrane action. Under this loading, failure of the guide sleeve would be defined by tearing of the oversleeve material.

The critical loading location is on the bottom side of the guide sleeve during the side drop. The oversleeve is supported on the edges by the plug welds and at the "ends" by the spacer disks. At the midspan of the DSC, disc spacing is 6.75 inches with open spans of:

$$6.75" - 1.25" = 5.50"$$

The transverse span (along the width of the guide sleeve) is approximately 8.65". Assuming failure along the short (5.50") span, the load capacity is:

$$L_{max} = 2A(.577S_y)$$

Where there are two failure surfaces whose cross sectional area is taken as the width of 5.50" times the oversleeve thickness of .0178 inches and the shear yield is 0.577 of the tensile yield (See Section 5-6 of [2.15]) at 700°F from Table 2:

$$\begin{aligned} L_{max} &= 2(5.50\ in)(0.0178\ in)(.577 \cdot 17.7\ ksi) \\ &= (0.196\ in^2)(10.21\ ksi) \\ &= 2.00\ kips \end{aligned}$$

The load is taken as the weight of 5.50" of oversleeve and neutron absorber and is approximated ratios calculated based on total lengths of 154" for the oversleeve and 153.3" for the neutron absorber.

$$\begin{aligned} L_{applied} &= 95\ g\ (L_{os} + L_{absorber}) \\ &= 95\ g\left(\frac{5.50"}{154"}8.0\ lb + \frac{5.50"}{153.3"}12.0\ lb\right) \\ &= 68.1\ lb \end{aligned}$$

The ratio of applied to allowable load is:

$$\frac{L_{applied}}{L_{max}} = \frac{.068\ kips}{2.00\ kips} = .034 < 1.0 \quad \therefore ok$$

2.7.6.9 Guide Sleeve 30 Foot Drop Weld Evaluation

Guide sleeve welding for 30 foot drop loads is evaluated in the same way as for the normal 1-foot drop case described in Section 2.6.11.5. Nodal forces at each of the weld nodes (#577-585)

for 95g side drop case are obtained from ANSYS analysis as listed in Section 2.10.3.1.7.14. Three direction loads are combined to find a resultant force using the following equation:

$$F_R = \sqrt{F_X^2 + F_Y^2 + F_Z^2}$$

A force per unit length (F_R/L) is calculated by dividing the resultant force by a tributary length. The tributary length (L) is calculated based on the coordinate of each node point. The above calculations are listed as follows:

Accident 95g Oblique Drop Loading Condition

Node	Z	L	Fx	Fy	Fz	$F_{RESULTANT}$	F/L
577	0	0.15625	-0.43	-119.10	26.74	122.1	**781.2**
578	0.3125	0.3125	1.04	-192.20	23.12	193.6	**619.5**
579	0.625	0.3853	-1.68	-183.80	32.75	186.7	**484.6**
580	1.083	0.4585	4.30	-11.46	79.60	80.5	**175.7**
581	1.542	0.4585	2.15	46.98	127.80	136.2	**297.0**
582	2	0.4580	0.34	53.51	143.40	153.1	**334.2**
583	2.458	0.4585	-8.16	66.82	112.40	131.0	**285.7**
584	2.917	0.4585	-2.35	87.06	62.33	107.1	**233.6**
585	3.375	0.2290	-0.90	51.36	-68.99	86.0	**375.6**
						Maximum	781.2

gs-weld.xls

The maximum combined load for accident loading conditions is calculated as 781.2 lbs/in. The corresponding weld stress is determined by dividing the calculated loads by the effective thickness of the weld.

The stress @ throat of 0.09" fillet welds for accident drop loading conditions is:

$f_{w\text{-}acc.}$ = (0.785 kips/in) / [(0.09 inch x 0.707)]

= 12.3 ksi

Weld Allowable Stress

From NG-3352, the allowable weld stress is taken as the factor *n* times the allowable stress limit. From Table NG3352-1, the single fillet welds are Type VII welds with a minimum value of *n* of 0.35 (surface visual examination).

Per F-1341.2, the allowable stress limit for the accident 95g side drop loading (Level D for plastic analysis) is limit to $0.9S_u$. Therefore, the allowable weld stress at the maximum sleeve temperature of 700°F is:

$$F_w = 0.35\,(0.9S_u)$$

$$= 0.35 \times 57.2 \text{ ksi}$$

$$= 20.0 \text{ ksi} > 12.3 \text{ ksi}$$

Therefore, the welds are qualified for the accident 95g side drop loads.

2.7.7 FF-DSC Analysis - Hypothetical Accident Conditions

The NUHOMS®-MP187 Failed Fuel (FF) Dry Shielded Canister (DSC) is designed to accommodate 13 failed PWR fuel assemblies. The DSC is a high integrity stainless steel welded pressure vessel that provides confinement of radioactive materials, encapsulates the fuel in an inert atmosphere, and provides biological shielding (in the axial direction). A detailed discussion of the FF-DSC assembly can be found in Section 2.1.1.2. The analyses of the FF-DSC summarized in this section are based on the SA-537, Class 2 carbon steel basket option. Appendix 2.10.13 provides an evaluation of the XM-19 basket design option for the FF-DSC which addresses the alternate basket assembly material (SA-240, Type XM-19 austenitic stainless steel) as well as other configuration modifications. For the transportation condition, no credit is taken for the containment provided by the DSC shell. The DSC shell is designed to ensure that no gross failure will result from the accident conditions which would result in potential damage to the DSC contents.

The basket assembly consists of 15 spacer discs, four support plates, and 13 fuel can assemblies, as discussed in Section 2.1.1.2. Each support plate assembly consists of two 2.00 x 12.0 inch plates or one 4.00 x 12.0 inch plate welded to the spacer discs to maintain longitudinal spacing.

The structural evaluation presented in the following sections concentrates on the basket assembly components which maintain the position of the fuel assemblies and provide criticality control. The nominal length of a cold PWR fuel assembly is 165.63 inches [2.8]. The total length of a PWR fuel assembly, including tolerances, thermal growth, and irradiation growth, is 166.89 inches [2.8]. The length of the FF-DSC cavity is 173.03 inches in order to accommodate the maximum PWR fuel assembly length. The FF basket assembly support plates are 172.50 inches long, allowing a gap of 0.50 inches between the support plates and DSC cavity for thermal expansion.

2.7.7.1 Spacer Disc Stress Analysis

2.7.7.1.1 Free Drop

The NUHOMS®-MP187 transportation package is analyzed for a variety of drop orientations and conditions, as described in Appendix [2.10.9]. The drop analyses are performed for the extreme initial ambient heat (100°F ambient) and cold (-20°F ambient) conditions per 10CFR71 [2.1], assuming worst case impact limiter crush strength properties to provide bounding results.

The FF-DSC components are analyzed for stress and buckling criteria for the vertical end drop, side drop and oblique drop conditions. Detailed analysis of each loading case given by Dynamic g-loads [2.10.9] and Dynamic Loading Factors [2.10.10] is not necessary. Four cases, shown in Table 2.7.7-1 which bound all loading conditions, were analyzed.

Table 2.7.7-1

Bounding 30-Foot Drop Cases

Drop Case	Longitudinal Acceleration, A_L (g)	Tangential Acceleration, A_T (g)
End Drop	60.0	0
Bounding Flat Side Impact	42.0	92.0
Bounding Corner Oblique Drop	40.0	50.0
Corner Slapdown	3.0	78.5

As shown in Table 2.7.7-2, the hot loading conditions are bounded by the cold loading conditions in both the primary and the secondary impact for all drops. Therefore, the spacer disc is only analyzed for the cold condition loading. For the same drop orientation, the small increase in allowables going from hot to cold conditions is off-set by a larger increase in 'g' load. Therefore, the cold condition loading is always the critical load case even with the slight change in allowables due to changes in temperature.

Table 2.7.7-2

Spacer Disc Equivalent Static G-loads

Orientation		Load	Equivalent Static Load (g's)						
Cask	Impact Limiter	Case ID	Longitudinal Direction			Tangential Direction			Resultant
			DLF	G_D	G_s	DLF	G_D	G_s	
End Drop	N/A	ENDC	1.49	38.9	58.0	1.30	N/A	N/A	58.0
		ENDH	1.27	23.5	29.8	1.17	N/A	N/A	29.8
CG Over Corner	Corner	CGCC	1.11	34.2	38.0	1.09	11.1	12.1	39.9
		CGCH	1.08	20.0	21.6	1.06	6.5	6.9	22.7
60° Oblique	Flatside	FS6C	1.04	30.4	31.6	1.03	42.8	44.1	54.3
		FS6H	1.02	26.0	26.5	1.01	15.7	15.9	30.9
	Corner	CN6C	1.17	22.7	26.6	1.11	32.8	36.4	45.1
		CN6H	1.06	20.8	22.0	1.05	13.1	13.7	25.9
30° Oblique	Flatside	FS3C	1.43	17.6	25.1	1.11	66.7	74.0	78.2
		FS3H	1.23	18.1	22.2	1.07	34.2	36.6	42.8
	Corner	CN3C	1.11	12.6	14.0	1.06	46.4	49.2	51.2
		CN3H	1.03	16.4	16.9	1.03	31.8	32.8	36.9
Horizontal	Flatside	FSHC	1.77	N/A	N/A	1.12	61.1	68.4	68.4
		FSHH	1.77	N/A	N/A	1.09	39.6	43.2	43.2
	Corner	CNHC	1.43	N/A	N/A	1.39	44.6	62.0	62.0
		CNHH	1.31	N/A	N/A	1.28	30.6	39.2	39.2
30° Slapdown	Flatside	FSSC	1.85	6.9	12.7	1.31	70.0	91.7	92.6
		FSSH	1.87	3.7	7.0	1.35	46.3	62.5	62.9
	Corner	CNSC	1.37	2.1	2.9	1.36	57.7	78.5	78.6
		CNSH	1.27	1.2	1.5	1.26	40.5	51.0	51.0
1" Side Drop	Flatside	FH1C	1.88	N/A	N/A	1.18	21.0	24.8	24.8
		FH1H	1.88	N/A	N/A	1.21	13.9	16.8	16.8
CG Over Flat	Flatside	Cold	1.15	35.7	41.1	1.10	11.6	12.8	43.1
		Hot	1.09	21.9	23.9	1.06	7.1	7.5	25.1

2.7.7.1.1.1 End Drop

As shown in Table 2.7.7-2, the maximum equivalent static g-load for the FF-DSC spacer disc end drop is 58.0g. The FF-DSC spacer discs are evaluated for a end drop load of 60g's. The FF-DSC spacer discs are loaded by their own weight during the postulated 30-foot end drop. The fuel assemblies and fuel tubes are not mechanically connected to the basket assembly and therefore are supported by the DSC cavity end plates in the end drop. The support plates support the spacer discs in the longitudinal direction and provide additional bending stiffness to the spacer discs due to their massive size. As discussed in Section 2.10.4.1.2.2, the rotational stiffness of the support plates is represented using torsional spring elements attached to the spacer disc model at the location of the support plates.

The stresses at the locations of the 20 highest stress intensities on the top and bottom fibers of the spacer disc are determined using the ANSYS model described in Appendix 2.10.4, and are reported in Table 2.7.7-3. The maximum spacer disc stress intensity resulting from a 60g end drop is 21.6 ksi at node 308. The allowable membrane plus bending stress intensity is 79.3 ksi. The minimum margin of safety in the spacer disc due to the 60g end drop is:

$$\begin{aligned} M.S. &= (79.3/21.6) - 1 \\ &= +2.67 \end{aligned}$$

The total vertical reaction force obtained from the 1/4 symmetry spacer disc end drop analysis is 17,071 pounds for the 60g end drop loading. The reaction force predicted for a 60g end drop load is:

$$R_v = 60(W_{disc}/4)$$

where the weight of FF-DSC spacer disc, W_{disc}, for minimum material condition (ignoring support plate cutouts) is 1,136 pounds. Therefore, the predicted FF-DSC spacer disc reaction load for a 60g end drop is 17,040 pounds. The difference between the predicted vertical reaction load and the finite element solution is only 31 pounds, or 0.2% of the predicted reaction load. Therefore, the finite element solution is in equilibrium.

Table 2.7.7-3

Top 20 Spacer Disc S.I. (Extreme Fiber) - End Drop

NODE	SX	SY	SZ	SXY	SYZ	SXZ	SINT	Allowable S.I.	Stress Type
308(3)	7.68	16.47	0.0	8.44	0.0	0.0	21.59(3)	79.3	$P_l + P_b$
429	16.45	7.65	0.0	8.38	0.0	0.0	21.52	79.3	$P_l + P_b$
438	11.28	9.13	0.0	4.8	0.0	0.0	15.12	79.3	$P_l + P_b$
430	9.12	11.26	0.0	4.8	0.0	0.0	15.12	79.3	$P_l + P_b$
431	8.40	9.95	0.0	5.02	0.0	0.0	14.25	79.3	$P_l + P_b$
437	9.95	8.40	0.0	5.02	0.0	0.0	14.25	79.3	$P_l + P_b$
432	8.53	9.28	0.0	4.79	0.0	0.0	13.71	79.3	$P_l + P_b$
436	9.28	8.53	0.0	4.79	0.0	0.0	13.71	79.3	$P_l + P_b$
433	8.54	8.87	0.0	4.7	0.0	0.0	13.41	79.3	$P_l + P_b$
435	8.87	8.54	0.0	4.7	0.0	0.0	13.41	79.3	$P_l + P_b$
434	8.65	8.65	0.0	4.7	0.0	0.0	13.32	79.3	$P_l + P_b$
314	-5.30	7.74	0.0	0.62	0.0	0.0	13.09	79.3	$P_l + P_b$
506	7.75	-5.22	0.0	0.62	0.0	0.0	13.02	79.3	$P_l + P_b$
441	6.85	9.81	0.0	3.77	0.0	0.0	12.37	79.3	$P_l + P_b$
457	9.81	6.85	0.0	3.77	0.0	0.0	12.37	79.3	$P_l + P_b$
455	9.26	7.21	0.0	3.92	0.0	0.0	12.29	79.3	$P_l + P_b$
443	7.21	9.26	0.0	3.92	0.0	0.0	12.29	79.3	$P_l + P_b$
445	7.39	8.53	0.0	3.99	0.0	0.0	11.99	79.3	$P_l + P_b$
453	8.53	7.39	0.0	3.99	0.0	0.0	11.99	79.3	$P_l + P_b$
451	8.09	7.58	0.0	4.0	0.0	0.0	11.85	79.3	$P_l + P_b$

Notes:

(1) All stresses are reported in units of ksi.
(2) All extreme fiber stresses are conservatively classified as membrane plus bending. The allowable membrane plus bending stress is limited to Su . The design stress, Sm, and ultimate tensile strength of ASME SA-537, Cl. 2 carbon steel at 400°F are 26.4 ksi and 79.3 ksi, respectively. Therefore, the allowable membrane plus bending stress is 79.3 ksi.
(3) The minimum margin of safety M.S. = (79.3/21.59)-1 = 2.67 (267% margin)
(4) For node numbers, See Figure 2.7.7-1.

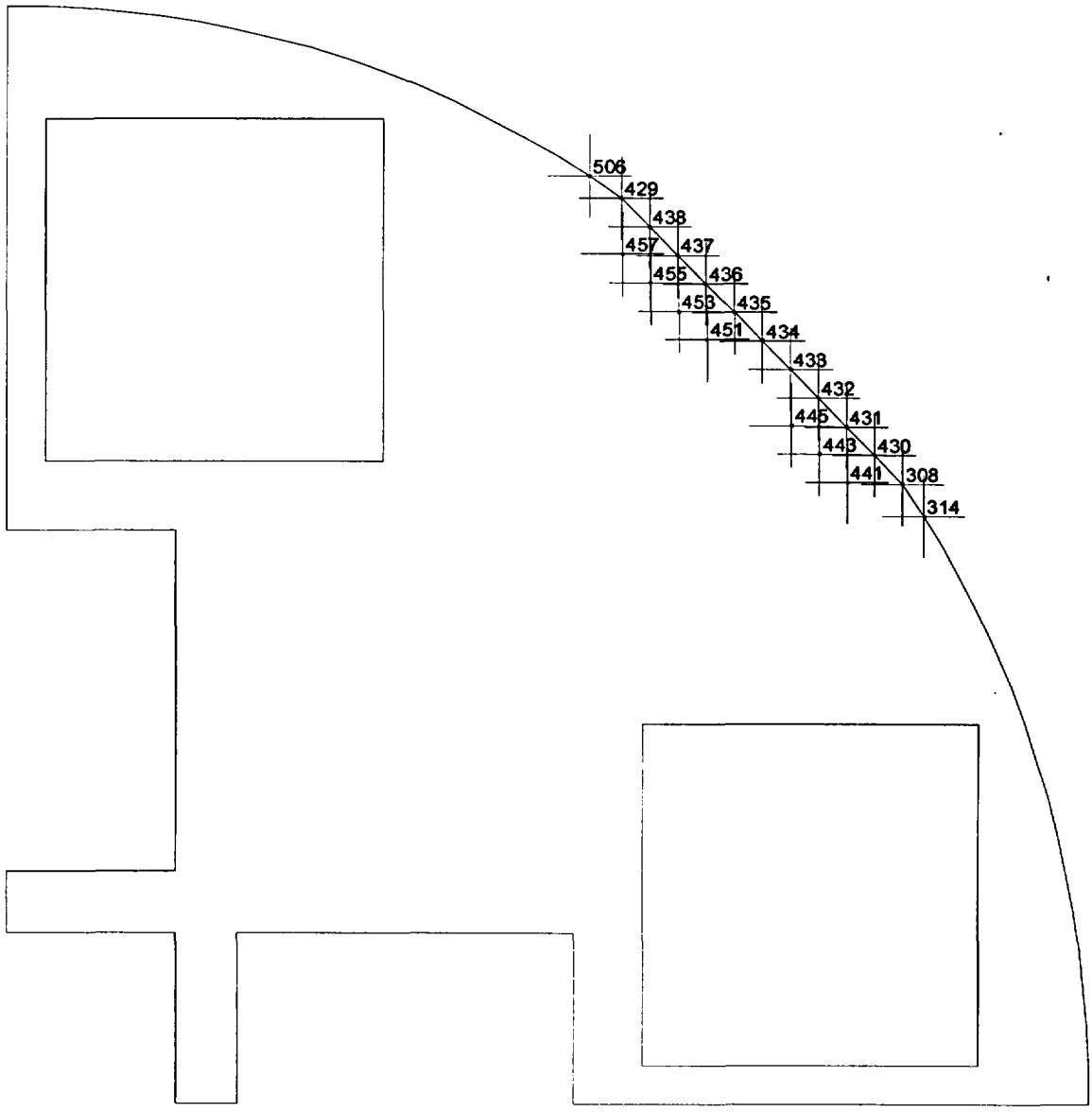

Figure 2.7.7-1

Top 20 FF Spacer Disc Extreme Fiber S.I. - End Drop

2.7.7.1.1.2 Side Drop

The peak g-load resulting from the postulated 30-foot side drop are determined for horizontal drops on the impact limiter flat side and diagonal corner for both extreme cold and hot conditions in Appendix 2.10.9. The equivalent static g-loads for side drop conditions are bounded by the acceleration resulting from the oblique conditions (encompassing slapdown), as shown in Table 2.7.7-2 and consequently need not be analyzed.

2.7.7.1.1.3 Corner Drop

The peak g-load resulting from the postulated 30-foot corner drop are determined for CG over corner drops on the impact limiter diagonal corner for both extreme cold and hot conditions in Appendix 2.10.9. The equivalent static g-loads for corner drop conditions, shown in Table 2.7.7-2, are lower than the bounding corner oblique drop loads shown in Table 2.7.7-1, and consequently need not be analyzed.

2.7.7.1.1.4 Oblique Drop

The FF-DSC structural components are analyzed for bounding 30-foot oblique drop conditions in the following sections. Analyses are performed for oblique flat side (Section 2.7.7.1.1.4.1), oblique corner impacts (Section 2.7.7.1.1.4.2), and corner slapdown (Section 2.7.7.1.1.4.3).

In the event of an oblique drop, the entire kinetic energy of the package upon primary impact is transferred into strain energy of the impact limiter and rotational kinetic energy of the package. The resulting secondary impact (slapdown) bounds all other (with the exception of the end drop analyzed above) drop conditions.

2.7.7.1.1.4.1 Flatside Oblique Impact Analysis

The flat side oblique secondary impact spacer disc analysis is performed using the same half symmetry ANSYS model developed for the 1-foot side drop analysis described in Appendix 2.10.4. The free body diagram resulting from the FEA analysis is presented in Figure 2.7.7-2.

Equivalent static g-loads are applied as discussed in Appendix 2.10.9. The bounding equivalent static g-load (G_S) applied to the model are 92 g's in the tangential direction and 42 g's in the longitudinal direction. As can be seen in Table 2.7.7-2, 92 g's tangential and 42 g's longitudinal easily encompasses all flatside loading conditions. The flatside oblique analysis herein bounds all flatside horizontal side drop, oblique drop primary, and secondary impacts.

THIS SECTION CONTAINS
PROPRIETARY INFORMATION

Figure 2.7.7-2
Spacer Disc Free Body Diagram

The stresses at the locations of the 20 highest stress intensities on the bottom, middle and top fibers of the spacer disc are reported in Table 2.7.7-4, Table 2.7.7-5 & Table 2.7.7-6. The ligament stress are summarized in Table 2.7.7-7. The maximum spacer disc stress intensity resulting from a bounding oblique flat side impact is 46.7 ksi at the top fiber of node 1045. The allowable membrane plus bending stress intensity is 79.3 ksi. The minimum margin of safety in the spacer disc for a bounding oblique flat side impact is:

M.S. = (79.3/46.7) - 1 = 0.69

Table 2.7.7-4

Spacer Disc Top 20 S.I (Bottom Fiber) - Bounding Flatside Impact

NODE	SX	SY	SZ	SXY	SYZ	SXZ	SINT	Allowable S.I.	Stress Type
898(4)	32.83	-0.41	0.0	-0.72	0.0	0.0	33.27(3)	79.3	$P_l + P_b$
901	30.61	-1.25	0.0	-0.47	0.0	0.0	31.86	79.3	$P_l + P_b$
1045	-9.84	-25.75	0.0	-6.63	0.0	0.0	28.14	79.3	$P_l + P_b$
1140	26.19	-1.31	0.0	-1.89	0.0	0.0	27.75	79.3	$P_l + P_b$
620	27.16	-0.17	0.0	0.18	0.0	0.0	27.33	79.3	$P_l + P_b$
627	26.53	-0.17	0.0	0.35	0.0	0.0	26.70	79.3	$P_l + P_b$
903	24.53	-1.32	0.0	1.07	0.0	0.0	25.93	79.3	$P_l + P_b$
1051	0.22	-23.95	0.0	2.70	0.0	0.0	24.76	79.3	$P_l + P_b$
626	24.55	-0.07	0.0	0.68	0.0	0.0	24.66	79.3	$P_l + P_b$
1137	23.09	-1.13	0.0	-1.05	0.0	0.0	24.30	79.3	$P_l + P_b$
1107	-22.02	-5.06	0.0	-6.43	0.0	0.0	24.18	79.3	$P_l + P_b$
1108	-22.08	-5.42	0.0	-4.05	0.0	0.0	23.01	79.3	$P_l + P_b$
54	20.14	5.55	0.0	6.87	0.0	0.0	22.87	79.3	$P_l + P_b$
910	22.03	-0.03	0.0	2.14	0.0	0.0	22.47	79.3	$P_l + P_b$
49	22.10	-0.17	0.0	0.18	0.0	0.0	22.27	79.3	$P_l + P_b$
625	21.83	0.20	0.0	0.62	0.0	0.0	21.84	79.3	$P_l + P_b$
50	21.47	-0.17	0.0	0.35	0.0	0.0	21.64	79.3	$P_l + P_b$
632	20.33	-0.15	0.0	3.25	0.0	0.0	21.48	79.3	$P_l + P_b$
57	20.75	0.59	0.0	3.10	0.0	0.0	21.21	79.3	$P_l + P_b$
1106	-16.40	-7.70	0.0	-7.63	0.0	0.0	20.83	79.3	$P_l + P_b$

Notes:

(1) All stresses are reported in units of ksi.
(2) All extreme fiber stresses are conservatively classified as membrane plus bending. The allowable membrane plus bending stress is limited to Su. The design stress, Sm, and ultimate tensile strength of ASME SA-537, Cl. 2 carbon steel at 400°F are 26.4 ksi and 79.3 ksi, respectively. Therefore, the allowable membrane plus bending stress is 79.3 ksi.
(3) The minimum margin of safety M.S. = (79.3/33.27)-1 = 1.38 (138% margin)
(4) The node locations are shown in Figure 2.7.7-3.

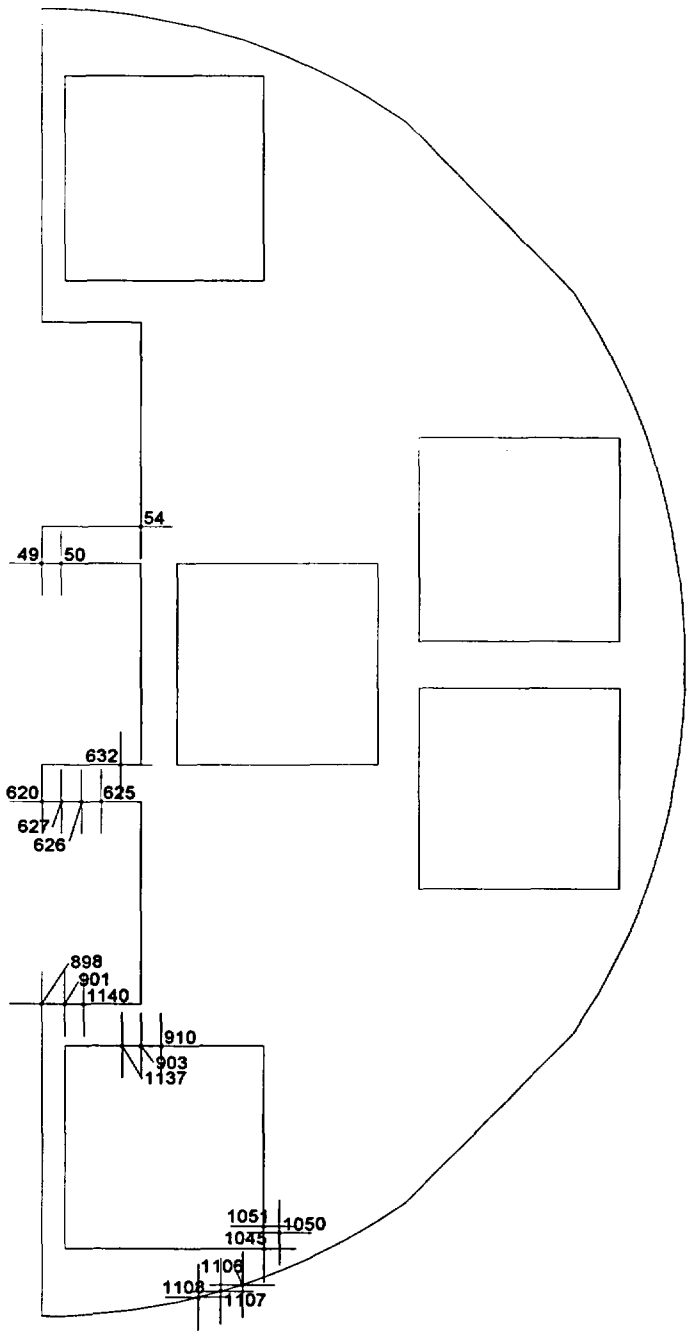

Figure 2.7.7-3

Location of Top 20 Spacer Disc S.I. (Bottom Fiber) - Bounding Flatside Impact

Table 2.7.7-5

Spacer Disc Top 20 S.I (Middle Fiber) - Bounding Flatside Impact

NODE	SX	SY	SZ	SXY	SYZ	SXZ	SINT	Allowable S.I.	Stress Type
1045(5)	-20.41	-27.63	0.0	-11.53	0.0	0.0	36.1(3)	79.3	Pl + Pb
1107	-32.77	-5.06	0.0	-8.06	0.0	0.0	35.0	79.3	Pl + Pb
1108	-32.34	-5.48	0.0	-5.51	0.0	0.0	33.5	79.3	Pl + Pb
1106	-27.74	-7.42	0.0	-9.51	0.0	0.0	31.5	79.3	Pl + Pb
1109	-25.83	-3.22	0.0	-2.66	0.0	0.0	26.2	79.3	Pl + Pb
1051	1.10	-23.86	0.0	-1.07	0.0	0.0	25.1	79.3	Pl + Pb
1098	-23.74	-0.30	0.0	2.88	0.0	0.0	24.2	79.3	Pl + Pb
1050	-10.97	-17.11	0.0	-9.36	0.0	0.0	23.9(4)	55.5	Pm
1074	-13.97	-17.36	0.0	-7.19	0.0	0.0	23.1	55.5	Pm
1027	-19.89	-7.69	0.0	2.52	0.0	0.0	20.4	79.3	Pl + Pb
1114	-17.02	-4.09	0.0	-7.20	0.0	0.0	20.3	79.3	Pl + Pb
1073	-14.90	-14.67	0.0	-5.40	0.0	0.0	20.2	55.5	Pm
1110	-19.93	-2.58	0.0	-0.68	0.0	0.0	20.0	79.3	Pl + Pb
1125	-19.05	-2.25	0.0	-0.13	0.0	0.0	19.1	55.5	Pm
898	17.89	-0.95	0.0	-0.60	0.0	0.0	18.9	55.5	Pm
1122	-18.66	-3.19	0.0	-1.08	0.0	0.0	18.69	79.3	Pl + Pb
1105	-12.09	-1.11	0.0	-6.92	0.0	0.0	17.7	79.3	Pl + Pb
901	15.41	-1.89	0.0	-1.50	0.0	0.0	17.6	55.5	Pm
1058	-0.53	-17.13	0.0	2.57	0.0	0.0	17.5	79.3	Pl + Pb
1119	-16.96	-3.10	0.0	-2.66	0.0	0.0	17.5	79.3	Pl + Pb

Notes:

(1) All stresses are reported in units of ksi.
(2) All extreme fiber stresses are conservatively classified as membrane plus bending. The allowable primary membrane stress is limited to the $0.7S_u$,and the membrane plus bending stress is limited to S_u. The design stress, S_m, and ultimate tensile strength of ASME SA-537, Cl. 2 carbon steel at 400°F are 26.4 ksi and 79.3 ksi, respectively. Therefore, the allowable membrane stress is 55.5 ksi, and the membrane plus bending stress is 79.3 ksi.
(3) The minimum margin of safety M.S. = (79.3/36.1)-1 = 1.19 (119% margin on $P_l + P_b$)
(4) The minimum margin of safety M.S. = (55.5/23.9)-1 = 1.32 (132% margin on P_m)
(5) The node locations are shown in Figure 2.7.7-4.

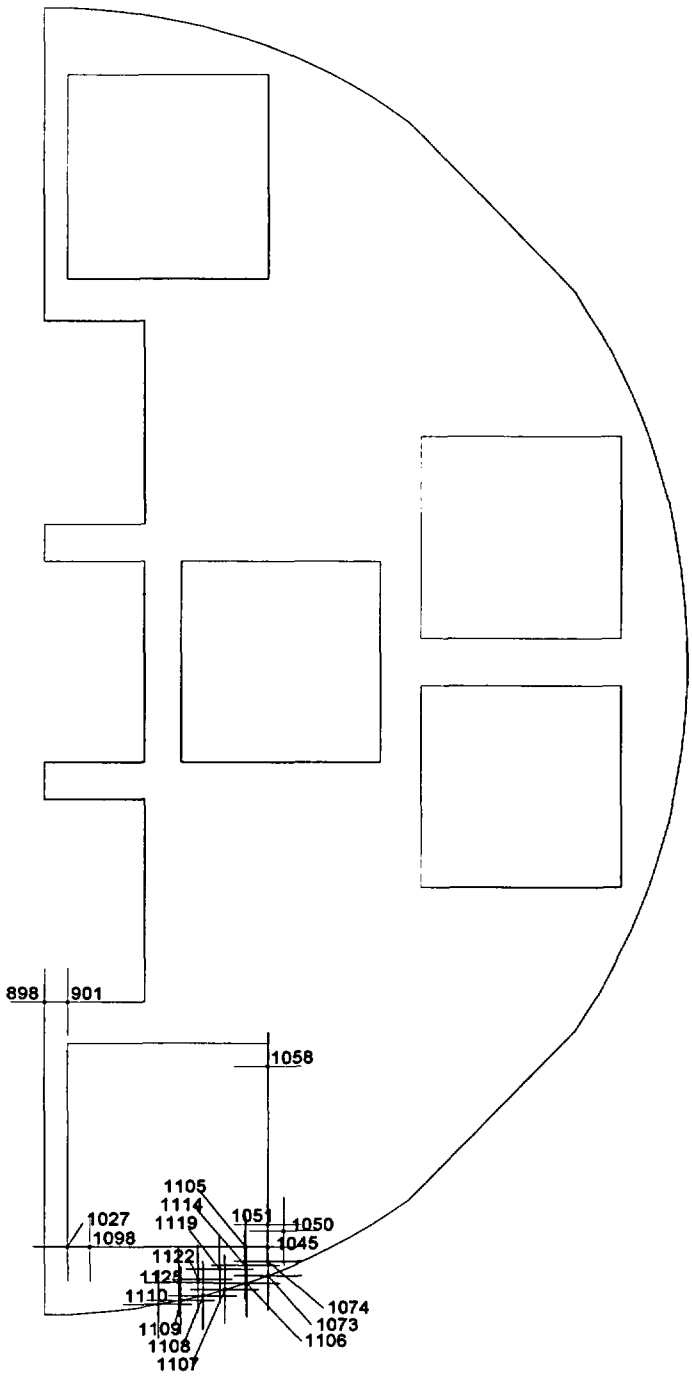

Figure 2.7.7-4
Location of Top 20 Spacer Disc S.I. (Middle Fiber) - Bounding Flatside Impact

Table 2.7.7-6

Spacer Disc Top 20 S.I (Top Fiber) - Bounding Flatside Impact

NODE	SX	SY	SZ	SXY	SYZ	SXZ	SINT	Allowable S.I.	Stress Type
1045(4)	-31.0	-29.5	0.0	-16.5	0.0	0.0	46.7(3)	79.3	PI + Pb
1107	-43.5	-5.1	0.0	-9.7	0.0	0.0	45.8	79.3	PI + Pb
1108	-42.6	-5.6	0.0	-7.0	0.0	0.0	43.9	79.3	PI + Pb
1106	-39.1	-7.2	0.0	-11.4	0.0	0.0	42.7	79.3	PI + Pb
1109	-35.9	-3.2	0.0	-3.9	0.0	0.0	36.3	79.3	PI + Pb
1098	-34.6	-0.93	0.0	1.84	0.0	0.0	34.7	79.3	PI + Pb
1114	-29.0	-4.2	0.0	-8.93	0.0	0.0	31.9	79.3	PI + Pb
1074	-24.3	-17.1	0.0	-10.6	0.0	0.0	31.9	79.3	PI + Pb
1027	-30.3	-6.8	0.0	4.4	0.0	0.0	31.1	79.3	PI + Pb
900	-27.4	-12.6	0.0	-7.23	0.0	0.0	30.3	79.3	PI + Pb
1139	-27.8	-0.0	0.0	-5.96	0.0	0.0	30.2	79.3	PI + Pb
1110	-29.82	-2.56	0.0	-1.78	0.0	0.0	30.0	79.3	PI + Pb
1028	-0.89	-29.15	0.0	-2.84	0.0	0.0	29.5	79.3	PI + Pb
1125	-29.26	-2.36	0.0	-1.33	0.0	0.0	29.4	79.3	PI + Pb
1122	-29.1	-3.28	0.0	-2.40	0.0	0.0	29.3	79.3	PI + Pb
1131	-0.05	-28.58	0.0	-3.19	0.0	0.0	29.3	79.3	PI + Pb
1073	-24.9	-15.1	0.0	-7.9	0.0	0.0	29.2	79.3	PI + Pb
588	-1.68	-29.0	0.0	1.96	0.0	0.0	29.2	79.3	PI + Pb
748	-25.56	-10.83	0.0	-8.1	0.0	0.0	29.1	79.3	PI + Pb
565	0.29	-28.46	0.0	0.23	0.0	0.0	28.8	79.3	PI + Pb

Notes:

(1) All stresses are in units of ksi.
(2) All extreme fiber stresses are conservatively classified as membrane plus bending. The allowable membrane plus bending stress is limited to Su. The design stress, Sm, and ultimate tensile strength of ASME SA-537, Cl. 2 carbon steel at 400°F are 26.4 ksi and 79.3 ksi, respectively. Therefore, the allowable membrane plus bending stress is 79.3 ksi.
(3) The minimum margin of safety M.S. = (79.3/46.7) -1 = 0.69 (69% margin)
(4) The node locations are shown in Figure 2.7.7-5.

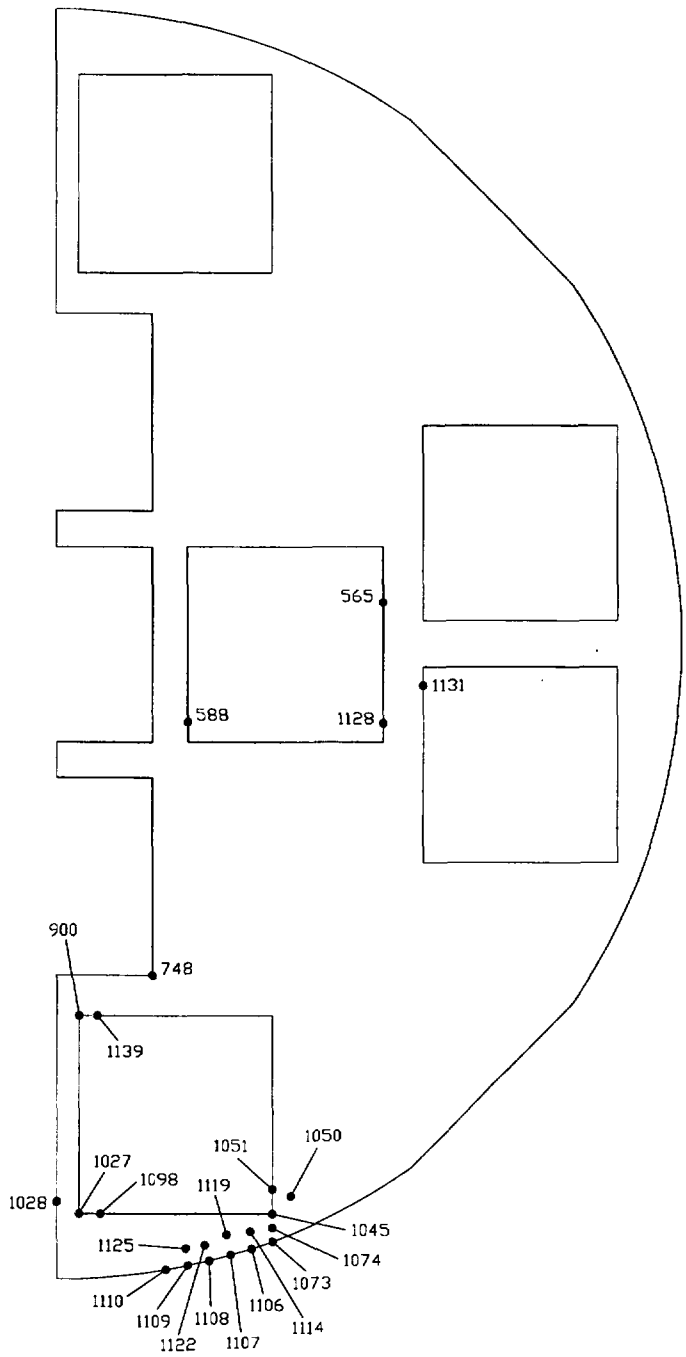

Figure 2.7.7-5

Location of Top 20 Spacer Disc S.I. (Top Fiber) - Bounding Flatside Impact

Table 2.7.7-7

Spacer Disc Ligament S.I. - Flat Oblique Secondary Impact

NODE	SX	SY	SZ	SXY	SYZ	SXZ	SINT	Allowable S.I.	Stress Type
10(4)	-3.4	-6.1	0.0	-0.32	0.0	0.0	6.04	55.5	P_m
20	-0.2	-3.2	0.0	-0.40	0.0	0.0	3.23	55.5	P_m
24	2.54	-7.02	0.0	0.03	0.0	0.0	9.56	55.5	P_m
25	-0.15	-0.77	0.0	0.66	0.0	0.0	1.61	55.5	P_m
55	-0.16	-3.73	0.0	0.68	0.0	0.0	4.11	55.5	P_m
135	1.16	-6.09	0.0	-0.50	0.0	0.0	7.31	55.5	P_m
330	0.62	-0.68	0.0	0.25	0.0	0.0	1.39	55.5	P_m
331	-2.57	-0.46	0.0	0.27	0.0	0.0	3.07	55.5	P_m
341	0.98	-2.27	0.0	0.85	0.0	0.0	3.66	55.5	P_m
459	0.83	-0.41	0.0	0.02	0.0	0.0	1.24	55.5	P_m
584	3.41	-8.38	0.0	-0.02	0.0	0.0	11.8	55.5	P_m
596	-2.50	-7.19	0.0	-0.09	0.0	0.0	7.19	55.5	P_m
628	3.06	-5.77	0.0	0.71	0.0	0.0	8.93	55.5	P_m
700	-0.96	-7.36	0.0	-0.58	0.0	0.0	7.41	55.5	P_m
897	-9.72	-1.87	0.0	1.78	0.0	0.0	10.10	55.5	P_m
902	2.12	-4.08	0.0	-2.20	0.0	0.0	7.58	55.5	P_m
904	1.94	-3.60	0.0	-1.24	0.0	0.0	6.07	55.5	P_m
1028	-15.52	-3.46	0.0	1.86	0.0	0.0	15.8(3)	55.5	P_m

Notes:

(1) All stresses are in units of ksi.
(2) All extreme fiber stresses are conservatively classified as membrane plus bending. The allowable membrane is limited to $0.7S_u$. The design stress, Sm, and ultimate tensile strength of ASME SA-537, Cl. 2 carbon steel at 400°F are 26.4 ksi and 79.3 ksi, respectively. Therefore, the allowable primary membrane stress is 55.5 ksi.
(3) The minimum margin of safety M.S. = (55.5/15.8)-1 = 2.51 (large margin)
(4) The node locations are shown in Figure 2.7.7-6.

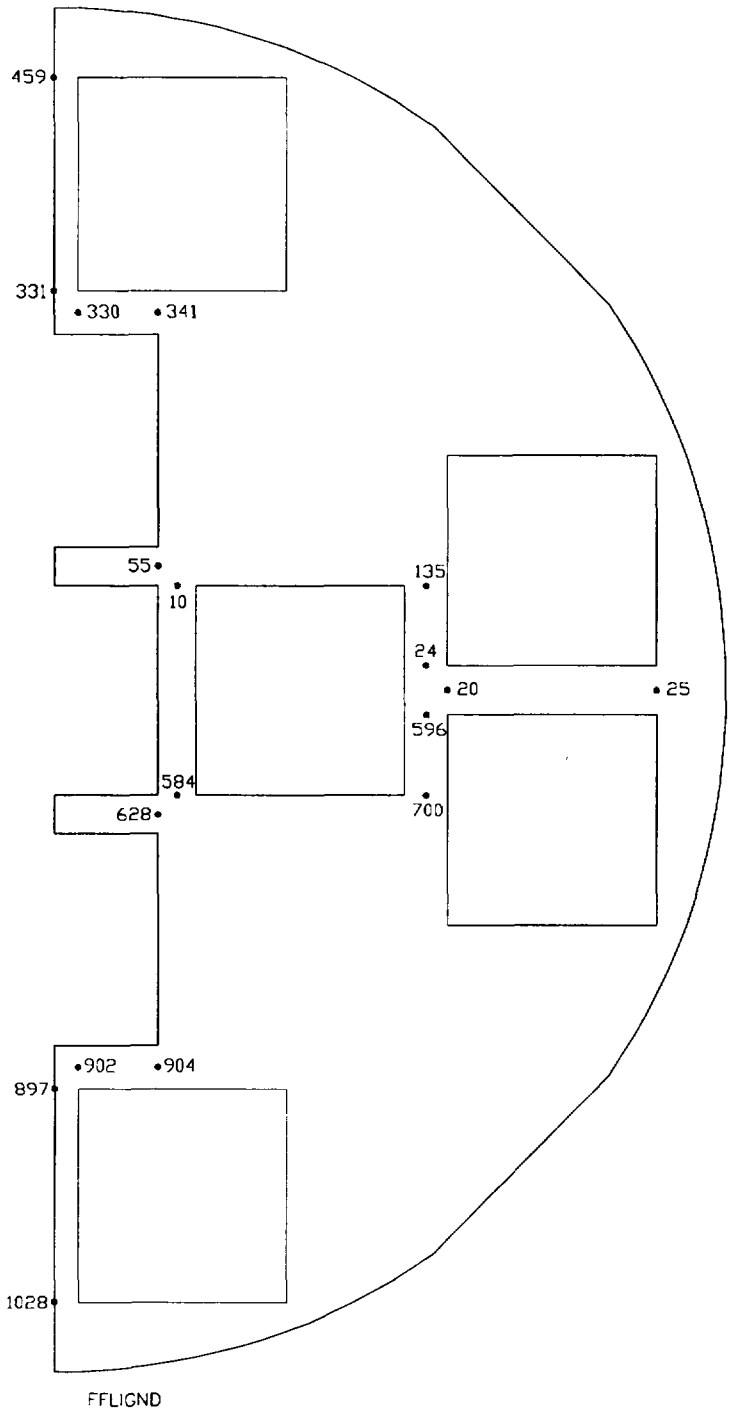

Figure 2.7.7-6

Location of Spacer Disc Ligament S.I. - Bounding Flatside Impact

2.7.7.1.1.4.2 Corner Oblique Impact Analysis

The corner oblique impact spacer disc analysis is performed using the full symmetry model described in Appendix 2.10.4. The free body diagram resulting from the FEA analysis is presented in Figure 2.7.7-7. Equivalent static g-loads are applied as discussed in Appendix 2.10.9. The bounding equivalent static g-load (G_S) applied to the model are 50 g's in the tangential direction and 40 g's in the longitudinal direction. The analysis herein bounds all corner horizontal side drop, corner oblique primary impact conditions. The corner oblique secondary (slapdown) analysis is provided in Section 2.7.7.1.1.4.3.

THIS SECTION CONTAINS
PROPRIETARY INFORMATION

Figure 2.7.7-7
Corner Oblique Force Body Diagram

The stresses at the locations of the 20 highest stress intensities on the bottom, middle and top fibers of the spacer disc are reported in Table 2.7.7-8, Table 2.7.7-9 & Table 2.7.7-10. The ligament stress are summarized in Table 2.7.7-11. The maximum spacer disc stress intensity resulting from a bounding oblique corner impact is 61 ksi at the top fiber of node 60. The minimum margin of safety in the spacer disc for a bounding oblique corner drop is +0.30. The minimum margin of safety in the spacer disc for a corner oblique impact is:

$$M.S. = (79.3/61.0) - 1$$

$$= +0.30$$

Table 2.7.7-8

Spacer Disc 20 Maximum S.I (Bottom Fiber) - Corner Oblique Impact

NODE	SX	SY	SZ	SXY	SYZ	SXZ	SINT	Allowable S.I.	Stress Type
1188(3)	-0.7	51.2	0.0	4.3	0.0	0.0	52.6(4)	79.3	$P_l + P_b$
27	51.2	-0.7	0.0	4.3	0.0	0.0	52.6	79.3	$P_l + P_b$
1174	46.8	-3.0	0.0	4.1	0.0	0.0	50.4	79.3	$P_l + P_b$
1148	-2.93	46.8	0.0	4.1	0.0	0.0	50.4	79.3	$P_l + P_b$
68	45.3	-3.5	0.0	5.2	0.0	0.0	49.9	79.3	$P_l + P_b$
41	-3.5	45.2	0.0	5.2	0.0	0.0	49.9	79.3	$P_l + P_b$
1045	-1.05	41.0	0.0	8.5	0.0	0.0	45.4	79.3	$P_l + P_b$
1059	41.0	-1.06	0.0	8.5	0.0	0.0	45.3	79.3	$P_l + P_b$
1649	-0.27	42.1	0.0	6.3	0.0	0.0	44.3	79.3	$P_l + P_b$
1663	42.1	-0.27	0.0	6.3	0.0	0.0	44.3	79.3	$P_l + P_b$
647	23.3	38.8	0.0	10.6	0.0	0.0	44.1	79.3	$P_l + P_b$
754	38.7	23.3	0.0	10.7	0.0	0.0	44.1	79.3	$P_l + P_b$
8	-0.86	41.9	0.0	3.1	0.0	0.0	43.2	79.3	$P_l + P_b$
1205	41.9	-0.86	0.0	3.1	0.0	0.0	43.2	79.3	$P_l + P_b$
1187	1.23	42.6	0.0	3.6	0.0	0.0	42.8	79.3	$P_l + P_b$
28	42.5	1.23	0.0	3.6	0.0	0.0	42.8	79.3	$P_l + P_b$
1173	41.0	0.80	0.0	2.3	0.0	0.0	41.1	79.3	$P_l + P_b$
1149	0.8	41.0	0.0	2.3	0.0	0.0	41.1	79.3	$P_l + P_b$
1252	16.4	37.2	0.0	9.3	0.0	0.0	40.7	79.3	$P_l + P_b$
1359	37.2	16.5	0.0	9.4	0.0	0.0	40.7	79.3	$P_l + P_b$

Notes:

(1) All stresses are in units of ksi.
(2) All extreme fiber stresses are conservatively classified as membrane plus bending. The allowable membrane plus bending stress is limited to the lesser of Su. The design stress, Sm, and ultimate tensile strength of ASME SA-537, Cl. 2 carbon steel at 400°F are 26.4 ksi and 79.3 ksi, respectively. Therefore, the allowable membrane plus bending stress is 79.3 ksi.
(3) The node locations are shown in Figure 2.7.7-8.
(4) The minimum margin of safety M.S. = (79.3/52.6) -1 = 0.50 (50% margin).

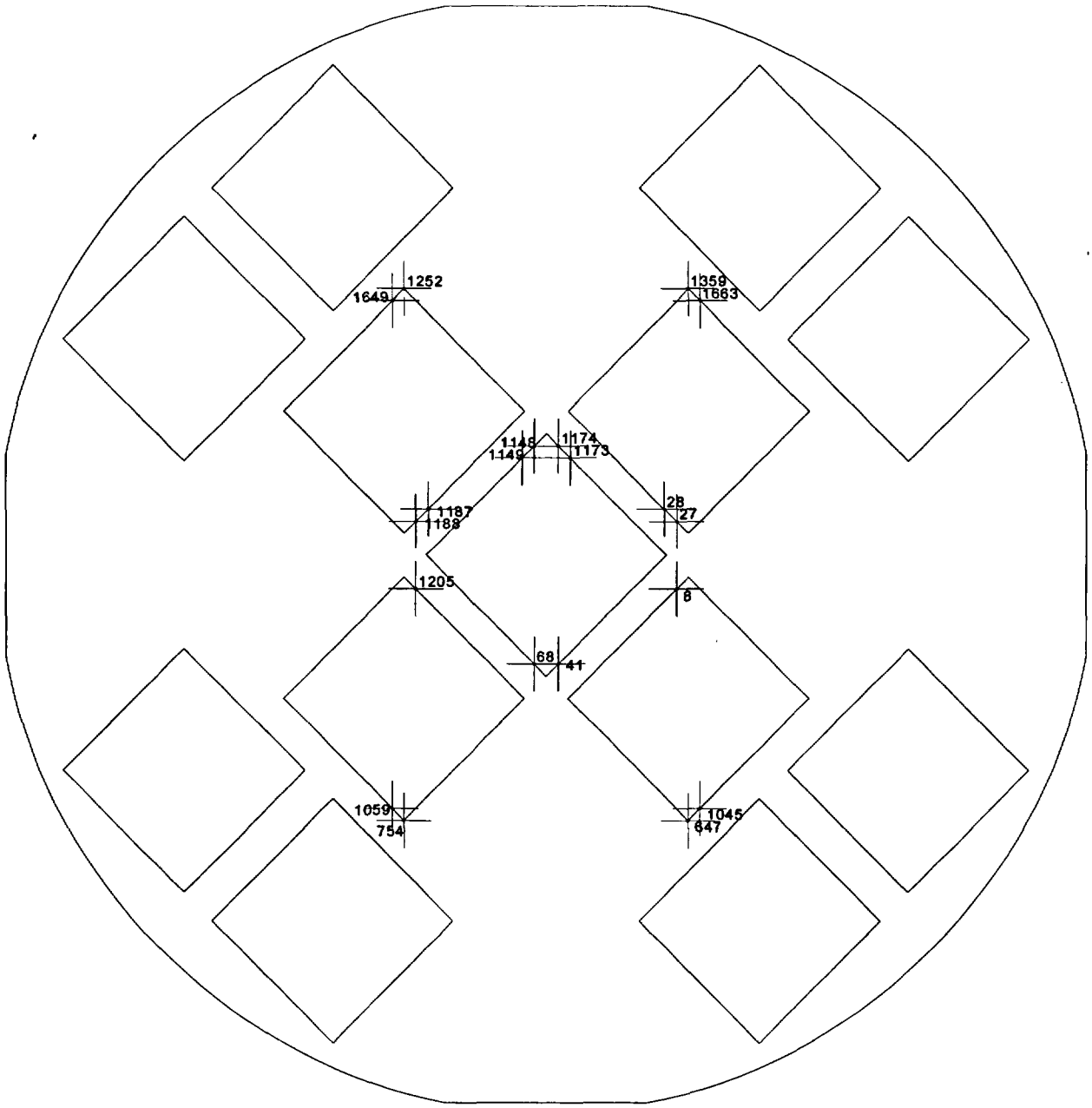

Figure 2.7.7-8

Location of 20 Maximum Spacer Disc S.I. (Bottom Fiber) - Corner Oblique Impact

Table 2.7.7-9

Spacer Disc 20 Maximum S.I (Middle Fiber) - Corner Oblique Impact

NODE	SX	SY	SZ	SXY	SYZ	SXZ	SINT	Allowable S.I.	Stress Type
60(3)	-43.5	2.3	0.0	3.1	0.0	0.0	46.3(4)	79.3	$P_l + P_b$
50	2.3	-43.5	0.0	3.1	0.0	0.0	46.2	79.3	$P_l + P_b$
11	2.9	-40.3	0.0	2.8	0.0	0.0	43.5	79.3	$P_l + P_b$
1202	-40.3	2.9	0.0	2.8	0.0	0.0	43.5	79.3	$P_l + P_b$
1191	3.76	-34.0	0.0	3.5	0.0	0.0	38.4	79.3	$P_l + P_b$
23	-34.0	3.8	0.0	3.5	0.0	0.0	38.4	79.3	$P_l + P_b$
1188	-1.8	35.7	0.0	2.7	0.0	0.0	37.8	79.3	$P_l + P_b$
27	35.7	1.74	0.0	2.7	0.0	0.0	37.8	79.3	$P_l + P_b$
705	3.7	-33.3	0.0	0.7	0.0	0.0	37.0	79.3	$P_l + P_b$
903	-33.3	3.7	0.0	0.7	0.0	0.0	37.0	79.3	$P_l + P_b$
544	34.8	-1.7	0.0	2.6	0.0	0.0	36.9	79.3	$P_l + P_b$
1029	-1.7	35.0	0.0	2.6	0.0	0.0	36.9	79.3	$P_l + P_b$
1174	32.2	-3.1	0.0	2.4	0.0	0.0	35.5	79.3	$P_l + P_b$
1148	-3.1	32.2	0.0	2.4	0.0	0.0	35.5	79.3	$P_l + P_b$
68	30.7	-3.6	0.0	3.4	0.0	0.0	35.0	79.3	$P_l + P_b$
41	-3.6	30.7	0.0	3.4	0.0	0.0	35.0	79.3	$P_l + P_b$
61	-33.4	-0.9	0.0	3.3	0.0	0.0	33.8	79.3	$P_l + P_b$
49	-0.94	-33.4	0.0	3.3	0.0	0.0	33.8	79.3	$P_l + P_b$
2190	0.8	-31.2	0.0	4.3	0.0	0.0	33.1	79.3	$P_l + P_b$
517	-31.2	0.8	0.0	4.3	0.0	0.0	33.1	79.3	$P_l + P_b$

Notes:

(1) All stresses are in units of ksi.
(2) All extreme fiber stresses are conservatively classified as membrane plus bending. The allowable membrane plus bending stress is limited to Su. The design stress, Sm, and ultimate tensile strength of ASME SA-537, Cl. 2 carbon steel at 400°F are 26.4 ksi and 79.3 ksi, respectively. Therefore, the allowable membrane plus bending stress is 79.3 ksi.
(3) The node locations are shown in Figure 2.7.7-9.
(4) The minimum margin of safety M.S. = (79.3/46.3)-1 = 0.71 (71% margin).

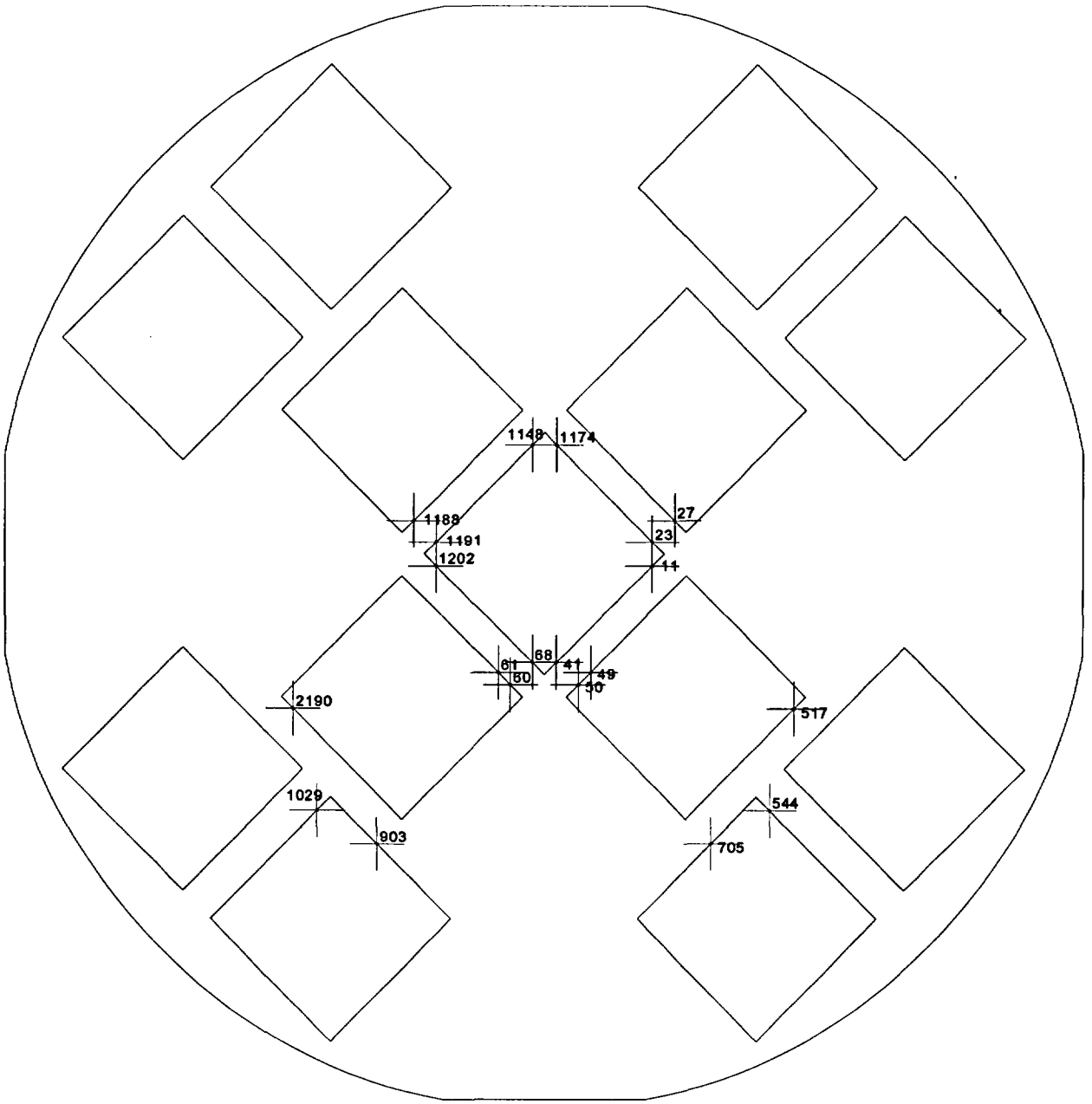

Figure 2.7.7-9

Location of 20 Maximum Spacer Disc S.I. (Middle Fiber) - Corner Oblique Impact

Table 2.7.7-10

Spacer Disc 20 Maximum S.I (Top Fiber) - Corner Oblique Impact

NODE	SX	SY	SZ	SXY	SYZ	SXZ	SINT	Allowable S.I.	Stress Type
60[3]	-59.04	1.22	0.0	4.71	0.0	0.0	61.0[4]	79.3	$P_l + P_b$
50	1.22	-59.00	0.0	4.7	0.0	0.0	61.0	79.3	$P_l + P_b$
11	2.79	-5.50	0.0	4.6	0.0	0.0	58.3	79.3	$P_l + P_b$
1202	-54.81	2.79	0.0	4.6	0.0	0.0	58.3	79.3	$P_l + P_b$
1191	3.68	-48.54	0.0	5.3	0.0	0.0	53.3	79.3	$P_l + P_b$
23	-48.52	3.68	0.0	5.3	0.0	0.0	53.3	79.3	$P_l + P_b$
705	3.51	-46.5	0.0	-1.0	0.0	0.0	50.1	79.3	$P_l + P_b$
903	-46.52	-3.51	0.0	-1.0	0.0	0.0	50.1	79.3	$P_l + P_b$
61	-49.5	-1.41	0.0	3.6	0.0	0.0	49.8	79.3	$P_l + P_b$
49	-1.4	-49.5	0.0	3.6	0.0	0.0	49.8	79.3	$P_l + P_b$
2190	-47.92	-0.12	0.0	5.9	0.0	0.0	49.2	79.3	$P_l + P_b$
517	-0.12	-47.92	0.0	5.8	0.0	0.0	49.2	79.3	$P_l + P_b$
12	-1.01	-47.77	0.0	2.4	0.0	0.0	47.9	79.3	$P_l + P_b$
1201	-47.8	-1.01	0.0	2.4	0.0	0.0	47.9	79.3	$P_l + P_b$
1166	-45.90	0.25	0.0	3.2	0.0	0.0	46.6	79.3	$P_l + P_b$
1158	0.25	-45.9	0.0	3.2	0.0	0.0	46.6	79.3	$P_l + P_b$
1050	2.18	-43.0	0.0	3.4	0.0	0.0	45.7	79.3	$P_l + P_b$
1054	-43.0	2.17	0.0	3.4	0.0	0.0	45.7	79.3	$P_l + P_b$
525	-42.1	0.5	0.0	7.4	0.0	0.0	45.0	79.3	$P_l + P_b$
2182	0.5	-42.1	0.0	7.4	0.0	0.0	45.0	79.3	$P_l + P_b$

Notes:

(1) All stresses are in units of ksi.
(2) All extreme fiber stresses are conservatively classified as membrane plus bending. The allowable membrane plus bending stress is limited to Su. The design stress, Sm, and ultimate tensile strength of ASME SA-537, Cl. 2 carbon steel at 400°F are 26.4 ksi and 79.3 ksi, respectively. Therefore, the allowable membrane plus bending stress is 79.3 ksi.
(3) The node locations are shown in Figure 2.7.7-10.
(4) The minimum margin of safety M.S. = (79.3/61.0)-1 = 0.30 (30% margin).

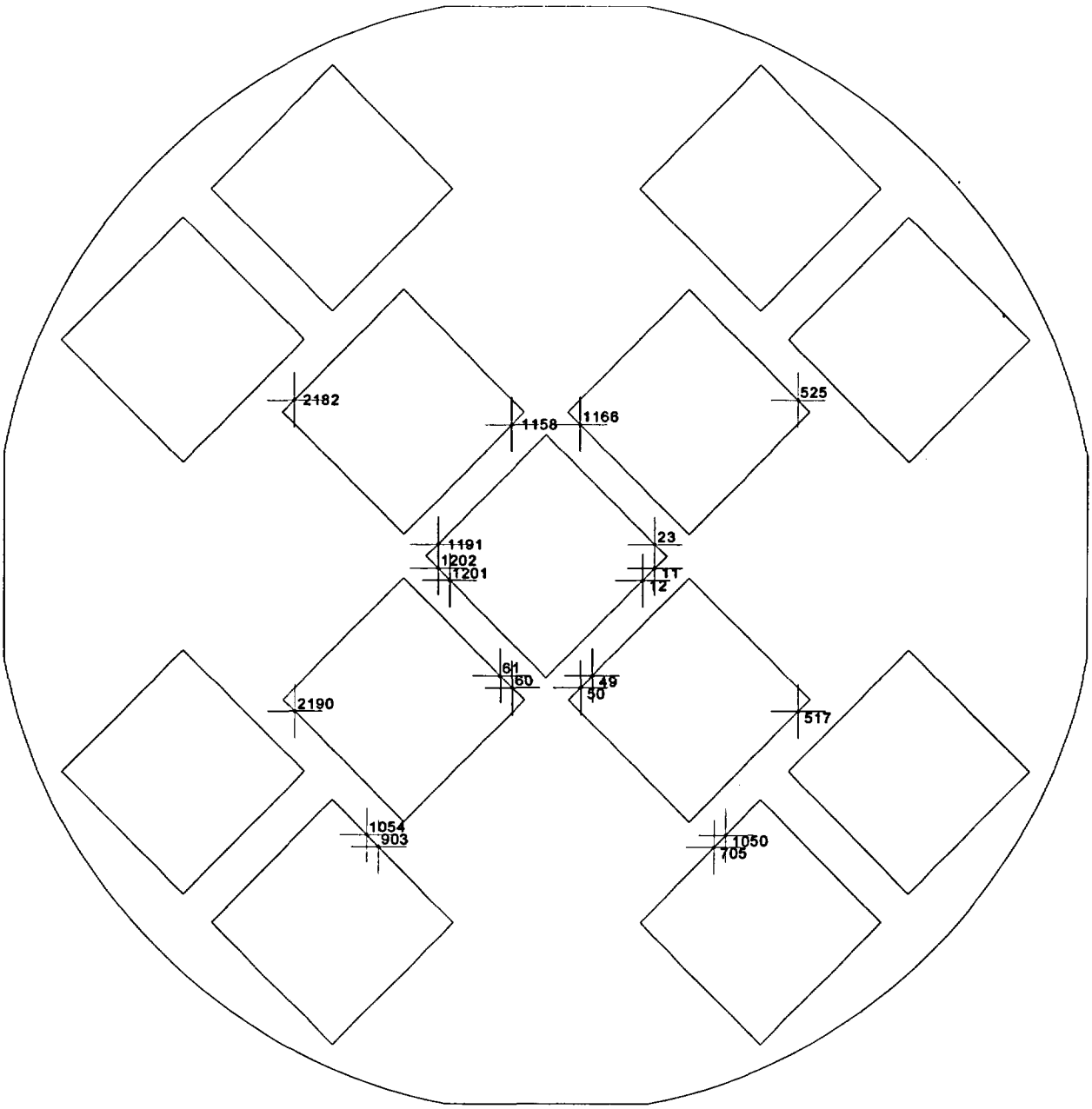

Figure 2.7.7-10

Location of 20 Maximum Spacer Disc S.I. (Top Fiber) - Corner Oblique Impact

Table 2.7.7-11

Spacer Disc Ligament S.I. - Corner Oblique Impact

NODE	SX	SY	SZ	SXY	SYZ	SXZ	SINT	Allowable S.I.	Stress Type
10(3)	-9.0	-3.1	0.0	-2.4	0.0	0.0	9.8	55.5	P_m
25	2.3	-10.2	0.0	-1.6	0.0	0.0	12.8	55.5	P_m
46	4.6	-6.7	0.0	-1.7	0.0	0.0	11.7	55.5	P_m
64	-6.6	4.6	0.0	-1.7	0.0	0.0	11.6	55.5	P_m
78	-0.43	1.34	0.0	-0.62	0.0	0.0	2.2	55.5	P_m
82	-8.37	-3.68	0.0	0.36	0.0	0.0	8.4	55.5	P_m
83	1.15	-2.25	0.0	0.12	0.0	0.0	3.4	55.5	P_m
104	1.36	-8.77	0.0	0.91	0.0	0.0	10.3	55.5	P_m
105	-0.81	0.21	0.0	-0.14	0.0	0.0	1.1	55.5	P_m
178	-6.10	-1.96	0.0	0.91	0.0	0.0	6.3	55.5	P_m
378	2.63	-7.86	0.0	1.84	0.0	0.0	11.1	55.5	P_m
496	0.3	-0.12	0.0	-0.26	0.0	0.0	0.7	55.5	P_m
534	9.85	-6.0	0.0	1.39	0.0	0.0	16.1	55.5	P_m
553	1.33	-0.44	0.0	-0.62	0.0	0.0	2.2	55.5	P_m
558	-6.0	9.85	0.0	1.39	0.0	0.0	16.1	55.5	P_m
706	9.30	-7.61	0.0	2.21	0.0	0.0	17.5(4)	55.5	P_m
904	-7.60	9.28	0.0	2.20	0.0	0.0	17.5	55.5	P_m
1028	-2.26	1.15	0.0	0.12	0.0	0.0	3.4	55.5	P_m
1153	7.46	-0.86	0.0	-2.06	0.0	0.0	9.3	55.5	P_m
1170	-0.86	7.42	0.0	-2.06	0.0	0.0	9.3	55.5	P_m
1190	-10.08	2.27	0.0	-1.59	0.0	0.0	12.8	55.5	P_m
1204	-3.13	-9.0	0.0	-2.33	0.0	0.0	9.8	55.5	P_m
1221	8.34	-0.40	0.0	0.8	0.0	0.0	8.9	55.5	P_m
1222	0.21	-0.81	0.0	-0.14	0.0	0.0	1.1	55.5	P_m
1233	-0.12	0.31	0.0	-0.26	0.0	0.0	0.7	55.5	P_m
1245	-0.35	8.34	0.0	0.78	0.0	0.0	8.9	55.5	P_m
1311	6.24	-1.43	0.0	1.24	0.0	0.0	8.1	55.5	P_m
1509	-1.43	6.24	0.0	1.24	0.0	0.0	8.1	55.5	P_m
1670	-8.77	1.36	0.0	0.91	0.0	0.0	10.3	55.5	P_m
1690	-3.68	-8.37	0.0	0.36	0.0	0.0	8.4	55.5	P_m
1844	-7.86	2.63	0.0	1.84	0.0	0.0	11.1	55.5	P_m
2044	-1.96	-6.09	0.0	0.91	0.0	0.0	6.3	55.5	P_m

Notes:

(1) All stresses are in units of ksi.

(2) All extreme fiber stresses are conservatively classified as membrane plus bending. The allowable membrane plus bending stress is limited to $0.7S_u$. The design stress, S_m, and ultimate tensile strength of ASME SA-537, Cl. 2 carbon steel at 400°F are 26.4 ksi and 79.3 ksi, respectively. Therefore, the allowable membrane plus bending stress is 55.5 ksi.

(3) The node locations are shown in Figure 2.7.7-11.

(4) The minimum margin of safety M.S. = (55.5/17.5) -1 = 2.17 (large margin).

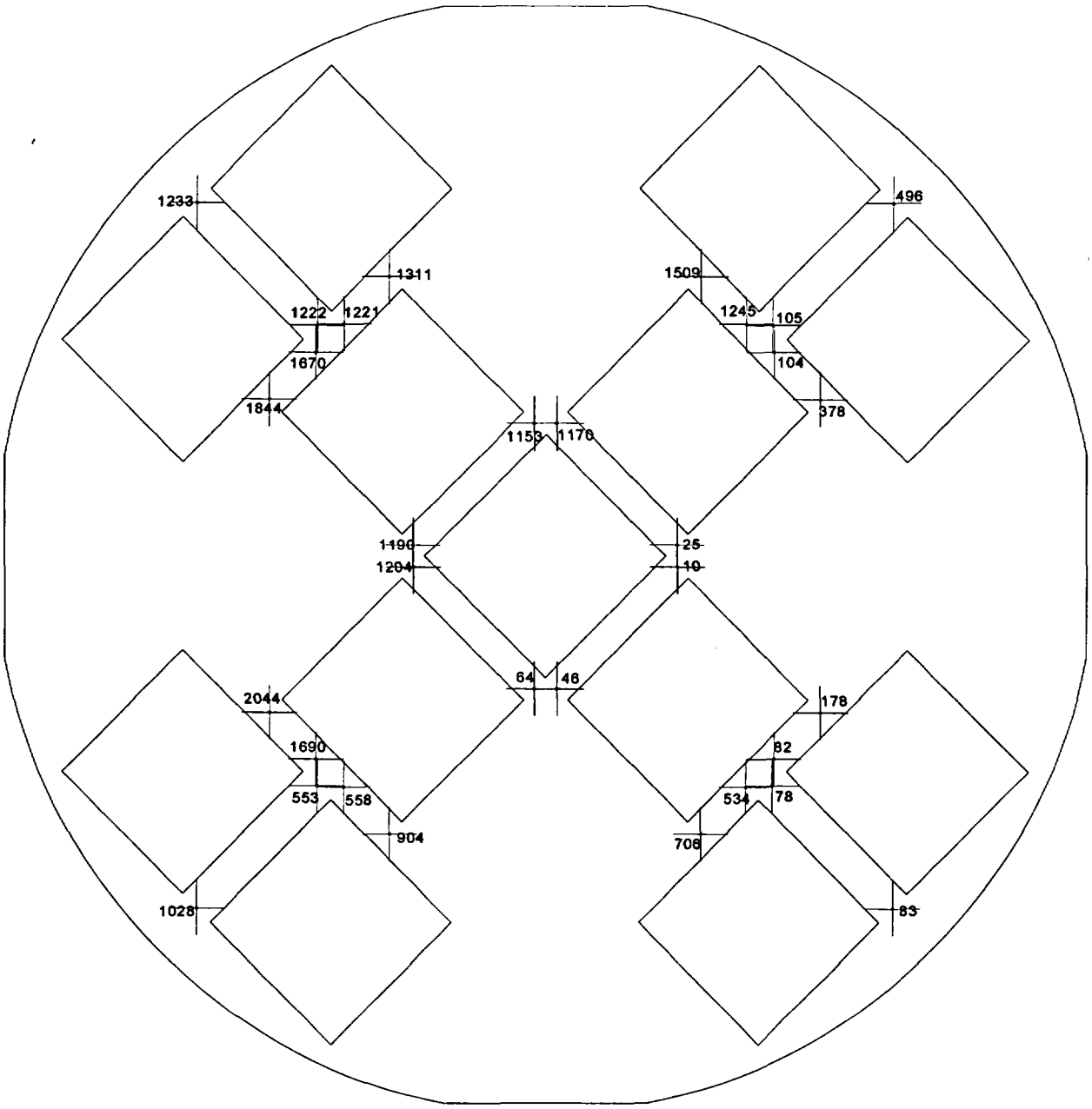

Figure 2.7.7-11

Location of Spacer Disc Ligament S.I. - Corner Oblique Impact

2.7.7.1.1.4.3 Corner Oblique Slapdown Analysis

The corner oblique impact spacer disc analysis is performed using the full symmetry model described in Appendix 2.10.4. The free body diagram resulting from the FEA analysis is presented in Figure 2.7.7-7. Equivalent static g-loads are applied as discussed in Appendix 2.10.9. The bounding equivalent static g-load (G_S) applied to the model are 73.9 g's in the tangential direction and 2.9 g's in the longitudinal direction.

The stresses at the locations of the 20 highest stress intensities on the bottom, middle and top fibers of the spacer disc are reported in Table 2.7.7-12, Table 2.7.7-13, Table 2.7.7-14. The ligament stresses are summarized in Table 2.7.7-15. The maximum spacer disc stress intensity resulting from a bounding oblique corner drop is 72.8 ksi at node 60. The minimum margin of safety in the spacer disc for a bounding oblique corner drop is:

$$\text{M.S.} = (79.3/72.8) - 1$$
$$= +0.09$$

Table 2.7.7-12

Spacer Disc 20 Maximum S.I. (Bottom Fiber) - Corner Slapdown

NODE	SX	SY	SZ	SXY	SYZ	SXZ	SINT	Allowable S.I.	Stress Type
60(3)	-66.3	3.7	0.0	4.7	0.0	0.0	70.6(4)	79.3	$P_l + P_b$
50	3.7	-66.1	0.0	4.7	0.0	0.0	70.5	79.3	$P_l + P_b$
11	4.5	-61.3	0.0	4.2	0.0	0.0	66.3	79.3	$P_l + P_b$
1202	-61.3	4.5	0.0	4.3	0.0	0.0	66.3	79.3	$P_l + P_b$
1188	-2.7	56.6	0.0	4.3	0.0	0.0	59.9	79.3	$P_l + P_b$
27	56.6	-2.7	0.0	4.3	0.0	0.0	59.8	79.3	$P_l + P_b$
1191	5.9	-51.6	0.0	5.3	0.0	0.0	58.4	79.3	$P_l + P_b$
23	-51.5	5.9	0.0	5.3	0.0	0.0	58.3	79.3	$P_l + P_b$
544	54.7	-2.7	0.0	4.3	0.0	0.0	58.0	79.3	$P_l + P_b$
1029	-2.7	54.6	0.0	4.3	0.0	0.0	58.0	79.3	$P_l + P_b$
1174	51.1	-4.7	0.0	3.8	0.0	0.0	56.3	79.3	$P_l + P_b$
1148	-4.7	51.1	0.0	3.8	0.0	0.0	56.3	79.3	$P_l + P_b$
705	5.7	50.0	0.0	1.1	0.0	0.0	55.7	79.3	$P_l + P_b$
68	49.0	5.6	0.0	5.5	0.0	0.0	55.7	79.3	$P_l + P_b$
903	-49.9	5.7	0.0	1.1	0.0	0.0	55.6	79.3	$P_l + P_b$
41	-5.6	48.9	0.0	5.5	0.0	0.0	55.6	79.3	$P_l + P_b$
2171	3.0	-49.0	0.0	3.0	0.0	0.0	52.3	79.3	$P_l + P_b$
100	-49.0	3.0	0.0	2.9	0.0	0.0	52.3	79.3	$P_l + P_b$
61	-50.6	-1.5	0.0	5.0	0.0	0.0	51.0	79.3	$P_l + P_b$
49	-1.5	-50.5	0.0	5.0	0.0	0.0	51.0	79.3	$P_l + P_b$

Notes:

(1) All stresses are in units of ksi.

(2) All extreme fiber stresses are conservatively classified as membrane plus bending. The allowable membrane plus bending stress is limited to Su. The design stress, Sm, and ultimate tensile strength of ASME SA-537, Cl. 2 carbon steel at 400°F are 26.4 ksi and 79.3 ksi, respectively. Therefore, the allowable membrane plus bending stress is 79.3 ksi.

(3) The node locations are shown in Figure 2.7.7-12.

(4) The minimum margin of safety M.S. = (79.3/70.6) -1 = 0.12 (12% margin).

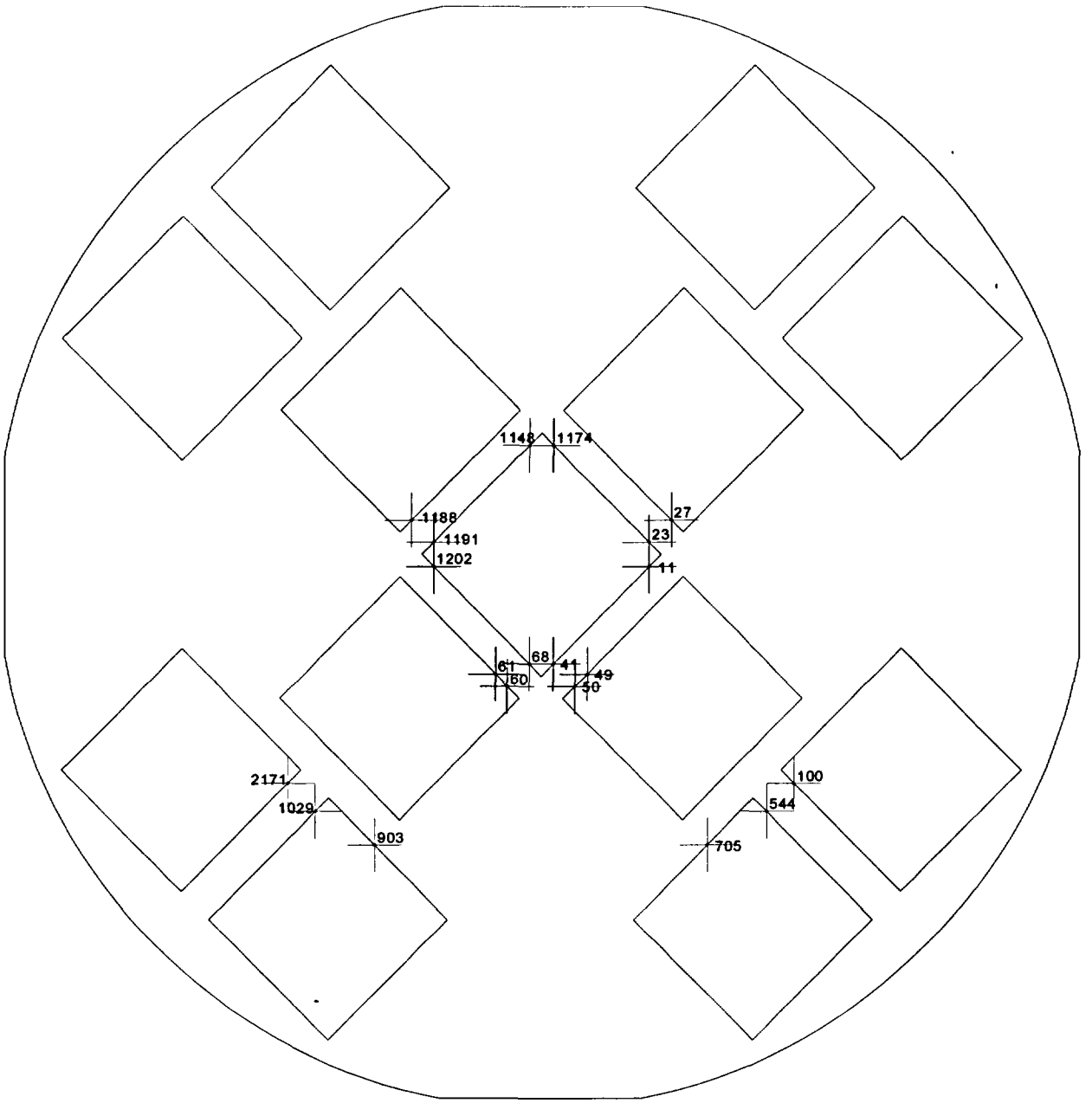

Figure 2.7.7-12

Location of 20 Maximum Spacer Disc S.I (Bottom Fiber) - Corner Slapdown

Table 2.7.7-13

Spacer Disc 20 Maximum S.I. (Middle Fiber) - Corner Slapdown

NODE	SX	SY	SZ	SXY	SYZ	SXZ	SINT	Allowable S.I.	Stress Type
60(3)	-67.5	3.6	0.0	4.9	0.0	0.0	71.7(4)	79.3	$P_l + P_b$
50	3.6	-67.4	0.0	4.9	0.0	0.0	71.6	79.3	$P_l + P_b$
11	4.5	-62.4	0.0	4.4	0.0	0.0	67.4	79.3	$P_l + P_b$
1202	-62.4	4.5	0.0	4.4	0.0	0.0	67.4	79.3	$P_l + P_b$
1191	5.8	52.7	0.0	5.4	0.0	0.0	59.5	79.3	$P_l + P_b$
23	-52.6	5.9	0.0	5.4	0.0	0.0	59.4	79.3	$P_l + P_b$
1188	-2.8	55.4	0.0	4.2	0.0	0.0	58.7	79.3	$P_l + P_b$
27	55.4	-2.7	0.0	4.2	0.0	0.0	58.7	79.3	$P_l + P_b$
544	54.5	-2.8	0.0	4.0	0.0	0.0	57.8	79.3	$P_l + P_b$
1029	-2.8	54.4	0.0	4.0	0.0	0.0	57.8	79.3	$P_l + P_b$
705	5.64	50.9	0.0	1.0	0.0	0.0	56.6	79.3	$P_l + P_b$
903	-50.9	5.7	0.0	1.0	0.0	0.0	56.6	79.3	$P_l + P_b$
1174	50.0	-4.7	0.0	3.7	0.0	0.0	55.2	79.3	$P_l + P_b$
1148	-4.7	50.0	0.0	3.7	0.0	0.0	55.1	79.3	$P_l + P_b$
68	47.9	-5.62	0.0	5.3	0.0	0.0	54.5	79.3	$P_l + P_b$
41	-5.62	47.8	0.0	5.3	0.0	0.0	54.5	79.3	$P_l + P_b$
2171	3.0	-49.2	0.0	3.2	0.0	0.0	52.5	79.3	$P_l + P_b$
100	-49.2	3.0	0.0	3.1	0.0	0.0	52.5	79.3	$P_l + P_b$
61	-51.8	-1.5	0.0	5.1	0.0	0.0	52.3	79.3	$P_l + P_b$
49	-1.5	-51.7	0.0	5.1	0.0	0.0	52.2	79.3	$P_l + P_b$

Notes:

(1) All stresses are in units of ksi.

(2) All extreme fiber stresses are conservatively classified as membrane plus bending. The allowable membrane plus bending stress is limited to Su. The design stress, Sm, and ultimate tensile strength of ASME SA-537, Cl. 2 carbon steel at 400°F are 26.4 ksi and 79.3 ksi, respectively. Therefore, the allowable membrane plus bending stress is 79.3 ksi.

(3) The node locations are shown in Figure 2.7.7-13.

(4) The minimum margin of safety M.S. = (79.3/71.7)-1 = 0.10 (10% margin).

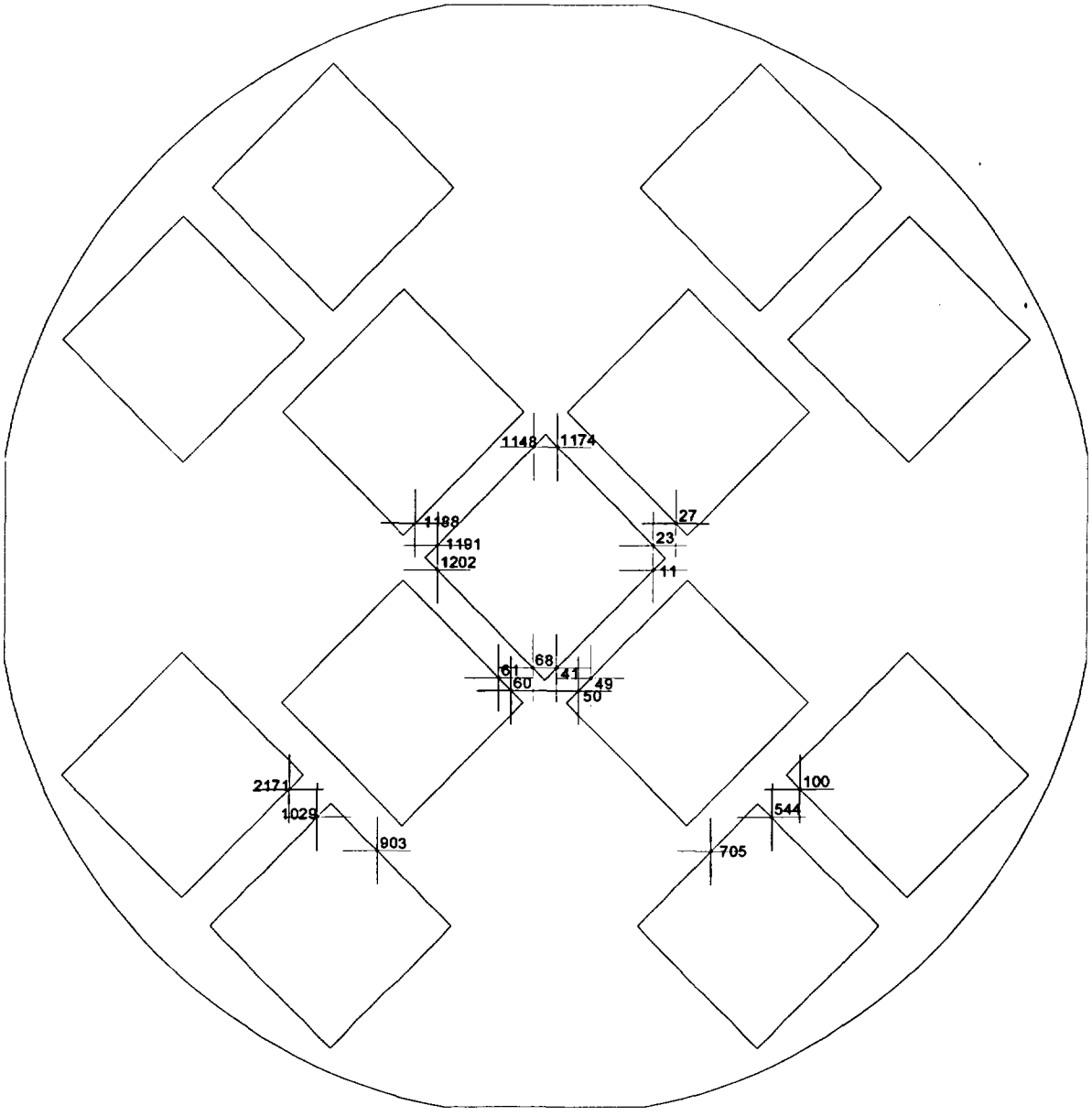

Figure 2.7.7-13

Location of 20 Maximum Spacer Disc S.I. (Middle Fiber) - Corner Slapdown

Table 2.7.7-14

Spacer Disc 20 Maximum S.I. (Top Fiber) - Corner Slapdown

NODE	SX	SY	SZ	SXY	SYZ	SXZ	SINT	Allowable S.I.	Stress Type
60[3]	-68.6	3.5	0.0	5.0	0.0	0.0	72.8[4]	79.3	$P_l + P_b$
50	3.5	-68.5	0.0	5.0	0.0	0.0	72.7	79.3	$P_l + P_b$
11	4.5	-63.5	0.0	4.5	0.0	0.0	68.5	79.3	$P_l + P_b$
1202	-63.5	4.5	0.0	4.5	0.0	0.0	68.5	79.3	$P_l + P_b$
1191	5.9	-53.7	0.0	5.6	0.0	0.0	60.6	79.3	$P_l + P_b$
23	-53.7	5.9	0.0	5.6	0.0	0.0	60.5	79.3	$P_l + P_b$
1188	-2.8	54.3	0.0	4.1	0.0	0.0	57.7	79.3	$P_l + P_b$
27	54.2	-2.9	0.0	4.1	0.0	0.0	57.6	79.3	$P_l + P_b$
705	5.7	-52.0	0.0	0.87	0.0	0.0	57.6	79.3	$P_l + P_b$
903	-51.9	5.6	0.0	0.87	0.0	0.0	57.6	79.3	$P_l + P_b$
544	54.3	-2.8	0.0	3.8	0.0	0.0	57.6	79.3	$P_l + P_b$
1029	-2.8	54.3	0.0	3.8	0.0	0.0	57.6	79.3	$P_l + P_b$
1174	48.9	-4.7	0.0	3.5	0.0	0.0	54.0	79.3	$P_l + P_b$
1148	-4.7	48.9	0.0	3.5	0.0	0.0	54.0	79.3	$P_l + P_b$
61	-53.0	-1.5	0.0	5.1	0.0	0.0	53.5	79.3	$P_l + P_b$
49	-1.5	-52.9	0.0	5.1	0.0	0.0	53.4	79.3	$P_l + P_b$
68	46.8	-5.7	0.0	5.2	0.0	0.0	53.4	79.3	$P_l + P_b$
41	-5.7	46.7	0.0	5.2	0.0	0.0	53.4	79.3	$P_l + P_b$
2190	-50.0	1.2	0.0	7.0	0.0	0.0	53.0	79.3	$P_l + P_b$
517	1.2	-50.0	0.0	7.0	0.0	0.0	53.0	79.3	$P_l + P_b$

Notes:

(1) All stresses are in units of ksi.
(2) All extreme fiber stresses are conservatively classified as primary plus secondary. The allowable membrane plus bending stress is limited to the Su. The design stress, Sm, and ultimate tensile strength of ASME SA-537, Cl. 2 carbon steel at 400°F are 26.4 ksi and 79.3 ksi, respectively. Therefore, the allowable membrane plus bending stress is 79.3 ksi.
(3) The node locations are shown in Figure 2.7.7-14.
(4) The minimum margin of safety M.S. = (79.3/72.8)-1 = 0.08 (8% margin).

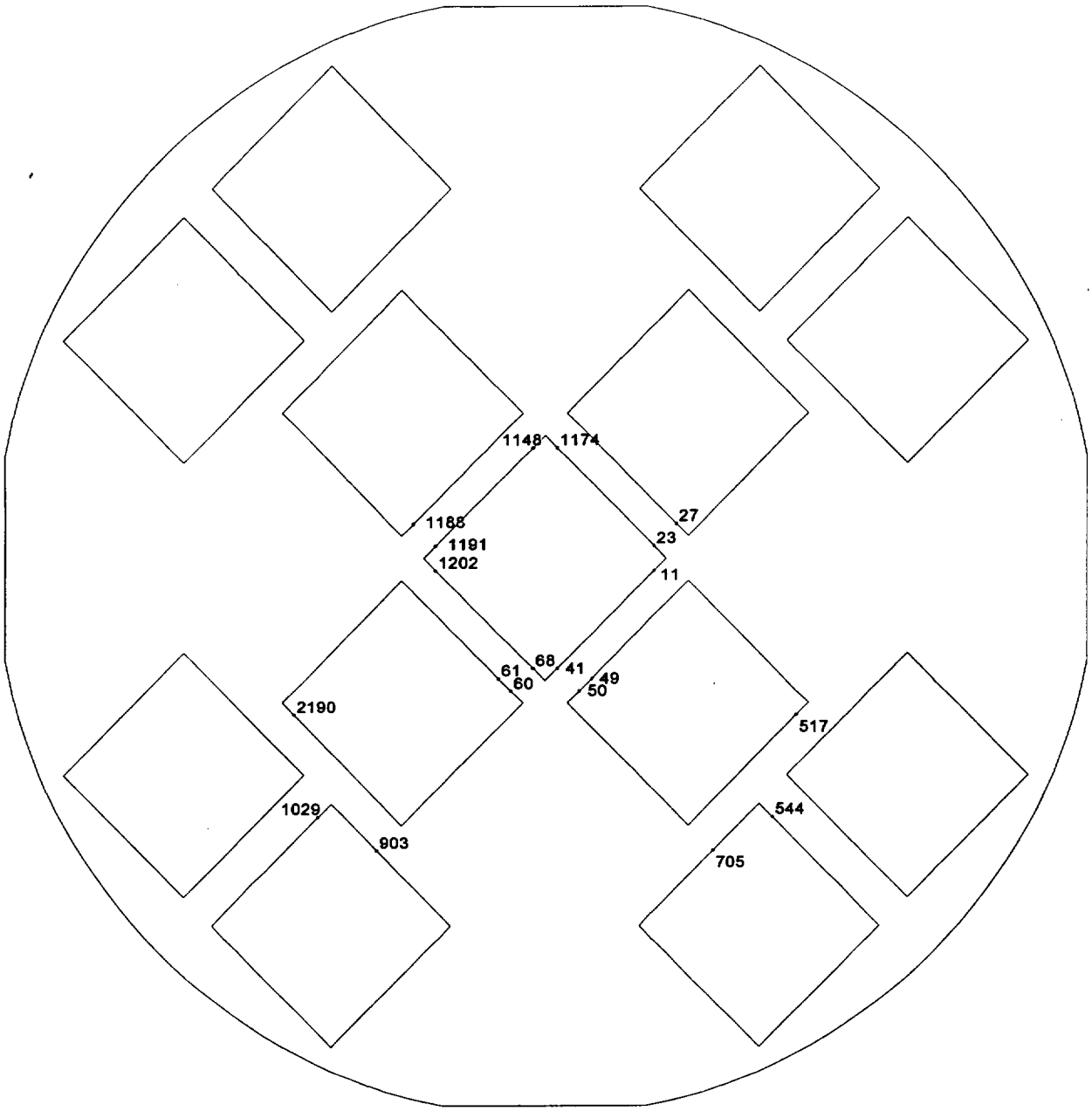

Figure 2.7.7-14

Location of 20 Maximum Spacer Disc S.I. (Top Fiber) - Corner Slapdown

Table 2.7.7-15

Spacer Disc Ligament S.I. - Corner Slapdown

NODE	SX	SY	SZ	SXY	SYZ	SXZ	SINT	Allowable S.I.	Stress Type
10(3)	-13.9	-4.7	0.0	-3.7	0.0	0.0	15.2	55.5	P_m
25	3.6	-15.7	0.0	-2.5	0.0	0.0	19.8	55.5	P_m
46	7.2	-10.2	0.0	-2.6	0.0	0.0	18.1	55.5	P_m
64	-10.2	7.2	0.0	-2.6	0.0	0.0	18.1	55.5	P_m
78	-0.7	1.63	0.0	-0.97	0.0	0.0	3.1	55.5	P_m
82	-13.5	-5.5	0.0	0.62	0.0	0.0	13.5	55.5	P_m
83	1.7	-4.2	0.0	0.17	0.0	0.0	5.8	55.5	P_m
104	2.04	-13.6	0.0	1.4	0.0	0.0	15.9	55.5	P_m
105	-1.3	0.33	0.0	-0.21	0.0	0.0	1.7	55.5	P_m
178	-9.8	-2.9	0.0	1.6	0.0	0.0	10.1	55.5	P_m
378	4.0	-12.2	0.0	2.9	0.0	0.0	17.2	55.5	P_m
496	0.45	-0.17	0.0	-0.4	0.0	0.0	1.1	55.5	P_m
534	15.38	-9.09	0.0	2.02	0.0	0.0	24.8	55.5	P_m
553	1.63	-0.71	0.0	-0.97	0.0	0.0	3.1	55.5	P_m
558	-9.09	15.	0.0	2.02	0.0	0.0	24.8	55.5	P_m
706	14.3	-11.6	0.0	3.4	0.0	0.0	26.7(4)	55.5	P_m
904	-11.6	14.3	0.0	3.4	0.0	0.0	26.7	55.5	P_m
1028	-4.2	1.7	0.0	0.17	0.0	0.0	5.9	55.5	P_m
1153	11.6	-1.3	0.0	-3.2	0.0	0.0	14.4	55.5	P_m
1170	-1.3	11.6	0.0	-3.2	0.0	0.0	14.4	55.5	P_m
1190	-15.6	3.6	0.0	-2.5	0.0	0.0	19.8	55.5	P_m
1204	-4.8	-14.0	0.0	-3.7	0.0	0.0	15.2	55.5	P_m
1221	13.	-0.61	0.0	1.2	0.0	0.0	13.8	55.5	P_m
1222	0.34	-1.27	0.0	-0.21	0.0	0.0	1.7	55.5	P_m
1233	-0.2	0.5	0.0	-0.4	0.0	0.0	1.1	55.5	P_m
1245	-0.61	13.0	0.0	1.22	0.0	0.0	13.8	55.5	P_m
1311	9.69	-2.28	0.0	1.93	0.0	0.0	12.6	55.5	P_m
1509	-2.27	9.70	0.0	1.92	0.0	0.0	12.6	55.5	P_m
1670	-13.6	2.1	0.0	1.4	0.0	0.0	15.8	55.5	P_m
1690	-5.45	-13.4	0.0	0.62	0.0	0.0	13.5	55.5	P_m
1844	-12.2	4.00	0.0	2.85	0.0	0.0	17.2	55.5	P_m
2044	-2.83	-9.74	0.0	1.54	0.0	0.0	10.1	55.5	P_m

Notes:

(1) All stresses in units of ksi.

(2) All ligament stresses are conservatively classified as primary membrane. The allowable primary membrane stress is limited to the lesser of 0.7Su. The design stress, Sm, and ultimate tensile strength of ASME SA-537, Cl. 2 carbon steel at 400°F are 26.4 ksi and 79.3 ksi, respectively. Therefore, the allowable membrane plus bending stress is 55.5 ksi.

(3) The node locations are shown in Figure 2.7.7-15.

(4) The minimum margin of safety M.S. = (55.5/26.7)-1 = 1.07 (107 % margin).

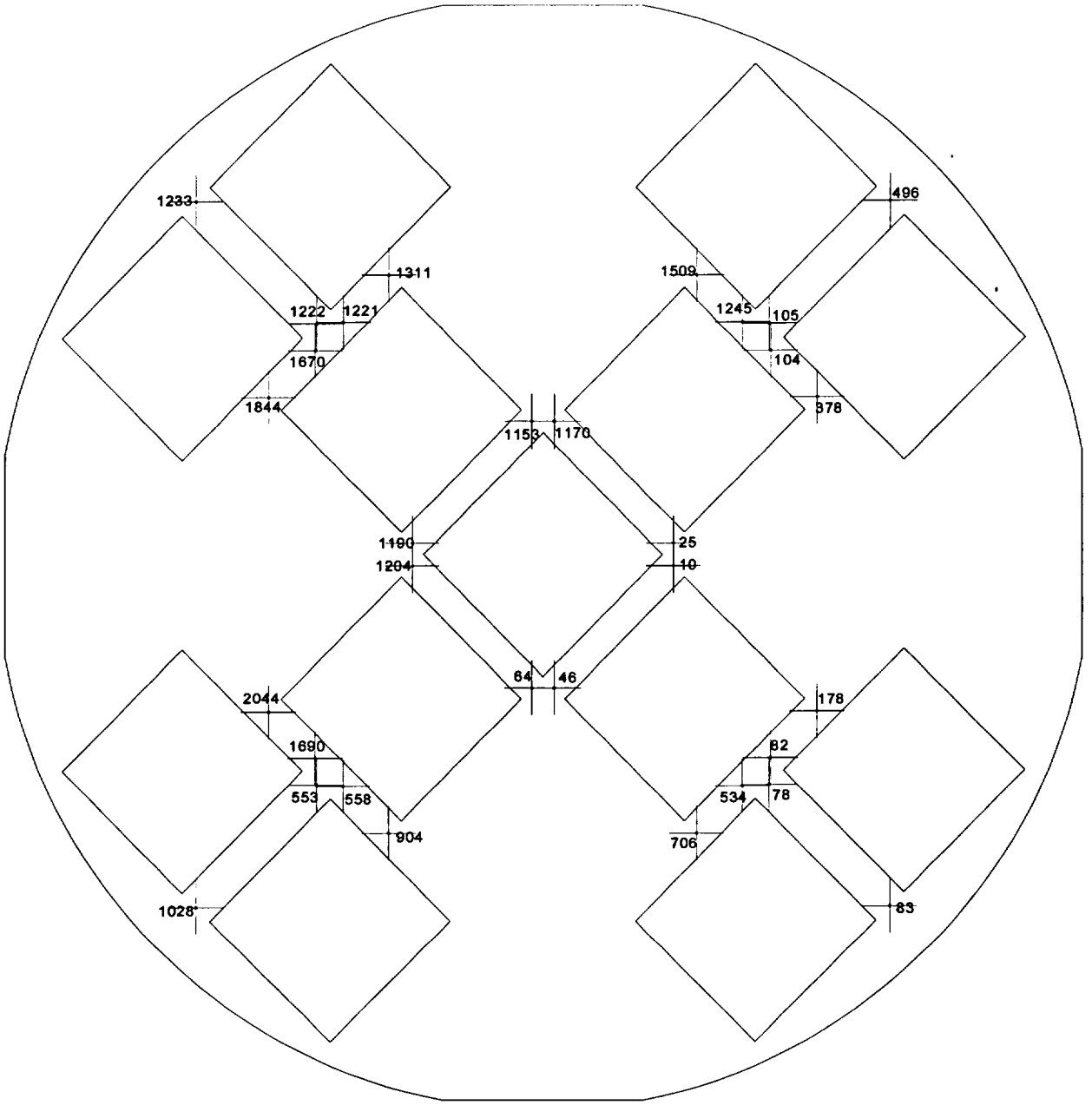

Figure 2.7.7-15

Location of Critical Spacer Disc Ligament Stresses - Corner Slapdown

2.7.7.1.2 Puncture

The NUHOMS®-MP187 Cask is evaluated for the puncture drop in Section 2.7.2.. The results of the cask puncture evaluation demonstrate that the cask will not puncture in the event of the postulated puncture drop condition. The drop deceleration loads which result from the puncture drop condition are much lower than those due to the 30-foot free drop. Therefore, the stresses in the FF-DSC components resulting from the puncture drop condition are bounded by those due to the 30-foot free drop condition.

2.7.7.1.3 Thermal

Hypothetical Accident Thermal Condition of Transport requires the cask to be fully engulfed in a fire to provide an average flame temperature of 1,472°F. As discussed in the normal thermal stress evaluation of Section 2.6, the maximum spacer disc thermal stress is resulting from the maximum global thermal gradients between the spacer disc center region and its outer boundary. The accident thermal condition subjects the spacer disc to a higher overall temperature, but a smaller global thermal gradient as compared to the normal thermal conditions. This temperature distribution exists because of the thermal insulation provided by the impact limiters and the neutron shielding 'jacket'. Therefore the resulting spacer disc thermal stress from the normal thermal condition is conservatively used for the accident thermal condition.

The maximum stress intensity in the spacer disc due to the normal and accident thermal conditions is 25.2 ksi.

General thermal stresses are classified as secondary stresses per NG-3213.12(a) [2.2] and as such need not meet the stress acceptance criteria for accident conditions. Local thermal stresses need be considered only from the fatigue standpoint per NG-3213.12(b) [2.2]. The accident fire thermal stresses are evaluated in accordance with Section C.7 of Regulatory Guide 7.6 [2.4] for low cycle fatigue. Regulatory Guide 7.6 [2.4] states that the extreme total stress range for accident conditions should be less than the adjusted value of S_a at 10 cycles from the appropriate design fatigue curves.

From Figure I-9.1 of the ASME Appendices [2.2], the value of S_a for 10 cycles is approximately 544 ksi for SA-537, Class 2 at 500°F and the modulus of elasticity at 500°F is 27.3 x 10^6 psi. Therefore, the adjusted value of S_a is:

$$S_a = (544)(27.3 \times 10^6/30.0 \times 10^6)$$
$$= 495 \text{ ksi}$$

The extreme total stress intensity range of the spacer disc for accident thermal conditions is conservatively assumed equal to twice the thermal stress, or 50.4 ksi. This is much lower than the adjusted value of S_a for 10 cycles from the design fatigue curves. Therefore, low cycle fatigue of the spacer disc due to the postulated accident fire event is not a concern.

2.7.7.2 Spacer Disc Buckling Analysis

The spacer discs maintain the configuration of the fuel assemblies under normal and accident conditions for criticality control. Therefore, the stability of the spacer discs is of great importance. The elastic stability of the FF-DSC spacer discs under the worst case accident drop loading is evaluated in the following sections. Bounding drop decelerations are conservatively used. The stresses in the spacer disc due to normal thermal conditions is considered in combination with the drop stresses. This load combination presents the worst case for buckling since both load conditions result in high compressive stresses in the spacer disc.

2.7.7.2.1 Flatside Impact Buckling Analysis

The FF-DSC spacer disc stability is evaluated for flatside drop decelerations of 92g in the tangential direction and 42g in the longitudinal direction, applied simultaneously. A bifurcation buckling analysis is performed using the 1/2 symmetry finite element model described in Appendix 2.10.4.

The FF-DSC spacer disc flatside impact buckled mode shape is shown in Figure 2.7.7-16. The factor of safety against buckling for the bounding flatside impact loading is 4.6. The required factor of safety against buckling is 1.5 ([2.2], F-1332). Therefore, the FF-DSC spacer discs meet

the buckling acceptance criteria for the bounding flatside drop loading combined with normal thermal stresses.

THIS SECTION CONTAINS
PROPRIETARY INFORMATION

Figure 2.7.7-16
Spacer Disc Flatside Impact Buckled Shape

2.7.7.2.2 Corner Impact Buckling Analysis

The FF-DSC spacer disc stability is evaluated for bounding corner impact decelerations of 80g in the tangential direction and 60g in the longitudinal direction, applied simultaneously. A bifurcation buckling analysis is performed using the finite element model described in Appendix 2.10.4.

The FF-DSC spacer disc flatside impact buckled mode shape is shown in Figure 2.7.7-17. The factor of safety against buckling for the bounding corner impact loading is 5.04. The required factor of safety against buckling is 1.5 ([2.2], F-1332). Therefore, the FF-DSC spacer discs meet the buckling acceptance criteria for the bounding corner impact loading combined with normal thermal stresses.

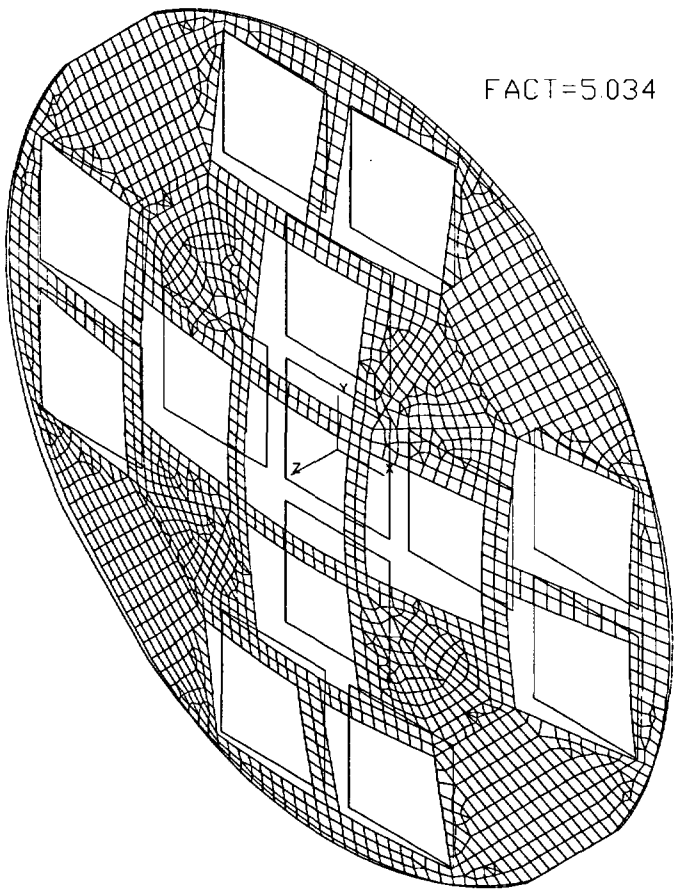

Figure 2.7.7-17

Spacer Disc Corner Impact Buckled Shape

2.7.7.3 Support Plate Stress Analysis

2.7.7.3.1 Free Drop

2.7.7.3.1.1 Support Plate End Drop

As shown in Appendix 2.10.9, the support plate end drop acceleration is 38.9g, and the applied DLF is 1.10, resulting in an equivalent static load of 43.2 g's. An equivalent static acceleration of 45g is used for the support plate end drop analysis. The support plates are evaluated for the end drop using ASME criteria of F-1334.5 [2.2] for linear type components subjected to combined compression and bending loads. The support plates may be fabricated using two 2.0 inch thick plates placed together or a solid 4.0 inch thick plate; either choice must meet the nil ductility requirements of NUREG/CR-1815 for carbon steel materials. The following calculations are based on the more conservative 2.0 inch thick plates. The support plates support their own weight in addition to the weight of the 15 spacer discs for the postulated 30-foot end drop condition. The maximum uniform compressive stress in the support plates is:

$$f_a = P/A$$

$$= WG/A$$

where;

W = [(15 x 1065) + (8 x 1181)]/(4 x 1000), Tributary weight of a support plate

= 6.4 kips

G = 45g, End drop equivalent static acceleration

A = 48 in^2, Cross-section area of a single support plate

therefore,

$$f_a = (6.4 \times 45)/48$$
$$= 6.0 \text{ ksi}$$

The bending stress in the support plate, due to the moment reaction at the spacer disc locations, is:

$$f_b = M/S$$

where;

M = Moment reaction from spacer disc end drop Finite Element Analysis

$$= (2 \times 129.2^2)^{1/2}$$
$$= 182.7 \text{ in-kips}$$

S = $bh^2/6$, Section modulus of support plate

$$= (12)(2.0)^2/6$$
$$= 8.0 \text{ in}^3$$

therefore,

$$f_b = 182.7/8.0$$
$$= 22.8 \text{ ksi}$$

The allowable compressive stress, F_a, is calculated as follows:

$$F_a = P/A_g$$

where P is determined in accordance with F-1334.3 and A_g is the gross area of the support plate (24 in^2), as follows:

$P/P_y = (1-\lambda^2/4)/[1.11 + 0.50\lambda + 0.17\lambda^2 - 0.28\lambda^3]$

where;

$\lambda = (KL/r)(1/\pi)(S_y/E)^{1/2}$

$P_y = S_yA$

K = 2.0, Factor for fixed-free boundary conditions

L = 7.75 in., Free distance at top end

I = $(12 \times 2^3)/12$, Moment of Inertial of support plates is calculated by neglecting the welded connection between the two support plates. Therefore, the members are assumed to act separately.

= 8.0 in^4

A = 24.0 in^2, Area of a support plates

r = $(8.0/24.0)^{1/2}$, Radius of gyration of support plate

= 0.58 in.

S_y = 50.8 psi, Yield strength of SA-237, Class 2 carbon steel at 364°F

E = 27.9×10^6 psi, Elastic modulus of SA-537, Class 2 carbon steel at 300°F

KL/r = (2.0)(7.75)/0.58

= 26.7

Therefore,

$\lambda = (26.7)(1/\pi)(50{,}800/27.9 \times 10^6)^{1/2}$

= 0.36

$P = (50{,}800 \times 24)(1-0.36^2/4)/[1.11 + 0.50(0.36) + 0.17(0.36)^2 - 0.28(0.36)^3]$

= 908.2 kips

F_a = 908.2/24

$= \quad 37.8$ ksi

The value of F'_e is determined in accordance with F-1334.5(b) as follows:

$$F'_e = \pi^2 E/[1.30(Kl/r)^2]$$

$$= \pi^2(27.9 \times 10^6)/[1.30(26.7)^2]$$

$$= 297 \text{ kips}$$

The allowable bending stress, F_b, determined in accordance with F-1334.4(b) for compact sections, is equal to fSy, where f is the plastic section factor for a rectangular section (=1.50) [2.7]. Therefore, the allowable bending stress is:

$$F_b = 1.5(50.8)$$

$$= 76.2 \text{ ksi}$$

Per ASME B&PV Code, F-1334.5, equations (20), (21), and (22) of NF-3322.1(e)(1) must be satisfied to demonstrate structural adequacy. Equation (20) is satisfied as follows:

$$f_a/F_a + C_{mx}f_{bx}/[(1-f_a/F'_{ex})F_{bx}] + C_{mY}f_{bY}/[(1-f_a/F'_{eY})F_{bY}] \leq 1.0$$

$$(6.0/37.8) + 1.0(22.8)/[(1-(6.0/297))(76.2)] + 0 = 0.47 \leq 1.0$$

Equation (21) is satisfied as follows:

$$f_a/0.6S_y + f_{bx}/F_{bx} + f_{bY}/F_{bY} \leq 1.0$$

$$6.0/(0.6 \times 50.8) + 22.8/76.2 + 0 = 0.50 \leq 1.0$$

Equation (22) is satisfied as follows:

$$f_a/F_a + f_{bx}/F_{bx} + f_{bY}/F_{bY} \leq 1.0$$

$$6.0/37.8 + 22.8/76.2 + 0 = 0.46 \leq 1.0$$

Therefore, the support plates satisfy the appropriate design criteria for the 30-foot end drop condition.

2.7.7.3.1.2 Support Plate 30-Foot Drop

The FF-DSC support plates are evaluated for the 30-foot drop condition using bounding longitudinal and tangential accelerations of 45 g's and 93 g's, respectively. The stresses in the support plates due to the 45 g longitudinal load, calculated in Section 2.7.7.3.1.1, are:

f_a = 6.0 ksi

f_b = 22.8 ksi

The support plate stresses due to the 93 g tangential load are determined by scaling the stresses due to the 24.8 g, 1-foot side drop by the ratio of 3.75 (=93/24.8). Therefore, the support plate stresses due to the 93 g tangential load are:

f_b = 1.84 x 3.75 = 6.9 ksi

f_v = 0.2 x 3.75 = 0.75 ksi

Therefore, the combined support plate tresses for the bounding oblique drop loads are:

f_a = 6.0 ksi

f_b = 22.8 + 6.9 = 29.7 ksi

f_v = 0.75 ksi (negligible)

Checking Eq. (20), (21), and (22) of NF-3322.1(e)(1) gives:

Eq. (20): 6.0/37.8 + (1.0 x 29.7)/[(1-6.0/297)(76.2)] = 0.56 < 1.0 ∴ O.K.

Eq. (21): 6.0/(0.6 x 50.8) + 29.7/76.2 = 0.59 < 1.0 ∴ O.K.

Eq. (22): 6.0/37.8 + 29.7/76.2 = 0.55 < 1.0 ∴ O.K.

2.7.7.3.2 Puncture

The NUHOMS®-MP187 Cask is evaluated for the puncture drop test of 10CFR71.73(c)(2) [2.1] in Section 2.7.3. The results of the cask puncture evaluation demonstrate that the cask will not puncture in the event of the postulated puncture drop condition. The drop deceleration loads which result from the puncture drop condition are much lower than those due to the 30-foot free drop. Therefore, the stresses in the FF-DSC and components resulting from the puncture drop condition are bounded by those due to the 30-foot free drop condition.

2.7.7.3.3 Thermal

Section 71.73(c)(3) of the Part 71 regulations [2.1] requires that the package be design to withstand a postulated 30 minute fire at 1475°F. The thermal analysis of the NUHOMS®-MP187 transportation package is presented in Chapter 3. The results from the accident fire thermal analysis show that the temperature of the DSC remains relatively constant during the 30 minute accident fire event due to the insulating properties of the NS3 neutron shielding material and the impact limiter foam. After the postulated 30 minute fire, the neutron shielding material and impact limiter foam become charred, thus increasing their insulating capabilities. This results in higher post-fire temperatures in the DSC and cask and lower thermal gradients in the DSC.

2.7.7.3.3.1 Differential Thermal Expansion

As discussed in the previous section, normal thermal conditions bound accident conditions in terms of temperature gradients. Although temperatures will be higher, the actual temperature difference between the DSC Shell and support plates will be less. Section 2.6.12.1.3 shows that the support plates are free to expand under normal conditions, therefore no further analysis is required.

2.7.7.3.3.2 Thermal Stress Analysis

Thermal stresses thermal gradients in the support plates are bounded by normal conditions for the same reason discussed in the previous section. The thermal gradients are greater during normal conditions than during accident conditions. Therefore the analysis given in Section 2.6.12.1.4 bounds and no further analysis is required.

2.7.7.4 Support Plate Buckling Analysis

The support plate buckling analysis is performed in accordance with the requirements for linear type component supports in F-1334.3 of Reference [2.2]. The maximum compressive load is limited to 2/3 of the buckling load, P, computed in Section 2.7.7.3.1.1 to be 908.2 kips. Therefore the maximum compressive load is limited to 605.5 kips. The maximum compressive load in the support plates due to the 45g end drop is:

$$p = 6.4 \times 45g$$

$$= 288 \text{ kips}$$

This is much lower than the allowable compressive force of 605.5 kips. Therefore, the support plates will not buckle due to the end drop loading.

2.7.7.5 Fuel Can Stress Analyses

2.7.7.5.1 Free Drop

2.7.7.5.1.1 End Drop

As shown in Appendix 2.10.9, the fuel can end drop equivalent static load is 41.3g's. An equivalent static acceleration of 45g is used for the fuel can end drop analysis. The fuel cans are evaluated for the end drop using the criteria of F-1334.5 of Reference [2.2] for linear type components subjected to combined compression and bending loads. The fuel cans support their own weight for the postulated 30-foot end drop condition. The maximum uniform compressive stress in the fuel cans is:

$$f_a = P/A$$

$$= WG/A$$

where;

$$W = 9.25(172.5 - 1.0 - 0.75 - 0.25)0.2853 + 18.39 + 52.64$$

$$= 0.522 \text{ kips}$$

G = 45g, End drop equivalent static acceleration

A = 9.25 in^2, Cross-section area of a Fuel Can

therefore,

$$f_a = (0.522 \times 45)/9.25$$

$$= 2.54 \text{ ksi}$$

There are no bending stresses induced by the spacer plates because the fuel cans are not attached to the spacer discs.

The allowable compressive stress, F_a, is calculated as follows:

$$F_a = P/A_g$$

where P is determined in accordance with F-1334.3 of the ASME Code and A_g is the gross area of the fuel can (9 in^2), as follows:

$$P/P_y = (1-\lambda^2/4)/[1.11 + 0.50\lambda + 0.17\lambda^2 - 0.28\lambda^3]$$

where;

$\lambda = (KL/r)(1/\pi)(S_y/E)^{1/2}$

$P_y = S_yA$

K = 2.0, Factor for fixed-free boundary conditions

L = 172.5 in., Free distance at top end

I = Moment of Inertia of fuel can

= 132.0 in^4

A = 9.25 in^2, Area of fuel can

r = $(132.0/9.25)^{1/2}$, Radius of gyration of fuel can

= 3.78 in.

S_y = 20,600 psi, Yield strength of SA-240, Type 304 at 500°F

E = 26.5 x 10^6 psi, Elastic modulus of SA-240, Type 304 at 407°F

KL/r = (2.0)(172.5)/3.78

= 91.3

Therefore,

$$\lambda = (91.3)(1/\pi)(20600/26.5 \times 10^6)^{1/2}$$

$= 0.81$

$P = (20600 \times 9.25)(1-0.81^2/4)/[1.11 + 0.50(0.81) + 0.17(0.81)^2 - 0.28(0.81)^3]$

$= 107{,}797$ lbs

$F_a = 107.8/9.25$

$= 11.7$ksi

The value of F'_e is determined in accordance with F-1334.5(b) as follows:

$F'_e = \pi^2 E/[1.30(Kl/r)^2]$

$= \pi^2(26.5 \times 10^6)/[1.30(91.3)^2]$

$= 24.2/$ kips

Per F-1334.5 of the ASME Code [2.2], equations (20), (21), and (22) of NF-3322.1(e)(1) must be satisfied to demonstrate structural adequacy. The allowable stresses for service level D conditions are calculated by factoring the service level A allowable stress by the smaller of 2 or $1.167S_u/S_y$ if $S_u > 1.2S_y$ in accordance with F-1334. For the fuel can SA-240, Type 304 steel, this factor is limited to 2.0. This factor is used only in equation (21) for the axial stress term.

Equation (20) is satisfied as follows:

$f_a/F_a + C_{mx}f_{bx}/[(1-f_a/F'_{ex})F_{bx}] + C_{mY}f_{bY}/[(1-f_a/F'_{eY})F_{bY}] \leq 1.0$

$(2.54/11.7) + 0 + 0 = 0.22 \leq 1.0$

Equation (21) is satisfied as follows:

$f_a/(2.0 \times 0.6S_y) + f_{bx}/F_{bx} + f_{bY}/F_{bY} \leq 1.0$

$2.54/(0.6 \times 20.6) + 0 + 0 = 0.21 \leq 1.0$

Equation (22) is satisfied as follows:

$$f_a/F_a + f_{bx}/F_{bx} + f_{bY}/F_{bY} \leq 1.0$$

$$2.54/11.7 + 0 + 0 = 0.22 \leq 1.0$$

Therefore, the fuel cans satisfy the appropriate design criteria for the 30-foot end drop condition.

2.7.7.5.1.2 Side Drop

The failed fuel cans are evaluated for two horizontal side drop orientations: 1) through the flatside of the impact limiter (referred to as flatside horizontal impact), and 2) through the corner of the impact limiter (referred to as corner horizontal impact). As shown in Appendix 2.10.9, the peak g-loads resulting from the cold and hot flatside horizontal impact are 61.1g's and 39.6g's, respectively. The corresponding DLFs for the fuel can are 1.12 and 1.09, respectively (Table 2.10.10.3). Therefore, the cold and hot flatside horizontal impact equivalent static g-loads are 68.5g's and 43.2g's, respectively. The peak g-loads resulting from the corner horizontal impact are 30.6g's for the hot condition and 44.6g's for the cold condition. The corresponding DLFs are 1.25 and 1.33, respectively. Therefore, the equivalent static g-loads for the hot and cold corner horizontal impacts are 38.3g's and 59.3g's, respectively. The failed fuel cans are evaluated for a bounding oblique drop load of 92g's in the tangential direction and 45g's in the longitudinal direction, applied simultaneously, as described in Section 2.7.7.5.1.3. Therefore, the fuel cans need not be evaluated for the side drop impact loads.

2.7.7.5.1.3 Oblique Drop

In the event of an oblique impact, the fuel cans are loaded in the longitudinal direction by their own self weight and in the tangential direction by both their self weight and the weight of the contained fuel assembly. The longitudinal load from the fuel assembly is transferred through the fuel can end plates in bearing directly to the DSC shell end plates and does not load the fuel can body. The fuel can equivalent static oblique drop impact loads are calculated by multiplying the peak g-loads for each oblique drop orientation (Appendix 2.10.9) by the corresponding DLFs calculated in Appendix 2.10.10. The resulting fuel can equivalent static oblique drop loads are summarized in Table 2.7.7-16. The FF-DSC fuel cans are evaluated for the 30-foot drop

condition using bounding longitudinal and tangential accelerations of 42 g's and 93 g's, respectively.

Table 2.7.7-16

Fuel Can Oblique Drop Equivalent Static Loads

Impact Orientation	Ambient Condition	Longitudinal Response			Tangential Response		
		Peak Rigid-Body Acceleration (g's)	Dynamic Load Factor (DLF)	Equivalent Static Acceleration (g's)	Peak Rigid-Body Acceleration (g's)	Dynamic Load Factor (DLF)	Equivalent Static Acceleration (g's)
Flatside 30° Primary Impact	Hot	18.1	1.07	19.4	34.2	1.07	36.6
	Cold	17.6	1.11	19.6	66.6	1.11	74.0
Flatside 30° Slapdown Impact	Hot	3.7	1.35	5.0	46.2	1.35	62.4
	Cold	6.9	1.31	9.1	70.0	1.31	91.7
Flatside 60° Impact	Hot	25.9	1.01	26.2	15.6	1.01	15.8
	Cold	30.3	1.03	31.2	42.8	1.03	44.1
Corner 30° Primary Impact	Hot	16.5	1.01	16.7	32.2	1.01	32.6
	Cold	12.6	1.03	13.0	46.4	1.03	47.8
Corner 30° Slapdown Impact	Hot	1.2	1.24	1.5	40.5	1.24	50.3
	Cold	2.1	1.31	2.8	57.6	1.32	76.1
Corner 60° Impact	Hot	20.9	1.02	21.3	13.1	1.02	13.4
	Cold	22.7	1.02	23.2	32.8	1.02	33.5
Max. Acceleration				31.2			91.7

The fuel cans are evaluated using the criteria of F-1334 of the ASME Code [2.2] for linear type components subjected to combined axial compression and bending loads. The stresses in the fuel cans due to the 35 g longitudinal load are calculated by factoring the stresses calculated for a 45g longitudinal load in Section 2.7.7.5.1.1 by the ratio of the longitudinal loads. The resulting fuel can stresses due to the 35g longitudinal impact load are:

$$f_a = 2.7(35/45)$$

$$= 2.1 \text{ ksi}$$

The fuel can stresses due to the 93 g tangential load are determined by scaling the stresses due to the 25.1 g 1-foot side drop, calculated in Section 2.6.12.3.3, by the ratio of 3.71 (=93/25.1). Therefore, the fuel can stresses due to the 93 g tangential load are:

f_b = 0.4 x 3.71 = 1.5 ksi

f_v = 0.9 x 3.71 = 3.4 ksi

Therefore, the combined fuel can tresses for the bounding oblique drop loads are:

f_a = 2.1 ksi

f_b = 1.5 ksi

f_v = 3.4 ksi

In accordance with F-1334.5 of the ASME Code [2.2], linear type members subjected to combined axial compression and bending must satisfy equations (20), (21), and (22) of NF-3322.1(e)(1), which are:

Eq. 20: $$\frac{f_a}{F_a} + \frac{C_{mx} f_{bx}}{(1 - f_a / F'_{ex}) F_{bx}} + \frac{C_{my} f_{by}}{(1 - f_a / F'_{ey}) F_{by}} \leq 1.0$$

Eq. 21: $$\frac{f_a}{2x0.60S_y} + \frac{f_{bx}}{F_{bx}} + \frac{f_{by}}{F_{by}} \leq 1.0$$

Eq. 22: $$\frac{f_a}{F_a} + \frac{f_{bx}}{F_{bx}} + \frac{f_{by}}{F_{by}} \leq 1.0$$

where the allowable axial stress, F_a, and the allowable Euler stress, F'_e, are calculated in Section 2.7.7.5.1.1. Unless otherwise specified, the allowable stresses for service level D conditions are calculated by factoring the service level A allowable stress by the smaller of 2 or $1.167S_u/S_y$ is $S_u>1.2S_y$ in accordance with F-1334 [2.2]. For the fuel can SA-240, Type 304 steel, this factor is limited to 2.0. This factor is used only in equation (21) for the axial stress term. The allowable bending stress, F_b, determined in accordance with F-1334.4(b) for compact sections, is equal to fS_y, where f is the plastic section factor for a hollow square section, calculated as follows:

$f = Zd/2I$ ([2.7], Table 1, case 3)

where;

$Z = (d_o^3 - d_i^3)/4$

$= (9.50^3 - 9.00^3)/4$

$= 32.1$

d = 9.50 in., Outer dimension of fuel can

I = 132 in^4 per Section 2.6.12.3.3

Therefore, the plastic section factor for the fuel can is:

$f = (32.1)(9.50)/(2 \times 132)$

$= 1.16$

Therefore, the allowable bending stress is:

$F_b = 1.16(19.4)$

$= 22.5$ ksi

Substituting the calculated stresses and allowable stresses in the interaction equations (20), (21), and (22) gives the following:

Eq. 20: $$\frac{2.1}{11.1} + \frac{1.0(1.5)}{[1 - (2.1 / 24.1)](22.5)} = 0.27 \leq 1.0$$

Eq. 21: $$\frac{2.1}{2x0.60(19.4)} + \frac{1.5}{22.5} = 0.16 \leq 1.0$$

Eq. 22: $$\frac{2.1}{11.1} + \frac{1.5}{22.5} = 0.26 \leq 1.0$$

Therefore, the fuel cans satisfy interaction equations (20), (21), and (22) for the bounding oblique drop impact load.

The allowable shear stress allowable is 0.42Su, or 26.7 ksi at 500°F for the fuel can material. The maximum shear stress in the fuel resulting from the bounding oblique drop impact load is 3.4 ksi. Therefore, the fuel can maximum shear stress is within the shear stress limit.

2.7.7.5.2 Puncture

The NUHOMS®-MP187 Cask is evaluated for the puncture drop test of 10CFR71.73(c)(2) [2.1] in Section 2.7.3. The results of the cask puncture evaluation demonstrate that the cask will not puncture in the event of the postulated puncture drop condition. The drop deceleration loads which result from the puncture drop condition are much lower than those due to the 30-foot free drop. Therefore, the stresses in the FF-DSC components resulting from the puncture drop condition are bounded by those due to the 30-foot free drop condition.

2.7.7.5.3 Thermal

2.7.7.5.3.1 Differential Thermal Expansion

As discussed in the previous section, normal thermal conditions bound accident conditions in terms of temperature gradients. Although temperatures will be higher, the actual temperature difference between the DSC Shell and fuel cans will be less. Section 2.6.12.1.3 shows that the support plates are free to expand under normal conditions, therefore no further analysis is required.

2.7.7.5.3.2 Thermal Stress Analysis

Thermal stresses thermal gradients in the support plates are bounded by normal conditions for the same reason discussed in the previous section. The thermal gradients are greater during normal conditions than during accident conditions. Therefore the analysis given in Section 2.6.12.1.4 bounds and no further analysis is required.

2.7.7.6 Fuel Can Buckling Analysis

The fuel can buckling analysis is performed in accordance with the requirements for linear type component supports in F-1334.3 of Reference [2.2]. The maximum compressive load is limited to 2/3 of the buckling load, P, computed in Section 2.7.7.5.1.1 to be 100.2 kips. Therefore the maximum compressive load is limited to 107.8 kips. The maximum compressive load in the fuel cans due to the 45g end drop is:

$$p = 0.522 \times 45g$$

$$= 23.5 \text{ kips}$$

This is much lower than the allowable compressive force. Therefore, the fuel cans will not buckle due to the end drop loading.

2.7.8 HAC Load Combination Evaluation

The NUHOMS®-MP187 package structural components are evaluated for the hypothetical accident conditions presented in Section 2.1.2.3, which were developed in accordance with Regulatory Guide 7.8 [2.3]. The load combination evaluations are presented in the following sections. The results demonstrate that all of the package components meet the applicable design criteria discussed in Section 2.1.2.

2.7.8.1 Cask HAC Load Combinations

The NUHOMS®-MP187 cask is evaluated for the hypothetical accident conditions in Sections 2.7.1 through 2.7.5. The stress components at the 52 cask stress points shown in Figure 2.7.8-1 are combined for the various hypothetical accident condition load combinations. The principal stresses and stress intensities are calculated based upon the combined stress components as follows. The principal stresses and stress intensity at each of the 52 cask stress points shown in Figure 2.7.8-1 by determining the roots of the cubic equation:

$$\sigma^3 - I_1\sigma^2 + I_2\sigma - I_3 = 0$$

where I_1, I_2, and I_3 are the principal invariants of stress and the three roots of the equation (σ_1, σ_2, and σ_3) are the principal stresses. The principal invariants are determined as follows:

$$I_1 = SX^2 + SY^2 + SZ^2$$

$$I_2 = \begin{vmatrix} SX & SXY \\ SXY & SY \end{vmatrix} + \begin{vmatrix} SX & SXZ \\ SXZ & SZ \end{vmatrix} + \begin{vmatrix} SY & SYZ \\ SYZ & SZ \end{vmatrix}$$

$$I_3 = \begin{vmatrix} SX & SXY & SXZ \\ SXY & SY & SYZ \\ SXZ & SYZ & SZ \end{vmatrix}$$

The stress intensity is calculated as the greater of the absolute value of the largest principal stress or the largest difference between principal stresses.

As discussed in Section 2.6.10, fabrication stresses in the cask are insignificant, and consequently, need not be included in the load combination evaluation. The controlling hypothetical accident condition load combinations considered for the cask are:

1.) Free Drop- 30 foot drop.: Three load combination conditions are considered as follows:

A.) Maximum internal pressure (50 psig), maximum fuel decay head load, maximum solar insolation, and 100°F ambient air temperature: The cask drop loads resulting from the hot drop conditions are significantly lower than those resulting from the cold drop conditions, as shown in Table 2.7.1-2. As discussed in Section 2.7.1, the package stresses are only determined for the g-loads resulting from the cold drop conditions. The load combinations including these drop conditions, evaluated in (B) and (C) below, bound those for the hot drop conditions. Therefore, these drop conditions need not be considered.

B.) Maximum internal pressure (50 psig), maximum fuel decay head load, zero solar insolation, and -20°F ambient air temperature: This load combination results in high drop loads due to a cold impact limiter and high temperatures throughout the package. The load combinations for this condition are performed using the drop loads based on zero decay heat (i.e -20°F throughout the package) combined with a 50 psig internal pressure load which is much higher than the internal pressure for the cold ambient condition. In addition, the stress allowables used for this condition are based on a cask design temperature of 300°F, which corresponds to the hot ambient conditions with maximum decay heat load. As shown in Section 2.7.1, the highest cask stresses result from the end drop, side drop, CG over corner, and slapdown drop conditions. Load combination evaluations for each of these drop conditions are discussed below:

1.) End Drop + Max. Internal Pressure: Top and bottom end drops were evaluated separately. For the top end drop, membrane stress intensities are presented in Table 2.7.8-1 and membrane plus bending stress intensities are presented in Table 2.7.8-2. For the bottom end drop, membrane stress intensities are presented in Table 2.7.8-3 and membrane plus bending stress intensities are presented in Table 2.7.8-4. The allowable stress intensities and corresponding margins of safety are also presented in each table.

For the top end drop, the minimum margin of safety for this load combination is +0.74 (+74%) for primary membrane stress intensity at stress point 9 in the top flange.

For the bottom end drop, the minimum margin of safety for this load combination is +1.14 (+114) for primary membrane stress intensity at stress points 21 and 22 of the inner shell.

The cask meets the applicable stress acceptance criteria for this load combination.

2.) Side Drop + Max. Internal Pressure: The cask primary membrane stress intensities resulting from this load combination are presented in Table 2.7.8-31 through Table 2.7.8-35 and membrane plus bending stress intensities are presented Table 2.7.8-36 through Table 2.7.8-40.. The minimum margin of safety for this load combination is +.38 (+38%) for primary membrane stress intensity at stress points 29 and 30 of the cask outer shell. Therefore, the cask meets the applicable stress acceptance criteria for this load combination.

3.) Flatside Slapdown + Max. Internal Pressure: The cask primary membrane stress intensities resulting from this load combination are presented in Table 2.7.8-1 through Table 2.7.8-5, membrane plus bending stress intensities are presented in Table 2.7.8-6 through Table 2.7.8-10. The minimum margin of safety for this load combination is +.60 (+60%) for primary membrane plus bending stress intensity at the top flange. Therefore, the cask meets the applicable stress acceptance criteria for this load combination.

4.) CG Over Corner Drop + Max. Internal Pressure: Separate analyses were performed for the CG over top corner and CG over bottom corner drops. The cask primary membrane stress intensities for the drops plus internal pressure are presented in Table 2.7.8-11 through Table 2.7.8-15 for the CG over top corner and Table 2.7.8-21 through Table 2.7.8-25 for the CG over bottom corner. Membrane plus bending stress intensities are presented in Table 2.7.8-16 through Table 2.7.8-20, and in Table 2.7.8-26 through

Table 2.7.8-30 for the CG over top and bottom corners, respectively.

For the CG over top corner drop, the minimum margin of safety for this load combination is +0.24 (+24%) for primary membrane plus bending stress intensity at stress point 28 in the outer shell.

For the CG over bottom corner drop, the minimum margin of safety for this load combination is +.43 (+43%) for primary membrane plus bending stress intensity at stress point 39 of the outer shell.

C.) Maximum internal pressure (50 psig), zero fuel decay head load, zero solar insolation, and -20°F ambient air temperature: This condition is similar to that described above, but due to the lower cask temperatures, the internal pressure is bounded by that of (B) discussed above. Therefore, the load combinations for this condition are bounded by those presented in (B) and need not be considered.

2.) Puncture- drop onto bar.: The puncture drop load causes very localized stresses in the cask at the point of impact. These puncture loads are opposed by internal pressure loads. The puncture-drop is evaluated at the hot condition. The worst case package stresses result from the puncture drop on the warm cask with no internal pressure load and therefore, no further analysis is required.

3.) Thermal- fire accident: Thermal stresses are classified as secondary stresses. Secondary stresses need not be evaluated for accident load conditions. The cask is evaluated for the accident fire condition in Section 2.7.3 for the effects of low cycle fatigue in accordance with the requirements of Regulatory Guide 7.6 [2.4]. No load combination evaluation of the thermal fire accident is necessary.

FIGURE WITHHELD UNDER 10 CFR 2.390

Tables 2.7.8-1 through 2.7.8-40

THIS SECTION CONTAINS
PROPRIETARY INFORMATION

Table 2.7.8-1
Cask Pm S.I. Summary - 30' Top End Drop + 50 psi Internal Pressure - All Azimuths

Cask Component	Stress Point	Stress Components (ksi)						Principal Stresses (ksi)			SI (ksi)	Stress Limit	M.S.
		S_X	S_Y	S_Z	S_{XY}	S_{YZ}	S_{XZ}	S_1	S_2	S_3			
Top Cover	1	-1.5	-1.4	-1.4	0.0	0.0	0.0	-1.5	-1.4	-1.4	0.1	46.2	Large
	2	-1.5	-1.4	-1.4	0.0	0.0	0.0	-1.5	-1.4	-1.4	0.1	46.2	Large
	3	-1.5	-1.4	-1.4	-1.3	0.0	0.0	-2.7	-1.4	-0.1	2.6	46.2	Large
	4	-1.5	-1.4	-1.4	-1.3	0.0	0.0	-2.7	-1.4	-0.1	2.6	46.2	Large
	5	-8.3	0.3	-4.4	-2.1	0.0	0.0	0.8	-8.8	-4.4	9.6	46.2	382%
	6	-8.3	0.3	-4.4	-2.1	0.0	0.0	0.8	-8.8	-4.4	9.6	46.2	382%
Top Flange	7	1.5	0.1	2.7	-0.6	0.0	0.0	-0.2	1.7	2.7	2.9	46.2	Large
	8	1.5	0.1	2.7	-0.6	0.0	0.0	-0.2	1.7	2.7	2.9	46.2	Large
	9	8.2	-10.1	8.1	1.8	0.0	0.0	-10.2	8.1	8.4	18.7	46.2	148%
	10	8.2	-10.1	8.1	1.8	0.0	0.0	-10.2	8.1	8.4	18.7	46.2	148%
Inner Shell	11	0.4	-7.3	-0.3	3.5	0.0	0.0	-8.6	-0.3	1.7	10.3	46.2	348%
	12	0.4	-7.3	-0.3	3.5	0.0	0.0	-8.6	-0.3	1.7	10.3	46.2	348%
	13	-0.4	-7.8	-22.8	-0.1	0.0	0.0	-22.8	-7.8	-0.4	22.3	46.2	107%
	14	-0.4	-7.8	-22.8	-0.1	0.0	0.0	-22.8	-7.8	-0.4	22.3	46.2	107%
	15	-0.4	-7.6	-19.5	0.0	0.0	0.0	-19.5	-7.6	-0.4	19.1	46.2	142%
	16	-0.4	-7.6	-19.5	0.0	0.0	0.0	-19.5	-7.6	-0.4	19.1	46.2	142%
	17	-0.3	-7.0	-12.4	0.0	0.0	0.0	-0.3	-12.4	-7.0	12.1	46.2	281%
	18	-0.3	-7.0	-12.4	0.0	0.0	0.0	-0.3	-12.4	-7.0	12.1	46.2	281%
	19	-0.1	-6.3	-5.3	0.0	0.0	0.0	-0.1	-6.3	-5.3	6.2	46.2	645%
	20	-0.1	-6.3	-5.3	0.0	0.0	0.0	-0.1	-6.3	-5.3	6.2	46.2	645%
	21	-0.1	-6.1	-2.8	0.0	0.0	0.0	-6.1	-2.8	-0.1	6.0	46.2	667%
	22	-0.1	-6.1	-2.8	0.0	0.0	0.0	-6.1	-2.8	-0.1	6.0	46.2	667%
	23	-0.1	-5.3	-0.8	0.1	0.0	0.0	-5.3	-0.8	-0.1	5.2	46.2	785%
	24	-0.1	-5.3	-0.8	0.1	0.0	0.0	-5.3	-0.8	-0.1	5.2	46.2	785%
	25	-1.7	-2.1	-0.5	0.4	0.0	0.0	-2.3	-1.4	-0.5	1.9	46.2	Large
	26	-1.7	-2.1	-0.5	0.4	0.0	0.0	-2.3	-1.4	-0.5	1.9	46.2	Large
Outer Shell	27	1.4	-2.7	8.3	-1.6	0.0	0.0	8.3	-3.3	1.9	11.5	46.2	300%
	28	1.4	-2.7	8.3	-1.6	0.0	0.0	8.3	-3.3	1.9	11.5	46.2	300%
	29	-1.2	-1.6	11.6	0.2	0.0	0.0	11.6	-1.7	-1.1	13.3	46.2	247%
	30	-1.2	-1.6	11.6	0.2	0.0	0.0	11.6	-1.7	-1.1	13.3	46.2	247%
	31	-0.4	-1.3	11.8	0.0	0.0	0.0	11.8	-1.3	-0.4	13.1	46.2	252%
	32	-0.4	-1.3	11.8	0.0	0.0	0.0	11.8	-1.3	-0.4	13.1	46.2	252%
	33	-0.3	-0.7	7.7	0.0	0.0	0.0	7.7	-0.7	-0.3	8.4	46.2	449%
	34	-0.3	-0.7	7.7	0.0	0.0	0.0	7.7	-0.7	-0.3	8.4	46.2	449%
	35	-0.1	-0.1	3.6	0.0	0.0	0.0	3.6	-0.1	-0.1	3.7	46.2	Large
	36	-0.1	-0.1	3.6	0.0	0.0	0.0	3.6	-0.1	-0.1	3.7	46.2	Large
	37	-0.1	0.5	2.1	0.0	0.0	0.0	2.1	-0.1	0.5	2.3	46.2	Large
	38	-0.1	0.5	2.1	0.0	0.0	0.0	2.1	-0.1	0.5	2.3	46.2	Large
	39	-0.1	0.8	0.6	0.0	0.0	0.0	-0.1	0.6	0.8	0.9	46.2	Large
	40	-0.1	0.8	0.6	0.0	0.0	0.0	-0.1	0.6	0.8	0.9	46.2	Large
Bottom Forging	41	-1.1	0.1	-0.2	0.1	0.0	0.0	-1.1	-0.2	0.1	1.2	46.2	Large
	42	-1.1	0.1	-0.2	0.1	0.0	0.0	-1.1	-0.2	0.1	1.2	46.2	Large
	43	-0.1	0.0	0.1	0.2	0.0	0.0	-0.3	0.1	0.2	0.5	46.2	Large
	44	-0.1	0.0	0.1	0.2	0.0	0.0	-0.3	0.1	0.2	0.5	46.2	Large
	45	-0.8	0.0	1.0	0.0	0.0	0.0	1.0	-0.8	0.0	1.8	46.2	Large
	46	-0.8	0.0	1.0	0.0	0.0	0.0	1.0	-0.8	0.0	1.8	46.2	Large
Ram Access Cover Plate	47	0.3	-0.9	-0.9	0.2	0.0	0.0	0.3	-1.0	-0.9	1.3	66.0	Large
	48	0.3	-0.9	-0.9	0.2	0.0	0.0	0.3	-1.0	-0.9	1.3	66.0	Large
	49	-0.1	-0.8	-0.8	0.1	0.0	0.0	-0.1	-0.8	-0.8	0.7	66.0	Large
	50	-0.1	-0.8	-0.8	0.1	0.0	0.0	-0.1	-0.8	-0.8	0.7	66.0	Large
	51	-0.1	-0.6	-0.6	0.0	0.0	0.0	-0.1	-0.6	-0.6	0.5	66.0	Large
	52	-0.1	-0.6	-0.6	0.0	0.0	0.0	-0.1	-0.6	-0.6	0.5	66.0	Large

HAC_COM2.XLS, TED+IP50

Table 2.7.8-2
Cask $P_m + P_b$ S.I. Summary - 30' Top End Drop + 50 psi Internal Pressure - All Azimuths

Cask Component	Stress Point	Stress Components (ksi)						Principal Stresses (ksi)			SI (ksi)	Stress Limit	M.S.
		S_X	S_Y	S_Z	S_{XY}	S_{YZ}	S_{XZ}	S_1	S_2	S_3			
Top Cover	1	-1.2	21.2	21.2	0.0	0.0	0.0	-1.2	21.2	21.2	22.4	66.0	195%
	2	-1.7	-23.9	-23.9	0.0	0.0	0.0	-1.7	-23.9	-23.9	22.2	66.0	197%
	3	-1.2	12.3	16.0	-1.3	0.0	0.0	-1.4	12.4	16.0	17.4	66.0	280%
	4	-1.7	-15.0	-18.7	-1.3	0.0	0.0	-1.6	-18.7	-15.1	17.1	66.0	285%
	5	-13.1	-9.1	-3.2	-2.1	0.0	0.0	-14.0	-8.2	-3.2	10.8	66.0	510%
	6	-6.0	9.7	-5.5	-2.1	0.0	0.0	10.0	-6.2	-5.5	16.3	66.0	306%
Top Flange	7	2.3	4.6	4.4	-0.6	0.0	0.0	2.2	4.4	4.7	2.5	66.0	Large
	8	0.6	-4.4	1.1	-0.6	0.0	0.0	-4.5	0.6	1.1	5.6	66.0	Large
	9	3.4	-34.3	-0.4	1.8	0.0	0.0	-34.4	-0.4	3.5	37.9	66.0	74%
	10	14.6	13.7	16.5	1.8	0.0	0.0	12.3	16.0	16.5	4.2	66.0	Large
Inner Shell	11	0.1	-24.9	-5.6	3.5	0.0	0.0	-25.4	-5.6	0.6	25.9	66.0	154%
	12	1.0	10.1	4.9	3.5	0.0	0.0	11.3	-0.1	4.9	11.5	66.0	476%
	13	0.0	-7.8	-23.2	-0.1	0.0	0.0	-23.2	-7.8	0.0	23.1	66.0	185%
	14	-0.9	-7.8	-22.4	-0.1	0.0	0.0	-22.4	-7.8	-0.9	21.5	66.0	207%
	15	-0.1	-7.7	-19.9	0.0	0.0	0.0	-19.9	-7.7	-0.1	19.8	66.0	233%
	16	-0.7	-7.5	-19.2	0.0	0.0	0.0	-19.2	-7.5	-0.7	18.4	66.0	259%
	17	-0.1	-7.0	-12.6	0.0	0.0	0.0	-0.1	-12.6	-7.0	12.6	66.0	425%
	18	-0.5	-7.0	-12.2	0.0	0.0	0.0	-0.5	-12.2	-7.0	11.7	66.0	464%
	19	-0.1	-6.4	-5.4	0.0	0.0	0.0	-0.1	-6.4	-5.4	6.3	66.0	943%
	20	-0.2	-6.3	-5.2	0.0	0.0	0.0	-0.2	-6.3	-5.2	6.1	66.0	985%
	21	-0.1	-6.1	-2.8	0.0	0.0	0.0	-6.1	-2.8	-0.1	6.1	66.0	990%
	22	-0.1	-6.1	-2.7	0.0	0.0	0.0	-6.1	-2.7	-0.1	6.0	66.0	Large
	23	-0.2	-5.2	-0.9	0.1	0.0	0.0	-5.2	-0.9	-0.2	5.0	66.0	Large
	24	0.1	-5.3	-0.8	0.1	0.0	0.0	-5.3	-0.8	0.1	5.4	66.0	Large
	25	-1.6	-3.3	-0.7	0.4	0.0	0.0	-3.4	-1.5	-0.7	2.7	66.0	Large
	26	-1.9	-0.9	-0.2	0.4	0.0	0.0	-2.0	-0.7	-0.2	1.8	66.0	Large
Outer Shell	27	1.7	-1.5	9.0	-1.6	0.0	0.0	9.0	-2.1	2.4	11.1	66.0	492%
	28	1.0	-3.9	7.5	-1.6	0.0	0.0	7.5	-4.4	1.5	11.9	66.0	453%
	29	-1.2	1.6	13.0	0.2	0.0	0.0	13.0	-1.2	1.6	14.3	66.0	363%
	30	-1.3	-4.7	10.2	0.2	0.0	0.0	10.2	-4.7	-1.3	14.9	66.0	343%
	31	-0.8	-1.8	12.0	0.0	0.0	0.0	12.0	-1.8	-0.8	13.8	66.0	378%
	32	0.0	-0.9	11.5	0.0	0.0	0.0	11.5	-0.9	0.0	12.4	66.0	430%
	33	-0.5	-0.7	8.0	0.0	0.0	0.0	8.0	-0.7	-0.5	8.7	66.0	662%
	34	0.0	-0.7	7.5	0.0	0.0	0.0	7.5	-0.7	0.0	8.2	66.0	708%
	35	-0.2	-0.2	3.7	0.0	0.0	0.0	3.7	-0.2	-0.2	3.9	66.0	Large
	36	0.0	0.1	3.5	0.0	0.0	0.0	3.5	0.0	0.1	3.5	66.0	Large
	37	-0.1	0.2	2.1	0.0	0.0	0.0	2.1	-0.1	0.2	2.3	66.0	Large
	38	-0.1	0.8	2.1	0.0	0.0	0.0	2.1	-0.1	0.8	2.2	66.0	Large
	39	-0.8	0.7	0.6	0.0	0.0	0.0	-0.8	0.6	0.7	1.5	66.0	Large
	40	0.0	1.0	0.7	0.0	0.0	0.0	0.0	0.7	1.0	1.0	66.0	Large
Bottom Forging	41	-3.4	-1.2	-0.4	0.1	0.0	0.0	-3.4	-1.2	-0.4	3.0	66.0	Large
	42	-0.2	1.4	0.0	0.1	0.0	0.0	1.4	-0.2	0.0	1.7	66.0	Large
	43	-0.1	0.3	1.5	0.2	0.0	0.0	1.5	-0.2	0.4	1.6	66.0	Large
	44	-0.1	-0.2	-1.2	0.2	0.0	0.0	-1.2	-0.4	0.1	1.3	66.0	Large
	45	-0.3	1.8	2.7	0.0	0.0	0.0	-0.3	1.8	2.7	3.0	66.0	Large
	46	-1.0	-1.7	-0.8	0.0	0.0	0.0	-1.7	-1.0	-0.8	0.9	66.0	Large
Ram Access Cover Plate	47	0.3	-0.4	-0.1	0.2	0.0	0.0	0.4	-0.5	-0.1	0.9	94.3	Large
	48	0.1	-1.4	-1.6	0.2	0.0	0.0	0.2	-1.6	-1.4	1.8	94.3	Large
	49	0.0	0.4	0.4	0.1	0.0	0.0	0.0	0.4	0.5	0.4	94.3	Large
	50	-0.2	-2.0	-2.0	0.1	0.0	0.0	-0.2	-2.0	-2.0	1.8	94.3	Large
	51	-0.1	0.8	0.7	0.0	0.0	0.0	-0.1	0.7	0.8	0.8	94.3	Large
	52	-0.1	-2.0	-1.9	0.0	0.0	0.0	-0.1	-2.0	-1.9	1.8	94.3	Large

HAC_COM2.XLS, TED+IP50

Table 2.7.8-3
Cask P_m S.I. Summary - 30' Bottom End Drop + 50 psi Internal Pressure - All Azimuths

Cask Component	Stress Point	Stress Components (ksi)						Principal Stresses (ksi)			SI (ksi)	Stress Limit	M.S.
		S_X	S_Y	S_Z	S_{XY}	S_{YZ}	S_{XZ}	S_1	S_2	S_3			
Top Cover	1	-0.1	0.0	0.0	0.0	0.0	0.0	-0.1	0.0	0.0	0.1	46.2	Large
	2	-0.1	0.0	0.0	0.0	0.0	0.0	-0.1	0.0	0.0	0.1	46.2	Large
	3	-0.1	0.0	0.0	-0.2	0.0	0.0	-0.3	0.0	0.2	0.4	46.2	Large
	4	-0.1	0.0	0.0	-0.2	0.0	0.0	-0.3	0.0	0.2	0.4	46.2	Large
	5	-1.9	0.5	-0.4	-0.3	0.0	0.0	-1.9	-0.4	0.6	2.5	46.2	Large
	6	-1.9	0.5	-0.4	-0.3	0.0	0.0	-1.9	-0.4	0.6	2.5	46.2	Large
Top Flange	7	0.7	0.7	0.9	-0.4	0.0	0.0	0.3	0.9	1.1	0.8	46.2	Large
	8	0.7	0.7	0.9	-0.4	0.0	0.0	0.3	0.9	1.1	0.8	46.2	Large
	9	0.4	-3.9	-0.4	0.0	0.0	0.0	-3.9	-0.4	0.4	4.3	46.2	974%
	10	0.4	-3.9	-0.4	0.0	0.0	0.0	-3.9	-0.4	0.4	4.3	46.2	974%
Inner Shell	11	-0.1	-6.0	-1.7	-0.3	0.0	0.0	-6.0	-1.7	-0.1	5.9	46.2	682%
	12	-0.1	-6.0	-1.7	-0.3	0.0	0.0	-6.0	-1.7	-0.1	5.9	46.2	682%
	13	-0.1	-6.8	-2.3	0.0	0.0	0.0	-6.8	-2.3	-0.1	6.7	46.2	585%
	14	-0.1	-6.8	-2.3	0.0	0.0	0.0	-6.8	-2.3	-0.1	6.7	46.2	585%
	15	-0.1	-7.0	-4.7	0.0	0.0	0.0	-0.1	-7.0	-4.7	6.9	46.2	570%
	16	-0.1	-7.0	-4.7	0.0	0.0	0.0	-0.1	-7.0	-4.7	6.9	46.2	570%
	17	-0.3	-7.7	-11.7	0.0	0.0	0.0	-0.3	-11.7	-7.7	11.4	46.2	304%
	18	-0.3	-7.7	-11.7	0.0	0.0	0.0	-0.3	-11.7	-7.7	11.4	46.2	304%
	19	-0.4	-8.3	-18.8	0.0	0.0	0.0	-18.8	-8.3	-0.4	18.4	46.2	151%
	20	-0.4	-8.3	-18.8	0.0	0.0	0.0	-18.8	-8.3	-0.4	18.4	46.2	151%
	21	-0.4	-8.5	-22.1	0.0	0.0	0.0	-22.1	-8.5	-0.4	21.6	46.2	114%
	22	-0.4	-8.5	-22.1	0.0	0.0	0.0	-22.1	-8.5	-0.4	21.6	46.2	114%
	23	0.1	-7.9	1.3	-3.8	0.0	0.0	-9.4	1.3	1.6	11.0	46.2	319%
	24	0.1	-7.9	1.3	-3.8	0.0	0.0	-9.4	1.3	1.6	11.0	46.2	319%
	25	-0.9	-3.6	5.8	-1.5	0.0	0.0	5.8	-4.3	-0.3	10.0	46.2	360%
	26	-0.9	-3.6	5.8	-1.5	0.0	0.0	5.8	-4.3	-0.3	10.0	46.2	360%
Outer Shell	27	0.0	1.1	0.9	0.1	0.0	0.0	0.0	0.9	1.1	1.1	46.2	Large
	28	0.0	1.1	0.9	0.1	0.0	0.0	0.0	0.9	1.1	1.1	46.2	Large
	29	0.0	0.8	1.9	0.0	0.0	0.0	1.9	0.0	0.8	2.0	46.2	Large
	30	0.0	0.8	1.9	0.0	0.0	0.0	1.9	0.0	0.8	2.0	46.2	Large
	31	-0.1	0.3	3.1	0.0	0.0	0.0	3.1	-0.1	0.3	3.2	46.2	Large
	32	-0.1	0.3	3.1	0.0	0.0	0.0	3.1	-0.1	0.3	3.2	46.2	Large
	33	-0.3	-0.4	7.3	0.0	0.0	0.0	7.3	-0.4	-0.3	7.7	46.2	501%
	34	-0.3	-0.4	7.3	0.0	0.0	0.0	7.3	-0.4	-0.3	7.7	46.2	501%
	35	-0.4	-1.0	11.4	0.0	0.0	0.0	11.4	-1.0	-0.4	12.4	46.2	272%
	36	-0.4	-1.0	11.4	0.0	0.0	0.0	11.4	-1.0	-0.4	12.4	46.2	272%
	37	-1.1	-1.3	11.3	-0.1	0.0	0.0	11.3	-1.4	-1.0	12.6	46.2	265%
	38	-1.1	-1.3	11.3	-0.1	0.0	0.0	11.3	-1.4	-1.0	12.6	46.2	265%
	39	1.1	-2.7	5.8	1.7	0.0	0.0	-3.3	1.8	5.8	9.2	46.2	404%
	40	1.1	-2.7	5.8	1.7	0.0	0.0	-3.3	1.8	5.8	9.2	46.2	404%
Bottom Forging	41	-8.2	-0.3	-2.3	0.3	0.0	0.0	-8.2	-2.3	-0.3	7.9	46.2	488%
	42	-8.2	-0.3	-2.3	0.3	0.0	0.0	-8.2	-2.3	-0.3	7.9	46.2	488%
	43	-1.5	-0.7	-0.6	1.4	0.0	0.0	-2.6	-0.6	0.4	2.9	46.2	Large
	44	-1.5	-0.7	-0.6	1.4	0.0	0.0	-2.6	-0.6	0.4	2.9	46.2	Large
	45	-6.2	0.4	7.7	0.6	0.0	0.0	7.7	-6.2	0.5	14.0	46.2	231%
	46	-6.2	0.4	7.7	0.6	0.0	0.0	7.7	-6.2	0.5	14.0	46.2	231%
Ram Access Cover Plate	47	0.5	-6.8	-7.2	2.4	0.0	0.0	1.2	-7.5	-7.2	8.8	66.0	654%
	48	0.5	-6.8	-7.2	2.4	0.0	0.0	1.2	-7.5	-7.2	8.8	66.0	654%
	49	-0.6	-5.9	-6.0	1.0	0.0	0.0	-0.4	-6.1	-6.0	5.6	66.0	Large
	50	-0.6	-5.9	-6.0	1.0	0.0	0.0	-0.4	-6.1	-6.0	5.6	66.0	Large
	51	-1.3	-4.4	-4.4	0.0	0.0	0.0	-1.3	-4.4	-4.4	3.1	66.0	Large
	52	-1.3	-4.4	-4.4	0.0	0.0	0.0	-1.3	-4.4	-4.4	3.1	66.0	Large

HAC_COM2.XLS, BED+IP50

Table 2.7.8-4
Cask $P_m + P_b$ S.I. Summary - 30' Bottom End Drop + 50 psi Internal Pressure - All Azimuths

Cask Component	Stress Point	Stress Components (ksi)						Principal Stresses (ksi)			SI (ksi)	Stress Limit	M.S.
		S_X	S_Y	S_Z	S_{XY}	S_{YZ}	S_{XZ}	S_1	S_2	S_3			
Top Cover	1	-0.1	2.4	2.4	0.0	0.0	0.0	-0.1	2.4	2.4	2.5	66.0	Large
	2	-0.1	-2.4	-2.4	0.0	0.0	0.0	-0.1	-2.4	-2.4	2.3	66.0	Large
	3	-0.1	0.9	1.6	-0.2	0.0	0.0	-0.1	1.0	1.6	1.7	66.0	Large
	4	-0.1	-0.9	-1.5	-0.2	0.0	0.0	-0.1	-1.5	-1.0	1.5	66.0	Large
	5	-3.3	-2.2	-1.4	-0.3	0.0	0.0	-3.4	-2.1	-1.4	2.0	66.0	Large
	6	-1.3	3.3	0.6	-0.3	0.0	0.0	3.3	-1.3	0.6	4.6	66.0	Large
Top Flange	7	1.2	1.9	1.4	-0.4	0.0	0.0	2.1	1.1	1.4	1.1	66.0	Large
	8	0.3	-0.6	0.3	-0.4	0.0	0.0	-0.7	0.3	0.4	1.2	66.0	Large
	9	0.2	-5.3	-0.8	0.0	0.0	0.0	-5.3	-0.8	0.2	5.5	66.0	Large
	10	0.6	-2.6	0.1	0.0	0.0	0.0	-2.6	0.1	0.6	3.2	66.0	Large
Inner Shell	11	-0.2	-4.0	-1.1	-0.3	0.0	0.0	-4.0	-1.1	-0.2	3.9	66.0	Large
	12	-0.1	-8.0	-2.2	-0.3	0.0	0.0	-8.0	-2.2	-0.1	7.9	66.0	738%
	13	-0.1	-6.9	-2.4	0.0	0.0	0.0	-6.9	-2.4	-0.1	6.8	66.0	866%
	14	-0.1	-6.8	-2.3	0.0	0.0	0.0	-6.8	-2.3	-0.1	6.7	66.0	892%
	15	-0.1	-7.0	-4.8	0.0	0.0	0.0	-0.1	-7.0	-4.8	7.0	66.0	843%
	16	-0.2	-7.0	-4.6	0.0	0.0	0.0	-0.2	-7.0	-4.6	6.8	66.0	870%
	17	-0.1	-7.7	-11.9	0.0	0.0	0.0	-0.1	-11.9	-7.7	11.9	66.0	456%
	18	-0.5	-7.7	-11.5	0.0	0.0	0.0	-0.5	-11.5	-7.7	11.0	66.0	498%
	19	-0.1	-8.4	-19.2	0.0	0.0	0.0	-19.2	-8.4	-0.1	19.1	66.0	245%
	20	-0.7	-8.2	-18.5	0.0	0.0	0.0	-18.5	-8.2	-0.7	17.7	66.0	272%
	21	-0.1	-8.5	-22.5	0.0	0.0	0.0	-22.5	-8.5	-0.1	22.4	66.0	195%
	22	-0.8	-8.6	-21.7	0.0	0.0	0.0	-21.7	-8.6	-0.8	20.9	66.0	216%
	23	-0.8	-30.8	-5.7	-3.8	0.0	0.0	-31.2	-5.7	-0.4	30.9	66.0	114%
	24	1.7	14.7	8.2	-3.8	0.0	0.0	0.7	8.2	15.8	15.1	66.0	338%
	25	-8.6	-23.6	-1.7	-1.5	0.0	0.0	-23.8	-8.4	-1.7	22.0	66.0	199%
	26	8.0	15.9	13.3	-1.5	0.0	0.0	7.7	13.3	16.1	8.5	66.0	680%
Outer Shell	27	-0.1	1.0	0.9	0.1	0.0	0.0	-0.1	0.9	1.0	1.1	66.0	Large
	28	0.0	1.2	0.9	0.1	0.0	0.0	0.0	0.9	1.2	1.2	66.0	Large
	29	-0.1	0.4	1.9	0.0	0.0	0.0	1.9	-0.1	0.4	2.0	66.0	Large
	30	0.0	1.2	2.0	0.0	0.0	0.0	0.0	1.2	2.0	2.0	66.0	Large
	31	-0.2	0.1	3.2	0.0	0.0	0.0	3.2	-0.2	0.1	3.4	66.0	Large
	32	0.0	0.4	3.1	0.0	0.0	0.0	3.1	0.0	0.4	3.1	66.0	Large
	33	-0.5	-0.4	7.5	0.0	0.0	0.0	7.5	-0.5	-0.4	8.0	66.0	722%
	34	0.0	-0.4	7.1	0.0	0.0	0.0	7.1	-0.4	0.0	7.5	66.0	786%
	35	-0.8	-1.3	11.7	0.0	0.0	0.0	11.7	-1.3	-0.8	13.0	66.0	407%
	36	0.0	-0.7	11.1	0.0	0.0	0.0	11.1	-0.7	0.0	11.8	66.0	458%
	37	-1.2	2.2	12.7	-0.1	0.0	0.0	12.7	-1.2	2.2	13.9	66.0	374%
	38	-1.1	-4.7	9.8	-0.1	0.0	0.0	9.8	-4.7	-1.1	14.5	66.0	355%
	39	9.3	-4.4	5.7	1.7	0.0	0.0	-4.6	5.7	9.5	14.1	66.0	369%
	40	0.6	-1.0	5.9	1.7	0.0	0.0	5.9	-2.1	1.7	8.0	66.0	721%
Bottom Forging	41	-26.7	-2.6	1.7	0.3	0.0	0.0	-26.7	-2.6	1.7	28.4	66.0	133%
	42	-2.2	2.0	-6.3	0.3	0.0	0.0	2.0	-6.3	-2.2	8.3	66.0	691%
	43	-1.1	4.3	13.6	1.4	0.0	0.0	13.6	-1.5	4.6	15.1	66.0	337%
	44	-1.9	-5.7	-14.7	1.4	0.0	0.0	-14.7	-6.2	-1.4	13.3	66.0	396%
	45	-2.6	13.5	24.3	0.6	0.0	0.0	-2.6	13.5	24.3	26.9	66.0	146%
	46	-7.7	-12.6	-8.8	0.6	0.0	0.0	-12.7	-8.8	-7.6	5.1	66.0	Large
Ram Access Cover Plate	47	1.4	-3.4	-0.5	2.4	0.0	0.0	-4.4	-0.5	2.4	6.8	94.3	Large
	48	-0.4	-10.2	-14.0	2.4	0.0	0.0	0.2	-14.0	-10.8	14.1	94.3	567%
	49	1.0	6.0	5.7	1.0	0.0	0.0	0.8	5.7	6.2	5.3	94.3	Large
	50	-2.2	-17.8	-17.8	1.0	0.0	0.0	-2.2	-17.9	-17.8	15.7	94.3	501%
	51	-0.4	9.1	9.1	0.0	0.0	0.0	-0.4	9.1	9.1	9.5	94.3	893%
	52	-1.9	-17.8	-17.8	0.0	0.0	0.0	-1.9	-17.8	-17.8	15.9	94.3	493%

HAC_COM2.XLS, BED+IP50

2.7.8.2 FO, FC, and FF DSC HAC Load Combinations

The FO-, FC, and FF-DSC basket assembly components are not part of the pressure boundary, and as such experience no stress due to pressure loads. The most significant stresses in the basket components result from the hypothetical 30 foot drop conditions. The controlling hypothetical accident load combination is the 30 foot drop combined with normal thermal loads. Thermal stresses are classified as secondary stresses, and as such are not required to meet any stress allowables for hypothetical accident conditions. Therefore, load combination evaluations of the basket components need not be performed for comparison to the stress limits. The thermal stresses do however contribute significantly to the buckling behavior of the spacer discs. This is due to the high compressive stresses in the spacer discs due to normal condition thermal gradient. The buckling evaluation of the spacer discs includes both stresses due to normal thermal and those due to the controlling 30 foot drop conditions. The buckling analysis demonstrates that the spacer discs meet the applicable buckling acceptance criteria.

2.8 Special Form

Special form materials are not part of the payloads considered for the MP187 cask.

2.9 Fuel Rods

As discussed in Chapter 4, containment of the radioactive materials is provided by the cask containment boundary. Analyses of the cask containment boundary for all normal conditions of transport and hypothetical accident conditions defined by the Part 71 Regulations [2.1] demonstrate that the cask remains leak tight.