Draft

APPENDIX A

TECHNICAL SPECIFICATIONS
FOR THE NAC-MPC SYSTEM

AMENDMENT 5

Table of Contents

A 1.0 USE AND APPLICATION A1-1
A 1.1 Definitions A1-1
A 1.2 Logical Connectors A1-7
A 1.3 Completion Times A1-10
A 1.4 Frequency A1-14

A 2.0 [Reserved] A2-1

A 3.0 LIMITING CONDITION FOR OPERATION (LCO) APPLICABILITY A3-1
SURVEILLANCE REQUIREMENT (SR) APPLICABILITY A3-2
A 3.1 NAC-MPC SYSTEM Integrity A3-4
A 3.1.1 CANISTER Maximum Time in Vacuum Drying A3-4
A 3.1.2 CANISTER Vacuum Drying Pressure A3-7
A 3.1.3 CANISTER Helium Backfill Pressure A3-8
A 3.1.4 CANISTER Maximum Time in TRANSFER CASK A3-9
A 3.1.5 CANISTER Helium Leak Rate A3-12
A 3.1.6 CONCRETE CASK Heat Removal System A3-13
A 3.1.7 Fuel Cooldown Requirements A3-15
A 3.1.8 [Deleted] A3-17
A 3.2 NAC-MPC SYSTEM Radiation Protection A3-20
A 3.2.1 CANISTER Surface Contamination A3-20
A 3.2.2 CONCRETE CASK Average Surface Dose Rates A3-21

Figure A3-1 CONCRETE CASK Average Surface Dose Rates A3-23

A 4.0 [Reserved] A4-1

A 5.0 ADMINISTRATIVE CONTROLS AND PROGRAMS A5-1
A 5.1 Training Program A5-1
A 5.2 Preoperational Testing and Training Exercises A5-1
A 5.3 Surveillance After an Off-Normal, Accident, or Natural Phenomena Event A5-2
A 5.4 Radioactive Effluent Control Program A5-3
A 5.5 NAC-MPC SYSTEM Transport Evaluation Program A5-3

A 1.0 USE AND APPLICATION

A 1.1 Definitions

----------NOTE----------

The defined terms of this section appear in capitalized type and are applicable to the Technical Specifications and description of the Approved Contents and NAC-MPC Design Features.

Term	Definition
ACTIONS	ACTIONS shall be that part of a Specification that prescribes Required Actions to be taken under designated Conditions within specified Completion Times.
CANISTER	See TRANSPORTABLE STORAGE CANISTER
CANISTER HANDLING FACILITY	The CANISTER HANDLING FACILITY includes the following components and equipment: (1) a canister transfer station that allows the staging of the TRANSFER CASK with the CONCRETE CASK or transport cask to facilitate CANISTER lifts involving spent fuel handling not covered by 10 CFR 50; and (2) either a stationary lift device or mobile lifting device used to lift the TRANSFER CASK and CANISTER.
CONCRETE CASK	See VERTICAL CONCRETE CASK
CY-MPC	CY-MPC is a NAC-MPC SYSTEM having a fuel basket designed to accommodate Connecticut Yankee reactor spent fuel. The CY-MPC meets the NAC-MPC SYSTEM requirements.
CY-MPC DAMAGED FUEL CAN	A stainless steel container that confines a damaged Connecticut Yankee spent fuel assembly, but allows gaseous and liquid media to escape, while minimizing the dispersal of gross particulates. Connecticut Yankee DAMAGED FUEL ASSEMBLIES must be loaded in a CY-MPC DAMAGED FUEL CAN. The CY-MPC DAMAGED FUEL CAN may also hold an INTACT FUEL ASSEMBLY, LATTICE or a FAILED ROD STORAGE CANISTER.

(continued)

CY-MPC RECONFIGURED FUEL ASSEMBLY	A stainless steel container, having external dimensions that are slightly larger than a standard Connecticut Yankee fuel assembly, that ensures criticality control geometry and which permits gaseous and liquid media to escape while minimizing dispersal of gross particulate. It may contain a maximum of 100 INTACT FUEL RODS or DAMAGED FUEL RODS, or FUEL DEBRIS from any Connecticut Yankee spent fuel assembly.
DAMAGED FUEL ASSEMBLY	A fuel assembly containing at least one DAMAGED FUEL ROD or that cannot be handled by normal means, or both. Yankee class fuel assemblies containing up to 20 fuel rod positions that are either missing or that are holding DAMAGED FUEL RODS.
DAMAGED FUEL ROD	DAMAGED FUEL ROD is a fuel rod with a known or suspected cladding defect greater than a hairline crack or pinhole leak.
FAILED ROD STORAGE CANISTER	A handling container for moving up to 60 individual INTACT FUEL RODS or DAMAGED FUEL RODS in stainless steel tubes into a CY-MPC DAMAGED FUEL CAN. The steel tubes are held in place by regularly spaced plates welded in an open stainless steel frame. The FAILED ROD STORAGE CANISTER, which is closed at the top end by a bolted closure and at the bottom by a welded plate to capture the fuel rods in the tubes, must be loaded in a CY-MPC DAMAGED FUEL CAN.
FORCED AIR COOLING	Air delivered to the bottom eight ports of the TRANSFER CASK at a minimum rate of 250 CFM and a maximum air temperature of 75°F for Yankee-MPC and at a minimum rate of 375 CFM and a maximum air temperature of 75ºF for CY-MPC. The canister must be backfilled with helium.
FUEL DEBRIS	FUEL DEBRIS is fuel in the form of particles, loose pellets, and fragmented rods or assemblies.
INDEPENDENT SPENT FUEL STORAGE INSTALLATION (ISFSI)	The facility within the perimeter fence licensed for storage of spent fuel within NAC-MPC SYSTEMs (see also 10 CFR 72.3).
INTACT FUEL ASSEMBLY	INTACT FUEL ASSEMBLY is a fuel assembly without DAMAGED FUEL RODS. Connecticut Yankee fuel assemblies with missing fuel rods, or with missing fuel rods replaced with solid filler rods, or with structural damage, are considered INTACT FUEL ASSEMBLIES provided that they have no DAMAGED FUEL RODS. Yankee Class fuel assemblies with missing fuel rods replaced with Zircaloy or stainless steel rods, or with structural damage, are considered INTACT FUEL ASSEMBLIES provided they have no DAMAGED FUEL RODS.

(continued)

INTACT FUEL ROD	INTACT FUEL ROD is a fuel rod without known or suspected cladding defects greater than a pinhole leak or hairline crack.
LATTICE	A fuel assembly structure that is used to hold up to 204 INTACT FUEL RODS or DAMAGED FUEL RODS from other fuel assemblies. A LATTICE is sometimes called a fuel skeleton, cage or structural cage. It is built from the same components as a standard fuel assembly, but some of those components may be modified slightly, such as relaxed grids, to accommodate the distortion that may be present in a DAMAGED FUEL ROD. The outside dimensions are identical to a standard fuel assembly.
LOADING CATEGORY (LOADING CATEGORIES)	The LOADING CATEGORY defines allowable combinations of maximum total canister decay heat and maximum fuel assembly decay heat for the CY-MPC. They are used to determine operational time limits during LOADING OPERATIONS or TRANSFER OPERATIONS.
LOADING OPERATIONS	LOADING OPERATIONS include all activities on an NAC-MPC SYSTEM while it is being loaded with fuel assemblies. LOADING OPERATIONS begin when the first fuel assembly is placed in the CANISTER and end when the NAC-MPC SYSTEM is secured on the transporter. LOADING OPERATIONS do not include post-storage operations, i.e., CANISTER transfer operations between the TRANSFER CASK and the CONCRETE CASK or transport cask after STORAGE OPERATIONS.
NAC-MPC SYSTEM	NAC-MPC SYSTEM includes the components approved for loading and storage of spent fuel assemblies at the ISFSI. The NAC-MPC SYSTEM consists of a CONCRETE CASK, a TRANSFER CASK, and a CANISTER. The NAC-MPC SYSTEM is provided in two configurations: the YANKEE-MPC and the CY-MPC.
OPERABLE	An OPERABLE CONCRETE CASK heat removal system transfers sufficient heat away from the fuel assemblies such that the fuel cladding, CANISTER component and CONCRETE CASK temperatures do not exceed applicable limits. The CONCRETE CASK heat removal system is considered OPERABLE if the difference between the ISFSI ambient temperature and the average outlet air temperature is ≤ 92°F for the YANKEE-MPC or

OPERABLE (continued)	≤ 110°F for the CY-MPC or if all four air inlet and outlet screens are visually verified to be unobstructed. Failing this, a CONCRETE CASK heat removal system may be declared OPERABLE if an engineering evaluation determines the CONCRETE CASK has adequate heat transfer capabilities to assure continued spent fuel, CANISTER and CONCRETE CASK integrity.
RETAINER	A retainer used for the Gulf United Nuclear Fuel (GUNF) lead test assemblies to retain the removable fuel rods within the fuel assembly.
STORAGE OPERATIONS	STORAGE OPERATIONS include all activities that are performed at the ISFSI, while an NAC-MPC SYSTEM containing spent fuel is located on the storage pad within the ISFSI perimeter.
STRUCTURAL DAMAGE	Damage to the fuel assembly that does not prevent handling the fuel assembly by normal means. STRUCTURAL DAMAGE is defined as partially torn, abraded, dented or bent grid straps, end fittings or guide tubes. The damaged grid straps or end fittings must continue to provide support to the fuel rods, as designed, and may not be completely torn or missing. Guide tubes cannot be ruptured and must be continuous between the upper and lower end fittings. Fuel assemblies with STRUCTURAL DAMAGE are considered to be INTACT FUEL ASSEMBLIES provided that they do not have failed or DAMAGED FUEL RODS.
TRANSFER CASK	TRANSFER CASK is a shielded lifting device that holds the CANISTER during LOADING and UNLOADING OPERATIONS and during closure welding, vacuum drying, leak testing, and non-destructive examination of the CANISTER closure welds. The TRANSFER CASK is also used to transfer the CANISTER into and from the CONCRETE CASK and into the transport cask.
TRANSFER OPERATIONS	TRANSFER OPERATIONS include all activities involved in transferring a loaded CANISTER from a CONCRETE CASK to another CONCRETE CASK, to a TRANSPORT CASK, or to an appropriate location for unloading.

(continued)

TRANSPORTABLE STORAGE CANISTER (CANISTER)	TRANSPORTABLE STORAGE CANISTER is a container consisting of a tube and disk fuel basket in a cylindrical canister shell welded to a baseplate. When the shield lid with welded port covers, and structural lid are welded in place, the CANISTER provides the confinement boundary for the confined spent fuel.
TRANSPORT OPERATIONS	TRANSPORT OPERATIONS include all activities involved in moving a loaded NAC-MPC CONCRETE CASK and CANISTER to and from the ISFSI. TRANSPORT OPERATIONS begin when the NAC-MPC SYSTEM is first secured on the transporter and end when the NAC-MPC SYSTEM is at its destination and no longer secured on the transporter.
UNLOADING OPERATIONS	UNLOADING OPERATIONS include all activities on a NAC-MPC SYSTEM to be unloaded of the contained fuel assemblies. UNLOADING OPERATIONS begin when the NAC-MPC SYSTEM is no longer secured on the transporter and end when the last fuel assembly is removed from the NAC-MPC SYSTEM.
VERTICAL CONCRETE CASK (CONCRETE CASK)	VERTICAL CONCRETE CASK is the cask that receives and holds the sealed CANISTER. It provides the gamma and neutron shielding and convective cooling of the spent fuel confined in the CANISTER.
WATER COOLING	Placement of the TRANSFER CASK holding an NAC-MPC CANISTER in the spent fuel pool. The canister must be backfilled with helium. WATER COOLING shall be maintained for a minimum of 24 hours, once initiated.
YANKEE-MPC	YANKEE-MPC is a NAC-MPC SYSTEM having a fuel basket designed to accommodate Yankee Class spent fuel. The YANKEE-MPC meets the requirements designated for the NAC-MPC SYSTEM.
YANKEE-MPC DAMAGED FUEL CAN	A stainless steel container that is similar to an enlarged fuel tube and that confines a Yankee Class INTACT FUEL ASSEMBLY, DAMAGED FUEL ASSEMBLY, RECAGED FUEL ASSEMBLY or a RECONFIGURED FUEL ASSEMBLY. A damaged fuel can is closed on its end by screened openings that allow gaseous and liquid media to escape, but minimize the dispersal of gross particulate. Use of the damaged fuel can requires that four cans be used in the canister in conjunction with a special shield lid machined to accept the cans.

(continued)

YANKEE-MPC RECAGED FUEL ASSEMBLY	A Yankee Class Combustion Engineering fuel assembly LATTICE (skeleton) holding United Nuclear fuel rods with no empty fuel rod positions.
YANKEE-MPC RECONFIGURED FUEL ASSEMBLY	A stainless steel canister having the same external dimensions as a standard Yankee Class fuel assembly, that ensures criticality control geometry and which permits gaseous and liquid media to escape while minimizing dispersal of gross particulates. It may contain a maximum of 64 INTACT FUEL RODS or DAMAGED FUEL RODS, or FUEL DEBRIS from any type of Yankee Class spent fuel assembly.

A 1.0 USE AND APPLICATION

A 1.2 Logical Connectors

PURPOSE

The purpose of this section is to explain the meaning of logical connectors.

Logical connectors are used in Technical Specifications (TS) to discriminate between, and yet connect, discrete Conditions, Required Actions, Completion Times, Surveillances, and Frequencies. The only logical connectors that appear in Technical Specifications are "AND" and "OR." The physical arrangement of these connectors constitutes logical conventions with specific meanings.

BACKGROUND

Several levels of logic may be used to state Required Actions. These levels are identified by the placement (or nesting) of the logical connectors and by the number assigned to each Required Action. The first level of logic is identified by the first digit of the number assigned to a Required Action and the placement of the logical connector in the first level of nesting (i.e., left justified with the number of the Required Action). The successive levels of logic are identified by additional digits of the Required Action number and by successive indentations of the logical connectors.

When logical connectors are used to state a Condition, Completion Time, Surveillance, or Frequency, only the first level of logic is used; the logical connector is left justified with the statement of the Condition, Completion Time, Surveillance, or Frequency.

(continued)

EXAMPLES The following examples illustrate the use of logical connectors.

EXAMPLES EXAMPLE 1.2-1

ACTIONS

CONDITION	REQUIRED ACTION	COMPLETION TIME
A. LCO not met	A.1 Verify. . . AND A.2 Restore. . .	

In this example, the logical connector "AND" is used to indicate that when in Condition A, both Required Actions A.1 and A.2 must be completed.

(continued)

EXAMPLES (continued)

EXAMPLE 1.2-2

ACTIONS

CONDITION	REQUIRED ACTION		COMPLETION TIME
A. LCO not met	A.1	Stop …	
	OR		
	A.2	Complete …	
	A.2.1	Verify …	
	AND		
	A.2.2	Check …	
	A.2.2.1	Reduce …	
		OR	
	A.2.2.2	Perform …	
	OR		
	A.3	Remove …	

This example represents a more complicated use of logical connectors. Required Actions A.1, A.2, and A.3 are alternative choices, only one of which must be performed as indicated by the use of the logical connector "OR" and the left justified placement. Any one of these three Actions may be chosen. If A.2 is chosen, then both A.2.1 and A.2.2 must be performed as indicated by the logical connector "AND." Required Action A.2.2 is met by performing A.2.2.1 or A.2.2.2. The indented position of the logical connector "OR" indicated that A.2.2.1 and A.2.2.2 are alternative choices, only one of which must be performed.

A 1.0 USE AND APPLICATION

A 1.3 Completion Times

PURPOSE	The purpose of this section is to establish the Completion Time convention and to provide guidance for its use.
BACKGROUND	Limiting Conditions for Operations (LCOs) specify the lowest functional capability or performance levels of equipment required for safe operation of the NAC-MPC SYSTEM. The ACTIONS associated with an LCO state conditions that typically describe the ways in which the requirements of the LCO can fail to be met. Specified with each stated Condition are Required Action(s) and Completion Time(s).
DESCRIPTION	The Completion Time is the amount of time allowed for completing a Required Action. It is referenced to the time of discovery of a situation (e.g., equipment or variable not within limits) that requires entering an ACTIONS Condition, unless otherwise specified, provided that the NAC-MPC SYSTEM is in a specified Condition stated in the Applicability of the LCO. Prior to the expiration of the specified Completion Time, Required Actions must be completed. An ACTIONS Condition remains in effect and the Required Actions apply until the Condition no longer exists or the NAC-MPC SYSTEM is not within the LCO Applicability. Once a Condition has been entered, subsequent subsystems, components, or variables expressed in the Condition, discovered to be not within limits, will <u>not</u> result in separate entry into the Condition, unless specifically stated. The Required Actions of the Condition continue to apply to each additional failure, with Completion Times based on initial entry into the Condition.

(continued)

EXAMPLES

The following examples illustrate the use of Completion Times with different types of Conditions and changing Conditions.

EXAMPLE 1.3-1

ACTIONS

CONDITION	REQUIRED ACTION	COMPLETION TIME
B. Required Action and associated Completion Time not met	B.1 Perform Action B.1 AND B.2 Perform Action B.2	12 hours 36 hours

Condition B has two Required Actions. Each Required Action has its own Completion Time. Each Completion Time is referenced to the time that Condition B is entered.

The Required Actions of Condition B are to complete action B.1 within 12 hours AND complete action B.2 within 36 hours. A total of 12 hours is allowed for completing action B.1 and a total of 36 hours (not 48 hours) is allowed for completing action B.2 from the time that Condition B was entered. If action B.1 is completed within six hours, the time allowed for completing action B.2 is the next 30 hours because the total time allowed for completing action B.2 is 36 hours.

(continued)

EXAMPLES (continued)

EXAMPLE 1.3-2

ACTIONS

CONDITION	REQUIRED ACTION	COMPLETION TIME
A. One System not within limit	A.1 Restore System to within limit	7 days
B. Required Action and associated Completion Time not met	B.1 Complete action B.1 AND B.2 Complete action B.2	12 hours 36 hours

When a System is determined not to meet the LCO, Condition A is entered. If the System is not restored within seven days, Condition B is also entered, and the Completion Time clocks for Required Actions B.1 and B.2 start. If the System is restored after Condition B is entered, Conditions A and B are exited; therefore, the Required Actions of Condition B may be terminated.

(continued)

EXAMPLES (continued)

EXAMPLE 1.3-3

ACTIONS

----------NOTE----------

Separate Condition entry is allowed for each component.

CONDITION	REQUIRED ACTION	COMPLETION TIME
A. LCO not met	A.1 Restore compliance with LCO	4 hours
B. Required Action and associated Completion Time not met	B.1 Complete action B.1 AND B.2 Complete action B.2	6 hours 12 hours

The Note above the ACTIONS table is a method of modifying how the Completion Time is tracked. If this method of modifying how the Completion Time is tracked was applicable only to a specific Condition, the Note would appear in that Condition rather than at the top of the ACTIONS Table.

The Note allows Condition A to be entered separately for each component, and Completion Times to be tracked on a per component basis. When a component is determined to not meet the LCO, Condition A is entered and its Completion Time starts. If subsequent components are determined to not meet the LCO, Condition A is entered for each component and separate Completion Times are tracked for each component.

IMMEDIATE COMPLETION TIME	When “Immediately” is used as a Completion Time, the Required Action should be pursued without delay and in a controlled manner.

A 1.0 USE AND APPLICATION

A 1.4 Frequency

PURPOSE

The purpose of this section is to define the proper use and application of Frequency requirements.

DESCRIPTION

Each Surveillance Requirement (SR) has a specified Frequency in which the Surveillance must be met in order to meet the associated Limiting Condition for Operation (LCO). An understanding of the correct application of the specified Frequency is necessary for compliance with the SR.

Each "specified Frequency" is referred to throughout this section and each of the Specifications of Section 3.0, Surveillance Requirement (SR) Applicability. The "specified Frequency" consists of requirements of the Frequency column of each SR.

Situations where a Surveillance could be required (i.e., its Frequency could expire), but where it is not possible or not desired that it be performed until sometime after the associated LCO is within its Applicability, represent potential SR 3.0.4 conflicts. To avoid these conflicts, the SR (i.e., the Surveillance or the Frequency) is stated such that it is only "required" when it can be and should be performed. With an SR satisfied, SR 3.0.4 imposes no restriction.

The use of "met" or "performed" in these instances conveys specific meanings. A Surveillance is "met" only after the acceptance criteria are satisfied. Known failure of the requirements of a Surveillance, even without a Surveillance specifically being "performed," constitutes a Surveillance not "met."

(continued)

EXAMPLES The following examples illustrate the various ways that Frequencies are specified.

EXAMPLE 1.4-1

SURVEILLANCE REQUIREMENTS

SURVEILLANCE	FREQUENCY
Verify pressure within limit	12 hours

Example 1.4-1 contains the type of SR most often encountered in the Technical Specifications (TS). The Frequency specifies an interval (12 hours) during which the associated Surveillance must be performed at least one time. Performance of the Surveillance initiates the subsequent interval. Although the Frequency is stated as 12 hours, SR 3.0.2 allows an extension of the time interval to 1.25 times the interval specified in the Frequency for operational flexibility. The measurement of this interval continues at all times, even when the SR is not required to be met per SR 3.0.1 (such as when the equipment or variables are outside specified limits, or the facility is outside the Applicability of the LCO). If the interval specified by SR 3.0.2 is exceeded while the facility is in a condition specified in the Applicability of the LCO, the LCO is not met in accordance with SR 3.0.1.

If the interval as specified by SR 3.0.2 is exceeded while the facility is not in a condition specified in the Applicability of the LCO for which performance of the SR is required, the Surveillance must be performed within the Frequency requirements of SR 3.0.2, prior to entry into the specified condition. Failure to do so would result in a violation of SR 3.0.4.

(continued)

EXAMPLE 1.4-2

SURVEILLANCE REQUIREMENTS

SURVEILLANCE	FREQUENCY
Verify flow is within limits	Once within 12 hours prior to starting activity AND 24 hours thereafter

Example 1.4-2 has two Frequencies. The first is a one time performance Frequency, and the second is of the type shown in Example 1.4-1. The logical connector "AND" indicates that both Frequency requirements must be met. Each time the example activity is to be performed, the Surveillance must be performed within 12 hours prior to starting the activity.

The use of "once" indicates a single performance will satisfy the specified Frequency (assuming no other Frequencies are connected by "AND"). This type of Frequency does not qualify for the 25% extension allowed by SR 3.0.2.

"Thereafter" indicates future performances must be established per SR 3.0.2, but only after a specified condition is first met (i.e., the "once" performance in this example). If the specified activity is canceled or not performed, the measurement of both intervals stops. New intervals start upon preparing to restart the specified activity.

A 2.0 [Reserved]

LCO 3.0.1	LCOs shall be met during specified conditions in the Applicability, except as provided in LCO 3.0.2.
LCO 3.0.2	Upon failure to meet an LCO, the Required Actions of the associated Conditions shall be met, except as provided in LCO 3.0.5. If the LCO is met or is no longer applicable prior to expiration of the specified Completion Time(s), completion of the Required Action(s) is not required, unless otherwise stated.
LCO 3.0.3	Not applicable to a NAC-MPC SYSTEM.
LCO 3.0.4	When an LCO is not met, entry into a specified condition in the Applicability shall not be made except when the associated ACTIONS to be entered permit continued operation in the specified condition in the Applicability for an unlimited period of time. This Specification shall not prevent changes in specified conditions in the Applicability that are required to comply with ACTIONS or that are related to the unloading of an NAC-MPC SYSTEM. Exceptions to this Condition are stated in the individual Specifications. These exceptions allow entry into specified conditions in the Applicability where the associated ACTIONS to be entered allow operation in the specified conditions in the Applicability only for a limited period of time.
LCO 3.0.5	Equipment removed from service or not in service in compliance with ACTIONS may be returned to service under administrative control solely to perform testing required to demonstrate it meets the LCO or that other equipment meets the LCO. This is an exception to LCO 3.0.2 for the System to return to service under administrative control to perform the testing.

A 3.0 SURVEILLANCE REQUIREMENT (SR) APPLICABILITY

SR 3.0.1

SRs shall be met during the specified conditions in the Applicability for individual LCOs, unless otherwise stated in the SR. Failure to meet a Surveillance, whether such failure is experienced during the performance of the Surveillance or between performances of the Surveillance, shall be a failure to meet the LCO. Failure to perform a Surveillance within the specified Frequency shall be a failure to meet the LCO, except as provided in SR 3.0.3. Surveillances do not have to be performed on equipment or variables outside specified limits.

SR 3.0.2

The specified Frequency for each SR is met if the Surveillance is performed within 1.25 times the interval specified in the Frequency, as measured from the previous performance or as measured from the time a specified condition of the Frequency is met.

For Frequencies specified as “once,” the above interval extension does not apply. If a Completion Time requires periodic performance on a “once per…” basis, the above Frequency extension applies to each performance after the initial performance.

Exceptions to this Specification are stated in the individual Specifications.

SR 3.0.3

If it is discovered that a Surveillance was not performed within its specified Frequency, then compliance with the requirement to declare the LCO not met may be delayed from the time of discovery up to 24 hours or up to the limit of the specified Frequency, whichever is less. This delay period is permitted to allow performance of the Surveillance.

If the Surveillance is not performed within the delay period, the LCO must immediately be declared not met, and the applicable Condition(s) must be entered.

(continued)

SR 3.0.3 (continued)	When the Surveillance is performed within the delay period and the Surveillance is not met, the LCO must immediately be declared not met, and the applicable Condition(s) must be entered.
SR 3.0.4	Entry into a specified Condition in the Applicability of an LCO shall not be made, unless the LCO's Surveillances have been met within their specified Frequency. This provision shall not prevent entry into specified conditions in the Applicability that are required to comply with Actions or that are related to the unloading of a NAC-MPC SYSTEM.

A 3.1 NAC-MPC SYSTEM Integrity

A 3.1.1 CANISTER Maximum Time in Vacuum Drying

LCO 3.1.1

1. The following limits for vacuum drying time shall be met, as appropriate:

1.a For the YANKEE-MPC configuration, the time duration from completion of draining the CANISTER through completion of vacuum dryness testing and the introduction of helium backfill shall not exceed the time shown for the specified heat loads:

Total Heat Load (L) (kW)	Time Limit (Hours)
$10.5 < L \leq 12.5$	38
$8.5 < L \leq 10.5$	48
$6.5 < L \leq 8.5$	58
$4.5 < L \leq 6.5$	83
$L \leq 4.5$	Not Limited

1.b For the CY-MPC configuration, the time duration from completion of draining the CANISTER through completion of vacuum dryness testing and the introduction of helium backfill shall not exceed the time shown for the specified LOADING CATEGORY (Tables B2-5 and B2-6):

LOADING CATEGORY	Time Limit (Hours)
A	21
B	23
C	33
D	72

2. The time duration from the end of a minimum of 24 hours of WATER COOLING or of FORCED AIR COOLING of the CANISTER through completion of vacuum dryness testing and the introduction of helium backfill shall not exceed the following limits.

2.a For the Yankee-MPC configuration, the time duration shall not exceed the time shown for the specified heat loads:

Total Heat Load (L) (kW)	Time Limit (Hours) After FORCED AIR COOLING or WATER COOLING
$10.5 < L \leq 12.5$	10
$8.5 < L \leq 10.5$	12
$6.5 < L \leq 8.5$	16
$4.5 < L \leq 6.5$	40

LCO 3.1.1 (continued) 2.b For the CY-MPC configuration, the time duration shall not exceed the time shown for the specified LOADING CATEGORY (reference Tables B2-5 and B2-6):

LOADING CATEGORY	Time Limit (Hours) After WATER COOLING	Time limit (Hours) After FORCED AIR COOLING
A	12	8
B	15	12
C	24	21
D	66	60

APPLICABILITY: During LOADING OPERATIONS

ACTIONS

----------NOTE----------

Separate Condition entry is allowed for each NAC-MPC SYSTEM.

CONDITION	REQUIRED ACTION	COMPLETION TIME
A. LCO time limits not met	A.1 Commence filling CANISTER with helium to 0 (+1, -0) psig	2 hours
	AND	
	A.2.1 Commence WATER COOLING	2 hours
	AND	
	A.2.2 Maintain WATER COOLING for a minimum of 24 hours	Prior to restart of LOADING OPERATIONS
	OR	
	A.2.3 Commence FORCED AIR COOLING.	2 hours
	AND	
	A.2.4 Maintain FORCED AIR COOLING for a minimum of 24 hours	Prior to restart of LOADING OPERATIONS

(continued)

SURVEILLANCE REQUIREMENTS		
SURVEILLANCE		FREQUENCY
SR 3.1.1.1	Monitor elapsed time from completion of CANISTER draining operations until start of helium backfill	Once at the completion of CANISTER draining AND 2 hours thereafter
SR 3.1.1.2	Monitor elapsed time from the end of WATER COOLING or FORCED AIR COOLING until start of helium backfill	Once at end of WATER COOLING or FORCED AIR COOLING AND 2 hours thereafter

A 3.1 NAC-MPC SYSTEM Integrity

A 3.1.2 CANISTER Vacuum Drying Pressure

LCO 3.1.2 The CANISTER vacuum drying pressure shall be ≤ 10 mm of mercury (Hg). Vacuum pressure shall be held for a minimum of 10 minutes with pressure remaining below 10 mm of mercury during the 10-minute period.

APPLICABILITY: During LOADING OPERATIONS

ACTIONS

----------NOTE----------
10-minute period shall commence following system pressure stabilization at a vacuum pressure at or below 10 mm Hg. Separate Condition entry is allowed for each NAC-MPC SYSTEM.

CONDITION	REQUIRED ACTION	COMPLETION TIME
A. CANISTER vacuum drying pressure limit not met	A.1 Establish CANISTER cavity vacuum drying pressure within limit	25 days
B. Required Action and associated Completion Time not met	B.1 Remove all fuel assemblies from the NAC-MPC SYSTEM	5 days

SURVEILLANCE REQUIREMENTS

SURVEILLANCE		FREQUENCY
SR 3.1.2.1	Verify CANISTER cavity vacuum drying pressure is within limit	Once prior to TRANSPORT OPERATIONS

A 3.1 NAC-MPC SYSTEM Integrity

A 3.1.3 CANISTER Helium Backfill Pressure

LCO 3.1.3 The CANISTER helium backfill pressure shall be 0 (+1, -0) psig. Prior to helium backfill, the CANISTER vacuum pressure shall be ≤ 3 mm of mercury.

APPLICABILITY: During LOADING OPERATIONS

ACTIONS

----------NOTE----------
Separate Condition entry is allowed for each NAC-MPC SYSTEM.

CONDITION	REQUIRED ACTION	COMPLETION TIME
A. CANISTER helium backfill pressure limit not met	A.1 Establish CANISTER helium backfill pressure within limit	25 days
B. Required Action and associated Completion Time not met	B.1 Remove all fuel assemblies from the NAC-MPC SYSTEM	5 days

SURVEILLANCE REQUIREMENTS

SURVEILLANCE		FREQUENCY
SR 3.1.3.1	Verify CANISTER helium backfill pressure is within limit.	Once prior to TRANSPORT OPERATIONS

A 3.1 NAC-MPC SYSTEM Integrity

A 3.1.4 CANISTER Maximum Time in TRANSFER CASK

LCO 3.1.4

The CANISTER shall be transferred from the TRANSFER CASK to a CONCRETE CASK, or to a transport cask, or returned to an appropriate location for UNLOADING OPERATIONS.

APPLICABILITY: During LOADING OPERATIONS, TRANSFER OPERATIONS, or UNLOADING OPERATIONS

ACTIONS:

----------NOTE----------
Separate Condition entry is allowed for each NAC-MPC SYSTEM.

CONDITION	REQUIRED ACTION	COMPLETION TIME
A. CANISTER transfer not completed	A.1 Complete CANISTER TRANSFER OPERATIONS	25 days
B. Required Action and associated completion time not met	B.1 Remove all fuel assemblies from the CANISTER	5 days

SURVEILLANCE REQUIREMENTS

SURVEILLANCE		FREQUENCY
SR 3.1.4.1	Verify CANISTER transfer completed	Once within 25 days

[Deleted]

[Deleted]

A 3.1 NAC-MPC SYSTEM Integrity

A 3.1.5 CANISTER Helium Leak Rate

LCO 3.1.5 The CANISTER shield lid to CANISTER shell confinement weld shall be tested to demonstrate a helium leak rate less than 2 x 10^{-7} cm^3/sec (helium). The test sensitivity shall be 1 x 10^{-7} cm^3/sec (helium).

APPLICABILITY: During LOADING OPERATIONS

ACTIONS

----------NOTE----------
Separate Condition entry is allowed for each NAC-MPC SYSTEM.

CONDITION	REQUIRED ACTION	COMPLETION TIME
A. CANISTER helium leak rate limit not met	A.1 Establish CANISTER helium leak rate within limit	25 days
B. Required Action and associated Completion Time not met	B.1 Remove all fuel assemblies from the NAC-MPC SYSTEM	5 days

SURVEILLANCE REQUIREMENTS

SURVEILLANCE		FREQUENCY
SR 3.1.5.1	Verify CANISTER helium leak rate is within limit	Once prior to TRANSPORT OPERATIONS.

A 3.1 NAC-MPC SYSTEM Integrity

A 3.1.6 CONCRETE CASK Heat Removal System

LCO 3.1.6 The CONCRETE CASK Heat Removal System shall be OPERABLE.

APPLICABILITY: During STORAGE OPERATIONS

ACTIONS

----------NOTE----------
Separate Condition entry is allowed for each NAC-MPC SYSTEM.

CONDITION	REQUIRED ACTION	COMPLETION TIME
A. LCO not met	A.1 Restore CONCRETE CASK Heat Removal System to OPERABLE status	8 hours
B. Required Action and associated Completion Time not met	B.1 Perform SR 3.1.6.1	Immediately and every 6 hours thereafter
	AND	
	B.2.1 Perform an engineering evaluation to determine that the CONCRETE CASK Heat Removal System is OPERABLE	12 hours
	OR	
	B.2.2 Place the NAC-MPC SYSTEM in a safe condition	12 hours

(continued)

SURVEILLANCE REQUIREMENTS

SURVEILLANCE		FREQUENCY
SR 3.1.6.1	Verify the difference between the average CONCRETE CASK air outlet temperature and ISFSI ambient temperature is ≤92ºF for the YANKEE-MPC CANISTER or ≤110ºF for the CY-MPC CANISTER.	24 hours
	OR	
	Visually verify all four air inlet and outlet screens are unobstructed.	24 hours

A 3.1 NAC-MPC SYSTEM Integrity

A 3.1.7 Fuel Cooldown Requirements

LCO 3.1.7 Fuel cooldown requirements for UNLOADING a CANISTER installed in the TRANSFER CASK shall be met as appropriate.

1. Initiate CANISTER internal cooldown
   a. Start nitrogen gas flush and maintain for a minimum of 10 minutes.
   b. Start cooling water flow rate of 5 (+3, -0) gallons per minute at inlet pressure of 25 (+10, -0) psig. Minimum cooling water temperature is 70°F.
   c. Limit the CANISTER pressure to ≤ 50 psig.
   d. Maintain cooling water flow through CANISTER until outlet water temperature is ≤ 200°F.

APPLICABILITY: During UNLOADING OPERATIONS

----------NOTES----------

The LCO is only applicable to wet UNLOADING OPERATIONS. Separate Condition entry is allowed for each NAC-MPC SYSTEM.

ACTIONS

CONDITION	REQUIRED ACTION	COMPLETION TIME
A. CANISTER internal cooldown requirements not met	A.1 Complete CANISTER internal cooldown steps	Prior to removal of CANISTER shield lid

(continued)

SURVEILLANCE REQUIREMENTS

SURVEILLANCE		FREQUENCY
SR 3.1.7.1	Condition 1.a Monitor Nitrogen gas flush time.	Within 10 minutes of start of Nitrogen gas flow.
SR 3.1.7.1	Condition 1.b Monitor cooling water temperature and flow rate.	Verify temperature prior to start of flow. Verify flow rate within 10 minutes of start of water flow and hourly thereafter.
SR 3.1.7.1	Condition 1.c Monitor CANISTER internal pressure.	At start of flow and every 30 minutes thereafter until cooling water begins to exit the CANISTER.
SR 3.1.7.1	Condition 1.d Monitor CANISTER water discharge temperature.	Once at start of discharge flow and hourly thereafter.

A 3.1 NAC-MPC SYSTEM Integrity

A 3.1.8 [DELETED]

[Deleted]

[Deleted]

A 3.2 NAC-MPC SYSTEM Radiation Protection

A 3.2.1 CANISTER Surface Contamination

LCO 3.2.1 Removable contamination on the accessible exterior surfaces of the CANISTER or accessible interior surfaces of the TRANSFER CASK shall each not exceed:

a. 10,000 dpm/100 cm^2 from beta and gamma sources; and

b. 100 dpm/100 cm^2 from alpha sources.

APPLICABILITY: During LOADING OPERATIONS

ACTIONS

----------NOTE----------
Separate Condition entry is allowed for each NAC-MPC SYSTEM.

CONDITION	REQUIRED ACTION	COMPLETION TIME
A. CANISTER or TRANSFER CASK removable surface contamination limits not met	A.1 Restore CANISTER and TRANSFER CASK removable surface contamination to within limits	Prior to TRANSPORT OPERATIONS

SURVEILLANCE REQUIREMENTS

SURVEILLANCE		FREQUENCY
SR 3.2.1.1	Verify that the removable contamination on the accessible exterior surfaces of the CANISTER containing fuel is within LCO limits	Once, prior to TRANSPORT OPERATIONS
SR 3.2.1.2	Verify that the removable contamination on the accessible interior surfaces of the TRANSFER CASK is within LCO limits	Once, prior to TRANSPORT OPERATIONS

A 3.2 NAC-MPC SYSTEM Radiation Protection

A 3.2.2 CONCRETE CASK Average Surface Dose Rates

LCO 3.2.2

A. The average surface dose rates of each YANKEE-MPC CONCRETE CASK shall not exceed:

- 50 mrem/hour (neutron + gamma) on the side (on the concrete surfaces);
- 55 mrem/hour (neutron + gamma) on the top; and,
- 200 mrem/hour (neutron + gamma), an average of the measurements at air inlets and outlets.

B. The average surface dose rates of each CY-MPC CONCRETE CASK shall not exceed:

- 170 mrem/hour (neutron + gamma) on the side (on the concrete surfaces);
- 100 mrem/hour (neutron + gamma) on the top; and,
- 110 mrem/hour (neutron + gamma), an average of the measurements at air inlets and outlets.

APPLICABILITY: Prior to or at the beginning of STORAGE OPERATIONS

ACTIONS

----------NOTE----------
Separate Condition entry is allowed for each NAC-MPC SYSTEM.

CONDITION	REQUIRED ACTION	COMPLETION TIME
A. CONCRETE CASK average surface dose rate limits not met	A.1 Administratively verify correct fuel loading AND	24 hours

(continued)

CONDITION	REQUIRED ACTION	COMPLETION TIME
	A.2 Perform analysis to verify compliance with the ISFSI offsite radiation protection requirements of 10 CFR 20 and 10 CFR 72. If acceptable, continue STORAGE OPERATIONS.	7 days
B. Required Action and associated Completion Time not met.	B.1 Remove all fuel assemblies from the NAC-MPC SYSTEM	30 days

SURVEILLANCE REQUIREMENTS

SURVEILLANCE		FREQUENCY
SR 3.2.2.1	Verify average surface dose rates of CONCRETE CASK loaded with a CANISTER containing fuel assemblies are within limits. Dose rates shall be measured at the locations shown in Figure A3-1.	Once after completion of transfer of CANISTER into CONCRETE CASK and prior to, or at the beginning of, STORAGE OPERATIONS.

Figure A3-1 CONCRETE CASK Average Surface Dose Rates

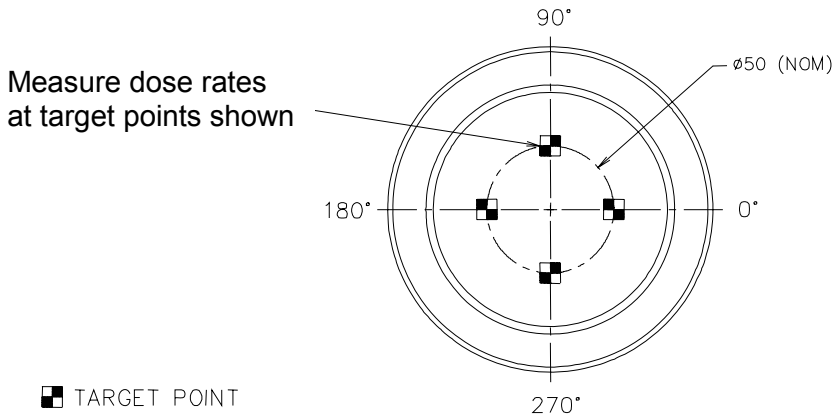

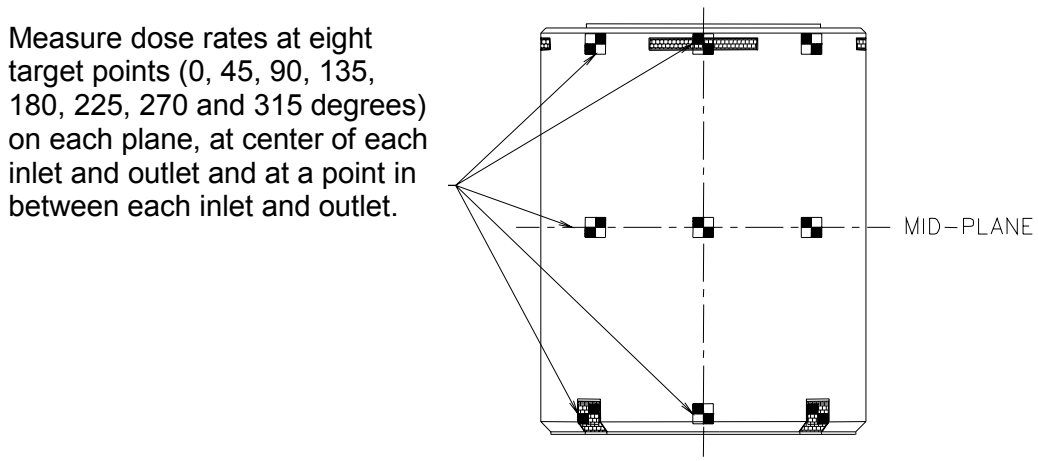

A 4.0 [Reserved]

A 5.0 ADMINISTRATIVE CONTROLS AND PROGRAMS

A 5.1 Training Program

A training program for the NAC-MPC SYSTEM shall be developed under the general licensee's Systems Approach to Training Program. Training modules shall include comprehensive instructions for all activities related to the NAC-MPC SYSTEM and the independent spent fuel storage installation (ISFSI).

A 5.2 Pre-Operational Testing and Training Exercises

A dry run training exercise on loading, closure, handling, unloading, and transfer of the NAC-MPC SYSTEM shall be conducted by the licensee prior to the first use of the system to load spent fuel assemblies. The training exercise shall not be conducted with spent fuel in the CANISTER. The dry run may be performed in an alternate step sequence from the actual procedures, but all steps must be performed. The dry run shall include, but is not limited to the following:

a. Moving the CONCRETE CASK into its designated loading area
b. Moving the TRANSFER CASK containing the empty CANISTER into the spent fuel pool
c. Loading one or more dummy fuel assemblies into the CANISTER, including independent verification
d. Selection and verification of fuel assemblies requiring preferential loading
e. Installing the shield lid
f. Removal of the TRANSFER CASK from the spent fuel pool
g. Closing and sealing of the CANISTER to demonstrate pressure testing, vacuum drying, helium backfilling, welding, weld inspection and documentation, and leak testing
h. TRANSFER CASK movement through the designated load path
i. TRANSFER CASK installation on the CONCRETE CASK
j. Transfer of the CANISTER to the CONCRETE CASK

(continued)

A 5.2 Preoperational Testing and Training Exercises (continued)

k. CONCRETE CASK shield plug and lid installation
l. Transport of the CONCRETE CASK to the ISFSI
m. CANISTER unloading, including reflooding and weld removal or cutting
n. CANISTER removal from the CONCRETE CASK

A 5.3 Surveillance After an Off-Normal, Accident, or Natural Phenomena Event

A Response Surveillance is required following off-normal, accident or natural phenomena events. The NAC-MPC SYSTEMs in use at an ISFSI shall be inspected within 4 hours after the occurrence of an off-normal, accident or natural phenomena event in the area of the ISFSI. This inspection must specifically verify that all the CONCRETE CASK inlets and outlets are not blocked or obstructed. At least one-half of the inlets and outlets on each CONCRETE CASK must be cleared of blockage or debris within 24 hours to restore air circulation.

The CONCRETE CASK and CANISTER shall be inspected if they experience a drop or a tip-over.

Following a natural phenomena event, the ISFSI shall be inspected to determine if movement or damage to the CONCRETE CASKS has resulted in unacceptable site boundary dose rates.

(continued)

A 5.4 Radioactive Effluent Control Program

The program implements the requirements of 10 CFR 72.44(d).

a. The NAC-MPC SYSTEM does not create any radioactive materials or have any radioactive waste treatment systems. Therefore, specific operating procedures for the control of radioactive effluents are not required. LCO 3.1.5, CANISTER Helium Leak Rate, provides assurance that there are no radioactive effluents from the NAC-MPC SYSTEM.

b. This program includes an environmental monitoring program. Each general licensee may incorporate NAC-MPC SYSTEM operations into their environmental monitoring program for 10 CFR Part 50 operations.

c. An annual report shall be submitted pursuant to 10 CFR 72.44(d)(3) or 10 CFR 50.36(a).

A 5.5 NAC-MPC SYSTEM Transport Evaluation Program

This program provides a means for evaluating various transport configurations and transport route conditions to ensure that the design basis drop limits are met. For lifting of the loaded TRANSFER CASK or CONCRETE CASK using devices, which are integral to a structure governed by 10 CFR Part 50 regulations, 10 CFR 50 requirements apply. This program is not applicable when the TRANSFER CASK or CONCRETE CASK is in the fuel building or is being handled by a device providing support from underneath (i.e., on a rail car, heavy haul trailer, air pads, etc.).

Pursuant to 10 CFR 72.212, this program shall evaluate the site specific transport route conditions.

(continued)

A 5.5 NAC-MPC SYSTEM Transport Evaluation Program (continued)

a. The program shall ensure that the transport route surfaces will not cause impact loading due to a design basis drop event in excess of 60g.

b. For site specific transport conditions, which are not bounded by the ISFSI pad surface characteristics, the program may evaluate the site specific conditions to ensure that the impact loading due to design basis drop events does not exceed 60g. This alternative analysis shall be commensurate with the drop analyses described in the Final Safety Analysis Report for the NAC-MPC SYSTEM. The program shall ensure that these alternative analyses are documented and controlled.

c. The TRANSFER CASK may be lifted in the vertical orientation to those heights necessary to perform cask handling operations, including CANISTER transfer, provided the lifts are made with structures and components designed in accordance with the criteria specified in Section B3.5. The TRANSFER CASK is not permitted to be lifted in the horizontal orientation.

d. The CONCRETE CASK is not permitted to be lifted in the horizontal orientation and is limited to 6 inches in the vertical orientation.

Draft

APPENDIX B

APPROVED CONTENTS AND DESIGN FEATURES FOR THE NAC-MPC SYSTEM

AMENDMENT 5

Appendix B
Table of Contents

B 1.0 [Reserved] B1-1

B 2.0 APPROVED CONTENTS B2-1
B 2.1 Fuel Specifications and Loading Conditions B2-1
B 2.1 1 Fuel to be Stored in the YANKEE-MPC System B2-1
B 2.1 2 Fuel to be Stored in the CY-MPC System B2-1
B 2.2 Violations B2-17

Figure B2-1 CY-MPC 24-Assembly Basket Fuel Loading Positions B2-16
Figure B2-2 CY-MPC 26-Assembly Basket Fuel Loading Positions B2-16
Table B2-1 Yankee Class Fuel Assembly Limits B2-2
Table B2-2 Yankee Class INTACT FUEL ASSEMBLY Characteristics B2-6
Table B2-3 Connecticut Yankee Fuel Assembly Limits B2-7
Table B2-4 Connecticut Yankee INTACT FUEL ASSEMBLY Characteristics B2-14
Table B2-5 Connecticut Yankee Fuel and CANISTER Heat LOADING CATEGORY Limits B2-15
Table B2-6 Heat Load Matrix used to Determine LOADING CATEGORY Limits B2-15

B 3.0 DESIGN FEATURES B3-1
B 3.1 Site B3-1
B 3.2 Design Features Significant to Safety B3-1
B 3.3 Codes and Standards B3-1
B 3.4 Site Specific Parameters and Analyses B3-7
B 3.5 CANISTER HANDLING FACILITY (CHF) B3-9

Table B3-1 List of ASME Code Alternatives for the NAC-MPC SYSTEM B3-3
Table B3-2 Load Combinations and Service Condition Definitions for the CANISTER HANDLING FACILITY (CHF) Structure B3-11

B 1.0 [Reserved]

B 2.0 APPROVED CONTENTS

B 2.1 Fuel Specifications and Loading Conditions

The NAC-MPC SYSTEM is provided in two configurations. The first, designated the YANKEE-MPC, is designed to store up to 36 Yankee Class fuel assemblies or YANKEE-MPC RECONFIGURED FUEL ASSEMBLIES. The YANKEE-MPC contents are described in Section B2.1.1. There is no preferential fuel loading requirement for the YANKEE-MPC configuration.

The second NAC-MPC SYSTEM configuration is designated the CY-MPC. This configuration is designed to store up to 26 Connecticut Yankee INTACT FUEL ASSEMBLIES, with up to four of these assemblies replaced with CY-MPC RECONFIGURED FUEL ASSEMBLIES or loaded CY-MPC DAMAGED FUEL CANS. The CY-MPC contents are described in Section B2.1.2. To ensure the efficient accommodation of Connecticut Yankee fuel, the CY-MPC is provided with two basket configurations – one designed for 26 assemblies and one designed for 24 assemblies. With these basket configurations, preferential loading is used to ensure the accommodation of the contents within the design basis limits of the CY-MPC System. The preferential loading requirements are described in Section B2.1.2.

B 2.1.1 Fuel to be Stored in the YANKEE-MPC System

INTACT and DAMAGED FUEL ASSEMBLIES, INTACT FUEL RODS, DAMAGED FUEL RODS and FUEL DEBRIS placed in a RECONFIGURED FUEL ASSEMBLY meeting the limits specified in Table B2-1 may be stored in the YANKEE-MPC System.

Preferential loading of Yankee Class fuel is used to establish reduced total decay heat loads in the CANISTER. The reduced heat load configurations allow the use of extended operating times in vacuum drying as specified in LCO 3.1.1. The reduced heat load configurations are based on loading Yankee Class fuel assemblies having a maximum decay heat of 320 watts and the total CANISTER decay heat load.

The values shown in Tables B2-1 and B2-2 are design nominal record values.

B 2.1.2 Fuel to be Stored in the CY-MPC System

INTACT FUEL ASSEMBLIES; CY-MPC RECONFIGURED FUEL ASSEMBLIES holding INTACT FUEL RODS, DAMAGED FUEL RODS, or FUEL DEBRIS; and CY-MPC DAMAGED FUEL CANS holding INTACT FUEL ASSEMBLIES or DAMAGED FUEL ASSEMBLIES, meeting the limits specified in Table B2-3 may be stored in the CY-MPC System. As shown in Section II of Table B2-3, certain fuel must be preferentially loaded to ensure satisfactory performance of the CY-MPC System.

The values shown in Tables B2-3 and B2-4 are design nominal record values.

Table B2-1
Yankee Class Fuel Assembly Limits

I. YANKEE-MPC CANISTER

A. Allowable Contents

1. Uranium oxide Yankee Class INTACT FUEL ASSEMBLIES listed in Table B2-2 and RECAGED FUEL ASSEMBLIES that meet the following specifications:

a. Cladding Type: Zircaloy or Stainless Steel as specified in Table B2-2 for the applicable fuel assembly class (Note: Type A and Type B configurations in Table B2-2 identify variations in the arrangement of the outer row of fuel rods that accommodate the insertion of control blades in the reactor).

b. Enrichment: As specified in Table B2-2 for the applicable fuel assembly type.

c. Decay Heat Per Assembly:
   i. Zircaloy-Clad Fuel: $\leq$ 347 Watts
   ii. Stainless Steel-Clad Fuel: $\leq$ 264 Watts

d. Post-irradiation Cooling Time and Average Burnup Per Assembly:
   i. Zircaloy-Clad Fuel: As specified in Table B2-2 for the applicable fuel assembly type.
   ii. Stainless Steel-Clad Fuel: As specified in Table B2-2 for the applicable fuel assembly type.

Table B2-1
Yankee Class Fuel Assembly Limits (Continued)

e. Unirradiated Fuel Assembly Length:	Maximum = 111.8 inches Minimum = 109.0 inches
f. Unirradiated Fuel Assembly Width:	≤ 7.64 inches
g. Fuel Assembly Weight:	≤ 950 lbs.
h. Minimum Length of Bottom Fuel Nozzle:	6.7 inches (17.0 cm)

2. Uranium oxide Yankee Class INTACT FUEL RODS, DAMAGED FUEL RODS or FUEL DEBRIS placed in YANKEE-MPC RECONFIGURED FUEL ASSEMBLIES (RFA) and DAMAGED FUEL ASSEMBLIES with up to 20 DAMAGED FUEL RODS in each, placed in a damaged fuel can. The original fuel assemblies for the INTACT FUEL RODS, DAMAGED FUEL RODS, FUEL DEBRIS and damaged fuel cans shall meet the criteria specified in Table B2-2 for the fuel assembly class, and meet the following additional specifications:

a. Cladding Type:	Zircaloy or Stainless Steel as specified in Table B2-2 for the applicable fuel assembly type.
b. Enrichment:	As specified in Table B2-2 for the applicable fuel assembly type.
c. Decay Heat Per YANKEE-MPC RECONFIGURED FUEL ASSEMBLY	≤ 102 Watts
d. Post-irradiation Cooling Time and Average Burnup Per Original Assembly:	
i. Zircaloy-Clad Fuel:	As specified in Table B2-2 for the applicable fuel assembly type.

Table B2-1
Yankee Class Fuel Assembly Limits (Continued)

ii. Stainless Steel-Clad Fuel:	As specified in Table B2-2 for the applicable fuel assembly type.
e. Unirradiated Original Fuel Assembly Length:	≤ 111.8 inches
f. Unirradiated Original Fuel Assembly Width:	≤ 7.64 inches
g. Maximum Weight:	≤ 950 lbs, including YANKEE-MPC RECONFIGURED FUEL ASSEMBLY
h. Maximum mass U per YANKEE-MPC RECONFIGURED FUEL ASSEMBLY:	66.33 kg

3. Uranium oxide Yankee Class fuel requiring preferential loading to meet CANISTER reduced heat load configurations.
   a. Fuel shall be as described in Items A.1 and/or A.2, except that the maximum fuel assembly decay heat is limited to 320 watts.
   b. Fuel assemblies having a decay heat up to 320 watts may be loaded in any fuel loading position.

B. Quantity per CANISTER:
Up to 36 fuel assemblies, RFAs, and RECAGED FUEL ASSEMBLIES, or up to 32 fuel assemblies, RFAs. and RECAGED FUEL ASSEMBLIES, and 4 damaged fuel cans. The maximum contents weight limit is 30,600 pounds, not including the weight of the damaged fuel cans.

C. Fuel assemblies, RFAs, RECAGED FUEL ASSEMBLIES and damaged fuel cans shall not contain control components.

D. INTACT FUEL ASSEMBLIES shall not contain empty fuel rod positions. A solid Zircaloy or stainless steel rod that would displace an equivalent amount of water as an intact fuel rod or a Zircaloy rod containing a stainless steel or Zircaloy slug shall replace any missing fuel rod.

Table B2-1
Yankee Class Fuel Assembly Limits (Continued)

E. DAMAGED FUEL RODS and FUEL DEBRIS must be loaded in the YANKEE-MPC RECONFIGURED FUEL ASSEMBLY.

F. One or more Combustion Engineering fuel assembly lattices holding United Nuclear fuel rods with no empty fuel rod positions (RECAGED FUEL ASSEMBLY).

G. Up to 4 INTACT or RECAGED fuel assemblies or RFAs in damaged fuel cans loaded in a corner position of the basket. A DAMAGED FUEL ASSEMBLY may not have more than 20 fuel rod positions that are either empty or holding fuel rods classified as damaged and must be loaded in a damaged fuel can.

H. One or more United Nuclear fuel assemblies having removable fuel rods secured with a RETAINER in the top end fitting.

Table B2-2 Yankee Class INTACT FUEL ASSEMBLY Characteristics

Fuel Assembly Type	Combustion Engineering Type A	Combustion Engineering Type B	Exxon Type A[3]	Exxon Type B[3]	Exxon Type A[4]	Exxon Type B[4]	Westinghouse Type A	Westinghouse Type B	United Nuclear Type A	United Nuclear Type B
ASSEMBLY CONFIGURATION[2]										
Assembly Length (cm)	283.9	283.9	283.3	283.3	283.9	283.9	282.6	282.6	282.4	282.4
Assembly Width (cm)	19.2	19.2	19.3	19.3	19.3	19.3	19.3	19.3	19.4	19.4
Assembly Weight (kg)	352	350.6	372	372	372	372	408.2	408.2	385.5	385.5
Enrichment-wt. % ^{235}U										
Maximum	3.93	3.93	4.03	4.03	4.03	4.03	4.97	4.97	4.03	4.03
Minimum	3.66	3.66	3.46	3.46	3.46	3.46	4.90	4.90	3.96	3.96
Max. Burnup (MWD/MTU)	36,000[1]	36,000[1]	36,000	36,000	36,000	36,000	32,000	32,000	32,000	32,000
Max. Initial Heavy Metal KgU/assembly	239.4	238.4	239.4	238.4	239.4	238.4	286.9	286.0	245.6	244.6
Min. Cool Time (yr)	8.1[1]	8.1[1]	16.0	16.0	10.0	10.0	24.0	24.0	13.0	13.0
Max. Decay Heat (kW)	0.347[1]	0.347[1]	0.269	0.269	0.331	0.331	0.264	0.264	0.257	0.257
FUEL ROD CONFIGURATION										
Fuel Rod Pitch (cm)	1.20	1.20	1.20	1.20	1.20	1.20	1.07	1.07	1.19	1.19
Active Fuel Length (cm)	231.1	231.1	231.1	231.1	231.1	231.1	234.0	234.0	231.1	231.1
Rod OD (cm)	0.93	0.93	0.93	0.93	0.93	0.93	0.86	0.86	0.93	0.93
Clad ID (cm)	0.81	0.81	0.81	0.81	0.81	0.81	0.76	0.76	0.81	0.81
Clad Material	Zircaloy	Zircaloy	Zircaloy	Zircaloy	Zircaloy	Zircaloy	SS	SS	Zircaloy	Zircaloy
Pellet OD (cm)	0.79	0.79	0.79	0.79	0.79	0.79	0.75	0.75	0.79	0.79
Rods per Assembly	231	230	231	230	231	230	305	304	237	236

1. Combustion Engineering fuel may be loaded at a maximum burnup of 32,000 MWD/MTU, a minimum enrichment of 3.5 wt % ^{235}U and cool time of 8.0 years. The maximum decay heat for this assembly is 0.304 kW.

2. Type A and Type B configurations identify variations in the arrangement of the outer row of fuel rods that accommodate the insertion of control blades in the reactor.

3. Exxon Type A or Type B fuel assembly with stainless steel fuel rod spacer grids.

4. Exxon Type A or Type B fuel assembly with Zircaloy fuel rod spacer grids.

Table B2-3
Connecticut Yankee Fuel Assembly Limits

I. CY-MPC CANISTER – 24-Assembly Basket Configuration

A. Allowable Contents

1. Uranium oxide Connecticut Yankee INTACT FUEL ASSEMBLIES listed in Table B2-4 and meeting the following specifications:

a. Cladding Type:	Zircaloy or stainless steel as specified in Table B2-4 for the applicable fuel assembly type.
b. Initial Enrichment:	
i. Zircaloy-Clad Fuel:	$\leq$ 4.61 wt. % ^{235}U
ii. Stainless Steel-Clad Fuel:	$\leq$ 4.03 wt. % ^{235}U
c. Decay Heat Per Assembly:	
i. Zircaloy-Clad Fuel:	$\leq$ 674 Watts
ii. Stainless Steel-Clad Fuel:	$\leq$ 674 Watts
d. Post-irradiation Cooling Time:	$\geq$ 6 Years
e. Average Burnup Per Assembly:	
i. Zircaloy-Clad Fuel:	$\leq$ 43,000 MWD/MTU
ii. Stainless Steel-Clad Fuel:	$\leq$ 38,000 MWD/MTU
f. Original Fuel Assembly Length:	$\leq$ 137.1 inches
g. Original Fuel Assembly Width:	$\leq$ 8.47 inches
h. Fuel Assembly Weight:	$\leq$ 1,490 lbs
i. Minimum Length of Bottom Fuel Nozzle:	3.2 inches

Table B2-3
Connecticut Yankee Fuel Assembly Limits (Continued)

2. Uranium oxide Connecticut Yankee INTACT FUEL ASSEMBLIES, DAMAGED FUEL ASSEMBLIES, INTACT FUEL RODS, DAMAGED FUEL RODS, or FUEL DEBRIS placed in a CY-MPC DAMAGED FUEL CAN or CY-MPC RECONFIGURED FUEL ASSEMBLY. The Connecticut Yankee INTACT FUEL ASSEMBLIES, DAMAGED FUEL ASSEMBLIES, INTACT FUEL RODS, DAMAGED FUEL RODS, or FUEL DEBRIS shall be, or shall be from, assemblies that meet the criteria specified in Table B2-4 for the fuel assembly type or vendor, and meet the following additional specifications:

a. Cladding Type:	Zircaloy or Stainless Steel as specified in Table B2-4 for the applicable fuel assembly.
b. Initial Enrichment:	
i. Zircaloy-Clad Fuel:	$\leq$ 4.61 wt. % ^{235}U
ii. Stainless Steel-Clad Fuel:	$\leq$ 4.03 wt. % ^{235}U
c. Decay Heat Per CY-MPC RECONFIGURED FUEL ASSEMBLY or CY-MPC DAMAGED FUEL CAN:	$\leq$ 674 Watts
d. Post-irradiation Cooling Time:	$\geq$ 6 Years
e. Average Burnup Per Original Assembly:	
i. Zircaloy-Clad Fuel:	$\leq$ 43,000 MWD/MTU
ii. Stainless Steel-Clad Fuel:	$\leq$ 38,000 MWD/MTU
f. Original Fuel Assembly Length:	$\leq$ 137.1 inches

Table B2-3
Connecticut Yankee Fuel Assembly Limits (Continued)

g. Original Fuel Assembly Width: ≤ 8.47 inches

h. Maximum Loaded Weight:
   i. CY-MPC RECONFIGURED FUEL ASSEMBLY: 1,200 lbs
   ii. CY-MPC DAMAGED FUEL CAN: 1,590 lbs

i. Maximum Mass U
   i. CY-MPC RECONFIGURED FUEL ASSEMBLY: 212 kg
   ii. CY-MPC DAMAGED FUEL CAN: 433.7 kg

B. Quantity per CANISTER:
   1. Up to 24 Connecticut Yankee INTACT FUEL ASSEMBLIES.
   2. Up to 4 CY-MPC RECONFIGURED FUEL ASSEMBLIES or CY-MPC DAMAGED FUEL CANS that are preferentially loaded into fuel tube locations 1, 4, 21, or 24 on Figure B2-1, with the remaining available locations loaded with up to 23 Connecticut Yankee INTACT FUEL ASSEMBLIES.
   3. Maximum contents weight limit of 35,100 lbs.
   4. Decay heat loading must conform to the LOADING CATEGORIES in Table B2-5 for total canister and individual fuel assembly heat load, where the LOADING CATEGORY corresponds to the time limits shown in LCOs 3.1.1 and 3.1.4.

C. CY-MPC RECONFIGURED FUEL ASSEMBLIES and CY-MPC DAMAGED FUEL CANS shall not contain control components.

D. Connecticut Yankee INTACT FUEL ASSEMBLIES with one or more missing fuel rods not replaced with solid filler rods, shall be preferentially loaded in fuel tube positions 1, 4, 21, or 24 on Figure B2-1.

E. Connecticut Yankee INTACT FUEL ASSEMBLIES (not loaded in CY-MPC DAMAGED FUEL CANS) may each have an inserted reactor control component (reactor control cluster or flow mixer), up to the canister payload weight limit of 35,100 lbs.

Table B2-3
Connecticut Yankee Fuel Assembly Limits (Continued)

F. Up to 6 Connecticut Yankee INTACT FUEL ASSEMBLIES loaded in fuel tube positions 7, 8, 12, 13, 17, or 18 as shown in Figure B2-1 in each CANISTER may each have an inserted flow mixer up to the CANISTER contents weight limit of 35,100 lbs.

G. Individual DAMAGED FUEL RODS and FUEL DEBRIS must be loaded in the CY-MPC RECONFIGURED FUEL ASSEMBLY.

H. DAMAGED FUEL ASSEMBLIES, LATTICES holding INTACT FUEL RODS or DAMAGED FUEL RODS and FAILED ROD STORAGE CANISTER holding INTACT FUEL RODS or DAMAGED FUEL RODS must be loaded in the CY-MPC DAMAGED FUEL CAN.

I. INTACT FUEL ASSEMBLIES and DAMAGED FUEL ASSEMBLIES may have stainless steel rods inserted into each of the 20 RCCA guide tubes. The weight of the contents, including the installed stainless steel rods, shall not exceed the authorized contents weight limit of 35,100 pounds.

II. CY-MPC CANISTER – 26-Assembly Basket Configuration

A. Allowable Contents

1. Uranium oxide Connecticut Yankee INTACT FUEL ASSEMBLIES listed in Table B2-4, excluding Westinghouse Vantage 5 fuel, and meeting the following specifications:

a. Cladding Type:	Zircaloy or stainless steel as specified in Table B2-4 for the applicable fuel assembly type.	
b. Initial Enrichment:		
i. Zircaloy-Clad Fuel:	≤ 3.93 wt. % ^{235}U	
ii. Stainless Steel-Clad Fuel:	≤ 4.03 wt. % ^{235}U	
c. Decay Heat Per Assembly:		
i. Uniform Heat Loading:	≤ 674 Watts	
	Fuel Loading Positions	Assembly Limit
ii. Preferential Loading: (See Figure B2-2)	7, 8, 12, 13, 14, 15, 19 and 20	≤ 840 Watts
	1, 2, 3, 4, 5, 6, 9, 10, 11, 16, 17, 18, 21, 22, 23, 24, 25 and 26	≤ 600 Watts
d. Post-irradiation Cooling Time:	≥ 6 Years	

Table B2-3
Connecticut Yankee Fuel Assembly Limits (Continued)

e. Average Burnup Per Original Assembly:	
i. Zircaloy-Clad Fuel:	≤ 43,000 MWD/MTU
ii. Stainless Steel-Clad Fuel:	≤ 38,000 MWD/MTU
f. Original Fuel Assembly Length:	≤ 137.1 inches
g. Original Fuel Assembly Width:	≤ 8.47 inches
h. Fuel Assembly Weight:	≤ 1,490 lbs
i. Minimum Length of Bottom Fuel Nozzle:	3.2 inches

2. Uranium oxide Connecticut Yankee INTACT FUEL ASSEMBLIES, DAMAGED FUEL ASSEMBLIES, INTACT FUEL RODS, DAMAGED FUEL RODS, or FUEL DEBRIS placed in a CY-MPC DAMAGED FUEL CAN or CY-MPC RECONFIGURED FUEL ASSEMBLY. The Connecticut Yankee INTACT FUEL ASSEMBLIES, DAMAGED FUEL ASSEMBLIES, INTACT FUEL RODS, DAMAGED FUEL RODS, or FUEL DEBRIS shall be, or shall be from, assemblies that meet the criteria specified in Table B2-4 for the fuel assembly type or vendor, and meet the following additional specifications:

a. Cladding Type:	Zircaloy or stainless steel as specified in Table B2-4 for the applicable fuel assembly type.	
b. Initial Enrichment:		
i. Zircaloy-Clad Fuel:	≤ 3.93 wt. % ^{235}U	
ii. Stainless Steel-Clad Fuel:	≤ 4.03 wt. % ^{235}U	
c. Decay Heat Per CY-MPC RECONFIGURED FUEL ASSEMBLY or DAMAGED FUEL CAN:		
i. Uniform Heat Loading:	≤ 674 Watts	
ii. Preferential Loading (See Figure B2-2)	Fuel Loading Position	Thermal Limit
	1, 4, 23, 26	≤ 600 Watts

Table B2-3
Connecticut Yankee Fuel Assembly Limits (Continued)

d. Post-irradiation Cooling Time:	≥ 6 Years
e. Average Burnup Per Original Assembly:	
i. Zircaloy-Clad Fuel:	≤ 43,000 MWD/MTU
ii. Stainless Steel-Clad Fuel:	≤ 38,000 MWD/MTU
f. Original Fuel Assembly Length:	≤ 137.1 inches
g. Original Fuel Assembly Width:	≤ 8.47 inches
h. Maximum Weight:	
i. CY-MPC RECONFIGURED FUEL ASSEMBLY:	1,200 lbs
ii. CY-MPC DAMAGED FUEL CAN:	1,590 lbs
i. Maximum Mass U	
i. CY-MPC RECONFIGURED FUEL ASSEMBLY:	212 kg
ii. CY-MPC DAMAGED FUEL CAN:	433.7 kg

B. Quantity per CANISTER:
1. Up to 26 Connecticut Yankee INTACT FUEL ASSEMBLIES.
2. Up to 4 CY-MPC RECONFIGURED FUEL ASSEMBLIES or CY-MPC DAMAGED FUEL CANS that are preferentially loaded into fuel tube locations 1, 4, 23, or 26 on Figure B2-2, with the remaining available locations loaded with up to 25 Connecticut Yankee INTACT FUEL ASSEMBLIES.
3. Maximum contents weight limit of 35,100 lbs.
4. Decay heat loading must conform to the LOADING CATEGORIES in Table B2-5 for total canister and individual fuel assembly heat load, where the LOADING CATEGORY corresponds to the time limits shown in LCOs 3.1.1, 3.1.4, and 3.1.8

Table B2-3
Connecticut Yankee Fuel Assembly Limits (Continued)

C. CY-MPC RECONFIGURED FUEL ASSEMBLIES and CY-MPC DAMAGED FUEL CANS shall not contain control components.
D. Connecticut Yankee INTACT FUEL ASSEMBLIES with one or more missing fuel rods not replaced with solid filler rods, shall be preferentially loaded in fuel tube positions 1, 4, 23, or 26 on Figure B2-2.
E. Connecticut Yankee INTACT FUEL ASSEMBLIES may each have an inserted reactor control component (reactor control cluster or flow mixer), up to the CANISTER contents weight limit of 35,100 lbs.
F. Up to 8 Connecticut Yankee INTACT FUEL ASSEMBLIES loaded in fuel tube positions 7, 8, 12, 13, 14, 15, 19 or 20 as shown in Figure B2-2 in each CANISTER may each have an inserted flow mixer up to the CANISTER contents weight limit of 35,100 lbs.
G. In the preferential loading configuration, Zircaloy clad fuel assemblies with cooling times less than 7 years shall not be loaded into fuel tube positions 13 or 14 as shown in Figure B2-2.
H. Individual DAMAGED FUEL RODS and FUEL DEBRIS must be loaded in the CY-MPC RECONFIGURED FUEL ASSEMBLY.
I. DAMAGED FUEL ASSEMBLIES, LATTICES holding INTACT FUEL RODS or DAMAGED FUEL RODS and FAILED ROD STORAGE CANISTER holding INTACT FUEL RODS or DAMAGED FUEL RODS must be loaded in the CY-MPC DAMAGED FUEL CAN.
J. INTACT FUEL ASSEMBLIES and DAMAGED FUEL ASSEMBLIES may have stainless steel rods inserted into each of the 20 RCCA guide tubes. The weight of the contents, including the installed stainless steel rods, shall not exceed the authorized contents weight limit of 35,100 pounds.

Table B2-4 Connecticut Yankee INTACT FUEL ASSEMBLY Characteristics

Parameter	West.	NUMEC	B & W (GUNF)	B & W	Gulf General Atomic	NUMEC	B & W	B & W	West. Vantage 5H[1]
Assembly Array	15 x 15	15 x 15	15 x 15	15 x 15	15 x 15	15 x 15	15 x 15	15 x 15	15 x 15
Fuel Rod Cladding	Stainless Steel	Stainless Steel	Stainless Steel	Stainless Steel	Zircaloy	Zircaloy	Zircaloy	Zircaloy	Zircaloy
Fuel Rods per Assembly	204	204	204	204	204	204	204	204	204
Guide Tubes per Assembly	20	20	20	20	20	20	20	20	20
Instrument Tubes per Assembly	1	1	1	1	1	1	1	1	1
Nominal Unirradiated Assembly Length (in)	137.1	137.1	137.1	137.1	137.1	137.1	137.1	137.1	137.1
Maximum Assembly Cross Section (in)	8.47	8.47	8.47	8.47	8.47	8.47	8.47	8.47	8.47
Maximum Enrichment (wt. % ^{235}U)	4.03	4.03	4.03	4.03	3.42	3.42	3.42	3.93	4.61
Maximum Initial Uranium Mass (MTU/ Assembly)	0.4337	0.4337	0.4337	0.4337	0.3971	0.3971	0.3971	0.3742	0.3900
Max. Burnup (MWD/MTU)	38,000	30,000	38,000	38,000	30,000	30,000	40,000	43,000	30,000

1. Westinghouse Vantage 5 fuel must be loaded in the 24-assembly basket.

Table B2-5 Connecticut Yankee Fuel and Canister Heat LOADING CATEGORY Limits

LOADING CATEGORY	Canister Maximum Total Heat Load (kW)	Fuel Assembly Maximum Heat Load (Watts)
A	17.5	840
B	13.0	840
C	13.0	674
D	9.0	500

Table B2-6 Heat Load Matrix used to Determine LOADING CATEGORY

Maximum Total Canister Heat Load (kW)	Maximum Individual Fuel Assembly Heat Load (Watts)		
	840	674	500
≤ 17.5	A	A	A
≤ 13.0	B	C	C
≤ 9.0	B	C	D

Note: Establish LOADING CATEGORY by determining the total heat load for all of the fuel assemblies to be loaded into a CANISTER and then determining the maximum individual fuel assembly heat load for these assemblies. These values are used to look up the first column ("Maximum Total Canister Heat Load"), starting at the lowest heat load, until the loading condition is met, then across that row starting from the right, until the individual fuel assembly condition ("Maximum Individual Fuel Assembly Heat Load") is met. The intersection of the row and column specifies the LOADING CATEGORY for the CANISTER. For the preferential loading configuration, the maximum CANISTER heat load is 17.5 kW.

Figure B2-1 CY-MPC 24-Assembly Basket Fuel Loading Positions

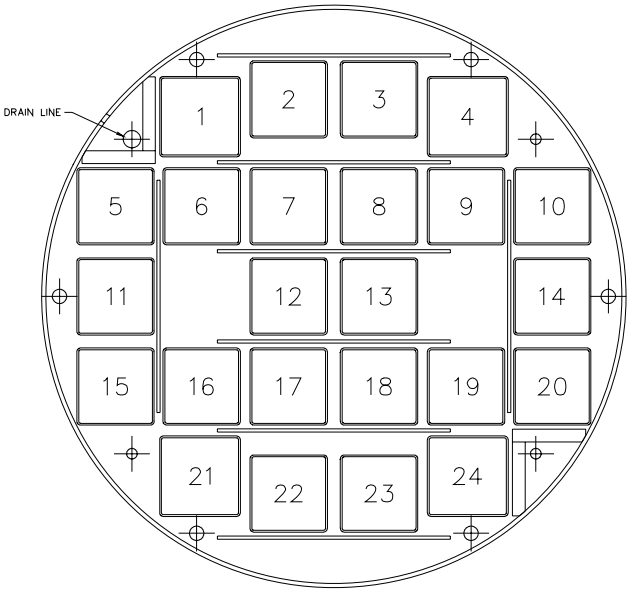

Figure B2-2 CY-MPC 26-Assembly Basket Fuel Loading Positions

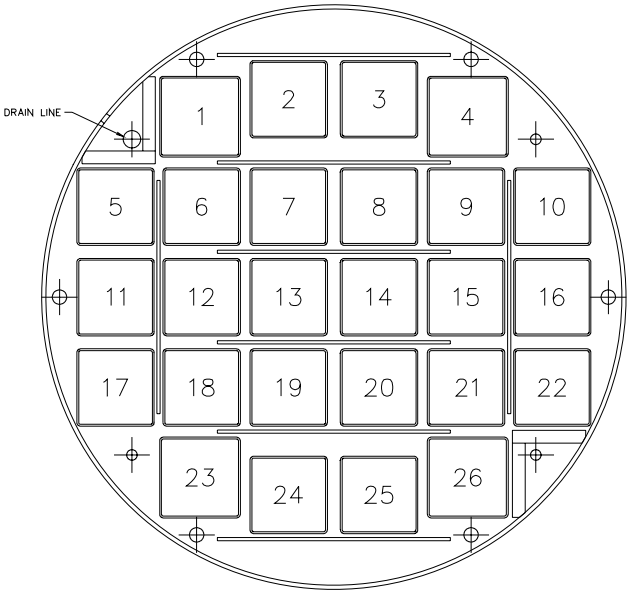

B 2.2 Violations

If any Fuel Specification or Loading Condition of B2.1 is violated, the following actions shall be completed in accordance with the requirements of 10 CFR 72.75:

B 2.2.1 The affected fuel assemblies shall be placed in a safe condition.
B 2.2.2 Within 24 hours, notify the NRC Operations Center.
B 2.2.3 Within 60 days, submit a written report describing the cause of the violation and actions taken to restore compliance and prevent recurrence.

B 3.0 DESIGN FEATURES

B 3.1 Site

B 3.1.1 Site Location

The NAC-MPC SYSTEM is authorized for use by 10 CFR 50 license holders at various site locations under the general license provisions of 10 CFR Part 72, Subpart K.

B 3.2 Design Features Significant to Safety

B 3.2.1 CRITICALITY CONTROL

a) Minimum ^{10}B loading in the Boral neutron absorbers:
   1. YANKEE-MPC – 0.01 g/cm^2
   2. CY-MPC – 0.02 g/cm^2

b) Minimum length of INTACT FUEL ASSEMBLY internal structure and bottom end fitting and/or spacers shall ensure the minimum distance to the fuel region from the base of the CANISTER is:
   1. YANKEE-MPC – 6.7 inches
   2. CY-MPC – 3.2 inches

B 3.2.2 FUEL CLADDING INTEGRITY

The licensee shall ensure that fuel oxidation and the resultant consequences are precluded during canister loading and unloading operations.

B 3.3 Codes and Standards

The American Society of Mechanical Engineers Boiler and Pressure Vessel Code (ASME Code), 1995 Edition with Addenda through 1995, is the governing Code for the NAC-MPC SYSTEM CANISTER except that Addenda through 1997 are applied for the critical flaw evaluation of the CANISTER closure weld.

The American Concrete Institute Specifications ACI 349 (1985) and ACI 318 (1995) govern the NAC-MPC SYSTEM CONCRETE CASK design and construction, respectively.

The American National Standards Institute ANSI N14.6 (1993) and NUREG-0612 govern the NAC-MPC SYSTEM TRANSFER CASK design, operation, fabrication, testing, inspection and maintenance.

(continued)

B 3.3.1 Alternatives to the ASME Code

Codes and Standards

The NAC-MPC CANISTER and fuel basket structure are designed and fabricated in accordance with the ASME Code, Section III, Division 1, Subsections NB and NG, respectively. Alternatives to the applicable ASME Code requirements are listed in Table B3-1.

Proposed alternatives to ASME Code Section III, 1995 Edition with Addenda, including alternatives allowed by Table B3-1, may be used as authorized by the Director of the Office of Nuclear Material Safety and Safeguards or Designee. The justification in Table B3-1 demonstrates that:

1. The proposed alternatives will provide an acceptable level of quality and safety, or
2. Compliance with the specified requirements of ASME Code, Section III, 1995 Edition with Addenda would result in hardship or unusual difficulty without a compensating increase in the level of quality and safety.

Table B3-1 List of ASME Code Alternatives for the NAC-MPC SYSTEM

Component	Reference ASME Code Section/Article	Code Requirement	Alternative, Justification and Compensatory Measures
CANISTER	NB-1100	Statement of requirements for Code stamping of components.	CANISTER is designed and will be fabricated in accordance with ASME Code, Section III, Subsection NB to the maximum practical extent, but Code stamping is not required.
CANISTER	NB-2000	Requirements to be supplied by ASME-approved material supplier.	Materials are supplied by vendors approved under the NAC Quality Assurance Program. Materials are procured using ASME material specifications. CMTRs for the material are required in accordance with NB-2000.
CANISTER Shield Lid and Structural Lid Welds	NB-4243	Full penetration welds required for Category C joints (flat head to main shell per NB-3352.3).	Shield lid and structural lid to CANISTER shell welds are not full penetration welds. These field welds are performed independently to provide a redundant closure. Leaktightness of the CANISTER is verified by testing.
CANISTER Structural Lid Weld	NB-4421	Requires removal of backing ring. Requires that the backing ring be continuous.	Structural lid to CANISTER shell weld uses a backing ring that is not removed. The backing ring permits completion of the groove weld; it is not considered in any analyses; and it has no detrimental effect on the CANISTER's function.
CANISTER Vent Port Cover and Drain Port Cover to Shield Lid Welds; Shield Lid to Canister Shell Weld	NB-5230	Radiographic (RT) or ultrasonic (UT) examination required.	Root and final surface liquid penetrant examination to be performed per ASME Code Section V, Article 6, with acceptance in accordance with ASME Code, Section III, NB-5350. If the weld is completed in a single weld-pass, only a final surface liquid penetrant examination is performed.

Table B3-1 List of ASME Code Alternatives for the NAC-MPC SYSTEM (continued)

Component	Reference ASME Code Section/Article	Code Requirement	Alternative, Justification and Compensatory Measures
CANISTER Structural Lid to Shell Weld	NB-5230	Radiographic (RT) or ultrasonic (UT) examination required.	The CANISTER structural lid to CANISTER shell closure weld is performed in the field following fuel assembly loading. The structural lid-to-shell weld will be verified by either ultrasonic (UT) or progressive liquid penetrant (PT) examination. If progressive PT examination is used, at a minimum, it must include the root and final layers and each approximately 3/8 inch of weld depth. If UT examination is used, it will be followed by a final surface PT examination. For either UT or PT examination, the maximum, undetectable flaw size is demonstrated to be smaller than the critical flaw size. The critical flaw size is determined in accordance with ASME Code, Section XI methods. The examination of the weld will be performed by qualified personnel per ASME Code Section V, Articles 5 (UT) and 6 (PT) with acceptance per ASME Code Section III, NB-5332 (UT) per 1997 Addenda, and NB-5350 for (PT).

Table B3-1 List of ASME Code Alternatives for the NAC-MPC SYSTEM (continued)

Component	Reference ASME Code Section/Article	Code Requirement	Alternative, Justification and Compensatory Measures
CANISTER Vessel and Shield Lid	NB-6111	All completed pressure retaining systems shall be pressure tested.	The CANISTER shield lid to shell weld is performed in the field following fuel assembly loading. The CANISTER is then pneumatically pressure tested as defined in Chapter 9 and described in Chapter 8. Accessibility for leakage inspections precludes a Code compliant hydrostatic test. The shield lid-to-shell weld is also leak tested to the leak-tight criteria of ANSI N14.5. The vent port and drain port cover welds are examined by root and final PT examination. If the weld is completed in a single weld pass, only a final surface liquid penetrant examination is performed. The vent port and drain port cover welds are not pressure tested, but are tested to the leak-tight criteria of ANSI N14.5. The structural lid enclosure weld is not pressure tested, but is examined by progressive PT or UT and final surface PT.
CANISTER Vessel	NB-7000	Vessels are required to have overpressure protection.	No overpressure protection is provided. The function of the CANISTER is to confine radioactive contents under normal, off-normal, and accident conditions of storage. The CANISTER vessel is designed to withstand a maximum internal pressure considering 100% fuel rod failure and maximum accident temperatures.

Table B3-1 List of ASME Code Alternatives for the NAC-MPC SYSTEM (continued)

Component	Reference ASME Code Section/Article	Code Requirement	Alternative, Justification and Compensatory Measures
CANISTER Vessel	NB-8000	States requirements for nameplates, stamping and reports per NCA-8000.	The NAC-MPC SYSTEM is marked and identified in accordance with 10 CFR 72 requirements. Code stamping is not required. The QA data package will be in accordance with NAC's approved QA program.
CANISTER Basket Assembly	NG-2000	Requires materials to be supplied by ASME-approved material supplier.	Materials are supplied by vendors approved under the NAC Quality Assurance Program. Materials are procured using ASME material specifications. CMTRs for the material are required in accordance with NG-2000.
CANISTER Basket Assembly	NG-8000	States requirements for nameplates, stamping and reports per NCA-8000.	The NAC-MPC SYSTEM will be marked and identified in accordance with 10 CFR 72 requirements. No Code stamping is required. The CANISTER basket data package will be in accordance with NAC's approved QA program.
CANISTER Vessel and Basket Assembly Material	NB-2130/ NG-2130	States requirements for certification of material organizations and materials to NCA-3861 and NCA-3862, respectively.	The NAC-MPC CANISTER and Basket Assembly component materials are procured in accordance with the specifications for materials in ASME Code Section II with Certified Material Test Reports. The component materials will be obtained from NAC approved Suppliers in accordance with NAC's approved QA program.

B 3.4 Site Specific Parameters and Analyses

Site-specific parameters and analyses that will require verification by the NAC-MPC SYSTEM user are, as a minimum, as follows:

1. The temperature of 75°F is the maximum average yearly temperature. The 3-day average ambient temperature shall be 100°F or less.

2. The allowed temperature extremes, averaged over a 3-day period, shall be greater than –40°F and less than 125°F.

3. The design basis earthquake horizontal acceleration at the top surface of the ISFSI pad is 0.25g in each orthogonal direction and is (0.25g x 0.667 =) 0.167g in the vertical direction.

4. The analyzed flood condition of 15 fps water velocity and a height of 50 feet of water (full submergence of the loaded cask) are not exceeded.

5. The potential for fire and explosion shall be addressed, based on site-specific considerations. This includes the condition that the fuel tank of the cask handling equipment used to move the loaded CONCRETE CASK onto or from the ISFSI site contains no more than 50 gallons of fuel.

(continued)

B 3.4 Site Specific Parameters and Analyses (continued)

6. In addition to the requirements of 10 CFR 72.212(b)(2)(ii), the ISFSI pads and foundation shall include the following characteristics as applicable to the end drop and tip-over analyses:

Parameter	Yankee-MPC	CY-MPC
Concrete thickness	36 inches maximum	36 inches maximum
Pad subsoil thickness	72 inches minimum	60 inches minimum
Specified concrete compressive strength	≤ 4,000 psi at 28 days	≤ 4,000 psi at 28 days
Concrete dry density (ρ)	$125 \leq \rho \leq 150$ lbs/ft^3	$135 \leq \rho \leq 150$ lbs/ft^3
Soil in place density (ρ)	$85 \leq \rho \leq 130$ lbs/ft^3	$85 \leq \rho \leq 130$ lbs/ft^3
Soil Stiffness	k ≤ 300 psi/in	--
Soil Modulus of Elasticity	--	≤ 30,000 psi

The concrete pad maximum thickness excludes the ISFSI pad footer. The compressive strength of the concrete should be determined according to the test method given in Section 5.6 of ACI 318. Steel reinforcement is used in the pad footer. The basis for acceptance of concrete shall be as described in Section 5.6 of ACI 318. The soil modulus of elasticity should be determined according to the test method described in ASTM D4719 or in ASTM D1196. The soil stiffness should be determined according to the test method described in Chapter 9 of the Civil Engineering Reference Manual, 6th Edition.

7. In cases where engineered features (i.e., berms, shield walls) are used to ensure that requirements of 10 CFR 72.104(a) are met, such features are to be considered important to safety and must be evaluated to determine the applicable Quality Assurance Category on a site specific basis.

8. TRANSFER CASK OPERATIONS shall only be conducted with surrounding air temperatures ≥ 0°F.

B 3.5 CANISTER HANDLING FACILITY (CHF)

B 3.5.1 TRANSFER CASK and CANISTER Lifting Devices

Movements of the TRANSFER CASK and CANISTER outside of the 10 CFR 50 licensed facilities, when loaded with spent fuel are not permitted unless the movements are made with a CANISTER HANDLING FACILITY designed, operated, fabricated, tested, inspected and maintained in accordance with the guidelines of NUREG-0612, “Control of Heavy Loads at Nuclear Power Plants,” and the below clarifications. This Technical Specification does not apply to handling heavy loads under a 10 CFR 50 license.

B 3.5.2 CANISTER HANDLING FACILITY Structure Requirements

B 3.5.2.1 CANISTER Station and Stationary Lifting Devices

1. The weldment structure of the CANISTER HANDLING FACILITY shall be designed to comply with the stress limits of ASME Code, Section III, Subsection NF, Class 3 for linear structures. The applicable loads, load combinations, and associated service condition definitions are provided in Table B3-2. All compression loaded members shall satisfy the buckling criteria of ASME Code, Section III, Subsection NF.
2. If a portion of the CANISTER HANDLING FACILITY structure is constructed of reinforced concrete, then the factored load combinations set forth in ACI 318 (1995) for the loads defined in Table B3-2 shall apply.
3. The TRANSFER CASK and CANISTER lifting device used with the CANISTER HANDLING FACILITY shall be designed, fabricated, operated, tested, inspected and maintained in accordance with NUREG-0612, Section 5.1.

(continued)

B 3.5.2.2 Mobile Lifting Devices

If a mobile lifting device is used as the lifting device, in lieu of a stationary lifting device, it shall meet the guidelines of NUREG-0612, Section 5.1, with the following clarifications:

1. Mobile lifting devices shall have a minimum safety factor of two over the allowable load table for the lifting device in accordance with the guidance of NUREG-0612, Section 5.1.6(1)(a) and shall be capable of stopping and holding the load during a Design Basis Earthquake (DBE) event.
2. Mobile lifting devices shall conform to the requirements of ANSI B30.5, “Mobile and Locomotive Cranes,” in lieu of the requirements of ANSI B30.2, “Overhead and Gantry Cranes.”
3. Mobile cranes are not required to meet the requirements of NUREG-0612, Section 5.1.6(2) for new cranes.

Table B3-2 Load Combinations and Service Condition Definitions for the CANISTER HANDLING FACILITY (CHF) Structure

Load Combination	ASME Section III Service Condition for Definition of Allowable Stress	Comment
D*	Level A	All primary load bearing members must satisfy Level A stress limits
D + S	Level A	
D + M + W	Level D	Factor of safety against overturning shall be ≥ 1.1
D + F	Level D	
D + E	Level D	
D + Y	Level D	

D* = Apparent dead load
D = Dead load
S = Snow and ice load for the CHF site
M = Tornado missile load of the CHF site[1]
W = Tornado wind load for the CHF site[1]
F = Flood load for the CHF site
E = Seismic load for the CHF site
Y = Tsunami load for the CHF site[1]

Note:
1. Tornado wind (W) and missile (M) loads and Tsunami (Y) load may be reduced or eliminated based on a Probability Risk Assessment for the CHF site.