Safety Analysis Report for the
F-294 Transport Package

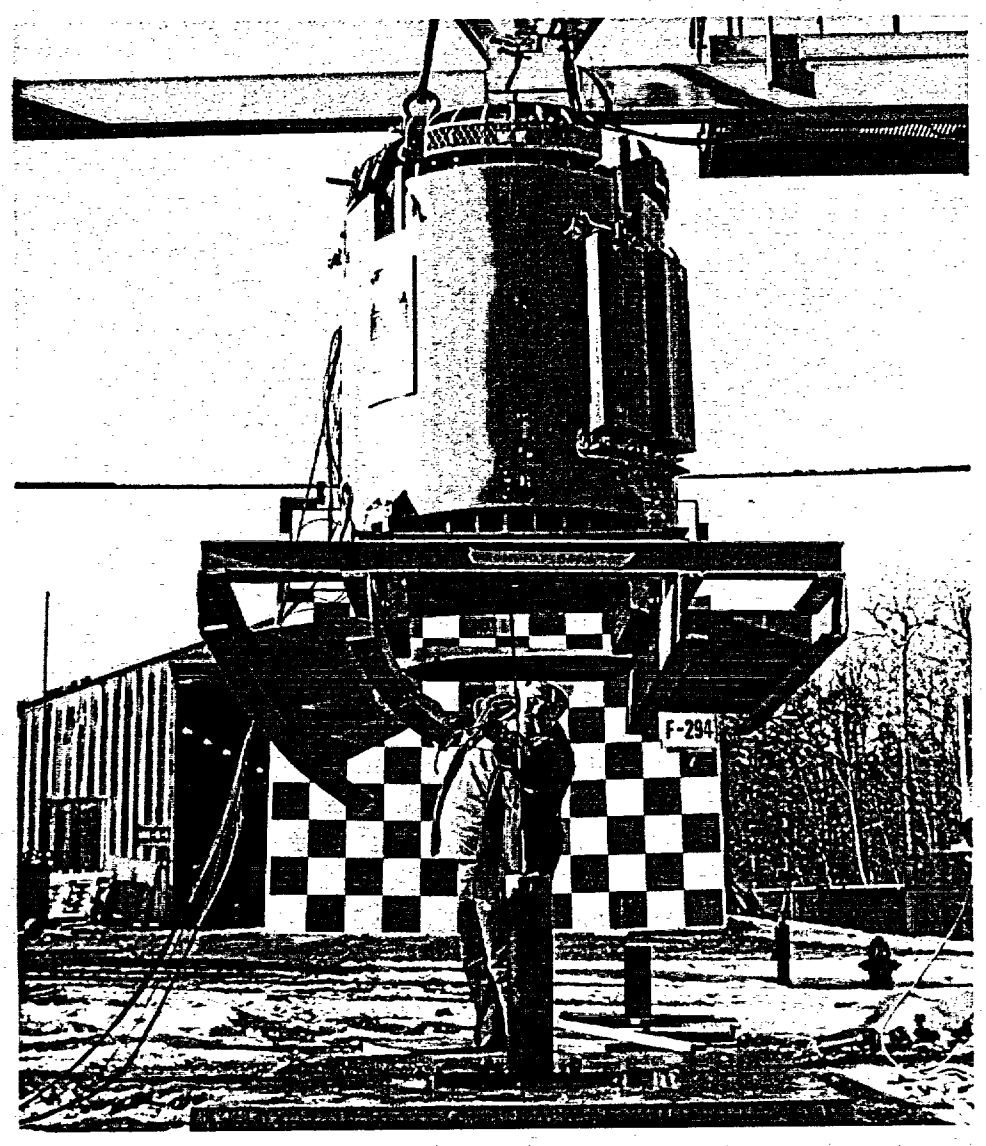

IN/TR 9301 F294 (4)

Part 2 of 2

MDS Nordion
Science Advancing Health

CONTENTS

CHAPTER 3 – THERMAL EVALUATION 1
3.1 DISCUSSION 1
3.1.1 Thermal Design Features *1*
3.1.2 Normal conditions of transport - steady state temperatures of F-294 ..... *2*
3.1.3 Hypothetical Accident conditions of transport - temperatures of F-294 in thermal test *2*
3.1.4 Decay heat load *3*
3.2 SUMMARY OF THERMAL PROPERTIES OF MATERIALS 3
3.3 TECHNICAL SPECIFICATIONS OF COMPONENTS 6
3.4 THERMAL EVALUATION FOR NORMAL CONDITIONS OF TRANSPORT 6
3.4.1 Thermal Model *6*
3.4.2 Maximum Temperatures *9*
3.4.3 Minimum Temperatures *10*
3.4.4 Maximum Internal Pressure *10*
3.4.4.1 Cavity of F-294 10
3.4.4.2 C-188 Assembly 10
3.4.5 Maximum Thermal Stresses *11*
3.4.6 Evaluation of the Package performance for Normal Conditions of Transport *11*
3.5 HYPOTHETICAL ACCIDENT THERMAL EVALUATION 12
3.5.1 Thermal Model *12*
3.5.1.1 Analytical Thermal Model 12
3.5.1.2 Test Thermal Model 12
3.5.2 Package Conditions and Environment *12*
3.5.3 Package Temperatures *13*
3.5.4 Maximum Internal Pressures *13*
3.5.4.1 Cavity of F-294 13
3.5.4.2 C-188 Assembly 14
3.5.5 Maximum Thermal Stresses *14*
3.5.6 Evaluation of Package Performance for the Hypothetical Accident Thermal Conditions *14*
3.5.6.1 C-188 Sealed Source 14
3.5.6.2 The Containment System 15
3.5.6.3 Shielding in the Container and the Plug 15
3.6 APPENDICES 18
Appendix 3.6.1 List of References for Chapter 3 ..... *1*
Appendix 3.6.2 Normal Thermal Tests of the F-294 Package with the F-313 Source Carrier *1*
Sub-Appendix 3.6.2.1 Test # 5.1.10, Normal Thermal Test Prior to the Drop 13
Sub-Appendix 3.6.2.2 Test # 5.3.10, Normal Thermal Testing After the Drop 27
Appendix 3.6.3 Steady State Heat Transfer in the Cavity of F-294 Package *1*
Appendix 3.6.4 Finite Element Analysis of the F-294 with the F-313 Source Carrier *1*
Sub-Appendix 3.6.4.1 COSMOS/M Element Descriptions [15] 31
Sub-Appendix 3.6.4.2 Radiation Shape Factors 43
Sub-Appendix 3.6.4.3 Derivation of Heat Transfer Coefficients 65
Sub-Appendix 3.6.4.4 COSMOS /M Input and Output Files 69
Appendix 3.6.5 Kaowool Product Information *1*
Appendix 3.6.6 Normal Thermal Tests of the F-294 Package with the F-457 Source Carrier *1*
Appendix 3.6.7 Finite Element analysis of the f-294 with the F-457 Source Carrier *1*

CHAPTER 4 – CONTAINMENT 1
4.1 CONTAINMENT BOUNDARY 1
4.1.1 Containment Vessel *1*
4.1.2 Containment Penetration *1*
4.1.3 Seals and Welds *2*
4.1.3.1 Seals 2
4.1.3.2 Welds 2
4.1.4 Closure *2*

4.2 REQUIREMENTS FOR NORMAL CONDITIONS OF TRANSPORT 2
4.2.1 Release of Radioactive Material *3*
4.2.2 Pressurization of Containment System *3*
4.2.2.1 Maximum Internal Pressure 4
4.2.3 Stress Analysis of closure plug and inner shell assembly *4*
4.2.3.1 Closure Plug Bolted Joint 4
4.2.3.2 Inner Shell Assembly 5
4.2.4 Coolant Contamination *6*
4.2.5 Coolant Loss *7*
4.3 CONTAINMENT REQUIREMENTS FOR HYPOTHETICAL ACCIDENT CONDITIONS 7
4.3.1 Pressurization of Containment System *8*
4.3.1.1 Maximum Internal Pressure 8
4.3.2 Stress Analysis of Closure Plug and Inner Shell Assembly *9*
4.3.2.1 Closure Plug Bolted Joint 9
4.3.2.2 Inner Shell Assembly 10
4.3.3 Impact of the puncture test *12*
4.3.4 Impact of the water immersion test *12*
4.3.5 Fission Gas Products *13*
4.3.6 Release of Contents *13*
4.4 APPENDICES 13
Appendix 4.4.1 List of References for Chapter 4 ..... *1*
Appendix 4.4.2 C-188 certificates *1*
Appendix 4.4.3 Stress Analysis of the Containment System Subject to Normal Conditions of Transport of F-294 ..... *1*
Appendix 4.4.4 C-188 Structural Integrity Under Normal Conditions of Transport of F-294 ..... *1*
Appendix 4.4.5 C-188 Structural Integrity Under Hypothetical Accident Conditions of Transport (HACOT) of F-294 ..... *1*
Appendix 4.4.6 Stress Analysis of the Containment System Subject to Hypothetical Accident Conditions of Transport of F-294 ..... *1*
Appendix 4.4.7 F-294 Prototype Container Testing: Drop Test Data Relevant to the Containment System .. *1*

CHAPTER 5 – SHIELDING EVALUATION **1**
5.1 DISCUSSION AND RESULTS 1
5.2 SOURCE SPECIFICATION 5
5.3 MODEL SPECIFICATION 5
5.3.1 Description of the radial and Axial Shielding Configuration *5*
5.3.2 Shield Regional Densities *5*
5.4 SHIELDING EVALUATION 6
5.4.1 Shielding evaluation of f-294 PACKAGE in normal conditions of transport (NCOT) *6*
5.4.2 Shielding evaluation of f-294 PACKAGE under hypothetical conditions of transport (HACOT) *7*
5.4.3 impact of the all stainless steel crack shield versus steel-encased-lead crack shield. *7*
5.5 APPENDICES 10
Appendix 5.5.1 List of References for Chapter 5 ..... *1*
Appendix 5.5.2 Pre-Drop Radiation Survey *1*
Appendix 5.5.3 Post-Drop Radiation Survey *1*
Appendix 5.5.4 Converting Exposure to Dose Equivalent *1*
Appendix 5.5.5 Exposure Rate Constant for ^{60}Co *1*
Appendix 5.5.6 Typical Microshield Output *1*
Appendix 5.5.7 Shielding Evaluation for the Hypothetical Accident Thermal Conditions *1*
Appendix 5.5.8 Worst-case Estimate of the Increase in External Radiation Fields for the Re-designed Crack Shield Assembly *1*

CHAPTER 6 – CRITICALITY **1**

CHAPTER 7 – OPERATING PROCEDURES 1
7.1 PROCEDURES FOR LOADING THE PACKAGE 1
7.1.1 Purpose *1*
7.1.2 Scope *2*
7.1.3 Compliance and Responsibility *2*
7.1.4 Transferring F-294 Empty Packaging From the Irradiator Site to the Pool *2*
7.1.5 Underwater Loading of C-188s *3*
7.1.6 Perform the Cavity Water Flush Test Procedure *4*
7.1.6.1 Notifying MDS Nordion of Deficiencies 5
7.1.7 Preparation for Shipment of Loaded F-294 ..... *5*
7.1.8 Instructions for Securing the Package on Road Vehicles *7*
7.1.9 Additional Instructions *7*
7.1.10 Loading Procedure *7*
7.2 PROCEDURES FOR UNLOADING THE PACKAGE 12
7.2.1 Purpose *12*
7.2.2 Scope *12*
7.2.3 Compliance and Responsibility *12*
7.2.4 Receipt of F-294 Transport Package *12*
7.2.4.1 Visual Inspection 12
7.2.4.2 Surface Wipe Test 13
7.2.4.3 Radiation Survey 13
7.2.4.4 Perform the Cavity Water Flush Test Procedure 13
7.2.4.5 Notifying MDS Nordion of Deficiencies 15
7.2.5 Transfer of Loaded F-294 Package to the Bottom of Source Storage Pool *15*
7.2.5.1 Transfer F-294 from Outside to Inside the Irradiator Building 15
7.2.6 Emergency Action Following a Suspected Radiation Incident *15*
7.2.7 Unloading Procedure *16*
7.3 PREPARATION OF AN EMPTY PACKAGE FOR TRANSPORT 16
7.3.1 Purpose *16*
7.3.2 Scope *16*
7.3.3 Compliance and Responsibility *16*
7.3.4 Operations on the Empty F-294 Transport Packaging *16*
7.3.5 Instructions for Securing the Empty F-294 on Road Vehicles *17*
7.3.6 Additional Instructions *17*
7.3.7 Operating Procedure *17*
7.4 REFERENCES 18

CHAPTER 8 – ACCEPTANCE TESTS AND MAINTENANCE PROGRAM 1
8.1 ACCEPTANCE TESTS 1
8.1.1 Visual Inspection *1*
8.1.2 Structural and Pressure Tests *1*
8.1.3 Leak Tests *1*
8.1.4 Component Tests *2*
8.1.4.1 Valves, Rupture Discs, and Fluid Transfer Devices 2
8.1.4.2 Gaskets 2
8.1.4.3 Miscellaneous 2
8.1.5 Tests for Shielding Integrity *2*
8.1.6 Thermal Acceptance Tests *3*
8.1.6.1 Discussion of Test Setup 3
8.1.6.2 Test Procedure 3
8.1.6.3 Acceptance Criteria 3
8.2 MAINTENANCE PROGRAM 5
8.2.1 Structural and Pressure Tests *5*
8.2.2 Leak Tests *5*
8.2.3 Subsystem Maintenance *5*
8.2.4 Valves, Rupture Discs, and Gaskets on the Containment Vessel *5*
8.2.4.1 Gaskets for Containment System (F-294 Inner Shell Assembly) 5

8.2.5 Shielding *5*
8.2.6 Thermal *6*
8.2.7 Miscellaneous *6*
8.3 APPENDICES 6
Appendix 8.3.1 MDS Nordion Procedure for Radiation Integrity of New Shipping Containers *1*
Appendix 8.3.2 MDS Nordion Radioactive Material Transport Packaging Inspection and Maintenance Procedure *1*
Appendix 8.3.3 MDS Nordion Procedure for F-294 Steady State Thermal Test *1*
Appendix 8.3.4 MDS Nordion Procedure for Helium Leak Test of F-294 Cavity *1*

CHAPTER 9 – QUALITY ASSURANCE **1**
9.1 QUALITY ASSURANCE PROGRAM AT MDS NORDION 1
9.2 MANUFACTURING HISTORY OF THE F-294 1
9.2.1 Prototype F-294 ..... *1*
9.3 APPENDICES 1
Appendix 9.3.1 Quality Assurance Program at AECL Commercial Products in 1981 ..... *1*
Appendix 9.3.2 Quality Assurance Program at MDS Nordion Since 1992 ..... *1*

CHAPTER 10 – ABILITY OF THE F-294 TRANSPORT PACKAGE TO MEET THE REQUIREMENTS OF TS-R-1 ..... **1**
10.1 GENERAL INFORMATION 2
10.2 STRUCTURAL EVALUATION 2
10.3 THERMAL EVALUATION 2

CHAPTER 3 – THERMAL EVALUATION

3.1 DISCUSSION

3.1.1 THERMAL DESIGN FEATURES

There are three significant thermal design features of the F-294 package.

1. Fins

On the external surface of the container, with the exception of the shield plug, fins are welded to the container shell to augment heat transfer during steady state normal conditions of transport. The fins also double as impact limiting devices for absorbing the energy during the hypothetical drop tests.

2. Fireshields

All of the exposed surface of the lead-shielded cask is surrounded by fireshields or localised thermal protection. These fireshields are constructed from thermal insulating materials enclosed within steel. There are five distinct thermal protection devices:

1. The top fireshield: 1 in. "Kaowool" thermal insulation is sandwiched between two mild steel plates; the top plate is 0.5 in. thick and the bottom plate is 0.25 in. thick. The top fireshield is integral with the crush shield assembly. The surface area of the top fireshield is 707 in^2.

2. The cylindrical fireshield: 1 in. "Kaowool" is sandwiched between two cylinders of mild steel; the inner cylinder is 44.875 in. OD, 0.25 in. thick, 48 in. high; the outer cylinder is 47.375 in. OD, 0.25 in. thick, 48 in. high. The surface area of the cylindrical fireshield is 6786 in^2).

3. The bottom fireshield: 1 in. ceramic fibre insulation is sandwiched between upper and lower mild steel plates of the skid. The upper plate of the skid is 0.5 in. thick x 44 in. wide x 44 in. long, the lower plate of the skid is 0.5 in. thick x 44 in. wide x 44 in. long. The surface area of the bottom fireshield is 1,764 in^2.

4. The top corner of the lead shielded cask has been modified. The primary conical shell is surrounded by a secondary conical shell. The space between the primary and secondary conical shell is filled with 0.375 in. thick thermal insulation. The surface area of the top corner thermal protection is 940 in^2.

5. The bottom corner of the lead shielded cask has been modified. The primary tori-spherical shell is surrounded by a secondary tori-spherical shell. The space between the primary and secondary tori-spherical shells is filled with 0.375 in. thick thermal insulation. The surface area of the bottom corner thermal protection is 970 in^2.

The total area of thermal protection around the F-294 cask is 11,167 in^2.

The "Kaowool"[1] blankets, protecting the lead-shielded container and plug, have low thermal conductivity (.025 Btu/hr-ft.-°F) and high service temperature (3,200°F), making them ideally suited for use as an insulating material in the packaging.

The ceramic fibre insulation provides the protection to the bottom of the lead shielded container.The low thermal conductivity of ceramic fibre insulation (0.227 Btu/hr-ft.-°F) and its high service temperature (2500°F) (Ref. [1]) make it ideally suited for use as an insulating material in the packaging.

Other steel components of the packaging serve to protect the "Kaowool" blankets against damage from puncture, impact and water.

[1] "Kaowool is a tradename for a ceramic fibre blanket made by Babcock and Wilcox.

3. Lead/Steel Interface Resistance

The F-294 packaging has some features that work to the advantage of maintaining its shielding integrity. In particular, there exists a contact thermal resistance between the lead and steel interface (thermally equivalent to a gap of 0.020 in. of air). This resistance adds to the heat protection to temperatures of about 620°F. This feature, however, is not part of the design; it is the result of the manufacturing process. (See Transnucleaire [Ref. 12, pp 170-171]; pages attached in Chapter 2, Appendix 2.10.10.)

In the steady state heat transfer analysis, this interface coefficient is taken into consideration. However, in the subsequent hypothetical fire test thermal analysis, this interface coefficient has been ignored. From the viewpoint of the F-294 lead melt, this combination provides a worst case scenario.

3.1.2 NORMAL CONDITIONS OF TRANSPORT - STEADY STATE TEMPERATURES OF F-294

If an F-294 package containing 360 kCi of Co-60 (5.57 kW decay heat load) was subjected to the environment described in 10 CFR 71 SS 71.71 (c) (1), Normal Conditions of Transport - Heat, the temperature of the lead shield would be estimated to be:

1) In the container body: Based on the finite element method (FEM) thermal analysis of the F-294 package with the F-313 source carrier, the maximum temperature of lead is 360°F (181°C) at node 146 (mid-height of cavity). Although the FEM thermal analysis of the F-294 package with the F-457 source carrier resulted in higher maximum temperatures, the permissible maximum temperature will remain the same when the loading procedure (Appendix 3.6.7) is followed.
2) In the shield plug: Based on the FEM thermal analysis of the F-294 package with the F-313 source carrier, the maximum temperature of lead is 385°F (196°C) at node 501 (bottom of closure plug). Although the FEM thermal analysis of the F-294 package with the F-457 source carrier resulted in higher maximum temperatures, the permissible maximum temperature will remain the same when the loading procedure (Appendix 3.6.7) is followed.

At these temperatures, the integrity of the lead shielding will not be impaired. (Refer to Chapter 3, Appendix 3.6.4.)

3.1.3 HYPOTHETICAL ACCIDENT CONDITIONS OF TRANSPORT - TEMPERATURES OF F-294 IN THERMAL TEST

If the F-294 package were subjected to the environment described in 10 CFR 71 SS 71.73 (c) (4), Hypothetical Accident Conditions - Thermal, the estimated worst case temperature of the lead shield is about 300°C. This is based on a number of conservative assumptions.

Steady state finite element analysis of the F-294 has shown good agreement between measured and calculated temperatures. Extrapolation of this model to the maximum activity has shown no significant effect on the shielding and containment systems.

Transient analysis using the same model has shown the F-294 to complete the regulatory fire test without the initiation of lead melt. Parametric studies have shown this to be true under a variety of modeling conditions. In all cases, peak lead temperatures were found to be significantly less than the melting point, particularly in light of the conservative assumptions used in the model. A maximum temperature of 303°C was observed. The maximum increase in lead temperature was found to be about 200°C during the fire transient.

The conservative assumptions used in this model have a significant effect on this result. It is estimated that the effect of the contact resistance decreases the maximum lead temperatures by about 50°C. Furthermore, an additional temperature decrease of between 10-30°C could be expected by the specification of a more realistic heat transfer coefficient in the interspace between the fireshield and the shielding vessel.

These findings, combined with the significant amount of energy required to effect a phase change in lead, indicates a substantial margin of safety in the design. It is submitted that the F-294 meets the thermal requirements of the regulations under the normal and hypothetical accident conditions of transport.

See Appendix 3.6.4 for details.

3.1.4 DECAY HEAT LOAD

The F-294 has a capacity of 360 kCi of cobalt-60. Using 15.47 watts per kilo-curie conversion coefficient, the total decay heat generated is 5,569.2 watts, rounded to 5.57 kilowatts.

3.2 SUMMARY OF THERMAL PROPERTIES OF MATERIALS

The general thermal properties of the materials used in the F-294 packaging are given in Table 3.2-T1.

The thermal properties as a function of temperature are given in Tables 3.2-T2, 3.2-T3, 3.2-T4, and 3.2-T5 respectively.

Table 3.2-T1
General Thermal Properties of F-294 Materials

Material	Density (lb./ft.^{3}) [Ref.]	Conductivity (BTU/hr-ft.-°F) [Ref.]	Specific Heat (Btu/lb.-°F) [Ref.]	Melting Point (°F) [Ref.]
ASTM A-36	489 [7]	25 [7]	.113 [7]	2,600 [8]
ASTM A-240 Type 304	488 [6]	9.4 [6]	.11 [6]	2,500 [9]
ASTM A-511 Type 316L	488 [6]	9.4 [6]	.11 [6]	2,550 [9]
Lead Pure 99.94%	710 [7]	20 [7]	.031 [7]	620 [2]
Kaowool	6 [5]	.025 [5]	.255 [5]	3,200 [5]
Transite	100	0.224	0.2	2,500 [1]

References for Table 3.2-T1, see Appendix 3.6.1.

Table 3.2-T2
Thermal Conductivity Values of the Packaging Materials (Btu/ft.-hr-°F)

Temp. (°F)	ss304 [6]	Mild Steel [6]	Air [23]	Kaowool [5]	Transite [1]
0	8.10	32.6	0.013	0.013	0.225
100	8.70	31.3	0.015	0.0167	0.227
200	9.3	30.2	0.017	0.0184	0.229
300	9.8	29.0	0.019	0.0208	0.231
400	10.4	27.8	0.021	0.0235	0.233
500	10.9	26.8	0.023	0.0306	0.236
600	11.3	25.7	0.025	0.0358	0.238
700	11.8	24.7	0.027	0.0427	0.240
800	12.2	23.5	0.029	0.0508	0.242
1000	13.2	21.6	0.032	0.0681	0.246
1500	15.3	17.0	0.040	0.1213	0.257

Table 3.2-T3
Specific Heat Values of Packaging Materials (Btu/lb.m-°F)

Temperature (°F)	304 Stainless [23]	Mild Steel [10]	Air [23]	Kaowool[a]	Transite[b]
0	0.110	0.108	0.25	0.25	0.20
100	0.113	0.113			
200	0.117				
300	0.120				
400	0.123				
500	0.127				
600	0.130				
700	0.133				
800	0.137				
1000	0.143[c]				
1500	0.160				

Notes:

a Assumed constant with temperature and represents the average value of air from 0°F to 1,000°F.
b Assumed constant with temperature.
c Extrapolated below 200°F and above 800°F.

Table 3.2-T4
Density Values (lb./ft.^{3}) of Packaging Materials

(Assumed constant with temperature)

304 Stainless steel	Mild steel	Air	Kaowool	Transite
494	489	0.0766	6	100

Table 3.2-T5
Lead Thermal Properties from Ref. [2]

Temperature (°F)	Thermal Conductivity (Btu/ft.-hr-°F)	Specific Heat (Btu/lb.m-°F)	Density (lb.m/ft.^{3})
0	20.26	0.0304	708
212	19.60	0.0315	
392	18.60	0.0325	
572	17.90	0.0338	
620		0.0340	
621	17.88	1.478[a]	
631		1.478[a]	
632		0.0330	
712		0.0338	
752	9.2		
784			
932	9.00		
1112	8.70		

Notes:

a The latent heat of fusion of 11.27 Btu/lb. is arbitrarily spread over an 8°F range to account for melting with an equivalent specific heat. Thus, if any nodal temperature of an element reaches 621°F, melting has begun. If all nodal temperatures of an element reach or exceed 629°F, the element of lead has completely melted.

3.3 TECHNICAL SPECIFICATIONS OF COMPONENTS

MDS Nordion Specification Number	Title and Scope
IN/DS 0757 F294	Technical Specification for the F-294 Transport Packaging.
IN/PR 0030 J1100	Technical Specification for the C-188 Sealed Source - Part I Inactive Components and Assembly. (Ref. [24]).
IN/TS 0146 J1100	Technical Specification for the C-188 Sealed Source - Part II Active Components and Assembly. (Ref. [25]).

3.4 THERMAL EVALUATION FOR NORMAL CONDITIONS OF TRANSPORT

3.4.1 THERMAL MODEL

The actual steady state temperature measurements of the F-294 package with an F-313 source carrier, with 374,428 curies of cobalt-60 are reported in Chapter 3, Appendix 3.6.2. Figure 3.4-F1 depicts the actual temperature measurements of F-294 package with 374,428 curies of cobalt-60. The finite element thermal analysis of the F-294/F-313 thermal model, using COSMOS software code, is presented in Chapter 3, Appendix 3.6.4. In addition, the Finite Element Method (FEM) model was validated using measured temperature data for the case of an undeformed F-294/F-313 containing 374,428 Ci of Co-60.

The actual steady state temperature measurements of the F-294 package with an F-457 source carrier, with 376,000 curies of cobalt-60 are reported in Chapter 3, Appendix 3.6.6. The finite element thermal analysis of the F-294/F-457 thermal model, using ANSYS software code, is presented in Chapter 3, Appendix 3.6.7. In addition, the Finite Element Method (FEM) model was validated using measured temperature data for the case of an undeformed F-294/F-457 containing 376,000 Ci of Co-60. Based on the validated FEM model, a loading procedure was developed and is presented in Chapter 3, Appendix 3.6.7.

The temperature data resulting from employing these two (2) methods of thermal evaluation are presented in Table 3.4-T1. The marginal differences in the listed temperatures are due to the thermal test load of 374,428 Ci, while the FEM model used 360,000 Ci. In the subsequent analysis, the higher of the temperatures resulting from either the test load or the FEM model is used.

C-188 sealed sources used in the F-294 package have been modeled in one-dimensional heat transfer analysis presented in Chapter 3, Appendix 3.6.3. In this analysis, the C-188 temperatures are estimated to be 830°F with the ambient of 100°F. The highest measured C-188 temperature was 824°F. Therefore, the one dimensional thermal model predicts the C-188 temperature fairly accurately.

In the F-294, for the maximum lead temperature, the FEM model predicts 358°F (181°C)maximum lead temperature in the main body. In the F-294 closure plug, the FEM model predicts 385°F (196°C) maximum lead temperature and a surface temperature of 420 °F (215 °C) at the bottom of the plug.

Table 3.4-T2 column 3 lists the measured surface temperatures of an F-294 package containing 374,428 Ci of Co-60. The maximum temperature is 74°C (165°F) at top of the lift lug fin. As this temperature exceeds 50°C (122°F) but is less than 85°C (185°F), the regulations require the F-294 to be transported as an "exclusive use" shipment. (See 10 CFR 71.43 g).)

Table 3.4-T1
Steady State Temperature Distribution of the F-294/F-313 Configuration

Cobalt Loading	Test[1]	Test[2]	FEM[3]	Node
External surface of package:				
Ambient	38°C	20°C	38°C	400
Bottom of ext. cyl. Fireshield	43°C	21°C	45°C	373
Middle of ext. cyl. Fireshield	48°C	26°C	44°C	251
Top of ext. cyl. Fireshield	58°C	36°C	49°C	315
Bottom of fin (air), entrance to chimney	45°C	23°C	N/A	-
Top of crush shield (air), exit from chimney	66°C	44°C	N/A	-
Top of the lift lug	75°C	53°C	70°C	709
Top crush shield/fireshield, upper surface, centre	62°C	40°C	51°C	85
Top crush shield/fireshield, upper surface, midway centre/edge	62°C	40°C	51°C	88
Top crush shield/fireshield, upper surface, edge	65°C	43°C	52°C	295
Crush shield, fin bottom	49°C	48°C	N/A	-
Main shield plug (top surface)	134°C	112°C	149°C	40
Container fin (root)	129°C	107°C	117°C	185
Container fin (tip)	N/A	N/A	100°C	702
Container wall, conical surface (primary shell),	N/A	N/A	81°C	717
Container wall, conical surface (secondary shell)	N/A	N/A	131°C	118
Container wall, mid-level	129°C	107°C	117°C	185
Container wall, bottom (primary shell)	N/A	N/A	96°C	215
Container wall, bottom (secondary shell)	N/A	N/A	83°C	732
Section through the shielding of the container: mid-level				
Outer wall (external - mid level)	129°C	107°C	117°C	185
Outer wall (internal - mid level)	N/A	N/A	118°C	173
Lead shielding (outside radius)	N/A	N/A	152°C	673
Lead shielding, average	N/A	N/A	N/A	-
Lead shielding (inside radius)	N/A	N/A	181°C	141
Cavity wall (outside radius)	N/A	N/A	181°C	141
Cavity wall (inside radius)	197°C	175°C	181°C	146
Cavity bottom	N/A	N/A	172°C	136
C-188: One ring Only: S/N 59532	440°C	417°C	N/A	-
C-188: One ring Only: S/N 59475	438°C	415°C	N/A	-
Bottom of the main shield plug	222°C	200°C	215°C	17

Notes:
[1] Corrected for Ambient, Measurement Errors and Solar Heat, see Chapter 3, Appendix 3.6.2 for details.
[2] Measured Test data, see Chapter 3, Appendix 3.6.2 for details (374,428 Ci.; 5.766 kW)
[3] Finite Element Model (FEM) heat transfer model, see Chapter 3, Appendix 3.6.4 for details.

Figure 3.4-F1
Prior to the drop tests, F-294/F-313 Steady State Temperature Measured Data
(374,428 Ci; 5.766 kW loading)

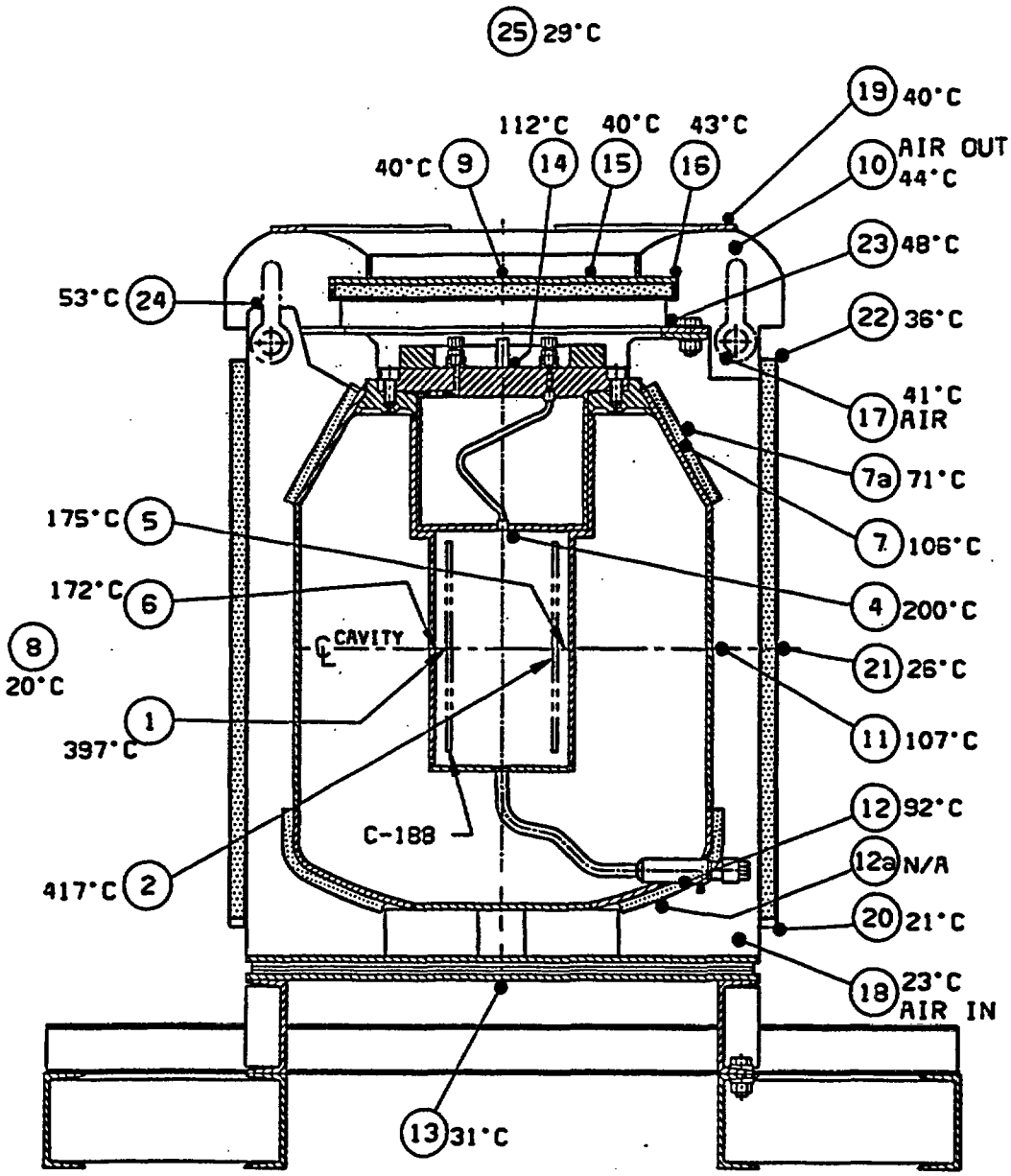

T/C #3 - C-188 TEMPERATURE (415°C), NOT SHOWN IN THIS PLANE

Table 3.4-T2
Temperature of Accessible Surface of the F-294/F-313 Package (374,428 Ci: 5.766 kW)

Location on F-294 Container	Test [1] Temp. (°C)	Test [2] Temp. (°C)
Bottom of ext. cyl. fireshield	21	42
Middle of ext. cyl. fireshield	26	47
Top of ext. cyl. fireshield	36	57
Bottom of fin (air) Entrance to chimney	23	44
Top of crush shield (air) Exit from the chimney	43	64
Top of the lift lug	53	74
Top crush shield/fire shield		
- upper surface, centre	40	61
- upper surface, midway centre/edge	40	61
upper surface, edge	43	64
Crush shield, fin bottom	48	69
Ambient	20	38

[1] Actual Thermal Test Data: See Chapter 3, Appendix 3.6.2
[2] Thermal test data corrected for 1) Ambient 2) Total Measurement Errors

3.4.2 MAXIMUM TEMPERATURES

For 360,000 curies of cobalt-60 as the radioactive contents, the highest temperatures of the F-294 packaging are listed in the Table 3.4-T3:

Table 3.4-T3
Maximum Temperatures of Designated F-294 components or Locations

Location/Description	Temperature
Ambient	100°F (38°C)
Outside upper surface of the crush shield	149°F (65°C)
Outside upper surface of the shield plug	273°F (134°C)
Outside, fireshield, mid height	118°F (48°C)
Outside, container, mid height	264°F (129°C)
Container, top of lift lug	167°F (75°C)
Cavity, underneath the plug	432°F (222°C)
Cavity, mid-height	387°F (197°C)
Cavity, bottom (Node 136 from FEM model)	342°F (172°C)
C-188	824°F (440°C)
Container, lead (Node 141 from FEM model)	358°F (181°C)
Shield plug, lead (Node 501 from FEM model)	385°F (196°C)

The temperatures listed in Table 3.4-T3 are inclusive of three correction factors:

1. Ambient Temperature Correction Factor of (38°C – 20°C) = 18°C
2. Total Measurement Errors: ± 3°C for temperature range up to 300°C and ± 4°C for temperature range up to 450°C.
3. Solar Heat Correction Factor of 1°C for cask temperatures only.
4. FEM model is described in Appendix 3.6.4.

For package temperatures when subjected to a hot environment (130°F), 30°F should be added to the temperatures listed above.

Based on the loading procedure presented in Chapter 3, Appendix 3.6.7, temperatures of the various F-294 components or locations will be the same for both the F-313 and F-457 source carriers.

3.4.3 MINIMUM TEMPERATURES

As there is no minimum activity specified, a minimum temperature of –40°F has been chosen as per requirements of 10 CFR 71.

3.4.4 MAXIMUM INTERNAL PRESSURE

3.4.4.1 Cavity of F-294

In the cavity of F-294, the pressure build up is as follows:

T_1 = Ambient temperature of cavity prior to source loading = 70°F
P_1 = Pressure of the cavity prior to source loading = 14.7 psia
T_2 = Temperature of the cavity after source loading = 387°F
= Average of (C-188 temperature and cavity wall temperature.)
= (824 + 387)/2 = 605.5°F
P_2 = Pressure of the cavity after source loading = ? (unknown) psia
P_2 = P_1 x [T_2 + 460]/[T_1 + 460]
= 14.7 x [605.5 + 460]/[70 + 460]
= 14.7 x 1,066/530
= 29.6 psia
= 14.9 psig.
≈ 16 psig (Design).

Therefore, the cavity of the F-294 in normal conditions of transport is at 16 psig and average temperature of 606°F. The pressure and temperature will be the same for both the F-313 and F-457 source carriers.

3.4.4.2 C-188 Assembly

In the C-188 assembly, the pressure build up is as follows:

T_1 = Ambient temperature of C-188 prior to loading in F-294 = 70°F
P_1 = Pressure of C-188 prior to loading in F-294 = 14.7 psia
T_2 = Maximum Temperature of C-188 after loading in F-294 = 842°F

P_2 = Pressure of C-188 after loading in F-294 = ? (unknown) psia

P_2 = $P_1 \times [T_2 + 460]/[T_1 + 460]$
= $14.7 \times [842 + 460]/[70 + 460]$
= $14.7 \times 1{,}302/530$
= 36.1 psia
= 21.4 psig.
≈ 22 psig (Design).

During normal conditions of transport of C-188 capsules in the F-294, the C-188 has an internal pressure of 22 psig and a maximum temperature of 842°F.

3.4.5 MAXIMUM THERMAL STRESSES

The maximum thermal stresses during the normal conditions of transport would arise from the temperature distribution given in section 3.4.2 above.

3.4.6 EVALUATION OF THE PACKAGE PERFORMANCE FOR NORMAL CONDITIONS OF TRANSPORT

Table 3.4-T4 lists the various materials used in the F-294 package with the corresponding expected and allowable temperatures.

Table 3.4-T4
List of Materials used in F-294 and their Temperature Compatibility

Material	Temperature (°F)				Location
	Expected		Allowable		
	min	max	min	max	
ASTM A-36	–40	150	–40	650[a]	fireshield sheathing
AISI CR 1020	–40	150	–40	650[a]	crush shield
ASTM A-240 ss304L	–40	400	–40	1,200	container envelope
ASTM A-240 ss304L	–40	400	–40	1,200	closure plug envelope
ASTM A-511 ss316L	–40	950	–40	1,200	C-188 encapsulation
Lead	–40	350	–40	620	lead shielding
"Kaowool"	–40	150	–40	3200	thermal insulation
"Hastelloy"	–40	400	–40	1200	cavity bottom

[a] ASME Section VIII, Division I Tables for material properties, indicate that temperatures of up to 650°F do not seriously affect the material strength of mild steels.

Temperature sensitive materials used in the MDS Nordion F-294 package are the lead gamma shield, which melts at 621°F, and the stainless steel outer structure of the C-188 sealed source. The neoprene rubber seals (used on the closure plug bolted joint and the drainline cap joint) have a temperature limit of 300°F but loss of either of these seals is not critical as containment is provided by the Special Form C-188 sealed sources. The Co-60 material is double encapsulated within the structure of the capsules. The C-188 sealed source has been demonstrated to meet Special Form requirements and, in particular, the 1472°F (800°C) temperature test.

The inner shell assembly and the lid (closure plug) of the lead-shielded cask is defined as the containment system of the F-294 package. Therefore, from the viewpoint of the integrity of the materials subject to temperature in Normal Conditions Of Transport (NCOT) of F-294, the containment is sound in NCOT. Finally, 10 CFR # 71.43(g) requires that the temperature limit for non-exclusive external surface use is 122°F, and 185°F maximum for exclusive use. These limits apply for all accessible external surfaces when the package is in the shade and the external ambient is 100°F. As the accessible surface temperatures of F-294 exceed 122°F (50°C), the F-294 will be transported as exclusive use shipment (see Chapter 7).

3.5 HYPOTHETICAL ACCIDENT THERMAL EVALUATION

3.5.1 THERMAL MODEL

3.5.1.1 Analytical Thermal Model

The thermal response of a F-294 package to a hypothetical accident is evaluated with Finite Element Method (FEM) models which are described in Appendices 3.6.4 and 3.6.7. The first step was to validate the FEM steady state model by comparing its output to the results obtained during the 374 kCi and 376 kCi of Co-60 tests. The 2nd step was to run "validated" FEM, steady state model at 360 kCi of Co-60 decay heat, with corrections for a 38 °C ambient condition. The output from 2nd step became the input (i.e., initial temperatures) for the 0.5 hour fire test, transient thermal analysis case of the same package.

The FEM model predicts that solar insolation will increase internal temperatures by 2°F (1°C).

3.5.1.2 Test Thermal Model

The analysis of the F-294 under the conditions of the regulatory fire test has been carried out analytically and is summarized in Appendices 3.6.4 and 3.6.7. Conservative assumptions are used throughout the analysis. It is concluded that there is a large margin of safety with regard to lead melt.

3.5.2 PACKAGE CONDITIONS AND ENVIRONMENT

Prior to the drop and puncture tests, there is about 11,200 in^2 of thermal protection as summarized below:

Location	Insulated Area (in^2)
Top Fireshield	707
Radial Fireshield	6,786
Bottom Fireshield	1,764
Top Corner of Shielding Vessel	940
Bottom Corner of Shielding Vessel	970
Total Thermal Protection	11,167

The analysis in Chapter 2, section 2.7 has shown that there will be loss of ≤ 0.3% of the total thermal protection area. For all practical purposes, this is considered no loss of thermal protection. The cylindrical fireshield, the bottom fixed skid and the top crush shield were all fully retained after the F-294 drop tests. However, approximately 800 in^2 of the total thermal protection area of the F-294 after the drop tests was crushed. The most significant damage was to the top-side corner of the cylindrical fireshield. There was also damage around the puncture pin impacted zones of the F-294.

The effect of crushing on the performance of Kaowool is considered in Appendix 3.6.4. The thermal conductivity of the entire 11,200 in^2 area was increased by a factor of 2 relative to steady state conditions. It was found that this effect was small in comparison with the effects of convection and radiation within the fin enclosure. Therefore, the damage to the thermal protection is considered to be insignificant.

3.5.3 PACKAGE TEMPERATURES

The results of the transient analyses are summarized in Appendix 3.6.4. Temperature histories for selected nodes are plotted in this Appendix. The maximum lead temperature was found to be 303 °C at 30 minutes from the start of the fire. This temperature was observed at the base of the main body.

The model used a series of conservative assumptions. In spite of these assumptions, a substantial margin of safety relative to the 327 °C melting point of lead was observed. See Table 3.5-T1 for lead and steel temperatures of the selected nodes of the F-294 thermal model depicted in Figure 3.5-F1.

The magnitude of the conservative factors used in the analysis is discussed in Appendix 3.6.4. The most significant of these are the assumptions of zero contact resistance at the start of the fire and unimpeded flow of hot gases over the shielding vessel.

These findings, combined with the significant amount of energy required to cause lead melt indicates a substantial margin of safety in the design. It is submitted that the F-294 meets the thermal requirements of the regulations under the normal and hypothetical accident conditions of transport.

3.5.4 MAXIMUM INTERNAL PRESSURES

The normal operating pressure and temperature of the F-294 cavity is 16 psig and 606°F. The cavity wall of the F-294 is at 387°F.

When the F-294 is subjected to a hypothetical thermal test, the temperature of the cavity and the sealed source will be as follows:

1. maximum cavity wall temperature during thermal test = 500°F (260°C)
2. cavity wall temperature during NCOT = 387°F
3. maximum sealed source temperature during NCOT (F-294/F-457) = 842°F

The source temperature during the thermal test will be:

$TS_{C\text{-}188} = 842 + 500 - 387 = 941°F = 955°F$

The average temperature of the cavity, during the thermal test, is:

$$\begin{aligned} TC_{AVG.,CAVITY} &= (TS_{C\text{-}188} + TC_{FIRE,\,CAVITY}) \\ &= (955 + 500)/2 \\ &= 728°F \end{aligned}$$

3.5.4.1 Cavity of F-294

In the cavity of the F-294, the pressure build up is as follows:

T_1 = Average Temperature of F-294 Cavity in NCOT = 606°F
P_1 = Pressure of the cavity in NCOT = 29.6 psia
T_2 = Average Temperature of the cavity after fire test = 728°F
P_2 = Pressure of the cavity after fire test = ? (unknown) psia

$$\begin{aligned} P_2 &= P_1 \times [T_2 + 460]/[T_1 + 460] \\ &= 29.6 \times [728 + 460]/[606 + 460] \\ &= 29.6 \times 1{,}188/1{,}066 \\ &= 33.0 \text{ psia} \\ &= 18.3 \text{ psig.} \\ &= 20 \text{ psig (design).} \end{aligned}$$

Therefore the cavity of F-294 in accident conditions of transport is at 20 psig and average temperature of 721°F

3.5.4.2 C-188 Assembly

In the C-188 assembly, the pressure build up is as follows:

T_1 = Temperature of C-188 in underwater pool = 70°F
P_1 = Internal Pressure of C-188 in underwater pool = 14.7 psia
T_2 = Temperature of C-188 in HACOT of F-294 = 955°F
P_2 = Pressure of C-188 in HACOT of F-294 = ? (unknown) psia

$$P_2 = P_1 \times [T_2 + 460]/[T_1 + 460]$$
$$= 14.7 \times [955 + 460]/[70 + 460]$$
$$= 14.7 \times 1{,}415/530$$
$$= 39.25 \text{ psia}$$
$$= 24.5 \text{ psig.}$$
$$= 27 \text{ psig (design)}$$

During accident conditions of transport, the C-188 has an internal pressure of 27 psig and maximum temperature of 955°F.

3.5.5 MAXIMUM THERMAL STRESSES

The maximum thermal stresses will occur at 30 minutes from the start of the fire test, when the exterior temperatures have reached a maximum and the internal temperatures are still rising. These temperatures are presented in Appendix 3.6.4 as a time history graph of the selected stainless steel and lead nodes.

3.5.6 EVALUATION OF PACKAGE PERFORMANCE FOR THE HYPOTHETICAL ACCIDENT THERMAL CONDITIONS

3.5.6.1 C-188 Sealed Source

The maximum temperature of the C-188, during the hypothetical thermal test, is 955°F. As the C-188 is certified as Special Form and has been tested successfully to 800°C (1,472°F), the integrity of the C-188 is sound.

The C-188 temperature in the hypothetical thermal test is 940°F which is less than the melting point of ss316L (2300°F). Therefore, the ss316L encapsulation shall not melt.

As the C-188 is free to expand, the thermal stresses are insignificant. The maximum growth from 70°F to 940°F is

$$\delta = L_{O,C\text{-}188} \times \alpha \times (955°F - 70°F)$$
$$= 17.777 \times 10.5E\text{-}6 \times (955 - 70)$$
$$= 0.17 \text{ in.}$$

The amount of free room between the underside of the shield plug and the top of the C-188 in the F-313 or F-457 source carrier is 1.0 in. As thermal growth of $\delta = 0.17$ in. is less than this clearance, during the hypothetical thermal test the C-188 capsules shall expand freely. Consequently, as there is no restraint, there are no significant thermal stresses in the outer body of the C-188.

A stress analysis of C-188 under internal pressures is carried out in Chapter 4, Appendix 4.4.5. The results are recaptured here.

Due to internal pressure of 27 psig in the C-188 during HACOT of F-294,

1. the hoop stress in the tube away from joint = 192 psi
2. the hoop stress in the tube at the joint = 288 psi
3. the bending stress in the end cap = 5 psi.

Based on yield stress of 15,000 psi for ss316L at 955°F, C-188 has a Safety Factor of 42 and Margin of Safety of 41.

Based on the above arguments, the integrity of the Special Form sealed source C-188 is sound.

3.5.6.2 The Containment System

The inner shell assembly and the lid (closure plug) of the F-294 lead shielded cask is defined as the containment system of F-294 package. The stress analysis of the containment system subject to hypothetical accident conditions of transport of F-294 is presented in Chapter 4, Appendix 4.4.6. It is demonstrated that:

1. as C-188 is certified Special Form RAM and provides leak tight containment AND
2. as the closure plug (the shielding) is retained over the inner shell assembly which houses the cobalt-60 C-188 sealed sources,

F-294 does meet the HACOT containment system requirements (10 CFR 71.51 (a) (2)).

3.5.6.3 Shielding in the Container and the Plug

For 360,000 curies of cobalt-60, the thermal model calculates *no lead melt*. Consequently there is no loss of lead shielding from the F-294.

Therefore, the integrity of lead shielding of the F-294 is sound.

Figure 3.5.-F1
Node Numbers of F-294 Thermal Model

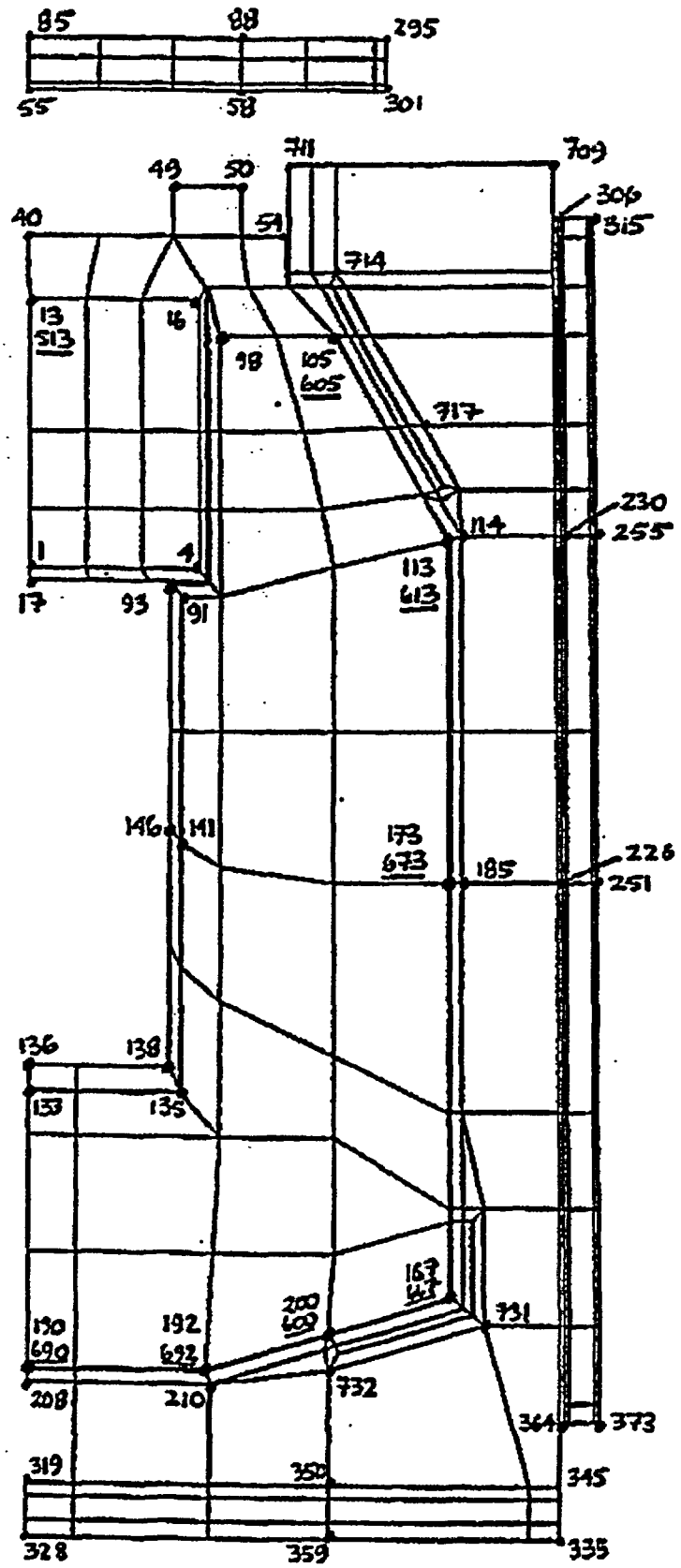

Table 3.5-T1
Maximum Temperatures of Selected Lead and Steel Nodes of F-294 Thermal Model in a Fire Test

Node	Approximate Location of Lead Node	Maximum Temp (°C)	Time (min)
17	Top Plug, Bottom Steel Surface	277	120
1	Top Plug, Lower Lead/Steel Interface	277	112
13	Top Plug, Upper Lead/Steel Interface	242	86
40	Top Plug, Top Steel Surface	244	30
55	Lower Steel Surface of Upper Fireshield	492	30
85	Upper Steel Surface of Upper Fireshield	666	30
146	Cavity Wall, Steel at Midheight	263	70
141	Cavity Wall, Inner Lead/Steel Interface, at Midheight	263	76
173	Cavity Wall, Outer Lead Steel Interface, at Midheight	257	30
185	Steel Outer Wall of Shield, at Midheight	288	30
226	Inner Steel Surface of Radial Fireshield, at Midheight	456	30
251	Outer Steel Surface of Radial Fireshield, at Midheight	783	30
136	Bottom Steel Surface of Cavity, at Centreline	259	69
133	Bottom of Shield, Upper Lead/Steel Interface	256	63
190	Bottom of Shield, Lower Lead/Steel Interface	244	30
208	Bottom Steel Surface of Shield	274	30
319	Inner Steel Surface of Bottom Fireshield	387	30
328	Outer Steel Surface of Bottom Fireshield	610	30

* Time equals zero at the start of the fire test.

3.6 APPENDICES

This section contains the following appendices.

Appendix 3.6.1	List of References for Chapter 3
Appendix 3.6.2	Normal Thermal Tests of the F-294 Package with the F-313 source carrier
Appendix 3.6.3	Steady State Heat Transfer in the Cavity of F-294 Package
Appendix 3.6.4	Finite Element Analysis of the F-294 with the F-313 source carrier
Appendix 3.6.5	Properties of Kaowool
Appendix 3.6.6	Normal Thermal Test of the F-294 package with the F-457 source carrier
Appendix 3.6.7	F-294 Loading Finite Element analysis

APPENDIX 3.6.1
LIST OF REFERENCES FOR CHAPTER 3

[1] T. Baumeister, E. A. Avallone, T. Baumeister III, (Editors), *Mark's Standard Handbook for Mechanical Engineers*, McGraw- Hill Book Company, 8th edition, 1978.

[2] Lead Industries Association, *Lead in Modern Industry*, New York City, New York, 1952, p.184.

[3] USNRC Regulatory Guide 7.8

[4] Timoshenko, S, & Young, D. H., *Elements of Strengths of Materials*, 4th ed., D. Van Nostrand Company, Inc., London 1962.

[5] Babcock and Wilcox Company Limited, Kaowool Ceramic Fibre Product Catalog.

[6] Chapman, Alan J., *Heat Transfer*, 3rd edition, Macmillan Publishing Company, Inc., New York, 1974, p.578 for 18-8 steel.

[7] Reference 6, p.576.

[8] Reference 1, pp.6-17.

[9] Shappert, L.B., *Cask Designers Guide*, ORNL-NISC-68, p.84, Table 2.6

[10] Holman, J.P., *Heat Transfer*, 5th edition, Mcgraw Hill Book Co., New York, 1981.

[11] Chu, Rod, "Self-absorption in Teletherapy and Irradiator ^{60}Co Sources", Atomic Energy of Canada Limited- Commercial Products. Paper presented at the 16th Annual Meeting of the American Nuclear Society, Los Angeles, California, July 1,1970.

[12] E7515. # Euratom contract No. 024-65-ECIC Transnucleaire #. "Report on the implications of the tests requirements for type B packagings and a study of practical solutions", Transnucleaire, Paris, France, Part II, pp.187-322.

[13] Gubareff, G.G., Janssen, J.E. & Torborg, R.H., *Thermal Radiation Properties Survey*, 2nd Edition. Honeywell Research Center, Minneapolis, Minnesota.

[14] McAdams, W. H., *Heat Transmission*, 3rd edition, McGraw-Hill, pp

[15] Structural Research and Analysis Corporation, *COSMOS/M User's Guide* (Revision 1.75), SRAC, Santa Monica, California, May 1993.

[16] Browne, E., Firestone, R.B., *Tables of Radioactive Isotopes*, John Wiley and Sons, New York, 1986.

[17] Perr,y R.H., Green, P. W. & Maloney, J. O., *Perry's Chemical Engineer's Handbook*, 6th Edition, McGraw Hill Book Co., New York, 1984.

[18] Transite catalogue, John Mansville Corp.

[19] Siegel, R. & Howell, J. R., *Thermal Radiation Heat Transfer*, McGraw Hill Book Co., New York, 1972.

[20] Naraghi, M.H.N., Chung, B.T.F., "Radiation Configuration Factors between Discs and a Class of Axisymmetric Bodies", American Society of Mechanical Engineers, Paper no. 81-HT-56.

[21] 10 CFR, Chapter 1, Part 71 - Packaging and Transportation of Radioactive Material, 1-1-91 Edition.

[22] IAEA Safety Standard, Safety Series No. 6, *Regulations for the Safe Transport of Radioactive Material*, 1985 Edition (as Amended 1990).

[23] Society of Automotive Engineers, Inc., (SAE), Aerospace Applied Thermodynamics Manual, 485 Lexington Ave., New York, N.Y., Published Feb. 1960, Revised Jan 1962 (Library of Congress catalog card No. 60-13450).

[24] Nordion Document,IN/PR 0030 J1100, Technical Specification for the C-188 Sealed Source - Part I Inactive Components and Assembly.

[25] Nordion Document,IN/TS 0146 J1100,Technical Specification for the C-188 Sealed Source - Part II Active Components and Assembly.

APPENDIX 3.6.2
NORMAL THERMAL TESTS OF THE F-294 PACKAGE WITH THE F-313 SOURCE CARRIER

CONTENTS

1. INTRODUCTION 3

2. THERMAL TESTS CONDUCTED PRIOR TO THE F-294 DROP TESTS 3
   2.1 TEST RESULTS OF THERMAL TEST CONDUCTED PRIOR TO THE F-294 DROP TESTS 3
      2.1.1 Highest Temperature 3
      2.1.2 Lowest Temperature 4

3. THERMAL TESTS CONDUCTED AFTER THE F-294 DROP TESTS 4
   3.1 TEST RESULTS OF THERMAL TEST CONDUCTED AFTER THE F-294 DROP TESTS 4
      3.1.1 Highest Temperature 4
      3.1.2 Lowest Temperature 5

4. TEMPERATURE MEASUREMENT ERRORS 5

5. TEMPERATURE INFORMATION FOR THERMAL TEST PRIOR TO THE F-294 DROP TESTS 6
   5.1 TEMPERATURE OF ACCESSIBLE SURFACE OF THE F-294 PACKAGE 6
   5.2 PACKAGE TEMPERATURES 7

6. TEMPERATURE INFORMATION FOR THERMAL TEST AFTER THE F-294 DROP TESTS 8
   6.1 TEMPERATURE OF THE F-294 PACKAGE 8

7. CONCLUSIONS 9

SUB-APPENDIX:3.6.2.1 TEST # 5.1.10, NORMAL THERMAL TEST PRIOR TO THE DROP 13

SUB-APPENDIX 3.6.2.2 TEST # 5.3.10, NORMAL THERMAL TESTING AFTER THE DROP 27

This page left blank intentionally.

1. INTRODUCTION

Extensive steady state normal thermal tests were carried out using a full scale F-294 test packaging and using actual C-188 cobalt-60 sealed sources. This appendix provides the thermal test data for thermal tests conducted on the F-294 before the F-294 drop tests and after the F-294 drop tests. All the thermal tests were conducted under shade conditions (i.e., a closed building). The measurement errors are identified and their magnitude is estimated.

The temperature data is converted into temperature information with appropriate consideration given to factors like ambient temperatures, measurement errors and shade or solar conditions.

2. THERMAL TESTS CONDUCTED PRIOR TO THE F-294 DROP TESTS

The details of the steady state, normal thermal tests conducted prior to the F-294 drop tests are given in Sub-Appendix 3.6.2.1.

The F-294 Shipping Package was subjected to normal thermal testing when loaded with Co-60 as outlined in The Procedure for Steady State Thermal Test IN/OP 0597 F294. Four tests (cases) were carried out on the four different configurations.

Test #1: F-294 with fireshield and crush shield, no added insulation
Test #2: F-294 without fireshield or crush shield, no added insulation
Test #3: F-294 without fireshield or crush shield, with added insulation
Test #4: F-294 with fireshield and crush shield, with added insulation.

The decay heat load was equivalent to forty (40), full scale active C-188 cobalt-60 sources. The C-188 capsules were loaded in a single ring within an F-313 source carrier. The curies used at the start and finish of the pre-drop thermal test are as follows:

1. At the start: 1998 Jan 06 - 375,510 curies (5.782 kW)
2. At the finish: 1998 Jan 14 - 374,428 curies (5.766 kW)

The F-294 cavity was purged with argon. Therefore the F-294 cavity environment was argon.

2.1 TEST RESULTS OF THERMAL TEST CONDUCTED PRIOR TO THE F-294 DROP TESTS

The details of the test temperature data are given in Sub-Appendix 3.6.2.1. Selective temperature data is recaptured as per Tables 3.6.2-T1 and 3.6.2-T2.

2.1.1 Highest Temperature

The highest temperature of the following designated location/components are based on Test #4 (F-294 with fireshield and crush shield, with added insulation) is as per Table 3.6.2-T1.

Table 3.6.2-T1
Highest Temperature of the Designated F-294 Locations in Test #4
(F-294 with Fireshield and Crush Shield, With Added Insulation)

Item	Location	Temperature (°C)
1	C-188	417
2	Cavity wall	175
3	Underside of the F-294 closure plug	200
4	Top of the F-294 closure plug	112
5	Mid height of the F-294 external container wall	107
6	Top of lift lug fin (most accessible surface)	53
7	Ambient	20°C

2.1.2 Lowest Temperature

The lowest temperature of the following designated location/components are based on Test #2 (F-294 without fireshield and crush shield, without added insulation) as per Table 3.6.2-T2.

Table 3.6.2-T2
Lowest Temperature of the F-294 Location/Components
(Test # 2: F-294 Without Fireshield and Crush Shield, No Added Insulation)

Item	Location	Temperature (°C)
1	C-188	386
2	Cavity wall	158
3	Underside of the F-294 closure plug	179
4	Top of the F-294 closure plug	101
5	Mid height of the F-294 external container wall	90
6	Ambient	23

3. THERMAL TESTS CONDUCTED AFTER THE F-294 DROP TESTS

The F-294 test packaging was subjected to eight (8) drop tests conducted on February 25, 1998 at Chalk River Laboratory, AECL, Chalk River, Ontario, Canada. After the drop tests, the F-294 Shipping Package was subjected to the normal thermal testing as outlined in The Procedure for Steady State Thermal Test IN/OP 0597. Post-drop thermal tests on F-294 were carried out between March 17 1998 and March 24 1998 in the Industrial Operations building, MDS Nordion, Ottawa, Ontario, Canada. The drop-tested F-294 was loaded by the same technician. The four tests (cases) were again carried out on the four different configurations.

Test #1: F-294 with fireshield and crush shield, no added insulation
Test #2: F-294 without fireshield or crush shield, no added insulation
Test #3: F-294 without fireshield or crush shield, with added insulation
Test #4: F-294 with fireshield and crush shield, with added insulation

The decay heat load was simulated using quantity forty (40), full scale active C-188 cobalt-60 sources. The C-188's were loaded in a single ring within F-313 source carrier. These C-188 sources were the same ones used in the pre-drop thermal test. The curies used at the start and finish of the post-drop thermal test are as follows:

1. at the start: 1998 March 17 - 366,160 curies (5.638 kW)
2. at the finish: 1998 March 24 - 365,237 curies (5.624 kW)

The F-294 cavity was purged with argon. Therefore the F-294 cavity environment was argon.

3.1 TEST RESULTS OF THERMAL TEST CONDUCTED AFTER THE F-294 DROP TESTS

The details of the test temperature data are given in the Sub-Appendix 3.6.2.2. Selective temperature data is re-captured as per Tables 3.6.2-T3 and 3.6.2-T4.

3.1.1 Highest Temperature

The highest temperatures of the following designated location/components are based on Test #4 (F-294 with fireshield and crush shield, with added insulation) as per Table 3.6.2-T3.

Table 3.6.2-T3
Highest Temperature of the designated F-294 Locations in Test #4
(F-294 With Fireshield and Crush Shield, With Added Insulation)

Item	Location	Temperature (°C)
1	C-188	413
2	Cavity wall	193
3	Underside of the F-294 closure plug	222
4	Top of the F-294 closure plug	111
5	Mid height of the F-294 external container wall	110
6	Top of lift lug fin (most accessible surface)	56
7	Ambient	23

3.1.2 Lowest Temperature

The lowest temperature, of the following designated location /components are based on Test # 1 (F-294 without fireshield and crush shield, no added insulation.) is as per Table 3.6.2-T4.

Table 3.6.2-T4
Lowest Temperature of the Designated F-294 Locations in Test #1
(F-294 Without Fireshield and Crush Shield, Without Added Insulation)

Item	Location	Temperature (°C)
1	C-188	368
2	Cavity wall	167
3	Underside of the F-294 closure plug	206
4	Top of the F-294 closure plug	87
5	Mid height of the F-294 external container wall	91
6	Ambient	25

4. TEMPERATURE MEASUREMENT ERRORS

The details of the temperature instrumentation, calibration etc. are given in Sub-Appendices 3.6.2.1 and 3.6.2.2.

The temperature measurement errors are made up of three major factors:

1. The accuracy of thermocouple wire (type K) ± 2.2°C or ± 0.75% whichever is greater.
2. The accuracy of readout instrumentation (Omega Temperature Logger, Fluke Temperature Reader, Omega Temperature Reader) ± 2.0 °C
3. The accuracy of thermo-couple junction, connection to the F-294 components, estimated ± 0.5°C

Based on these individual accuracies, the total measurement error ($\Delta\theta$) is estimated as follows:

1) For temperature range up to 300°C:

$$\Delta\theta = \pm\sqrt{[(\text{t/c error})^2 + (\text{readout instrument error})^2 + (\text{connection error})^2}$$
$$= \pm\sqrt{[(2.25)^2 + (2)^2 + (0.5)^2}$$
$$= \pm\sqrt{[9.09}$$
$$= \pm 3.05$$
$$= \pm 3°C$$

2) For temperature range between > 300°C and ≤ 450°C:

$$\Delta\theta = \pm\sqrt{[(\text{t/c error})^2 + (\text{readout instrument error})^2 + (\text{connection error})^2]}$$
$$= \pm\sqrt{[(3.375)^2 + (2)^2 + (0.5)^2]}$$
$$= \pm\sqrt{[15.64]}$$
$$= \pm 3.95$$
$$= \pm 4°C$$

5. TEMPERATURE INFORMATION FOR THERMAL TEST PRIOR TO THE F-294 DROP TESTS

5.1 TEMPERATURE OF ACCESSIBLE SURFACE OF THE F-294 PACKAGE

For 374,428 Ci of cobalt-60 (5.766 kW), Table 3.6.2-T5, column 3 lists the maximum temperatures of the external surface of the F-294 container in the shade inclusive of:

1. ambient temperature correction factor (38°C – 20°C)
2. total measurement error of ± 3°C.

The highest temperature of the accessible surface of the F-294 package is 74°C (165°F), at lift lug location.

The temperature credit, as a result of using a higher test source (at start of thermal test prior to the F-294 drop test program 375,510 kCi of cobalt-60 [Jan 06, 1998] and at end of thermal test prior to the F-294 drop test program 374,428 kCi of cobalt-60 [Jan 14, 1998]) versus the license capacity of 360 kCi of cobalt-60, has been ignored.

Table 3.6.2-T5
Temperature of Accessible Surface of the F-294 Package (374,428 Ci: 5.766 kW)

Location on F-294 Container	Test[1] Temp. (°C)	Test[2] Temp. (°C)
Bottom of ext. cyl. fireshield	21	42
Middle of ext. cyl. fireshield	26	47
Top of ext. cyl. fireshield	36	57
Bottom of fin (air) Entrance to chimney	23	44
Top of crush shield (air) Exit from the chimney	43	64
Top of the lift lug	53	74
Top crush shield/fire shield upper surface, centre upper surface, midway centre/edge upper surface, edge	 40 40 43	 61 61 64
Crush shield, fin bottom	48	69
Ambient	20	38

[1] Actual Thermal Test Data: See Chapter 3, Sub-Appendix 3.6.2.1
[2] Thermal test data corrected for 1) Ambient 2) Total Measurement Errors

5.2 PACKAGE TEMPERATURES

The temperature of the following designated location/components of F-294, based on Test #4 (F-294 with fireshield and crush shield, with added insulation) are as per Table 3.6.2-T6. For 374,428 Ci of cobalt-60 (5.766 kW), Table 3.6.2-T6, column 4, lists the maximum temperatures of the F-294 container in the shade inclusive of:

1. ambient temperature correction factor (38°C – 20°C)
2. total measurement error of ± 3°C or ± 4°C depending on the temperature range.

Figure 3.6.2-F1 shows the temperatures for the normal steady state thermal test of the F-294, prior to the drop test, using 374,428 Ci of cobalt-60 (5.766 kW).

Table 3.6.2-T6
Temperature of the F-294 Package, Prior to the Drop Test of F-294

Channel	Location	Test #4 (°C)	Test #4 corrected (°C)
1	C-188 source, midpoint of s/n 59432	397	419
2	C-188 source, midpoint of s/n 59475	417	439
3	C-188 source, midpoint of s/n 59532	415	437
4	Underside of shielding plug, adjacent to ventline exit hole	200	221
5	Cavity wall, at vertical midpoint, on side of drainline	175	196
6	Cavity wall, at vertical midpoint, on opposite side of drainline	172	193
7	Container wall, between the fins, upper section	106	127
7a	Container wall, between the fins, upper section, top of insulation	71	92
8	Ambient, at elevation even with cavity midpoint	20	38
9	Top center of upper crush shield	40	61
10	Air temperature between fins of crush shield, side of drainline	44	65
11	Container wall, between the fins, midsection	107	128
12	Container wall, adjacent to drainline	92	113
12a	Container wall, adjacent to drainline, top of insulation	N/A	N/A
13	Underside of container, center	31	52
14	Top center of shielding plug	112	133
15	Top of crush shield, equidistant between center and outside edge of plate	40	61
16	Top of crush shield, outside edge of plate	43	64
17	Air temperature, top edge of fireshield, side of drainline	41	62
18	Air temperature, lower edge of fireshield, side of drainline	23	44
19	Top of donut ring on crush shield	40	61
20	Lower edge of fireshield, side of drainline	21	42
21	Midpoint of fireshield, side of drainline	26	47
22	Upper edge of fireshield, side of drainline	36	57
23	Lower donut ring on crush shield, side of drainline	48	69
24	Top of lifting lug fin, opposite side of drainline	53	74
25	Ambient, approximately one meter above container	29	50

6. TEMPERATURE INFORMATION FOR THERMAL TEST AFTER THE F-294 DROP TESTS

Details of the steady state, normal thermal test of the drop tested F-294 are given in Sub-Appendix 3.6.2.2. When these tests were carried out, the punctured zones (openings in the fireshield) were taped over with aluminum tape in order to cut down the air bypass. This results in the cask and package temperatures being conservative.

6.1 TEMPERATURE OF THE F-294 PACKAGE

For 365,237 Ci of cobalt-60 (5.624 kW), Table 3.6.2-T7, column 4 lists the maximum temperatures of the external surface of the F-294 container in the shade inclusive of:

1. ambient temperature correction factor (38°C – 23°C)
2. total measurement error of ± 3°C or ± 4°C, depending on the temperature range.

Figures 3.6.2-F2 and 3.6.2-F3 show the temperatures, for normal steady state thermal test of F-294, after the drop test, using 365,237 Ci of cobalt-60 (5.624 kW).

Table 3.6.2-T7
Temperature of the F-294 Package, After the F-294 Drop Tests (365,237 Ci: 5.624kW)

Channel	Location	Test#4 °C	Test #4 corrected °C
1	C-188 source, midpoint of s/n 59532	381	400
2	C-188 source, midpoint of s/n 59475	413	432
3	Underside of shielding plug, adjacent to ventline exit hole	222	240
4	Cavity wall midheight, in line with damaged lift lug #4	186	204
5	Cavity wall midheight on the side opposite the drainline	191	209
6	Cavity wall midheight on the same side as the drainline	193	211
7	Container wall between the fins, middle section, in line with drainline	108	126
8	Ambient, at elevation even with cavity midpoint	23	38
9	Top center of shielding plug	111	129
10	Ambient, approximately one meter above top of container	29	47
11	Top of lift lug #2	56	74
12	Container wall, lower section, adjacent to the drainline	96	114
13	Underside of container, center; middle of indentation from puncture pin	35	53
14	Container wall, upper section, under damaged fins, mid-way between lift lugs #1 and #2 (damage zone #2)	111	129
15	Container wall, middle section, mid-way between lift lugs #1 and #2 (damage zone #2)	110	128
16	Container wall, lower section, mid-way between lift lugs #1 and #2 (damage zone #2)	99	117
17	Air temperature, top edge of fireshield, in line with drainline	52	70
18	Air temperature, lower edge of fireshield, in line with drainline	32	50
19	Air temperature, upper section, between damaged fins near lift lug #4	54	72
20	Container wall, middle section; under fin folded over from puncture pin, near lift lug #4	104	122
21	Container wall, upper section, in line with drainline.	111	129
22	Top of damaged lift lug #4	64	82
23	Top of insulation, over t/c #21	79	97
24	Top of insulation, over t/c #12	71	89
25	Inoperative	n/a	n/a

Channel	Location	Test#4 °C	Test #4 corrected °C
26	Container wall, upper section, adjacent to damaged lift lug #4 (on reinforcing pad)	109	127
27	Air temperature, lower section, between damaged fins, near lift lug #4	23	41
28	Container wall, upper section, adjacent to damaged lift lug #4 (other side of fin from t/c #26)	111	129
29	Top of insulation, over t/c #26	87	105
30	Top of insulation, lower section, next to lift lug #4	64	82
31	Top center of crush shield	45	63
32	Top of crush shield, equidistant between center and outside edge of plate, in line with lift lug #2	43	61
33	Top of crush shield, outside edge of plate, in line with lift lug #2	40	58
34	Top edge of fireshield, in line with drainline	35	53
35	Mid-height of fireshield, in line with drainline	29	47
36	Bottom edge of fire shield, in line with drainline	27	45
37	Air temperature, between damaged fins of crush shield, in line with drainline	47	65
38	Top of upper donut ring on crush shield, in line with lift lug #2	46	64
39	Top of lower donut ring on crush shield, in line with lift lug #2	57	75
40	Top of fireshield, puncture pin damaged zone #1, near lift lug #4	42	60
41	Top of fireshield, near lift lug #2	37	55
42	Top of insulation, upper section, between fins of damage zone #2	79	97
43	Top of insulation, lower section, between fins of damaged zone #2	65	83

7. CONCLUSIONS

7.1 With the F-294 package in the shade, the highest C-188 temperature is 439°C (822.2°F) based on ambient temperature of 38°C (100°F). The solar heat load is expected to raise the cask temperatures by 1° C. Therefore, the highest C-188 temperature is 440°C (824°F) based on ambient temperature of 38°C (100°F).

7.2 The highest temperature of the most accessible surface of the package (i.e., top of the lift lug) is 74°C (165°F).

7.3 In general, the cask temperatures of the drop-tested F-294 were marginally higher than the pre-drop-tested F-294.

7.4 Steady state temperatures following the drop test will not result in any damage to the shielding or containment systems.

Figure 3.6.2-F1
Temperatures for Normal Steady State Thermal Test of F-294 Prior to the Drop Test, using 374,428 Ci of Cobalt-60 (5,766 kW)

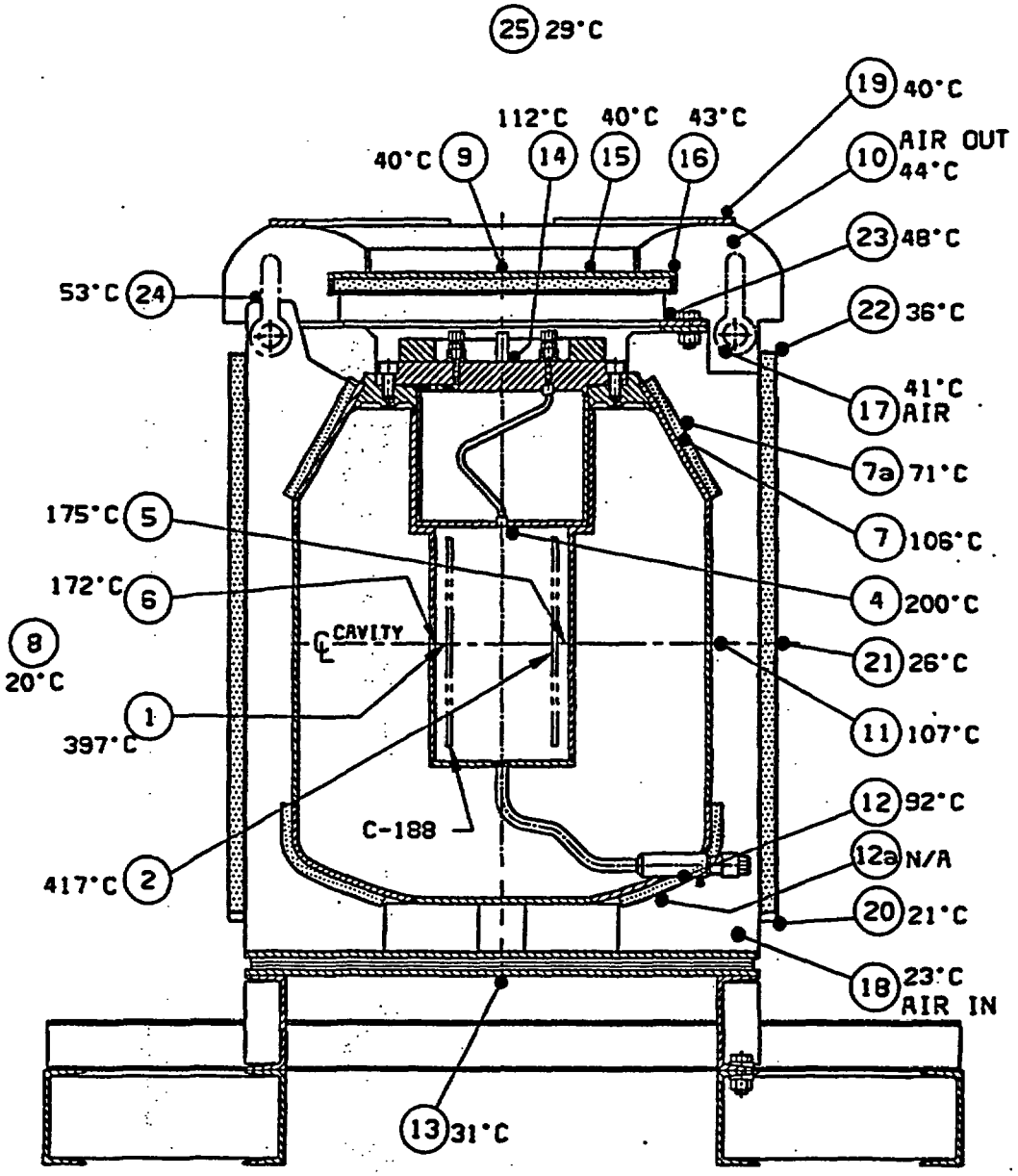

T/C #3 - C-188 TEMPERATURE (415°C), NOT SHOWN IN THIS PLANE

Figure 3.6.2-F2
Temperatures for Normal Steady State Thermal Test of F-294 After the Drop Test, using 365,237 Ci of Cobalt-60 (5.624 kW) (Plane of Drainline section)

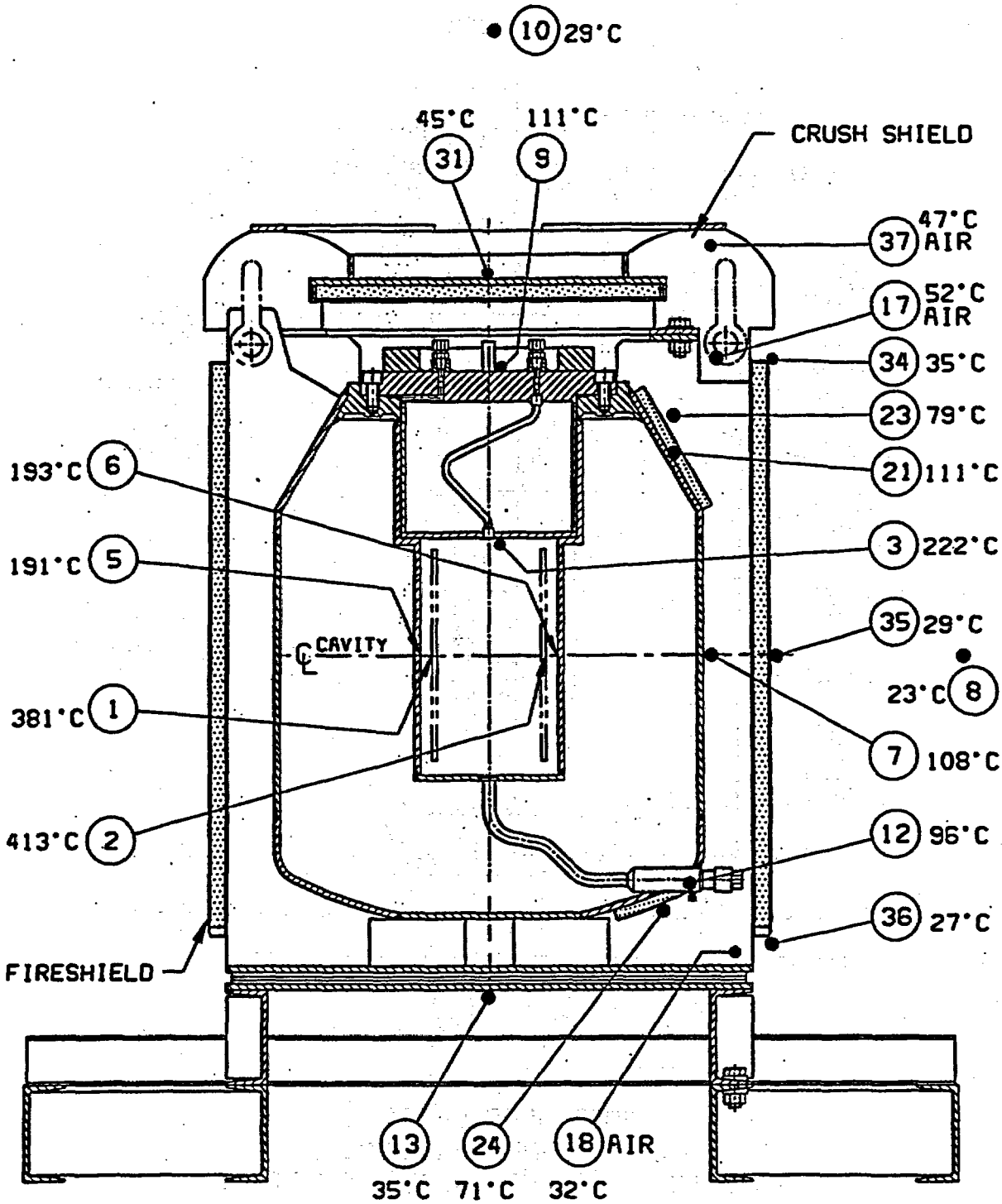

Figure 3.6.2-F3
Temperatures for Normal Steady State Thermal Test of F-294 After the Drop Test, using 365,237 Ci of Cobalt-60 (5,624 kW) (Away from the Plane of Drainline section)

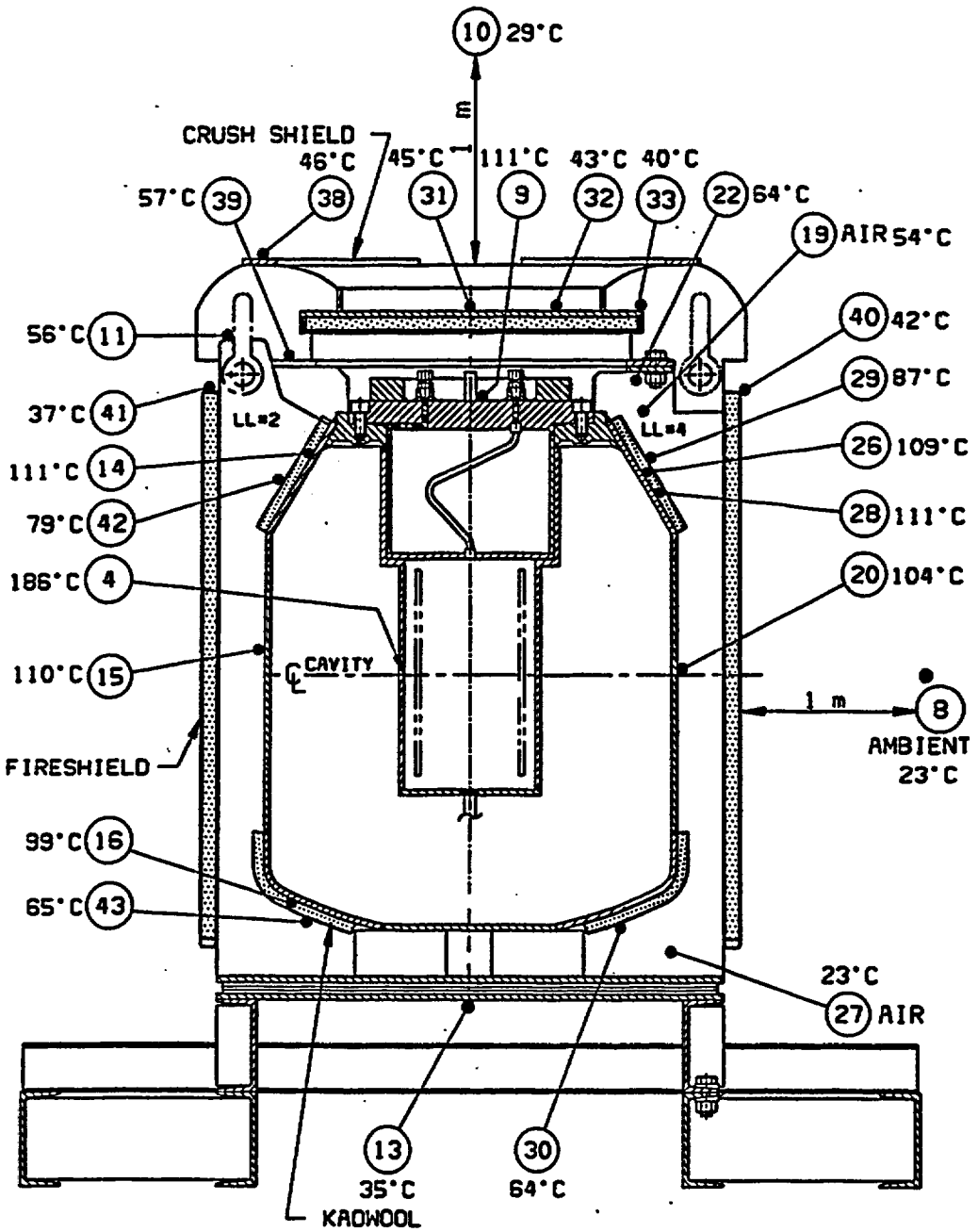

POST–DROP F–294
THERMOCOUPLE LOCATIONS
AT PLANES AWAY FROM DRAIN LINE SECTION

SUB-APPENDIX 3.6.2.1
TEST # 5.1.10, NORMAL THERMAL TEST PRIOR TO THE DROP

5.10 TEST #5.1.10 - Normal Thermal Test Prior to the Drop

#1 Test # 5.1.10, as per test plan document IN/QA 1368 F294 (1),
F-294 Regulatory Tests
Normal Thermal Test Prior to the Drop

Date test conducted January 6, 1998

#2 Person conducting the test/procedure

D. Whitby conducted the test.

#2.1 Introduction

The F-294 Shipping Package was subjected to normal thermal testing when loaded with Co-60 as outlined in The Procedure for Steady State Thermal Test IN/OP 0597 F294. The F-294 was loaded by Ed Psutka of Industrial Operations, and the thermal testing was carried out by Greg Chupick the Industrial Operations Monitor, and Dave Whitby of Industrial QC. Four tests were carried out on the four different configurations.

Test #1: F-294 with fireshield and crush shield, no added insulation
Test #2: F-294 without fireshield or crush shield, no added insulation
Test #3: F-294 without fireshield or crush shield, with added insulation
Test #4: F-294 with fireshield and crush shield, with added insulation

#2.2 Instrumentation

Calibrated type K thermocouples were used through out the thermal test, with two 10-channel digital readers. The Omega Temperature Logger OM-302, number 6-810-021 was last calibrated September 1997 with a quoted accuracy of ± 2°C. It is due for re-calibration September 1998. The Fluke digital reader model 2166A, number 6-810-022 was last calibrated October 1997 with a quoted accuracy of ± 0.5%; it is due for re-calibration October 1998.

The thermocouples comprised of certified Type K wire. A sample was calibrated by Site Operating Systems & Technical Services to confirm its performance. The samples were tested from 0°C, up to 600°C; all points tested were within ± 2.2°C, or ± 0.75% of reading, whichever was greater (see Tables 2.10.12-T4 and 2.10.12-T5). The thermocouples each had a flame fusion junction which could be mounted on to the container wall using thermal paste, high temperature aluminum adhesive tape, and/or duct tape.

#2.3 Thermocouple Placement within F-294 Cavity

The F-294 Flask was prepared for thermal tests prior to loading. Three thermocouples were mounted on ½ in. square stainless steel flat plate; two were in turn tack welded on to the cavity wall, in line with the drainline, radially opposed to each other and axially on the cavity center line. The third was mounted on to the underside of container plug, adjacent to the vent line exit hole. The wire for the three thermocouples was routed out the F-294 plug vent line to Type K connectors.

Thermocouples were also mounted actively on to three of the C-188 sources using hose clamps for a secure contact. The position of the thermocouples were approximately at the center of the sources; the Source Technician then placed these sources (s/n 59475, s/n 59432 and s/n 59532) within the F-313 cage assembly as shown on the Loading Diagram (see Figure 3.6.2.1-F1). The thermocouple wire was routed through the drainline to Type K connectors.

#2.4 Source Loading

The F-294 was loaded with 375,510 curies Cobalt-60 on January 06, 1998 in the form of forty (40) C-188 sealed sources, as per the loading diagram attached (see Figure 3.6.2.1-F1). The loading was done as any typical preparation for shipment, in Cell 06 within Industrial Operations, MDS Nordion, Ottawa, complete with a cavity argon purge and the plug fasteners torqued to 100 ft.-lb. A neoprene gasket was used to seal the cavity.

The loaded container was removed from Cell 06 and placed in the shipping bay. The thermocouples were mounted on to the container as listed in Table 3.6.2.1-T3 and shown in Figure 3.6.2.1-F2. The container was allowed to attain steady state overnight. Steady state was assumed after two similar successive readings, one hour apart.

#2.5 Measurements

Temperatures were recorded for each location on January 07, 1998 (see Table 3.6.2.1-T4).

The fireshield and the upper crushshield were disassembled with the appropriate thermocouples being removed from their position on January 07. The container was allowed to attain steady state over night, and the readings were recorded on just the F-294 container on January 8, 1998 (see Table 3.6.2.1-T5).

One-half-inch Kaowool insulation strips were cut and taped on to the upper and lower sections as per instructions from V. Shah (see Figures 2.10.12-F3 and 2.10.12-F4) on January 12. The container was allowed to attain steady state over night, and the temperature readings were then recorded on January 13, 1998 (see Table 3.6.2.1-T6).

The fireshield and upper crush shield were assembled into place and the appropriate additional thermocouples were fixed into position after Test 3 on January 13. After attaining steady state, temperature readings were recorded on January 14, 1998 (see Table 3.6.2.1-T7).

#2.6 Observations

The loading of the F-294 occurred late in the afternoon of January 06, 1998 and not all thermocouples had been applied by the end of the day's shift; consequently, some thermocouples had to be applied the next morning, and temperature data prior to thermal steady state was not recorded as outlined in procedure IN/OP 0597 F294 section 4.9.

The performance of the adhesive tape used to fasten the thermocouples against the container surfaces was not as good as expected when the container attained its higher temperatures. With the removal of the fireshield just prior to Test #2 (Table 3.6.2.1-T8), some of the thermocouples had visibly lifted away from the container surface. It was not evident during the testing, as these thermocouples were inaccessible and hidden from view under the fireshield. As a result, the following values are suspected to be low:

Test #1, channels 11, 12 and 13.
Test #2, channel 7.

#3 Conclusions

1. Four cases (tests) were carried out as follows:
   Test #1: F-294 with fireshield and crush shield, no added insulation
   Test #2: F-294 without fireshield and crush shield, no added insulation
   Test #3: F-294 without fireshield and crush shield, with added insulation
   Test #4: F-294 with fireshield and crush shield, with added insulation
2. The decay heat load was simulated using quantity forty (40), full scale active C-188 cobalt-60 sources. The C-188s were loaded in a single ring within an F-313 source carrier. The curies used at the start and finish of the pre-drop thermal test are as follows:
   1. at the start: 1998 Jan 06 - 375,510 curies (5.782 kW)
   2. at the finish: 1998 Jan 14 - 374,428 curies (5.766 kW)

3. The F-294 cavity was purged with argon. Therefore, the F-294 cavity environment was argon.
4. It is estimated that the time required for the temperature to reach equilibrium is 24 hours based on Test #1.
5. The highest temperatures of the F-294 designated location/components (based on Test #4, F-294 with fireshield and crush shield, with added insulation) are as per table below.

Item	Location	Temperature (°C)
1	C-188	417
2	cavity wall	175
3	underside of the F-294 closure plug	200
4	top of the F-294 closure plug	112
5	mid height of the F-294 external container wall	107
6	top of lift lug fin (most accessible surface)	53
7	ambient	20

6. The lowest temperatures of the following designated location/components (based on Case 2, F-294 without fireshield and crush shield, without added insulation), are as per table below.

Item	Location	Temperature (°C)
1	C-188	386
2	Cavity wall	158
3	Underside of the F-294 closure plug	179
4	Top of the F-294 closure plug	101
5	Mid height of the F-294 external container wall	90
6	Ambient	23

#4 Personnel

	Name	Title
Test prepared by:	D. Whitby	Industrial Quality Control
Reviewed by:	G. Chupick	Industrial Monitor, Decontamination Services
Approved by:	V. Shah	Package Engineering

Table 3.6.2.1-T1
Instrument Lab Work Report and Data Table, Thermocouple Sample #1

MDS Nordion

INSTRUMENT LAB
WORK REPORT & DATA TABLE

Equipment Name: K Thermocouple Sample Date: 98 Jan 28 Page of
Model Number: Type K PN: HH-K-24-SLE Serial No. Sample # 1
Manufacturer: Omega Equipment No. n/a
Location/Room No. Cobalt operations Time & Date Available:
Description of Service Required: Calibration of Thermocouple spool sample
Originator: Dave Withy. Dept: Signature:

INSTRUMENT LAB USE ONLY

Calibration:	Yes ✓ No	Repair:	Yes No ✓	Temp: 23 deg C	
Complete:	Yes No ✓	Maintenance:	Yes No ✓	Hum: 28 % RH	
Partial:	Yes ✓ No	between 0°C and 600°C			
Traceable to NIST or NRC:	Yes ✓ No	Interval: n/a Months			

Description of Intervention: Inserted DUT into Joffre dry block for temperature calibration at 100°C and above. Inserted DUT into Haake liquid bath with reference RTD for temperature calib. below 100°C. Recorded readings.

Equipment Used & calibration due date: #6-445-42 Wall Temperature Calibrator TRC-82 (NOV 98
#6-309-287 Joffre Dry Block Calibrator 650 SE (98 Jan. 17)
#6-365-165 Haake Liquid Bath G (SEP. 98)
#6-445-18 and #6-750-19 Fluke RTD System 2190A (APR 98)

CALIBRATION RESULTS	REFERENCE	MEASUREMENTS OBTAINED D. U. T.			TOLERANCE
PARAMETERS TESTED	NOMINAL	INITIAL	FINAL	DEVIATION	LIMITS
Temperature (°C)					
	0.3	0.0	0.0	-.3	±2.2
	100.0	101.0	101.0	1.0	±2.2
	200.0	201.1	201.1	1.1	±2.2
	400.0	401.6	401.6	1.6	±3.0
	600.0	603.1	603.1	3.1	±4.5

COMMENTS: tolerance = ±2.2°C or 0.75% of rdg. (whichever greater)

QUANTITY	REPLACEMENT PARTS DESCRIPTION	PART NUMBER	COST

Completed By: R. Alardyce Instrument Technician Date: 98 Jan 28
Verified By: [illegible] Instrument Technician Date: 98 Jan 28

CP-6-MASTER/Rev. 03/Form 2

Table 3.6.2.1-T2
Instrument Lab Work Report and Data Table, Thermocouple Sample #2

MDS Nordion

INSTRUMENT LAB
WORK REPORT & DATA TABLE

Equipment Name: Thermocouple Sample — Date: 98 Jan 28 — Page of
Model Number: Type K P/N: HH-K-24-SLE — Serial No. Sample #2
Manufacturer: Omega — Equipment No. n/a.
Location/Room No. Cobalt operations — Time & Date Available:
Description of Service Required: Calibration of thermocouple spool sample
Originator: Dave Withy. — Dept: — Signature:

INSTRUMENT LAB USE ONLY

Calibration:	Yes ✓ No	Repair:	Yes No ✓	Temp: 23 deg C	
Complete:	Yes No ✓	Maintenance:	Yes No ✓	Hum: 28 % RH	
Partial:	Yes ✓ No	between 0°C and 600°C			
Traceable to NIST or NRC:	Yes ✓ No	Interval: n/a. Months			

Description of Intervention: Inserted DUT into Jeffra dry block for temperature calibration at 100°C and above. Inserted DUT into Hoke liquid bath with reference RTD for temperature calibration below 100°C. Recorded readings.

Equipment Used & calibration due date: #6-445-42 Wahl Temperature Calibrator TKC-52 (AUG 98)
#6-809-287 Jeffra Dry Block Calibrator 650SE (99 Jan 17)
#6-365-165 Hoke Liquid Bath G (SEP 98)
#6-445-18 and #6-750-19 Fluke RTD System 2180A (APR 98)

CALIBRATION RESULTS	REFERENCE	MEASUREMENTS OBTAINED D. U. T.			TOLERANCE
PARAMETERS TESTED	NOMINAL	INITIAL	FINAL	DEVIATION	LIMITS
Temperature (°C)					
	0.3	-0.4	-0.4	-.7	±2.2
	100.0	100.9	100.9	.9	±2.2
	200.0	201.2	201.2	1.2	±2.2
	400.0	401.5	401.5	1.5	± 3.0
	600.0	602.9	602.9	2.9	± 4.5

COMMENTS: tolerance = ±2.2°C or 0.75% of rdg. (whichever greater)

QUANTITY	REPLACEMENT PARTS DESCRIPTION	PART NUMBER	COST

Completed By: Ron Alarie — Instrument Technician — Date: 98 Jan. 28
Verified By: [illegible] — Instrument Technician — Date: 98 Jan 28

CP-6-MASTER/Rev. 03/Form 2

Table3.6.2.1-T3
Thermocouple Locations

Channel	Location
1	C-188 source, midpoint of s/n 59432
2	C-188 source, midpoint of s/n 59475
3	C-188 source, midpoint of s/n 59532
4	Underside of shielding plug, adjacent to ventline exit hole
5	Cavity wall, at vertical midpoint, on side of drainline
6	Cavity wall, at vertical midpoint, on opposite side of drainline
7	Container wall, between the fins, upper section
8	Ambient, at elevation even with cavity midpoint
9	Top center of upper crush shield
10	Air temperature between fins of crush shield, side of drainline
11	Container wall, between the fins, midsection
12	Container wall, adjacent to drainline
13	Underside of container, center
14	Top center of shielding plug
15	Top of crush shield, equidistant between center and outside edge of plate
16	Top of crush shield, outside edge of plate
17	Air temperature, top edge of fireshield, side of drainline
18	Air temperature, lower edge of fireshield, side of drainline
19	Top of donut ring on crush shield
20	Lower edge of fireshield, side of drainline
21	Midpoint of fireshield, side of drainline
22	Upper edge of fireshield, side of drainline
23	Lower donut ring on crush shield, side of drainline
24	Top of lifting lug fin, opposite side of drainline
25	Ambient, approximately one meter above container

Table 3.6.2.1-T4
Test #1 - Temperatures Recorded at Location of each Thermocouple F-294 with Fireshield and Crush Shield in Place, no Extra Insulation

Channel	Temperature (°C)
1	387
2	409
3	406
4	181
5	165
6	161
7	94
8	23
9	42
10	42
11	86*
12	63*
13	24*
14	104
15	39
16	41
17	44
18	25
19	37
20	25
21	25
22	35
23	44

* Suspect reading, see Observations.

Table 3.6.2.1-T5
Test #2 - Temperatures Recorded at Location of each Thermocouple
F-294 with Fireshield and Crush Shield Removed, No Extra Insulation

Channel	Temperature (°C)
1	386
2	409
3	406
4	179
5	162
6	158
7	78*
8	23
9	
10	
11	90
12	66
13	32
14	101
15	
16	
17	
18	
19	
20	
21	
22	
23	

* Suspect reading, see Observations.

Table 3.6.2.1-T6
Test #3 - Temperatures Recorded at Location of each Thermocouple with Fireshield and Crush Shield Removed (With Extra Insulation)

Channel	Temperature (°C)
1	394
2	414
3	412
4	193
5	169
6	166
7	96
7a	61 (top of insulation) above #7
8	21
9	
10	
11	97
12	92
12a	65 (top of insulation) above #12
13	32
14	104
15	
16	
17	26
18	25
19	
20	
21	
22	
23	
24	43
25	34

Table 3.6.2.1-T7
Test #4 - Temperatures Recorded at Location of each Thermocouple F-294 with Fireshield and Crush Shield in Place, With Extra Insulation

Channel	Temperature (°C)
1	397
2	417
3	415
4	200
5	175
6	172
7	106
7a	71 (top of insulation above #7
8	20
9	40
10	44
11	107
12	92
13	31
14	112
15	40
16	43
17	41
18	23
19	40
20	21
21	26
22	36
23	48
24	53
25	29

Figure 3.6.2.1-F1
F-294 Loading Diagram

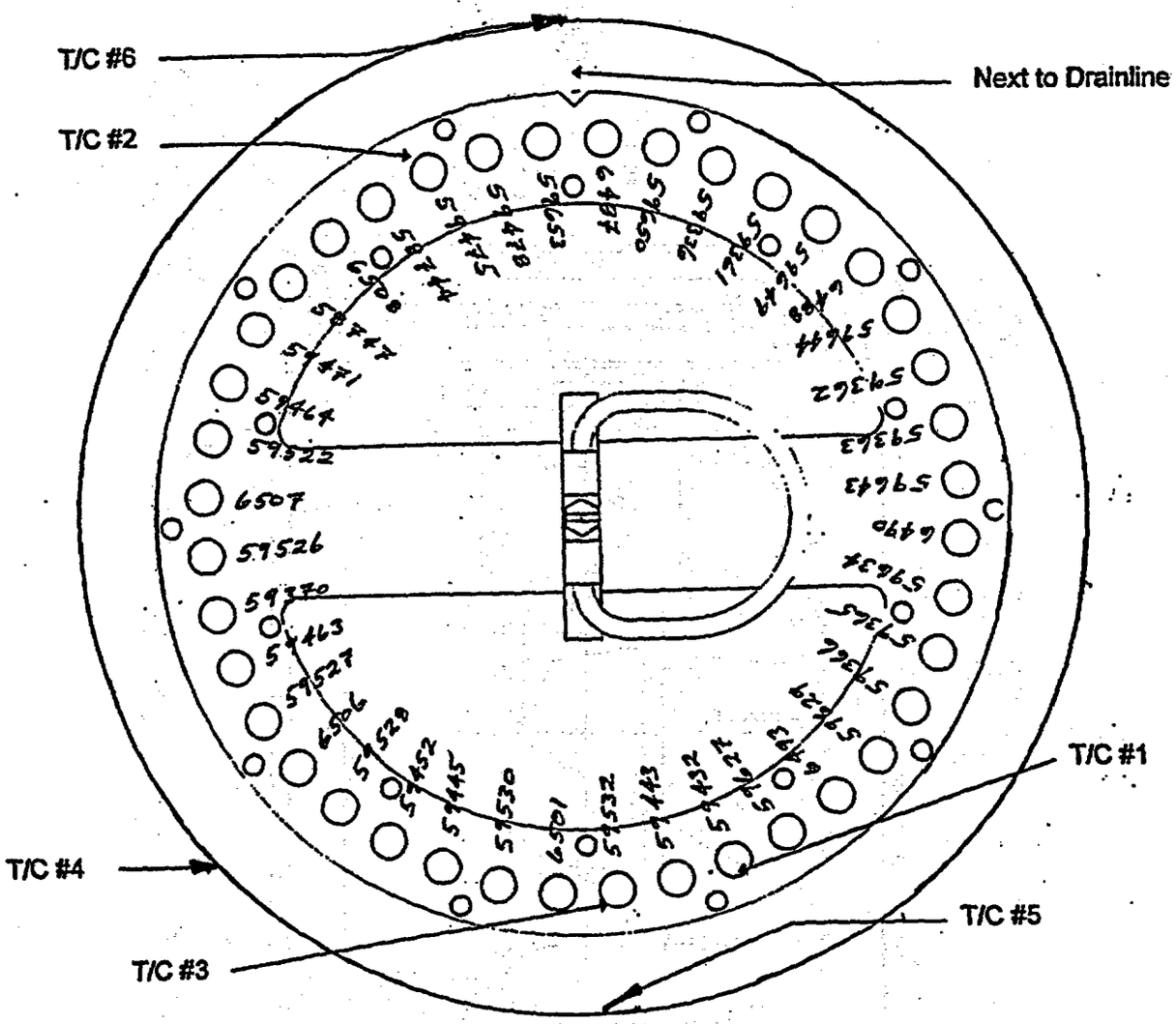

Figure 3.6.2.1-F2
Thermocouple Locations on F-294

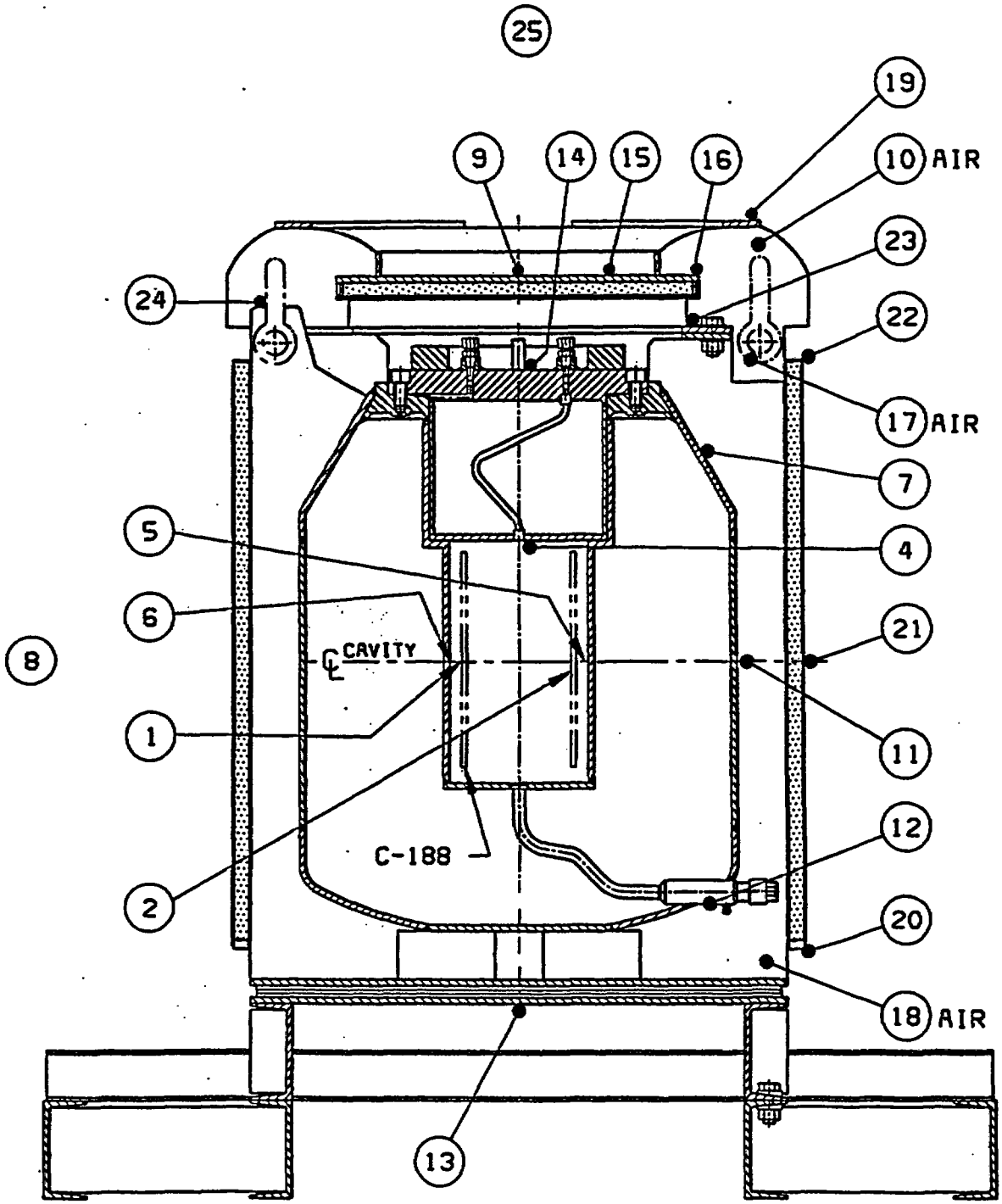

T/C #3 - C-188 TEMPERATURE, NOT SHOWN IN THIS PLANE

Figure 3.6.2.1-F3
F-294 Bottom Corner, Extra Thermal Insulation (1/2 in. Kaowool)

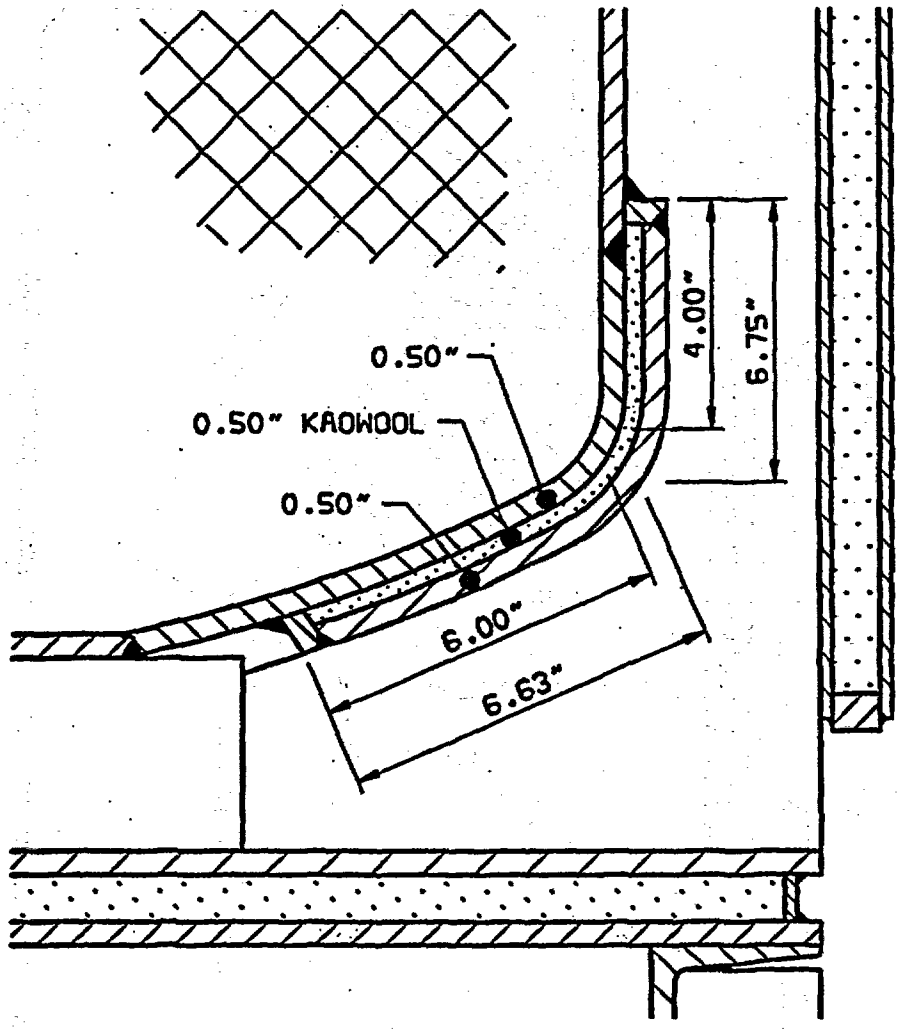

Figure 3.6.2.1-F4
F-294 Top Corner, Extra Thermal Insulation (1/2 in. Kaowool)

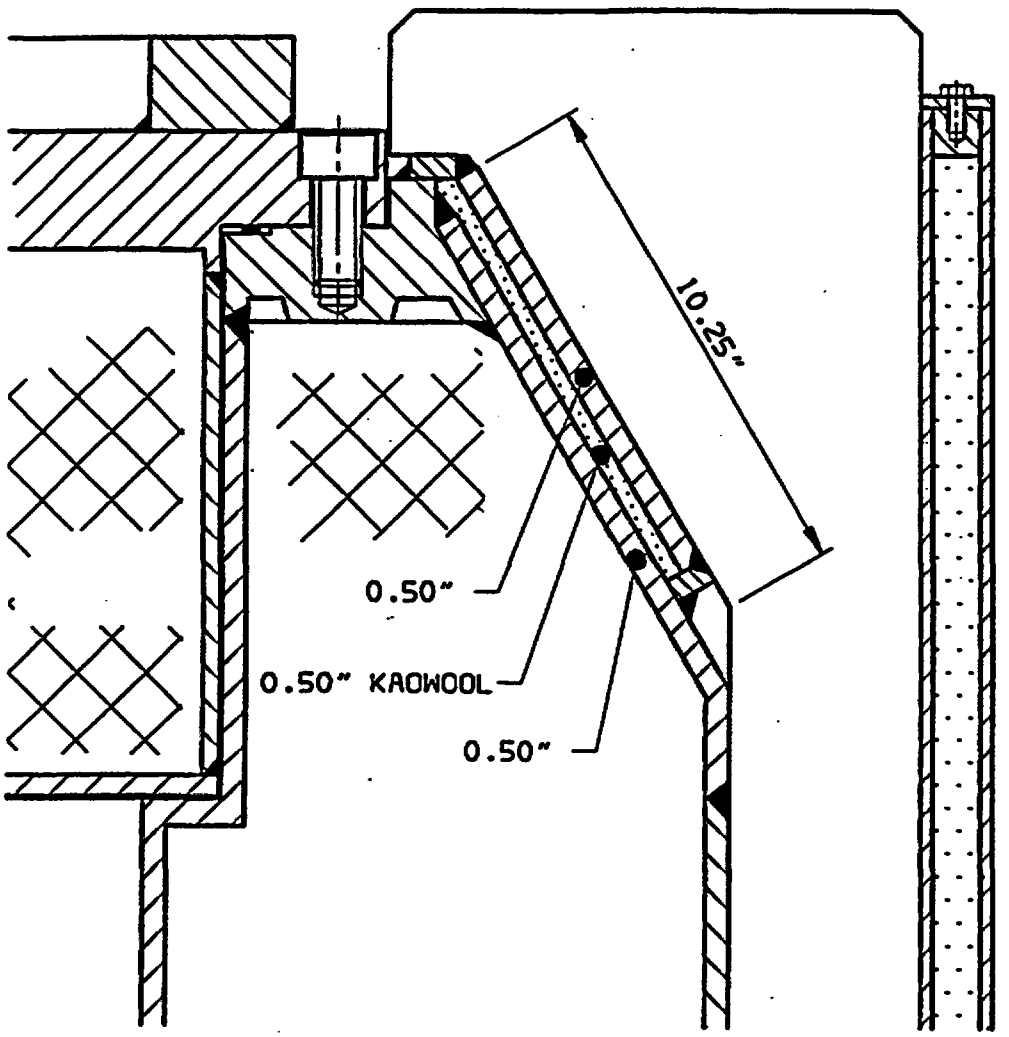

SUB-APPENDIX 3.6.2.2
TEST # 5.3.10, NORMAL THERMAL TESTING AFTER THE DROP

TEST #5.3.10 - Normal Thermal Test After the Drop

#1 Test # 5.3.10 as per test plan document IN/QA 1368 F294 (1)
Normal Thermal Test After the Drop

Date test conducted: March 17 to 24, 1998

#2 Person(s) who conducted the test/procedure
Ed Psutka, Industrial Operations
Greg Chupick, Industrial Operations Monitor
Dave Whitby, Industrial Quality Control

#3 Test Details

The F-294 test packaging was subjected to eight (8) drop tests conducted on February 25, 1998 at Chalk River Laboratory, AECL, Chalk River, Ontario, Canada. After the drop tests, the F-294 Shipping Package was subjected to the same normal thermal testing after the drop test as was performed prior to the drop test when loaded with Co-60 as outlined in The Procedure for Steady State Thermal Test IN/OP 0597. The drop-tested F-294 was loaded by the same technician, Ed Psutka of Industrial Operations, and the thermal testing was carried out by Greg Chupick, the Industrial Operations Monitor, and Dave Whitby of Industrial Quality Control. The same four tests were again carried out on the four different configurations.

Test #1: F-294 with fireshield and crush shield, no added insulation
Test #2: F-294 without fireshield or crush shield, no added insulation
Test #3: F-294 without fireshield or crush shield, with added insulation
Test #4: F-294 with fireshield and crush shield, with added insulation

#3.1 Instrumentation

All the instrumentation used on the pre-drop thermal test was also used on the post-drop test. A third temperature reader was used due to the higher number of thermocouple locations on the drop-tested F-294. The following instrumentation was used.

Instrument	Make	Model	Cal. Date	Accuracy	Nordion No.
Temperature Logger	Omega	OM-302	1997 Sept.	± 2°C	6-810-021
Temperature Reader	Fluke	2166A	1997 Oct.	± 0.5%	6-810-022
Temperature Reader	Omega	650	1998 Feb.	± 1°C	6-810-013
Thermocouple wire Type K	Omega	HH-K-20	1998 Jan.	± 2.2°C or ± 0.75%	n/a

The thermocouples each had a flame fusion junction that could be mounted on the container wall. The method of affixing the thermocouples onto the container was improved over the pre-drop thermal test. Each thermocouple junction was fusion welded onto a stainless steel flat plate, approximately ½ in. square and approximately 0.030 in. thick which, in turn, was tack welded directly on to the container wall.

The F-294 flask was prepared for thermal tests prior to loading just as the pre-drop test, except with an additional thermocouple located in the cavity. Two thermocouples were mounted on the cavity wall, in line with the drainline, radially opposed to each other and axially on the cavity center line. A third thermocouple was mounted in line with the most damaged area of the F-294, near lift lug #4 (see Figure 3.6.2.2-F1). A fourth thermocouple was mounted on the underside of the container plug, adjacent to the vent line exit hole. The wire for the four thermocouples was routed out the F-294 plug vent line to Type K connectors.

Thermocouples were also mounted actively onto the same three C-188 sources, using hose clamps for a secure contact. The thermocouples were positioned at approximately the center of the sources; the Source Technician then placed these sources (s/n's 59475, 59432, 59532) within the F-313 cage assembly as shown on the Loading Diagram attached (see Figure 3.6.2.2-F3). The thermocouple wire was routed through the drainline to Type K connectors.

#3.2 Source Loading in Cell 06

The F-294 was loaded 1998 March 17 with the same sources in the same loading configuration as the pre-drop thermal test. The activity for that date was 366,160 curies Cobalt-60, as per the loading diagram attached (see Figure 3.6.2.2-F3). The loading was done as any typical preparation for shipment, complete with a cavity argon purge and the plug fasteners torqued to 100 ft.-lb. in Cell 06 within Industrial Operations, MDS Nordion, Ottawa.

The loaded container was removed from Cell 06 and placed in the shipping bay. The thermocouples were mounted on the container as listed in Table 3.6.2.2-T1 and shown in Figure 3.6.2.2-F4. Some additional thermocouples were mounted onto the damaged areas of the container (see Figures 3.6.2.2-F1 and 3.6.2.2-F2).

#4 Actual Thermal Tests

#4.1 Test #1 - Fireshield and Crush Shield Removed

The F-294 was loaded at approximately 13:00 on 1998 March 17; after preparation, temperature readings were acquired at 14:20 and successive readings were taken to demonstrate a thermal steady state condition up to 1998 March 19 (see Test #1, Table 3.6.2.2-T2 and Figure 3.6.2.2-F5).

#4.2 Test #2 - Fireshield and Crush Shield in Place

The fireshield and the upper crush shield, which had been damaged during the drop test, had to be cut from the container assembly prior to loading. The fireshield was cut into three segments and the more damaged crush shield had to have some fins flame cut for removal.

To re-assemble the fireshield in place, the lower edge was fastened normally while the upper area was strapped together. The seams were taped to prevent air flow between the segments. The puncture holes on the fireshield were also taped to prevent air flow bypass. The crushshield was set in place on top of the container, although it could not be fastened down. As the crushshield was propped up by the lifting eye welded on top of the plug, we had to cut out an elliptical hole approximately 4 in. x 6 in. so that the crush shield would seat as close as possible to the top of the container. This hole was taped so that there would not be any bypass of air flow. Temperature readings were taken on March 19 through to March 20 (see Test #2, Table 3.6.2.2-T3).

#4.3 Test #3 - Fireshield and Crush Shield Removed - Insulated

One-half-inch Kaowool insulation strips were cut and taped on to the upper and lower sections, as per instructions from V. Shah on March 20. Temperature readings were then recorded from March 20 and again on March 23 (see Test #3, Table 3.6.2.2-T4).

Test #4 - Fireshield and Crush Shield in Place - Insulated

The fireshield and upper crush shield were assembled into place as in Test #2 and the appropriate additional thermocouples were tacked into position after Test #3 on March 23. Temperature readings were recorded through to March 24 (see Test #4, Table 3.6.2.2-T5).

#5 Observations

The thermocouple mounted on C-188 s/n 59432 must have broken during the loading procedure as it was not operating properly afterward; therefore this thermocouple was not allocated to a channel during the testing.

Position 5 on the Omega 650 temperature reader, which corresponds with channel 25, was inoperative and was not used for these tests.

Based on Test #1, it appears that temperature equilibrium is reached in approximately 24 hours from the start of the test.

The highest temperature readings are shown in Table 3.6.2.2-T6.

#6 Conclusions

1. Four cases (tests) were carried out as follows:
   Test #1: F-294 without fireshield and crush shield, no added insulation
   Test #2: F-294 with fireshield and crush shield, no added insulation
   Test #3: F-294 without fireshield and crush shield, with added insulation
   Test #4: F-294 with fireshield and crush shield, with added insulation
2. The decay heat load was simulated using quantity forty (40), full-scale active C-188 cobalt-60 sources. The C-188 capsules were loaded in a single ring within the F-313 source carrier. These C-188 sources were the same ones used in the pre-drop thermal test. The curies used at the start and finish of the post-drop thermal test are as follows:
   - at the start: 1998 March 17 - 366,160 curies (5.638 kW)
   - at the finish: 1998 March 24 - 365,237 curies (5.624 kW)
3. The F-294 cavity was purged with argon. Therefore the F-294 cavity environment was argon.
4. It is estimated that the time required for the temperature to reach equilibrium is 24 hours, based on Test #1.
5. The highest temperatures of the following designated location/components are based on Test #4 (F-294 with fireshield and crushshield, with added insulation) are as per table below.

Item	Location	Temperature (°C)
1	C-188	413
2	Cavity wall	193
3	Underside of the F-294 closure plug	222
4	Top of the F-294 closure plug	111
5	Mid height of the F-294 external container wall	110
6	Top of lift lug fin (most accessible surface)	56
7	Ambient	23

6. The lowest temperatures of the following designated location/components are based on Case 1 (F-294 without fireshield and crushshield, without added insulation) are as per table below.

Item	Location	Temperature (°C)
1	C-188	368
2	Cavity wall	167
3	Underside of the F-294 closure plug	206
4	Top of the F-294 closure plug	87
5	Mid height of the F-294 external container wall	91
6	Ambient	25

#7 Personnel

	Name	Title
Test prepared by:	D. Whitby	Industrial Quality Control
Reviewed by:	G. Chupick	Industrial Monitor, Decontamination Services
Approved by:	V. Shah	Package Engineering

Table 3.6.2.2-T1
Thermocouple Locations

Channel	Location
1	C-188 source, midpoint of s/n 59532
2	C-188 source, midpoint of s/n 59475
3	Underside of shielding plug, adjacent to ventline exit hole
4	Cavity wall midheight, in line with damaged lift lug #4
5	Cavity wall midheight on the side opposite the drainline
6	Cavity wall midheight on the same side as the drainline
7	Container wall between the fins, middle section, in line with drainline
8	Ambient, at elevation even with cavity midpoint
9	Top center of shielding plug
10	Ambient, approximately one meter above top of container
11	Top of lift lug #2
12	Container wall, lower section, adjacent to the drainline
13	Underside of container, center; middle of indentation from puncture pin
14	Container wall, upper section, under damaged fins, mid-way between lift lugs #1 and #2 (damage zone #2)
15	Container wall, middle section, mid-way between lift lugs #1 and #2 (damage zone #2)
16	Container wall, lower section, mid-way between lift lugs #1 and #2 (damage zone #2)
17	Air temperature, top edge of fireshield, in line with drainline
18	Air temperature, lower edge of fireshield, in line with drainline
19	Air temperature, upper section, between damaged fins near lift lug #4
20	Container wall, middle section; under fin folded over from puncture pin, near lift lug #4
21	Container wall, upper section, in line with drainline.
22	Top of damaged lift lug #4
23	Top of insulation, over t/c #21
24	Top of insulation, over t/c #12
25	Inoperative
26	Container wall, upper section, adjacent to damaged lift lug #4 (on reinforcing pad)
27	Air temperature, lower section, between damaged fins, near lift lug #4
28	Container wall, upper section, adjacent to damaged lift lug #4 (other side of fin from t/c #26)
29	Top of insulation, over t/c #26
30	Top of insulation, lower section, next to lift lug #4
31	Top center of crush shield
32	Top of crush shield, equidistant between center and outside edge of plate, in line with lift lug #2
33	Top of crush shield, outside edge of plate, in line with lift lug #2
34	Top edge of fireshield, in line with drainline
35	Mid-height of fireshield, in line with drainline
36	Bottom edge of fire shield, in line with drainline
37	Air temperature, between damaged fins of crush shield, in line with drainline
38	Top of upper donut ring on crush shield, in line with lift lug #2
39	Top of lower donut ring on crush shield, in line with lift lug #2
40	Top of fireshield, puncture pin damaged zone #1, near lift lug #4
41	Top of fireshield, near lift lug #2
42	Top of insulation, upper section, between fins of damage zone #2
43	Top of insulation, lower section, between fins of damage zone #2

Table 3.6.2.2-T2
Test #1 - Recorded Temperatures
(No Insulation, Crush Shield and Fireshield Removed)

Channel	98/03/17										98/02/18							98/03/19	
	14:20	15:00	15:30	16:00	16:30	17:00	17:30	18:00	18:30	19:00	8:30	10:00	11:00	12:00	13:00	14:00	15:45	8:45	10:50
1		357	358	359	359	359	360	360	359	360	368	367	367	368	368	368	368	368	368
2		398	400	400	400	400	399	399	399	398	404	404	404	405	405	405	405	405	405
3		167	171	174	178	181	183	186	188	189	204	205	206	204	206	204	206	206	206
4		128	132	136	139	143	146	148	150	152	167	167	167	167	168	168	168	167	167
5		144	149	151	153	155	157	158	159	161	173	173	173	173	174	174	174	174	174
6		138	142	146	149	152	155	157	159	161	174	174	175	175	175	175	175	175	175
7		48	53	57	61	64	67	71	73	76	90	90	90	91	91	91	91	91	91
8		24	24	24	25	25	24	25	25	24	25	24	24	25	25	25	25	23	25
9		42	46	49	53	56	62	63	67	69	83	87	88	88	86	85	83	85	87
10		26	27	27	29	28	28	32	30	31	33	31	29	28	31	33	32	30	29
11	25	26	27	29	30	31	32	33	34	35	41	41	41	41	42	41	41	41	41
12	33	40	45	48	52	55	58	60	62	64	77	77	77	77	77	77	78	77	77
13	22	22	23	23	24	24	25	26	26	27	32	32	33	33	33	33	33	33	33
14	37	43	48	52	55	58	62	64	66	68	83	84	84	84	85	85	84	84	84
15	41	50	54	59	62	66	69	72	73	75	91	91	91	92	92	92	91	91	
16	31	38	42	45	48	51	54	57	58	60	74	75	75	75	76	75	76	74	75
17	24	26	26	27	27	28	28	28	28	29	31	31	31	31	31	32	31	31	31
18	22	22	22	22	23	23	23	23	23	23	24	23	23	24	24	24	28	28	28
19	24	28	29	30	31	31	32	32	33	34	36	38	38	38	37	38	39	38	39
20	41	49	54	58	62	65	68	71	73	75	88	88	89	89	89	89	89	89	88
21		42	46	50	53	56	59	61	62	64	77	78	78	78	78	78	77	77	77
22		27	29	30	32	34	35	36	37	38	44	44	45	45	-	45	45	44	45
23		42																	
24		22																	
25		43																	
26		42	46	49	53	56	59	62	63	65	80	80	80	82	81	81	80	80	80
27		22	26	27	27	28	29	30	31	31	25	25	25	25	25	26	26	26	26
28		43	48	52	55	58	61	63	65	67	82	82	82	80	83	83	83	82	83

Table 3.6.2.2-T3
Test #2, Recorded Temperatures
(No Insulation, with Crush Shield and Fireshield)

Channel	98/03/19		98/03/20			
	16:00	17:00	8:45	9:45	11:00	11:50
1	371	371	373	373	372	372
2	406	406	407	407	407	407
3	209	209	212	212	212	212
4	169	170	172	172	172	172
5	173	174	176	176	176	175
6	178	178	181	180	180	179
7	94	95	97	97	97	97
8	24	24	24	23	24	23
9	98	98	103	102	103	102
10	28	27	28	26	25	25
11	51	52	53	53	53	53
12	68	67	68	69	68	68
13	32	32	32	31	31	31
14	91	92	94	94	94	94
15	95	95	97	97	97	96
16	61	59	63	63	65	61
17	51	51	52	51	51	51
18	33	33	36	34	34	36
19	50	50	50	50	50	50
20	87	88	89	89	89	88
21	86	86	88	87	88	88
22	57	56	57	56	57	57

Channel	98/03/19		98/03/20			
	16:00	17:00	8:45	9:45	11:00	11:50
23	–	–	–	–	–	
24	–	–	–	–	–	
25	–	–	–	–	–	
26	89	90	92	92	92	92
27	24	24	24	18	24	23
28	91	92	94	94	94	94
29	–	–	–	–	–	–
30	–	–	–	–	–	–
31	42	42	43	43	43	43
32	39	39	40	40	40	40
33	40	40	41	41	41	41
34	34	34	34	34	34	34
35	29	29	29	29	29	29
36	28	29	28	27	28	28
37	46	46	47	45	47	47
38	43	44	44	44	44	44
39	57	58	59	58	58	58
40	38	39	39	39	39	39
41	37	37	37	37	37	37
42	–	–	–	–	–	–
43	–	–	–	–	–	–

Table 3.6.2.2-T4
Test #3, Recorded Temperatures
(With Insulation, Crush Shield and Fireshield Removed)

Channel	98/03/20		98/03/23
	15:30	16:30	9:30
1	373	374	377
2	408	408	411
3	211	211	213
4	174	175	179
5	181	182	187
6	182	183	187
7	96	97	102
8	24	24	24
9	92	91	93
10	27	28	26
11	45	45	46
12	89	91	96
13	33	34	37
14	96	97	100
15	97	99	103
16	90	92	98
17	32	33	33
18	28	29	28
19	41	42	43
20	96	98	102
21	96	97	100
22	48	48	n/r

Channel	98/03/20		98/03/23
	15:30	16:30	9:30
23	66	66	64
24	70	72	75
25			
26	93	94	97
27	27	27	28
28	95	96	99
29	71	72	71
30	67	73	78
31			
32			
33			
34			
35			
36			
37			
38			
39	40	40	40
40			
41			
42	65	66	66
43	65	67	73

Table 3.6.2.2-T5
Test #4, Recorded Temperatures
(With Insulation, Crush Shield and Fireshield)

Channel	98/03/23				98/03/24	
	11:15	13:05	15:10	16:50	8:20	9:15
1	378	379	379	379	381	381
2	411	411	412	412	413	413
3	213	215	218	218	221	222
4	181	182	183	184	186	186
5	187	187	188	189	191	191
6	188	189	191	191	193	193
7	104	105	106	107	109	108
8	24	23	23	23	23	23
9	99	103	106	108	110	111
10	28	28	28	31	27	29
11	50	53	55	56	56	56
12	94	94	94	95	96	96
13	37	36	35	35	36	35
14	102	105	108	109	111	111
15	105	107	108	109	111	110
16	97	97	97	98	99	99
17	49	51	52	53	53	52
18	32	33	32	33	33	32
19	52	53	53	54	54	54
20	101	101	102	103	104	104
21	102	106	108	109	111	111
22	57	61	62		63	64

Channel	98/03/23				98/03/24	
	11:15	13:05	15:10	16:50	8:20	9:15
23	73	75	76	78	79	79
24	72	71	70	71	70	71
25						
26	100	103	105	106	109	109
27	24	24	24	25	24	23
28	102	106	108	109	111	111
29	82	84	80	86	87	87
30	63	61	61	63	64	64
31	31	42	44	45	45	45
32	30	41	42	43	43	43
33	31	39	40	41	41	40
34	31	34	34	35	34	35
35	27	29	29	29	29	29
36	27	27	27	28	27	27
37	44	46	47	47	48	47
38	35	44	45	46	46	46
39	50	54	56	56	56	57
40	38	41	41	42	42	42
41	32	36	36	37	37	37
42	72	75	76	77	78	79
43	74	72	73	70	74	65

Table 3.6.2.2-T6
Thermocouple Location with Highest Temperature Readings

Channel	Location	Final Temperature (°C)			
		Test #1	Test #2	Test #3	Test #4
1	C-188 source, midpoint of s/n 59532	368	372	377	381
2	C-188 source, midpoint of s/n 59475	405	407	411'	413
3	Underside of shielding plug, adjacent to ventline exit hole	206	212	213	222
4	Cavity wall midheight, in line with damaged lift lug #4	167	172	179	186
5	Cavity wall midheight on the side opposite the drainline	174	175	187	191
6	Cavity wall midheight on the same side as the drainline	175	179	187	193
7	Container wall between the fins, middle section, in line with drainline	91	97	102	108
8	Ambient, at elevation even with cavity midpoint	25	23	24	23
9	Top center of shielding plug	87	102	93	111
10	Ambient, approximately one meter above top of container	29	25	26	29
11	Top of lift lug #2	41	53	46	56
12	Container wall, lower section, adjacent to the drainline	77	68	96	96
13	Underside of container, center; middle of indentation from puncture pin	33	31	37	35
14	Container wall, upper section, under damaged fins, mid-way between lift lugs #1 and #2 (damage zone #2)	84	94	100	111
15	Container wall, middle section, mid-way between lift lugs #1 and #2 (damage zone #2)	91	96	103	110
16	Container wall, lower section, mid-way between lift lugs #1 and #2 (damage zone #2)	75	61	98	99
17	Air temperature, top edge of fireshield, in line with drainline	31	51	33	52
18	Air temperature, lower edge of fireshield, in line with drainline	28	36	28	32
19	Air temperature, upper section, between damaged fins near lift lug #4	39	50	43	54
20	Container wall, middle section; under fin folded over from puncture pin, near lift lug #4	88	88	102	104
21	Container wall, upper section, in line with drainline.	77	88	100	111
22	Top of damaged lift lug #4	45	57	n/r	64
23	Top of insulation, over t/c #21	n/a	n/a	64	79
24	Top of insulation, over t/c #12	n/a	n/a	75	71
25	Inoperative	n/a	n/a	n/a	n/a
26	Container wall, upper section, adjacent to damaged lift lug #4 (on reinforcing pad)	80	92	97	109
27	Air temperature, lower section, between damaged fins, near lift lug #4	26	23	28	23
28	Container wall, upper section, adjacent to damaged lift lug #4 (other side of fin from t/c #26)	83	94	99	111
29	Top of insulation, over t/c #26	n/a	n/a	71	87
30	Top of insulation, lower section, next to lift lug #4	n/a	n/a	78	64
31	Top center of crush shield	n/a	43	n/a	45
32	Top of crush shield, equidistant between center and outside edge of plate, in line with lift lug #2	n/a	40	n/a	43
33	Top of crush shield, outside edge of plate, in line with lift lug #2	n/a	41	n/a	40
34	Top edge of fireshield, in line with drainline	n/a	34	n/a	35
35	Mid-height of fireshield, in line with drainline	n/a	29	n/a	29
36	Bottom edge of fire shield, in line with drainline	n/a	28	n/a	27
37	Air temperature, between damaged fins of crush shield, in line with drainline	n/a	47	n/a	47
38	Top of upper donut ring on crush shield, in line with lift lug #2	n/a	44	n/a	46
39	Top of lower donut ring on crush shield, in line with lift lug #2	n/a	58	40	57
40	Top of fireshield, puncture pin damaged zone #1, near lift lug #4	n/a	39	n/a	42
41	Top of fireshield, near lift lug #2	n/a	37	n/a	37
42	Top of insulation, upper section, between fins of damage zone #2	n/a	n/a	66	79
43	Top of insulation, lower section, between fins of damaged zone #2	n/a	n/a	73	65

Figure 3.6.2.2-F1
Digital Photo: Locations and Identifications of Damaged Zone #1
(G:\QA\QC\PHOTOS\4F294.BMP)

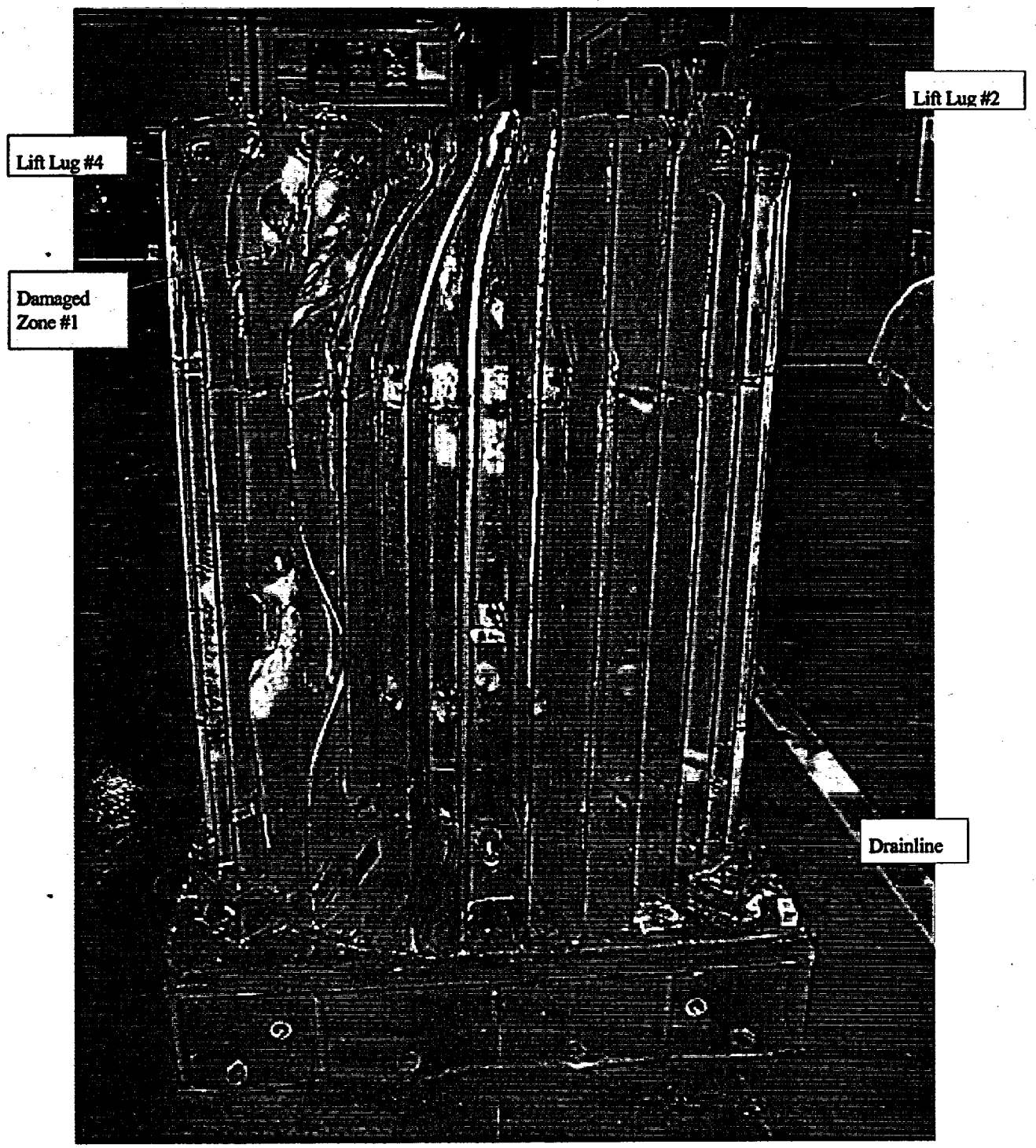

Figure 3.6.2.2-F2
Digital Photo: Locations and Identifications of Damaged Zone #2
(G:\QA\QC\PHOTOS\3F294.BMP)

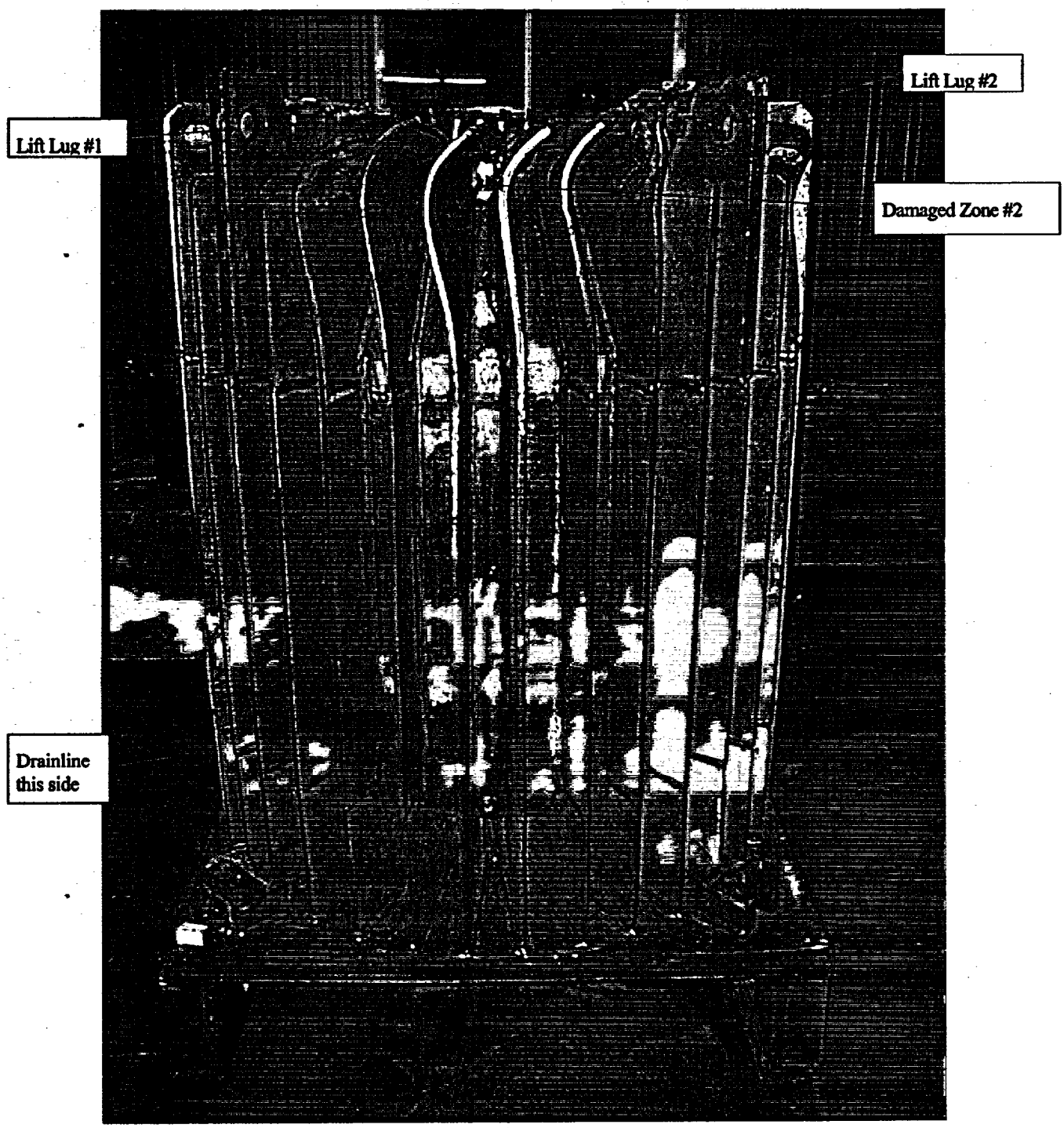

Figure 3.6.2.2-F3
Loading Diagram of F-294 and Locations of Thermocouples in the F-294 Cavity

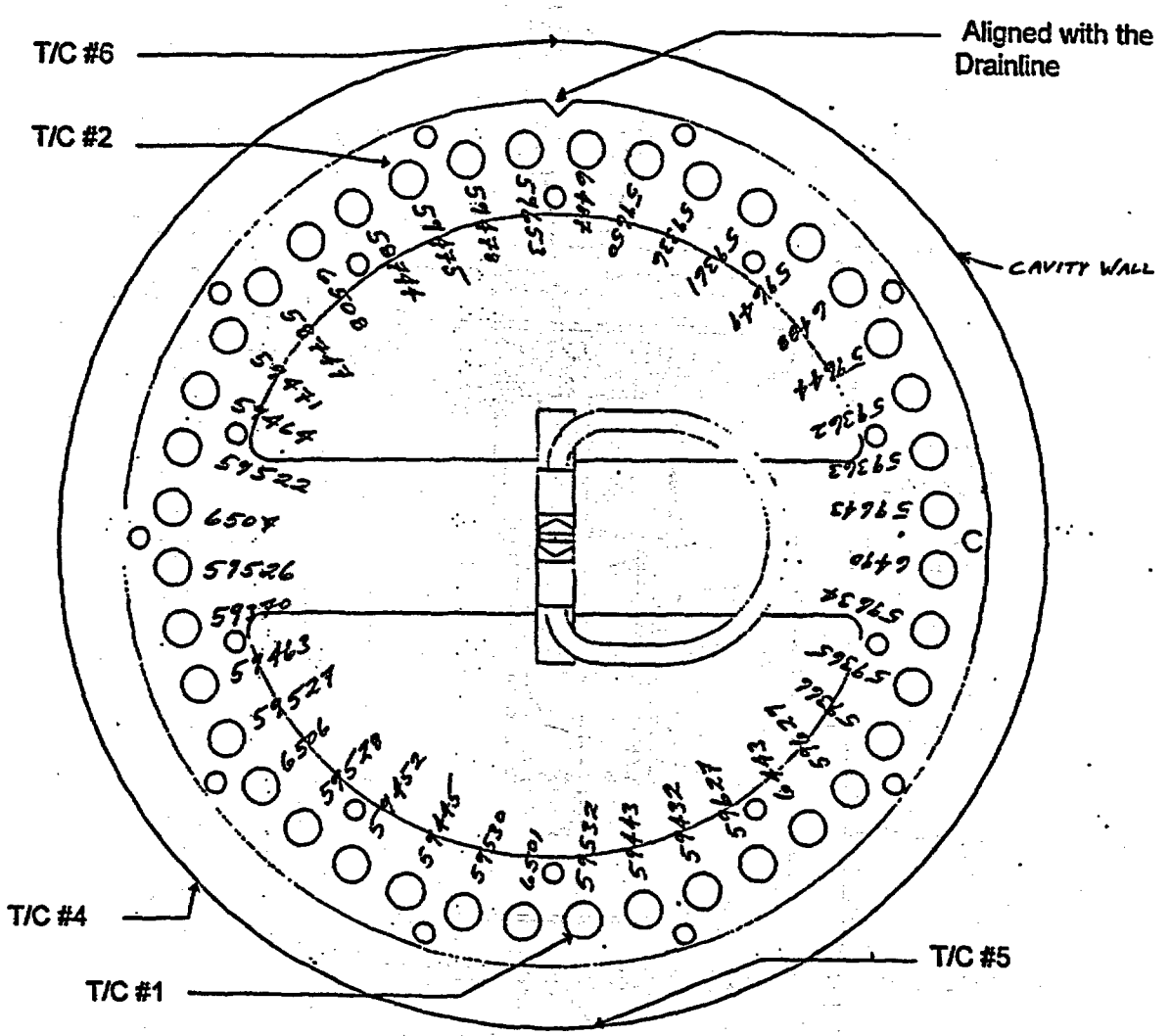

Figure 3.6.2.2-F4
Thermocouple Locations (plane through drainline)

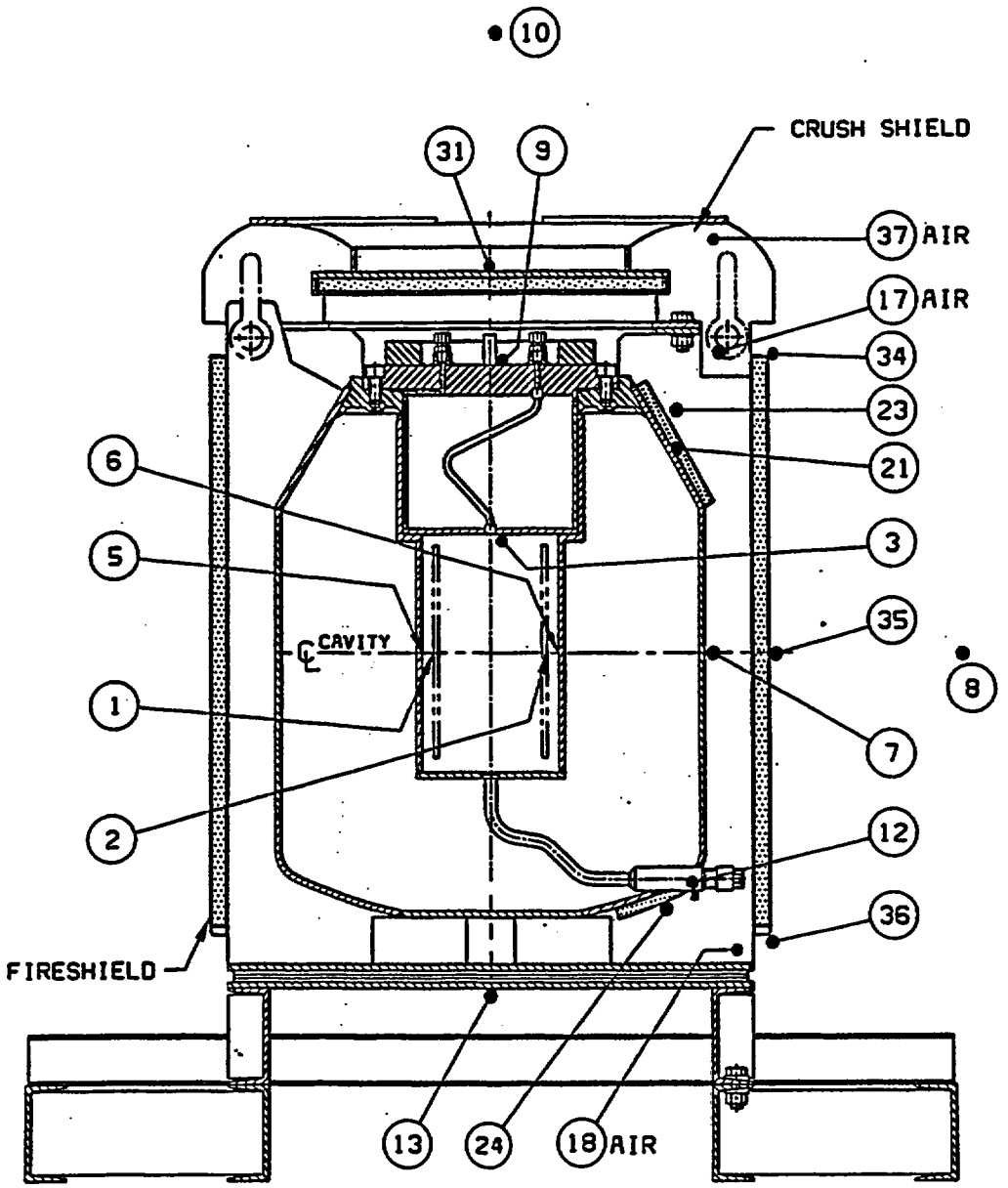

Figure 3.6.2.2-F5
Thermocouple Locations (other planes)

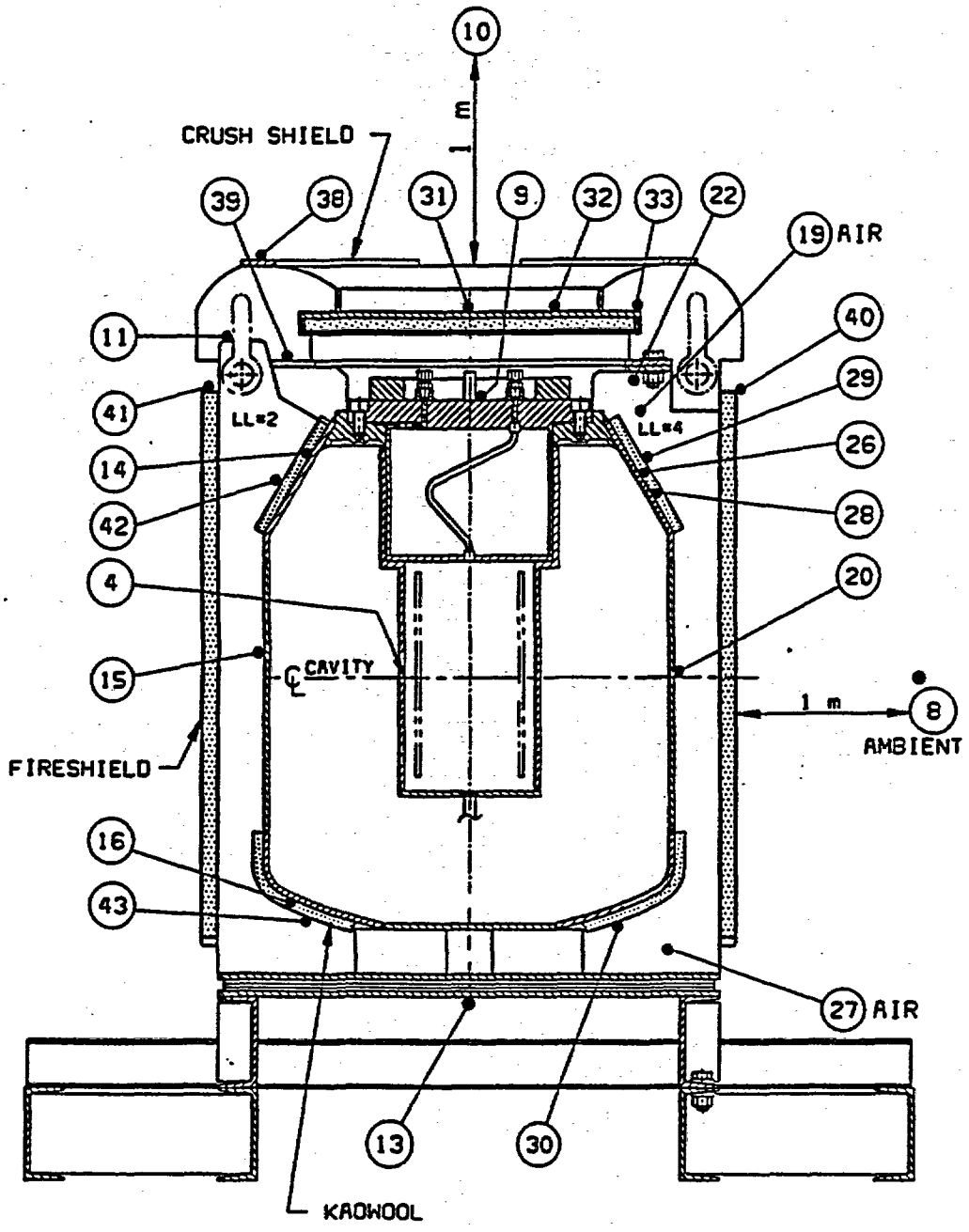

Figure 3.6.2.2-F6
Test #1 Temperature *vs* Time - Plot of Selected Thermocouples

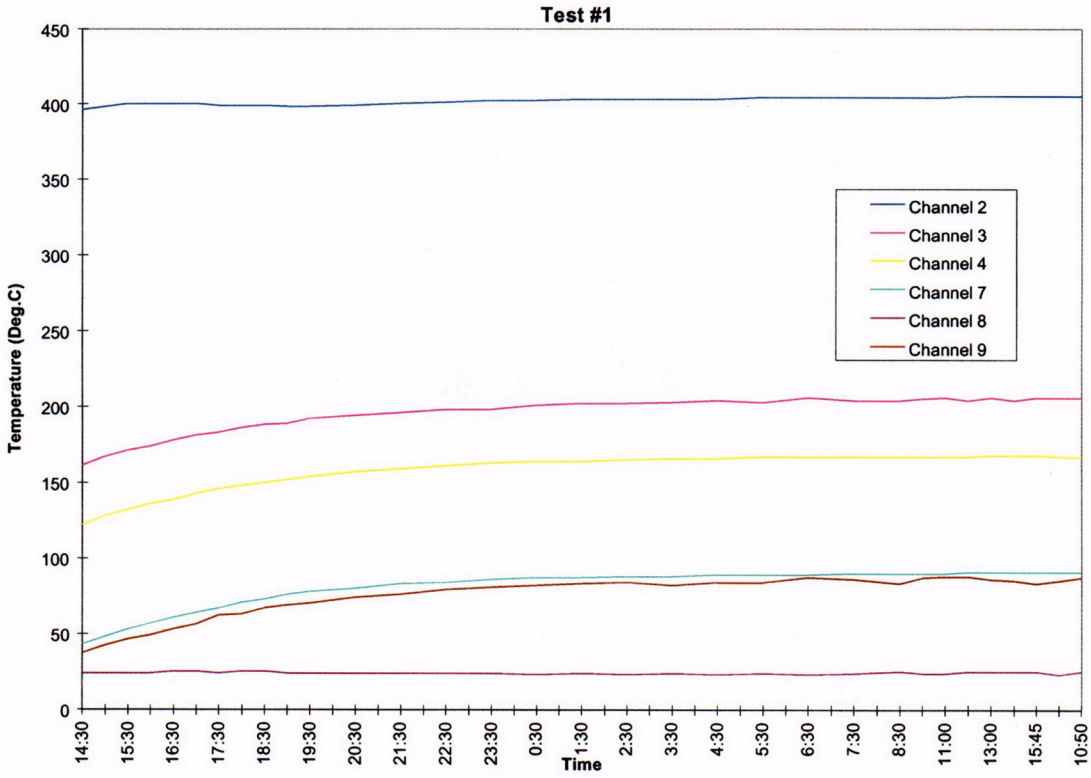

C01

APPENDIX 3.6.3
STEADY STATE HEAT TRANSFER IN THE CAVITY OF F-294 PACKAGE

1. INTRODUCTION

Present regulations do not place a limit on the maximum temperature of a cobalt-60 radioactive source capsule during transport. What they do require is that, under normal conditions of transport, the radioactive material released from the containment vessel be limited to the amounts specified in the regulations. Under hypothetical accident conditions some activity release, up to specified regulatory limits, may be permitted. It is therefore prudent to keep the source encapsulation temperatures as low as possible. For the C-188 double encapsulated cobalt-60 source capsule, the outer ss316L encapsulation is considered part of the containment system. The C-188 has been certified as Special Form Radioactive Material and consequently has met the 800°C (1,472°F) thermal test for Special Form Radioactive Materials to IAEA SS 6 - 1985 Edition (Ref. [17]). See Chapter 4, Appendix 4.4.2.

Temperature calculations of C-188 source capsules loaded in one (1) ring of holes of the F-313 source holder in the F-294 cavity are presented here.

2. DEFINITION OF PROBLEM

The C-188 cobalt-60 sources are loaded in a F-313 source holder within 11.5 in. diameter of the F-294 cavity. The source holder is loaded with 40 sources in the outermost (1st) ring of holes only. Heat in the cavity is the result of

1. attenuation of gamma rays within the source capsule (self-attenuation)
2. capsule to capsule (mutual attenuation)
3. capsule to source holder material (mutual attenuation)

Two methods are employed to calculate the maximum ss316L cladding temperature required to transfer heat generated within the cavity. From Chapter 3, Appendix 3.6.2, the measured cavity wall temperature is 175 °C (347 °F) with an ambient of 20 °C (68 °F). The cavity wall temperature of 193 °C (379 °F) at an ambient of 38 °C (100 °F) is used in the thermal calculations. This value is not corrected for temperature measurement errors and solar heat load.

In method #1, the 40 source capsules are modeled as an equivalent tubular heat source. The heat is transferred from only the outer surface of the "equivalent" tubular source to the F-294 cavity wall.

In method #2, the heat transfer from one single source capsule within 11.5 in. diameter cavity is considered. The radiation heat exchange between one source capsule and the cavity wall is estimated based on view factors.

In both methods, it is assumed that the heat is transferred from the source capsule to the cylindrical wall of the cavity; credit, due to the heat exchange at the top (between top end cap and the shield plug bottom face) and at the bottom (between the bottom end cap and the cavity bottom face), has been ignored.

3. METHOD #1 - ESTIMATE TEMPERATURE OF SOURCE OUTER ENCAPSULATION

Step #1 Thermal model

See Figure 3.6.3-F1, Figure 3.6.3-F3 and Figure 3.6.3-F4 for thermal model, geometrical and other data of the cavity and source capsules.

Step #2 Heat load Q_{load}

For source holder loaded with source capsules in the 1st ring only, the heat load in the cavity is approximately 35% of the total heat load [Ref. 11].
Therefore

$$Q_{load} = 0.35 \times 360 \text{ kCi} \times 15.47 \text{ W/kCi} \times 3.413 \text{ Btu/h/W}$$
$$= 6{,}653 \text{ Btu/h}$$

Step #3 Heat transfer coefficients

For turbulent range of the natural convection heat transfer mode, McAdams (Ref. [14]) recommends for air environment, heat transfer coefficient h_c:

$$h_c = 0.19\,(\Delta T)^{0.333}$$

where

ΔT = temperature difference across the boundary layer, surface temperature - ambient temperature.

Step #4 Heat transport by convection, Q_c

Heat transport by convection, Q_c

$$Q_c = U_1 \times A_1 \times (T_3 - T_1)$$

where

U_1 = overall heat transfer coefficient based on bare cavity wall surface area - Btu/h-ft.^{2}-°F
A_1 = the bare, unfinned cavity wall effective surface area - ft.^{2}
T_3 = temperature of the 1st ring of C-188 sources - °F
T_1 = cavity wall temperature = 379 °F
Q_c = amount of heat transferred by convection - Btu/h.

The overall heat transfer coefficient is evaluated as follows:

$$1/U_1 = 1/h_{c32} \times A_1/A_3 + 1/h_{c21}$$

where

h_{c32} = convective h.t.c. across boundary layer between 3 and 2.
h_{c21} = convective h.t.c. across boundary layer between 2 and 1.
A_1 = surface area of bare cavity wall
A_3 = equivalent area of outside surface area of 1st ring of sources

Find an equivalent annulus representing 40, C-188 capsules in a ring.

#1. Cross sectional area of 40 C-188 capsules
$AX40 = 40 \times \pi \times 0.380^2/4 = 4.537 \text{ in}^2$

#2. Cross sectional area of equivalent annulus.
$AXAN = \pi/4[(PCD + 2\Delta)^2 - (PCD - 2\Delta)^2]$
$= \pi/4[(10 + 2\Delta)^2 - (10 - 2\Delta)^2]$
$= 62.84\Delta$

#3. Set AX40 – AXAN and determine Δ
$4.537 = 62.84\,\Delta$
$\Delta = 0.072$ in.

#4. Equivalent source annulus.

OD $= PCD + 2\Delta = 10 + 2 \times 0.072 = 10.144$ in.

ID $= PCD - 2\Delta = 10 - 2 \times 0.072 = 9.856$ in.

#5. Verify AXAN = AX40

$AXAN = \pi/4 \times (10.144^2 - 9.856^2) = 4.524 \text{ in}^2$

Reasonable accuracy.

Initialization:

$T_s = 830°F$

$T_c = 379°F$

Mean temperature, $T_m = (T_s + T_c)/2 = (830 + 379)/2 = 604.5°F$

$h_{c32} = 0.19\,(830 - 604.5)^{0.333} = 1.154$

$h_{c21} = 0.19\,(604.5 - 379)^{0.333} = 1.154$

$A_1 = \pi \times 11.5 \times 19.75/144 = 4.95 \text{ ft.}^2$

$A_3 = \pi \times 10.144 \times 17.777/144 = 3.93 \text{ ft.}^2$

$1/U1 = 1/hc32 \times [A1/A3] + 1/hc21$

$= 1/1.154 \times [4.95/3.93] + 1/1.154$

$U_1 = 0.510$ Btu/h-ft.^{2}-°F

Therefore

$Q_c = U_1 \times A_1 \times (T_3 - T_1)$

$= 0.510 \times 4.95 \times (830 - 379)$

$= 1{,}138$ Btu/h

Step #5 Radiant heat exchange between "tubular" source and cavity wall

$Q_R = \sigma A_3[1/\{(1/\varepsilon_3 + A_3/A_1\,(1/\varepsilon_1 - 1)\}]\,[T_3^4 - T_1^4]$

where

ε_3 = emissivity of ss316L source surface = 0.6

ε_1 = emissivity of ss304 cavity surface = 0.42

T_3 = source Initialization temperature = T_s = 830°F = 1290°R

T_1 = cavity wall temperature = T_c = 379°F = 839°R

σ = Boltzmann's constant = 0.1713×10^{-8} Btu/h-ft.^{2}-°R

$Q_R = \sigma A_3\,[1/\{(1/\varepsilon_3 + A_3/A_1\,(1/\varepsilon_1 - 1)\}]\,[T_3^4 - T_1^4]$

$= 0.1713 \times 3.93\,[1/\{1/0.6 + 3.93/4.95(1/0.42 - 1)\}]\,[12.9^4 - 8.39^4]$

$= 0.1713 \times 3.93 \times 0.361 \times 22{,}737.$

$= 5{,}525$ Btu/h

Step #6 Heat transferred

$Q_T = Q_R + Q_c$

$= 5{,}525 + 1{,}138$

$= 6{,}663$ Btu/h

Step #7 Reconciliation

Since the heat transferred Q_T of 6,663 Btu/h is marginally just greater than Q_{load} of 6,653 Btu/h, the Initialization temperature of T_s = 830°F is correct. Therefore, the C-188 source temperature shall be at 830°F in normal conditions of transport of F-294 for 360 kCi case.

4. METHOD #2 - HEAT TRANSFER FROM ONE SINGLE SOURCE CAPSULE TO THE CAVITY WALL

Effective thermal radiating surface

Effective thermal radiating surface is readily determined for the case of one C-188 source in the F-294 cavity because all elements of capsule radiating surface (a_1) see only the surrounding cold cavity wall heat sink and no element of the source capsule surface can see an equally hot surface where mutual exchange of radiation would accomplish no net heat transfer. The familiar heat exchange equation is:

$$Q_R = \sigma A_3 \varepsilon_3 \alpha [T_3^4 - T_1^4]$$

where

T_3 = temperature of source surface
T_1 = temperature of sink surface
A_3 = surface area of one source capsule
σ = Boltzmann's constant
ε_3 = 0.6 ss316L, emissivity of source capsule surface
α = view factor estimated graphically as shown in Figure 3.6.3-F2.

In Figure 3.6.3-F2, angles of unobstructed view from the source capsule centre to the cavity wall are estimated.

Step #1 Heat load from one source capsule: 360 kCi for qty = 40, C-188 capsules

Therefore, we have 9.0 kCi per C-188 source capsule.

$$Q_{load,1} = 0.35 \times 9.0 \text{ kCi} \times 15.47 \text{ W/kCi} \times 3.413 \text{ Btu/h/W}$$
$$= 166.3 \text{ Btu/h}$$

Step #2 Source capsule surface area A

$$A_3 = \pi \times 0.380 \times 17.777/144 = 0.147 \text{ ft.}^2$$

Step #3 View factor: α = 0.6 from Figure 3.6.3-F2

Step #4 Initialization: T_s = 830°F (1,290°R), T_c = 379°F (839°R)

Step #5 Radiant heat exchange

$$Q_R = \sigma A_3 \varepsilon_3 \alpha [T_3^4 - T_1^4]$$
$$= 0.1713 \times 0.147 \times 0.6 \times 0.6 [12.90^4 - 8.39^4]$$
$$= 206. \text{ Btu/h}$$

Step # 6 Convective heat exchange

$$Q_c = UA_3 (T_3 - T_1)$$

where

Q_c = heat transfer by convection Btu/h
U = overall heat transfer coefficient between the source capsule surface and the cavity wall surface = 0.510 (same as calculated in section 3, step # 4)
T_3 = source surface temperature °F
T_1 = cavity wall temperature °F

$$Q_c = U \times A_3 \times (T_3 - T_1)$$
$$= 0.510 \times 0.147 \times (830 - 379)$$
$$= 33.8 \text{ Btu/h}$$

Step #7 Reconciliation

$$Q_T = Q_R + Q_c$$
$$= 206. + 33.8 \text{ Btu/h}$$
$$= 239.8 \text{ Btu/h}$$

Since the heat transferred Q_T of 239.8 Btu/h is greater than $Q_{load,1}$ of 166.3 Btu/h, the initialization temperature of T_1 = 830°F is high. Reiterate with a better value.

Step #8 2nd computational cycle

With

$$T_s = 750\ °F = T_3$$
$$Q_R = 149.4 \text{ Btu/h}$$
$$Q_c = 26. \text{ Btu/h}$$
$$Q_T = Q_R + Q_c$$
$$= 149.4 + 26$$
$$= 175.4 \text{ Btu/h}$$

Since the heat transferred Q_T of 175.4 Btu/h is marginally just greater than $Q_{load,1}$ of 166.3. Btu/h, the temperature of T_3 = 750°F converges.

5. CONCLUSIONS

5.1 For 360 kCi of cobalt-60 in F-294 cavity, equally distributed in quantity = 40, C-188s, in one ring of holes in an F-313 source holder:

1. C-188 source temperature of 830°F is calculated based on method #1.
2. C-188 source temperature of 750°F is calculated based on method #2.

In method #2, the estimation of view factor α is rather high. In reality, the path of C-188 to the cavity wall is obscured by the F-313 source holder support rods. Method #1 is considered more accurate of the two methods as it considers the emissivity of the cavity wall.

5.2 As per Chapter 3, Appendix 3.6.3, the measured temperature of C-188 source, based on 374,428 Ci of cobalt-60 in the cavity of F-294 purged with argon, is 824°F at an ambient of 100°F.

5.3 C-188 source temperature measurements (824°F) validates the analytical method #1 to estimate the C-188 source temperature (830°F). The analytical method #2 under-predicts the C-188 source temperature (750°F).

Figure 3.6.3-F1
Cavity Heat Transfer - Geometry, Data, Temperature Distribution

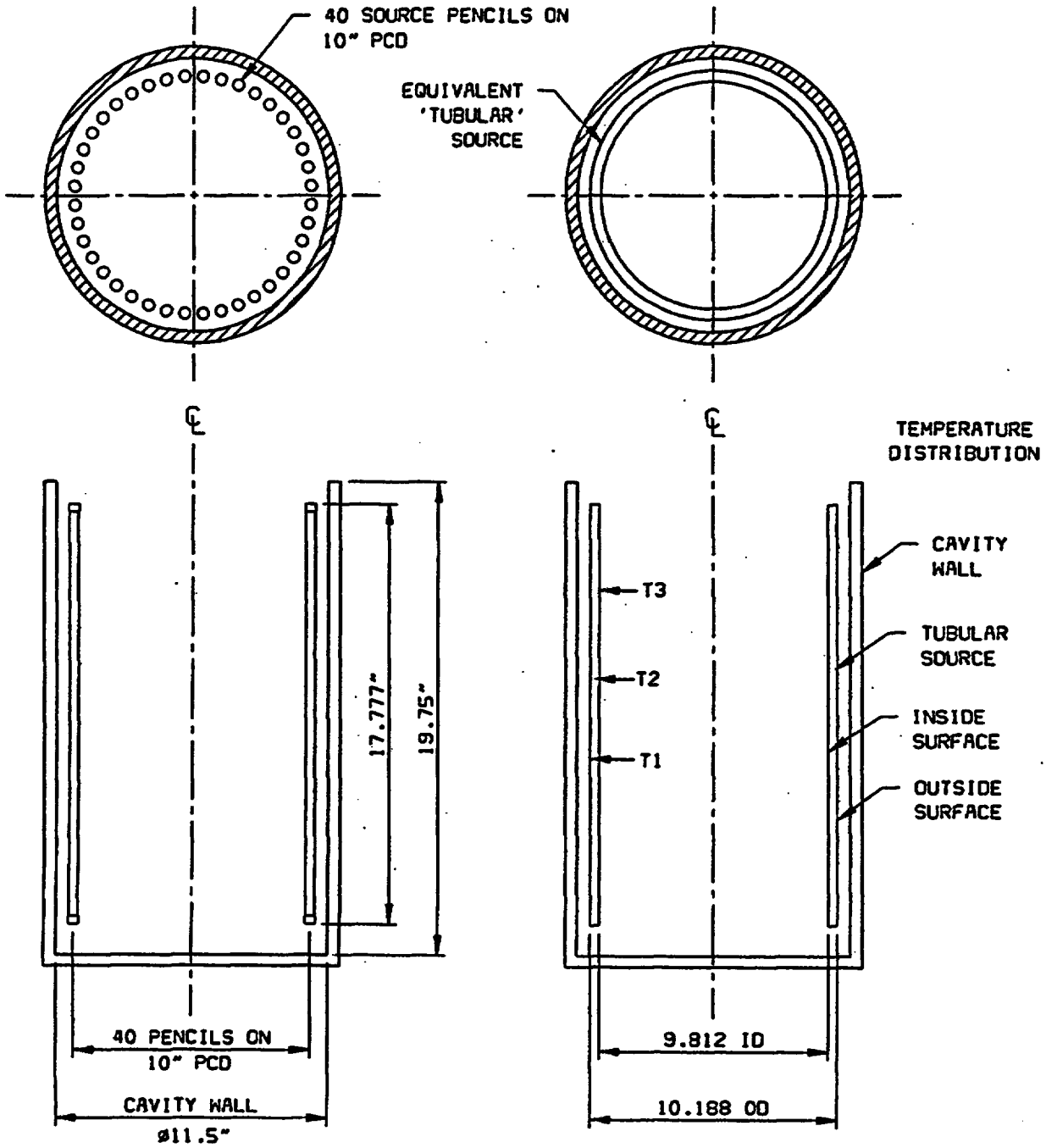

Figure 3.6.3-F2
Radiant Window for 40, C-188 Capsules in 11.5 in. Diameter Cavity

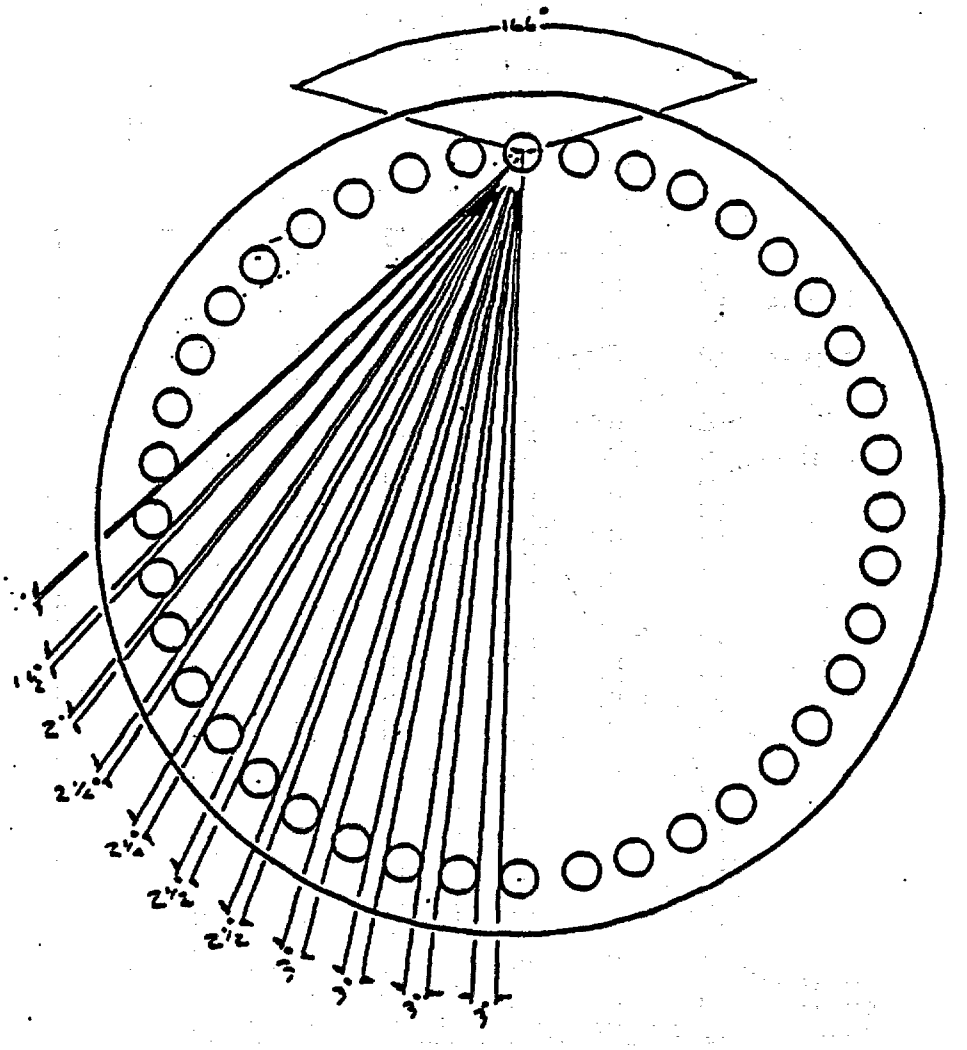

W = Radiant Heat Window = 166° + 52° = 218°
As % of 360° view factor $\alpha = \frac{218}{360} = 0.6$

Figure 3.6.3-F3
Thermal Model for One (1) or Two (2) Rings of C-188s in the F-294 Cavity

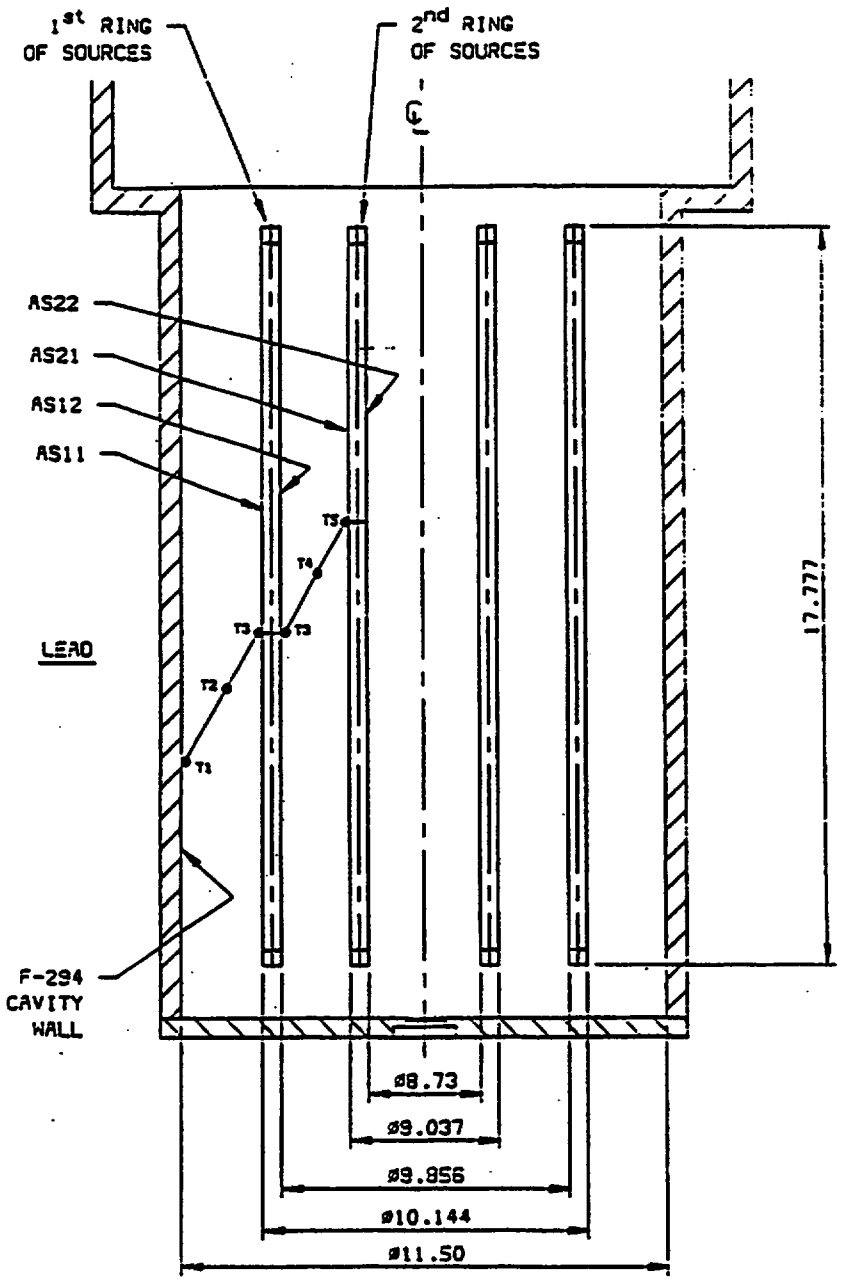

Figure 3.6.3-F4
Equivalent Annulus of 1st Ring of C-188s

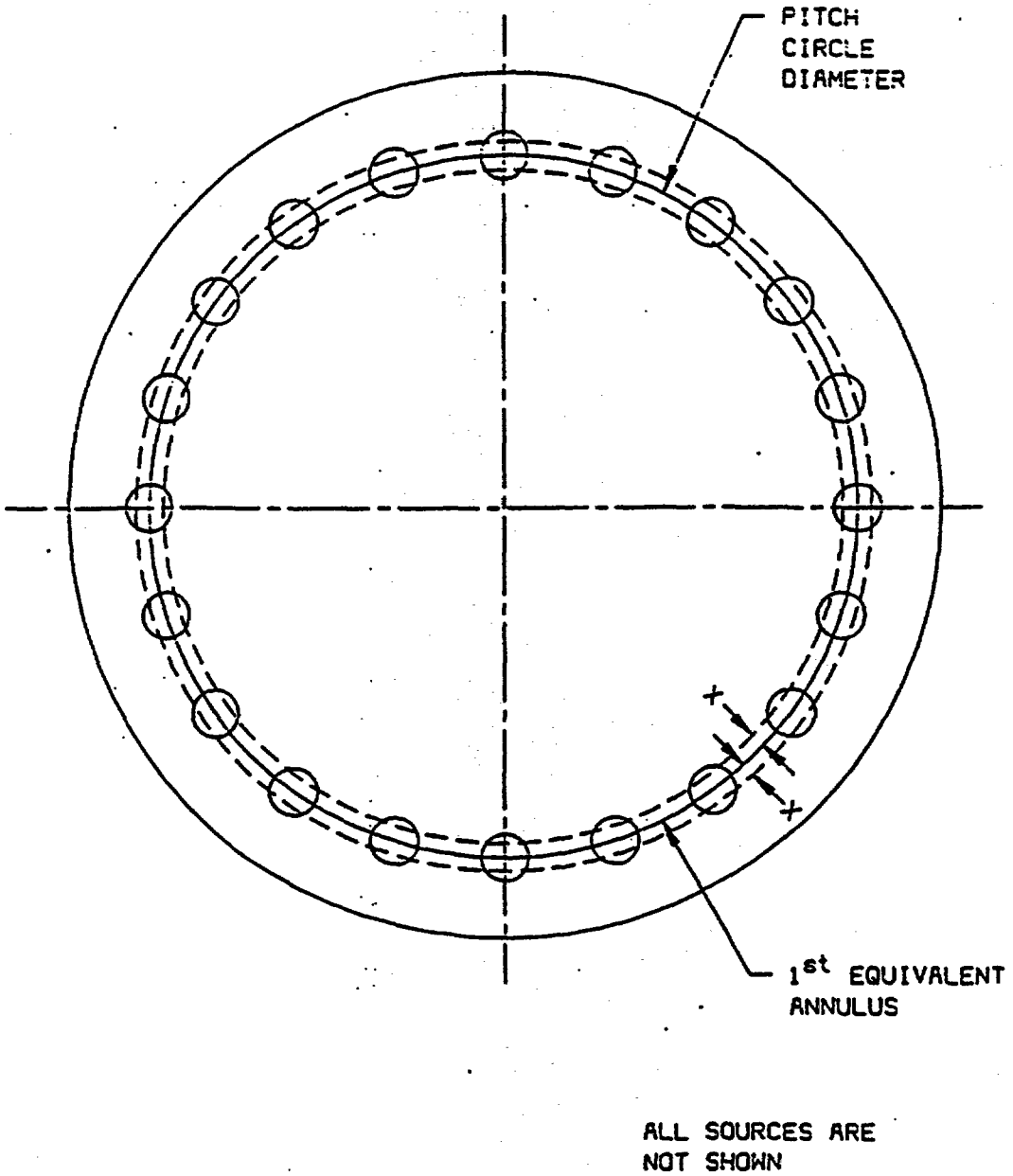

APPENDIX 3.6.4
FINITE ELEMENT ANALYSIS OF THE F-294 WITH THE F-313 SOURCE CARRIER

CONTENTS

1 INTRODUCTION 3

2 DESCRIPTION OF THE MODEL 3
- 2.1 GEOMETRY 3
- 2.2 THERMAL PARAMETERS 3

3 VALIDATION OF THE MODEL 9

4 STEADY STATE ANALYSIS AT 360 KCI OF CO-60 10
- 4.1 APPLICATION OF THE SOLAR HEAT LOAD 11

5 TRANSIENT RESPONSE TO THE FIRE TEST 12

6 DISCUSSION 13
- 6.1 INFLUENCE OF THE CONTACT RESISTANCE 13
- 6.2 EFFECT OF CONVECTIVE HEAT TRANSFER COEFFICIENT 13
- 6.3 EFFECT OF THE LATENT HEAT OF FUSION FOR LEAD 14
- 6.4 EFFECT OF DECREASED THERMAL PROTECTION RESULTING FROM A DROP TEST 14
- 6.5 EFFECTS OF INCREASED RADIATION TO THE ENVIRONMENT 14

7 SUMMARY 15

SUB-APPENDIX 3.6.4.1 COSMOS/M ELEMENT DESCRIPTIONS [15] 31

SUB-APPENDIX 3.6.4.2 RADIATION SHAPE FACTORS 43

SUB-APPENDIX 3.6.4.3 DERIVATION OF HEAT TRANSFER COEFFICIENTS 65

SUB-APPENDIX 3.6.4.4 COSMOS /M INPUT AND OUTPUT FILES 69

This page left blank intentionally.

1 INTRODUCTION

This appendix describes the thermal performance of the F-294 transport package with the F-313 source carrier before, during and after the regulatory fire test. Analysis is done using the COSMOS/M finite element package.[15]

The package has a maximum activity of 360 kCi of Co-60. In sections 2 and 3, the model is described and validated using the results of a test loading at 375.5 kCi. The fourth and fifth sections apply the model to the case of a 360 kCi load of Co-60.

Section 6 includes various parametric studies to establish the sensitivity of the results to the main assumptions of the model.

2 DESCRIPTION OF THE MODEL

The F-294 is shown in Figure 3.6.4-F1. Modeling assumptions fall into two categories; geometrical and thermal parameters. These assumptions are discussed below.

A brief description of the elements used in the analysis is found in Sub-appendix 1. SI units are used in the analysis. However, where applicable, conversion factors are provided.

2.1 GEOMETRY

The model is shown in Figure 3.6.4-F2. The following is assumed:

a) The model includes elements made up of stainless steel, mild steel, lead, kaowool, transite and air. The material distribution is shown in Figures 3.6.4-F3.

b) The package has axial symmetry. This effectively reduces this to a two-dimensional problem. (PLANE2D elements are used.) This assumption requires the fin elements to be treated differently from the remaining elements. (See material property set 6, Figure 3.6.4-F3.)

The fins account for 12% of the radial area. There is three-dimensional heat transfer between them and the main body of the shield, the external fireshields and the environment. The various heat transfer paths are shown in Figure 3.6.4-F4.

In order to properly account for conduction heat input, the density and thermal conductivity of the fin material are decreased to 12% of values for stainless steel. This ensures that the two dimensional transient heat flow equation is satisfied. In order to account for convection and radiation effects, heat transfer from the fin surfaces is explicitly modeled using convection and radiation links. (See CLINK and RLINK elements in Sub-appendix 1.)

c) The top plug sits on a neoprene gasket retained in the main body. The air gap between the top plug and the main body is assumed to be 0.0016 m (0.0625 in).

c) The base of the F-294 is dished. This geometry is simulated using straight lines as shown in Figure 3.6.4-F5.

2.2 THERMAL PARAMETERS

The following assumptions relate to the thermal characteristics of the unit.

a) The decay of Co-60 generates 2504 keV of photon energy and 96 keV of continuous radiation.[16] Thus, each kCi of Co-60 generates 15.4 W of heat, as demonstrated below:

$$\frac{1000\,Ci}{1kCi} * 3.7E10\frac{dis/s}{Ci} * 2600\frac{keV}{dis} * 1.602E-16\frac{J}{keV} * 1\frac{W}{J/s} = 15.4\frac{W}{kCi}$$

b) The self attenuation of the capsule results in lower radiation fields in the axial dimension and higher radial fields. This effect is demonstrated in Figure 3.6.4-F6. As most of this radiation is converted to heat energy it is important to account for the difference in heat generation rate between the top plug and the main body. In the analysis, it is conservatively assumed that 80% of the heat is generated radially and that the remaining 20% of the heat is distributed evenly between the top plug and the bottom of the main body. The conservative nature of this assumption is demonstrated by the relatively high top plug top surface temperature calculated in section 3.0 relative to the measured top plug surface temperature.

It is further assumed that this heat is generated in the first steel and lead elements in the path of the emitted radiation. For the top plug only, it is necessary to model the heat generated in the steel elements separately from the lead elements. (See assumption h.) The resultant heat generation rates are given in Table 3.6.4-T1. The heated elements are shown in Figure 3.6.4-F7.

Table 3.6.4-T1
Element Heat Generation Rates

Affected Elements	Location	Heat Generation Rate ($W/kCi/m^3$)
1, 2, 3	TOP PLUG (steel)	262.7
10,11,12,13	TOP PLUG (lead)	170.1
53, 54, 59, 60	BOTTOM	226.8
37, 55, 56, 57, 58, 61, 62, 63, 64	SIDE	387.4

c) For the normal conditions of transport, the air between the fireshield and main body is heated as it rises. Experiments have shown the temperature increase to be 21°C between the entrance and the exit (see section 3). In the steady state analysis, three discrete air temperatures are used:

- For convective heat transfer at the bottom of the main body, the air temperature is assumed to be 38°C. The affected areas are the lower fireshield, and the lower horizontal and dished surface of the main body. Node 400 is arbitrarily located in space as shown in Figure 3.6.4-F8 and is assigned a constant temperature of either 38°C or 800 °C. The latter temperature is only used during the fire test.
- For convective heat transfer from the radial fireshield and from the vertical and upper conical section of the main body, the air temperature is assumed to increase to 48°C. Node 401 is arbitrarily located in space as shown in Figure 3.6.4-F8 and is assigned a constant temperature of either 48°C or 800°C. The latter temperature is only used during the fire test.
- For convection from the top plug, the air temperature is assumed to increase to 55°C. Node 402 is arbitrarily located in space as shown in Figure 3.6.4-F8 and is assigned a constant temperature of either 55°C or 800°C.

For the validation run, these node temperatures are set to 23°C, 33°C and 40°C respectively.

d) Heat transfer between the top plug and the main body is assumed to be by conduction through air, and by radiation. Conduction is modeled using the one dimensional TRUS2D elements (see Sub-appendix 1). The elements are assigned cross sectional areas using the algorithm of Figure 3.6.4-F9. Radiation effects are modeled using radiation links between the same nodes. Shape factors are set to one.

e) Radiation effects in the regions enclosed by the fireshield are modeled using radiation links (see RLINK elements in Sub-appendix 1). These elements are shown in Figure 3.6.4-F11 and are connected to node 400.

Use of RLINKS requires shape factors, radiating surface areas and emissivities to be assigned. Shape factors are calculated as described in Sub-appendix 2. Surface areas for specific nodes are assigned as described in Figure 3.6.4-F9. All internal surfaces are assigned an emissivity of 0.8.

f) Heat transfer from the surface of the shielding vessel is via convection and radiation. Fin effects are considered by explicitly modeling the convection and radiation paths from the surface of the shield and from the fins. Convection effects from these surfaces are modeled using convection links (see CLINK elements in Sub-appendix 1). Surface nodes are connected to either node 400, 401 or 402, depending on their location (see assumption c).

For these surfaces, the convection heat transfer coefficient is set to 6.5 $W/m^{2o}C$. This value is chosen to match measured surface temperatures (see section 3). The analysis of Sub-appendix 3 shows this value to be reasonable.

g) Radiation and convection boundary conditions are assigned to the outside surfaces of the fireshield. The heat transfer coefficients are taken to be 1.6 $W/m^{2o}C$, 1.0 $W/m^{2o}C$ and 4.0 $W/m^{2o}C$ for the outer radial surface, the bottom surface of the fireshield and the upper surface of the top fireshield respectively. (See Sub-appendix 3.) For the radiation boundary conditions, the emissivities and shape factors are conservatively set to 1.

h) For steady state analyses, a contact resistance equivalent to 0.5 mm (0.020 in) of air is inserted between the lead and the external stainless steel shell. This value is based on reference [12] and matches experimental results. Positioning this contact resistance at the outside surface maximizes internal steady state temperatures as all of the heat is generated within the additional thermal resistance.

A contact resistance equivalent to 1 mm (0.040 in) of air is introduced between the base of the top plug and the lead. This value is chosen to match the experimental results and represents the relatively poor bond between the lead and the stainless steel encountered during manufacturing. The lead shielding is poured from the base of the top plug and hence bonding cannot be assured.

Section 3 shows that these contact resistances yield internal and external temperatures that most accurately reflect the experimental results.

For transient analyses, this contact resistance is removed and a perfect thermal bond is assumed. This is an extremely conservative assumption.

Including the contact resistance in the model results in a realistic assessment of package temperatures under steady state conditions. In spite of the fact that this contact resistance does not disappear at the start of the regulatory fire, it is removed. The resultant additional heat input during the fire test results in lead temperatures that are higher than what would be expected during a real fire.

i) Variations in heat capacity are allowed for the lead elements only. Values of the specific heat for the materials other than lead are listed in Table 3.6.4-T2. The variation in the thermal capacity of lead is shown in Table 3.6.4-T3.

The latent heat of fusion for lead is modeled by spreading it over an arbitrary 5°C temperature range above the melting point (327°C). This is shown schematically in Figure 3.6.4-F10. The shaded area under the curve represents the latent heat of fusion (24,750 J/kg).[17]

It should be noted here that lead melt was not a factor in these analyses. All cases showed a substantial margin of safety regarding the onset of melting.

j) Variations in thermal conductivity with temperature were allowed for the stainless steel, lead and kaowool components (see Table 3.6.4-T4). For lead, thermal conductivities are taken from

reference [17] and for stainless steel, the thermal conductivity is found from the relations described in Table 3.6.4-T4.

Table 3.6.4-T2
Specific Heat of Materials used in the F-294

Material	Specific Heat (J/kg°C)	Specific Heat (Btu/lb.$_m$ °F)	Reference
Stainless Steel	460	0.11	[10]
Air	1060	0.25	[10]
Transite	837	0.20	[1]
Kaowool	1060	0.25	Assumed equal to air
Mild Steel	465	0.11	[10]

Table 3.6.4-T3
Variation of Thermal Capacity of Lead

Temperature (°C)	Specific Heat (J/kg°C)	Specific Heat (Btu/lb.$_m$ °F)
≤ -23	127	0.031
27	129	0.031
127	132	0.032
227	136	0.033
327	142	0.034
328	6188	1.478
331	6188	1.478
≥ 332	159	0.038

NOTE: For temperatures up to 327 °C, values come from reference [17]. Values between 327 and 332°C include the latent heat of fusion. For temperatures above 332°C, a constant specific heat is assumed based on a tabulated value at 371°C in reference [1].

Table 3.6.4-T4
Variation of Thermal Conductivity with Temperature

Temperature (°C) [°F]	Stainless Steel (W/m°C)	Lead (W/m°C)	Kaowool (W/m°C)
≤ 27		35	
≤ 38	14.0		0.029 (extrapolated)
100	15.1		0.032 (extrapolated)
123		34	
149 [300]	17.0		.036 (extrapolated)
204 [400]	18.0		0.048
227		33	
260 [500]	18.9		0.053
316 [600]	19.6		0.062
327		31	
371 [700]	20.4		0.074
427 [800]	21.1		0.088
527		19	
538 [1000]	22.8		0.118
727		22	
816 [1500]	26.5		0.210
927 [1700]	26.5 (assumed)	24	0.248

NOTES:
1) Thermal conductivities of type 304 stainless steel are taken from reference [6].
2) Thermal conductivities of lead are taken from reference [17].
3) Thermal conductivities of kaowool are taken from reference [5].
4) 1 W/m°C = 0.5778 Btu/h/ft./°F.

k) Air elements are assumed to have a constant thermal conductivity of 0.0224 W/m°C.[10]. Transite elements were assigned a constant thermal conductivity of 0.389 W/m°C.[1]. Mild steel elements were assigned a thermal conductivity of 64.1 W/m°C.[10]. Fin elements were assigned a constant thermal conductivity of 2.4 W/m°C.

l) The densities of the materials used in the F-294 are summarized in Table 3.6.4-T5.

m) The stainless steel crack shield is welded to the top plug along its inner and outer circumference. Heat transfer between this shield and the top plug is simulated by inserting a 0.5 mm (.020 in.) air gap between the plug body and the shielding ring. TRUS2D elements are used to connect the applicable nodes on both surfaces. The conduction area for these elements is taken to be the product of the weld size (3/8 in) and circumference. Thermal radiation across this gap was modeled using radiation links with a shape factor of 1. (See RLINK elements in Sub-appendix 1.)

Table 3.6.4-T5
Densities of Materials used in the F-294

Material	Density (kg/m^3)	Density (lb.$_m$/ft.^{3})	Reference
Stainless Steel	7800	487	[10]
Lead	11373	710	[10]
Air	1.2	0.07	[10]
Transite	1600	100	[18]
Kaowool	96	6	[5]
Mild Steel	7800	487	[10]

3 VALIDATION OF THE MODEL

Figure 3.6.4-F11 shows steady state temperature measurements taken on an F-294 prototype. The unit was loaded with 375.5 kCi of Co-60 and its temperatures were measured. Table 3.6.4-T6 lists the results.

Table 3.6.4-T6
Steady State Temperature Measurements

Thermocouple Location [COSMOS/M Node Number]	Test (°C)	COSMOS/M (°C)	
		no contact resistance	including contact resistance
Ambient	23	23	23
Air temperature at entrance to fireshield	23	-	-
Air temperature at exit from fireshield	44	-	-
Average of two diametrically opposed thermocouples at midheight of cavity [Node 146]	174	137	172
Bottom surface of top plug at centreline [Node 17]	200	167	208
Bottom of cavity [Node 136]	-	126	162
Top of fin [Node 709]	53	54	55
Top corner of shield, below insulation [Node 118]	106	107	120
Top corner of shield, above insulation [Node 717]	71	77	78
Bottom corner of shield, below insulation [Node 215 and N185, interpolated]	92	92	101
Top of upper fireshield at centreline [Node 85]	40	36	36
Midheight of radial fireshield [Node 251]	25	29	29
Top surface of top plug at centreline [Node 40]	107	134	138
Midheight of external surface of the shielding vessel [Node 185]	107	106	105

The COSMOS/M model was applied to this case using the model described in section 2. The results are shown in Table 3.6.4-T6, for a range of contact resistance values. The reasonable agreement between the predicted and measured temperatures shows that the use of the contact resistance most accurately models the temperature distribution in the shielding vessel. It also shows that the use of a heat transfer coefficient of 6.5 $W/m^{2o}C$ yields realistic results for shield surface, fin surface and fireshield surface temperatures.

The basic input and output files for this case are found in Sub-appendix 4.

4 STEADY STATE ANALYSIS AT 360 KCI OF CO-60

The input file for this case can be found in Sub-appendix 4. The following results are taken from the output file found in Sub-appendix 4. The locations of the tabulated nodes are found in Figure 3.6.4-F12. This case assumes a contact resistance.

Table 3.6.4-T7
Shielding Vessel External Temperatures (Steady State, 360 kCi, With Contact Resistance)

Node	Temp. (°C)	Node	Temp. (°C)	Node	Temp. (°C)
40	149	714	94	731	70
49	144	717	91	732	83
50	143	114	112	210	91
54	142	185	117	208	109

Table 3.6.4-T8
Top Plug Internal Temperatures (Steady State, 360 kCi,With Contact Resistance)

Node	Temp. (°C)
17	215
1	215
4	197
16	160
513	172
13	153

Table 3.6.4-T9
Main Body Internal Temperatures (Steady State, 360 kCi, With Contact Resistance)

Node	Temp. (°C)	Node	Temp. (°C)	Node	Temp. (°C)
98	141	692*	139	673*	152
93	174	192	92	173	118
146	181	600*	138	613*	147
138	169	200	96	113	113
136	172	667*	137	605*	145
690*	142	167	129	105	123
190	109				

* denotes a lead node which includes the effect of contact resistance. See Figure 3.6.4-F14 for node locations.

Table 3.6.4-T10
Fireshield Internal and External Temperatures
(Steady State, 360 kCi,With Contact Resistance)

Internal		External	
Node	Temp (°C)	Node	Temp (°C)
55	54	85	51
58	53	88	51
301	52	295	52
306	49	315	49
230	50	255	46
226	48	251	44
364	46	373	45
345	57	335	57
350	60	359	58
319	64	328	59

4.1 APPLICATION OF THE SOLAR HEAT LOAD

Figure 3.6.4-F13 shows the elements that were subjected to the solar heat flux. The input and output files for this case are INSOL8.INP and SS360SUN.TEM and can be found in Sub-appendix 4.

The elemental heat flux was based on the assumption that all of the solar heat load is concentrated on the radial and upper fireshields. The heat flux on the top surface was increased from 800 W/m^2 to 2000 W/m^2 as the solar flux is applied over a radius of 0.381 m (15 in) instead of .602 m (23 11/16 in) (see Figure 3.6.4-F1). Similarly, the regulatory heat flux for the radial fireshield was increased from 400 W/m^2 to 500 W/m^2 to account for the fact the solar flux is applied over a height of 1.23 m (48.5 in) (see Figure 3.6.4-F1).

The absorbtivity of the surface was conservatively set to 1.

The results show no appreciable change in the temperature of the inner shielding vessel. Temperatures are all within 1 or 2 °C of the values listed in Tables 3.6.4-T7 through 3.6.4-T9. Thus, there is no effect on the shielding or containment systems.

These results can be explained by the fact the fireshields are thermally isolated from the main body of the F-294. Furthermore, they are insulated, and do not pass heat through to internal surfaces. Therefore, most of the incident heat is absorbed by the outer steel layer and convected and radiated back to the environment.

This method of analysis considerably overestimates the external surface temperatures. A more realistic means of establishing maximum surface temperatures comes from applying the regulatory heat flux of 800 W/m^2 to the upper surface and 400 W/m^2 to the side. Under these conditions, surface temperatures on the upper fireshield are found to range between 105 and 115 °C. Surface temperatures on the radial fireshield are found to range between 87 °C and 115 °C.

5 TRANSIENT RESPONSE TO THE FIRE TEST

The input file used for the analysis is called FIRE12.INP and can be found in Sub-appendix 4. This file applies a 30 minute 800°C fire followed by a 100 minute cooldown period. In most cases 100 minutes of cooling was sufficient to allow all lead temperatures to reach their maximum values. However, subsequent parametric analyses required 120 minutes of cooling before internal temperatures began to decrease.

The convection heat transfer coefficient between the outside of the fireshield and the shielding vessel is set to 12 $W/m^{2o}C$ and is justified in Sub-appendix 3. The external surfaces of the inner shielding vessel are also assumed to have the same heat transfer coefficient. This assumption is extremely conservative as the fireshield and fins provide a barrier to the free flow of gases over the shielding vessel. However, since it is difficult to quantify this effect, it is assumed that they do not impede the flow of gas.

The initial temperatures are the temperatures of section 4 (360 kCi, With Contact Resistance). The contact resistance was set to zero at the start of the fire, thus resulting in maximum heat input during the fire.

The temperature histories for the selected lead nodes are plotted in Figures 3.6.4-F14 through 3.6.4-F16. The maximum lead temperature was found to be 303 °C at node 192, at the end of the fire test. This is substantially less than 327°C, the melting point of lead.

Table 3.6.4-T11
Maximum Lead Temperatures During/After the Fire

Node	Approximate Location of Lead Node	Maximum Temp (°C)	Time* (min)
501	Top Plug	258	109
4	Top Plug	259	108
16	Top Plug	237	45
13	Top Plug	231	82
91	Cavity Wall	254	65
141	Cavity Wall	260	65
135	Cavity Wall	257	60
133	Cavity Wall	260	63
190	Base of Main Body	272	30
192	Base of Main Body	303	30
200	Base of Main Body	298	30
165	Base of Main Body	276	30
173	Side of Main Body	285	30
113	Side of Main Body	280	30
115	Side of Main Body	258	31
105	Top of Main Body	243	37
98	Top of Main Body	238	50

* Time equals zero at the start of the fire test.

6 DISCUSSION

This section examines the effects of selected modeling assumptions on the thermal performance of the F-294. The results are compared to the basic case of section 5. Additionally, the relative margin of safety as a result of these conservative modeling assumptions is estimated.

6.1 INFLUENCE OF THE CONTACT RESISTANCE

Ignoring the effect of the contact resistance between the lead and the stainless steel is extremely conservative. The results of Table 3.6.4-T6 show that, in practice, a contact resistance exists between the lead and steel interfaces. Ignoring this effect considerably underpredicts steady state temperatures within the F-294 shield, typically by 30 °C at the inner cavity.

The analysis of section 5 assumes that the contact resistance disappears at the start of the fire. Therefore, it is of interest to determine what the effect of the contact resistance could be if it was assumed to be constant throughout the hypothetical fire and the subsequent cooldown period.

The results of this study show typical maximum lead temperatures of 245 °C [Node 141] in the main body and 257 °C [Node 501] in the top plug. This can be compared with the maximum lead temperature of 303 °C [Node 182] and 258 °C respectively.

The main effect of introducing the contact resistance is to lower maximum lead temperatures near the outside boundary of the shielding vessel. It also delays the onset of the maximum temperature. In the main body, the maximum lead temperature is reached 102 minutes after the start of the fire and is due to the effect of decay heat once temperature gradients in the main body have stabilized. In the top plug the effect is similar. However, the relatively low mass of the plug compared to the main body makes this effect less significant.

Based on these results, the incremental margin of safety due to the contact resistance is estimated to be 50 °C.

6.2 EFFECT OF CONVECTIVE HEAT TRANSFER COEFFICIENT

As discussed earlier, the value of the heat transfer coefficient for the shielding vessel was set to 12 $W/m^{2o}C$. This value is based on the free flow of gases over the external surface of the fireshield. No account was taken for the fireshield as a barrier to the flow of hot gases. In practice, the heat transfer coefficient to the shielding vessel is lower.

Under steady state conditions, the heat transfer coefficient was 6.5 $W/m^{2o}C$. It is of interest to determine what the effect of a more realistic heat transfer coefficient would be. Therefore, the analysis was repeated using a heat transfer coefficient of 12 $W/m^{2o}C$ for external surfaces and 9.5 $W/m^{2o}C$ for the shielding vessel. (This value is simply the mean of the steady state and fire heat transfer coefficients.)

The maximum external lead temperature was found to be 276°C at node 192 and the maximum internal lead temperature was found to be about 251°C at node 141. This can be compared with the values of 303 and 260 °C previously calculated. The effects on the top plug were less pronounced, with maximum temperatures of about 253 °C, compared to 258 °C. In all cases, there remained a large margin relative to the 327°C melting point of lead.

Based on these results, the incremental margin of safety is estimated to be 30 °C in the main body and 10 °C in the top plug.

6.3 EFFECT OF THE LATENT HEAT OF FUSION FOR LEAD

The highest temperature in the main body was found to be 303 °C at node 192. The initial temperature at this node was 92 °C. Thus, there was a 211 °C increase in lead temperature at this location.

Let us assume that there is a single hot spot on the package and that a maximum of 3.5 cm (1.4 in) of lead. (See chapter 5.) It is of interest to determine how much heat would be required to cause a hemispherical mass of lead to melt.

The total mass of lead present in the 3.5 cm radius hemisphere is:

$$m = \rho V = 11.3\ g/cm^3 * (4/6\ \pi * 3.5^3) = 1014\ g = 1\ kg$$

The energy required to increase the temperature of this mass of lead by the calculated 211 °C is:

$$Q = mC_p\Delta T = 1\ kg * 132\ J/kg°C * 211\ °C = 27{,}850\ J$$

Similarly the heat required to bring this mass of lead from 303 °C to 327 °C, the melting point of lead, is:

$$Q = 1\ kg * 132\ J/kg°C * 24\ °C = 3{,}200\ J$$

Finally, the heat required to cause this mass to melt is:

$$Q = 1\ kg * 24{,}750\ J/kg°C = 24{,}750\ J$$

Thus, the total heat energy required to cause the melting of a 1 kg mass of lead located at the hottest node is 55,800 J. The total energy absorbed by this mass during the fire test is 27,850 J. Therefore, about 50% of the total heat energy required to cause this mass of lead to melt was input during the fire. Therefore, the high latent heat of fusion of lead provides a significant additional margin of safety.

6.4 EFFECT OF DECREASED THERMAL PROTECTION RESULTING FROM A DROP TEST

The effect of impaired thermal protection was simulated by doubling the thermal conductivity of the kaowool insulation. In essence, its density was assumed to decrease to less than 3 lb./ft.^{3} The initial temperatures calculated in the base case were used as inputs to the fire test. This is justified by the assumption that accidental damage to the kaowool occurs after steady state temperatures have been reached, and that the fire starts immediately after the incident.

Comparison of the results shows little difference. This indicates that the heat transferred through the fireshield and to the main body is small in comparison with the effects of radiation and convection to the environment.

6.5 EFFECTS OF INCREASED RADIATION TO THE ENVIRONMENT

In order to simulate the effects of increased radiation to the environment, all nodes connected to the environment had their emissivities increased from 0.8 to 1.0. This simulates a 25% increase in radiation heat transfer from the environment to the shielding vessel during the fire.

The results show an increase in lead temperatures for the nodes closest to the environment. However, the effect is typically 1 or 2 °C. This result is expected as most of the heat transferred to the shield is due to convection. Direct radiation is absorbed by the intervening fins and the external fireshield.

7 SUMMARY

Steady state finite element analysis of the F-294 has shown good agreement between measured and calculated temperatures. Extrapolation of this model to the maximum activity has shown no significant effect on the shielding and containment systems.

Transient analysis using the same model has shown the F-294 to complete the regulatory fire test without the initiation of lead melt. Parametric studies have shown this to be true under a variety of modeling conditions. In all cases, peak lead temperatures were found to be significantly less than the melting point, particularly in light of the conservative assumptions used in the model. A maximum temperature of 303°C was observed. The maximum increase in lead temperature was found to be about 200°C during the fire transient.

The conservative assumptions used in this model have a significant effect on this result. It is estimated that the effect of the contact resistance provides an additional 50°C margin of safety and that between 10-30°C could be gained by specifying a more realistic heat transfer coefficient in the interspace between the fireshield and the shielding vessel.

These findings, combined with the significant amount of energy required to effect a phase change in lead, indicates a substantial margin of safety in the design. It is submitted that the F-294 meets the thermal requirements of the regulations under the normal and hypothetical accident conditions of transport.

Figure 3.6.4-F1
The F-294 Transport Packaging Engineering Information Drawing
F629401-001 (Sheets 1 to 5)

FIGURE WITHHELD UNDER 10 CFR 2.390

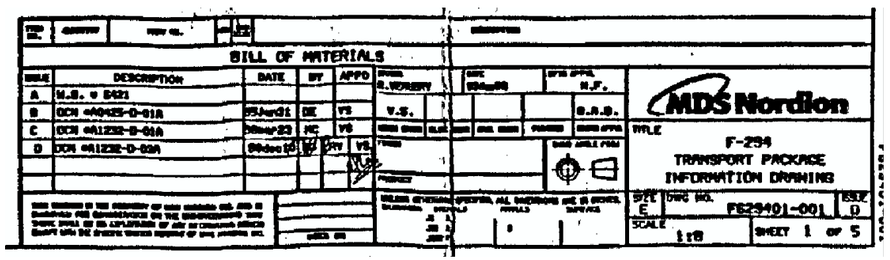

FIGURE WITHHELD UNDER 10 CFR 2.390

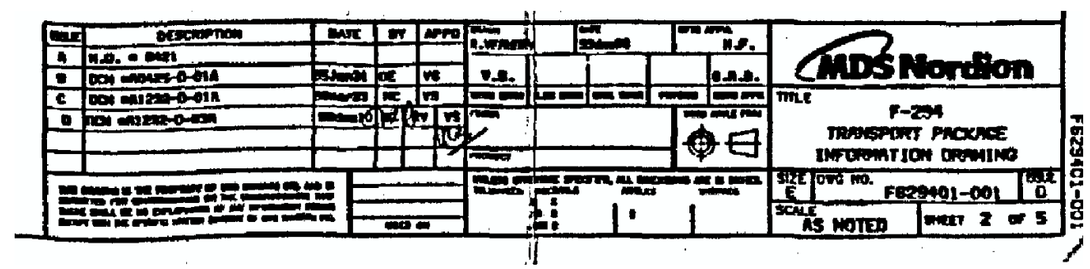

FIGURE WITHHELD UNDER 10 CFR 2.390

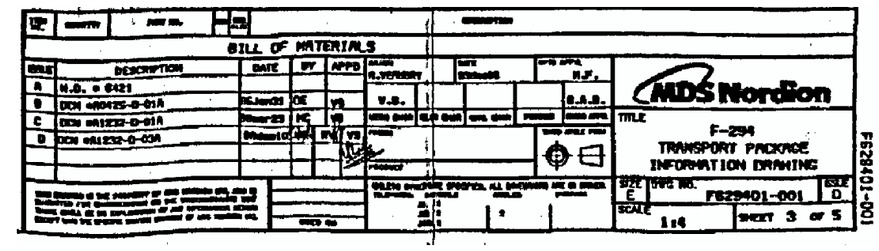

FIGURE WITHHELD UNDER 10 CFR 2.390

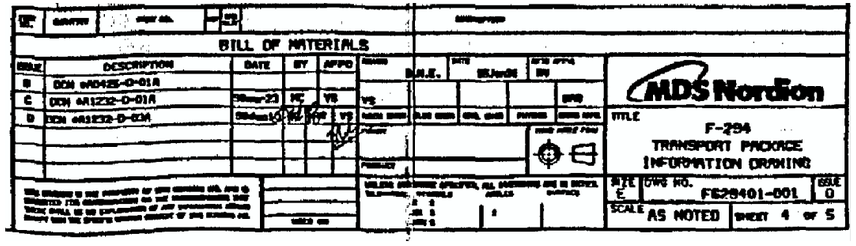

FIGURE WITHHELD UNDER 10 CFR 2.390

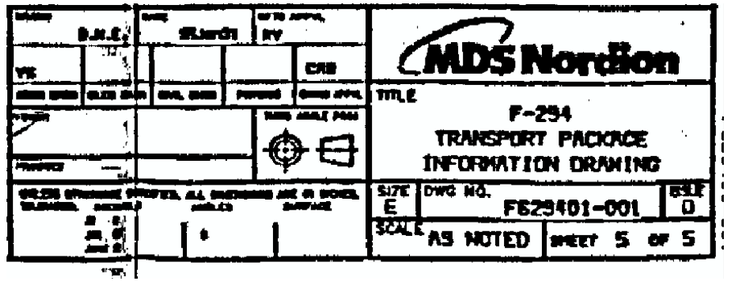

Figure 3.6.4-F2
COSMOS/M Model Geometry

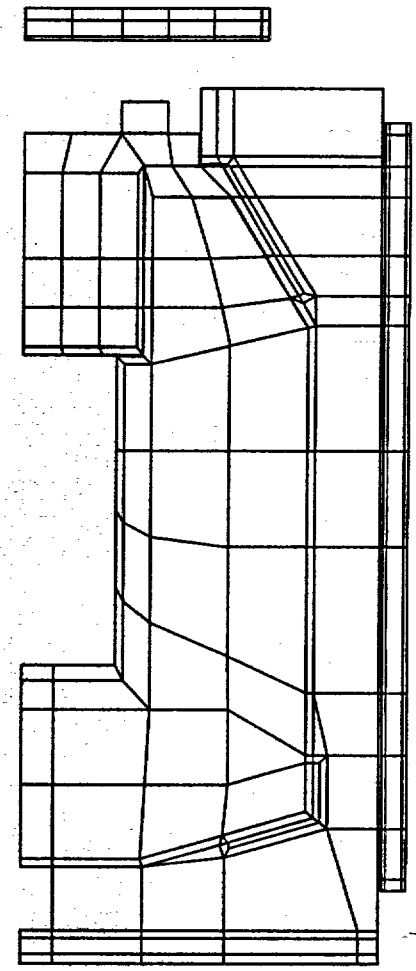

Figure 3.6.4-F3
Material Distribution

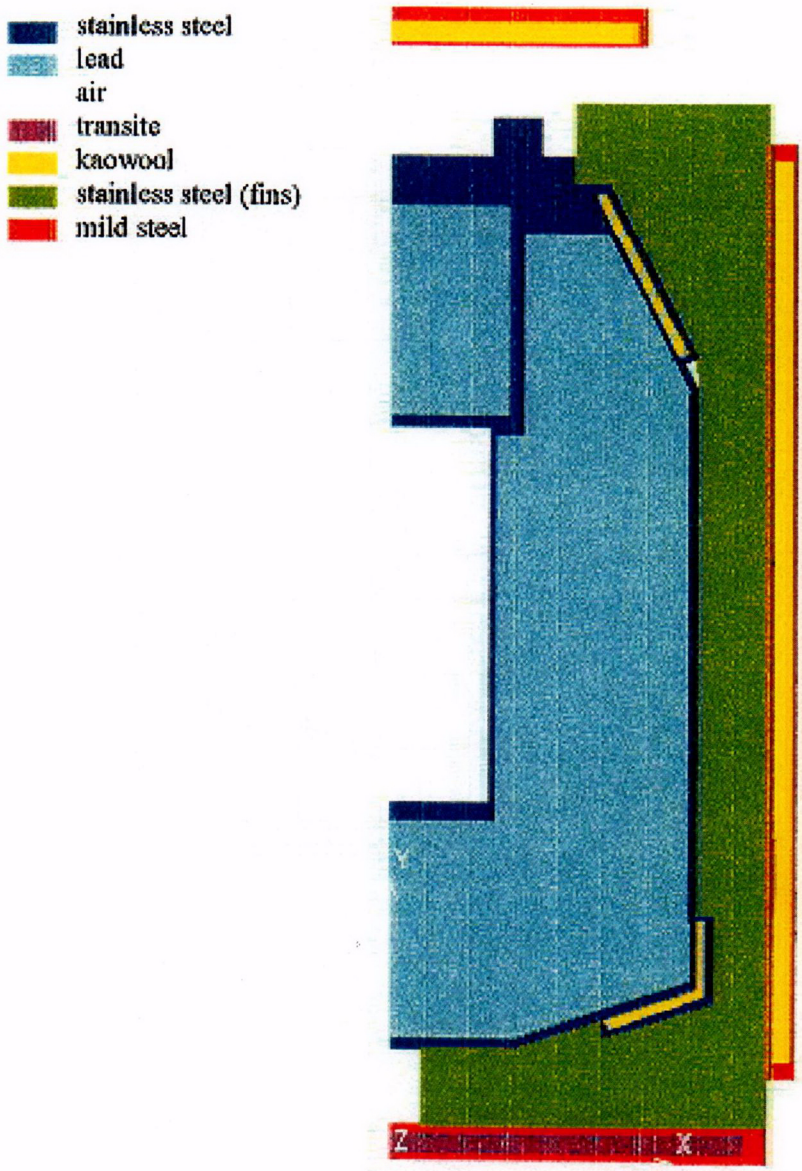

C02

Figure 3.6.4-F4
Heat Transfer Paths to the Main Body

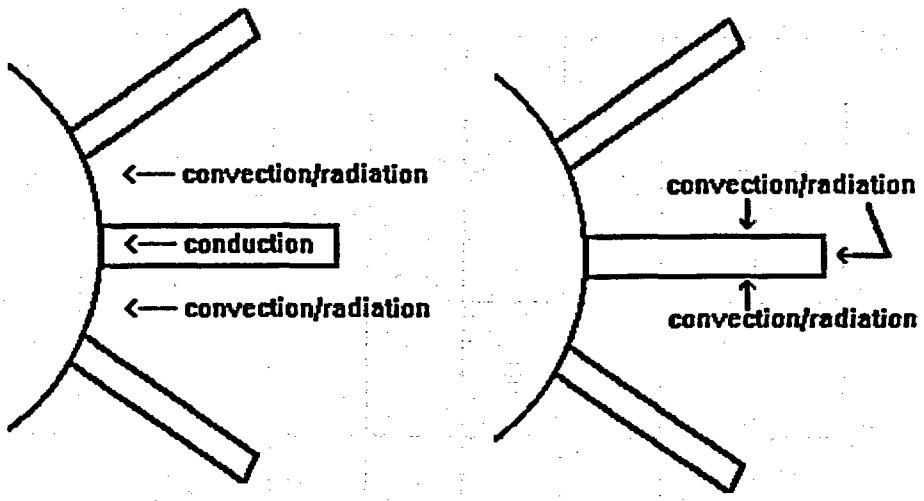

AVAILABLE AREA FOR CONDUCTION INTO THE SHIELDING VESSEL IS 12% OF THE CYLINDRICAL AREA. THE REMAINING 88% OF THE SURFACE AREA HAS HEAT INPUT VIA CONDUCTION/RADIATION

ENVIRONMENT TEMPERATURE IS 800 °C DURING THE FIRE

Figure 3.6.4-F5
Modelling the Base of the F-294

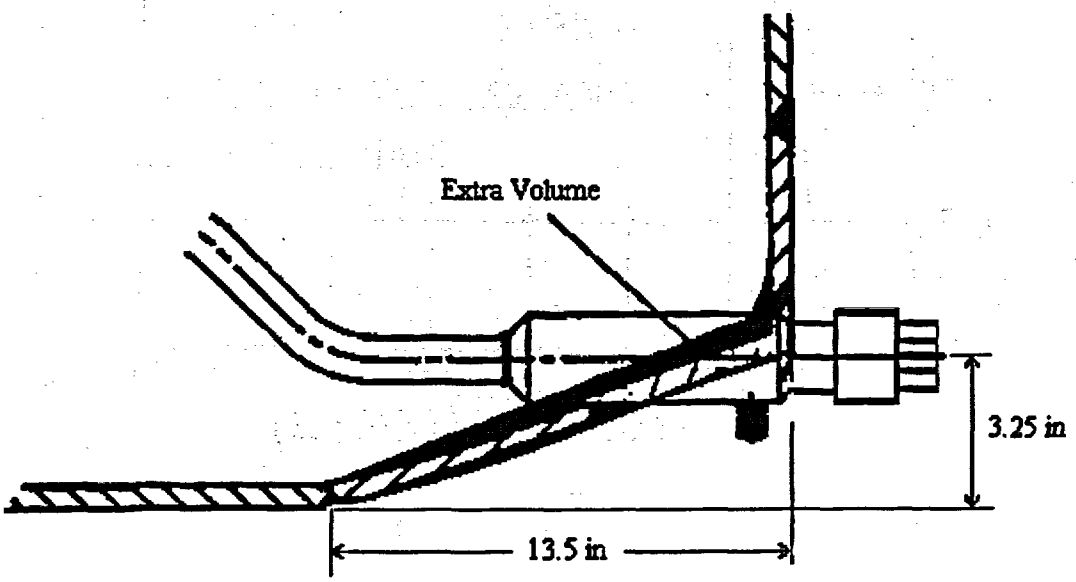

Figure 3.6.4-F6
Field Distribution Around a Sealed Source

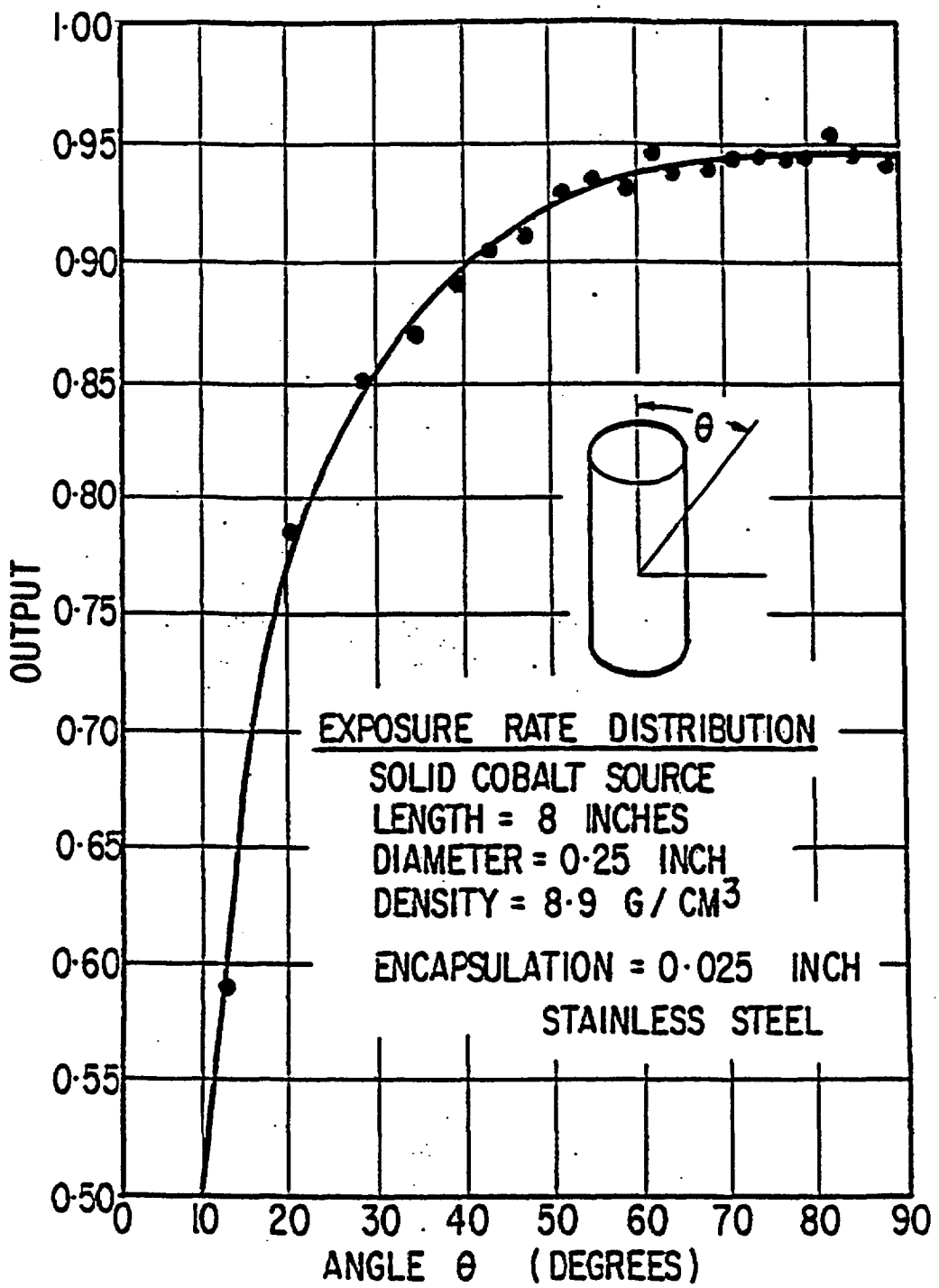

Figure 3.6.4-F7
Boundary Conditions and Heat Generation

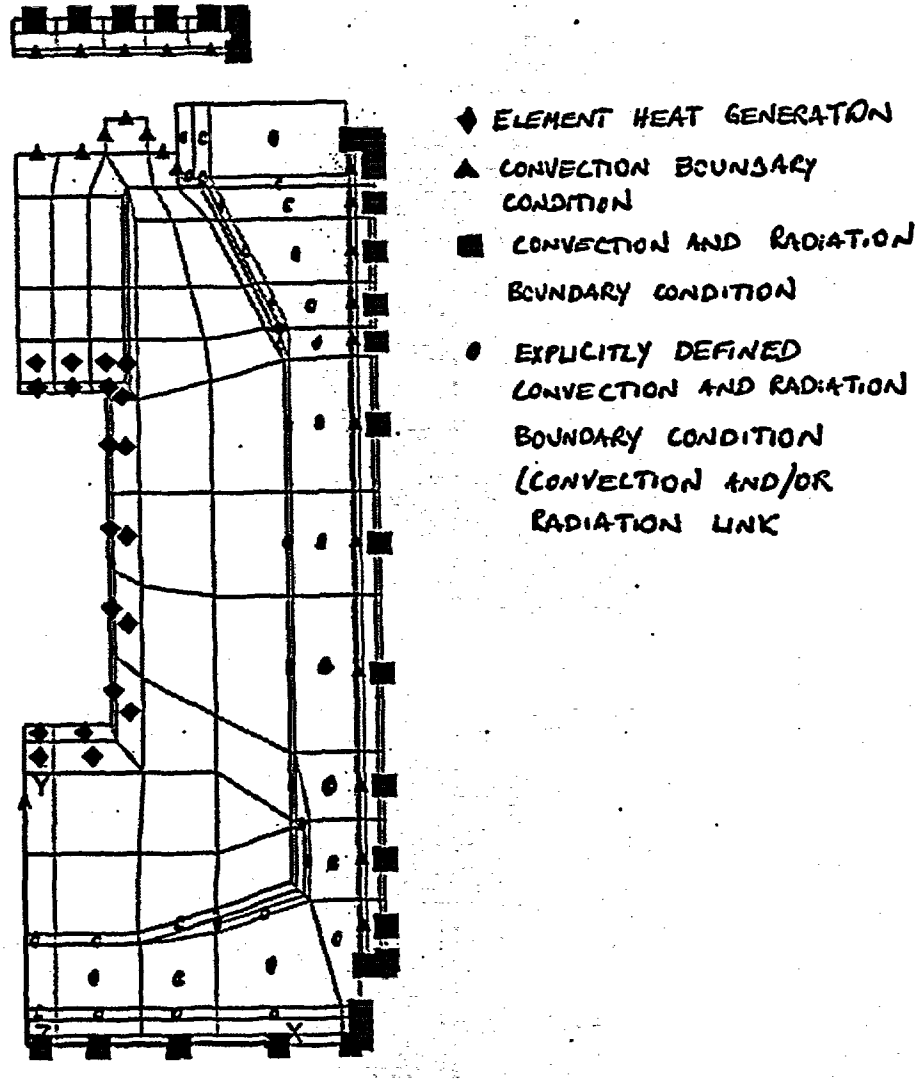

Figure 3.6.4-F8

Radiation and Convection Elements (RLINKS and CLINKS)

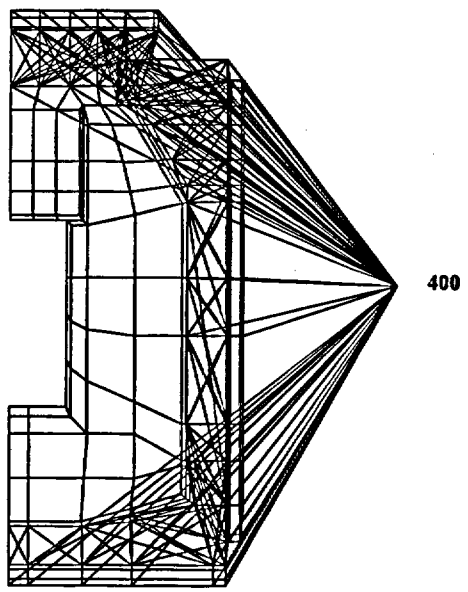

RLINKS TO NODE 400

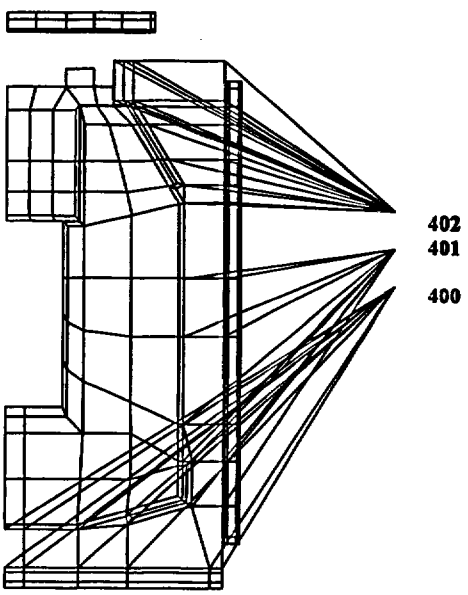

CLINKS TO NODES 400, 401 AND 402

Figure 3.6.4-F9
Calculation of Nodal Areas

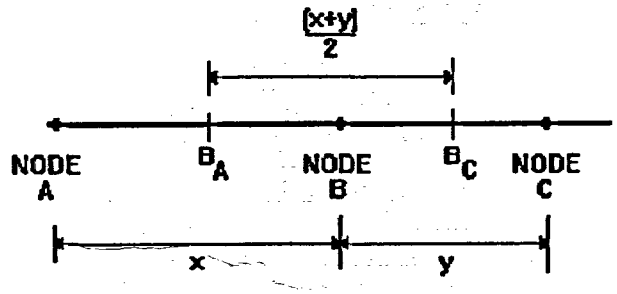

Node B is assigned an area equal to the area between points B_A and B_C.

Figure 3.6.4-F10
Lead Thermal Capacity

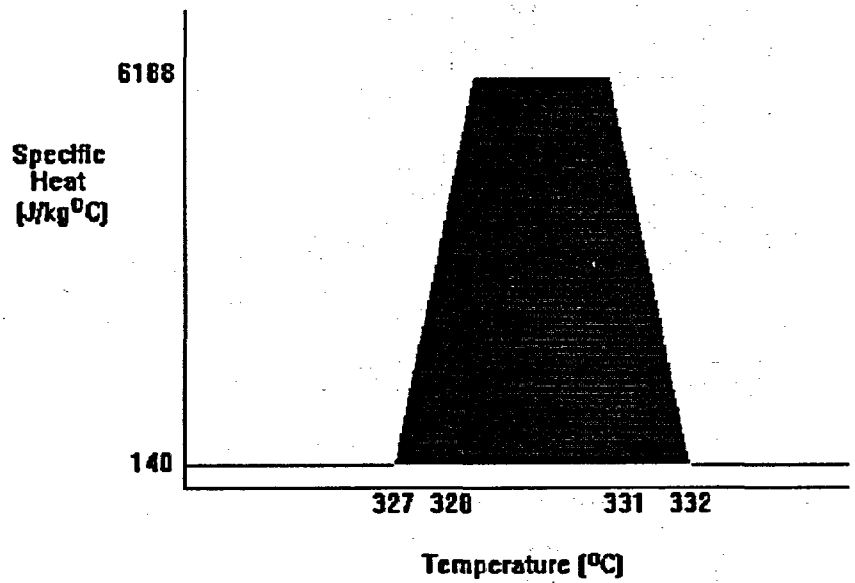

Figure 3.6.4-F11
Temperature Measurements of an F-294 Prototype Loaded with 375.5 kCi Co-60

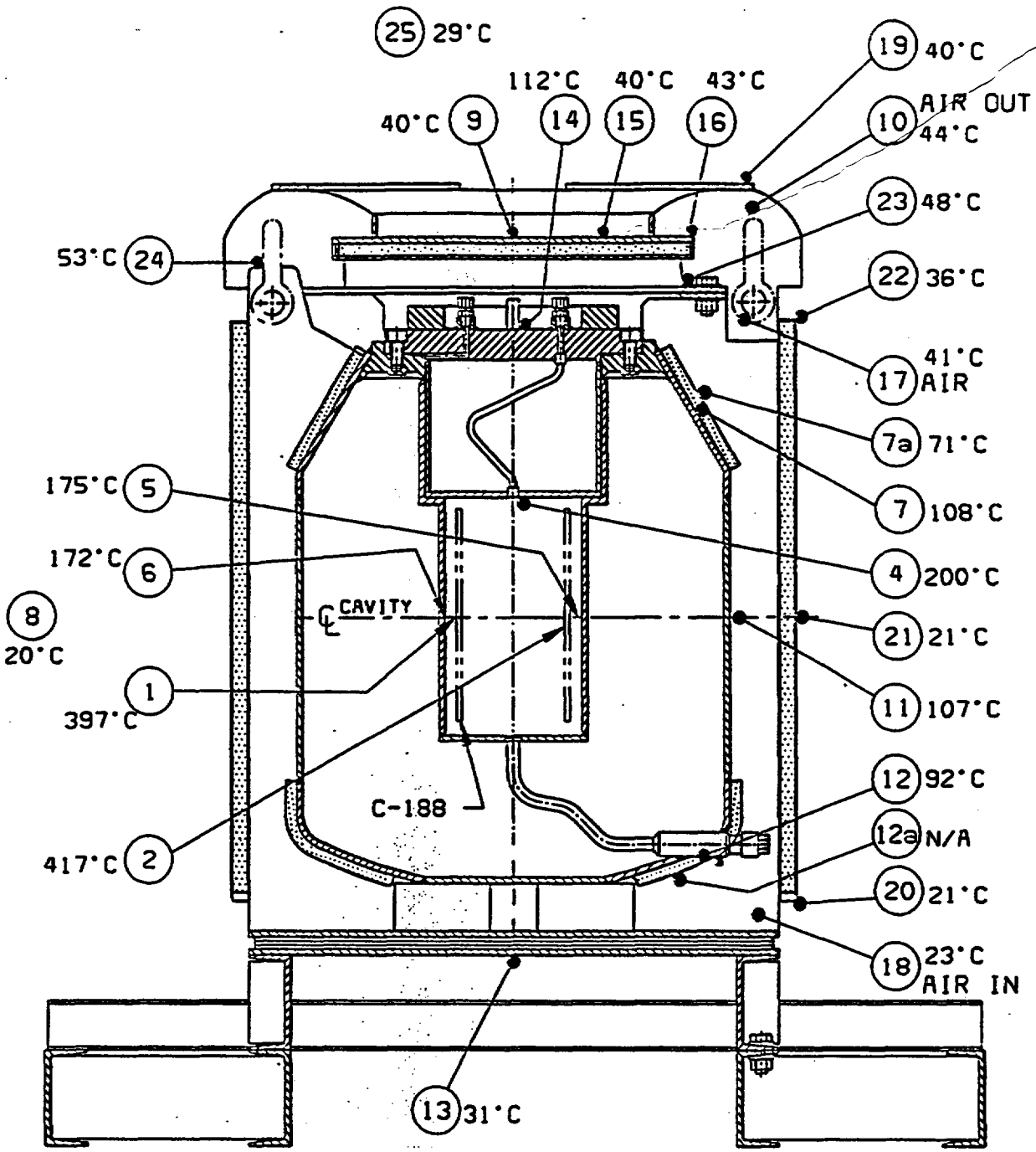

T/C #3 - C-188 TEMPERATURE (415°C), NOT SHOWN IN THIS PLANE

Figure 3.6.4-F12
Node Numbers

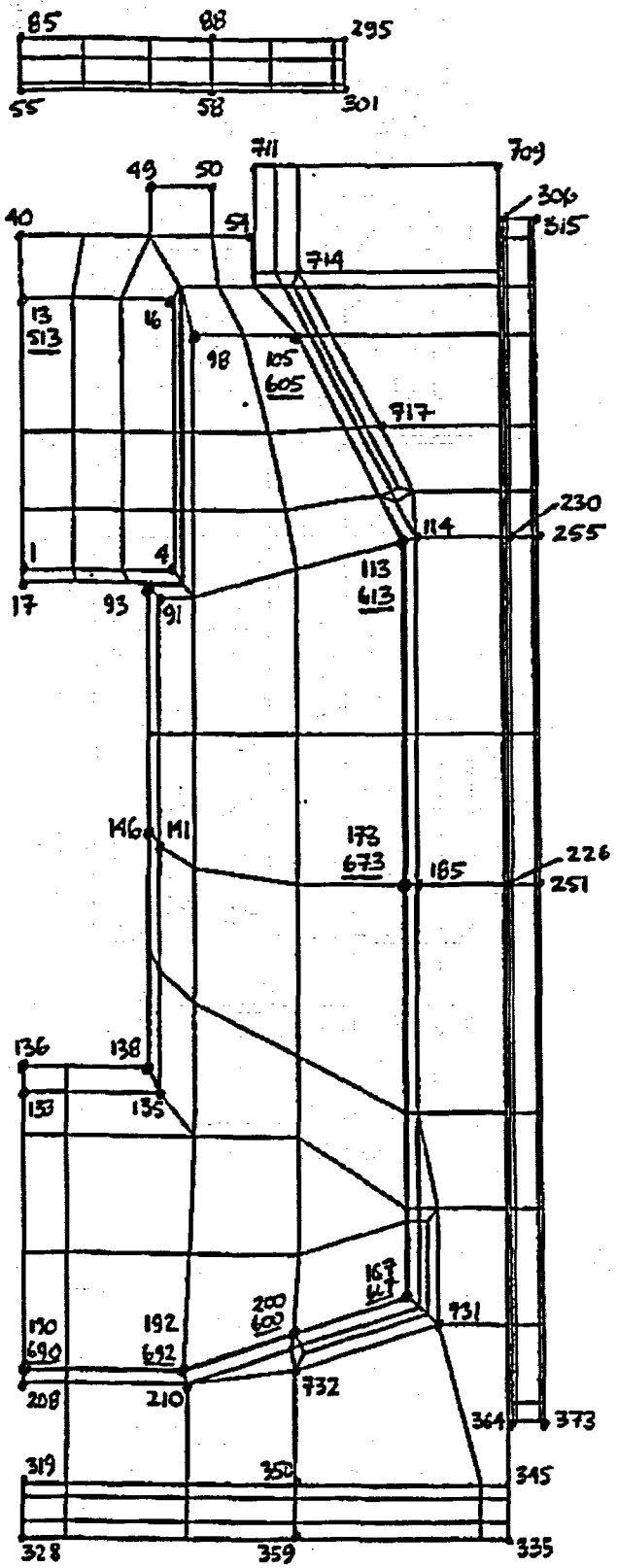

NOTE: Underlined node number is within the contact resistance

Figure 3.6.4-F13
Insolation Heat Load

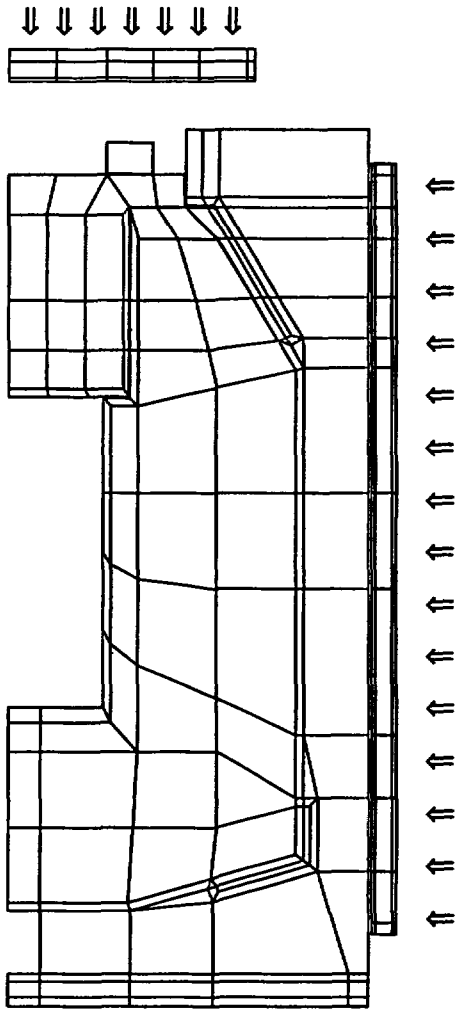

⇓ = 2000 W/m^2
⇐ = 500 W/m^2

Figure 3.6.4-F14
Lead Temperatures in the Top Plug

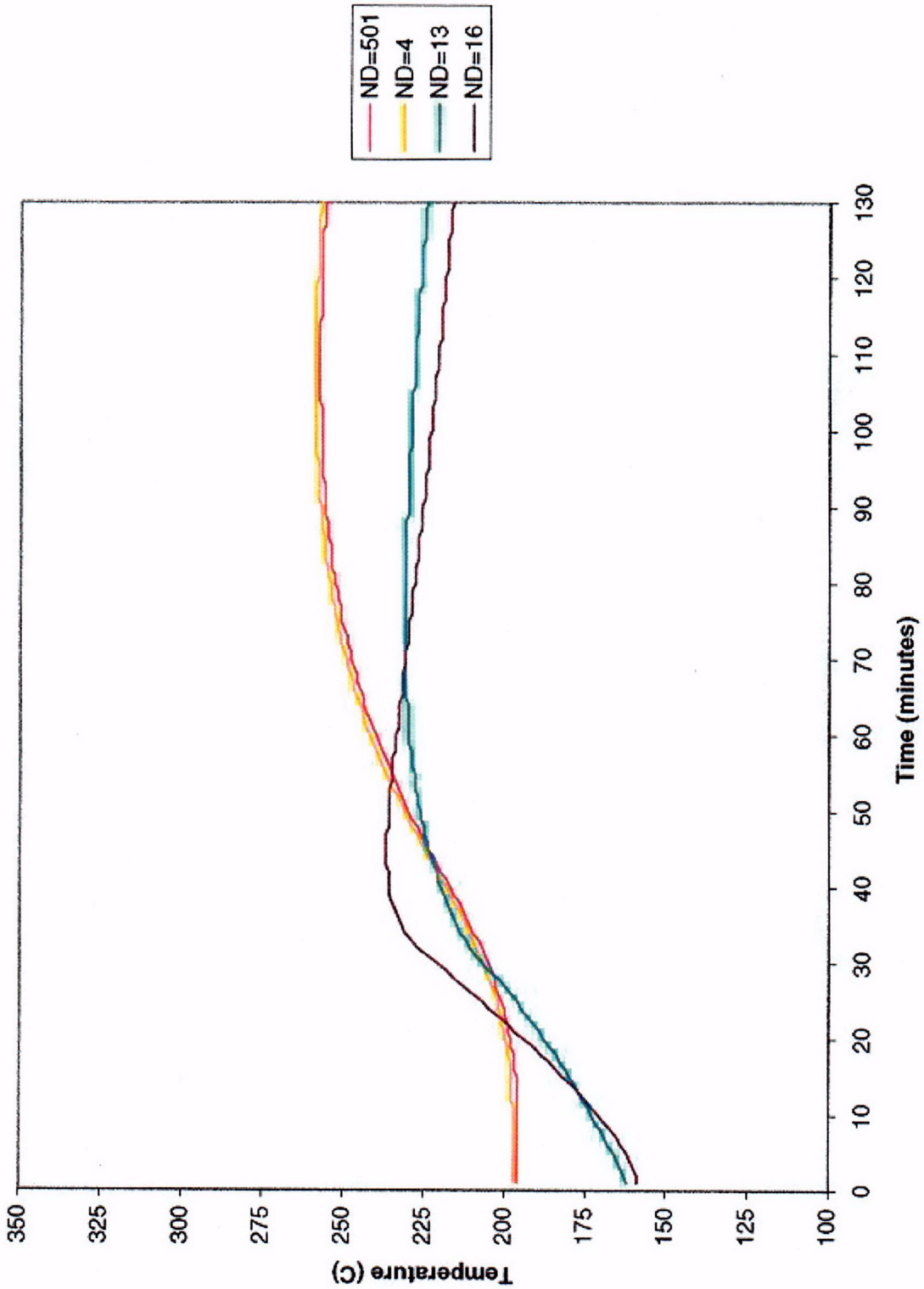

C03

Figure 3.6.4-F15
Lead Temperatures at the Upper Half of the Main Body

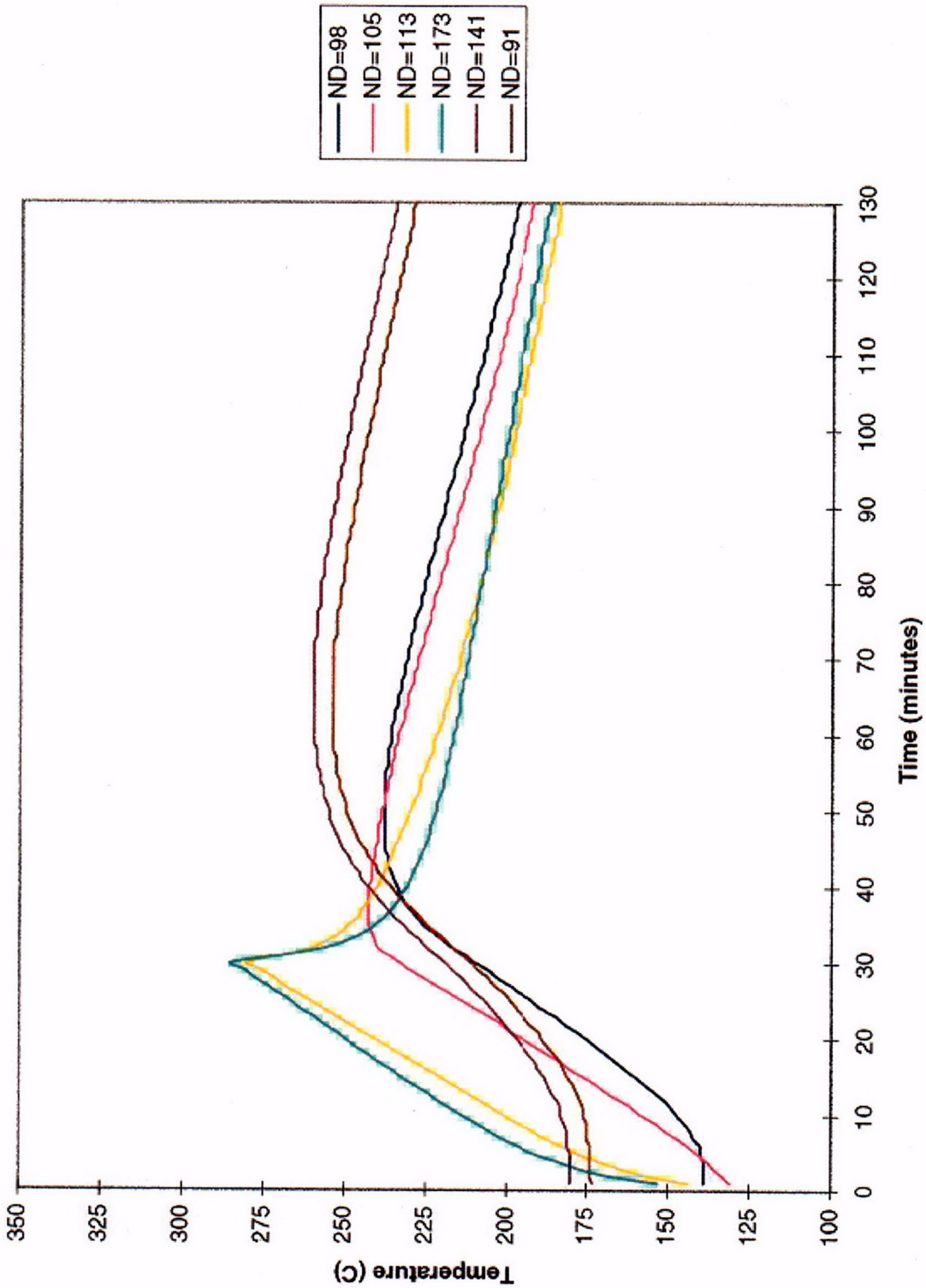

C04

Figure 3.6.4-F16
Lead Temperatures at the Lower Half of the Main Body

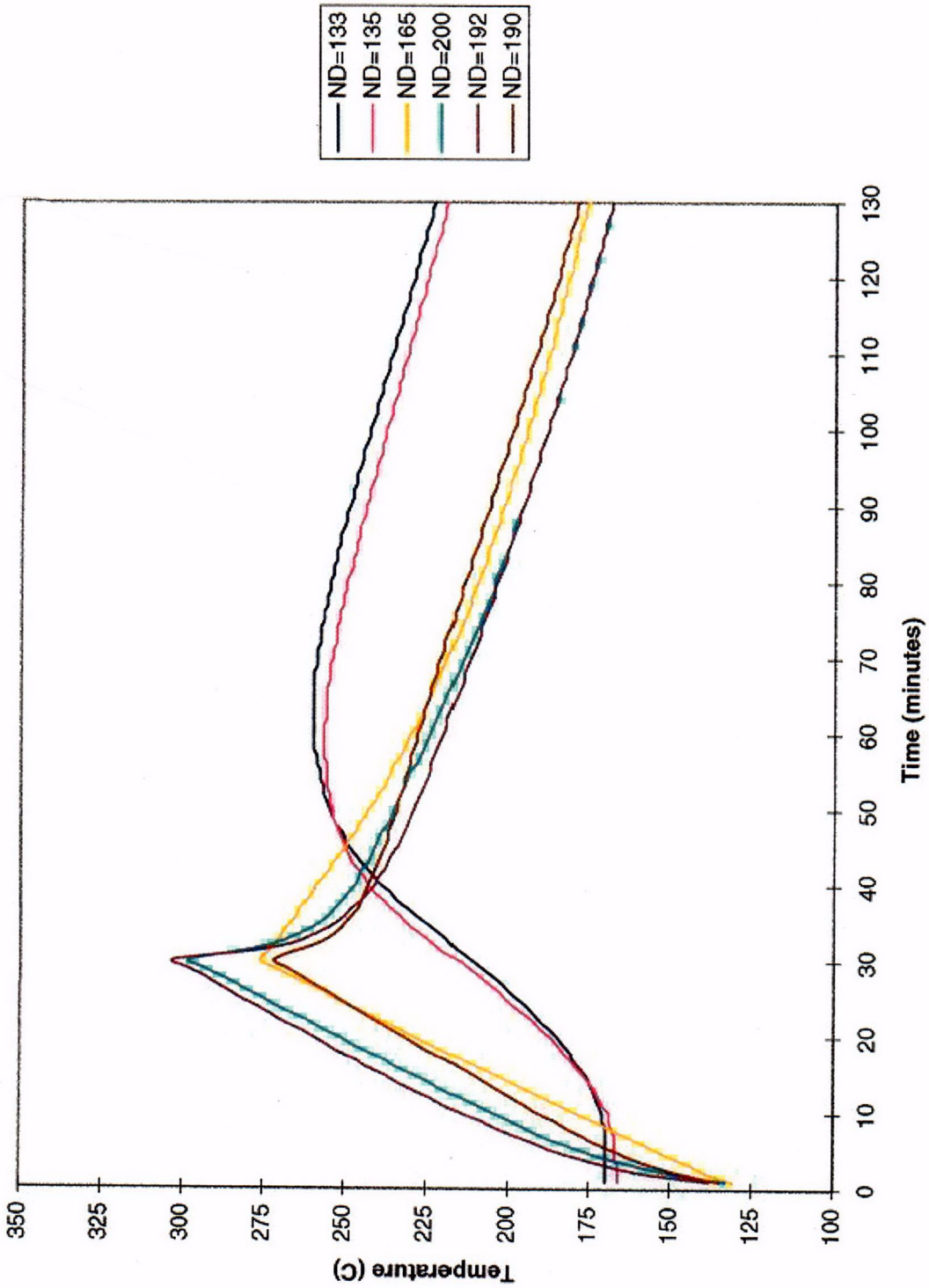

C05

This page left blank intentionally.

SUB-APPENDIX 3.6.4.1
COSMOS/M ELEMENT DESCRIPTIONS [15]

4.1 LINEAR 2-D SPAR/TRUSS (element_name =TRUSS2D)

General Description:

TRUSS2D is a 2-node uniaxial element for two dimensional structural and thermal models. All elements have to be defined in the X-Y plane as shown in Figure 4-1. Only two translational degrees of freedom per node are considered for structural analysis. Temperature is the only degree of freedom for the thermal module.

Special Features:

Buckling, inplane loading

Default Element Coordinate System (ECS = -1):

The nodal input pattern shown in Figure 4-1 specifies the direction of the element axis. The x-axis goes from the first node to the second. The element y-axis is perpendicular to the x-axis and lies in the X-Y plane.

Element Group Options:

Op. 1 to Op. 4: Unused options for this element

Op. 5: Use default value (Linear elastic material type)

Op. 6: Use default value (Small displacement formulation)

Op. 7: Use default value (Material creep is not considered)

Real Constants:

r1 = Cross-sectional area

Material Properties:

EX = Modulus of elasticity
KX = Thermal conductivity
ALPX = Coefficient of thermal expansion
C = Specific heat
DENS = Density
DAMP = Material Damping coefficient
ECONX = Electrical conductivity (thermal analysis only)

Element Loadings:

Thermal
Gravitational

Output Results:

Forces and stresses are available in the element coordinate system.

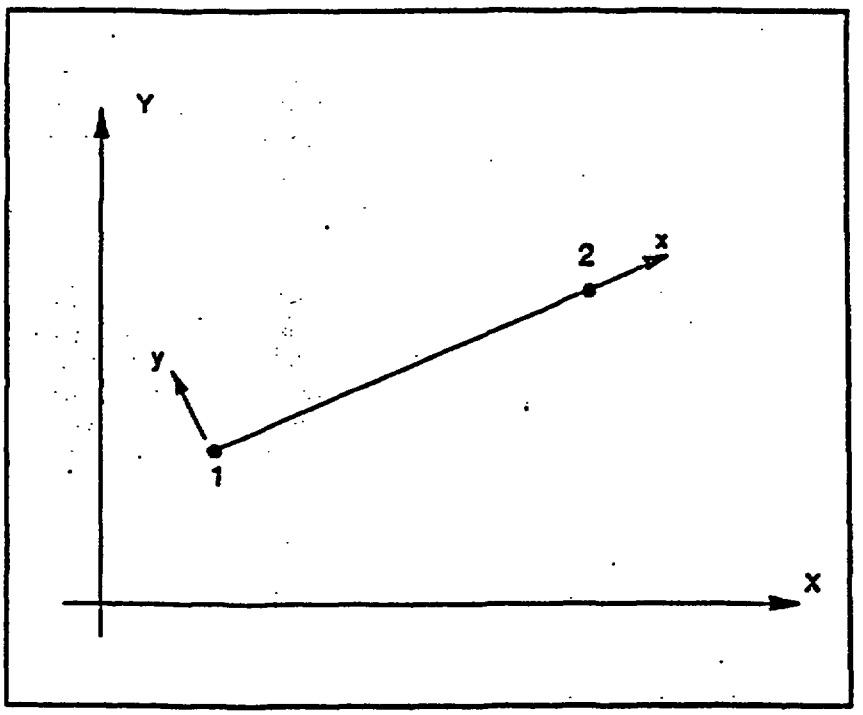

XY: Global Cartesian Coordinate System
xy: Element Coordinate System

Figure 4-1. 2-D TRUSS

4.7 LINEAR 2-D 4- to 8-NODE PLANE STRESS, PLANE STRAIN AND BODY OF REVOLUTION (element_name = PLANE2D)

General Description:

PLANE2D is a 4- to 8-node two dimensional element for plane stress, plane strain, or axisymmetric structural and thermal problems. All elements have to be defined in the X-Y plane. Axisymmetric structures have to be modeled in the positive X half plane, in which X represents the radial direction and Y refers to the axis of symmetry. Only two translational degrees of freedom per node are considered for structural analysis. One degree of freedom, representing temperature, is used for the thermal module.

The nodal input pattern is shown in Figure 4-12 for an 8-node element illustrating its local node numbering. The element however can be used with 4- to 8-nodes by issuing zeros (0) at the location of missing nodes during the element connectivity definition (EL command). Triangular shaped elements can also be considered. In this case, the third and fourth nodes (in case of 4-node elements) and the third, fourth and seventh nodes (in case of 5- to 8-node elements) will be assigned the same global node number, as shown in Figure 4-12. Both clockwise and counter-clockwise node numbering are allowed.

Special Features:

Buckling, Inplane Loading, Fluid-solid interaction, Adaptive P-Method for the 8-node structural elements (polynomial degrees up to 10)

Default Element Coordinate System (ECS= -1):

The element x-axis goes from the first node to the second, and the element y-axis is normal to the x-axis toward the fourth node.

Element Group Options:

Op. 1:
= 0 ; Structural or thermal element (default)
= 1 ; 4-node incompressible fluid element

For structural or thermal elements (Op. 1 = 0), the other options are:

Op. 2: (See Footnote 1)
= 0 ; Reduced integration
= 1 ; QM6 incompatible element; full integration for 8-node elements (default)
= 2 ; Full integration
= 3 ; Unrelated option for this type of analysis

Op. 3:
= 0 ; Plane Stress (default)
= 1 ; Axisymmetric (a one radian sector is considered, thus loads for a one radian sector should be applied)
= 2 ; Plane Strain

Op.4:
= 0 ; Stresses calculated in global Cartesian coordinate system
= 1 ; Stresses calculated in the defined local element coordinate system

Op. 5: Use default value (Linear elastic material).

Op. 6: Use default value (Small displacement formulation)

Op. 7: Use default value (Material Creep is not considered)

For fluid elements (Op. 1 = 1), the other options are:

Op. 2: Unused option

Op. 3:
= 1 ; Axisymmetric
= 2 ; Plane Strain (default)

Op. 4 to Op. 7: Unused options for this element

Real Constants:

r1 = Thickness (only for plane stress analysis)
r2 = Material angle (β)
The material angle is measured with respect to the element coordinate system, as shown in Figure 4–12.

Material Properties:

For structural or thermal elements (Op. 1 = 0)
(See Figure 4–12 for material directions)

EX = Modulus of elasticity in the 1st material direction
EY = Modulus of elasticity in the 2nd material direction
EZ = Modulus of elasticity in the global Z–direction
KX = Thermal conductivity in the global X–direction
KY = Thermal conductivity in the global Y–direction
KZ = Thermal conductivity in the global Z–direction
NUXY = Poisson's ratio relating the 1st and 2nd material directions (strain in the 2nd direction due to unit strain along the 1st direction)
NUYZ = Poisson's ratio relating the 2nd material direction and global Z–direction (strain in the Z–direction due to unit strain along the 2nd direction)
NUXZ = Poisson's ratio relating the 1st material direction and global Z–direction (strain in the Z–direction due to unit strain along the 1st direction)
C = Specific heat
ALPX = Coefficient of thermal expansion in the 1st material direction
ALPY = Coefficient of thermal expansion in the 2nd material direction
ALPZ = Coefficient of thermal expansion in the global Z–direction
GXY = Shear modulus relating the 1st and 2nd material directions
DENS = Density
DAMP = Material damping coefficient
ECONX = Electrical conductivity (thermal analysis only)

Note:

The element is assigned orthotropic material properties if at least one of the following conditions is satisfied:

1. Moduli of elasticities in two directions are defined and are unequal.
2. Poisson's ratio in two planes are defined and are unequal.
3. Thermal coefficients in two directions are defined and are unequal.
4. Thermal conductivity in two directions are defined and are unequal.

The following condition has to be satisfied for proper representation of orthotropic properties in the ith and j^{th} material directions:

$$\frac{\nu_{ij}}{E_i} = \frac{\nu_{ji}}{E_j}$$

Where ν_{ij}, E_i, and E_j are provided as input and ν_{ji} is calculated internally by the program.

For fluid elements (Op. 1 = 1)

EX = Fluid elastic (bulk) modulus
GXY = 10^{-19}EX; an arbitrarily small number to give element some shear stability

Element Loadings:

Thermal
Gravitational
Pressure (applied normal to element faces)

Output Results:

Stress components including the von Mises stress are available at all nodes and the center of the element in either global or element coordinate directions.

Principal stresses may also be optionally requested at the element center (see A_STRESS command in the ANALYSIS menu).

For fluid option, pressure is printed at the center of each element.

References:

K. J. Bathe, E. L. Wilson and R. Iding, "NONSAP – A Structural Analysis Program for Static and Dynamic Response of Nonlinear Systems," SESM Report Number 74–3, University of California–Berkeley, 1974.

R. D. Cook, "Concepts and Applications of Finite Element Analysis," Second Edition. John Wiley & Sons, 1981.

Footnote 1: Numerical Integration

1. Reduced Integration

For 4–node elements:

2 x 2 Gauss integration for bending terms
1 x 1 Gauss integration for shear terms

Overcomes parasitic shear effects; handles nearly incompressible materials; not available for orthotropic models.

For 8–node elements:

2 x 2 Gauss integration for bending terms
2 x 2 Gauss integration for shear terms

2. QM6 (Available for 4–node elements only)

2 x 2 Gauss integration for all terms including the effect of bubble functions which introduce additional internal degrees of freedom.

Overcomes parasitic shear effects, handles nearly incompressible materials, in general more stable with better accuracy, but more costly in terms of solution time.

3. Full Integration

For 4–node elements:

2 x 2 Gauss integration for all terms.

Fastest and simplest solution option, does not overcome parasitic shear effects.

For 8–node elements:

3 x 3 Gauss integration for all terms.

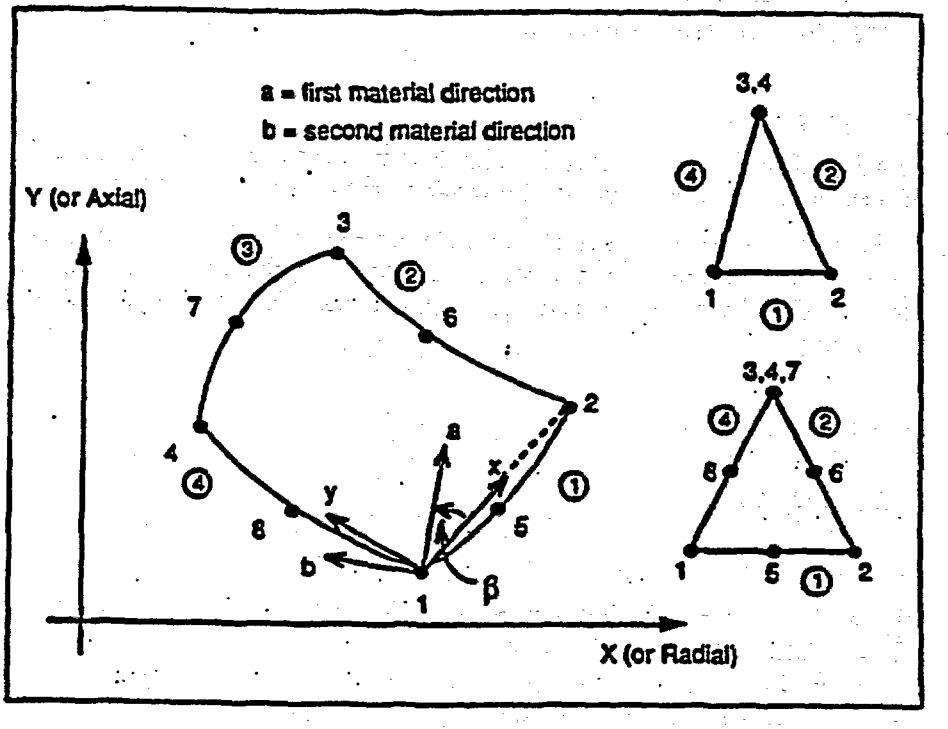

XY: Global Cartesian Coordinate System
xy: Element Coordinate System
0: Face Numbers for Pressure Application
(positive when applied inward)

Figure 4-12. 2-D Element

4.48 THERMAL RADIATION LINK (element_name = RLINK)

General Description:

RLINK is a 2–node element to model the heat flow between two nodes due to radiation. One degree of freedom for each node is used in two– or three–dimensional thermal models.

The nodal input pattern for this element is shown in Figure 4–86. The two nodes may or may not be coincident. Temperature boundary condition must be specified at the node which is not directly connected to the model. This temperature boundary condition represents the radiation source temperature.

Special Features: (None)

Element Group Options: (None)

Real Constants:

r1 = Area of the radiating surface
r2 = View factor
r3 = Emissivity
r4 = Stefan–Boltzman constant

Material Properties: (None)

Element Loadings:

Thermal

Output Results:

Heat flow due to radiation is available for each element.

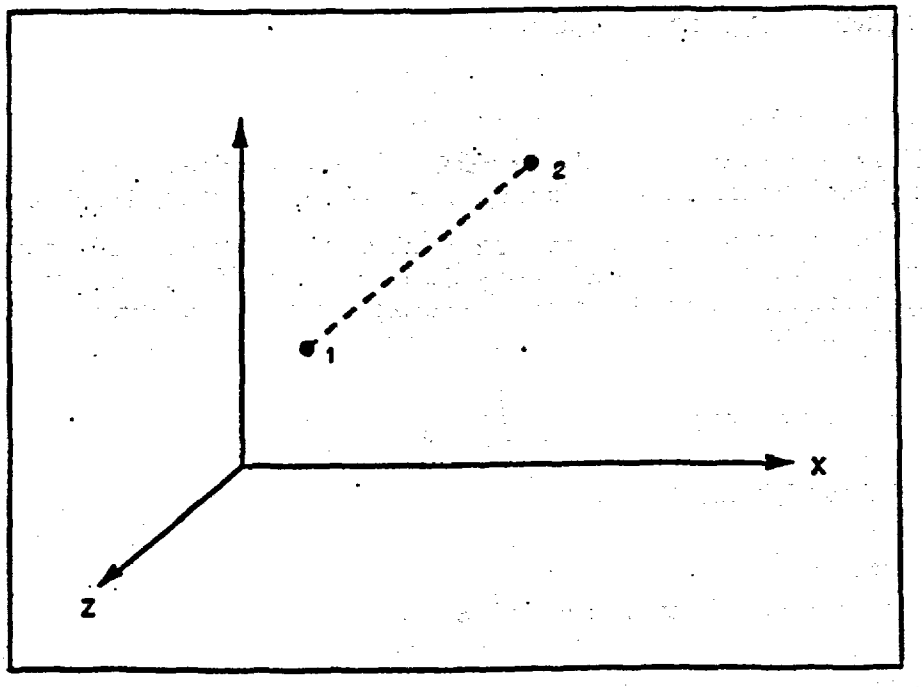

Figure 4-86. Radiation Link

4.49 THERMAL CONVECTION LINK (element_name = CLINK)

General Description:

CLINK is a 2–node element to model the heat flow due to convection between two nodes. One degree of freedom per node is used in two– or three–dimensional thermal models.

The nodal input pattern for this element is shown in Figure 4–87. The two nodes may or may not be coincident. Temperature boundary conditions must be specified at the node which is not directly connected to the model. This temperature boundary condition represents the convection source temperature.

Special Features: (None)

Element Group Options: (None)

Real Constants:

r1 = Area of the convection surface

Material Properties:

HC = Film coefficient

Element Loadings:

Thermal

Output Results:

Heat flow due to convection is available for each element.

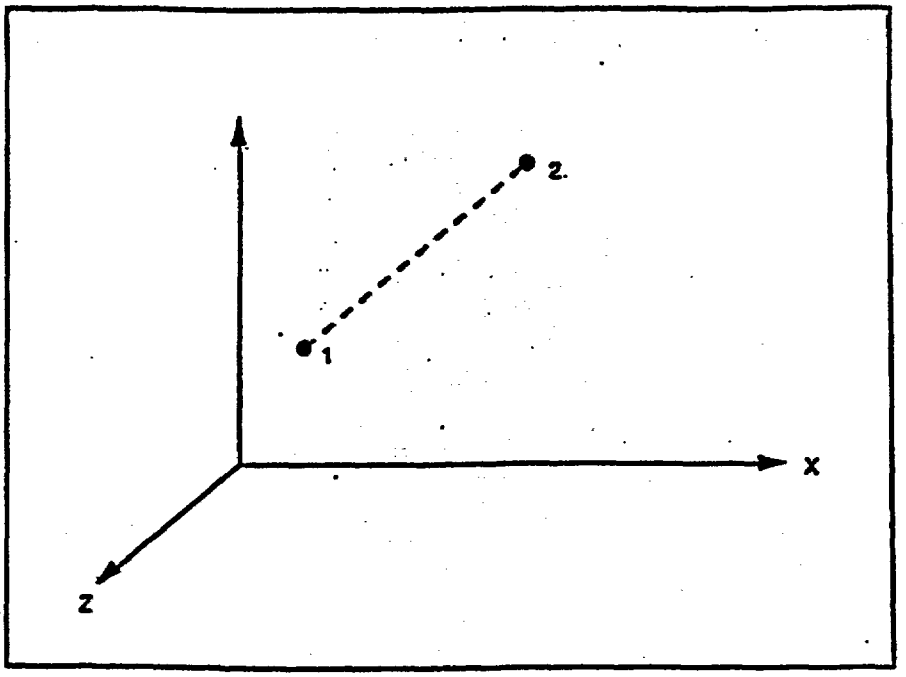

Figure 4-87. Convection Link

This page left blank intentionally.

SUB-APPENDIX 3.6.4.2
RADIATION SHAPE FACTORS

S2.1.0 SHAPE FACTORS FOR CONCENTRIC CYLINDERS OF EQUAL LENGTH

The basic case of two concentric cylinders is shown in Figure S2.1. Shape factors $F_{2\text{-}1}$ and $F_{2\text{-}2}$ for this case are given by Siegel and Howell:[19]

$$F_{2\text{-}1} = \frac{1}{R} - \frac{1}{\pi R}\{\cos^{-1}(\frac{B}{A}) - \frac{1}{2L}[\sqrt{(A+2)^2 - 4R^2}\cos^{-1}(\frac{B}{RA}) + B\sin^{-1}(\frac{1}{R}) - \frac{\pi A}{2}]\}$$

$$F_{2\text{-}2} = 1 - \frac{1}{R} + \frac{2}{\pi R}\tan^{-1}(\frac{2\sqrt{R^2-1}}{L})$$
$$- \frac{L}{2\pi R}[\frac{\sqrt{4R^2+L^2}}{L\sin^{-1}}[\frac{4(R^2-1)+(L^2/R^2)(R^2-1)}{L^2+4(R^2-1)}]$$
$$- \sin^{-1}(\frac{R^2-2}{R^2}) + \frac{\pi}{2}(\frac{\sqrt{4R^2+L^2}}{L} - 1)]$$

where:

$R = r_2/r_1$
$L = l/r_1$
$A = L^2 + R^2 - 1$
$B = L^2 - R^2 + 1$

Using shape factor algebra, the following expressions can be derived:

$F_{2\text{-}3} = F_{2\text{-}4} = (1 - F_{2\text{-}1} - F_{2\text{-}2})/2$
$F_{1\text{-}2} = (A_2/A_1)F_{2\text{-}1}$
$F_{1\text{-}3} = F_{1\text{-}4} = (1-F_{1\text{-}2})/2$
$F_{4\text{-}1} = F_{3\text{-}1} = (A_1/A_3)F_{1\text{-}3}$
$F_{4\text{-}2} = F_{3\text{-}2} = (A_2/A_3)F_{2\text{-}3}$
$F_{4\text{-}3} = F_{3\text{-}4} = 1 - F_{3\text{-}1} - F_{3\text{-}2}$

It is somewhat more practical to generate shape factors for the geometry shown in Figure S2.2. The cases listed in Table S2.1 can be calculated using the general cases shown above. For example, shape factor $F_{2b\text{-}3b}$ can be evaluated using the above equations with $r_1 = r_a$, $r_2 = r_b$ and $l = l_b$.

Figure S2.1
Basic Case: Concentric Cylinder with Closed Ends

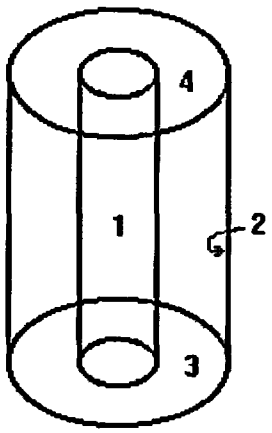

r_1 = outer radius of inner cylinder

r_2 = inner radius of outer cylinder

l = height

Figure S2.2
The 2x2 Concentric Cylinder

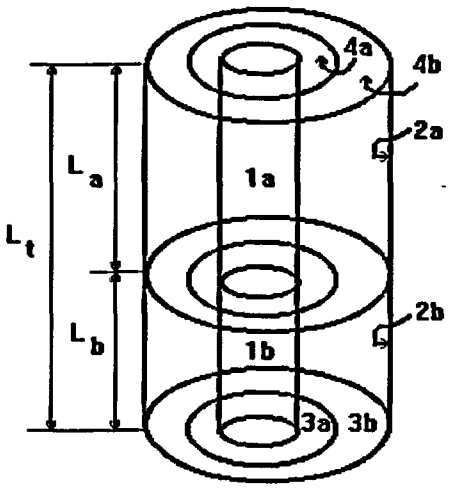

r_o = outer radius of inner cylinder

r_a = outer radius of annulus 3a (or 4a)

r_b = inner radius of outer cylinder

Table S2.1
Basic Shape Factors Applied to the 2 x 2 Cylinder

Shape Factor	Case Considered	r_1	r_2	l
$F_{2a,2b-1a,1b}$; $F_{2a,2b-2a,2b}$; $F_{2a,2b-3a,3b}$; $F_{1a,1b-2a,2b}$; $F_{1a,1b-3a,3b}$; $F_{3a,3b-1a,1b}$; $F_{3a,3b-2a,2b}$; $F_{3a,3b-4a,4b}$; $F_{4a,4b-1a,1b}$; $F_{4a,4b-2a,2b}$; $F_{4a,4b-3a,3b}$	Combined cylinder	r_0	r_b	l_a+l_b
F_{2a-1a}; F_{2a-2a}; $F_{2a-4a,4b}$; F_{1a-2a} ; $F_{1a-4a,4b}$; $F_{4a,4b-1a}$; $F_{4a,4b-2a}$	Upper cylinder	r_0	r_b	l_a
F_{2b-1b}; F_{2b-2b}; $F_{2b-3a,3b}$; F_{1b-2b} ; $F_{1b-3a,3b}$; $F_{3a,3b-1b}$; $F_{3a,3b-2b}$	Lower cylinder	r_0	r_b	l_b
$F_{1a,1b-4a}$; $F_{1a,1b-3a}$; $F_{3a,-4a}$; $F_{3a-1a,1b}$; F_{4a-3a} ; $F_{4a-1a,1b}$	Inner cylinder	r_0	r_a	l_a+l_b
$F_{2a,2b-3b}$; $F_{2a,2b-4b}$; $F_{3b-2a,2b}$; F_{3b-4b}; $F_{4b-2a,2b}$; F_{4b-3b}	Outer cylinder	r_a	r_b	l_a+l_b
F_{1a-4a} ; F_{4a-1a}	Upper inner cylinder	r_0	r_a	l_a
F_{1b-3a} ; F_{3a-1b}	Lower inner cylinder	r_o	r_a	l_b
F_{2a-4b} ; F_{4b-2a}	Upper outer cylinder	r_a	r_b	l_a
F_{2b-3b} ; F_{3b-2b}	Lower outer cylinder	r_a	r_b	l_b

Other cases must also be calculated using shape factor algebra and, in particular, the following relations:

$$A_iF_{i-j} = A_jF_{j-i} \qquad \text{(RECIPROCITY)}$$

$$F_{i-j,k} = F_{i-j} + F_{i-k} \qquad \text{(ADDITIVE RELATION)}$$

$$A_{ij}F_{i,j-k} = A_iF_{i-j} + A_jF_{j-k} \qquad \text{(CONSERVATION)}$$

$$\sum_j F_{i-j} = 1 \text{ for any single value of i} \qquad \text{(CLOSURE)}$$

The remaining shape factors were calculated using the four shape factor relations listed above in combination with the cases listed in Table S2.1.

It is useful to consider a numerical example. Consider the case $r_o = 1$, $r_a = 2$, $r_b = 3$, $L_a = 1$ and $L_b = 2$. Figure S2.3 shows the results calculated for the cases in Table S2.1. Figure S2.4 shows how these cases were manipulated to yield the matrix of shape factors for this configuration.

Figure S2.3
Calculated Basic Shape Factors

GENERAL CASE FOR 2x2 CYLINDER

la =	1.0000	r0 =	1
lb =	2.0000	ra =	2
t = la + lb =	3.0000	rb =	3

SEE NEXT PAGE
FOR SHAPE
FACTOR SUMMARY

FOR THE CASES IN THIS BOX: (Combined Cylinder)

R = rb/ro =	3.0000	A1a,1b =	18.8496
L = lt/r0 =	3.0000	A2a,2b =	56.5487
A =	17.0000	A3a,3b =	25.1327
B =	1.0000	A4a,4b =	25.1327

F2a,2b-1a,1b=	0.2012
F2a,2b-2a,2b=	0.2819
F2a,2b-3a,3b=	0.2584
F1a,1b-2a,2b=	0.6037
F1a,1b-3a,3b=	0.1982
F3a,3b-1a,1b=	0.1488
F3a,3b-2a,2b=	0.5815
F3a,3b-4a,4b=	0.2699
F4a,4b-1a,1b=	0.1486
F4a,4b-2a,2b=	0.5815
F4a,4b-3a,3b=	0.2699

FOR THE CASES IN THIS BOX:(Upper Cylinder,r0,rb,la)

R = rb/ro =	3.0000	A1a =	6.2832
L = la/r0 =	1.0000	A2a =	18.8496
A =	9.0000	A4a,4b =	25.1327
B =	-7.0000		

F2a-1a=	0.0925
F2a-2a=	0.1172
F2a-4a,4b=	0.3952
F1a-2a=	0.2774
F1a-4a,4b=	0.3613
F4a,4b-1a=	0.0903
F4a,4b-2a=	0.2964

THIS BOX:(Upper Inner Cylinder,r0,ra,la)

R = ra/ro =	2.0000	A1a =	6.2832
L = la/r0 =	1.0000	Phant A2 =	12.5664
A =	4.0000	A4a =	9.4248
B =	-2.0000		

Phant F2-1a=	0.2323
PhantF2a-2a=	0.1377
PhantF2-4a=	0.3150
PhantF1a-2=	0.4645
F1a-4a=	0.2877
F4a-1a=	0.1785

FOR THE CASES IN THIS BOX:(Lower Cylinder,r0,rb,lb)

R = rb/ro =	3.0000	A1b =	12.5664
L = lb/r0 =	2.0000	A2b =	37.6991
A =	12.0000	A3a,3b =	25.1327
B =	-4.0000		

F2b-1b=	0.1590
F2b-2b=	0.2097
F2b-3a,3b=	0.3157
F1b-2b=	0.4769
F1b-3a,3b=	0.2618
F3a,3b-1b=	0.1308
F3a,3b-2b=	0.4735

THIS BOX:(Lower Inner Cylinder,r0,ra,lb)

R = ra/ro =	2.0000	A1b =	12.5664
L = lb/r0 =	2.0000	PhantA2 =	25.1327
A =	7.0000	A3a =	9.4248
B =	1.0000		

Phant F2-1b=	0.3371
PhantF2a-2a=	0.2285
PhantF2-3b=	0.21[illegible]
PhantF1b-2=	0.[illegible]
F1b-3a=	0.[illegible]
F3a-1b=	0.217[illegible]

FOR THE CASES IN THIS BOX:(Inner Cylinder,r0,ra,lt)

R = ra/ro =	2.0000	A1a,1b =	18.8496
L = lt/r0 =	3.0000	A3a =	9.4248
A =	12.0000	A4a =	9.4248
B =	6.0000	Phant A2 =	37.6991

Phantom 2-1a,1b	0.3858
Phantom 2-2	0.2882
Phantom 2-3a	0.1630
Phantom 1a,lb-2	0.7715
F1a,1b-4a=	0.1142
F4a-1a,1b=	0.2285
F1a,1b-3a =	0.1142
F3a-1a,1b=	0.2285
F3a-4a=	0.1194
F4a-3a =	0.1194

THIS BOX:(Upper Outer Cylinder,ra,rb,la)

R = rb/ra =	1.5000	PhantA1 =	12.5664
L = la/ra =	0.5000	A2a =	18.8496
A =	1.5000	A4b =	15.7080
B =	-1.0000		

Phant F2a-1=	0.3007
PhantF2a-2a=	0.0763
F2a-4b=	0.3115
F4b-2a=	0.3738

FOR THE CASES IN THIS BOX:(Outer Cylinder,ra,rb,lt)

R = rb/ra =	1.5000	PhantA1 =	37.6991
L = lt/ra =	1.5000	A2a,2b =	56.5487
A =	3.5000	3b =A4b =	15.7080
B =	1.0000		

Phant F2a,2b-1=	0.5073
PhF2a,2b-2a,2b=	0.1697
F2a,2b-3b=	0.1815
F2a,2b-4b=	0.1815
F4b-2a,2b=	0.5814
F3b-2a,2b=	0.5814
PhF1a,1b-3b=	0.1198
F3b-4b=	0.1317
F4b-3b =	0.1317

THIS BOX:(Lower Outer Cylinder,ra,rb,lb)

R = rb/ra =	1.5000	PhantA1 =	25.1327
L = lb/ra =	1.0000	A2b =	37.6991
A =	2.2500	A3b =	15.7080
B =	-0.2500		

Phant F2-1b=	0.4408
PhantF2a-2a=	0.1309
F2b-3b=	0.2142
F3b-2b=	0.5140

Figure S2.4
Matrix of Shape Factors for 2x2 Concentric Cylinders

GENERAL CASE FOR 2x2 CYLINDER

NOTE: MOST OF THIS WORKSHEET IS PROTECTED
ONLY THE GEOMETRIC INFORMATION CAN BE CHANGED

Ia =	1.0000	i0 =	1
Ib =	2.0000	i2 =	2
t = Ia + Ib =	3.0000	ib =	3

OUTER SURFACE OF INNER CYLINDER

	2.000		2.000		2.000		
F1a- 1a =	0.000	F1b- 1a =	0.000	F1a,1b- 1a =	0.000	A1a=	6.283185
F1a- 1b=	0.000	F1b- 1b=	0.000	F1a,1b- 1b=	0.000	A1b=	12.56637
F1a- 1a,1b=	0.000	F1b- 1a,1b=	0.000	F1a,1b- 1a,1b=	0.000	A1a,1b=	18.84956
F1a- 2a =	0.277	F1b- 2a =	0.145	F1a,1b- 2a =	0.189	A2a=	18.84956
F1a- 2b =	0.290	F1b- 2b =	0.477	F1a,1b- 2b = **	0.415	A2b=	37.69911
F1a- 2a,2b=	0.567	F1b- 2a,2b=	0.622	F1a,1b- 2a,2b=	0.604	A2a,2b=	56.54867
F1a- 3a =	0.017	F1b- 3a =	0.183	F1a,1b- 3a =	0.114	A3a=A4a=	9.424778
F1a- 3b=	0.054	F1b- 3b=	0.099	F1a,1b- 3b=	0.084	A3b=A4b=	15.70796
F1a- 3a,3b=	0.071	F1b- 3a,3b=	0.282	F1a,1b- 3a,3b=	0.198	A3a,3b=	25.13274
F1a- 4a=	0.268	F1b- 4a=	0.037	F1a,1b- 4a=	0.114	A4a,4b=	25.13274
F1a- 4b=	0.094	F1b- 4b=	0.079	F1a,1b- 4b=	0.084		
F1a- 4a,4b=	0.361	F1b- 4a,4b=	0.117	F1a,1b- 4a,4b=	0.198		

INNER SURFACE OF OUTER CYLINDER

	2.000		2.000		2.000		
F2a- 1a =	0.092	F2b- 1a =	0.048	F2a,2b- 1a = **	0.063	A1a=	6.283185
F2a- 1b= **	0.097	F2b- 1b=	0.159	F2a,2b- 1b= **	0.138	A1b=	12.56637
F2a- 1a,1b=	0.189	F2b- 1a,1b= **	0.207	F2a,2b- 1a,1b=	0.201	A1a,1b=	18.84956
F2a- 2a =	0.117	F2b- 2a =	0.077	F2a,2b- 2a =	0.091	A2a=	18.84956
F2a- 2b =	0.185	F2b- 2b =	0.210	F2a,2b- 2b =	0.191	A2b=	37.69911
F2a- 2a,2b= **	0.272	F2b- 2a,2b=	0.287	F2a,2b- 2a,2b=	0.282	A2a,2b=	56.54867
F2a- 3a =	0.038	F2b- 3a =	0.101	F2a,2b- 3a =	0.097	A3a=A4a=	9.424778
F2a- 3b=	0.056	F2b- 3b=	0.214	F2a,2b- 3b=	0.182	A3b=A4b=	15.70796
F2a- 3a,3b=	0.144	F2b- 3a,3b=	0.318	F2a,2b- 3a,3b=	0.258	A3a,3b=	25.13274
F2a- 4a=	0.084	F2b- 4a=	0.104	F2a,2b- 4a=	0.097	A4a,4b=	25.13274
F2a- 4b=	0.311	F2b- 4b=	0.087	F2a,2b- 4b=	0.182		
F2a- 4a,4b=	0.395	F2b- 4a,4b=	0.190	F2a,2b- 4a,4b=	0.258		

TOP SURFACE OF LOWER ANNULUS

	2.000		2.000		2.000		
F3a- 1a =	0.011	F3b- 1a =	0.022	F3a,3b- 1a =	0.018	A1a=	6.283185
F3a- 1b=	0.217	F3b- 1b=	0.079	F3a,3b- 1b=	0.131	A1b=	12.56637
F3a- 1a,1b=	0.228	F3b- 1a,1b=	0.101	F3a,3b- 1a,1b=	0.149	A1a,1b=	18.84956
F3a- 2a =	0.176	F3b- 2a =	0.067	F3a,3b- 2a =	0.108	A2a=	18.84956
F3a- 2b =	0.406	F3b- 2b =	0.514	F3a,3b- 2b =	0.473	A2b=	37.69911
F3a- 2a,2b=	0.582	F3b- 2a,2b=	0.581	F3a,3b- 2a,2b=	0.581	A2a,2b=	56.54867
F3a- 3a =	0.000	F3b- 3a =	0.000	F3a,3b- 3a =	0.000	A3a=A4a=	9.424778
F3a- 3b=	0.000	F3b- 3b=	0.000	F3a,3b- 3b=	0.000	A3b=A4b=	15.70796
F3a- 3a,3b=	0.000	F3b- 3a,3b=	0.000	F3a,3b- 3a,3b=	0.000	A3a,3b=	25.13274
F3a- 4a=	0.113	F3b- 4a=	0.186	F3a,3b- 4a=	0.181	A4a,4b=	25.13274
F3a- 4b=	0.071	F3b- 4b=	0.132	F3a,3b- 4b= **	0.109		
F3a- 4a,4b=	0.190	F3b- 4a,4b= **	0.318	F3a,3b- 4a,4b=	0.270		

BOTTOM SURFACE OF TOP ANNULUS

	2.000		2.000		2.000		
F4a- 1a =	0.178	F4b- 1a =	0.037	F4a,4b- 1a =	0.090	A1a=	6.283185
F4a- 1b=	0.050	F4b- 1b=	0.063	F4a,4b- 1b=	0.058	A1b=	12.56637
F4a- 1a,1b=	0.228	F4b- 1a,1b=	0.101	F4a,4b- 1a,1b=	0.149	A1a,1b=	18.84956
F4a- 2a =	0.167	F4b- 2a =	0.374	F4a,4b- 2a =	0.236	A2a=	18.84956
F4a- 2b =	0.414	F4b- 2b =	0.208	F4a,4b- 2b =	0.285	A2b=	37.69911
F4a- 2a,2b=	0.582	F4b- 2a,2b=	0.581	F4a,4b- 2a,2b=	0.581	A2a,2b=	56.54867
F4a- 3a =	0.113	F4b- 3a =	0.186	F4a,4b- 3a = **	0.181	A3a=A4a=	9.424778
F4a- 3b=	0.071	F4b- 3b=	0.132	F4a,4b- 3b=	0.109	A3b=A4b=	15.70796
F4a- 3a,3b=	0.190	F4b- 3a,3b= **	0.318	F4a,4b- 3a,3b=	0.270	A3a,3b=	25.13274
F4a- 4a=	0.000	F4b- 4a=	0.000	F4a,4b- 4a=	0.000	A4a,4b=	25.13274
F4a- 4b=	0.000	F4b- 4b=	0.000	F4a,4b- 4b=	0.000		
F4a- 4a,4b=	0.000	F4b- 4a,4b=	0.000	F4a,4b- 4a,4b=	0.000		

means this is taken directly from page A of this spreadsheet
means that subtraction used to calculate this shape factor based on
means that reciprocity was used based on
(underline)means closure
no features means that closure was used based on other information in that column
** means that closure was based on that row
** means reciprocity after the final steps were done

S2.2.0 SHAPE FACTORS FOR CONCENTRIC PARALLEL DISKS

The basic case of two concentric parallel disks is shown in Figure S2.5. The shape factor for this case is given by:[19]

$$F_{a\text{-}b} = \frac{1}{2}[X - \sqrt{X^2 - 4(\frac{R_b^2}{R_a^2})}]$$

where:

$$X = 1 + \frac{1 + R_b^2}{R_a^2}$$

$R_a = r_a/h$ and $R_b = r_b/h$

Shape factor algebra is used to derive the following relations:

$$F_{b\text{-}a} = (A_a/A_b)*F_{a\text{-}b}$$

$$F_{b\text{-}c} = 1 - F_{b\text{-}a}$$

$$F_{c\text{-}b} = (A_b/A_c)F_{b\text{-}c}$$

where c represents all other surfaces.
Again, it is more practical to subdivide this geometry as shown in Figure S2.6. The cases listed in Table S2.2 can be calculated with the general relations listed above.

Figure S2.5
Basic Case: Concentric Parallel Disks

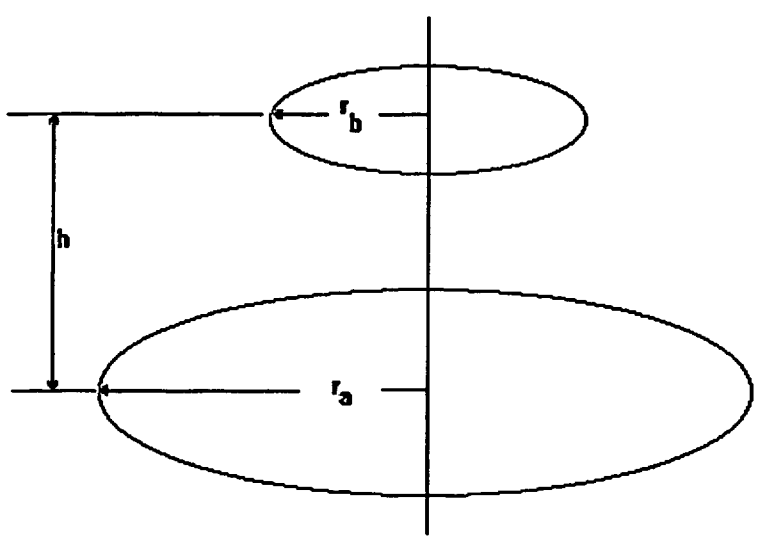

Figure S2.6
2x2 Disks

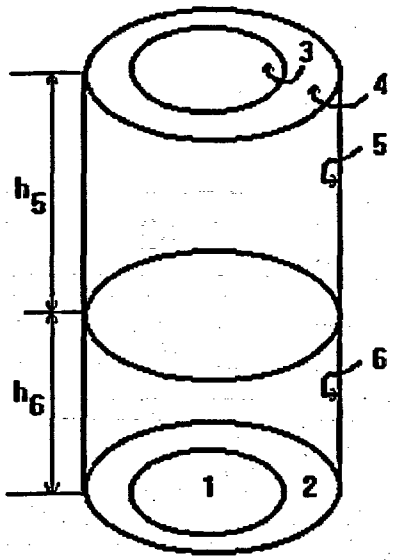

r_1 = outer radius of lower inner disk

$r_2 = r_4$ = outer radius of cylinder

r_3 = outer radius of upper inner disk

h_t = total height = $h_5 + h_6$

Table S2.2
Basic Shape Factors Applied to the 2 x 2 Disk

Shape Factor	Case Considered	r_a	r_b	h
$F_{1,2\text{-}3\text{-}4}$; $F_{1,2\text{-}5,6}$; $F_{3,4\text{-}1,2}$; $F_{3,4\text{-}5,6}$; $F_{5,6\text{-}1,2}$; $F_{5,6\text{-}3,4}$; $F_{5,6\text{-}5,6}$	Combined cylinder	r_2	r_4	h_5+h_6
$F_{3,4\text{-}5}$; $F_{5\text{-}3,4}$; $F_{5\text{-}5}$	Upper cylinder	r_2	r_4	h_5
$F_{1,2\text{-}6}$; $F_{6\text{-}1,2}$; $F_{6\text{-}6}$	Lower cylinder	r_2	r_4	h_6
$F_{1\text{-}3}$; $F_{3\text{-}1}$	Inner disks to each other	r_1	r_3	h_5+h_6
$F_{1,2\text{-}3}$; $F_{3\text{-}1,2}$; $F_{3\text{-}5,6}$; $F_{5,6\text{-}3}$	Entire lower disk to inner upper disk	r_2	r_3	h_5+h_6
$F_{1\text{-}3,4}$; $F_{3,4\text{-}1}$; $F_{1\text{-}5,6}$; $F_{5,6\text{-}1}$	Inner lower disk to entire upper disk	r_1	r_4	h_5+h_6
$F_{1\text{-}6}$; $F_{6\text{-}1}$	Lower cylinder	r_1	r_2	h_6
$F_{3\text{-}5}$; $F_{5\text{-}3}$	Upper outer cylinder	r_2	r_3	h_5

It is useful to consider a numerical example. Consider the case $r_1 = 1$, $r_2 = 3$, $r_3 = 2$, $r_4 = 3$, $h_5 = 1$ and $h_6 = 2$. Figure S2.7 shows the results calculated for the cases in Table S2.2. Figure S2.8 shows how these cases were manipulated to yield the matrix of shape factors for this configuration.

Figure S2.7
Calculated Basic Shape Factors (2x2 disk)

GENERAL CASE FOR 2x2 PARALLEL DISKS WITH r4 = r2

r1 =	1.0000	h5 =	1.0000
r2 =	3.0000	h6 =	2.0000
r3 =	2.0000		
r4=r2=	3.0000	ht =	3.0000

THIS ENTIRE PAGE IS PROTECTED

Ph means that this is a phantom shape factor

Combined cylinder (r2,r4,ht)					
Ra = r2/ht=	1.0000	A1,2 =	28.2743	F1,2-3,4=	0.3820
Rb= r4/ht =	1.0000	A3,4 =	28.2743	F1,2-5,6=	0.6180
X =	3.0000	A5,6 =	56.5487	F3,4-1,2=	0.3820
				F3,4-5,6=	0.6180
				F5,6-1,2=	0.3090
				F5,6-3,4=	0.3090
				F5,6-5,6=	0.3820

Upper cylinder (r2,r4,h5)					
a = r2/h5=	3.0000	A1,2 =	28.2743	PhF1,2-3,4=	0.7176
b= r4/h5 =	3.0000	PhA3,4 =	28.2743	PhF1,2-5=	0.2824
X =	2.1111	A5 =	18.8496	PhF3,4-1,2=	0.7176
				F3,4-5=	0.2824
				PhF5-1,2=	0.4238
				F5-3,4=	0.4238
				F5-5=	0.1529

Lower cylinder (r2,r4,h6)					
a = r2/h6=	1.5000	PhA1,2 =	28.2743	PhF1,2-3,4=	0.5195
b= r4/h6 =	1.5000	A3,4 =	28.2743	F1,2-6=	0.4805
X =	2.4444	A6 =	37.6991	PhF3,4-1,2=	0.5195
				PhF3,4-6=	0.4805
				F6-1,2=	0.3604
				PhF6-3,4=	0.3604
				F6-6=	0.2792

Inner Disks (r1,r3,ht)					
Ra = r1/ht=	0.3333	A1 =	3.1416	F1-3=	0.2918
Rb= r3/ht =	0.6667	A3 =	12.5664	F3-1=	0.0729
X =	14.0000				

Lower-Inner Upper Disk(r2,r3,ht)					
Ra = r2/ht=	1.0000	A1,2 =	28.2743	F1,2-3=	0.1978
Rb= r3/ht =	0.6667	A3 =	12.5664	F3-1,2=	0.4451
X =	2.4444	A5,6=	56.54867	F3-5,6=	0.5549
				F5,6-3=	0.1233

Inner Lower-Upper Disk(r1,r4,ht)					
Ra = r1/ht=	0.3333	A1 =	3.1416	F1-3,4=	0.4861
Rb= r4/ht =	1.0000	A3,4 =	28.2743	F3,4-1=	0.0540
X =	19.0000	A5,6=	56.54867	F1-5,6=	0.5139
				F5,6-1=	0.0285

Lower Outer Cylinder(r1,r4,h6)					
Ra = r1/h6=	0.5000	A1 =	3.1416	PhF1-3,4=	0.6754
Rb= r4/h6 =	1.5000	A6 =	37.6991	F1-6=	0.3246
X =	14.0000			F6-1=	0.0270

Upper Outer Cylinder(r2,r3,h5)					
Ra = r2/h5=	3.0000	A1,2 =	28.2743	PhF1,2-3=	0.3772
Rb= r3/h5 =	2.0000	A5 =	18.8496	PhF3-1,2=	0.8488
X =	1.5556	A3 =	12.56637	F3-5=	0.1514
				F5-3=	0.1009

Figure S2.8
Matrix of Shape Factors for the 2x2 Disk

SUMMARY OF SHAPE FACTORS:

r1 =	1	h5 =	1	A1=	3.1416
r2 =	1	h6 =	2	A2=	25.1327
r3 =	2			A3=	12.5664
r4=r2=	3	ht =	3	A4=	15.7080

F1- 1 =	0.000	F2- 1 =	0.000	F1,2- 1 =	0.000
F1- 2 =	0.000	F2- 2 =	0.000	F1,2- 2 =	0.000
F1- 3 =	0.292	F2- 3 = **	0.186	F1,2- 3 =	0.198
F1- 4 =	0.194	F2- 4 = **	0.183	F1,2- 4 =	0.184
F1- 5 =	0.189	F2- 5 = **	0.131	F1,2- 5 =	0.138
F1- 6 =	0.325	F2- 6 = **	0.500	F1,2- 6 =	0.481
F1- 1,2 =	0.000	F2- 1,2 =	0.000	F1,2- 1,2 =	0.000
F1- 3,4 =	0.486	F2- 3,4 =	0.369	F1,2- 3,4 =	0.382
F1- 5,6 =	0.514	F2- 5,6 =	0.631	F1,2- 5,6 =	0.618
	2.000		2.000		2.000
F3- 1 =	0.073	F4- 1 =	0.039	F3,4- 1 =	0.054
F3- 2 =	0.372	F4- 2 =	0.293	F3,4- 2 =	0.328
F3- 3 =	0.000	F4- 3 =	0.000	F3,4- 3 =	0.000
F3- 4 =	0.000	F4- 4 =	0.000	F3,4- 4 =	0.000
F3- 5 =	0.151	F4- 5 = **	0.387	F3,4- 5 =	0.282
F3- 6 =	0.403	F4- 6 = **	0.281	F3,4- 6 =	0.336
F3- 1,2 =	0.445	F4- 1,2 =	0.331	F3,4- 1,2 =	0.382
F3- 3,4 =	0.000	F4- 3,4 =	0.000	F3,4- 3,4 =	0.000
F3- 5,6 =	0.555	F4- 5,6 =	0.669	F3,4- 5,6 =	0.618
	2.000		2.000		2.000
F5- 1 =	0.032	F6- 1 =	0.027	F5,6- 1 =	0.029
F5- 2 =	0.176	F6- 2 =	0.333	F5,6- 2 =	0.280
F5- 3 =	0.101	F6- 3 =	0.134	F5,6- 3 =	0.123
F5- 4 =	0.323	F6- 4 =	0.117	F5,6- 4 =	0.186
F5- 5 =	0.153	F6- 5 =	0.109	F5,6- 5 = **	0.123
F5- 6 =	0.217	F6- 6 =	0.279	F5,6- 6 = **	0.259
F5- 1,2 =	0.206	F6- 1,2 =	0.380	F5,6- 1,2 =	0.309
F5- 3,4 =	0.424	F6- 3,4 =	0.252	F5,6- 3,4 =	0.309
F5- 5,6 =	0.370	F6- 5,6 =	0.388	F5,6- 5,6 =	0.382
	2.000		2.000		2.000

means this is taken directly from page A of this spreadsheet

means that subtraction used to calculate this shape factor based on

means that reciprocity was used based on

no features means that closure was used based on other information in that column

** means that closure was based on that row

S2.3.0 SHAPE FACTORS FOR 6 SIDED ENCLOSURES

The general case for the internal surfaces of a cube is shown in Figure S2.9. The cases that yield basic shape factor data are shown in Figures S2.10 and S2.11. The equations shown in these figures combined with shape factor algebra yield the relevant results.

Figure S2.9
Shape Factor Geometry for Enclosures

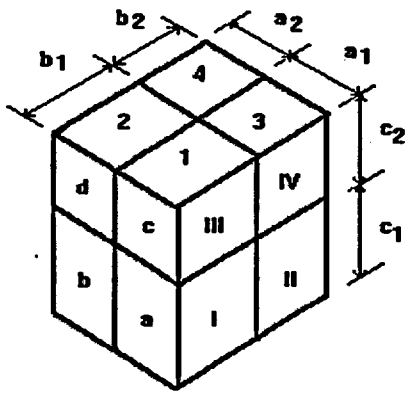

Opposite surfaces are denoted'. For example, surface 1' is opposite surface 1.

Figure S2.10
Shape Factor for Parallel Plates

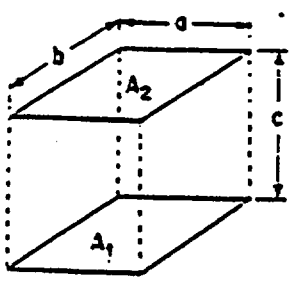

Identical, parallel, directly opposed rectangles.

$X = \frac{a}{c} \qquad Y = \frac{b}{c}$

$$F_{1-2} = \frac{2}{\pi X Y}\left\{\ln\left[\frac{(1+X^2)(1+Y^2)}{1+X^2+Y^2}\right]^{\frac{1}{2}} + X\sqrt{1+Y^2}\tan^{-1}\frac{X}{\sqrt{1+Y^2}} + Y\sqrt{1+X^2}\tan^{-1}\frac{Y}{\sqrt{1+X^2}} - X\tan^{-1}X - Y\tan^{-1}Y\right\}$$

Figure S2.11
Shape Factor for Perpendicular Attached Plates

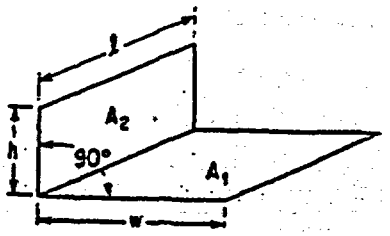

Two finite rectangles of same length, having one common edge, and at an angle of 90° to each other.

$$H = \frac{h}{l} \qquad W = \frac{w}{l}$$

$$F_{1-2} = \frac{1}{\pi W}\left(W\tan^{-1}\frac{1}{W} + H\tan^{-1}\frac{1}{H} - \sqrt{H^2+W^2}\tan^{-1}\frac{1}{\sqrt{H^2+W^2}}\right.$$
$$\left. + \tfrac{1}{4}\ln\left\{\left[\frac{(1+W^2)(1+H^2)}{(1+W^2+H^2)}\right]\left[\frac{W^2(1+W^2+H^2)}{(1+W^2)(W^2+H^2)}\right]^{W^2}\left[\frac{H^2(1+H^2+W^2)}{(1+H^2)(H^2+W^2)}\right]^{H^2}\right\}\right)$$

Figure S2.12
Typical Calculations (Enclosures)

Shape factor calculations for the inner surfaces of an enclosed box

Dimensions:	a1+a2=	0.183	b1+b2=	0.074	c1+c2=	0.108			
	a2=	0.147	b2=	0.000	c2=	0.065			
	a1=	0.036	b1=	0.074	c1=	0.043			
Areas:	A1=	0.00266	A2=	0.01088	A3=	0.00000	A4=	0.00001	
	A12=	0.01354	A13=	0.00267	A24=	0.01089	A34=	0.00002	
	Aa=	0.00155	Ab=	0.00832	Ac=	0.00234	Ad=	0.00956	
	Aac=	0.00389	Abd=	0.01588	Acd=	0.01190	Aab=	0.00787	
			Aabcd=	0.019784	A1234=	0.013560			

F1-1'=	0.0616	F2-1'=	0.0272	F3-1'=	0.0548	F4-1'=	0.0248	F12-3'4'=	0.0002
F1-2'=	0.1110	F2-2'=	0.1818	F3-2'=	0.1012	F4-2'=	0.1634	F13-2'4'=	0.1111
F1-3'=	0.0001	F2-3'=	0.0000	F3-3'=	0.0001	F4-3'=	0.0000	F34-1'2'=	0.1818
F1-4'=	0.0001	F2-4'=	0.0002	F3-4'=	0.0002	F4-4'=	0.0003	F24-1'3'=	0.0272
F1-a=	0.0165	F2-a=	0.0082	F3-a=	0.0183	F4-a=	0.0082	Fd-4=	0.0001
F1-b=	0.0253	F2-b=	0.0451	F3-b=	0.0333	F4-b=	0.0542	Fc-1=	0.1619
F1-c=	0.1422	F2-c=	0.0157	F3-c=	0.0318	F4-c=	0.0106	Fc-13=	0.1620
F1-d=	0.0642	F2-d=	0.2274	F3-d=	0.0434	F4-d=	0.0828	Fc-3=	0.0000
F1-a'=	0.0165	F2-a'=	0.0082	F3-a'=	0.0000	F4-a'=	0.0000		
F1-b'=	0.0253	F2-b'=	0.0452	F3-b'=	0.0001	F4-b'=	0.0001		
F1-c'=	0.1416	F2-c'=	0.0157	F3-c'=	0.4967	F4-c'=	0.0004		
F1-d'=	0.0642	F2-d'=	0.2268	F3-d'=	0.0015	F4-d'=	0.4989		
F1-i=	0.0217	F2-i=	0.0241	F3-i=	0.0184	F4-i=	0.0218		
F1-ii=	0.0000	F2-ii=	0.0000	F3-ii=	0.0000	F4-ii=	0.0000		
F1-iii=	0.2887	F2-iii=	0.0415	F3-iii=	0.1775	F4-iii=	0.0343		
F1-iv=	0.0002	F2-iv=	0.0000	F3-iv=	0.0032	F4-iv=	0.0001		
F1-i'=	0.0114	F2-i'=	0.0266	F3-i'=	0.0108	F4-i'=	0.0236		
F1-ii'=	0.0000	F2-ii'=	0.0000	F3-ii'=	0.0000	F4-ii'=	0.0000		
F1-iii'=	0.0092	F2-iii'=	0.1100	F3-iii'=	0.0087	F4-iii'=	0.0756		
F1-iv'=	0.0000	F2-iv'=	0.0001	F3-iv'=	0.0000	F4-iv'=	0.0009		
SUM=	1.0000	SUM=	1.0000	SUM=	1.0000	SUM=	1.0000		

Fa-1=	0.0283	Fb-1=	0.0106	Fc-1=	0.1619	Fd-1=	0.0179
Fa-2=	0.0435	Fb-2=	0.0776	Fc-2=	0.0731	Fd-2=	0.2589
Fa-3=	0.0000	Fb-3=	0.0000	Fc-3=	0.0000	Fd-3=	0.0000
Fa-4=	0.0001	Fb-4=	0.0001	Fc-4=	0.0001	Fd-4=	0.0001
Fa-1'=	0.2117	Fb-1'=	0.0185	Fc-1'=	0.0407	Fd-1'=	0.0127
Fa-2'=	0.0756	Fb-2'=	0.3150	Fc-2'=	0.6518	Fd-2'=	0.1019
Fa-3'=	0.0000	Fb-3'=	0.0000	Fc-3'=	0.0000	Fd-3'=	0.0000
Fa-4'=	0.0001	Fb-4'=	0.0001	Fc-4'=	0.0001	Fd-4'=	0.0001
Fa-a=	0.0759	Fb-a=	0.0226	Fc-a=	0.0398	Fd-a=	0.0138
Fa-b=	0.0921	Fb-b=	0.1875	Fc-b=	0.0562	Fd-b=	0.1050
Fa-c=	0.0601	Fb-c=	0.0208	Fc-c=	0.1042	Fd-c=	0.0317
Fa-d=	0.0850	Fb-d=	0.1587	Fc-d=	0.1294	Fd-d=	0.2600
Fa-i=	0.2503	Fb-i=	0.0315	Fc-i=	0.0407	Fd-i=	0.0174
Fa-ii=	0.0000	Fb-ii=	0.0000	Fc-ii=	0.0000	Fd-ii=	0.0000
Fa-iii=	0.0616	Fb-iii=	0.0263	Fc-iii=	0.2859	Fd-iii=	0.0434
Fa-iv=	0.0000	Fb-iv=	0.0000	Fc-iv=	0.0001	Fd-iv=	0.0001
Fa-i'=	0.0069	Fb-i'=	0.0911	Fc-i'=	0.0058	Fd-i'=	0.0260
Fa-ii'=	0.0000	Fb-ii'=	0.0000	Fc-ii'=	0.0000	Fd-ii'=	0.0000
Fa-iii'=	0.0087	Fb-iii'=	0.0393	Fc-iii'=	0.0102	Fd-iii'=	0.1109
Fa-iv'=	0.0000	Fb-iv'=	0.0000	Fc-iv'=	0.0000	Fd-iv'=	0.0001
SUM=	1.0000	SUM=	1.0000	SUM=	1.0000	SUM=	1.0000

Fi-1=	0.0182	Fii-1=	0.0154	Fiii-1=	0.1599	Fiv-1=	0.0983
Fi-2=	0.0824	Fii-2=	0.0745	Fiii-2=	0.0939	Fiv-2=	0.0776
Fi-3=	0.0000	Fii-3=	0.0000	Fiii-3=	0.0001	Fiv-3=	0.0018
Fi-4=	0.0001	Fii-4=	0.0001	Fiii-4=	0.0001	Fiv-4=	0.0002
Fi-1'=	0.2164	Fii-1'=	0.1292	Fiii-1'=	0.0288	Fiv-1'=	0.0230
Fi-2'=	0.0851	Fii-2'=	0.0685	Fiii-2'=	0.0921	Fiv-2'=	0.0816
Fi-3'=	0.0002	Fii-3'=	0.0026	Fiii-3'=	0.0000	Fiv-3'=	0.0001
Fi-4'=	0.0001	Fii-4'=	0.0002	Fiii-4'=	0.0001	Fiv-4'=	0.0001
Fi-a=	0.1218	Fii-a=	0.0161	Fiii-a=	0.0198	Fiv-a=	0.0087
Fi-b=	0.0627	Fii-b=	0.0588	Fiii-b=	0.0346	Fiv-b=	0.0405
Fi-c=	0.0300	Fii-c=	0.0131	Fiii-c=	0.1391	Fiv-c=	0.0223
Fi-d=	0.0523	Fii-d=	0.0612	Fiii-d=	0.0863	Fiv-d=	0.0842
Fi-a'=	0.1211	Fii-a'=	0.4970	Fiii-a'=	0.0198	Fiv-a'=	0.0008
Fi-b'=	0.0627	Fii-b'=	0.0002	Fiii-b'=	0.0346	Fiv-b'=	0.0001
Fi-c'=	0.0300	Fii-c'=	0.0012	Fiii-c'=	0.1384	Fiv-c'=	0.4978
Fi-d'=	0.0524	Fii-d'=	0.0001	Fiii-d'=	0.0864	Fiv-d'=	0.0003
Fi-i'=	0.0282	Fii-i'=	0.0269	Fiii-i'=	0.0241	Fiv-i'=	0.0230
Fi-ii'=	0.0000	Fii-ii'=	0.0000	Fiii-ii'=	0.0000	Fiv-ii'=	0.0000
Fi-iii'=	0.0364	Fii-iii'=	0.0348	Fiii-iii'=	0.0418	Fiv-iii'=	0.0398
Fi-iv'=	0.0000	Fii-iv'=	0.0001	Fiii-iv'=	0.0001	Fiv-iv'=	0.0001
SUM=	1.0000	SUM=	1.0000	SUM=	1.0000	SUM=	1.0000

S2.5.0 RESULTS

The results of these calculations are summarized in Table S2.3.

Table S2.3
Nodal Areas and Shape Factors

Real Constant Set	Area (m^2/rad)	Shape Factor	From Node	To Node
100	0.00068	0.072	40	49
101	0.00068	0.056	40	55
102	0.00068	0.306	40	56
103	0.00068	0.250	40	57
104	0.00068	0.141	40	58
105	0.00068	0.084	40	59
106	0.00068	0.030	40	301
107	0.00068	0.034	40	400
108	0.00068	0.027	40	435
109	0.00571	0.115	41	49
110	0.00571	0.037	41	55
111	0.00571	0.249	41	56
112	0.00571	0.274	41	57
113	0.00571	0.167	41	58
114	0.00571	0.100	41	59
115	0.00571	0.003	41	301
116	0.00571	0.055	41	435
117	0.00523	0.145	35	49
118	0.00523	0.019	35	55
119	0.00523	0.169	35	56
120	0.00523	0.275	35	57
121	0.00523	0.123	35	58
122	0.00523	0.269	35	435
123	0.00370	0.071	435	49
124	0.00370	0.016	435	55
125	0.00370	0.115	435	56
126	0.00370	0.096	435	57
127	0.00370	0.051	435	58
128	0.00370	0.039	435	59
129	0.00370	0.017	435	301
130	0.00370	0.129	435	400
131	0.00980	0.015	49	55
132	0.00980	0.129	49	56
133	0.00980	0.169	49	57
134	0.00980	0.125	49	58
135	0.00980	0.075	49	59

Real Constant Set	Area (m^2/rad)	Shape Factor	From Node	To Node
136	0.00980	0.025	49	301
137	0.00980	0.124	49	400
138	0.01290	0.035	50	45
139	0.01290	0.049	50	54
140	0.01290	0.003	50	55
141	0.01290	0.039	50	56
142	0.01290	0.122	50	57
143	0.01290	0.173	50	58
144	0.01290	0.164	50	59
145	0.01290	0.059	50	301
146	0.01290	0.099	50	400
147	0.00550	0.289	445	45
148	0.00550	0.113	445	54
149	0.00550	0.009	445	58
150	0.00550	0.082	445	59
151	0.00550	0.052	445	301
152	0.00550	0.028	445	400
153	0.00590	0.103	45	58
154	0.00590	0.200	45	59
155	0.00590	0.084	45	301
156	0.00590	0.039	45	400
157	0.01610	0.024	54	57
158	0.01610	0.092	54	58
159	0.01610	0.056	54	59
160	0.01610	0.044	54	301
161	0.01610	0.089	54	400
162	0.01610	0.038	54	306
163	0.00980	0.034	713	710
164	0.00980	0.018	713	711
165	0.00980	0.030	713	59
166	0.00980	0.043	713	58
167	0.00980	0.388	713	54
168	0.00980	0.054	713	728
169	0.00980	0.023	713	715
170	0.00980	0.058	713	301
171	0.00980	0.005	713	727
172	0.00980	0.005	713	709
173	0.00980	0.011	713	400
174	0.02090	0.061	712	713
175	0.02090	0.037	712	710
176	0.02090	0.016	712	711
177	0.02090	0.032	712	59
178	0.02090	0.069	712	58

Real Constant Set	Area (m^2/rad)	Shape Factor	From Node	To Node
179	0.02090	0.209	712	54
180	0.02090	0.077	712	728
181	0.02090	0.077	712	301
182	0.02090	0.005	712	727
183	0.02090	0.007	712	709
184	0.02090	0.053	712	715
185	0.02090	0.012	712	400
186	0.02090	0.002	712	306
187	0.07660	0.029	714	58
188	0.07660	0.010	714	59
189	0.07660	0.011	714	713
190	0.07660	0.042	714	712
191	0.07660	0.051	714	727
192	0.07660	0.007	714	306
193	0.07660	0.010	714	264
194	0.07660	0.005	714	711
195	0.07660	0.016	714	710
196	0.07660	0.125	714	728
197	0.07660	0.020	714	708
198	0.07660	0.036	714	709
199	0.07660	0.030	714	400
200	0.07660	0.081	714	301
201	0.07660	0.041	714	54
202	0.06090	0.060	715	706
203	0.06090	0.040	715	707
204	0.06090	0.035	715	708
205	0.06090	0.033	715	727
206	0.06090	0.017	715	709
207	0.06090	0.030	715	260
208	0.06090	0.017	715	262
209	0.06090	0.011	715	264
210	0.06090	0.013	715	306
211	0.06090	0.158	715	714
212	0.06090	0.043	715	728
213	0.06090	0.063	715	400
214	0.09330	0.014	716	258
215	0.09330	0.021	716	260
216	0.09330	0.019	716	262
217	0.09330	0.014	716	264
218	0.09330	0.012	716	306
219	0.09330	0.027	716	705
220	0.09330	0.038	716	706
221	0.09330	0.062	716	707

Real Constant Set	Area (m^2/rad)	Shape Factor	From Node	To Node
222	0.09330	0.031	716	708
223	0.09330	0.018	716	727
224	0.09330	0.054	716	400
225	0.09330	0.105	716	715
226	0.09330	0.042	716	714
227	0.08690	0.023	717	230
228	0.08690	0.013	717	258
229	0.08690	0.030	717	260
230	0.08690	0.029	717	262
231	0.08690	0.015	717	264
232	0.08690	0.004	717	306
233	0.08690	0.045	717	704
234	0.08690	0.032	717	705
235	0.08690	0.069	717	706
236	0.08690	0.047	717	707
237	0.08690	0.016	717	708
238	0.08690	0.007	717	709
239	0.08690	0.111	717	716
240	0.08690	0.014	717	715
241	0.08690	0.029	717	400
242	0.05590	0.025	718	707
243	0.05590	0.050	718	706
244	0.05590	0.068	718	705
245	0.05590	0.079	718	704
246	0.05590	0.064	718	230
247	0.05590	0.057	718	258
248	0.05590	0.048	718	260
249	0.05590	0.118	718	717
250	0.05590	0.029	718	400
251	0.12050	0.051	114	718
252	0.12050	0.008	114	717
253	0.12050	0.013	114	706
254	0.12050	0.025	114	705
255	0.12050	0.110	114	704
256	0.12050	0.030	114	703
257	0.12050	0.003	114	222
258	0.12050	0.004	114	226
259	0.12050	0.039	114	228
260	0.12050	0.152	114	230
261	0.12050	0.019	114	258
262	0.12050	0.023	114	260
263	0.12050	0.015	114	400
264	0.12050	0.051	114	187

Real Constant Set	Area (m^2/rad)	Shape Factor	From Node	To Node
265	0.17440	0.028	187	704
266	0.17440	0.138	187	703
267	0.17440	0.030	187	702
268	0.17440	0.004	187	224
269	0.17440	0.045	187	226
270	0.17440	0.184	187	228
271	0.17440	0.047	187	230
272	0.17440	0.002	187	258
273	0.17440	0.007	187	400
274	0.17440	0.043	187	185
275	0.19010	0.028	185	703
276	0.19010	0.142	185	702
277	0.19010	0.028	185	701
278	0.19010	0.003	185	222
279	0.19010	0.042	185	224
280	0.19010	0.191	185	226
281	0.19010	0.042	185	228
282	0.19010	0.001	185	400
283	0.16340	0.047	183	226
284	0.16340	0.054	183	185
285	0.16340	0.034	183	702
286	0.16340	0.003	183	364
287	0.16340	0.174	183	224
288	0.16340	0.040	183	737
289	0.16340	0.028	183	736
290	0.16340	0.007	183	700
291	0.16340	0.007	183	222
292	0.16340	0.129	183	701
293	0.04850	0.092	164	224
294	0.04850	0.070	164	701
295	0.04850	0.130	164	183
296	0.04850	0.005	164	345
297	0.04850	0.004	164	344
298	0.04850	0.022	164	700
299	0.04850	0.003	164	364
300	0.04850	0.029	164	222
301	0.04850	0.137	164	737
302	0.04850	0.102	164	736
303	0.28700	0.005	731	183
304	0.28700	0.005	731	164
305	0.28700	0.026	731	737
306	0.28700	0.015	731	736
307	0.28700	0.033	731	364

Real Constant Set	Area (m^2/rad)	Shape Factor	From Node	To Node
308	0.28700	0.082	731	222
309	0.28700	0.019	731	400
310	0.28700	0.060	731	700
311	0.28700	0.005	731	321
312	0.28700	0.021	731	345
313	0.28700	0.113	731	344
314	0.28700	0.045	731	350
315	0.28700	0.024	731	730
316	0.05510	0.091	730	222
317	0.05510	0.007	730	364
318	0.05510	0.047	730	700
319	0.05510	0.005	730	344
320	0.05510	0.005	730	345
321	0.05510	0.004	730	400
322	0.05510	0.076	730	164
323	0.05510	0.088	730	736
324	0.05510	0.197	730	737
325	0.05510	0.030	730	183
326	0.05510	0.020	730	701
327	0.05510	0.036	730	224
328	0.13000	0.006	732	400
329	0.13000	0.182	732	350
330	0.13000	0.071	732	344
331	0.13000	0.018	732	321
332	0.13000	0.005	732	364
333	0.13000	0.002	732	700
334	0.13000	0.003	732	345
335	0.13000	0.118	732	731
336	0.04880	0.049	736	701
337	0.04880	0.038	736	224
338	0.04880	0.004	736	702
339	0.04880	0.001	736	226
340	0.04880	0.308	736	737
341	0.04880	0.037	736	222
342	0.04880	0.001	736	364
343	0.08920	0.029	210	344
344	0.08920	0.064	210	350
345	0.08920	0.008	210	732
346	0.08920	0.278	210	321
347	0.08920	0.002	210	731
348	0.08920	0.085	210	211
349	0.09190	0.081	211	321
350	0.09190	0.176	211	350

Real Constant Set	Area (m^2/rad)	Shape Factor	From Node	To Node
351	0.09190	0.017	211	320
352	0.09190	0.130	211	732
353	0.09190	0.014	211	731
354	0.09190	0.020	211	344
355	0.09190	0.003	211	364
356	0.09190	0.003	211	400
357	0.01370	0.061	209	210
358	0.01370	0.454	209	320
359	0.01370	0.207	209	321
360	0.01370	0.004	209	319
361	0.01370	0.005	209	208
362	0.00032	0.056	208	319
363	0.01830	0.006	320	208
364	0.01830	0.106	320	321
365	0.01830	0.169	320	210
366	0.01830	0.008	320	319
367	0.08010	0.063	321	350
368	0.08010	0.005	321	344
369	0.14330	0.065	350	344
370	0.14330	0.002	350	345
371	0.14330	0.003	350	400
372	0.14330	0.003	350	364
373	0.14330	0.006	350	222
374	0.14330	0.004	350	700
375	0.14160	0.043	344	345
376	0.14160	0.057	344	400
377	0.14160	0.028	344	364
378	0.14160	0.020	344	222
379	0.14160	0.023	344	700
380	0.14160	0.005	344	736
381	0.14160	0.003	344	737
382	0.03700	0.295	345	400
383	0.03700	0.044	345	364
384	0.03700	0.023	345	222
385	0.03700	0.059	345	700
386	0.05790	0.248	700	222
387	0.05790	0.106	700	364
388	0.05790	0.027	700	736
389	0.05790	0.024	700	737
390	0.05790	0.005	700	701
391	0.05790	0.013	700	224
392	0.05790	0.030	700	400
393	0.09260	0.002	701	222

Real Constant Set	Area (m^2/rad)	Shape Factor	From Node	To Node
394	0.09260	0.312	701	224
395	0.09260	0.042	701	702
396	0.09260	0.027	701	226
397	0.09260	0.003	701	703
398	0.09260	0.001	701	228
399	0.09260	0.025	701	737
400	0.10760	0.023	702	224
401	0.10760	0.310	702	226
402	0.10760	0.025	702	228
403	0.10760	0.037	702	703
404	0.09870	0.025	703	226
405	0.09870	0.038	703	704
406	0.09870	0.005	703	705
407	0.09870	0.306	703	228
408	0.09870	0.024	703	230
409	0.06820	0.035	704	228
410	0.06820	0.031	704	705
411	0.06820	0.299	704	230
412	0.06820	0.022	704	258
413	0.06820	0.011	704	706
414	0.06820	0.006	704	707
415	0.03980	0.064	705	230
416	0.03980	0.101	705	706
417	0.03980	0.016	705	707
418	0.03980	0.011	705	708
419	0.03980	0.182	705	258
420	0.03980	0.052	705	260
421	0.03980	0.005	705	262
422	0.07700	0.040	706	258
423	0.07700	0.011	706	230
424	0.07700	0.096	706	707
425	0.07700	0.170	706	260
426	0.07700	0.035	706	262
427	0.07700	0.113	706	708
428	0.07700	0.005	706	709
429	0.08540	0.046	707	260
430	0.08540	0.128	707	708
431	0.08540	0.010	707	709
432	0.08540	0.005	707	258
433	0.08540	0.140	707	262
434	0.08540	0.031	707	264
435	0.08540	0.006	707	306
436	0.08540	0.013	707	400

Real Constant Set	Area (m^2/rad)	Shape Factor	From Node	To Node
437	0.04000	0.019	262	400
438	0.05360	0.031	708	400
439	0.05360	0.015	708	301
440	0.05360	0.044	708	306
441	0.05360	0.111	708	264
442	0.05360	0.049	708	262
443	0.05360	0.007	708	260
444	0.07750	0.005	709	262
445	0.07750	0.084	709	708
446	0.07750	0.010	709	264
447	0.07750	0.453	709	400
448	0.07750	0.118	709	727
449	0.02310	0.039	264	400
450	0.02310	0.028	264	301
451	0.03380	0.129	306	709
452	0.03380	0.028	306	301
453	0.03380	0.091	306	400
454	0.01580	0.002	710	306
455	0.01580	0.176	710	400
456	0.01580	0.003	710	59
457	0.01580	0.051	710	58
458	0.01580	0.163	710	54
459	0.01580	0.106	710	50
460	0.01580	0.123	710	728
461	0.01580	0.062	710	727
462	0.00760	0.061	711	710
463	0.00760	0.004	711	59
464	0.00760	0.006	711	301
465	0.00760	0.172	711	400
466	0.00760	0.227	711	54
467	0.00760	0.037	711	58
468	0.00760	0.193	711	50
469	0.00760	0.082	711	728
470	0.00760	0.008	711	727
471	0.00760	0.005	711	709
472	0.07330	0.024	727	301
473	0.07330	0.081	727	400
474	0.07330	0.033	727	264
475	0.07330	0.105	727	708
476	0.07330	0.155	727	306
477	0.07750	0.003	728	59
478	0.07750	0.007	728	301
479	0.07750	0.034	728	727

Real Constant Set	Area (m^2/rad)	Shape Factor	From Node	To Node
480	0.07750	0.054	728	709
481	0.07750	0.303	728	400
482	0.07750	0.016	728	708
483	0.07750	0.008	728	264
484	0.07750	0.006	728	306
485	0.07750	0.087	728	50
486	0.07750	0.016	728	54
487	0.00070	0.039	55	400
488	0.00570	0.042	56	400
489	0.01130	0.052	57	400
490	0.01610	0.085	58	400
491	0.02330	0.189	59	400
492	0.01550	0.420	301	400
497	0.00610	1.000	35	435
498	0.00740	1.000	45	445
595	0.01410	1.000	20	94
596	0.01460	1.000	28	100
597	0.02130	1.000	30	101
598	0.01390	1.000	32	102

This page left blank intentionally.

SUB-APPENDIX 3.6.4.3
DERIVATION OF HEAT TRANSFER COEFFICIENTS

The heat transfer coefficients used in the analysis were chosen to match the empirical results. This appendix demonstrates that the values used are reasonable in comparison with approximate relations for air. It also calculates bounding values for the heat transfer coefficient for a cylinder in a fire environment.

For all steady state calculations, the temperatures of the applicable surfaces are taken from the file SS360.TEM, which is found in Subappendix 4.

HEATED SURFACES FACING UPWARD

There are three surfaces that fall into this category. They are the top surface of the upper fireshield, the top surface of the top plug and the top surface of the lower fireshield.

For heated surfaces facing upward, Holman suggests the following simplified relation for the turbulent flow of air.[10]

$$h = 1.43 \Delta T^{0.333}$$

where: h = the heat transfer coefficient ($W/m^2 {}^\circ C$)
ΔT = temperature difference in $^\circ C$

Substituting in the appropriate temperatures from the results of the steady state calculations yields the following results:

Location	ΔT ($^\circ C$)	h ($W/m^2 {}^\circ C$)
Upper surface of top fireshield	13	3.4
Top surface of the top plug	111	6.9

HEATED SURFACES FACING DOWNWARD

For a heated horizontal plate facing downward, Holman suggests:[10]

$$h = 0.61 \left(\frac{\Delta T}{L^2}\right)^{0.2}$$

Substituting in the appropriate temperatures from the results of the steady state calculations yields the following results:

Location	L (m)	ΔT ($^\circ C$)	h ($W/m^2 {}^\circ C$)
Bottom surface of the bottom fireshield	1.12	21	1

CYLINDRICAL SURFACES

The outer surface of the main body and the outer surface of the radial fireshield are the only cylindrical surfaces on the package. It is necessary to calculate the heat transfer coefficient for both surfaces using the assumption that they are unfinned. The case of an unfinned vertical cylinder is considered by Holman [10]. For this case, the heat transfer coefficient is approximated by:

$$h = 0.95(\Delta T)^{0.333}$$

Substituting in the appropriate temperatures from the results of the steady state calculations yields the following results:

Location	ΔT (°C)	h (W/m²°C)
Outer surface of radial fireshield	7	1.8

FIN ENCLOSURE

The flow of air in the fin enclosure can be approximated by a rectangular duct with dimensions of 4.25 in (0.108 m)x 3.5 in (0.089 m). The hydraulic diameter of this duct, d, is given by:

$$d = \frac{4*AREA}{PERIMETER} = \frac{4(0.108)(0.089)}{2(0.0108+0.089)} = 0.1 \text{ m}$$

For the following calculations, the properties of air are taken at 300 K from reference [10]. The relevant property values are:

Property	Value
Specific Heat, C_p	1006 J/kgK
Dynamic Viscosity, μ	1.85E-5 kg/ms
Thermal Conductibity, k	0.026 W/mK
Prandtl number, Pr	0.708
density, ρ	1.18 kg/m³

During the test loading of the F-294, the air temperature rise was found to be 21 °C. (See Section 3 of Appendix 3.6.4.) If it is assumed that all of the decay heat from the flask is divided equally between the 36 fin enclosures, each enclosure would dissipate:

$$Q = \frac{360 \text{ kCi} * 15.4 \text{W/kCi}}{36} = 154 \text{ W per enclosure}$$

which is equal to the heat gained by the air. Thus, the mass flow of air is:

$$m = \frac{Q}{C_p \Delta T} = \frac{154}{1006(21)} = 0.0073 \text{ kg/s}$$

From which the velocity of 0.64 m/s can be calculated.

This leads to a Reynolds number of:

$$Re = \frac{\rho u d}{\mu} = \frac{1.18(0.64)(0.1)}{1.85E\text{-}5} = 4100$$

which indicates that the flow is turbulent.

For smooth pipes, Holman suggests the following relationship for the Nusselt number, Nu:[10]

$$Nu = hd/k = 0.023\ Re^{0.8}Pr^{0.4} = 0.023(4100)^{0.8}(.708)^{0.4} = 15.6$$

From which the value of the heat transfer coefficient can be calculated:

$$h = 0.025(15.6)/0.1 = 4\ W/m^{2o}C$$

For a rough tube, Holman quotes the following relationship for the Stanton Number, St:[10]

$$St = \frac{h}{\rho C_p u} = \frac{f}{8Pr^{0.667}}$$

where f is the friction factor. Assuming a relative roughness of 0.05, leads to a value of 0.075 for the friction factor [10]. Thus, the value of the heat transfer coefficent for a rough pipe is:

$$h = \frac{\rho C_p u f}{8Pr^{0.667}} = \frac{0.075(1.2)(1006)(0.64)}{8(0.0708)^{0.667}} = 9.1\ W/m^{2o}C$$

A value of 6.5 $W/m^{2o}C$ is used in the analysis, and is reasonable because it is bounded by these two extreme values for pipes.

HEAT TRANSFER COEFFICIENT DURING THE FIRE TEST

The F-294 can be approximated as a cylinder. For the purposes of modelling the heat transfer coefficients, it is conservatively assumed that the heat transfer coefficients for the inner shielding vessel are the same as the values for the outer fireshield. The flow of the hot gases across the shielding vessel takes place at a velocity of 6.1 m/s (20 ft./s).

This assumption is extremely conservative as the fireshield and fins provide a barrier to the free flow of gases over the shielding vessel. However, since it is difficult to quantify this effect, it is assumed that they do not impede the flow of gas.

From Holman[10], the heat transfer coefficient takes the form:

$$h = k/d * C(ud/v)^n Pr^{0.333}$$

where: d is the diameter of the fireshield = 1.2 m
C,n are constants that depend on the Reynolds number (ud/v)
k = thermal conductivity of the fluid
v = kinematic viscosity of the fluid
Pr = Prandtl number for the fluid
u = free stream velocity

The property values of k,v and Pr are evaluated at the film temperature, which is defined as the mean of the wall and free stream fluid temperatures.

At the start of the fire, the wall temperature is 42 °C at the midheight of the shielding vessel. The film temperature is, therefore, 421 °C and, from Holman[10], the property values are k = 0.0520 W/m°C, ν = 6.5E-5 m^2/s and Pr =0.684. This yields a Reynolds number of about 100,000. At this value of Re, the constants C and n are 0.0266 and 0.805 respectively.[10] Substituting in the diameter of the outer fireshield (1.2 m) yields a heat transfer coefficient of:

$$h = \frac{1.2(0.0266)(6.1*1.2/6.5E\text{-}5)^{0.805}.685^{0.333}}{0.0520} = 11.5\ W/m^2{}^\circ C$$

A value of 12 W/m^2 °C is used in the analysis.

SUB-APPENDIX 3.6.4.4
COSMOS /M INPUT AND OUTPUT FILES

1.0 OVERVIEW

This sub-appendix includes all of the input files used in the analyses and includes the output files for the steady state cases. Each of the input files (*.INP) perform different tasks as describe in Table S4.1. In order to complete an analysis, the files are run in the order shown in Table S4.2.

Table S4.1
Input/Output File Names and Descriptions

INPUT FILES	Description	Page
F294GEOM.INP	Inputs geometry of the F294	69
GAPON.INP	Adds a contact resistance between lead and stainless steel	93
GAPOFF.INP	Removes contact resistance between lead and stainless steel	95
TESTBND.INP	Inputs boundary conditions for tested case (steady state)	96
360BND.INP	Inputs boundary conditions for regulatory conditions (steady state)	99
FIRE12.INP	Inputs boundary conditions for hypothetical accident conditions	102
INSOL8.INP	Applies insolation heat load	103
OUTPUT FILES		
SSTEST.TEM	Output of Validation Case	104
SS360.TEM	Output for 360 kCi case with regulatory ambient conditions and contact resistance	108
SS360SUN.TEM	Output for 360 kCi case with regulatory ambient conditions, conservative insolation heat load and contact resistance	112
360SUN2.TEM	Output for 360 kCi case with regulatory ambient conditions, realistic insolation heat load and contact resistance	116
UNBOND.TEM	Output for 360 kCi case with regulatory ambient conditions and no contact resistance	120

Table S4.2
Input Files for the Various Analyses

1.	Validation Case – No Contact Resistance
	294GEOM.INP
	TESTBND.INP
2.	Validation Case – with Contact Resistance
	294GEOM.INP
	GAPON.INP
	TESTBND.INP
3.	Steady State Analysis (360 kCi, with Contact Resistance)
	294GEOM.INP
	GAPON.INP
	360BND.INP
4.	Fire Test (360 kCi, Contact Resistance Removed at Start of Fire)
	294GEOM.INP
	GAPON.INP
	360BND.INP
	GAPOFF.INP
	FIRE12.INP
5.	Insolation Heat Load
	294GEOM.INP
	GAPON.INP
	360BND.INP
	INSOL8.INP

2.0 FILE 294GEOM.INP

```
TITLE,F294 geometry (FILE F294geom.INP)
C*  Element definitions
EGROUP,1,PLANE2D,0,1,1,0,0,0,0,
EGROUP,2,CLINK,0,0,0,0,0,0,0,
EGROUP,3,RLINK,0,0,0,0,0,0,0,
EGROUP,4,TRUSS2D,0,0,0,0,0,0,0,0,
c*  Real constants
RCONST,1,1,1,2,1.0,0.0,
C*  Areas for conduction links from plug to main body
RCONST,4,587,1,2,.0055,1
RCONST,4,588,1,2,.0099,1
RCONST,4,589,1,2,.0182,1
RCONST,4,590,1,2,.0213,1
RCONST,4,591,1,2,.0146,1
RCONST,4,592,1,2,.0141,1
C*  Areas for conduction links from crack shield to plug
RCONST,4,593,1,2,.00097,1
RCONST,4,594,1,2,.00142,1
C*  Keypoint definitions
PT,1,0,-0.0032,0
PT,2,0,0.0127,0,
PT,3,0,0.0381,0,
PT,4,0,0.0508,0,
PT,5,0,0.1524,0,
PT,6,0,0.1651,0,
PT,7,0,0.45085,0,
PT,8,0,0.47625,0,
PT,9,0,0.973138,0,
PT,10,0,0.985838,0,
PT,11,0,1.265238,0,
PT,12,0,1.328738,0,
PT,13,0,1.47638,0,
PT,14,0,1.48273,0,
PT,15,0,1.50813,0,
PT,16,0,1.5272,0,
PT,17,0.563563,0.1334,0,
PT,18,0.0508,0.1524,0,
PT,19,0.14605,0.47625,0,
PT,20,0.14605,0.97155,0,
PT,21,0.15875,0.45085,0,
PT,22,0.15875,0.95885,0,
PT,23,0.18669,0.973138,0,
PT,24,0.1778,0.985838,0,
PT,25,0.1778,1.265238,0,
PT,26,0.200819,0.95885,0,
PT,27,0.187833,0.97155,0,
PT,28,0.18669,1.27794,0,
PT,29,0.1524,1.328738,0,
PT,30,0.1524,1.37795,0,
PT,31,0.223838,1.328738,0,
PT,32,0.223838,1.37795,0,
PT,33,0.200819,1.2271,0,
PT,34,0.3233,1.2271,0,
PT,35,0.4445,1.0172,0,
PT,36,0.4445,0.2415,0,
PT,37,0.1867,0.1651,0,
PT,38,0.1905,0.1524,0,
PT,39,0.4572,0.2314,0,
PT,40,0.4572,1.0207,0,
PT,41,0.3380,1.2271,0,
```

```
PT,42,0.3096,1.27635,0,
PT,43,0.187833,1.27635,0,
PT,44,0.27305,1.27794,0,
PT,45,0.27305,1.328738,0,
PT,46,0.274638,1.27635,0,
PT,47,0.231236,1.27794,0,
PT,49,0.381,1.5272,0,
PT,50,0.5588,0.0508,0,
PT,51,0.3683,1.50813,0,
PT,52,0.3683,1.48273,0,
PT,53,.3683,1.5272,0,
PT,54,0.563563,0.1143,0,
PT,55,0.563563,1.3452,0,
PT,56,0.5699,0.1143,0,
PT,57,0.5699,1.3452,0,
PT,58,0.595313,0.1143,0,
PT,59,0.595313,1.3452,0,
PT,60,0.601663,0.1143,0,
PT,61,0.601663,1.3452,0,
PT,62,0.52705,-0.0032,0,
PT,63,0.52705,0.0127,0,
PT,64,0.52705,0.0381,0,
PT,65,0.52705,0.0508,0,
PT,66,0.5588,-0.0032,0,
PT,67,.3683,1.47638,0,
PT,68,.118533,1.26524,0,
PT,69,.200819,.405,0,
PT,70,0,.405,0,
PT,71,.09525,.1651,0,
PT,72,.1905,.0508,0,
PT,73,.5588,.12065,0,
PT,74,.563563,1.0214,0,
PT,75,.5699,1.0214,0,
PT,76,.595313,1.0214,0,
PT,77,.601663,1.0214,0,
PT,78,.5588,1.0214,0,
PT,80,.381,1.47638,0,
PT,81,.381,1.48273,0,
PT,82,.381,1.50813,0,
PT,83,.5588,1.3272,0,
PT,84,.563563,1.3272,0,
PT,85,.5699,1.3272,0,
PT,86,.595313,1.3272,0,
PT,87,.601663,1.3272,0,
PT,88,.5699,0.1334,0,
PT,89,.595313,0.1334,0,
PT,90,.601663,0.1334,0,
PT,91,.1905,.0381,0,
PT,92,.1905,.0127,0,
PT,93,.1905,-0.0032,0,
PT,94,.5588,.0381,0,
PT,95,.5588,.0127,0,
VIEW,0,0,1,0,
SCALE,0,
C*  Material property set 1 = stainless
MPROP,1,DENS,7800.,
MPROP,1,C,460,
C*  set variation of k with respect to temperature
CURDEF,TEMP,1,1,-273,14.0,38,14.0,100,15.1,149,17.0,204,18.0,260,18.9
CURDEF,TEMP,1,6,316,19.6,371,20.4,427,21.1,538,22.8,816,26.5,927,26.5
ACTSET,TP,1,
C*  assign value of 1 to KX as this value gets multiplied by curve 1
MPROP,1,KX,1.000,
```

```
ACTSET,TP,0,
c*  Material property set 2 = lead
MPROP,2,DENS,11373.,
C*  set variation of C with respect to temperature
CURDEF,TEMP,9,1,-23,127,27,129,127,132,227,136,327,142
CURDEF,TEMP,9,6,328,6188,331,6188,332,159,1000,159
ACTSET,TP,9,
MPROP,2,C,1.0000,
ACTSET,TP,0,
C*  set variation of k with respect to temperature
CURDEF,TEMP,2,1,-273,35,-27,35,123,34,227,33,327,31
CURDEF,TEMP,2,6,527,19,727,22,927,24
ACTSET,TP,2,
MPROP,2,KX,1.0000,
ACTSET,TP,0,
C*  Material property set 3 = air
MPROP,3,DENS,1.2,
MPROP,3,C,1060,
MPROP,3,KX,.0224,
C*  Material property set 4 = transite
MPROP,4,DENS,1600.,
MPROP,4,C,837.
MPROP,4,KX,0.389,
C*  Material property set 5 = kaowool
MPROP,5,DENS,96,
MPROP,5,C,1060,
C*  set variation of k with temperature
CURDEF,TEMP,4,1,-273,.029,38,.029,100,.032,149,.036,204,.048
CURDEF,TEMP,4,6,260,.053,316,.062,371,.074,427,.088,538,.118
CURDEF,TEMP,4,11,816,.210,927,.248,
ACTSET,TP,4,
MPROP,5,KX,1.0,
ACTSET,TP,0,
C*  Material property set 6 = stainless fins used 12% of
C*  k and density for continuity in 2D heat transf eq'n
C*  k = 0.12(20)=2.4, density = 0.12(7800)= 940, C unchanged
MPROP,6,DENS,940.,
MPROP,6,C,460,
MPROP,6,KX,2.4,
C*  Material property set 7 = mild steel
MPROP,7,DENS,7800.,
MPROP,7,C,465,
MPROP,7,KX,64.1,
C*  Material property set 8 = convection htc used for conv links
C*  Air values used for other parameters
MPROP,8,DENS,1.2,
MPROP,8,C,1060,
MPROP,8,KX,.0224,
MPROP,8,HC,6.5
C*  Start of mesh generation
SF4PT,1,10,24,25,11,0,
SF4PT,2,9,23,24,10,0,
SF4PT,3,24,23,28,25,0,
ACTSET,EG,1,
ACTSET,RC,1,
ACTSET,MP,2,
M_SF,1,1,1,4,3,3,1,2,
ACTSET,MP,1,
M_SF,2,2,1,4,3,1,1,1,
M_SF,3,3,1,4,1,3,1,2,
SF4PT,4,68,25,28,29,0,
M_SF,4,4,1,4,1,1,1,1,
SF4PT,5,11,68,29,12,0,
```

```
SF4PT,6,29,28,47,31,0,
SF4PT,7,29,31,32,30,0,
SF4PT,8,47,44,45,31,0,
ACTSET,MP,1
M_SF,5,5,1,4,2,1,1,1,
M_SF,6,6,1,4,1,1,1,1,
ACTSET,MP,1,
M_SF,7,7,1,4,1,1,1,1,
ACTSET,MP,1,
M_SF,8,8,1,4,1,1,1,1,
SF4PT,9,13,67,52,14,0,
SF4PT,10,14,52,51,15,0,
SF4PT,11,15,51,53,16,0,
ACTSET,MP,7,
M_SF,9,9,1,4,5,1,1,1,
ACTSET,MP,5,
M_SF,10,10,1,4,5,1,1,1,
ACTSET,MP,7,
M_SF,11,11,1,4,5,1,1,1,
SF4PT,12,22,26,27,20,0,
SF4PT,13,26,33,43,27,0,
ACTSET,MP,1,
M_SF,12,12,1,4,1,1,1,1,
M_SF,13,13,1,4,3,1,2,1,
SF4PT,14,33,34,46,43,0,
SF4PT,15,34,41,42,46,0,
ACTSET,MP,1
M_SF,14,14,1,4,2,1,1,1,
M_SF,15,15,1,4,1,1,1,1,
SF4PT,16,35,40,41,34,0,
M_SF,16,16,1,4,1,3,1,2,
SF4PT,17,26,35,34,33,0,
ACTSET,MP,2,
M_SF,17,17,1,4,2,3,1,2,
SF4PT,18,7,21,19,8,0,
SF4PT,19,21,22,20,19,0,
SF4PT,20,70,69,21,7,0,
SF4PT,21,69,26,22,21,0,
SF4PT,22,69,36,35,26,0,
SF4PT,23,6,37,69,70,0,
SF3PT,24,37,36,69,0,
SF4PT,25,36,39,40,35,0,
ACTSET,MP,1,
M_SF,18,18,1,4,2,1,1,1,
M_SF,19,19,1,4,4,1,1,1,
ACTSET,MP,2,
M_SF,20,20,1,4,2,1,1,1,
M_SF,21,21,1,4,4,1,1,1,
M_SF,22,22,1,4,2,4,1,1,
ACTSET,MP,1
M_SF,25,25,1,4,1,4,1,1,
ACTSET,MP,2
M_SF,23,23,1,4,2,2,1,1,
M_SF,24,24,1,4,2,2,1,1,
SF4PT,26,5,38,37,6,0,
SF4PT,30,38,39,36,37,0,
SF4PT,36,17,88,75,74,0,
SF4PT,37,88,89,76,75,0,
SF4PT,38,89,90,77,76,0,
ACTSET,MP,1,
M_SF,26,26,1,4,2,1,1,1,
M_SF,30,30,1,4,2,1,1,1,
ACTSET,MP,7,
```

```
M_SF,36,36,1,4,1,5,1,1,
ACTSET,MP,5,
M_SF,37,37,1,4,1,5,1,1,
ACTSET,MP,7,
M_SF,38,38,1,4,1,5,1,1,
SF4PT,39,74,75,85,84,0,
SF4PT,40,75,76,86,85,0,
SF4PT,41,76,77,87,86,0,
SF4PT,44,51,82,49,53,0,
SF4PT,45,52,81,82,51,0,
SF4PT,46,67,80,81,52,0,
ACTSET,MP,7,
M_SF,39,39,1,4,1,5,1,2,
ACTSET,MP,5,
M_SF,40,40,1,4,1,5,1,2,
ACTSET,MP,7,
M_SF,41,41,1,4,1,5,1,2,
ACTSET,MP,7,
M_SF,44,44,1,4,1,1,1,1,
ACTSET,MP,7,
M_SF,45,45,1,4,1,1,1,1,
ACTSET,MP,7,
M_SF,46,46,1,4,1,1,1,1,
SF4PT,50,84,85,57,55,0,
SF4PT,51,85,86,59,57,0,
SF4PT,52,86,87,61,59,0,
ACTSET,MP,7,
M_SF,50,50,1,4,1,1,1,1,
ACTSET,MP,7,
M_SF,51,51,1,4,1,1,1,1,
ACTSET,MP,7,
M_SF,52,52,1,4,1,1,1,1,
SF4PT,53,3,91,72,4,0,
SF4PT,54,2,92,91,3,0,
SF4PT,55,1,93,92,2,0,
ACTSET,MP,7,
M_SF,53,53,1,4,2,1,1,1,
ACTSET,MP,4,
M_SF,54,54,1,4,2,1,1,1,
ACTSET,MP,7,
M_SF,55,55,1,4,2,1,1,1,
SF4PT,59,62,66,95,63,0,
SF4PT,60,63,95,94,64,0,
SF4PT,61,64,94,50,65,0,
SF4PT,62,91,64,65,72,0,
SF4PT,63,92,63,64,91,0,
SF4PT,64,93,62,63,92,0,
ACTSET,MP,7,
M_SF,59,59,1,4,1,1,1,1,
ACTSET,MP,7,
M_SF,60,60,1,4,1,1,1,1,
ACTSET,MP,7,
M_SF,61,61,1,4,1,1,1,1,
ACTSET,MP,7,
M_SF,62,62,1,4,2,1,1,1,
ACTSET,MP,4,
M_SF,63,63,1,4,2,1,1,1,
ACTSET,MP,7,
M_SF,64,64,1,4,2,1,1,1,
ACTSET,MP,7
SF4PT,66,54,56,88,17,0,
SF4PT,67,56,58,89,88,0,
SF4PT,68,58,60,90,89,0,
```

```
M_SF,66,68,1,4,1,1,1,1,
NMERGE,1,900,1,0.0001,0,1,0,
C*  Clean up mesh geometry
NMODIFY,97,97,1,0,.200819,1.12817,0,
NMODIFY,128,128,1,0,.291016,1.12817,0,
NMODIFY,9,9,1,0,0,1.12817,0,
NMODIFY,10,10,1,0,.05926667,1.12817,0,
NMODIFY,11,11,1,0,.1185333,1.12817,0,
NMODIFY,12,12,1,0,.1778,1.12817,0,
NMODIFY,30,30,1,0,.18669,1.12817,0,
NMODIFY,101,101,1,0,.187833,1.12817,0,
NMODIFY,28,28,1,0,.18669,1.04913,0,
NMODIFY,96,96,1,0,.200819,1.049139696,0,
NMODIFY,100,100,1,0,.187833,1.04913,0,
NMODIFY,116,116,1,0,.4301,1.0679,0,
NMODIFY,125,125,1,0,.3103,1.04913,0,
NMODIFY,142,142,1,0,.15875,.820387,0,
NMODIFY,147,147,1,0,.14605,.820387,0,
NMODIFY,187,187,1,0,.4572,.818436,0,
NMODIFY,41,41,1,0,.07366,1.32874,0,
NMODIFY,57,57,1,0,.1524,1.47638,0,
NMODIFY,63,63,1,0,.1524,1.48273,0,
NMODIFY,75,75,1,0,.1524,1.50813,0,
NMODIFY,87,87,1,0,.1524,1.5272,0,
NMODIFY,56,56,1,0,.07366,1.47638,0,
NMODIFY,62,62,1,0,.07366,1.48273,0,
NMODIFY,74,74,1,0,.07366,1.50813,0,
NMODIFY,86,86,1,0,.07366,1.5272,0,
NMODIFY,58,58,1,0,.223838,1.47638,0,
NMODIFY,64,64,1,0,.223838,1.48273,0,
NMODIFY,76,76,1,0,.223838,1.50813,0,
NMODIFY,88,88,1,0,.223838,1.5272,0,
NMODIFY,172,172,1,0,.32266,.6662,0,
NMODIFY,173,173,1,0,.4445,.6662,0,
NMODIFY,185,185,1,0,.4572,.6662,0,
NMODIFY,175,175,1,0,.32266,.8204,0,
NMODIFY,176,176,1,0,.4445,.8204,0,
NMODIFY,187,187,1,0,.4572,.8204,0,
NMODIFY,228,228,1,0,.5636,.8204,0,
NMODIFY,229,229,1,0,.5699,.8204,0,
NMODIFY,241,241,1,0,.5953,.8204,0,
NMODIFY,253,253,1,0,.6017,.8204,0,
NMODIFY,224,224,1,0,.5636,.4316,0,
NMODIFY,225,225,1,0,.5699,.4316,0,
NMODIFY,237,237,1,0,.5953,.4316,0,
NMODIFY,249,249,1,0,.6017,.4316,0,
NMODIFY,222,222,1,0,.5636,.2148,0,
NMODIFY,223,223,1,0,.5699,.2148,0,
NMODIFY,235,235,1,0,.5953,.2148,0,
NMODIFY,247,247,1,0,.6017,.2148,0,
NMODIFY,258,258,1,0,.5636,1.068,0,
NMODIFY,259,259,1,0,.5699,1.068,0,
NMODIFY,271,271,1,0,.5953,1.068,0,
NMODIFY,283,283,1,0,.6017,1.068,0,
NMODIFY,260,260,1,0,.5636,1.1339,0,
NMODIFY,261,261,1,0,.5699,1.1339,0,
NMODIFY,273,273,1,0,.5953,1.1339,0,
NMODIFY,285,285,1,0,.6017,1.1339,0,
NMODIFY,262,262,1,0,.5636,1.2271,0,
NMODIFY,263,263,1,0,.5699,1.2271,0,
NMODIFY,275,275,1,0,.5953,1.2271,0,
NMODIFY,287,287,1,0,.6017,1.2271,0,
NMODIFY,264,264,1,0,.5636,1.2764,0,
```

```
NMODIFY,265,265,1,0,.5699,1.2764,0,
NMODIFY,277,277,1,0,.5953,1.2764,0,
NMODIFY,289,289,1,0,.6017,1.2764,0,
C*  Nodes below cavity
NMODIFY,137,137,1,0,.0508,.47625,0,
NMODIFY,134,134,1,0,.0508,.45085,0,
NMODIFY,150,150,1,0,.0508,.40500,0,
NMODIFY,194,194,1,0,.0508,.28505,0,
NMODIFY,191,191,1,0,.0508,.16510,0,
NMODIFY,209,209,1,0,.0508,.15240,0,
NMODIFY,320,320,1,0,.0508,.05080,0,
NMODIFY,317,317,1,0,.0508,.03810,0,
NMODIFY,323,323,1,0,.0508,.01270,0,
NMODIFY,329,329,1,0,.0508,-.0032,0,
C*  Nodes on lower fireshield
NMODIFY,359,359,1,0,.318,-.0032,0,
NMODIFY,353,353,1,0,.318,.0127,0,
NMODIFY,347,347,1,0,.318,.0381,0,
NMODIFY,350,350,1,0,.318,.0508,0,
C*  Define node 400 as the environment at 38 C, 401 at 48 C and 402
C*  at 55 C for steady state conditions.  Nodes are separated so that
C*  different boundary conditions appear in plots.
ND,400,1,0.8,0
NTND,400,38,400,1,
ND,401,1,0.9,0
NTND,401,48,401,1,
ND,402,1,1.0,0
NTND,402,55,402,1,
C*  Insert nodes for gap elements between crack shield and top plug
ND,435,0.1524,1.32924,0,,,,,,,
ND,445,0.22384,1.32924,0,,,,,,,
C* Generate fin nodes
ND,700,.5588,.2148,0,0,0,0,0,0,0,
ND,701,.5588,.4316,0,0,0,0,0,0,0,
ND,702,.5588,.6662,0,0,0,0,0,0,0,
ND,703,.5588,.8204,0,0,0,0,0,0,0,
ND,704,.5588,1.0214,0,0,0,0,0,0,0,
ND,705,.5588,1.0680,0,0,0,0,0,0,0,
ND,706,.5588,1.1339,0,0,0,0,0,0,0,
ND,707,.5588,1.22714,0,0,0,0,0,0,0,
ND,708,.5588,1.27635,0,0,0,0,0,0,0,
ND,709,.5588,1.4,0,0,0,0,0,0,0,
ND,710,.3,1.4,0,0,0,0,0,0,0,
ND,711,.27464,1.4,0,0,0,0,0,0,0,
ND,712,.3,1.293,0,0,0,0,0,0,0,
ND,713,.2746,1.293,0,0,0,0,0,0,0,
ND,714,.3257,1.293,0,0,0,0,0,0,0,
ND,715,.3353,1.27635,0,0,0,0,0,0,0,
ND,716,.3637,1.22714,0,0,0,0,0,0,0,
ND,717,.4176,1.1339,0,0,0,0,0,0,0,
ND,718,.4556,1.0680,0,0,0,0,0,0,0,
ND,719,.4364,1.0569,0,0,0,0,0,0,0,
ND,720,.4383,1.0727,0,0,0,0,0,0,0,
ND,721,.4029,1.1339,0,0,0,0,0,0,0,
ND,722,.3490,1.22714,0,0,0,0,0,0,0,
ND,723,.3206,1.27635,0,0,0,0,0,0,0,
ND,724,.3073,1.2803,0,0,0,0,0,0,0,
ND,725,.31834,1.2803,0,0,0,0,0,0,0,
ND,726,.2746,1.2803,0,0,0,0,0,0,0,
ND,727,.5588,1.293,0,0,0,0,0,0,0,
ND,728,.3257,1.4,0,0,0,0,0,0,0,
C*
NMODIFY,203,203,1,0,.323,.28505,0,
```

```
NMODIFY,166,166,1,0,.323,.405,0,
ND,168,.4445,.32,0,0,0,0,0,0,0,
ND,165,.4445,.3327,0,0,0,0,0,0,0,
ND,164,.4572,.3327,0,0,0,0,0,0,0,
ND,163,.4572,.32,0,0,0,0,0,0,0,
ND,211,.31167,.18829,0,0,0,0,0,0,0,
ND,730,.4794,.3327,0,0,0,0,0,0,0,
ND,732,.3180,.1670,0,0,0,0,0,0,0,
ND,733,.32656,.18277,0,0,0,0,0,0,0,
ND,733,.4667,.22428,0,0,0,0,0,0,0,
ND,731,.4794,.21481,0,0,0,0,0,0,0,
ND,733,.32656,.18277,0,0,0,0,0,0,0,
ND,734,.4667,.22428,0,0,0,0,0,0,0,
ND,735,.4667,.320,0,0,0,0,0,0,0,
ND,736,.5588,.3327,0,0,0,0,0,0,0,
ND,737,.5636,.3327,0,0,0,0,0,0,0,
ND,738,.5699,.3327,0,0,0,0,0,0,0,
ND,739,.5953,.3327,0,0,0,0,0,0,0,
ND,740,.6017,.3327,0,0,0,0,0,0,0,
ND,170,.4445,.4316,0,0,0,0,0,0,0,
ND,183,.4572,.4316,0,0,0,0,0,0,0,
C*  Radiation links
ACTSET,MP,3
ACTSET,EG,3
    RCONST,3,  100 ,1,4, 0.0007 ,0.072 ,0.8,5.669E-8
    EL,,CR,,2,  40 ,         49
    RCONST,3,  101 ,1,4, 0.0007 ,0.056 ,0.8,5.669E-8
    EL,,CR,,2,  40 ,         55
    RCONST,3,  102 ,1,4, 0.0007 ,0.306 ,0.8,5.669E-8
    EL,,CR,,2,  40 ,         56
    RCONST,3,  103 ,1,4, 0.0007 ,0.250 ,0.8,5.669E-8
    EL,,CR,,2,  40 ,         57
    RCONST,3,  104 ,1,4, 0.0007 ,0.141 ,0.8,5.669E-8
    EL,,CR,,2,  40 ,         58
    RCONST,3,  105 ,1,4, 0.0007 ,0.084 ,0.8,5.669E-8
    EL,,CR,,2,  40 ,         59
    RCONST,3,  106 ,1,4, 0.0007 ,0.030 ,0.8,5.669E-8
    EL,,CR,,2,  40 ,        301
    RCONST,3,  107 ,1,4, 0.0007 ,0.034 ,0.8,5.669E-8
    EL,,CR,,2,  40 ,        400
    RCONST,3,  108 ,1,4, 0.0007 ,0.027 ,0.8,5.669E-8
    EL,,CR,,2,  40 ,        435
    RCONST,3,  109 ,1,4, 0.0057 ,0.115 ,0.8,5.669E-8
    EL,,CR,,2,  41 ,         49
    RCONST,3,  110 ,1,4, 0.0057 ,0.037 ,0.8,5.669E-8
    EL,,CR,,2,  41 ,         55
    RCONST,3,  111 ,1,4, 0.0057 ,0.249 ,0.8,5.669E-8
    EL,,CR,,2,  41 ,         56
    RCONST,3,  112 ,1,4, 0.0057 ,0.274 ,0.8,5.669E-8
    EL,,CR,,2,  41 ,         57
    RCONST,3,  113 ,1,4, 0.0057 ,0.167 ,0.8,5.669E-8
    EL,,CR,,2,  41 ,         58
    RCONST,3,  114 ,1,4, 0.0057 ,0.100 ,0.8,5.669E-8
    EL,,CR,,2,  41 ,         59
    RCONST,3,  115 ,1,4, 0.0057 ,0.003 ,0.8,5.669E-8
    EL,,CR,,2,  41 ,        301
    RCONST,3,  116 ,1,4, 0.0057 ,0.055 ,0.8,5.669E-8
    EL,,CR,,2,  41 ,        435
    RCONST,3,  117 ,1,4, 0.0052 ,0.145 ,0.8,5.669E-8
    EL,,CR,,2,  35 ,         49
    RCONST,3,  118 ,1,4, 0.0052 ,0.019 ,0.8,5.669E-8
    EL,,CR,,2,  35 ,         55
    RCONST,3,  119 ,1,4, 0.0052 ,0.169 ,0.8,5.669E-8
```

```
EL,,CR,,2,  35 ,          56
RCONST,3,  120 ,1,4, 0.0052 ,0.275 ,0.8,5.669E-8
EL,,CR,,2,  35 ,          57
RCONST,3,  121 ,1,4, 0.0052 ,0.123 ,0.8,5.669E-8
EL,,CR,,2,  35 ,          58
RCONST,3,  123 ,1,4, 0.0037 ,0.071 ,0.8,5.669E-8
EL,,CR,,2, 435 ,          49
RCONST,3,  124 ,1,4, 0.0037 ,0.016 ,0.8,5.669E-8
EL,,CR,,2, 435 ,          55
RCONST,3,  125 ,1,4, 0.0037 ,0.115 ,0.8,5.669E-8
EL,,CR,,2, 435 ,          56
RCONST,3,  126 ,1,4, 0.0037 ,0.096 ,0.8,5.669E-8
EL,,CR,,2, 435 ,          57
RCONST,3,  127 ,1,4, 0.0037 ,0.051 ,0.8,5.669E-8
EL,,CR,,2, 435 ,          58
RCONST,3,  128 ,1,4, 0.0037 ,0.039 ,0.8,5.669E-8
EL,,CR,,2, 435 ,          59
RCONST,3,  129 ,1,4, 0.0037 ,0.017 ,0.8,5.669E-8
EL,,CR,,2, 435 ,         301
RCONST,3,  130 ,1,4, 0.0037 ,0.129 ,0.8,5.669E-8
EL,,CR,,2, 435 ,         400
RCONST,3,  131 ,1,4, 0.0098 ,0.015 ,0.8,5.669E-8
EL,,CR,,2,  49 ,          55
RCONST,3,  132 ,1,4, 0.0098 ,0.129 ,0.8,5.669E-8
EL,,CR,,2,  49 ,          56
RCONST,3,  133 ,1,4, 0.0098 ,0.169 ,0.8,5.669E-8
EL,,CR,,2,  49 ,          57
RCONST,3,  134 ,1,4, 0.0098 ,0.125 ,0.8,5.669E-8
EL,,CR,,2,  49 ,          58
RCONST,3,  135 ,1,4, 0.0098 ,0.075 ,0.8,5.669E-8
EL,,CR,,2,  49 ,          59
RCONST,3,  136 ,1,4, 0.0098 ,0.025 ,0.8,5.669E-8
EL,,CR,,2,  49 ,         301
RCONST,3,  137 ,1,4, 0.0098 ,0.124 ,0.8,5.669E-8
EL,,CR,,2,  49 ,         400
RCONST,3,  138 ,1,4, 0.0129 ,0.035 ,0.8,5.669E-8
EL,,CR,,2,  50 ,          45
RCONST,3,  139 ,1,4, 0.0129 ,0.049 ,0.8,5.669E-8
EL,,CR,,2,  50 ,          54
RCONST,3,  140 ,1,4, 0.0129 ,0.003 ,0.8,5.669E-8
EL,,CR,,2,  50 ,          55
RCONST,3,  141 ,1,4, 0.0129 ,0.039 ,0.8,5.669E-8
EL,,CR,,2,  50 ,          56
RCONST,3,  142 ,1,4, 0.0129 ,0.122 ,0.8,5.669E-8
EL,,CR,,2,  50 ,          57
RCONST,3,  143 ,1,4, 0.0129 ,0.173 ,0.8,5.669E-8
EL,,CR,,2,  50 ,          58
RCONST,3,  144 ,1,4, 0.0129 ,0.164 ,0.8,5.669E-8
EL,,CR,,2,  50 ,          59
RCONST,3,  145 ,1,4, 0.0129 ,0.059 ,0.8,5.669E-8
EL,,CR,,2,  50 ,         301
RCONST,3,  146 ,1,4, 0.0129 ,0.099 ,0.8,5.669E-8
EL,,CR,,2,  50 ,         400
RCONST,3,  148 ,1,4, 0.0055 ,0.113 ,0.8,5.669E-8
EL,,CR,,2, 445 ,          54
RCONST,3,  149 ,1,4, 0.0055 ,0.009 ,0.8,5.669E-8
EL,,CR,,2, 445 ,          58
RCONST,3,  150 ,1,4, 0.0055 ,0.082 ,0.8,5.669E-8
EL,,CR,,2, 445 ,          59
RCONST,3,  151 ,1,4, 0.0055 ,0.052 ,0.8,5.669E-8
EL,,CR,,2, 445 ,         301
RCONST,3,  152 ,1,4, 0.0055 ,0.028 ,0.8,5.669E-8
EL,,CR,,2, 445 ,         400
```

```
RCONST,3,  153 ,1,4, 0.0059 ,0.103 ,0.8,5.669E-8
EL,,CR,,2,  45 ,         58
RCONST,3,  154 ,1,4, 0.0059 ,0.200 ,0.8,5.669E-8
EL,,CR,,2,  45 ,         59
RCONST,3,  155 ,1,4, 0.0059 ,0.084 ,0.8,5.669E-8
EL,,CR,,2,  45 ,        301
RCONST,3,  156 ,1,4, 0.0059 ,0.039 ,0.8,5.669E-8
EL,,CR,,2,  45 ,        400
RCONST,3,  157 ,1,4, 0.0161 ,0.024 ,0.8,5.669E-8
EL,,CR,,2,  54 ,         57
RCONST,3,  158 ,1,4, 0.0161 ,0.092 ,0.8,5.669E-8
EL,,CR,,2,  54 ,         58
RCONST,3,  159 ,1,4, 0.0161 ,0.056 ,0.8,5.669E-8
EL,,CR,,2,  54 ,         59
RCONST,3,  160 ,1,4, 0.0161 ,0.044 ,0.8,5.669E-8
EL,,CR,,2,  54 ,        301
RCONST,3,  161 ,1,4, 0.0161 ,0.089 ,0.8,5.669E-8
EL,,CR,,2,  54 ,        400
RCONST,3,  162 ,1,4, 0.0161 ,0.038 ,0.8,5.669E-8
EL,,CR,,2,  54 ,        306
RCONST,3,  163 ,1,4, 0.0098 ,0.034 ,0.8,5.669E-8
EL,,CR,,2, 713 ,        710
RCONST,3,  164 ,1,4, 0.0098 ,0.018 ,0.8,5.669E-8
EL,,CR,,2, 713 ,        711
RCONST,3,  165 ,1,4, 0.0098 ,0.030 ,0.8,5.669E-8
EL,,CR,,2, 713 ,         59
RCONST,3,  166 ,1,4, 0.0098 ,0.043 ,0.8,5.669E-8
EL,,CR,,2, 713 ,         58
RCONST,3,  167 ,1,4, 0.0098 ,0.388 ,0.8,5.669E-8
EL,,CR,,2, 713 ,         54
RCONST,3,  168 ,1,4, 0.0098 ,0.054 ,0.8,5.669E-8
EL,,CR,,2, 713 ,        728
RCONST,3,  169 ,1,4, 0.0098 ,0.023 ,0.8,5.669E-8
EL,,CR,,2, 713 ,        715
RCONST,3,  170 ,1,4, 0.0098 ,0.058 ,0.8,5.669E-8
EL,,CR,,2, 713 ,        301
RCONST,3,  171 ,1,4, 0.0098 ,0.005 ,0.8,5.669E-8
EL,,CR,,2, 713 ,        727
RCONST,3,  172 ,1,4, 0.0098 ,0.005 ,0.8,5.669E-8
EL,,CR,,2, 713 ,        709
RCONST,3,  173 ,1,4, 0.0098 ,0.011 ,0.8,5.669E-8
EL,,CR,,2, 713 ,        400
RCONST,3,  174 ,1,4, 0.0209 ,0.061 ,0.8,5.669E-8
EL,,CR,,2, 712 ,        713
RCONST,3,  175 ,1,4, 0.0209 ,0.037 ,0.8,5.669E-8
EL,,CR,,2, 712 ,        710
RCONST,3,  176 ,1,4, 0.0209 ,0.016 ,0.8,5.669E-8
EL,,CR,,2, 712 ,        711
RCONST,3,  177 ,1,4, 0.0209 ,0.032 ,0.8,5.669E-8
EL,,CR,,2, 712 ,         59
RCONST,3,  178 ,1,4, 0.0209 ,0.069 ,0.8,5.669E-8
EL,,CR,,2, 712 ,         58
RCONST,3,  179 ,1,4, 0.0209 ,0.209 ,0.8,5.669E-8
EL,,CR,,2, 712 ,         54
RCONST,3,  180 ,1,4, 0.0209 ,0.077 ,0.8,5.669E-8
EL,,CR,,2, 712 ,        728
RCONST,3,  181 ,1,4, 0.0209 ,0.077 ,0.8,5.669E-8
EL,,CR,,2, 712 ,        301
RCONST,3,  182 ,1,4, 0.0209 ,0.005 ,0.8,5.669E-8
EL,,CR,,2, 712 ,        727
RCONST,3,  183 ,1,4, 0.0209 ,0.007 ,0.8,5.669E-8
EL,,CR,,2, 712 ,        709
RCONST,3,  184 ,1,4, 0.0209 ,0.053 ,0.8,5.669E-8
```

```
EL,,CR,,2, 712 ,        715
RCONST,3,  185 ,1,4, 0.0209 ,0.012 ,0.8,5.669E-8
EL,,CR,,2, 712 ,        400
RCONST,3,  186 ,1,4, 0.0209 ,0.002 ,0.8,5.669E-8
EL,,CR,,2, 712 ,        306
RCONST,3,  187 ,1,4, 0.0766 ,0.029 ,0.8,5.669E-8
EL,,CR,,2, 714 ,         58
RCONST,3,  188 ,1,4, 0.0766 ,0.010 ,0.8,5.669E-8
EL,,CR,,2, 714 ,         59
RCONST,3,  189 ,1,4, 0.0766 ,0.011 ,0.8,5.669E-8
EL,,CR,,2, 714 ,        713
RCONST,3,  190 ,1,4, 0.0766 ,0.042 ,0.8,5.669E-8
EL,,CR,,2, 714 ,        712
RCONST,3,  191 ,1,4, 0.0766 ,0.051 ,0.8,5.669E-8
EL,,CR,,2, 714 ,        727
RCONST,3,  192 ,1,4, 0.0766 ,0.007 ,0.8,5.669E-8
EL,,CR,,2, 714 ,        306
RCONST,3,  193 ,1,4, 0.0766 ,0.010 ,0.8,5.669E-8
EL,,CR,,2, 714 ,        264
RCONST,3,  194 ,1,4, 0.0766 ,0.005 ,0.8,5.669E-8
EL,,CR,,2, 714 ,        711
RCONST,3,  195 ,1,4, 0.0766 ,0.016 ,0.8,5.669E-8
EL,,CR,,2, 714 ,        710
RCONST,3,  196 ,1,4, 0.0766 ,0.125 ,0.8,5.669E-8
EL,,CR,,2, 714 ,        728
RCONST,3,  197 ,1,4, 0.0766 ,0.020 ,0.8,5.669E-8
EL,,CR,,2, 714 ,        708
RCONST,3,  198 ,1,4, 0.0766 ,0.036 ,0.8,5.669E-8
EL,,CR,,2, 714 ,        709
RCONST,3,  199 ,1,4, 0.0766 ,0.030 ,0.8,5.669E-8
EL,,CR,,2, 714 ,        400
RCONST,3,  200 ,1,4, 0.0766 ,0.081 ,0.8,5.669E-8
EL,,CR,,2, 714 ,        301
RCONST,3,  201 ,1,4, 0.0766 ,0.041 ,0.8,5.669E-8
EL,,CR,,2, 714 ,         54
RCONST,3,  202 ,1,4, 0.0609 ,0.060 ,0.8,5.669E-8
EL,,CR,,2, 715 ,        706
RCONST,3,  203 ,1,4, 0.0609 ,0.040 ,0.8,5.669E-8
EL,,CR,,2, 715 ,        707
RCONST,3,  204 ,1,4, 0.0609 ,0.035 ,0.8,5.669E-8
EL,,CR,,2, 715 ,        708
RCONST,3,  205 ,1,4, 0.0609 ,0.033 ,0.8,5.669E-8
EL,,CR,,2, 715 ,        727
RCONST,3,  206 ,1,4, 0.0609 ,0.017 ,0.8,5.669E-8
EL,,CR,,2, 715 ,        709
RCONST,3,  207 ,1,4, 0.0609 ,0.030 ,0.8,5.669E-8
EL,,CR,,2, 715 ,        260
RCONST,3,  208 ,1,4, 0.0609 ,0.017 ,0.8,5.669E-8
EL,,CR,,2, 715 ,        262
RCONST,3,  209 ,1,4, 0.0609 ,0.011 ,0.8,5.669E-8
EL,,CR,,2, 715 ,        264
RCONST,3,  210 ,1,4, 0.0609 ,0.013 ,0.8,5.669E-8
EL,,CR,,2, 715 ,        306
RCONST,3,  211 ,1,4, 0.0609 ,0.158 ,0.8,5.669E-8
EL,,CR,,2, 715 ,        714
RCONST,3,  212 ,1,4, 0.0609 ,0.043 ,0.8,5.669E-8
EL,,CR,,2, 715 ,        728
RCONST,3,  213 ,1,4, 0.0609 ,0.063 ,0.8,5.669E-8
EL,,CR,,2, 715 ,        400
RCONST,3,  214 ,1,4, 0.0933 ,0.014 ,0.8,5.669E-8
EL,,CR,,2, 716 ,        258
RCONST,3,  215 ,1,4, 0.0933 ,0.021 ,0.8,5.669E-8
EL,,CR,,2, 716 ,        260
```

```
RCONST,3,  216 ,1,4, 0.0933 ,0.019 ,0.8,5.669E-8
EL,,CR,,2, 716 ,        262
RCONST,3,  217 ,1,4, 0.0933 ,0.014 ,0.8,5.669E-8
EL,,CR,,2, 716 ,        264
RCONST,3,  218 ,1,4, 0.0933 ,0.012 ,0.8,5.669E-8
EL,,CR,,2, 716 ,        306
RCONST,3,  219 ,1,4, 0.0933 ,0.027 ,0.8,5.669E-8
EL,,CR,,2, 716 ,        705
RCONST,3,  220 ,1,4, 0.0933 ,0.038 ,0.8,5.669E-8
EL,,CR,,2, 716 ,        706
RCONST,3,  221 ,1,4, 0.0933 ,0.062 ,0.8,5.669E-8
EL,,CR,,2, 716 ,        707
RCONST,3,  222 ,1,4, 0.0933 ,0.031 ,0.8,5.669E-8
EL,,CR,,2, 716 ,        708
RCONST,3,  223 ,1,4, 0.0933 ,0.018 ,0.8,5.669E-8
EL,,CR,,2, 716 ,        727
RCONST,3,  224 ,1,4, 0.0933 ,0.054 ,0.8,5.669E-8
EL,,CR,,2, 716 ,        400
RCONST,3,  225 ,1,4, 0.0933 ,0.105 ,0.8,5.669E-8
EL,,CR,,2, 716 ,        715
RCONST,3,  226 ,1,4, 0.0933 ,0.042 ,0.8,5.669E-8
EL,,CR,,2, 716 ,        714
RCONST,3,  227 ,1,4, 0.0869 ,0.023 ,0.8,5.669E-8
EL,,CR,,2, 717 ,        230
RCONST,3,  228 ,1,4, 0.0869 ,0.013 ,0.8,5.669E-8
EL,,CR,,2, 717 ,        258
RCONST,3,  229 ,1,4, 0.0869 ,0.030 ,0.8,5.669E-8
EL,,CR,,2, 717 ,        260
RCONST,3,  230 ,1,4, 0.0869 ,0.029 ,0.8,5.669E-8
EL,,CR,,2, 717 ,        262
RCONST,3,  231 ,1,4, 0.0869 ,0.015 ,0.8,5.669E-8
EL,,CR,,2, 717 ,        264
RCONST,3,  232 ,1,4, 0.0869 ,0.004 ,0.8,5.669E-8
EL,,CR,,2, 717 ,        306
RCONST,3,  233 ,1,4, 0.0869 ,0.045 ,0.8,5.669E-8
EL,,CR,,2, 717 ,        704
RCONST,3,  234 ,1,4, 0.0869 ,0.032 ,0.8,5.669E-8
EL,,CR,,2, 717 ,        705
RCONST,3,  235 ,1,4, 0.0869 ,0.069 ,0.8,5.669E-8
EL,,CR,,2, 717 ,        706
RCONST,3,  236 ,1,4, 0.0869 ,0.047 ,0.8,5.669E-8
EL,,CR,,2, 717 ,        707
RCONST,3,  237 ,1,4, 0.0869 ,0.016 ,0.8,5.669E-8
EL,,CR,,2, 717 ,        708
RCONST,3,  238 ,1,4, 0.0869 ,0.007 ,0.8,5.669E-8
EL,,CR,,2, 717 ,        709
RCONST,3,  239 ,1,4, 0.0869 ,0.111 ,0.8,5.669E-8
EL,,CR,,2, 717 ,        716
RCONST,3,  240 ,1,4, 0.0869 ,0.014 ,0.8,5.669E-8
EL,,CR,,2, 717 ,        715
RCONST,3,  241 ,1,4, 0.0869 ,0.029 ,0.8,5.669E-8
EL,,CR,,2, 717 ,        400
RCONST,3,  242 ,1,4, 0.0559 ,0.025 ,0.8,5.669E-8
EL,,CR,,2, 718 ,        707
RCONST,3,  243 ,1,4, 0.0559 ,0.050 ,0.8,5.669E-8
EL,,CR,,2, 718 ,        706
RCONST,3,  244 ,1,4, 0.0559 ,0.068 ,0.8,5.669E-8
EL,,CR,,2, 718 ,        705
RCONST,3,  245 ,1,4, 0.0559 ,0.079 ,0.8,5.669E-8
EL,,CR,,2, 718 ,        704
RCONST,3,  246 ,1,4, 0.0559 ,0.064 ,0.8,5.669E-8
EL,,CR,,2, 718 ,        230
RCONST,3,  247 ,1,4, 0.0559 ,0.057 ,0.8,5.669E-8
```

```
EL,,CR,,2, 718 ,        258
RCONST,3,  248 ,1,4, 0.0559 ,0.048 ,0.8,5.669E-8
EL,,CR,,2, 718 ,        260
RCONST,3,  249 ,1,4, 0.0559 ,0.118 ,0.8,5.669E-8
EL,,CR,,2, 718 ,        717
RCONST,3,  250 ,1,4, 0.0559 ,0.029 ,0.8,5.669E-8
EL,,CR,,2, 718 ,        400
RCONST,3,  251 ,1,4, 0.1205 ,0.051 ,0.8,5.669E-8
EL,,CR,,2, 114 ,        718
RCONST,3,  252 ,1,4, 0.1205 ,0.008 ,0.8,5.669E-8
EL,,CR,,2, 114 ,        717
RCONST,3,  253 ,1,4, 0.1205 ,0.013 ,0.8,5.669E-8
EL,,CR,,2, 114 ,        706
RCONST,3,  254 ,1,4, 0.1205 ,0.025 ,0.8,5.669E-8
EL,,CR,,2, 114 ,        705
RCONST,3,  255 ,1,4, 0.1205 ,0.110 ,0.8,5.669E-8
EL,,CR,,2, 114 ,        704
RCONST,3,  256 ,1,4, 0.1205 ,0.030 ,0.8,5.669E-8
EL,,CR,,2, 114 ,        703
RCONST,3,  257 ,1,4, 0.1205 ,0.003 ,0.8,5.669E-8
EL,,CR,,2, 114 ,        222
RCONST,3,  258 ,1,4, 0.1205 ,0.004 ,0.8,5.669E-8
EL,,CR,,2, 114 ,        226
RCONST,3,  259 ,1,4, 0.1205 ,0.039 ,0.8,5.669E-8
EL,,CR,,2, 114 ,        228
RCONST,3,  260 ,1,4, 0.1205 ,0.152 ,0.8,5.669E-8
EL,,CR,,2, 114 ,        230
RCONST,3,  261 ,1,4, 0.1205 ,0.019 ,0.8,5.669E-8
EL,,CR,,2, 114 ,        258
RCONST,3,  262 ,1,4, 0.1205 ,0.023 ,0.8,5.669E-8
EL,,CR,,2, 114 ,        260
RCONST,3,  263 ,1,4, 0.1205 ,0.015 ,0.8,5.669E-8
EL,,CR,,2, 114 ,        400
RCONST,3,  264 ,1,4, 0.1205 ,0.051 ,0.8,5.669E-8
EL,,CR,,2, 114 ,        187
RCONST,3,  265 ,1,4, 0.1744 ,0.028 ,0.8,5.669E-8
EL,,CR,,2, 187 ,        704
RCONST,3,  266 ,1,4, 0.1744 ,0.138 ,0.8,5.669E-8
EL,,CR,,2, 187 ,        703
RCONST,3,  267 ,1,4, 0.1744 ,0.030 ,0.8,5.669E-8
EL,,CR,,2, 187 ,        702
RCONST,3,  268 ,1,4, 0.1744 ,0.004 ,0.8,5.669E-8
EL,,CR,,2, 187 ,        224
RCONST,3,  269 ,1,4, 0.1744 ,0.045 ,0.8,5.669E-8
EL,,CR,,2, 187 ,        226
RCONST,3,  270 ,1,4, 0.1744 ,0.184 ,0.8,5.669E-8
EL,,CR,,2, 187 ,        228
RCONST,3,  271 ,1,4, 0.1744 ,0.047 ,0.8,5.669E-8
EL,,CR,,2, 187 ,        230
RCONST,3,  272 ,1,4, 0.1744 ,0.002 ,0.8,5.669E-8
EL,,CR,,2, 187 ,        258
RCONST,3,  273 ,1,4, 0.1744 ,0.007 ,0.8,5.669E-8
EL,,CR,,2, 187 ,        400
RCONST,3,  274 ,1,4, 0.1744 ,0.043 ,0.8,5.669E-8
EL,,CR,,2, 187 ,        185
RCONST,3,  275 ,1,4, 0.1901 ,0.028 ,0.8,5.669E-8
EL,,CR,,2, 185 ,        703
RCONST,3,  276 ,1,4, 0.1901 ,0.142 ,0.8,5.669E-8
EL,,CR,,2, 185 ,        702
RCONST,3,  277 ,1,4, 0.1901 ,0.028 ,0.8,5.669E-8
EL,,CR,,2, 185 ,        701
RCONST,3,  278 ,1,4, 0.1901 ,0.003 ,0.8,5.669E-8
EL,,CR,,2, 185 ,        222
```

```
RCONST,3,  279 ,1,4, 0.1901 ,0.042 ,0.8,5.669E-8
EL,,CR,,2, 185 ,        224
RCONST,3,  280 ,1,4, 0.1901 ,0.191 ,0.8,5.669E-8
EL,,CR,,2, 185 ,        226
RCONST,3,  281 ,1,4, 0.1901 ,0.042 ,0.8,5.669E-8
EL,,CR,,2, 185 ,        228
RCONST,3,  282 ,1,4, 0.1901 ,0.001 ,0.8,5.669E-8
EL,,CR,,2, 185 ,        400
RCONST,3,  283 ,1,4, 0.1634 ,0.047 ,0.8,5.669E-8
EL,,CR,,2, 183 ,        226
RCONST,3,  284 ,1,4, 0.1634 ,0.054 ,0.8,5.669E-8
EL,,CR,,2, 183 ,        185
RCONST,3,  285 ,1,4, 0.1634 ,0.034 ,0.8,5.669E-8
EL,,CR,,2, 183 ,        702
RCONST,3,  286 ,1,4, 0.1634 ,0.003 ,0.8,5.669E-8
EL,,CR,,2, 183 ,        364
RCONST,3,  287 ,1,4, 0.1634 ,0.174 ,0.8,5.669E-8
EL,,CR,,2, 183 ,        224
RCONST,3,  288 ,1,4, 0.1634 ,0.040 ,0.8,5.669E-8
EL,,CR,,2, 183 ,        737
RCONST,3,  289 ,1,4, 0.1634 ,0.028 ,0.8,5.669E-8
EL,,CR,,2, 183 ,        736
RCONST,3,  290 ,1,4, 0.1634 ,0.007 ,0.8,5.669E-8
EL,,CR,,2, 183 ,        700
RCONST,3,  291 ,1,4, 0.1634 ,0.007 ,0.8,5.669E-8
EL,,CR,,2, 183 ,        222
RCONST,3,  292 ,1,4, 0.1634 ,0.129 ,0.8,5.669E-8
EL,,CR,,2, 183 ,        701
RCONST,3,  293 ,1,4, 0.0485 ,0.092 ,0.8,5.669E-8
EL,,CR,,2, 164 ,        224
RCONST,3,  294 ,1,4, 0.0485 ,0.070 ,0.8,5.669E-8
EL,,CR,,2, 164 ,        701
RCONST,3,  295 ,1,4, 0.0485 ,0.130 ,0.8,5.669E-8
EL,,CR,,2, 164 ,        183
RCONST,3,  296 ,1,4, 0.0485 ,0.005 ,0.8,5.669E-8
EL,,CR,,2, 164 ,        345
RCONST,3,  297 ,1,4, 0.0485 ,0.004 ,0.8,5.669E-8
EL,,CR,,2, 164 ,        344
RCONST,3,  298 ,1,4, 0.0485 ,0.022 ,0.8,5.669E-8
EL,,CR,,2, 164 ,        700
RCONST,3,  299 ,1,4, 0.0485 ,0.003 ,0.8,5.669E-8
EL,,CR,,2, 164 ,        364
RCONST,3,  300 ,1,4, 0.0485 ,0.029 ,0.8,5.669E-8
EL,,CR,,2, 164 ,        222
RCONST,3,  301 ,1,4, 0.0485 ,0.137 ,0.8,5.669E-8
EL,,CR,,2, 164 ,        737
RCONST,3,  302 ,1,4, 0.0485 ,0.102 ,0.8,5.669E-8
EL,,CR,,2, 164 ,        736
RCONST,3,  303 ,1,4, 0.2870 ,0.005 ,0.8,5.669E-8
EL,,CR,,2, 731 ,        183
RCONST,3,  304 ,1,4, 0.2870 ,0.005 ,0.8,5.669E-8
EL,,CR,,2, 731 ,        164
RCONST,3,  305 ,1,4, 0.2870 ,0.026 ,0.8,5.669E-8
EL,,CR,,2, 731 ,        737
RCONST,3,  306 ,1,4, 0.2870 ,0.015 ,0.8,5.669E-8
EL,,CR,,2, 731 ,        736
RCONST,3,  307 ,1,4, 0.2870 ,0.033 ,0.8,5.669E-8
EL,,CR,,2, 731 ,        364
RCONST,3,  308 ,1,4, 0.2870 ,0.082 ,0.8,5.669E-8
EL,,CR,,2, 731 ,        222
RCONST,3,  309 ,1,4, 0.2870 ,0.019 ,0.8,5.669E-8
EL,,CR,,2, 731 ,        400
RCONST,3,  310 ,1,4, 0.2870 ,0.060 ,0.8,5.669E-8
```

```
EL,,CR,,2, 731 ,        700
RCONST,3,  311 ,1,4, 0.2870 ,0.005 ,0.8,5.669E-8
EL,,CR,,2, 731 ,        321
RCONST,3,  312 ,1,4, 0.2870 ,0.021 ,0.8,5.669E-8
EL,,CR,,2, 731 ,        345
RCONST,3,  313 ,1,4, 0.2870 ,0.113 ,0.8,5.669E-8
EL,,CR,,2, 731 ,        344
RCONST,3,  314 ,1,4, 0.2870 ,0.045 ,0.8,5.669E-8
EL,,CR,,2, 731 ,        350
RCONST,3,  315 ,1,4, 0.2870 ,0.024 ,0.8,5.669E-8
EL,,CR,,2, 731 ,        730
RCONST,3,  316 ,1,4, 0.0551 ,0.091 ,0.8,5.669E-8
EL,,CR,,2, 730 ,        222
RCONST,3,  317 ,1,4, 0.0551 ,0.007 ,0.8,5.669E-8
EL,,CR,,2, 730 ,        364
RCONST,3,  318 ,1,4, 0.0551 ,0.047 ,0.8,5.669E-8
EL,,CR,,2, 730 ,        700
RCONST,3,  319 ,1,4, 0.0551 ,0.005 ,0.8,5.669E-8
EL,,CR,,2, 730 ,        344
RCONST,3,  320 ,1,4, 0.0551 ,0.005 ,0.8,5.669E-8
EL,,CR,,2, 730 ,        345
RCONST,3,  321 ,1,4, 0.0551 ,0.004 ,0.8,5.669E-8
EL,,CR,,2, 730 ,        400
RCONST,3,  322 ,1,4, 0.0551 ,0.076 ,0.8,5.669E-8
EL,,CR,,2, 730 ,        164
RCONST,3,  323 ,1,4, 0.0551 ,0.088 ,0.8,5.669E-8
EL,,CR,,2, 730 ,        736
RCONST,3,  324 ,1,4, 0.0551 ,0.197 ,0.8,5.669E-8
EL,,CR,,2, 730 ,        737
RCONST,3,  325 ,1,4, 0.0551 ,0.030 ,0.8,5.669E-8
EL,,CR,,2, 730 ,        183
RCONST,3,  326 ,1,4, 0.0551 ,0.020 ,0.8,5.669E-8
EL,,CR,,2, 730 ,        701
RCONST,3,  327 ,1,4, 0.0551 ,0.036 ,0.8,5.669E-8
EL,,CR,,2, 730 ,        224
RCONST,3,  328 ,1,4, 0.1300 ,0.006 ,0.8,5.669E-8
EL,,CR,,2, 732 ,        400
RCONST,3,  329 ,1,4, 0.1300 ,0.182 ,0.8,5.669E-8
EL,,CR,,2, 732 ,        350
RCONST,3,  330 ,1,4, 0.1300 ,0.071 ,0.8,5.669E-8
EL,,CR,,2, 732 ,        344
RCONST,3,  331 ,1,4, 0.1300 ,0.018 ,0.8,5.669E-8
EL,,CR,,2, 732 ,        321
RCONST,3,  332 ,1,4, 0.1300 ,0.005 ,0.8,5.669E-8
EL,,CR,,2, 732 ,        364
RCONST,3,  333 ,1,4, 0.1300 ,0.002 ,0.8,5.669E-8
EL,,CR,,2, 732 ,        700
RCONST,3,  334 ,1,4, 0.1300 ,0.003 ,0.8,5.669E-8
EL,,CR,,2, 732 ,        345
RCONST,3,  335 ,1,4, 0.1300 ,0.118 ,0.8,5.669E-8
EL,,CR,,2, 732 ,        731
RCONST,3,  336 ,1,4, 0.0488 ,0.049 ,0.8,5.669E-8
EL,,CR,,2, 736 ,        701
RCONST,3,  337 ,1,4, 0.0488 ,0.038 ,0.8,5.669E-8
EL,,CR,,2, 736 ,        224
RCONST,3,  338 ,1,4, 0.0488 ,0.004 ,0.8,5.669E-8
EL,,CR,,2, 736 ,        702
RCONST,3,  339 ,1,4, 0.0488 ,0.001 ,0.8,5.669E-8
EL,,CR,,2, 736 ,        226
RCONST,3,  340 ,1,4, 0.0488 ,0.308 ,0.8,5.669E-8
EL,,CR,,2, 736 ,        737
RCONST,3,  341 ,1,4, 0.0488 ,0.037 ,0.8,5.669E-8
EL,,CR,,2, 736 ,        222
```

```
RCONST,3,  342 ,1,4, 0.0488 ,0.001 ,0.8,5.669E-8
EL,,CR,,2, 736 ,        364
RCONST,3,  343 ,1,4, 0.0892 ,0.029 ,0.8,5.669E-8
EL,,CR,,2, 210 ,        344
RCONST,3,  344 ,1,4, 0.0892 ,0.064 ,0.8,5.669E-8
EL,,CR,,2, 210 ,        350
RCONST,3,  345 ,1,4, 0.0892 ,0.008 ,0.8,5.669E-8
EL,,CR,,2, 210 ,        732
RCONST,3,  346 ,1,4, 0.0892 ,0.278 ,0.8,5.669E-8
EL,,CR,,2, 210 ,        321
RCONST,3,  347 ,1,4, 0.0892 ,0.002 ,0.8,5.669E-8
EL,,CR,,2, 210 ,        731
RCONST,3,  348 ,1,4, 0.0892 ,0.085 ,0.8,5.669E-8
EL,,CR,,2, 210 ,        211
RCONST,3,  349 ,1,4, 0.0919 ,0.081 ,0.8,5.669E-8
EL,,CR,,2, 211 ,        321
RCONST,3,  350 ,1,4, 0.0919 ,0.176 ,0.8,5.669E-8
EL,,CR,,2, 211 ,        350
RCONST,3,  351 ,1,4, 0.0919 ,0.017 ,0.8,5.669E-8
EL,,CR,,2, 211 ,        320
RCONST,3,  352 ,1,4, 0.0919 ,0.130 ,0.8,5.669E-8
EL,,CR,,2, 211 ,        732
RCONST,3,  353 ,1,4, 0.0919 ,0.014 ,0.8,5.669E-8
EL,,CR,,2, 211 ,        731
RCONST,3,  354 ,1,4, 0.0919 ,0.020 ,0.8,5.669E-8
EL,,CR,,2, 211 ,        344
RCONST,3,  355 ,1,4, 0.0919 ,0.003 ,0.8,5.669E-8
EL,,CR,,2, 211 ,        364
RCONST,3,  356 ,1,4, 0.0919 ,0.003 ,0.8,5.669E-8
EL,,CR,,2, 211 ,        400
RCONST,3,  357 ,1,4, 0.0137 ,0.061 ,0.8,5.669E-8
EL,,CR,,2, 209 ,        210
RCONST,3,  358 ,1,4, 0.0137 ,0.454 ,0.8,5.669E-8
EL,,CR,,2, 209 ,        320
RCONST,3,  359 ,1,4, 0.0137 ,0.207 ,0.8,5.669E-8
EL,,CR,,2, 209 ,        321
RCONST,3,  360 ,1,4, 0.0137 ,0.004 ,0.8,5.669E-8
EL,,CR,,2, 209 ,        319
RCONST,3,  361 ,1,4, 0.0137 ,0.005 ,0.8,5.669E-8
EL,,CR,,2, 209 ,        208
RCONST,3,  362 ,1,4, 0.0003 ,0.056 ,0.8,5.669E-8
EL,,CR,,2, 208 ,        319
RCONST,3,  363 ,1,4, 0.0183 ,0.006 ,0.8,5.669E-8
EL,,CR,,2, 320 ,        208
RCONST,3,  364 ,1,4, 0.0183 ,0.106 ,0.8,5.669E-8
EL,,CR,,2, 320 ,        321
RCONST,3,  365 ,1,4, 0.0183 ,0.169 ,0.8,5.669E-8
EL,,CR,,2, 320 ,        210
RCONST,3,  366 ,1,4, 0.0183 ,0.008 ,0.8,5.669E-8
EL,,CR,,2, 320 ,        319
RCONST,3,  367 ,1,4, 0.0801 ,0.063 ,0.8,5.669E-8
EL,,CR,,2, 321 ,        350
RCONST,3,  368 ,1,4, 0.0801 ,0.005 ,0.8,5.669E-8
EL,,CR,,2, 321 ,        344
RCONST,3,  369 ,1,4, 0.1433 ,0.065 ,0.8,5.669E-8
EL,,CR,,2, 350 ,        344
RCONST,3,  370 ,1,4, 0.1433 ,0.002 ,0.8,5.669E-8
EL,,CR,,2, 350 ,        345
RCONST,3,  371 ,1,4, 0.1433 ,0.003 ,0.8,5.669E-8
EL,,CR,,2, 350 ,        400
RCONST,3,  372 ,1,4, 0.1433 ,0.003 ,0.8,5.669E-8
EL,,CR,,2, 350 ,        364
RCONST,3,  373 ,1,4, 0.1433 ,0.006 ,0.8,5.669E-8
```

```
EL,,CR,,2, 350 ,        222
RCONST,3,  374 ,1,4, 0.1433 ,0.004 ,0.8,5.669E-8
EL,,CR,,2, 350 ,        700
RCONST,3,  375 ,1,4, 0.1416 ,0.043 ,0.8,5.669E-8
EL,,CR,,2, 344 ,        345
RCONST,3,  376 ,1,4, 0.1416 ,0.057 ,0.8,5.669E-8
EL,,CR,,2, 344 ,        400
RCONST,3,  377 ,1,4, 0.1416 ,0.028 ,0.8,5.669E-8
EL,,CR,,2, 344 ,        364
RCONST,3,  378 ,1,4, 0.1416 ,0.020 ,0.8,5.669E-8
EL,,CR,,2, 344 ,        222
RCONST,3,  379 ,1,4, 0.1416 ,0.023 ,0.8,5.669E-8
EL,,CR,,2, 344 ,        700
RCONST,3,  380 ,1,4, 0.1416 ,0.005 ,0.8,5.669E-8
EL,,CR,,2, 344 ,        736
RCONST,3,  381 ,1,4, 0.1416 ,0.003 ,0.8,5.669E-8
EL,,CR,,2, 344 ,        737
RCONST,3,  382 ,1,4, 0.0370 ,0.295 ,0.8,5.669E-8
EL,,CR,,2, 345 ,        400
RCONST,3,  383 ,1,4, 0.0370 ,0.044 ,0.8,5.669E-8
EL,,CR,,2, 345 ,        364
RCONST,3,  384 ,1,4, 0.0370 ,0.023 ,0.8,5.669E-8
EL,,CR,,2, 345 ,        222
RCONST,3,  385 ,1,4, 0.0370 ,0.059 ,0.8,5.669E-8
EL,,CR,,2, 345 ,        700
RCONST,3,  386 ,1,4, 0.0579 ,0.248 ,0.8,5.669E-8
EL,,CR,,2, 700 ,        222
RCONST,3,  387 ,1,4, 0.0579 ,0.106 ,0.8,5.669E-8
EL,,CR,,2, 700 ,        364
RCONST,3,  388 ,1,4, 0.0579 ,0.027 ,0.8,5.669E-8
EL,,CR,,2, 700 ,        736
RCONST,3,  389 ,1,4, 0.0579 ,0.024 ,0.8,5.669E-8
EL,,CR,,2, 700 ,        737
RCONST,3,  390 ,1,4, 0.0579 ,0.005 ,0.8,5.669E-8
EL,,CR,,2, 700 ,        701
RCONST,3,  391 ,1,4, 0.0579 ,0.013 ,0.8,5.669E-8
EL,,CR,,2, 700 ,        224
RCONST,3,  392 ,1,4, 0.0579 ,0.030 ,0.8,5.669E-8
EL,,CR,,2, 700 ,        400
RCONST,3,  393 ,1,4, 0.0926 ,0.002 ,0.8,5.669E-8
EL,,CR,,2, 701 ,        222
RCONST,3,  394 ,1,4, 0.0926 ,0.312 ,0.8,5.669E-8
EL,,CR,,2, 701 ,        224
RCONST,3,  395 ,1,4, 0.0926 ,0.042 ,0.8,5.669E-8
EL,,CR,,2, 701 ,        702
RCONST,3,  396 ,1,4, 0.0926 ,0.027 ,0.8,5.669E-8
EL,,CR,,2, 701 ,        226
RCONST,3,  397 ,1,4, 0.0926 ,0.003 ,0.8,5.669E-8
EL,,CR,,2, 701 ,        703
RCONST,3,  398 ,1,4, 0.0926 ,0.001 ,0.8,5.669E-8
EL,,CR,,2, 701 ,        228
RCONST,3,  399 ,1,4, 0.0926 ,0.025 ,0.8,5.669E-8
EL,,CR,,2, 701 ,        737
RCONST,3,  400 ,1,4, 0.1076 ,0.023 ,0.8,5.669E-8
EL,,CR,,2, 702 ,        224
RCONST,3,  401 ,1,4, 0.1076 ,0.310 ,0.8,5.669E-8
EL,,CR,,2, 702 ,        226
RCONST,3,  402 ,1,4, 0.1076 ,0.025 ,0.8,5.669E-8
EL,,CR,,2, 702 ,        228
RCONST,3,  403 ,1,4, 0.1076 ,0.037 ,0.8,5.669E-8
EL,,CR,,2, 702 ,        703
RCONST,3,  404 ,1,4, 0.0987 ,0.025 ,0.8,5.669E-8
EL,,CR,,2, 703 ,        226
```

```
RCONST,3,  405 ,1,4, 0.0987 ,0.038 ,0.8,5.669E-8
EL,,CR,,2, 703 ,        704
RCONST,3,  406 ,1,4, 0.0987 ,0.005 ,0.8,5.669E-8
EL,,CR,,2, 703 ,        705
RCONST,3,  407 ,1,4, 0.0987 ,0.306 ,0.8,5.669E-8
EL,,CR,,2, 703 ,        228
RCONST,3,  408 ,1,4, 0.0987 ,0.024 ,0.8,5.669E-8
EL,,CR,,2, 703 ,        230
RCONST,3,  409 ,1,4, 0.0682 ,0.035 ,0.8,5.669E-8
EL,,CR,,2, 704 ,        228
RCONST,3,  410 ,1,4, 0.0682 ,0.031 ,0.8,5.669E-8
EL,,CR,,2, 704 ,        705
RCONST,3,  411 ,1,4, 0.0682 ,0.299 ,0.8,5.669E-8
EL,,CR,,2, 704 ,        230
RCONST,3,  412 ,1,4, 0.0682 ,0.022 ,0.8,5.669E-8
EL,,CR,,2, 704 ,        258
RCONST,3,  413 ,1,4, 0.0682 ,0.011 ,0.8,5.669E-8
EL,,CR,,2, 704 ,        706
RCONST,3,  414 ,1,4, 0.0682 ,0.006 ,0.8,5.669E-8
EL,,CR,,2, 704 ,        707
RCONST,3,  415 ,1,4, 0.0398 ,0.064 ,0.8,5.669E-8
EL,,CR,,2, 705 ,        230
RCONST,3,  416 ,1,4, 0.0398 ,0.101 ,0.8,5.669E-8
EL,,CR,,2, 705 ,        706
RCONST,3,  417 ,1,4, 0.0398 ,0.016 ,0.8,5.669E-8
EL,,CR,,2, 705 ,        707
RCONST,3,  418 ,1,4, 0.0398 ,0.011 ,0.8,5.669E-8
EL,,CR,,2, 705 ,        708
RCONST,3,  419 ,1,4, 0.0398 ,0.182 ,0.8,5.669E-8
EL,,CR,,2, 705 ,        258
RCONST,3,  420 ,1,4, 0.0398 ,0.052 ,0.8,5.669E-8
EL,,CR,,2, 705 ,        260
RCONST,3,  421 ,1,4, 0.0398 ,0.005 ,0.8,5.669E-8
EL,,CR,,2, 705 ,        262
RCONST,3,  422 ,1,4, 0.0770 ,0.040 ,0.8,5.669E-8
EL,,CR,,2, 706 ,        258
RCONST,3,  423 ,1,4, 0.0770 ,0.011 ,0.8,5.669E-8
EL,,CR,,2, 706 ,        230
RCONST,3,  424 ,1,4, 0.0770 ,0.096 ,0.8,5.669E-8
EL,,CR,,2, 706 ,        707
RCONST,3,  425 ,1,4, 0.0770 ,0.170 ,0.8,5.669E-8
EL,,CR,,2, 706 ,        260
RCONST,3,  426 ,1,4, 0.0770 ,0.035 ,0.8,5.669E-8
EL,,CR,,2, 706 ,        262
RCONST,3,  427 ,1,4, 0.0770 ,0.113 ,0.8,5.669E-8
EL,,CR,,2, 706 ,        708
RCONST,3,  428 ,1,4, 0.0770 ,0.005 ,0.8,5.669E-8
EL,,CR,,2, 706 ,        709
RCONST,3,  429 ,1,4, 0.0854 ,0.046 ,0.8,5.669E-8
EL,,CR,,2, 707 ,        260
RCONST,3,  430 ,1,4, 0.0854 ,0.128 ,0.8,5.669E-8
EL,,CR,,2, 707 ,        708
RCONST,3,  431 ,1,4, 0.0854 ,0.010 ,0.8,5.669E-8
EL,,CR,,2, 707 ,        709
RCONST,3,  432 ,1,4, 0.0854 ,0.005 ,0.8,5.669E-8
EL,,CR,,2, 707 ,        258
RCONST,3,  433 ,1,4, 0.0854 ,0.140 ,0.8,5.669E-8
EL,,CR,,2, 707 ,        262
RCONST,3,  434 ,1,4, 0.0854 ,0.031 ,0.8,5.669E-8
EL,,CR,,2, 707 ,        264
RCONST,3,  435 ,1,4, 0.0854 ,0.006 ,0.8,5.669E-8
EL,,CR,,2, 707 ,        306
RCONST,3,  436 ,1,4, 0.0854 ,0.013 ,0.8,5.669E-8
```

```
EL,,CR,,2, 707 ,        400
RCONST,3,  437 ,1,4, 0.0400 ,0.019 ,0.8,5.669E-8
EL,,CR,,2, 262 ,        400
RCONST,3,  438 ,1,4, 0.0536 ,0.031 ,0.8,5.669E-8
EL,,CR,,2, 708 ,        400
RCONST,3,  439 ,1,4, 0.0536 ,0.015 ,0.8,5.669E-8
EL,,CR,,2, 708 ,        301
RCONST,3,  440 ,1,4, 0.0536 ,0.044 ,0.8,5.669E-8
EL,,CR,,2, 708 ,        306
RCONST,3,  441 ,1,4, 0.0536 ,0.111 ,0.8,5.669E-8
EL,,CR,,2, 708 ,        264
RCONST,3,  442 ,1,4, 0.0536 ,0.049 ,0.8,5.669E-8
EL,,CR,,2, 708 ,        262
RCONST,3,  443 ,1,4, 0.0536 ,0.007 ,0.8,5.669E-8
EL,,CR,,2, 708 ,        260
RCONST,3,  444 ,1,4, 0.0775 ,0.005 ,0.8,5.669E-8
EL,,CR,,2, 709 ,        262
RCONST,3,  445 ,1,4, 0.0775 ,0.084 ,0.8,5.669E-8
EL,,CR,,2, 709 ,        708
RCONST,3,  446 ,1,4, 0.0775 ,0.010 ,0.8,5.669E-8
EL,,CR,,2, 709 ,        264
RCONST,3,  447 ,1,4, 0.0775 ,0.453 ,0.8,5.669E-8
EL,,CR,,2, 709 ,        400
RCONST,3,  448 ,1,4, 0.0775 ,0.118 ,0.8,5.669E-8
EL,,CR,,2, 709 ,        727
RCONST,3,  449 ,1,4, 0.0231 ,0.039 ,0.8,5.669E-8
EL,,CR,,2, 264 ,        400
RCONST,3,  450 ,1,4, 0.0231 ,0.028 ,0.8,5.669E-8
EL,,CR,,2, 264 ,        301
RCONST,3,  451 ,1,4, 0.0338 ,0.129 ,0.8,5.669E-8
EL,,CR,,2, 306 ,        709
RCONST,3,  452 ,1,4, 0.0338 ,0.028 ,0.8,5.669E-8
EL,,CR,,2, 306 ,        301
RCONST,3,  453 ,1,4, 0.0338 ,0.091 ,0.8,5.669E-8
EL,,CR,,2, 306 ,        400
RCONST,3,  454 ,1,4, 0.0158 ,0.002 ,0.8,5.669E-8
EL,,CR,,2, 710 ,        306
RCONST,3,  455 ,1,4, 0.0158 ,0.176 ,0.8,5.669E-8
EL,,CR,,2, 710 ,        400
RCONST,3,  456 ,1,4, 0.0158 ,0.003 ,0.8,5.669E-8
EL,,CR,,2, 710 ,         59
RCONST,3,  457 ,1,4, 0.0158 ,0.051 ,0.8,5.669E-8
EL,,CR,,2, 710 ,         58
RCONST,3,  458 ,1,4, 0.0158 ,0.163 ,0.8,5.669E-8
EL,,CR,,2, 710 ,         54
RCONST,3,  459 ,1,4, 0.0158 ,0.106 ,0.8,5.669E-8
EL,,CR,,2, 710 ,         50
RCONST,3,  460 ,1,4, 0.0158 ,0.123 ,0.8,5.669E-8
EL,,CR,,2, 710 ,        728
RCONST,3,  461 ,1,4, 0.0158 ,0.062 ,0.8,5.669E-8
EL,,CR,,2, 710 ,        727
RCONST,3,  462 ,1,4, 0.0076 ,0.061 ,0.8,5.669E-8
EL,,CR,,2, 711 ,        710
RCONST,3,  463 ,1,4, 0.0076 ,0.004 ,0.8,5.669E-8
EL,,CR,,2, 711 ,         59
RCONST,3,  464 ,1,4, 0.0076 ,0.006 ,0.8,5.669E-8
EL,,CR,,2, 711 ,        301
RCONST,3,  465 ,1,4, 0.0076 ,0.172 ,0.8,5.669E-8
EL,,CR,,2, 711 ,        400
RCONST,3,  466 ,1,4, 0.0076 ,0.227 ,0.8,5.669E-8
EL,,CR,,2, 711 ,         54
RCONST,3,  467 ,1,4, 0.0076 ,0.037 ,0.8,5.669E-8
EL,,CR,,2, 711 ,         58
```

```
RCONST,3,  468 ,1,4, 0.0076 ,0.193 ,0.8,5.669E-8
EL,,CR,,2, 711 ,        50
RCONST,3,  469 ,1,4, 0.0076 ,0.082 ,0.8,5.669E-8
EL,,CR,,2, 711 ,       728
RCONST,3,  470 ,1,4, 0.0076 ,0.008 ,0.8,5.669E-8
EL,,CR,,2, 711 ,       727
RCONST,3,  471 ,1,4, 0.0076 ,0.005 ,0.8,5.669E-8
EL,,CR,,2, 711 ,       709
RCONST,3,  472 ,1,4, 0.0733 ,0.024 ,0.8,5.669E-8
EL,,CR,,2, 727 ,       301
RCONST,3,  473 ,1,4, 0.0733 ,0.081 ,0.8,5.669E-8
EL,,CR,,2, 727 ,       400
RCONST,3,  474 ,1,4, 0.0733 ,0.033 ,0.8,5.669E-8
EL,,CR,,2, 727 ,       264
RCONST,3,  475 ,1,4, 0.0733 ,0.105 ,0.8,5.669E-8
EL,,CR,,2, 727 ,       708
RCONST,3,  476 ,1,4, 0.0733 ,0.155 ,0.8,5.669E-8
EL,,CR,,2, 727 ,       306
RCONST,3,  477 ,1,4, 0.0775 ,0.003 ,0.8,5.669E-8
EL,,CR,,2, 728 ,        59
RCONST,3,  478 ,1,4, 0.0775 ,0.007 ,0.8,5.669E-8
EL,,CR,,2, 728 ,       301
RCONST,3,  479 ,1,4, 0.0775 ,0.034 ,0.8,5.669E-8
EL,,CR,,2, 728 ,       727
RCONST,3,  480 ,1,4, 0.0775 ,0.054 ,0.8,5.669E-8
EL,,CR,,2, 728 ,       709
RCONST,3,  481 ,1,4, 0.0775 ,0.303 ,0.8,5.669E-8
EL,,CR,,2, 728 ,       400
RCONST,3,  482 ,1,4, 0.0775 ,0.016 ,0.8,5.669E-8
EL,,CR,,2, 728 ,       708
RCONST,3,  483 ,1,4, 0.0775 ,0.008 ,0.8,5.669E-8
EL,,CR,,2, 728 ,       264
RCONST,3,  484 ,1,4, 0.0775 ,0.006 ,0.8,5.669E-8
EL,,CR,,2, 728 ,       306
RCONST,3,  485 ,1,4, 0.0775 ,0.087 ,0.8,5.669E-8
EL,,CR,,2, 728 ,        50
RCONST,3,  486 ,1,4, 0.0775 ,0.016 ,0.8,5.669E-8
EL,,CR,,2, 728 ,        54
RCONST,3,  487 ,1,4, 0.0007 ,0.039 ,0.8,5.669E-8
EL,,CR,,2,  55 ,       400
RCONST,3,  488 ,1,4, 0.0057 ,0.042 ,0.8,5.669E-8
EL,,CR,,2,  56 ,       400
RCONST,3,  489 ,1,4, 0.0113 ,0.052 ,0.8,5.669E-8
EL,,CR,,2,  57 ,       400
RCONST,3,  490 ,1,4, 0.0161 ,0.085 ,0.8,5.669E-8
EL,,CR,,2,  58 ,       400
RCONST,3,  491 ,1,4, 0.0233 ,0.189 ,0.8,5.669E-8
EL,,CR,,2,  59 ,       400
RCONST,3,  492 ,1,4, 0.0155 ,0.420 ,0.8,5.669E-8
EL,,CR,,2, 301 ,       400
C*  Start of convection links
ACTSET,EG,2
ACTSET,MP,8
RCONST,2,  700 ,1,1, 0.0003
EL,,CR,,2, 208 ,       400
RCONST,2,  701 ,1,1, 0.0137
EL,,CR,,2, 209 ,       400
RCONST,2,  702 ,1,1, 0.0892
EL,,CR,,2, 210 ,       400
RCONST,2,  703 ,1,1, 0.0919
EL,,CR,,2, 211 ,       400
RCONST,2,  704 ,1,1, 0.1300
EL,,CR,,2, 732 ,       400
```

```
RCONST,2,  705 ,1,1, 0.2870
EL,,CR,,2, 731 ,        401
RCONST,2,  706 ,1,1, 0.0551
EL,,CR,,2, 730 ,        401
RCONST,2,  707 ,1,1, 0.0485
EL,,CR,,2, 164 ,        401
RCONST,2,  708 ,1,1, 0.1634
EL,,CR,,2, 183 ,        401
RCONST,2,  709 ,1,1, 0.1901
EL,,CR,,2, 185 ,        401
RCONST,2,  710 ,1,1, 0.1744
EL,,CR,,2, 187 ,        401
RCONST,2,  711 ,1,1, 0.1205
EL,,CR,,2, 114 ,        402
RCONST,2,  712 ,1,1, 0.0559
EL,,CR,,2, 718 ,        402
RCONST,2,  713 ,1,1, 0.0869
EL,,CR,,2, 717 ,        402
RCONST,2,  714 ,1,1, 0.0933
EL,,CR,,2, 716 ,        402
RCONST,2,  715 ,1,1, 0.0609
EL,,CR,,2, 715 ,        402
RCONST,2,  716 ,1,1, 0.0209
EL,,CR,,2, 712 ,        402
RCONST,2,  717 ,1,1, 0.0098
EL,,CR,,2, 713 ,        402
RCONST,2,  718 ,1,1, 0.0766
EL,,CR,,2, 714 ,        402
RCONST,2,  719 ,1,1, 0.0003
EL,,CR,,2, 319 ,        400
RCONST,2,  720 ,1,1, 0.0183
EL,,CR,,2, 320 ,        400
RCONST,2,  721 ,1,1, 0.0801
EL,,CR,,2, 321 ,        400
RCONST,2,  722 ,1,1, 0.1433
EL,,CR,,2, 350 ,        400
RCONST,2,  723 ,1,1, 0.1416
EL,,CR,,2, 344 ,        400
RCONST,2,  724 ,1,1, 0.0370
EL,,CR,,2, 345 ,        400
RCONST,2,  725 ,1,1, 0.0579
EL,,CR,,2, 700 ,        401
RCONST,2,  726 ,1,1, 0.0488
EL,,CR,,2, 736 ,        401
RCONST,2,  727 ,1,1, 0.0926
EL,,CR,,2, 701 ,        401
RCONST,2,  728 ,1,1, 0.1076
EL,,CR,,2, 702 ,        401
RCONST,2,  729 ,1,1, 0.0987
EL,,CR,,2, 703 ,        401
RCONST,2,  730 ,1,1, 0.0682
EL,,CR,,2, 704 ,        402
RCONST,2,  731 ,1,1, 0.0398
EL,,CR,,2, 705 ,        402
RCONST,2,  732 ,1,1, 0.0770
EL,,CR,,2, 706 ,        402
RCONST,2,  733 ,1,1, 0.0854
EL,,CR,,2, 707 ,        402
```

```
  RCONST,2,  734 ,1,1, 0.0536
  EL,,CR,,2, 708 ,      402
  RCONST,2,  735 ,1,1, 0.0733
  EL,,CR,,2, 727 ,      402
  RCONST,2,  736 ,1,1, 0.0775
  EL,,CR,,2, 709 ,      402
  RCONST,2,  737 ,1,1, 0.0775
  EL,,CR,,2, 728 ,      402
  RCONST,2,  738 ,1,1, 0.0158
  EL,,CR,,2, 710 ,      402
  RCONST,2,  739 ,1,1, 0.0076
  EL,,CR,,2, 711 ,      402
C*
ACTSET,EG,1
ACTSET,RC,1
ACTSET,MP,2
EL,83,SF,0,4,195,203,166,151,0,0,0,0,0,0,
EL,66,SF,0,4,166,168,170,169,0,0,0,0,0,0,
EL,82,SF,0,4,200,167,168,203,0,0,0,0,0,0,
EL,84,SF,0,4,203,165,168,166,0,0,0,0,0,0,
EL,84,SF,0,4,203,168,165,166,0,0,0,0,0,0,
EL,66,SF,0,4,166,165,170,169,0,0,0,0,0,0,
ACTSET,MP,1,
ACTSET,RC,1,
ACTSET,EG,1,
EL,73,SF,0,4,167,181,163,168,0,0,0,0,0,0,
EL,631,SF,0,4,168,163,164,165,0,0,0,0,0,0,
EL,632,SF,0,4,165,164,183,170,0,0,0,0,0,0,
EL,87,SF,0,4,210,211,200,192,0,0,0,0,0,0,
EL,633,SF,0,4,211,215,200,200,0,0,0,0,0,0,
EL,634,SF,0,4,211,732,733,215,0,0,0,0,0,0,
EL,635,SF,0,4,732,731,734,733,0,0,0,0,0,0,
EL,636,SF,0,4,731,730,735,734,0,0,0,0,0,0,
EL,637,SF,0,4,730,164,163,735,0,0,0,0,0,0,
ACTSET,MP,5,
ACTSET,RC,1,
ACTSET,EG,1,
EL,641,SF,0,4,733,734,181,215,0,0,0,0,0,0,
EL,642,SF,0,4,181,734,735,163,0,0,0,0,0,0,
EL,95,SF,0,4,223,235,739,738,0,0,0,0,0,0,
EL,643,SF,0,4,738,739,237,225,0,0,0,0,0,0,
ACTSET,MP,7,
EL,90,SF,0,4,222,223,738,737,0,0,0,0,0,0,
EL,100,SF,0,4,235,247,740,739,0,0,0,0,0,0,
EL,644,SF,0,4,737,738,225,224,0,0,0,0,0,0,
EL,645,SF,0,4,739,740,249,237,0,0,0,0,0,0,
C* Conduction elements between plug and main body
ACTSET,MP,3
ACTSET,EG,4
ACTSET,RC,587
EL,,CR,,2,52,108
```

```
ACTSET,RC,588
EL,,CR,,2,46,107
ACTSET,RC,589
EL,,CR,,2,32,102
ACTSET,RC,590
EL,,CR,,2,30,101
ACTSET,RC,591
EL,,CR,,2,28,100
ACTSET,RC,592
EL,,CR,,2,20,94
C* Radiation links between plug and main body. Assign SF=1
ACTSET,EG,3
RCONST,3,  595 ,1,4, 0.0141 ,1.0 ,0.8,5.669E-8
EL,,CR,,2,  20 ,       94
RCONST,3,  596 ,1,4, 0.0146 ,1.0 ,0.8,5.669E-8
EL,,CR,,2,  28 ,       100
RCONST,3,  597 ,1,4, 0.0213 ,1.0 ,0.8,5.669E-8
EL,,CR,,2,  30 ,       101
RCONST,3,  598 ,1,4, 0.0139 ,1.0 ,0.8,5.669E-8
EL,,CR,,2,  32 ,       102
C* Modify crack shield element
ACTSET,EG,1
ACTSET,MP,1
ACTSET,RC,1
EL,20,SF,0,4,435,445,50,49,0,
C* Add conduction and radiation links for crack shield
ACTSET,EG,4
ACTSET,MP,1
ACTSET,RC,593
EL,,CR,,2,35,435
ACTSET,RC,594
EL,,CR,,2,45,445
ACTSET,EG,3,
ACTSET,MP,3,
RCONST,3,497,1,4,.0061,1.0,.8,5.669E-8,
EL,676,CR,0,2,35,435,0,0,0,0,0,0,
RCONST,3,498,1,4,.0074,1.0,.8,5.669E-8,
EL,677,CR,0,2,45,445,0,0,0,0,0,0,
ACTSET,EG,1,
ACTSET,MP,3,
ACTSET,RC,1,
EL,,SF,0,4,35,45,445,435,0,0,0,0,0,0,
C* Generate fin elements
ACTSET,EG,1,
ACTSET,RC,1,
ACTSET,MP,6,
EL,600,SF,0,4,320,321,210,209,0,0,0,0,0,0,
EL,601,SF,0,4,321,350,732,210,0,0,0,0,0,0,
EL,602,SF,0,4,350,344,731,732,0,0,0,0,0,0,
EL,603,SF,0,4,344,345,700,731,0,0,0,0,0,0,
EL,604,SF,0,4,731,700,736,730,0,0,0,0,0,0,
```

```
EL,605,SF,0,4,701,702,185,183,0,0,0,0,0,0,
EL,606,SF,0,4,702,703,187,185,0,0,0,0,0,0,
EL,607,SF,0,4,703,704,114,187,0,0,0,0,0,0,
EL,608,SF,0,4,114,704,705,718,0,0,0,0,0,0,
EL,609,SF,0,4,718,705,706,717,0,0,0,0,0,0,
EL,610,SF,0,4,717,706,707,716,0,0,0,0,0,0,
EL,611,SF,0,4,716,707,708,715,0,0,0,0,0,0,
EL,612,SF,0,4,715,708,709,714,0,0,0,0,0,0,
EL,612,SF,0,4,715,708,727,714,0,0,0,0,0,0,
EL,613,SF,0,4,714,727,709,728,0,0,0,0,0,0,
EL,614,SF,0,4,712,714,728,710,0,0,0,0,0,0,
EL,615,SF,0,4,713,712,710,711,0,0,0,0,0,0,
EL,638,SF,0,4,164,730,183,183,0,0,0,0,0,0,
EL,639,SF,0,4,730,736,701,183,0,0,0,0,0,0,
EL,640,SF,0,4,732,211,210,210,0,0,0,0,0,0,
c* Generate kaowool shield elements
ACTSET,MP,1,
EL,616,SF,0,4,719,718,720,116,0,0,0,0,0,0,
EL,617,SF,0,4,720,718,717,721,0,0,0,0,0,0,
EL,618,SF,0,4,721,717,716,722,0,0,0,0,0,0,
EL,619,SF,0,4,722,716,715,723,0,0,0,0,0,0,
EL,620,SF,0,4,723,715,714,725,0,0,0,0,0,0,
EL,621,SF,0,4,724,725,714,712,0,0,0,0,0,0,
EL,622,SF,0,4,726,724,712,713,0,0,0,0,0,0,
EL,623,SF,0,4,108,112,724,726,0,0,0,0,0,0,
ACTSET,MP,5,
EL,624,SF,0,4,116,720,721,118,0,0,0,0,0,0,
EL,625,SF,0,4,118,721,722,110,0,0,0,0,0,0,
EL,626,SF,0,4,110,722,723,112,0,0,0,0,0,0,
EL,627,SF,0,4,112,723,725,724,0,0,0,0,0,0,
C* Fix stainless elements on cone
ACTSET,MP,1
EL,44,SF,0,4,113,114,719,115,0,0,0,0,0,0,
EL,628,SF,0,4,719,116,115,115,0,0,0,0,0,0,
```

3.0 FILE GAPON.INP

```
C*  File gapon.inp
C*  Insert nodes for gap elements starting from bottom
C*  New node number = stainless # + 500, except for 200 which is 600
C*  Node location gives     0.02 inches, or 0.000508 m gap
    ND,       690 ,0.000000 ,0.165608 ,0,,,,,,,
    ND,       691 ,0.050800 ,0.165608 ,0,,,,,,,
    ND,       692 ,0.186700 ,0.165608 ,0,,,,,,,
    ND,       600 ,0.315456 ,0.203787 ,0,,,,,,,
    ND,       667 ,0.443992 ,0.241500 ,0,,,,,,,
    ND,       668 ,0.443992 ,0.320000 ,0,,,,,,,
    ND,       665 ,0.443992 ,0.332700 ,0,,,,,,,
    ND,       670 ,0.443992 ,0.431600 ,0,,,,,,,
    ND,       673 ,0.443992 ,0.666200 ,0,,,,,,,
    ND,       676 ,0.443992 ,0.820400 ,0,,,,,,,
    ND,       613 ,0.443992 ,1.017200 ,0,,,,,,,
    ND,       615 ,0.416603 ,1.064497 ,0,,,,,,,
    ND,       617 ,0.377774 ,1.131744 ,0,,,,,,,
    ND,       605 ,0.322860 ,1.226592 ,0,,,,,,,
    ND,       604 ,0.262060 ,1.226592 ,0,,,,,,,
    ND,       515 ,0.118533 ,1.264730 ,0,,,,,,,
    ND,       514 ,0.059267 ,1.264730 ,0,,,,,,,
    ND,       513 ,0.000000 ,1.264730 ,0,,,,,,,
C*  Insert gap at bottom of top plug
    ND,       501 ,0.000000 ,0.986346 ,0,,,,,,,
    ND,       502 ,0.059266 ,0.986346 ,0,,,,,,,
    ND,       503 ,0.118533 ,0.986346 ,0,,,,,,,
C*  Insert gap radially
C*    ND,       633 ,0.000000 ,0.450342 ,0,,,,,,,
C*    ND,       634 ,0.050800 ,0.450342 ,0,,,,,,,
C*    ND,       635 ,0.159258 ,0.450342 ,0,,,,,,,
C*    ND,       640 ,0.159258 ,0.577850 ,0,,,,,,,
C*    ND,       641 ,0.159258 ,0.704850 ,0,,,,,,,
C*    ND,       642 ,0.159258 ,0.820387 ,0,,,,,,,
C*  Modify appropriate elements,
ACTSET,EG,1
ACTSET,MP,2
ACTSET,RC,1
EL,7,SF,0,4,9,10,514,513,0,
EL,8,SF,0,4,10,11,515,514,0,
EL,9,SF,0,4,11,12,16,515,0,
EL,51,SF,0,4,97,128,604,98,0,
EL,52,SF,0,4,128,617,605,604,0,
EL,50,SF,0,4,125,615,617,128,0,
EL,48,SF,0,4,122,613,615,125,0,
EL,72,SF,0,4,175,676,613,122,0,
EL,70,SF,0,4,172,673,676,175,0,
EL,68,SF,0,4,169,670,673,172,0,
EL,66,SF,0,4,166,665,670,169,0,
EL,84,SF,0,4,203,668,665,166,0,
EL,82,SF,0,4,600,667,668,203,0,
EL,81,SF,0,4,692,600,203,195,0,
EL,78,SF,0,4,691,692,195,194,0,
EL,77,SF,0,4,690,691,194,193,0,
C* Top plug lead elements
EL, 1,SF,0,4,501,502,6,5,0,
EL, 2,SF,0,4,502,503,7,6,0,
EL, 3,SF,0,4,503,4,8,7,0,
C*  Main body lead elements
C*EL,59,SF,0,4,149,150,634,633,0,
C*EL,60,SF,0,4,150,151,635,634,0,
```

```
C*EL,61,SF,0,4,151,156,640,635,0,
C*EL,62,SF,0,4,156,157,641,640,0,
C*EL,63,SF,0,4,157,158,642,641,0,
C*EL,64,SF,0,4,158,92,91,642,0,
C*  Gap plane2d elements
ACTSET,MP,3
EL,,SF,0,4,190,191,691,690,0,
EL,,SF,0,4,191,192,692,691,0,
EL,,SF,0,4,192,200,600,692,0,
EL,,SF,0,4,200,167,667,600,0,
EL,,SF,0,4,167,168,668,667,0,
EL,,SF,0,4,168,165,665,668,0,
EL,,SF,0,4,165,170,670,665,0,
EL,,SF,0,4,170,173,673,670,0,
EL,,SF,0,4,173,176,676,673,0,
EL,,SF,0,4,176,113,613,676,0,
EL,,SF,0,4,113,115,615,613,0,
EL,,SF,0,4,115,117,617,615,0,
EL,,SF,0,4,117,105,605,617,0,
EL,,SF,0,4,105,104,604,605,0,
EL,,SF,0,4,604,104,98,98,0,
EL,,SF,0,4,15,515,16,16,0,
EL,,SF,0,4,14,15,515,514,0,
EL,,SF,0,4,14,13,513,514,0,
C* Base of top plug elements
EL,,SF,0,4,1,2,502,501,0,
EL,,SF,0,4,2,3,503,502,0,
EL,,SF,0,4,3,503,4,4,0,
C* Radial elements
C*EL,,SF,0,4,633,634,134,133,0,
C*EL,,SF,0,4,634,635,135,134,0,
C*EL,,SF,0,4,635,640,140,135,0,
C*EL,,SF,0,4,640,641,141,140,0,
C*EL,,SF,0,4,641,642,142,141,0,
C*EL,,SF,0,4,142,642,91,91,0,
```

4.0 FILE GAPOFF.INP

```
C*  File gapoff.inp
C*  Modify appropriate elements, note gap is now lead
ACTSET,EG,1
ACTSET,MP,2
ACTSET,RC,1
EL,7,SF,0,4,9,10,514,513,0,
EL,8,SF,0,4,10,11,515,514,0,
EL,9,SF,0,4,11,12,16,515,0,
EL,51,SF,0,4,97,128,604,98,0,
EL,52,SF,0,4,128,617,605,604,0,
EL,50,SF,0,4,125,615,617,128,0,
EL,48,SF,0,4,122,613,615,125,0,
EL,72,SF,0,4,175,676,613,122,0,
EL,70,SF,0,4,172,673,676,175,0,
EL,68,SF,0,4,169,670,673,172,0,
EL,66,SF,0,4,166,665,670,169,0,
EL,84,SF,0,4,203,668,665,166,0,
EL,82,SF,0,4,600,667,668,203,0,
EL,81,SF,0,4,692,600,203,195,0,
EL,78,SF,0,4,691,692,195,194,0,
EL,77,SF,0,4,690,691,194,193,0,
C*  Gap plane2d elements
ACTSET,MP,2
EL,679,SF,0,4,190,191,691,690,0,
EL,680,SF,0,4,191,192,692,691,0,
EL,681,SF,0,4,192,200,600,692,0,
EL,682,SF,0,4,200,167,667,600,0,
EL,683,SF,0,4,167,168,668,667,0,
EL,684,SF,0,4,168,165,665,668,0,
EL,685,SF,0,4,165,170,670,665,0,
EL,686,SF,0,4,170,173,673,670,0,
EL,687,SF,0,4,173,176,676,673,0,
EL,688,SF,0,4,176,113,613,676,0,
EL,689,SF,0,4,113,115,615,613,0,
EL,690,SF,0,4,115,117,617,615,0,
EL,691,SF,0,4,117,105,605,617,0,
EL,692,SF,0,4,105,104,604,605,0,
EL,693,SF,0,4,604,104,98,98,0,
EL,694,SF,0,4,15,515,16,16,0,
EL,695,SF,0,4,14,15,515,514,0,
EL,696,SF,0,4,14,13,513,514,0,
```

5.0 FILE TESTBND.INP

```
TITLE,F294 STEADY STATE CALCS (VALIDATION OF MEASUREMENT, FILE TESTBND.INP)
C*  This file inserts boundary conditions based on the environment
C*  present during the steady state thermal test prior to the drop.
C*  Specification of heat load and convection boundary conditions
C*  Based on 375.5 kCi and ambient temp of 23 C
C*  Top gets 10 % of heat gen, 1/3 in steel, 2/3 in lead
QEL,10,94600,13,1,
QEL,1,61250,3,1,
C*  Bottom gets 10 % of heat gen
QEL,53,85163,54,1,
QEL,59,85163,60,1,
C*  Radial gets 80 % of heat gen
QEL,37,145468,37,1,
QEL,55,145468,58,1,
QEL,61,145468,64,1,
C*  Upper fireshield, inside surfaces see 40 C
CEL,22,6.5,40,1,26,1,0,
CEL,121,6.5,40,1,121,1,0,
CEL,32,4.0,29,3,36,1,0,
CEL,119,4.0,29,3,119,1,0,
CEL,119,6.5,40,2,121,1,0
C*  Radial fireshield, inside surfaces see 33 C except for exit
CEL,89,6.5,33,4,93,1,0,
CEL,104,6.5,40,4,108,1,0,
CEL,644,6.5,33,4,644,1,0,
CEL,122,6.5,40,3,124,1,0,
CEL,122,6.5,40,4,122,1,0,
CEL,114,1.6,23,2,118,1,0,
CEL,645,1.6,23,2,645,1,0,
CEL,99,1.6,23,2,103,1,0,
CEL,140,1.6,23,1,142,1,0,
CEL,140,1.6,23,4,140,1,0,
CEL,124,1.6,23,2,142,18,0,
C*  Lower fireshield
C*  CEL,125,6.5,23,3,126,1,0,
CEL,129,1.0,23,1,130,1,0,
CEL,131,1.0,23,2,133,1,0,
CEL,131,1.0,23,1,131,1,0,
CEL,138,1.0,23,1,139,1,0,
C*  Top plug, air temp of 40 C assumed
CEL,20,8.0,40,2,21,1,0,
CEL,20,8.0,40,3,21,1,0,
CEL,20,8.0,40,4,20,1,0,
CEL,17,8.0,40,3,18,1,0,
C*  Radiation boundary conditions based on 23 C
C*  Radiation links
ACTSET,MP,3
ACTSET,EG,3
    RCONST,3,  900 ,1,4, 0.0007 ,1.0,0.8,5.669E-8
    EL,,CR,,2,  85 ,        400
    RCONST,3,  901 ,1,4, 0.0057 ,1.0,0.8,5.669E-8
    EL,,CR,,2,  86 ,        400
    RCONST,3,  902 ,1,4, 0.0113 ,1.0,0.8,5.669E-8
    EL,,CR,,2,  87 ,        400
    RCONST,3,  903 ,1,4, 0.0159 ,1.0 ,0.8,5.669E-8
```

```
EL,,CR,,2,  88 ,        400
RCONST,3,  904 ,1,4, 0.0214 ,1.0 ,0.8,5.669E-8
EL,,CR,,2,  89 ,        400
RCONST,3,  905 ,1,4, 0.0158 ,1.0 ,0.8,5.669E-8
EL,,CR,,2,  90 ,        400
RCONST,3,  906 ,1,4, 0.0060 ,1.0 ,0.8,5.669E-8
EL,,CR,,2,  295,        400
RCONST,3,  907 ,1,4, 0.0085 ,1.0 ,0.8,5.669E-8
EL,,CR,,2,  293,        400
RCONST,3,  908 ,1,4, 0.0059 ,1.0 ,0.8,5.669E-8
EL,,CR,,2,  297,        400
RCONST,3,  909 ,1,4, 0.0061 ,1.0 ,0.8,5.669E-8
EL,,CR,,2,  301,        400
RCONST,3,  910 ,1,4, 0.0158 ,1.0 ,0.8,5.669E-8
EL,,CR,,2,  60 ,        400
RCONST,3,  911 ,1,4, 0.0018 ,1.0 ,0.8,5.669E-8
EL,,CR,,2, 306 ,        400
RCONST,3,  912 ,1,4, 0.0091 ,1.0 ,0.8,5.669E-8
EL,,CR,,2, 307 ,        400
RCONST,3,  913 ,1,4, 0.0094 ,1.0 ,0.8,5.669E-8
EL,,CR,,2, 311 ,        400
RCONST,3,  914 ,1,4, 0.0073 ,1.0 ,0.8,5.669E-8
EL,,CR,,2, 315 ,        400
RCONST,3,  915 ,1,4, 0.0207 ,1.0 ,0.8,5.669E-8
EL,,CR,,2, 291 ,        400
RCONST,3,  916 ,1,4, 0.0301 ,1.0 ,0.8,5.669E-8
EL,,CR,,2, 289 ,        400
RCONST,3,  917 ,1,4, 0.0429 ,1.0 ,0.8,5.669E-8
EL,,CR,,2, 287 ,        400
RCONST,3,  918 ,1,4, 0.0478 ,1.0 ,0.8,5.669E-8
EL,,CR,,2, 285 ,        400
RCONST,3,  919 ,1,4, 0.0339 ,1.0 ,0.8,5.669E-8
EL,,CR,,2, 283 ,        400
RCONST,3,  920 ,1,4, 0.0745 ,1.0 ,0.8,5.669E-8
EL,,CR,,2, 255 ,        400
RCONST,3,  921 ,1,4, 0.1068 ,1.0 ,0.8,5.669E-8
EL,,CR,,2, 253 ,        400
RCONST,3,  923 ,1,4, 0.1170 ,1.0 ,0.8,5.669E-8
EL,,CR,,2, 251 ,        400
RCONST,3,  924 ,1,4, 0.1003 ,1.0 ,0.8,5.669E-8
EL,,CR,,2, 249 ,        400
RCONST,3,  925 ,1,4, 0.0652 ,1.0 ,0.8,5.669E-8
EL,,CR,,2, 740 ,        400
RCONST,3,  926 ,1,4, 0.0600 ,1.0 ,0.8,5.669E-8
EL,,CR,,2, 247 ,        400
RCONST,3,  927 ,1,4, 0.0302 ,1.0 ,0.8,5.669E-8
EL,,CR,,2, 245 ,        400
RCONST,3,  928 ,1,4, 0.0077 ,1.0 ,0.8,5.669E-8
EL,,CR,,2, 373 ,        400
RCONST,3,  929 ,1,4, 0.0094 ,1.0 ,0.8,5.669E-8
EL,,CR,,2, 369 ,        400
RCONST,3,  930 ,1,4, 0.0091 ,1.0 ,0.8,5.669E-8
EL,,CR,,2, 365 ,        400
RCONST,3,  931 ,1,4, 0.0018 ,1.0 ,0.8,5.669E-8
EL,,CR,,2, 364 ,        400
RCONST,3,  932 ,1,4, 0.0003 ,1.0 ,0.8,5.669E-8
EL,,CR,,2, 328 ,        400
```

```
    RCONST,3,  933 ,1,4, 0.0070 ,1.0 ,0.8,5.669E-8
    EL,,CR,,2, 329 ,        400
    RCONST,3,  934 ,1,4, 0.0251 ,1.0 ,0.8,5.669E-8
    EL,,CR,,2, 330 ,        400
    RCONST,3,  935 ,1,4, 0.0570 ,1.0 ,0.8,5.669E-8
    EL,,CR,,2, 359 ,        400
    RCONST,3,  936 ,1,4, 0.0581 ,1.0 ,0.8,5.669E-8
    EL,,CR,,2, 334 ,        400
    RCONST,3,  937 ,1,4, 0.0132 ,1.0 ,0.8,5.669E-8
    EL,,CR,,2, 335 ,        400
    RCONST,3,  938 ,1,4, 0.0115 ,1.0 ,0.8,5.669E-8
    EL,,CR,,2, 337 ,        400
    RCONST,3,  939 ,1,4, 0.0142 ,1.0 ,0.8,5.669E-8
    EL,,CR,,2, 341 ,        400
C*  Define node 400 as the environment at 23 C, 401 at 33 C and 402
C*  at 40 C for steady state conditions.  Nodes are separated so that
C*  different boundary conditions appear in plots.
NTND,400,23,400,1,
NTND,401,33,401,1,
NTND,402,40,402,1,
A_THERMAL,S,0.001,1,1,20,
```

6.0 FILE 360BND.INP

```
TITLE,F294 STEADY STATE CALCS (FILE 360BND.INP)
C*  This file inserts boundary conditions based on the environment
C*  present during the steady state thermal test prior to the drop.
C*  Specification of heat load and convection boundary conditions
C*  Based on 360 kCi and ambient temp of 38 C
C*  Top gets 10 % of heat gen, 1/3 in steel, 2/3 in lead
QEL,10,90695,13,1,
QEL,1,58722,3,1,
C*  Bottom gets 10 % of heat gen
QEL,53,81648,54,1,
QEL,59,81648,60,1,
C*  Radial gets 80 % of heat gen
QEL,37,139463,37,1,
QEL,55,139463,58,1,
QEL,61,139463,64,1,
C*  Upper fireshield, inside surfaces see 55 C
CEL,22,6.5,55,1,26,1,0,
CEL,121,6.5,55,1,121,1,0,
CEL,32,4.0,44,3,36,1,0,
CEL,119,4.0,44,3,119,1,0,
CEL,119,6.5,55,2,121,1,0
C*  Radial fireshield, inside surfaces see 33 C except for exit
CEL,89,6.5,48,4,93,1,0,
CEL,104,6.5,55,4,108,1,0,
CEL,644,6.5,48,4,644,1,0,
CEL,122,6.5,55,3,124,1,0,
CEL,122,6.5,55,4,122,1,0,
CEL,114,1.6,38,2,118,1,0,
CEL,645,1.6,38,2,645,1,0,
CEL,99,1.6,38,2,103,1,0,
CEL,140,1.6,38,1,142,1,0,
CEL,140,1.6,38,4,140,1,0,
CEL,124,1.6,38,2,142,18,0,
C*  Lower fireshield
C*  CEL,125,6.5,38,3,126,1,0,
CEL,129,1.0,38,1,130,1,0,
CEL,131,1.0,38,2,133,1,0,
CEL,131,1.0,38,1,131,1,0,
CEL,138,1.0,38,1,139,1,0,
C*  Top plug, air temp of 55 C assumed
CEL,20,8.0,55,2,21,1,0,
CEL,20,8.0,55,3,21,1,0,
CEL,20,8.0,55,4,20,1,0,
CEL,17,8.0,55,3,18,1,0,
C*  Radiation boundary conditions based on 38 C
C*  Radiation links
ACTSET,MP,3
ACTSET,EG,3
    RCONST,3,  900 ,1,4, 0.0007 ,1.0,0.8,5.669E-8
    EL,,CR,,2,  85 ,        400
    RCONST,3,  901 ,1,4, 0.0057 ,1.0,0.8,5.669E-8
    EL,,CR,,2,  86 ,        400
    RCONST,3,  902 ,1,4, 0.0113 ,1.0,0.8,5.669E-8
    EL,,CR,,2,  87 ,        400
    RCONST,3,  903 ,1,4, 0.0159 ,1.0 ,0.8,5.669E-8
```

```
EL,,CR,,2,  88 ,        400
RCONST,3,  904 ,1,4, 0.0214 ,1.0 ,0.8,5.669E-8
EL,,CR,,2,  89 ,        400
RCONST,3,  905 ,1,4, 0.0158 ,1.0 ,0.8,5.669E-8
EL,,CR,,2,  90 ,        400
RCONST,3,  906 ,1,4, 0.0060 ,1.0 ,0.8,5.669E-8
EL,,CR,,2,  295,        400
RCONST,3,  907 ,1,4, 0.0085 ,1.0 ,0.8,5.669E-8
EL,,CR,,2,  293,        400
RCONST,3,  908 ,1,4, 0.0059 ,1.0 ,0.8,5.669E-8
EL,,CR,,2,  297,        400
RCONST,3,  909 ,1,4, 0.0061 ,1.0 ,0.8,5.669E-8
EL,,CR,,2,  301,        400
RCONST,3,  910 ,1,4, 0.0158 ,1.0 ,0.8,5.669E-8
EL,,CR,,2,  60 ,        400
RCONST,3,  911 ,1,4, 0.0018 ,1.0 ,0.8,5.669E-8
EL,,CR,,2, 306 ,        400
RCONST,3,  912 ,1,4, 0.0091 ,1.0 ,0.8,5.669E-8
EL,,CR,,2, 307 ,        400
RCONST,3,  913 ,1,4, 0.0094 ,1.0 ,0.8,5.669E-8
EL,,CR,,2, 311 ,        400
RCONST,3,  914 ,1,4, 0.0073 ,1.0 ,0.8,5.669E-8
EL,,CR,,2, 315 ,        400
RCONST,3,  915 ,1,4, 0.0207 ,1.0 ,0.8,5.669E-8
EL,,CR,,2, 291 ,        400
RCONST,3,  916 ,1,4, 0.0301 ,1.0 ,0.8,5.669E-8
EL,,CR,,2, 289 ,        400
RCONST,3,  917 ,1,4, 0.0429 ,1.0 ,0.8,5.669E-8
EL,,CR,,2, 287 ,        400
RCONST,3,  918 ,1,4, 0.0478 ,1.0 ,0.8,5.669E-8
EL,,CR,,2, 285 ,        400
RCONST,3,  919 ,1,4, 0.0339 ,1.0 ,0.8,5.669E-8
EL,,CR,,2, 283 ,        400
RCONST,3,  920 ,1,4, 0.0745 ,1.0 ,0.8,5.669E-8
EL,,CR,,2, 255 ,        400
RCONST,3,  921 ,1,4, 0.1068 ,1.0 ,0.8,5.669E-8
EL,,CR,,2, 253 ,        400
RCONST,3,  923 ,1,4, 0.1170 ,1.0 ,0.8,5.669E-8
EL,,CR,,2, 251 ,        400
RCONST,3,  924 ,1,4, 0.1003 ,1.0 ,0.8,5.669E-8
EL,,CR,,2, 249 ,        400
RCONST,3,  925 ,1,4, 0.0652 ,1.0 ,0.8,5.669E-8
EL,,CR,,2, 740 ,        400
RCONST,3,  926 ,1,4, 0.0600 ,1.0 ,0.8,5.669E-8
EL,,CR,,2, 247 ,        400
RCONST,3,  927 ,1,4, 0.0302 ,1.0 ,0.8,5.669E-8
EL,,CR,,2, 245 ,        400
RCONST,3,  928 ,1,4, 0.0077 ,1.0 ,0.8,5.669E-8
EL,,CR,,2, 373 ,        400
RCONST,3,  929 ,1,4, 0.0094 ,1.0 ,0.8,5.669E-8
EL,,CR,,2, 369 ,        400
RCONST,3,  930 ,1,4, 0.0091 ,1.0 ,0.8,5.669E-8
EL,,CR,,2, 365 ,        400
RCONST,3,  931 ,1,4, 0.0018 ,1.0 ,0.8,5.669E-8
EL,,CR,,2, 364 ,        400
RCONST,3,  932 ,1,4, 0.0003 ,1.0 ,0.8,5.669E-8
EL,,CR,,2, 328 ,        400
```

```
    RCONST,3,  933 ,1,4, 0.0070 ,1.0 ,0.8,5.669E-8
    EL,,CR,,2, 329 ,        400
    RCONST,3,  934 ,1,4, 0.0251 ,1.0 ,0.8,5.669E-8
    EL,,CR,,2, 330 ,        400
    RCONST,3,  935 ,1,4, 0.0570 ,1.0 ,0.8,5.669E-8
    EL,,CR,,2, 359 ,        400
    RCONST,3,  936 ,1,4, 0.0581 ,1.0 ,0.8,5.669E-8
    EL,,CR,,2, 334 ,        400
    RCONST,3,  937 ,1,4, 0.0132 ,1.0 ,0.8,5.669E-8
    EL,,CR,,2, 335 ,        400
    RCONST,3,  938 ,1,4, 0.0115 ,1.0 ,0.8,5.669E-8
    EL,,CR,,2, 337 ,        400
    RCONST,3,  939 ,1,4, 0.0142 ,1.0 ,0.8,5.669E-8
    EL,,CR,,2, 341 ,        400
C*  Define node 400 as the environment at 38 C, 401 at 48 C and 402
C*  at 55 C for steady state conditions.  Nodes are separated so that
C*  different boundary conditions appear in plots.
NTND,400,38,400,1,
NTND,401,48,401,1,
NTND,402,55,402,1,
A_THERMAL,S,0.001,1,1,20,
```

7.0 FILE FIRE12.INP

```
TITLE,F294 TRANSIENT ANALYSIS - case h=12
TEMPINIT,1
CLS;
EPLOT;
MPROP,8,HC,12.0
C*  Set time curves for ambient temperature
CURDEF,TIME,5,1,0,800,1800,800,1800.01,38,100000,38
CURDEF,TIME,6,1,0,800,1800,800,1800.01,48,100000,48
CURDEF,TIME,7,1,0,800,1800,800,1800.01,55,100000,55
C*  Set node 400,401,402 temperature to 1
ACTSET,TC,5
NTND,400,1,400,1,
ACTSET,TC,0
ACTSET,TC,6
NTND,401,1,401,1,
ACTSET,TC,0
ACTSET,TC,7
NTND,402,1,402,1,
ACTSET,TC,0
C*  Modify external convection boundary conditions
C*  Upper fireshield
CEL,22,12.0,1,1,26,1,7,
CEL,121,12.0,1,1,121,1,7,
CEL,32,12.0,1,3,36,1,5,
CEL,119,12.0,1,3,119,1,5,
CEL,119,12.0,1,2,121,1,5
C*  Radial fireshield
CEL,89,12.0,1,4,93,1,6,
CEL,104,12.0,1,4,108,1,6,
CEL,644,12.0,1,4,644,1,6,
CEL,122,12.0,1,3,124,1,7,
CEL,122,12.0,1,4,122,1,7,
CEL,114,12.0,1,2,118,1,5,
CEL,645,12.0,1,2,645,1,5,
CEL,99,12.0,1,2,103,1,5,
CEL,140,12.0,1,1,142,1,5,
CEL,140,12.0,1,4,140,1,5,
CEL,124,12.0,1,2,142,18,5,
C*  Lower fireshield
CEL,129,12.0,1,1,130,1,5,
CEL,131,12.0,1,2,133,1,5,
CEL,131,12.0,1,1,131,1,5,
CEL,138,12.0,1,1,139,1,5,
C*  Top plug
CEL,20,12.0,1,2,21,1,7,
CEL,20,12.0,1,3,21,1,7,
CEL,20,12.0,1,4,20,1,7,
CEL,17,12.0,1,3,18,1,7,
C*
A_FFETHERMAL,T,2,0.001,20,1,
TIMES,0,9000,60,
```

8.0 FILE INSOL8.INP

```
C*  File INSOL8.INP
C*  This file requires 294GEOM,GAPON,360BND to be run before it.
C*  Apply the solar heat flux
TITLE,F294 STEADY STATE WITH INSOLATION CONSIDERED
HXEL,32,2000,3,36,1,
HXEL,119,2000,3,119,1,
HXEL,124,500,2,124,1,
HXEL,114,500,2,118,1,
HXEL,99,500,2,103,1,
HXEL,645,500,2,645,1,
HXEL,142,500,2,142,1,
ESELPROP,EG,1,1,1,1,
CLS,1,
EPLOT;
HXPLOT;
```

9.0 SSTEST.TEM

```
*****************************************************************
*****************************************************************
**                                                             **
**                                                             **
**  CCCC   OOOO   SSSS   M     M   OOOO   SSSS     / M     M   **
**  C      O  O   S      MM   MM   O  O   S       /  MM   MM   **
**  C      O  O   SSSS   M M M M   O  O   SSSS   /   M M M M   **
**  C      O  O      S   M  M  M   O  O      S  /    M  M  M   **
**  CCCC   OOOO   SSSS   M     M   OOOO   SSSS /     M     M   **
**                                                             **
**                                                             **
**                HEAT TRANSFER VERSION:   1.75                **
**                      DISTRIBUTED BY:                        **
**      STRUCTURAL  RESEARCH  AND  ANALYSIS  CORPORATION       **
**                12121 WILSHIRE BLVD. SUITE 700               **
**            LOS ANGELES,   CALIFORNIA    90025               **
**                TEL. NO.   (310) 207-2800                    **
**               COPYRIGHT  1988   S. R. A. C.                 **
**                                                             **
*****************************************************************
*****************************************************************

Licensed to:NORDION INTERNAT

 Total number of nodes                          =      274
 Total number of elements                       =      216
 Total number of words in stiffness matrix      =     5108
 Maximum half bandwidth                         =      174
 Total number of stiffness blocks               =        1

 Type of analysis       :     Nonlinear Steady State

 Method of solution     :     Newton Raphson
 Reformation interval in equilibrium iterations   =      1
 Max. no. of equilibrium iterations allowed       =     20
 Convergen tolerance                              =    0.10000E-02

1-----------------------------------------------------------------------
 Structural Research and Analysis Co  HSTAR 1.75    5/28/1998  Page   1
 SSTEST2 F294 STEADY STATE CALCS (VALIDATIONOFMEASUREMENT FILETESTEND.INP
 -----------------------------------------------------------------------


        Temperatures at time step =    1     Time =  0.00000E+00)

    Number of equilibrium iterations in time step (    1 ) =     3


  Node   Temperature     Node   Temperature     Node   Temperature

    1     207.65          2     205.56          3     199.85
    4     189.28          5     183.03          6     182.97
    7     183.06          8     182.38          9     173.04
```

10	172.61	11	171.79	12	172.23
13	142.98	14	142.71	15	143.69
16	150.27	17	207.79	18	205.89
19	198.62	20	189.87	28	182.07
30	172.45	32	146.09	35	138.84
40	138.55	41	140.00	45	135.09
46	135.00	49	132.89	50	132.65
52	131.98	54	131.06	55	38.448
56	38.347	57	38.105	58	37.769
59	37.310	60	36.698	61	38.446
62	38.346	63	38.104	64	37.767
65	37.310	66	36.692	73	35.753
74	35.807	75	35.907	76	36.050
77	36.242	78	36.520	85	35.745
86	35.803	87	35.903	88	36.044
89	36.242	90	36.498	91	163.68
92	156.79	93	164.54	94	157.42
96	145.64	97	140.06	98	130.00
100	145.83	101	140.91	102	124.26
104	114.03	105	111.31	107	119.14
108	105.81	110	112.85	112	100.55
113	101.14	114	99.894	115	103.83
116	101.46	117	121.25	118	120.42
122	143.40	125	141.62	128	138.09
133	160.72	134	160.33	135	156.91
136	162.29	137	161.42	138	159.79
140	167.87	141	171.45	142	170.04
145	169.71	146	172.13	147	170.41
149	155.92	150	155.65	151	148.89
156	160.67	157	165.69	158	165.15
163	95.549	164	93.093	165	94.886
166	138.64	167	118.15	168	96.910
169	143.08	170	100.47	172	149.65
173	106.35	175	149.39	176	106.20
181	120.58	183	99.358	185	105.06
187	104.91	190	96.788	191	92.042
192	79.672	193	140.33	194	139.92
195	136.33	200	83.412	203	131.96
208	96.960	209	90.152	210	78.361
211	79.377	215	83.060	220	30.453

1----------

Structural Research and Analysis Co HSTAR 1.75 5/28/1998 Page 2
SSTEST2 F294 STEADY STATE CALCS (VALIDATIONOFMEASUREMENT FILETESTBND.INP

221	30.448	222	31.163	223	31.163
224	32.315	225	32.315	226	33.032
227	33.031	228	33.593	229	33.592
230	34.786	231	34.786	233	30.330
235	29.799	237	29.081	239	29.133
241	29.583	243	30.705	245	30.326
247	29.799	249	29.080	251	29.133
253	29.583	255	30.704	258	35.136
259	35.133	260	35.372	261	35.371
262	35.215	263	35.213	264	34.885
265	34.886	266	34.354	267	34.344
271	31.077	273	31.677	275	32.708

277	33.360	279	34.137	283	31.076
285	31.676	287	32.707	289	33.362
291	34.125	293	36.551	295	36.508
297	36.663	301	36.677	306	34.302
307	34.289	311	34.213	315	34.203
316	49.764	317	49.927	318	47.923
319	49.713	320	49.973	321	47.943
322	44.646	323	44.606	324	44.176
328	44.632	329	44.592	330	44.167
334	42.864	335	42.842	336	42.864
337	42.845	340	42.891	341	42.800
344	42.893	345	42.731	347	45.639
350	45.645	353	43.583	359	43.575
364	30.404	365	30.401	369	30.367
373	30.360	400	23.000	401	33.000
402	40.000	435	138.38	445	134.89
501	188.06	502	187.96	503	187.81
513	162.65	514	161.49	515	158.25
600	127.63	604	134.12	605	134.28
613	136.57	615	136.82	617	136.86
665	129.12	667	126.38	668	129.05
670	133.88	673	141.69	676	141.40
690	131.22	691	130.81	692	128.19
700	56.698	701	82.656	702	87.857
703	87.771	704	81.903	705	75.508
706	68.065	707	59.561	708	54.395
709	55.409	710	62.611	711	61.864
712	95.229	713	100.69	714	80.739
715	78.183	716	71.514	717	77.971
718	92.225	719	100.52	720	92.619
721	76.760	722	72.082	723	80.368
724	97.442	725	84.514	726	104.98
727	53.034	728	65.132	730	87.573
731	56.405	732	70.209	733	70.898
734	57.561	735	86.659	736	74.269
737	31.878	738	31.878	739	29.303
740	29.303				

```
Tmax  =     207.79
Tmin  =     23.000

1-----------------------------------------------------------------------
 Structural Research and Analysis Co  HSTAR 1.75    5/28/1998  Page   3
 SSTEST2 F294 STEADY STATE CALCS (VALIDATIONOFMEASUREMENT FILETESTBND.INP
 -----------------------------------------------------------------------
```

```
=================================

S O L U T I O N   T I M E   L O G

=================================
```

Input phase	=	8.0
Assemblage of matrices	=	3.0
Triangularization of conductivity matrix	=	0.0
Solution of equations	=	0.0
Miscellaneous calculations	=	1.0
T O T A L S O L U T I O N T I M E	=	12.0

10.0 SS360.TEM

```
*****************************************************************
*****************************************************************
**                                                             **
**                                                             **
**  CCCC   OOOO   SSSS   M     M   OOOO   SSSS     / M     M   **
**  C      O  O   S      MM   MM   O  O   S       /  MM   MM   **
**  C      O  O   SSSS   M M M M   O  O   SSSS   /   M M M M   **
**  C      O  O      S   M  M  M   O  O      S  /    M  M  M   **
**  CCCC   OOOO   SSSS   M     M   OOOO   SSSS /     M     M   **
**                                                             **
**                                                             **
**                HEAT TRANSFER VERSION:   1.75                **
**                     DISTRIBUTED BY:                         **
**      STRUCTURAL  RESEARCH  AND  ANALYSIS  CORPORATION       **
**                12121 WILSHIRE BLVD. SUITE 700               **
**            LOS ANGELES,   CALIFORNIA    90025               **
**                TEL. NO.   (310) 207-2800                    **
**               COPYRIGHT  1988   S. R. A. C.                 **
**                                                             **
*****************************************************************
*****************************************************************

Licensed to:NORDION INTERNAT

 Total number of nodes                          =      274
 Total number of elements                       =      216
 Total number of words in stiffness matrix      =     5305
 Maximum half bandwidth                         =      241
 Total number of stiffness blocks               =        1

 Type of analysis       :     Nonlinear Steady State

 Method of solution     :     Newton Raphson
 Reformation interval in equilibrium iterations   =      1
 Max. no. of equilibrium iterations allowed       =     20
 Convergen tolerance                              =    0.10000E-02

1-----------------------------------------------------------------------
 Structural Research and Analysis Co  HSTAR 1.75    6/13/1998  Page   1
 SS360   F294 STEADY STATE CALCS (FILE360BND.INP)
 -----------------------------------------------------------------------


        Temperatures at time step =    1     Time =  0.00000E+00)

    Number of equilibrium iterations in time step (    1 ) =     3


  Node   Temperature    Node   Temperature    Node   Temperature

    1     214.90          2     212.89          3     207.43
    4     197.33          5     191.34          6     191.28
    7     191.36          8     190.71          9     181.75
```

10	181.33	11	180.54	12	180.96
13	152.96	14	152.71	15	153.64
16	159.88	17	215.03	18	213.21
19	206.24	20	197.90	28	190.42
30	181.17	32	155.91	35	149.09
40	148.82	41	150.17	45	145.59
46	145.50	49	143.53	50	143.29
52	142.69	54	141.81	55	53.704
56	53.601	57	53.336	58	52.971
59	52.478	60	51.834	61	53.703
62	53.599	63	53.335	64	52.970
65	52.478	66	51.828	73	50.868
74	50.923	75	51.024	76	51.170
77	51.366	78	51.650	85	50.860
86	50.918	87	51.020	88	51.164
89	51.366	90	51.628	91	173.04
92	166.43	93	173.86	94	167.03
96	155.71	97	150.33	98	140.61
100	155.89	101	151.12	102	135.11
104	125.48	105	122.87	107	130.33
108	117.80	110	124.31	112	112.86
113	113.24	114	112.09	115	115.74
116	113.53	117	132.10	118	131.32
122	153.56	125	151.85	128	148.44
133	170.17	134	169.80	135	166.52
136	171.66	137	170.81	138	169.28
140	177.06	141	180.51	142	179.17
145	178.83	146	181.16	147	179.51
149	165.56	150	165.30	151	158.80
156	170.13	157	174.98	158	174.47
163	107.70	164	105.39	165	107.07
166	148.94	167	128.93	168	108.97
169	153.23	170	112.41	172	159.56
173	118.06	175	159.33	176	117.93
181	131.22	183	111.38	185	116.86
187	116.73	190	108.63	191	104.16
192	92.374	193	150.56	194	150.17
195	146.71	200	95.988	203	142.50
208	108.80	209	102.38	210	91.136
211	92.167	215	95.666	220	45.558

1----------

Structural Research and Analysis Co HSTAR 1.75 6/13/1998 Page 2
SS360 F294 STEADY STATE CALCS (FILE360BND.INP)

221	45.553	222	46.285	223	46.285
224	47.491	225	47.491	226	48.234
227	48.234	228	48.787	229	48.787
230	49.942	231	49.942	233	45.433
235	44.892	237	44.161	239	44.208
241	44.655	243	45.774	245	45.429
247	44.892	249	44.161	251	44.208
253	44.654	255	45.773	258	50.277
259	50.275	260	50.494	261	50.493
262	50.313	263	50.311	264	49.973
265	49.973	266	49.432	267	49.422
271	46.145	273	46.745	275	47.778

277	48.433	279	49.213	283	46.144
285	46.744	287	47.777	289	48.435
291	49.202	293	51.682	295	51.637
297	51.797	301	51.813	306	49.380
307	49.367	311	49.290	315	49.280
316	63.757	317	63.914	318	62.002
319	63.708	320	63.958	321	62.021
322	58.850	323	58.812	324	58.404
328	58.837	329	58.799	330	58.395
334	57.169	335	57.148	336	57.169
337	57.152	340	57.197	341	57.109
344	57.200	345	57.044	347	59.832
350	59.838	353	57.842	359	57.835
364	45.509	365	45.505	369	45.470
373	45.464	400	38.000	401	48.000
402	55.000	435	148.67	445	145.40
501	196.17	502	196.07	503	195.92
513	171.77	514	170.66	515	167.55
600	138.33	604	144.62	605	144.78
613	147.02	615	147.25	617	147.26
665	139.78	667	137.09	668	139.70
670	144.37	673	151.91	676	151.64
690	141.79	691	141.40	692	138.88
700	70.655	701	95.434	702	100.41
703	100.35	704	94.961	705	88.882
706	81.825	707	73.735	708	68.803
709	69.785	710	76.763	711	76.082
712	107.91	713	113.06	714	94.139
715	91.696	716	85.303	717	91.399
718	104.91	719	112.66	720	105.27
721	90.255	722	85.847	723	93.780
724	109.96	725	97.726	726	117.03
727	67.503	728	79.135	730	100.16
731	70.438	732	83.450	733	84.109
734	71.539	735	99.286	736	87.446
737	47.031	738	47.030	739	44.388
740	44.387				

```
Tmax  =     215.03
Tmin  =     38.000

1-----------------------------------------------------------------------
 Structural Research and Analysis Co  HSTAR 1.75    6/13/1998  Page   3
 SS360   F294 STEADY STATE CALCS (FILE360BND.INP)
 -----------------------------------------------------------------------
```

==========

S O L U T I O N T I M E L O G

==========

Input phase	=	9.0
Assemblage of matrices	=	3.0
Triangularization of conductivity matrix	=	0.0
Solution of equations	=	0.0
Miscellaneous calculations	=	1.0
T O T A L S O L U T I O N T I M E	=	13.0

11.0 SS360SUN.TEM

```
*****************************************************************
*****************************************************************
**                                                             **
**                                                             **
**  CCCC   OOOO   SSSS   M     M   OOOO   SSSS     / M     M   **
**  C      O  O   S      MM   MM   O  O   S       /  MM   MM   **
**  C      O  O   SSSS   M M M M   O  O   SSSS   /   M M M M   **
**  C      O  O      S   M  M  M   O  O      S  /    M  M  M   **
**  CCCC   OOOO   SSSS   M     M   OOOO   SSSS /     M     M   **
**                                                             **
**                                                             **
**                HEAT TRANSFER VERSION:   1.75                **
**                      DISTRIBUTED BY:                        **
**      STRUCTURAL  RESEARCH  AND  ANALYSIS  CORPORATION       **
**                12121 WILSHIRE BLVD. SUITE 700               **
**            LOS ANGELES,   CALIFORNIA    90025               **
**                TEL. NO.   (310) 207-2800                    **
**               COPYRIGHT  1988   S. R. A. C.                 **
**                                                             **
*****************************************************************
*****************************************************************

Licensed to:NORDION INTERNAT

 Total number of nodes                        =       274
 Total number of elements                     =       216
 Total number of words in stiffness matrix    =      5206
 Maximum half bandwidth                       =       223
 Total number of stiffness blocks             =         1

 Type of analysis       :     Nonlinear Steady State

 Method of solution     :     Newton Raphson
 Reformation interval in equilibrium iterations   =      1
 Max. no. of equilibrium iterations allowed       =     20
 Convergen tolerance                              =    0.10000E-02

1-----------------------------------------------------------------------
 Structural Research and Analysis Co  HSTAR 1.75    6/13/1998  Page   1
 ss360sunF294 STEADY STATE WITH INSOLATION CONSIDERED
 -----------------------------------------------------------------------


        Temperatures at time step =    1     Time =  0.00000E+00)

    Number of equilibrium iterations in time step (    1 ) =     4


  Node   Temperature    Node   Temperature    Node   Temperature

    1     215.18          2     213.17          3     207.70
    4     197.60          5     191.64          6     191.57
    7     191.65          8     190.99          9     182.05
```

10	181.63	11	180.85	12	181.25
13	153.37	14	153.12	15	154.03
16	160.24	17	215.31	18	213.49
19	206.52	20	198.17	28	190.70
30	181.45	32	156.28	35	149.50
40	149.25	41	150.60	45	146.00
46	145.89	49	143.97	50	143.74
52	143.08	54	142.22	55	126.01
56	128.63	57	133.32	58	140.28
59	150.59	60	165.73	61	126.06
62	128.66	63	133.35	64	140.33
65	150.58	66	165.91	73	191.91
74	190.40	75	187.70	76	183.84
77	178.56	78	170.70	85	192.17
86	190.51	87	187.82	88	184.01
89	178.55	90	171.34	91	173.14
92	166.54	93	173.96	94	167.14
96	155.83	97	150.46	98	140.75
100	156.01	101	151.24	102	135.26
104	125.64	105	123.02	107	130.49
108	117.97	110	124.46	112	113.03
113	113.32	114	112.17	115	115.83
116	113.62	117	132.21	118	131.43
122	153.67	125	151.96	128	148.56
133	170.24	134	169.87	135	166.59
136	171.73	137	170.88	138	169.35
140	177.14	141	180.60	142	179.26
145	178.91	146	181.24	147	179.61
149	165.63	150	165.37	151	158.87
156	170.21	157	175.06	158	174.56
163	107.76	164	105.45	165	107.13
166	149.01	167	128.99	168	109.03
169	153.30	170	112.47	172	159.64
173	118.12	175	159.42	176	118.00
181	131.28	183	111.44	185	116.92
187	116.80	190	108.67	191	104.21
192	92.414	193	150.63	194	150.23
195	146.77	200	96.033	203	142.56
208	108.84	209	102.42	210	91.175
211	92.210	215	95.711	220	92.354

1----------

Structural Research and Analysis Co HSTAR 1.75 6/13/1998 Page 2
ss360sunF294 STEADY STATE WITH INSOLATION CONSIDERED

221	92.435	222	82.434	223	82.432
224	69.237	225	69.246	226	65.635
227	65.644	228	66.084	229	66.093
230	70.339	231	70.349	233	94.421
235	104.14	237	117.97	239	122.48
241	122.30	243	118.20	245	94.499
247	104.14	249	117.98	251	122.49
253	122.31	255	118.21	258	72.294
259	72.302	260	75.565	261	75.572
262	81.771	263	81.786	264	86.288
265	86.276	266	92.018	267	92.116
271	116.25	273	112.73	275	105.68

277	100.60	279	94.038	283	116.26
285	112.74	287	105.70	289	100.59
291	94.147	293	169.81	295	171.04
297	166.71	301	166.34	306	92.563
307	92.665	311	93.369	315	93.464
316	63.791	317	63.947	318	62.036
319	63.742	320	63.991	321	62.055
322	58.905	323	58.867	324	58.459
328	58.892	329	58.854	330	58.450
334	57.218	335	57.197	336	57.219
337	57.201	340	57.245	341	57.158
344	57.248	345	57.092	347	59.869
350	59.875	353	57.896	359	57.889
364	93.023	365	93.112	369	93.726
373	93.832	400	38.000	401	48.000
402	55.000	435	149.08	445	145.82
501	196.46	502	196.36	503	196.21
513	172.10	514	170.99	515	167.88
600	138.40	604	144.75	605	144.91
613	147.12	615	147.35	617	147.38
665	139.84	667	137.15	668	139.76
670	144.44	673	151.99	676	151.73
690	141.85	691	141.46	692	138.94
700	70.721	701	95.492	702	100.46
703	100.41	704	95.034	705	88.958
706	81.908	707	73.838	708	68.919
709	69.888	710	76.908	711	76.231
712	108.09	713	113.24	714	94.318
715	91.853	716	85.423	717	91.490
718	104.99	719	112.75	720	105.35
721	90.347	722	85.970	723	93.945
724	110.13	725	97.897	726	117.20
727	67.616	728	79.269	730	100.22
731	70.491	732	83.489	733	84.150
734	71.592	735	99.347	736	87.506
737	73.594	738	73.608	739	113.21
740	113.22				

```
Tmax  =     215.31
Tmin  =     38.000

1-----------------------------------------------------------------------
 Structural Research and Analysis Co  HSTAR 1.75    6/13/1998  Page   3
 ss360sunF294 STEADY STATE WITH INSOLATION CONSIDERED
 -----------------------------------------------------------------------
```

==========

S O L U T I O N T I M E L O G

==========

Input phase	=	9.0
Assemblage of matrices	=	4.0
Triangularization of conductivity matrix	=	0.0
Solution of equations	=	0.0
Miscellaneous calculations	=	1.0
T O T A L S O L U T I O N T I M E	=	14.0

12.0 SS360SUN2.TEM

```
*****************************************************************
*****************************************************************
**                                                             **
**                                                             **
**  CCCC   OOOO   SSSS   M     M   OOOO   SSSS     / M     M   **
**  C      O  O   S      MM   MM   O  O   S       /  MM   MM   **
**  C      O  O   SSSS   M M M M   O  O   SSSS   /   M M M M   **
**  C      O  O      S   M  M  M   O  O      S  /    M  M  M   **
**  CCCC   OOOO   SSSS   M     M   OOOO   SSSS /     M     M   **
**                                                             **
**                                                             **
**                HEAT TRANSFER VERSION:   1.75                **
**                     DISTRIBUTED BY:                         **
**      STRUCTURAL  RESEARCH  AND  ANALYSIS  CORPORATION       **
**                12121 WILSHIRE BLVD. SUITE 700               **
**            LOS ANGELES,   CALIFORNIA    90025               **
**                TEL. NO.   (310) 207-2800                    **
**               COPYRIGHT  1988   S. R. A. C.                 **
**                                                             **
*****************************************************************
*****************************************************************

Licensed to:NORDION INTERNAT

 Total number of nodes                        =      274
 Total number of elements                     =      216
 Total number of words in stiffness matrix    =     5206
 Maximum half bandwidth                       =      223
 Total number of stiffness blocks             =        1

 Type of analysis       :     Nonlinear Steady State

 Method of solution     :     Newton Raphson
 Reformation interval in equilibrium iterations   =     1
 Max. no. of equilibrium iterations allowed       =    20
 Convergen tolerance                              =    0.10000E-02

1-----------------------------------------------------------------------
 Structural Research and Analysis Co  HSTAR 1.75    6/13/1998  Page   1
 360SUN2 F294 STEADY STATE WITH INSOLATION CONSIDERED
 -----------------------------------------------------------------------


        Temperatures at time step =    1     Time =  0.00000E+00)

    Number of equilibrium iterations in time step (    1 ) =     3


  Node   Temperature    Node   Temperature    Node   Temperature

    1     214.96         2     212.96         3     207.49
    4     197.39         5     191.41         6     191.35
    7     191.43         8     190.77         9     181.81
```

10	181.40	11	180.61	12	181.03
13	153.05	14	152.80	15	153.72
16	159.96	17	215.09	18	213.27
19	206.31	20	197.96	28	190.48
30	181.23	32	155.98	35	149.18
40	148.91	41	150.26	45	145.68
46	145.58	49	143.62	50	143.37
52	142.77	54	141.89	55	86.673
56	87.838	57	89.887	58	92.935
59	97.440	60	104.06	61	86.695
62	87.849	63	89.897	64	92.953
65	97.435	66	104.14	73	115.44
74	114.79	75	113.60	76	111.89
77	109.57	78	106.18	85	115.54
86	114.84	87	113.64	88	111.96
89	109.57	90	106.45	91	173.07
92	166.47	93	173.89	94	167.07
96	155.75	97	150.37	98	140.65
100	155.92	101	151.15	102	135.15
104	125.52	105	122.91	107	130.37
108	117.85	110	124.35	112	112.90
113	113.27	114	112.13	115	115.77
116	113.56	117	132.14	118	131.35
122	153.60	125	151.89	128	148.48
133	170.20	134	169.83	135	166.55
136	171.69	137	170.84	138	169.31
140	177.09	141	180.54	142	179.20
145	178.86	146	181.19	147	179.55
149	165.59	150	165.33	151	158.83
156	170.17	157	175.01	158	174.50
163	107.73	164	105.43	165	107.11
166	148.97	167	128.96	168	109.01
169	153.26	170	112.44	172	159.59
173	118.08	175	159.36	176	117.96
181	131.25	183	111.41	185	116.89
187	116.76	190	108.65	191	104.18
192	92.394	193	150.59	194	150.19
195	146.74	200	96.011	203	142.53
208	108.82	209	102.40	210	91.156
211	92.189	215	95.689	220	85.346

1----------

Structural Research and Analysis Co HSTAR 1.75 6/13/1998 Page 2
360SUN2 F294 STEADY STATE WITH INSOLATION CONSIDERED

221	85.414	222	77.018	223	77.016
224	65.982	225	65.990	226	63.073
227	63.081	228	63.570	229	63.577
230	67.403	231	67.412	233	87.085
235	95.300	237	107.19	239	111.86
241	111.91	243	108.37	245	87.150
247	95.298	249	107.20	251	111.87
253	111.91	255	108.37	258	69.130
259	69.136	260	71.970	261	71.976
262	77.269	263	77.281	264	81.095
265	81.085	266	85.935	267	86.018
271	106.68	273	103.62	275	97.535

277	93.200	279	87.637	283	106.69
285	103.62	287	97.549	289	93.188
291	87.729	293	105.80	295	106.32
297	104.49	301	104.34	306	86.395
307	86.481	311	87.073	315	87.153
316	63.780	317	63.936	318	62.025
319	63.731	320	63.980	321	62.045
322	58.895	323	58.857	324	58.449
328	58.881	329	58.843	330	58.440
334	57.208	335	57.186	336	57.208
337	57.190	340	57.234	341	57.147
344	57.236	345	57.081	347	59.859
350	59.865	353	57.886	359	57.878
364	85.908	365	85.984	369	86.500
373	86.588	400	38.000	401	48.000
402	55.000	435	148.75	445	145.49
501	196.24	502	196.14	503	195.99
513	171.84	514	170.73	515	167.62
600	138.36	604	144.66	605	144.82
613	147.06	615	147.28	617	147.30
665	139.81	667	137.12	668	139.73
670	144.40	673	151.94	676	151.68
690	141.82	691	141.42	692	138.91
700	70.699	701	95.467	702	100.44
703	100.38	704	94.995	705	88.917
706	81.863	707	73.779	708	68.850
709	69.824	710	76.798	711	76.118
712	107.95	713	113.10	714	94.182
715	91.736	716	85.339	717	91.433
718	104.94	719	112.69	720	105.30
721	90.289	722	85.883	723	93.821
724	110.00	725	97.768	726	117.08
727	67.550	728	79.169	730	100.20
731	70.473	732	83.471	733	84.131
734	71.573	735	99.320	736	87.483
737	69.610	738	69.622	739	102.94
740	102.95				

```
Tmax  =     215.09
Tmin  =     38.000

1-----------------------------------------------------------------------
 Structural Research and Analysis Co  HSTAR 1.75    6/13/1998  Page   3
 360SUN2 F294 STEADY STATE WITH INSOLATION CONSIDERED
 -----------------------------------------------------------------------
```

```
=================================

S O L U T I O N   T I M E   L O G

=================================
```

Input phase	=	9.0
Assemblage of matrices	=	3.0
Triangularization of conductivity matrix	=	0.0
Solution of equations	=	0.0
Miscellaneous calculations	=	0.0
T O T A L S O L U T I O N T I M E	=	12.0

13.0 UNBOND.TEM

```
*****************************************************************
*****************************************************************
**                                                             **
**                                                             **
**  CCCC   OOOO   SSSS   M     M   OOOO   SSSS     / M     M   **
**  C      O  O   S      MM   MM   O  O   S       /  MM   MM   **
**  C      O  O   SSSS   M M M M   O  O   SSSS   /   M M M M   **
**  C      O  O      S   M  M  M   O  O      S  /    M  M  M   **
**  CCCC   OOOO   SSSS   M     M   OOOO   SSSS /     M     M   **
**                                                             **
**                                                             **
**                HEAT TRANSFER VERSION:   1.75                **
**                      DISTRIBUTED BY:                        **
**      STRUCTURAL  RESEARCH  AND  ANALYSIS  CORPORATION       **
**                12121 WILSHIRE BLVD. SUITE 700               **
**            LOS ANGELES,   CALIFORNIA    90025               **
**                TEL. NO.   (310) 207-2800                    **
**               COPYRIGHT  1988   S. R. A. C.                 **
**                                                             **
*****************************************************************
*****************************************************************

Licensed to:NORDION INTERNAT

 Total number of nodes                          =      253
 Total number of elements                       =      195
 Total number of words in stiffness matrix      =     6321
 Maximum half bandwidth                         =      171
 Total number of stiffness blocks               =        1

 Type of analysis       :     Nonlinear Steady State

 Method of solution     :     Newton Raphson
 Reformation interval in equilibrium iterations   =      1
 Max. no. of equilibrium iterations allowed       =     20
 Convergen tolerance                              =    0.10000E-02

1-----------------------------------------------------------------------
 Structural Research and Analysis Co  HSTAR 1.75    5/28/1998  Page   1
 UNBOND  F294 STEADY STATE CALCS (VALIDATIONOFMEASUREMENT FILETESTBND.INP
 -----------------------------------------------------------------------


        Temperatures at time step =    1     Time =  0.00000E+00)

    Number of equilibrium iterations in time step (    1 ) =     3


  Node   Temperature    Node   Temperature    Node   Temperature

     1    166.27          2    166.03          3    165.47
     4    164.61          5    160.84          6    160.60
     7    160.06          8    159.14          9    150.80
    10    150.49         11    149.77         12    149.03
```

13	138.95	14	138.09	15	136.33
16	133.12	17	166.66	18	166.45
19	165.73	20	165.18	28	158.72
30	148.87	32	130.45	35	126.26
40	133.63	41	133.18	45	121.50
46	121.24	49	120.22	50	119.99
52	118.65	54	117.85	55	38.212
56	38.113	57	37.889	58	37.576
59	37.145	60	36.560	61	38.211
62	38.111	63	37.888	64	37.575
65	37.146	66	36.553	73	35.631
74	35.684	75	35.782	76	35.923
77	36.112	78	36.386	85	35.623
86	35.680	87	35.778	88	35.917
89	36.112	90	36.364	91	130.95
92	124.14	93	131.91	94	124.95
96	114.03	97	109.23	98	105.44
100	114.45	101	110.03	102	103.81
104	103.58	105	102.99	107	102.31
108	95.548	110	103.61	112	92.326
113	103.38	114	102.02	115	103.91
116	101.77	117	106.51	118	106.60
122	110.80	125	109.85	128	107.28
133	124.48	134	124.14	135	121.22
136	126.19	137	125.35	138	124.26
140	132.92	141	137.07	142	136.31
145	134.91	146	137.88	147	136.73
149	119.63	150	119.40	151	113.18
156	125.59	157	131.25	158	131.44
163	92.203	164	91.283	165	93.517
166	103.39	167	94.698	168	94.016
169	108.03	170	98.838	172	115.25
173	107.22	175	115.68	176	107.66
181	95.770	183	97.861	185	105.86
187	106.39	190	95.146	191	94.257
192	89.898	193	103.56	194	103.18
195	99.638	200	89.846	203	96.392
208	95.662	209	92.763	210	88.219
211	85.293	215	87.884	220	30.450

1----------

Structural Research and Analysis Co HSTAR 1.75 5/28/1998 Page 2
UNBOND F294 STEADY STATE CALCS (VALIDATIONOFMEASUREMENT FILETESTBND.INP

221	30.445	222	31.159	223	31.159
224	32.311	225	32.311	226	33.038
227	33.038	228	33.604	229	33.604
230	34.795	231	34.795	233	30.327
235	29.796	237	29.080	239	29.134
241	29.584	243	30.707	245	30.323
247	29.796	249	29.079	251	29.133
253	29.584	255	30.706	258	35.143
259	35.141	260	35.377	261	35.376
262	35.218	263	35.215	264	34.886
265	34.887	266	34.354	267	34.344
271	31.078	273	31.678	275	32.709
277	33.361	279	34.137	283	31.077

285	31.677	287	32.707	289	33.363
291	34.126	293	36.416	295	36.374
297	36.525	301	36.538	306	34.302
307	34.289	311	34.213	315	34.204
316	52.580	317	52.766	318	50.425
319	52.523	320	52.819	321	50.451
322	46.456	323	46.405	324	45.860
328	46.440	329	46.388	330	45.849
334	44.116	335	44.085	336	44.115
337	44.086	340	44.127	341	44.031
344	44.126	345	43.951	347	47.542
350	47.550	353	45.097	359	45.088
364	30.401	365	30.397	369	30.363
373	30.357	400	23.000	401	33.000
402	40.000	435	125.81	445	121.35
700	56.338	701	81.725	702	88.269
703	88.948	704	82.742	705	76.066
706	67.850	707	58.752	708	53.709
709	53.932	710	59.768	711	59.223
712	87.336	713	91.647	714	75.395
715	73.412	716	68.578	717	77.037
718	92.632	719	101.18	720	92.886
721	75.651	722	68.960	723	75.166
724	89.446	725	78.577	726	95.041
727	52.397	728	61.886	730	85.606
731	56.095	732	74.508	733	75.160
734	57.246	735	84.699	736	73.113
737	31.873	738	31.872	739	29.302
740	29.301				

```
Tmax  =     166.66
Tmin  =     23.000

1-----------------------------------------------------------------------
 Structural Research and Analysis Co  HSTAR 1.75    5/28/1998  Page   3
 UNBOND  F294 STEADY STATE CALCS (VALIDATIONOFMEASUREMENT FILETESTEND.INP
 -----------------------------------------------------------------------
```

```
=================================

S O L U T I O N   T I M E   L O G

=================================
```

Input phase	=	7.0
Assemblage of matrices	=	3.0
Triangularization of conductivity matrix	=	0.0
Solution of equations	=	0.0
Miscellaneous calculations	=	1.0
T O T A L S O L U T I O N T I M E	=	11.0

APPENDIX 3.6.5
KAOWOOL PRODUCT INFORMATION

Babcock & Wilcox

Kaowool Ceramic Fiber Product Catalog

Blanket

B&W Kaowool ceramic fiber is the basic fiber from which the Kaowool family has grown. The raw material is kaolin, a naturally occurring, high purity, alumina-silica fireclay. Kaowool has a melting point of 3200F, a normal use limit of 2300F, but can be used at even higher temperatures in certain applications. B&W Kaowool has fiber lengths up to 10 in., average lengths of 4 in. These long fibers, thoroughly interlaced in the production process, provide Kaowool blanket, bulk, and strip products with unsurpassed strength without the addition of a binder system. Other forms are processed from basic Kaowool ceramic fiber.

B&W Kaowool blanket contains no organic binder. Blanket will not contaminate furnace atmospheres or emit offensive odors. Available in nominal densities of: 3, 4, 6 and 8 lb cu ft. Width: 24 in. and 48 in. Length: 24 ft.

Thickness

B&W Kaowool blankets are manufactured in the following thicknesses for the indicated density:

	3 lb cu ft	4 lb cu ft	6 lb cu ft	8 lb cu ft
¼ in.	—	—	yes	yes
½ in.	yes	yes	yes	yes
¾ in.	yes	yes	yes	yes
1 in.	yes	yes	yes	yes
1½ in.	yes	yes	yes	yes
2 in.	yes	yes	—	—

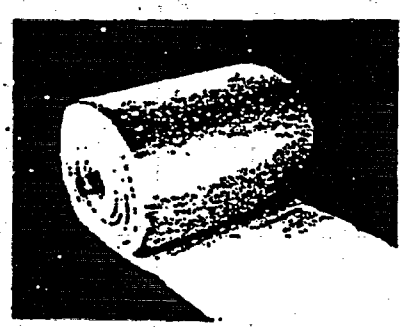

Physical Properties:

Kaowool ceramic fiber is a highly efficient insulator. Kaowool's low shot content gives more usable fiber for your insulating dollar. Kaowool's longer fibers give it the high tensile strength and resiliency to withstand vibration and physical abuse. Kaowool is self-supporting—will not separate, sag or settle. Kaowool has low thermal conductivity, low heat storage, and is extremely resistant to thermal shock.

Color	White
Fiber Diameter	2.8 microns (average)
Fiber Length	4" (average) (to 10")
Specific Gravity	2.56 (ASTM C188)
Specific Heat at 1800 F mean	0.255 Btu/lb/F
Tensile Strength, Fiber	1.9×10^5 lb/sq. in.
Tensile Modulus, Fiber	16.8×10^4 lb/sq. in.
Use Limits:	
Continuous	2300 F
Single Application	3000 F
Melting Point	3200 F
Hardness	6—MOH's scale
	700—Knoop's scale—100 gr. loading

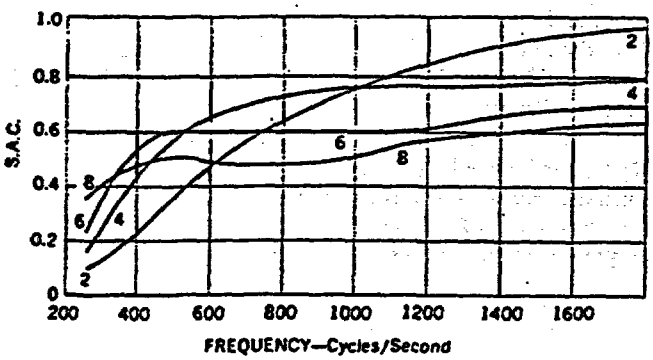

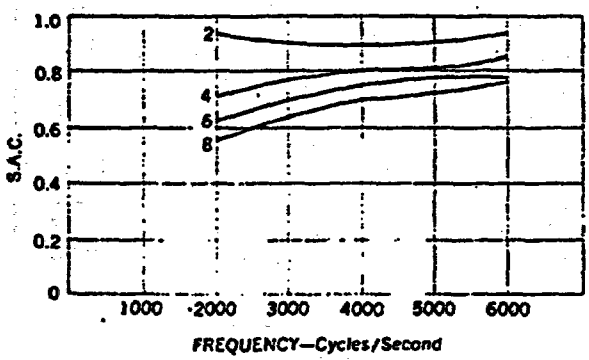

Sound absorption coefficient (S.A.C.) vs. frequency for B&W Kaowool Blanket. One-inch thickness at density indicated by numbers on curves.

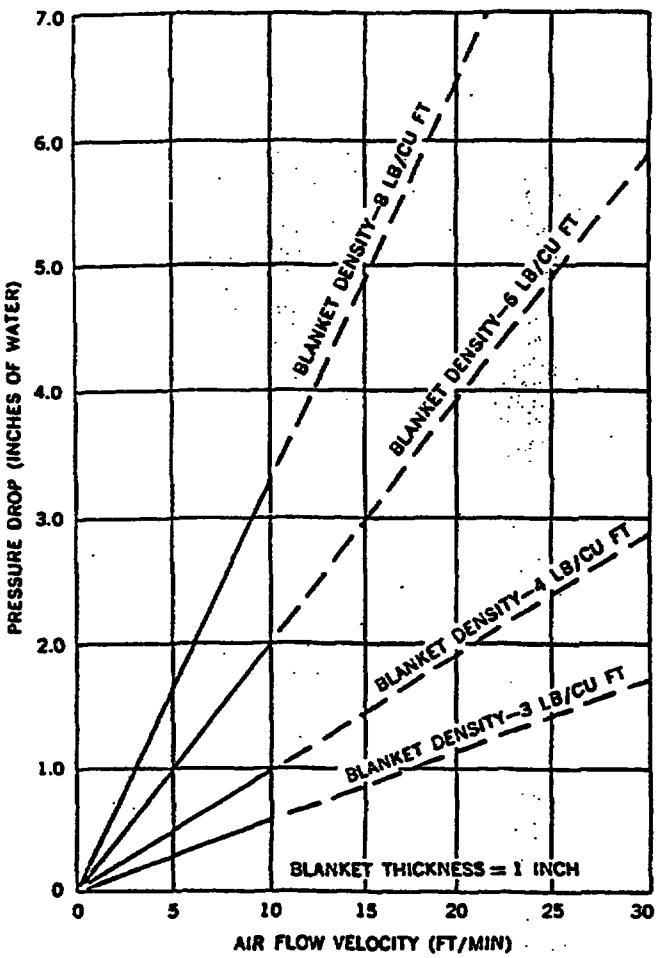

PRESSURE DROP ACROSS KAOWOOL BLANKETS

Chemical Properties:

B&W Kaowool ceramic fibers possess excellent resistance to chemical attack. Exceptions are hydrofluoric acid, phosphoric acid and strong alkalies. Kaowool is unaffected by oil or water. Thermal and physical properties are restored after drying.

Chemical Analysis	%
Alumina, Al_2O_3	45.1
Silica, SiO_2	51.9
Iron Oxide, Fe_2O_3	1.3
Titania, TiO_2	1.7
Magnesia, MgO	Trace
Calcia, CaO	0.1
Alkalies as Na_2O	0.2
Boric Anhydride, B_2O_3	0.08

B&W KAOWOOL BLANKET THERMAL CONDUCTIVITY AT VARIOUS DENSITIES

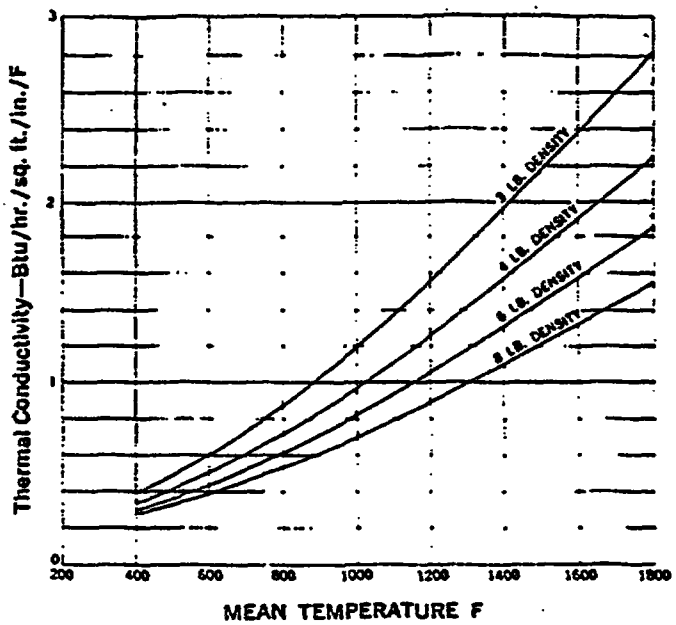

Blanket

Typical Applications

High Temperature Insulation:
- Annealing furnaces
- Boiler combustion chambers and heat exchangers, oil-fired
- Catalytic mufflers and automotive afterburners
- Gas turbines
- Fans
- Laboratory ovens
- Steam valves of headers and steam separators
- Thin wall kilns—back-up
- Water and steam tubes—back-up
- Petroleum catalytic crackers

Protection on Water-cooled Risers and Cross-over Rails—Reheating furnaces

Oven Linings

Superheater seals

Wrapping Pipe and Tubing after Welding for Stress Relieving

Furnace Repair

Acoustical Service for Missiles, Rockets, and Jet Aircraft

Cryogenic Vessel Fire Protection

Furnace Door Cover and Linings

Expansion Joint Packing

High temperature filters

Babcock & Wilcox

Kaowool Ceramic Fiber Product Catalog

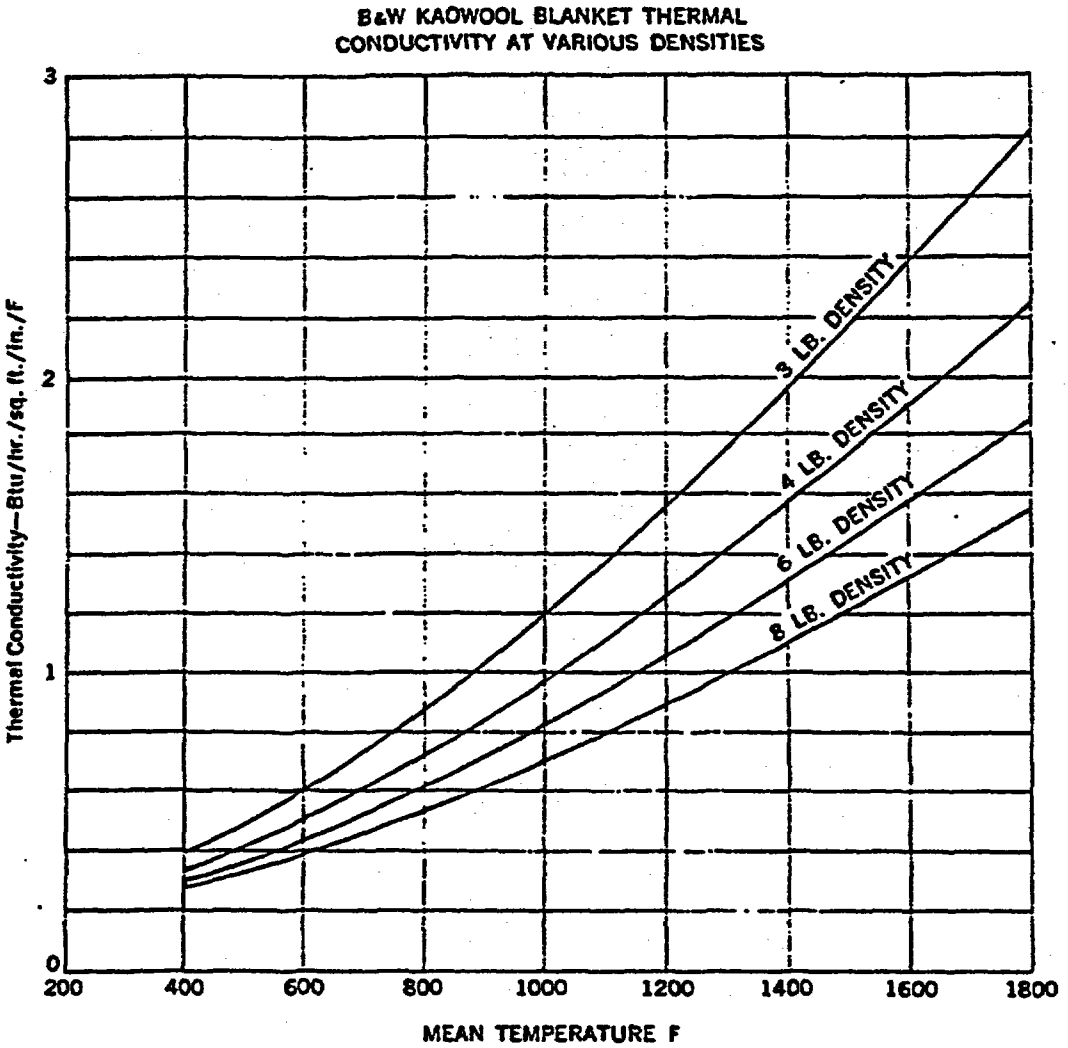

APPENDIX 3.6.6
NORMAL THERMAL TESTS OF THE F-294 PACKAGE WITH THE F-457 SOURCE CARRIER

Report for F-294 Steady State Thermal Test
S/N: F294-03

Thermal Test

Prepared By: _____ Date: 2000/12/07
B. Prieur, Industrial Quality Control

Reviewed By: _____ Date: 00.12.07
J. Ramsay, Package Engineering, Engineering Technology

Approved By: _____ Date: 00·12·19
D. Whitby, Senior Industrial Quality Control

TABLE OF CONTENTS

1. INTRODUCTION
2. EQUIPMENT USED
3. THERMOCOUPLE PLACEMENT WITHIN F-294 CAVITY
4. SOURCE LOADING
5. MEASUREMENTS
6. OBSERVATIONS
7. REFERENCES
8. APPENDIX 1: Raw temperature data.
9. APPENDIX 2: Source loading diagram.

LIST OF FIGURES

FIGURES	TITLE
1	Thermocouple locations on the F-294-03 package.

LIST OF CHARTS

CHARTS	TITLE
1	Temperature versus Time Plot using the Temperature Recording Data.

LIST OF TABLES

TABLE	TITLE
1	Maximum recorded temperature of test using the *Temperature Recording Unit*.
2	Thermocouple location v/s Read-out channels (As per Figure 1).

Steady State Thermal Test of F-294 s/n 3

1. Introduction

The steady state thermal test was performed according to procedure IN/OP 0597 F294 (2). The F-294-03 Shipping package was subjected to normal thermal testing when loaded with Co-60 as outlined in The Procedure for Steady State Thermal Test IN/OP 0597 F294 (2). The F294-03 was loaded by Greg Chateauvert (Cobalt Operations Technician), and the thermal testing was preformed by Benjamin Prieur (Industrial Quality Control). One thermal test configuration was used: F-294-03 loaded with eighty (80) sources in the modified source cage design. F-294-03 didn't include the crushshield and fireshield.
Start date of test: 2000-October-26
End date of test: 2000-October-27

2. Equipment Used

Calibrated type K thermocouples and wires were used throughout the thermal test, with one 20 channel digital thermometer readers. The Keithley 2000-20 multimeter, serial number: 6-445-137 was last calibrated on February 2000 with a quoted accuracy of +/- 2 °C, it is due for re-calibration on February 16 2001.

3. Thermocouple Placement within F-294 Cavity

The F-294 assembly was prepared for thermal tests prior to loading. Two thermocouples were mounted on ½" square stainless steel flat plates; two were in turn tack welded on to the cavity wall, in line with the drainline, radially opposed to each other and axially on the cavity center line. Two cavity wall thermocouple wires were then routed through the drainline to Type K connectors

The third was mounted on to the underside of the container plug, adjacent to the vent line exit hole. Thermocouples were also mounted on to two of the C-188 sources using screw clamps for a secure contact. The position of the thermocouples were approximately at the center of the sources; Greg Chateauvert (Source Technician) then placed these sources (s/n 70167, s/n 70292) within the modified cage assembly. The thermocouple wires were then routed through the drainline to Type K connectors. The wire for the three thermocouples (bottom plug + 2 C-188) was routed out the F-294 plug vent line to Type K connectors.

Table 2 represents the F-294 thermocouple locations versus the read-out channels.

4. Source Loading

The F-294 was loaded with 376 kilo curies of Co 60 on 2000-October-26 in the form of eighty (80) C-188 sealed sources. The loading was done as a typical preparation for shipment, in Cell 06 within Cobalt Operations, MDS Nordion, Kanata. The loaded container was removed from Cell 06 and placed in the shipping bay. The container was installed on the shipping skid. The thermocouples were mounted on to the container as shown in (Figure 1). The package was allowed to attain steady state overnight. Steady state is assumed after three or more successive numerically equal readings. The temperature readings were recorded every five minutes.

5. Measurements

Start Date: 2000-October-26
Temperature readings were recorded every five minutes, the test was performed on the package not including the crushshield and fireshield.
The table below (Table 1) represents the highest temperature readings recorded using *Temperature Recording Unit* during entire thermal test.

Table 1. Maximum Recorded Temperature of test using the *Temperature Recording Unit.*

Channel	Location	Temperature (°C)
1	Top of plug external face, near plug lift lug	102
2	C-188, close to drainline cap	458
4	Bottom of plug in the cavity	23
5	Cavity wall, close to drainline cap	239
6	Cavity wall, away from drainline cap	226
7	Container external wall, top (between two fins)	52
9	C-188, away from drainline cap	467
11	Container external wall, close to drainline cap (between two fins)	95
12	Container external wall, under drainline cap	64
13	Underside, center of F-294 skid	29

Chart 1 represents the temperature versus time of each thermocouple reading taken using the *Temperature Recording Unit* over the entire duration of the thermal test. This chart outlines the increase in temperature in the beginning and shows the settling of the temperature near the end.
Note: Series on chart is known as the actual channel on temperature reader.

Chart 1, Temperature versus Time Plot using the *Temperature Recording Unit.*

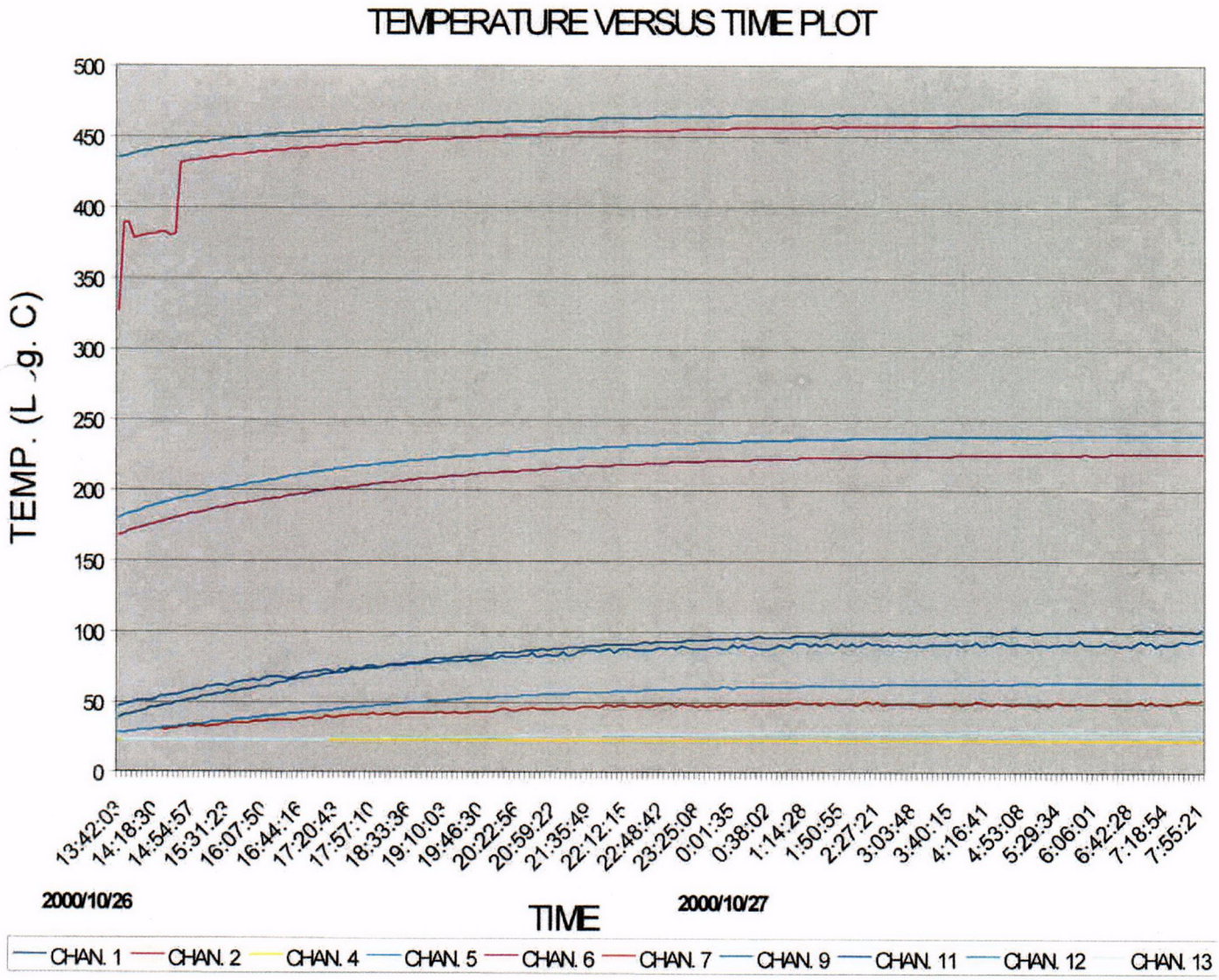

C06

Table 2, Thermocouple Location v/s Read-out Channels

Instrument: *Temperature Recording Unit, serial number: 6-445-137.*

Thermocouple Number	Channel Number	Thermocouple Identification on F-294-03
1	1	Top of plug external face, near plug lift lug
2	2	C-188, close to drainline cap
4	4	Bottom of plug in the cavity
5	5	Cavity wall, close to drainline cap
6	6	Cavity wall, away from drainline cap
7	7	Container external wall, top (between two fins)
9	9	C-188, away from drainline cap
11	11	Container external wall, close to drainline cap (between two fins)
12	12	Container external wall, under drainline cap
13	13	Underside, center of F-294 skid

6. Observations

On the Temperature versus Time Plot, channel 2; thermocouple located on the C-188 close to drainline, the temperature profile from the start isn't as predicted. A gradual temperature profile was expected, what was measured was an irregular rise in temperature trend. This profile could have been caused by a malfunction in the connection between the thermocouple wire and source c-clamp. There was most likely a temporary break in the connection. Channel 4; thermocouple located on the bottom of plug in the cavity, the recorded temperature readings are below the expected readings. This was most likely due to a short in the thermocouple wire before entering the F-294-03 container, this might have been caused during the loading of the container when the wires were pulled through the plug.

7. References

Ref.[1]: IN/OP 0597 F294 (2): Procedure for the F-294 steady state thermal test.

Ref.[2]: CO-QC/OP-0023 (1): Operating procedure for Temperature Recording Unit set-up. (In-process)

F-294 THERMOCOUPLE LOCATIONS
F-457 CAGE TEST

J Ramsey cc 09.27

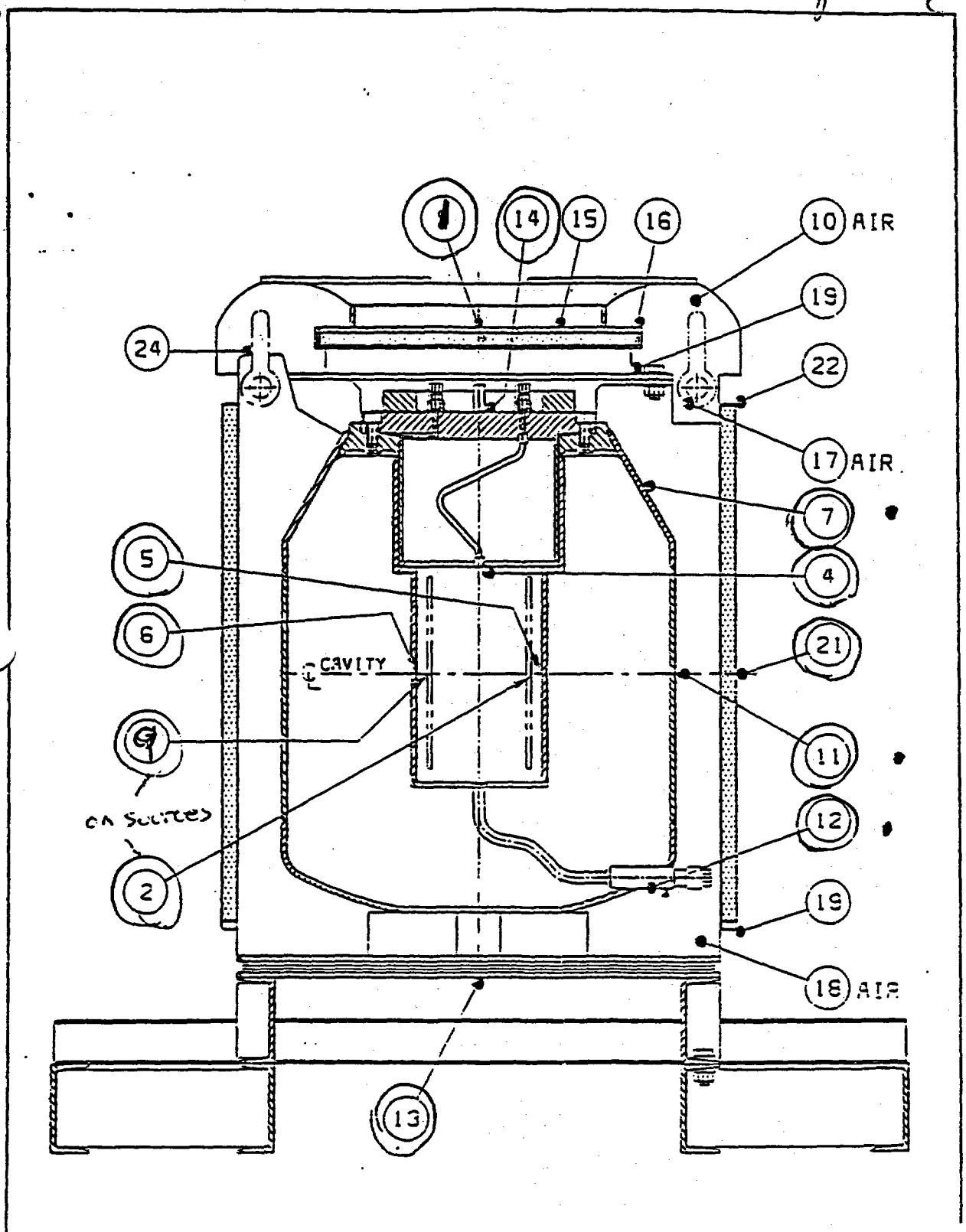

Figure 1, Thermocouple locations on the F-294-03 package.

TIME	Chan.1	Chan.2	Chan.3	Chan.4	Chan.5	Chan.6	Chan.7	Chan.8	Chan.9
13:42:03	39.33667	327.0319	9.90E+37	23.217	180.4616	168.197	28.33856	9.90E+37	434.6583
13:47:16	40.86523	388.6468	9.90E+37	23.07093	181.7974	169.3088	28.43475	9.90E+37	435.9276
13:52:28	41.26023	389.4997	9.90E+37	23.0045	183.0771	170.7799	28.93221	9.90E+37	437.0807
13:57:40	42.17644	378.4741	755.2851	22.9805	184.2519	171.955	29.28829	199.7651	438.0292
14:02:53	43.21495	379.0655	9.90E+37	22.97268	185.4667	172.9476	29.50016	9.90E+37	438.9137
14:08:05	44.08134	379.8018	-186.632	22.9576	186.58	174.1886	30.09944	9.90E+37	439.6887
14:13:18	45.73342	380.5557	9.90E+37	22.97025	187.6945	175.1361	29.846	9.90E+37	440.3947
14:18:30	46.32848	381.1859	9.90E+37	22.95187	188.7716	176.1944	30.54742	9.90E+37	441.0736
14:23:42	46.53796	381.7203	9.90E+37	22.92171	189.8529	177.3068	30.80848	9.90E+37	441.7646
14:28:55	47.96256	382.3568	9.90E+37	22.82306	190.7611	178.1447	30.48324	9.90E+37	442.2988
14:34:07	48.42837	380.3191	789.4195	22.8061	191.6837	179.0776	31.3192	9.90E+37	442.9058
14:39:19	49.7303	380.9102	9.90E+37	22.86937	192.6524	179.9382	31.39173	9.90E+37	443.4503
14:44:32	50.43347	431.3914	77.76009	22.87427	193.8479	180.8565	31.92979	9.90E+37	444.0244
14:49:44	51.02397	432.0196	9.90E+37	22.86318	194.6788	181.7669	32.53102	9.90E+37	444.4956
14:54:57	51.8228	432.5416	823.8852	22.71556	195.4761	182.5118	31.63838	9.90E+37	444.9652
15:00:09	52.0599	433.0185	9.90E+37	22.72689	196.2961	183.2488	32.74204	9.90E+37	445.5384
15:05:21	53.53775	433.7134	1327.189	22.70975	197.1326	184.1549	33.07645	454.1419	446.0152
15:10:34	53.80824	434.1899	9.90E+37	22.64656	197.9858	185.0005	32.12848	9.90E+37	446.4703
15:15:46	55.18738	434.6975	9.90E+37	22.58838	198.8128	185.7725	33.35992	9.90E+37	446.8754
15:20:58	55.5345	435.0388	9.90E+37	22.62221	199.6028	186.5214	33.3913	9.90E+37	447.2501
15:26:11	56.30651	435.4495	9.90E+37	22.68786	200.6001	187.2242	34.12751	9.90E+37	447.6162
15:31:23	57.51224	436.0673	9.90E+37	22.77907	201.3109	188.0695	34.53329	9.90E+37	448.1029
15:36:36	57.30842	436.5641	9.90E+37	22.8091	202.0463	188.7453	35.12717	9.90E+37	448.551
15:41:48	58.48324	437.0116	9.90E+37	22.74211	202.6842	189.5289	34.62836	9.90E+37	449.0072
15:47:00	59.12335	437.3561	9.90E+37	22.71918	203.4656	190.2915	34.93611	9.90E+37	449.3322
15:52:13	59.04871	437.8583	9.90E+37	22.71023	204.1143	190.8245	35.49636	9.90E+37	449.6865
15:57:25	60.36555	438.1846	739.9277	22.71725	204.763	191.4648	36.27694	1099.299	450.0178
16:02:37	61.13935	438.6662	526.6906	22.79351	205.4513	192.2551	36.4026	935.4537	450.3861
16:07:50	60.52205	439.0298	9.90E+37	22.82568	206.1228	192.7079	36.40104	130.3377	450.6787
16:13:02	61.13337	439.4241	9.90E+37	22.71069	206.6822	193.4345	36.83081	9.90E+37	450.999
16:18:14	63.33477	439.7077	9.90E+37	22.62655	207.2888	193.8361	37.32827	9.90E+37	451.2843
16:23:27	64.13642	440.0301	9.90E+37	22.62449	207.8709	194.4376	37.1098	9.90E+37	451.5663
16:28:39	64.47777	440.3826	9.90E+37	22.68406	209.0619	195.0791	37.25916	9.90E+37	451.879
16:33:52	65.61815	440.7161	9.90E+37	22.7814	209.6581	195.7923	37.13239	9.90E+37	452.1797
16:39:04	65.76498	441.132	-156.611	22.8084	210.1773	196.4899	37.30874	9.90E+37	452.4687
16:44:16	66.53117	441.2987	786.9534	22.69858	210.688	196.9447	38.38551	358.7594	452.6921
16:49:29	67.05325	441.5798	580.8346	22.6164	211.1981	197.4549	37.99429	9.90E+37	452.9918
16:54:41	67.76933	441.8542	9.90E+37	22.56106	211.7078	198.0071	38.7157	9.90E+37	453.203
16:59:53	68.19118	442.2555	9.90E+37	22.58337	212.641	198.5068	38.29427	9.90E+37	453.4634
17:05:06	68.96669	442.4944	9.90E+37	22.61816	213.1262	198.9157	38.44651	9.90E+37	453.7641
17:10:18	69.52826	442.7661	9.90E+37	22.63172	213.6587	199.5742	39.5365	9.90E+37	453.9104
17:15:31	69.90771	443.1119	978.9708	22.69504	214.1287	199.9846	39.03629	392.2758	454.2142
17:20:43	70.63101	443.4372	9.90E+37	22.69352	214.6173	200.5559	39.45257	9.90E+37	454.4599
17:25:55	71.19623	443.6761	9.90E+37	22.70661	215.0918	200.9322	40.37528	1248.258	454.6841
17:31:08	71.67383	443.8971	9.90E+37	22.70827	215.5455	201.3957	39.73795	9.90E+37	454.944
17:36:20	72.50666	444.1224	197.986	22.68486	216.0912	201.9277	40.61573	9.90E+37	455.1809
17:41:32	72.69197	444.4364	9.90E+37	22.67905	216.529	202.477	40.78558	9.90E+37	455.346
17:46:45	73.22195	444.6712	-156.585	22.68395	216.9639	202.7788	40.50495	9.90E+37	455.5984
17:51:57	73.69263	444.9698	-34.492	22.66389	217.3847	203.4218	41.40869	238.6054	455.7627
17:57:10	74.32545	445.126	9.90E+37	22.71551	217.8451	203.8015	41.63795	388.2537	456.0123
18:02:22	74.00392	445.4839	9.90E+37	22.72611	218.2566	204.2788	40.67963	9.90E+37	456.2034
18:07:34	75.21112	445.649	9.90E+37	22.76919	218.6696	204.6543	41.14826	9.90E+37	456.4083
18:12:47	75.53469	445.9451	9.90E+37	22.73407	219.0515	205.0012	42.28543	9.90E+37	456.6001
18:17:59	76.95815	446.1509	9.90E+37	22.76268	219.4669	205.4269	41.4083	492.1684	456.8185
18:23:11	77.0647	446.3898	9.90E+37	22.7413	219.8257	205.8629	41.30648	9.90E+37	456.9919

APPENDIX 1, Raw temperature data.

TIME	Chan.1	Chan.2	Chan.3	Chan.4	Chan.5	Chan.6	Chan.7	Chan.8	Chan.9
18:28:24	77.31696	446.5146	9.90E+37	22.80572	220.2167	206.3879	41.64833	1013.863	457.2074
18:33:36	78.04898	446.8271	9.90E+37	22.82225	220.5732	206.6537	42.39388	443.4588	457.3557
18:38:49	78.40589	447.0357	9.90E+37	22.85622	220.9679	207.1354	41.58425	9.90E+37	457.6112
18:44:01	78.18348	447.248	273.6139	22.8458	221.2864	207.5047	41.61598	954.5844	457.8247
18:49:13	79.16386	447.3818	1321.353	22.83029	221.605	207.9006	42.29902	9.90E+37	457.9142
18:54:26	79.9707	447.6959	849.9007	22.82595	221.9923	208.1358	42.01976	497.9308	458.1113
18:59:38	80.83776	447.9321	9.90E+37	22.83184	222.3336	208.4177	42.15599	12.84289	458.2798
19:04:50	81.0117	448.1688	9.90E+37	22.81456	222.6203	208.8721	42.51439	9.90E+37	458.4476
19:10:03	80.89646	448.2517	9.90E+37	22.81869	222.9216	209.2208	42.01808	9.90E+37	458.6394
19:15:15	81.45679	448.4194	9.90E+37	22.79188	223.2653	209.5998	42.3242	9.90E+37	458.7671
19:20:28	81.92458	448.6349	9.90E+37	22.80958	223.5641	209.9514	42.60718	863.3806	458.9469
19:25:40	82.0498	448.8403	9.90E+37	22.80605	223.8732	210.205	42.38253	9.90E+37	459.0958
19:30:52	82.37124	449.0042	435.1463	22.8173	224.1914	210.4929	42.44024	-198.346	459.2227
19:36:05	82.69825	449.1576	1365.422	22.82335	224.4798	210.8245	42.84472	9.90E+37	459.466
19:41:17	83.29418	449.4859	9.90E+37	22.80591	224.7783	211.2559	42.81351	85.09417	459.634
19:46:30	82.76065	449.7088	9.90E+37	22.80677	225.0369	211.5516	43.17795	9.90E+37	459.7984
19:51:42	83.33191	449.7633	9.90E+37	22.81422	225.3195	211.7528	43.11562	9.90E+37	459.9201
19:56:54	83.47214	450.0045	9.90E+37	22.79397	225.5962	212.0161	43.21403	9.90E+37	460.1032
20:02:07	84.57838	450.2053	9.90E+37	22.73712	225.8503	212.4796	44.09972	9.90E+37	460.2541
20:07:19	85.03128	450.3621	367.1562	22.74018	226.1451	212.6326	45.05805	9.90E+37	460.4151
20:12:31	85.47637	450.5843	889.9282	22.69274	226.3597	213.1359	44.73707	488.4797	460.5218
20:17:44	85.43365	450.7708	9.90E+37	22.70056	226.635	213.2975	44.47351	317.7883	460.575
20:22:56	84.84773	450.9226	473.0924	22.72435	226.9059	213.4873	44.3638	9.90E+37	460.7577
20:28:08	85.93832	450.9483	9.90E+37	22.72968	227.2026	213.6661	44.64707	9.90E+37	460.883
20:33:21	86.52321	451.2207	274.2777	22.72646	227.4168	213.8822	45.2218	1131.386	461.0423
20:38:33	86.75303	451.3094	9.90E+37	22.72116	227.6464	214.2199	45.55349	9.90E+37	461.1617
20:43:45	86.71299	451.4909	567.6375	22.71695	227.8844	214.3418	44.92534	9.90E+37	461.3287
20:48:58	87.7464	451.6635	9.90E+37	22.7487	228.1348	214.7401	45.15642	9.90E+37	461.4379
20:54:10	87.33041	451.766	23.92445	22.76027	228.3677	215.0018	44.93667	533.7129	461.5592
20:59:22	87.94565	451.9039	9.90E+37	22.7645	228.6137	215.2558	44.77902	973.8268	461.6283
21:04:35	88.13629	452.0112	9.90E+37	22.70886	228.814	215.5148	45.09173	9.90E+37	461.7362
21:09:47	88.43305	452.1989	9.90E+37	22.75427	229.0426	215.5119	45.86153	266.6363	461.8805
21:15:00	88.59717	452.3938	9.90E+37	22.74728	229.2184	215.7481	45.20078	9.90E+37	461.9755
21:20:12	89.18038	452.5244	9.90E+37	22.72528	229.4923	216.1409	45.19983	120.7105	462.0964
21:25:24	89.40434	452.5397	9.90E+37	22.74278	229.6414	216.3438	45.89818	9.90E+37	462.2465
21:30:37	89.45825	452.7635	9.90E+37	22.7199	229.8423	216.5696	46.79083	9.90E+37	462.3452
21:35:49	89.87607	452.8515	9.90E+37	22.67209	230.085	216.6189	46.56936	1318.433	462.3815
21:41:01	89.9302	452.8602	9.90E+37	22.66536	230.2522	216.8134	46.99194	9.90E+37	462.4925
21:46:14	90.17135	453.061	9.90E+37	22.64072	230.4433	217.1556	46.28615	9.90E+37	462.5786
21:51:26	90.64072	453.1896	9.90E+37	22.62703	230.6527	217.3973	47.72285	9.90E+37	462.7258
21:56:38	90.77468	453.3446	9.90E+37	22.62923	230.8505	217.461	47.8656	9.90E+37	462.7637
22:01:51	90.77625	453.4016	9.90E+37	22.61527	231.0582	217.5927	46.92242	9.90E+37	462.8293
22:07:03	90.80539	453.5091	9.90E+37	22.62154	231.2034	217.8857	47.50553	9.90E+37	462.9466
22:12:15	91.05305	453.6154	9.90E+37	22.61983	231.3528	217.9599	47.57941	9.90E+37	463.0235
22:17:28	91.21034	453.7254	9.90E+37	22.61372	231.5455	218.0869	46.73553	9.90E+37	463.1088
22:22:40	91.24914	453.7656	9.90E+37	22.62869	231.723	218.3427	47.19407	9.90E+37	463.1895
22:27:53	92.05481	453.8718	9.90E+37	22.6412	231.9078	218.3762	47.58714	9.90E+37	463.2831
22:33:05	92.51796	454.0563	31.27616	22.67937	232.0674	218.6415	47.075	742.9988	463.3613
22:38:17	92.31083	454.1349	-67.3432	22.69268	232.2491	218.9691	47.25214	738.2338	463.481
22:43:29	92.57419	454.2285	9.90E+37	22.67305	232.3865	218.977	48.43023	9.90E+37	463.5029
22:48:42	92.90678	454.323	9.90E+37	22.66708	232.5161	219.3647	48.4569	9.90E+37	463.6359
22:53:54	92.68994	454.346	9.90E+37	22.63574	232.6522	219.3469	48.7691	9.90E+37	463.6672
22:59:07	92.93157	454.4971	1203.604	22.64581	232.8164	219.5006	48.53065	9.90E+37	463.7358
23:04:19	92.82227	454.4937	9.90E+37	22.63464	232.9625	219.7037	47.27188	9.90E+37	463.7998
23:09:31	92.96295	454.59	9.90E+37	22.66619	233.1164	219.8068	48.66576	9.90E+37	463.9272
23:14:44	93.87308	454.6737	9.90E+37	22.62861	233.2423	220.0293	48.47205	9.90E+37	463.9652

TIME	Chan.1	Chan.2	Chan.3	Chan.4	Chan.5	Chan.6	Chan.7	Chan.8	Chan.9
23:19:56	93.98154	454.8871	278.9048	22.6524	233.3961	220.1233	47.66831	9.90E+37	464.0355
23:25:08	93.72703	454.9263	9.90E+37	22.68628	233.5399	220.3804	47.27125	5.416735	464.1333
23:30:21	94.32195	455.0101	9.90E+37	22.70479	233.6554	220.3315	47.85469	9.90E+37	464.2283
23:35:33	93.77879	455.0897	674.4219	22.6817	233.7885	220.5316	47.29635	596.028	464.2181
23:40:46	94.79498	455.2401	9.90E+37	22.70755	233.9032	220.7449	47.87282	9.90E+37	464.3187
23:45:58	94.83474	455.2281	9.90E+37	22.68307	234.0301	220.7163	47.86035	910.0894	464.3441
23:51:10	95.0735	455.2776	9.90E+37	22.69981	234.1309	220.8979	47.47688	9.90E+37	464.4519
23:56:23	94.51591	455.4633	9.90E+37	22.69052	234.2602	221.0211	48.05305	9.90E+37	464.4837
0:01:35	95.4293	455.5032	9.90E+37	22.66451	234.3678	221.1703	49.07219	283.3543	464.564
0:06:47	95.8198	455.5097	9.90E+37	22.62885	234.4828	221.1728	47.85451	1131.384	464.6018
0:12:00	95.20828	455.617	9.90E+37	22.6723	234.6013	221.4309	48.61674	9.90E+37	464.6705
0:17:12	95.38137	455.6259	9.90E+37	22.66705	234.7503	221.3817	47.86325	9.90E+37	464.7004
0:22:25	96.17625	455.7142	9.90E+37	22.64798	234.8133	221.5731	47.8522	9.90E+37	464.8224
0:27:37	96.73559	455.7731	9.90E+37	22.66836	234.9503	221.7048	48.40183	9.90E+37	464.8415
0:32:49	96.12883	455.8329	431.5493	22.6771	235.034	221.8193	47.72967	1305.385	464.861
0:38:02	96.12665	455.9367	9.90E+37	22.72228	235.1262	221.9413	47.74717	9.90E+37	464.9223
0:43:14	96.43893	455.9593	9.90E+37	22.67742	235.2116	221.9674	47.75342	9.90E+37	464.9256
0:48:26	96.37957	456.0193	9.90E+37	22.64514	235.3125	222.112	48.55251	9.90E+37	465.0188
0:53:39	96.34834	456.0897	9.90E+37	22.64918	235.3951	222.1834	47.70827	9.90E+37	465.0377
0:58:51	96.32259	456.1708	285.002	22.64798	235.4931	222.2481	48.58052	-101.229	465.1091
1:04:04	96.77367	456.1928	9.90E+37	22.67734	235.6129	222.3566	49.58917	9.90E+37	465.2123
1:09:16	96.84686	456.2705	492.9518	22.66201	235.665	222.5764	49.84525	9.90E+37	465.1886
1:14:28	97.09561	456.3432	9.90E+37	22.65687	235.7901	222.6166	49.05079	882.3858	465.2334
1:19:41	96.94737	456.3642	9.90E+37	22.66469	235.8694	222.6686	49.13676	9.90E+37	465.2838
1:24:53	97.09545	456.4129	9.90E+37	22.66279	235.9576	222.9848	50.3776	9.90E+37	465.3038
1:30:05	96.26392	456.5141	9.90E+37	22.65505	236.0412	222.9232	48.26954	1276.631	465.343
1:35:18	96.8422	456.578	9.90E+37	22.65864	236.1156	222.9753	49.83791	9.90E+37	465.4046
1:40:30	97.65625	456.5396	9.90E+37	22.65074	236.1885	222.9409	49.81522	9.90E+37	465.434
1:45:43	98.06435	456.4927	599.8374	22.6506	236.3046	223.0784	49.22206	987.9853	465.516
1:50:55	97.77847	456.6216	905.0429	22.63298	236.3608	223.0478	49.36217	-49.2154	465.4843
1:56:07	97.73028	456.6765	9.90E+37	22.62253	236.4511	223.1614	49.27145	9.90E+37	465.5479
2:01:20	97.58206	456.7133	9.90E+37	22.63196	236.5302	223.3325	49.165	9.90E+37	465.5701
2:06:32	97.66934	456.7779	9.90E+37	22.62687	236.6103	223.372	48.40663	9.90E+37	465.5748
2:11:44	98.32601	456.8233	163.2741	22.62092	236.6851	223.388	49.83724	9.90E+37	465.73
2:16:57	98.12813	456.8547	9.90E+37	22.63239	236.7668	223.6163	50.72088	9.90E+37	465.7062
2:22:09	98.17265	456.8971	9.90E+37	22.66351	236.8671	223.5947	49.19981	199.2563	465.7561
2:27:21	98.45117	456.9821	463.6169	22.63933	236.9344	223.6274	50.60896	-169.482	465.69
2:32:34	98.07402	456.9596	9.90E+37	22.68521	236.992	223.6971	47.89997	9.90E+37	465.7364
2:37:46	99.53962	457.011	9.90E+37	22.74878	237.0288	223.773	48.74278	9.90E+37	465.8195
2:42:58	98.39812	457.0618	9.90E+37	22.7398	237.1355	223.7743	49.03646	9.90E+37	465.8745
2:48:11	97.89642	457.0831	-119.101	22.70412	237.1632	223.8563	48.71309	4.827201	465.8432
2:53:23	98.28548	457.1273	9.90E+37	22.71042	237.2309	223.8707	48.67462	9.90E+37	465.924
2:58:36	99.23971	457.2663	9.90E+37	22.6899	237.298	224.2093	48.71019	9.90E+37	465.9969
3:03:48	98.44304	457.1933	9.90E+37	22.69935	237.3425	224.2821	48.91912	9.90E+37	466.0072
3:09:00	98.1187	457.3168	9.90E+37	22.72644	237.4312	224.0759	47.6315	9.90E+37	466.0338
3:14:13	98.85009	457.3304	1078.066	22.74701	237.4795	224.3511	48.41714	675.7146	466.1377
3:19:25	99.26742	457.3821	9.90E+37	22.74363	237.5443	224.2558	48.23272	9.90E+37	466.1146
3:24:37	99.57268	457.4043	9.90E+37	22.76608	237.5786	224.4491	48.91237	9.90E+37	466.1722
3:29:50	98.93909	457.4651	9.90E+37	22.75416	237.6376	224.3915	48.55659	9.90E+37	466.1893
3:35:02	98.35656	457.4395	9.90E+37	22.74805	237.6762	224.372	48.91283	9.90E+37	466.1764
3:40:15	99.51239	457.4646	9.90E+37	22.76528	237.7136	224.4282	48.78756	1058.284	466.2151
3:45:27	99.34212	457.517	9.90E+37	22.75429	237.7826	224.6614	49.69205	9.90E+37	466.2546
3:50:39	100.0301	457.6101	9.90E+37	22.74594	237.8464	224.5576	48.48175	9.90E+37	466.2872
3:55:52	99.2475	457.6189	9.90E+37	22.72853	237.8633	224.5594	48.75629	9.90E+37	466.2362
4:01:04	100.0104	457.5896	803.1654	22.68395	237.883	224.7278	49.12351	9.90E+37	466.3045
4:06:16	100.455	457.5671	9.90E+37	22.68141	237.9049	224.7379	50.56864	9.90E+37	466.3081

TIME	Chan.1	Chan.2	Chan.3	Chan.4	Chan.5	Chan.6	Chan.7	Chan.8	Chan.9
4:11:29	99.72368	457.6664	9.90E+37	22.68877	237.9818	224.8432	49.70056	823.8788	466.3208
4:16:41	100.3375	457.5998	1148.032	22.7225	238.0197	224.7878	49.11508	9.90E+37	466.338
4:21:54	100.3646	457.727	9.90E+37	22.74103	238.0907	224.8686	48.42372	9.90E+37	466.4372
4:27:06	99.33209	457.7079	9.90E+37	22.73201	238.1124	224.8987	49.74429	9.90E+37	466.3795
4:32:18	100.0134	457.784	9.90E+37	22.71513	238.1587	224.7597	49.36169	9.90E+37	466.4324
4:37:31	99.81556	457.834	9.90E+37	22.74821	238.2033	224.9932	49.43218	9.90E+37	466.4726
4:42:43	100.6293	457.7999	9.90E+37	22.74736	238.2537	224.9548	48.41792	9.90E+37	466.4999
4:47:55	100.2389	457.8282	9.90E+37	22.74615	238.2736	225.1841	48.67472	9.90E+37	466.4901
4:53:08	99.83938	457.8762	9.90E+37	22.77765	238.3173	225.0502	48.56179	9.90E+37	466.5258
4:58:20	100.3001	457.8998	364.767	22.76699	238.3693	225.0909	49.02866	219.5039	466.5833
5:03:32	98.77022	457.9077	9.90E+37	22.79723	238.415	225.216	48.90958	9.90E+37	466.5646
5:08:45	99.00721	457.946	9.90E+37	22.80165	238.445	225.2972	48.24419	1022.961	466.5636
5:13:57	100.4174	457.9609	9.90E+37	22.75518	238.4698	225.4613	49.34366	9.90E+37	466.6068
5:19:10	100.0786	457.8752	682.8828	22.76013	238.4943	225.1939	48.47491	81.46222	466.6591
5:24:22	100.3369	457.9772	9.90E+37	22.75062	238.5372	225.3231	49.56796	9.90E+37	466.669
5:29:34	99.73579	457.998	9.90E+37	22.77476	238.5376	225.2448	49.62212	9.90E+37	466.6906
5:34:47	100.2313	457.9767	9.90E+37	22.75831	238.5961	225.2633	49.01228	957.0448	466.7377
5:39:59	99.76595	458.0213	9.90E+37	22.73268	238.637	225.4036	48.66008	9.90E+37	466.668
5:45:12	100.3984	458.0622	9.90E+37	22.70994	238.6826	225.2345	48.7307	9.90E+37	466.7196
5:50:24	100.512	458.0741	9.90E+37	22.71786	238.695	225.3672	50.48816	9.90E+37	466.71
5:55:36	100.5012	458.152	1128.706	22.75754	238.7175	225.5049	48.90817	990.5661	466.715
6:00:49	101.1994	458.181	9.90E+37	22.78255	238.7558	225.4288	48.96348	9.90E+37	466.7954
6:06:01	100.8596	458.1913	543.3658	22.82271	238.781	225.394	48.94162	1082.043	466.7753
6:11:13	100.7794	458.0912	644.6879	22.80931	238.7868	225.4995	48.95732	-134.059	466.813
6:16:26	101.2203	458.1767	9.90E+37	22.76699	238.8103	225.4516	49.52539	9.90E+37	466.9133
6:21:38	100.5382	458.1634	9.90E+37	22.71543	238.8477	225.675	48.62875	9.90E+37	466.8191
6:26:51	100.1007	458.2682	9.90E+37	22.7154	238.8717	225.7816	48.97359	9.90E+37	466.904
6:32:03	100.3969	458.2399	9.90E+37	22.71492	238.9225	225.5621	48.98648	9.90E+37	466.8517
6:37:15	100.3063	458.2875	9.90E+37	22.73335	238.9325	225.5665	49.34815	256.4163	466.888
6:42:28	100.4124	458.2257	9.90E+37	22.75858	238.9885	225.5402	48.61068	9.90E+37	466.8875
6:47:40	101.162	458.2543	9.90E+37	22.76233	238.9808	225.7766	49.9039	-41.93	466.8243
6:52:52	101.1497	458.2894	9.90E+37	22.76814	238.9847	225.6114	50.87248	9.90E+37	466.8577
6:58:05	101.1068	458.2086	9.90E+37	22.76431	239.0356	225.6137	49.11517	867.3679	466.813
7:03:17	100.4747	458.3272	9.90E+37	22.75719	239.0694	225.7257	50.83403	9.90E+37	466.8186
7:08:29	101.7549	458.2449	325.0495	22.79056	239.088	225.6048	49.12812	9.90E+37	466.8238
7:13:42	101.9937	458.2608	9.90E+37	22.79509	239.1023	225.698	49.89109	9.90E+37	466.789
7:18:54	101.3159	458.2362	9.90E+37	22.82298	239.1074	225.7323	49.03955	9.90E+37	466.8643
7:24:07	100.963	458.2572	1025.569	22.79225	239.1208	225.7695	48.96718	9.90E+37	466.8982
7:29:19	101.2523	458.2584	9.90E+37	22.7622	239.1295	225.5785	49.97349	9.90E+37	466.8179
7:34:31	100.8576	458.307	9.90E+37	22.72333	239.173	225.7095	50.06323	9.90E+37	466.8155
7:39:44	100.9739	458.297	9.90E+37	22.75095	239.1744	225.7564	51.7616	9.90E+37	466.8576
7:44:56	101.0401	458.4137	9.90E+37	22.76287	239.1903	225.8007	50.56802	9.90E+37	466.8926
7:50:08	100.3072	458.3333	9.90E+37	22.7484	239.1904	225.7624	50.78827	9.90E+37	466.9201
7:55:21	102.2701	458.3641	9.90E+37	22.6966	239.2079	225.7765	51.7511	9.90E+37	466.8754

TIME	Chan.10	Chan.11	Chan.12	Chan.13	Chan.14	Chan.15	Chan.16	Chan.17	Chan.18
13:42:03	167.0068	46.91005	27.99162	23.52854	9.90E+37	9.90E+37	9.90E+37	-52.6827	-54.6824
13:47:16	9.90E+37	47.80444	28.3109	23.46265	9.90E+37	9.90E+37	94.87942	458.0742	99.84472
13:52:28	9.90E+37	48.69749	28.75606	23.41385	274.7008	9.90E+37	9.90E+37	9.90E+37	169.1543
13:57:40	9.90E+37	49.57119	29.0694	23.3569	9.90E+37	1366.942	1121.355	400.7836	-47.6556
14:02:53	9.90E+37	50.53613	29.54056	23.28528	9.90E+37	9.90E+37	-180.753	25.81366	9.90E+37
14:08:05	9.90E+37	51.23176	29.93386	23.22458	526.3369	644.7138	888.4927	429.3623	-73.7024
14:13:18	9.90E+37	51.11791	29.79824	23.20195	9.90E+37	9.90E+37	9.90E+37	9.90E+37	14.95806
14:18:30	9.90E+37	52.36532	30.69058	23.15237	9.90E+37	916.0063	237.1373	-181.581	164.0922
14:23:42	1262.421	53.77984	31.2111	23.13718	9.90E+37	9.90E+37	9.90E+37	-139.853	9.90E+37

TIME	Chan.10	Chan.11	Chan.12	Chan.13	Chan.14	Chan.15	Chan.16	Chan.17	Chan.18
14:28:55	9.90E+37	54.43465	31.51137	23.05808	9.90E+37	9.90E+37	9.90E+37	-173.039	9.90E+37
14:34:07	9.90E+37	55.22774	32.03976	23.00903	9.90E+37	1180.559	482.7172	-31.6123	184.2522
14:39:19	9.90E+37	54.78818	32.05445	23.04155	668.6898	218.4094	9.90E+37	9.90E+37	-49.1876
14:44:32	9.90E+37	56.03351	32.71389	22.98305	844.9425	881.1498	845.4702	230.9071	-32.9755
14:49:44	9.90E+37	56.6012	33.12209	22.9478	479.0312	585.3959	719.7866	238.379	9.90E+37
14:54:57	9.90E+37	58.1377	33.58659	22.8642	-100.335	150.2712	453.0296	188.1789	9.90E+37
15:00:09	1276.64	58.78156	34.12859	22.8777	9.90E+37	9.90E+37	9.90E+37	-131.134	9.90E+37
15:05:21	9.90E+37	59.45544	34.40198	22.89377	1285.221	1225.839	869.6637	242.0944	-90.4409
15:10:34	9.90E+37	60.50765	34.58253	22.93647	9.90E+37	9.90E+37	9.90E+37	9.90E+37	47.42754
15:15:46	9.90E+37	60.86814	35.58995	22.9478	9.90E+37	9.90E+37	-184.83	74.21939	9.90E+37
15:20:58	68.66839	61.60116	35.94145	22.89281	9.90E+37	9.90E+37	655.5554	30.36684	19.94254
15:26:11	9.90E+37	62.24159	36.34783	22.90494	9.90E+37	9.90E+37	9.90E+37	9.90E+37	204.4222
15:31:23	9.90E+37	61.14131	36.49074	22.92929	9.90E+37	9.90E+37	9.90E+37	9.90E+37	9.90E+37
15:36:36	9.90E+37	63.35453	37.16279	22.91475	116.1885	274.0038	544.3284	249.53	9.90E+37
15:41:48	59.15469	64.07105	37.65626	22.9339	9.90E+37	9.90E+37	9.90E+37	9.90E+37	9.90E+37
15:47:00	9.90E+37	64.61579	38.03852	22.89723	9.90E+37	9.90E+37	621.0635	19.28629	74.19667
15:52:13	9.90E+37	65.15472	38.44451	22.88191	168.132	9.90E+37	9.90E+37	9.90E+37	98.45406
15:57:25	9.90E+37	65.64446	38.86028	22.92835	9.90E+37	9.90E+37	9.90E+37	9.90E+37	-31.3712
16:02:37	9.90E+37	65.3981	39.14986	22.98284	9.90E+37	9.90E+37	9.90E+37	9.90E+37	-46.8126
16:07:50	373.0689	66.84144	39.62938	23.00925	9.90E+37	9.90E+37	677.0603	39.69584	-12.6541
16:13:02	9.90E+37	67.53012	40.07997	22.99267	9.90E+37	9.90E+37	9.90E+37	9.90E+37	9.90E+37
16:18:14	9.90E+37	67.52113	40.30453	23.00421	9.90E+37	9.90E+37	9.90E+37	9.90E+37	9.90E+37
16:23:27	9.90E+37	68.40624	40.62524	23.0415	-39.6459	150.258	460.3241	164.2221	9.90E+37
16:28:39	9.90E+37	67.09135	41.41056	23.09384	1217.458	1180.224	877.1291	215.8954	-43.6376
16:33:52	9.90E+37	66.91341	41.71095	23.14637	9.90E+37	9.90E+37	52.30661	76.43556	9.90E+37
16:39:04	9.90E+37	68.44168	42.02011	23.19617	856.128	884.903	849.2484	331.2347	-181.68
16:44:16	9.90E+37	70.21869	42.34039	23.22427	1195.327	1150.27	883.3955	253.2401	-107.113
16:49:29	9.90E+37	70.60304	42.62687	23.23696	550.1571	137.9294	9.90E+37	9.90E+37	-100.666
16:54:41	9.90E+37	71.21463	43.12076	23.27131	636.7228	204.5739	9.90E+37	9.90E+37	91.16672
16:59:53	9.90E+37	71.56268	43.3973	23.3106	9.90E+37	9.90E+37	1191.315	367.3076	26.97178
17:05:06	9.90E+37	72.07408	43.82141	23.38451	-80.4968	113.099	513.3029	387.524	-20.5061
17:10:18	9.90E+37	72.78125	44.12574	23.43278	962.2759	424.6017	-105.501	9.90E+37	165.3173
17:15:31	808.2056	71.9	44.37138	23.51348	9.90E+37	9.90E+37	1070.782	307.0578	80.24718
17:20:43	1198.088	71.48477	44.80042	23.55166	9.90E+37	9.90E+37	9.90E+37	9.90E+37	9.90E+37
17:25:55	9.90E+37	73.52897	45.15629	23.64686	9.90E+37	1279.32	483.9004	-37.4621	151.5062
17:31:08	9.90E+37	73.12379	45.55415	23.682	-118.558	93.59707	506.207	410.7236	20.40867
17:36:20	9.90E+37	74.82666	45.8558	23.72893	9.90E+37	9.90E+37	227.0078	299.8394	-28.4795
17:41:32	9.90E+37	73.91438	46.17179	23.80581	9.90E+37	9.90E+37	9.90E+37	9.90E+37	9.90E+37
17:46:45	9.90E+37	74.0987	46.54004	23.85821	1066.182	1058.291	1034.554	430.5471	-32.5408
17:51:57	9.90E+37	75.93908	46.83242	23.93056	9.90E+37	9.90E+37	9.90E+37	9.90E+37	9.90E+37
17:57:10	9.90E+37	76.33896	47.30171	23.98223	9.90E+37	9.90E+37	9.90E+37	9.90E+37	5.264826
18:02:22	9.90E+37	75.04726	47.51909	24.03416	-52.8143	142.7517	457.5327	166.7338	9.90E+37
18:07:34	-77.2166	75.46409	47.93493	24.0999	9.90E+37	9.90E+37	9.90E+37	9.90E+37	9.90E+37
18:12:47	9.90E+37	77.3795	48.18302	24.1655	9.90E+37	1108.891	406.7407	-74.5252	180.4438
18:17:59	9.90E+37	75.97508	48.70325	24.21591	9.90E+37	9.90E+37	9.90E+37	9.90E+37	33.90231
18:23:11	410.1613	75.85711	48.93643	24.25936	9.90E+37	9.90E+37	9.90E+37	9.90E+37	-161.746
18:28:24	404.3249	76.4456	49.22239	24.34578	9.90E+37	9.90E+37	919.4784	220.912	-108.147
18:33:36	747.835	76.58094	49.65469	24.40101	9.90E+37	9.90E+37	848.1053	142.9138	17.88613
18:38:49	984.1155	77.09637	49.83018	24.40095	9.90E+37	9.90E+37	9.90E+37	9.90E+37	-93.9523
18:44:01	9.90E+37	77.45543	50.14163	24.44955	9.90E+37	9.90E+37	9.90E+37	9.90E+37	-58.7812
18:49:13	9.90E+37	77.83207	50.33401	24.52021	823.0128	336.0638	9.90E+37	9.90E+37	147.7511
18:54:26	479.61	77.7761	50.8849	24.53422	1207.76	1157.05	840.8729	202.0508	15.81185
18:59:38	9.90E+37	77.74491	50.99273	24.6092	9.90E+37	9.90E+37	9.90E+37	9.90E+37	-26.4794
19:04:50	9.90E+37	78.10128	51.23102	24.67606	9.90E+37	9.90E+37	567.7944	-17.2235	77.82596
19:10:03	9.90E+37	78.87667	51.33954	24.71699	9.90E+37	9.90E+37	9.90E+37	9.90E+37	-63.3597
19:15:15	9.90E+37	78.64395	51.85759	24.78805	9.90E+37	912.1878	256.9403	-171.661	134.0522

TIME	Chan.10	Chan.11	Chan.12	Chan.13	Chan.14	Chan.15	Chan.16	Chan.17	Chan.18
19:20:28	9.90E+37	79.00069	51.87918	24.83739	9.90E+37	9.90E+37	9.90E+37	9.90E+37	-140.492
19:25:40	9.90E+37	78.73322	52.28424	24.86879	9.90E+37	9.90E+37	632.9431	-6.18685	9.90E+37
19:30:52	1308.285	79.63064	52.67536	24.87848	1296.723	1246.837	956.5775	296.1113	-63.0753
19:36:05	9.90E+37	79.48283	52.8319	24.94207	9.90E+37	9.90E+37	986.4072	266.7946	83.01561
19:41:17	909.7673	79.8766	53.14887	25.00497	9.90E+37	9.90E+37	1029.725	331.2315	30.06502
19:46:30	9.90E+37	80.07491	53.23233	25.07738	9.90E+37	9.90E+37	9.90E+37	9.90E+37	3.859293
19:51:42	172.8731	80.53877	53.25097	25.13074	9.90E+37	9.90E+37	9.90E+37	9.90E+37	-62.9174
19:56:54	9.90E+37	81.06103	53.26889	25.22443	9.90E+37	705.5101	80.40584	9.90E+37	100.8895
20:02:07	9.90E+37	81.01071	53.50322	25.29953	9.90E+37	9.90E+37	9.90E+37	9.90E+37	-77.4186
20:07:19	9.90E+37	82.96769	53.61356	25.35551	861.1186	893.7007	837.3359	311.8994	-190.135
20:12:31	9.90E+37	81.90752	53.88105	25.46134	126.6212	291.0883	504.7149	271.6066	-146.418
20:17:44	9.90E+37	81.91556	54.02145	25.55011	579.4616	641.1109	816.4617	565.7942	114.4829
20:22:56	9.90E+37	81.89411	54.41612	25.60891	241.612	373.1388	672.0354	399.5845	-47.6469
20:28:08	9.90E+37	82.78521	54.61705	25.63422	9.90E+37	9.90E+37	283.7785	241.2719	-107.191
20:33:21	9.90E+37	83.47735	54.71563	25.71396	763.6878	297.3277	9.90E+37	9.90E+37	216.9856
20:38:33	365.9557	84.63776	54.75306	25.79237	9.90E+37	9.90E+37	9.90E+37	9.90E+37	-46.2594
20:43:45	9.90E+37	82.37092	55.15481	25.84155	9.90E+37	9.90E+37	250.6041	234.2849	-114.108
20:48:58	9.90E+37	82.50048	55.71569	25.88053	9.90E+37	986.3629	286.3716	-189.035	102.105
20:54:10	9.90E+37	83.52684	55.59139	25.92531	9.90E+37	9.90E+37	9.90E+37	9.90E+37	200.6242
20:59:22	1319.896	83.2352	56.04821	25.99517	9.90E+37	1371.34	930.2081	303.4077	-166.469
21:04:35	9.90E+37	82.73036	56.05015	26.01657	709.84	276.6051	9.90E+37	9.90E+37	238.2135
21:09:47	699.9987	85.88874	56.2459	26.05769	9.90E+37	9.90E+37	894.4022	210.8784	146.9892
21:15:00	9.90E+37	82.68557	56.3391	26.12554	9.90E+37	9.90E+37	9.90E+37	9.90E+37	-23.4618
21:20:12	9.90E+37	84.19315	56.53339	26.19047	61.99283	9.90E+37	9.90E+37	9.90E+37	9.90E+37
21:25:24	1119.301	85.67696	56.51576	26.22037	9.90E+37	9.90E+37	9.90E+37	91.34248	-60.4347
21:30:37	9.90E+37	86.89553	56.64436	26.28466	24.22334	9.90E+37	9.90E+37	9.90E+37	9.90E+37
21:35:49	9.90E+37	86.84247	56.91876	26.37015	9.90E+37	9.90E+37	9.90E+37	9.90E+37	-51.309
21:41:01	9.90E+37	86.54607	56.89431	26.41436	902.4958	394.8103	-181.581	-190.55	289.8668
21:46:14	9.90E+37	86.4206	57.09181	26.47029	9.90E+37	9.90E+37	9.90E+37	9.90E+37	9.90E+37
21:51:26	9.90E+37	87.36676	57.2745	26.55126	9.90E+37	9.90E+37	235.6056	171.7729	9.90E+37
21:56:38	394.6516	88.11237	57.38502	26.64355	9.90E+37	9.90E+37	9.90E+37	9.90E+37	9.90E+37
22:01:51	9.90E+37	85.41002	57.58816	26.66736	9.90E+37	9.90E+37	-151.938	-26.1796	9.90E+37
22:07:03	9.90E+37	88.1474	57.77602	26.75374	9.90E+37	9.90E+37	9.90E+37	9.90E+37	-68.5277
22:12:15	431.5832	88.4343	57.90147	26.79004	9.90E+37	9.90E+37	9.90E+37	9.90E+37	9.90E+37
22:17:28	9.90E+37	88.45318	58.21433	26.8642	9.90E+37	9.90E+37	258.013	288.1686	-46.2599
22:22:40	9.90E+37	86.66481	58.44498	26.89724	9.90E+37	9.90E+37	9.90E+37	9.90E+37	-180.819
22:27:53	9.90E+37	87.48332	58.4176	26.93463	9.90E+37	9.90E+37	9.90E+37	-40.0683	9.90E+37
22:33:05	9.90E+37	87.27094	58.73606	26.98395	9.90E+37	9.90E+37	9.90E+37	9.90E+37	-177.972
22:38:17	9.90E+37	87.11428	58.75765	27.01527	9.90E+37	9.90E+37	9.90E+37	9.90E+37	83.88267
22:43:29	394.6545	87.77685	58.93909	27.09596	9.90E+37	9.90E+37	9.90E+37	9.90E+37	9.90E+37
22:48:42	9.90E+37	89.16071	59.04641	27.14479	275.2194	392.2681	714.0963	417.4612	-25.8258
22:53:54	9.90E+37	88.14334	59.10863	27.12191	9.90E+37	-65.0175	295.1518	62.20319	9.90E+37
22:59:07	9.90E+37	89.15523	59.24643	27.20508	9.90E+37	9.90E+37	9.90E+37	9.90E+37	-82.367
23:04:19	9.90E+37	88.31001	59.22224	27.2013	9.90E+37	9.90E+37	97.23083	296.3148	45.1255
23:09:31	752.815	89.67849	59.61636	27.30944	9.90E+37	9.90E+37	9.90E+37	9.90E+37	-83.8922
23:14:44	9.90E+37	88.94506	59.64093	27.32827	9.90E+37	9.90E+37	-62.0789	36.10966	9.90E+37
23:19:56	9.90E+37	87.94224	59.64308	27.33185	1343.291	1275.204	977.8286	286.3758	25.86619
23:25:08	9.90E+37	87.7066	60.06078	27.41275	9.90E+37	9.90E+37	9.90E+37	9.90E+37	-91.2882
23:30:21	9.90E+37	88.44978	59.85527	27.41883	1369.865	675.6055	113.2754	-45.0475	331.0816
23:35:33	9.90E+37	87.90513	60.12299	27.42116	9.90E+37	9.90E+37	9.90E+37	9.90E+37	-129.65
23:40:46	9.90E+37	88.53466	60.37095	27.4581	9.90E+37	1295.283	952.9869	252.007	-15.3229
23:45:58	99.27584	88.67698	60.34848	27.49537	9.90E+37	9.90E+37	891.5152	189.4396	120.4659
23:51:10	9.90E+37	88.08097	60.57265	27.46766	723.7295	287.5923	9.90E+37	9.90E+37	273.9959
23:56:23	9.90E+37	88.09573	60.64646	27.5173	148.9968	9.90E+37	9.90E+37	9.90E+37	104.5485
0:01:35	9.90E+37	90.99572	60.45446	27.57602	9.90E+37	9.90E+37	9.90E+37	9.90E+37	-130.687
0:06:47	9.90E+37	89.46209	60.60036	27.58243	9.90E+37	9.90E+37	739.6295	75.601	94.80248

TIME	Chan.10	Chan.11	Chan.12	Chan.13	Chan.14	Chan.15	Chan.16	Chan.17	Chan.18
0:12:00	9.90E+37	90.51624	60.74128	27.6077	9.90E+37	9.90E+37	351.5439	235.8853	-184.504
0:17:12	9.90E+37	89.16253	60.75863	27.6738	9.90E+37	9.90E+37	9.90E+37	9.90E+37	-131.906
0:22:25	9.90E+37	88.70131	60.87998	27.66267	9.90E+37	1223.976	443.6073	-30.7816	141.4962
0:27:37	9.90E+37	88.17395	60.86871	27.72125	9.90E+37	1235.643	467.3192	-20.2677	191.7917
0:32:49	9.90E+37	87.882	61.1905	27.77646	9.90E+37	9.90E+37	9.90E+37	9.90E+37	65.41649
0:38:02	9.90E+37	87.72012	61.14771	27.78582	9.90E+37	9.90E+37	9.90E+37	9.90E+37	-199.474
0:43:14	9.90E+37	89.1102	61.38572	27.76944	9.90E+37	1338.025	519.3676	-7.92682	119.2421
0:48:26	9.90E+37	91.01268	61.28976	27.84831	9.90E+37	9.90E+37	9.90E+37	9.90E+37	-141.708
0:53:39	9.90E+37	89.9271	61.31431	27.88531	9.90E+37	9.90E+37	56.26504	-47.6442	9.90E+37
0:58:51	9.90E+37	89.46933	61.49101	27.87174	726.175	780.8368	918.9104	418.6542	-72.2072
1:04:04	220.7531	91.56296	61.48644	27.93636	9.90E+37	9.90E+37	9.90E+37	9.90E+37	9.90E+37
1:09:16	9.90E+37	91.51991	61.48328	27.96456	9.90E+37	801.7451	174.3001	9.90E+37	70.55815
1:14:28	503.9046	91.69815	61.54784	27.96638	9.90E+37	9.90E+37	938.8976	269.2484	-44.9226
1:19:41	9.90E+37	90.07605	61.56123	28.03161	63.10609	9.90E+37	9.90E+37	9.90E+37	9.90E+37
1:24:53	9.90E+37	92.04541	61.70835	28.0685	9.90E+37	9.90E+37	75.40392	82.83031	9.90E+37
1:30:05	854.3718	90.30669	61.72555	28.07315	9.90E+37	9.90E+37	818.7439	120.6284	11.90666
1:35:18	448.2042	92.39975	61.80869	28.15226	9.90E+37	9.90E+37	9.90E+37	9.90E+37	9.90E+37
1:40:30	9.90E+37	90.70883	61.79636	28.10851	760.0802	299.7593	9.90E+37	9.90E+37	7.659934
1:45:43	9.90E+37	89.45887	62.03227	28.13889	9.90E+37	9.90E+37	9.90E+37	9.90E+37	43.74763
1:50:55	9.90E+37	92.03393	62.12253	28.19646	341.924	461.2406	628.6343	237.131	9.90E+37
1:56:07	9.90E+37	90.46365	62.21359	28.1921	9.90E+37	1307.332	501.6254	-102.134	-196.311
2:01:20	531.027	91.5311	62.24939	28.19941	9.90E+37	9.90E+37	9.90E+37	9.90E+37	-115.863
2:06:32	9.90E+37	90.28896	62.34662	28.25869	9.90E+37	9.90E+37	9.90E+37	9.90E+37	9.90E+37
2:11:44	9.90E+37	90.96505	62.32383	28.29763	152.7509	300.8175	532.5221	184.3903	9.90E+37
2:16:57	9.90E+37	92.95689	62.43991	28.34382	761.0806	303.4099	9.90E+37	9.90E+37	-67.9459
2:22:09	9.90E+37	90.50564	62.40662	28.33041	9.90E+37	9.90E+37	9.90E+37	9.90E+37	-146.346
2:27:21	9.90E+37	92.14927	62.47131	28.40555	382.7152	489.6665	644.9352	252.0091	-166.466
2:32:34	9.90E+37	89.77164	62.5385	28.33362	9.90E+37	9.90E+37	9.90E+37	9.90E+37	9.90E+37
2:37:46	9.90E+37	90.79962	62.94228	28.37917	9.90E+37	9.90E+37	9.90E+37	9.90E+37	-163.541
2:42:58	9.90E+37	90.11653	62.93046	28.35372	9.90E+37	9.90E+37	9.90E+37	9.90E+37	-6.35118
2:48:11	9.90E+37	90.58423	62.86645	28.35856	9.90E+37	9.90E+37	9.90E+37	9.90E+37	-196.419
2:53:23	9.90E+37	89.88591	62.6664	28.37429	9.90E+37	9.90E+37	9.90E+37	-23.9246	9.90E+37
2:58:36	9.90E+37	90.14153	63.05196	28.4032	9.90E+37	9.90E+37	654.364	42.18432	104.553
3:03:48	9.90E+37	90.64863	62.9529	28.43945	9.90E+37	1026.648	362.5173	-108.404	146.5043
3:09:00	9.90E+37	90.35976	63.06265	28.40755	9.90E+37	9.90E+37	9.90E+37	-15.8489	9.90E+37
3:14:13	253.4076	90.22251	63.06413	28.41767	9.90E+37	9.90E+37	890.7697	162.9681	47.724
3:19:25	9.90E+37	90.97216	63.15016	28.45693	9.90E+37	9.90E+37	9.90E+37	-167.254	9.90E+37
3:24:37	1252.497	90.67076	63.24619	28.41744	9.90E+37	9.90E+37	9.90E+37	9.90E+37	9.90E+37
3:29:50	1356.561	90.90119	63.18024	28.47834	9.90E+37	9.90E+37	9.90E+37	9.90E+37	9.90E+37
3:35:02	9.90E+37	90.82537	63.18188	28.46834	9.90E+37	9.90E+37	9.90E+37	9.90E+37	9.90E+37
3:40:15	2.217591	90.84943	63.19351	28.48241	9.90E+37	9.90E+37	795.692	109.5957	80.24905
3:45:27	9.90E+37	91.76766	63.1965	28.46235	9.90E+37	9.90E+37	9.90E+37	9.90E+37	-11.5453
3:50:39	9.90E+37	89.57693	63.40931	28.49474	9.90E+37	840.0636	210.8765	9.90E+37	92.37977
3:55:52	9.90E+37	90.71445	63.10247	28.55209	9.90E+37	9.90E+37	587.8982	15.47197	135.2938
4:01:04	9.90E+37	90.81471	63.35161	28.56752	-149.745	9.90E+37	9.90E+37	9.90E+37	151.5073
4:06:16	327.4607	92.58481	63.17818	28.57961	9.90E+37	9.90E+37	9.90E+37	9.90E+37	9.90E+37
4:11:29	9.90E+37	90.1041	63.37581	28.56934	1076.748	1067.504	882.7975	298.5475	-49.6232
4:16:41	9.90E+37	91.30812	63.47812	28.58164	121.7376	9.90E+37	9.90E+37	9.90E+37	86.31501
4:21:54	9.90E+37	90.69302	63.60403	28.57749	1349.191	636.5186	43.9093	9.90E+37	145.255
4:27:06	9.90E+37	92.98874	63.28245	28.62125	9.90E+37	9.90E+37	621.0678	30.43163	110.6544
4:32:18	334.7071	92.53873	63.36427	28.63378	9.90E+37	9.90E+37	9.90E+37	9.90E+37	9.90E+37
4:37:31	782.0598	91.47254	63.34243	28.67375	9.90E+37	9.90E+37	9.90E+37	-120.92	9.90E+37
4:42:43	9.90E+37	90.56992	63.46783	28.58413	9.90E+37	9.90E+37	9.90E+37	-153.389	9.90E+37
4:47:55	9.90E+37	91.62034	63.72786	28.61187	799.2256	846.1762	819.252	229.6608	-141.178
4:53:08	1051.73	91.49282	63.57217	28.63322	9.90E+37	9.90E+37	9.90E+37	9.90E+37	9.90E+37
4:58:20	9.90E+37	90.78249	63.95151	28.64592	1187.074	1124.68	806.1958	154.1684	-136.252

TIME	Chan.10	Chan.11	Chan.12	Chan.13	Chan.14	Chan.15	Chan.16	Chan.17	Chan.18
5:03:32	9.90E+37	90.08513	63.81614	28.55967	9.90E+37	9.90E+37	9.90E+37	9.90E+37	-38.2231
5:08:45	-196.321	90.90116	63.3212	28.64928	9.90E+37	9.90E+37	897.91	189.4415	-4.56272
5:13:57	9.90E+37	91.32511	63.7044	28.60205	9.90E+37	9.90E+37	-29.9717	99.55711	9.90E+37
5:19:10	814.7082	90.32606	63.6652	28.58719	9.90E+37	9.90E+37	1180.035	405.5498	-3.66476
5:24:22	9.90E+37	90.73359	63.65168	28.70442	9.90E+37	1105.192	363.7167	-89.8638	124.1558
5:29:34	9.90E+37	91.17248	63.54649	28.68117	9.90E+37	9.90E+37	32.47797	-66.2868	9.90E+37
5:34:47	9.90E+37	91.56513	63.90416	28.73325	9.90E+37	9.90E+37	9.90E+37	9.90E+37	8.559032
5:39:59	9.90E+37	91.1455	63.68605	28.65703	9.90E+37	9.90E+37	9.90E+37	9.90E+37	-108.391
5:45:12	9.90E+37	90.7965	63.73001	28.66152	9.90E+37	9.90E+37	9.90E+37	9.90E+37	121.2578
5:50:24	9.90E+37	93.92403	63.64324	28.71823	9.90E+37	780.1294	222.17	-158.059	169.0916
5:55:36	9.90E+37	91.24734	63.80109	28.68742	296.2184	-152.788	9.90E+37	9.90E+37	-67.9377
6:00:49	9.90E+37	91.36236	64.03448	28.67927	9.90E+37	9.90E+37	9.90E+37	9.90E+37	131.5769
6:06:01	9.90E+37	90.94796	64.11659	28.69383	12.94039	9.90E+37	9.90E+37	9.90E+37	17.75384
6:11:13	9.90E+37	91.4796	63.87676	28.6399	9.90E+37	9.90E+37	1027.404	290.0315	-35.759
6:16:26	9.90E+37	93.1775	63.71491	28.73719	9.90E+37	9.90E+37	574.8806	20.99811	142.7496
6:21:38	9.90E+37	91.43116	63.83034	28.71705	9.90E+37	9.90E+37	583.1636	16.66165	154.0033
6:26:51	9.90E+37	91.28965	63.90164	28.76634	9.90E+37	9.90E+37	705.8449	79.32582	5.125634
6:32:03	9.90E+37	89.91339	63.84967	28.77164	9.90E+37	9.90E+37	514.639	-2.78451	156.5215
6:37:15	9.90E+37	90.71263	63.94013	28.79262	9.90E+37	9.90E+37	956.4607	269.2542	-2.7956
6:42:28	9.90E+37	90.1607	63.81503	28.74394	9.90E+37	9.90E+37	9.90E+37	9.90E+37	9.90E+37
6:47:40	9.90E+37	91.78993	63.83245	28.79977	9.90E+37	9.90E+37	9.90E+37	9.90E+37	-46.4247
6:52:52	443.4662	93.79199	63.91948	28.85799	9.90E+37	9.90E+37	9.90E+37	9.90E+37	9.90E+37
6:58:05	170.7466	92.2594	63.94728	28.8171	9.90E+37	9.90E+37	825.5653	110.8136	-14.0072
7:03:17	9.90E+37	92.50166	63.83639	28.91168	9.90E+37	9.90E+37	9.90E+37	9.90E+37	-6.33814
7:08:29	9.90E+37	90.0865	63.93313	28.82278	-39.1523	172.8825	452.011	48.79733	9.90E+37
7:13:42	9.90E+37	91.94097	64.02722	28.8547	9.90E+37	9.90E+37	9.90E+37	-164.539	9.90E+37
7:18:54	9.90E+37	91.08777	63.91738	28.89202	1327.181	606.8421	5.164655	-83.065	325.0451
7:24:07	834.9072	91.42145	63.92229	28.86123	9.90E+37	9.90E+37	1161.817	342.0835	-85.9469
7:29:19	9.90E+37	92.35735	64.00958	28.8654	9.90E+37	9.90E+37	9.90E+37	9.90E+37	-117.276
7:34:31	166.0982	93.64989	63.86738	28.93631	9.90E+37	9.90E+37	862.9099	145.4181	53.93817
7:39:44	9.90E+37	92.8919	63.84651	28.97817	802.0529	351.708	-159.41	9.90E+37	144.0085
7:44:56	9.90E+37	92.61006	64.00126	28.99434	9.90E+37	9.90E+37	9.90E+37	-53.277	9.90E+37
7:50:08	9.90E+37	93.6185	63.95921	29.05376	9.90E+37	9.90E+37	9.90E+37	9.90E+37	-135.438
7:55:21	374.649	94.9537	63.95633	29.05631	9.90E+37	9.90E+37	796.926	-105.492	-19.3491

TIME	Chan.19	Chan.20
13:42:03	9.90E+37	9.90E+37
13:47:16	9.90E+37	9.90E+37
13:52:28	333.6758	145.4285
13:57:40	9.90E+37	90.0057
14:02:53	9.90E+37	9.90E+37
14:08:05	9.90E+37	-49.1627
14:13:18	6.571368	9.90E+37
14:18:30	430.4224	447.4488
14:23:42	9.90E+37	9.90E+37
14:28:55	9.90E+37	9.90E+37
14:34:07	432.7924	444.727
14:39:19	252.2577	198.2717
14:44:32	120.4897	443.4772
14:49:44	9.90E+37	63.28344
14:54:57	9.90E+37	-52.0218
15:00:09	9.90E+37	9.90E+37
15:05:21	-89.311	280.1392
15:10:34	225.8351	-35.2469
15:15:46	9.90E+37	9.90E+37

TIME	Chan.19	Chan.20
15:20:58	204.4224	423.3078
15:26:11	-76.1808	9.90E+37
15:31:23	9.90E+37	9.90E+37
15:36:36	9.90E+37	-70.8859
15:41:48	9.90E+37	9.90E+37
15:47:00	280.133	409.2714
15:52:13	238.2049	-8.75055
15:57:25	-115.864	9.90E+37
16:02:37	-51.8587	9.90E+37
16:07:50	200.6315	428.2707
16:13:02	9.90E+37	9.90E+37
16:18:14	9.90E+37	9.90E+37
16:23:27	9.90E+37	-45.0436
16:28:39	28.97476	365.9631
16:33:52	9.90E+37	9.90E+37
16:39:04	9.90E+37	-63.5458
16:44:16	-87.7595	258.0156
16:49:29	140.1453	20.40645
16:54:41	299.1637	136.6922
16:59:53	130.3335	426.8258
17:05:06	9.90E+37	-75.419
17:10:18	377.5213	207.5966
17:15:31	223.2653	464.8021
17:20:43	9.90E+37	9.90E+37
17:25:55	411.357	432.1034
17:31:08	9.90E+37	9.90E+37
17:36:20	9.90E+37	9.90E+37
17:41:32	9.90E+37	9.90E+37
17:46:45	-90.92	219.5002
17:51:57	9.90E+37	9.90E+37
17:57:10	-40.7083	9.90E+37
18:02:22	9.90E+37	1.323548
18:07:34	9.90E+37	9.90E+37
18:12:47	433.9615	410.4988
18:17:59	119.5076	9.90E+37
18:23:11	9.90E+37	9.90E+37
18:28:24	-138.518	220.753
18:33:36	182.9677	442.2012
18:38:49	9.90E+37	9.90E+37
18:44:01	-39.3338	9.90E+37
18:49:13	385.7938	282.4062
18:54:26	154.0017	431.5823
18:59:38	-56.1407	9.90E+37
19:04:50	310.5328	417.1889
19:10:03	9.90E+37	9.90E+37
19:15:15	399.4323	399.5644
19:20:28	76.82088	-176.417
19:25:40	-112.57	259.2457
19:30:52	9.90E+37	130.3321
19:36:05	182.9616	463.6087
19:41:17	104.5464	399.4274
19:46:30	121.5516	9.90E+37
19:51:42	-126.763	9.90E+37
19:56:54	294.5518	187.1224
20:02:07	-79.7509	9.90E+37
20:07:19	9.90E+37	-136.575

TIME	Chan.19	Chan.20
20:12:31	9.90E+37	9.90E+37
20:17:44	9.90E+37	9.90E+37
20:22:56	9.90E+37	-94.1667
20:28:08	9.90E+37	9.90E+37
20:33:21	406.0517	198.2658
20:38:33	9.90E+37	9.90E+37
20:43:45	9.90E+37	9.90E+37
20:48:58	341.9218	348.8754
20:54:10	268.0353	-123.063
20:59:22	9.90E+37	38.83146
21:04:35	229.4596	-98.8156
21:09:47	303.2483	504.0797
21:15:00	-73.72	9.90E+37
21:20:12	118.9997	46.34769
21:25:24	9.90E+37	9.90E+37
21:30:37	174.1335	201.3538
21:35:49	-72.2055	9.90E+37
21:41:01	413.5339	130.4914
21:46:14	9.90E+37	9.90E+37
21:51:26	9.90E+37	9.90E+37
21:56:38	9.90E+37	9.90E+37
22:01:51	9.90E+37	9.90E+37
22:07:03	-199.466	9.90E+37
22:12:15	9.90E+37	9.90E+37
22:17:28	9.90E+37	9.90E+37
22:22:40	9.90E+37	9.90E+37
22:27:53	9.90E+37	9.90E+37
22:33:05	-114.103	9.90E+37
22:38:17	138.5144	9.90E+37
22:43:29	9.90E+37	9.90E+37
22:48:42	9.90E+37	-69.4112
22:53:54	9.90E+37	-72.4092
22:59:07	-130.489	9.90E+37
23:04:19	9.90E+37	9.90E+37
23:09:31	9.90E+37	9.90E+37
23:14:44	9.90E+37	9.90E+37
23:19:56	65.69801	385.1045
23:25:08	-40.7031	9.90E+37
23:30:21	321.764	-1.05998
23:35:33	9.90E+37	9.90E+37
23:40:46	12.73542	333.4927
23:45:58	273.9957	480.7629
23:51:10	382.0957	137.9299
23:56:23	233.3087	-43.485
0:01:35	9.90E+37	9.90E+37
0:06:47	295.9525	381.2109
0:12:00	9.90E+37	9.90E+37
0:17:12	9.90E+37	9.90E+37
0:22:25	373.1368	430.7448
0:27:37	410.1583	341.1355
0:32:49	-61.9005	9.90E+37
0:38:02	9.90E+37	9.90E+37
0:43:14	339.521	437.6601
0:48:26	9.90E+37	9.90E+37
0:53:39	9.90E+37	9.90E+37
0:58:51	9.90E+37	-142.552

TIME	Chan.19	Chan.20
1:04:04	9.90E+37	9.90E+37
1:09:16	340.7248	394.1066
1:14:28	-135.774	193.0577
1:19:41	24.70086	9.90E+37
1:24:53	9.90E+37	9.90E+37
1:30:05	154.003	377.4857
1:35:18	9.90E+37	9.90E+37
1:40:30	263.6905	211.5851
1:45:43	241.8025	-6.18752
1:50:55	9.90E+37	-47.828
1:56:07	60.829	311.1963
2:01:20	9.90E+37	9.90E+37
2:06:32	9.90E+37	9.90E+37
2:11:44	9.90E+37	-2.50961
2:16:57	200.3083	172.0714
2:22:09	9.90E+37	9.90E+37
2:27:21	9.90E+37	46.19627
2:32:34	9.90E+37	9.90E+37
2:37:46	9.90E+37	9.90E+37
2:42:58	164.8682	-33.8878
2:48:11	9.90E+37	9.90E+37
2:53:23	9.90E+37	9.90E+37
2:58:36	298.3902	439.3564
3:03:48	377.933	319.6595
3:09:00	9.90E+37	9.90E+37
3:14:13	179.187	422.676
3:19:25	9.90E+37	9.90E+37
3:24:37	9.90E+37	9.90E+37
3:29:50	9.90E+37	9.90E+37
3:35:02	9.90E+37	9.90E+37
3:40:15	236.9709	473.0928
3:45:27	-1.05871	9.90E+37
3:50:39	341.9254	302.7239
3:55:52	347.9442	428.045
4:01:04	163.4474	9.90E+37
4:06:16	9.90E+37	9.90E+37
4:11:29	-166.768	186.7568
4:16:41	265.6987	76.77322
4:21:54	333.0237	141.6652
4:27:06	308.1192	473.8925
4:32:18	9.90E+37	9.90E+37
4:37:31	9.90E+37	9.90E+37
4:42:43	9.90E+37	9.90E+37
4:47:55	9.90E+37	124.1604
4:53:08	9.90E+37	9.90E+37
4:58:20	-136.565	240.6997
5:03:32	-173.85	9.90E+37
5:08:45	46.20014	383.9125
5:13:57	9.90E+37	9.90E+37
5:19:10	-49.2094	270.3202
5:24:22	339.5204	396.4843
5:29:34	9.90E+37	9.90E+37
5:34:47	-6.18417	9.90E+37
5:39:59	9.90E+37	9.90E+37
5:45:12	84.0425	9.90E+37
5:50:24	389.8836	346.853

TIME	Chan.19	Chan.20
5:55:36	219.3499	148.98
6:00:49	234.5093	-102.133
6:06:01	219.07	11.63444
6:11:13	1.331064	349.1531
6:16:26	346.7373	431.7585
6:21:38	363.5617	478.4366
6:26:51	165.3151	364.2075
6:32:03	365.9624	464.3015
6:37:15	-12.8096	321.4262
6:42:28	9.90E+37	9.90E+37
6:47:40	116.4232	9.90E+37
6:52:52	9.90E+37	9.90E+37
6:58:05	129.1044	429.2144
7:03:17	59.34816	9.90E+37
7:08:29	9.90E+37	37.60661
7:13:42	9.90E+37	9.90E+37
7:18:54	357.6666	46.35142
7:24:07	-123.289	253.0872
7:29:19	9.90E+37	9.90E+37
7:34:31	166.5794	506.2083
7:39:44	298.3096	118.1755
7:44:56	9.90E+37	9.90E+37
7:50:08	9.90E+37	9.90E+37
7:55:21	150.2632	323.2498

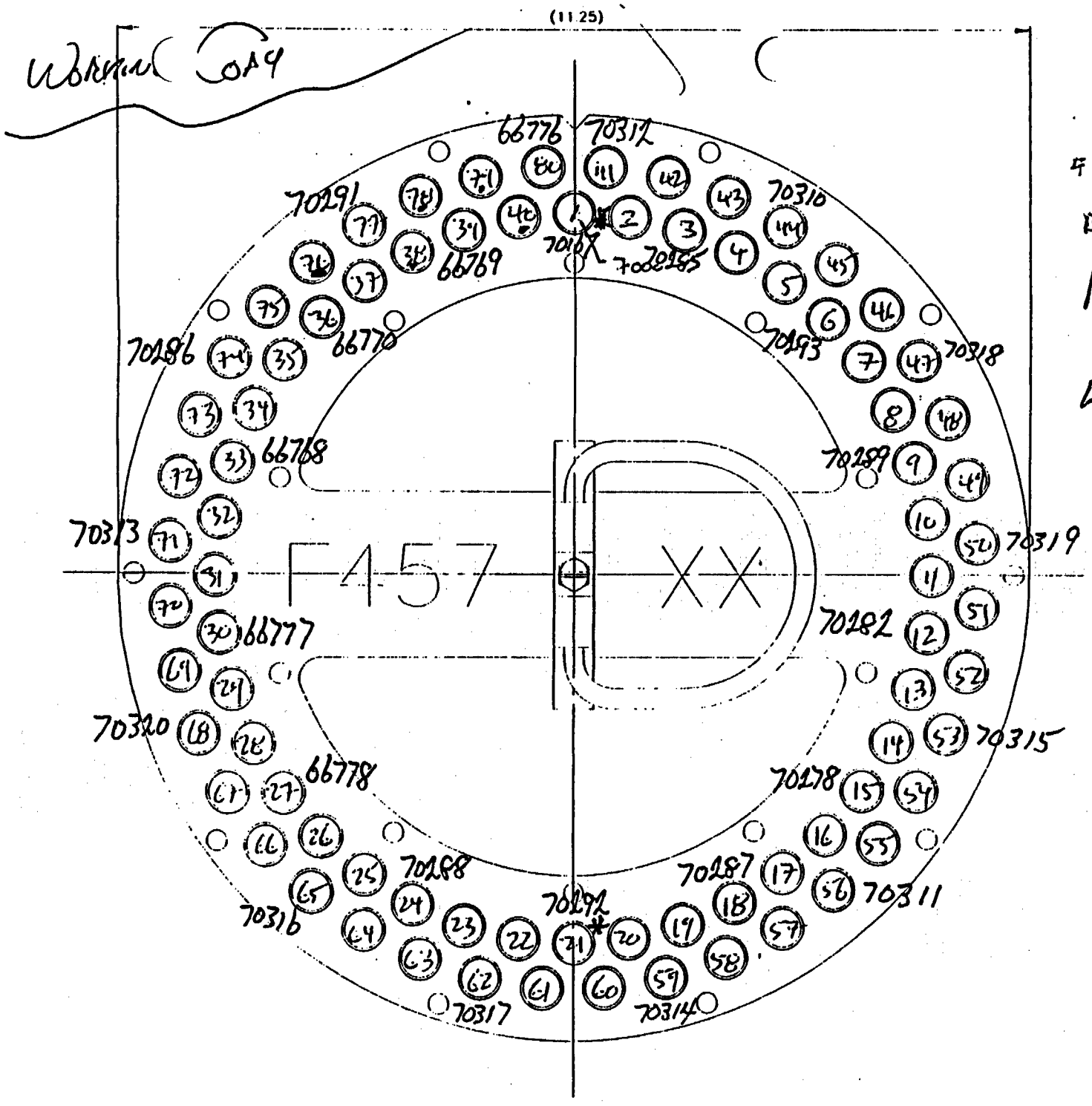

Warning Card

#1 ~7000 Ci

Rest ~12000 Ci

ALL LOW CURRIE SOURCES FROM POS. 60. EXCEPT FOR 5 MARKED WITH A DOT TO POS UE9 WHICH IS STORED IN FRONT OF THE QUARENTINE TABLE.

APPENDIX 2, Source loading diagram.

F-294 THERMAL LOADING TEST FOR F457 CAGE 00.10.02

Inner Cage Position			Outer Cage Position	Serial Number	Curies
1	70167	7509	41	70312	12618
2		500	42		500
3	70285	12662	43		500
4		500	44	70310	12615
5		500	45		500
6	70293	12662	46		500
7		500	47	70318	12632
8		500	48		500
9	70289	12714	49		500
10		500	50	70319	12655
11		500	51		500
12	70282	12796	52		500
13		500	53	70315	12699
14		500	54		500
15	70278	12803	55		500
16		500	56	70311	12714
17		500	57		500
18	70287	12803	58		500
19		500	59	70314	12803
20		500	60		500
21	70292	12847	61		500
22		500	62	70317	12936
23		500	63		500
24	70288	12885	64		500
25		500	65	70316	12595
26		500	66		500
27	66778	12121	67		500
28		500	68	70320	12595
29		500	69		500
30	66777	12444	70		500
31		500	71	70313	12610
32		500	72		500
33	66768	12716	73		500
34		500	74	70286	12632
35		500	75		500
36	66770	12723	76		500
37		500	77	70291	12640
38		500	78		500
39	66769	12738	79		500
40		500	80	66776	12885
Total		185423			190629	376052

F294 TEST

Returned C-188s for ~~Recycling~~ as Spacers - NC696019

DECAYED TO: 31-Oct-00

CAP TYPE	SERIAL #	STOR LOC	ORG. IR#	Inner Type	Fabrication W.O #	ETUR P/S	RETURN DATE	MEASURED CURIES	MEASURED DATE	DECAYE CI/C-18	ECAYED CI/Slug	COMMENTS
C-188	5065	13-W	151	C195 Inners	453 278 188-28	64025	01-Oct-97	8,050	16-Dec-77	395.3	24.7	F294 Test NC696019
C-188	5111	13-W	151	C195 Inners	453 278 188-28	64025	01-Oct-97	8,851	16-Jan-78	439.6	27.5	F294 Test NC696019
C-188	5112	13-W	151	C195 Inners	453 278 188-28	64025	01-Oct-97	8,851	16-Jan-78	439.6	27.5	F294 Test NC696019
C-188	5113	13-W	151	C195 Inners	453 278 188-28	64025	01-Oct-97	8,851	16-Jan-78	439.6	27.5	F294 Test NC696019
C-188	5114	13-W	151	C195 Inners	453 278 188-28	64025	01-Oct-97	8,851	16-Jan-78	439.6	27.5	F294 Test NC696019
C-188	5115	13-W	151	C195 Inners	453 278 188-28	64025	01-Oct-97	8,851	16-Jan-78	439.6	27.5	F294 Test NC696019
C-188	5116	13-W	151	C195 Inners	453 278 188-28	64025	01-Oct-97	8,851	16-Jan-78	439.6	27.5	F294 Test NC696019
C-188	5117	13-W	151	C195 Inners	453 278 188-28	64025	01-Oct-97	8,851	16-Jan-78	439.6	27.5	F294 Test NC696019
C-188	5119	13-W	151	C195 Inners	453 278 188-28	64025	01-Oct-97	8,851	16-Jan-78	439.6	27.5	F294 Test NC696019
C-188	5120	13-W	151	C195 Inners	453 278 188-28	64025	01-Oct-97	8,920	16-Jan-78	443.0	27.7	F294 Test NC696019
C-188	5124	13-W	151	C195 Inners	453 278 188-28	64025	01-Oct-97	8,856	17-Jan-78	440.0	27.5	F294 Test NC696019
C-188	5125	13-W	151	C195 Inners	453 278 188-28	64025	01-Oct-97	8,856	17-Jan-78	440.0	27.5	F294 Test NC696019
C-188	5126	13-W	151	C195 Inners	453 278 188-28	64025	01-Oct-97	8,856	17-Jan-78	440.0	27.5	F294 Test NC696019
C-188	5127	13-W	151	C195 Inners	453 278 188-28	64025	01-Oct-97	8,856	17-Jan-78	440.0	27.5	F294 Test NC696019
C-188	5128	13-W	151	C195 Inners	453 278 188-28	64025	01-Oct-97	8,856	17-Jan-78	440.0	27.5	F294 Test NC696019
C-188	5129	13-W	151	C195 Inners	453 278 188-28	64025	01-Oct-97	8,856	17-Jan-78	440.0	27.5	F294 Test NC696019
C-188	5131	13-W	151	C195 Inners	453 278 188-28	64025	01-Oct-97	8,856	17-Jan-78	440.0	27.5	F294 Test NC696019
C-188	5132	13-W	151	C195 Inners	453 278 188-28	64025	01-Oct-97	8,856	17-Jan-78	440.0	27.5	F294 Test NC696019
C-188	5133	13-W	151	C195 Inners	453 278 188-28	64025	01-Oct-97	8,521	17-Jan-78	423.3	26.5	F294 Test NC696019
C-188	5134	13-W	151	C195 Inners	453 278 188-28	64025	01-Oct-97	8,521	17-Jan-78	423.3	26.5	F294 Test NC696019
C-188	5135	13-W	151	C195 Inners	453 278 188-28	64025	01-Oct-97	8,521	17-Jan-78	423.3	26.5	F294 Test NC696019
C-188	5136	13-W	151	C195 Inners	453 278 188-28	64025	01-Oct-97	8,521	17-Jan-78	423.3	26.5	F294 Test NC696019
C-188	5137	13-W	151	C195 Inners	453 278 188-28	64025	01-Oct-97	8,521	17-Jan-78	423.3	26.5	F294 Test NC696019
C-188	5138	13-W	151	C195 Inners	453 278 188-28	64025	01-Oct-97	8,521	17-Jan-78	423.3	26.5	F294 Test NC696019
C-188	5139	13-W	151	C195 Inners	453 278 188-28	64025	01-Oct-97	8,521	17-Jan-78	423.3	26.5	F294 Test NC696019
C-188	5140	13-W	151	C195 Inners	453 278 188-28	64025	01-Oct-97	8,521	17-Jan-78	423.3	26.5	F294 Test NC696019
C-188	5141	13-W	151	C195 Inners	453 278 188-28	64025	01-Oct-97	8510	17-Jan-78	422.8	26.4	F294 Test NC696019
C-188	5142	13-W	151	C195 Inners	453 278 188-28	64025	01-Oct-97	8510	17-Jan-78	422.8	26.4	F294 Test NC696019
C-188	5143	13-W	151	C195 Inners	453 278 188-28	64025	01-Oct-97	8,298	17-Jan-78	412.2	25.8	F294 Test NC696019
C-188	5144	13-W	151	C195 Inners	453 278 188-28	64025	01-Oct-97	8,298	17-Jan-78	412.2	25.8	F294 Test NC696019
C-188	5145	13-W	151	C195 Inners	453 278 188-28	64025	01-Oct-97	8,298	17-Jan-78	412.2	25.8	F294 Test NC696019
C-188	5147	13-W	151	C195 Inners	453 278 188-28	64025	01-Oct-97	8,298	17-Jan-78	412.2	25.8	F294 Test NC696019
C-188	5148	13-W	151	C195 Inners	453 278 188-28	64025	01-Oct-97	8,298	17-Jan-78	412.2	25.8	F294 Test NC696019
C-188	5149	13-W	151	C195 Inners	453 278 188-28	64025	01-Oct-97	8,298	17-Jan-78	412.2	25.8	F294 Test NC696019
C-188	5150	13-W	151	C195 Inners	453 278 188-28	64025	01-Oct-97	8,151	17-Jan-78	405.0	25.3	F294 Test NC696019
C-188	5151	13-W	151	C195 Inners	453 278 188-28	64025	01-Oct-97	8,151	17-Jan-78	405.0	25.3	F294 Test NC696019
C-188	5152	13-W	151	C195 Inners	453 278 188-28	64025	01-Oct-97	8,151	17-Jan-78	405.0	25.3	F294 Test NC696019
C-188	5153	13-W	151	C195 Inners	453 278 188-28	64025	01-Oct-97	8,151	17-Jan-78	405.0	25.3	F294 Test NC696019
C-188	5154	13-W	151	C195 Inners	453 278 188-28	64025	01-Oct-97	8,151	17-Jan-78	405.0	25.3	F294 Test NC696019
C-188	5155	13-W	151	C195 Inners	453 278 188-28	64025	01-Oct-97	8,151	17-Jan-78	405.0	25.3	F294 Test NC696019

F-294

Returned C-188s for ~~Recycling~~ as Spacers - NC696019

C-188	5156	13-W	151	C195 Inners	453 278 188-28	64025	01-Oct-97	8,151	17-Jan-78	405.0	25.3	F294 Test NC696019
C-188	5157	13-W	151	C195 Inners	453 278 188-28	64025	01-Oct-97	7,970	17-Jan-78	395.9	24.7	F294 Test NC696019
C-188	5158	13-W	151	C195 Inners	453 278 188-28	64025	01-Oct-97	7,970	17-Jan-78	395.9	24.7	F294 Test NC696019
C-188	5159	13-W	151	C195 Inners	453 278 188-28	64025	01-Oct-97	7,970	17-Jan-78	395.9	24.7	F294 Test NC696019
C-188	5160	13-W	151	C195 Inners	453 278 188-28	64025	01-Oct-97	7,970	17-Jan-78	395.9	24.7	F294 Test NC696019
C-188	5161	13-W	151	C195 Inners	453 278 188-28	64025	01-Oct-97	7,970	17-Jan-78	395.9	24.7	F294 Test NC696019
C-188	5188	13-W	151	C195 Inners	453 278 188-28	64025	01-Oct-97	7,965	23-Jan-78	396.6	24.8	F294 Test NC696019
C-188	4842	13-UE9	69	C-195 Inners	453-273-188-25	64811	98/10/14	10,525	12-Aug-77	493.9	30.9	F294 Test NC696019
C-188	4993	13-UE9	69	C-195 Inners	453-273-188-26	64811	98/10/14	10,380	10-Oct-77	497.6	31.1	F294 Test NC696019
C-188	5067	13-UE9	69	C-195 Inners	453-273-188-28	64811	98/10/14	9,728	16-Jan-78	483.1	30.2	F294 Test NC696019
C-188	5068	13-UE9	69	C-195 Inners	453-273-188-28	64811	98/10/14	9,728	16-Jan-78	483.1	30.2	F294 Test NC696019
C-188	5069	13-UE9	69	C-195 Inners	453-273-188-28	64811	98/10/14	9,728	16-Jan-78	483.1	30.2	F294 Test NC696019

52 832 Slugs 138 Type 13 (6 spacers) 22,231.7
118 Type 14 (7 spacers)

APPENDIX 3.6.7
FINITE ELEMENT ANALYSIS OF THE F-294 WITH THE F-457 SOURCE CARRIER

IN/TR 1801 F294 (1)

F-294 Loading Finite Element Analysis

Signatures

Prepared by: J. Ramsay, Package Engineering Date: 01.09.18

Reviewed by: M. A. Charette, Regulatory Affairs Date: 01-11-02

Approved by: M. Krzaniak, Manager, Package Engineering Date: 01 NOV 20

Document History

Date	Version	Comments	Prepared by	Reviewed by	Approved by
Sept, 2001	1	DCN A1699-D-03A	J. Ramsay	M.A. Charette	M. Krzaniak

This document contains information proprietary to MDS Nordion Inc. Any disclosure or use of this information or any reproduction of this document other than the specified purpose for which it is intended is expressly prohibited except as MDS Nordion may otherwise agree in writing. NOTE: The portion of this text affected by changes is indicated by a vertical line in the margin.

TABLE OF CONTENTS

1. INTRODUCTION 3

2. F-294 ANALYSIS 3
   2.1 F-294 Finite Element Model 3
   2.2 F-294 Model Verification 4
      2.2.1 Test 1 — F-294 Model Verification *4*
      2.2.2 Test 2 — F-294 Model Verification *4*
   2.3 F-294 Loading Configuration with Double Row Cage (F-457) 5

3. CONCLUSION 6

4. REFERENCES 6

APPENDIX A — ANSYS INPUT FILES A-1

APPENDIX B — CONVECTION COEFFICIENT CALCULATION B-1

1. INTRODUCTION

This report presents the finite element analysis of the F-294 transport container used to determine the cobalt loading configuration for the container.

The F-294 transport package is licensed to carry 360 kCi of cobalt-60. The cobalt-60, encapsulated in stainless steel or Zircaloy, must be loaded into the cavity of the containers such that the maximum surface temperature of the outermost encapsulation does not exceed the stainless steel sensitization temperature of 482°C as per Reference [1]. The cobalt "pencils", arranged in circular rows, are held in stainless steel carriers similar to that shown in Figure 1.

For the F-294 container, the allowable loading configuration is currently limited to a single row of pencils. This loading configuration was experimentally tested to ensure the sensitization temperature was not exceeded. To increase the utility of the F-294 container, it is desired to add a second row of pencils to the carrier.

To accomplish the above task, a finite element model was developed and verified based on past experimental results. The results of the finite element analyses and the subsequent loading configuration for the container are presented here.

2. F-294 ANALYSIS

2.1 F-294 Finite Element Model

A two-dimensional model of a cross-section of the F-294 cavity was created using the ANSYS finite element software, as shown in Figure 2 and listed in Appendix A. The model is parametric in that the following variables can be changed as required by the user:

- Diameter of cavity and thickness of steel on the inside of the container,
- Outside diameter of container and thickness of steel on outside of container,
- Lead to steel bonding equivalent air gap on inside and outside of container,
- Inner diameter of fire shield,
- Outer diameter of fire shield,
- Thickness of inner and outer fire shield steel sheet,
- Number and thickness of fins on container,
- Number, arrangement (number of rows and angle), diameter and activity of pencils inside the cavity,
- All material properties, and
- Heat transfer coefficients and emissivities of heat transfer surfaces.

Material properties for the lead, steel and air were taken from Reference [2], while the properties for the kaowool were taken from Reference [3].

On the inside and outside of the container, the radiation heat transfer was modeled by radiation matrices calculated by ANSYS. The radiating surfaces are defined and where necessary (on the outside of the container) a remote node is specified to effect the heat balance. Emissivity values for the surfaces were taken from Reference [2]. The convection across the air gaps on the inside of the container was modeled by adjusting the conduction heat transfer coefficients until the heat balance matched experimental data, as will be discussed in Section 2.2. The convection heat transfer coefficient on the outside of the container was calculated as in Appendix B.

2.2 F-294 Model Verification

Several of the parameters discussed in Section 2.1 required adjustment for the model to accurately reflect the heat transfer in the package. Specifically, the adjusted parameters were:

- Lead to steel bonding equivalent air gap on inside and outside of container,
- Heat conductance (modeling conduction and convection) inside the cavity, and
- Heat conductance (modeling conduction and convection) in the fin enclosure.

These parameters were determined by comparing the results of the numerical model to two tests previously performed on actual F-294 containers, where the containers were loaded to capacity with cobalt-60. In both of these tests the containers were instrumented with thermocouples such that the temperature distribution throughout the container was determined for a maximum load of cobalt-60.

2.2.1 Test 1 — F-294 Model Verification

This loading test of the F-294 was performed for the F-294 Safety Analysis Report (SAR) submission for the licensing of the package to the 1985 IAEA regulation [4]. The F-294 was loaded as shown in Figure 3 and the maximum steady state temperatures were recorded as in Table 1.

The parameters in the model were adjusted so that the maximum pencil temperature in the model matched the maximum pencil temperature recorded in the test. To achieve a proper heat balance in the container the temperature on the inside of the fire shield had to be specified. This value was set to 50°C as measured in the test. The resulting calculated temperatures in the model are compared to the test temperatures in Table 1. The temperature distribution in the model is shown in Figure 4.

To determine the sensitivity of the model to the temperature specified on the inside of the fire shield, the model was also run with this temperature set to 100°C with all other parameters identical to the previous run. The calculated temperatures in the two cases are compared in Table 1. The outer temperatures increase approximately linearly with the set temperature. The inner cavity and maximum pencil temperatures increase by 25°C, since the air in the cavity has a low thermal conductivity and insulates the pencils from the outside effects. The actual temperature on the inside of the fire shield is not expected to exceed 70°C, based on comparison with the temperature measured on the container between the fins (Table 1). Therefore, an increment of approximately 10°C [(70-50)/(100-50)*25 = 10] was incorporated into the safety margin for the maximum allowable temperature in the cavity, as discussed in Section 2.3.

2.2.2 Test 2 — F-294 Model Verification

This loading test of the F-294 was performed for the testing of the F-457 two-row cage as documented in the thermal test report [5]. The F-294 was loaded as shown in Figure 5 and the maximum steady state temperatures recorded as in Table 2.

The parameters set from Section 2.2.1 were used for this run. The resulting calculated temperatures are compared to the test temperatures in Table 2. The measured and tested temperatures compare favorably, especially the maximum pencil temperature.

2.3 F-294 Loading Configuration with Double Row Cage (F-457)

The ultimate purpose of the model developed in Section 2.2 was to determine the allowable loading configurations for the double row F-457 cage in the F-294 as shown in Figure 1. The thermal tests performed on the package (Section 2.2.2) showed that if the double row cage were to be loaded incorrectly, the temperature in the F-294 cavity could potentially exceed the sensitization temperature of 482°C. Using the model developed in Section 2.2, various loading combinations were tried to determine the allowable loading in the cage to ensure the temperatures in the cavity remain below the sensitization temperature.

To be conservative the maximum allowable temperature in the cavity for the loading combinations was taken as 450°C. This maximum temperature was determined as follows;

Sensitization temperature			482°C
			minus
Ambient Regulations to Ambient Test	(38-22)	=	16°C
			minus
Insolation Load as per SAR [4]		=	5°C
			minus
Safety Margin for Modeling Inaccuracies		=	11°C
			450°C

It was assumed that the outer ring of the F-457 cage would be filled first. Therefore, the outer ring was loaded to capacity with sources of a certain activity, while the activity of the sources on the fully loaded inner ring were adjusted until the maximum temperature inside the cavity was equal to or just below 450°C.

The pencil activities in the outer and inner rings are listed in Table 3 and plotted in Figure 6. From this table we can see that the maximum pencil activity on the inner ring is restricted by the maximum allowable curie content for the package. Therefore, for most configurations, the maximum allowable pencil activity on the inside ring can be calculated from the following formula.

$$\text{Maximum Allowable Pencil Activity on Inner Ring (kCi)} = \frac{(360 - \text{Outer Ring Total Activity in kCi})}{40.0}$$

If an actual loading scenario cannot be handled using the above guideline, a more detailed analysis of the loading configuration can be performed by Package Engineering using the model presented in this report.

3. CONCLUSION

The loading configuration guidelines for the F-294 transport package were determined from a numerical model as follows:

F-294 with F-457 Source Cage Transport Package Loading Guidelines

$$\text{Maximum Allowable Pencil Activity on Inner Ring (kCi)} = \frac{(360 - \text{Outer Ring Total Activity in kCi})}{40.0}$$

4. REFERENCES

1. MDS Nordion Technical Specification, "Recommended Operating Conditions for MDS Nordion C-199 Cobalt-60 Sources to be Used in Wet Source Storage Gamma Irradiators", IN/TS 1234 C188 (3), 5 May 2001.
2. Incropera, Frank P., DeWitt, David P., "Fundamentals of Heat and Mass Transfer, Second Edition, John Wiley & Sons, 1985.
3. Kaowool Product Catalogue.
4. MDS Nordion Technical Report, "Safety Analysis Report for F-294 Transport Package", IN/TR 9301 F294 (3), 2 March 2000.
5. MDS Nordion Industrial Quality Control Report, "Report for F-294 Steady State Thermal Test S/N: F294-03", May 2000.

Table 4-1 — F-294 Test 1, Temperature Comparison

Location	ANSYS Node	50°C Inside Fireshield (°C)	Measured Temperatures (°C)	100°C Inside Fireshield (°C)
Outside Fireshield	12056	28	26	40
Inside Fireshield	10657	50	—	100
Outside Container Between Fins	10220	85	107	133
Cavity Wall	741	189	175	238
Maximum Source Temperature	—	419	417	444

Table 4-2 — F-294 Test 2, Temperature Comparison

Location	ANSYS Node	50°C Inside Fireshield (°C)	Measured Temperatures (°C)
Outside Fireshield	12542	28	29
Inside Fireshield	11144	50	—
Outside Container Between Fins	10707	85	95
Cavity Wall	1281	191	226
Maximum Source Temperature	—	465	467

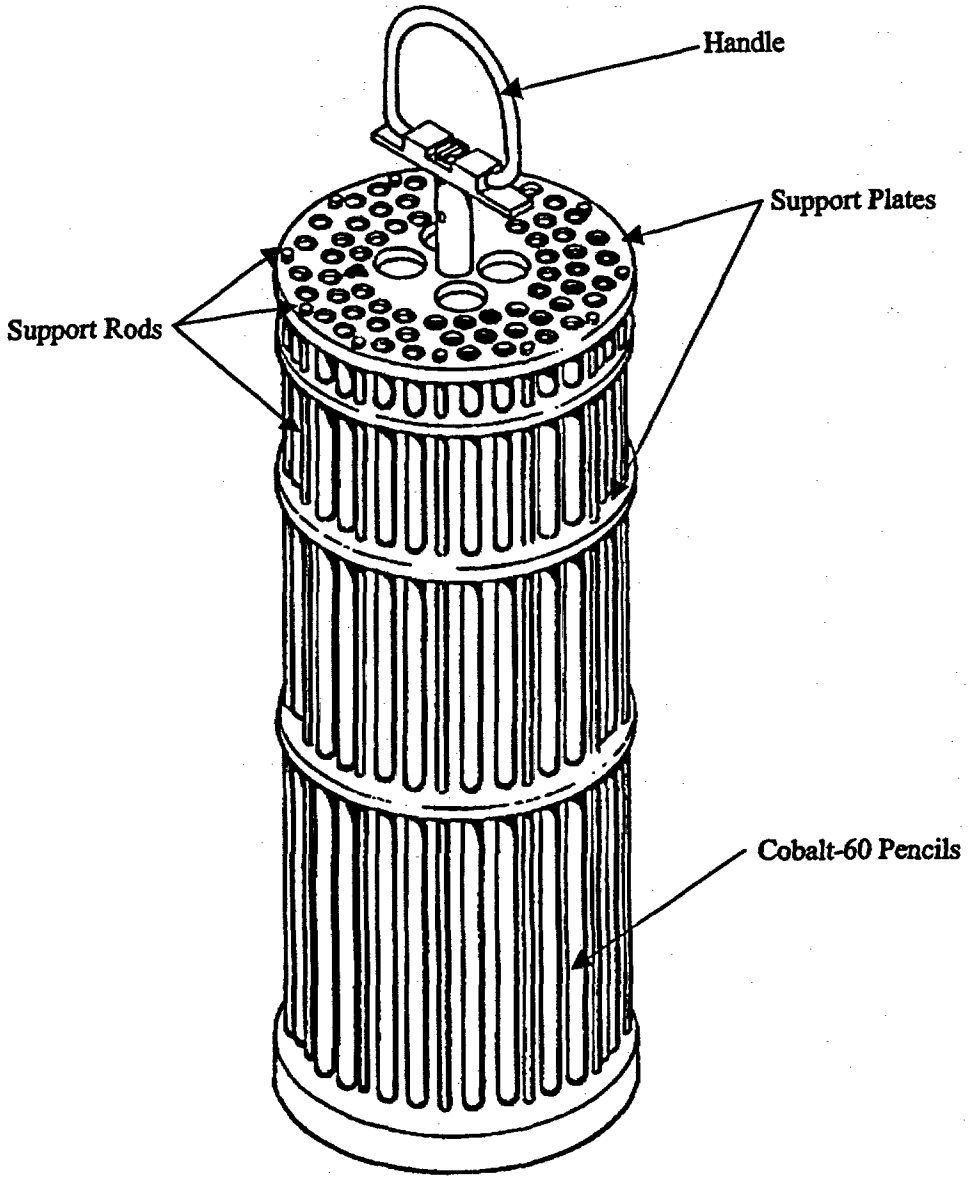

Figure 1
Typical Source Cage Construction

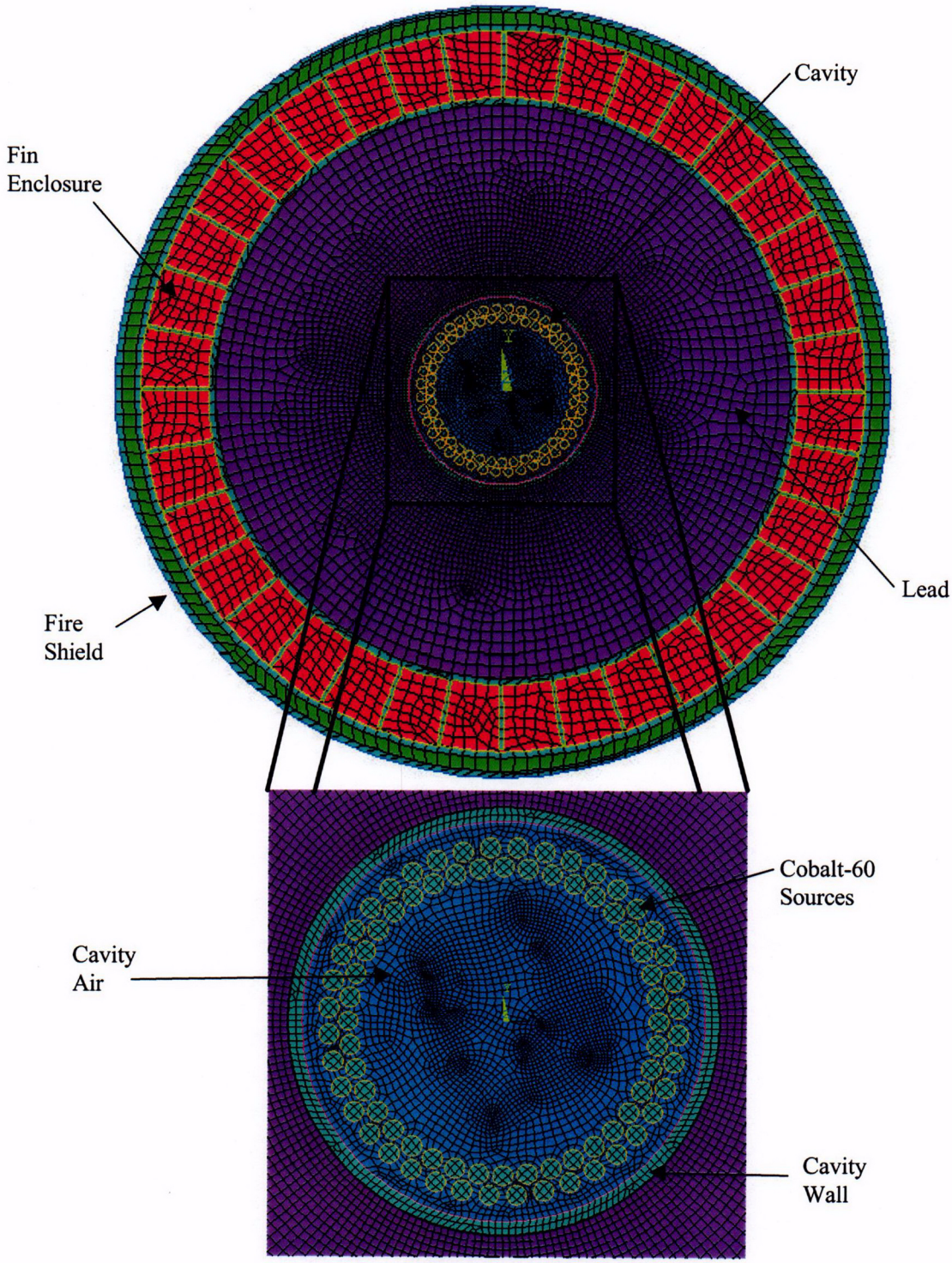

Figure 2
F-294 ANSYS Finite Element Model

C07

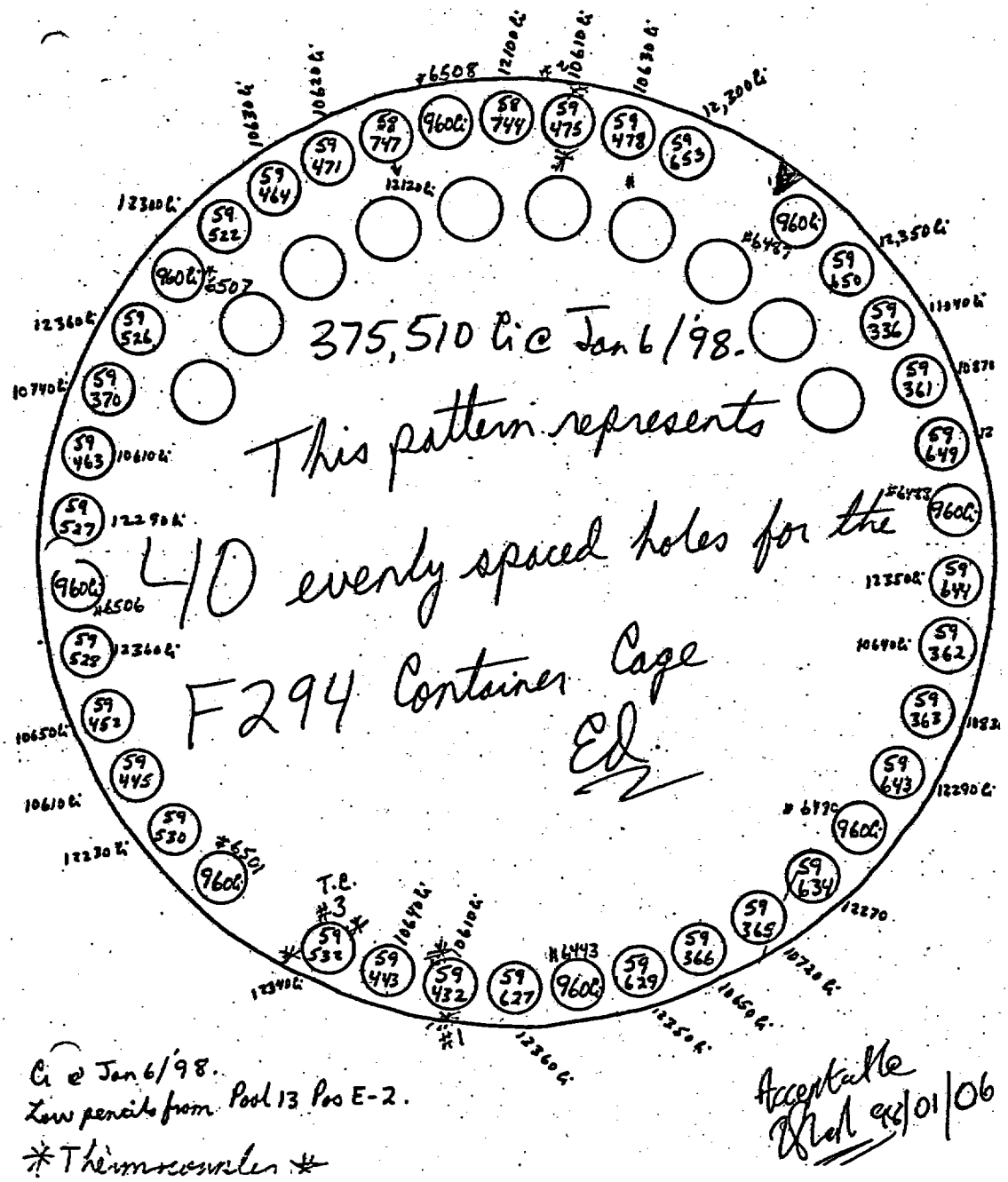

Figure 3
F-294 Loading Diagram for Verification Test 1

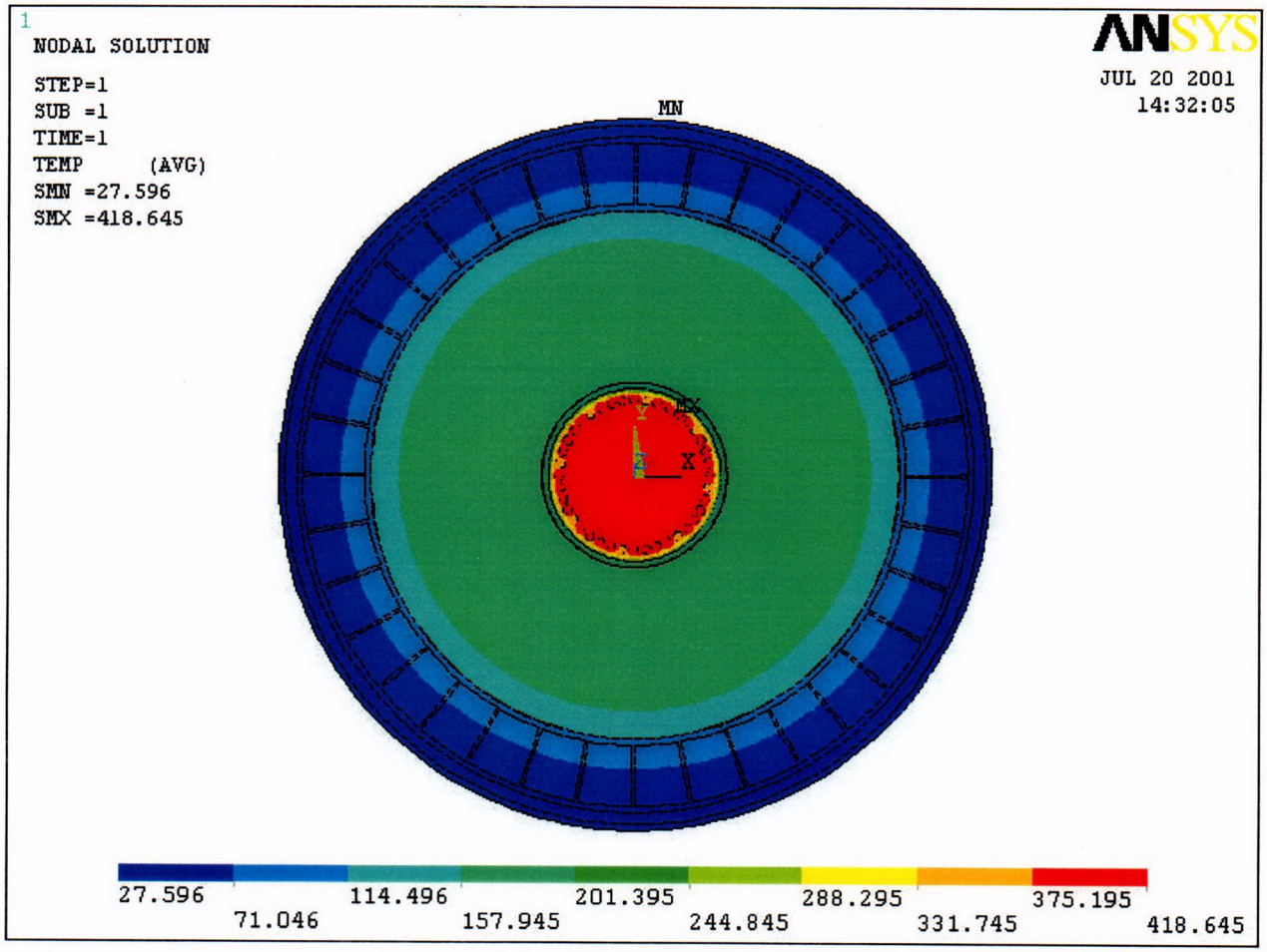

Figure 4
Temperature Distribution in F-294 Test 1 Model

C08

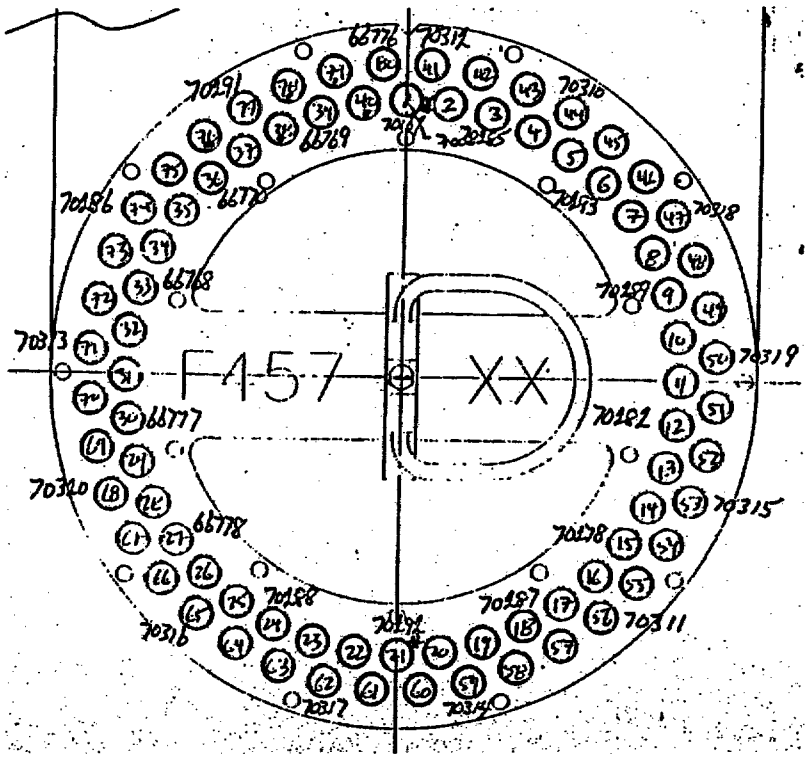

Inner Cage Position	Serial Number	Curies	Outer Cage Position	Serial Number	Curies	
1	70167	7509	41	70312	12618	
2		500	42		500	
3	70285	12662	43		500	
4		500	44	70310	12615	
5		500	45		500	
6	70293	12662	46		500	
7		500	47	70318	12632	
8		500	48		500	
9	70289	12714	49		500	
10		500	50	70319	12655	
11		500	51		500	
12	70282	12796	52		500	
13		500	53	70315	12699	
14		500	54		500	
15	70278	12803	55		500	
16		500	56	70311	12714	
17		500	57		500	
18	70287	12803	58		500	
19		500	59	70314	12803	
20		500	60		500	
21	70292	12847	61		500	
22		500	62	70317	12936	
23		500	63		500	
24	70288	12885	64		500	
25		500	65	70316	12595	
26		500	66		500	
27	66778	12121	67		500	
28		500	68	70320	12595	
29		500	69		500	
30	66777	12444	70		500	
31		500	71	70313	12610	
32		500	72		500	
33	66768	12716	73		500	
34		500	74	70286	12632	
35		500	75		500	
36	66770	12723	76		500	
37		500	77	70291	12640	
38		500	78		500	
39	66769	12738	79		500	
40		500	80	66776	12885	
Total		185423			190629	376052

Figure 5
F-294 Loading Diagram for Verification Test 2

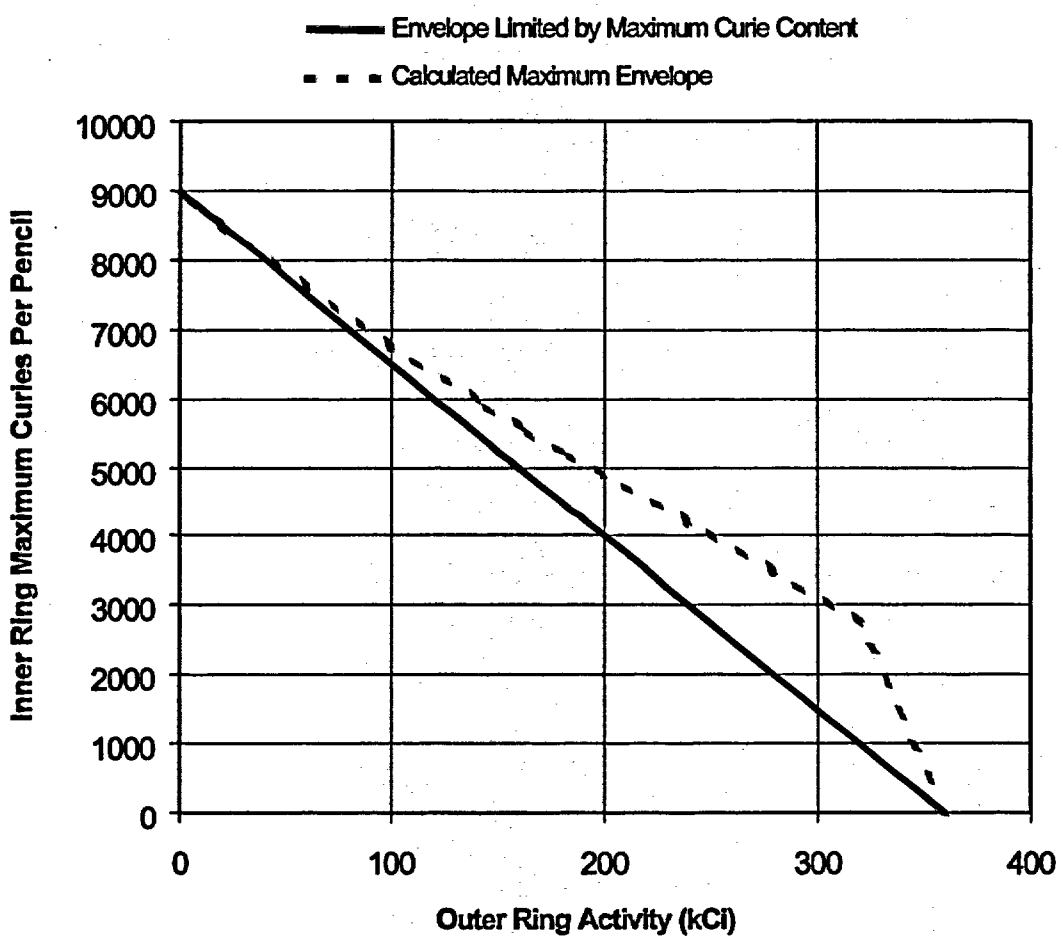

Figure 6
Outer Versus Inner Ring Loading for F-294

APPENDIX A
ANSYS Input Files

```
! ANSYS Input File for Internal Temperature of Cage Pencils
! For F-294 Transport Package with 376 kCi Cobalt in fully
! loaded single ring F-313 cage.
! Test 1
! 01.08.15 JRR
!
/prep7
! command variables
!
*AFUN,DEG ! use degrees for angular functions
!
! Input Variables
!
NR = 1 ! number of rows in cage (1 or 2)
NP1 = 40 ! number of pencils in row 1 (outer row)
NP2 = 0
DR1 = 0.2540 ! row 2 diameter (m)
WPC = 0.01537 ! Watts/Ci for Isotope
!
! activity of pencils in curies - repeat as required for all positions
! first subscript is row number, second is pencil number
AC11 = 12100 $ AC12 = 10610 $ AC13 = 10630 $ AC14 =
12300 $ AC15 = 960
AC16 = 12350 $ AC17 = 11040 $ AC18 = 10870 $ AC19 =
12361 $ AC110 = 960
AC111 = 12350 $ AC112 = 10640 $ AC113 = 10830 $ AC114 =
12290 $ AC115 = 960
AC116 = 12270 $ AC117 = 10720 $ AC118 = 10650 $ AC119 =
12350 $ AC120 = 960
AC121 = 12360 $ AC122 = 10610 $ AC123 = 10640 $ AC124 =
12340 $ AC125 = 960
AC126 = 12230 $ AC127 = 10610 $ AC128 = 10650 $ AC129 =
12360 $ AC130 = 960
AC131 = 12290 $ AC132 = 10610 $ AC133 = 10740 $ AC134 =
12360 $ AC135 = 960
AC136 = 12300 $ AC137 = 10630 $ AC138 = 10620 $ AC139 =
12120 $ AC140 = 960
! total heat input to calculate lead heat generation contribution
TOTHT = AC11+AC12+AC13+AC14+AC15+AC16
TOTHT = TOTHT+AC17+AC18+AC19+AC110+AC111+AC112
TOTHT =
TOTHT+AC113+AC114+AC115+AC116+AC117+AC118
TOTHT =
TOTHT+AC119+AC120+AC121+AC122+AC123+AC124
TOTHT =
TOTHT+AC125+AC126+AC127+AC128+AC129+AC130
TOTHT =
TOTHT+AC131+AC132+AC133+AC134+AC135+AC136
TOTHT = TOTHT+AC137+AC138+AC139+AC140
!
! angle to pencils from theta = 0 - repeat as required for all
positions
! first subscript is row number, second is pencil number
AN11 = 0 $ AN12 = 9 $ AN13 = 18 $ AN14 = 27 $ AN15 = 36
AN16 = 45 $ AN17 = 54 $ AN18 = 63 $ AN19 = 72 $ AN110 = 81
AN111 = 90 $ AN112 = 99 $ AN113 = 108 $ AN114 = 117 $
AN115 = 126
AN116 = 135 $ AN117 = 144 $ AN118 = 153 $ AN119 = 162 $
AN120 = 171
AN121 = 180 $ AN122 = 189 $ AN123 = 198 $ AN124 = 207 $
AN125 = 216
AN126 = 225 $ AN127 = 234 $ AN128 = 243 $ AN129 = 252 $
AN130 = 261
AN131 = 270 $ AN132 = 279 $ AN133 = 288 $ AN134 = 297 $
AN135 = 306
AN136 = 315 $ AN137 = 324 $ AN138 = 333 $ AN139 = 342 $
AN140 = 351
!
PD = 0.0148 ! pencil diameter (m)
CD = 0.2921 ! cavity diameter (m)
CWALL = 0.01 ! cavity wall thickness (m)
CEQV = 0.0008 ! equivalent air gap for lead-steel resistance at
cavity (m)
FWALL = 0.01 ! container wall thickness (m)
FEQV = 0.0008 ! equivalent air gap for lead-steel resistance at
container (m)
FOD = 0.9144 ! container outside diameter (m)
SID = 1.1240 ! fire shield inner diameter (m)
SOD = 1.2035 ! fire shield outside diameter (m)
SWALL = 0.01 ! fire shield steel wall thickness (m)
FINOD = 1.1176! fin outside diameter (m)
FINTK = 0.01 ! fin thickness (m)
FINNM = 36 ! number of fins
!
AT = 20 ! ambient temperature (C)
PE = 0.33 ! pencil emissivity
CE = 0.27 ! cavity emissivity
FEE = 0.8 ! fin enclosure emissivity
FE = 0.8 ! container outside emissivity
CH = 0.09 ! cavity convective k coefficient
FEH = 4.0 ! fin enclosure convective k coefficient
FH = 3.0 ! container outside heat transfer coefficient (W/m2C)
!
! calculations based on input data
!
FINAN1 = 360/FINNM
FINAN2 = ASIN((FINTK/2)/FOD)
! create keypoints at center of circles
csys,1
!
! circle center keypoints
k,1,0,0
k,2,DR1/2,AN11 $ k,3,DR1/2,AN12 $ k,4,DR1/2,AN13 $
k,5,DR1/2,AN14 $ k,6,DR1/2,AN15
k,7,DR1/2,AN16 $ k,8,DR1/2,AN17 $ k,9,DR1/2,AN18 $
k,10,DR1/2,AN19 $ k,11,DR1/2,AN110
k,12,DR1/2,AN111 $ k,13,DR1/2,AN112 $ k,14,DR1/2,AN113 $
k,15,DR1/2,AN114 $ k,16,DR1/2,AN115
k,17,DR1/2,AN116 $ k,18,DR1/2,AN117 $ k,19,DR1/2,AN118 $
k,20,DR1/2,AN119 $ k,21,DR1/2,AN120
k,22,DR1/2,AN121 $ k,23,DR1/2,AN122 $ k,24,DR1/2,AN123 $
k,25,DR1/2,AN124 $ k,26,DR1/2,AN125
k,27,DR1/2,AN126 $ k,28,DR1/2,AN127 $ k,29,DR1/2,AN128 $
k,30,DR1/2,AN129 $ k,31,DR1/2,AN130
k,32,DR1/2,AN131 $ k,33,DR1/2,AN132 $ k,34,DR1/2,AN133 $
k,35,DR1/2,AN134 $ k,36,DR1/2,AN135
k,37,DR1/2,AN136 $ k,38,DR1/2,AN137 $ k,39,DR1/2,AN138 $
k,40,DR1/2,AN139 $ k,41,DR1/2,AN140
!
```

```
! fin key points
!
k,100,FOD/2,-FINAN2
*REPEAT,FINNM,2,0,FINAN1
k,101,FOD/2,FINAN2
*REPEAT,FINNM,2,0,FINAN1
k,200,FINOD/2,-FINAN2
*REPEAT,FINNM,2,0,FINAN1
k,201,FINOD/2,FINAN2
*REPEAT,FINNM,2,0,FINAN1
!
! create circles at each keypoint
circle,1,CD/2
circle,1,CD/2+CWALL
circle,1,CD/2+CWALL+CEQV
circle,1,FOD/2-FWALL-FEQV
circle,1,FOD/2-FWALL
circle,1,FOD/2
circle,1,SID/2
circle,1,SID/2+SWALL
circle,1,SOD/2-SWALL
circle,1,SOD/2
circle,2,PD/2
*REPEAT,(NP1+NP2),1,0
!
! create circle areas
al,1,2,3,4
*REPEAT,(10+NP1+NP2),4,4,4,4
!
! subtract circles to form sections
asel,s,area,,1
asel,a,area,,11,(10+NP1+NP2)
asba,1,all,,keep,keep
allsel
asba,2,1,,keep,keep
*REPEAT,9,1,1
!
! create areas for fins
a,100,101,201,200
*REPEAT,FINNM,2,2,2,2
!
! subtract fin areas from area (10+NP1+NP2+7)
asel,s,area,,(10+NP1+NP2+7)
asel,a,area,,(10+NP1+NP2+11),(10+NP1+NP2+11+FINNM-1)
asba,(10+NP1+NP2+7),all,,keep,keep
allsel
!
! add fin areas to area (10+NP1+NP2+6)
asel,s,area,,(10+NP1+NP2+6)
asel,a,area,,(10+NP1+NP2+11),(10+NP1+NP2+11+FINNM-1)
aadd,all
allsel
!
! material properties
! material property set 1 = stainless
mp,kxx,1,16.3
! material property set 2 = lead
mp,kxx,2,35
! material property set 3 = lead-steel contact at fin encl.
mp,kxx,3,.0224,
! material property set 4 = air in cavity
mp,kxx,4,CH
! material property set 5 = air in fin enclosure
mp,kxx,5,FEH
! material property set 6 = kaowool
mp,kxx,6,0.054
! pencil emissivity
mp,emis,7,PE
! cavity emissivity
mp,emis,8,CE
! fin enclosure emissivity
mp,emis,9,FEE
! outside container emissivity
mp,emis,10,FE
! material property set 11 = lead-steel contact at cavity
mp,kxx,11,.0224*8,
!
! mesh areas
!
et,1,55 ! element type 1 = plane 55 thermal 2-d
type,1
!
! sources
mat,1
real,1
esize,0.005
amesh,11,NP1+NP2+10
! air inner cavity
mat,4
real,2
amesh,NP1+NP2+11
! cavity wall
mat,1
real,3
amesh,NP1+NP2+12
! lead-steel bond at cavity
mat,11
real,4
amesh,NP1+NP2+13
! lead
mat,2
real,5
esize,0.02
amesh,NP1+NP2+14
! lead-steel bond at outside
mat,3
real,6
amesh,NP1+NP2+15
! outside shell and fins
mat,1
real,7
amesh,NP1+NP2+FINNM+22
! fin enclosure
mat,5
real,8
amesh,NP1+NP2+FINNM+21
! inside fire shield steel
mat,1
real,9
amesh,NP1+NP2+18
! inside fire shield kaowool
mat,6
real,10
amesh,NP1+NP2+19
! outside fire shield steel
mat,1
real,11
amesh,NP1+NP2+20
!
! create radiation enclosures
! cavity enclosure
et,2,32
type,2
real,12
mat,7
ksel,s,loc,x,0,CD/2-0.01
```

```
lslk,s,1
lmesh,all
lreverse,all
mat,8
ksel,s,loc,x,CD/2
lslk,s,1
lmesh,all
! fin enclosure
real,13
mat,9
asel,s,area,,NP1+NP2+FINNM+21
allsel,below,area
lmesh,all
ksel,s,loc,x,FOD/2
lslk,s,1
lreverse,all
! outside fireshield
real,14
mat,10
ksel,s,loc,x,SOD/2
lslk,s,1
lmesh,all
lreverse,all
allsel
!
! create node for outside radiation
n,9999999,SOD
!
! create radiation matrices
fini
/aux12
emis,7,PE
emis,8,CE
emis,9,FEE
emis,10,FE
stef,5.7e-8
geom,1
vtype,0
esel,s,real,,12
nelem
write,rad1
esel,s,real,,13
nelem
write,rad2
space,9999999
esel,s,real,,14
nelem
nsel,a,node,,9999999
write,rad3
allsel
fini
/prep7
et,3,50,1
type,3
real,15
se,rad1
se,rad2
se,rad3
!
allsel
toffst,273 ! offset for input in degrees C
save
! apply convection on outside surface
esel,s,real,,14
nelem
eall
sf,all,conv,FH,AT
! apply heat generation rates to pencils
! pencil area including
! attentuation factor = 3.0
! (1/3rd of heat in pencils (1/3.0) - 2/3rds in lead)
! length factor = 0.432
! (17" inch active pencil lendth/39.37 inch per meter)
! radial distribution factor = 1.43
! (only 70% of heat is radial (1/1.43) - 30% axial)
PA = (3.1416*(PD/2)*(PD/2))*0.432*3.0*1.43
asel,s,area,,11
allsel,below,area
esel,r,type,,1
bfe,all,hgen,,AC11*WPC/PA
asel,s,area,,12
allsel,below,area
esel,r,type,,1
bfe,all,hgen,,AC12*WPC/PA
asel,s,area,,13
allsel,below,area
esel,r,type,,1
bfe,all,hgen,,AC13*WPC/PA
asel,s,area,,14
allsel,below,area
esel,r,type,,1
bfe,all,hgen,,AC14*WPC/PA
asel,s,area,,15
allsel,below,area
esel,r,type,,1
bfe,all,hgen,,AC15*WPC/PA
asel,s,area,,16
allsel,below,area
esel,r,type,,1
bfe,all,hgen,,AC16*WPC/PA
asel,s,area,,17
allsel,below,area
esel,r,type,,1
bfe,all,hgen,,AC17*WPC/PA
asel,s,area,,18
allsel,below,area
esel,r,type,,1
bfe,all,hgen,,AC18*WPC/PA
asel,s,area,,19
allsel,below,area
esel,r,type,,1
bfe,all,hgen,,AC19*WPC/PA
asel,s,area,,20
allsel,below,area
esel,r,type,,1
bfe,all,hgen,,AC110*WPC/PA
asel,s,area,,21
allsel,below,area
esel,r,type,,1
bfe,all,hgen,,AC111*WPC/PA
asel,s,area,,22
allsel,below,area
esel,r,type,,1
bfe,all,hgen,,AC112*WPC/PA
asel,s,area,,23
allsel,below,area
esel,r,type,,1
bfe,all,hgen,,AC113*WPC/PA
asel,s,area,,24
allsel,below,area
esel,r,type,,1
bfe,all,hgen,,AC114*WPC/PA
asel,s,area,,25
allsel,below,area
esel,r,type,,1
bfe,all,hgen,,AC115*WPC/PA
```

```
asel,s,area,,26
allsel,below,area
esel,r,type,,1
bfe,all,hgen,,AC116*WPC/PA
asel,s,area,,27
allsel,below,area
esel,r,type,,1
bfe,all,hgen,,AC117*WPC/PA
asel,s,area,,28
allsel,below,area
esel,r,type,,1
bfe,all,hgen,,AC118*WPC/PA
asel,s,area,,29
allsel,below,area
esel,r,type,,1
bfe,all,hgen,,AC119*WPC/PA
asel,s,area,,30
allsel,below,area
esel,r,type,,1
bfe,all,hgen,,AC120*WPC/PA
asel,s,area,,31
allsel,below,area
esel,r,type,,1
bfe,all,hgen,,AC121*WPC/PA
asel,s,area,,32
allsel,below,area
esel,r,type,,1
bfe,all,hgen,,AC122*WPC/PA
asel,s,area,,33
allsel,below,area
esel,r,type,,1
bfe,all,hgen,,AC123*WPC/PA
asel,s,area,,34
allsel,below,area
esel,r,type,,1
bfe,all,hgen,,AC124*WPC/PA
asel,s,area,,35
allsel,below,area
esel,r,type,,1
bfe,all,hgen,,AC125*WPC/PA
asel,s,area,,36
allsel,below,area
esel,r,type,,1
bfe,all,hgen,,AC126*WPC/PA
asel,s,area,,37
allsel,below,area
esel,r,type,,1
bfe,all,hgen,,AC127*WPC/PA
asel,s,area,,38
allsel,below,area
esel,r,type,,1
bfe,all,hgen,,AC128*WPC/PA
asel,s,area,,39
allsel,below,area
esel,r,type,,1
bfe,all,hgen,,AC129*WPC/PA
asel,s,area,,40
allsel,below,area
esel,r,type,,1
bfe,all,hgen,,AC130*WPC/PA
asel,s,area,,41
allsel,below,area
esel,r,type,,1
bfe,all,hgen,,AC131*WPC/PA
asel,s,area,,42
allsel,below,area
esel,r,type,,1
bfe,all,hgen,,AC132*WPC/PA
asel,s,area,,43
allsel,below,area
esel,r,type,,1
bfe,all,hgen,,AC133*WPC/PA
asel,s,area,,44
allsel,below,area
esel,r,type,,1
bfe,all,hgen,,AC134*WPC/PA
asel,s,area,,45
allsel,below,area
esel,r,type,,1
bfe,all,hgen,,AC135*WPC/PA
asel,s,area,,46
allsel,below,area
esel,r,type,,1
bfe,all,hgen,,AC136*WPC/PA
asel,s,area,,47
allsel,below,area
esel,r,type,,1
bfe,all,hgen,,AC137*WPC/PA
asel,s,area,,48
allsel,below,area
esel,r,type,,1
bfe,all,hgen,,AC138*WPC/PA
asel,s,area,,49
allsel,below,area
esel,r,type,,1
bfe,all,hgen,,AC139*WPC/PA
asel,s,area,,50
allsel,below,area
esel,r,type,,1
bfe,all,hgen,,AC140*WPC/PA
! apply remaining heat generation to lead
! lead area including
! attentuation factor = 1.5
! (2/3rds heat in lead (1/1.5) - 1/3rd of heat in pencils)
! radial distribution factor = 1.43
! (only 70% of heat is radial (1/1.43) - 30% axial)
LA = ((3.1416*(FOD/2)*(FOD/2))-
(3.1416*(CD/2)*(CD/2)))*1.5*1.43
esel,s,mat,,2
nelem
esel,r,type,,1
bfe,all,hgen,,TOTHT*WPC/LA
allsel
save
! remove link32s, set ambient temp and run
fini
/solve
csys,1
nsel,s,loc,x,sid/2
d,all,temp,50
allsel
esel,u,real,,12,14
d,9999999,temp,AT
lnsrch,on
solve
nsel,s,loc,x,sid/2
d,all,temp,100
allsel
esel,u,real,,12,14
solve
fini
/exit,save
```

```
! ANSYS Input File for Internal Temperature of Cage Pencils
! For F-294 Transport Package with 376 kCi Cobalt in fully
! loaded double ring F-457 cage.
! Test 2
! 01.08.15 JRR
!
/prep7
! command variables
!
*AFUN,DEG ! use degrees for angular functions
!
! Input Variables
!
NR = 2 ! number of rows in cage (1 or 2)
NP1 = 40 ! number of pencils in row 1 (outer row)
NP2 = 40 ! number of pencils in row 2 (inner row)
DR1 = 0.2254 ! row 1 diameter (m)
DR2 = 0.2540 ! row 2 diameter (m)
WPC = 0.01537 ! Watts/Ci for Isotope
!
! activity of pencils in curies - repeat as required for all positions
! first subscript is row number, second is pencil number
AC11 = 7509 $ AC12 = 500 $ AC13 = 12662 $ AC14 = 500 $
AC15 = 500
AC16 = 12662 $ AC17 = 500 $ AC18 = 500 $ AC19 = 12714 $
AC110 = 500
AC111 = 500 $ AC112 = 12796 $ AC113 = 500 $ AC114 = 500 $
AC115 = 12803
AC116 = 500 $ AC117 = 500 $ AC118 = 12803 $ AC119 = 500 $
AC120 = 500
AC121 = 12847 $ AC122 = 500 $ AC123 = 500 $ AC124 =
12885 $ AC125 = 500
AC126 = 500 $ AC127 = 12121 $ AC128 = 500 $ AC129 = 500 $
AC130 = 12444
AC131 = 500 $ AC132 = 500 $ AC133 = 12716 $ AC134 = 500 $
AC135 = 500
AC136 = 12723 $ AC137 = 500 $ AC138 = 500 $ AC139 =
12738 $ AC140 = 500
!
AC21 = 12618 $ AC22 = 500 $ AC23 = 500 $ AC24 = 12615 $
AC25 = 500
AC26 = 500 $ AC27 = 12632 $ AC28 = 500 $ AC29 = 500 $
AC210 = 12655
AC211 = 500 $ AC212 = 500 $ AC213 = 12699 $ AC214 = 500 $
AC215 = 500
AC216 = 12714 $ AC217 = 500 $ AC218 = 500 $ AC219 =
12803 $ AC220 = 500
AC221 = 500 $ AC222 = 12936 $ AC223 = 500 $ AC224 = 500 $
AC225 = 12595
AC226 = 500 $ AC227 = 500 $ AC228 = 12595 $ AC229 = 500 $
AC230 = 500
AC231 = 12610 $ AC232 = 500 $ AC233 = 500 $ AC234 =
12632 $ AC235 = 500
AC236 = 500 $ AC237 = 12640 $ AC238 = 500 $ AC239 = 500 $
AC240 = 12885
! total heat input to calculate lead heat generation contribution
TOTHT = AC11+AC12+AC13+AC14+AC15+AC16
TOTHT = TOTHT+AC17+AC18+AC19+AC110+AC111+AC112
TOTHT =
TOTHT+AC113+AC114+AC115+AC116+AC117+AC118
TOTHT =
TOTHT+AC119+AC120+AC121+AC122+AC123+AC124
TOTHT =
TOTHT+AC125+AC126+AC127+AC128+AC129+AC130
TOTHT =
TOTHT+AC131+AC132+AC133+AC134+AC135+AC136
TOTHT = TOTHT+AC137+AC138+AC139+AC140
!
TOTHT = TOTHT+AC21+AC22+AC23+AC24+AC25+AC26
TOTHT = TOTHT+AC27+AC28+AC29+AC210+AC211+AC212
TOTHT =
TOTHT+AC213+AC214+AC215+AC216+AC217+AC218
TOTHT =
TOTHT+AC219+AC220+AC221+AC222+AC223+AC224
TOTHT =
TOTHT+AC225+AC226+AC227+AC228+AC229+AC230
TOTHT =
TOTHT+AC231+AC232+AC233+AC234+AC235+AC236
TOTHT = TOTHT+AC237+AC238+AC239+AC240
!
! angle to pencils from theta = 0 - repeat as required for all
positions
! first subscript is row number, second is pencil number
AN11 = 0 $ AN12 = 9 $ AN13 = 18 $ AN14 = 27 $ AN15 = 36
AN16 = 45 $ AN17 = 54 $ AN18 = 63 $ AN19 = 72 $ AN110 = 81
AN111 = 90 $ AN112 = 99 $ AN113 = 108 $ AN114 = 117 $
AN115 = 126
AN116 = 135 $ AN117 = 144 $ AN118 = 153 $ AN119 = 162 $
AN120 = 171
AN121 = 180 $ AN122 = 189 $ AN123 = 198 $ AN124 = 207 $
AN125 = 216
AN126 = 225 $ AN127 = 234 $ AN128 = 243 $ AN129 = 252 $
AN130 = 261
AN131 = 270 $ AN132 = 279 $ AN133 = 288 $ AN134 = 297 $
AN135 = 306
AN136 = 315 $ AN137 = 324 $ AN138 = 333 $ AN139 = 342 $
AN140 = 351
!
PINC = 4.5
AN21 = 0+PINC $ AN22 = 9+PINC $ AN23 = 18+PINC $ AN24
= 27+PINC $ AN25 = 36+PINC
AN26 = 45+PINC $ AN27 = 54+PINC $ AN28 = 63+PINC $
AN29 = 72+PINC $ AN210 = 81+PINC
AN211 = 90+PINC $ AN212 = 99+PINC $ AN213 = 108+PINC $
AN214 = 117+PINC $ AN215 = 126+PINC
AN216 = 135+PINC $ AN217 = 144+PINC $ AN218 =
153+PINC $ AN219 = 162+PINC $ AN220 = 171+PINC
AN221 = 180+PINC $ AN222 = 189+PINC $ AN223 =
198+PINC $ AN224 = 207+PINC $ AN225 = 216+PINC
AN226 = 225+PINC $ AN227 = 234+PINC $ AN228 =
243+PINC $ AN229 = 252+PINC $ AN230 = 261+PINC
AN231 = 270+PINC $ AN232 = 279+PINC $ AN233 =
288+PINC $ AN234 = 297+PINC $ AN235 = 306+PINC
AN236 = 315+PINC $ AN237 = 324+PINC $ AN238 =
333+PINC $ AN239 = 342+PINC $ AN240 = 351+PINC
!
PD = 0.0148 ! pencil diameter (m)
CD = 0.2921 ! cavity diameter (m)
CWALL = 0.01 ! cavity wall thickness (m)
CEQV = 0.0008 ! equivalent air gap for lead-steel resistance at
cavity (m)
FWALL = 0.01 ! container wall thickness (m)
FEQV = 0.0008 ! equivalent air gap for lead-steel resistance at
container (m)
FOD = 0.9144 ! container outside diameter (m)
SID = 1.1240 ! fire shield inner diameter (m)
SOD = 1.2035 ! fire shield outside diameter (m)
SWALL = 0.01 ! fire shield steel wall thickness (m)
FINOD = 1.1176! fin outside diameter (m)
FINTK = 0.01 ! fin thickness (m)
FINNM = 36 ! number of fins
!
AT = 20 ! ambient temperature (C)
PE = 0.33 ! pencil emissivity
CE = 0.27 ! cavity emissivity
FEE = 0.8 ! fin enclosure emissivity
```

```
FE = 0.8 ! container outside emissivity
CH = 0.08 ! cavity convective k coefficient
FEH = 4.0 ! fin enclosure convective k coefficient
FH = 3.0 ! container outside heat transfer coefficient (W/m2C)
!
! calculations based on input data
FINAN1 = 360/FINNM
FINAN2 = ASIN((FINTK/2)/FOD)
! create keypoints at center of circles
csys,1
!
! circle center keypoints
k,1,0,0
k,2,DR1/2,AN11 $ k,3,DR1/2,AN12 $ k,4,DR1/2,AN13 $
k,5,DR1/2,AN14 $ k,6,DR1/2,AN15
k,7,DR1/2,AN16 $ k,8,DR1/2,AN17 $ k,9,DR1/2,AN18 $
k,10,DR1/2,AN19 $ k,11,DR1/2,AN110
k,12,DR1/2,AN111 $ k,13,DR1/2,AN112 $ k,14,DR1/2,AN113 $
k,15,DR1/2,AN114 $ k,16,DR1/2,AN115
k,17,DR1/2,AN116 $ k,18,DR1/2,AN117 $ k,19,DR1/2,AN118 $
k,20,DR1/2,AN119 $ k,21,DR1/2,AN120
k,22,DR1/2,AN121 $ k,23,DR1/2,AN122 $ k,24,DR1/2,AN123 $
k,25,DR1/2,AN124 $ k,26,DR1/2,AN125
k,27,DR1/2,AN126 $ k,28,DR1/2,AN127 $ k,29,DR1/2,AN128 $
k,30,DR1/2,AN129 $ k,31,DR1/2,AN130
k,32,DR1/2,AN131 $ k,33,DR1/2,AN132 $ k,34,DR1/2,AN133 $
k,35,DR1/2,AN134 $ k,36,DR1/2,AN135
k,37,DR1/2,AN136 $ k,38,DR1/2,AN137 $ k,39,DR1/2,AN138 $
k,40,DR1/2,AN139 $ k,41,DR1/2,AN140
k,42,DR2/2,AN21 $ k,43,DR2/2,AN22 $ k,44,DR2/2,AN23 $
k,45,DR2/2,AN24 $ k,46,DR2/2,AN25
k,47,DR2/2,AN26 $ k,48,DR2/2,AN27 $ k,49,DR2/2,AN28 $
k,50,DR2/2,AN29 $ k,51,DR2/2,AN210
k,52,DR2/2,AN211 $ k,53,DR2/2,AN212 $ k,54,DR2/2,AN213 $
k,55,DR2/2,AN214 $ k,56,DR2/2,AN215
k,57,DR2/2,AN216 $ k,58,DR2/2,AN217 $ k,59,DR2/2,AN218 $
k,60,DR2/2,AN219 $ k,61,DR2/2,AN220
k,62,DR2/2,AN221 $ k,63,DR2/2,AN222 $ k,64,DR2/2,AN223 $
k,65,DR2/2,AN224 $ k,66,DR2/2,AN225
k,67,DR2/2,AN226 $ k,68,DR2/2,AN227 $ k,69,DR2/2,AN228 $
k,70,DR2/2,AN229 $ k,71,DR2/2,AN230
k,72,DR2/2,AN231 $ k,73,DR2/2,AN232 $ k,74,DR2/2,AN233 $
k,75,DR2/2,AN234 $ k,76,DR2/2,AN235
k,77,DR2/2,AN236 $ k,78,DR2/2,AN237 $ k,79,DR2/2,AN238 $
k,80,DR2/2,AN239 $ k,81,DR2/2,AN240
! fin key points
 k,100,FOD/2,-FINAN2
*REPEAT,FINNM,2,0,FINAN1
k,101,FOD/2,FINAN2
*REPEAT,FINNM,2,0,FINAN1
k,200,FINOD/2,-FINAN2
*REPEAT,FINNM,2,0,FINAN1
k,201,FINOD/2,FINAN2
*REPEAT,FINNM,2,0,FINAN1
!
! create circles at each keypoint
circle,1,CD/2
circle,1,CD/2+CWALL
circle,1,CD/2+CWALL+CEQV
circle,1,FOD/2-FWALL-FEQV
circle,1,FOD/2-FWALL
circle,1,FOD/2
circle,1,SID/2
circle,1,SID/2+SWALL
circle,1,SOD/2-SWALL
circle,1,SOD/2
circle,2,PD/2
*REPEAT,(NP1+NP2),1,0
!
! create circle areas
al,1,2,3,4
*REPEAT,(10+NP1+NP2),4,4,4,4
!
! subtract circles to form sections
asel,s,area,,1
asel,a,area,,11,(10+NP1+NP2)
asba,1,all,,keep,keep
allsel
asba,2,1,,keep,keep
*REPEAT,9,1,1
!
! create areas for fins
a,100,101,201,200
*REPEAT,FINNM,2,2,2,2
!
! subtract fin areas from area (10+NP1+NP2+7)
asel,s,area,,(10+NP1+NP2+7)
asel,a,area,,(10+NP1+NP2+11),(10+NP1+NP2+11+FINNM-1)
asba,(10+NP1+NP2+7),all,,keep,keep
allsel
!
! add fin areas to area (10+NP1+NP2+6)
asel,s,area,,(10+NP1+NP2+6)
asel,a,area,,(10+NP1+NP2+11),(10+NP1+NP2+11+FINNM-1)
aadd,all
allsel
!
! material properties
! material property set 1 = stainless
mp,kxx,1,16.3
! material property set 2 = lead
mp,kxx,2,35
! material property set 3 = lead-steel contact at fin encl.
mp,kxx,3,.0224,
! material property set 4 = air in cavity
mp,kxx,4,CH
! material property set 5 = air in fin enclosure
mp,kxx,5,FEH
! material property set 6 = kaowool
mp,kxx,6,0.054
! pencil emissivity
mp,emis,7,PE
! cavity emissivity
mp,emis,8,CE
! fin enclosure emissivity
mp,emis,9,FEE
! outside container emissivity
mp,emis,10,FE
! material property set 11 = lead-steel contact at cavity
mp,kxx,11,.0224*8,
!
! mesh areas
!
et,1,55 ! element type 1 = plane 55 thermal 2-d
type,1
! sources
mat,1
real,1
esize,0.005
amesh,11,NP1+NP2+10
! air inner cavity
mat,4
real,2
amesh,NP1+NP2+11
! cavity wall
mat,1
```

```
real,3
amesh,NP1+NP2+12
! lead-steel bond at cavity
mat,11
real,4
amesh,NP1+NP2+13
! lead
mat,2
real,5
esize,0.02
amesh,NP1+NP2+14
! lead-steel bond at outside
mat,3
real,6
amesh,NP1+NP2+15
! outside shell and fins
mat,1
real,7
amesh,NP1+NP2+FINNM+22
! fin enclosure
mat,5
real,8
amesh,NP1+NP2+FINNM+21
! inside fire shield steel
mat,1
real,9
amesh,NP1+NP2+18
! inside fire shield kaowool
mat,6
real,10
amesh,NP1+NP2+19
! outside fire shield steel
mat,1
real,11
amesh,NP1+NP2+20
!
! create radiation enclosures
! cavity enclosure
et,2,32
type,2
real,12
mat,7
ksel,s,loc,x,0,CD/2-0.01
lslk,s,1
lmesh,all
lreverse,all
mat,8
ksel,s,loc,x,CD/2
lslk,s,1
lmesh,all
! fin enclosure
real,13
mat,9
asel,s,area,,NP1+NP2+FINNM+21
allsel,below,area
lmesh,all
ksel,s,loc,x,FOD/2
lslk,s,1
lreverse,all
! outside fireshield
real,14
mat,10
ksel,s,loc,x,SOD/2
lslk,s,1
lmesh,all
lreverse,all
!
allsel
!
! create node for outside radiation
n,9999999,SOD
!
! create radiation matrices
fini
/aux12
emis,7,PE
emis,8,CE
emis,9,FEE
emis,10,FE
stef,5.7e-8
geom,1
vtype,0
esel,s,real,,12
nelem
write,rad1
esel,s,real,,13
nelem
write,rad2
space,9999999
esel,s,real,,14
nelem
nsel,a,node,,9999999
write,rad3
allsel
fini
/prep7
et,3,50,1
type,3
real,15
se,rad1
se,rad2
se,rad3
!
allsel
toffst,273 ! offset for input in degrees C
save
! apply convection on outside surface
esel,s,real,,14
nelem
eall
sf,all,conv,FH,AT
! apply heat generation rates to pencils
! pencil area including
! attentuation factor = 3.0
! (1/3rd of heat in pencils (1/3.0) - 2/3rds in lead)
! length factor = 0.432
! (17" inch active pencil lendth/39.37 inch per meter)
! radial distribution factor = 1.43
! (only 70% of heat is radial (1/1.43) - 30% axial)
PA = (3.1416*(PD/2)*(PD/2))*0.432*3.0*1.43
asel,s,area,,11
allsel,below,area
esel,r,type,,1
bfe,all,hgen,,AC11*WPC/PA
asel,s,area,,12
allsel,below,area
esel,r,type,,1
bfe,all,hgen,,AC12*WPC/PA
asel,s,area,,13
allsel,below,area
esel,r,type,,1
bfe,all,hgen,,AC13*WPC/PA
asel,s,area,,14
allsel,below,area
esel,r,type,,1
bfe,all,hgen,,AC14*WPC/PA
```

```
asel,s,area,,15
allsel,below,area
esel,r,type,,1
bfe,all,hgen,,AC15*WPC/PA
asel,s,area,,16
allsel,below,area
esel,r,type,,1
bfe,all,hgen,,AC16*WPC/PA
asel,s,area,,17
allsel,below,area
esel,r,type,,1
bfe,all,hgen,,AC17*WPC/PA
asel,s,area,,18
allsel,below,area
esel,r,type,,1
bfe,all,hgen,,AC18*WPC/PA
asel,s,area,,19
allsel,below,area
esel,r,type,,1
bfe,all,hgen,,AC19*WPC/PA
asel,s,area,,20
allsel,below,area
esel,r,type,,1
bfe,all,hgen,,AC110*WPC/PA
asel,s,area,,21
allsel,below,area
esel,r,type,,1
bfe,all,hgen,,AC111*WPC/PA
asel,s,area,,22
allsel,below,area
esel,r,type,,1
bfe,all,hgen,,AC112*WPC/PA
asel,s,area,,23
allsel,below,area
esel,r,type,,1
bfe,all,hgen,,AC113*WPC/PA
asel,s,area,,24
allsel,below,area
esel,r,type,,1
bfe,all,hgen,,AC114*WPC/PA
asel,s,area,,25
allsel,below,area
esel,r,type,,1
bfe,all,hgen,,AC115*WPC/PA
asel,s,area,,26
allsel,below,area
esel,r,type,,1
bfe,all,hgen,,AC116*WPC/PA
asel,s,area,,27
allsel,below,area
esel,r,type,,1
bfe,all,hgen,,AC117*WPC/PA
asel,s,area,,28
allsel,below,area
esel,r,type,,1
bfe,all,hgen,,AC118*WPC/PA
asel,s,area,,29
allsel,below,area
esel,r,type,,1
bfe,all,hgen,,AC119*WPC/PA
asel,s,area,,30
allsel,below,area
esel,r,type,,1
bfe,all,hgen,,AC120*WPC/PA
asel,s,area,,31
allsel,below,area
esel,r,type,,1
bfe,all,hgen,,AC121*WPC/PA
asel,s,area,,32
allsel,below,area
esel,r,type,,1
bfe,all,hgen,,AC122*WPC/PA
asel,s,area,,33
allsel,below,area
esel,r,type,,1
bfe,all,hgen,,AC123*WPC/PA
asel,s,area,,34
allsel,below,area
esel,r,type,,1
bfe,all,hgen,,AC124*WPC/PA
asel,s,area,,35
allsel,below,area
esel,r,type,,1
bfe,all,hgen,,AC125*WPC/PA
asel,s,area,,36
allsel,below,area
esel,r,type,,1
bfe,all,hgen,,AC126*WPC/PA
asel,s,area,,37
allsel,below,area
esel,r,type,,1
bfe,all,hgen,,AC127*WPC/PA
asel,s,area,,38
allsel,below,area
esel,r,type,,1
bfe,all,hgen,,AC128*WPC/PA
asel,s,area,,39
allsel,below,area
esel,r,type,,1
bfe,all,hgen,,AC129*WPC/PA
asel,s,area,,40
allsel,below,area
esel,r,type,,1
bfe,all,hgen,,AC130*WPC/PA
asel,s,area,,41
allsel,below,area
esel,r,type,,1
bfe,all,hgen,,AC131*WPC/PA
asel,s,area,,42
allsel,below,area
esel,r,type,,1
bfe,all,hgen,,AC132*WPC/PA
asel,s,area,,43
allsel,below,area
esel,r,type,,1
bfe,all,hgen,,AC133*WPC/PA
asel,s,area,,44
allsel,below,area
esel,r,type,,1
bfe,all,hgen,,AC134*WPC/PA
asel,s,area,,45
allsel,below,area
esel,r,type,,1
bfe,all,hgen,,AC135*WPC/PA
asel,s,area,,46
allsel,below,area
esel,r,type,,1
bfe,all,hgen,,AC136*WPC/PA
asel,s,area,,47
allsel,below,area
esel,r,type,,1
bfe,all,hgen,,AC137*WPC/PA
asel,s,area,,48
allsel,below,area
esel,r,type,,1
bfe,all,hgen,,AC138*WPC/PA
```

```
asel,s,area,,49
allsel,below,area
esel,r,type,,1
bfe,all,hgen,,AC139*WPC/PA
asel,s,area,,50
allsel,below,area
esel,r,type,,1
bfe,all,hgen,,AC140*WPC/PA
!
asel,s,area,,51
allsel,below,area
esel,r,type,,1
bfe,all,hgen,,AC21*WPC/PA
asel,s,area,,52
allsel,below,area
esel,r,type,,1
bfe,all,hgen,,AC22*WPC/PA
asel,s,area,,53
allsel,below,area
esel,r,type,,1
bfe,all,hgen,,AC23*WPC/PA
asel,s,area,,54
allsel,below,area
esel,r,type,,1
bfe,all,hgen,,AC24*WPC/PA
asel,s,area,,55
allsel,below,area
esel,r,type,,1
bfe,all,hgen,,AC25*WPC/PA
asel,s,area,,56
allsel,below,area
esel,r,type,,1
bfe,all,hgen,,AC26*WPC/PA
asel,s,area,,57
allsel,below,area
esel,r,type,,1
bfe,all,hgen,,AC27*WPC/PA
asel,s,area,,58
allsel,below,area
esel,r,type,,1
bfe,all,hgen,,AC28*WPC/PA
asel,s,area,,59
allsel,below,area
esel,r,type,,1
bfe,all,hgen,,AC29*WPC/PA
asel,s,area,,60
allsel,below,area
esel,r,type,,1
bfe,all,hgen,,AC210*WPC/PA
asel,s,area,,61
allsel,below,area
esel,r,type,,1
bfe,all,hgen,,AC211*WPC/PA
asel,s,area,,62
allsel,below,area
esel,r,type,,1
bfe,all,hgen,,AC212*WPC/PA
asel,s,area,,63
allsel,below,area
esel,r,type,,1
bfe,all,hgen,,AC213*WPC/PA
asel,s,area,,64
allsel,below,area
esel,r,type,,1
bfe,all,hgen,,AC214*WPC/PA
asel,s,area,,65
allsel,below,area
esel,r,type,,1
bfe,all,hgen,,AC215*WPC/PA
asel,s,area,,66
allsel,below,area
esel,r,type,,1
bfe,all,hgen,,AC216*WPC/PA
asel,s,area,,67
allsel,below,area
esel,r,type,,1
bfe,all,hgen,,AC217*WPC/PA
asel,s,area,,68
allsel,below,area
esel,r,type,,1
bfe,all,hgen,,AC218*WPC/PA
asel,s,area,,69
allsel,below,area
esel,r,type,,1
bfe,all,hgen,,AC219*WPC/PA
asel,s,area,,70
allsel,below,area
esel,r,type,,1
bfe,all,hgen,,AC220*WPC/PA
asel,s,area,,71
allsel,below,area
esel,r,type,,1
bfe,all,hgen,,AC221*WPC/PA
asel,s,area,,72
allsel,below,area
esel,r,type,,1
bfe,all,hgen,,AC222*WPC/PA
asel,s,area,,73
allsel,below,area
esel,r,type,,1
bfe,all,hgen,,AC223*WPC/PA
asel,s,area,,74
allsel,below,area
esel,r,type,,1
bfe,all,hgen,,AC224*WPC/PA
asel,s,area,,75
allsel,below,area
esel,r,type,,1
bfe,all,hgen,,AC225*WPC/PA
asel,s,area,,76
allsel,below,area
esel,r,type,,1
bfe,all,hgen,,AC226*WPC/PA
asel,s,area,,77
allsel,below,area
esel,r,type,,1
bfe,all,hgen,,AC227*WPC/PA
asel,s,area,,78
allsel,below,area
esel,r,type,,1
bfe,all,hgen,,AC228*WPC/PA
asel,s,area,,79
allsel,below,area
esel,r,type,,1
bfe,all,hgen,,AC229*WPC/PA
asel,s,area,,80
allsel,below,area
esel,r,type,,1
bfe,all,hgen,,AC230*WPC/PA
asel,s,area,,81
allsel,below,area
esel,r,type,,1
bfe,all,hgen,,AC231*WPC/PA
asel,s,area,,82
allsel,below,area
esel,r,type,,1
```

```
bfe,all,hgen,,AC232*WPC/PA
esel,s,area,,83
allsel,below,area
esel,r,type,,1
bfe,all,hgen,,AC233*WPC/PA
asel,s,area,,84
allsel,below,area
esel,r,type,,1
bfe,all,hgen,,AC234*WPC/PA
asel,s,area,,85
allsel,below,area
esel,r,type,,1
bfe,all,hgen,,AC235*WPC/PA
asel,s,area,,86
allsel,below,area
esel,r,type,,1
bfe,all,hgen,,AC236*WPC/PA
asel,s,area,,87
allsel,below,area
esel,r,type,,1
bfe,all,hgen,,AC237*WPC/PA
asel,s,area,,88
allsel,below,area
esel,r,type,,1
bfe,all,hgen,,AC238*WPC/PA
asel,s,area,,89
allsel,below,area
esel,r,type,,1
bfe,all,hgen,,AC239*WPC/PA
asel,s,area,,90
allsel,below,area
esel,r,type,,1
bfe,all,hgen,,AC240*WPC/PA
! apply remaining heat generation to lead
! lead area including
! attentuation factor = 1.5
! (2/3rds heat in lead (1/1.5) - 1/3rd of heat in pencils)
! radial distribution factor = 1.43
! (only 70% of heat is radial (1/1.43) - 30% axial)
LA = ((3.1416*(FOD/2)*(FOD/2))-
(3.1416*(CD/2)*(CD/2)))*1.5*1.43
esel,s,mat,,2
nelem
esel,r,type,,1
bfe,all,hgen,,TOTHT*WPC/LA
allsel
save
!
! remove link32s, set ambient temp and run
!
fini
/solve
csys,1
nsel,s,loc,x,sld/2
d,all,temp,50
allsel
esel,u,real,,12,14
d,9999999,temp,AT
insrch,on
solve
fini
/exit,save
```

APPENDIX B
Convection Coefficient Calculation

The outside fireshield of the F-294 is a cylinder. The flow of air over the outside of the fireshield is assumed to take place at a velocity of 0.5 m/s – close to stagnant air.

From Reference [2], the heat transfer coefficient takes the form:

$$h = k/D * C(uD/\nu)^m Pr^{0.333}$$

where:

D is the diameter of the fireshield = 0.9144 m
C,m are constants that depend on the Reynolds number (uD/ν)
k = thermal conductivity of the fluid
ν = kinematic viscosity of the fluid
Pr = Prandtl number for the fluid
u = free stream velocity

The property values of k,ν and Pr are evaluated at the film temperature, which is defined as the mean of the wall and free stream fluid temperatures, approximately 27°C or 300 K. From Reference [2], the property values are k = 0.0263 W/m°C, ν = 15.89E-6 m^2/s and Pr =0.707. This yields a Reynolds number of about 30,000. At this value of Re, the constants C and m are 0.193 and 0.618, respectively. Substituting in the diameter of the fireshield (0.9144 m) yields a heat transfer coefficient of:

$$h = \frac{0.0263(0.193)(0.5*0.9144/15.89E\text{-}6)^{0.618}}{0.9144}.707^{0.333} = 2.8\ W/m^2\,°C$$

A value of 3 $W/m^2\,°C$ is used in the analysis.