National Spent Nuclear Fuel Program

Structural Analyses of the 18-In. DOE-EM Standardized Canister

by

Thomas Hill

Idaho National Laboratory

NRC Transportation Meeting
December 6, 2006

Providing for safe, efficient transportation of DOE spent nuclear fuel

Scope of Analysis

- *June 2006 meeting reviewed robust design of DOE-EM Standardized Canister*
- *Since then, we have analyzed the DOE-EM Standardized Canister for the following two loadings:*
  - *An accidental drop from 30 feet onto an essentially unyielding flat surface while within a transportation cask [10 CFR Part 71.73(c)(1)]*
  - *A static external water pressure of 290 psig on the canister surface (10 CFR Part 71.61)*

National Spent Nuclear Fuel Program

DOE-EM Standardized Canister Configuration Evaluated

- *18-inch diameter, 15-foot long canister*
- *Three Type 1a baskets*
- *Ten Advanced Test Reactor (ATR) fuel elements per basket (30 total per canister)*
- *One 6.75-inch thick internal shield plug*
- *Total loaded weight of 3731 lbs*

18-Inch Diameter, 15-Foot Canister

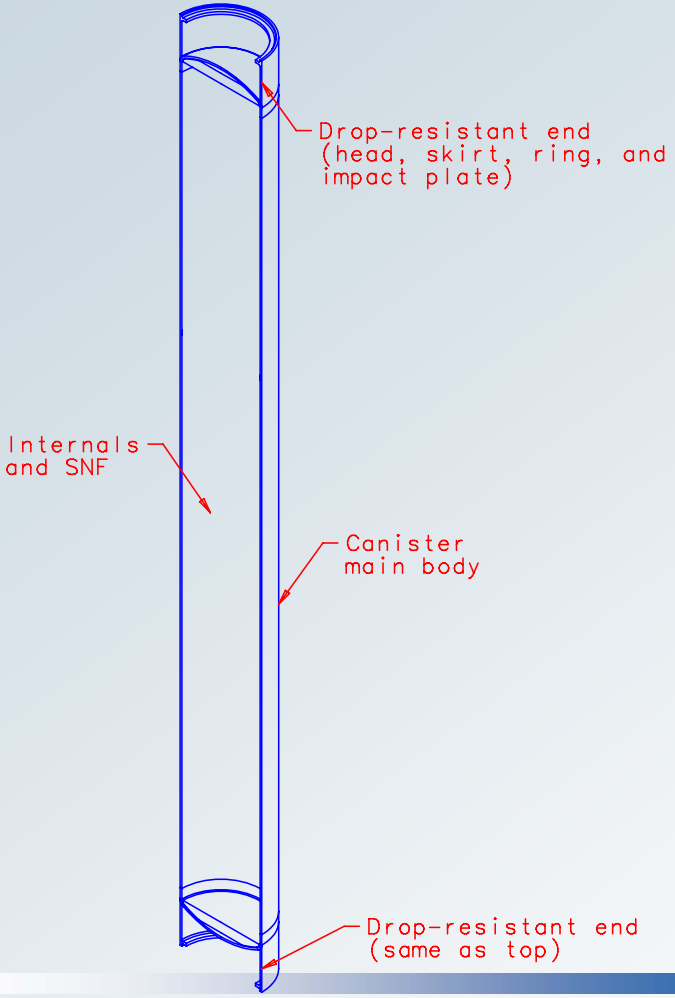

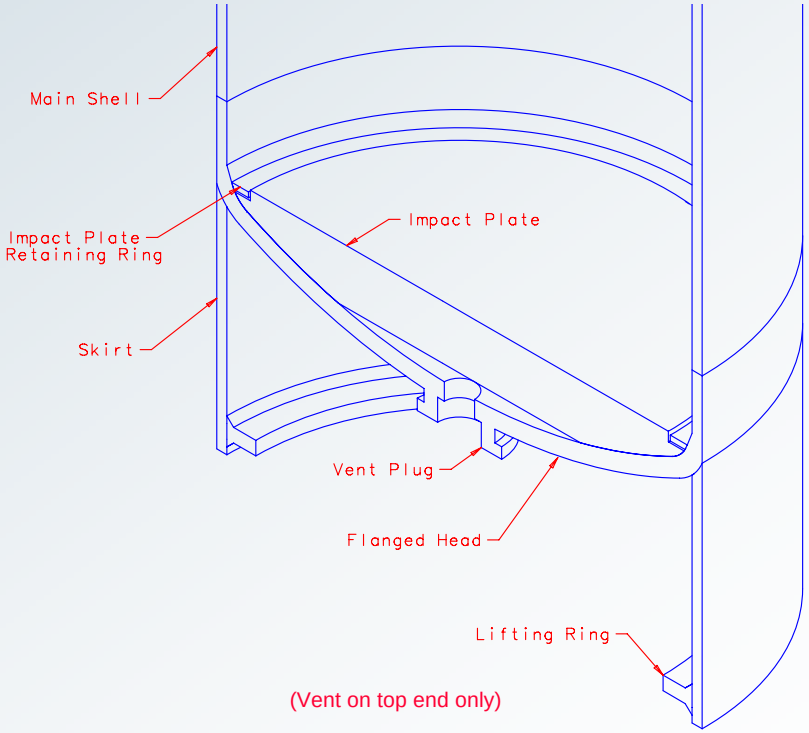

(Vent on top end only)

National Spent Nuclear Fuel Program

Type 1a Basket

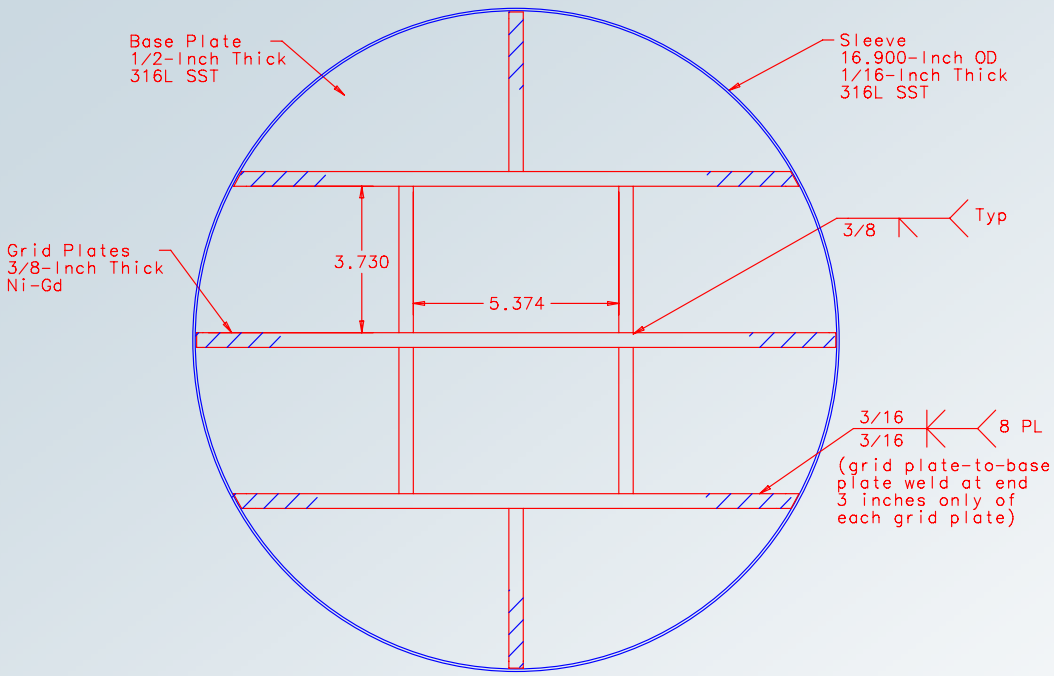

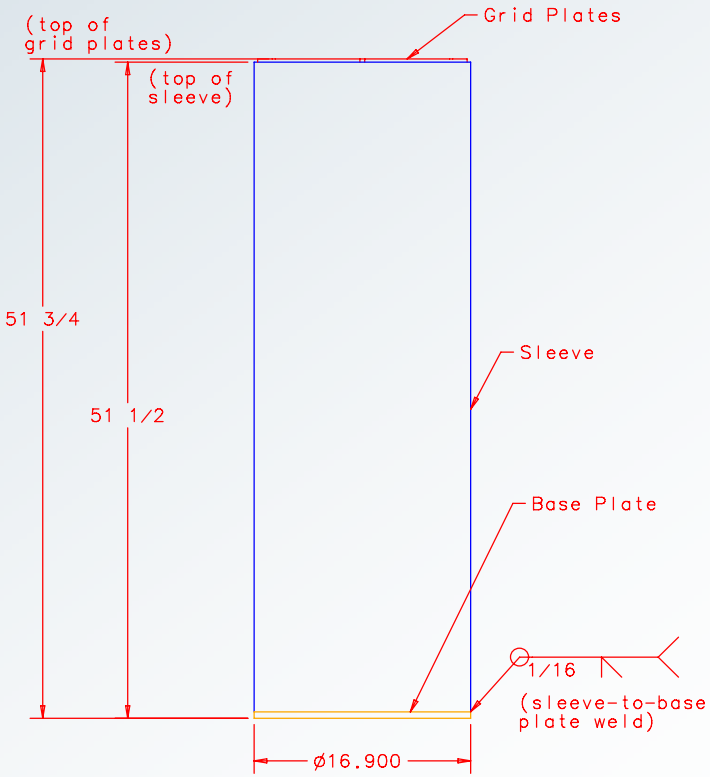

ATR Fuel Element

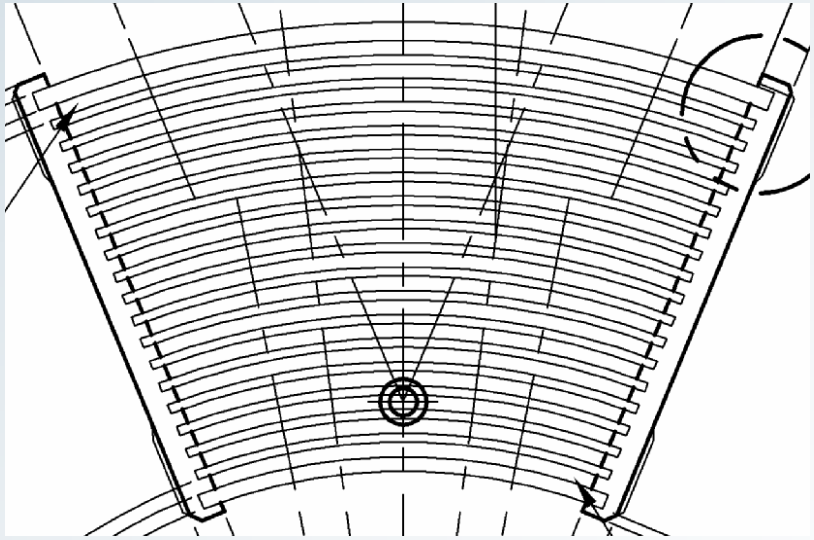

National Spent Nuclear Fuel Program

Shield Plug

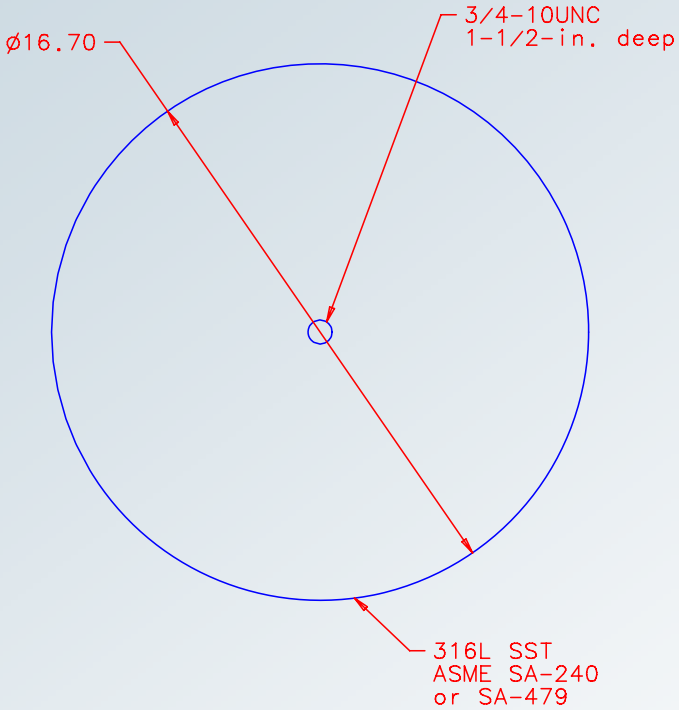

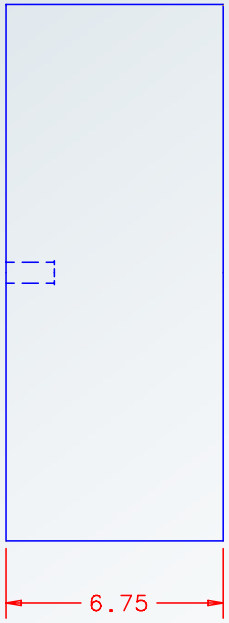

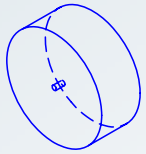

National Spent Nuclear Fuel Program

Temperature Conditions

Accidental Drop: 10 CFR Part 71.73 requires ambient air between -20°F and 100°F to create the condition most unfavorable for the canister

- *Case 1: all canister and basket parts at 70°F (shown valid for -20°F to 100°F range)*
- *Case 2: all canister and basket parts at 600°F (enveloping operating temperature during transportation)*

Water Immersion: all canister components at 70°F

Impact Angles Evaluated

Bottom-end impacting and top-end impacting at the following orientations:

- *Vertical*
- *Center-of-gravity over the corner (5-degree off-vertical)*
- *45-degree off-vertical*
- *80-degree off-vertical*
- *90-degree off-vertical (i.e., horizontal)*

Transportation Cask Design

Transportation cask conditions assumed:

- *Cask impact onto the essentially unyielding, flat surface applied no more than 100-g's bulk deceleration to the canisters within*
- *Cask internals prevented one canister from impacting another canister*
- *Cask internal design provided a flat surface at the canister ends*
- *Cask internal design provided a flat surface of support longitudinally for each canister (e.g., each canister positioned within a round or square tube)*
- *Cask protected the canisters such that the 30-foot drop was the enveloping design load for the structural responses of the canisters, including the puncture drop event*

Acceptance Criteria

Drop Evaluations

- *-20°F to 100°F Drops:*
  Containment material strains less than the ASME Code-specified minimum elongation of 40% for the heads and 35% (longitudinal, 25% transverse) for the main shell
- *600°F Drops:*
  Containment material strains less than the uniform strain limit of 20% (strain just prior to necking) at 600°F

Acceptance Criteria (Cont.)

Water Immersion Evaluation

- *10 CFR Part 71.61 requires a containment system "without collapse, buckling, or in-leakage of water" under the 290 psig external pressure loading*
- *Water tightness ensured by having containment material strains at or below the limits established on the previous page for -20°F to 100°F drops*

Finite Element Model

Number of Finite Elements Per Component or Assembly:

- *28,784 for canister assembly (shell, heads, skirts, internal impact plates)*
- *34,512 for three Type 1a baskets*
- *204 for fuel elements*
- *5,060 for shield plug*

(1 plane of symmetry used)

FE Model Upper and Lower Ends

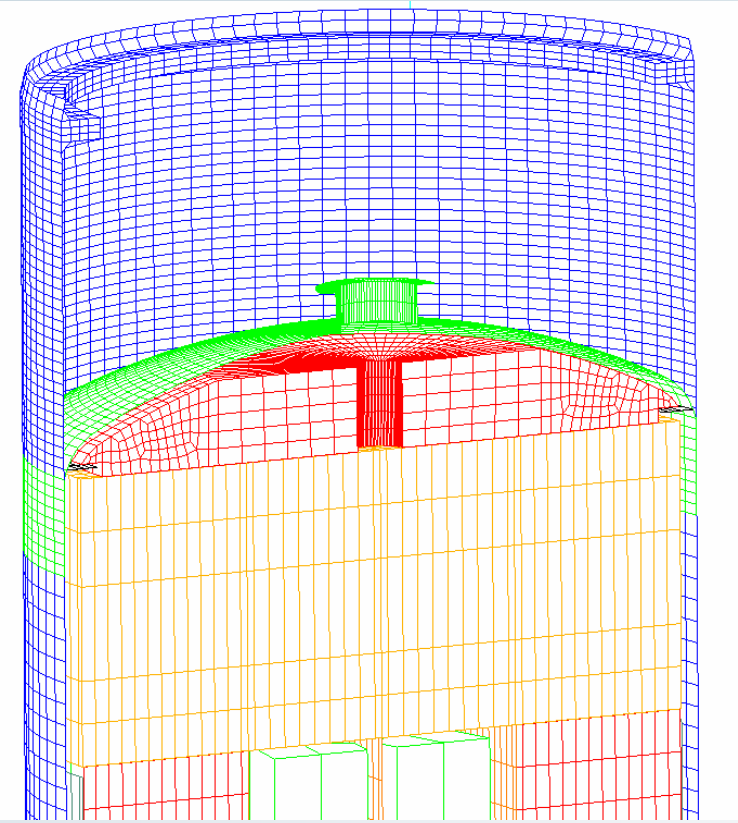

Upper End

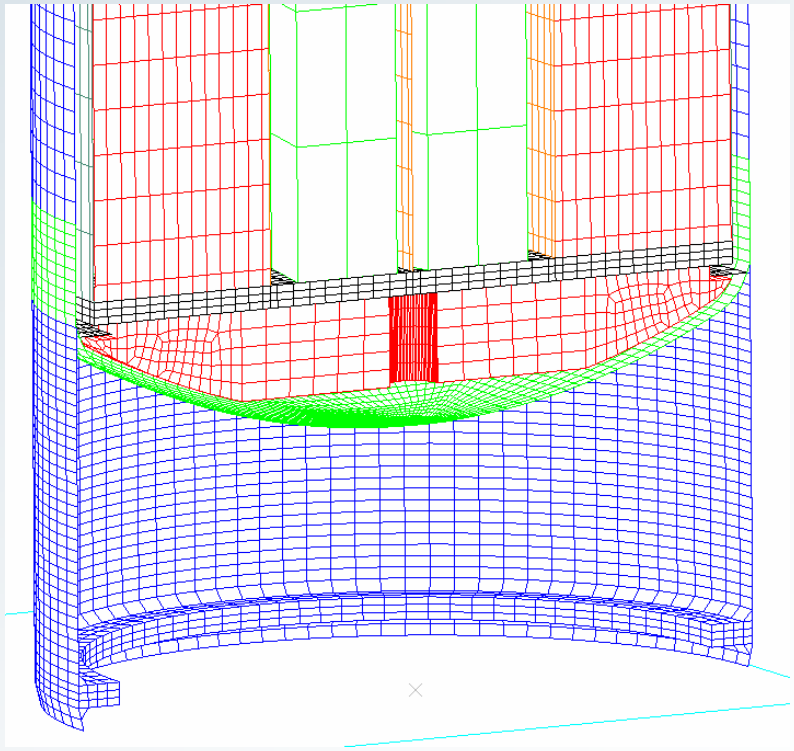

Lower End

National Spent Nuclear Fuel Program

Type 1a Basket Model with Fuel

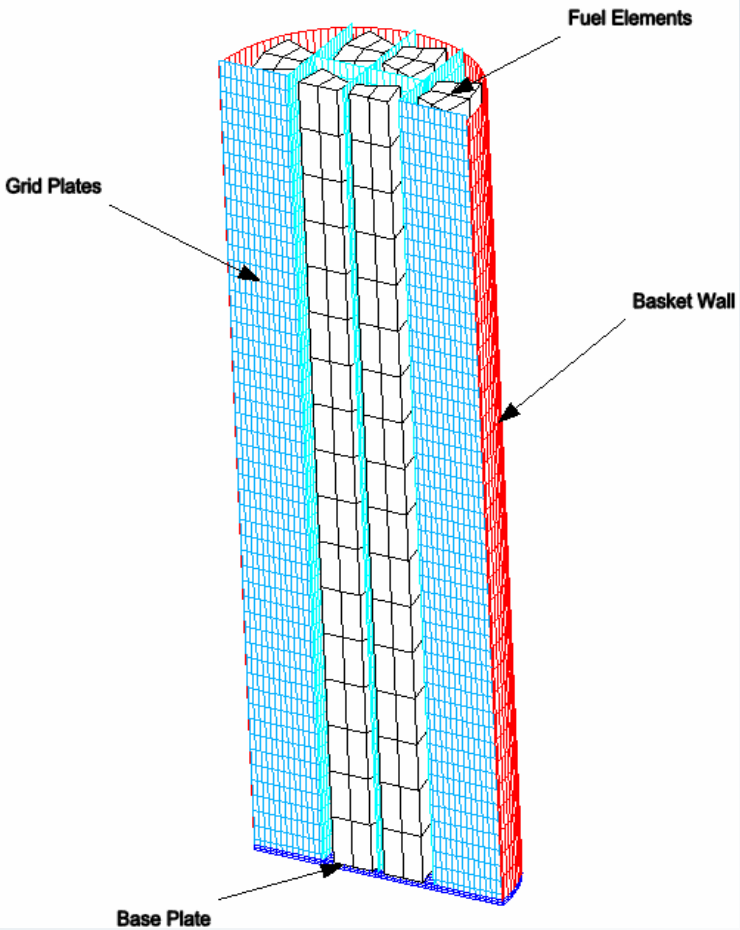

National Spent Nuclear Fuel Program

Drop Results

Canister 70ºF (-20°F to 100°F) Drop Results

Impact Angle / Impacting End	Peak Equivalent Plastic Strains (PEEQ, %)								
	Bottom Head			Main Shell			Top Head		
	Outside	Middle	Inside	Outside	Middle	Inside	Outside	Middle	Inside
0 / Bottom	6	0.6	7	0	0	0.1	4	0	4
0 / Top	3	0	3	0	0	0	6	0.5	6
5 (CGOC) / Bottom	6	0.7	7	0.5	0.2	0.5	3	0.1	3
5 (CGOC) / Top	3	0	3	0	0	0.1	7	0.6	7
45 / Bottom	5	2	5	2	0.1	2	1	0.6	2
45 / Top	2	1	1	1	0	1	7	3	8
80 / Bottom	3	2	4	2	0	2	3	2	3
80 / Top	4	3	4	2	0	2	4	2	5
90 / Both	3	2	3	2	0	2	3	2	3
Maximum PEEQ	6	3	7	2	0.2	2	7	3	8

Drop Results (Cont.)

Canister 70°F (-20°F to 100°F) Drop Results

- *Maximum strains in the canister of 7% outside surface, 3% middle surface, and 8% inside surface were well below the minimum elongation values (40% heads, 35% and 25% for the main shell*
- *Maximum strains were also well below the 1999 prototype canister maximum strains (57%, 19%, 42%), which showed post-drop helium leaktight condition*
- *Canister remains leak-tight during accidental drop event within the transportation cask*

Drop Results (Cont.)

Canister 600°F Drop Results

Impact Angle / Impacting End	Peak Equivalent Plastic Strains (PEEQ, %)								
	Bottom Head			Main Shell			Top Head		
	Outside	Middle	Inside	Outside	Middle	Inside	Outside	Middle	Inside
0 / Bottom	7	1	8	0.2	0.2	0.5	3	0	3
0 / Top	3	0	3	0.2	0.3	0.4	6	0.9	7
5 (CGOC) / Bottom	6	1	8	0.9	0.2	0.9	4	0.1	4
5 (CGOC) / Top	4	0.1	4	0.3	0.3	0.6	8	1	8
45 / Bottom	5	3	6	3	0.3	3	2	1	2
45 / Top	3	2	3	2	0.4	2	7	4	8
80 / Bottom	4	3	6	3	0.2	3	5	3	4
80 / Top	7	5	6	3	0.2	3	5	3	6
90 / Both	4	3	4	3	0.3	3	6	3	5
Maximum PEEQ	7	5	8	3	0.4	3	8	4	8

Drop Results (Cont.)

Canister 600°F Drop Results

- *Maximum strains in canister of 8% outside surface, 5% middle surface, and 8% inside surface were below the uniform strain limit of 20%*
- *Canister remains leak-tight during accidental drop event within the transportation cask*

Water Immersion Results

Under a 290 psig external pressure, the canister responded as follows:

- *Minimum theoretical pressure required to buckle the canister was calculated at 440 psig*
- *Maximum stress in the canister of 23.1 ksi was below the ASME Code minimum specified yield strength (25 ksi)*
- *Canister containment material remained elastic during this external pressure application*
- *Water leak-tight condition is maintained*

On-Going Work

- *18-inch diameter, 15-foot long canister being evaluated for the maximum design weight of 6000 pounds with one and three Type 1a baskets*
- *18-inch diameter, 15-foot long canister being evaluated for the minimum expected weight with one Type 1a basket*
- *18-inch diameter, 10-foot long canister being evaluated for the maximum design weight of 5005 pounds with three Type 1a baskets*

Meeting Agenda

10:00 a.m.	Introductions
10:10 a.m.	Meeting Objectives
10:30 a.m.	**DOE-EM SNF Canister Integrity**
11:00 a.m.	DOE-EM Canister Criticality Safety
11:15 a.m.	Summary and Conclusions
11:30 a.m.	Staff Feedback
11:45 a.m.	Public Comments
12:00 p.m.	Adjourn