FORM 374

U.S. NUCLEAR REGULATORY COMMISSI

MATERIALS LICENSE

Amendment No. 24

Pursuant to the Atomic Energy Act of 1954, as amended, the Energy Reorganization Act of 1974 (Public Law 93-438), and Title 10, Code of Federal Regulations, Chapter I, Parts 30, 31, 32, 33, 34, 35, 39, 40 and 70, and in reliance on statements and representations heretofore made by the licensee, a license is hereby issued authorizing the licensee to receive, acquire, possess, and transfer byproduct, source, and special nuclear material designated below; to use such material for the purpose(s) and at the place(s) designated below; to deliver or transfer such material to persons authorized to receive it in accordance with the regulations of the applicable Part(s). This license shall be deemed to contain the conditions specified in Section 183 of the Atomic Energy Act of 1954, as amended, and is subject to all applicable rules, regulations and orders of the Nuclear Regulatory Commission now or hereafter in effect and to any conditions specified below.

Licensee	
Department of the Army 1. U. S. Army Communications - Electronic Command 2. Fort Monmouth, New Jersey 07703-5000	In accordance with application dated April 18, 1991, 3. License number 29-01022-07 is amended in its entirety to read as follows: 4. Expiration date October 31, 1997 5. Docket or Reference No. 030-06989

6. Byproduct, source, and/or special nuclear material	7. Chemical and/or physical form	8. Maximum amount that licensee may possess at any one time under this license
A. Cesium 137	A.	A. [redacted] Ex 2
B. Cobalt 60	B.	B.

9. Authorized use

A. and B. For irradiation of materials except explosives and flammable materials.

CONDITIONS

10. Licensed material may be used only at the licensee's facilities at [redacted] Ex 2 Evans Area, Wall Township, New Jersey.

11. A. Licensed material shall be used by, or under the supervision and in the physical presence of individuals who have received the training described in application dated April 18, 1991 and have been approved in writing by the Radiation Safety Officer. The licensee shall maintain records of individuals designated as users for three years following the last use of licensed material by the individual.

B. The Radiation Safety Officer for this license is Joseph Santarsiero.

12. Sealed sources or detector cells containing licensed material shall not be opened or sources removed from source holders or detector cells by the licensee.

13. A. Sealed sources and detector cells shall be tested for leakage and/or contamination at intervals not to exceed 6 months or at such other intervals as are specified by the certificate of registration referred to in 10 CFR 32.210, not to exceed 3 years.

Information in this record was deleted in accordance with the Freedom of Information Act, exemptions 2 & 6
2006-0235
EE/16
OFFICIAL RECORD COPY - ML 10

MATERIALS LICENSE
SUPPLEMENTARY SHEET

License number: 29-01022-07

Docket or Reference number: 030-06989

Amendment No. 24

(13. continued) CONDITIONS

B. Notwithstanding Paragraph A of this Condition, sealed sources designed to emit alpha particles shall be tested for leakage and/or contamination at intervals not to exceed 3 months.

C. In the absence of a certificate from a transferor indicating that a test has been made within six months prior to the transfer, a sealed source or detector cell received from another person shall not be put into use until tested.

D. Each sealed source fabricated by the licensee shall be inspected and tested for construction defects, leakage, and contamination prior to any use or transfer as a sealed source.

E. Sealed sources and detector cells need not be leak tested if:

(i) they contain only hydrogen 3; or

(ii) they contain only a gas; or

(iii) the half-life of the isotope is 30 days or less; or

(iv) they contain not more than 100 microcuries of beta and/or gamma emitting material or not more than 10 microcuries of alpha emitting material; or

(v) they are not designed to emit alpha particles, are in storage, and are not being used. However, when they are removed from storage for use or transfer to another person, and have not been tested within the required leak test interval, they shall be tested before use or transfer. No sealed source or detector cell shall be stored for a period of more than 10 years without being tested for leakage and/or contamination.

F. The test shall be capable of detecting the presence of 0.005 microcurie of radioactive material on the test sample. Records of leak test results shall be kept in units of microcuries and shall be maintained for inspection by the Commission. If the test reveals the presence of 0.005 microcurie or more of removable contamination, a report shall be filed with the U.S. Nuclear Regulatory Commission and the source shall be removed from service and decontaminated, repaired, or disposed of in accordance with Commission regulations. The report shall be filed within 5 days of the date the leak test result is known with the U.S. Nuclear Regulatory Commission, Region I, ATTN: Chief, Nuclear Materials Safety Branch, 475 Allendale Road, King of Prussia, Pennsylvania 19406. The report shall specify the source involved, the test results, and corrective action taken.

G. The licensee is authorized to collect leak test samples for analysis by the licensee. Alternatively, tests for leakage and/or contamination may be performed by persons specifically licensed by the Commission or an Agreement State to perform such services.

MATERIALS LICENSE
SUPPLEMENTARY SHEET

License number: 29-01022-07
Docket or Reference number: 03030-06989
Amendment No. 24

(Continued) CONDITIONS

14. Before initiation of irradiator operations or after reloading of sources in the irradiator and before restart of the irradiator, a radiation survey shall be conducted to determine radiation levels around, above and below the irradiator with the sources in the shielded position and in the exposed position. The results of the survey shall be sent to the U.S. Nuclear Regulatory Commission, Region I, ATTN: Chief, Nuclear Materials Safety Branch, 475 Allendale Road, King of Prussia, Pennsylvania 19406, not more than 30 days after the survey is conducted.

15. The licensee shall conduct a physical inventory every 6 months to account for all sources and/or devices received and possessed under the license. Records of inventories shall be maintained for 5 years from the date of each inventory.

16. The licensee may transport licensed material in accordance with the provisions of 10 CFR 71, "Packaging and Transportation of Radioactive Material."

17. Except as specifically provided otherwise in this license, the licensee shall conduct its program in accordance with the statements, representations, and procedures contained in the documents including any enclosures, listed below. The Nuclear Regulatory Commission's regulations shall govern unless the statements, representations and procedures in the licensee's application and correspondence are more restrictive than the regulations.

A. Application dated April 18, 1991
B. Letter dated July 23, 1991
C. Letter dated May 15, 1992

For the U.S. Nuclear Regulatory Commission

Date SEP 30 1992

By Original Signed By: Judith A. Joustra

Nuclear Materials Safety Branch
Region I
King of Prussia, Pennsylvania 19406

SEP 3 0 1992

License No. 29-01022-07
Docket No. 030-06989
Control No. 114634

Department of the Army
Commander
U. S. Army Materiel Command
ATTN: AMCSF-P
5001 Eisenhower Avenue
Alexandria, Virginia 22333-0001

Dear Sir or Madam:

Please find enclosed the renewal of your NRC Material License.

Please review the enclosed document carefully and be sure that you understand all conditions. If there are any errors or questions, please notify the Region I Material Licensing Section, (215) 337-5093, so that we can provide appropriate corrections and answers.

Please be advised that you must conduct your program involving licensed radioactive materials in accordance with the conditions of your NRC license, representations made in your license application, and NRC regulations. In particular, please note the items in the enclosed, "Requirements for Materials Licensees."

Since serious consequences to employees and the public can result from failure to comply with NRC requirements, the NRC expects licensees to pay meticulous attention to detail and to achieve the high standard of compliance which the NRC expects of its licensees.

You will be periodically inspected by NRC. A fee may be charged for inspections in accordance with 10 CFR Part 170. Failure to conduct your program safely and in accordance with NRC regulations, license conditions, and representations made in your license application and supplemental correspondence with NRC will result in prompt and vigorous enforcement action against you. This could include issuance of a notice of violation, or in case of serious violations, an imposition of a civil penalty or an order suspending, modifying or revoking your license as specified in the General Policy and Procedures for NRC Enforcement Actions, 10 CFR Part 2, Appendix C.

We wish you success in operating a safe and effective licensed program.

Sincerely,

Original Signed By:
Judith A. Joustra

Francis M. Costello, Chief
Industrial Applications Section
Division of Radiation Safety
and Safeguards

Enclosures:
1. Amendment No. 24
2. Requirements for Materials Licensees
3. 10 CFR Parts 2, 19, 20, 30, 71, 170 and 171
4. NRC Form 313

DRSS:RI DRSS:RI
White/cmm Costello

09/22/92 09/30/92

MS-16
9-4

DEPARTMENT OF THE ARMY

HEADQUARTERS, US ARMY COMMUNICATIONS-ELECTRONICS COMMAND
AND FORT MONMOUTH
FORT MONMOUTH, NEW JERSEY 07703-5000

REPLY TO
ATTENTION OF

May 15, 1992

Chief, Safety Office

Mr. Duncan White
US Nuclear Regulatory Commission
License Processing Section
Materials Section B
475 Allendale Road
King of Prussia, PA 19406

Dear Mr. White:

This refers to US Nuclear Regulatory Commission (NRC) License Number 29-01022-07, Docket Number 030-06989, Control Number 114634.

As a result of your telephone conversation with the undersigned regarding this matter on April 27, 1992, the following additional information is being provided so that our NRC renewal application can be processed to completion.

a. The inside of the Underground Vault Exposure Room is equipped with an emergency (panic) button. Should an individual remain inside of the exposure room and a source inadvertently placed in the exposure mode, which is highly improbable, the individual can activate the emergency button, causing the source and its shielding plug to be lowered into its Source Storage Shield. However, it should be noted that when the control panel is activated to raise the source into the exposure position, a loud audible alarm is activated for a ten second period, providing an individual adequate time to activate the panic button and/or raise the wooden barrier and exit the exposure room.

b. We will not perform maintenance or repair of the actual sealed sources. Should maintenance or repair of the sources be required, these functions will either be performed by the manufacturer or by qualified licensees authorized by the NRC or Agreement State to perform such services, or alternatively, the sealed sources will be disposed of as radioactive waste (See Supplement F).

c. Leak tests of the sealed sources have been, and are currently being, performed every six months as stipulated in Condition 12 of Amendment Number 23 dated March 28, 1991.

Sincerely,

Barry J. Silber
Acting Chief, Safety Office

OFFICIAL RECORD COPY ML 10

114634

MAY 20 1992

NRC FORM 218 (4-76) NRCM 0240

U.S. NUCLEAR REGULATORY COMMISSION

TELEPHONE OR VERBAL CONVERSATION RECORD

DATE 4-27-92

TIME 9 30 ☐ A.M. ☒ P.M.

☐ INCOMING CALL ☒ OUTGOING CALL ☐ VISIT

PERSON CALLING	OFFICE/ADDRESS	PHONE NUMBER	EXTENSION
D White			

PERSON CALLED	OFFICE/ADDRESS	PHONE NUMBER	EXTENSION
R Silver / Lyle Armstrong	Ft Monmouth	908 - 544-4127	

CONVERSATION

SUBJECT Rec'd Phone Call for Renewal of 29-01223-07

SUMMARY

Evans Area

Request that licensee provide following information to R

(1) Egress out of vault area with source exposed?
Panic button stops source, activates alarm

(2) Leak test frequency

(3) Maintenance / repair of licensed material

The licensee has no additional info on Co-60 specification than that provided.

REFERRED TO:

☐ ADVISE ME OF ACTION TAKEN.

ACTION REQUESTED

MS15

INITIALS

DATE

ACTION TAKEN

INITIALS

DATE

OFFICIAL RECORD COPY M. 10

11/2/92

030-06989

DEPARTMENT OF THE ARMY
HEADQUARTERS, U. S. ARMY MATERIEL COMMAND
5001 EISENHOWER AVENUE, ALEXANDRIA, VA 22333-0001

July 23, 1991

Safety Office

U.S. Nuclear Regulatory Commission
Region I
ATTN: Materials Licensing Branch
475 Allendale Road
King of Prussia, Pennsylvania 19406

Reference: NRC License No. 29-01022-07, Docket No. 030-06989, Control No. 114634

Gentlemen:

Forwarded are two copies of a request from Headquarters, U.S. Army Communications-Electronics Command to change "Dosimeters are exchanged monthly" to "Dosimeters are exchanged quarterly" in Supplement D of the referenced license.

We recommend approval of this request.

Sincerely,

John E. Rankin
Chief
Safety Office

Enclosures

Copies Furnished:
HQDA(SGPS-PSP-E) w/encls
Cdr, CECOM, ATTN: AMSEL-SF-RER wo/encl
Dir, USAMC Field Safety Activity, ATTN: AMXOS-PE w/encl

114634
JUL 29 1991

OFFICIAL RECORD COPY ML 10

DEPARTMENT OF THE ARMY
HEADQUARTERS, US ARMY COMMUNICATIONS-ELECTRONICS COMMAND
AND FORT MONMOUTH
FORT MONMOUTH, NEW JERSEY 07703-5000

REPLY TO
ATTENTION OF

19 Jul 91
AMCSF-P
(mf)

AMSEL-SF-RER (385-11m) 11 July 1991

MEMORANDUM THRU Commander, U.S. Army Materiel Command, ATTN: AMCSF-P, 5001 Eisenhower Avenue, Alexandria, VA 22333-0001

FOR U.S. Nuclear Regulatory Commission, License Processing Section, Materials Section B, 475 Allendale Road, King of Prussia, PA 19406

SUBJECT: U.S. Nuclear Regulatory Commission (NRC) License Number 29-01022-07, Docket No. 030-06989, Control No. 114634

1. Reference:

a. FONECON between Mr. Gary Ziola, CECOM Safety Office, and Ms. Cindy O'Daniell, NRC, 10 July 1991, SAB.

b. NRC License Renewal Application, License Number 29-01022-07, dated 18 April 1991.

2. As discussed in reference 1a FONECON, request you amend reference 1b application to reflect the following change:

Under Supplement D, Facilities and Equipment, paragraph 8 entitled Personnel Dosimetry, change: "Dosimeters are exchanged monthly" to "Dosimeters are exchanged quarterly." This condition was previously amended to reflect a quarterly exchange in our letter dated 28 March 1991, Control No. 113819 and as approved by the NRC in Amendment No. 23 issued on 3 April 1991.

3. Your expeditious processing of this request is appreciated.

4. Our POC is Mr. Gary Ziola, Milnet (AMSEL-SF@MONMOUTH-EMH3.ARMY.MIL): Message (CDR CECOM FT MONMOUTH NJ //AMSEL-SF-RER//); Facsimile on DSN 995-2667 or (908) 542-7161: or Voice on DSN 995-4427 or (908) 544-4427.

5. CECOM Bottom Line: THE SOLDIER.

Steven A Horne
STEVEN A. HORNE
Chief, Safety Office

UNITED STATES
NUCLEAR REGULATORY COMMISSION
REGION I
475 ALLENDALE ROAD
KING OF PRUSSIA, PENNSYLVANIA 19406

Docket No. 030-06989

License No. 29-01022-07

Control No. 114634

Department of the Army
U.S. Army Communications Electronics Command
ATTN: Colonel Ronald E. Gornto
Fort Monmouth, New Jersey 07703

Dear Colonel Gornto:

SUBJECT: LICENSE RENEWAL APPLICATION

This is to acknowledge receipt of your application for renewal of material(s) license identified above. Your application is deemed timely filed, and accordingly, the license will not expire until final action has been taken by this office.

Any correspondence regarding the renewal application should reference the control number specified above.

Sincerely,

Original Signed By:
Cheryl K. Buraker

for Sheryl Villar, Chief
Licensing Assistant Section
Division of Radiation Safety
and Safeguards

CKB 5/20/91

OFFICIAL RECORD COPY ML 10

030-06989

DEPARTMENT OF THE ARMY
HEADQUARTERS, U. S. ARMY MATERIEL COMMAND
5001 EISENHOWER AVENUE, ALEXANDRIA, VA 22333-0001

April 29, 1991

Safety Office

U.S. Nuclear Regulatory Commission
Region I
ATTN: Materials Licensing Branch
475 Allendale Road
King of Prussia, Pennsylvania 19406

Reference: AMCSF-P/91-0039

Gentlemen:

Forwarded are two copies of the U.S. Army Communications-Electronics Command request for renewal of license 29-01022-07.

We recommend approval. Please acknowledge receipt of correspondence on the enclosed DA Form 209, Delay, Referral, or Follow-Up Notice.

Sincerely,

Patricia A. Elker

Patricia A. Elker
Chief, Health Physics,
Safety Office

Enclosures

Copies Furnished:
HQDA(SGPS-PSP-E) wo/encl
Cdr, CECOM, ATTN: AMSEL-SF wo/encl
Director, USAMC Field Safety Activity, ATTN: AMXOS w/encl

FEE EXEMPT

11634

OFFICIAL RECORD COPY ML 10

MAY 01 1991

DEPARTMENT OF THE ARMY
HEADQUARTERS, US ARMY COMMUNICATIONS-ELECTRONICS COMMAND
AND FORT MONMOUTH
FORT MONMOUTH, NEW JERSEY 07703-5000

REPLY TO
ATTENTION OF

AMSEL-CS

18 APR 1991

MEMORANDUM FOR Commander, U.S. Army Materiel Command, ATTN: AMCSF-P, 5001 Eisenhower Avenue, Alexandria, Virginia 22333-0001

SUBJECT: Vault Irradiator License Application

1. The Department of the Army, U.S. Army Communications-Electronics Command, Fort Monmouth, New Jersey, is hereby making application for renewal of Byproduct Material License Number 29-01022-07 issued for the use of radioactive material in Research and Development projects at Fort Monmouth, New Jersey.

2. The enclosed application is being submitted for review in fulfillment of the requirements of Title 10, Code of Federal Regulations. The major change in the license application is the deletion of the Picker 698 Curie Cobalt-60 sealed source. This source was disposed of through Chem-Nuclear Systems, Inc., Barnwell, SC, on 9 January 1989.

3. Request the enclosed application be forwarded to the U.S. Nuclear Regulatory Commission, Region I, Nuclear Material Section B, 475 Allendale Road, King of Prussia, Pennsylvania 19406, for their review and appropriate action.

4. Our POC is Mr. Gary Ziola, Message (CDR CECOM FT MONMOUTH NJ //AMSEL-SF-RER//); Facsimile on (908) 542-7161 or Voice on (908) 544-4427.

5. CECOM Bottom Line: THE SOLDIER.

7 Encls
as

for RONALD E. GORNTO
Colonel, GS
Chief of Staff

114634

NRC FORM 313
(1-84)
10 CFR 30, 32, 33, 34, 35 and 40

U.S. NUCLEAR REGULATORY COMMISSION
APPROVED BY OMB
3150-0120
Expires: 5-31-87

APPLICATION FOR MATERIAL LICENSE

INSTRUCTIONS: SEE THE APPROPRIATE LICENSE APPLICATION GUIDE FOR DETAILED INSTRUCTIONS FOR COMPLETING APPLICATION. SEND TWO COPIES OF THE ENTIRE COMPLETED APPLICATION TO THE NRC OFFICE SPECIFIED BELOW.

FEDERAL AGENCIES FILE APPLICATIONS WITH:

U.S. NUCLEAR REGULATORY COMMISSION
DIVISION OF FUEL CYCLE AND MATERIAL SAFETY, NMSS
WASHINGTON, DC 20555

ALL OTHER PERSONS FILE APPLICATIONS AS FOLLOWS, IF YOU ARE LOCATED IN:

CONNECTICUT, DELAWARE, DISTRICT OF COLUMBIA, MAINE, MARYLAND, MASSACHUSETTS, NEW JERSEY, NEW YORK, PENNSYLVANIA, RHODE ISLAND, OR VERMONT, SEND APPLICATIONS TO:

U.S. NUCLEAR REGULATORY COMMISSION, REGION I
NUCLEAR MATERIAL SECTION B
631 PARK AVENUE
KING OF PRUSSIA, PA 19406

ALABAMA, FLORIDA, GEORGIA, KENTUCKY, MISSISSIPPI, NORTH CAROLINA, PUERTO RICO, SOUTH CAROLINA, TENNESSEE, VIRGINIA, VIRGIN ISLANDS, OR WEST VIRGINIA, SEND APPLICATIONS TO:

U.S. NUCLEAR REGULATORY COMMISSION, REGION II
MATERIAL RADIATION PROTECTION SECTION
101 MARIETTA STREET, SUITE 2900
ATLANTA, GA 30323

IF YOU ARE LOCATED IN:

ILLINOIS, INDIANA, IOWA, MICHIGAN, MINNESOTA, MISSOURI, OHIO, OR WISCONSIN, SEND APPLICATIONS TO:

U.S. NUCLEAR REGULATORY COMMISSION, REGION III
MATERIALS LICENSING SECTION
799 ROOSEVELT ROAD
GLEN ELLYN, IL 60137

ARKANSAS, COLORADO, IDAHO, KANSAS, LOUISIANA, MONTANA, NEBRASKA, NEW MEXICO, NORTH DAKOTA, OKLAHOMA, SOUTH DAKOTA, TEXAS, UTAH, OR WYOMING, SEND APPLICATIONS TO:

U.S. NUCLEAR REGULATORY COMMISSION, REGION IV
MATERIAL RADIATION PROTECTION SECTION
611 RYAN PLAZA DRIVE, SUITE 1000
ARLINGTON, TX 76011

ALASKA, ARIZONA, CALIFORNIA, HAWAII, NEVADA, OREGON, WASHINGTON, AND U.S. TERRITORIES AND POSSESSIONS IN THE PACIFIC, SEND APPLICATIONS TO:

U.S. NUCLEAR REGULATORY COMMISSION, REGION V
MATERIAL RADIATION PROTECTION SECTION
1450 MARIA LANE, SUITE 210
WALNUT CREEK, CA 94596

PERSONS LOCATED IN AGREEMENT STATES SEND APPLICATIONS TO THE U.S. NUCLEAR REGULATORY COMMISSION ONLY IF THEY WISH TO POSSESS AND USE LICENSED MATERIAL IN STATES SUBJECT TO U.S. NUCLEAR REGULATORY COMMISSION JURISDICTION.

1. THIS IS AN APPLICATION FOR *(Check appropriate item)*

- [ ] A. NEW LICENSE
- [ ] B. AMENDMENT TO LICENSE NUMBER _____
- [X] C. RENEWAL OF LICENSE NUMBER 29-01022-07

2. NAME AND MAILING ADDRESS OF APPLICANT *(Include Zip Code)*

Commander
U.S. Army Communications-Electronics Command
ATTN: AMSEL-SF-RER
Fort Monmouth, NJ 07703-5000

3. ADDRESS(ES) WHERE LICENSED MATERIAL WILL BE USED OR POSSESSED.

Building 9401, Evans Area
Fort Monmouth, NJ 07703-5000

4. NAME OF PERSON TO BE CONTACTED ABOUT THIS APPLICATION: Mr. Joseph Santarsiero or Mr. Gary Ziola

TELEPHONE NUMBER: (908) 544-3112

SUBMIT ITEMS 5 THROUGH 11 ON 8½ x 11" PAPER. THE TYPE AND SCOPE OF INFORMATION TO BE PROVIDED IS DESCRIBED IN THE LICENSE APPLICATION GUIDE.

5. RADIOACTIVE MATERIAL
a. Element and mass number, b. chemical and/or physical form, and c. maximum amount which will be possessed at any one time. See Supplement A

6. PURPOSE(S) FOR WHICH LICENSED MATERIAL WILL BE USED. See Supplement A

7. INDIVIDUAL(S) RESPONSIBLE FOR RADIATION SAFETY PROGRAM AND THEIR TRAINING AND EXPERIENCE. See Supplement B

8. TRAINING FOR INDIVIDUALS WORKING IN OR FREQUENTING RESTRICTED AREAS. See Supplement C

9. FACILITIES AND EQUIPMENT. See Supplement D

10. RADIATION SAFETY PROGRAM. See Supplement E

11. WASTE MANAGEMENT. See Supplement F

12. LICENSEE FEES *(See 10 CFR 170 and Section 170.31)*
FEE CATEGORY exempt
AMOUNT ENCLOSED $

13. CERTIFICATION. *(Must be completed by applicant)* THE APPLICANT UNDERSTANDS THAT ALL STATEMENTS AND REPRESENTATIONS MADE IN THIS APPLICATION ARE BINDING UPON THE APPLICANT.

THE APPLICANT AND ANY OFFICIAL EXECUTING THIS CERTIFICATION ON BEHALF OF THE APPLICANT, NAMED IN ITEM 2, CERTIFY THAT THIS APPLICATION IS PREPARED IN CONFORMITY WITH TITLE 10, CODE OF FEDERAL REGULATIONS, PARTS 30, 32, 33, 34, 35, AND 40 AND THAT ALL INFORMATION CONTAINED HEREIN, IS TRUE AND CORRECT TO THE BEST OF THEIR KNOWLEDGE AND BELIEF.

WARNING: 18 U.S.C. SECTION 1001 ACT OF JUNE 25, 1948, 62 STAT. 749 MAKES IT A CRIMINAL OFFENSE TO MAKE A WILLFULLY FALSE STATEMENT OR REPRESENTATION TO ANY DEPARTMENT OR AGENCY OF THE UNITED STATES AS TO ANY MATTER WITHIN ITS JURISDICTION.

SIGNATURE—CERTIFYING OFFICER	TYPED/PRINTED NAME	TITLE	DATE
MAJ, GS	for RONALD E. GORNTO COL, GS	Chief of Staff	18 APR 1991

14. VOLUNTARY ECONOMIC DATA

a. ANNUAL RECEIPTS

- [ ] <$250K
- [ ] $250K–500K
- [ ] $500K–750K
- [ ] $750K–1M
- [ ] $1M–3.5M
- [ ] $3.5M–7M
- [ ] $7M–10M
- [ ] >$10M

b. NUMBER OF EMPLOYEES *(Total for entire facility excluding outside contractors)*

c. NUMBER OF BEDS

d. WOULD YOU BE WILLING TO FURNISH COST INFORMATION *(dollar and/or staff hours)* ON THE ECONOMIC IMPACT OF CURRENT NRC REGULATIONS OR ANY FUTURE PROPOSED NRC REGULATIONS THAT MAY AFFECT YOU? *(NRC regulations permit it to protect confidential commercial or financial—proprietary—information furnished to the agency in confidence)*

- [ ] YES
- [ ] NO

FOR NRC USE ONLY

PE OF FEE	FEE LOG	FEE CATEGORY	COMMENTS	APPROVED BY
AMOUNT RECEIVED	CHECK NUMBER		114634	DATE

SUPPLEMENT A

1. Reference: Items 5 and 6, NRC Form 313.

2.

a. Element & Mass Number	b. Chemical and/or Physical Form	c. Maximum Amount Which Will be Possessed at Any One Time
A. Cobalt 60	[redacted]	[redacted]
B. Cesium 137		

3. Authorized Use A and B will be used in a custom designed irradiator facility for irradiation of materials other than explosives, flammables or corrosives.

4. The manufacturer of the Cobalt 60 sealed source is the U.S. Radium Corporation. The design of the source is as specified in [redacted] Sealed source drawings are at enclosures 1 and 2 for details regarding the construction of the sealed source.

[redacted] The manufacturer of the Cesium 137 sealed source is the [redacted] Technical data for the sealed source design is at enclosures 3 and 4. The Cesium 137 source is used with the R-Metrics Limited Source Container. Engineering drawings for the R-Metrics Limited Source Container are attached at enclosures 5 through 12.

6. Sealed source activity has been recalculated as of February 1991.

a. Cobalt 60: [redacted] (originally [redacted]

b. Cesium 137: [redacted] (originally [redacted])

5. The Picker Corporation [redacted] Cobalt 60 sealed source, originally authorized under this license, has been disposed of as radioactive waste. The source was consigned to the Barnwell Waste Management Facility on 9 January 1989 by Chem-Nuclear Systems Inc.

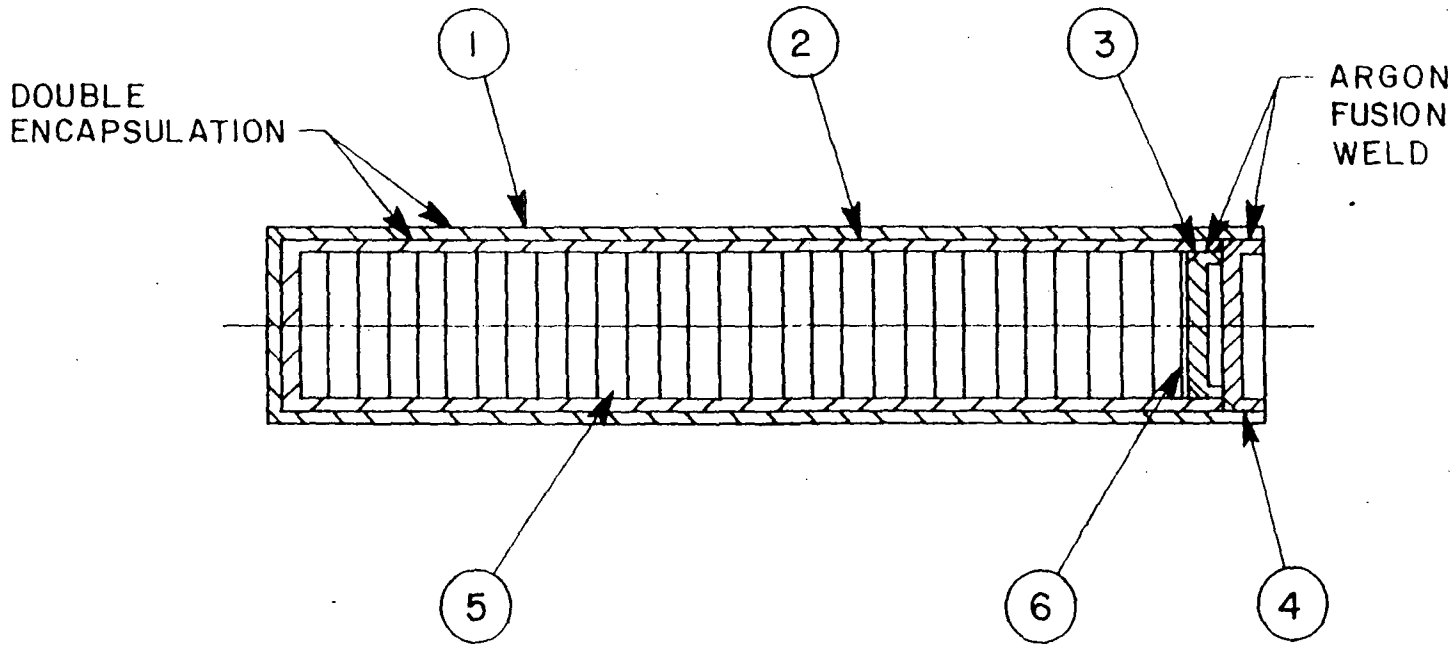

1. OUTER CAN, 304L STAINLESS STEEL
2. INNER CAN " " "
3. INNER CAP " " "
4. OUTER CAP " " "
5. WAFER, NICKEL PLATED COBALT
6. SPRING, 020 DIA WIRE STAINLESS STEEL

COBALT 60 SEALED SOURCE

ENCL 1

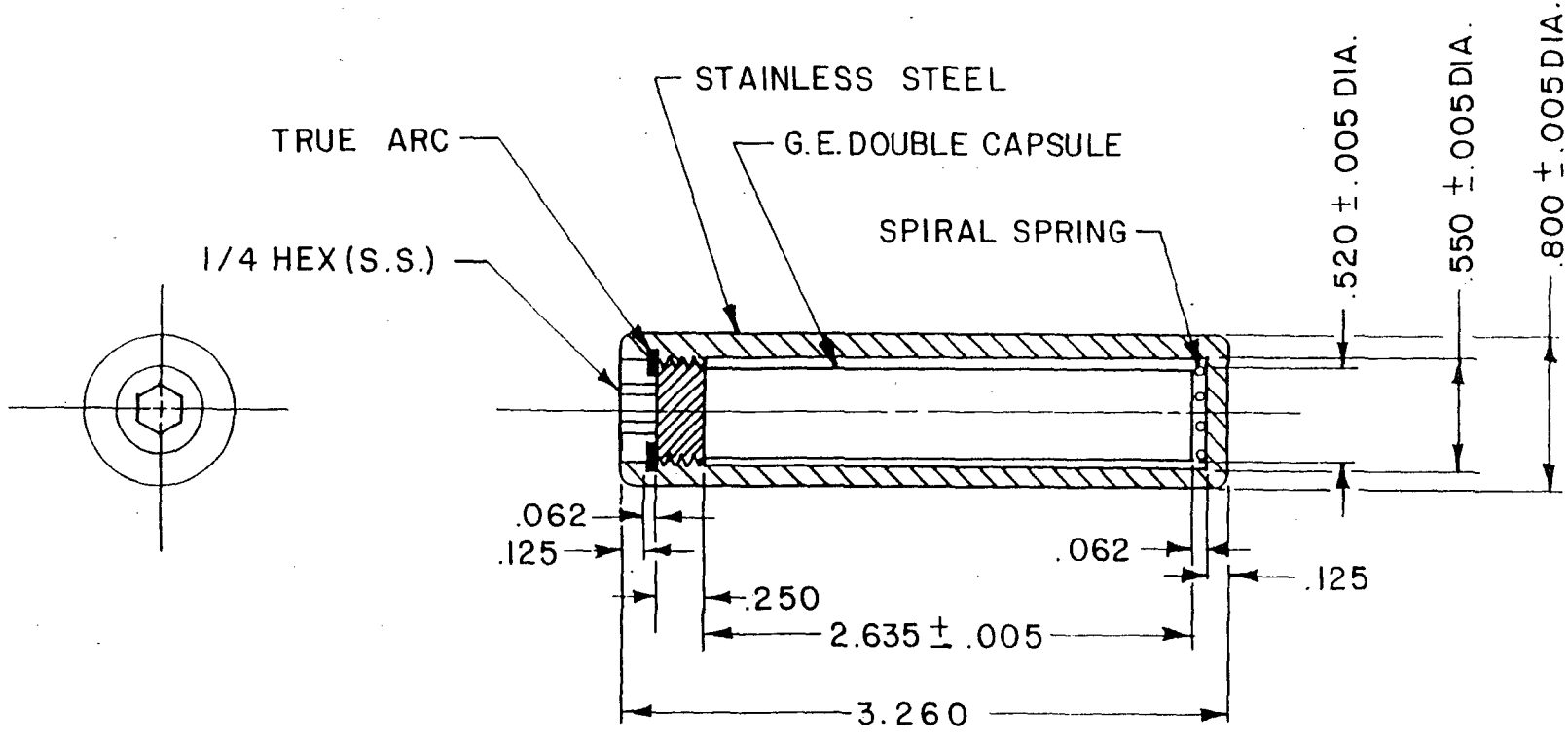

OUTER CAPSULE FOR COBALT 60 SOURCE

Cesium-137 source capsules

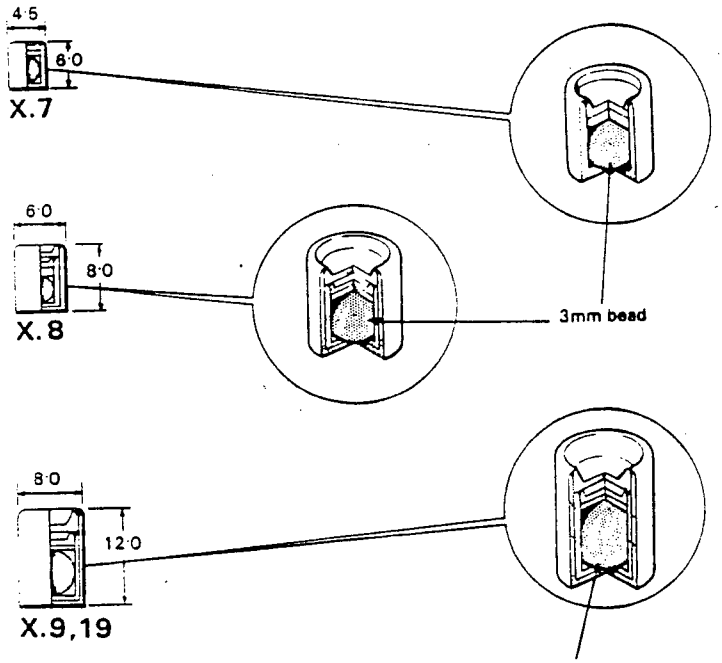

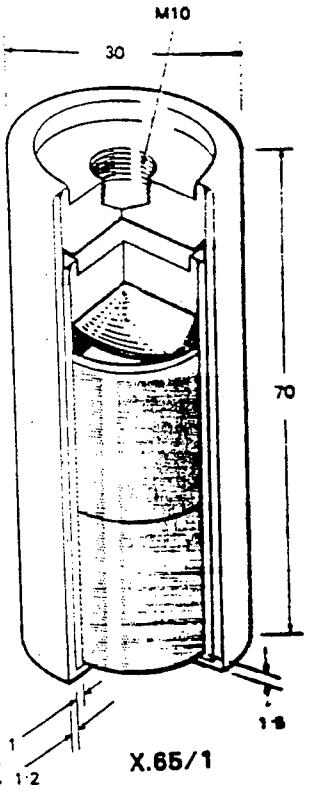

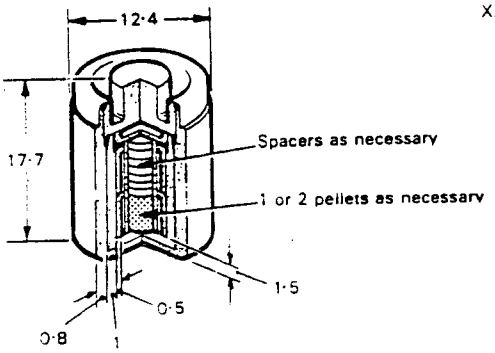

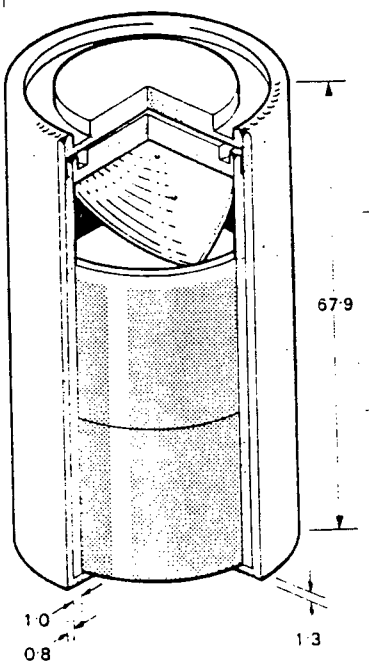

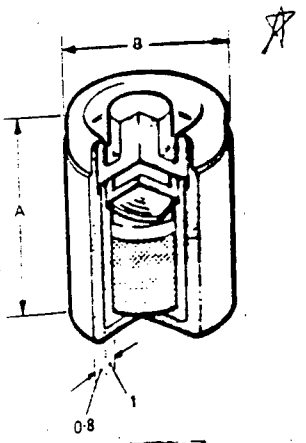

Capsule dimensions

capsule	height 'A' mm	diameter 'B' mm
X.60/1	17.7	12.4
X.61/1	20.2	14.6
X.62/1	22.7	17.4
X.63/1	26.2	21.2
X.64/1	28.2	27.0

Dimensions in mm

FNCL .3

Cesium-137 sources

Sources up to 3 curies contain the radionuclide as a bead of cesium glass; the higher activity sources contain compressed pellets of cesium chloride.

Encapsulation is in welded stainless steel. Sources up to 300mCi are supplied with single or double encapsulation; higher activity sources are doubly encapsulated.

Quality control

Wipe test A
Bubble test D
Immersion test M (for capsules X.7, 8, 9, 19)
Helium leak test H (for capsules X.60/1–66/1)

A Test Report is supplied with each source or batch of sources, stating the measured equivalent activity for sources up to 3Ci; for higher activity sources, the nominal content is stated, together with the exposure rate measured according to the procedure in ICRU Report 18.

Prototype testing:

capsule type	IAEA Special form	ANSI Classification
X.7	SFC.23	C64444
X.8	SFC.24	C64444
X.9	SFC.25	C64444
X.19	SFC.117	C64444
X.60/1		E63534
X.60/2		E63534
X.61/1		E63534
X.62/1		E63534
X.63/1		E63534
X.64/1		E63534
X.65/1		E63534
X.66/1		E63534

nominal equivalent activity*	single encapsulation type X.7 source code	double encapsulation type	double encapsulation source code
1mCi	CDC.701	X.8	CDC.801
3mCi	CDC.703	X.8	CDC.803
5mCi	CDC.704	X.8	CDC.804
10mCi	CDC.705	X.8	CDC.805
20mCi	CDC.706	X.8	CDC.806
30mCi	CDC.707	X.8	CDC.807
50mCi	CDC.708	X.8	CDC.808
100mCi	CDC.709	X.8	CDC.809
200mCi	CDC.710	X.8	CDC.810
300mCi	CDC.711	X.8	CDC.811
500mCi		X.19	CDC.190
1Ci		X.19	CDC.191
[illegible]		X.19	CDC.192
[illegible]		X.9	CDC.93

*tolerance −0, +25%
for definition of equivalent activity, see page 00.

nominal content†	
[illegible]	[illegible]

†dependent on specific activity of the caesium chloride; content normally within −0, +25% of stated nominal.

Availability

Sources up to [illegible]
Sources over [illegible]

Cesium-137 sources, 3mCi [illegible] can be supplied calibrated with measured radiation output (code H.50).
Calibration accuracy: ±5% overall uncertainty.

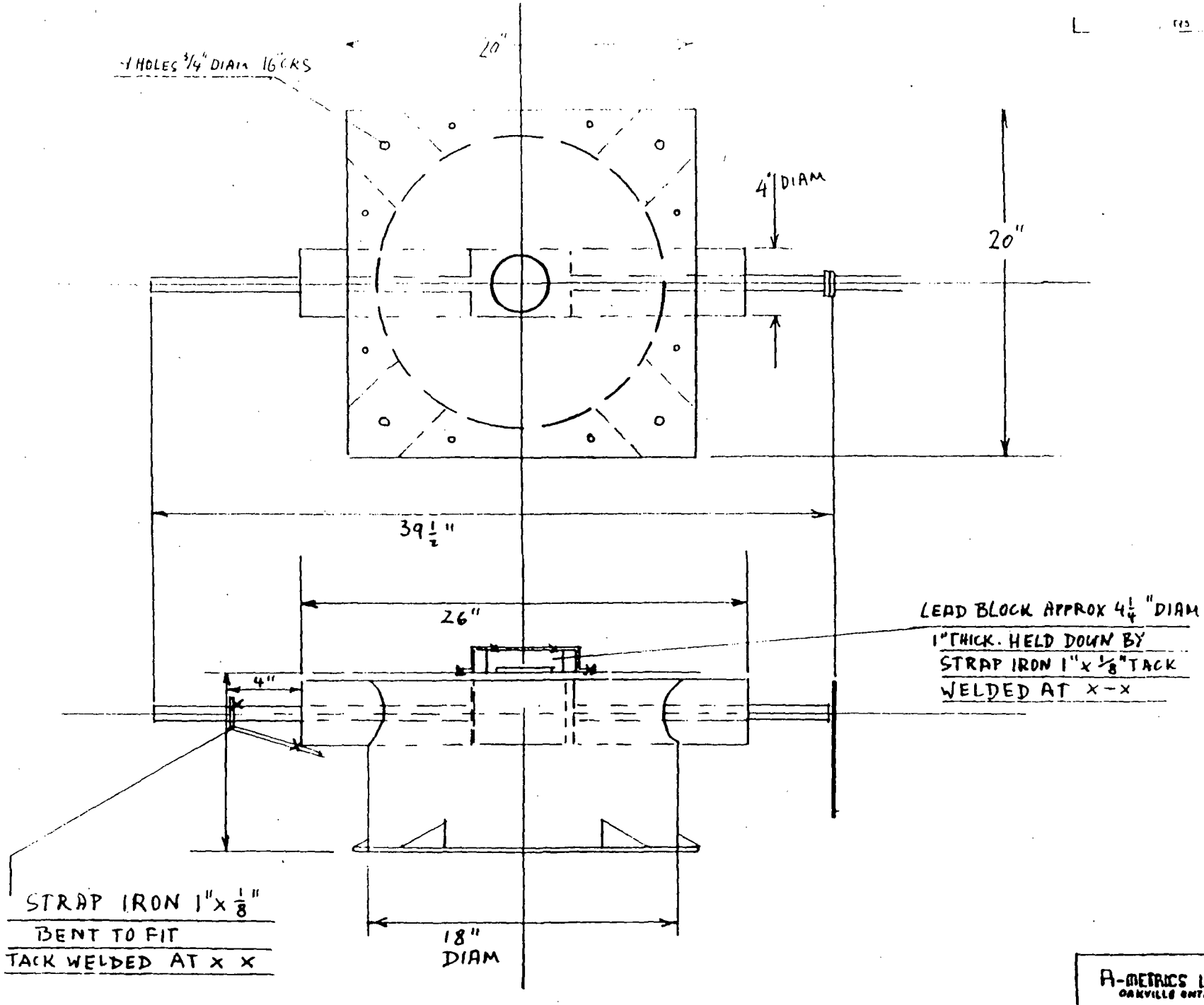

MODIFICATIONS MADE FOR TRUCK SHIPMENT

MATERIAL WELDED STEEL CONTAINER FILLED WITH LEAD	DIMENSIONS INCHES	SCALE	ENG. APPR. RTM
FINISH	WEIGHT	DRAWN BY RTM	APPR. BY
		DATE APR 2.85	

A-METRICS LTD
OAKVILLE ONTARIO

Cs 137 CONTAINER
PROPOSED MODIFICATIONS

ENCL 5

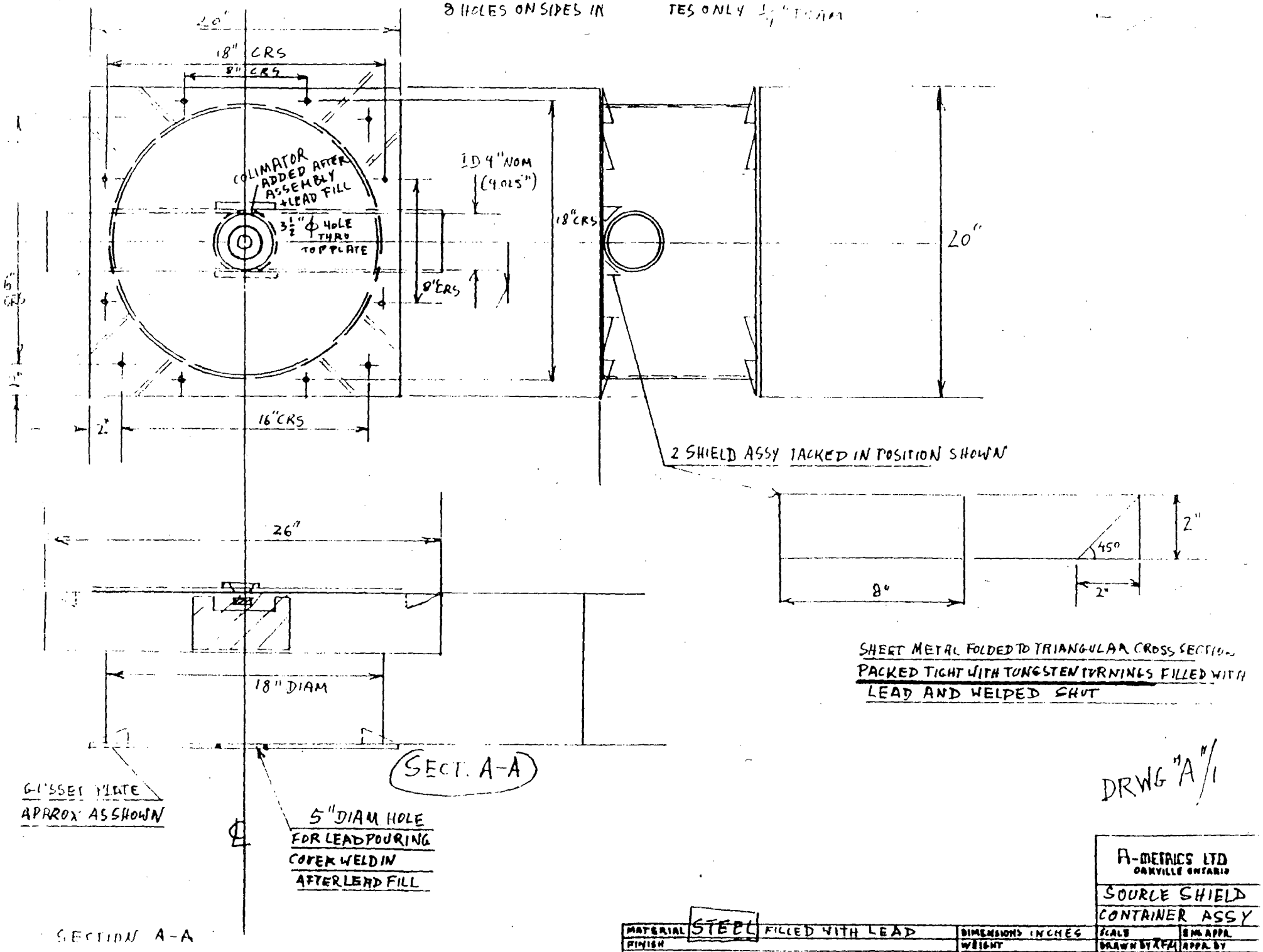
8 HOLES ON SIDES IN
TES ONLY
20"
18" CRS
8" CRS
COLIMATOR ADDED AFTER ASSEMBLY + LEAD FILL
3½" Φ HOLE THRU TOP PLATE
ID 4" NOM (4.025")
18" CRS
8" CRS
20"
16" CRS
2"
2 SHIELD ASSY TACKED IN POSITION SHOWN
26"
18" DIAM
GUSSET PLATE APPROX AS SHOWN
5" DIAM HOLE FOR LEAD POURING COVER WELD IN AFTER LEAD FILL
SECT. A-A
SECTION A-A
2"
45°
8"
2"
SHEET METAL FOLDED TO TRIANGULAR CROSS SECTION PACKED TIGHT WITH TUNGSTEN TURNINGS FILLED WITH LEAD AND WELDED SHUT
DRWG "A"/1
A-METRICS LTD
OAKVILLE ONTARIO
SOURCE SHIELD CONTAINER ASSY
MATERIAL STEEL FILLED WITH LEAD
FINISH
DIMENSIONS INCHES
WEIGHT
SCALE
DRAWN BY
DATE 15 OCT 81
APPR BY

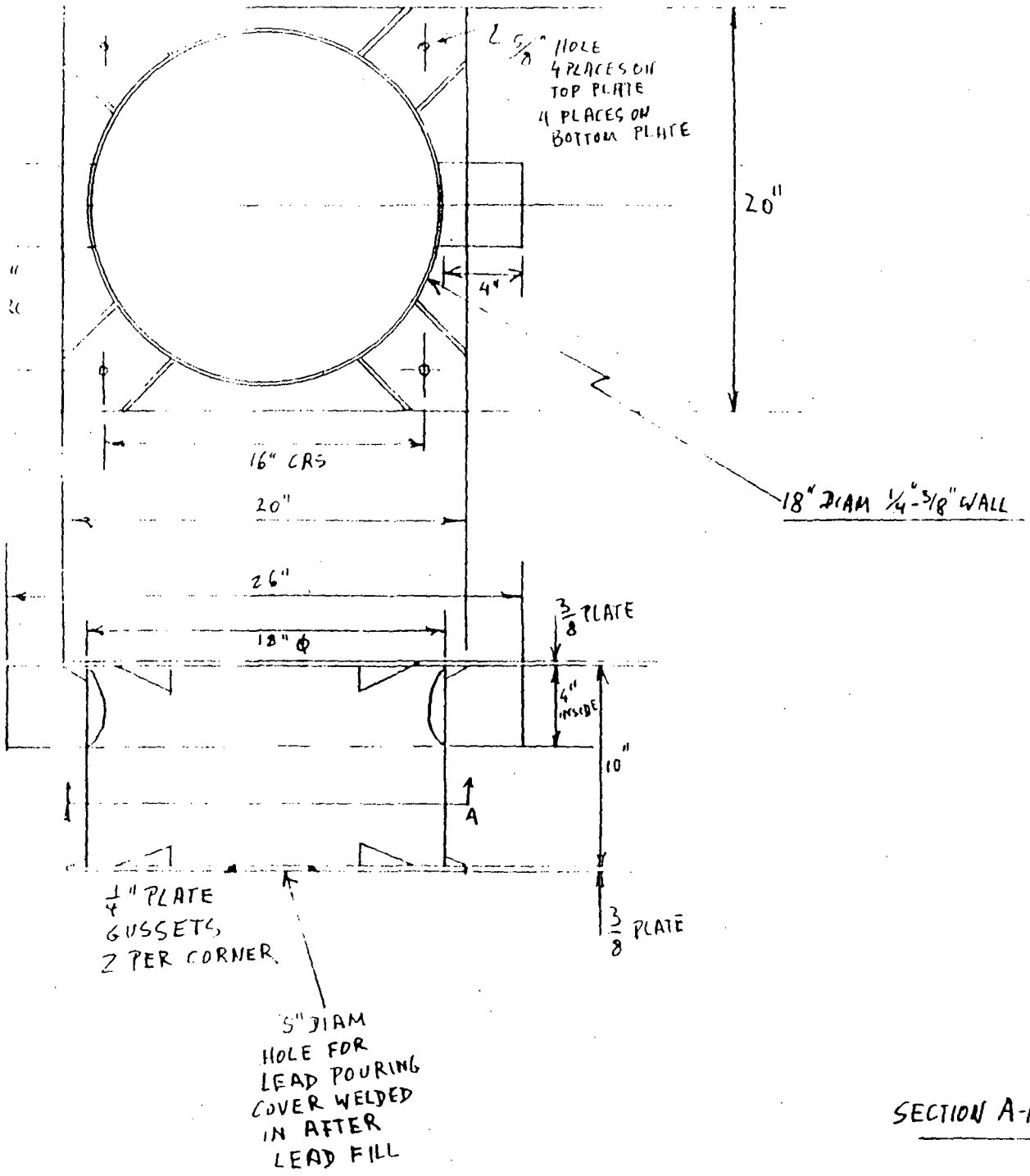

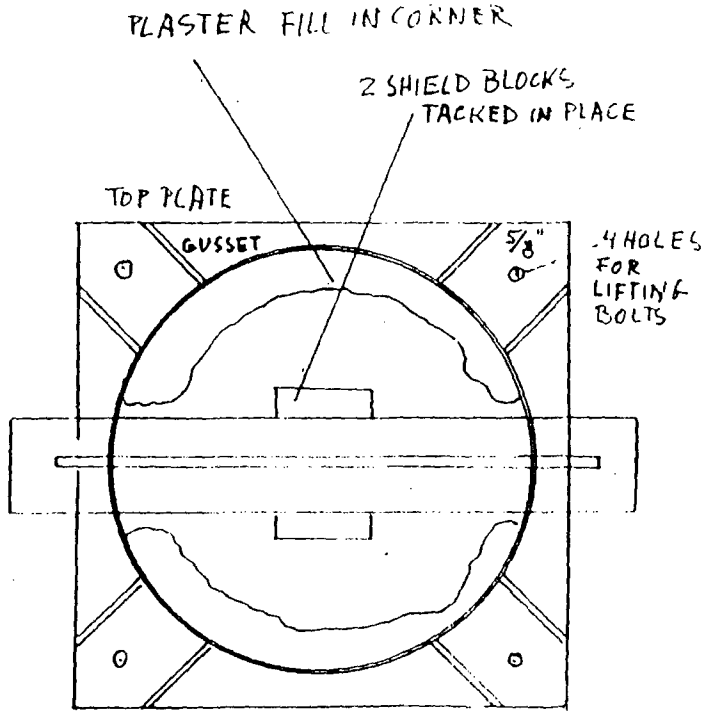

DRW6 "A"-2

SECTION A-A SET UP TO POUR LEAD

486 WYECROFT 845-6036 A-METRICS LTD OAKVILLE ONTARIO			
CESIUM 137 SOURCE SHIELD			
MATERIAL MILD STEEL PIPE + PLATE	DIMENSIONS INCHES	SCALE	EMB APPL. RFA
FINISH WELDED CONSTRUCTION NO FINISH	WEIGHT	DRAWN BY RFA	APPR. BY
UNLESS OTHERWISE STATED TOLERANCE DIMENS. ±	DEC. DIM. ±	DATE 7 AUG 80	

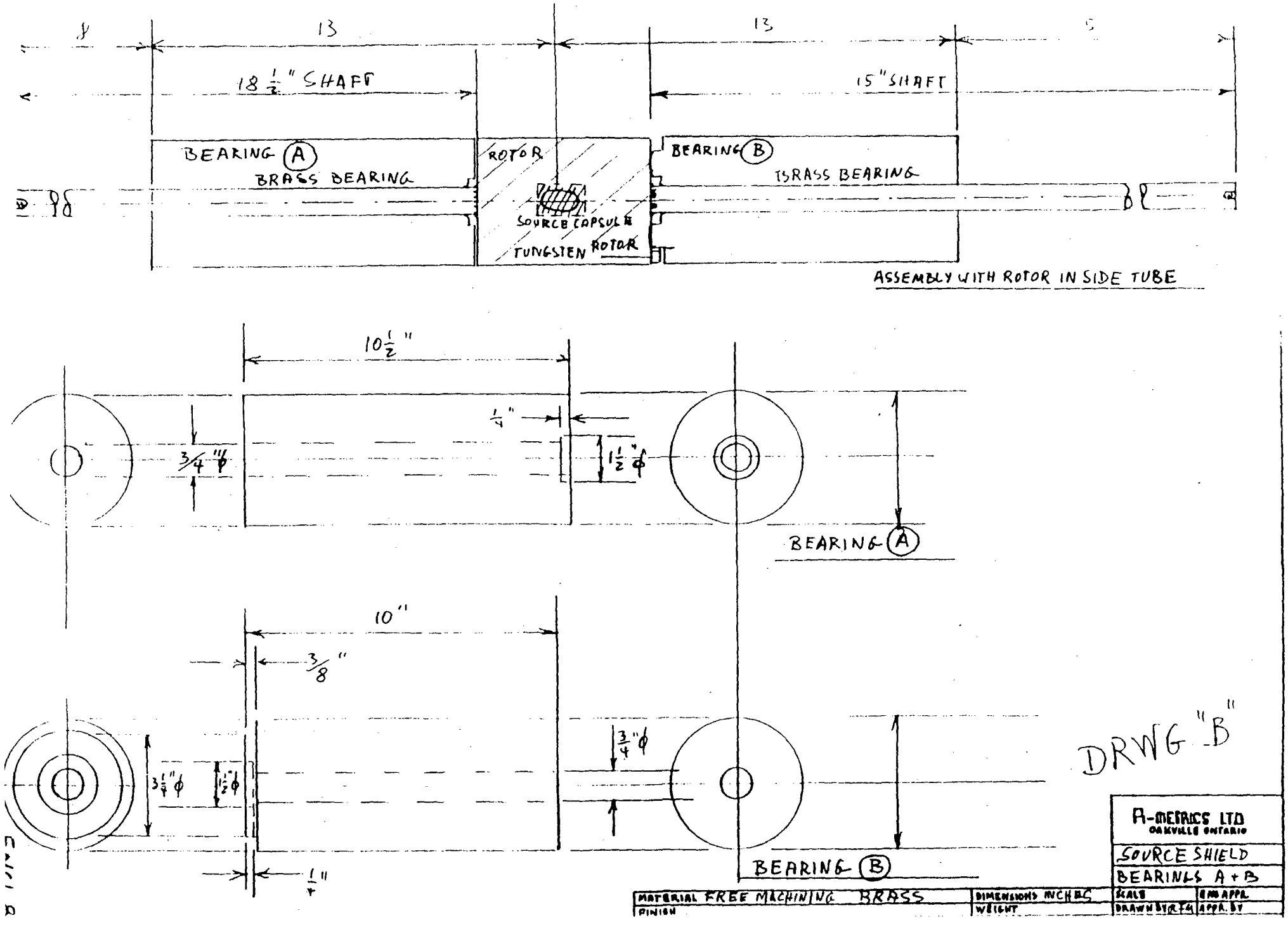
8
13
13
5
18 1/2" SHAFT
15" SHAFT
BEARING (A)
BRASS BEARING
ROTOR
BEARING (B)
BRASS BEARING
SOURCE CAPSULE
TUNGSTEN ROTOR
ASSEMBLY WITH ROTOR IN SIDE TUBE
10 1/2"
1/4"
3/4" ϕ
1 1/2" ϕ
BEARING (A)
10"
3/8"
3 1/4" ϕ
1 1/2" ϕ
3/4" ϕ
1/4"
BEARING (B)
DRWG "B"
A-MERICS LTD
OAKVILLE ONTARIO
SOURCE SHIELD
BEARINGS A + B
MATERIAL FREE MACHINING BRASS
FINISH
DIMENSIONS INCHES
WEIGHT
SCALE
DRAWN BY R.F.G.
ENG APPR.
APPR. BY

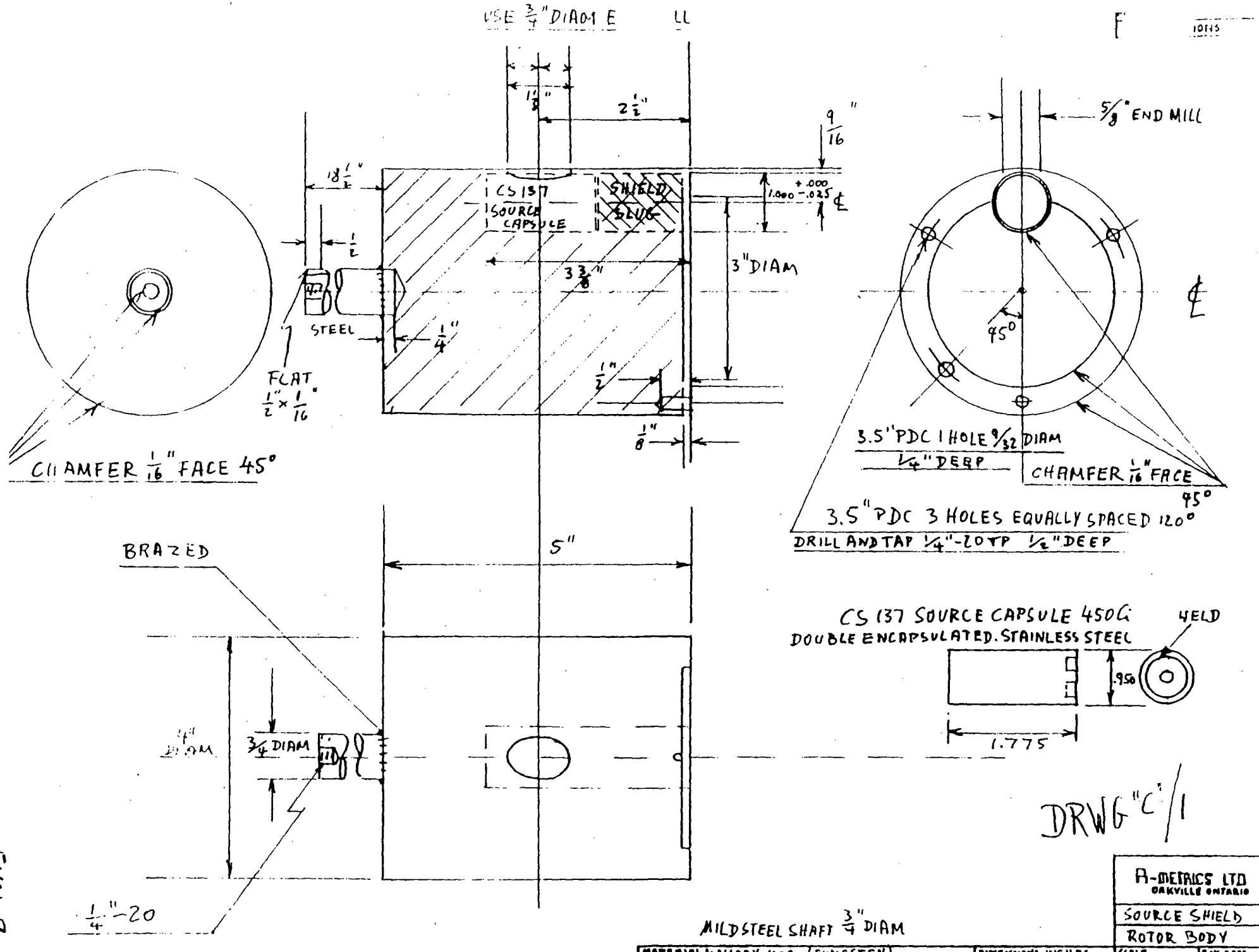
USE 3/4" DIAM E
LL
F
10145
1 1/8"
2 1/2"
9/16"
5/8" END MILL
18 1/2"
1/2
CS 137 SOURCE CAPSULE
SHIELD SLUG
1.000 +.000 -.025
℄
3 3/8"
3" DIAM
STEEL
1/4"
FLAT 1/2" × 1/16"
1/2"
1/8"
CHAMFER 1/16" FACE 45°
45°
℄
3.5" PDC 1 HOLE 9/32 DIAM 1/4" DEEP
CHAMFER 1/16" FACE 45°
3.5" PDC 3 HOLES EQUALLY SPACED 120°
DRILL AND TAP 1/4"-20 TP 1/2" DEEP
5"
BRAZED
CS 137 SOURCE CAPSULE 450G
DOUBLE ENCAPSULATED. STAINLESS STEEL
WELD
.950
1.775
1" DIAM
3/4 DIAM
1/4"-20
DRWG "C"/1
MILD STEEL SHAFT 3/4" DIAM
A-METRICS LTD
OAKVILLE ONTARIO
SOURCE SHIELD
ROTOR BODY
MATERIAL MALLORY 1000 TUNGSTEN
DIMENSIONS INCHES
SCALE
ENG. APPR.
FINISH
WEIGHT
DRAWN BY RFM
APPR. BY

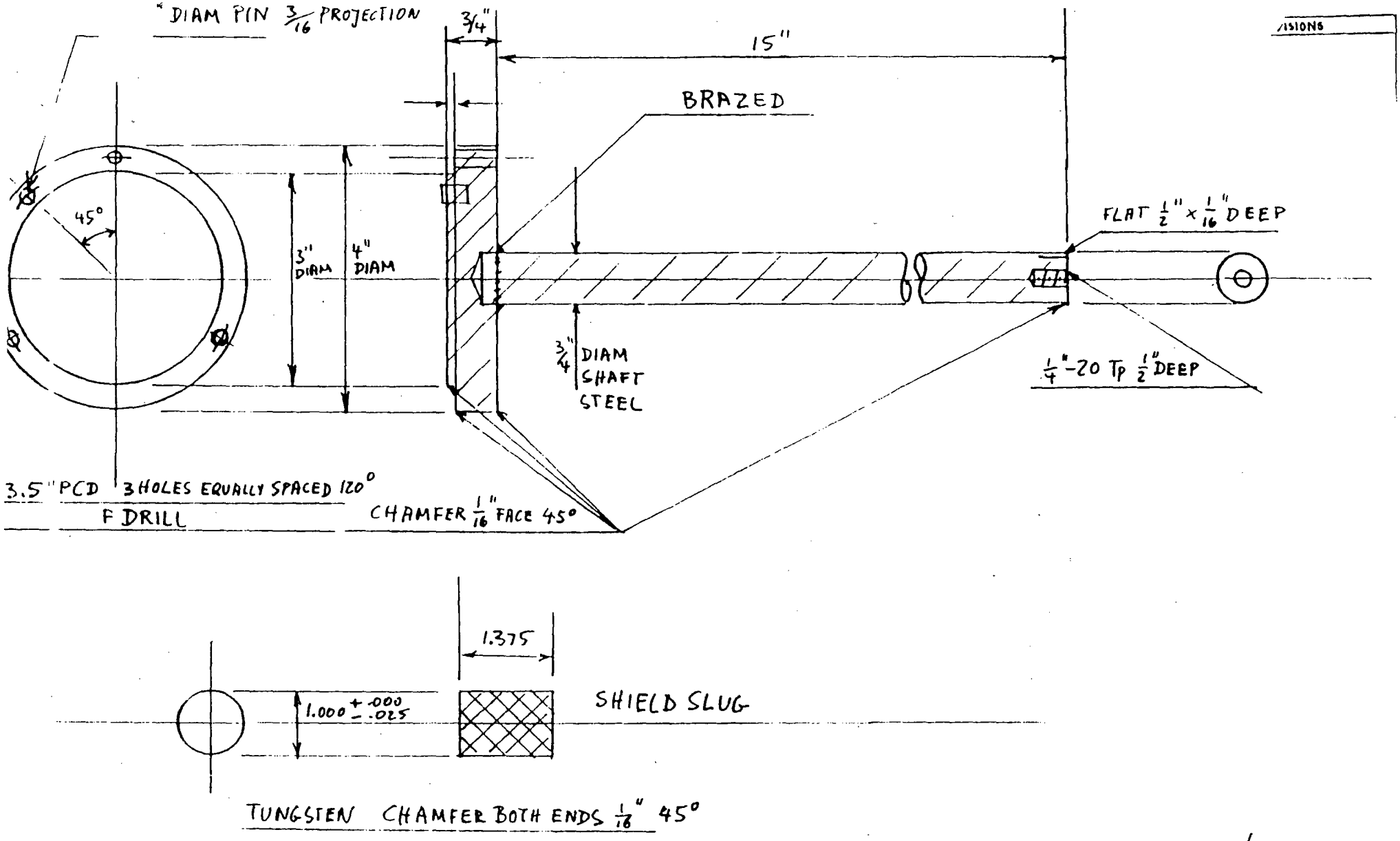

DRWG "C"/2

A-METRICS LTD OAKVILLE ONTARIO	
SOURCE SHIELD	
ROTOR END SHIELD SLUG	
SCALE	ENG APPR
DRAWN BY REN	APPR. BY
MATERIAL TUNGSTEN, STEEL SHAFT	DIMENSIONS INCHES
	WEIGHT

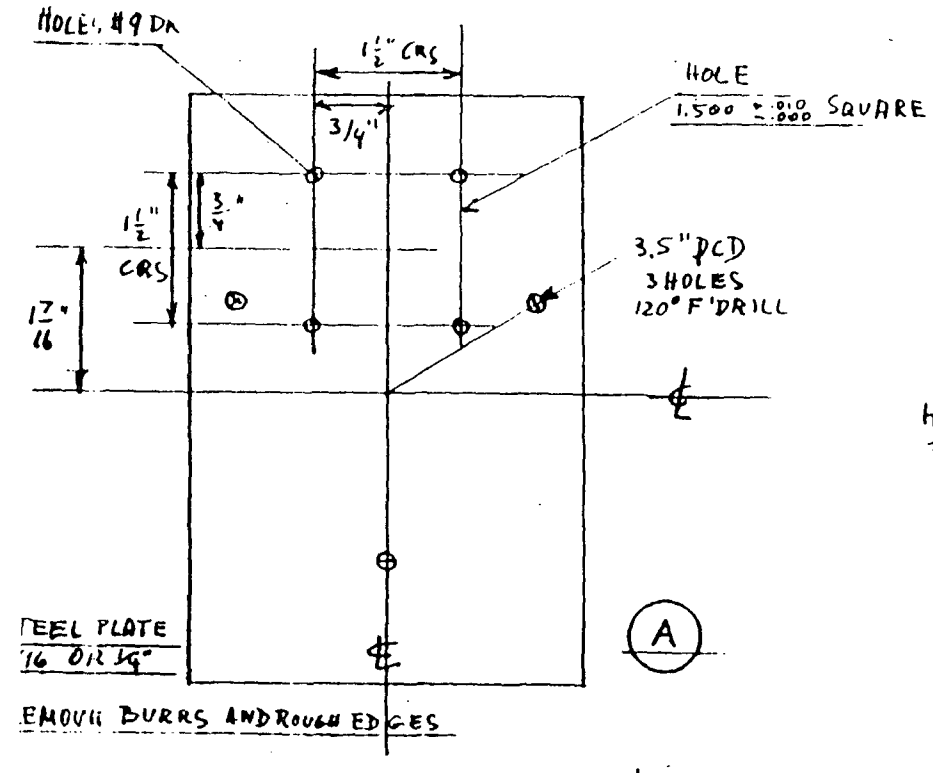

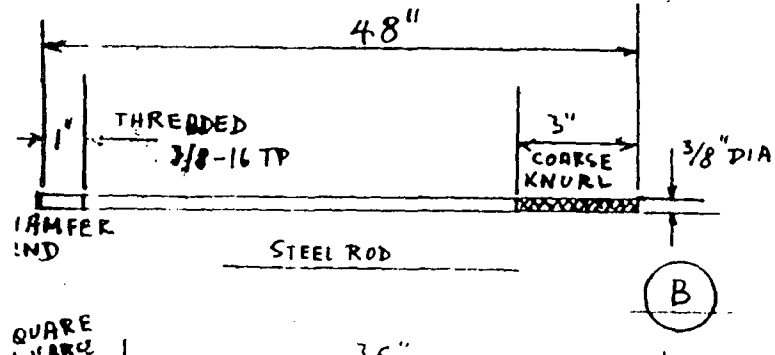

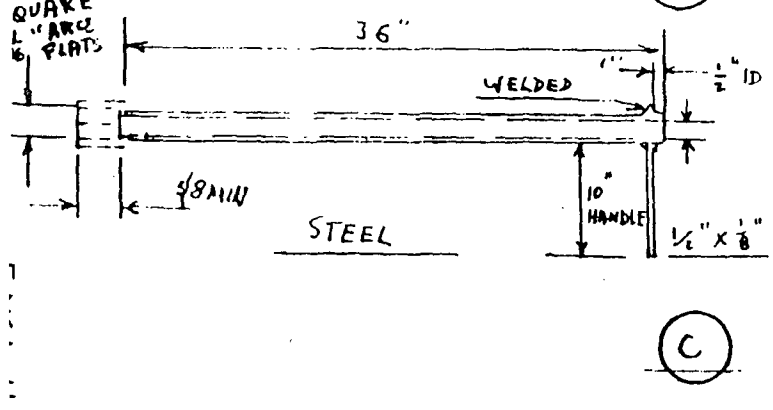

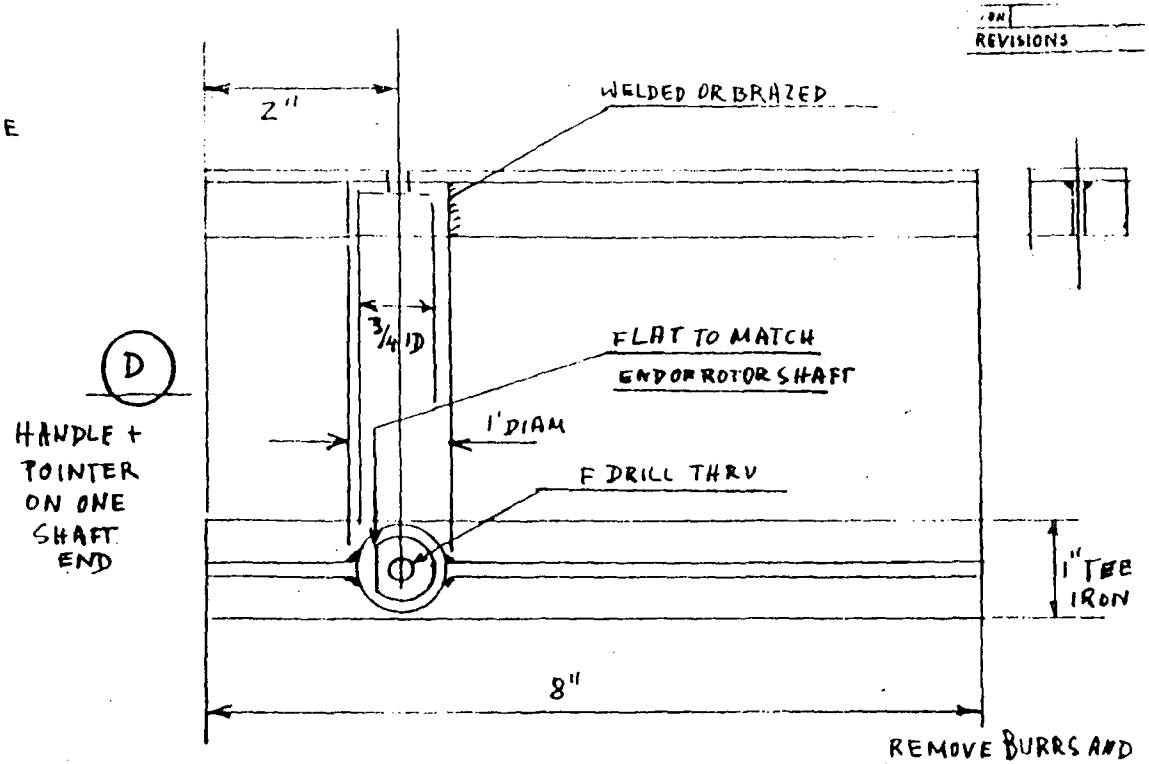

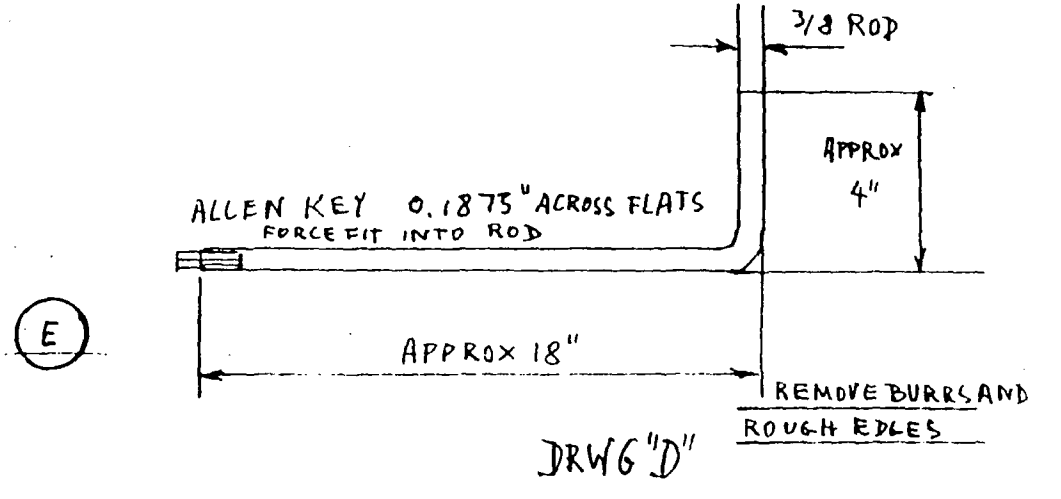

A-METRICS LTD
OAKVILLE ONTARIO

CS137 SOU

TRANSFER TOOLS

MATERIAL MILD STEEL	DIMENSIONS INCHES	SCALE	ENG APPR

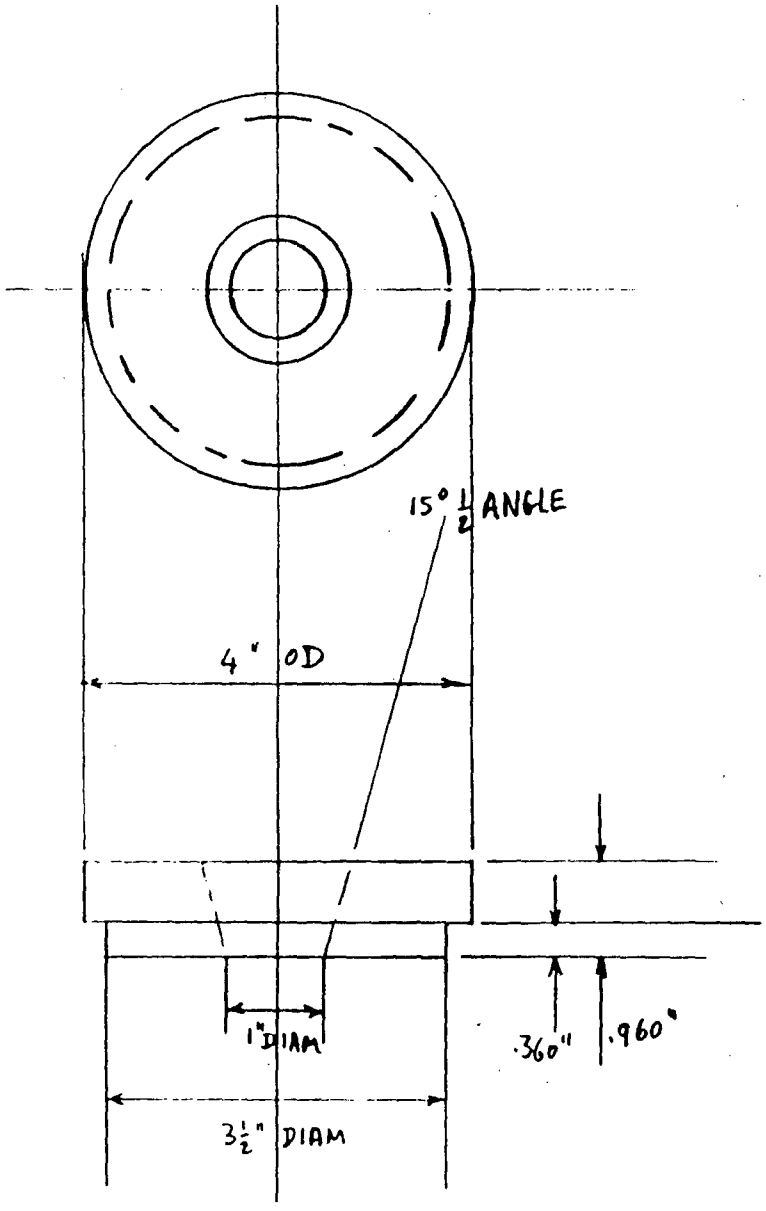

DRWG "E"

R-METRICS LTD OAKVILLE ONTARIO			
SOURCE SHIELD			
TOP SHIELD			
MATERIAL MALLORY 1000 TUNGSTEN	DIMENSIONS INCHES	SCALE	ENG APPR
FINISH	WEIGHT	DRAWN BY	APPR BY
TOLERANCE UNLESS OTHERWISE SPEC. FRAC. DIMENS. ±	DEC. DIM. ±	DATE 22 OCT 81	

Supplement B

1. Reference: Item 7, NRC Form 313.

2. Enclosures 1, 2 and 3 are the qualifications of the Radiation Protection Officer (RPO), Alternate RPO and License Manager, respectively.

JOSEPH M. SANTARSIERO, Health Physicist
Chief, Radiological Engineering Branch
U.S. Army Communications-Electronics Command (CECOM)
Fort Monmouth, NJ 07703-5000

EDUCATION

College: Seton Hall University, East Orange, New Jersey, Biology Program, 1972-1973.

Rutgers, The State University, New Brunswick, New Jersey, BS Degree in Biology, May 1978.

American Registry of Radiologic Technologies (ARRT).
Certifying Board of Nuclear Medicine Technology (CBNMT).

State of New Jersey Certification - Nuclear Medicine Technology.

Post Graduate: Rutgers, The State University, New Brunswick, New Jersey.
Masters program on graduate study in Radiation Science.

PROFESSIONAL EXPERIENCE

Oct 1986-Present	Supervisory Health Physicist	USACECOM Fort Monmouth, New Jersey

Responsible for directing and administrating Health Physics/Radiological safety programs for the life cycle management of CECOM radioactive commodities utilized worldwide; directs/administers the Fort Monmouth Radiation Protection Program for multiple type and quantities of radioactive material; develops and provides guidance and assistance to DoD activities and elements worldwide in the handling, storing and disposal of radioactive materials; provides guidance for and technical review of U.S. Nuclear Regulatory Commission (NRC) license applications and DA Radiation Authorizations for use of radioactive materials in CECOM systems or components thereof; develops technical criteria and provides these data to DA Major Commands to assure compliance with NRC and/or DA Radiation Authorization requirements; assures compliance with NRC and/or DA Radiation Authorization requirements; assures compliance throughout the Command for ionizing radiation producing devices utilized.

Feb 1984-Oct 1986 Senior Health Physicist

USACECOM
Fort Monmouth,
New Jersey

Responsible for health physics functions in the establishment and implementation of the CECOM Safety Program aimed at establishing life cycle controls of CECOM commodities utilizing radioactive material and ionizing radiation producing devices; responsible for the evaluation of radiological protection programs and radiation facilities to determine their adequacy and to insure compliance with DA Radiation Authorizations and NRC licenses; perform studies and evaluations necessary to minimize health risks to personnel.

Jul 1984-Dec 1985 Health Physics Consultant

Porter Consultants, Inc.
Ardmore, Pennsylvania

Acted as health physics consultant in Radiation Emergency Planning and in Nuclear Power Plant Radiation Monitoring Systems and Operations. Participated in numerous nuclear reactor facility drill operations as referee/observer.

Sep 1983-Feb 1984 Radiation Physicist

Department of
Environmental
Protection Trenton,
New Jersey

Approved or rejected licenses or amendments for possession and use of radioactive materials after assessment of user qualification, radiation safety program, and compliance with State rules and regulations. Performed inspections and violation investigations of facilities utilizing licensable materials. Conducted special projects evaluating radiation hazards and development of procedures for control and reduction of unnecessary radiation. Investigated violations and incidents, presenting possible radiation hazards with authority to establish improved radiation safety requirements. Member of emergency response team with authority to make immediate decisions relative to public health and safety regarding the control of radiation. Responded to all public and private inquiries involving radioactive materials or nonionizing radiations. Proposed regulations for NJ Administrative Code adoption.

Aug 1982-Sep 1983 Health Physics Consultant

Bio-Med Associates
Kenilworth, New Jersey

Acted as health physics consultant to hospitals, doctors, administrators, etc., regarding the safe and proper use of radiation and radioactive material. Determined the requirements of, and designed the shielding for X-ray installations and nuclear medicine departments. Evaluated radiation safety programs, prepared and gave lectures to physicians, nurses, administrators, etc., regarding radiation and radioactivity. Designed areas where radioactive materials are stored and/or used. Performed quality control procedures on X-ray machines and nuclear medicine instruments. Reviewed personnel monitoring records and methods, evaluated personnel performance regarding radiation and its use, performed sealed source leak tests on numerous radionuclides.

May 1978-Aug 1982 Senior Nuclear Medicine

Monmouth Medical
Technologist Center
Long Branch, New Jersey

Licensed to prepare and administer radiopharmaceuticals for diagnostic imagine of disease in or on human beings. Responsible for the quality control of imaging systems and computers, dose calculation and assay prior to administration, patient orientation to procedures and on-call emergency procedures. Performed various health physics activities, including radiation surveys, air sampling and wipe tests, leak testing of sealed sources, decontamination facilities and equipment, disposal of radioactive wastes, calibration of radiation survey and measurement instrumentation, record-keeping, etc., to insure compliance with NRC and New Jersey State Regulations.

FORMAL TRAINING

Topic	Duration of Training	On-The-Job	Formal Course
(1) Internship in Radiation Sciences; Rutgers University, New Brunswick, NJ (1977-1978)*	1 Year	Yes	Yes
(2) Radiation and Radioactivity; Rutgers Graduate School of Radiation Science, New Brunswick, NJ (Sep-Dec 1981)	1 Semester	No	Yes
(3) Radioactivity and the Environment; Rutgers Graduate School of Radiation Science, New Brunswick, NJ (Jan-Apr 1982)	1 Semester	No	Yes
(4) Special Topics in Radiological Health; Rutgers Graduate School of Radiation Science, New Brunswick, NJ (Jan-Apr 1982)	1 Semester	Yes	Yes
(5) Radiation Dosimetry; Rutgers Graduate School of Radiation Science, New Brunswick, NJ (Sep-Dec 1982)	1 Semester	No	Yes
(6) Radiation Biophysics; Rutgers Graduate School of Radiation Science, New Brunswick, NJ (Jan-Apr 1983)	1 Semester	No	Yes
(7) Radiation Chemistry; Rutgers Graduate School of Radiation Science, New Brunswick, NJ (Sep-Dec 1983)	1 Semester	No	Yes
(8) Nuclear Emergency Response, State of NJ, Depart of Environmental Protection (27, 28 Sep 1983)	16 Hours	No	Yes

FORMAL TRAINING

Topic	Duration of Training	On-The-Job	Formal Course
(9) Instrumentation and Radiation; Rutgers Graduate School of Radiation Science, New Brunswick, NJ (Jan-Apr 1984)	1 Semester	No	Yes
(10) Radioactive Materials Transportation; Department of Energy, Chicago, IL (20-24 Aug 1984)	40 Hours	No	Yes
(11) Nuclear Energy Technology; Rutgers Graduate School of Radiation Science, New Brunswick, NJ (Sep-Dec 1985)	1 Semester	No	Yes
(12) Army Nuclear Weapons Refresher Course, Albuquerque, N.M.	16 Hours	No	Yes
(13) Flag Officer Nuclear Accident Course, Alexandria, V.A.	16 Hours	No	Yes
(14) Senior Officer Nuclear Accident Course	16 Hours	No	Yes

** Course work included: Radiation Detection and Measurement; Nuclear Instrumentation; Radionuclide Chemistry; Radiation Protection; Radiation Biology.

EXPERIENCE WITH RADIOACTIVE MATERIALS:

Isotope	Maximum Amount	Type of Use	* Experience/ Location
1. $^{99}Mo/^{99m}Te$	2 Ci	For items 1 through 18, radiopharmaceutical preparation dose injection, and/or related diagnostic/ therapeutic procedures, health physics surveys, wipe test analysis, and instrument calibration.	5 yr/MMC,ENG
2. ^{131}I	20 mCi		5 yr/MMC
3. ^{75}Se	5 mCi		5 yr/MMC
4. ^{67}Ga	50 mCi		5 yr/MMC
5. $^{201}T1$	30 mCi		5 yr/MMC
6. ^{32}P	40 mCi		5 yr/MMC
7. ^{133}Xe	200 mCi		5 yr/MMC
8. $^{81}Rb/^{81m}Kr$	25 mCi		5 yr/MMC
9. ^{125}I	50 mCi		5/MMC
10. ^{123}I	10 mCi		5 yr/MMC
11. ^{137}Cs	130 Ci		7 yr/MMC
12. ^{226}Ra	800 mg		(5 yrs),FM (2 yrs) 5 yr/MMC,ENG 7 yr FM
13. ^{192}Ir	80 Ci		6 mo/MMC
14. ^{57}Co	25 mCi		5 yr/MMC
15. ^{133}Ba	10 mCi		5 yr/MMC
16. ^{51}Cr	25mCi		5 yr/MMC
17. ^{59}Cs	20 Ci		1 yr/MMC
18. ^{111}In	3 mCi		5 yr/MMC,
19. ^{60}Co	100 Ci		4 yr/MMC

Isotope	Amount	Type of Use	Location
		For items 19 through 25 experience consisted	(1 yr, FM (3 yr)
20. ^{137}Cs	1 Ci	of wipe tests, experiments and	7 yr/FM
21. ^{85}Kr	6 mCi	evaluations Research and Development Projects and Commodity Management	2 yr/FM
22. ^{239}Pu	0.001 Ci	utilizing these sources	7 yr/FM
23. ^{226}Ra	0.1 Ci		7 yr/FM
24. ^{90}Sr	200 uCi		2 yr/FM
25. ^{232}Th	0.001 Ci		7 yr/FM

*MMC = Monmouth Medical Center, Long Branch, NJ
ENG = Englewood Hospital, Englewood, NJ
FM = Ft Monmouth, NJ

CURRICULUM VITAE

Mark G. Zarick

PERSONAL DATA

Home Address: [redacted] Ex 6

Phone Numbers: (201) 341-2242 Home [redacted]

Date of Birth: [redacted] Ex 6

Place of Birth:

Marital Status:

EDUCATION

Rensselaer Polytechnic Institute, Troy, NY	BS Degree, Chemistry	1975-1979
Rensselaer Polytechnic Institute, Troy, NY	Graduate Study, Nuclear Chemistry	1979-1982

PROFESSIONAL MEMBERSHIPS

Plenary Member, Health Physics Society, 8 years

PROFESSIONAL EXPERIENCE

Safety Office, US Army Communications-Electronics Command, 2/85 to present:

Conduct the command health physics program through life cycle controls of CECOM radioactive and radiation producing devices. These controls are initiated throughout the lifetime of the devices and include but are not limited to the research, development, test, production, deployment and disposal stages of the devices. Prepare, review and defend CECOM Nuclear Regulatory Commission (NRC) licenses and DA Radiation Authorizations (DARA) for the world-wide possession of CECOM radioactive items. Conduct evaluations/inspections of the radiation protection programs of other Army major commands, installations, and Test, Measurement and Diagnostic Equipment activities to insure compliance with our NRC Licenses, DARAs and applicable regulations. Conduct the radiation protection program associated with the devices controlled by our NRC Licenses. This has included surveys, leak and wipe testing, planning the safety program for the re-wired vault irradiator, and calibrating alpha, beta and gamma survey instrumentation.

Health Physics Division, US Army Environmental Hygiene Agency, 8/84 to 2/85:

Served as Alternate Radiation Protection Officer and Custodian of DD Forms 1141 for the US Army Environmental Hygiene Agency (AEHA). Was responsible for ensuring the safety of all radioactive or radiation producing devices utilized at AEHA; conducted regular safety surveys; managed and monitored the AEHA film badge dosimetry program. Conducted radiation surveys, evaluations, special studies and consultations at Army, Defense Logistic Agency and DoD installations and activities. The purpose of these visits was to ensure that there were no adverse health or environmental effects resulting from the use of radioactive materials or radiation producing devices. Among the items surveyed were medical X-ray and fluorescence devices, industrial radiography sources, accelerators, radiac calibration sets and radioactive commodities. Evaluated the radiation protection programs associated with these items and provided commanders with written reports which included recommendations to improve their programs. Had the authority to halt operations when unsafe conditions existed. Served as a member of the Health Services Command Inspector General Team; inspected Army Medical Centers, Medical Activities and Dental Activities to insure that their radiation protection programs were in compliance with Army, federal and Joint Commission for the Accreditation of Hospitals standards and regulations. Reviewed and made recommendations regarding Nuclear Regulatory Commission Licenses and Department of the Army Radiation Authorizations.

Laser Branch, US Army Environmental Hygiene Agency, 4/84 to 8/84:

Conducted optical radiation protection surveys and special studies of US Army installations and other federal agencies. The purpose of these surveys and studies was to evaluate the procedures used to protect personnel from receiving hazardous exposures to laser radiation and other high intensity optical sources; to insure that laser safety programs were in compliance with Army, Food and Drug Administration and international standards and regulations; to train personnel using hazardous lasers on laser safety procedures; to brief commanders on the findings of these surveys; and to write technical reports detailing survey results and making recommendations to reduce or eliminate potential hazards to personnel.

Microwave Branch, US Army Environmental Hygiene Agency, 9/82 to 4/84:

Managed, planned and conducted surveys at Army installations of electronic equipment in order to identify the health hazards associated with radio frequency (RF), microwave and ionizing radiation sources. These sources included radar systems, RF communications equipment, jammers, particle accelerators, microwave ovens, medical diathermy and ultrasonic equipment. Was responsible for establishing microwave/RF radiation hazard criteria and guidelines in determining and analyzing the nature and degree of radiation hazard, the adequacy of engineering controls and protective equipment in use. Researched, developed and compiled data outlining the shortcomings and operating parameters of commercial survey instruments in use in the Army. Evaluated specific hazards to personnel during maintenance, repair and operations and coordinated Army-wide and permanent records established for the purpose of providing guidance and advice to Army installations.

Conducted training programs regarding RF/microwave safety topics; this included three Laser-Microwave Hazards Courses, two Microwave Oven Survey Techniques Workshops and other lectures to conferences conducted at AEHA.

COURSES AND TRAINING COMPLETED

Mo/Yr Completed	Total Hours	Subject	Name, Location and School	Certificate or Diploma
December 1990	80	Nuclear Emergency Team Operations Course	Interservice Nuclear Weapons School, Kirtland AFB, NM 87117	Certificate
October 1986	40	Army Medical Dept. Physics in Military Medicine Conference	US Army Environmental Hygiene Agency APG, MD 21010-5422	Certificate
October 1986	200	Applied Health Physics Course	Oak Ridge Associated Universities, PO Box 117 Oak Ridge, TN 37831	Certificate
January 1986	40	Medical Effects of Nuclear Weapons	Armed Forces Radiobiology Research Institute, Bethesda, MD	Certificate
October 1985	40	Nuclear Medical Science Officer Workshop	US Army Environmental Hygiene Agency, APG, MD	Certificate
May 1985	40	Radioactive Material Shipping Regulatory Awareness Course	Chem-Nuclear Systems, Inc., Columbia, SC	Certificate
February 1985	40	Nuclear Hazards Training Course	Interservice Nuclear Weapons School Kirtland AFB, NM 87117	Certificate
September 1984	16	Basic Radiological Health Course	Health Physics Society Baltimore-Washington Chapter	Certificate
October 1983	40	Nuclear Medical Science Officer	US Army Environmental Hygiene Agency, APG, MD	Certificate
April 1983	40	Laser-Microwave Hazards Course	US Army Environmental Hygiene Agency, APG, MD	Certificate
May 1980	1 sem	Nuclear and Radiation Chemistry	Rensselaer Poly Inst Troy, NY	
May 1980	1 sem	Nuclear Applications in Medicine	Rensselaer Poly Inst Troy, NY	
Dec 1980	1 sem	Radiological Engineering	Rensselaer Poly Inst Troy, NY	

TEACHING EXPERIENCE

Served as a teaching assistant for two years at Rensselaer Polytechnic Institute. Taught numerous lectures, laboratories, and graded papers and tests; taught two Microwave Oven Techniques Workshops while attached to the US Army Environmental Hygiene Agency (AEHA); taught in three Laser Microwave Hazards Courses at AEHA. This is a comprehensive 1-week course which deals with laser and microwave sources: what they are, how they produce energy, how to measure it, and how to effectively preclude hazardous exposures to personnel using these sources; presented a lecture on Microwave Radiation Safety at the 1983 Nuclear Medical Science Officer Workshop; addressed physics students at Miami Dade Community College, Miami, Florida on the topic of "The Physics of the Chernobyl Accident" were well received and resulted in my receiving a Certificate of Appreciation; was a guest lecturer at the 1986 Army Medical Department Physics in Military Medicine Conference; developed and teach on a continuing basis the "Army National Guard Radiation Protection Officer Course", a 40 hour course designed to qualify personnel as State RPOs; developed and teach the "Army National Guard Radioactive Commodity and Transportation Course", a 16 hour course for transportation personnel; present other guest lectures to Army personnel on a regular basis.

EXPERIENCE WITH RADIONUCLIDES

Isotope	Maximum Activity (in Ci)	Duration of Experience	Type of Experience
^{3}H	30	2 Years	For all below, research, laboratory analysis, surveys and wipe/leak testing
^{57}Co	0.01	3 Years	
^{60}Co	13,000	3 Years	
^{60}Co	153	3 Years	
^{60}Co	0.08	3 Years	
^{60}Co	429	3 Years	
^{90}Sr	0.14	3 Years	
^{90}Sr	0.05	3 Years	
^{241}Am	0.01	3 Years	
^{137}Cs	0.12	3 Months	
^{137}Cs	400	3 Years	
^{137}Cs	6.98	3 Years	
^{137}Cs	63	3 Years	
^{226}Ra	0.02	2 Years	
^{238}Pu	49	3 Years	
^{239}Pu	0.05	2 Years	
^{241}Am	0.01	2 Years	

EXPERIENCE WITH OTHER RADIATION PRODUCING DEVICES

Device	Duration of Experience	Type of Experience
Co-60 Pool Irradiator	2 years	Training, Use and Oversight
Co-60 Picker Irradiator	2 years	Training, Use and Oversight
Cs-137 Irradiator	2 years	Training, Use and Oversight
Diagnostic & Industrial X-Ray Machines	>40 Hrs.	Health Physics Surveys
Linear Accelerator (Rensselaer Poly Inst)	4 Weeks	Health Physics Surveys

EXPERIENCE WITH RADIATION

1981-2: As a graduate student at Rensselaer Polytechnic Institute, Troy, NY, worked with an X-ray fluorescence diffraction experiment as part of my thesis work. Performed volunteer work at the Institute's Linear Accelerator. Used sealed sources and unknown sources as part of this work.

1982-1985: As an Army health physicist stationed at the US Army Environmental Hygiene Agency, APG, MD, conducted leak and wipe testing of various sealed sources, check sources, and gas chromatograph sources. Conducted surveys of radiobiology laboratories and other radiation laboratories at the Agency. Utilized various radiation detection instrumentation performed operational testing of visual and audible alarms as part of this work. Conducted surveys of X-Ray devices.

1985-Present: As a health physicist at my current position at Fort Monmouth, NJ, have worked with the wide variety of instruments and sources that we use in order to maintain the NRC Licenses and DA Radiation Authorizations issued to this Command. In this regard, have worked with our various irradiators and their radiation programs; have done alpha, beta and gamma spectroscopy experiments; have used our various calibrators to calibrate radiation detection equipment; participated in our installation radon program and analyzed collected samples; am a member of the Fort Monmouth Radiation Control Committee.

STEVEN A. HORNE,
Chief, Safety Office
U.S. Army Communications-Electronics Command (CECOM)
Fort Monmouth, New Jersey 07703-5000

EDUCATION

College:	Old Dominion University, Norfolk, VA Associates Degree in Applied Science, 1964
	Catholic University, Washington, DC BSE in Nuclear Science and Engineering, 1975
Post Graduate:	Catholic University, Washington, DC Graduate courses in Nuclear Science and Engineering

PROFESSIONAL EXPERIENCE

May 1986-Present	Chief, Safety Office	CECOM Fort Monmouth, NJ

Responsible for the command safety program including the overall planning, directing and administering of complex and comprehensive programs encompassing Radiological Safety, Industrial/Occupational Safety, Environmental and System Safety Engineering. Ensures that all management objectives are implemented, to include a comprehensive accident prevention program for the conduction of the OSHA programs for all CECOM and tenant activities at Fort Monmouth. Ensures that the overall safety of developed/deployed CECOM equipments throughout all phases of the life cycle are achieved. Serves as Radiation Control Officer and chief technical advisor to the National Guard Bureau. Designated as the command Review and Materiel Release Board member for the resolution, correction and ultimate approval for safety release of equipment. Develops and sets office objectives/policies, and supervises/provides professional leadership for up to 38 personnel of various disciplines. Serves as the technical advisor and consultant to the Commanding General, Command Group and senior management on all safety program aspects.

May 1982- May 1986	Supervisory Safety Engineer Safety Office	CECOM Fort Monmouth, NJ

Manage and direct the Environmental, Radiological & System Safety Engineering programs to ensure the overall safety of equipment throughout all phases of life cycle management. Designated Senior Review Board member to approve safety of equipment prior to fielding. Develops, initiates and administers programs to ensure overall safety management objectives. Sets division policy, goals and objectives and ensures programs are implemented to meet all requirements. Serves as senior technical advisor to the Commander and top management on all programs and problems associated within assigned responsibility.

October 1981- May 1982	Supervisory Health Physicist Safety Office	CECOM Fort Monmouth, NJ

Direct and supervise the Materiel Readiness Division, which includes both Health Physics and System Safety Engineering programs to ensure overall safety of CECOM commodities throughout life cycle management. Maintain continuous surveillance over assigned weapon systems, provide advice, guidance and assistance on specific problem areas. Develop and implement corrective actions in the form of new policies, direction, improved methods and procedures.

March 1976- October 1981	Senior Health Physicist Safety Office	CECOM Fort Monmouth, NJ

Responsible for the establishment, implementation and the overall accomplishment of the command's health physics program. Responsibility includes the development, initiation and administration of programs to assure life cycle management control of numerous ionizing and nonionizing commodities. Perform investigations and special radiological engineering studies relative to safety in the life cycle management of all assigned commodities. Conducts reviews and evaluations of equipment to determine maximum safety and/or to provide recommendations for required safety improvements. Evaluate test plans, reports and provides recommendations relating to the safety deficiencies and/or shortcomings.

November 1972- March 1976	Health Physicist Safety Office	USAMERADCOM Fort Belvoir, VA

Responsible for the overall accomplishment of both the USAMERDC and USANVL Radiation Protection Programs. Performed both basic and applied health physics. These studies and evaluations included all safety aspects of equipment through all phases of life cycle, hazard analysis and general guidelines for safe design and use of equipment. Performed contractor evaluations and certified industrial companies for compliance to Federal, DA, DARCOM safety requirements and for the analysis of same. Furnished technical advice and guidance to other DARCOM MSC's and laboratories.

October 1970- November 1972	Health Physicist Safety Office	USAMERDC Fort Belvoir, VA

Designated as the Principal Staff Officer for the direction, coordination and performance for the overall accomplishment of USAMERDC's Radiation Protection Program. Responsibility included both Atomic Energy Commission Byproduct, Source and Special Nuclear Materiel Licenses and DA Authorizations, radiological equipment studies and evaluations on all ionizing equipment. Reviewed all technical manuals and bulletins for applicable radiation safety requirements. Furnished technical advice and guidance to all engineers and scientists.

FORMAL TRAINING

Topic	Duration of Training	On-The-Job	Formal Course
Fifty-six semester hours pertaining to radiation, including college physics, Environmental Aspects of Nuclear Power Plant Management, Environmental Radioactivity, Nucleonic Fundamentals, Nuclear Properties and Interactions, Nuclear Physics, Nuclear Radiation Detection, Nuclear Reactor Physics, Radiation Biology, Radioisotope Techniques and Radiological Physics - Old Dominion University and the Catholic University of America.	1961-1975	No	Yes
Radiation Detection Effects and Devices Utilizing various types of high energy accelerators - Virginia Associated Research Center Newport News, Virginia, and NASA Langley Research Center, Langley, Virginia.	1 Year	Yes	No
Radiation Safety, detection instrumentation and isotopic handling equipment - Flow Corp, Fort Belvoir, Virginia.	2 Months	Yes	No
Radiological Safety Course pertaining to Nuclear Moisture/Density Instrumentation - Seaman Nuclear Corporation, Milwaukee, Wisconsin.	24 Hours	No	Yes
Occupational Radiation Protection Course 212 - Public Health Services, Las Vegas, Nevada.	80 Hours	No	Yes
Fundamentals of Non-Ionizing Radiation Protection Course 264 - Public Health Service, Rockville, Maryland.	40 Hours	No	Yes

Topic	Duration of Training	On-The-Job	Formal Course
Laser Safety Course-University of Cincinnati, Ohio.	40 Hours	No	Yes
Radionuclide Analysis by Gamma Spectroscopy Course 208 - Public Health Services, Winchester, Massachusetts.	80 Hours	No	Yes
Radiation Guides and Dose Assessment Course 272 - Environmental Protection Agency, Las Vegas, Nevada.	80 Hours	No	Yes
Boiling Water Reactor Technology Course - Public Service Gas and Electric Company; Salem, New Jersey.	64 Hours	No	Yes
Flag Officer Nuclear Accident Course Alexandria, Virginia	16 Hours	No	Yes
Nuclear Equipments Training and Operations Course Albuquerque, N.M.	64 Hours	No	Yes
Army Nuclear Weapons Refresher Course Albuquerque, N.M.	16 Hours	No	Yes

EXPERIENCE WITH RADIOACTIVE MATERIALS:

Isotope	Maximum Activities in Curies	Duration of Experience	Type of Experience
^{241}Am	1	3 Years	For all radionuclides listed, experience consisted of laboratory analysis, wipe tests, Research & Development Projects Commodity Management and evaluations utilizing these sources
^{252}Cf	.27	3 Years	
^{57}Co	0.1	4 Years	
^{60}Co	1200	8 Years	
^{137}Cs	1	8 Years	
^{3}	20	8 Years	
^{192}Ir	100	8 Years	
^{85}Kr	0.1	10 Years	
^{147}Pm	1	8 Years	
^{226}Ra	0.1	10 Years	
$^{226}RaBe$	1	5 Years	
^{239}Pu	0.001	10 Years	
$^{239}PuBe$	1	1 Year	
^{90}Sr	0.2	2 Years	
^{232}Th	0.001	10 Years	

EXPERIENCE WITH RADIATION PRODUCING DEVICES

Device	Duration of Experience	Type of Experience
NASA Langley Research Center, and Virginia Associated Associated Research Center's, Space Radiation Effects laboratory consisting of a 2 MeV Van De Graaff accelerator, 3 MeV Dynamitron accelerator, 10 MeV Linear Dynamitron accelerator, 10 MeV Linear Electron Accelerator, a 600 MeV Proton Synchrocyrlotron Accelerator and a 14 MeV Neutron Generator.	1.5 Years	Radiation damage Shielding Experiments and Related Health Physics Studies.
250 KeV General Electric Corporation X-ray machine.	8 Years	Health Physics and laboratory experiments.
Various energy dispersive and wave length X-ray fluorescence spectrometry with X-ray generators up to 50 KeV.	8 Years	Health Physics and laboratory experiments.

Supplement C

1. Reference: Item 8, NRC Form 313.

2. The use of radioactive material at Fort Monmouth is limited to:

a. CECOM Safety Office Health Physics staff.

b. Individuals approved by the Fort Monmouth Radiation Control Committee (RCC).

3. The Fort Monmouth RCC is composed of members of the CECOM Safety Office, representatives of research/development and installation medical and engineering activities which utilize radioactive material, and the Commander's representative. The purpose of the RCC, in part, is to advise the Commander, CECOM, on the safe utilization of radioactive material at Fort Monmouth. The RCC reviews and has approval authority over all radiological permits and license applications relating to research/development projects at Fort Monmouth. The qualifications of personnel authorized to conduct research activities which require the use of radioactive materials are reviewed/approved by the RCC. Approved radiation workers receive training in basic radiation safety from the Radiological Safety Branch of the CECOM Safety Office prior to the initial work assignment. Annual training of radiation workers will be conducted by the RPO and/or qualified designee in accordance with the requirements of Title 10, Code of Federal Regulations (10 CFR), Part 19.

4. The Irradiator Facility Operator Training Program outline is at Enclosure 1. Individuals entering this program and facility operators presently under the employ of this command will be required to pass, with a minimum grade of 75 percent, an examination that tests their understanding and knowledge of the information provided in this program. A copy of the examination, along with the correct answers are provided at Enclosures 2 and 3. Individuals failing this examination will be required to receive further training, with emphasis given to the specific area(s) in which the individual lacks proficiency. After this additional training is provided, the individual will be re-evaluated in the same manner.

Operator Training Program

Operators of the irradiator facility authorized by this license must be approved by the Radiation Control Committee (RCC). Approval of the RCC is contingent upon the completion of the following training:

a. The individual must complete the following training as provided by the Radiation Protection Officer (RPO), the Radiation Facility Supervisor, and/or their designated qualified representatives, as applicable.

Subject	Duration	Type Training
Interaction of Radiation with Matter	2 hours	Lecture and/or Training Film
Biological Effects of Radiation	1 hour	Lecture and/or Training Film
Principles and Practices of Radiation Safety	4 hours	Lecture and/or Training Film
Radiation Instrumentation, Detection and Dosimetry	1 hour	Lecture and/or Training Film

This requirement may be satisfied if the individual has previously received formal training and/or experience meeting or exceeding the above criteria. Training and/or experience will be evaluated by the RCC on a case-by-case basis.

b. The individual must also complete training which will be presented by the RPO, the Radiation Facility Supervisor or his designated qualified representatives, as applicable:

Subject	Duration	Type Training
Radiation Emergency Procedures	1 hour	Lecture and/or Training Film
Familiarization with NRC License and Supporting Documentation	2 hours	Lecture
Familiarization with the Physical Plant and Design of the Irradiator	2 hours	Lecture
Operation and Maintenance of Facility (Instruction)	1 hour	Demonstrations
Operation and Maintenance of Facility (Practical Operation)	2 hours	Operation of facility under direct supervision

ENCL 1

EXAMINATION

1. The Curie is a unit of:

   a. volume
   b. absorbed dose
   c. activity
   d. power density

2. A Curie is equal to:

   a. 2.22×10^{5} cpm
   b. 6.02×10^{23} cpm
   c. 3.7×10^{10} dps
   d. 4.5×10^{-7} dpm

3. The Rad is a unit of:

   a. Exposure of X- or gamma radiation in air
   b. Radiation absorbed dose; 100 ergs/gram
   c. Roentgen equivalent man
   d. 3.7×10^{10} disintegrations per second

4. An alpha particle has:

   a. a positive electrical charge
   b. a negative electrical charge
   c. no charge (neutral)

5. A beta particle has:

   a. a positive electrical charge
   b. a negative electrical charge
   c. no charge (neutral)

6. The atomic number of an element reflects:

   a. the number of neutrons
   b. the number of protons
   c. the number of electrons
   d. the total number of neutrons and protons

7. For Cobalt-60 (Co-60), the number 60 (sixty) indicates the:

   a. Half-life
   b. Number of radioactive particles
   c. Atomic number
   d. Atomic weight

8. Which type of radiation harms you least in the case of external exposure?

   a. alpha
   b. beta
   c. gamma
   d. neutrons

9. What radiation harms you most in the case of ingestion or inhalation of radioactive isotopes?

a. alpha
b. beta
c. gamma
d. neutrons

10. Which of the following types of radiation is the most penetrating?

a. alpha
b. beta
c. gamma

11. An alpha particle can be stopped by:

a. a piece of paper
b. a piece of 1/4" plywood
c. a concrete block
d. a 1/4" thick piece of lead
e. all of the above.
f. none of the above

The best means of protection from ionizing radiation is:

a. time
b. distance
c. shielding
d. all of the above
e. none of the above

13. The Maximum Permissible Dose (MPD) for radiation workers (whole body) is:

a. 0.5 rem/yr
b. 3.0 rem/yr
c. 5.0 rem/yr
d. 75 rem/yr

14. When not in use, all film badges are stored in a designated area with a control film badge. This reason(s) for this is (are):

a. To more accurately compare their exposure with the control badge
b. To keep all film badges away from radiation areas when not being worn
c. To measure the amount of radiation the storage area is exposed to
d. all of the above
e. a and b only

15. Of the following types of dosimetry, which is (are) required of all personnel working in the control room.

a. film badge
b. "chirpee" type monitor
c. pocket dosimeter

16. What is the procedure to check the operational status of the Geiger-Mueller (G-M) survey meter? _____

17. Which of the following types of radiation will the G-M survey meter detect?

a. Alpha
b. High energy beta
c. Gamma
d. a and c only
e. b and c only

18. Your G-M survey meter is on the x100 scale and indicates a reading of 1.5. What is the radiation level in the room?

a. 150 mR/hr
b. 1500 mR/hr
c. 15 R/hr
d. 150 R/hr

19. What dosimetry/instrumentation does one person entering the exposure room require?

a. film badge
b. "chirpee" type monitor
c. pocket dosimeter
d. all of the above
e. a and b only

20. When operating the underground vault irradiator, what is the maximum number of individuals allowed in the control room while the source(s) are in the "up" position?

a. 1
b. 2
c. 4
d. 6

21. Upon entering the control room you notice that the control room area monitor is reading 5 mR/hr. You should:

a. Proceed as normal
b. Notify the Supervisor or RPO. There is no leak
c. Notify the Supervisor or RPO. A possible source leak condition exists
d. Change the battery on the area monitor

22. The source plug mechanism is equipped with a multiple interlock system. If any one interlock is opened while the source is in the "up" position, the source will immediately return to its lead shield.

a. True
b. False

23. The source will be kept in its storage container with the lead plug over the source when:

a. The source is not in use
b. Individuals are in the exposure room
c. A leak test of the source indicates the source is leaking
d. Radioactive contamination is found in the room
e. all of the above.
f. a and c only

24. The primary purpose for the lead and ferrite shielding installed between the exposure and control rooms is to protect personnel from:

a. alpha radiation
b. beta radiation
c. gamma radiation
d. neutrons

25. You are operating the underground vault irradiator. You have discovered that the source has leaked. What should you do?

a. Cut off the air supply to the source controls
b. Shut off the control room exhaust fan
c. Take wipes of selected areas in the exposure room
d. Leave the underground vault area
e. a and b only
f. a, b and d only

26. In the event of an electrical power failure, the source capsule must be manually returned to the lead storage area.

a. True
b. False

27. You are trapped in the exposure room. Suddenly you hear the warning alarm indicating that the source is about to be raised to the "up" (exposure) position. The FIRST thing you should do is:

a. Bang on the view window and scream for help
b. Set the emergency stop switch to the "up" position
c. Set the emergency stop switch to the "down" position
d. Ensure your dosimetry is positioned to accurately measure your exposure

28. The irradiator source is stuck in the "up" position. The FIRST thing you should do is:

a. Enter the exposure room and manually lower it
b. Call the RPO or Radiation Facility Supervisor
c. Call the fire department
d. Notify the Nuclear Regulatory Commission

29. The irradiator source will not go into the exposure or "up" position. Which of the following situations would not be an explanation for this?

a. Electrical power failure
b. Interlock malfunction
c. Emergency switch in exposure room is in the "up" position
d. Main control panel emergency stop switch is in the "down" position

30. Ionizing radiation exposure poses its greatest threat to the developing fetus during the:

a. first trimester
b. second trimester
c. third trimester
d. fourth trimester

31. We are continually exposed to natural background radiation. Which of the following is not a source of natural background radiation:

a. Radiation from the naturally radioactive materials in the ground
b. Medical & dental x-rays
c. Radiation from outer space
d. Radiation from Radon gas accumulated in a residence

32. The half-life of a radioactive source is defined as:

a. Half the useful lifetime of the source
b. The time it takes for the source activity to decrease by one-half
c. One-half the time it will take for the source to decrease to an activity of zero
d. none of the above

33. Increasing the distance between yourself and a gamma radiation source lowers your absorbed exposure because:

a. Radiation intensity decreases rapidly with distance
b. Radiation loses speed with distance
c. Radiation tires easily
d. Gamma radiation is completely absorbed in a few feet of air

34. The Roentgen is a unit of:

a. Exposure of X- or gamma radiation in air
b. Radiation absorbed dose; 100 ergs/gram
c. Roentgen equivalent man
d. 3.7×10^{10} disintegrations per minute

35. You are in a radiation area with an exposure rate of 30 mR/hr. How long will it take you to receive an exposure of 2 mR?

a. 1 min
b. 2 min
c. 4 min
d. 10 min

36. The NRC defines a Radiation Area as any area with a radiation level greater than or equal to:

a. 1 Rad in any one hour
b. 10 Rads in any one hour
c. 5 millirems in any one hour
d. 1 millirem in any two hours

37. The term "ALARA" describes:

a. The mechanism of interlock alarm systems
b. The concept of minimizing radiation exposure
c. A radiation detection device similar to the "chirpee"
d. The "Annual Limits Associated with Radiation Accidents"

38. All radiation workers are required to have periodic radiation physicals.

a. True
b. False

39. Eating, drinking and smoking is permitted in the control room but is strictly prohibited in the exposure room

a. True
b. False

40. Under what provision/regulation is training/instruction required to be given to radiation workers?

a. 21 CFR Part 30
b. 49 CFR Part 50
c. 10 CFR Part 19
d. 3 CFR Part 17

41. An acute exposure is defined as:

a. an exposure to a large dose of radiation over a short period of time
b. an exposure to a small dose of radiation received repeatedly over a long period of time
c. an exposure of 5 mR per year

42. A chronic exposure is defined as:

a. an exposure to a large dose of radiation received over a short period of time
b. an exposure to a small dose of radiation received repeatedly over a long period of time
c. an exposure of 5 mR per year
d. an exposure which makes the individual chronically ill

43. Radiation detection and measuring devices are necessary because you cannot see, hear, smell or feel radiation.

a. True
b. False

44. Which of the following is most sensitive to the effects of radiation?

a. hands
b. body trunk
c. lens of the eye
d. feet

45. Dose rate is defined as:

a. the amount of radiation released from a radioactive source per unit time
b. The total amount of radiation absorbed per unit volume
c. the amount of radiation absorbed per unit time
d. the speed of light

Given the following, answer the following three questions:

$$\Gamma = \frac{R/hr}{1\ m/Ci}$$

Γ (Cs-137) = .33 Γ (Co-60) = 1.32

46. What is the exposure, in air, from a Co-60 source with an activity of 600 Ci at 1 meter?

a. 800 R/hr
b. 450 R/hr
c. 200 R/hr
d. 1000 R/hr

47. What is the exposure at 2 meters?

a. 800 R/hr
b. 450 R/hr
c. 200 R/hr
d. 1000 R/hr

48. What is the exposure, in air, from a Cs-137 source with an activity of 450 Ci at 1 meter?

a. 150 R/hr
b. 100 R/hr
c. 300 R/hr
d. 400 R/hr

Given:

$$A_n = A_o e^{-\lambda t} \qquad \lambda = .693/T_{1/2}$$

$T_{1/2}$(Co-60) = 5.27 yrs $T_{1/2}$ (Cs-137) = 30 yrs

49. The activity of a Co-60 source on 1 January 1970 was assayed as 1000 Ci. What was the activity of this source on 1 January 1985?

50. The activity of a Cs-137 source was assayed as 450 Ci on 1 July 1950. What was the activity of this source on 1 July 1980?

ANSWER SHEET

1. c.
2. c.
3. b.
4. a.
5. b.
6. b.
7. d.
8. a.
9. a.
10. c.
11. e.
12. d.
13. c.
14. e.
15. a.
16. Perform a battery check
17. e.
18. a.
19. d.
20. d.
21. c.
22. a.
23. e.
24. c.
25. f.
26. b.
27. c.
28. b.
29. c.
30. a.
31. b.
32. b.
33. a.
34. a.
35. c.
36. c.
37. b.
38. a.
39. b.
40. c.
41. a.
42. b.
43. a.
44. c.
45. c.
46. a.
47. c.
48. a.
49. 140 Ci
50. 225 Ci

Supplement D

1. Reference: Item 9, NRC Form 313.

2. The following facilities and equipment are described:

a. Evans Area, Wall Township, NJ

b. Underground Vault, [ ] Ex 2

c. Radioisotope Processing/Instrumentation and Decontamination Rooms, [ ]

d. Radioactive Material Storage Vault, [ ] Ex 2

e. Radiation Detection Instrumentation

3. <u>Evans Area, Wall Township, NJ</u>

The Evans Area is located in Wall Township, Monmouth County and is approximately ten miles south of the CECOM Safety Office, Radiological Engineering Branch, located in the Charles Wood Area in Tinton Falls Township, Monmouth County. The Evans Area is completely surrounded by a twelve foot high security fence. Access to the area is restricted and monitored by DoD security officers. The Evans Area contains laboratories and open air test areas devoted to the research and development of electronic and optical systems for DA use. The Evans Area is also the location of the CECOM Safety Office satellite Health Physics Laboratory. The Evans Area branch of the Fort Monmouth Fire Department has a 2-3 minute response time to all facilities within the area.

4. <u>Underground Vault,</u> [ ] Ex 2

a. The location of the underground area, consisting of the Vault Console and Exposure Room, in relation to the remainder of [ ] is shown at enclosure 1. Ex 2

b. The Vault Exposure Room (see encls 2 & 3) was designed for the use of a [ ] Cobalt-60 sealed source. Enclosure 2 shows the 18" thick wall that extends the maze 5'4" into the Vault Exposure Room. Interlocking ferrite bricks were used in the construction of the wall. The ferrite block used on each side of the Zinc Bromide Window in the wall, between the Vault Console and the Exposure Room, is also shown. Ex 2

c. Enclosure 4 shows the relative locations of the various alarm sensors, a warning light that is lit when either source is

"up" and other pertinent components. Other warning lights that are lit when either source is "up" are located on top of the earth mound, in the hall at the top of the stairs, and on the control console.

d. The components shown in enclosures 5 and 6 and the pneumatic and electrical systems shown in enclosures 7 and 8, make up the storage and use device for the Cobalt-60 source. The Shield and Rise Tube Adapter of the Rise Tube Assembly shown in enclosure 6 fits into the plug well (item 3 of enclosure 5). The Rise Tube Assembly is held in place by a Plug Plate that fits over the shoulder of the Shield and Rise Tube Adapter and the top of the Primary Source Storage Shield. The Plug Plate is held down by nuts screwed onto the stainless steel lugs (item 4 of enclosure 5). The Rise Tube Extension is screwed and bolted onto the top of the Rise Tube (enclosure 6).

e. An assembly which raises the lead storage plug for the Cobalt-60 source shown in enclosure 8 is mounted on the wall containing the Zinc Bromide Window. After a 10-second warning period, the motor-driven spool raises the plug. A magnetic clutch releases to lower the plug.

f. The electrical control system schematic is shown in enclosure 9. The electrical interlock system will cause the source and its shielding plug, to be lowered into its Source Storage Shield if:

(1) The maze door is opened,

(2) The Zinc Bromide in the observation Window is low.

(3) The radiation level in the Console Room is above 1.0 mR/hr or the monitor is off, or,

(4) The remote control switch in the Exposure Room or the main control switch in the control room, are switched to the "down" position.

(5) An electrical power failure occurs.

(6) The wooden barrier, past the lead door, is in the vertical position.

(7) If the electrical lock on the lead door is open.

The connection TB 4-5 (encl 10) was closed when the system was tested with a dummy source; however, now this connection is open so that the sources cannot be raised from inside the Exposure Room.

g. A pair of Argonne Type D-8 Slave manipulators (enclosure 3) is installed to move the equipment located in the Exposure Room while the operator is in the Control Room.

h. The sump in the Exposure Room is connected to the radioactive waste dilution system in Building 9045. (Described in paragraph 6).

i. An alarm bell rings if the radiation level in the Console Room goes above 1.0 mR/hr. The alarm bell is audible throughout Building 9401.

j. The pneumatic control system is shown in enclosure 7. The hand operated valves (in the Console Room) in the up line, allow either or both sources to be raised for use when the system is in operation.

5. Radioisotope Processing/Instrumentation and Decontamination Rooms, ( ) 42

Enclosure 10 shows the Radioisotope Processing/ Instrumentation Room and enclosure 11 shows the Decontamination Room that are located in Building 9045.

a. Radioisotope Processing Room. The Radioisotope Processing Room is located in a contamination controlled area within Building 9045. The Processing Room is equipped with remote handling tools, a ventilated hood (100 linear feet per minute across opening when half open) and a "hot" stainless steel sink. The hood is equipped with an air filter. Air ducts from the filters lead to a tall stack on the roof of Building 9045. The drain from the hot sink is connected to the "hot" underground storage tank. In addition, a second 550 gallon "hot" storage tank is located outside the Decontamination Room. Liquid in the "hot" storage tank that the various "hot" drains are connected to can be pumped into the second "hot" storage tank. Tap water can be added to this second tank for dilution purposes. The tap water line is not directly connected to the tank -- water from the tank cannot siphon into the tap water line. Liquid from this second "hot" storage tank can be pumped into the sanitary sewer. The two "hot" liquid waste pumps are located under a removable steel plate in the floor of the room. Gauges to measure the volume of liquid in the two tanks and switches for controlling the pumps are located on the NNE wall of the room. Lead bricks are available for constructing temporary work and storage shields. Work surfaces are stainless steel designed to contain spills.

b. Decontamination Room. The Decontamination Room is equipped with a shower, a hand sink, and a floor drain. The three drains are connected to a 550 gallon "hot" waste storage tank that is buried outside the room. The room is equipped with a toilet. In addition, coveralls, surgical caps, shoe covers, booties, gloves, etc., are stored in a cabinet in the room and lockers are provided for storage of an individual's personal clothing and belongings.

6. Radioactive Material Storage Vault, ( ) Ex 2

Enclosure 12 shows the Radioactive Materials Storage Vault. One portion of the building is used to store radioactive waste for decay or until a waste disposal shipment is made. The remainder of the building is used to store radioactive material that will be used at a later date. The building is equipped with an exhaust fan that exhausts a volume of air every minute that is approximately 2 1/2 times the volume of the building. The fan comes on whenever the door is opened. The building is normally locked and access to the key is controlled. The building is not used for any purpose other than the storage of radioactive material.

7. Radiation Detection Instrumentation

At enclosure 13 is a listing of radiation detection instrumentation utilized by the CECOM Safety Office. All survey instruments are calibrated in accordance with the procedures outlined in Technical Bulletin (TB) 9-6665-285-15, Army Calibration Program for Radiac Survey Meters and TB 750-25-1, Maintenance of Supplies and Equipment: Army Test, Measurement, and Diagnostic Equipment (TMDE) Calibration and Repair Support Program. These procedures state that all active survey instruments will be calibrated every 90 days, at two points on each scale. Each point must be separated by at least 50 percent of the maximum scale reading and the survey meter tolerance of each calibration point must be within ± 10 percent of the standards calculated value. Beta and gamma survey instruments are calibrated using the AN/UDM-1A Radiac Calibrator Set containing Cesium-137. Alpha survey instruments are calibrated using the AN/UDM-6 or AN/UDM-7C Radiac Calibrator Sets containing Plutonium-239. Each Radiac Calibrator Set is traceable to the National Institute of Standard and Technology (NIST). Neutron survey instruments are calibrated at the U.S. Army Ionizing Radiation Dosimetry Center (AIRDC), currently located at Lexington Bluegrass Army Depot, KY, utilizing a Plutonium-239 Beryllium source traceable to or certified by NIST. Mixed radiation counting systems are calibrated prior to use utilizing NIST traceable check sources. The liquid scintillation system is calibrated monthly utilizing a set of NIST traceable tritium quenched standards.

8. Personnel Dosimetry

All personnel classified as radiation workers in accordance with 10 CFR 20 and Army Regulation (AR) 40-14, Control and Recording Procedures for Exposure to Ionizing Radiation and Radioactive Materials, 15 March 1982, are provided thermoluminescent dosimeters, whole body, wrist and/or neutron film badges, as appropriate. The dosimetry service is provided by AIRDC. Dosimeters are exchanged monthly, with records maintained by the CECOM Safety Office and AIRDC.

9. Radiation Level Surveys

A radiation level survey was performed with both the Cobalt 60 and the Cesium 137 sources simultaneously raised in the "open" position. Results of the survey are documented at enclosures 14 and 15.

Ex 2

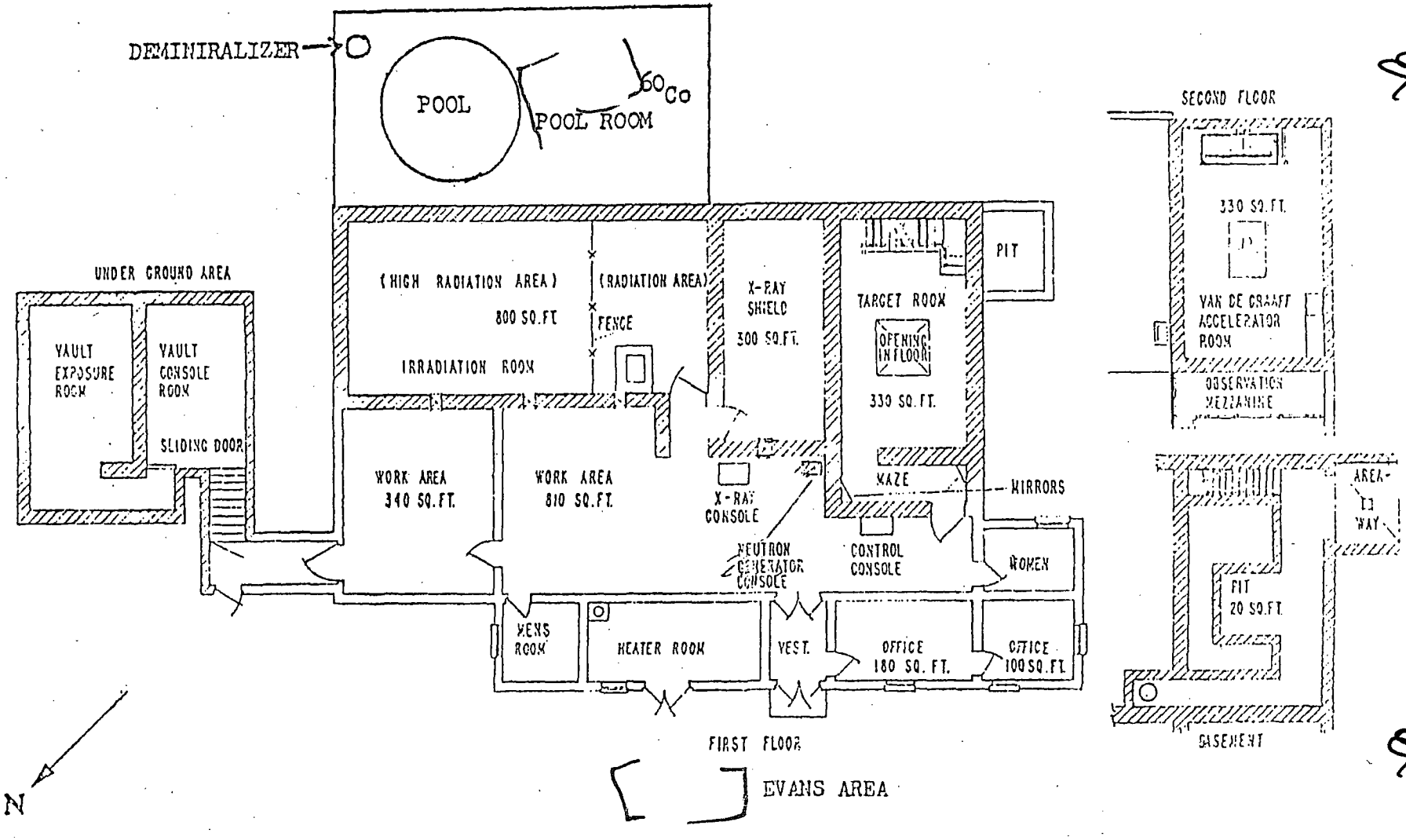
DEMINIRALIZER
POOL
POOL ROOM
60Co
UNDER GROUND AREA
VAULT EXPOSURE ROOM
VAULT CONSOLE ROOM
SLIDING DOOR
(HIGH RADIATION AREA)
800 SQ.FT
IRRADIATION ROOM
(RADIATION AREA)
FENCE
X-RAY SHIELD
300 SQ.FT.
TARGET ROOM
OPENING IN FLOOR
330 SQ.FT.
PIT
WORK AREA 340 SQ.FT.
WORK AREA 810 SQ.FT.
X-RAY CONSOLE
NEUTRON GENERATOR CONSOLE
MAZE
MIRRORS
CONTROL CONSOLE
WOMEN
MENS ROOM
HEATER ROOM
VEST.
OFFICE 180 SQ. FT.
OFFICE 100 SQ.FT.
FIRST FLOOR
EVANS AREA
N
SECOND FLOOR
330 SQ.FT.
VAN DE GRAAFF ACCELERATOR ROOM
OBSERVATION MEZZANINE
AREA-WAY
PIT 20 SQ.FT.
BASEMENT

Ex 2

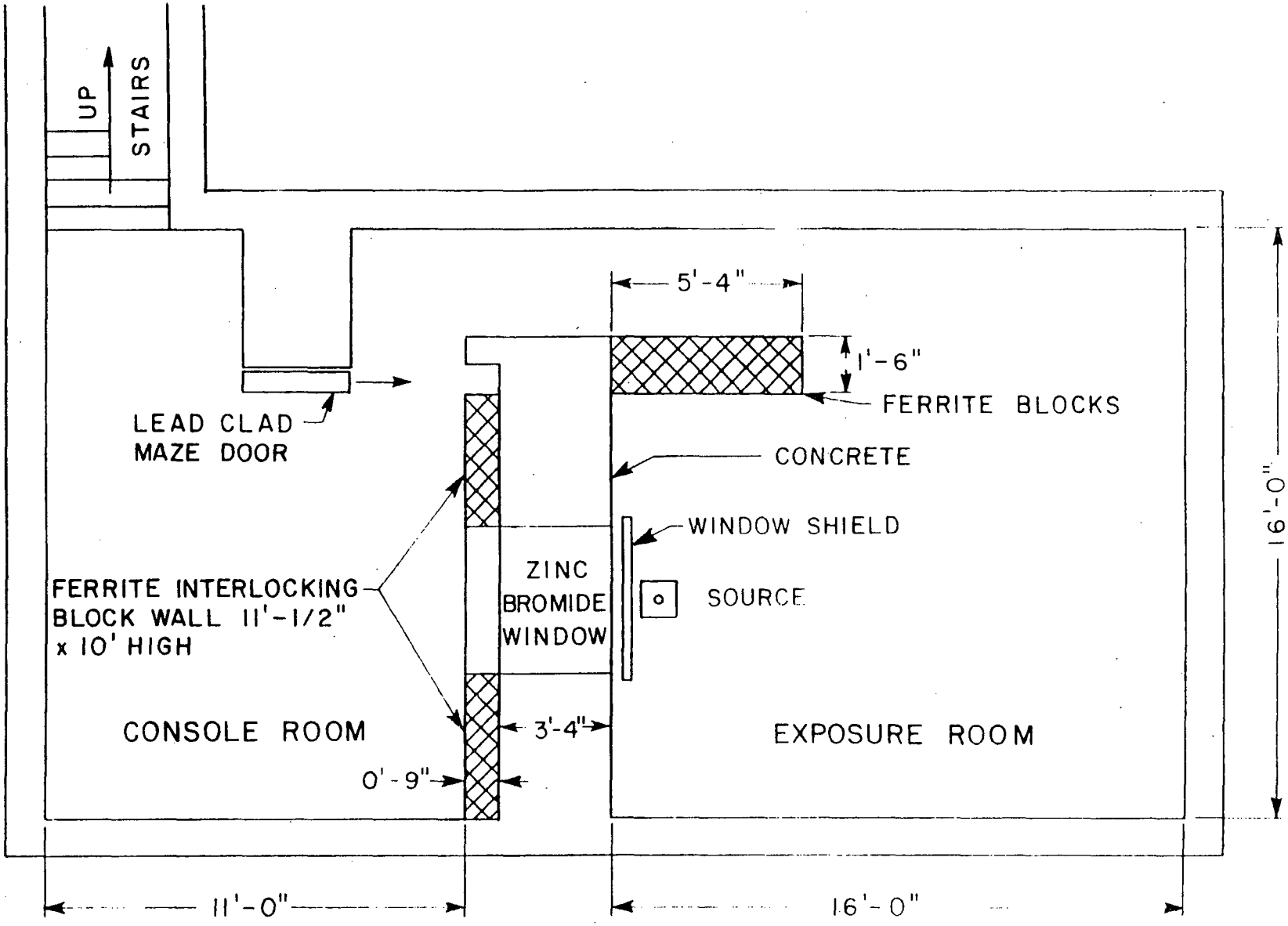

PLAN VIEW UNDERGROUND VAULT

SCALE $\frac{1''}{4}$ = 1'-0"

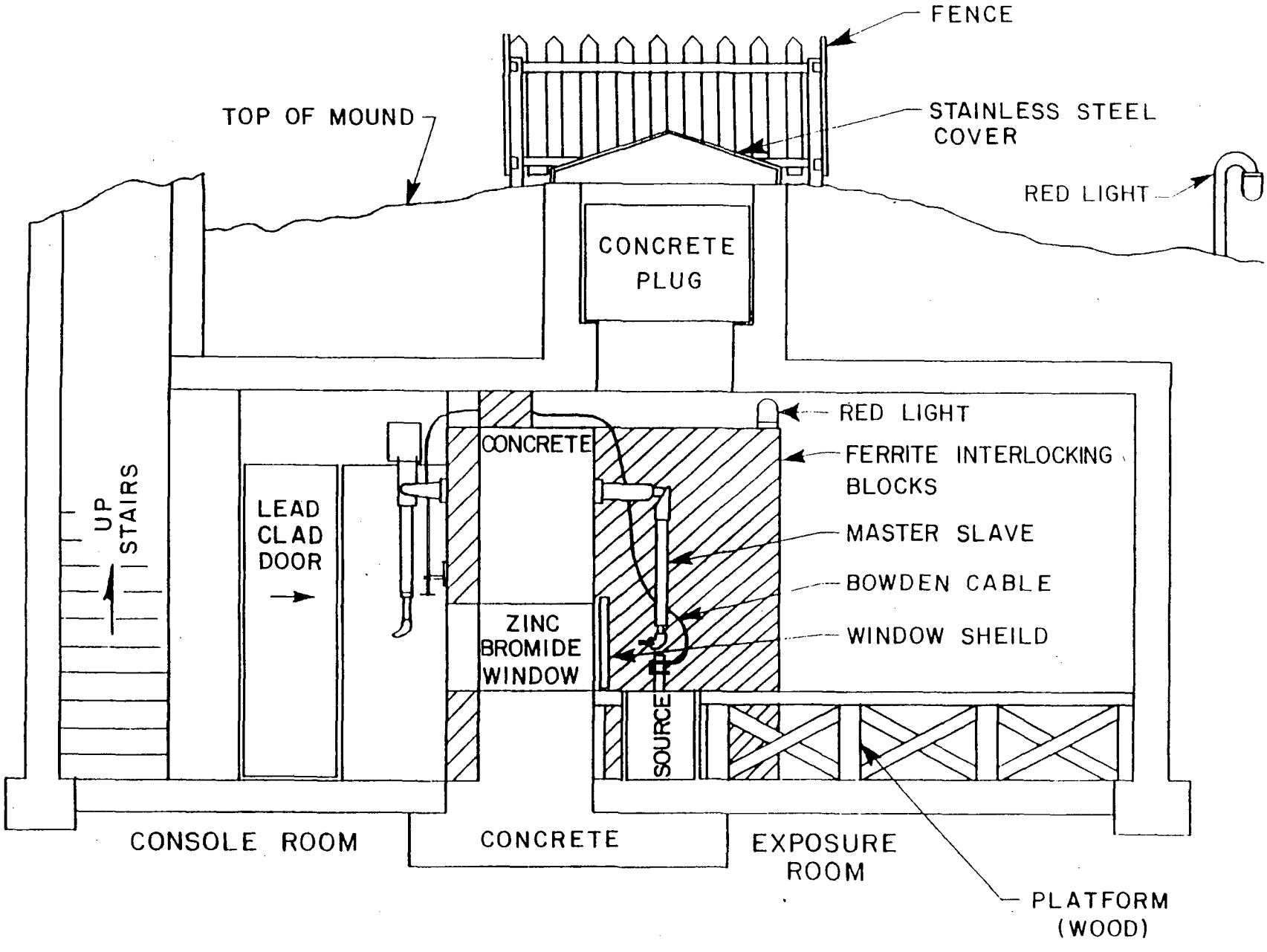

ELEVATION VIEW UNDERGROUND VAULT

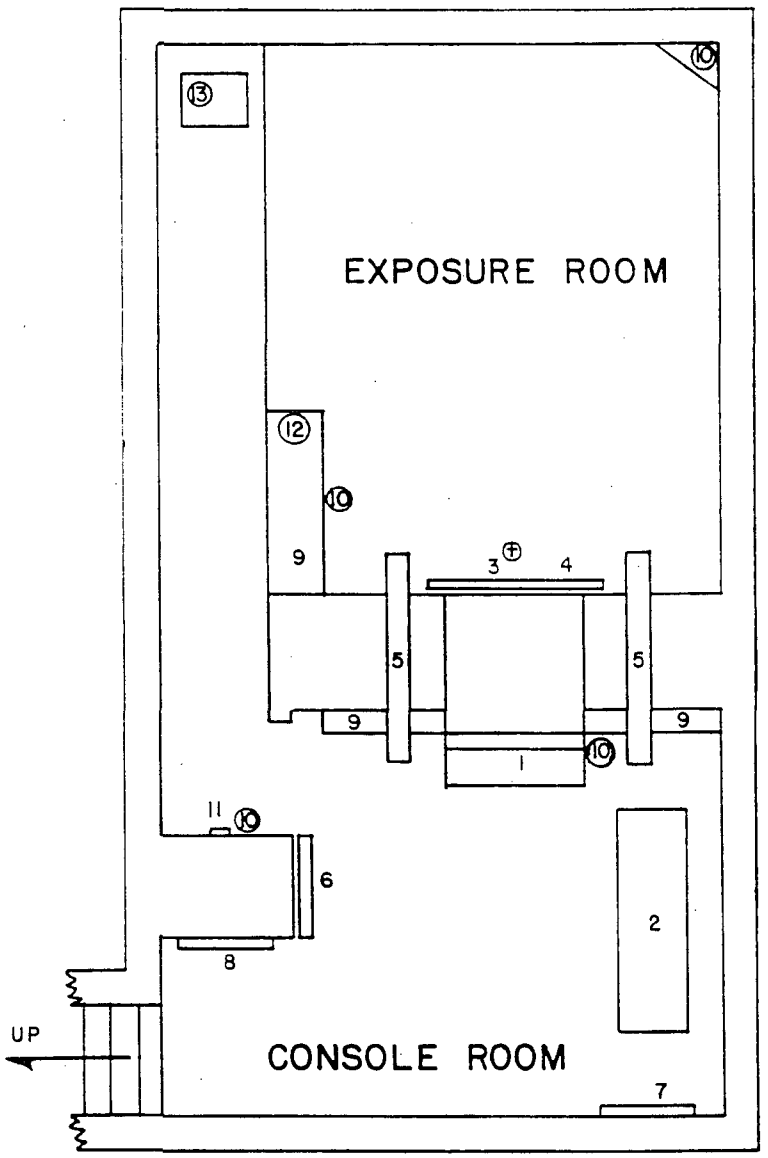

1. CONTROL CONSOLE
2. MONITOR CONSOLE
3. SOURCE POSITION
4. WINDOW SHIELD
5. SLAVE MANIPULATORS
6. MAZE DOOR
7. PNEUMATIC CONTROL SYSTEM
8. ELECTRICAL PANEL
9. FERRITE INTERLOCKING BLOCK
10. RADIATION ALARM SENSORS
11. MANUAL ALARM SENSORS
12. WARNING LIGHT
13. SUMP PUMP

UNDERGROUND VAULT INSTRUMENTATION

SCALE $\frac{3}{16}$ = 1"-0"

ENCL 4

1. AISI 1/4" TYPE 316 STAINLESS STEEL (ANNEALED, PICKLED & OILED)
2. STAINLESS STEEL ARC WELDING (ALL WELDING)
3. PLUG WELL 3" I.D. X 12 $\frac{1}{2}$" DEEP
4. STAINLESS STEEL LUGS FOR PLUG PLATE
5. 1" DIA. STAINLESS STEEL RODS
6. LIFTING HOLES
7. THREADED PLATE
8. BASE MOUNTING
9. PLUG PLATE

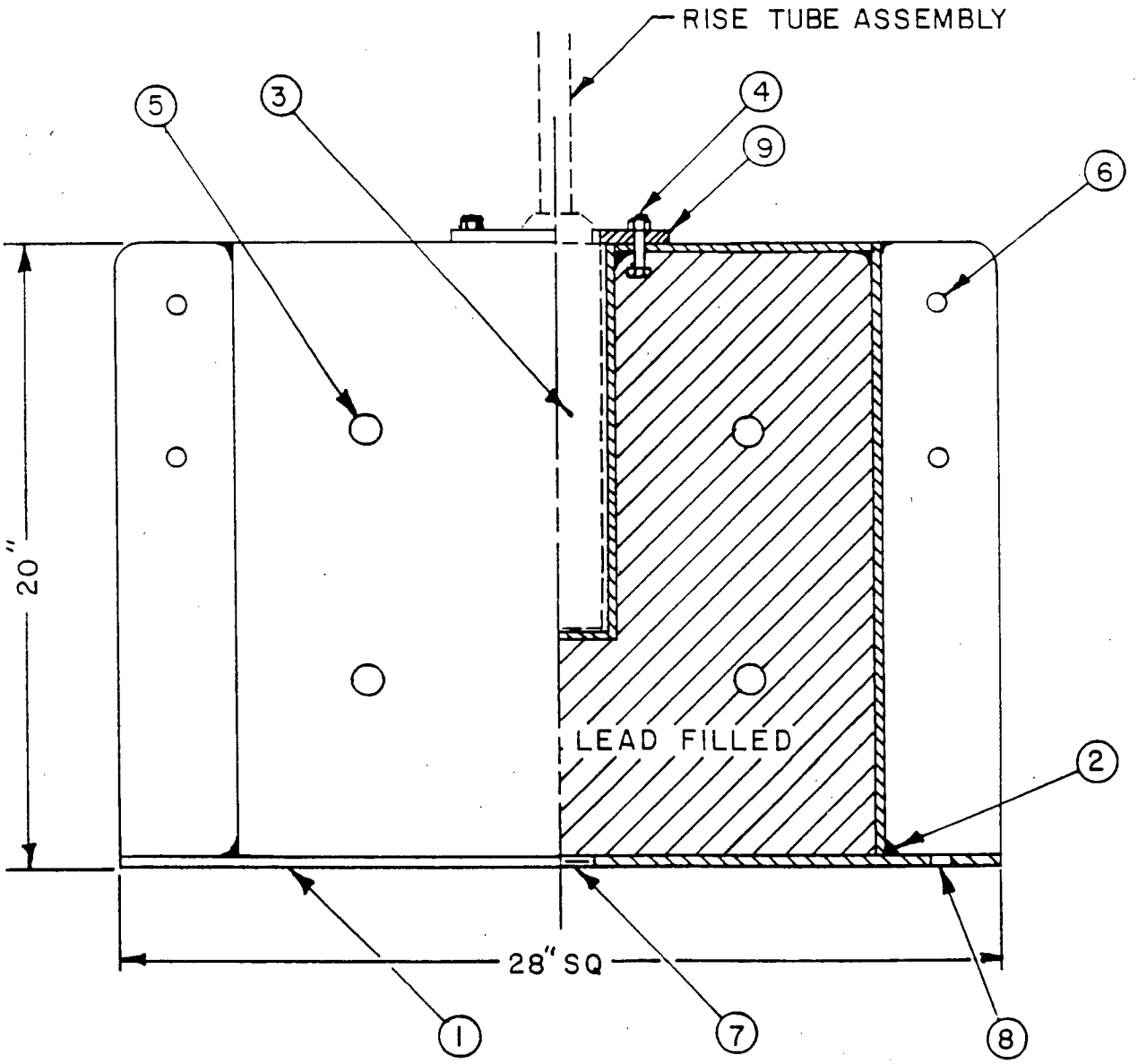

PRIMARY SOURCE STORAGE SHIELD

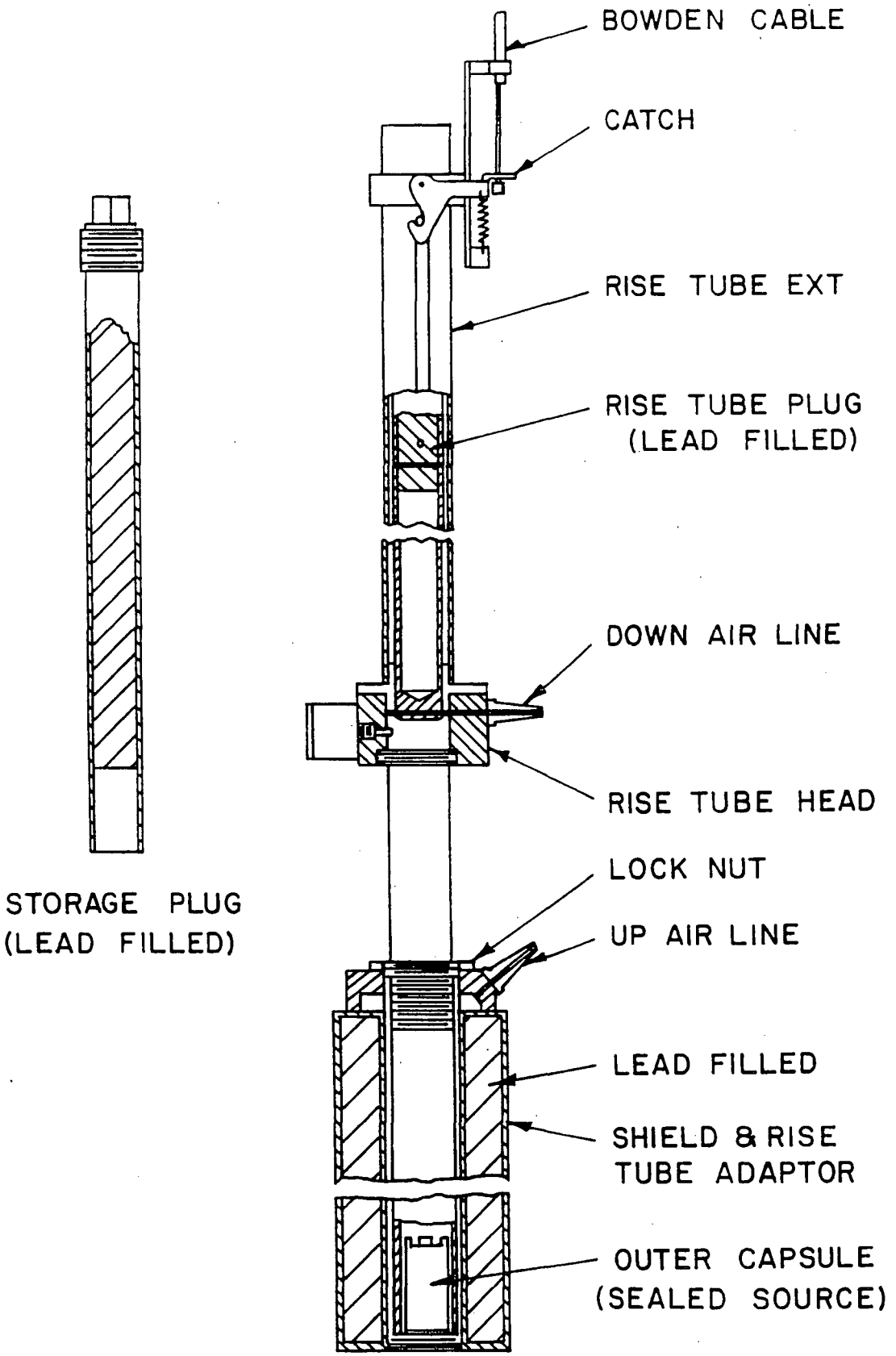

CAPSULE & RISE TUBE ASSEMBLY

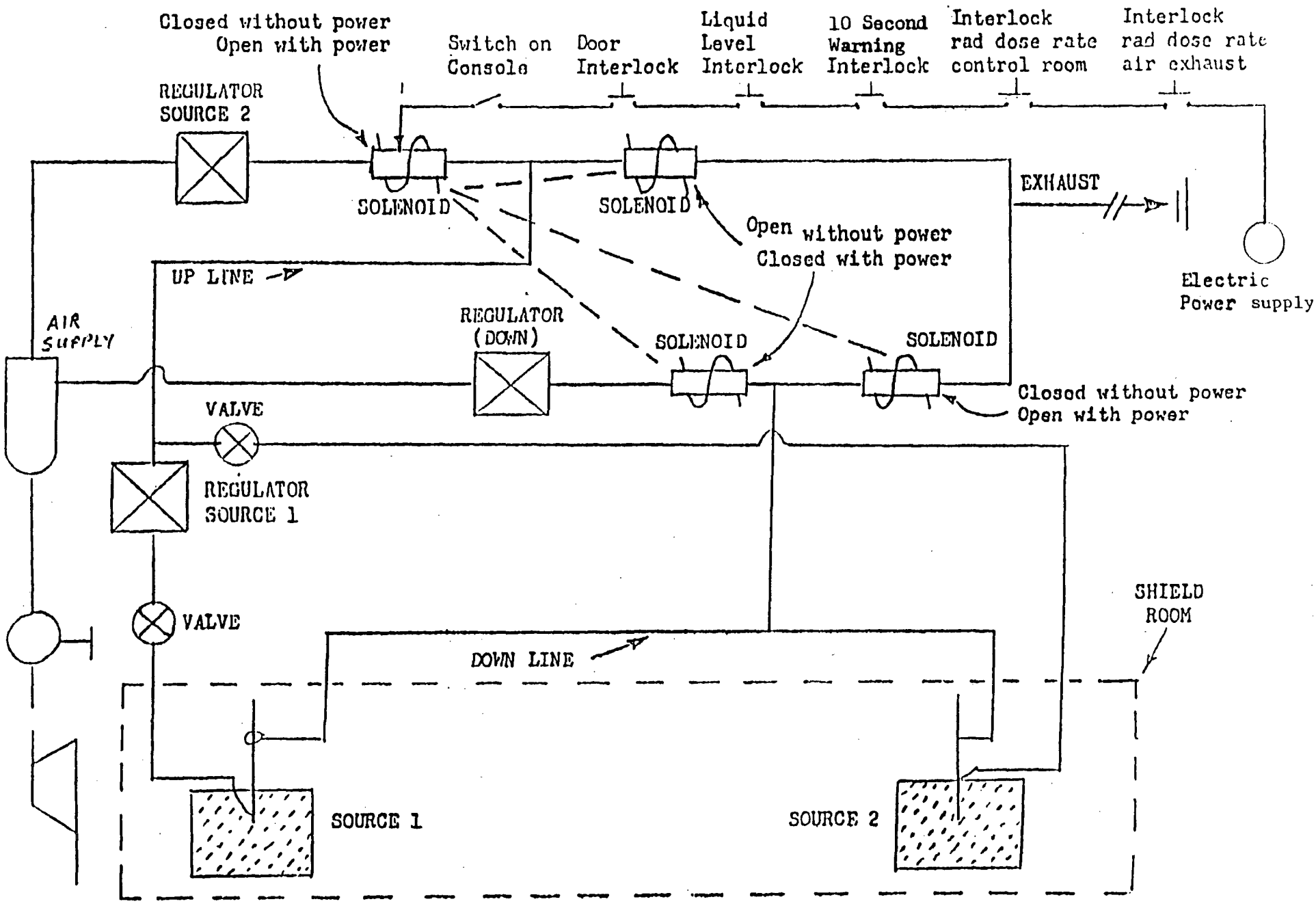

PNEUMATIC CONTROL SYSTEM.

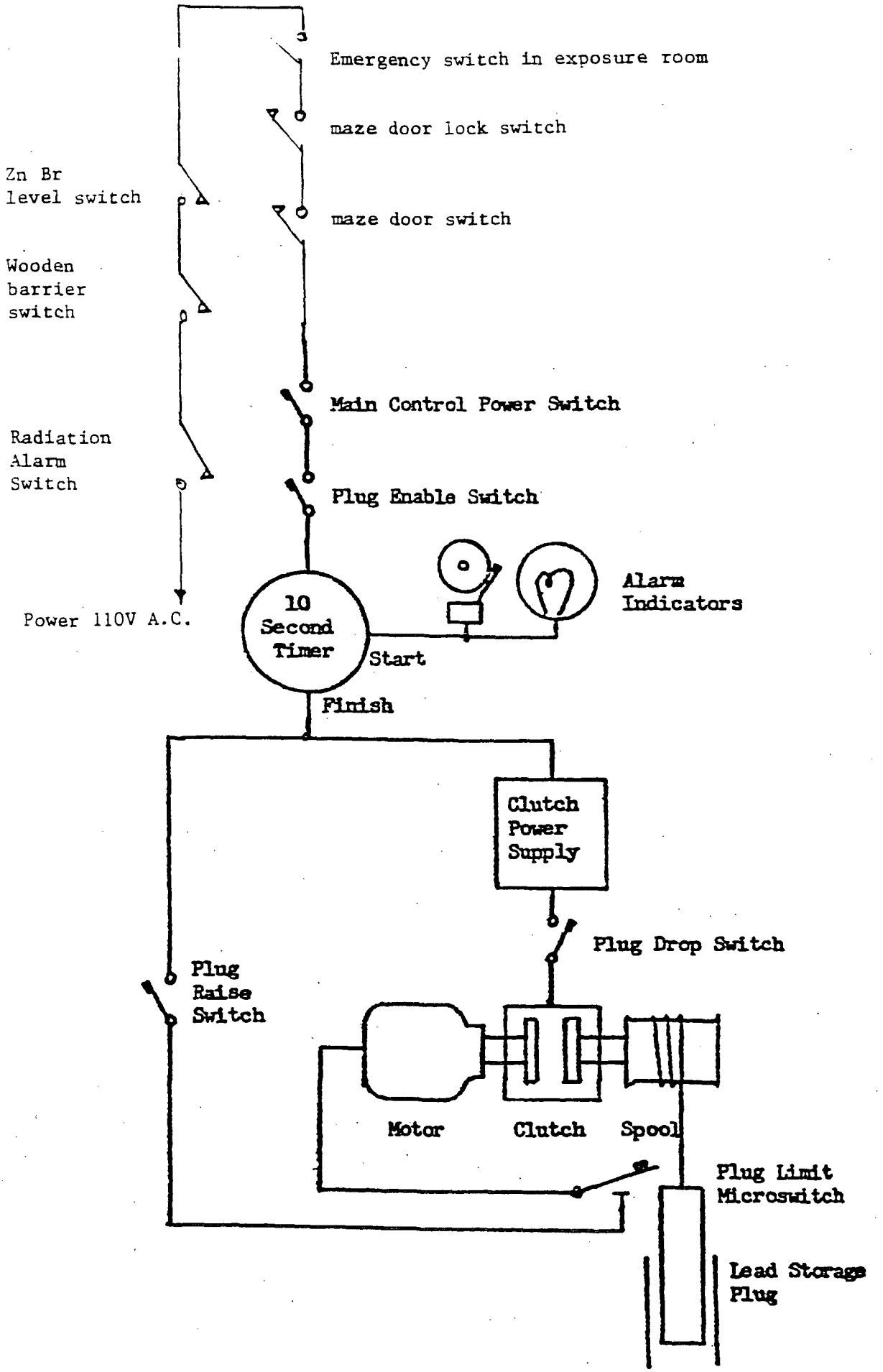

SCHEMATIC OF STORAGE PLUG CONTROL MECHANISM

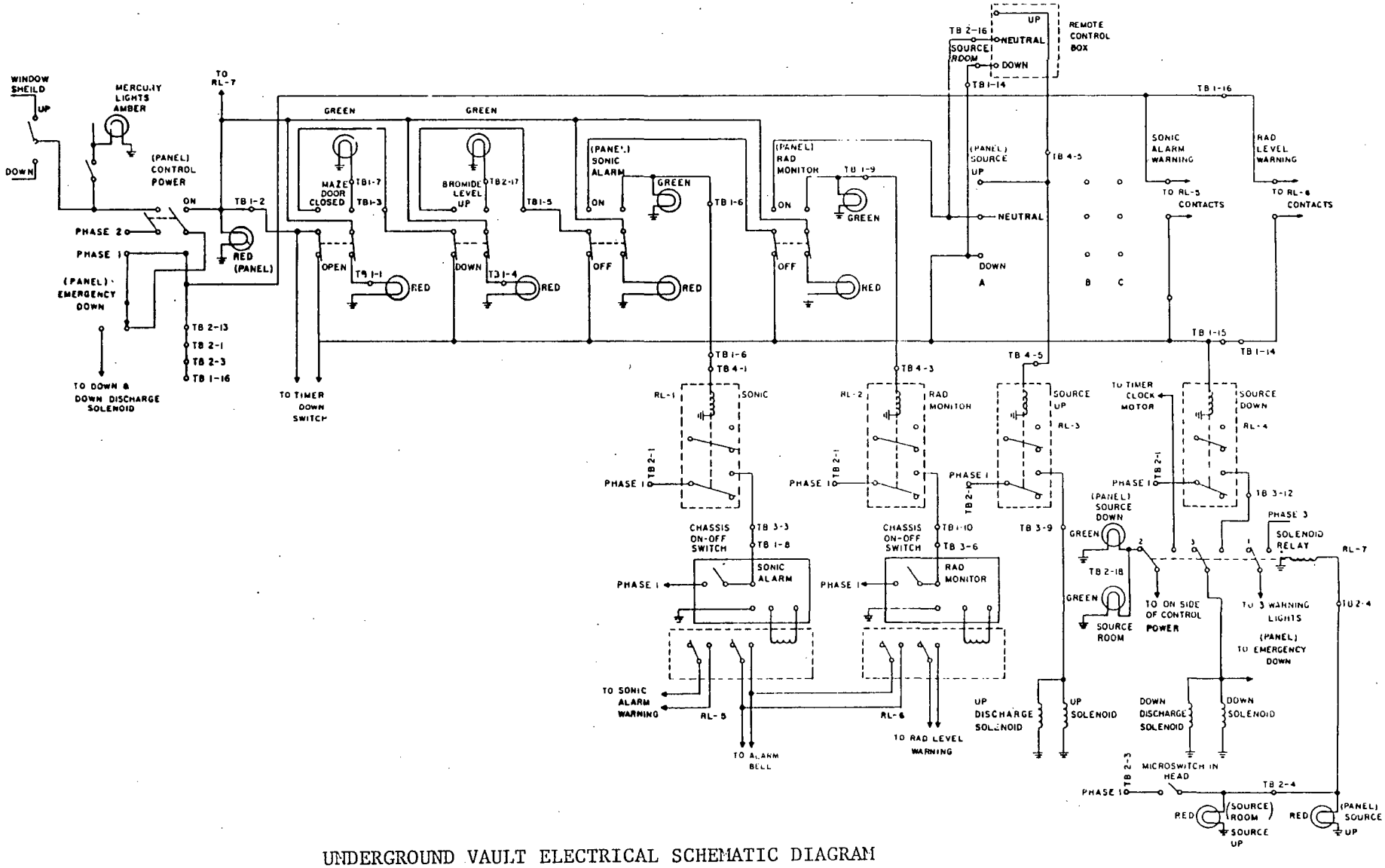

UNDERGROUND VAULT ELECTRICAL SCHEMATIC DIAGRAM

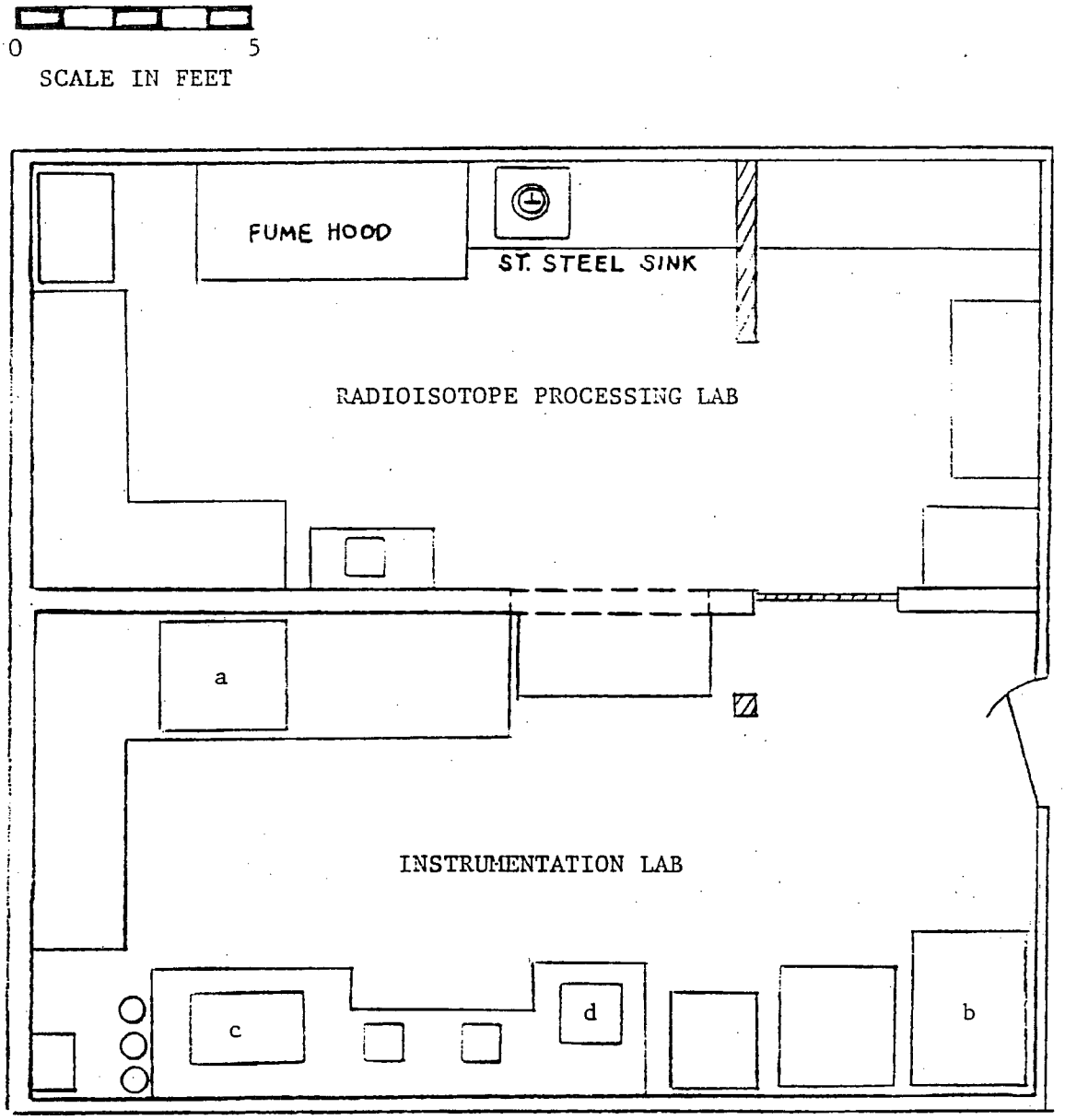

NOTE: ⊕ DRAIN TO RADIOACTIVE TANK NO. 2

RADIOISOTOPE PROCESSING/INSTRUMENTATION ROOM

E2

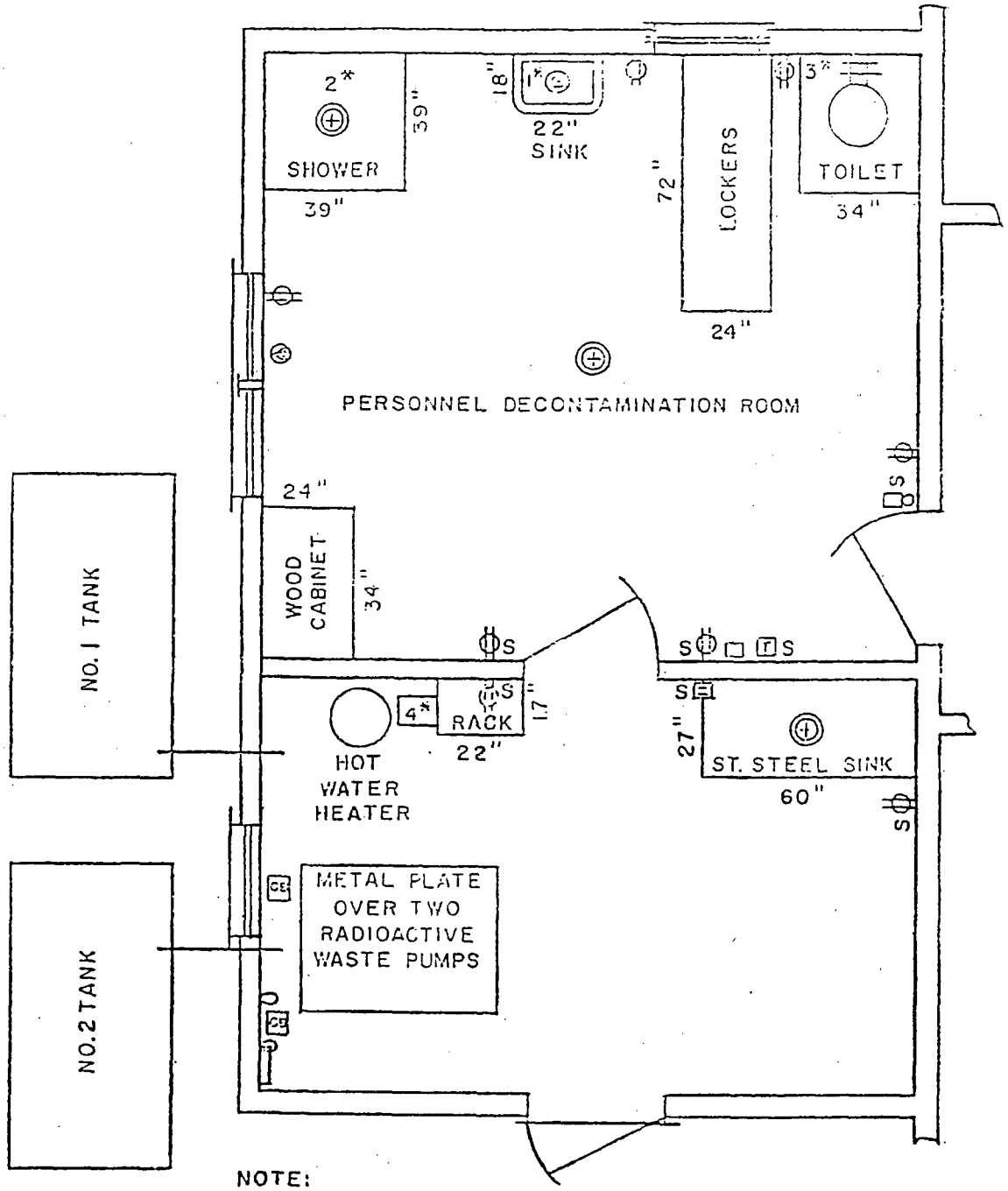

NOTE:

DRAIN TO RADIOACTIVE TANK NO. 2

INDEPENDENT ELECTRICALLY HEATED ROOMS

0 5

SCALE IN FEET

DECONTAMINATION ROOM

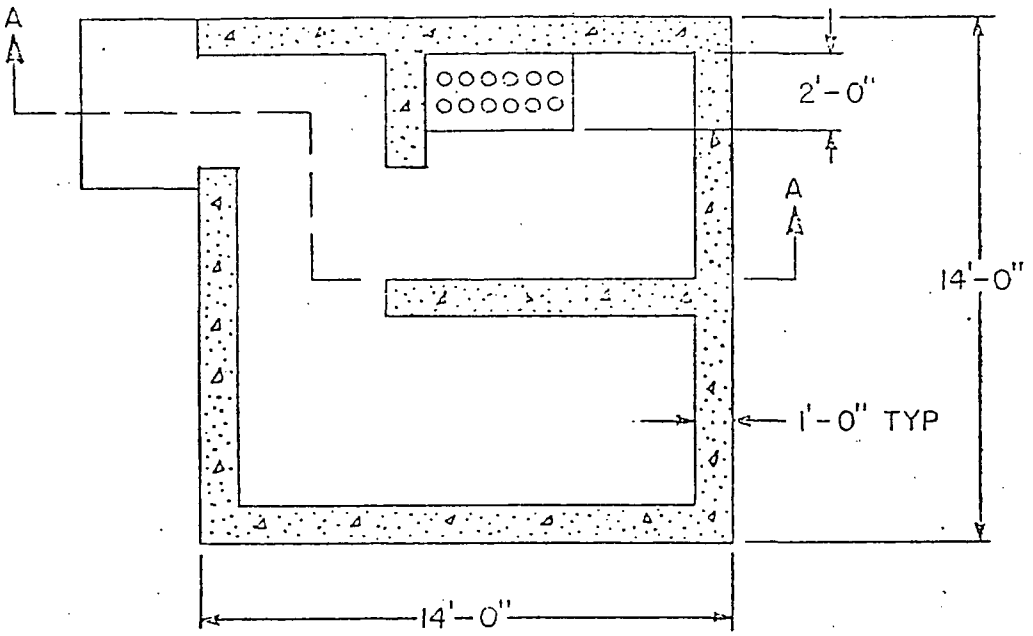

FLOOR PLAN

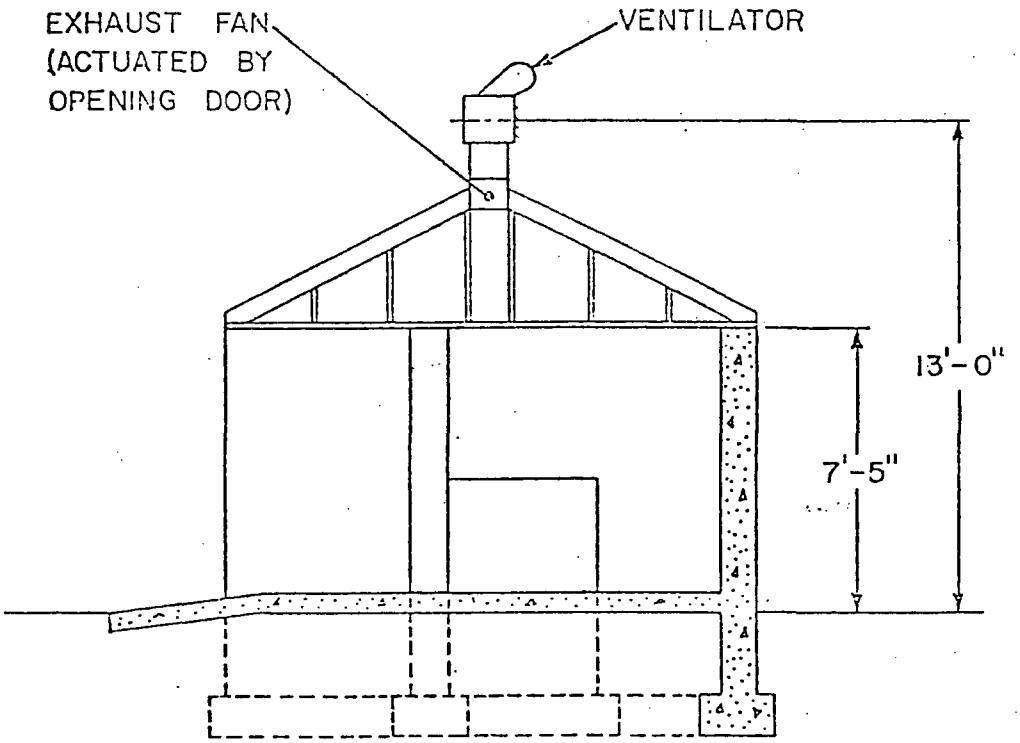

SECTION A-A

RADIOACTIVE STORAGE VAULT, EVANS AREA

RADIATION DETECTION/MEASUREMENT INSTRUMENTATION

1. Hand held instruments:

Instrument	Type	Range
Ludlum Model #5	Geiger Counter	0-2000 mR/hr
Keithley Model #36150	Integrating Survey Meter	0-20 R/hr
Ludlum Model #28[1]	Ratemeter	0-500,000 cpm
Eberline PRM-7	Mircro R Meter	0-5 mr/hr
Eberline RM-21	Neutron Survey Meter	0-10000 mr/hr
Eberline RO-2/RO-3	Portable Ion Chamber	0-5000 mr/hr
Eberline PRM-5-3[2]	Pulse Rate Meter	0-500,000 cpm
Eberline PRS-1[2]	Portable Rate Meter	Variable [3]
Dosimeter Corp Model DRD #862	Pocket Dosimeter	0-200 mR
Eberline ESP-1[2]	Eberline Smart Portable	Variable [3]

[1] Probes available include Model 44-9 (Pancake GM)

[2] Probes available include: AC-3 (Alpha Scintillation), HP-210 (Pancake GM), HP-270 (GM), PNR-4 (now NRD-neutron), LEG-1 (Gamma), SPA-3 (Scintillation)

[3] Variable, depending upon probe used

2. Fixed radiation counting systems (See Enclosure 10):

   a. Packard Model 1500 Liquid Scintillation Counter

   b. Tennelec Model 5110 Low Background Alpha/Beta Counter

   c. Canberra Model 2404 Alpha/Beta/Gamma Counter

   d. Canberra Series 35 Plus Multichannel Analyzer

RADIATION SURVEY
Underground Vault
Irradiator Facility

Ex 2

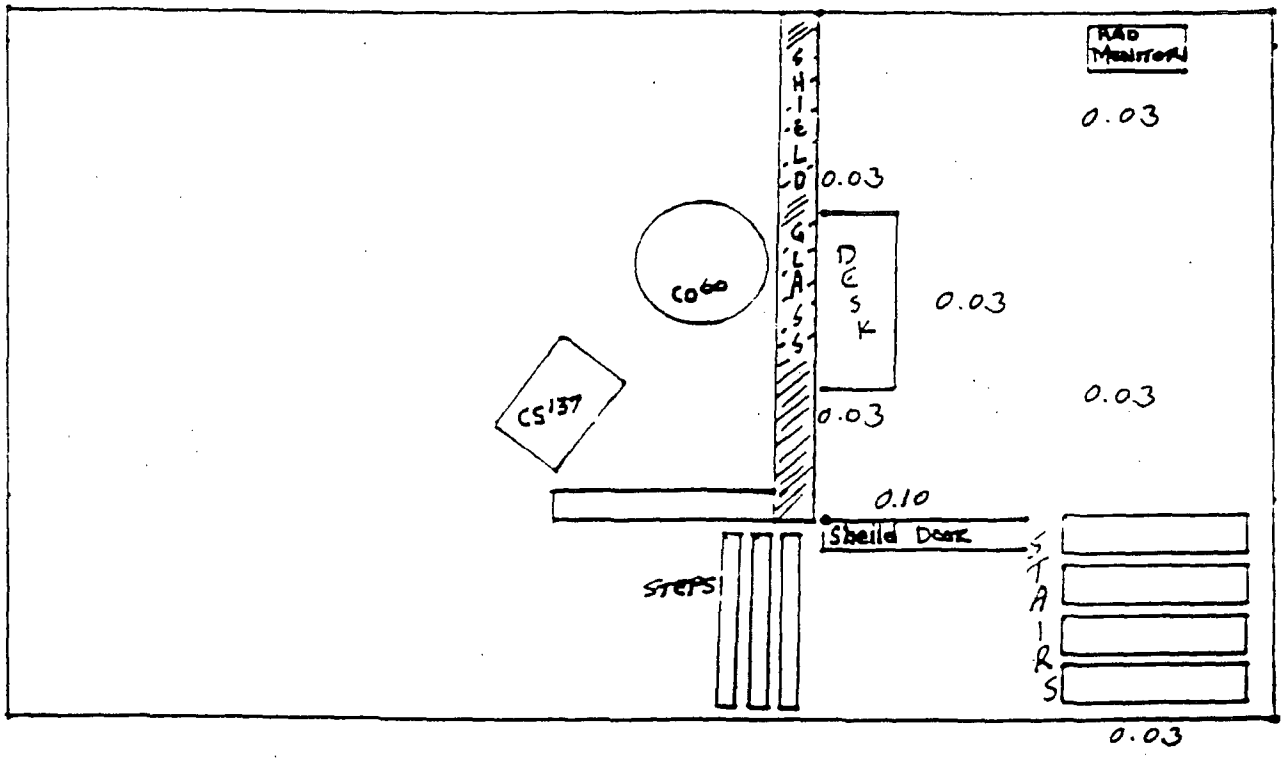

POSTINGS

Notice to Workers ✓

Section 206 ✓

NRC Form 3 ✓

Caution Radioactive Material ✓

Caution High Radiation Area ✓

SOP ✓

Background 0.03 mr/hr

NOTE: Cs-137 and Co-60 sealed sources fully open during survey.

COMMENTS: All readings are in mR/hr at waist level (36") unless otherwise indicated.

Survey instrument: Ludlum Model #5

Calibration Due Date: 8 July 91 Serial #: 44271

Surveyor: SSG H. Bianchi Date: 10 April 91

RADIATION SURVEY

DIRT MOUND ABOVE VAULT IRRADIATOR

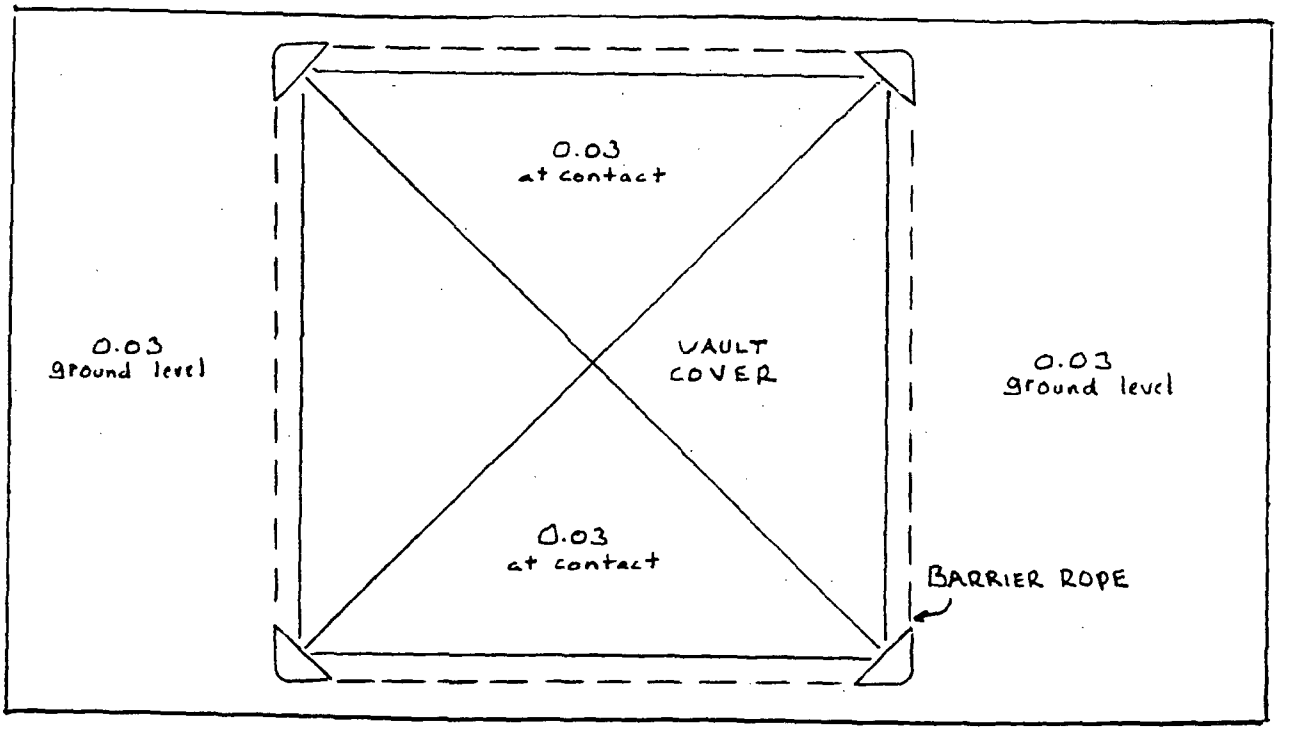

POSTINGS

Notice to Workers n/a

Section 206 n/a

NRC Form 3 n/a

Caution Radioactive Material n/a

Caution High Radiation Area n/a

SOP n/a

Background 0.03 mr/hr

NOTE: Cs-137 and Co-60 sealed sources fully open during survey.

COMMENTS: All readings are in mR/hr at waist level (36") unless otherwise indicated.

Survey instrument: Ludlum Model #5

Calibration Due Date: 8 July 91 Serial #: 44271

Surveyor: SSG A. Bianchi Date: 10 April 91

ENCL 15

Supplement E

1. Reference: Item 10, NRC Form 313.

2. The radiation protection program at Fort Monmouth is under the management of the CECOM Safety Office on behalf of the Commander, CECOM. CECOM Regulation 385-18 (enclosure 1), establishes policies, responsibilities, and procedures for possession/use of radioactive materials at Fort Monmouth.

3. The completion of a radiological permit application is required of all potential users of radioactive material at Fort Monmouth. In this document, the researcher indicates radioactive materials required, available facilities for research, safety equipment available, training/experience of research personnel and provides a standard operating procedure. The application is reviewed by the RPO for completeness and accuracy, and a recommendation for approval/disapproval is given to the (RCC). The RCC has final approval/disapproval authority.

4. The RPO insures that monthly inspections of all facilities where radioactive material are used and/or stored are performed and results maintained. Included in these inspections are radiation surveys, wipe tests (where appropriate), evaluation of shielding procedures, postings and overall adherence to required regulations.

5. At enclosure 2 is the Standard Operating Procedure for the use of the Irradiator Facility.

HEADQUARTERS
U.S. ARMY COMMUNICATIONS-ELECTRONICS COMMAND
FORT MONMOUTH, NEW JERSEY 07703-5000

CECOM REGULATION
No. 385-18

18 November 1988

Safety

IONIZING RADIATION PROTECTION PROGRAM

Issue of changes to this regulation by other Command elements is prohibited unless specifically approved by Commander, CECOM, ATTN: AMSEL-SF-RER.

	Paragraph	Page
Purpose	1	1
Applicability	2	1
References	3	1
Terms	4	2
Policy	5	2
Responsibilities	6	2
Licensing of R&D Projects	7	3
Procedures	8	4
Appendix A. Terms		A-1
B. Dosimeter Application and Record of Radiation Exposure (DD Form 1952)		B-1
C. Record of Occupational Exposure to Ionizing Radiation (DD Form 1141)		C-1

1. Purpose. This regulation establishes policy, procedures, and responsibilities for the use of ionizing radiation sources at the U.S. Army Communciations-Electronics Command (CECOM).

2. Applicability. This regulation applies to all activities utilizing ionizing radiation sources.

3. References. Related references are as follows:

a. AR 40-14 (Control and Recording Procedures for Exposure to Ionizing Radiation and Radioactive Materials).

b. AR 385-11 (Safety, Ionizing Radiation Protection, Licensing, Contrc Transportation, Disposal, and Radiation Safety).

c. AR 700-64 (Radioactive Commodities in the DOD Supply System).

d. Title 10, Code of Federal Regulations (Energy).

e. Title 49, Code of Federal Regulations (Transportation).

*This regulation supersedes CECOM-R 385-18, 19 March 1987.

ENCL 1

(3) Evaluate all applications for Radiological Permits for RCC review/approval.

(4) Maintain all records on the utilization of ionizing radiation sources required by the NRC, Department of Defense, Department of the Army, Department of Transportation, U.S. Army Materiel Command, and all other applicable agencies.

e. Directors of R&D activities will:

(1) Ensure that all R&D projects in their activity involving the utilization of ionizing radiation sources are conducted in full compliance with all applicable regulations and standing operating procedures (SOP).

(2) Appoint one primary and one alternate member to the RCC.

f. Researchers/engineers will:

(1) Develop SOPs for the safe utilization of ionizing radiation sources under their control, subject to RCC approval.

(2) Ensure all activities under their control are conducted in a safe manner in full compliance with all applicable regulations.

7. Licensing of R&D Projects. a. Licensing and Permits:

(1) All R&D projects requiring the acquisition of radioactive material will notify the CECOM Safety Office (CSO) at least 9 months prior to start-up to ensure the procurement of the necessary NRC licenses, DARAs, and/or amendments. Information provided must include source design, radionuclide activity, facilities, and a description of the research project/proposed use.

(2) Only the CSO may obtain NRC licenses/amendments and DARAs/amendments for activities utilizing radioactive materials/sources.

b. Radiological Permits:

(1) All researchers requiring the use of radioactive material and/or ionizing radiation producing devices will, at least 3 months prior to start-up, submit to the CSO a completed Radiological Permit application. This application can be obtained by contacting the CSO, ATTN: AMSEL-SF-RER.

(2) Additionally, researchers will submit an SOP to the CSO for the use of the radioactive material/ionizing radiation producing device. The SOP will contain information on the safe handling and use of the isotope(s)/device(s), storage, disposal, and personnel protection.

(3) Applications must be approved by both the CSO and the RCC. Prior to approval, the RPO or designee will conduct a preliminary survey of the work site.

c. Transportation:

(1) All incoming/outgoing shipments of radioactive material must be surveyed and wipe tested by the RPO or qualified designee.

(2) In addition to all other records required, each shipment of radioactive material must include one copy of a Radioactive Material Movement form signed by the RPO or designee. These forms are maintained by the CECOM Safety Office.

e. Disposal:

(1) All disposal of radioactive material must be coordinated with the RPO.

(2) Only the CSO may request disposition instructions from the U.S. Arr Armament, Munitions, and Chemical Command.

f. Instrumentation: The RPO will maintain radiological detection instrumentation sufficient to detect all of the types of radiation.

g. Training:

(1) Operational training of personnel in the use of ionizing radiation sources is the responsibility of the individual(s) issued the authorizing Radiological Permit. Experience and training of researchers is to be included on the Radiological Permit. Experience and training of researcher is to be included on the Radiological Permit (see para 7b above).

(2) Annual training required under Title 10, Code of Federal Regulatio (CFR) Part 19, of all personnel involved in the use, storage, transportatio maintenance, and disposal of ionizing radiation sources will be conducted b the RPO or qualified designee. Personnel failing to attend this training will not be permitted to continue using ionizing radiation sources.

(3) Annual training will include, but is not limited to, a review of the rules and regulations contained in Title 10, CFR, Parts 19, 20, and 21, and this regulation.

h. Emergency Procedures:

(1) Any accident or incident involving the loss of radioactive materials, contamination of property, contamination of personnel, or exposure of personnel to more than 100 millirem (mrem) in 1 week will be reported to the RPO within 1 hour by telephonic means (notification will be made to the staff duty officer within 1 hour during off-duty hours).

(2) Decontamination of facilities will be supervised by the RPO or qualified designee.

(3) Decontamination of personnel will be supervised by the RPO and Medical Officer.

(4) In any emergency situation, priority must be given to minimizing risk to personnel. Secondary to this is the protection of property.

Appendix A

Terms

ALARA. An acronym for "as low as reasonably achievable;" refers to an operating philosophy in which occupational exposures to radiation are kept to a minimum.

Bioassay. The determination of kinds, amounts or concentrations, and locations of radioactive materials in the human body.

Contamination (radioactive). The deposition of radioactive material in any place where it is not desired, and particularly in any place where its presence might be harmful.

Curie (Ci). A unit of activity. One Ci equals 3.70 E10 nuclear transformations per second. A microcurie (uCi) equals one-millionth of a curie (3.70 E04 disintegrations per second or 2.22 E06 disintegrations per minute).

DARA. Department of the Army Radioactive Material Authorization or Permit.

Decontamination. The reduction or removal of radioactive contamination from any given surface.

Dose. A general term denoting the quantity of radiation or energy absorbed.

Exposure (occupational). Exposure to ionizing radiation incurred by an employee whose duties may result in such exposure. It does not include exposures that are incident to medical or dental diagnosis or therapy.

Film Badge. A pack of appropriate photographic film and filters used to determine radiation exposure.

Ionizing radiation producing devices. Electronic devices that are capable of producing ionizing radiation.

Leak test. A determination of the integrity of a sealed source encapsulation by measurement of the amount of radioactive material escaping the encapsulation.

Licensed material. Source, special nuclear, or by-product material received, stored, possessed, used, or transferred under a general or specific license issued by the NRC.

License (specific). A document issued by the NRC under 10 CFR that gives the bearer the right to procure, receive, store, transfer, use, export, and import specified radioactive items under specific terms.

Rad. The unit of absorbed dose equal to 0.01 Joules/kilogram in any medium.

Radiation. Emission of energy through space in the form of waves or particles.

Appendix A--Continued

Radioactive waste. Includes the following:

a. Property contaminated to the extent that decontamination is economically unsound.

b. Surplus radioactive material whose sale, transfer, or donation is prohibited.

c. Waste that is radioactive due to production, possession, or use of radioactive material.

Radionuclide. A radioactive species of an atom characterized by the constitution of its nucleus.

Rem. A special unit of dose equivalent. The dose equivalent in rems is numerically equal to the absorbed dose in rads multiplied by the quality factor and any other necessary modifying factors.

Sealed source. Any radioactive material that is permanently bonded or fixed in a capsule or matrix designed to prevent the release or dispersal of such radioactive material under the most severe conditions that may be encountered in normal use or handling.

Wipe Test. A procedure in which a swab or piece of absorbent material (paper or cloth) is rubbed on a surface and its radioactivity measured to determine if the surface is contaminated with removable or non-fixed radioactive material.

X-rays. Penetrating electromagnetic radiation whose wavelengths are shorter than visible light. They are usually produced by bombarding a metallic target with fast electrons in a high vacuum. In nuclear reactions, photons that originate in the nucleus are called gamma rays. In atomic reactions, photons that originate from the electronic orbits are called x-rays.

Appendix B

DOSIMETER APPLICATION AND RECORD OF OCCUPATIONAL RADIATION EXPOSURE

Print legibly or type all information requested. See Privacy Act Statement on reverse.

1. FULL NAME (Last, First, Middle) JARVIS, Whitney N.	2. DATE OF BIRTH (YYMMDD) [redacted]	3. SOCIAL SECURITY NO. [redacted]
4. DUTY SECTION (Dept., Ward, Unit, etc.) Research Laboratory	5. JOB TITLE Chemist	6. DUTY PHONE 283-1814
7. PAY GRADE CIVILIAN: GS-12 / MILITARY:	8. HAVE YOU WORN A DOSIMETER ISSUED BY THIS COMMAND IN THE PAST ☐ YES ☒ NO	9. DATE OF RADIATION PHYSICAL (YYMMDD) 81-05-01
10. DUTY STATUS ☒ PERMANENT ☐ TRANSIENT 6 WEEKS OR LESS	IF TRANSIENT SHOW MAILING ADDRESS (street address, city, state, zip code) OF LOCATION OF HEALTH RECORDS	

EXPOSURE INFORMATION *(ITEMS 11 THROUGH 20 FOR HEALTH PHYSICS USE ONLY)*

11. CLASSIFICATION OF EXPOSURE: ☒ EXTERNAL ☐ NEUTRON ☐ INTERNAL

12. BADGES REQUIRED: ☐ WRIST ☒ WHOLE-BODY ☐ NEUTRON

13. TLD REQUIRED: ☐ WRIST ☐ WHOLE-BODY ☐ FINGER

14. BIOASSAYS REQUIRED

WHOLE-BODY COUNT	THYROID UPTAKE	URINALYSIS	FREQUENCY
☐ YES ☐ NO	☐ YES ☐ NO	☐ α ☐ β ☐ β-γ	☐ MONTHLY ☐ QUARTERLY ☐ ANNUALLY

GIVE DATES FOR ITEMS 15 THROUGH 20 (YYMMDD)

15. DOSIMETER(S) ISSUED 81-05-03	16. DD FORM(S) 1141 INITIATED 81-05-03	17. DOSIMETER(S) DISCONTINUED
18. LAST DOSIMETER(S) RETURNED	19. LOCATOR CARD TO HEALTH RECORD 81-05-03	20. DD FORM(S) 1141 TO MEDICAL RECORDS

OCCUPATIONAL EXPOSURE HISTORY

NOTE: This section only applies to the individual who has worked with radiation-producing devices or radioisotopes in a permanent status. List only those employers for whom you worked with radiation.

NAME OF EMPLOYER	ADDRESS (street address, city, state, zip code)	FROM YR	FROM MO	TO YR	TO MO	Do not write in this space
Nuclear Services, Inc	Shickshinny, PA	78	08	80	04	
Rosewater University	Portland, OR	80	04	81	04	
				TOTAL EXPOSURE DATA		

REMARKS

SAMPLE

DD FORM 1952, 81 NOV — EDITION OF 1 SEP 74 IS OBSOLETE.

Appendix C

RECORD OF OCCUPATIONAL EXPOSURE TO IONIZING RADIATION

FOR INSTRUCTIONS, SEE REVERSE OF SHEET.

1. IDENTIFICATION NUMBER	2. NAME (Last, first, middle initial)	3. SOCIAL SECURITY NUMBER	4. RANK/RATE TITLE OF POSITION	5. DATE OF BIRTH (Day, month, year)
086	JARVIS, WHITNEY N.		TDR	

PLACE WHERE EXPOSURE OCCURRED	PERIOD OF EXPOSURE		DOSE THIS PERIOD (rem) 1. Method of monitoring is presumed to be film badge reading unless otherwise specified under item 16, "REMARKS."				ACCUMULATED DOSE (rem)		INITIAL
ACTIVITY	FROM (Day-Mo-Yr)	TO (Day-Mo-Yr)	SKIN DOSE (Soft)	GAMMA AND X-RAY	NEUTRON	TOTAL THIS PERIOD	TOTAL LIFETIME	PERMISSIBLE LIFETIME 5(N-18)	PERSON MAKING ENTRY
6	7	8	9	10	11	12	13	14	15
Previous Exposure[2]	Aug66	Apr68	-	-	-	00.204	00.204	NA	CED
Admin Dose[3]	Apr68	Apr69	-	-	-	75.000	75.204	NA	CED
APG-EA, MD	3May69	4Jun69	NR	00.009	NU	00.009	75.213	NA	CED
do	6Jun69	6Jun69	Quarterly Review by RPO				-	NA	JER
do	5Jun69	4Jul69	00.007	00.018	NU	00.018	75.231	NA	CED
do	5Jul69	7Aug69	NR	00.159	NU	00.159	75.390	NA	CED
do	8Aug69	6Sep69	Film Badge Lost[4]		NU	06.250	81.640	NA	CED
do	8Sep69	8Sep69	Quarterly Review by RPO				-	NA	JER
do	7Sep69	4Oct69	NR	00.143	NU	00.143	81.783	NA	CED
do	5Oct69	4Nov69	NR	00.162	NU	00.162	81.945	NA	WLW
do	5Nov69	6Dec69	00.032	00.150	NU	00.150	82.095	NA	WLW
do	Film Badge Service Discontinued 6 Dec 69						-	NA	WLW
do	6Dec69	6Dec69	Quarterly Review by RPO				-	NA	JER
Fort Plunkett	2Jan70	3Feb70	NR	00.015	NU	00.015	82.110	NA	RKO
do	4Feb70	3Mar70	NR	00.420	NU	00.420	82.530	NA	RKO
do	4Mar70	2Apr70	00.140	18.125[5]	NU	18.125	100.655	NA	RKO
do	22Mar70	22Mar70	Quarterly Review by RPO				-	NA	MJM
do	3Apr70	4May70	Relieved From Duties[6]				100.655	NA	RKO
do	5May70	3Jun70	Involving Exposure to RAD				100.655	NA	RKO
do	4Jun70	2Jul70	00.025	00.200	NU	00.200	100.855	NA	RKO
Fort Smith, CA	Aug70	Jul71	No Film Badge Worn or Exposure Received				100.855	NA	GML
			SAMPLE						

16. REMARKS (Continue on additional sheet if necessary)

1. Wrist Record (WB Record 074)
2. Nuclear Services, Inc., Shickshinny, PA
3. Rosewater University, Portland, OR
   No film badge records (AR 40-14)
   NR - none reported; NU - not used.
4. Admin Dose = $\frac{75 \text{ rem}}{12 \text{ months}}$ = 06.250
5. Accidental Exposure. Case documented IAW AR 40-5.
6. Necessary to avoid exceeding quarterly limit

TO BE RETAINED PERMANENTLY IN INDIVIDUAL'S MEDICAL RECORD

DD FORM 1141 (MAY 65)

PREVIOUS EDITIONS ARE OBSOLETE.

The proponent of this publication is the U.S. Army Communications-Electronics Command. Users are invited to send comments on DA Form 2028 (Recommended Changes to Publications and Blank Forms) to Commander, CECOM, ATTN: AMSEL-SF-RER, Fort Monmouth, New Jersey 07703-5000.

OFFICIAL:

BILLY M. THOMAS
Major General, USA
Commanding

RONALD E. GORNTO
Colonel, GS
Chief of Staff

DISTRIBUTION:
To be distributed in accordance with SEL Form 1130 requirements for CECOM regulations, Safety, plus

AMSEL-SF-RER.....10
Record Set File, ATTN: SELHI-ADJ.....6

HEADQUARTERS
U.S. ARMY COMMUNICATIONS-ELECTRONICS COMMAND
FORT MONMOUTH, NEW JERSEY 07703-5000

Draft

CECOM REGULATION
No. 385-18

Safety

IONIZING RADIATION PROTECTION PROGRAM

Issue of changes to this regulation by other CECOM elements is prohibited unless specifically approved by Commander, CECOM, ATTN: AMSEL-SF-RER.

	Paragraph	Page
Purpose	1	1
Scope	2	1
References	3	1
Terms	4	2
Policy	5	2
Responsibilities	6	2
Licensing of R&D Projects	7	3
Procedures	8	4
Appendix A. Terms		A-1
B. Dosimeter Application and Record of Radiation Exposure (DD Form 1952)		B-1
C. Record of Occupational Exposure to Ionizing Radiation (DD Form 1141)		C-1

1. Purpose. This regulation establishes policy, procedures, and responsibilities for the use of ionizing radiation sources at the U.S. Army Communications-Electronics Command (CECOM), Fort Monmouth.

2. Scope. This regulation applies to all activities utilizing ionizing radiation sources at Fort Monmouth.

3. References. Related references are as follows:

a. AR 40-14, Control and Recording Procedures for Exposure to Ionizing Radiation and Radioactive Materials.

b. AR 385-11, Safety, Ionizing Radiation Protection, Licensing, Control, Transportation, Disposal, and Radiation Safety.

---

* This regulation supercedes CECOM-R 385-18, 18 November 1988

---

(4) Obtain all NRC licenses and DARAs necessary to conduct approved Research and Development (R&D) operations for R&D activities.

(5) Serve as license manager for all NRC licenses/DARAs issued to CECOM.

d. The RPO, ARPO or designee will:

(1) Administer the RPP.

(2) Provide safety guidance to users of ionizing radiation sources.

(3) Maintain all necessary NRC licenses and DARAs for R&D activities at Fort Monmouth.

(4) Conduct monthly evaluations of R&D activities utilizing ionizing radiation sources.

(5) Evaluate all applications for Radiological Permits for RCC review/approval.

(6) Maintain all records on the utilization of ionizing radiation sources required by the NRC, Department of Defense, Department of the Army, Department of Transportation, U. S. Army Materiel Command, and all other applicable agencies.

(7) Have the authority to grant interim approval of Radiological Permits pending the next scheduled RCC meeting.

e. Directors of R&D activities will:

(1) Ensure that all R&D projects in their activity involving the utilization of ionizing radiation sources are conducted in full compliance with all applicable regulations and standing operating procedures (SOP).

(2) Appoint one primary and one alternate member to the RCC.

f. Researchers/engineers will:

(1) Develop SOPs for the safe utilization of ionizing radiation sources under their control, subject to RCC approval.

(2) Ensure all activities under their control are conducted in a safe manner in full compliance with all applicable regulations.

(2) Personnel requiring Thermoluminescent Dosimetry (TLD) badges will submit to the RPO a completed DD Form 1952 (Dosimeter Application and Record of Occupational Radiation Exposure) (see Appendix B).

(3) Exposure records will be prepared and maintained on DD Forms 1141 (Record of Occupational Exposure to Ionizing Radiation) (see Appendix C) or Automated Dosimetry Records by the RPO or designee in accordance with AR 40-14.

(4) Radiation physicals will be conducted, as applicable, by the Medical Officer at an interval not to exceed 3 years.

b. Surveys:

(1) Health physics surveys of areas where ionizing radiation sources are utilized will be conducted monthly by the RPO or qualified designee.

(2) Wipe tests will be conducted monthly by the RPO or qualified designee in those areas where unsealed radioisotopes are used and/or stored.

(3) Periodic leak testing of sealed sources of radioactive material will be conducted by the RPO or qualified designee at a frequency determined by the applicable NRC license/DARA.

(4) Surveys will include determination as to adequacy of personnel protection, adherence to operating procedures, record keeping, etc.

c. Procurement:

(1) All requests for the procurement of radioactive material will be routed through the RPO to ensure that the proper NRC license/DARA is available.

(2) No procurement of ionizing radiation sources are authorized without an approved Radiological Permit (see paragraph 7b above).

d. Transportation:

(1) All incoming/outgoing shipments of radioactive material must be surveyed and wipe tested by the RPO or qualified designee.

(2) Currently, all shipments enter/leave Fort Monmouth through Building 116. Any radiological shipments arriving/leaving Fort Monmouth from some other location must be coordinated with both the Transportation Division and the RPO/Radiological Engineering Branch.

be reported to the RPO within 1 hour by telephonic means (notification will be made to the staff duty officer within 1 hour during off-duty hours).

(2) Decontamination of facilities will be supervised by the RPO or qualified designee.

(3) Decontamination of personnel will be supervised by the RPO and Medical Officer.

(4) In any emergency situation, priority must be given to saving lives and minimizing injuries to personnel. Secondary to this is the protection of property.

Rad. The unit of absorbed dose equal to 0.01 Joules/kilogram in any medium.

Radiation. Emission of energy through space in the form of waves or particles.

Radiation Control Committee (RCC). A group of qualified personnel officially appointed to set local policy and to guide the radiation protection program.

Radiation Protection Officer (RPO). An individual designated to provide consultation and advice on the degree of hazards associated with radiation and the effectiveness of measures to control these hazards. This individual shall be technically qualified by virtue of education, training, and/or professional experience to assure a capability commensurate with the type and hazard of the radiation sources for which he/she is responsible. (The term "Radiation Protection Officer" is a functional title and is not intended to denote a commissioned status or job classification).

Radiation sources. Materials or devices that make or are capable of generating radiation, including:

a. Naturally occurring radioactive materials.

b. By-product materials.

c. Source materials.

d. Special nuclear materials.

e. Fission products.

f. Materials containing induced or deposited radioactivity.

g. Radiographic and fluoroscopic equipment.

h. Particle generators and accelerators.

i. Electronic equipment that use klystrons, magnetrons, or other electron tubes that produce x-rays.

Radiation survey. An evaluation of the radiation hazard associated with the use or possession of radiation sources, and the adequacy of protective measures.

DOSIMETER APPLICATION AND RECORD OF OCCUPATIONAL RADIATION EXPOSURE

Print legibly or type all information requested. See Privacy Act Statement on reverse.

1. FULL NAME (Last, First, Middle)	2. DATE OF BIRTH (YYMMDD)	3. SOCIAL SECURITY NO.
JARVIS, Whitney N.	[redacted]	[redacted]

4. DUTY SECTION (Dept., Ward, Unit, etc.)	5. JOB TITLE	6. DUTY PHONE
Research Laboratory	Chemist	283-1814

7. PAY GRADE		8. HAVE YOU WORN A DOSIMETER ISSUED BY THIS COMMAND IN THE PAST	9. DATE OF RADIATION PHYSICAL (YYMMDD)
CIVILIAN	MILITARY		
GS-12		☐ YES ☒ NO	81-05-01

10. DUTY STATUS	IF TRANSIENT SHOW MAILING ADDRESS (street address, city, state, zip code) OF LOCATION OF HEALTH RECORDS
☒ PERMANENT ☐ TRANSIENT 6 WEEKS OR LESS	

EXPOSURE INFORMATION *(ITEMS 11 THROUGH 20 FOR HEALTH PHYSICS USE ONLY)*

11. CLASSIFICATION OF EXPOSURE: ☒ EXTERNAL ☐ NEUTRON ☐ INTERNAL

12. BADGES REQUIRED: ☐ WRIST ☒ WHOLE-BODY ☐ NEUTRON

13. TLD REQUIRED: ☐ WRIST ☐ WHOLE-BODY ☐ FINGER

14. BIOASSAYS REQUIRED

WHOLE-BODY COUNT	THYROID UPTAKE	URINALYSIS	FREQUENCY
☐ YES ☐ NO	☐ YES ☐ NO	☐ α ☐ β ☐ β-γ	☐ MONTHLY ☐ QUARTERLY ☐ ANNUALLY

GIVE DATES FOR ITEMS 15 THROUGH 20 (YYMMDD)

15. DOSIMETER(S) ISSUED	16. DD FORM(S) 1141 INITIATED	17. DOSIMETER(S) DISCONTINUED
81-05-03	81-05-03	
18. LAST DOSIMETER(S) RETURNED	**19. LOCATOR CARD TO HEALTH RECORD**	**20. DD FORM(S) 1141 TO MEDICAL RECORDS**
	81-05-03	

OCCUPATIONAL EXPOSURE HISTORY

NOTE: This section only applies to the individual who has worked with radiation-producing devices or radioisotopes in a permanent status. List only those employers for whom you worked with radiation.

NAME OF EMPLOYER	ADDRESS (street address, city, state, zip code)	FROM YR	FROM MO	TO YR	TO MO	Do not write in this space
Nuclear Services, Inc	Shickshinny, PA	78	08	80	04	
Rosewater University	Portland, OR	80	04	81	04	
				TOTAL EXPOSURE DATA		

REMARKS

SAMPLE

DD FORM 81 NOV 1952 EDITION OF 1 SEP 74 IS OBSOLETE. (see reverse)

Sample DD Form 1952.

RECORD OF OCCUPATIONAL EXPOSURE TO IONIZING RADIATION

FOR INSTRUCTIONS, SEE REVERSE OF SHEET.

1. IDENTIFICATION NUMBER	2. NAME (Last, first, middle initial)	3. SOCIAL SECURITY NUMBER	4. RANK/RATE TITLE OF POSITION	5. DATE OF BIRTH (Day, month, year)
074	JARVIS, WHITNEY N.		TDR	

Ex 6

PLACE WHERE EXPOSURE OCCURRED WHOLE BODY	PERIOD OF EXPOSURE		DOSE THIS PERIOD (rem) 1. Method of monitoring is presumed to be film badge reading unless otherwise specified under item 16, "REMARKS."				ACCUMULATED DOSE (rem)		INITIAL
ACTIVITY	FROM (Day-Mo-Yr)	TO (Day-Mo-Yr)	SKIN DOSE (Soft)	GAMMA AND X-RAY	NEUTRON	TOTAL THIS PERIOD	TOTAL LIFETIME	PERMISSIBLE LIFETIME 5(N-18)	PERSON MAKING ENTRY
6	7	8	9	10	11	12	13	14	15
Previous Exposure[1]	Aug66	Apr68	NR	00.107	NU	00.107	00.107	-	CED
Admin Dose[2]	Apr68	Apr69	-	-	-	05.000	05.107	45.000	CED
APG-EA. MD	3May69	4Jun69	NR	00.000	NU	00.000	05.107	45.000	CED
do	6Jun69	6Jun69	Quarterly Review by RPO				-	-	JER
do	5Jun69	4Jul69	00.003	00.010	NU	00.010	05.117	45.000	CED
do	5Jul69	7Aug69	NR	00.078	NU	00.078	05.195	45.000	CED
do	8Aug69	6Sep69	Film Badge Lost[3]		NU	00.416	05.611	45.000	CED
do	8Sep69	8Sep69	Quarterly Review by RPO				-	-	JER
do	7Sep69	4Oct69	NR	00.064	NU	00.064	05.675	45.000	CED
do	5Oct69	4Nov69	NR	00.075	NU	00.075	05.750	45.000	WLW
do	5Nov69	6Dec69	00.016	00.070	NU	00.070	05.820	45.000	WLW
do	Film Badge Service Discontinued 6 Dec 69						-	-	WLW
do	6Dec69	6Dec69	Quarterly Review by RPO				-	-	JER
Fort Plunkett	2Jan70	3Feb70	NR	00.000	00.000	00.000	05.820	45.000	RKO
do	4Feb70	3Mar70	NR	00.178	00.062	00.240	06.060	45.000	RKO
do	4Mar70	2Apr70	00.052	02.504	00.126	02.630	08.690	45.000	RKO
do	22Mar70	22Mar70	Quarterly Review by RPO				-	-	MJM
do	3Apr70	4May70	Relieved From Duties				08.690	50.000	RKO
do	5May70	3Jun70	Involving Exposure to RAD[5]				08.690	50.000	RKO
do	4Jun70	2Jul70	00.017	00.100	00.043	00.143	08.833	50.000	RKO
Fort Smith, CA	Aug70	Jul71	No Film Badge Worn or Exposure Received				08.833	55.000	GML
			SAMPLE						

16. REMARKS (Continue on additional sheet if necessary)

1. Nuclear Services, Inc., Shickshinny, PA
2. Rosewater University, Portland, OR
   No film badge records (AR 40-14).

NR - none reported; NU - not used

Has wrist badge No. 086.

3. Admin Dose = $\frac{5 \text{ rem}}{12 \text{ months}}$ = 00.416 rem
4. Alleged overexposure.
5. Pending investigation IAW AR 40-5.

TO BE RETAINED PERMANENTLY IN INDIVIDUAL'S MEDICAL RECORD

DD FORM 1 MAY 67 1141 PREVIOUS EDITIONS ARE OBSOLETE.

Sample DD Form 1141 for whole-body exposure.

RECORD OF OCCUPATIONAL EXPOSURE TO IONIZING RADIATION

Ex. 2

FOR INSTRUCTIONS, SEE REVERSE OF SHEET.

1. IDENTIFICATION NUMBER	2. NAME (Last, first, middle initial)	3. SOCIAL SECURITY NUMBER	4. RANK/RATE TITLE OF POSITION	5. DATE OF BIRTH (Day,
086	JARVIS, WHITNEY N.		TDR	

PLACE WHERE EXPOSURE OCCURRED	PERIOD OF EXPOSURE		DOSE THIS PERIOD (rem) 1. Method of monitoring is presumed to be film badge reading unless otherwise specified under item 16, "REMARKS."				ACCUMULATED DOSE (rem)		INITIAL
ACTIVITY	FROM (Day-Mo-Yr)	TO (Day-Mo-Yr)	SKIN DOSE (Sk/t)	GAMMA AND X-RAY	NEUTRON	TOTAL THIS PERIOD	TOTAL LIFETIME	PERMISSIBLE LIFETIME 5(N-18)	PERSON MAKING ENTRY
6	7	8	9	10	11	12	13	14	15
Previous Exposure[2]	Aug66	Apr68	-	-	-	00.204	00.204	NA	CED
Admin Dose[3]	Apr68	Apr69	-	-	-	75.000	75.204	NA	CED
APG-EA, MD	3May69	4Jun69	NR	00.009	NU	00.009	75.213	NA	CED
do	6Jun69	6Jun69	Quarterly Review by RPO				-	NA	JER
do	5Jun69	4Jul69	00.007	00.018	NU	00.018	75.231	NA	CED
do	5Jul69	7Aug69	NR	00.159	NU	00.159	75.390	NA	CED
do	8Aug69	6Sep69	Film Badge Lost[4]		NU	06.250	81.640	NA	CED
do	8Sep69	8Sep69	Quarterly Review by RPO				-	NA	JER
do	7Sep69	4Oct69	NR	00.143	NU	00.143	81.783	NA	CED
do	5Oct69	4Nov69	NR	00.162	NU	00.162	81.945	NA	WLW
do	5Nov69	6Dec69	00.032	00.150	NU	00.150	82.095	NA	WLW
do	Film Badge Service Discontinued 6 Dec 69						-	NA	WLW
do	6Dec69	6Dec69	Quarterly Review by RPO				-	NA	JER
Fort Plunkett	2Jan70	3Feb70	NR	00.015	NU	00.015	82.110	NA	RKO
do	4Feb70	3Mar70	NR	00.420	NU	00.420	82.530	NA	RKO
do	4Mar70	2Apr70	00.140	18.125[5]	NU	18.125	100.655	NA	RKO
do	22Mar70	22Mar70	Quarterly Review by RPO				-	NA	MJM
do	3Apr70	4May70	Relieved From Duties[6]				100.655	NA	RKO
do	5May70	3Jun70	Involving Exposure to RAD				100.655	NA	RKO
do	4Jun70	2Jul70	00.025	00.200	NU	00.200	100.855	NA	RKO
Fort Smith, CA	Aug70	Jul71	No Film Badge Worn or Exposure Received				100.855	NA	GML
			SAMPLE						

16. REMARKS (Continue on additional sheet if necessary)

1. Wrist Record (WB Record 074)
2. Nuclear Services, Inc., Shickshinny, PA
3. Rosewater University, Portland, OR
   No film badge records (AR 40-14)
   NR - none reported; NU - not used.
4. Admin Dose = $\frac{75 \text{ rem}}{12 \text{ months}}$ = 06.250
5. Accidental Exposure. Case documented IAW AR 40-5.
6. Necessary to avoid exceeding quarterly limit

TO BE RETAINED PERMANENTLY IN INDIVIDUAL'S MEDICAL RECORD

DD FORM 1 MAY 67 1141

PREVIOUS EDITIONS ARE OBSOLETE.

Sample DD Form 1141 for wrist exposure.

The proponent of this publication is the U.S. Army Communications-Electronics Command. Users are invited to send comments on DA Form 2028 (Recommended Changes to Publications and Blank Forms) to Commander, CECOM, ATTN: AMSEL-SF-RER, Fort Monmouth, New Jersey 07703-5000.

OFFICIAL:

ALFRED J. MALLETTE
Brigadere General, USA
Commanding

DISTRIBUTION:
To be distributed in accordance with SEL Form 1130 requirements for CECOM regulations, Safety, plus

AMSEL-SF-RER.....10
Record Set File, ATTN: SELHI-ADJ..... 6

~~11~~ omit

STANDARD OPERATING PROCEDURE
FOR THE USE OF THE
UNDERGROUND VAULT IRRADIATOR

SOP Number 10-2

1. Purpose: ~~To provide~~ procedure for use of underground vault irradiator in [redacted]. Ex 2

2. Scope: This procedure applies to authorized personnel of the CECOM Safety Office, Radiological Engineering Branch and Center for EW/RSTA, Sensor Systems Division.

3. Procedures:

a. Pre-Operation Set-Up

(1) Obtain key to unlock vault.

(2) Film badge and pocket dosimeter must be properly worn prior to entrance into vault. Visitor badges and dosimeters will be assigned by the Radiation Area Supervisor or CECOM Safety Office Personnel.

(3) Ensure the survey meters that will be taken into vault have been:

(a) Calibrated (active)
(b) Batteries checked
(c) Passed check source test

b. Operation of Cobalt 60 Source

(1) Open the compressed air valve at the top of the stairs.

(2) Close circuit breaker #10. Turn "power" on the console up.

(3) Enter the exposure room and arrange the experimental setup.

(4) Upon leaving the exposure room make sure the emergency switch is up, put the barrier at the door in place, and close the lead lined door.

(5) Turn the key "warning and plug power" to the right, this will lock the lead lined door and activate the plug circuit.

(6) Depress the warning button until the bell starts ringing.

(7) After the bell stops ringing press and hold the "plug" button. The plug light will change from green to yellow and after the plug is up the light will change to red.

(8) Turn the key to bring the source up. The source is now operational.

(9) To stop radiation, turn the warning and plug power key off. This will bring the source down and lower the plug. Radiation is now off. Turn the source power key off.

(10) After completing the experiment, open the circuit breaker and close the compressed air valve located at the top of the stairs.

ENCL 2

(11) When leaving the vault, leave the lead lined door open to promote air circulation, turn off the lights and lock the entrance door upstairs.

c. Operation of Cesium 137 Source

(1) Repeat steps b(1) through b(6) above.
(2) After the bell stops ringing turn the key "Cs source". After the wheel has turned, the radiation is on.
(3) To turn radiation off, turn the key "Cs source" off. This will rotate the source into the shielded position.
(4) Repeat steps b(10) and b(11)

d. Post Operation Procedures

(1) Ensure all sources have been completely shut down.
(2) Ensure external viewing system has been turned off.
(3) Exit room and lock door before returning key and survey meter.
(4) Place film badge and dosimeter on storage rack for subsequent use.

Prepared by: _____ Date: 19 Oct. 1990
STANLEY KRONENBERG, PH.D.
Research Physical Scientist

Approved by: _____ Date: 10/19/90
JOSEPH M. SANTARSIERO
C, Radiological Engrg Br
Radiation Protection Officer

Supplement F

1. Reference: Item 11, NRC Form 313.

2. Disposal of the radioactive materials indicated at Supplement B may be accomplished by return to the appropriate manufacturer, as applicable, and/or through established DA channels in accordance with 10 CFR, and applicable DA regulations. Headquarters, U.S. Army Armament, Munitions and Chemical Command (AMCCOM), has been delegated the responsibility of management coordination for radioactive waste disposal. AMCCOM assures that all radioactive wastes are packaged and shipped in accordance with all applicable requirements for ultimate transfer of the radioactive waste to an authorized burial site. Requests for disposal of transuranic elements are provided to the U.S. Department of Energy (DOE) through AMCCOM. The DOE provides disposition instructions, inclusive of compliance requirements to U.S. Department of Transportation regulations, for shipment to specified DOE installations for ultimate disposal of the material as radioactive waste.

RECORD OF ENVIRONMENTAL CONSIDERATION

TITLE: U.S Nuclear Regulatory Commission (NRC) License Application

DESCRIPTION:

1. The U.S. Army Communications-Electronics Command (CECOM), as proponent for the U.S. Army in Research and Development of electronics and optical systems, has prepared subject vault irradiator license application.

2. This document covers the life cycle of subject material to include use, storage, possession, transportation and disposal.

DETERMINATION:

Based on supporting information available in the license application package, it has been determined that:

1. The item/action meets the screening criteria in Section II, Appendix A, AR 200-2 and qualifies as categorically excluded (paragraph A-11, Appendix A, AR 200-2) from the requirements for an Environmental Assessment or Environmental Impact Statement, because the operations discussed in the NRC license application package are conducted by an established laboratory within enclosed facilities which conform to all applicable federal, state and local laws, regulations and standards.

2. The item is not expected to have a significant individual or cumulative effect on the environment.

3. No environmentally controversial change to existing environmental conditions is expected.

4. There are no extraordinary circumstances (para 4-2, AR 200-2) that may result in an impact on the human environment that would require an Environmental Assessment or an Environmental Impact Statement.

PROPONENT OFFICE: CECOM Safety Office
Fort Monmouth, NJ
AMSEL-SF-RER

RESPONSIBLE OFFICIAL: Joseph M. Santarsiero DATE: 28 FEB 91
JOSEPH M. SANTARSIERO
Chief, Radiological Engrg Branch

REVIEWED BY: Christopher Kencik DATE: 28 Feb 91
CHRISTOPHER KENCIK
Chief, Environmental Engrg Branch

APPROVED BY: Steven A. Horne DATE: 28 Feb 91
STEVEN A. HORNE
Chief, Safety Office

SECURITY VERIFICATION: THIS DOCUMENT HAS BEEN REVIEWED IN FULL CONSIDERATION OF THE REQUIREMENTS OF OPERATIONS SECURITY (OPSEC) AND HAS BEEN DETERMINED TO BE ACCEPTABLE FOR PUBLIC RELEASE.