QSA GLOBAL

QSA Global, Inc.
40 North Avenue
Burlington, MA 01803
Telephone: (781) 272-2000
Toll Free: (800) 815-1383
Facsimile: (781) 359-9191

30 May 2006

ATTN: Document Control Desk
Director, Spent Fuel Project Office
Office of Nuclear Material Safety and Safeguards
U.S. Nuclear Regulatory Commission
11555 Rockville Pike
One White Flint
Rockville, MD 20852

RE: Amendment in Entirety for USA/9283/B(U)-85

Dear Director:

Enclosed please find an application for an amendment in entirety to the Type B(U) approval of the Model OP-660 & OPL-660 transport packages.v The application was completed following updated submission guidance and includes additional compliance information in accordance with IAEA Regulations for the Safe Transport of Radioactive Material, 1996 Edition (Revised), No. TS-R-1. We request that the amended Type B(U) package transport certificate be endorsed to the –96 version of IAEA (TS-R-1).

Please note that AEA Technology QSA Inc has recently changed ownership and the new name is QSA Global Inc. There is no change in the organizational structure or safety/regulatory programs of our facility.

This amendment includes one hard copy of the submission. Copies of this submission are authorized for publication on the USNRC document sites and for use in evaluation of this application. The contact information for questions related to this submission is:

Lori Podolak
Product Licensing Specialist
Regulatory Affairs Department
QSA Global Inc.
40 North Avenue
Burlington, MA 01803

Phone No.: (781) 272-2000 ext 241

Email: Lori.Podolak@qsa-global.com

NMSS01

Should you have any additional questions or wish to discuss this submission after receipt please contact me at the number shown above.

Sincerely,

Lori Podolak

Lori Podolak
Product Licensing Specialist
Regulatory Affairs Department

C. Roy Mon — RA/QA Approval — 24 May 06 Date

D. Eh — Engineering Approval — 31 May 06 Date

Enclosures:

- Revision 2 to SAR
- List of Affected Pages
- Model OP-660 & OPL-660 Evaluation to 10 CFR 71 Changes incorporated October 1, 2004
- Comparison Document for Changes from SAR Rev 1 to SAR Rev 2

Model OP-660 & OPL-660 Type B Transport Package Evaluation for Compliance to Criteria Adopted as Part of the Final Rule for 10 CFR 71 Effective October 1, 2004

Adopted Compliance Criteria for 10 CFR 71 Final Rule Effective October 1, 2004	Description
Issue 2: Radionuclide Exemption Values	Not applicable based on package contents.
Issue 3: Revision of A_1 and A_2	Total package activity is limited on the Certificate of Compliance, therefore changes in the A_1 and A_2 values have no impact on the package ability to comply with the final rule.
Issue 4: Uranium Hexafloride Package Requirements	Not applicable, the package is not used for transport of uranium hexafloride.
Issue 5: Criticality Safety Index	Not applicable, the package is not used for transport of fissile material.
Issue 7: Deep Immersion Test	Not applicable, the package is not used for transport of material in amounts greater than 10^5 A_2.
Issue 8: Grandfathering	The package complies with the final rule in 10 CFR 71, therefore grandfathering is not necessary for this package.
Issue 9: Changes to Various Definitions	No change is necessary to conform to the new rule.
Issue 10: Crush Test for Fissile Material Packages	Not applicable, the package is not used for transport of fissile material.
Issue 11: Fissile Material Package Design for Transport by Aircraft	Not applicable, the package is not used for transport of fissile material.
Issue 12: Special Package Authorizations	Not applicable, criteria needed to meet this requirement does not apply to this package.
Issue 13: Expansion of Part 71 Quality Assurance Requirements	QSA Global Inc. (previously AEA Technology QSA, Inc.) is the holder of an NRC-approved QA program, therefore the requirements of this rule are met.
Issue 16: Fissile Material Exemptions and General License Provisions	Not applicable, the package is not used for transport of fissile material.
Issue 17: Double Containment of Plutonium	Not applicable, the package is not used for transport of plutonium.
Issue 19: Modification of Events Reporting Requirements	No change is needed to the Certificate of Compliance or the package application to conform to the rule.

Safety Analysis Report for the Models OP-660 & OPL-660 Transport Packages

List of Affected Pages	
Revision 1, 12 June 1998	Original Submission
Revision 2, 24 May 2006	Revision in Entirety. Reformatting of the SAR to cover compliance to IAEA TS-R-1 and NRC guidance format.

Revision 2 to this SAR is essentially a full revision as the basic SAR format has been revised to demonstrate compliance with IAEA Regulations for the Safe Transport of Radioactive Material (TS-R-1). The SAR has also been formatted in accordance with U.S. NRC Regulatory Guide 7.9, Revision 2. Due to the significant formatting changes present in this revision, textual changes based on the structural changes in presenting the SAR information are not identified within the body of Revision 8. In addition, modifications to general location of information within the SAR related to this re-formatting are not specifically identified in this change overview. Only significant changes and/or clarifications relative to the content of information previously contained in Revision 1 of the SAR are described in this document. These changes are listed under the SAR Section in Revision 2 where the information is now contained.

Section Reference	Description
Generic Format Changes	• Minor grammatical changes were made throughout the document to improve readability. Such modifications do not change the original intent of the sections affected. • Format changes to SAR in line with Regulatory Guide 7.9, Revision 2. • References to "exposure device" replaced with "container" or "package". • References to "AEA Technology QSA, Inc." replaced with "QSA Global Inc."
Section 1.2	• Added Table 1.2.B providing additional information on the package contents. • The maximum decay heat clarified to reflect content activity for Ir-192 and self-absorption in the source capsule. A correction factor was used to correct the Ir-192 output activity to the maximum content activity that could be transported within the package. • Written description of overall container dimension modified. Referenced dimensions as shown on drawing R66050 Rev C. This represents no change in the package construction but rather provides consistency between the drawings and the SAR. • Major package components consolidated but essentially unchanged from list in SAR Rev 1.
Section 1.3	Added MIL-S-23389B
Section 2.1.4	Identification of Codes and Standards for package design section added.
Section 2.2.1	Mechanical Properties of Materials modified to: • Remove column with elongation specifications (not necessary) • Consolidate stainless steel entries based on the most limiting version previously provided in Rev 7 of the SAR • Update references.
Section 2.2.3	Effects of Radiation on materials section added.
Section 2.3	Fabrication and Evaluation sections added.
Section 2.4.1	Written description of overall container dimension modified. Referenced dimensions as shown on drawing R66050 Rev C. This represents no change in the package construction but rather provides consistency between the drawings and the SAR.
Section 2.6.1.1	Summary of Temperatures table added.
Section 2.6.1.2	Evaluation of thermal expansion effects added.
Section 2.6.1.3 & 2.6.1.4	Stress evaluation added.
Section 2.6.3	Additional justification based on capsule integrity added to demonstrate compliance.
Section 2.7.1	• Detail of test configurations including figures of drop orientations added for clarity. • General summary of test specimen condition after testing added. • Justification added for drop orientations which were not tested as being less likely to cause greater damage than the tested orientations.
Section 2.7.4.1	Summary of Temperatures and Pressures tables added.
Section 2.7.4.2 – 2.7.4.4	New Sections added.

Section Reference	Description
Section 2.7.6	Additional justification based on capsule integrity added to demonstrate compliance.
Section 2.7.7	Section added to assess deep water immersion test evaluation.
Section 2.7.8	Summary of test specimen damage enhanced to include Summary Table based on testing.
Sections 2.8 and 2.9	Sections added to assess requirements from Regulatory Guide.
Section 2.12	Added to incorporate Test Documentation/Evaluations as appendix to this section.
Section 3.1	The maximum decay heat clarified to reflect content activity for Ir-192 and self-absorption in the source capsule. A correction factor was used to correct the Ir-192 output activity to the maximum content activity that could be transported within the package.
Sections 3.1.2 – 3.1.4 & 3.3	Sections added as recommended in Regulatory Guide.
Section 3.4.1.1	Decay heat value used in calculations corrected to 2.8 Watts. Calculations in section corrected accordingly.
Section 3.4.1.2	Decay heat value used in calculations corrected to 2.8 Watts. Assumption of heat deposition changed from 25% to 100% deposition on smallest face for calculation used in this section to demonstrate compliance.
Section 4	Additional justification included to demonstrate compliance.
Section 5	Reformatted with added detail as recommended in Regulatory Guide.
Section 7	• Section re-formatted for clarity. • Section 7.1.2 and 7.2.2. added to address physical loading and unloading of the package. • Section 7.4 and 7.5 added to cover package transport by consignor, emergency response and appendix.
Section 8	Section re-formatted for clarity.
Section 9	Added to address other IAEA TS-R-1 Compliance issues not otherwise addressed in SAR format.

Safety Analysis Report

QSA Global Inc.

Model OP-660 & OPL-660
Type B(U) - 96
Transport Package

24 May 2006

Revision 2

Contents

SECTION 1 - GENERAL INFORMATION **1-1**

1.1 INTRODUCTION 1-1
1.2 PACKAGE DESCRIPTION 1-1
1.2.1 Packaging *1-3*
1.2.2 Contents *1-5*
1.2.3 Special Requirements for Plutonium *1-6*
1.2.4 Operational Features *1-6*
1.3 APPENDIX: 1-7

SECTION 2 - STRUCTURAL EVALUATION **2-1**

2.1 DESCRIPTION OF STRUCTURAL DESIGN 2-1
2.1.1 Discussion *2-1*
2.1.2 Design Criteria *2-1*
2.1.3 Weight and Centers of Gravity *2-1*
2.1.4 Identification of Codes and Standards for Package Design *2-1*
2.2 MATERIALS 2-2
2.2.1 Material Properties and Specifications *2-2*
2.2.2 Chemical, Galvanic or Other Reactions *2-3*
2.2.3 Effects of Radiation on Materials *2-4*
2.3 FABRICATION AND EXAMINATION 2-4
2.3.1 Fabrication *2-4*
2.3.2 Examination *2-4*
2.4 GENERAL REQUIREMENTS FOR ALL PACKAGES 2-4
2.4.1 Minimum Package Size *2-4*
2.4.2 Tamper-Indicating Feature *2-4*
2.4.3 Positive Closure *2-5*
2.5 LIFTING AND TIE-DOWN STANDARDS FOR ALL PACKAGES 2-5
2.5.1 Lifting Devices *2-5*
2.5.2 Tie-Down Devices *2-6*
2.6 NORMAL CONDITIONS OF TRANSPORT 2-9
2.6.1 Heat *2-10*
2.6.1.1 Summary of Pressures and Temperatures *2-10*
2.6.1.2 Differential Thermal Expansion *2-10*
2.6.1.3 Stress Calculations *2-10*
2.6.1.4 Comparison with Allowable Stresses *2-10*
2.6.2 Cold *2-11*
2.6.3 Reduced External Pressure *2-11*
2.6.4 Increased External Pressure *2-11*
2.6.5 Vibration *2-12*
2.6.6 Water Spray *2-12*
2.6.7 Free Drop *2-12*
2.6.8 Corner Drop *2-13*
2.6.9 Compression *2-13*
2.6.10 Penetration *2-14*
2.7 HYPOTHETICAL ACCIDENT CONDITIONS OF TRANSPORT 2-15
2.7.1 Free Drop *2-15*
2.7.1.1 End Drop *2-15*
2.7.1.2 Side Drop *2-16*

2.7.1.3 Corner Drop *2-16*
2.7.1.4 Oblique Drops *2-17*
2.7.1.5 Summary of Results *2-18*
2.7.2 Crush *2-18*
2.7.3 Puncture *2-18*
2.7.4 Thermal *2-19*
2.7.4.1 Summary of Pressures and Temperatures *2-19*
2.7.4.2 Differential Thermal Expansion *2-20*
2.7.4.3 Stress Calculations *2-20*
2.7.4.4 Comparison of Allowable Stresses *2-21*
2.7.5 Immersion - Fissile Material *2-22*
2.7.6 Immersion - All Packages *2-22*
2.7.7 Deep Water Immersion Test (for Type B Packages Containing More than 10^5 A_2) *2-22*
2.7.8 Summary of Damage *2-22*
2.8 ACCIDENT CONDITIONS FOR AIR TRANSPORT OF PLUTONIUM 2-27
2.9 ACCIDENT CONDITIONS FOR FISSILE MATERIAL PACKAGES FOR AIR TRANSPORT 2-27
2.10 SPECIAL FORM 2-27
2.11 FUEL RODS 2-27
2.12 APPENDIX 2-28
2.12.1 Test Plan 70 and Test Report 70. ..... *2-28*
2.12.2 Test Plan 76 and Test Report 76. ..... *2-28*
2.12.3 Test Plan 78 and Test Report 78. ..... *2-28*

SECTION 3 - THERMAL EVALUATION 3-1

3.1 DESCRIPTION OF THERMAL DESIGN 3-1
3.1.1 Design Features *3-1*
3.1.2 Content's Decay Heat *3-1*
3.1.3 Summary Tables of Temperatures *3-2*
3.1.4 Summary Tables of Maximum Pressures *3-2*
3.2 MATERIAL PROPERTIES AND COMPONENT SPECIFICATIONS 3-2
3.2.1 Material Properties *3-2*
3.2.2 Component Specifications *3-3*
3.3 THERMAL EVALUATION FOR NORMAL CONDITIONS OF TRANSPORT 3-3
3.3.1 Heat and Cold *3-4*
3.3.2 Maximum Normal Operating Pressure *3-9*
3.4 THERMAL EVALUATION UNDER HYPOTHETICAL ACCIDENT CONDITIONS 3-9
3.4.1 Initial Conditions *3-9*
3.4.2 Fire Test Conditions *3-10*
3.4.3 Maximum Temperatures and Pressure *3-10*
3.4.4 Maximum Thermal Stresses *3-10*
3.5.4 Accident Conditions for Fissile Material Packages for Air Transport *3-10*
3.5 APPENDIX 3-10

SECTION 4 – CONTAINMENT 4-1

4.1 DESCRIPTION OF THE CONTAINMENT SYSTEM 4-1
4.2 CONTAINMENT UNDER NORMAL CONDITIONS OF TRANSPORT 4-1
4.3 CONTAINMENT UNDER HYPOTHETICAL ACCIDENT CONDITIONS 4-1
4.4 LEAKAGE RATE TESTS FOR TYPE B PACKAGES 4-2
4.5 APPENDIX: REFERENCE ISO9978:1992(E) – RADIATION PROTECTION – SEALED RADIOACTIVE SOURCES – LEAKAGE TEST METHODS. 4-2

SECTION 5 - SHIELDING EVALUATION 5-1

5.1 DESCRIPTION OF SHIELDING DESIGN 5-1

5.1.1 Design Features *5-1*
5.1.2 Summary Table of Maximum Radiation Levels *5-1*
5.2 SOURCE SPECIFICATION 5-2
5.2.1 Gamma Source *5-2*
5.2.2 Neutron Source *5-2*
5.3 SHIELDING MODEL 5-2
5.3.1 Configuration of Source and Shielding *5-2*
5.4 SHIELDING EVALUATION 5-3
5.4.1 Methods *5-3*
5.4.2 Input and Output Data *5-3*
5.4.3 Flux-to-Dose-Rate Conversion *5-3*
5.4.4 External Radiation Levels *5-3*
5.5 APPENDIX 5-3

SECTION 6 - CRITICALITY EVALUATION 6-1

SECTION 7 – PACKAGE OPERATIONS 7-1

7.1 PACKAGE LOADING 7-1
7.1.1 PREPARATION FOR LOADING 7-1
7.1.1.1 Authorized Package Contents *7-1*
7.1.1.2 Packaging Maintenance and Inspection Prior to Loading *7-1*
7.1.1.2.a Instructions for the 660 Projector 7-1
7.1.1.2.b Instructions for the Overpack and Overpack Inserts 7-2
7.2 PACKAGE UNLOADING 7-4
7.2.1 Receipt of Package from Carrier *7-4*
7.3 PREPARATION OF EMPTY PACKAGE FOR TRANSPORT 7-5
7.4 OTHER OPERATIONS 7-6
7.4.1 Package Transportation By Consignor *7-6*
7.4.2 Emergency Response *7-7*
7.5 APPENDIX 7-7

SECTION 8 - ACCEPTANCE TESTS AND MAINTENANCE PROGRAM 8-1

8.1 ACCEPTANCE TEST 8-1
8.1.1 Visual Inspections and Measurements *8-1*
8.1.2 Weld Examinations *8-1*
8.1.3 Structural and Pressure Tests *8-1*
8.1.4 Leakage Tests *8-2*
8.1.5 Component and Material Tests *8-2*
8.1.6 Shielding Tests *8-2*
8.1.7 Thermal Tests *8-2*
8.1.8 Miscellaneous Tests *8-2*
8.2 MAINTENANCE PROGRAM 8-2
8.2.1 Structural and Pressure Tests *8-2*
8.2.2 Leakage Tests *8-3*
8.2.3 Component and Material Tests *8-3*
8.2.4 Thermal Tests *8-3*
8.2.5 Miscellaneous Tests *8-3*
8.3 APPENDIX 8-3

SECTION 9 – IAEA TS-R-1 1996 EDITION (REVISED) REQUIREMENTS NOT OTHERWISE ADDRESSED – SECTION VI 9-1

9.1 GENERAL PACKAGE DESIGN REQUIREMENTS 9-1
9.2 REQUIREMENTS FOR TYPE A PACKAGES (REQUIRED BY TS-R-1 PARAGRAPH 650) 9-2

9.3 REQUIREMENTS FOR TYPE B(U) PACKAGES 9-2
9.4 APPENDIX 9-2

List of Tables

TABLE 1.2.A – 660 STYLE PROJECTORS 1-1
TABLE 1.2.B: ISOTOPE INFORMATION PERMITTED IN THE OP-660 & OPL-660 PACKAGES 1-6
TABLE 2.2.A: MECHANICAL PROPERTIES OF PRINCIPAL PACKAGE MATERIALS 2-2
TABLE 2.2.B: COMPRESSIVE STRENGTH OF NON-METALLIC MATERIALS 2-3
TABLE 2.7.A: SUMMARY TABLE OF TEMPERATURES 2-19
TABLE 2.7.B: SUMMARY TABLE OF MAXIMUM PRESSURES 2-20
TABLE 2.7.C: SUMMARY OF DAMAGE DURING PERFORMANCE OF TP70 & TP76 2-23
TABLE 3.1.A: SUMMARY TABLE OF TEMPERATURES 3-2
TABLE 3.2.A: THERMAL PROPERTIES OF PRINCIPLE PACKAGE MATERIALS 3-2
TABLE 3.3.A: INSOLATION DATA 3-5
TABLE 5.1.A: NORMAL CONDITIONS OF TRANSPORT 5-1
TABLE 5.1.B: HYPOTHETICAL ACCIDENT CONDITIONS OF TRANSPORT 5-2

List of Figures

FIGURE 1.2.A – OP-660 & OPL-660 STRUCTURAL COMPONENTS 1-2
FIGURE 1.2.B – 660 DEVICE STRUCTURAL COMPONENTS 1-3
FIGURE 2.4.A – ANALYSIS OF TIE DOWN FORCES, CONFIGURATIONS 2-7
FIGURE 2.4.B – ANALYSIS OF FORCES ON HANDLE: LOAD CALCULATIONS 2-8
FIGURE 2.4.C – ANALYSIS OF FORCES ON HANDLE: LOAD PER HANDLE 2-9
FIGURE 2.7.A – SPECIMEN B1 & B2 ORIENTATION FOR THE 9 M DROP TEST 2-15
FIGURE 2.7.B – SPECIMEN C1 & C2 ORIENTATION FOR THE 9 M DROP TEST 2-16
FIGURE 2.7.C – SPECIMEN A1 AND A2 ORIENTATION FOR THE 9 M DROP TEST 2-17
FIGURE 2.7.D – SPECIMEN D1 AND D2 ORIENTATION FOR THE 9 M DROP TEST 2-18

Section 1 - GENERAL INFORMATION

1.1 Introduction

The Model OP-660 & OPL-660 are designed as transport packages and storage containers for Type B quantities of special form radioactive material. They conform to the Type B(U)-96 criteria for packaging in accordance 10 CFR 71, 49 CFR 173, and the IAEA Regulations for the Safe Transport of Radioactive Material (TS-R-1) which were in effect at the time of sign-off of this report.

1.2 Package Description

(Reference:

- *10 CFR 71.33*
- *IAEA TS-R-1, paragraph 220 & 807)*

The transport package consists of an outer steel container fabricated according to military specification MIL-S-23389B which includes wood, rigid foam inserts and, for the OPL-660 design, lead inserts inside the steel container surrounding a Model 660 Series Projector (Figure 1.2.A). The Model OP-660 & OPL-660 packages may contain the following projector models; 660, 660A, 660B, 660E, 660AE, and 660BE. These models are structurally identical. All materials of construction and methods of fabrication are essentially the same. The models with the designation AE, BE and E have wires and connectors attached to the end plates for automatic source actuation when the device is in operation. All models except the 660 and 660E use a Posilok™ lock assembly. Throughout this evaluation all models are considered interchangeable as a component of the package. The variations in the 660 Style devices are shown in Table 1.2.A.

Table 1.2.A – 660 Style Projectors

Model	Description	Maximum Output Activity
660	Narrow body pre-automatic lock	120 Ci
660	Wide body pre-automatic lock	120 Ci
660E	Any 660 with the addition of an electrical hoop-up for use with an automatic actuator	120 Ci
660A	Wide body retrofitted with automatic locking mechanism	120 Ci
660AE	Any 660A with the addition of an electrical hoop-up for use with an automatic actuator	120 Ci
660B	Wide body manufactured with automatic locking mechanism	140 Ci
660BE	Any 660B with the addition of an electrical hoop-up for use with an automatic actuator	140 Ci

The exterior steel container is lined with polyethylene foam which protects the Projector during transport. The OPL-660, it is also fitted with lead inserts on the bottom and ends of the container which provide additional shielding for the package. The top insert for both designs incorporates plywood attached to the top foam insert to further locate the device inside the overpack. The projector fits in the center of the inserts but is not mechanically fixed to the outer box. The container lid is closed by two latches on either end of the package.

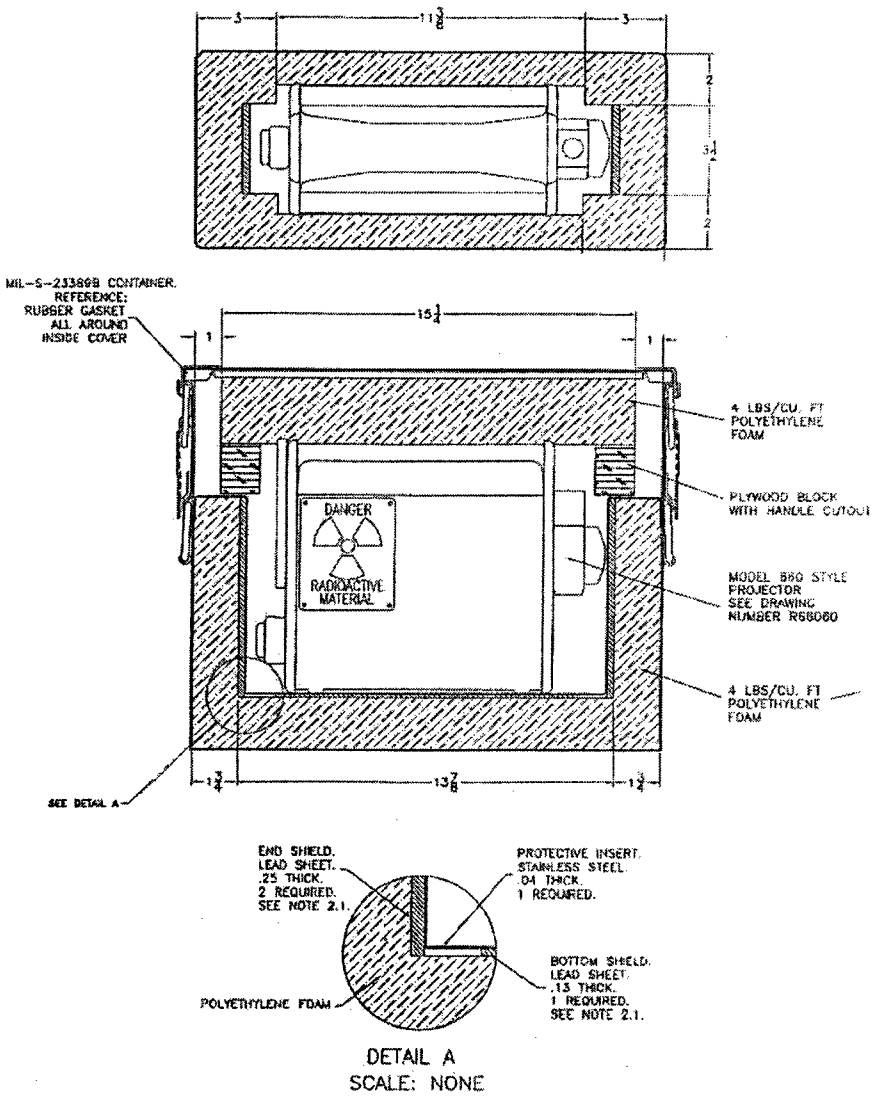

Figure 1.2.A – OP-660 & OPL-660 Structural Components

The package is constructed in accordance with descriptive drawings in Appendix A. Overall external dimensions for the OP-660 & OPL-660 package are 18 19/32" (472 mm) long, 8 19/64" (211 mm) wide and 14 19/32" (371 mm) high. The package weighs a maximum of 88 lbs (40 kgs). The container is used for the transport of either 5.19 TBq (140 Ci) of Ir-192 as a special form source in either the Model 660B or 660BE, or 4.44 TBq (120 Ci) of Ir-192 as a special form source in any of the other 660 style devices.

1.2.1 Packaging

The following paragraphs describe the major components of the transport package.

1.2.1.1 660 Series Projectors: The Model 660 Series Projectors are radiography devices. The maximum overall dimensions are approximately 12 7/8" (327 mm) long, 9 5/8" (244 mm) high and 5 ¼" (133 mm) wide, with a maximum weight of 56 lbs (25 kg). The projector is shown in Figure 1.2.B and consists of the following major components:

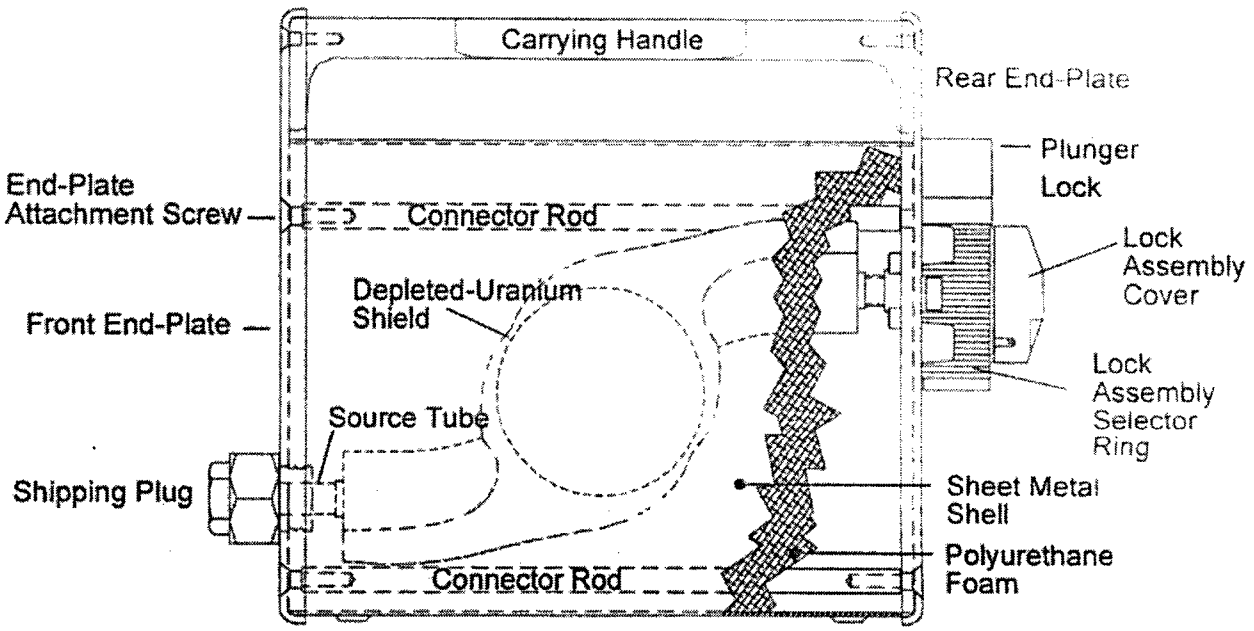

Figure 1.2.B – 660 Device Structural Components

- Titanium or zircalloy source tube enclosed in a depleted-uranium shield
- Lock assembly attached to one end of the device
- Shipping plug assembly attached to the opposite end of the device
- Steel Housing

1.2.1.2.1 Shield Assembly: The shield consists of an S-shaped titanium or zircalloy source tube cast within the middle of depleted uranium. The depleted uranium is cast in place around the source tube.

The depleted-uranium shield is the primary radiation protection. The shield limits the projector's transmission of gamma rays to a maximum of 200 mR/hr at the surface and 10 mR/hr at one meter from the surface of the projector. In some cases, supplemental lead shielding may be added to portions of the depleted uranium shield to compensate for shield casting inconsistencies. This lead shielding is a maximum of ¼" thick and the total weight of the added lead will not exceed 3 lbs (1.4 kgs). The total weight of the depleted uranium will not exceed 37 lbs (16.8 kgs).

1.2.1.2.2 660 Projector Lock Assembly: At one end of the shell is a lock assembly to prevent unauthorized use or unintentional movement of the source assembly within the projector. The lock assembly secures the source assembly in the shielded position during transport. The lock assembly is attached to the end plate by four 10-32 by 1 ¼" long stainless steel screws. Torque requirements for these screws are shown on the drawings in Section 1.4.

The Ir-192 special form source is attached to a source wire assembly. The source wire assembly is secured in the projector by either a Posilok™ or a non-Posilok™ lock assembly. (See drawings in Section 1.4 for general lock configuration variations between the Posilok™ or a non-Posilok™ lock assemblies.)

1.2.1.2.3 Shipping Plug Assembly: The other end of the shell incorporates a source guide tube connector assembly. During transport and storage, this connector assembly includes the installation of a shipping plug. The shipping plug is only removed during radiography operations. The storage plug prevents dirt from entering the exposure device whenever the device is not in use. The shipping plug assembly is attached to the end plate with a steel retaining ring.

1.2.1.2.4 Steel Housing: The depleted uranium shield is encased in a steel housing consisting of a shell and two end-plates. The shell is fabricated from 16 gauge thick stainless or carbon steel. The end plates are fabricated from 11 gauge thick carbon steel. The void space inside the shell surrounding the depleted uranium shield is filled with a rigid polyurethane foam (minimum 8 lb/ft^3). The foam secures the shield inside the shell and provides protection against shock and vibration.

Four carbon steel tapped rods extend thorough the shell and are used to attach the end plates to the assembly at either end by eight ¼-20 by ¾" long steel screws (four screw per end plate). All uranium/steel interfaces have copper separators to reduce the potential formation of a eutectic alloy.

1.2.1.2 OP-660 & OPL-660 Steel Overpack Container: All versions of the 660 projectors are located inside a steel transport container that uses polyethylene foam and wood inserts to provide projector stability and protection during transport. The minimum free rise density of the foam is 8 lb/ft^3.

The exterior outer steel container consists of a 20 mm Cartridge Shipping and Storage Container (ammo box) fabricated according to military specification MIL-S-23389B with inserts to secure the projector. The ammo box is constructed of heavy gauge sheet metal welded together to form a rectangular box. This steel container incorporates a lid which attaches to the body of the container by two latch mechanisms located one on either end of the container. The steel container also incorporates two handles on either end of the container for use in lifting the package.

The external surfaces of the overpack is painted black and is free from protruding features allowing ease of decontamination. As far as practicable the outer surface of the box is impermeable to water ingress.

1.2.2 Contents

(Reference:

- *10 CFR 71.33(a)(4)*
- *IAEA TS-R-1, paragraph 213 and 501(b))*

The Model OP-660 & OPL-660 transport packages are designed to transport special form capsules containing Ir-192 (see Table 1.2.B for projector limitations). Additional information for the contents is provided in Table 1.2.B. The maximum decay heat for Ir-192 in Table 1.2.B has been adjusted to account for content activity of the source. Actual content to output activity varies based on the capsule configuration as well as variations in isotope self-absorption. A factor of 2.3 was used for Ir-192 to convert output activity to content activity as this factor reflects the worst case variation for Ir-192 sources

transported in these packages. The source capsules are loaded into the Model 660 Style devices and secured according to the procedure described in Section 7.

The maximum weight of the contents for the shield containers is also listed in Table 1.2.B. The content weight values are calculated based on the package capacity and the lowest specific activity of Ir-192 (200 Ci/gram) used in source production for these devices.

Note: Ir-192 of higher specific activity can be used but this would produce sources with lower total mass of the contents. Values listed in the Table 1.2.B are the maximum content masses.

Table 1.2.B: Isotope Information Permitted in the OP-660 & OPL-660 Packages

Inner Container	Isotope	Activity[1]	Capsule Form[2]	Chemical/Physical Form	Maximum Content Weight	Maximum Decay Heat[3]
660, 660E, 660A, 660AE	Ir-192	120 Ci	Special Form	Metal	< 1 gram	2.4 Watts
660B, 660BE	Ir-192	140 Ci	Special Form	Metal	< 1 gram	2.8 Watts

[1] Maximum Activity for Ir-192 is defined as output Curies as required in ANSI N432 and 10 CFR 34.20 and in line with TS-R-1 and Rulemaking by the USNRC and the USDOT published in the Federal Register on 26 January 2004.
[2] Special Form is defined in 10 CFR 71, 49 CFR 173, and IAEA TS-R-1.
[3] Maximum decay heat for Ir-192 is calculated by correcting the output activity to content activity. A factor of 2.3 is used for Ir-192 to account for source capsule and self-absorption in this conversion.

1.2.3 Special Requirements for Plutonium

Not applicable. This package is not approved for the transportation of plutonium.

1.2.4 Operational Features

These packages do not involve complex containment systems for source securement. The sources for these packages are all special form, welded capsules. The capsules are attached to flexible handling wires which are held in place by the projector lock mechanism. The projectors are inserted into the OP-660 & OPL-660 transport container and secured as described in Section 7.

1.3 Appendix:

- Drawings of the Model OP-660 & OPL-660 transport packages.
- MIL-S-23389B

Section 1.3 Appendix:

- Drawings of the Model OP-660 & OPL-660 transport packages.
- MIL-S-23389B

FIGURE WITHHELD UNDER 10 CFR 2.390

REVISED PER DDCO# 18	SENTINEL™ Amersham Corporation 40 NORTH AVE, BURLINGTON, MA 01803	DESCRIPTIVE DRAWING
APPROVED/DATE S Gramian 15 June 98		
UNLESS OTHERWISE SPECIFIED; 1. DIMENSIONS ARE IN INCHES. 2. TOLERANCES: SEE NOTE 1.3.	TITLE MODEL OPL-660 & OP-660 SHIPPING CONTAINER	
	SIZE A / DWG. NO. R 66050	REV C
	SCALE NONE / SHEET 1 OF 2	

FIGURE WITHHELD UNDER 10 CFR 2.390

UNLESS OTHERWISE SPECIFIED; 1. DIMENSIONS ARE IN INCHES. 2. TOLERANCES: .XX ± 0.02 FRACTIONS ± 1/4	TITLE MODEL OPL-660 & OP-660 SHIPPING CONTAINER		
	SIZE A	DWG. NO. R 66050	REV C
		SCALE NONE / SHEET 2 OF 2	

FIGURE WITHHELD UNDER 10 CFR 2.390

REVISED PER DDCO# 18	SENTINEL Amersham Corporation 40 NORTH AVE, BURLINGTON, MA 01803	DESCRIPTIVE DRAWING
APPROVED/DATE S. Grassi 15 June 98		
UNLESS OTHERWISE SPECIFIED; 1. DIMENSIONS ARE IN INCHES. 2. TOLERANCES: .X ± 0.1 .XX ± 0.06 FRACTIONS ± 1/8	TITLE MODEL 660 SERIES PROJECTOR	
	SIZE A	DWG. NO. R 66060
	SCALE NONE	SHEET 1 OF 3
		REV A

FIGURE WITHHELD UNDER 10 CFR 2.390

UNLESS OTHERWISE SPECIFIED; 1. DIMENSIONS ARE IN INCHES. 2. TOLERANCES: .X ± 0.1 .XX ± 0.06 FRACTIONS ± 1/8	TITLE MODEL 660 SERIES PROJECTOR		
	SIZE A	DWG. NO. R 66060	REV A
		SCALE NONE	SHEET 2 OF 3

FIGURE WITHHELD UNDER 10 CFR 2.390

UNLESS OTHERWISE SPECIFIED; 1. DIMENSIONS ARE IN INCHES. 2. TOLERANCES: .XXX ± 0.005 FRACTIONS ± 1/8	TITLE MODEL 660 SERIES PROJECTOR		
	SIZE A	DWG. NO. R 66060	REV A
		SCALE NONE	SHEET 3 OF 3

NOTICE
OF VALIDATION

MIL-S-23389B
NOTICE 1
15 JULY 1988

MILITARY SPECIFICATION

SHIPPING AND STORAGE CONTAINER,
CARTRIDGE: 20MM, M548

MIL-S-23389B, dated 29 September 1975, has been reviewed and determined to be valid for use in acquisition.

Preparing activity:
Army - AR

Custodians:
Army - AR
Air Force - 99

AMSC N/A FSC 8140

DISTRIBUTION STATEMENT A. Approved for public release; distribution is unlimited.

4.4.3.3 Cover (see Dwg. D7258946, a detail of Dwg. D7258945).

Categories and Defects	Method of Inspection
Critical: None defined.	
Major:	
101. Thickness, metal	Gage
102. Width, inside cover (2 places)	Gage
Minor: None defined.	

4.4.3.4 Shipping and Storage Container, Painted (see Dwg. D7258943, D7258944, and D7258945, as applicable).

Categories and Defects	Method of Inspection
Critical: None defined.	
Major:	
101. Inside width, body assembly, min	Gage
102. Inside length, body assembly, min	Gage
103. Inside depth, body assembly, min	Gage
104. Interior or exterior paint inadequate	Visual 1/
105. Corrosion	Visual
106. Cracked or split component	Visual
107. Missing, incomplete, broken or mislocated metal component	Visual
108. Missing welds	Visual
109. Mutilated metal component	Visual 2/
110. Steel sliver, burr or sharp edge	Visual-Feel 3/
111. Missing, inverted, loose, misaligned or defective gasket	Visual-Manual 4/
Minor:	
201. Outside height	Gage
202. Outside length	Gage
203. Outside width	Gage
204. Marking incorrect, incomplete, illegible or missing	Visual
205. Foreign matter, except corrosion	Visual

1/ MIL-STD-406 shall be used as a guide to classify paint defects. In the standard defects classified as incidental shall be considered permissible; defects classified as minor shall be considered major. Missing, damaged or incomplete paint shall be classified a defect. Bare spots on any subassembly which do not accumulate to exceed 1/2 square inch in area or scratches which do not penetrate to the phosphate coating shall be disregarded.

2/ If the body or cover is severely dented or malformed, or the carrying or locking hardware is bent or otherwise distorted to cause a functional failure or become a personnel hazard, the sample unit shall be classed defective.

3/ If a steel sliver, burr or sharp edge which could injure unprotected hands is found on a ferrule, the bottom edge of a latch or cover skirt, or on the top or bottom edges of the body, the sample unit shall be classed defective.

4/ If the gasket is missing, inverted, broken, split or torn, contains a gross defect in texture or fit, or can be shifted horizontally within the gasket retainer by finger pressure or manual shake off the cover assembly, the sample unit shall be classed defective.

4.4.4 Tests.-The tests listed in Table I shall be performed on each lot in compliance with the test methods and procedures specified by 4.5. The sampling plans for the various tests shall be as specified by Table I. For acceptance, the results of each test shall apply with the applicable requirement(s).

Table I

Test		Sample Size	Item	Requirement
Phosphate coating	1/		3-Standard panels, TT-C-490	3.4.1
Paint adhesion	2/	3	Containers	3.4.2
Corrosion resistance	3/	2	Containers	3.4.3
Gasket compression	4/	10	Containers	3.5
Airtightness	5/	50	Containers	3.6
Functioning	6/	8	Containers	3.7
Weld security	7/	8	Containers	
Hasp			Body assemblies	3.8.1
Handle			Body assemblies	3.8.2
Latch			Cover assemblies	3.8.3
Concavity and convexity	8/	50	Containers	
			Cover assemblies	3.9.1
			Body assemblies	3.9.2

1/ Failure of the phosphate coating on the standard panels to comply with the applicable requirements for appearance and minimum weight, shall be cause for rejection of all container subassemblies phosphated since the preceding test.

2/ Failure of one or more units of the sample to comply with the requirements for paint adhesion shall be cause for rejection of the lot.

3/ Failure of one or more units of the sample to comply with the requirements for corrosion resistance shall be cause for rejection of the lot.

4/ A variables inspection plan from MIL-STD-414, Table B-3, an AQL of 1.50 percent shall be used to determine lot acceptability, applying the method of calculation as shown in Example B-3. Failure of the sample to meet the acceptability criterion shall be cause for rejection of the lot.

5/ Failure of four or more units of the sample to comply with the requirement for airtightness shall be cause for rejection of the lot. If two or three units of the sample fail to comply with the requirement, a second sample consisting of the same number of units as specified for the first sample shall be tested. If in the accumulated samples, five or more units fail to comply with the requirement, the lot shall be rejected. A stream or recurring succession of bubbles from any surface, seam or gasket junction shall be evidence of a defective container.

6/ Failure of two or more units of the sample to comply with the specified functioning requirements shall be cause for rejection of the lot. If one unit fails to comply with the requirements, a second sample consisting of the same number as specified for the first sample, shall be tested. If in the accumulated samples, two or more units fail to comply with the requirements for functioning, the lot shall be rejected.

7/ Failure of one or more units of the sample to comply with the specified requirements for weld security of hasp assemblies, latch assemblies or handle assemblies shall be cause for rejection of the lot.

8/ Failure of four or more units of the sample to comply with the requirement for convexity or concavity shall be cause for rejection of the lot. If two or three units of the sample fail to comply with the requirement, a second sample consisting of the same number of units as specified for the first sample shall be tested. If in the accumulated samples, five or more units fail to comply with the requirement the lot shall be rejected. The sampling plan shall apply independently to cover and body assemblies.

4.4.5 Packaging, Packing and Marking Inspection.-There are no packaging or packing requirements applicable to this item.

4.4.6 Inspection equipment.-Index of Inspection Equipment List (IEL) 7259441 identifies the applicable Inspection Equipment Lists required to perform examination and tests prescribed herein. Equipment design(s) shall be in accordance with the applicable IEL code designations. The code designations are defined on Dwg. B1107528, a detail of IEL 7259441.

4.5 Test Methods and Procedures.

4.5.1 Phosphate Coating.-The method of test shall be as specified in the requirements of TT-C-490, as applicable to the type of phosphate used. The prescribed panels shall be processed with the cover or body assemblies to be represented, beginning with the start of daily production and at 4 hour intervals, maximum, thereafter. Appearance and weight of the phosphate coating on the panels shall be recorded against the batch of cover or body assemblies represented.

4.5.2 Paint Adhesion.-The method of test shall be as specified in the applicable requirements of TT-C-490. The test shall be performed on three randomly selected surfaces of each unit of the sample.

4.5.3 Corrosion Resistance.-The method of test shall be as specified in ASTM B117-64 - Method of Test for Salt Spray (Fog) Testing. Using a sharp instrument, one "X" 6 to 7 inches long shall be scored on a flat surface of the cover and one side of the body of each sample container. The samples shall be supported, one with the scored "X" in the upright position for the cover test and the other sample supported with the scored "X" in the upright position for the body side test. Traces of paint blistering or corrosion spots on component edges or sharp corners shall not be classed as protective coating failure.

4.5.4 Gasket Compression.-The method of test shall be as specified on Dwg. D11075090, a detail of IEL 7259441, to determine compliance to the requirement.

4.5.5 Airtightness.-The container shall be conditioned to ambient temperature and pressure prior to testing. The containers shall be tested in accordance with 4.5.5.1 or with permission of the procurement agency with 4.5.5.2. A wetting agent may be used to minimize air bubbles clinging to the exterior surface.

4.5.5.1 Vacuum Method.-The container shall be tested for leakage by immersing the closed container in the inverted position under water in a vacuum vessel and lower the pressure in the vessel to three pounds per square inch minimum below ambient pressure. Observation for leakage of air from the container interior shall be made for a minimum of 30 seconds after reduction of pressure.

4.5.5.2 Hot Water Method.-The container shall be tested for leakage by immersing the closed container, in the inverted position, to a depth of one inch below the surface of the water. The temperature of the water and the length of time of immersion shall be that which will assure an increase in pressure to a minimum of 3 psi above ambient pressure. Observation for air leakage from the container interior shall be made during the period of pressure buildup and for 30 seconds after the 3 psi pressure differential has been reached.

4.5.6 Functioning.-The container shall be inspected to assure compliance with the requirements of 3.7 through the following procedures:

a. Unlock and lock the cover assembly hardware by hand leverage. Note the locking and unlocking action for effectiveness and ease of operation.

b. Remove and replace the cover assembly. Note any misfit or bind with the body assembly.

c. Remove all cover assemblies. Inspect the gaskets for fit, security, cuts, and splits.

d. Note any sticking of gaskets to the top edges of the body assemblies.

e. Environmentally condition the container as specified in 3.7.3. After conditioning reinspect the container in accordance with a, b, c, and d, above.

4.5.7 Weld Security.

4.5.7.1 Hasp Assembly.-The sample body assembly resting on their bottoms shall be clamped in a suitable devise. The specified tensional force, utilizing the test fixture (see Dwg. D11075104, a detail of IEL 7259441) for hasp weld security, shall be slowly applied perpendicular to the bottom and against the underside of the offset of the hasp. The force shall be applied at a rate of .125 to .25 inch per minute and held for one minute. After removal of the force, examine the hasp for distortion and weld failure.

4.5.7.2 Handle Assembly.-With the sample body assembly resting on its bottom or on end, attach the test fixture (see Dwg. D11075103, a detail of IEL 7259441) for end handle security to each end handle. With one test fixture securely held, apply the specified tensional force through the other test fixture parallel to the container bottom against the ferrule of each handle. The force shall be applied at a rate of .125 to .25 inch per minute and held for one minute. After removal of the force, examine the handle and hasp for distortion and weld failure.

4.5.7.3 Latch Assembly.-Attach test fixture (see Dwg. D11075102, a detail of IEL 7259441) for latch assembly security to each latch on the cover assembly. Secure one test fixture and slowly apply a tensional force to the other parallel to the face of the cover. The force shall be applied at a rate of .125 to .25 inch per minute and held for one minute. The test fixtures apply the force against the surface of the latch links exposed on the underside of each latch. After removal of the force, examine the latches, latch links, latch link retainers and cover for distortion and weld failure.

4.5.8 Concavity and Convexity.

4.5.8.1 Cover Assembly.-The concavity and convexity shall be measured on the sample cover assemblies using test equipment (see Dwg. D7259439, a detail of IEL 7259441) along the length of the cover in the area above the cover gasket and the width adjacent to latch link retainer on the flat surface of the cover.

4.5.8.2 Body Assembly.-The concavity and convexity shall be measured on the sample bodies along the length and width of the top edge using test equipment (see Dwg. D7259440, a detail of IEL 7259441).

5. PREPARATION FOR DELIVERY

5.1 Packaging and Packing.-There are no packaging or packing requirements for this item.

5.2 Marking.-Each container shall be marked on the welded end in accordance with Dwg. D7258944 and each cover assembly in accordance with Dwg. D7258945.

5.3 Shipping Labels.-Shipping labels shall be affixed to each container on the welded end when shipment is made in less than full car or truck load quantities.

5.3.1 Labels.-The labels shall conform with MIL-L-19896 and shall be 4 inches square, approximately. The labels shall be marked with 1/4 inch high, minimum, letters and figures with the following information:

a. Consignee.
b. Manufacturer.
c. Item nomenclature.
d. Lot number.
e. Contractor number.

6. NOTES

6.1 Ordering Data.-Invitation for bids and contracts or orders will specify the following:

6.1.1 Title, number and date of this specification.

6.1.2 Place of inspection, if not place of manufacture.

6.1.3 First article sample requirements. (see 3.2 and 4.3)

6.1.4 Provisions for the submission and approval of the welding procedure.

6.2 AQL's.-The optional use of AQL values for either individual defects or classes of defects is intended to minimize inspection agency administrative burden which might result from an exclusive assignment of individual defect AQL's. The option also permits flexibility where sampling inspection for acceptance is integrated into the manufacturing process.

6.3 Intermediate Point Inspection.-The classification of defects identifies the defect characteristics (among other things) for acceptance inspection. It may be necessary to modify the sequence of inspection stations to best suit the manufacturing process. Inspection for defect characteristics which will be hidden or altered by subsequent processing operations (including unrelated operations) should be scheduled to prevent premature acceptance which could be detrimental to the attainment of optimum product quality in the end item.

6.4 Measurement for Gasket Compression.-Three point contact of the container resting on blocks may be used to overcome any rocking motion which might be encountered with the container resting on the surface plate. However, since the measurement technique relies upon relative distances, care should be taken to assure that there is no displacement on the referenced surfaces between the readings.

NOTE: Asterisks are not used in this revision to identify changes with respect to the previous issue due to the extensiveness of the changes.

Custodians:

Army - MU
Air Force - 70

Review Activities:

Army - MU
Air Force - 70

Preparing Activity:

Army - MU

Project No. 8140-0119

☆ U. S. GOVERNMENT PRINTING OFFICE: 1975 -603-766/1339

MIL-S-23389B
29 September 1975
SUPERSEDING
MIL-S-23389A
6 March 1968

MILITARY SPECIFICATION

SHIPPING AND STORAGE CONTAINER, CARTRIDGE, 20MM, M548

This specification is approved for use by all departments and agencies of the Department of Defense.

1. SCOPE

1.1 This specification covers one model steel container for shipping and storing ammunition.

2. APPLICABLE DOCUMENTS

2.1 The following documents of the issue in effect on date of invitation for bids or request for proposal, form a part of this specification to the extent specified herein.

SPECIFICATIONS

FEDERAL

TT-C-490 - Cleaning Methods and Pretreatment of Ferrous Surfaces for Organic Coatings

MILITARY

MIL-L-19896 - Labels and Label Tape, Pressure Sensitive Adhesive, Paper, Water Resistant
MIL-W-12332 - Welding, Resistance, Spot, Seam, and Projection; for Fabricating Assemblies of Low-Carbon Steel

STANDARDS

MILITARY

MIL-STD-105 - Sampling Procedures and Tables for Inspection by Attributes
MIL-STD-109 - Quality Assurance Terms and Definitions
MIL-STD-406 - Visual Inspection Standards for Tern Plate Cans and Steel Boxes Used in Small Arms Ammunition Packaging.

FSC 8140

MIL-STD-414 - Sampling Procedures and Tables for Inspection by Variables for Percent Defective
MIL-STD-1235 - Single and Multilevel Continuous Sampling Procedures and Tables for Inspection by Attributes

DRAWINGS

ARMAMENT COMMAND

D7258943 - Shipping and Storage Container, Cartridge, 20mm, M548
D7258944 - Body Assembly
D7258945 - Cover Assembly
IEL 7259441 - Index of Inspection Equipment Lists for: Shipping and Storage Container, Cartridge, 20mm, M548

(Copies of specifications, standards, drawings, and publications required by suppliers in connection with specific procurement functions should be obtained from the procuring activity or as directed by the contracting officer.)

2.2 Other Publications.-The following documents form a part of this specification to the extent specified herein. Unless otherwise indicated, the issue in effect on date of invitation for bids or request for proposal shall apply.

American Society for Testing and Materials (ASTM)
ASTM B117-64 -- Method of Test for Salt Spray (Fog) Testing

(Application for copies should be addressed to the American Society for Testing and Materials, 1916 Race Street, Philadelphia, Pa. 19103)

Technical Society and Technical Association specifications and standards are generally available for reference from libraries. They are also distributed among technical groups and using Federal agencies.

3. REQUIREMENTS

3.1 General.-The container shall comply with the requirements of Drawing (Dwg.) D7258943, referenced specifications and other requirements specified herein.

3.2 First Article Sample.-Unless otherwise directed by the contracting officer, a first article sample shall be required.

3.3 Welding Procedure.-Fabrication of the container shall be in accordance with the recorded welding procedure requirements of MIL-W-12332.

3.4 Protective Coating.

3.4.1 Phosphate.-The cleaning method and pretreatment process used shall comply with the requirements of Dwgs. D7258944 and D7258945. The phosphate coating shall comply with the requirements of TT-C-490 for appearance and minimum weight, as applicable to the type of phosphate used.

3.4.2 Paint.-The paint coating shall comply with the requirements of Dwgs. D7258944 and D7258945. In addition, the coating shall be smooth, unbroken and free of blisters, runs, thin spots and foreign matter. Adhesion of the paint to the pretreated surfaces shall comply with applicable requirements of TT-C-490.

3.4.3 Corrosion Resistance.-The exterior surface of the container shall show no visible evidence of paint blistering, creepage (loss of adhesion), or corrosion of basis metal in excess of 1/8 inch from a test score, or more than five scattered blisters or corrosion spots having individual diameters greater than 3/16 inch in any 4 x 12 inch flat area, excluding score marks, after exposure to a 5% solution of salt spray for 80 hours.

3.5 Gasket Compression.-The gasket compression of the container shall be as specified by Dwg. D7258943. (see 6.4)

3.6 Airtightness.-The assembled container shall withstand, without leakage, an air pressure differential of three pounds per square inch (psi).

3.7 Functioning.

3.7.1 Cover Assembly.-The locking hardware shall be operable manually. The cover assembly shall be removable manually without the use of exorbitant force. The gasket shall remain secure in the correct position within the cover upon removal of the cover assembly. The gasket shall not stick to, be cut or split by contact against the top edge of the body assembly.

3.7.2 Hasp and Latch.-Mating parts of the body hasp and latches shall engage without requiring deformation of any container part, and the latches shall close and open freely. When closed the latches of the assembled container shall remain closed until manually opened.

3.7.3 Elevated Temperature Storage.-Following storage of the container in its closed position at an air temperature of 163 degrees Fahrenheit (°F) minimum for a period of 24 hours minimum and subsequent return to ambient temperature, the container shall function as required in 3.7.1 and 3.7.2.

3.8 Weld Security.

3.8.1 Hasp Assembly.-Each hasp of the body assembly shall comply with the security requirement of Dwg. D7258944 without permanent deformation or failure of a weld.

3.8.2 Handle Assembly.-The handles of the body assembly shall withstand a pull of 600 pounds without permanent deformation of a component or failure of a weld.

3.8.3 Latch Assembly.-The latch assemblies of the cover assembly shall comply with the security requirement of Dwg. D7258945 without breakage or permanent deformation of any of the components or welds.

3.9 Concavity and convexity.

3.9.1 Cover Assembly.-The cover assembly shall meet the requirements of Dwg. D7258945 for flatness.

3.9.2 Body Assembly.-The top edges of the body assembly shall meet the requirements of Dwg. D7258944 for straightness.

3.10 Workmanship.-The requirements for workmanship are as specified by applicable drawings, referenced specifications and the following:

3.10.1 Processing Defects.-The container shall be free of cracks, splits, sharp edges, slivers, burrs, severe dents, cuts and scratches, missing or defective welds and components and other forms of unsatisfactory workmanship.

3.10.2 Cleanliness.-The painted container shall be free of all foreign matter.

4. QUALITY ASSURANCE PROVISIONS

4.1 Responsibility for Inspection.-Unless otherwise specified in the contract or purchase order, the supplier is responsible for the performance of all inspection requirements as specified herein. Except as otherwise specified in the contract or order, the supplier may use his own or any other facilities suitable for the performance of the inspection requirements specified herein, unless disapproved by the Government. The Government reserves the right to perform any of the inspections set forth in the specification where such inspections are deemed necessary to assure supplies and services conform to prescribed requirements.

4.1.1 Quality Assurance Terms and Definitions.-Reference shall be made to MIL-STD-109 for definition of quality assurance terms.

4.2 Classification of Inspections.-The inspection requirements specified herein are classified as follows:

1. First Article Inspection (see 4.3)
2. Quality Conformance Inspection (see 4.4)

4.3 First Article Inspection.

4.3.1 First Article Sample.-At the beginning of production, a sample representative of the production material, equipment, processes and procedures shall be submitted in accordance with contract requirements and shall consist of 50 painted containers, three sets of unassembled component parts, and the welding procedure. Prior to approval of the first article sample, the acquisition of material or components for, or the commencement of production of the balance of the contract quantity shall be at the sole risk of the contractor.

4.3.1.1 First Article Inspection.-Prior to submission of the first article sample to the Government, the contractor shall inspect all components and assemblies for all contract, drawings and specification requirements. The contractor's inspection shall be subjected to verification by the Government representative.

4.3.1.2 Examination and Tests.-The first article sample will be inspected for all requirements of the drawings and specifications at a Government laboratory or such facility specified in the contract. Determination as to approval of any first article sample shall be based only upon results of initial examinations and tests.

4.3.1.3 First Article Sample Failure.-Failure of the sample to comply with requirements of the drawings and specifications will result in sample disapproval.

4.4 Quality Conformance Inspection.

4.4.1 Submission of Product.-The product shall be submitted in accordance with MIL-STD-105 or MIL-STD-1235, as applicable.

4.4.1.1 Lot.-A lot shall consist of assembled containers produced by one manufacturer in one unchanged process, in accordance with the contract, the same drawings and drawing revisions, and same specification and specification revision.

4.4.1.2 Lot Identification.-The cover and body assemblies of each container of the lot shall be identified as specified by Dwgs. D7258944 and D7258945, supplemented as directed by the procuring activity.

4.4.2 Examination.-Examination for major and minor defects shall be performed as specified herein. Each assembly found to be defective shall be rejected.

4.4.2.1 Sampling Plans.-The sampling plans of either MIL-STD-105 or MIL-STD-1235 shall apply at the option of the contractor. To determine product acceptability, major and minor defects as listed herein may be considered on a class basis, or they may be considered individually. (see 6.2) However, when three or less defect characteristics are listed in a classification, acceptability shall be determined on an individual basis for major defects. (see 6.2)

4.4.2.2 AQL's.-The following AQL's are assigned:

a. Individual defects

Major defects	0.25%
Minor defects	0.40%

b. Class basis

Major defects	1.50%
Minor defects	2.50%

4.4.3 Classification of Defects (see 6.3).-The classification of defects shall be as follows:

4.4.3.1 Body (see Dwg. D7258949, a detail of Dwg. D7258944).

Categories and Defects	Method of Inspection
Critical: None defined.	
Major:	
101. Thickness, metal	Gage
102. Convexity or concavity top edges of body	Gage
Minor:	
201. Height of body seam	Gage

4.4.3.2 Bottom (see Dwg. B7258950, a detail of Dwg. D7258944).

Categories and Defects	Method of Inspection
Critical: None defined.	
Major:	
101. Thickness, metal	Gage
102. Length	Gage
103. Width	Gage
Minor: None defined.	

Section 2 - STRUCTURAL EVALUATION

This section identifies and describes the principal structural engineering design of the packaging, components, and systems important to safety and compliance with the performance requirements of 10 CFR Part 71.

2.1 Description of Structural Design

(Reference:

- *10 CFR 71.33(a)*
- *IAEA TS-R-1, paragraph 220 & 807(b))*

2.1.1 Discussion

The Model OP-660 & OPL-660 transport packages are described in Section 1.2, "Package Description."

2.1.2 Design Criteria

The Model OP-660 & OPL-660 transport packages are designed to comply with the requirements for Type B(U) packaging as prescribed by 10 CFR 71 and IAEA TS-R-1. All design criteria are evaluated by a straightforward application of the appropriate section of 10 CFR 71 or IAEA TS-R-1.

2.1.3 Weight and Centers of Gravity

The transport package weighs up to 88 lbs (40 kg). The maximum weight of the Model 660 projector is 56 lbs (25 kg). The maximum weight of the projector shield is 37 lbs (17 kg). The shield may also include the addition of up to 3 lbs (1.4 kgs) of lead as supplemental shielding to the exterior surface of the shield. This lead, if applied, will not exceed ¼ inch thick in any location on the depleted uranium shield. The center of gravity (C of G) is nominally assumed as the geometric center of the projector, except that in the longitudinal direction it is ¼ inch (6.4 mm) from the center of the projector towards the lock on the rear end-plate.

2.1.4 Identification of Codes and Standards for Package Design

2.1.4.1 Package Design

See Section 2.1.2 relating to design criteria of the package. No specific codes or standards were directly incorporated in the design effort of the finished assembly for the OP-660 & OPL-660 transport packages. However the design was based on the Type A and Type B(U) container requirements of 49 CFR, 10 CFR 71 and IAEA regulations in effect at the time of the package design.

2.1.4.2 Fabrication & Assembly

All component fabrication (including assembly) is controlled under the QSA Global Inc. Quality Assurance Program approved by the USNRC and ISO. All external fabrication deemed critical to safety is either verified to equivalent in-house standards or dedicated as appropriate for use prior to release as part of this transport package. For the Model OP-660 & OPL-660 transport package the overpack box welding meets the requirements of MIL-S-23389B.

2.1.4.3 Maintenance & Use

Maintenance and use of these transport container assemblies is described in Sections 7 and 8.

2.2 Materials

(Reference:

- *10 CFR 71.33(a)(5)*
- *IAEA TS-R-1, paragraph 220 & 807(b))*

2.2.1 Material Properties and Specifications

Tables 2.2.A and 2.2.B list the relevant mechanical properties (at ambient temperature) of the principal materials used in the Model OP-660 & OPL-660 transport package. The references in the last column are listed after the tables.

Table 2.2.A: Mechanical Properties of Principal Package Materials

Material	Tensile Strength	Yield Strength	Elongation	Resource
Depleted Uranium (U-0.75 Ti)	65 ksi	30 ksi	12%	Reference #1, p. 20-35
Lead (99%)	1.7 ksi	7.9 ksi	30%	Reference #1, p. 12-3
Steel (nominal)	57 ksi	42 ksi	36%	Reference #1, p. 4-20
Titanium Tube Ti-3Ai-2.5V	90 ksi	75 ksi	10%	Reference #1, p. 9-3
Cast Aluminum	35 ksi	25 ksi	5%	Reference #1, p. 6-59

Table 2.2.B: Compressive Strength of Non-metallic Materials

Material	Compressive Strength	Resource
Polyurethane Foam 8 lbs/ft^3 *Foam Values are Nominal ± 2 lb/ft^3	Nominally 155 psi	General Latex and Chemical Company
Wood	35 psi	Reference #2, p. 260

Resource references:

1. Howard E. Boyer and Timothy L. Gall, Editors, *Metals Handbook.* Metals Park, Ohio: American Society for Metals, 1985.

2. Lawrence H. Van Vlack, *Materials for Engineering: Concepts and Applicants.* Boston: Addison-Wesley Publishing Company, 1992.

2.2.2 Chemical, Galvanic or Other Reactions

(Reference:
- *USNRC, 10 CFR 71.43(d)*
- *IAEA TS-R-1, paragraph 613 and 642)*

The materials used in the OP-660 & OPL-660 outer container are steel, rigid polyurethane foam and wood. There will be no adverse chemical or galvanic reactions between any of these components.

The materials used in the construction of the 660 Projector are depleted uranium metal, lead (in some instances), steel, stainless steel, titanium or zircalloy, rigid polyurethane foam and aluminum. There will be no significant chemical or galvanic action between any of these components.

The possibility of the formation of a eutectic alloy of steel and depleted uranium at temperatures below the melting temperatures of the individual metals has been considered. The iron-uranium eutectic alloy temperature is approximately 1,337°F (725°C). However, vacuum conditions and extreme cleanliness of the surfaces are necessary to produce this alloy at this low temperature. Due to the conditions in which the shield is mounted in the 660 style devices, sufficient contact for this effect does not exist.

In July 1992, two Model 660's manufactured in 1974 with supplemental lead shielding were disassembled and visually examined. There was no evidence of eutectic alloying. Further the Model 660 style projectors tested under Test Plan 76 (See Section 2.12.2) contained lead supplements and as concluded in that report there was no unusual damage resulting from the use of lead.

2.2.3 Effects of Radiation on Materials

(Reference:
- *USNRC, 10 CFR 71.43(d)*
- *IAEA TS-R-1, paragraph 613)*

Lead, depleted uranium, titanium (or zircalloy), steel, wood and polyurethane foam have been used in transport packaging for decades without degradation of the package performance over time due to irradiation from package contents.

2.3 Fabrication and Examination

(Reference:
- *10 CFR 71.33(a)(5)*
- *IAEA TS-R-1, paragraph 232, 310, 638 and 807(b))*

2.3.1 Fabrication

Package components are procured, manufactured and inspected for use under QSA Global Inc. NRC approved QA Program Number 0040. All transport package components are evaluated and documented for compliance to the drawings provided in Appendix 1.4 prior to initial use as part of a Model OP-660 & OPL-660 transport package.

2.3.2 Examination

Section 8 describes the acceptance testing and routine maintenance requirements for shield containers and package components used on the Model OP-660 & OPL-660 packages.

2.4 General Requirements for All Packages

2.4.1 Minimum Package Size

(Reference:
- *USNRC, 10 CFR 71.43(a)*
- *USDOT, 49 CFR 173.412(b)*
- *IAEA TS-R-1, paragraph 634)*

The package is approximately 18 19/32" (472 mm) long, 8 19/64" (211 mm) wide and 14 19/32" (371 mm) high and therefore exceeds minimum package size requirements

2.4.2 Tamper-Indicating Feature

(Reference:
- *USNRC, 10 CFR 71.43(b)*
- *USDOT, 49 CFR 173.412(a)*
- *IAEA TS-R-1, paragraph 635)*

The Model OP-660 & OPL-660 packages incorporates a seal wire attached to both of the lid latches which, if broken during transport, serves as evidence of possible unauthorized access to the contents.

2.4.3 Positive Closure

(Reference:

- *USNRC, 10 CFR 71.43(b)*
- *USDOT, 49 CFR 173.412(a)*
- *IAEA TS-R-1, paragraph 635)*

The Model OP-660 & OPL-660 packages incorporates a seal wire attached to both of the lid latches. The package lid cannot be removed without releasing the lid latches. Releasing a lid latch will break one or both of the seal wires and these cannot be inadvertently opened. Further the inner projector requires use of a key to access the package contents through the lock mechanism. Again this would require a deliberate action on the projector and cannot inadvertently open during normal transport.

2.5 Lifting and Tie-Down Standards for All Packages

2.5.1 Lifting Devices

(Reference:

- *USNRC, 10 CFR 71.45(a)*
- *IAEA TS-R-1, paragraphs 502(b), 606, 607 and 608)*

The package is designed to be mechanically lifted by its two handles. The maximum package weight is 88 lbs (40 kgs). The handles are rated for 600 pounds tensile load.

The following assumptions are made in the container handle analysis:

- One handle is used to lift the package.
- The handles meet the strength requirements of MIL-S-23389B, Section 3.8.2.

The factor of safety (F_S) per handle is determined by:

$$F_S = F_M / F$$

Where: F = Maximum weight of the package (88 lbs)
F_M = Strength requirement of MIL-S-23389B Section 3.8.2 (600 lbs)

From this the factor of safety for the handle lifting strength is 6.8. This factor exceeds the minimum regulatory safety factor requirement of 3. Further, failure of the lifting handles would not impair the package's ability to meet other test requirements for normal conditions of transport.

2.5.2 Tie-Down Devices

(Reference:

- *USNRC, 10 CFR 71.45(b) (1) (2) (3)*
- *IAEA TS-R-1, paragraph 606 and 636)*

The handles on the OP-660 and OPL-660 containers are not specifically designed to serve as tie down devices. However, because they could be possibly be used to tie down the package (rather than using the specified blocking and bracing for transport), the handles were tested as tie down devices under Test Plan 78 (See Section 2.12.3).

The test specimens in Test Plan 78 were three ammo boxes (MIL-S-23389B) which are the same type used in the manufacture of the OP-660 and OPL-660 packages. A tensile load of 910 lbs (413 kgs) was placed on the handles for two minutes in the longitudinal direction to simulate the highest loading conditions for the package handles. The objective of the loading was to pull the handle off the ammo box. Test Plan 78 includes the engineering analysis that determined the test set-up and specimen orientation (see Section 2.12.3).

The recommended tie down configuration is to align the longitudinal axis of the package with the axis of the vehicle. Four tie down cables, two per handle, are attached to the vehicle at 45° (± 15°) in any plane. An analysis of the forces on the handle for this configuration (See Figures 2.4.A – 2.4.C) shows that the forces on the handles are below the test loading condition of Test Plan 78. The analysis is based on the following assumptions:

- The package is secured by four tie downs, two at each handle (Figure 2.4.A).
- One handle takes the horizontal longitudinal inertia of 10 times the package weight.
- Both handles equally share the horizontal transverse inertia of five times the package weight.
- The frictional force is not considered.

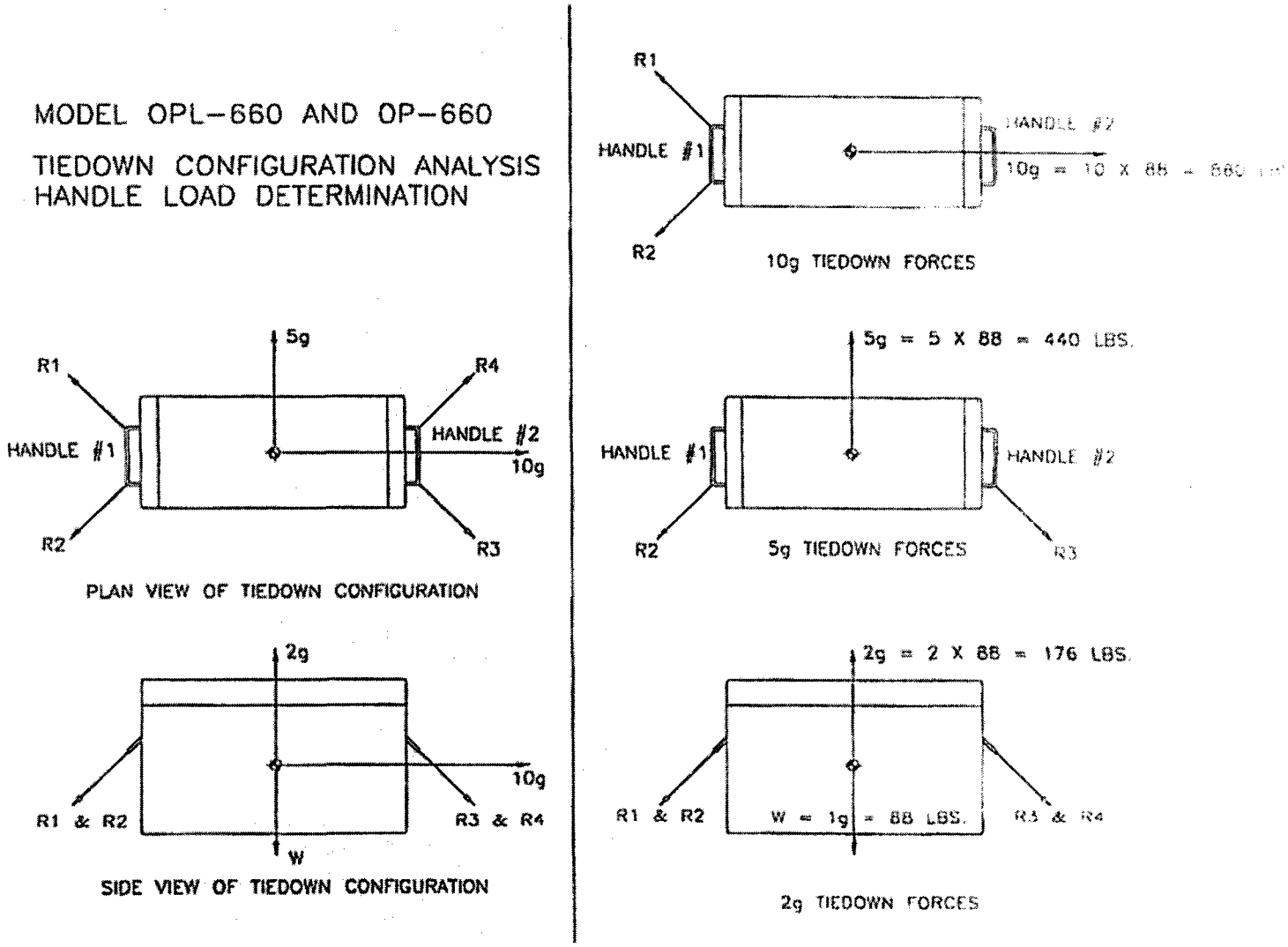

Figure 2.4.A – Analysis of Tie Down Forces, Configurations

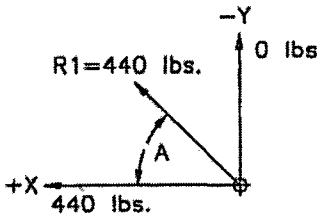	A=30° Fx = 381 LBS. Fy = -220 LBS.	A=45° Fx = 311 LBS. Fy = -311 LBS.	A=60° Fx = 220 LBS. Fy = -381 LBS.
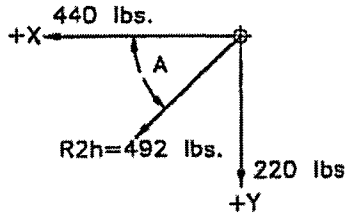	A=30° Fx = 426 LBS. Fy = 246 LBS.	A=45° Fx = 348 LBS. Fy = 348 LBS.	A=60° Fx = 246 LBS. Fy = 426 LBS.
	A=30° ΣFx = 807 LBS. ΣFy = 26 LBS.	A=45° ΣFx = 659 LBS. ΣFy = 37 LBS.	A=60° ΣFx = 466 LBS ΣFy = 45 LBS.
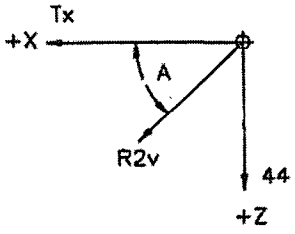	A=30° Tx = 807 LBS. R2v = 808 LBS. Fx = 700 LBS. Fz = 404 LBS.	A=45° Tx = 659 LBS. R2v = 660 LBS. Fx = 467 LBS. Fz = 467 LBS.	A=60° Tx = 466 LBS R2v = 468 LBS Fx = 234 LBS Fz = 405 LBS.

Figure 2.4.B – Analysis of Forces on Handle: Load Calculations

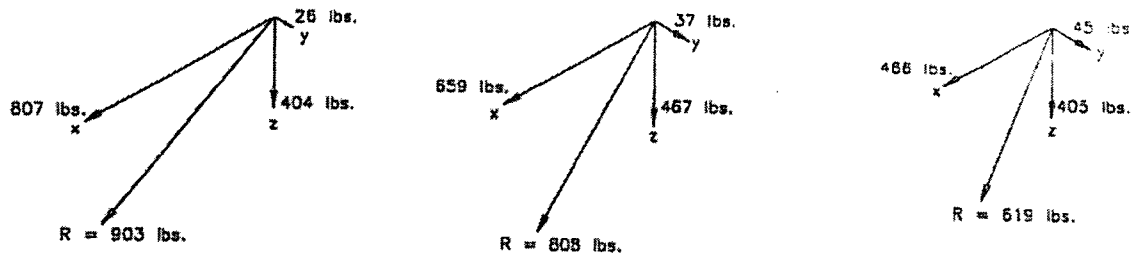

Tiedown Forces at 30° Apart	Tiedown Forces at 45° Apart	Tiedown Forces at 60° Apart
Resultant load = 903 pounds	Resultant load = 808 pounds	Resultant load = 619 pounds
$Ax = Cos^{-1}$ (807/903) = 26.7°	$Ax = Cos^{-1}$ (659/808) = 35.4°	$Ax = Cos^{-1}$ (466/619) = 41.2°
$Ay = Cos^{-1}$ (26/903) = 88.4°	$Ay = Cos^{-1}$ (37/808) = 87.4°	$Ay = Cos^{-1}$ (45/619) = 85.8°
$Az = Cos^{-1}$ (404/903) = 63.4°	$Az = Cos^{-1}$ (467/808) = 54.7°	$Az = Cos^{-1}$ (405/619) = 49.1°

Figure 2.4.C – Analysis of Forces on Handle: Load per Handle

The testing and analysis demonstrates that the package handles meet the requirements of this section.

2.6 Normal Conditions of Transport

(Reference:

- *10 CFR 71.41(a)*
- *IAEA TS-R-1, paragraph 807(c))*

Evaluations by direct testing are documented in Test Plan Reports 70, 76 and 78 which are contained in Appendix 2.12. The drop test pad for the drops described in these Test Plan reports was a 4 ft x 4 ft x 1 in thick steel plate embedded into a concrete slab. This produced an essentially unyielding horizontal surface as required by 10 CFR 71.71(c)(7) and (8) as well as 71.73(c)(1) and (3). Puncture tests as required by 71.73(c)(3) were performed with a steel bar meeting the requirements of 10 CFR 71.73(c)(3) that was securely mounted to this same unyielding surface.

Evaluations by analysis are described in the section they apply to in this Safety Analysis Report or when applicable in Test Plan Reports contained in Appendix 2.12.

2.6.1 Heat

(Reference:
- *USNRC, 10 CFR 71.71(c)(1)*
- *IAEA TS-R-1, paragraph 615, 617, 618, 637, 651, 662 and 664)*

The heat source for the Model OP-660 & OPL-660 transport package is described in Section 1.2.3. Iridium-192, approximately 8.6 milliwatts per Curie based on assuming a decay energy of 1.46 MeV/decay. The maximum decay heat for Ir-192 in Table 1.2.B has been adjusted to account for content activity of the source. Actual content to output activity varies based on the capsule configuration as well as variations in isotope self-absorption. A factor of 2.3 was used for Ir-192 to convert output activity to content activity as this factor reflects the worst case variation for Ir-192 sources transported in these packages.

Assuming all the decay energy is transformed into heat, the maximum heat generation rate for Ir-192 would be approximately 2.8 Watts. The thermal evaluation for the heat test is described in Section 3.

2.6.1.1 Summary of Pressures and Temperatures

(Reference:
- *IAEA TS-R-1, paragraph 615 and 661)*

See Table 3.1.A for a Summary Table of Temperatures during normal conditions of transport. As all components are vented to ambient, no pressure will build up in the units under Normal Transport conditions.

2.6.1.2 Differential Thermal Expansion

Any thermal expansion encountered during Normal Transport will be insignificant with respect to the manufacturing tolerances of the package.

2.6.1.3 Stress Calculations

Stress calculations for normal transport of this package are contained in Sections 2.4.1 and 2.7.4.3. Results of these calculations demonstrate that the package meets the requirements for Normal Transport.

2.6.1.4 Comparison with Allowable Stresses

The Model OP-660 & OPL-660 package was fully tested and passed under Normal Conditions of transport. It is therefore concluded that the Model OP-660 & OPL-660 package will satisfy the performance requirements specified by the regulations.

2.6.2 Cold

(Reference:

- *USNRC, 10 CFR 71.71 (c)(2)*
- *IAEA TS-R-1, paragraph 615, 637 and 664)*

The metals used in the manufacture of the projector and the container all withstand a temperature of -40°F (-40°C). The outer package housing and the primary containment are all fabricated from thin wall (less than 1/8 inch thick) steel, and thus brittle fracture is not a concern.

The polyethylene foam used in the container inserts has an operating temperature range down to -40°F (-40°C) as demonstrated in Test Plan 76 (See Section 2.12.2). The rigid polyurethane foam used in the projector has an operating temperature range down to -45°F (-43°C).

The operating temperature range of the package was tested under Hypothetical Accident Conditions in Test Plan 76 (See Section 2.12.2) and the package performed satisfactorily, therefore it is concluded that the Model OP-660 & OPL-660 transport packages will withstand the normal transport cold condition.

2.6.3 Reduced External Pressure

(Reference:

- *USNRC, 10 CFR 71.71 (c)(3)*
- *IAEA TS-R-1, paragraph 643 & 619*

Although they are gasketed, the Model OP-660 and OPL-660 packages are not air tight because label attachment holes in the containers allow pressure release to the atmosphere preventing differential pressure from occurring.

The authorized contents are special form source capsules that meet a minimum ANSI N542-1977 and ISO 2919-1999 classification of Class 3 for pressure. This classification is more limiting than the reduced external pressure requirement as it covers 25 kN/m^2 to 7MN kN/m^2. Therefore, the reduced external pressure requirements of 3.5 psi in 10 CFR, 8.7 psi (60 kPa) in 49 CFR and IAEA will not adversely affect the package containment.

2.6.4 Increased External Pressure

(Reference:

- *USNRC, 10 CFR 71.71(c)(4))*

Although they are gasketed, the Model OP-660 and OPL-660 packages are not air tight because label attachment holes in the containers allow pressure release to the atmosphere preventing differential pressure from occurring.

The authorized contents are special form source capsules that meet a minimum ANSI N542-1977 and ISO 2919-1999 classification of Class 3 for pressure. This classification is more limiting than the reduced external pressure requirement as it covers 25 kN/m^2 to 7MN kN/m^2. Therefore, the increased external pressure requirements of 20 psi in 10 CFR 71 will not adversely affect the package containment.

2.6.5 Vibration

(Reference:

- *USNRC, 10 CFR 71.71(c)(5)*
- *IAEA TS-R-1, paragraph 612)*

The 660 Projectors have been in use and transported for more than 20 years. In this period, there has been no evidence of vibration-induced failure. The use of the outer container will not adversely affect those results, as the container inserts hold the projector in place.

The outer container is a folded and welded steel construction with a lid retained by a two spring tensioned latches. These components are not susceptible to vibration induced failure. It is therefore concluded that the Model OP-660 & OPL-660 packages will maintain their structural integrity and shielding effectiveness under the normal transport vibration condition.

2.6.6 Water Spray

(Reference:

- *USNRC, 10 CFR 71.71(c)(6)*
- *IAEA TS-R-1, paragraph 719, 720 and 721)*

Water spray preconditioning of the package was not performed. The 660 projectors are constructed of waterproof materials throughout. The outer container, while not being air or water tight is constructed of waterproof material and will provide protection from rainfall. The outer container lid to body interface incorporates a lip which prevents rain ingress.

2.6.7 Free Drop

(Reference:

- *USNRC, 10 CFR 71.71(c)(7)*
- *IAEA TS-R-1, paragraph 722(a))*

The results of Test Plan 70 (See Section 2.12.1) demonstrated that the Model 660 Series projectors when tested without the overpack maintained its structural integrity and shielding effectiveness under the normal transport free drop test. The projector was tested at -40°C using four drop orientations:

- Normal transport position, impacting the bottom edges of both end plates.
- Lock Assembly Impact on the rear end plate.

- Shipping Plug impact on the front end plate.
- Bottom edge of the rear end plate.

Radiation profiles after testing revealed no significant change in radiation levels as a result of the 1.2 m drop test. Placing the 660 Series projector inside an OP-660 or OPL-660 container will provide further protection to the projector as was demonstrated in the 9 m drop tests under Test Plan 76 (See Section 2.12.2). Therefore it is concluded that the Model OP-660 and OPL-660 packages meet the requirements of the Normal Conditions of Transport, 1.2 m drop test.

2.6.8 Corner Drop

(Reference:
- *USNRC, 10 CFR 71.71(c)(8)*
- *IAEA TS-R-1, paragraph 722(b))*

This test is not applicable, as the transport package does not transport fissile material, nor is the exterior of the transport package made from either fiberboard or wood.

2.6.9 Compression

(Reference:
- *USNRC, 10 CFR 71.71(c)(9)*
- *IAEA TS-R-1, paragraph 723)*

Test Plan Report 70 (See Section 2.12.2) demonstrated that the 660 Series projectors maintained their structural integrity and shielding effectiveness under the Normal Conditions of Transport compression test. Placing the 660 Series projector inside either the OP-660 or the OPL-660 container will not invalidate these results. In addition, the following analysis demonstrates that a weight of five times the package weight will not impair the structural integrity of the package.

This analysis demonstrates that the Model OP-660 and OPL-660 packages will not bend under a compressive load of five times its weight.

The compressive load on the package is $F_C = 5 \times 88$ lbs = 440 lbs. The vertically projected surface area of the package is:

$$A_T = 18\ ¼" \times 8\ ¼" = 150\ in^2$$

The vertically projected surface area times 2 lbs/in^2 gives 300 lbs. This is less than F_C (440 lbs).

Consider the Model OP-660 and OPL-660 package as a short column with a slenderness ratio (L/R) of:

$$L/R = 14.31/11.08 = 1.3$$

Where: L is the package height (14.31 inches)
R is the least radius of gyration of the section, a thin-wall rectangle with the smallest side of 7.5 inches and sheet thickness of 0.05 inches

$$R = (I_{MIN}/A)^{0.5} = 11.08 \text{ inches}$$

Where: A is the area around the thin wall rectangle (2.48 in^2)
I_{MIN} is the moment of inertia of the thin wall rectangle (27.49 in^4)

The maximum safe load (S_W) applied centrally to the package is found by:

$$S_W = 17{,}000 - 0.485\ ((L/R)^2) = 16{,}999 \text{ lbs}$$

The margin of safety (M) is determined by ($S_W/F_C - 1$) which equals 38.6. Therefore the package will not fail with a compressive load of five times its weight. Also, since the slenderness ratio is below 30, the package is considered a compressive block in which bending of the member is unlikely to occur.

Reference: Eugene A. Avallone and Theodore Baumeister III, Editors, *Mark's Standard Handbook for Mechanical Engineers*, Tenth Edition. (New York: McGraw-Hill, 1978, pages 5-38 and 5-39).

2.6.10 Penetration

(Reference:
- *USNRC, 10 CFR 71.71(c)(10)*
- *IAEA TS-R-1, paragraph 724)*

In Test Plan 70, the Model 660 Series projectors demonstrated that they maintained their structural integrity and shielding effectiveness under this test condition. In this test plan, the projector was impacted by the penetration bar as follows:

- On the lock assembly.
- On the rear end plate screws.
- On the outer housing.

After testing there was no loss of structural integrity or shielding effectiveness resulting from the impacts. Placing the 660 projector inside either the OP-660 or OPL-660 container will add further protection to the projector and will not invalidate these results. On this basis it is concluded that the Model OP-660 and OPL-660 packages meet the requirements of this section under the Normal Conditions of Transport penetration test.

2.7 Hypothetical Accident Conditions of Transport

(Reference:
- *USNRC, 10 CFR 71.73*
- *IAEA TS-R-1, paragraph 726)*

Sections 2.7.1 through 2.7.5 summarize evaluations and testing for the hypothetical accident conditions of transport tests. Section 2.7.6 summarizes the results of this testing. Test Report 76 (See Section 2.12.2) describes the satisfactory performance of the package to the Hypothetical Accident Condition testing.

2.7.1 Free Drop

(Reference:
- *USNRC, 10 CFR 71.73(c)(1)*
- *IAEA TS-R-1, paragraph 727(a))*

Eight (8) test specimens were used to conduct the 9 m drop test and were tested in four different orientations. Justification for all test unit drop orientations are included in Test Plan 76 (Section 2.12.2). Detailed description of this testing is contained in Test Report 76 (Section 2.12.2).

2.7.1.1 End Drop

This orientation was used for test samples B1 and B2. The test was performed with the impact being on the lid of the steel box. The intention was to test the projector to see if the shell would move relative to the end plates.

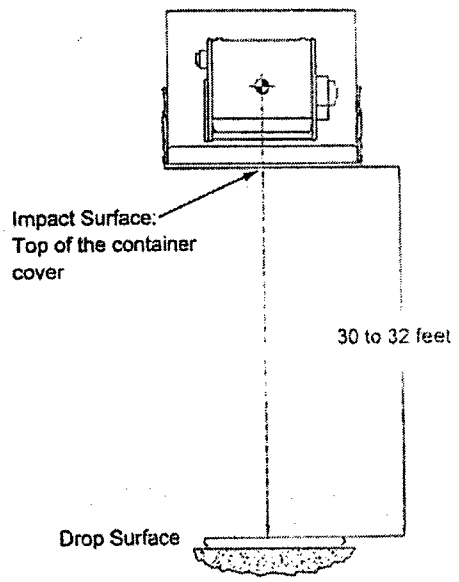

Figure 2.7.A – Specimen B1 & B2 Orientation for the 9 m Drop Test

2.7.1.2 Side Drop

This orientation was used for test samples C1 and C2. The test was performed with the impact being on the rear latch of the steel box. The intention was to damage the latch and open the container.

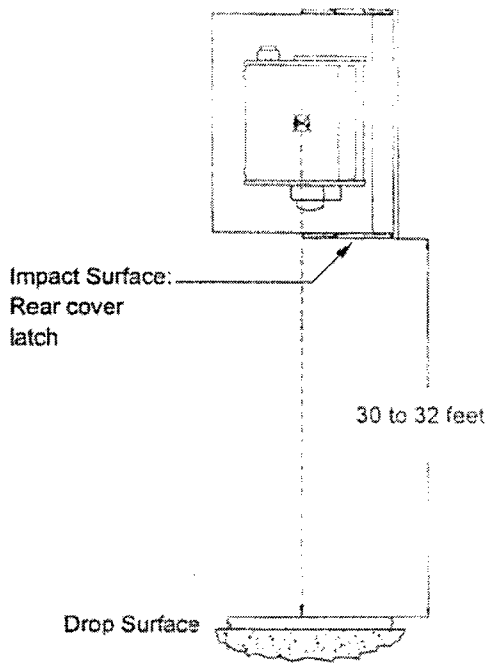

Figure 2.7.B – Specimen C1 & C2 Orientation for the 9 m Drop Test

2.7.1.3 Corner Drop

The corner drop was not performed as this orientation was determined to be less damaging than other orientations that were tested. As was seen in Test Plan Report 76 (see Section 2.12.2), the steel box and inserts absorbed most of the impact energy with only minor damage transferred to the projectors. Results of testing showed that more package deformation occurred in the edge drops than was seen in the side drops.

As was seen in the edge and side drops, a pure corner drop would transfer most of its energy into deformation of the outer package. This would result in a very slow deceleration, thus limiting the energy generated at impact and transmitted to the projector. A corner drop would also transfer less energy in a direction parallel to the end plates reducing the likelihood for the end plate bolts to fail in shear. Without this type of failure, the depleted uranium shield is not vulnerable to degradation in a thermal test.

In a corner drop, the package could break one of the lock hasps, but due to the localized impact area, it is not likely that sufficient energy would be transferred to both lock hasps causing their break upon impact. Therefore the shield container would remain inside the overpack prior to the 1 m puncture drop.

From this assessment it is determined that a corner drop of the package would be less damaging than the drop orientations performed for this package, therefore it was not performed.

2.7.1.4 Oblique Drops

This orientation was used for test samples A1, A2, D1 and D2. The test performed for samples A1 and A2 with an impact on the bottom rear edge of the container. Previous test results indicated that this orientation is the most damaging package oreientation for the mechanical tests. In Test Plan Report 70 (See Section 2.12.1) this orientation caused failure of the rear end plate screws and subsequent shield failure.

The test performed for samples D1 and D2 with an impact on the top rear edge of the container. This orientation was designed to attempt to jar the cover lid off the container.

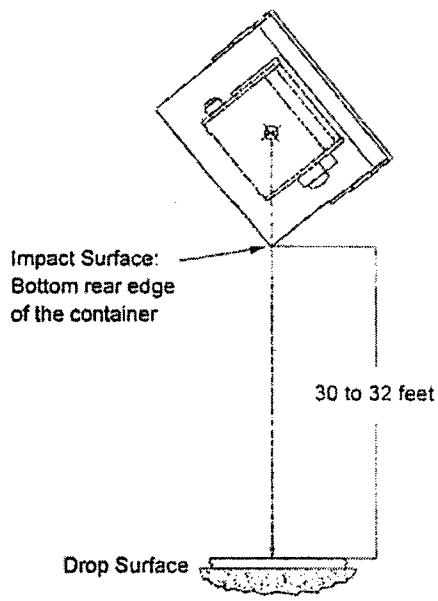

Figure 2.7.C – Specimen A1 and A2 Orientation for the 9 m Drop Test

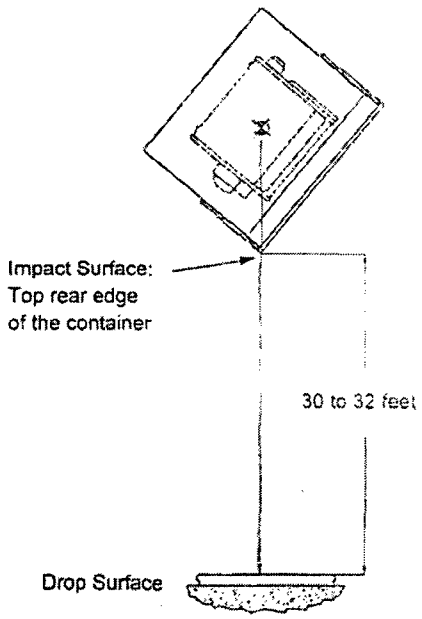

Figure 2.7.D – Specimen D1 and D2 Orientation for the 9 m Drop Test

2.7.1.5 Summary of Results

(Reference:

- *USNRC, 10 CFR 71.73(a) and (b)*
- *IAEA TS-R-1, paragraph 726)*

See Table 2.7.A for test unit results summary.

2.7.2 Crush

(Reference:

- *USNRC, 10 CFR 71.73(c)(2)*
- *IAEA TS-R-1, paragraph 727(c))*

Not applicable. This package is not used for the Type B transport of normal form radioactive material.

2.7.3 Puncture

(Reference:

- *USNRC, 10 CFR 71.73(c)(3)*
- *IAEA TS-R-1, paragraph 727(b))*

Justification for all test unit puncture orientations are included in Test Plan Report 76 (see Appendix 2.12.2). The orientations were determined following the 9 meter drop tests and were selected based on an assessment as to which orientation would impart the most damage to each specimen.

All puncture tests were carried out with the projector retained within the steel box. See Table 2.7.A for test unit results summary. All damage to test specimens from the puncture test was minimal. At the conclusion of the puncture test, an intermediate inspection was performed which included radiographs of the units, a radiation profile (of six specimens) and a visual inspection. This concluded that the source tube in each of the specimens was still engaged with the end plates. There were no broken source tubes or damaged dummy source assemblies. The source assemblies were secured in their shielded positions.

Radiation profiles were performed at the conclusion of the 9 m drop tests and puncture tests to determine whether testing should continue. Test specimens B1 and B2 were not profiled at this time due to bent source tubes.

The profiles showed that all but one of the test specimens had no increase in radiation levels. One test specimen (unit A1) showed an increase in radiation levels at the lock assembly. However, the maximum reading at one meter from this test unit was only 3 mR/hr.

2.7.4 Thermal

(Reference:

- *USNRC, 10 CFR 71.73(c)(4)*
- *IAEA TS-R-1, paragraph 651 through 655, and 728)*

Four test specimens, one from each original 9 m drop orientation, were selected to undergo thermal testing based on having greater damage to the projector structure and to the source tube connections. The detailed test description and results are given in Sections 6.7 and 5.4 of Test Plan Report 76 (See Section 2.12.2)

2.7.4.1 Summary of Pressures and Temperatures

(Reference:

- *IAEA TS-R-1, paragraph 502(d))*

Table 2.7.A: Summary Table of Temperatures

Surface Temperature Condition	Specimen A1	Specimen B2	Specimen C2	Specimen D1
Fire Test During	838°C (1,540°F)	817°C (1,503°F)	830°C (1,526°F)	830°C (1,526°F)
Post-Fire (Maximum Temperature)	838°C (1,540°F)	817°C (1,503°F)	830°C (1,526°F)	830°C (1,526°F)

The 660 projectors (and the OP-660, OPL-660 overpack containers after the drop/puncture testing) are vented to atmosphere. As such, no pressure will build up in the units under Hypothetical Accident conditions.

Table 2.7.B: Summary Table of Maximum Pressures

Void Volume (in^3)	Fire Conditions 800°C (1,472°F) Pressure Developed
0	0 psig

2.7.4.2 Differential Thermal Expansion

Actual testing on the projectors which are the primary containment for ensuring integrity of the package has shown that any differential thermal expansion has no detrimental effect on the packages ability to pass the thermal testing portion of the Hypothetical Accident Conditions. Design clearances between fitted components in the OP-660 & OPL-660 are sufficient to allow for thermal expansion at the maximum temperature of 71°C (160°F). It can be drawn from the actual testing results that thermal expansion will not have a significant effect on the Model OP-660 & OPL-660 packages.

2.7.4.3 Stress Calculations

This analysis demonstrates that the pressure inside the source capsule used in conjunction with the model OP-660 & OPL-660 container, when subjected to the Hypothetical Accident Conditions of Transport thermal test, does not exceed the pressure which corresponds to the minimum yield strength at the thermal test temperature.

The source capsule is fabricated from stainless steel, either Type 304 or 304L. The maximum inside diameter of the capsule is 0.19 inches (4.8 mm). The source capsule is seal-welded. The minimum weld penetration is 0.02 inches (0.5 mm). Under conditions of internal pressure, the critical location for failure is this weld.

The internal volume of the source capsule contains a second source capsule which is seal welded to enclose the radioactive material, spacers and air. It is assumed at the time of loading, any entrapped air is at standard temperature and pressure, 20° C (68°F) and 14.7 psi (101 kN/m^2), respectively. This is a conservative assumption because, during the welding process, the internal air is heated, causing some of the air mass to escape before the capsule is sealed. When the welded capsule returns to ambient temperature, the internal pressure would be somewhat reduced.

Under the Hypothetical Accident Conditions, it is assumed that the capsule could reach a temperature of 800°C (1,475°F). Using the ideal gas law and requiring the air to occupy a constant volume, the internal gas pressure could reach 54 psi (370 kN/m^2).

The capsule is assumed to be a thin walled cylindrical pressure vessel with the wall thickness equal to the depth of weld penetration.

The maximum longitudinal stress is calculated from:

$$\sigma_L A = PA_p$$

where

σ_L	=	Longitudinal stress
A	=	Stress Area $= \pi d t_p = (15\ mm^2$ or $0.0119\ inches^2)$
t_p	=	minimum weld penetration
d	=	maximum inner diameter
P	=	Pressure (54 psi)
A_p	=	Pressure Area $= \pi r^2 = (18\ mm^2$ or $0.028\ inches^2)$

From this relationship, the maximum longitudinal stress is calculated to be 127 psi.

The hoop stress is calculated from:

$$2\sigma_h t = Pd$$

where

t	=	Thickness of the cylinder (0.5 mm or 0.02 inches)
d	=	Inside diameter (4.8 mm or 0.19 inches)
σ_h	=	Hoop stress

From this relationship, the hoop stress is calculated to be 259 psi.

At a temperature of 870°C (1,598°F), the yield strength of type 304 stainless steel is 10,000 psi (69 MN/m^2). Therefore, the stress generated is less than 3% of the yield strength of the material.

2.7.4.4 Comparison of Allowable Stresses

All stresses calculated in Section 2.7.4 are well below strengths for the materials of construction. Further, the Model OP-660 & OPL-660 package was fully tested and passed under Normal and Hypothetical Accident Conditions of transport. It is therefore concluded that the Model OP-660 & OPL-660 package will satisfy the performance requirements specified by the regulations.

2.7.5 Immersion - Fissile Material

(Reference:

- *USNRC, 10 CFR 71.73 (c)(5)*
- *IAEA TS-R-1, paragraphs 731-733)*

Not applicable. This package is not used for transport of Type B quantities of fissile material.

2.7.6 Immersion - All Packages

(Reference:

- *USNRC, 10 CFR 71.73 (c)(6)*
- *IAEA TS-R-1, paragraph 701 and 729)*

The Model OP-660 & OPL-660 transport packages are open to the atmosphere and contain no other components that would create a differential pressure under immersion. All materials are impervious to water and would not be affected.

The primary containment system in the package is a special form source, which meets the ANSI 542 and ISO 2919 requirements for Class 3 pressure testing. Therefore the OP-660 & OPL-660 could withstand the immersion test as Class 3 is in excess of the required 150 kPa (21.7 lb ft/in^2).

2.7.7 Deep Water Immersion Test (for Type B Packages Containing More than 10^5 A_2)

(Reference:

- *USNRC, 10 CFR 71.61*
- *IAEA TS-R-1, paragraph 657, 658 and 730)*

Not applicable. This package does not transport normal form radioactive material in quantities exceeding $10^5 A_2$.

2.7.8 Summary of Damage

(Reference:

- *USNRC, 10 CFR 71.73(a) and (b)*
- *IAEA TS-R-1, paragraph 701, 702, 716 and 726)*

Table 2.7.C summarizes the results of the Normal Conditions of Transport and Hypothetical Accident testing performed on the Model OP-660 & OPL-660 transport packages.

Table 2.7.C: Summary of Damage During Performance of TP70 & TP76

Specimen	Test Performed	Test Results
TP70 Unit A	Compression test	Slight scratches on the top surface of the end plate. No other obvious damage.
	1 meter (40 inch) penetration bar on 660 device side closest to the DU shield within the container	Indent at point of impact. No other damage.
	1.2 meter (4 foot) drop on bottom (Normal Transport Orientation)	First drop attempt indicated the specimen hit on one end plate only. Second drop attempt achieved intended impact.
	Post-Drop Inspection	• Shell bottom bowed out away from the center of the unit. • Various scratches and dents on bottom of endplates, feet and handle. • Slight shift of source tube off center out of original alignment, source wire assembly undamaged. • Surface and 1 meter dose rates remained within limit of 200 mR/hr and 10 mR/hr respectively.
TP70 Unit B	Compression test	Slight scratches on the top surface of the end plate. No other obvious damage.
	1 meter (40 inch) penetration bar on selector ring	Small flattened knurl on selector ring at point of impact. No other damage.
	1.2 meter (4 foot) drop on outer edge of lock assembly cover	Test specimen impacted as intended.
	Post-Drop Inspection	• Scuff mark on the lock cover at impact point. No other external damage. • Selector ring operational but source would not expose normally from the device. • Source tube had a crack at the top and was oval in shape. Source wire assembly undamaged. • Surface and 1 meter dose rates remained within limit of 200 mR/hr and 10 mR/hr respectively.
TP70 Unit C	Compression test	Slight scratches on the top surface of the end plate. No other obvious damage.
	1 meter (40 inch) penetration bar on shipping plug nut	Indent on shipping plug nut at point of impact. No other damage.
	1.2 meter (4 foot) drop on outer edge of shipping plug	First drop impact met the TP criteria but compressed the front nut into the end plate instead of the intended effect of prying it away from the end plate. A second drop was performed with the center of gravity between the front nut and the end plate with the intention of prying the front nut away from the end plate.

Specimen	Test Performed	Test Results
	Post-Drop Inspection	• Scuff mark on shipping cover at impact point. No other external damage. • Source tube appeared bent after removal of shipping plug fitting. • Front nut did not rotate, source cannot be projected normally from the device but source wire assembly undamaged. • Surface and 1 meter dose rates remained within limit of 200 mR/hr and 10 mR/hr respectively.
TP70 Unit D	Compression test	Slight scratches on the top surface of the end plate. No other obvious damage.
	1 meter (40 inch) penetration bar on bottom left screw of rear plate	Four attempts were made to impact the desire location. Final specimen condition showed dent in plate 1" diameter by 1/16" deep. No other damage.
	1.2 meter (4 foot) drop on bottom edge of rear end plate	Test specimen impacted as intended.
	Post-Drop Inspection	• Scratches and paint removed at impact point of end plate. Dent on bottom of the shell, scar less than 1/16" deep and ¾" long. No other external damage. • Source projected normally from device, source wire assembly undamaged. • Surface and 1 meter dose rates remained within limit of 200 mR/hr and 10 mR/hr respectively.
TP76 A1	1.2 meter (4 foot) drop on bottom edge of rear end plate	Sheet metal of container slightly bent. No damage to inner device.
	9 meter (30 foot) drop on bottom edge of rear end plate	Sheet metal insert has impression of the lock from inner device. No damage to inner device.
	1 meter (40 inch) puncture on bottom edge of rear end plate (Tested inner device without overpack container)	Slight scuffing on the bottom rear edge of device.
	Thermal Test (Tested inner device without overpack container)	• Maximum specimen temperature 838.1°C. • Lead shielding melted away during the thermal test. There was no damage to the depleted uranium shield. • Aluminum handle melted with cosmetic scaring to device from high temperatures. No additional damage to device. • Maximum 1 meter dose rate 3.4 mR/hr.
TP76 A2	1.2 meter (4 foot) drop on bottom edge of rear end plate	No damage to container or inner device.
	9 meter (30 foot) drop on bottom edge of rear end plate	Impact surface of container was crushed and sheet metal insert bent at rear. No damage to inner device.

Specimen	Test Performed	Test Results
	1 meter (40 inch) puncture on bottom edge of rear end plate (Tested inner device without overpack container)	Slight scuffing on the bottom rear edge of device.
	Thermal Test	Not performed. Test unit performance bounded by thermal test performed on TP76 specimen A1.
TP76 B1	1.2 meter (4 foot) drop on lid	No damage to container or inner device.
	9 meter (30 foot) drop on lid	• Container lid came off on impact. • Wood insert and top foam insert of container slightly damaged. • Device handle cracked and bent and slight bend to rear end plate.
	1 meter (40 inch) puncture on bottom (Tested inner device without overpack container) (Impacted Twice to Achieve Drop Orientation)	Indentation on right and bottom sides from impacts.
	Thermal Test	Not performed. Test unit performance bounded by thermal test performed on TP76 specimen B2.
TP76 B2	1.2 meter (4 foot) drop on lid	No damage to container or inner device.
	9 meter (30 foot) drop on lid	• Container lid came off on impact. • Wood insert and top foam insert of container cracked. • Device lock assembly compressed slightly and rear right handle screw broke.
	1 meter (40 inch) puncture on bottom (Tested inner device without overpack container)	Indentation of puncture bar at impact point. No other additional damage.
	Thermal Test (Tested inner device without overpack container)	• Maximum specimen temperature 817°C. • Lead shielding melted away during the thermal test. There was no damage to the depleted uranium shield. • Aluminum handle melted with cosmetic scaring to device from high temperatures. No additional damage to device. • Maximum 1 meter dose rate 2.7 mR/hr.
TP76 C1	1.2 meter (4 foot) drop on rear latch side	Sheet metal of container and rear lead panel slightly bent. No damage to inner device.
	9 meter (30 foot) drop on rear latch side	• Container rear latch difficult to open. Opposite latch released and lid opened approximately 6 inches. • Device rear end plate dimpled at lock.

Specimen	Test Performed	Test Results
	1 meter (40 inch) puncture on rear latch side (Tested inner device without overpack container)	• Lock plunger came off. • Scuffing on dust cover cap. • Bowing in and around lock assembly.
	Thermal Test	Not performed. Test unit performance bounded by thermal test performed on TP76 specimen C2.
TP76 C2	1.2 meter (4 foot) drop on rear latch side	Sheet metal of container slightly bent. Minor damage to rear end plate of device.
	9 meter (30 foot) drop on rear latch side	• Container rear latch bent. Slight depression in center of the container box and sheet metal insert bent. • Device had slight rear end plate bow at lock.
	1 meter (40 inch) puncture on rear latch side (Tested inner device without overpack container)	Slight bowing inward of rear plate.
	Thermal Test (Tested inner device without overpack container)	• Maximum specimen temperature 830.5°C. • Lead shielding melted away during the thermal test. There was no damage to the depleted uranium shield. • Aluminum handle melted with cosmetic scaring to device from high temperatures. No additional damage to device. • Maximum 1 meter dose rate 2.6 mR/hr.
TP76 D1	1.2 meter (4 foot) drop on top edge of rear end plate	Container lid pushed upwards at impact point, but remained secured. No damage to inner device.
	9 meter (30 foot) drop on top edge of rear end plate	• Container wood insert damaged, bracket and latches bent, foam pulled from glued surface. • Device end plates bent and plunger lock cam off.
	1 meter (40 inch) puncture on bottom edge of rear end plate (Tested inner device without overpack container)	Scuffing of dust cover cap and bottom rear edge.
	Thermal Test (Tested inner device without overpack container)	• Maximum specimen temperature 829.5°C. • Lead shielding melted away during the thermal test. There was no damage to the depleted uranium shield. • Aluminum handle melted with cosmetic scaring to device from high temperatures. No additional damage to device. • Maximum 1 meter dose rate 2.9 mR/hr.
TP76 D2	1.2 meter (4 foot) drop on bottom edge of rear end plate	No damage to container or inner device.
	9 meter (30 foot) drop on bottom edge of rear end plate	• Container lid corner bent. Damage to wood insert and slight bend to metal insert. • No damage to inner device.

Specimen	Test Performed	Test Results
	1 meter (40 inch) puncture on bottom edge of rear end plate (Tested inner device without overpack container)	Scuffing of dust cover cap and bottom rear edge.
	Thermal Test	Not performed. Test unit performance bounded by thermal test performed on TP76 specimen D1.

As demonstrated in testing under Test Plan 76, the overpack container protected the inner device in the 30 foot drop test. Subsequent puncture and thermal testing on the inner device outside the overpack container did not result in a loss of structural integrity for the package. Radiation intensity measurements taken before and after the test demonstrate there was no significant reduction in shielding efficiency as a result of the Hypothetical Accident Condition testing. Based on these results, it is concluded that the Model OP-660 & OPL-660 maintains structural integrity and shielding effectiveness during Hypothetical Accident Conditions and Normal Conditions of Transport.

2.8 Accident Conditions for Air Transport of Plutonium

Not applicable. This package is not used for transport of plutonium.

2.9 Accident Conditions for Fissile Material Packages for Air Transport

Not Applicable. This package is not used for transport of Type B quantities of fissile material.

2.10 Special Form

(Reference:

- *USNRC, 10 CFR 71.75*
- *IAEA TS-R-1, paragraphs 602-604)*

The OP-660 & OPL-660 projectors are designed to transport QSA Global Inc. source capsules. These source capsules have been certified as special form radioactive material by U.S. Department of Transportation.

2.11 Fuel Rods

Not applicable. This package is not used for transport of fuel rods.

2.12 Appendix

2.12.1 Test Plan 70 and Test Report 70.

2.12.2 Test Plan 76 and Test Report 76.

2.12.3 Test Plan 78 and Test Report 78.

Section 2.12.1 - Test Plan 70 and Test Report 70

SENTINEL

TEST PLAN NO. 70

TEST PLAN COVER SHEET

TEST TITLE: MODEL 660 SERIES TYPE B TRANSPORT TESTS

PRODUCT MODEL: 660 SERIES PROJECTORS

ORIGINATED BY: S. Gomi	DATE: 17 SEPT 97

TEST PLAN REVIEW

ENGINEERING APPROVAL:	DATE: 17 Sept 97
QUALITY ASSURANCE APPROVAL:	DATE:
REGULATORY AFFAIRS APPROVAL: C. Langham	DATE: 17 Sep 97

COMMENTS:

TEST RESULTS REVIEW

ENGINEERING APPROVAL: S. Gomi	DATE: 18 DEC 97
QUALITY ASSURANCE APPROVAL:	DATE:
REGULATORY AFFAIRS APPROVAL: C. Langham	DATE: 15 Dec 97

Amersham QSA

SENTINEL

TEST PLAN NO. 70

TEST TITLE: MODEL 660 SERIES TYPE B TRANSPORT TESTS	
PRODUCT MODEL: 660 SERIES PROJECTORS	
ORIGINATED BY: S. Gemin	DATE: 17 SEPT 97
ENGINEERING APPROVAL:	DATE: 17 Sept 97
QUALITY ASSURANCE APPROVAL:	DATE:
REGULATORY AFFAIRS APPROVAL: C. Langham	DATE: 17 Sep 97
COMMENTS:	
ENGINEERING APPROVAL: S. Gemin	DATE: 18 Dec 97
QUALITY ASSURANCE APPROVAL:	DATE: 18 Dec 97
REGULATORY AFFAIRS APPROVAL:	DATE:

Amersham GSA

SENTINEL

TEST PLAN NO. 70

TEST TITLE: MODEL 660 SERIES TYPE B TRANSPORT TESTS	
PRODUCT MODEL: 660 SERIES PROJECTORS	
ORIGINATED BY: S. Gomez	DATE: 17 SEPT 97
ENGINEERING APPROVAL:	DATE: 17 Sept 97
QUALITY ASSURANCE APPROVAL:	DATE: 17 Sept 97
REGULATORY AFFAIRS APPROVAL:	DATE:
COMMENTS:	
ENGINEERING APPROVAL:	DATE:
QUALITY ASSURANCE APPROVAL:	DATE:
REGULATORY AFFAIRS APPROVAL:	DATE:

Amersham QSA

TP70 Test Results

This document describes the results of package design tests conducted by Amersham to determine whether Model 660 Series projectors meet NRC requirements for Type B(U) packages (10 CFR 71.71 and 10 CFR 71.73).

The Model 660 Series includes the following models: 660, 660A, 660B, 660E, 660AE, and 660BE. Reference Certificate of Compliance 9033.

The tests were conducted in accordance with Amersham Test Plan #70 (dated September 7, 1997). The test plan also covers the criteria stated in IAEA, Safety Series 6 (1985, as amended 1990).

Four projectors were tested. All four units met the criteria in 10 CFR 71.71, but one test specimen failed to meet the criteria in 10 CFR 71.73 because the unit's carbon steel end-plate screws failed. As a result of the tests, Amersham is now testing Model 660 Series projectors with tougher stainless steel screws to assure that the projectors satisfy all the requirements for Type B(U) packages.

This document reports on the manufacturing and acceptance of the test specimens, execution of the Normal Transport Conditions and Hypothetical Accident Conditions tests, test inspections, and assessment of the test units as to their conformity with the requirements of 10 CFR 71.

Section 1 Transport Package Overview

The Model 660 Series projector consists of a source tube enclosed in a depleted-uranium shield, an end plate with a lock assembly, a second end plate with a storage plug assembly, four steel connecting rods, a sheet metal shell and foam packing material (Figure 1).

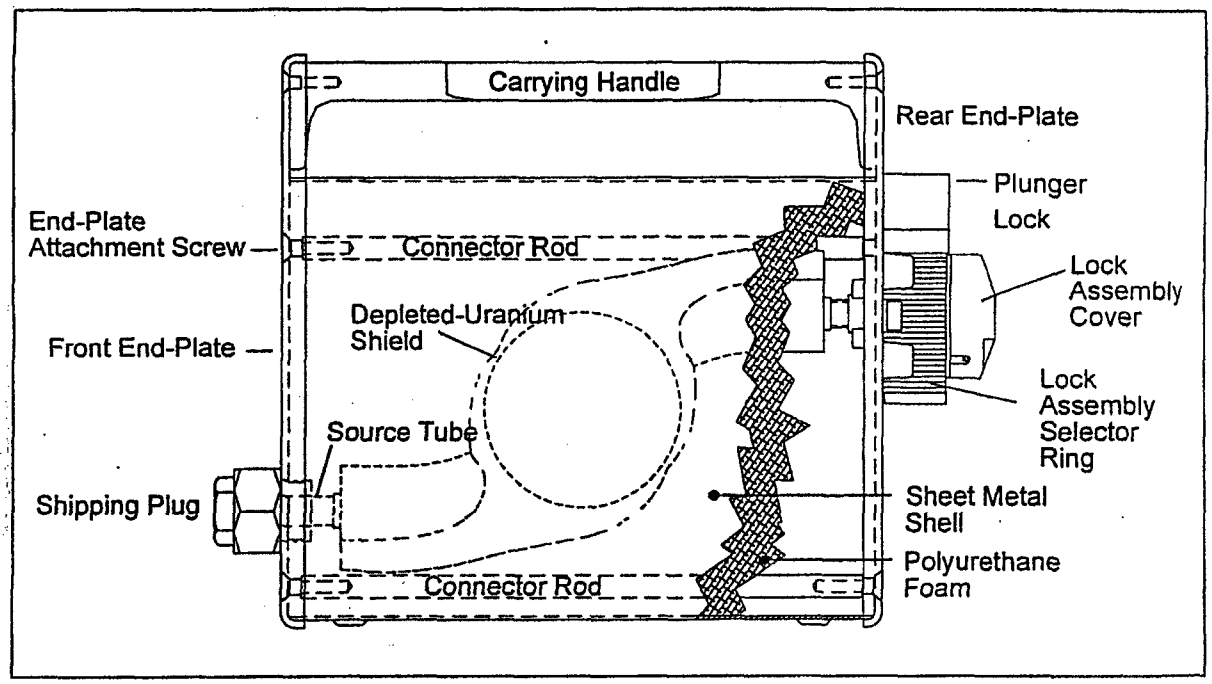

Figure 1: Side View of a Model 660 Series Projector

The shield consists of a 1/2-inch outside diameter source tube with its mid-section set in depleted uranium. One end of the source tube is inserted into a 1/2-inch hole of the lock assembly at the rear end-plate. The other end of the shield's source tube is inserted into another 1/2-inch hole of the shipping plug at the front end-plate. Both 1/2-inch holes allow enough radial clearance for a slip fitting attachment. There is approximately 1/8-inch axial clearance at the front end for assembly.

The source is contained in a special-form, encapsulated capsule assembly which is attached to the source wire assembly. This source wire assembly is secured in the package by the lock assembly. The lock assembly, in turn, is attached to the rear end-plate by four stainless steel screws. There are two versions of the lock assembly used on the Model 660 series projectors. The size, material and location of the end-plate attachment screws are identical on both versions.

The shield, end plates and the sheet metal shell are connected by four 3/8-inch thick steel rods which are threaded at each end to accept 1/4-inch screws securing the end plates to the rods.

A polyurethane foam is used to fill the space around the shield and fill void within the sheet metal shell. The foam acts as an impact absorber.

The depleted-uranium shield provides the primary radiation protection for the Model 660 Series projector. The shield accomplishes this by limiting the transmission of gamma rays to a dose level at or below 200 mR/hr at the package surface and limiting the dose level at or below 10 mR/hr at one meter from the surface of the package. A fracture of the shield could compromise this protection.

The tests that were performed focused on damaging those components of the package which could cause the displacement of the source relative to its stored position within the shield and which affect the integrity of the shield itself.

Section 2 Test Specimen Production and Acceptance

Five test specimens were manufactured in the Amersham Burlington, Mass., facility in accordance with Amersham Drawing TP70, Rev. C. These units provided four test specimens and a spare. The spare was not used.

As required in the test plan, the TP70s are standard Model 660B projectors with the following modifications:

- Heavier than normal shields were cast for the TP70
- Supplemental lead was added to the shield

These modifications enabled us to produce test specimens that weighed at least 54 pounds, and thus provide worst-case conditions for the free drop and puncture tests. (Ninety-seven percent of all Model 660 Series units weigh 54 pounds or less.)

The four test specimens were labeled to facilitate tests for specific failure modes:

- Specimen A: Shield movement or fracture
- Specimen B: Failure of the lock assembly attachment screws
- Specimen C: Loss of the connection between the storage plug and the source tube
- Specimen D: Failure of the end-plate screws

The test specimens were manufactured in accordance with the Amersham Quality Assurance Program. The program provides for documentation of the manufacturing process, assures that the units comply with the relevant drawings and manufacturing instructions, and specifies radiological profiling of the completed product. Table 1 summarizes key manufacturing and profiling data.

Table 1: Test Specimen Manufacturing Data

Specimen	A	B	C	D
Completion Date	10/6/97	10/6/97	10/6/97	10/6/97
Total Weight	54.90 lbs	54.85 lbs	55.30 lbs	55.20 lbs
Profile Data, Maximum Readings				
At Package Surface	167.8 mR/hr	142.9 mR/hr	154.5 mR/hr	149.2 mR/hr
At One Meter	1.6 mR/hr	1.6 mR/hr	1.1 mR/hr	0.9 mR/hr

On October 9, 1997, representatives from Engineering, Quality Assurance and Regulatory Affairs jointly accepted the four test specimens and the spare as conforming to the requirements of Amersham Drawing TP70, Rev. C, and Test Plan #70.

The representatives also jointly determined that the TP70 units were representative of the full Model 660 Series population for purposes of the design tests under 10 CFR 71.

Section 3 Normal Transport Conditions

Based on Normal Transport Conditions tests conducted in October 1997 on the test model TP70, the Model 660 Series projectors comply with the requirements of 10 CFR 71.71 and with the comparable IAEA Safety Series 6 provisions. This section describes the execution of the tests, the results and the assessments made by representatives from Engineering, Regulatory Affairs and Quality Assurance.

3.1 Test Execution

Three Normal Transport Conditions Tests were conducted to meet the requirements of 10 CFR 71.71 and Test Plan #70:

- Compression test
- Penetration test
- Four-foot free drop

Table 2 summarizes information about execution of the tests.

Table 2: Normal Transport Conditions Tests (10 CFR 71.71)

	Compression Test	Penetration Test	Four-foot Free Drop
Dates	10/9/97 to 10/10/97	10/13/97	10/13/97
Location	Amersham Burlington, Mass.	Valley Tree Groveland, Mass.	Valley Tree Groveland, Mass.
Attempts	One each	Four attempts required for Specimen D	Two attempts each required for Specimens A and C
Setup Changes Required	None	None	Orientation for C modified for second attempt

Four attempts were required for the Penetration Test involving Specimen D because of movement in the boom and the size of the target on the package, a screw head on the rear end-plate. The fourth attempt resulted in a direct hit.

Specimens A and C required two attempts each in the four-foot free drop:

- Specimen A's surface temperature was above -40° C immediately after the first attempt. The package was -41.2° C after the second attempt.

- The first drop of Specimen C met the criteria of Test Plan #70. However, the impact compressed the shipping plug into the package rather than prying the plug away from the end plate. The Engineering, Regulatory Affairs and Quality Assurance representatives jointly decided to modify the package orientation for a second attempt. The new orientation aligned the center of gravity with a point between the shipping plug and the edge of the end plate as shown in Figure 2.

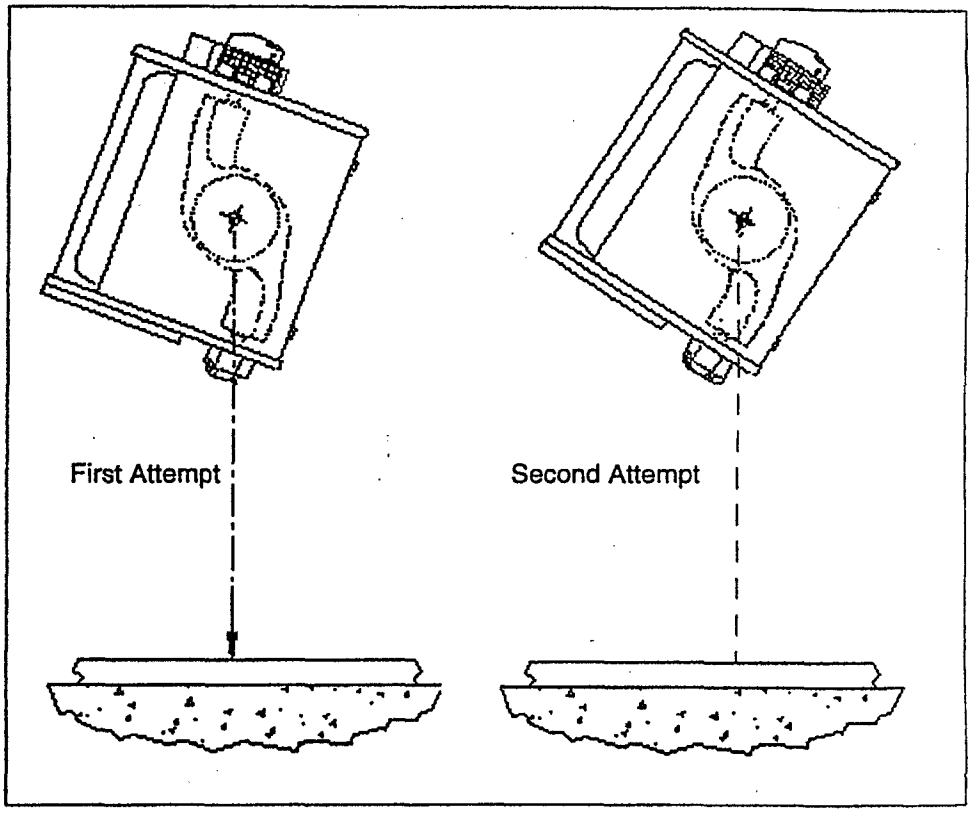

Figure 2: Specimen C Orientations for Four-foot Free Drop Attempts

3.2 Damage Inspections

Damage to the test units was recorded after each test, and the units were examined to determine whether testing should continue on the specimen and what changes should be made in the orientation specified for the next test.

The change in the four-foot free drop orientation for Specimen C is noted above. The test team determined that the new orientation would also be used in the 30-foot free drop.

The compression and penetration test caused no significant damage to any of the test units.

The four-foot drop test caused minor scratches and damage to all units, and some damage to the functionality of two of the units.

Specimen B: Although the selector ring could be rotated, the source could not be projected from the unit. The rear plate was removed under a controlled procedure which was videotaped. The removal revealed that the impact had deformed the end of the source tube and reduced the effective diameter of the tube enough to prevent movement of the source. The rear plate was re-installed and the end-plate screws were torqued to the same values measured prior to the removal.

Specimen C: After the four-foot drop, the front nut of the shipping plug could not be turned and the front end of the source tube was crimped, thus preventing the source from being projected beyond the front plate of the projector. The front end-plate could not be removed.

3.3 Test Assessment

Although the tests caused some damage to the test units, there was no compromise of the package integrity and the design met the safety requirements under Normal Transport Conditions as defined in 10 CFR 71.71.

The tests caused none of the system failures of interest listed in Test Plan #70. There was no damage to the structural integrity of the units. The end-plate and lock assembly screws remained intact. There was no movement of the source, and no damage to the shield.

As part of the test assessment, all four test specimens were profiled on October 12, 1997, in accordance with Amersham Work Instruction Q-09.

All readings were within the limits defined in 10 CFR 71.71.

The radiation profile worksheets are included in Appendix A. The maximum readings for each specimen are shown in Table 3. These readings are corrected for maximum capacity.

Table 3: Maximum Readings from First Intermediate Test Inspection

	Specimen A	Specimen B	Specimen C	Specimen D
At Package Surface	193.2 mR/hr	142.9 mR/hr	194.9 mR/hr	149.2 mR/hr
At One Meter	1.59 mR/hr	1.61 mR/hr	1.61 mR/hr	1.59 mR/hr

3.4 Conclusions

Based on the first three tests of Test Plan #70, the team concluded that:

- Model 660 Series projectors meet the requirements of 10 CFR 71.71
- All four specimens should undergo the final three tests in the plan.
- The modified orientation for Specimen C four-foot drop should be used in the 30-foot drop for the unit.

Section 4 Hypothetical Accident Conditions

The four TP70 test units underwent Hypothetical Accident Conditions tests in October 1997. Specimens A, B and C did not sustain damage that compromised the transport integrity of the package. The 30-foot free drop and puncture tests caused the failure of the carbon steel end-plate screws on Specimen D, which in turn led to oxidation of the shield during the thermal test. Engineering analysis indicates that stainless steel screws would prevent such a failure. The use of stainless steel end-plate screws is being tested under Amersham Test Plan #73 and Test Plan #74.

With the exception of the carbon steel end-plate screws, the Model 660 Series projectors comply with the requirements of 10 CFR 71.73 and with the comparable IAEA Safety Series 6 provisions. This section describes the execution of the tests, the results and the assessments made by representatives from Engineering, Regulatory Affairs and Quality Assurance.

4.1 Test Execution

Three Hypothetical Accidents tests were conducted to meet the requirements of 10 CFR 71.73 and Test Plan #70:

- 30-foot free drop
- Puncture test
- Thermal test

The tests were conducted in accordance with Test Plan #70. Table 2 summarizes information about execution of the tests.

Table 4: Hypothetical Accidents Tests (10 CFR 71.73)

	30-foot Free Drop	Puncture Test	Thermal
Dates	10/14/97	10/14/97	10/22/97
Location	Valley Tree Groveland, Mass.	Valley Tree Groveland, Mass.	Manufacturing Sciences Oak Ridge, Tenn.
Attempts	One per specimen	One per specimen	For Specimens A, B and D, one each C was not burned
Setup Changes Required	C orientation changed as in four foot drop	C orientation changed as in four foot drop D orientation inverted	Target oven temperature 850 C°

The following assessments and subsequent adjustments were made for the execution of the tests:

- The 30-foot free drop and puncture test for Specimen C used the adjusted package orientation selected for the second attempt of the four-drop (see page 7).
- For the puncture test, the Specimen D orientation was inverted to impact the top edge of the front end plate rather than the bottom edge of the rear plate (Figure 3). The change was made to further the damage to the rear plate.

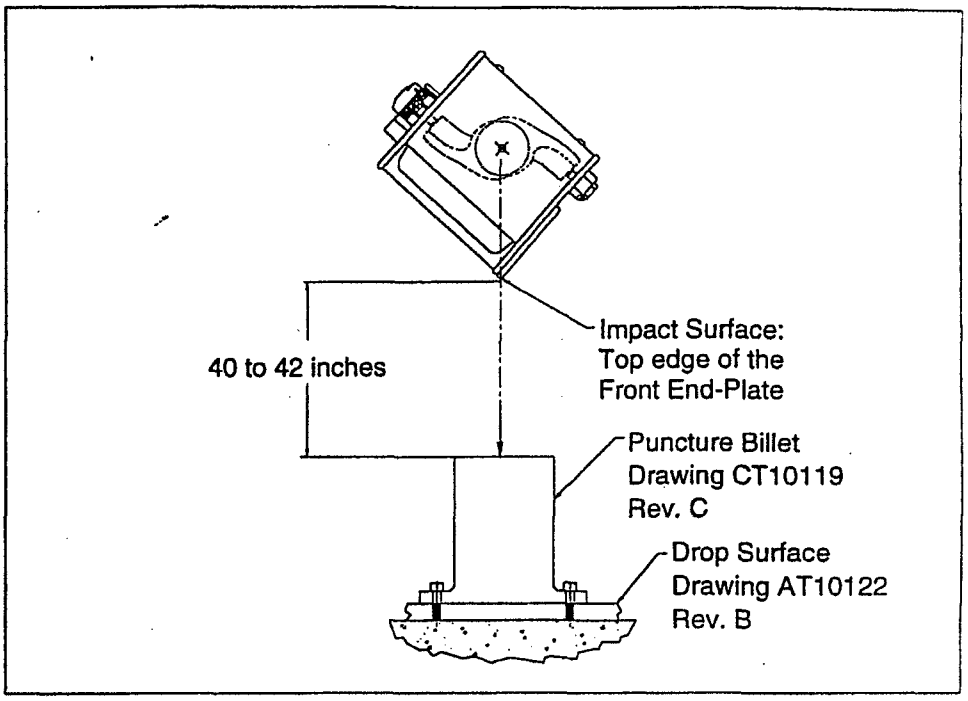

Figure 3: Revised Orientation for Specimen D Puncture Test

- Specimen C did not undergo the thermal test because the test would not have caused the failure of interest, that is, movement of the shield. The shield was held to the plate by the compressed shipping plug (see page 7). In addition, Specimens A and B, which were more vulnerable than C because of gaps that exposed the foam, did not sustain additional damage during their thermal tests. Specimen C would not sustain more damage than A or B.
- The target oven temperature for the thermal test was changed to 850 C° as the oven could not reach target of 900 C°.

4.2 Damage Inspections

Despite sustaining damage which affected the functionality of the units, Specimens A, B, and C maintained their structural integrity throughout the three tests, that is, the source remained in the secured and shielded position and the end-plate screws held. The three units had satisfactory profiles.

Specimen A: Boroscopy and radiography of the unit after the puncture test revealed damage to both ends of the shield making the unit inoperative. However, the source remained secured and shielded within the unit. There was no exposure of the source as a result of the thermal test.

Specimen B: The 30-foot drop and the puncture test cause additional damage to the lock assembly, but the lock assembly screws, which were the target of this specimen, held. The tests also caused some end-plate deformation. There was no exposure of the source as a result of the thermal test.

Specimen C: The test object for Specimen C was removal of the shipping plug. The multiple impacts on the plug damaged the front nut and crimped the front end of the tube making the unit inoperative. There was also denting and crumpling of the front plate and the shell. But the shipping plug held and the shield remained secured and enclosed within the unit. Specimen C did not undergo the thermal test.

Specimen D: The 30-foot free drop caused the loss of the two upper screws on the rear end-plate of Specimen D. Loss of these screws allowed the rear plate to open during the thermal test when the aluminum handle melted. The top of the plate pivoted from the unit allowing the depleted uranium shield to become partly exposed to the heating elements once the foam had burned off. The unit took four days to cool to room temperature, during which time the shield oxidized significantly.

4.3 Test Assessment

Appendix A includes the worksheets for the radiation profiles taken as part of the final test inspection. Table 5 shows the maximum radiation measured in these profiles.The readings have been corrected for maximum capacity

Table 5: Maximum Readings from Final Test Inspection

	Specimen A	Specimen B	Specimen C	Specimen D
At Package Surface	2,382.9 mR/hr	1,362 mR/hr	329.4 mR/hr	Not profiled
At One Meter	27.5 mR/hr	8.2 mR/hr	2.93 mR/hr	Not profiled

Based on radiation profiles and the maintenance of their structural integrity throughout the tests, Specimens A, B and C meet the criteria of 10 CFR 71.73.

Radiographs of Specimen D showed that there was significant loss of shielding, resulting in the ear of the shield being completely exposed at the back of the unit. This exposure provided a straight path for the radiation and subsequent failure in meeting the 1 R/hr at one meter criterion. There was no need for a radiation profile because of the lack of uranium shielding relative to the source position.

Engineering analysis indicates that stainless steel screws would prevent such a failure. The use of stainless steel end-plate screws is being tested under Amersham Test Plan #73 and Test Plan #74.

4.4 Conclusions

Based on the testing performed under Test Plan #70, the team concluded that:

- The Model 660 Series meets the Normal Conditions of Transport criteria of 10 CFR 71.71.
- With the exception of the end-plate screws, the design of the Model 660 Series meets that requirements of 10 CFR 71 and comparable IAEA transport safety criteria.
- Model 660 Series projectors with stainless steel end-plate screws should be tested to evaluate these fasteners.

Appendix A: Radiation Profile Worksheets

SENTINEL

SHIELDING PROFILE AND INSPECTION FORM

TPTO Specimen "A"

Model: B660 Serial Number: B3582 Radionuclide: Ir-192 Max.Capacity: 140 Ci

Shield Data

Shield Heat#: _____ Mass of Shield: _____ Lbs. Lot #: _____

Initial Profile

Reference 66 Ons Profile Form

Source Model: _____ Source SN: _____ Activity: _____ Ci

Survey Inst.: _____ SN: _____ Date Cal.: _____ Date Due: _____

Surface	Observed Intensity mR/hr	Surface Correction Factor		Adjusted Intensity mR/hr
Top			Capacity Correction Factor: _____	
Right				
Front				
Left				
Rear				
Bottom				

Inspector: _____ Date: _____ NCR #: _____

Final Profile

Source Model: 424-9 Source SN: C4215 Activity: 122.7 Ci Mass of Device: _____ Lbs.

Survey Inst.: AN/PDR27T SN: SM392401 Date Cal.: 18 March 97 Date Due: 18 March 98

Surface	Observed Intensity mR/hr: At Surface	Surface Corr. Factor	At One Meter		Adjusted Intensity mR/hr: At Surface	At One Meter
Top	95	1.16	.5	Capacity Correction Factor: 1.14	125.6	.57
Right	115	1.28	.5		167.8	.57
Front	90	1.13	1.0		115.9	1.14
Left	65	1.28	.4		94.8	.45
Rear	Center of Cap 150	1.13	1.4		193.2	1.59
Bottom	85	1.19	.6		115.3	.68

Inspector: [signature] Date: 12 Oct 97 NCR #: _____

016 1/1

Comments: First intermediate profile. MR 12 Oct 97

Amersham QSA

SENTINEL

SHIELDING PROFILE AND INSPECTION FORM

TP70 Specimen "B"

Model: B660 Serial Number: B3583 Radionuclide: Ir-192 Max.Capacity: 140 Ci

Shield Data

Shield Heat#: _____ Mass of Shield: _____ Lbs. Lot #: _____

Initial Profile

Source Model: _____ Source SN: _____ Activity: _____ Ci

Survey Inst.: _____ SN: _____ Date Cal.: _____ Date Due: _____

Surface	Observed Intensity mR/hr	Surface Correction Factor		Adjusted Intensity mR/hr
Top			Capacity Correction Factor:	
Right				
Front				
Left				
Rear				
Bottom				

Reference 6602 Profile Form

Inspector: _____ Date: _____ NCR #: _____

Final Profile

Source Model: 424-9 Source SN: C4215 Activity: 121.6 Ci Mass of Device: _____ Lbs.

Survey Inst.: AN/PDR27T SN: SM392401 Date Cal.: 18 March 97 Date Due: 18 March 98

Surface	Observed Intensity mR/hr: At Surface	Surface Corr. Factor	At One Meter		Adjusted Intensity mR/hr: At Surface	At One Meter
Top	65	1.16	.5	Capacity Correction Factor: 1.15	86.7	.57
Right	85	1.28	.5		125.1	.57
Front	100	1.13	1.3		129.9	1.49
Left	80	1.28	.5		117.7	.57
Rear	110	1.13	1.4		142.9	1.61
Bottom	100	1.19	.7		136.8	.80

Inspector: Michael R Byrd Date: 13 Oct 97 NCR #: N/A

QI6-1/1

Comments: One Meter Rule Used: Fairgate #20-310 Metal Ruler 13 Oct 97 MRB

Amersham QSA

SENTINEL

SHIELDING PROFILE AND INSPECTION FORM

TPTO Specimen C

Model: B660 Serial Number: B3584 Radionuclide: Ir 192 Max.Capacity: 140 Ci

Shield Data

Shield Heat#: _____ Mass of Shield: _____ Lbs. Lot #: _____

Initial Profile

Source Model: _____ Source SN: _____ Activity: _____ Ci

Survey Inst.: _____ SN: _____ Date Cal.: _____ Date Due: _____

Surface	Observed Intensity mR/hr	Surface Correction Factor		Adjusted Intensity mR/hr
Top			Capacity Correction Factor: _____	
Right				
Front				
Left				
Rear				
Bottom				

Refuse 660 Profile Form

Inspector: _____ Date: _____ NCR #: _____

Final Profile

Source Model: 424-9 Source SN: C4215 Activity: 121.6 Ci Mass of Device: _____ Lbs.

Survey Inst.: AN/PDR27T SN: SM392401 Date Cal.: 18 March 97 Date Due: 18 March 98

Surface	Observed Intensity mR/hr: At Surface	Surface Corr. Factor	At One Meter		Adjusted Intensity mR/hr: At Surface	At One Meter
Top	110	1.16	.7	Capacity Correction Factor: 1.15	146.7	.80
Right	105	1.28	.5		154.5	.57
Front	90	1.13	1.0		103.5	1.15
Left	130	1.28	.5		191.3	.57
Rear	150	1.13	1.4		194.9	1.61
Bottom	65	1.19	.5		88.9	.57

Inspector: Michael A. Bryant Date: 13 Oct 97 NCR #: N/A

Q16-1/1

Comments: One Meter Ruler: Fairgate # 20-310 Metal Ruler

Amersham QSA

SENTINEL

SHIELDING PROFILE AND INSPECTION FORM

TP70 Specimen "D"

Model: B660 Serial Number: B3585 Radionuclide: Ir-192 Max.Capacity: 140 Ci

Shield Data

Shield Heat#: _____ Mass of Shield: _____ Lbs. Lot #: _____

Initial Profile

Source Model: _____ Source SN: _____ Activity: _____ Ci

Survey Inst.: _____ SN: _____ Date Cal.: _____ Date Due: _____

Surface	Observed Intensity mR/hr	Surface Correction Factor		Adjusted Intensity mR/hr
Top			Capacity Correction Factor: _____	
Right				
Front				
Left				
Rear				
Bottom				

Reference 6600C Profile Form

Inspector: _____ Date: _____ NCR #: _____

Final Profile

Source Model: 424-9 Source SN: C4215 Activity: 122.7 Ci Mass of Device: _____ Lbs.

Survey Inst.: AN/PDR27T SN: SM392401 Date Cal.: 18 March 97 Date Due: 18 March 98

Surface	Observed Intensity mR/hr: At Surface	Surface Corr. Factor	At One Meter		Adjusted Intensity mR/hr: At Surface	At One Meter
Top	60	1.16	.3	Capacity Correction Factor: 1.14	79.3	.57
Right	85	1.28	.5		124.0	.34
Front	95	1.13	1.2		122.3	1.36
Left	60	1.28	.4		87.5	.45
Rear	110	1.13	1.4		141.7	1.59
Bottom	110	1.19	.8		149.2	.91

Inspector: Michael B. Bangs Date: 12 Oct 97 NCR #: _____

Q16 1/1

Comments: Michael B. Bangs 12 Oct 97 First intermediate profile. MBB 12 Oct 97

Amersham QSA

SENTINEL

	TEST PLAN NO. 70
TEST PLAN COVER SHEET	
TEST TITLE: MODEL 660 TYPE B TRANSPORT TESTS	
PRODUCT MODEL: MODEL 660 SERIES PROJECTOR	
ORIGINATED BY: S. Gravi	DATE: 18 AUG 1997
TEST PLAN REVIEW	
ENGINEERING APPROVAL:	DATE: 18 Aug 97
QUALITY ASSURANCE APPROVAL: KN Aff	DATE: 18 Aug 97
REGULATORY AFFAIRS APPROVAL:	DATE: 18 Aug 97
COMMENTS:	
TEST RESULTS REVIEW	
ENGINEERING APPROVAL:	DATE:
QUALITY ASSURANCE APPROVAL:	DATE:
REGULATORY AFFAIRS APPROVAL:	DATE:

Amersham QSA

PAC TEC
Packaging Technology, Inc.

4507-D Pacific Highway East
Tacoma, Washington 98424-2633
☎ (253) 922-1450 (253) 922-1445

August 18, 1997

Document No. AMERglc2.doc
File: 97012

Ms. Cathleen Roughan
Regulatory Affairs and Safety Manager
Amersham Corporation
40 North Avenue
Burlington, MA 01803

SUBJECT: Review of Amersham Test Plan #70, dated 8/18/97

Reference: Letter, Cathleen Roughan, Amersham Corporation, to Gary Clark, Packaging Technology, Inc., dated June 16, 1997.

Dear Ms. Roughan:

In accordance with the referenced letter, Packaging Technology has reviewed the subject test plan for the Model 660 package. Based on our independent review, we have determined that the test plan provides the required details to ensure that packaging testing performed in accordance with this test plan will comply with the requirements of Title 10, Code of Federal Regulations, Part 71 (10 CFR 71).

Very Truly Yours,

Packaging Technology, Inc.

Gary L. Clark

Gary L. Clark, P.E.
Vice President

Reviewed by: K Mattey 19 Aug 97

Contents

List of Figures and Tables iv

Amersham Test Plan #70 1

1.0 Transport Package Overview 1

2.0 Purpose 2

3.0 System Failures of Interest 3

3.1 Shield Movement or Fracture 3

3.2 Lock Assembly Screws 3

3.3 Shipping Plug and Source Tube Connection 3

3.4 End-Plate Attachment Screws 3

3.5 Other System Failures 4

4.0 Construction and Condition of Test Specimens 4

5.0 Material and Equipment List 6

6.0 Test Procedure 7

6.1 Test Specimen Preparation and Inspection 8

6.2 Compression Test (10 CFR 71.71(c)(9)) 8

6.2.1 Compression Test Setup 8

6.2.2 Compression Test Pass/Fail Criteria 10

6.3 Penetration Test (10 CFR 71.71(c)(10)) 11

6.3.1 Penetration Test Setup 11

6.3.2 Specimen A Orientation for Penetration Test 12

6.3.3 Specimen B Orientation for Penetration Test 13

6.3.4 Specimen C Orientation for Penetration Test 14

6.3.5 Specimen D Orientation for Penetration Test 15

6.3.6 Penetration Test Pass/Fail Criteria 16

6.4 Four-foot Free Drop Test (10 CFR 71.71(c)(7)) 17
6.4.1 Four-foot Free Drop Setup 17
6.4.2 Specimen A Orientation for Four-foot Free Drop 18
6.4.3 Specimen B Orientation for Four-foot Free Drop 19
6.4.4 Specimen C Orientation for Four-foot Free Drop 20
6.4.5 Specimen D Orientation for Four-foot Free Drop 21
6.4.6 Four-foot Free Drop Pass/Fail Criteria 22
6.5 First Intermediate Test Inspection 23
6.6 30-foot Free Drop Test (10 CFR 71.73(c)(1)) 24
6.6.1 30-foot Free Drop Setup 24
6.6.2 Specimen A Orientation for the 30-foot Free Drop 25
6.6.3 Specimen B Orientation for the 30-foot Free Drop 26
6.6.4 Specimen C Orientation for the 30-foot Free Drop 27
6.6.5 Specimen D Orientation for the 30-foot Free Drop 28
6.6.6 30-foot Free Drop Test Pass/Fail Criteria 28
6.7 Puncture Test (10 CFR 71.73(c)(3)) 29
6.7.1 Puncture Test Setup 29
6.7.2 Specimen A Orientation for the Puncture Test 30
6.7.3 Specimen B Orientation for the Puncture Test 31
6.7.4 Specimen C Orientation for the Puncture Test 32
6.7.5 Specimen D Orientation for the Puncture Test 33
6.7.6 Puncture Test Pass/Fail Criteria 34
6.8 Second Intermediate Test Inspection 34
6.9 Thermal Test (10 CFR 71.73(c)(4)) 35
6.9.1 Thermal Test 35
6.9.2 Orientation 35
6.9.3 Thermal Test Pass/Fail Criteria 36
6.10 Final Test Inspection 37

7.0 Worksheets 38

Equipment List 1: Compression Test 38

Checklist 1: Compression Test 38

Equipment List 2: Penetration Test Equipment 40

Checklist 2: Penetration Test 40

Equipment List 3: Four-foot Free Drop Equipment List 42

Checklist 3: Four-foot Free Drop 42

Equipment List 4: 30-foot Free Drop Equipment List 44

Checklist 4: 30-foot Free Drop 44

Equipment List 5: Puncture Test Equipment 46

Checklist 5: Puncture Test 46

Equipment List 6: Thermal Test Equipment 48

Checklist 6: Thermal Test 48

Appendix A Drawings

List of Figures and Tables

Figure 1: Side View of a Model 660 1
Table 1: Model 660 Series Variations 5
Figure 2: Placement of the Specimen for Compression Test 9
Figure 3: Specimen A Orientation for Penetration Test 12
Figure 4: Specimen B Orientation for Penetration Test 13
Figure 5: Specimen C Orientation for Penetration Test 14
Figure 6: Specimen D Orientation for Penetration Test 15
Figure 7: Specimen A Orientation for Four-foot Drop Test 18
Figure 8: Specimen B Positioning for Four-foot Free Drop 19
Figure 9: Specimen C Positioning for Four-Foot Drop 20
Figure 10: Specimen D Positioning for Four-foot Drop 21
Figure 11: Orientation for Specimen A for 30-foot Free Drop 25
Figure 12: Orientation for Specimen B for 30-foot Drop 26
Figure 13: Orientation for Specimen C for 30-foot Free Drop 27
Figure 14: Orientation for Specimen D for 30-foot Free Drop 28
Figure 15: Specimen A Orientation for the Puncture Test 30
Figure 16: Specimen B Orientation for the Puncture Test 31
Figure 17: Specimen C Orientation for the Puncture Test 32
Figure 18: Specimen D Orientation for the Puncture Test 33

Amersham Test Plan #70

This document describes the package design test plan for Sentinel Model 660 Series projectors to meet NRC requirements for Type B(U) packages (10 CFR 71.71 and 10 CFR 71.73). The test plan also covers the criteria stated in IAEA, Safety Series 6 (1985, as amended 1990).

The Model 660 Series includes the following models: 660, 660A, 660B, 660E, 660AE, and 660BE. Reference Certificate of Compliance 9033.

This document outlines the testing scenario, justifies the package orientations for the different test specimens, and provides test worksheets to record key steps in the testing sequence.

1.0 Transport Package Overview

The Model 660 Series projector consists of a source tube enclosed in a depleted-uranium shield, an end plate with a lock assembly, a second end plate with a storage plug assembly, four steel connecting rods, a sheet metal shell and foam packing material (Figure 1).

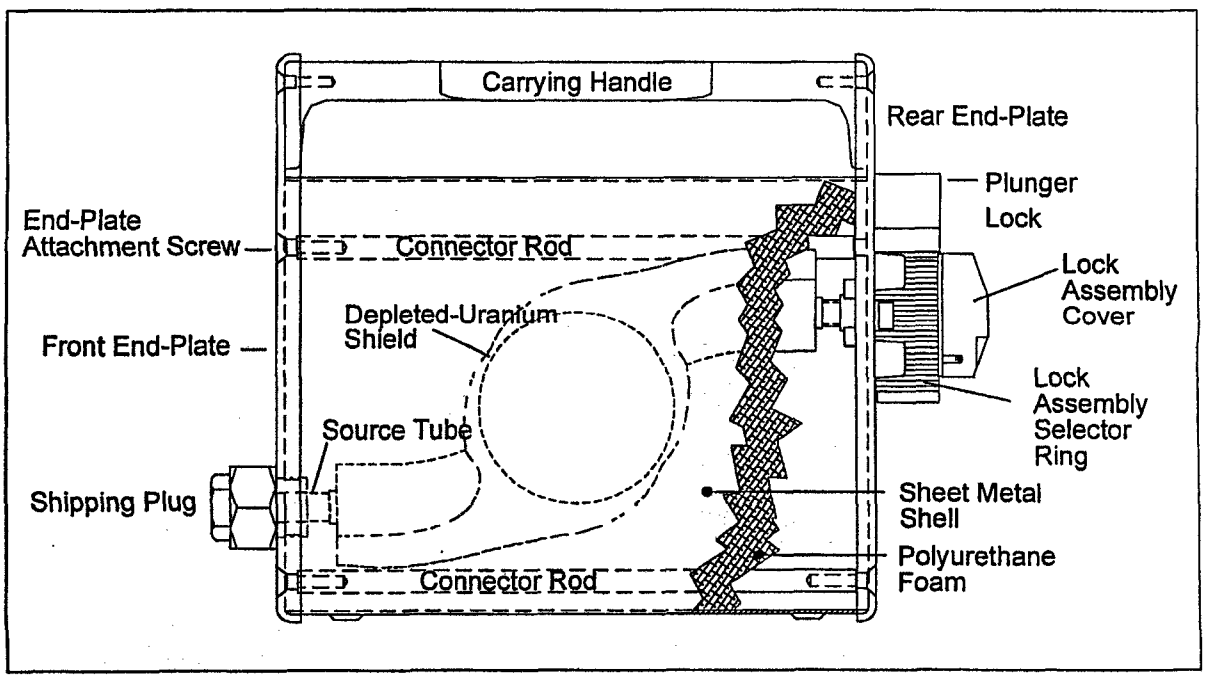

Figure 1: Side View of a Model 660

The shield consists of a 1/2-inch outside diameter source tube with its mid-section set in depleted uranium. One end of the source tube is inserted into a 1/2-inch deep hole of the lock assembly at the rear end-plate. The other end of the shield's source tube is inserted into another 1/2-inch deep hole of the shipping plug at the front end-plate. Both 1/2-inch deep holes allow enough radial clearance for a slip fitting attachment. There is approximately 1/8-inch axial clearance at the front end for assembly.

The source is contained in a special-form, encapsulated capsule assembly which is attached to the source wire assembly. This source wire assembly is secured in the package by the lock assembly. The lock assembly, in turn, is attached to the rear end-plate by four #10-32 U.N.C. stainless steel screws. There are two versions of the lock assembly used on the Model 660 series projectors. The size, material and location of the end-plate attachment screws are identical on both versions.

The shield, end plates and the sheet metal shell are connected by four 3/8-inch thick steel rods which are threaded at each end to accept 1/4-inch screws securing the end plates to the rods.

A polyurethane foam is used to fill the space around the shield and fill void within the sheet metal shell. The foam acts as an impact absorber.

The depleted-uranium shield provides the primary radiation protection for the Model 660 Series projector. The shield accomplishes this by limiting the transmission of gamma rays to a dose level at or below 200 mR/hr at the package surface and limiting the dose level at or below 10 mR/hr at one meter from the surface of the package. A fracture of the shield could compromise this protection.

The location of the source relative to its stored position in the shield is also an important safety element. A large displacement of the source relative to its stored position could elevate the dose at the surface of the package above regulatory limits.

There are two possible scenarios to displace the source relative to its stored position:

- The shield could move away from the source if the source tubes were bent or fractured during testing.
- The source could move away from the shield if the lock assembly became loose or was removed from the end plate or if the end plates themselves became loose or were removed during testing.

The tests in this plan focus on damaging those components of the package which could cause the displacement of the source relative to its stored position within the shield and which affect the integrity of the shield itself.

2.0 Purpose

This purpose of this plan, which was developed in accordance with Amersham SOP-E005, is to ensure the Model 660 Series projectors meet the Type B transport package requirements of 10 CFR 71.

The series includes these models: 660, 660A, 660B, 660E, 660AE, and 660BE. Refer to Appendix A for descriptive drawings of these models.

The Normal Conditions of Transport tests (10 CFR 71.71) to be performed are the compression test, penetration test and four-foot free drop test.

The water spray preconditioning of the package is not performed as the Model 660 projectors are constructed of waterproof materials throughout. The water spray would not contribute to any degradation in structural integrity.

The Hypothetical Accident Tests (10 CFR 71.73) to be performed are the 30-foot free drop, puncture test, and thermal test.

The crush test (10 CFR 71.73(c)(2)) is not performed because the radioactive contents are special-form radioactive material.

The immersion test and all other conditions specified in 10 CFR 71 will be separately evaluated in accordance with Amersham Work Instruction WI-E08.

3.0 System Failures of Interest

The possible system failures which could occur during test conditions and affect package integrity:

3.1 Shield Movement or Fracture

Elevated dose levels and depleted uranium contamination may result if the shield were to move or break as a result of high shock loading.

3.2 Lock Assembly Screws

Elevated dose levels may result if the lock assembly with source assembly attached were to be removed or damaged as a result of high-impact loading.

Dispersal of special form contents is highly unlikely since the encapsulated source assembly meets the requirements of special form and is protected at the center of the shield.

3.3 Shipping Plug and Source Tube Connection

A direct impact on the shipping plug could deform the end plate in towards the shield. An impact could also damage the source tube connection allowing the shield to move.

3.4 End-Plate Attachment Screws

The loss of the rear end-plate would result in loss of the lock assembly as well and cause exposure of the source. The loss of the front plate may indicate that the loss of the rear plate is just as likely.

3.5 Other System Failures

Two other possible system failures were considered but rejected because damage to these components would not cause damage to safety-related components.

- **Plunger Lock:** The lock mount containing the plunger lock functions as a locking index plunger for the selector ring. It does not hold the source wire assembly. If it were to fail, the source would continue to be secured in the lock assembly. The selector ring can only be rotated during operation, that is, after removal of the shipping cap and depression of the anti-rotation lugs.
- **Carrying Handle**: The handle provides no safety features to the device. Its primary function is as a carrying or lifting feature.

4.0 Construction and Condition of Test Specimens

The attached test specimen drawing (Drawing TP70, Rev. A) specifies the Model 660 Series test specimen in its worst-case transport condition, that is, with lead added to the shield. This added shield weight provides the maximum mass of the device.

Except for the compression and thermal tests, the test temperature of the specimen must be below -40° C at the time of each test, a minimum temperature required by IAEA, Safety Series 6 (1985, as amended 1990). The low temperature represents the worst-case condition for the package because of the potential for brittle fracture of the shield and the end-plate attachment screws.

Four test specimens, built to Drawing TP70, Rev. A, and the Amersham Quality Assurance Program, are to be tested, one for each possible failure mode:

- Specimen A: Shield movement or fracture
- Specimen B: Failure of the lock assembly attachment screws
- Specimen C: Loss of the connection between the storage plug and the source tube
- Specimen D: Failure of the end-plate attachment screws

NOTE: *Because each test is designed to add to damage inflicted on a specific component or assembly in the preceding test, it is important that each specimen maintain its identity throughout the battery of tests and that the setup instructions specific to the specimen are strictly followed.*

The test packages will be Model 660B units constructed in accordance with Amersham Drawing D66010, Rev. C, modified per Drawing TP70, Rev. A.

Table 1 lists the difference between the test specimen and other 660 Series models.

Table 1: Model 660 Series Variations

Feature	Test Specimen per Drawing TP70, Rev. A	660 Series Models
Shell Material	Stainless steel	The Models 660, 660A, 660AE and 660E can have either a carbon steel shell or a stainless steel shell. All other models in the series use stainless steel.
Lock Assembly	Posilok™	The Model 660 and 660E use a non Posilok lock assembly. All other models feature the Posilok lock assembly.
Actuator Wires and Connectors	No actuator wires and connectors	Models 660AE, 660BE and 660E have wires and connectors attached to ends plates for automatic actuation. Models 660, 660A and 660B do not have actuator wire and connectors.
Shield Capacity	140 Curie	The following models have 120-Curie capacity shields: 660, 660A, 660AE and 660E. The following models have 140-Curie capacity shields: 660B and 660BE.
Body Width	Standard width (5 1/4 inches).	Some Model 660s and Model 660Es have a narrow-body design (4 3/4 inches wide). All other units use the standard width body (5 1/4 inches).
Source Tube Material	Titanium	Prior to 1980, the Models 660, 660A, 660AE and 660E were manufactured with zircaloy source tubes. All other units have titanium source tubes.
Use of Lead	Lead added to shield	Some Model 660 Series units in all models have lead added to the shield in an amount equal to or less than the amount used in the test specimen.

The differences listed in Table 1 do not affect the radiological safety of the projector for the following reasons:

- **Shell Materials:** The shell thickness is 1/16-inch for the carbon steel and stainless steel versions. The likelihood of a crack or brittle flaw increases with the thickness of the section and is a problem in sections greater than 1/8-inch. Additionally, the temperature for transition from ductile to brittle is lower for the thinner sections. The thicker carbon steel end plates will reach the ductile to brittle transition temperature long before the shell does. The end plates are structural members, while the shell is not structurally significant.
- **Lock Style:** Damage to the Posilok lock assembly used on the test specimen would represent damage to any Model 660 Series lock assembly, including the non Posilok style assemblies used on the Model 660 and the Model 660E.

The internal components of both lock assemblies are protected by the same lock assembly cover and practically the same selector ring. The cover and selector ring must be significantly damaged before an impact can disrupt the internal components' securement of the source. Because of the strength of the cover and the selector ring, damage to the source securement is more likely to occur from the failure of the lock assembly attachment screws. All models use the same type and size attachment screws in the same locations.

- **Actuator Wires and Connectors**: The additional parts used for automatic actuation provide no structural support.
- **Shield Capacity**: The lower-capacity shields are either lighter than or the same weight as the shield used on the Model 660B, making the 660B the worst case for shield failures of interest in these tests.
- **Body Width**: The end plates and shells of the narrow-body versions of the Model 660 and the Model 660E would provide smaller impact surfaces than the standard-width plates and shell used in the test specimen. The smaller impact surfaces would result in greater surface deformation and less deceleration on impact. As a result there would be less transfer of impact forces that could affect the integrity of the source securement.
- **Source Tube Material**: The Model 660 Series projectors have been manufactured with titanium source tubes exclusively since 1980. Because this represents our current manufacturing methods and because the majority of Model 660 Series units currently in use have titanium source tubes, the test specimens will be manufactured with titanium source tubes. Based on an evaluation of the damage caused by the tests, we will assess the implications for products fabricated with zircaloy.

  Note that although listed on the descriptive drawings, stainless steel source tubes have never been used in the fabrication of Model 660 Series units, nor do we intend to use them in future fabrication.
- **Lead Added**: The addition of lead to the shield creates a worst-case condition by increasing the weight of the shield.

5.0 Material and Equipment List

The test worksheets in Section 7.0 list the key materials and equipment specified in 10 CFR 71 and the necessary measurement instruments.

Additional materials and equipment may be used to facilitate the tests.

6.0 Test Procedure

Four units are tested in parallel with the same sequence but with the focus on the transport integrity of different components and assemblies for each sample, as described in Section 3.0.

The tests have the following sequence:

1. Test specimen preparation and inspection
2. Compression test (10 CFR 71.71(c)(9))
3. Penetration test (10 CFR 71.71(c)(10))
4. Four-foot free drop (10 CFR 71.71(c)(7))
5. First intermediate test inspection
6. 30-foot free drop (10 CFR 71.73(c)(1))
7. Puncture test (10 CFR 71.73(c)(3))
8. Second intermediate test inspection
9. Thermal test (10 CFR 71.73(c)(4))
10. Final test inspection

6.1 Test Specimen Preparation and Inspection

To prepare the test units:

1. Manufacture five standard production units with the changes indicated on Amersham Drawing TP70, Rev. A. The fifth unit is a spare.
2. Ensure that all fabrication and inspection records are documented in accordance with the Amersham Quality Assurance Program.

   The radiation profile should be performed and recorded in accordance with Amersham Work Instruction WI-Q05.
3. Install a dummy 424-9 source assembly.
4. Measure and record the location of the dummy source from the front end using the source location tool (Amersham Drawing BT10142, Rev. A).
5. Prepare the package for transport.

6.2 Compression Test (10 CFR 71.71(c)(9))

The first test is the compression test per 10 CFR 71.71(c)(9), in which the package is placed under a load of 280 to 290 pounds for at least 24 hours.

Use *Checklist 1: Compression Test* on page 38 to date and initial all action items and to record required data.

NOTE: *The worksheet identifies those steps which must be witnessed by Engineering, Regulatory Affairs and Quality Assurance.*

The following describes the orientation of the test specimen during the compression test and the pass/fail criteria.

6.2.1 Compression Test Setup

The same setup is used in the compression test for all test samples.

To prepare a specimen for the compression test:

1. Review the setup shown in Figure 2.
2. Place the specimen upright on a concrete surface with only the feet of the package touching the floor.

   The package is oriented in it normal transport position.
3. Place 280 to 290 pounds uniformly distributed onto the specimen as shown in Figure 2.

The weight is five times the package weight and greater than 2 lbf/in^2 multiplied by the vertically projected area (5.25" wide x 9.875" long x 2 lbf/in^2 = 104 lbf).

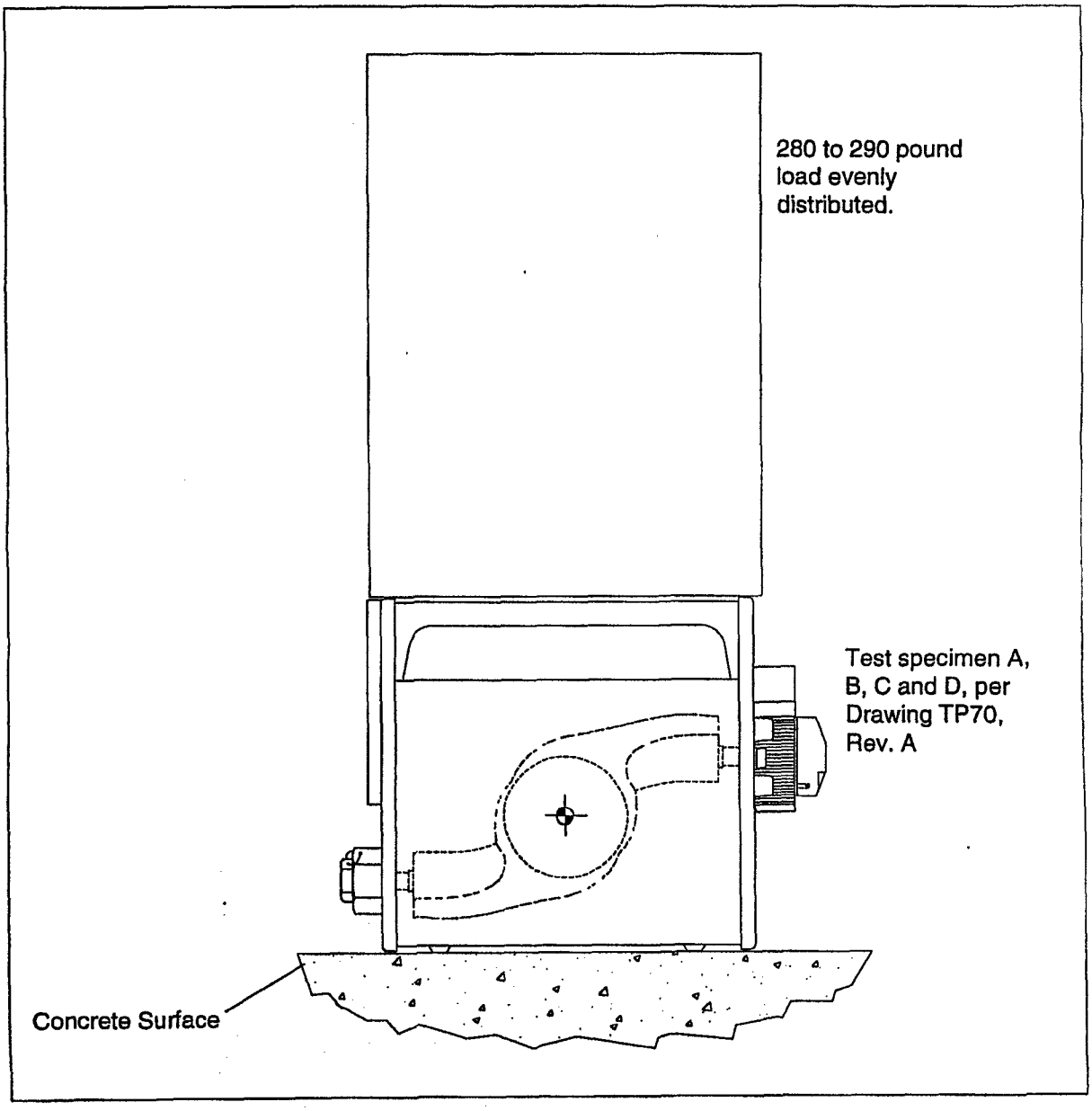

Figure 2: Placement of the Specimen for Compression Test

6.2.2 Compression Test Pass/Fail Criteria

The same pass/fail criteria are applied to all test specimens in the compression test:

- The specimen fails with the loss of either end plate.
- The loss of one end plate indicates the loss of the other is just as likely for this orientation.

NOTE: *If a test specimen meets any of the failure criteria, the Engineering, Regulatory Affairs and Quality Assurance team members should evaluate the specimen and jointly decide whether testing of that specimen is to continue.*

6.3 Penetration Test (10 CFR 71.71(c)(10))

The compression test is followed by the penetration test per 10 CFR 71.71(c)(10), in which a penetration bar is dropped from a height of at least 40 inches to impact a specified point on the package. The bar is dropped through free air.

Use *Checklist 2: Penetration Test* on page 40 to ensure that test sequence is followed. Date and initial all action items and record required data.

NOTE: *The worksheet identifies those steps which must be witnessed by Engineering, Regulatory Affairs and Quality Assurance.*

The following describes the orientation of each test specimen immediately before the bar is dropped and the pass/fail criteria for the test.

6.3.1 Penetration Test Setup

There is a specific orientation for each specimen so that the penetration bar is aimed at the component or assembly of interest.

NOTE: *Because each test is designed to add to damage inflicted on a specific component or assembly in the preceding test, it is important that each specimen maintain its identity throughout the battery of tests and that the setup instructions specific to the specimen are strictly followed.*

This test requires that the test specimen be at or below -40° C at the time of the penetration bar release. The worksheet calls for measuring and recording the specimen temperature before and after the test.

To set up a package for the penetration test:

1. Measure the specimen's internal and surface temperature to ensure that the package is at or below -40° C.
2. Place the specimen on the drop surface (Drawing AT10122, Rev. A) and position it according to the specimen-specific orientation described below.
3. Use steel shims to position the package, if necessary.
4. Position the penetration bar shown in Drawing BT10129, Rev. A, directly above the specified point of impact, and raise the bar 40 to 42 inches above the target.

6.3.2 Specimen A Orientation for Penetration Test

The penetration target for Specimen A is the hit marker on the left side of the package (when facing the lock assembly), as shown in Figure 3. There are two objectives for this orientation:

- Move the shield and thus disrupt the source tube connections at either end plate
- Fracture the shield

This setup was chosen because the depleted-uranium shield is closer to the exterior on the left side than it is in any other location.

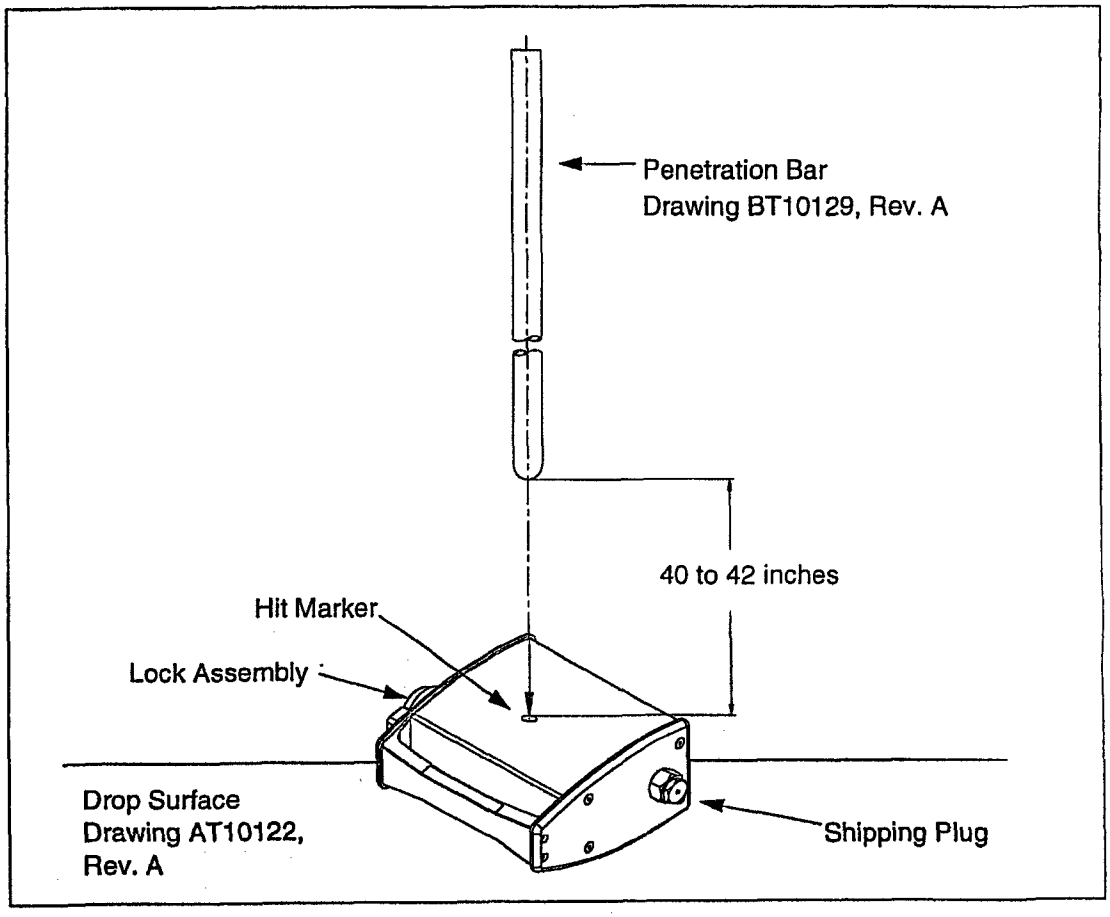

Figure 3: Specimen A Orientation for Penetration Test

6.3.3 Specimen B Orientation for Penetration Test

The setup for Specimen B (Figure 4) provides the greatest impact moment on the lock assembly with the penetration bar. The resulting damage could include loosening or shearing the lock assembly screws, disruption of the source tube-end plate connection at either end, and movement of the source. Note that the point of impact is the outer edge of the lock selector ring.

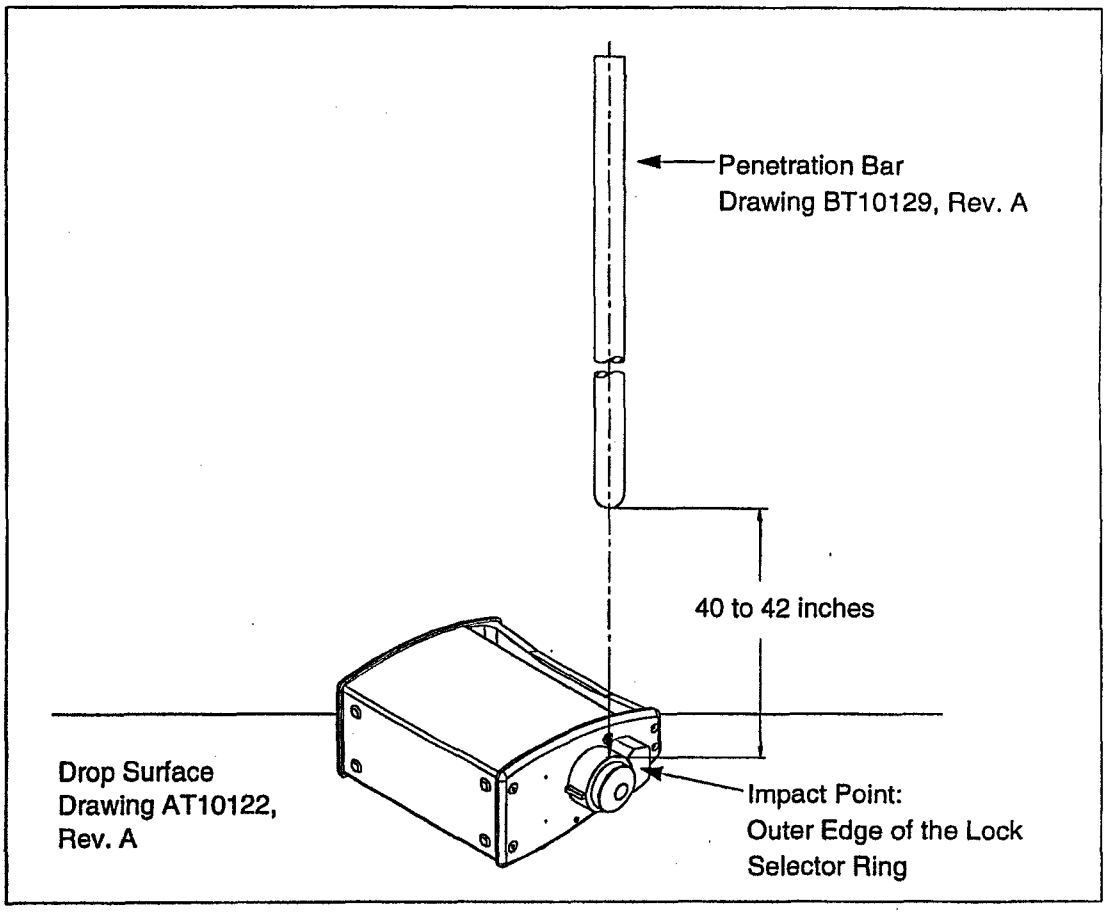

Figure 4: Specimen B Orientation for Penetration Test

Other orientations that were considered, but not included in this test include:

- **Normal Transport**: If the package were oriented in its normal transport position, the plunger lock-mount would interfere.
- **Inverted**: If the package were inverted, that is, positioned on its handle, the plunger lock-mount would restrict the lock assembly movement, reducing the likelihood of shearing the screws, disrupting the source tube-end plate connections and moving of the source.

6.3.4 Specimen C Orientation for Penetration Test

The Specimen C setup attacks the shipping plug in much the same way as Setup B attacks the lock assembly. This test causes an initial round of damage to the plug which is compounded by the two drop tests for the Specimen C.

The point of the penetration bar should impact a flat portion on the shipping plug fitting as close to the outer edge as possible (Figure 5).

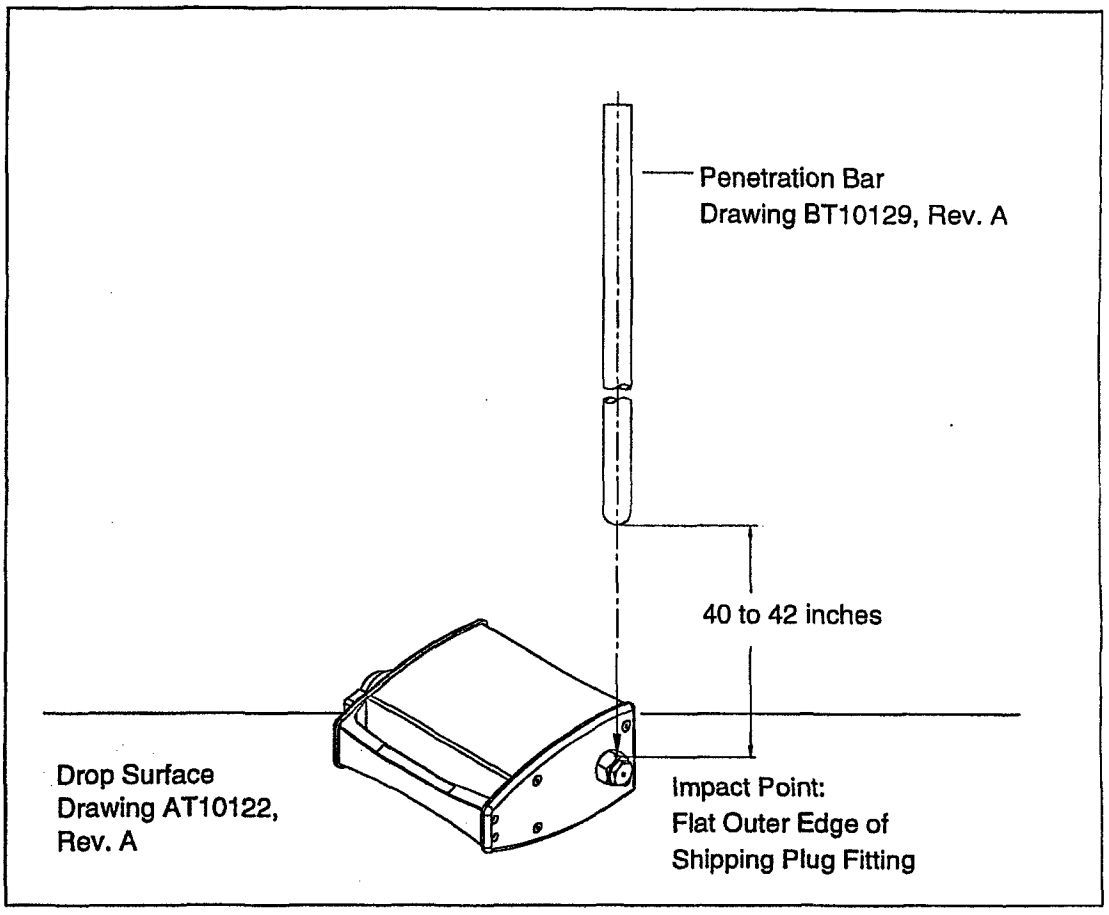

Figure 5: Specimen C Orientation for Penetration Test

6.3.5 Specimen D Orientation for Penetration Test

The object of the penetration test setup for Specimen D is to impact the end-plate attachment screw in the lower left corner of the rear end-plate (Figure 6). A hit marker indicates the target.

Damage that may result from the bar drop includes loosening or shearing of the end-plate screws.

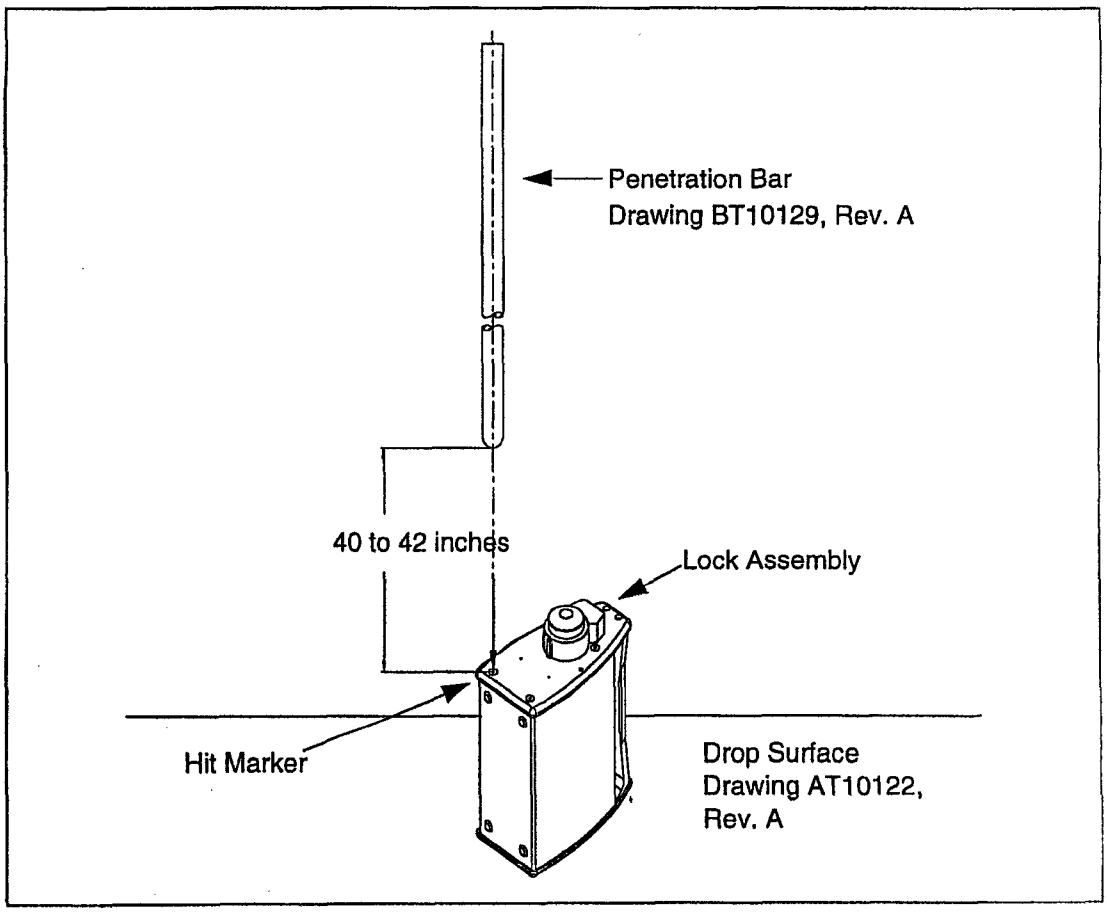

Figure 6: Specimen D Orientation for Penetration Test

6.3.6 Penetration Test Pass/Fail Criteria

The specimen fails if any of the following occurs:

- Any indication of exposure of depleted uranium
- The removal or failure of the lock assembly that secures the source assembly in place
- The loss of either end plate

NOTE: *If a test specimen meets any of the failure criteria, the Engineering, Regulatory Affairs and Quality Assurance team members should evaluate the specimen and jointly decide whether testing of the specimen is to continue.*

6.4 Four-foot Free Drop Test (10 CFR 71.71(c)(7))

The final Normal Transport Conditions test is the four-foot free drop as described in 10 CFR 71.71(c)(7). This drop compounds any damage caused in the first two tests. Upon completion of this step, you will perform the first intermediate test inspections.

Use *Checklist 3: Four-foot Free Drop* on page 42 to ensure that the test sequence is followed. Date and initial all action items, and record required data on the worksheet.

NOTE: *The worksheet identifies those steps which must be witnessed by Engineering, Regulatory Affairs and Quality Assurance.*

The following describes the orientation of the test specimens prior to the drop and the pass/fail criteria for the test.

6.4.1 Four-foot Free Drop Setup

In this test, the package is released from a height of four feet and lands on the steel drop surface specified in Drawing AT10122, Rev. A. There is a specific orientation for each specimen so that the package lands on the component or assembly of interest.

NOTE: *Because each test is designed to add to damage inflicted on a specific component or assembly in the preceding test, it is important that each specimen maintain its identity throughout the battery of tests and that the setup instructions specific to the specimen are strictly followed.*

This test requires that the test specimen be at or below -40° C at the time of the drop. Follow the Worksheet instructions for measuring and recording the specimen temperature before and after the drop.

To set up a package for the four-foot drop test:

1. Use the drop surface specified in Drawing AT10122, Rev A.
2. Measure the specimen's internal and surface temperature to ensure that the package is at or below -40° C.
3. Place the specimen on the drop surface and position it according to the specimen-specific orientation described below.
4. Raise the package so that the impact target is 4.0 to 4.5 feet above the drop surface.
5. Align the selected center of gravity marker as shown in the referenced drawing.

6.4.2 Specimen A Orientation for Four-foot Free Drop

The impact points are the bottom edges of the two end plates as shown in the Figure 7. Align the center of gravity marker on the sides of the packages with the middle of the drop surface.

This orientation attempts to break the connection between the source tube and the end plates, and move the shield away from the source. Each end plate provides a rigid structure which limits deformation and directs the shock load to the source tube connections of the shield. The momentum of the shield toward the bottom of the package may cause the end plates to separate from the shell.

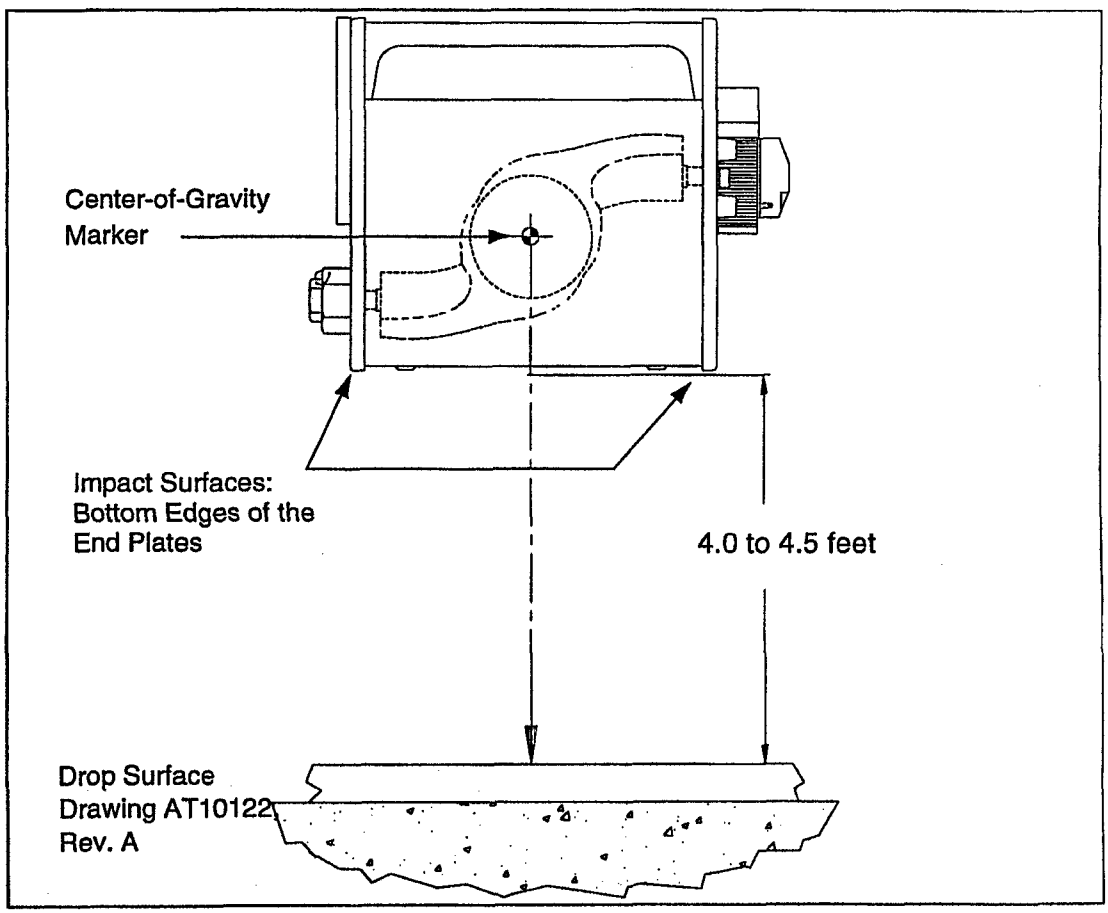

Figure 7: Specimen A Orientation for Four-foot Drop Test

As the bottom edges make contact with the drop surface, the plates rapidly decelerate while the downward momentum of the shield (the heaviest component in the package and the center of gravity) increases the likelihood of damaging the source tube-to-end plate connections. The shield may act as a wedge forcing the end plates apart. The downward momentum may also have the secondary effect of moving the source.

6.4.3 Specimen B Orientation for Four-foot Free Drop

The four-foot drop setup for Specimen B is shown in Figure 8. The object of the drop is to shear or loosen the lock assembly screws and damage the connection with the shield.

The impact point is the outer edge of the lock assembly cover. It is important to position test specimen B so that its center of gravity is directly above the lock assembly.

The impact will add to any damage to the lock assembly caused by the penetration bar in the second test.

This orientation directs the maximum obtainable shear force to the lock assembly attachment screws in an attempt to move the lock and the source. Other orientations for attacking the lock assembly would not benefit from the center of gravity aligned with the impact position and/or would be limited by interference from the plate edges.

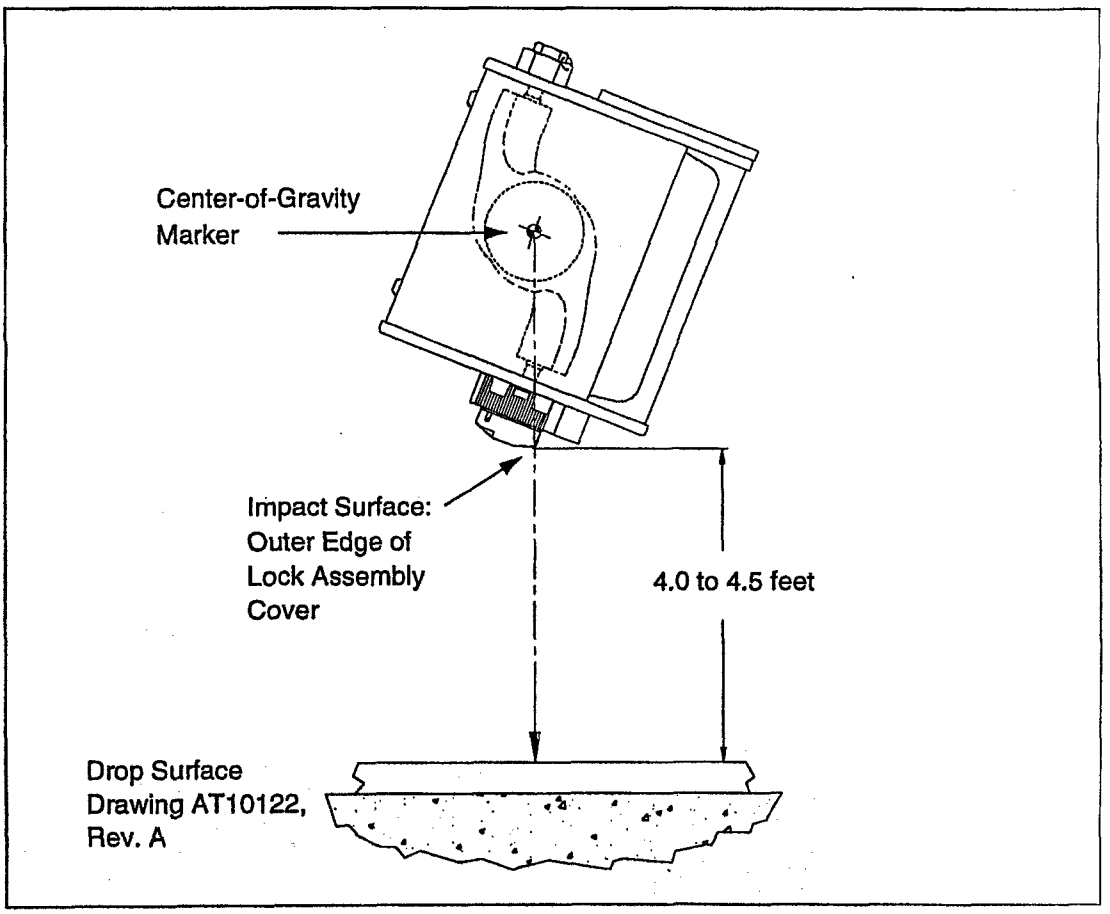

Figure 8: Specimen B Positioning for Four-foot Free Drop

6.4.4 Specimen C Orientation for Four-foot Free Drop

The setup for Specimen C is similar to the Specimen B orientation except that the point of impact is a flat outer edge on the shipping plug. The object in this drop is to disrupt the connection between the source tube and the shipping plug, which in turn could cause movement of the source. A secondary effect could be disruption of the connection between the source tube and the rear end-plate.

Figure 9 shows the Four-foot Drop setup for Specimen C. Again, the center of gravity is directly above the point of impact and there is no interference from the plate edges or other package components.

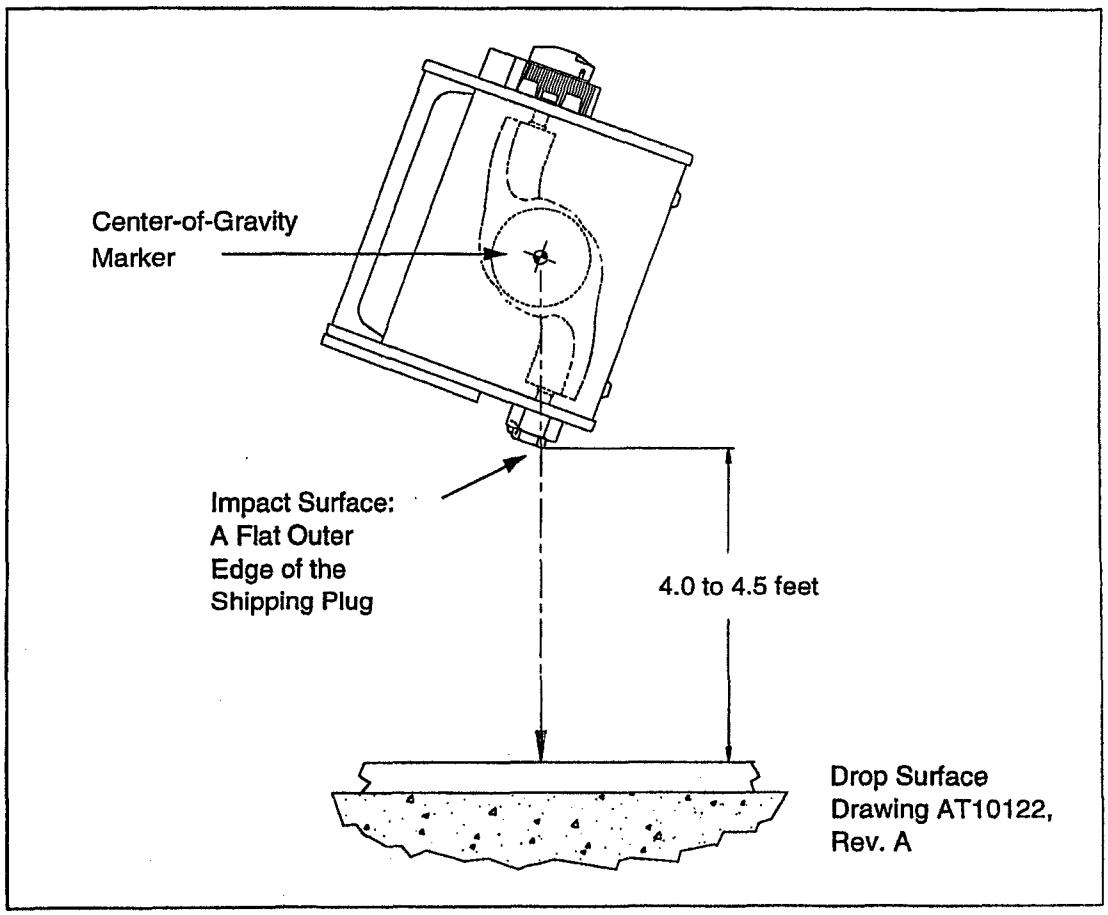

Figure 9: Specimen C Positioning for Four-Foot Drop

6.4.5 Specimen D Orientation for Four-foot Free Drop

The four-foot drop setup for Specimen D (Figure 10) targets the bottom edge of the rear end-plate. Here, the objective is to loosen or shear the end-plate screws which hold the plate to the steel connecting rods. The bottom edge of the plate provides the greatest surface area for a direct hit, and thus the most rapid deceleration. Other locations were rejected as follows:

- The top edge provides less than half the surface area of the bottom edge, and much of the load would be directed through the carrying handle.
- The curved side edges would only provide a point impact.
- The lock assembly and the shipping plug would interfere with a direct hit to the face of their respective end plates.
- Dropping the package on any corner would absorb the impact energy by deforming the end plate into the foam.

Make sure the center of gravity is directly over the point of impact.

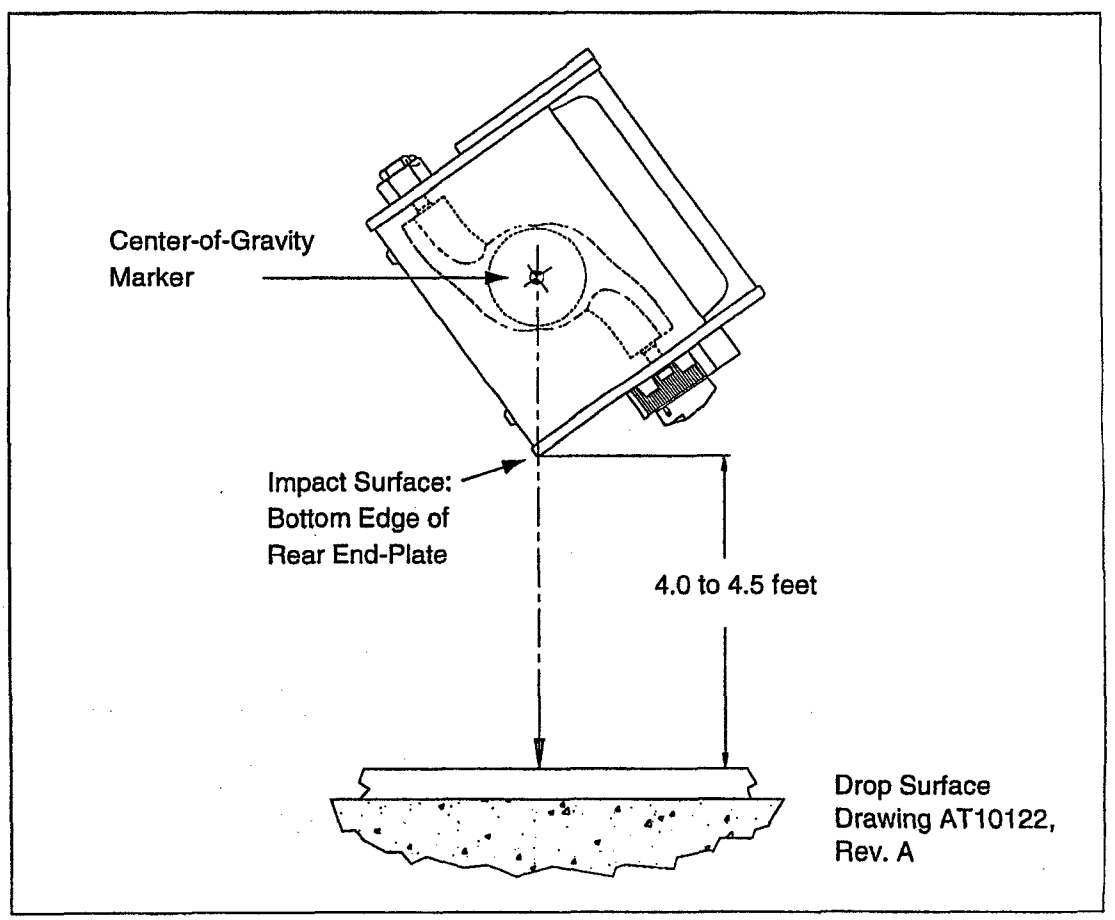

Figure 10: Specimen D Positioning for Four-foot Drop

6.4.6 Four-foot Free Drop Pass/Fail Criteria

The specimen fails if any of the following occurs:

- Any indication of exposure of depleted uranium
- The removal or failure of the lock assembly that secures the source assembly in place
- The loss of either end plate
- A significant increase in radiation levels
- Measured radiation at the surface greater than 200 mR/hr
- Measured radiation one meter from the surface greater than 10 mR/hr

NOTE: *If a test specimen meets on any of the failure criteria, the Engineering, Regulatory Affairs and Quality Assurance team members should evaluate the specimen and jointly decide whether testing of the specimen is to continue.*

6.5 First Intermediate Test Inspection

Perform an intermediate test inspection after the four-foot free drop test.

1. Measure and record any damage to the test specimen.
2. Measure and record the location of the source from the rear end-plate using the source location tool (Amersham Drawing BT10142, Rev. A).
3. Remove and assess the condition of the dummy source.
4. Reassemble the package using an active 424-9 source, making sure that the source wire position and the package configuration are the same as they were immediately after the four-foot free drop.
5. Measure and record a radiation profile of the test specimen in accordance with Amersham Work Instruction WI-Q09.
6. Assess the significance of any change in radiation at the surface or at one meter from the package.
7. Reassemble the package using the same dummy source used in the specimen during the first three tests.
8. Make sure that the source wire position and the package configuration are the same as they were immediately after the four-foot free drop.

6.6 30-foot Free Drop Test (10 CFR 71.73(c)(1))

The first Hypothetical Accidents Test is the 30-foot free drop as described in 10 CFR 71.73(c)(1). This drop compounds any damage caused in the three Normal Conditions Tests.

Use *Checklist 4: 30-foot Free Drop* on page 44 to ensure that the test sequence is followed. Date and initial all action items, and record required data on the worksheet.

NOTE: *The worksheet identifies those steps which must be witnessed by Engineering, Regulatory Affairs and Quality Assurance.*

Figure 11 through Figure 14 illustrate the orientations for the four test units, which are the same as those for the four-foot free drop except the package is raised 30 feet above the drop surface.

This test requires that the test specimen be at or below -40° C at the time of the drop. Follow the worksheet instructions for measuring and recording the specimen temperature before and after the drop.

6.6.1 30-foot Free Drop Setup

To set up a package for the 30-foot drop test:

1. Use the drop surface specified in Drawing AT10122, Rev A.
2. Measure the specimen's internal and surface temperature to ensure that the package is at or below -40° C.
3. Place the specimen on the drop surface and position it according to the specimen-specific orientation described below.
4. Raise the package so that the impact target is 30 to 32 feet above the drop surface.
5. Align the selected center-of-gravity marker as shown in the referenced drawing.

6.6.2 Specimen A Orientation for the 30-foot Free Drop

Figure 11 shows the package orientation for test specimen A.

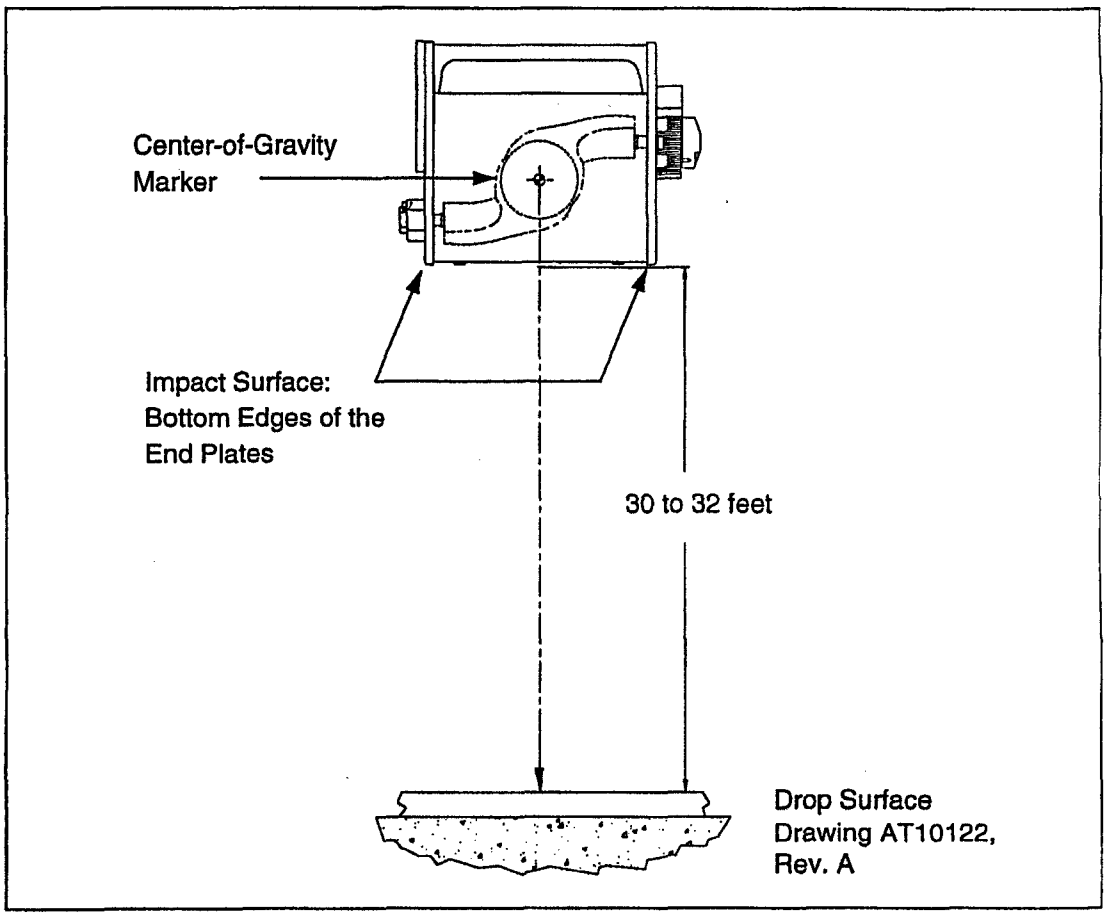

Figure 11: Orientation for Specimen A for 30-foot Free Drop

6.6.3 Specimen B Orientation for the 30-foot Free Drop

Figure 12 shows the package orientation for test specimen B.

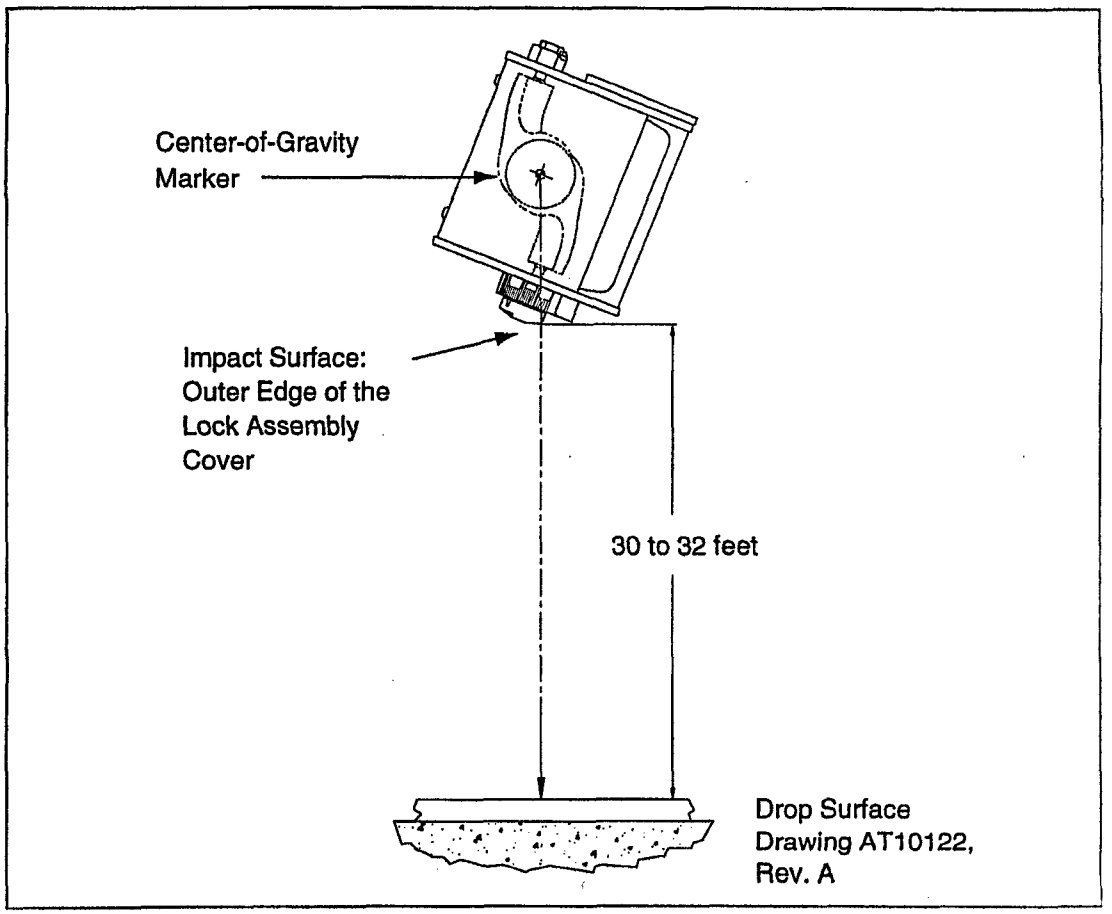

Figure 12: Orientation for Specimen B for 30-foot Drop

6.6.4 Specimen C Orientation for the 30-foot Free Drop

Figure 13 shows the package orientation for test specimen C.

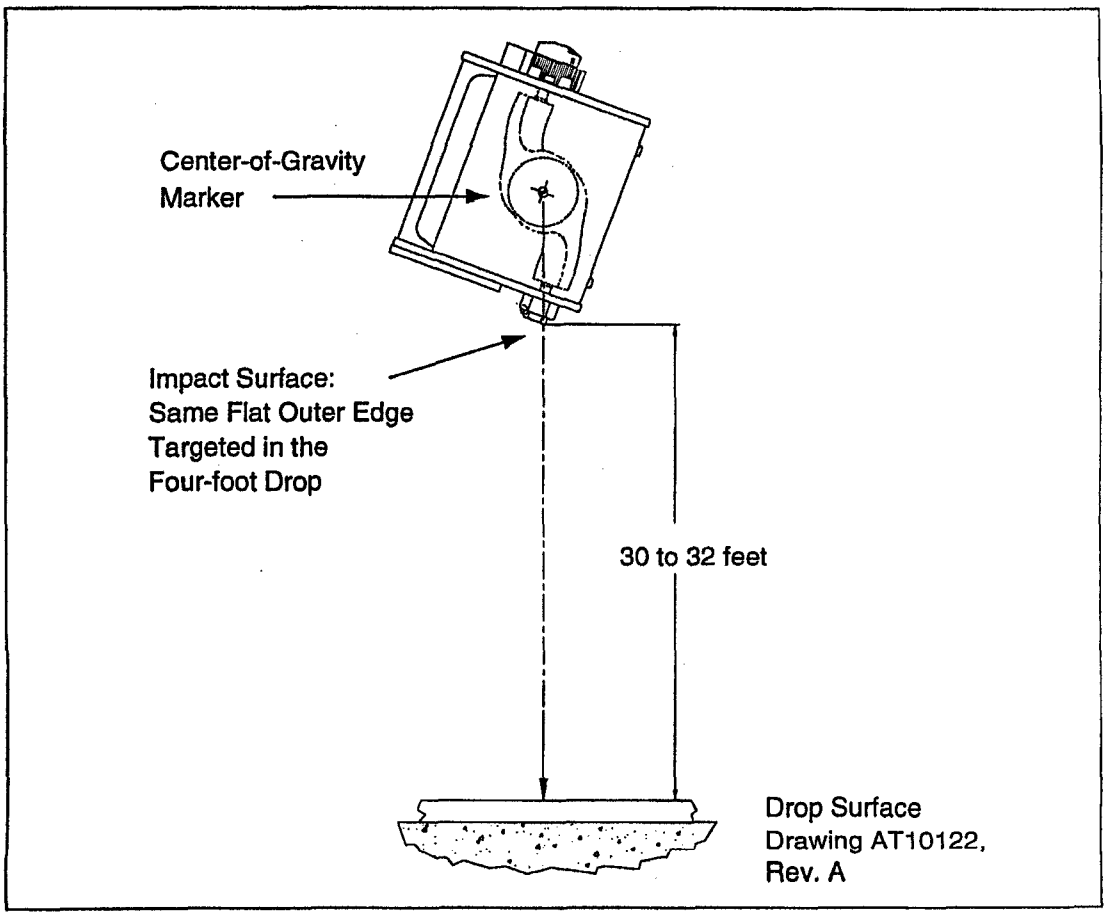

Figure 13: Orientation for Specimen C for 30-foot Free Drop

6.6.5 Specimen D Orientation for the 30-foot Free Drop

Figure 14 shows the package orientation for test specimen D.

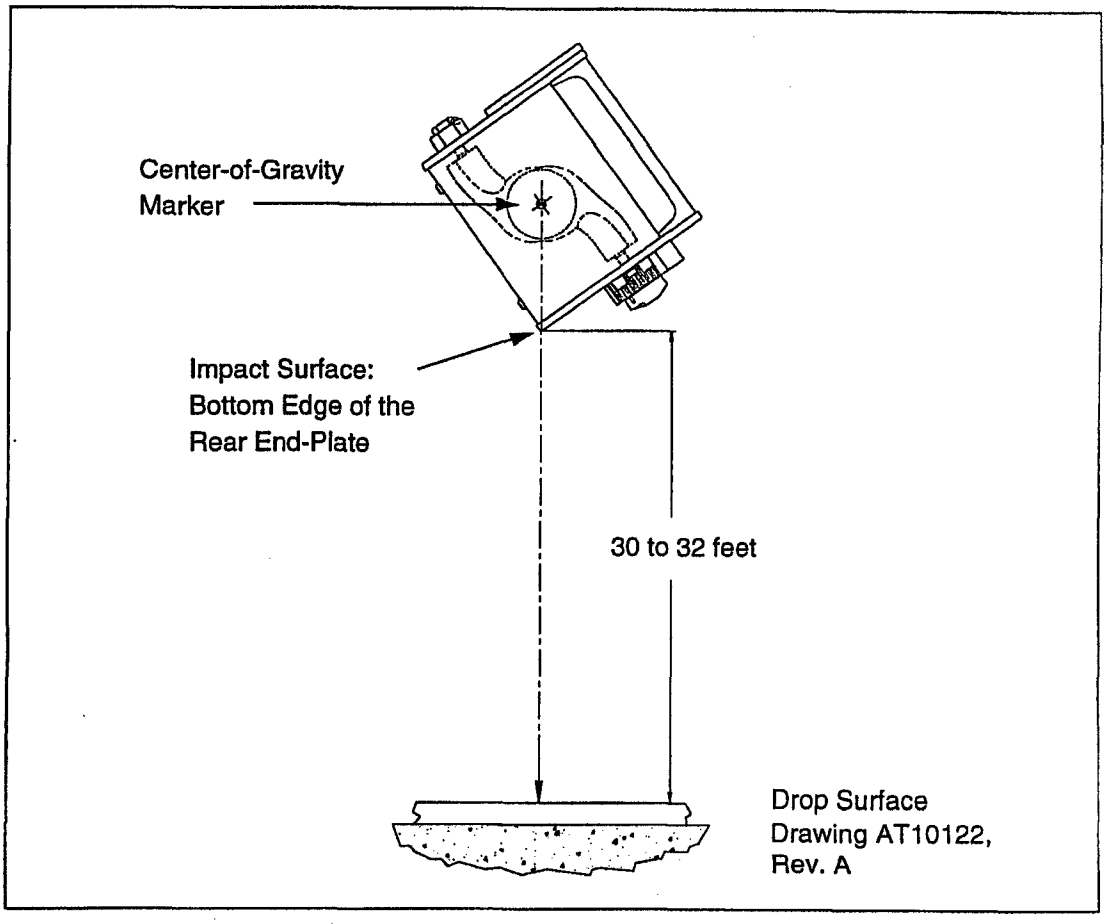

Figure 14: Orientation for Specimen D for 30-foot Free Drop

6.6.6 30-foot Free Drop Test Pass/Fail Criteria

The specimen fails if any of the following occurs:

- The removal or failure of the lock assembly that secures the source assembly in place
- The loss of either end plate

NOTE: *If a test specimen meets any of the failure criteria, the Engineering, Regulatory Affairs and Quality Assurance team members should evaluate the specimen and jointly decide whether testing of the specimen is to continue.*

6.7 Puncture Test (10 CFR 71.73(c)(3))

The 30-foot free drop is followed by the puncture test per 10 CFR 71.73(c)(3), in which a package is dropped from a height of at least 40 inches onto the puncture billet specified in Drawing CT10119, Rev. C.

The billet is to be bolted to the drop surface used in the free drop tests (Figure 15).

Use *Checklist 5: Puncture Test* on page 46 to ensure that test sequence is followed. Date and initial all action items and record required data.

NOTE: *The worksheet identifies those steps which must be witnessed by Engineering, Regulatory Affairs and Quality Assurance.*

The following describes the orientation of each test specimen immediately before the package is dropped onto the billet and the pass/fail criteria for the test.

6.7.1 Puncture Test Setup

There is a specific orientation for each specimen so that the package lands on the component or assembly of interest.

NOTE: *Because each test is designed to add to damage inflicted on a specific component or assembly in the preceding test, it is important that each specimen maintain its identity throughout the battery of tests and that the setup instructions specific to the specimen are strictly followed.*

This test requires that the test specimen be at or below -40° C at the time of the test. The worksheet calls for measuring and recording the specimen temperature before and after the test.

This test uses the 12-inch high puncture billet (Drawing CT10119, Rev. C). The billet meets the minimum height (8 inches) required in 10 CFR 71.73(c)(3). The specimen has no projections or overhanging members longer than 8 inches which could act as impact absorbers, thus allowing the billet to cause the maximum damage to the specimen.

To set up a package for the puncture test:

1. Ensure that the package is at or below -40° C.
2. Position it according to the specimen-specific orientation described below.
3. Raise the package so that there is 40 to 42 inches between the package and the top of the puncture billet.
4. Check the alignment of the specified center-of-gravity marker with the targeted point of impact.

Figure 15 through Figure 18 illustrate the four package orientations for the puncture tests. The justification for each orientation is the same as the orientation for the specimen's free drops.

6.7.2 Specimen A Orientation for the Puncture Test

The objective of the Specimen A orientation (Figure 15) is to puncture the shell and move the shield. The impact area is the bottom of the package, the largest flat surface on the shell. This surface will yield the greatest deceleration, while the momentum of the shield continues downward. Align the center of gravity marker on the side of the package with the center of the puncture billet.

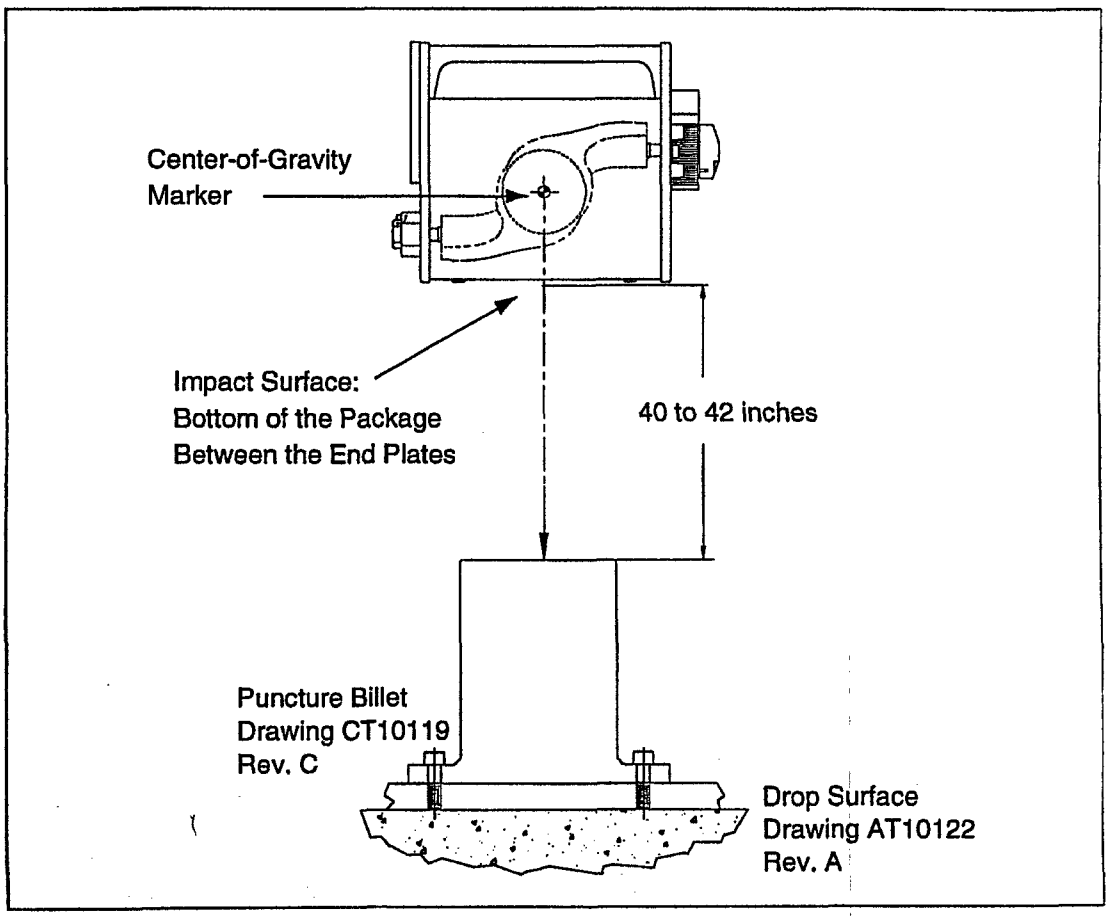

Figure 15: Specimen A Orientation for the Puncture Test

6.7.3 Specimen B Orientation for the Puncture Test

The objective of the Specimen B setup (Figure 16) is to continue the damage inflicted on the lock assembly caused by the penetration test and the two free drops. To achieve the same point of attack as the free drops, you must align the center-of-gravity marker over the lock assembly and ensure that the plunger lock clears the top of the billet.

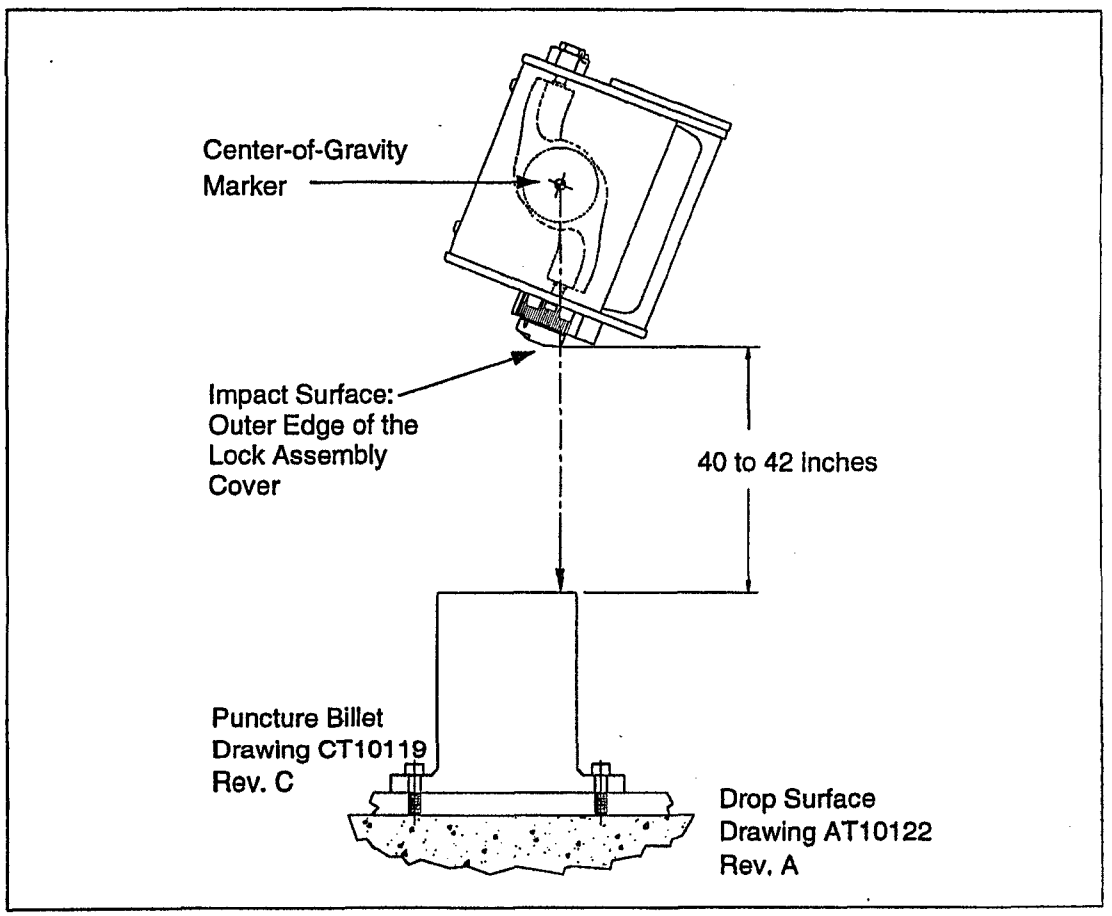

Figure 16: Specimen B Orientation for the Puncture Test

6.7.4 Specimen C Orientation for the Puncture Test

The objective of the Specimen C setup (Figure 17) is to continue the damage inflicted on the shipping plug assembly caused by the penetration test and the two free drops. The impact point should be the same flat outer edge on the shipping plug targeted in the previous tests. Align the center-of-gravity marker directly above the impact point on the shipping plug assembly.

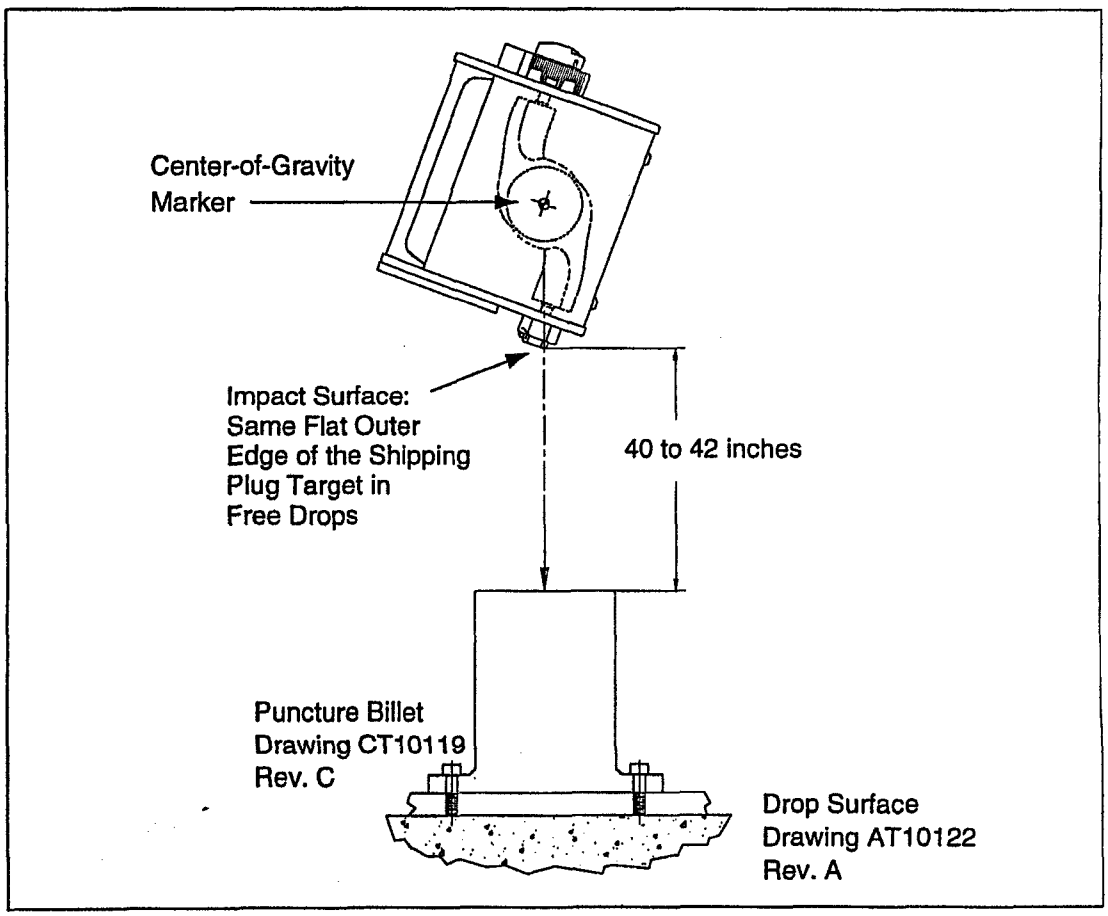

Figure 17: Specimen C Orientation for the Puncture Test

6.7.5 Specimen D Orientation for the Puncture Test

The Specimen D setup (Figure 18) targets the bottom edge of the rear end-plate to distort the end plate and loosen or shear the screws securing the end plate to the interior metal rods.

The bottom edge provides the largest, unobstructed flat surface on the plate. The impact will crush the bottom of the end plate into the polyurethane foam, the softest material in the package, and cause the maximum distortion of the plate. Attacking the top edge was rejected because the flat surface area is less than half that of the bottom edge and the carrying handle would deflect much of the energy.

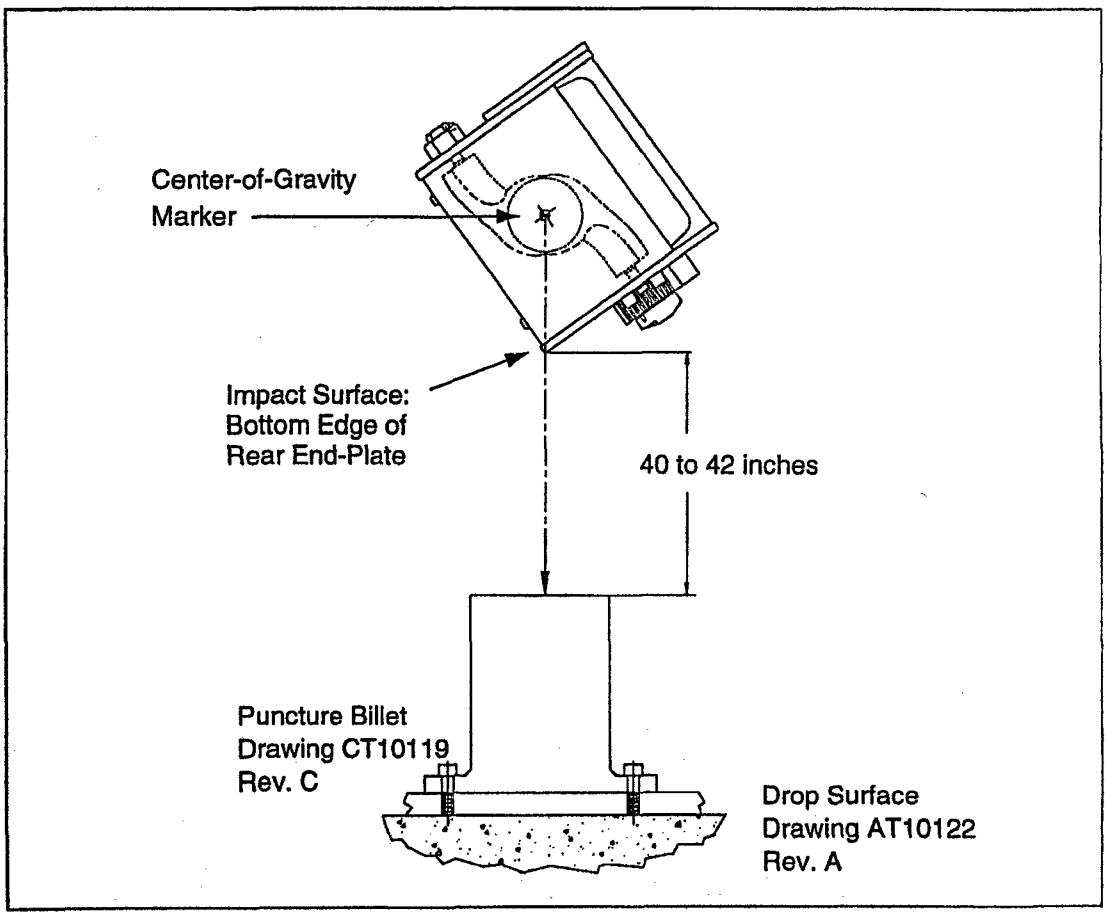

Figure 18: Specimen D Orientation for the Puncture Test

6.7.6 Puncture Test Pass/Fail Criteria

The specimen fails if any of the following occurs:

- The removal or failure of the lock assembly that secures the source assembly in place
- The loss of either end plate
- Radiation level one meter from the package surface exceeds 1 R/hr

NOTE: *If a test specimen meets any of the failure criteria, the Engineering, Regulatory Affairs and Quality Assurance team members should evaluate the specimen and jointly decide whether testing of the specimen is to continue.*

6.8 Second Intermediate Test Inspection

Perform a second intermediate test inspection after the puncture test and before the thermal test.

1. Measure and record any damage to the test specimen.
2. Measure and record the location of the source from the front end using the source location tool (Amersham Drawing BT10142, Rev. A).
3. Remove and assess the condition of the dummy source.
4. Reassemble the package using an active 424-9 source, making sure that the source wire position and the package configuration are the same as they were immediately after the puncture test.
5. Measure and record a radiation profile of the test specimen in accordance with Amersham Work Instruction WI-Q09.
6. Reassemble the package using the same dummy source used in the specimen during the first three tests.
7. Make sure that the source wire position and the package configuration are the same as they were immediately after the puncture test.

6.9 Thermal Test (10 CFR 71.73(c)(4))

The final requirement is the thermal test specified in 10 CFR 71.73(c)(4).

To assure sufficient heat input to the test specimens, each specimen will be pre-heated to a temperature of at least 800° C and held to at least that temperature for 30 minutes. This test condition provides heat input in excess of the requirements specified in 10 CFR 71.73(c)(4), which does not include a pre-heat condition. The pre-heat condition assures equivalent heat input regardless of emissivity and absorptivity coefficients.

The test environment is a vented (intake and exhaust) electric oven operating at 900° C. There will be sufficient air flow to allow combustion.

If the specimen is burning when it is removed, the unit is allowed to extinguish by itself and then cool naturally. The final evaluation of the package is performed when the specimen reaches ambient temperature.

6.9.1 Thermal Test

To perform the thermal test:

1. Heat the oven to 900° C.
2. Attach a thermocouple to the package's internal measurement location.
3. Place the package in the oven and close the door.
4. When the interior temperature of the package goes above 800° C, open the oven door enough to allow air flow through the oven and start a 30-minute timer.
5. Measure and record the oven temperature, test specimen internal temperature and intake air velocity. Record whether there is any combustion.
6. Monitor the specimen's internal temperature and the oven temperature throughout the 30-minute test period to ensure that both temperatures remain above 800° C.
7. At the end of the 30 minutes, repeat Step 5.
8. Remove the test specimen from the oven.
9. Allow the package to self-extinguish and cool.

6.9.2 Orientation

The orientation and justification should be based on an assessment of the test specimen condition immediately after the puncture test. Record, justify and approve the orientation for this test in accordance with Amersham SOP-E005.

6.9.3 Thermal Test Pass/Fail Criteria

Specimen fails if any one of the following occurs:

- The loss of either end plate. The loss of one end plate indicates the loss of the other is just as likely for this orientation.
- Release of the shield outside the test specimen.
- Radiation of 1 R/hr at one meter from the surface of the package.

6.10 Final Test Inspection

Perform the following inspections after completion of the thermal test:

1. Measure and record any damage to the test specimen.
2. Measure and record the location of the source from the front end-plate using the source location tool (Drawing BT10142, Rev A).
3. Remove and assess the condition of the dummy source.
4. Reassemble the package using an active 424-9 source, making sure that the source wire position and the package configuration are the same as they were immediately after the puncture test.
5. Measure and record a radiation profile of the test specimen in accordance with Amersham Work Instruction WI-Q09.
6. Assess the significance of any change in radiation at the surface or at one meter from the package.
7. Determine whether it is necessary to dismantle the test specimen for inspection of hidden component damage or failure.
8. If you decide to proceed with the inspection, record and photograph the process of removing any component.
9. Measure and record any damage or failure found in the process of dismantling the test specimen.

7.0 Worksheets

Use the following worksheets for executing these tests. There are two worksheets for each test: an equipment list and a test procedure checklist.

Use the test equipment list to record the serial number of each measurement device used. Attach a copy of the relevant inspection report or calibration certificate after you have verified the range and accuracy of the equipment.

Quality Control will initial each step on the checklist as it is executed and record data as required.

Make copies of the forms for additional attempts. Maintain records of all attempts.

Equipment List 1: Compression Test

Description	Enter the Serial Number	Attach Inspection Report or Calibration Certificate
Weight Scale		
Record any additional tools used to facilitate the test and attach the appropriate inspection report or calibration certificate.		

Checklist 1: Compression Test

Test Location: **Attempt Number:**

Step	Specimen A	Specimen B	Specimen C	Specimen D
1. Perform initial test inspection on the specimen.				
2. Position specimen on concrete surface per the appropriate drawing.	Figure 2	Figure 2	Figure 2	Figure 2
3. Measure ambient temperature.				
Record ambient temperature:				
Note the instrument used:				

Checklist 1: Compression Test (Continued)

Test Location: **Attempt Number:**

Step	Specimen A	Specimen B	Specimen C	Specimen D
4. Apply a uniformly distributed weight of 280 to 290 pounds on the top surface of the handle for a period of 24 hours.				
Record the actual weight:				
Note the instrument used:				
Record start time and date:				
5. After 24 hours, remove the weight.				
Record end date:				
Record end time:				
6. Measure the ambient temperature.				
Record the ambient temperature:				
Note the instrument used:				
7. Photograph the test specimen and any subsequent damage.				
8. Record damage to test specimen on a separate sheet and attach.				
The following step must be performed by Engineering, RA and QA.				
9. Make preliminary assessment relative to Pass/Fail Criteria. Record assessment relative to pass/fail criteria on a separate sheet and attach.	See page 10	See page 10	See page 10	See page 10

Test Data Accepted by:	Signature	Date
Engineering:		
Regulatory Affairs:		
Quality Assurance:		

Equipment List 2: Penetration Test Equipment

Description	Enter the Serial Number	Attach Inspection Report or Calibration Certificate
Penetration Bar, Drawing BT10129, Rev. A		
Drop Surface, Drawing AT10122, Rev. A		
Thermometer, Atkins 39658-T		
Thermocouple rod probe, McMaster Carr T28012G-00-05		
Thermocouple surface probe, Atkins 50012-T		
Record any additional tools used to facilitate the test and attach the appropriate inspection report or calibration certificate.		

Checklist 2: Penetration Test

Test Location: **Attempt Number:**

Step	Specimen A	Specimen B	Specimen C	Specimen D
1. Immerse the test specimen in dry ice as needed to bring specimen temperature below -40° C.				
2. Remove the specimen from the dry ice, and position it as shown in the referenced figure.	Figure 3	Figure 4	Figure 5	Figure 6
3. Begin video recording of the test so that the impact is recorded.				
4. Inspect the orientation setup and verify the bar height.				
5. Measure the ambient temperature and the test specimen internal and surface temperatures. Ensure that specimen temperature is below -40° C.				
Record ambient temperature:				
Note the instrument used:				

Checklist 2: Penetration Test (Continued)

Test Location: **Attempt Number:**

Step	Specimen A	Specimen B	Specimen C	Specimen D
Record the specimen internal temperature:				
Note the instrument used:				
Record the specimen surface temperature:				
Note the instrument used:				
The following step must be witnessed by Engineering, RA and QA.				
6. Drop the penetration bar onto the specified area shown in the referenced figure.	Figure 3	Figure 4	Figure 5	Figure 6
7. Check to ensure that penetration bar hit the specified area.				
8. Measure the test specimen's surface temperature. Ensure that specimen is below -40° C.				
Record the specimen surface temperature:				
Note the instrument used:				
9. Pause the video recorder. Ensure that the point of impact and orientation specified in the plan have been achieved and recorded.				
10. Record damage to test specimen on a separate sheet and attach.				
The following step must be performed by Engineering, RA and QA.				
11. Make preliminary assessment relative to Pass/Fail Criteria. Record assessment relative to pass/fail criteria on a separate sheet and attach.	See page 16	See page 16	See page 16	See page 16

Test Data Accepted by:	Signature	Date
Engineering:		
Regulatory Affairs:		
Quality Assurance:		

Equipment List 3: Four-foot Free Drop Equipment List

Description	Enter the Serial Number	Attach Inspection Report or Calibration Certificate
Drop Surface, Drawing AT10122, Rev. A		
Thermometer, Atkins 39658-T		
Thermocouple rod probe, McMaster Carr T28012G-00-05		
Thermocouple surface probe, Atkins 50012-T		
Record any additional tools used to facilitate the test and attach the appropriate inspection report or calibration certificate.		

Checklist 3: Four-foot Free Drop

Test Location: **Attempt Number:**

Step	Specimen A	Specimen B	Specimen C	Specimen D
1. Immerse the test specimen in dry ice as need to bring specimen temperature below -40° C.				
2. Measure the ambient temperature.				
Record ambient temperature:				
Note the instrument used:				
3. Attach the test specimen to the release mechanism.				
4. Begin video recording of test so that impact is recorded.				
5. Measure the temperature of the specimen. Ensure that specimen is below -40° C.				
Record the specimen internal temperature:				
Note the instrument used:				
Record the specimen surface temperature.				
Note the instrument used:				

Checklist 3: Four-foot Free Drop (Continued)

Test Location: **Attempt Number:**

Step	Specimen A	Specimen B	Specimen C	Specimen D
6. Lift and orient the test specimen as shown in the referenced figure for the specimen.	Figure 7	Figure 8	Figure 9	Figure 10
7. Inspect the orientation setup and verify drop height.				
8. Photograph the setup in at least two perpendicular planes.				
The following step must be witnessed by Engineering, RA and QA.				
9. Release the test specimen.				
10. Measure the surface temperature of the test specimen.				
Record the surface temperature:				
Note the instrument used:				
11. Pause the video recorder. Ensure that the point of impact and orientation specified in the plan have been achieved and recorded.				
12. Record damage to test specimen on a separate sheet and attach.				
The following step must be performed by Engineering, RA and QA.				
13. Make preliminary assessment relative to Pass/Fail Criteria. Record assessment relative to pass/fail criteria on a separate sheet and attach.	See page 22	See page 22	See page 22	See page 22

Test Data Accepted by:	Signature	Date
Engineering:		
Regulatory Affairs:		
Quality Assurance:		

Equipment List 4: 30-foot Free Drop Equipment List

Description	Enter the Serial Number	Attach Inspection Report or Calibration Certificate
Drop Surface, Drawing AT10122, Rev. A		
Thermometer, Atkins 39658-T		
Thermocouple rod probe, McMaster Carr T28012G-00-05		
Thermocouple surface probe, Atkins 50012-T		
Record any additional tools used to facilitate the test and attach the appropriate inspection report or calibration certificate.		

Checklist 4: 30-foot Free Drop

Test Location: **Attempt Number:**

Step	Specimen A	Specimen B	Specimen C	Specimen D
1. Immerse the test specimen in dry ice as need to bring specimen temperature below -40° C.				
2. Measure the ambient temperature.				
Record ambient temperature:				
Note the instrument used:				
3. Attach the test specimen to the release mechanism.				
4. Begin video recording of test so that the impact is recorded.				
5. Measure the temperature of the specimen. Ensure that specimen is below -40° C.				
Record the specimen internal temperature:				
Note the instrument used:				
Record the specimen surface temperature.				
Note the instrument used:				

Checklist 4: 30-foot Free Drop (Continued)

Test Location: **Attempt Number:**

Step	Specimen A	Specimen B	Specimen C	Specimen D
6. Lift and orient the test specimen as shown in the referenced figure for the specimen.	Figure 11	Figure 12	Figure 13	Figure 14
7. Inspect the orientation setup and verify drop height.				
8. Photograph the setup in at least two perpendicular planes.				
The following step must be witnessed by Engineering, RA and QA.				
9. Release the test specimen.				
10. Measure the surface temperature of the test specimen.				
Record the surface temperature:				
Note the instrument used:				
11. Pause the video recorder. Ensure that the point of impact and orientation specified in the plan have been achieved and recorded.				
12. Record damage to test specimen on a separate sheet and attach.				
The following step must be performed by Engineering, RA and QA.				
13. Make preliminary assessment relative to Pass/Fail Criteria. Record assessment relative to pass/fail criteria on a separate sheet and attach. Determine what changes are necessary in package orientation for the puncture test to achieve maximum damage.	See page 22	See page 22	See page 22	See page 22

Test Data Accepted by:	Signature	Date
Engineering:		
Regulatory Affairs:		
Quality Assurance:		

Equipment List 5: Puncture Test Equipment

Description	Enter the Serial Number	Attach Inspection Report or Calibration Certificate
Drop Surface, Drawing AT10122, Rev. A		
Puncture Billet, Drawing CT10119, Rev. C		
Thermometer, Atkins 39658-T		
Thermocouple rod probe, McMaster Carr T28012G-00-05		
Thermocouple surface probe, Atkins 50012-T		
Record any additional tools used to facilitate the test and attach the appropriate inspection report or calibration certificate.		

Checklist 5: Puncture Test

Test Location: **Attempt Number:**

Step	Specimen A	Specimen B	Specimen C	Specimen D
1. Immerse the test specimen in dry ice as need to bring specimen temperature below -40° C.				
2. Measure the ambient temperature.				
Record ambient temperature:				
Note the instrument used:				
3. Attach the test specimen to the release mechanism.				
4. Begin video recording of test so that the impact is recorded.				
5. Measure the surface temperature of the specimen. Ensure that specimen is below -40° C.				
Record the specimen surface temperature.				
Note the instrument used:				

Checklist 5: Puncture Test (Continued)

Test Location: **Attempt Number:**

Step	Specimen A	Specimen B	Specimen C	Specimen D
6. Lift and orient the test specimen as shown in the referenced figure for the specimen.	Figure 11	Figure 12	Figure 13	Figure 14
7. Inspect the orientation setup and verify drop height.				
8. Photograph the setup in at least two perpendicular planes.				
The following step must be witnessed by Engineering, RA and QA.				
9. Release the test specimen.				
10. Measure the surface temperature of the test specimen.				
Record the surface temperature:				
Note the instrument used:				
11. Pause the video recorder. Ensure that the point of impact and orientation specified in the plan have been achieved and recorded.				
12. Record damage to test specimen on a separate sheet and attach.				
The following step must be performed by Engineering, RA and QA.				
13. Make preliminary assessment relative to Pass/Fail Criteria. Record assessment relative to pass/fail criteria on a separate sheet and attach. As part of the assessment, determine the package orientation for the thermal test.	See page 34	See page 34	See page 34	See page 34

Test Data Accepted by:	Signature	Date
Engineering:		
Regulatory Affairs:		
Quality Assurance:		

Equipment List 6: Thermal Test Equipment

Description	Enter the Serial Number	Attach Inspection Report or Calibration Certificate
Thermometer, Atkins 39658-T		
Thermocouple rod probe, McMaster Carr T28012G-00-05		
Thermocouple surface probe, Atkins 50012-T		
Oven thermostat		
Record any additional tools used to facilitate the test and attach the appropriate inspection report or calibration certificate.		

Checklist 6: Thermal Test

Test Location: **Attempt Number:**

Step	Specimen A	Specimen B	Specimen C	Specimen D
1. Pre-heat the oven to 900° C.				
2. Attach the thermocouples the specimen's internal measuring point.				
3. Place the package in the oven and close the oven door.				
Record date and time placed in oven.				
5. When the specimen temperature exceeds 800° C, open the oven door enough to create air flow through the oven. Record time.				
Note whether there is combustion when door is opened.				
6. Measure the oven temperature, the specimen's internal temperature and the intake air flow velocity.				
Record the oven temperature:				
Note instrument used:				

Checklist 6: Thermal Test (Continued)

Test Location: **Attempt Number:**

Step	Specimen A	Specimen B	Specimen C	Specimen D
Record the specimen temperature:				
Note instrument used:				
Record intake air flow velocity:				
Note instrument used:				
7. Monitor the specimen temperature and oven temperature throughout the 30-minute period to ensure that both are above 800° C.				
8. At the end of the 30-minute period, repeat step 6 using the same measurement devices.				
Record the oven temperature:				
Record the specimen temperature:				
Record intake air flow velocity:				
9. Remove test specimen from the oven.				
Record time the specimen is removed.				
Describe combustion when door is opened to remove specimen.				
NOTE: If specimen continues to burn, let it self-extinguish and cool naturally.				
10. Measure the ambient temperature.				
Record the ambient temperature:				
Note the instrument used:				
11. Photograph the test specimen and any subsequent damage				
12. Record damage to test specimen on a separate sheet and attach.				
The following step must be performed by Engineering, RA and QA.				
13. Make preliminary assessment relative to Pass/Fail Criteria. Record assessment relative to pass/fail criteria on a separate sheet and attach.	See page 36	See page 36	See page 36	See page 36

Checklist 6: Thermal Test (Continued)

Test Location: **Attempt Number:**

Step	Specimen A	Specimen B	Specimen C	Specimen D
Test Data Accepted by:	Signature			Date
Engineering:				
Regulatory Affairs:				
Quality Assurance:				

Appendix A
Drawings

Model 660 Test Specimen
TP70, Rev. A (1 sheet)

Model 660 Gamma Ray Projector Shipping Container Descriptive Assembly
C66025, Rev. F (3 sheets)

Model 660 Gamma Ray Projector Shipping Container Descriptive Assembly
C66025, Rev. B (4 sheets)

Model 660 Gamma Ray Projector Shipping Container Descriptive Assembly
C66030, Rev. D (3 sheets)

Model 660 Gamma Ray Projector Shipping Container Descriptive Assembly
C66030, Rev. A (3 sheets)

Model 660 Gamma Ray Projector Shipping Container Descriptive Assembly
C66030, Rev. – (4 sheets)

REV	REVISED BY	DATE	DESCRIPTION	ECO#
A	SEE TITLE BLOCK		RELEASE FOR PRODUCTION	2339

NOTES

1. MATERIAL:
EXCEPT AS SHOWN, MANUFACTURE TEST UNIT PER DRAWING NUMBER D66010, REVISION C AND IN ACCORDANCE WITH THE AMERSHAM QUALITY ASSURANCE PROGRAM. ALSO, INSTALL DUMMY SOURCE, DRAWING NUMBER A42409XL. SEE NOTE 3.2.

2. WEIGHT

2.1. TEST UNIT SHALL WEIGH 56 TO 57 POUNDS.

2.2. ADD LEAD (1/4 THICK MAX) TO THE SHIELD ASSEMBLY TO BRING THE TOTAL SHIELD ASSEMBLY WEIGHT TO 40 POUNDS OR MORE.

2.3. DISTRIBUTE THE LEAD EVENLY SO AS TO NOT SIGNIFICANTLY AFFECT THE CENTER OF GRAVITY.

2.4. USE GLASS TAPE TO ATTACH LEAD TO SHIELD.

2.5. PHOTOGRAPH COMPLETED SHIELD ASSEMBLY WITH LEAD APPLIED.

3. LABELING AND IDENTIFICATION

3.1. LABEL TYPE B (U) INFORMATION WITH LABEL STATING: "TP70 TEST SPECIMEN".

3.2. MARK EACH TEST SPECIMEN, ITS SHIPPING PLUG, AND ITS DUMMY SOURCE WITH AN IDENTIFICATION LETTER: "A", "B", "C", "D", & "S".

4. CENTER OF GRAVITY:

4.1. DETERMINE THE TEST UNIT CENTER OF GRAVITY LOCATION BY;

4.1.1. SUSPEND THE TEST UNIT BY A CORD OR CABLE.
4.1.2. ATTACH A CORD OR CABLE WITH A WEIGHT (PLUMB BOB)TO THE TEST UNIT AT THE SUSPENDED ATTACHMENT POINT.
4.1.3. WAIT UNIT THE TEST UNIT COMES TO REST.
4.1.4. MARK A LINE ON THE TEST UNIT ALONG THE PLUMB BOB.
4.1.5. REMOVE THE TEST UNIT FROM ITS SUSPENSION POINT.
4.1.6. REATTACH THE TEST UNIT TO A POINT APPROXIMATELY 90 DEGREES FROM THE PREVIOUS ATTACHMENT POINT.
4.1.7. REPEAT STEPS 2 THROUGH 5.
4.1.8. INDICATE THE CENTER OF GRAVITY LOCATION AT THE INTERSECTION OF THE TWO MARKED LINES.
4.1.9. REPEAT STEPS 1 THROUGH 8 FOR EACH SIDE OF THE TEST UNIT.

5. ATTACHMENT POINTS

5.1. USE THE ORIENTATION FIGURES OF THE TEST PLAN TO LOCATE ANY ATTACHMENT POINTS ON THE TEST UNIT, IF NEEDED.

5.2. ATTACHMENT POINTS SHALL NOT INTERFERE WITH THE CENTER OF GRAVITY LOCATION OR AFFECT THE PERFORMANCE OF THE TEST UNIT DURING TESTING.

5.3. ATTACHMENT POINT SIZE AND LOCATION SHALL BE DOCUMENTED BEFORE TESTING CAN PROCEED.

5.4. ADHESIVE, HOOKS, AND STRAPS TO BE DETERMINED BY ENGINEERING PRIOR TO TEST.

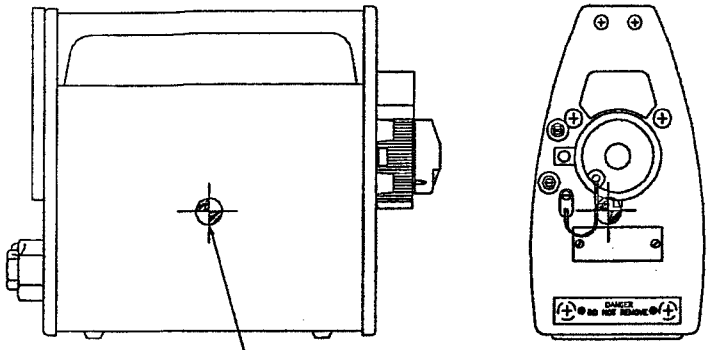

SEE NOTE 4 (CENTER OF GRAVITY MARKER)
MARK ALL 4 SIDES.
TOP AND BOTTOM C OF G MARKERS NOT REQUIRED.

ADD HIT MARKER ON SHELL OF TEST SPECIMEN "A" & "S".
HIT MARKER LOCATION AT THE SPOT WHERE THE SHIELD "HOT TOP" IS CLOSEST TO THE SHELL.

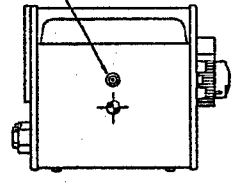

TEST SPECIMEN "A" & "S" ONLY

ADD HIT MARKER ON LABEL AT A SPOT OVER THE SCREW HEAD OF TEST SPECIMEN "D" & "S".

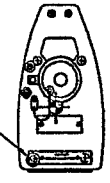

TEST SPECIMEN "D" & "S" ONLY

THIS DRAWING IS THE EXCLUSIVE PROPERTY OF AMERSHAM CORPORATION. IT MAY ONLY BE USED FOR THE PURPOSE FOR WHICH IT WAS ISSUED. IT MAY NOT BE DUPLICATED IN ANY WAY, NOR TRANSMITTED TO ANY THIRD PARTY WITHOUT THE EXPRESS PERMISSION OF AMERSHAM CORPORATION.

USED ON: TEST PLAN #70		AMERSHAM CORPORATION BURLINGTON, MA 01803	SENTINEL
MATERIALS: SEE NOTE 1		DWG. TITLE	
SURFACE TEXTURE: 63 UNLESS OTHERWISE STATED		MODEL 660 TEST SPECIMEN	
FINISH: FINISH	UNLESS OTHERWISE NOTED DIMENSIONS ARE IN INCHES TOLERANCES ARE:		
REMOVE ALL BURRS	.X ± 0.1 / .XX ± 0.01		
DRAWN / CHECKED / APPROVED: Approved drawing on file	.XXX ± 0.005 / ANGLES ± 1° / FRACT ± 1/64	SAFETY CLASS A / SIZE C / DWG. NO. TP70	REV A
		SCALE NONE	SHEET 1 OF 1

FIGURE WITHHELD UNDER 10 CFR 2.390

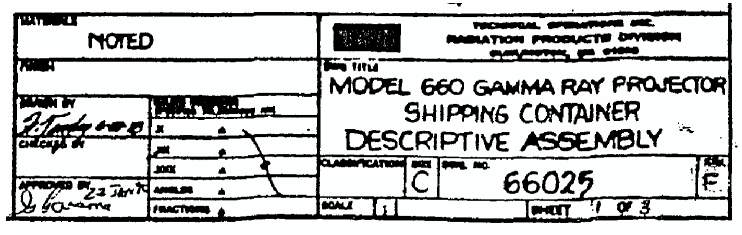

FIGURE WITHHELD UNDER 10 CFR 2.390

MATERIALS: NOTED		[redacted] TECHNICAL OPERATIONS INC. RADIATION PRODUCTS DIVISION BURLINGTON, MA 01803
FINISH: —		DWG TITLE: MODEL 660 GAMMA RAY PROJECTOR SHIPPING CONTAINER DESCRIPTIVE ASSEMBLY
DRAWN BY: [illegible]	UNLESS OTHERWISE SPECIFIED TOLERANCES ARE: .X ±	
CHECKED BY:	.XX ±	
	.XXX ±	CLASSIFICATION: SIZE: C DWG. NO.: 66025 REV.: F
APPROVED BY: [illegible] 23 JAN 86	ANGLES ±	
	FRACTIONS ±	SCALE: 2:1 SHEET 2 OF 3

FIGURE WITHHELD UNDER 10 CFR 2.390

MATERIALS: AS NOTED	Tech/Ops, Inc. RADIATION PRODUCTS DIVISION BURLINGTON, MA 01803	
FINISH	DWG TITLE: MODEL 660 GAMMA RAY PROJECTOR SHIPPING CONTAINER DESCRIPTIVE ASSEMBLY	
DRAWN BY	UNLESS OTHERWISE SPECIFIED TOLERANCES ARE: X ±	
CHECKED BY	XX ±	
APPROVED BY	XXX ±	
	ANGLES ±	
	FRACTIONS ±	
	CLASSIFICATION	SIZE C / DWG. NO. 66025 / REV. F
	SCALE 1:1	SHEET 3 OF 3

FIGURE WITHHELD UNDER 10 CFR 2.390

MATERIALS: NOTED		TECHNICAL OPERATIONS INC. RADIATION PRODUCTS DIVISION BURLINGTON, MA 01803
FINISH		DWG TITLE: MODEL 660 GAMMA RAY PROJECTOR SHIPPING CONTAINER DESCRIPTIVE ASSEMBLY
DRAWN BY: J. Turley 6-27-78	UNLESS OTHERWISE SPECIFIED TOLERANCES ARE	
CHECKED BY	.X ±	
	.XX ±	
	.XXX ±	CLASSIFICATION / SIZE: C / DWG. NO.: 66025 / REV.: B
APPROVED BY	ANGLES ±	
	FRACTIONS ±	SCALE: 1:1 / SHEET 1 OF 4

FIGURE WITHHELD UNDER 10 CFR 2.390

MATERIALS: NOTED	[redacted]	TECHNICAL OPERATIONS INC. RADIATION PRODUCTS DIVISION BURLINGTON, MA 01803
FINISH: —	DWG TITLE: MODEL 660 GAMMA RAY PROJECTOR SHIPPING CONTAINER DESCRIPTIVE ASSEMBLY	
DRAWN BY: J. Tangley 6-27-78	UNLESS OTHERWISE SPECIFIED TOLERANCES ARE: .X ±	
CHECKED BY	.XX ±	
	.XXX ±	CLASSIFICATION / SIZE C / DWG. NO. 66025 / REV. B
APPROVED BY	ANGLES ±	
	FRACTIONS ±	SCALE 2:1 / SHEET 2 OF 4

FIGURE WITHHELD UNDER 10 CFR 2.390

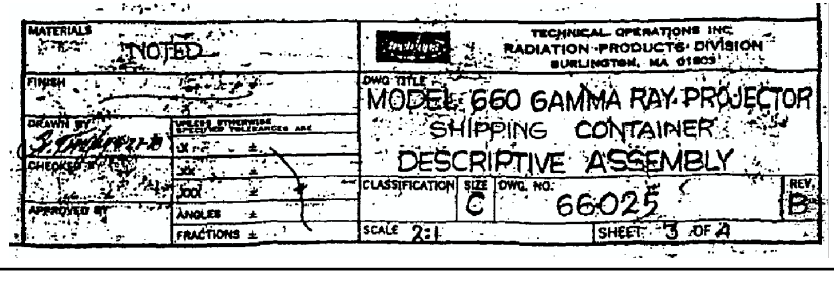

FIGURE WITHHELD UNDER 10 CFR 2.390

MATERIALS: AS NOTED		Tech Ops — Tech/Ops, Inc. RADIATION PRODUCTS DIVISION BURLINGTON, MA 01803
FINISH: "		DWG TITLE: MODEL 660 GAMMA RAY PROJEC. SHIPPING CONTAINER DESCRIPTIVE ASSEMBLY
DRAWN BY: J. Tuckey 4-12-88	UNLESS OTHERWISE SPECIFIED TOLERANCES ARE: X ±	
CHECKED BY: 18 APR 88	.XX ±	
APPROVED BY: 18 Apr 88	.XXX ±	CLASSIFICATION / SIZE: C / DWG. NO.: 66025
	ANGLES ±	
	FRACTIONS ±	SCALE 1:1 / SHEET 4 OF 4

FIGURE WITHHELD UNDER 10 CFR 2.390

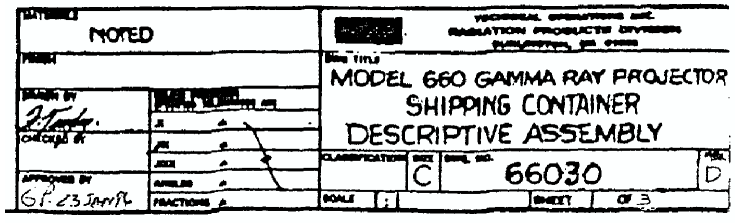

FIGURE WITHHELD UNDER 10 CFR 2.390

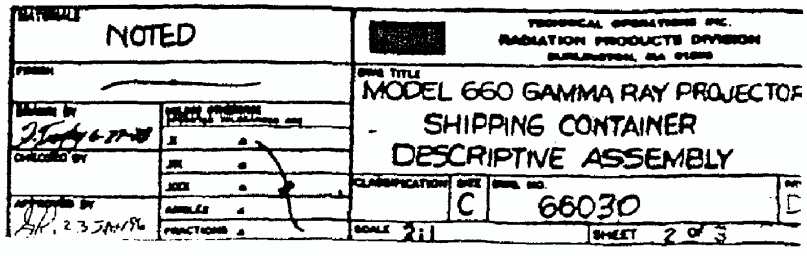

FIGURE WITHHELD UNDER 10 CFR 2.390

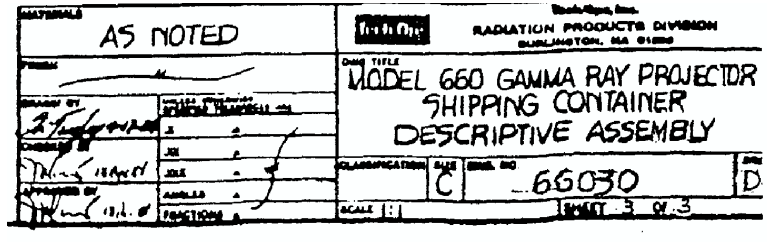

FIGURE WITHHELD UNDER 10 CFR 2.390

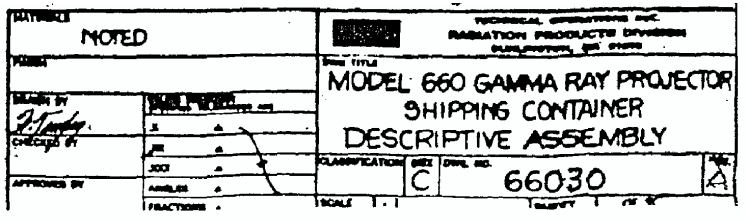

FIGURE WITHHELD UNDER 10 CFR 2.390

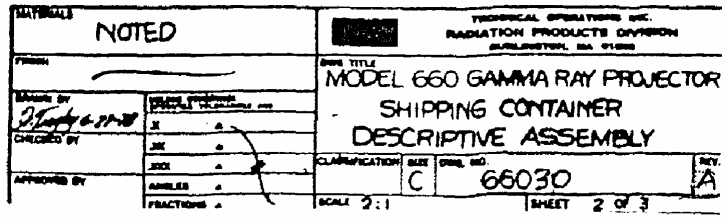

FIGURE WITHHELD UNDER 10 CFR 2.390

FIGURE WITHHELD UNDER 10 CFR 2.390

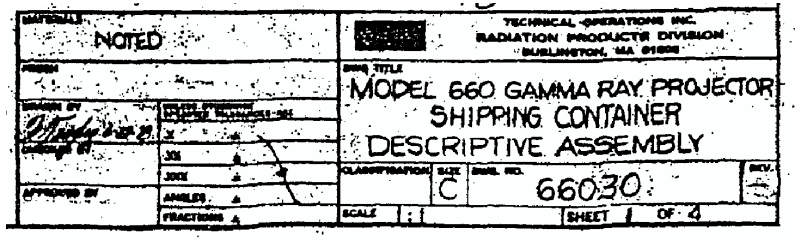

FIGURE WITHHELD UNDER 10 CFR 2.390

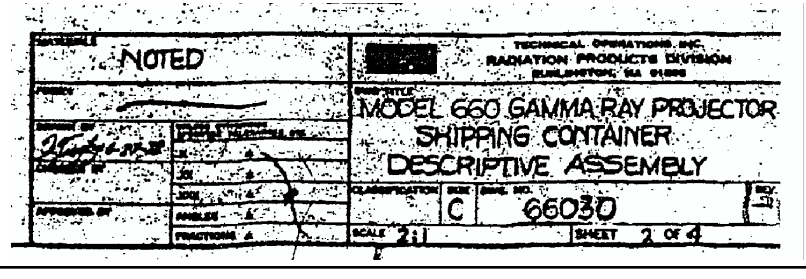

FIGURE WITHHELD UNDER 10 CFR 2.390

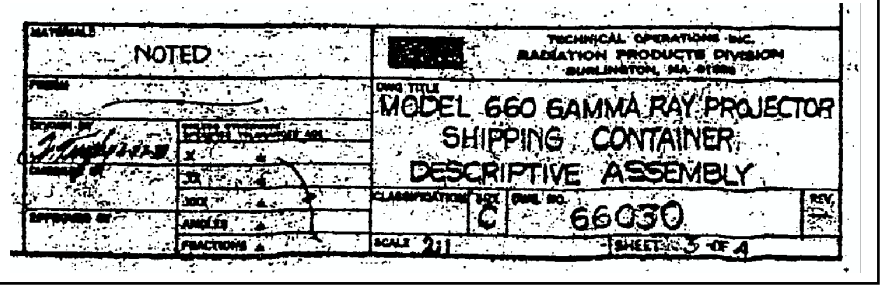

FIGURE WITHHELD UNDER 10 CFR 2.390

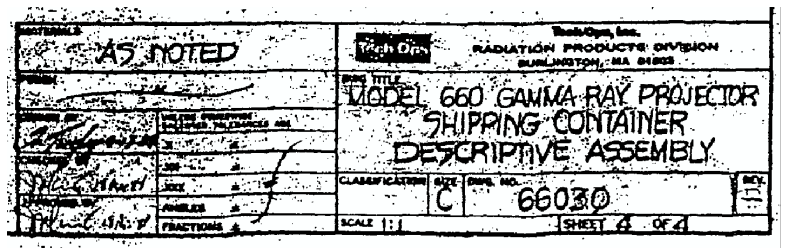

Section 2.12.2 - Test Plan 76 and Test Report 76

SENTINEL

TEST PLAN NO. 76

TEST PLAN COVER SHEET

TEST TITLE: MODEL 660 OP(L) TYPE B TRANSPORT TESTS	
PRODUCT MODEL: MODEL 660 OP(L)	
ORIGINATED BY: S. Gianni 17APR98 22 APR98	DATE: 15APR98 15APR98 ~~14APR98~~

TEST PLAN REVIEW

ENGINEERING APPROVAL: 23 Apr 98	DATE: 15 Apr 98
QUALITY ASSURANCE APPROVAL: KNA 23 APR 98 KNA	DATE: 15 APR 98 17APR98
REGULATORY AFFAIRS APPROVAL: C. Longman 23 Apr 98	DATE: 15 Apr 98

COMMENTS:

PAGES 4 AND 5 CHANGED ON 17 APR 1998

PAGES 6 AND APPENDIX A: DRAWINGS CHANGED ON 22 APR 98

TEST RESULTS REVIEW

ENGINEERING APPROVAL: S. Gianni	DATE: 15 MAY 98
QUALITY ASSURANCE APPROVAL:	DATE: 20 MAY 98
REGULATORY AFFAIRS APPROVAL: C. Longman	DATE: 18 May 98

Amersham QSA

Test Report #76

This document describes the results of package design tests conducted for Hypothetical Accident Conditions (10 CFR 71.73) by Amersham to demonstrate that the Model OPL-660 and Model OP-660 meet NRC requirements for Type B(U) packages.

The tests were conducted in accordance with Amersham Test Plan #76 (dated April 15, 1998). The test plan also covers the criteria stated in IAEA, Safety Series 6 (1985, as amended 1990).

The OPL-660 and OP-660 consist of a Model 660 Series projector installed in a steel box. The Model 660 Series includes the following projector models: 660, 660A, 660B, 660E, 660AE, and 660BE. Reference Certificate of Compliance 9033.

The OPL-660 and OP-660 use steel "ammo boxes" with foam and wood inserts to secure the projector. The OPL-660 also has lead panel inserts.

The Hypothetical Accident Conditions tests (10 CFR 71.73) performed were the 30-foot free drop, puncture test and thermal test. The units were first subjected to the four-foot free drop specified in 10 CFR 71.71.

This document reports on the manufacturing and acceptance of the test specimens, execution of the tests, test inspections, and assessment of the units as to their conformity with the requirements of 10 CFR 71.

Section 1 Transport Package Overview

The units tested under this plan consisted of the Model 660 Series projectors in either of two overpacks, as specified in SENTINEL Drawing TP76-X, Rev. D (TP76-X).

1.1 Container Description

The Model OPL-660 container consists of a steel shipping box with shock-absorbing polyethylene foam inserts and lead panels inside the box, and an insert made of foam and plywood attached to the inside of the cover. A sheet metal liner is installed between the box inserts and the projector. The inserts secure the Model 660 Series projector in the center of the box. The foam insert in the box is partially lined with sheet metal. The density of the foam is 4 lbs/ft^3.

The front, rear and bottom lead panels reduce measured radiation to less than 50 mR/hour at the surface and to less than 1 mR/hour at 1 meter to meet U.S. Department of Transportation Yellow II requirements (49 CFR Part 171 to 179).

The Model OP-660 does not include the lead panels, but is otherwise the same as the OPL-660.

Figure 1 shows an OPL-660 with a Model 660 Series projector in place. The drawing calls components and testing impact surfaces referenced in this report.

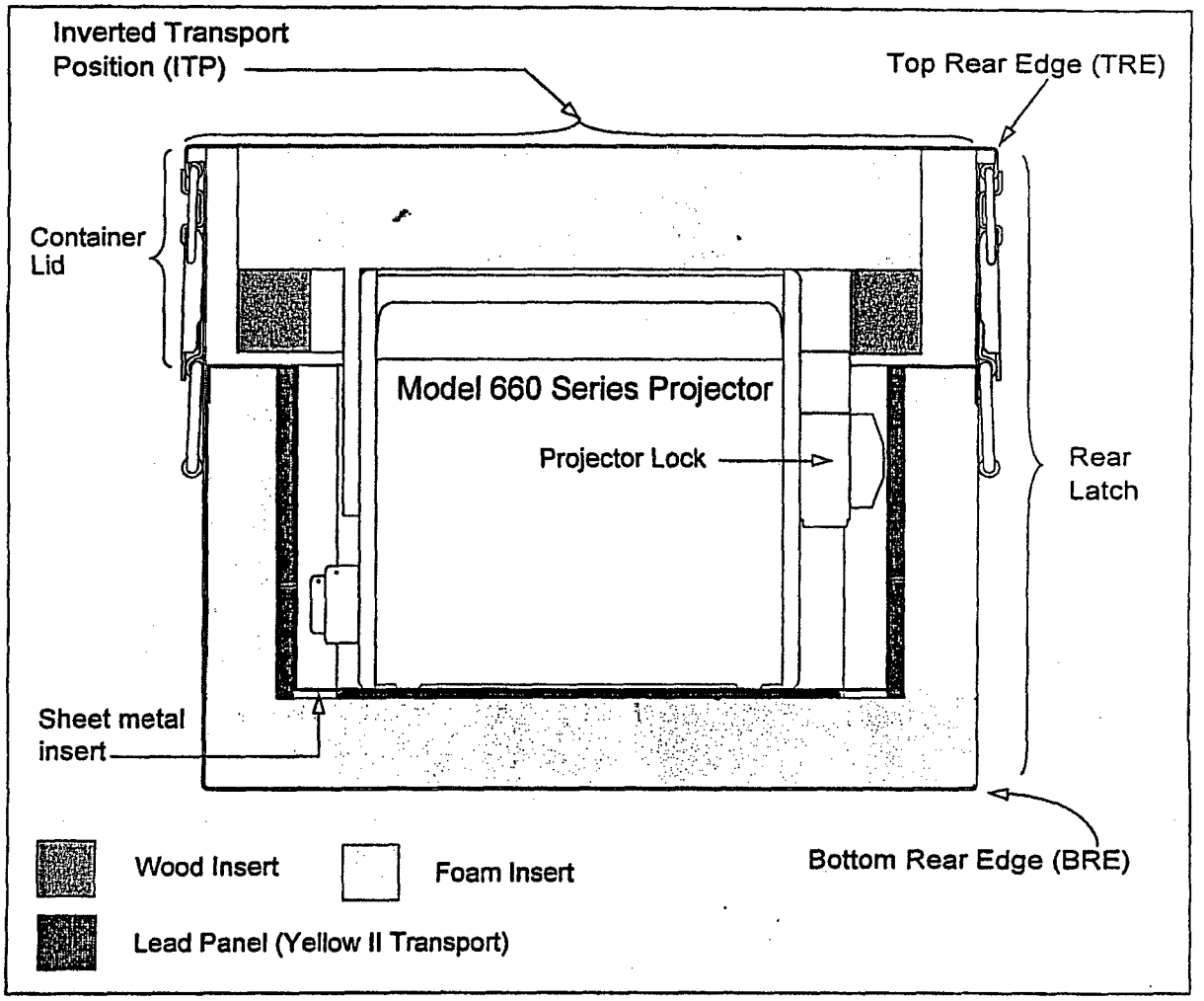

Figure 1: Side View of the OPL-660 in the Normal Transport Position (NTP)

1.2 Projector Description

The Model 660 Series projector consists of a source tube enclosed in a depleted-uranium shield, an end-plate with a lock assembly, a second end-plate with a storage plug assembly, four steel connecting rods, a sheet metal shell and foam packing material. Figure 2 is a cutaway view of the projector identifying components and testing impact surfaces referenced in this report.

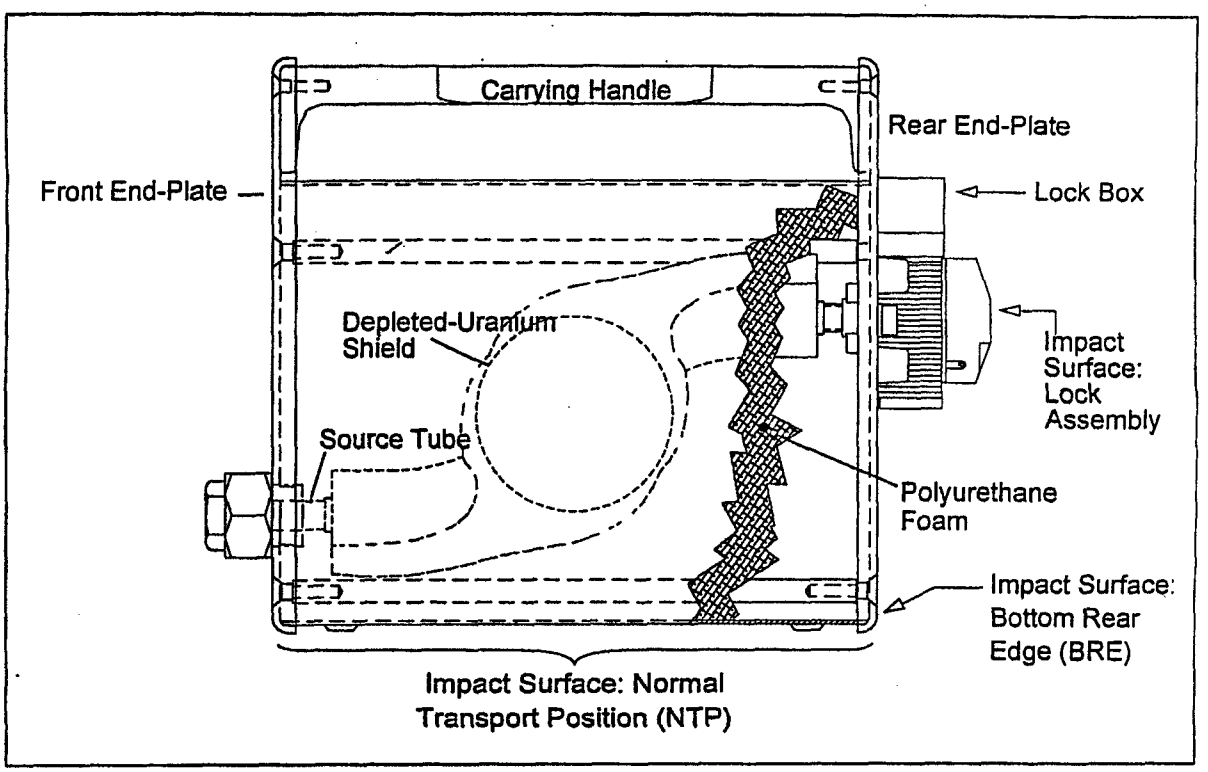

Figure 2: Side View of a Model 660 Series Projector in Normal Transport Position (NTP)

TP76-X specified a change in current manufacturing practice to ensure the Model 660 Series projectors were in a worst-case condition. The shield was specially made to increase the weight of the specimen by adding depleted uranium to the *ears*, that is, to the source-tube exit portions of the shield. Supplemental lead was also wrapped symmetrically around the shield to further increase the weight. The added weight induced higher loads during dynamic testing.

Section 2 Test Objectives and Setups

2.1 Objectives

The test setups in Test Plan #76 were intended to cause three system failures:

- Separate the lid from the container and then attack the Model 660 Series projector without any protection. For purposes of this test plan, the lid was considered removed if either latch opened.
- Move the source from its ideal shielded position. The displacement could result in elevated radiation levels.
- Damage an end-plate enough to cause an opening between the end-plate and the projector shell to expose the depleted-uranium shield to the heating elements and oxygen during the thermal once the foam has burned off. Such exposure could lead to oxidation of the shield and increased levels of radiation.

2.2 Package Orientations

Test Plan #76 called for eight packages to be tested using four different orientations to test the OPL-660 and the OP-660 (Figure 1 on page 3):

- **Bottom Rear Edge (BRE).** This orientation targeted the bottom rear edge of the container in the free drops and the puncture test. Previous test results indicated that BRE is the most damaging package orientation for the mechanical tests. The BRE orientation caused the failure of the rear end-plate screws and the subsequent shield failure in Test Plan #70.
- **Inverted Transport Position (ITP).** The ITP orientation impacted the top of the container cover in the 30-foot free drop and the puncture test. Experimental drops with the package indicated that the ITP orientation could cause the shell to move relative to the end-plates.
- **Rear Latch.** The third orientation provided a direct hit on the rear latch to damage the latch and open the box.
- **Top Rear Edge (TRE).** This orientation targets the top rear edge of the container in an attempt to jar the cover off. If the lid is removed in the 30-foot free drop, the puncture test will target the bottom rear edge of the projector.

Because the latches on a majority of tests specimens opened during the 30-foot drop, the projectors were removed from the steel box and subjected to the puncture and thermal tests without the protection of the box. Test Plan #76 specified three projector-only orientations for the puncture test (Figure 2 on page 4):

- **Bottom Rear Edge (BRE).** This orientation attacked the bottom edge of the rear end-plate.
- **Inverted Transport Position (ITP).** The impact surface is the bottom shell surface between the two end-plates.
- **Lock Assembly.** This orientation attacks the lock assembly on the rear end-plate. The projector's center of gravity is aligned the lock assembly when the lock assembly hits the puncture billet.

Test Plan #76 specified that orientations for the thermal test were to be determined as part of the puncture test assessment.

2.3 Test Setups

Table 1 identifies the test setups by container type, package orientation and the test unit temperature at impact in the free drop and puncture tests.

Table 1: Test Plan #76 Setups

Test Setup	Container	Free Drop Orientation (See Figure 1)	Puncture Test Orientation (See Figure 2)	Test Specimen Temperature
A1	OPL-660	Bottom Rear Edge (BRE)	Bottom Rear Edge (BRE)	At or below -40° C
A2	OP-660			
B1	OPL-660	Inverted Transport Position (ITP)	Normal Transport Position (NTP)	At or above 27° C
B2	OP-660			
C1	OPL-660	Rear Latch	Lock Assembly	At or above 27° C
C2	OP-660			
D1	OPL-660	Top Rear Edge (TRE)	Bottom Rear Edge (BRE)	At or above 27° C
D2	OP-660			

Section 3 Test Specimen Production and Acceptance

The Test Plan #76 test units were manufactured in the Amersham Burlington, Mass., facility in accordance with TP76X and the Amersham Quality Assurance Program. The program provides for documentation of the manufacturing process, assures that the units comply with the relevant drawings and manufacturing instructions, and specifies radiological profiling of the completed product.

A total of ten units were manufactured, two of which were replacements for units that missed their respective targets in the 30-foot free drop: B3666 for B3674 in Setup A2, and B3673 for B3676 in Setup D2. The replacement units went through the full scenario of tests under the conditions specified for the original units. Table 2 summarizes key manufacturing and profiling data.

Table 2: Test Specimens Manufactured for Test Plan #76

Test Setup	Serial Number	Projector Weight	Total Package Weight	Projector Profile At Surface	Projector Profile At One Meter
A1	B3665	54.3 lbs	87.4 lbs	181 mR/hr	1.4 mR/hr
A2	B3674	54.5 lbs	80.0 lbs	172 mR/hr	1.5 mR/hr
A2	B3666	54.6 lbs	80.3 lbs	166 mR/hr	1.4 mR/hr
B1	B3667	54.4 lbs	87.6 lbs	147 mR/hr	1.5 mR/hr
B2	B3671	54.3 lbs	80.0 lbs	188 mR/hr	1.5 mR/hr
C1	B3669	54.4 lbs	87.5 lbs	161 mR/hr	1.5 mR/hr
C2	B3675	54.4 lbs	80.2 lbs	152 mR/hr	1.6.mR/hr
D1	B3670	54.6 lbs	87.5 lbs	155 mR/hr	1.4 mR/hr
D2	B3676	54.6 lbs	79.6 lbs	160 mR/hr	1.6 mR/hr
D2	B3673	54.2 lbs	79.1 lbs	175 mR/hr	1.4 mR/hr

On the April 24, 1998, representatives from Engineering, Quality Assurance and Regulatory Affairs jointly accepted the test specimens listed as conforming to the requirements of TP76-X.

Section 4 Normal Conditions of Transport

The four foot free drop tests were conducted at Valley Tree, Groveland, Mass., on April 24, 1998 to inflict preliminary damage to the specimens before undergoing the Hypothetical Accident Conditions Tests.

Specimens used in test setups A1 and A2 were tested at or below -40° C. All other specimens were tested at or above 27° C.

Testing under Test Plan #70 and completion of the checklist under Amersham work instruction WI-E08 had already demonstrated the Model 660 Series projector without the container meets the requirements of 10 CR 71:71.

As noted in Table 3, the tests resulted in minor damage to the test units. There were no changes to the planned orientations and test conditions for the 30-foot free drop tests.

Table 3: Four Foot Free Drop Damage Summary

Test Setup	Serial Number	Orientation	Container Damage	Projector Damage
A1	B3665	BRE	Sheet metal insert slightly bent.	No damage.
A2	B3674	BRE	No damage.	No damage.
A2	B3666	BRE	No damage.	No damage.
B1	B3667	ITP	No damage.	No damage.
B2	B3671	ITP	No damage.	No damage.
C1	B3669	Rear Latch	Sheet metal insert and rear lead panel slightly bent.	No damage.
C2	B3675	Rear Latch	Slight bend in sheet metal insert.	Minor damage to rear end-plate.
D1	B3670	TRE	Lid pushed upwards at impact point, but remained secured.	No damage.
D2	B3676	TRE	No damage.	No damage.
D2	B3673	TRE	No damage.	No damage.

Section 5 Hypothetical Accident Conditions Tests

This section describes the execution of the Hypothetical Accident Conditions tests, results and the assessments made by representatives from Engineering, Regulatory Affairs and Quality Assurance.

5.1 30-Foot Free Drop

The 30-foot free drops were conducted at Valley Tree in Groveland, Mass., on April 24, 1998. All units consisted of a projector in an OPL-660 or OP-660 container. Specimens used as A1 and A2 were tested at or below -40° C. All other specimens were tested at or above 27° C.

Two of the units missed their intended targets – B3674 in Setup A2 and B3676 in Setup D2. Their replacements underwent the four-foot and 30-foot free drops using the same orientations and tests conditions. The replacements and other specimens hit their respective targets. The 30-foot free drop test met the requirements of Test Plan #76 and 10 CFR 71.73(1)

Table 4 lists the damage as a result of the 30-foot free drop tests. As the table indicates, the tests resulted in minor damage to the test units. The container latch opened on the majority of drops. As a result, the tests setups for the puncture and thermal portions of the test sequence were changed to test only the projectors.

Table 4: 30-Foot Free Drop Damage Summary

Test Setup	Serial Number	Orientation	Additional Container Damage	Additional Projector Damage
A1	B3665	BRE	Sheet metal insert has impression of the lock.	No damage.
A2	B3674	BRE	Missed target. Testing discontinued. Replaced by B3666.	
A2	B3666	BRE	Impact surface crushed. Sheet insert bent at rear.	No damage.
B1	B3667	ITP	Lid came off on impact. Wood insert and top foam insert slightly damaged.	Slight bend to rear end-plate. Handle cracked and bent.
B2	B3671	ITP	Lid came off at impact. Wood insert and foam cracked.	Rear-right handle screw broke. Lock assembly compressed slightly.

Table 4: 30-Foot Free Drop Damage Summary (Continued)

Test Setup	Serial Number	Orientation	Additional Container Damage	Additional Projector Damage
C1	B3669	Rear Latch	Rear latch difficult to open. Opposite latch released and lid opened approximately 6 inches.	Rear end-plate dimpled at lock.
C2	B3675	Rear Latch	Rear latch bent. Slight depression in center of box. Sheet metal insert bent.	Slight rear end-plate bow at lock.
D1	B3670	TRE	Wood insert damaged; bracket and latches bent; foam pulled from glued surface.	End-plates bent; lost plunger lock box.
D2	B3676	TRE	Missed target. Testing discontinued. Replaced with B3673.	
D2	B3673	TRE	Corner of lid bent. Damage to wood insert. Slight bend to metal insert.	No damage.

5.2 Puncture Test

The puncture tests were conducted at Valley Tree in Groveland, Mass., on April 24, 1998. All units were tested without their containers. Specimens used as A1 and A2 were tested at or below -40° C. All other specimens were tested at or above 27° C. Because the units were removed from the containers, the test setups used the orientations called out in Figure 2 on page 4.

All units hit their respective targets. The puncture tests met the requirements of Test Plan #76 and 10 CFR 71.73(3).

Table 5 lists the puncture test damage for the eight specimens. As the table indicates, there was no significant damage to any of the projectors.

Table 5: Puncture Test Damage Summary

Test Setup	Serial Number	Orientation (Figure 2)	Additional Projector Damage
A1	B3665	BRE	Scuffing on impact surface.
A2	B3666	BRE	No damage.
B1	B3667	NTP	Indentation on bottom of unit; two attempts.
B2	B3671	NTP	Puncture bar impression at impact point.
C1	B3669	Lock Assembly	Plunger lock box came off. Scuffed lock cover. Rear end-plate bowed at lock.

Table 5: Puncture Test Damage Summary (Continued)

Test Setup	Serial Number	Orientation (Figure 2)	Additional Projector Damage
C2	B3675	Lock Assembly	Rear end-plate dimpled.
D1	B3670	BRE	Scuffed at bottom rear edge.
D2	B3673	BRE	Scuffed at bottom rear edge.

5.3 Intermediate Test Inspection

Table 6 describes the source tube damage determined by radiograph after the puncture test. Source tube connections were engaged at both ends for all test specimens. Due to source tube damage on test specimens B3667 and B3671 (Setups B1 and B2), no attempt was made to measure the source location or profile these devices prior to completion of the thermal test. All other test specimens were profiled. Profile measurements demonstrated that there was no reason to discontinue testing.

Table 6: Pre-Thermal Source Tube Damage Summary

Test Setup	Serial Number	Source Tube Connection to Front End-Plate	Source Tube Connection to Rear End-Plate
A1	B3665	No damage	No damage
A2	B3666	No damage	No damage
B1	B3667	0.19-inch offset bend	0.06-inch offset bend
B2	B3671	0.19-inch offset bend	0.19-inch offset bend
C1	B3669	No damage	0.12-inch compressed end
C2	B3675	No damage	0.12-inch compressed end
D1	B3670	No damage	0.09-inch offset bend
D2	B3673	No damage	0.09-inch offset bend

5.4 Thermal Tests

The thermal tests were conducted at the Manufacturing Sciences test facility at Oak Ridge, Tenn., on April 29, 1998. Test specimen B3665, B3671, B3675, and B3670 were selected for the thermal test because they had the most source tube and exterior damage for their respective setup.

All four projectors were tested in the normal transport position (NTP orientation) and without the protection of the steel container.

The thermal tests met the requirements of Test Plan #76 and 10 CFR 71.73(4).

Radiographs taken immediately after the thermal test revealed that the shield in all four test specimens had sagged during the thermal test, but that the source tube was still connected to the end-plate at each end. Table 7 lists the thermal test damage for the four test specimen.

Table 7: Thermal Test Damage Summary

Test Setup	Serial Number	Orientation	Additional External Damage	Additional Source Tube Damage
A1	B3665	NTP	Handle melted. Scarring on exterior from high temperatures.	Shield sagged 0.06 inches.
B2	B3671			
C2	B3675			
D1	B3670			

5.5 Final Test Inspection

Final test inspection was performed on the four test specimen at Amersham's Burlington facility on May 1, 1998. The final inspection consisted of profile measurements taken of the four test specimens. Radiographs and source location measurements were taken prior to the profile measurements to ensure the source and shield positions were the same as those after the thermal test.

Table 8 describes the findings from the radiograph examinations.

Table 8: Post-Transport Source Tube Damage Summary

Test Setup	Serial Number	Additional Source Tube Dislocations
A1	B3665	None
B2	B3671	None
C2	B3675	0.12 inches
D1	B3670	None

Table 9: Source Location Measurements

Test Setup	Serial Number	Test Specimen Acceptance	Final Test Inspection	Change
A1	B3665	5.73 inches	5.92 inches	0.19 inches
B2	B3671	5.79 inches	5.91 inches	0.12 inches
C2	B3675	5.72 inches	5.92 inches	0.20 inches
D1	B3670	5.74 inches	5.96 inches	0.22 inches

The source would have to move more than two inches from its ideal shielded position to emit radiation levels above 1R/hr at a meter (assuming there was no shield degradation). As shown in Table 9, the largest source movement was only 0.22 inches.

Based on profiling conducted during final test inspection, all units were well within the 1 R/hr at one meter from the package surface. The highest reading from all four units was 0.0039 R/hr at one meter.

Table 10 shows the maximum radiation levels measured in these profiles. The readings have been corrected for maximum capacity. The Radiation Profile Worksheets are included in Appendix A.

Table 10: Maximum Radiation Measured During Final Test Inspection

Test Setup	Serial Number	Package Surface	At One Meter
A1	B3665	246 mR/hr	3.4 mR/hr
B2	B3671	338 mR/hr	3.9 mR/hr
C2	B3675	323 mR/hr	2.7 mR/hr
D1	B3670	231 mR/hr	2.6 mR/hr

Section 6 Conclusions

Based on the testing performed under Test Plan #76, the representatives from Engineering, Quality Assurance and Regulatory Affairs jointly made the following conclusions:

- The testing met the requirements of Test Plan#76 and 10 CFR 71.
- The first objective of removing the projector from the box was accomplished in the 30-foot free drop (Section 5.1 on page 9). As a result, we were able to attack the projector directly in subsequent tests.
- The second objective of moving the source from its ideal shielded position was not met as evidenced by source location measurements reported in Table 9 and the radiation profile results in Table 10.
- The third objective of damaging an end-plate enough to open a gap between an end-plate and the projector shell was not met as shown by damage summary in the Table 7 and the radiation profile results in Table 10.
- The Model OPL-660 and Model OP-660 transport packages meet NRC requirements for Type B(U) packages, as demonstrated by the successful completion of the hypothetical Accident Conditions tests covered in this report, as well as the additional analysis for general conditions for all packages and normal conditions of transport that were performed and are discussed in the Safety Analysis Report.

Section 7 Test Specimen Photographs

This section includes photographs of four test specimens taken at various points in the test sequence. They are included here to show exterior damage sustained by the units.

Serial Number B3665, Setup A1

Right: Immediately after the four-foot drop

Lower left: After 30-foot drop

Lower right: After puncture test

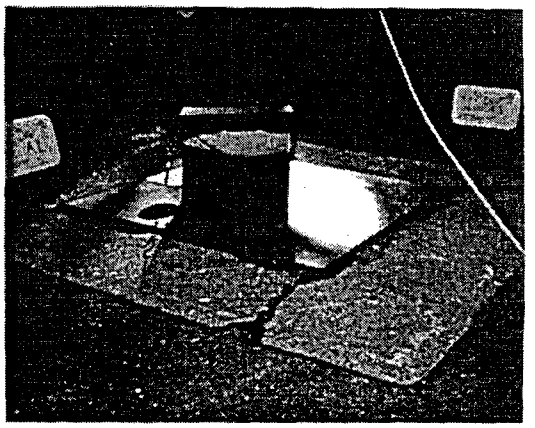

B 3665 A1 24 Apr 98
After 4 foot drop CMR

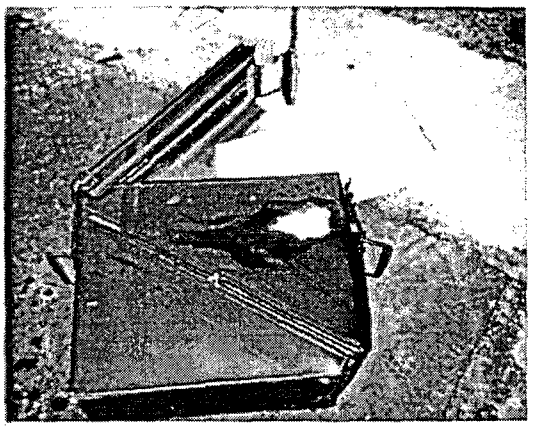

B 3665 CMR
After 30 foot drop 24 Apr 98

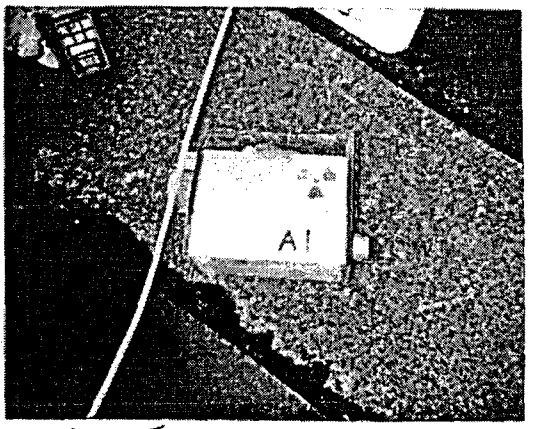

A1 B 3665 24 Apr 98
After Puncture CMR

Serial Number B3665, Setup A1 (cont'd)

Left: Immediately before the thermal test

Right: Immediately after the thermal test

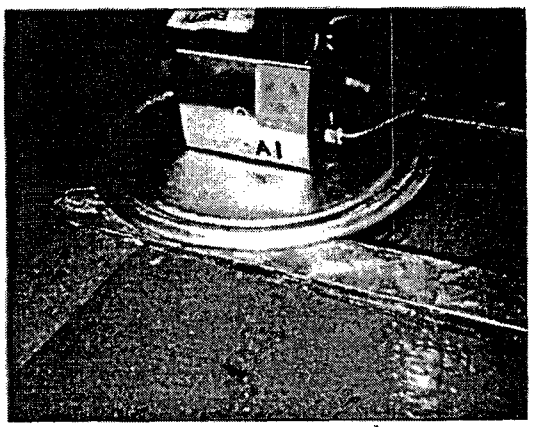

A1 B3665 at Mfg. Sciences
Befor Thermal KNA 29 APR 98

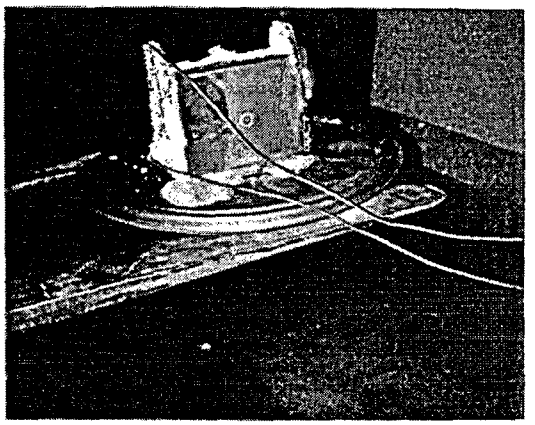

A1 B3665 at Mfg. Sciences
After Thermal KNA 29 APR 98

Serial Number B3671, Setup B2

Right: Immediately after the four-foot drop

Lower left: After 30-foot drop

Lower right: After puncture test

After 4' drop B 3671 B 2
24 APR 98

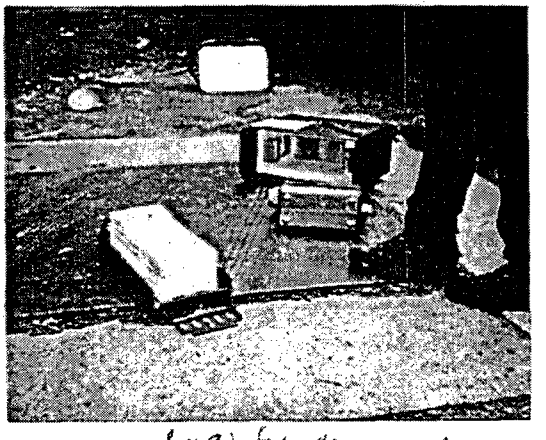

B3671 after 30 foot drop B 2
CMR 24 April 98

B 2 B3671
After Puncture TEST CMR

Serial Number B3671, Setup B2 (cont'd)

Left: Immediately before the thermal test

Right: Immediately after the thermal test

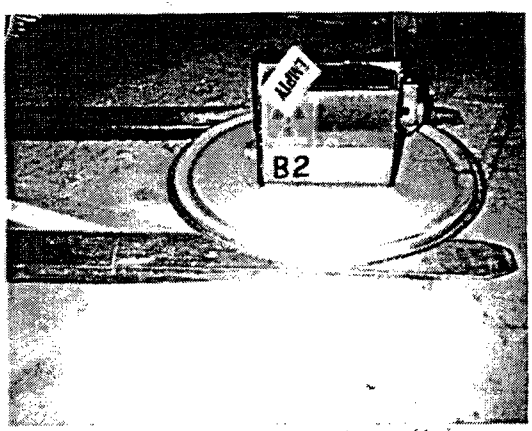

B2 B3671 out Mfg Scanner
Before Thermal TP#76 29 APR 98

B2 B3671 At Mfg Scanner
After Thermal

Serial Number B3369, Setup C1, and B3675, Setup C2

Upper right: C2 immediately after the four-foot drop

Left: C2 after 30-foot drop

Lower right: C1 after puncture test

Specimen B3675 (Setup C2) was not photographed immediately after the puncture test. A photo of B3369 (Setup C1), which sustained equivalent damage, is included.

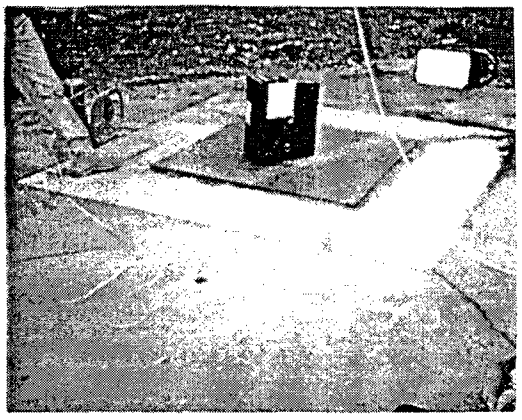

B3675 C2 [illegible]
After 4 foot drop [illegible]

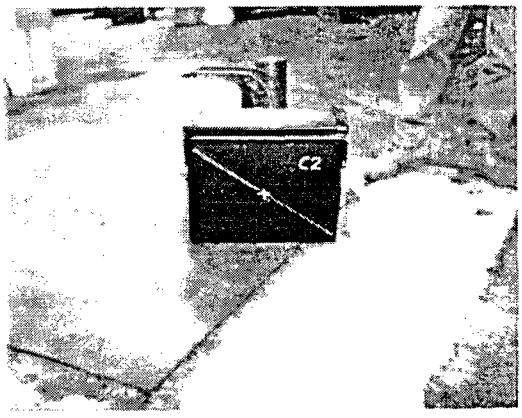

B3675 C2 [illegible]
After 30 foot drop [illegible]

[illegible] B3369 [illegible]
After puncture [illegible]

Serial Number B3369, Setup C1, and B3675, Setup C2 (cont'd)

Left: C2 immediately before the thermal test

Right: C2 immediately after the thermal test

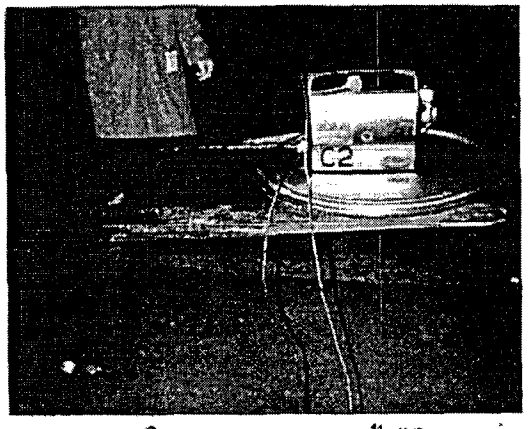

C2 B3675 At Mfg. Service
Before Thermal KNA 29 APR 98

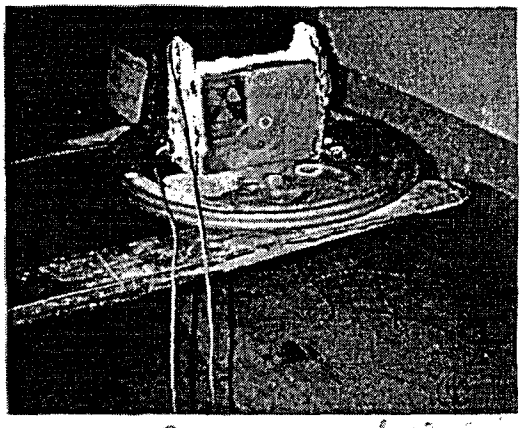

C2 B3675 At Mfg. Service
After Thermal KNA 29 APR 98

Serial Number B3670, Setup D1, and B3676, Setup D2

Upper right: D1 immediately after the four-foot drop

Left: D2 after 30-foot drop

Lower right: D1 after puncture test

Specimen B3670 (Setup D1) was not photographed immediately after the 30-foot drop. A photo of B3676 (Setup D2), which sustained equivalent damage, is included instead.

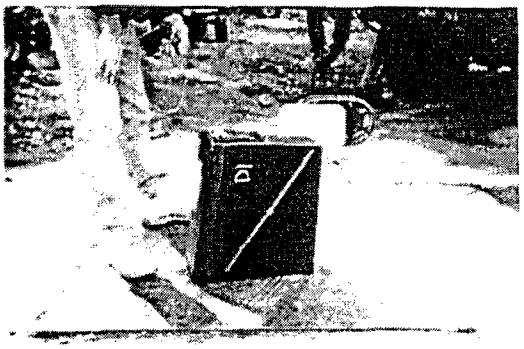

B 3670 D1 24 Apr 98
After 4 foot drop cmr

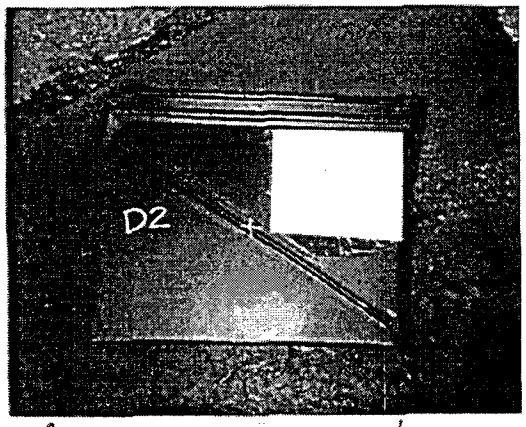

B3676 D2 24 Apr 98
After 30 foot drop cmr

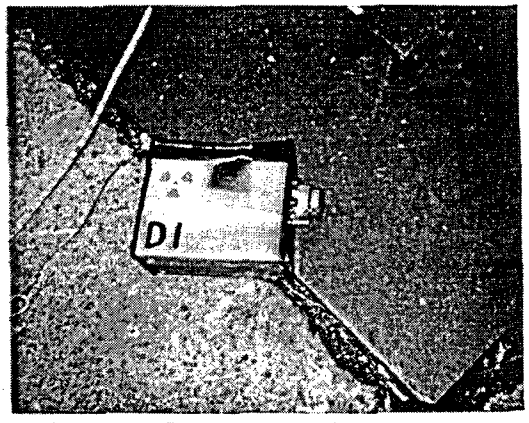

B3670 D1 cmr
After Puncture Test 24 Apr 98

Serial Number B3670, Setup D1, and B3676, Setup D2(cont'd)

Left: D1 immediately before the thermal test

Right: D1 immediately after the thermal test

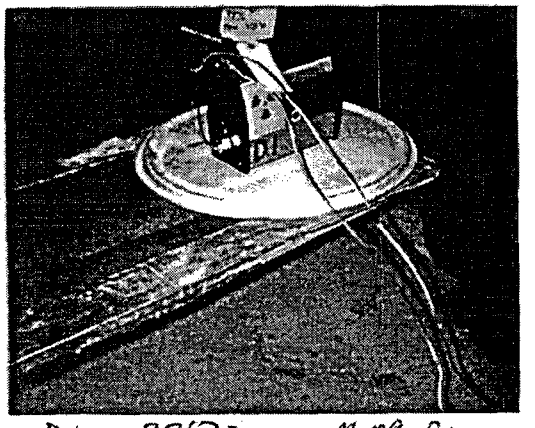

D1 B3670 At Mfg Science
Before Thermal
Kmt 29 APR 98

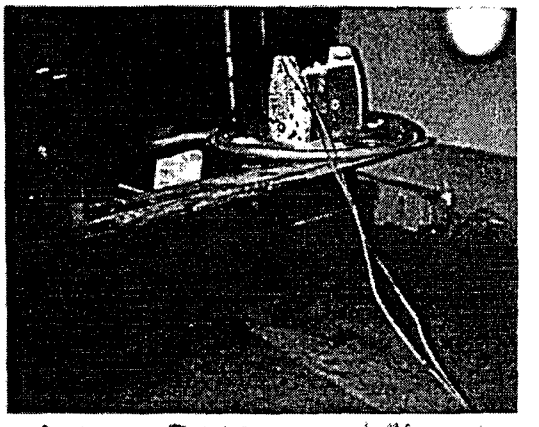

D1 B3670 At Mfg Science
After Thermal
Kmt 29 APR 98

Appendix A: Radiation Profile Worksheets

SENTINEL

SHIELDING PROFILE AND INSPECTION FORM

TP-T6

Model: B660 Serial Number: B3665 Radionuclide: Ir-192 Max.Capacity: 140 Ci

Shield Data

Shield Heat#: 37227 B-1 | Mass of Shield: 38.25 Lbs. | Lot #: 98088-2

Initial Profile

Source Model: 424-9 Source SN: C5840 Activity: 115.2 Ci

Survey Inst.: AN/PDR27T SN: SM392401 Date Cal.: 18 March 98 Date Due: 18 March 99

Surface	Observed Intensity mR/hr	Surface Correction Factor		Adjusted Intensity mR/hr
Top	⚠	1.16	Capacity Correction Factor: 1.21	⚠
Right		1.28		
Front		1.13		
Left		1.28		
Rear		1.13		
Bottom		1.19		

Inspector: ⚠ Date: 1 April 98 NCR #: N/A

Final Profile

Source Model: T10163 Source SN: X0018 Activity: 106.6 Ci | Mass of Device: N/A Lbs.

Survey Inst.: AN/PDR27T SN: SM392401 Date Cal.: 18 March 98 Date Due: 18 March 99

Surface	Observed Intensity mR/hr: At Surface	Surface Corr. Factor	At One Meter		Adjusted Intensity mR/hr: At Surface	At One Meter
Top	80	1.16	.7	Capacity Correction Factor: 1.31	122	.9
Right	100	1.28	.5		168	.7
Front	100	1.13	.9		148	1.2
Left	70	1.28	.4		117	.5
Rear	*260	1.13	2.3		*385	3.0
Bottom	60	1.19	.4		94	.5

Inspector: MBeyl Date: 27 April 98 NCR #: N/A

QI6-1/1

Comments: *Center of Dust Cover
⚠ See Original SPIF Attached

Amersham QSA

ENTINEL

SHIELDING PROFILE AND INSPECTION FORM

Model: B660 TestSpec, Serial Number: B3665 Radionuclide: Ir 192 Max.Capacity: 140 Ci

Shield Data

Shield Heat#: 37227 B-1 | Mass of Shield: 38.25 Lbs. | Lot #: 98083-2

Initial Profile

Source Model: 424-9 Source SN: C5840 Activity: 115.2 Ci

Survey Inst.: AN/PDR27T SN: SM392401 Date Cal.: 18 March 98 Date Due: 18 March 99

Surface	Observed Intensity mR/hr	Surface Correction Factor		Adjusted Intensity mR/hr
Top	75	1.16	Capacity Correction Factor: 1.21	105
Right	110	1.28		170
Front	110	1.13		150
Left	50	1.28		77
Rear	100	1.13		137
Bottom	100	1.19		144

Inspector: MBzyl Date: 1 April 98 NCR #: N/A

Final Profile

Source Model: 424-9 Source SN: C5964 Activity: 117.9 Ci | OHAUS #35014 MB 17 Apr 98 Mass of Device: ~~39.30~~ 54.30 Lbs.

Survey Inst.: AN/PDR27T SN: SM392401 Date Cal.: 18 March 98 Date Due: 18 March 99

Surface	Observed Intensity mR/hr: At Surface	Surface Corr. Factor	At One Meter		Adjusted Intensity mR/hr: At Surface	At One Meter
Top	80	1.16	.7	Capacity Correction Factor: 1.18	110	.8
Right	120	1.28	.8		181	.9
Front	90	1.13	1.2		120	1.4
Left	75	1.28	.5		113	.6
Rear	105	1.13	1.2		140	1.4
Bottom	75	1.19	.7		105	.8

Inspector: MBzyl Date: 17 April 98 NCR #: N/A

Q16-1/1

Comments: .202 w/ #135

Amersham QSA

SENTINEL

SHIELDING PROFILE AND INSPECTION FORM

TP-76 A1

Model: B660 Serial Number: B3665 Radionuclide: Ir-192 Max.Capacity: 140 Ci

Shield Data

Shield Heat#: _____ Mass of Shield: _____ Lbs. Lot #: _____

Initial Profile

Source Model: _____ Source SN: _____ Activity: _____ Ci

Survey Inst.: _____ SN: _____ Date Cal.: _____ Date Due: _____

Surface	Observed Intensity mR/hr	Surface Correction Factor		Adjusted Intensity mR/hr
Top			Capacity Correction Factor: _____	
Right				
Front				
Left				
Rear				
Bottom				

Inspector: _____ Date: _____ NCR #: _____

Final Profile

Source Model: 87501 Cap Source SN: X0018 Activity: 102.7 Ci Mass of Device: N/A Lbs.

Survey Inst.: AN/PDR27T SN: SM392401 Date Cal.: 18 March 98 Date Due: 18 March 99

Surface	Observed Intensity mR/hr				Adjusted Intensity mR/hr	
	At Surface	Surface Corr. Factor	At One Meter		At Surface	At One Meter
Top	75	1.16	.8	Capacity Correction Factor: 1.36	118	1.1
Right	85	1.28	.8		148	1.1
Front	115	1.13	2.5		177	3.4
Left	50	1.28	.6		87	8
Rear	* 160	1.13	1.5		246	2.0
Bottom	70	1.19	.7		113	1.0

Inspector: MBzyd Date: 1 May 98 NCR #: N/A

QI6-1/1

Comments: After Thermal Testing
*Center of Dust Cover

Amersham QSA

SENTINEL

SHIELDING PROFILE AND INSPECTION FORM

Model: B660 TestSpec, Serial Number: B3671 Radionuclide: Ir 192 Max.Capacity: 140 Ci

Shield Data

Shield Heat#: 37239B-1 | Mass of Shield: 38.20 Lbs. | Lot #: 98083-2

Initial Profile

Source Model: 424-9 Source SN: C5840 Activity: 115.2 Ci

Survey Inst.: AN/PDR27T SN: SM392401 Date Cal.: 18 March 98 Date Due: 18 March 99

Surface	Observed Intensity mR/hr	Surface Correction Factor		Adjusted Intensity mR/hr
Top	100	1.16	Capacity Correction Factor: 1.21	140
Right	115	1.28		178
Front	100	1.13		137
Left	65	1.28		101
Rear	110	1.13		150
Bottom	75	1.19		108

Inspector: MBayol Date: 1 April 98 NCR #: N/A

Final Profile

Source Model: 424-9 Source SN: C5964 Activity: 116.8 Ci | OHAUS #35014 Mass of Device: 54.25 Lbs.

Survey Inst.: AN/PDR27T SN: SM392401 Date Cal.: 18 March 98 Date Due: 18 March 99

Surface	Observed Intensity mR/hr: At Surface	Surface Corr. Factor	At One Meter		Adjusted Intensity mR/hr: At Surface	At One Meter
Top	90	1.16	.7	Capacity Correction Factor: 1.19	124	.8
Right	85	1.28	.6		129	.7
Front	75	1.13	1.0		101	1.2
Left	90	1.28	.6		137	.7
Rear	140	1.13	1.3		188	1.5
Bottom	75	1.19	.7		106	.8

Inspector: MBayol Date: 18 April 98 NCR #: N/A

Q16-1/1

Comments: .197 w/#135

Amersham QSA

SENTINEL

SHIELDING PROFILE AND INSPECTION FORM

TP-76 B2

Model: B660 Serial Number: B3671 Radionuclide: Ir-192 Max.Capacity: 140 Ci

Shield Data

Shield Heat#: _____ Mass of Shield: _____ Lbs. Lot #: _____

Initial Profile

Source Model: _____ Source SN: _____ Activity: _____ Ci

Survey Inst.: _____ SN: _____ Date Cal.: _____ Date Due: _____

Surface	Observed Intensity mR/hr	Surface Correction Factor		Adjusted Intensity mR/hr
Top			Capacity Correction Factor: _____	
Right				
Front				
Left				
Rear				
Bottom				

Inspector: _____ Date: _____ NCR #: _____

Final Profile

Source Model: 87581 Cap Source SN: X0018 Activity: 102.7 Ci Mass of Device: N/A Lbs.

Survey Inst.: AN/PDR27T SN: SM392401 Date Cal.: 18 March 98 Date Due: 18 March 99

Surface	Observed Intensity mR/hr: At Surface	Surface Corr. Factor	At One Meter		Adjusted Intensity mR/hr: At Surface	At One Meter
Top	100	1.16	1.0	Capacity Correction Factor: 1.36	158	1.4
Right	70	1.28	.8		122	1.1
Front	210*	1.13	2.0		323	2.7
Left	75	1.28	.6		131	.8
Rear	140	1.13	1.5		215	2.0
Bottom	50	1.19	.7		81	1.0

Inspector: [illegible] Date: 1 May 98 NCR #: N/A

016-1/1

Comments: After Thermal Testing

* Front of Storage Hug

Amersham QSA

SENTINEL

SHIELDING PROFILE AND INSPECTION FORM

odel: B660 TestSpec, Serial Number: B3675 Radionuclide: Ir 192 Max.Capacity: 140 Ci

Shield Data

Shield Heat#: 37248.B-1 | Mass of Shield: 38.40 Lbs. | Lot #: 98083-2

Initial Profile

Source Model: 424-9 Source SN: C5840 Activity: 115.2 Ci

Survey Inst.: AN/PDR27T SN: SM392401 Date Cal.: 18March98 Date Due: 18March99

Surface	Observed Intensity mR/hr	Surface Correction Factor		Adjusted Intensity mR/hr
Top	60	1.16	Capacity Correction Factor: 1.21	116
Right	75	1.28		116
Front	90	1.13		123 ~~157~~ MB 1 April 98
Left	50	1.28		77
Rear	110	1.13		150
Bottom	110	1.19		158

Inspector: MBrynd Date: 1 April 98 NCR #: N/A

Final Profile

Source Model: 424-9 Source SN: C5964 Activity: 114.6 Ci | OHAUS #35014 Mass of Device: 54.40 Lbs.

Survey Inst.: AN/PDR27T SN: SM392401 Date Cal.: 18March98 Date Due: 18March99

Surface	Observed Intensity mR/hr: At Surface	Surface Corr. Factor	At One Meter		Adjusted Intensity mR/hr: At Surface	At One Meter
Top	60	1.16	.6	Capacity Correction Factor: 1.22	85	.7
Right	85	1.28	.6		133	.7
Front	65	1.13	.7		90	.9
Left	70	1.28	.5		109	.6
Rear	110	1.13	1.3		152	1.6
Bottom	100	1.19	.8		145	1.0

Inspector: MBrynd Date: 20 April 98 NCR #: N/A

Q16-1/1

Comments: .129 w/#135

Amersham QSA

SENTINEL

SHIELDING PROFILE AND INSPECTION FORM

TP-76

Model: B660 Serial Number: B3675 Radionuclide: Ir-192 Max.Capacity: 140 Ci

Shield Data

Shield Heat#: 372488-1	Mass of Shield: 38.40 Lbs.	Lot #: 98088-2

Initial Profile

Source Model: 424-9 Source SN: C5840 Activity: 115.2 Ci

Survey Inst.: AN/PDR27T SN: SM392401 Date Cal.: 18 March 98 Date Due: 18 March 99

Surface	Observed Intensity mR/hr	Surface Correction Factor		Adjusted Intensity mR/hr
Top	*	1.16	Capacity Correction Factor: 1.21	*
Right		1.28		
Front		1.13		
Left		1.28		
Rear		1.13		
Bottom		1.19		

Inspector: * Date: 1 April 98 NCR #: N/A

Final Profile

Source Model: T10163 Source SN: X0018 Activity: 106.6 Ci Mass of Device: N/A Lbs.

Survey Inst.: AN/PDR27T SN: SM392401 Date Cal.: 18 March 98 Date Due: 18 March 99

Surface	Observed Intensity mR/hr: At Surface	Surface Corr. Factor	At One Meter		Adjusted Intensity mR/hr: At Surface	At One Meter
Top	40	1.16	.4	Capacity Correction Factor: 1.31	61	.5
Right	70	1.28	.5		117	.7
Front	95	1.13	1.0		141	1.3
Left	70	1.28	.4		117	.5
Rear	70	1.13	.8		104	1.0
Bottom	95	1.19	.6		148	.8

Inspector: MRBeyl Date: 27 April 98 NCR #: N/A

QI6-1/1

Comments: * See Original SPIF Attached

Amersham QSA

SENTINEL

SHIELDING PROFILE AND INSPECTION FORM

TP-76 C2

Model: B660 Serial Number: B3675 Radionuclide: Ir-192 Max.Capacity: 140 Ci

Shield Data

Shield Heat#: _____ Mass of Shield: _____ Lbs. Lot #: _____

Initial Profile

Source Model: _____ Source SN: _____ Activity: _____ Ci

Survey Inst.: _____ SN: _____ Date Cal.: _____ Date Due: _____

Surface	Observed Intensity mR/hr	Surface Correction Factor		Adjusted Intensity mR/hr
Top			Capacity Correction Factor: _____	
Right				
Front				
Left				
Rear				
Bottom				

Inspector: _____ Date: _____ NCR #: _____

Final Profile

Source Model: 87501 Cap Source SN: X0018 Activity: 102.7 Ci Mass of Device: N/A Lbs.

Survey Inst.: AN/PDR27T SN: SM392401 Date Cal.: 18 March 98 Date Due: 18 March 99

Surface	Observed Intensity mR/hr: At Surface	Surface Corr. Factor	At One Meter		Adjusted Intensity mR/hr: At Surface	At One Meter
Top	65	1.16	.9	Capacity Correction Factor: 1.36	103	1.2
Right	70	1.28	.7		122	1.0
Front	* 150	1.13	1.7		231	2.3
Left	75	1.28	.8		131	1.1
Rear	110	1.13	1.9		169	2.6
Bottom	80	1.19	.7		129	1.0

Inspector: MRPlud Date: 1 May 98 NCR #: N/A

QI6-1/1

Comments: After Thermal Testing

* Front of Storage Plug

Amersham QSA

SENTINEL

SHIELDING PROFILE AND INSPECTION FORM

Model: B660 TestSpec, Serial Number: B3670 Radionuclide: Ir-192 Max.Capacity: 140 Ci

Shield Data

Shield Heat#: 37236B-2 | Mass of Shield: 38.35 Lbs. | Lot #: 98083-2

Initial Profile

Source Model: 424-9 Source SN: C5840 Activity: 115.2 Ci

Survey Inst.: AN/PDR27T SN: SM392401 Date Cal.: 18March98 Date Due: 18March99

Surface	Observed Intensity mR/hr	Surface Correction Factor		Adjusted Intensity mR/hr
Top	95	1.16	Capacity Correction Factor: 1.21	133
Right	95	1.28		147
Front	110	1.13		150
Left	65	1.28		161
Rear	100	1.13		137
Bottom	80	1.19		115

Inspector: MBoyd Date: 1 April 98 NCR #: N/A

Final Profile

Source Model: 424-9 Source SN: C5964 Activity: 116.8 Ci | OHAUS #35014 Mass of Device: 54.60 Lbs.

Survey Inst.: AN/PDR27T SN: SM392401 Date Cal.: 18March98 Date Due: 18March99

Surface	Observed Intensity mR/hr: At Surface	Surface Corr. Factor	At One Meter		Adjusted Intensity mR/hr: At Surface	At One Meter
Top	75	1.16	.6	Capacity Correction Factor: 1.19	104	.7
Right	80	1.28	.7		122	.8
Front	75	1.13	1.0		101	1.2
Left	75	1.28	.6		114	.7
Rear	115	1.13	1.2		155	1.4
Bottom	75	1.19	.8		106	1.0

Inspector: MBoyd Date: 18 April 98 NCR #: N/A

Q16-1/1

Comments: .199 w/#135

Amersham QSA

SENTINEL

SHIELDING PROFILE AND INSPECTION FORM

TP-76

Model: B660 Serial Number: B3670 Radionuclide: Ir-192 Max.Capacity: 140 Ci

Shield Data

Shield Heat#: 37236B-2 | Mass of Shield: 38.35 Lbs. | Lot #: 98088-7

Initial Profile

Source Model: 424-9 Source SN: C5840 Activity: 115.2 Ci

Survey Inst.: AN/PDR27T SN: SM392401 Date Cal.: 18 March 98 Date Due: 18 March 99

Surface	Observed Intensity mR/hr	Surface Correction Factor		Adjusted Intensity mR/hr
Top	*	1.16	Capacity Correction Factor: 1.21	*
Right		1.28		
Front		1.13		
Left		1.28		
Rear		1.13		
Bottom		1.19		

Inspector: * Date: 1 April 98 NCR #: N/A

Final Profile

Source Model: T10163 Source SN: X0018 Activity: 106.6 Ci | Mass of Device: N/A Lbs.

Survey Inst.: AN/PDR27T SN: SM392401 Date Cal.: 18 March 98 Date Due: 18 March 99

Surface	Observed Intensity mR/hr: At Surface	Surface Corr. Factor	At One Meter		Adjusted Intensity mR/hr: At Surface	At One Meter
Top	70	1.16	.6	Capacity Correction Factor: 1.31	106	.8
Right	70	1.28	.5		117	.7 ~~.6~~ MRB 27 April 98
Front	85	1.13	1.1 ~~.5~~ MRB 27 April 98		126	1.4
Left	80	1.28	.5		134	.7
Rear	125	1.13	1.1		185	1.4
Bottom	65	1.19	.5		101	.7

Inspector: MRB Date: 27 April 98 NCR #: N/A

QI6-1/1

Comments: * See Original SPIF Attached

Amersham QSA

SENTINEL

KNA 4MAY98

SHIELDING PROFILE AND INSPECTION FORM

TP-76 ~~B2~~ D1

Model: B660 Serial Number: B3670 Radionuclide: Ir-192 Max.Capacity: 140 Ci

Shield Data

Shield Heat#: _____ Mass of Shield: _____ Lbs. Lot #: _____

Initial Profile

Source Model: _____ Source SN: _____ Activity: _____ Ci

Survey Inst.: _____ SN: _____ Date Cal.: _____ Date Due: _____

Surface	Observed Intensity mR/hr	Surface Correction Factor		Adjusted Intensity mR/hr
Top			Capacity Correction Factor: _____	
Right				
Front				
Left				
Rear				
Bottom				

Inspector: _____ Date: _____ NCR #: _____

Final Profile

Source Model: 87501 Cap Source SN: X0018 Activity: 102.7 Ci Mass of Device: N/A Lbs.

Survey Inst.: AN/PDR27T SN: SM392401 Date Cal.: 18 March 98 Date Due: 18 March 99

Surface	Observed Intensity mR/hr: At Surface	Surface Corr. Factor	At One Meter		Adjusted Intensity mR/hr: At Surface	At One Meter
Top	60	1.16	1.0	Capacity Correction Factor: 1.36	95	1.4
Right	70	1.28	.8		122	1.1
Front	* 160	1.13	2.1		246	2.9
Left	70	1.28	.8		122	1.1
Rear	(*) 220	1.13	2.1		338	2.9
Bottom	60	1.19	.6		97	.9

Inspector: MBeyd Date: 1 May 98 NCR #: N/A

Q16-1/1

Comments: After Thermal Testing
* Front of Storage Plug (*) Center of ~~Storage Plug~~ Dirt Cover
MB 4 May 98

Amersham QSA

SENTINEL

SHIELDING PROFILE AND INSPECTION FORM

Model: B660 TestSpec, Serial Number: B3667 Radionuclide: Ir 192 Max.Capacity: 140 Ci

Shield Data

Shield Heat#: 37234B-1 | Mass of Shield: 38.35 Lbs. | Lot #: 98083-2

Initial Profile

Source Model: 424-9 Source SN: C5840 Activity: 115.2 Ci

Survey Inst.: AN/PDR27T SN: SM392401 Date Cal.: 18 March 98 Date Due: 18 March 99

Surface	Observed Intensity mR/hr	Surface Correction Factor		Adjusted Intensity mR/hr
Top	75	1.16	Capacity Correction Factor: 1.21	105
Right	95	1.28		147
Front	110	1.13		150
Left	65	1.28		101
Rear	100	1.13		137
Bottom	85	1.19		122

Inspector: MBoyd Date: 1 April 98 NCR #: N/A

Final Profile

Source Model: 424-9 Source SN: C5964 Activity: 117.9 Ci | OHAUS #35014 DJB 17 April 98 Mass of Device: ~~38.25~~ 54.35 Lbs.

Survey Inst.: AN/PDR27T SN: SM392401 Date Cal.: 18 March 98 Date Due: 18 March 99

Surface	Observed Intensity mR/hr: At Surface	Surface Corr. Factor	At One Meter		Adjusted Intensity mR/hr: At Surface	At One Meter
Top	70	1.16	.7	Capacity Correction Factor: 1.18	96	.8
Right	75	1.28	.7		113	.8
Front	85	1.13	1.2		113	1.4
Left	70	1.28	.6		106	.7
Rear	110	1.13	1.3		147	1.5
Bottom	80	1.19	.8		112	.9

Inspector: MBoyd Date: 17 April 98 NCR #: N/A

QI6-1/1

Comments: .197 w/ #135

Amersham QSA

SENTINEL

SHIELDING PROFILE AND INSPECTION FORM

TP-76

Model: B660 Serial Number: B3666 Radionuclide: Ir-192 Max.Capacity: 140 Ci

Shield Data

Shield Heat#: 37227B-2 | Mass of Shield: 38.60 Lbs. | Lot #: 98088-2

Initial Profile

Source Model: 424-9 Source SN: C5840 Activity: 115.2 Ci

Survey Inst.: AN/PDR27T SN: SM392401 Date Cal.: 18 March 98 Date Due: 18 March 99

Surface	Observed Intensity mR/hr	Surface Correction Factor		Adjusted Intensity mR/hr
Top	*	1.16	Capacity Correction Factor: 1.21	*
Right		1.28		
Front		1.13		
Left		1.28		
Rear		1.13		
Bottom		1.19		

Inspector: * Date: 1 April 98 NCR #: N/A

Final Profile

Source Model: T10163 Source SN: X0018 Activity: 106.6 Ci | Mass of Device: N/A Lbs.

Survey Inst.: AN/PDR27T SN: SM392401 Date Cal.: 18 March 98 Date Due: 18 March 99

Surface	Observed Intensity mR/hr: At Surface	Surface Corr. Factor	At One Meter		Adjusted Intensity mR/hr: At Surface	At One Meter
Top	70	1.16	.6	Capacity Correction Factor: 1.31	106	.8
Right	90	1.28	.5		151	~~.6~~ .7 mcB 27 April 98
Front	105	1.13	1.2		155	1.6
Left	65	1.28	.4		109	.5
Rear	105	1.13	.9		155	1.2
Bottom	55	1.19	.5		86	.7

Inspector: MCBygal Date: 27 April 98 NCR #: N/A

QI6-1/1

Comments: * See Original SPIF Attached

Amersham QSA

SENTINEL

SHIELDING PROFILE AND INSPECTION FORM

Model: B660 TestSpec, Serial Number: B3666 Radionuclide: Ir 192 Max.Capacity: 140 Ci

Shield Data

Shield Heat#: 37227B-2 | Mass of Shield: 38.60 Lbs. | Lot #: 98083-2

Initial Profile

Source Model: 424-9 Source SN: C5840 Activity: 115.2 Ci

Survey Inst.: AN/PDR27T SN: SM392401 Date Cal.: 18March98 Date Due: 18March99

Surface	Observed Intensity mR/hr	Surface Correction Factor		Adjusted Intensity mR/hr
Top	100	1.16	Capacity Correction Factor: 1.21	140
Right	110	1.28		170
Front	110	1.13		150
Left	65	1.28		101
Rear	100	1.13		137
Bottom	85	1.19		122

Inspector: MBryd Date: 1 April 98 NCR #: N/A

Final Profile

Source Model: 424-9 Source SN: C5964 Activity: 117.9 Ci | MBR 17 April 98 QHAUS #35014 54.60 Mass of Device: ~~39.65~~ Lbs.

Survey Inst.: AN/PDR27T SN: SM392401 Date Cal.: 18March98 Date Due: 18March99

Surface	Observed Intensity mR/hr: At Surface	Surface Corr. Factor	At One Meter		Adjusted Intensity mR/hr: At Surface	At One Meter
Top	85	1.16	.7	Capacity Correction Factor: 1.18	116	.8
Right	110	1.28	.7		166	.8
Front	90	1.13	1.2		120	1.4
Left	90	1.28	.6		136	.7
Rear	130	1.13	1.1		162	1.3
Bottom	70	1.19	.7		98	.8

Inspector: MBryd Date: 17 April 98 NCR #: N/A

Q16-1/1

omments: .202 w/ #135

Amersham QSA

SENTINEL

SHIELDING PROFILE AND INSPECTION FORM

Model: B660 TestSpec, Serial Number: B3669 Radionuclide: Ir 192 Max.Capacity: 140 Ci

Shield Data

Shield Heat#: 37236B-1 | Mass of Shield: 38.30 Lbs. | Lot #: 98083-2

Initial Profile

Source Model: 424-9 Source SN: C5840 Activity: 115.2 Ci

Survey Inst.: AN/PDR27T SN: SM392401 Date Cal.: 18March98 Date Due: 18March99

Surface	Observed Intensity mR/hr	Surface Correction Factor		Adjusted Intensity mR/hr
Top	65	1.16	Capacity Correction Factor: 1.21	91
Right	105	1.28		163
Front	105	1.13		144
Left	60	1.28		93
Rear	115	1.13		157
Bottom	90	1.19		130

Inspector: MDBryel Date: 1 April 98 NCR #: N/A

Final Profile

Source Model: 424-9 Source SN: C5964 Activity: 116.8 Ci | OHAUS #35014 Mass of Device: 54.35 Lbs.

Survey Inst.: AN/PDR27T SN: SM392401 Date Cal.: 18March98 Date Due: 18March99

Surface	Observed Intensity mR/hr: At Surface	Surface Corr. Factor	At One Meter		Adjusted Intensity mR/hr: At Surface	At One Meter
Top	65	1.16	.6	Capacity Correction Factor: 1.19	90	.7
Right	85	1.28	.6		129	.7
Front	85	1.13	1.0		114	1.2
Left	60	1.28	.5		91	.6
Rear	120	1.13	1.3		161	1.5 ~~1.0~~ MDB 18 April 98
Bottom	90	1.19	.8		127	1.0

Inspector: MDBryel Date: 18 April 98 NCR #: N/A

QIG-1/1

Comments: .197 w/#135

Amersham QSA

SENTINEL

SHIELDING PROFILE AND INSPECTION FORM

TP-76

Model: B660 Serial Number: B3669 Radionuclide: Ir-192 Max.Capacity: 140 Ci

Shield Data

Shield Heat#: 37236 B-1 | Mass of Shield: 38.30 Lbs. | Lot #: 98088-2

Initial Profile

Source Model: 424-9 Source SN: C5840 Activity: 115.2 Ci

Survey Inst.: AN/PDR27T SN: SM392401 Date Cal.: 18 March 98 Date Due: 18 March 99

Surface	Observed Intensity mR/hr	Surface Correction Factor		Adjusted Intensity mR/hr
Top		1.16	Capacity Correction Factor: 1.21	
Right		1.28		
Front		1.13		
Left		1.28		
Rear		1.13		
Bottom		1.19		

Inspector: Date: 1 April 98 NCR #: N/A

Final Profile

Source Model: T10163 Source SN: X0018 Activity: 106.6 Ci | Mass of Device: N/A Lbs.

Survey Inst.: AN/PDR27T SN: SM392401 Date Cal.: 18 March 98 Date Due: 18 March 99

Surface	Observed Intensity mR/hr: At Surface	Surface Corr. Factor	At One Meter		Adjusted Intensity mR/hr: At Surface	At One Meter
Top	48	1.16	MRB 27 April 98 ~~.5~~ .4	Capacity Correction Factor: 1.31	61	.5
Right	80	1.28	.5		134	.7
Front	100	1.13	1.5		140	2.0
Left	60	1.28	.4		101	.5
Rear	80	1.13	.9		118	1.2
Bottom	95	1.19	.6		148	.8

Inspector: MRBoyd Date: 27 April 98 NCR #: N/A

Q16-1/1

Comments: See Original SHF Attached

Amersham QSA

SENTINEL

SHIELDING PROFILE AND INSPECTION FORM

Model: B660 TestSpec, Serial Number: B3673 Radionuclide: Ir 192 Max.Capacity: 140 Ci

Shield Data

Shield Heat#: 37244 B-1 | Mass of Shield: 38.25 Lbs. | Lot #: 98083-2

Initial Profile

Source Model: 424-9 Source SN: C5840 Activity: 115.2 Ci

Survey Inst.: AN/PDR27T SN: SM392401 Date Cal.: 18 March 98 Date Due: 18 March 99

Surface	Observed Intensity mR/hr	Surface Correction Factor		Adjusted Intensity mR/hr
Top	85	1.16	Capacity Correction Factor: 1.21	119
Right	95	1.28		147
Front	115	1.13		157
Left	65	1.28		101
Rear	100	1.13		137
Bottom	85	1.19		122

Inspector: [illegible] Date: 1 April 98 NCR #: N/A

Final Profile

Source Model: 424-9 Source SN: C5964 Activity: 116.8 Ci | OHAUS #35014 Mass of Device: 5420 Lbs.

Survey Inst.: AN/PDR27T SN: SM392401 Date Cal.: 18 March 98 Date Due: 18 March 99

Surface	Observed Intensity mR/hr: At Surface	Surface Corr. Factor	At One Meter		Adjusted Intensity mR/hr: At Surface	At One Meter
Top	85	1.16	.7	Capacity Correction Factor: 1.19	117	.8
Right	75	1.28	.5		114	.6
Front	85	1.13	1.0		114	1.2
Left	85	1.28	.6		129	.7
Rear	130	1.13	1.7		175	1.4
Bottom	70	1.19	.7		99	.8

Inspector: [illegible] Date: 18 April 98 NCR #: N/A

Q16-1/1

Comments: .200 w/#135

Amersham QSA

SENTINEL

SHIELDING PROFILE AND INSPECTION FORM

TP-76

Model: B660 Serial Number: B3673 Radionuclide: Ir-192 Max.Capacity: 140 Ci

Shield Data

Shield Heat#: 37244B-1 | Mass of Shield: 38.35 Lbs. | Lot #: 98088-2

Initial Profile

Source Model: 424-9 Source SN: C5840 Activity: 115.2 Ci

Survey Inst.: AN/PDR27T SN: SM392401 Date Cal.: 18 March 98 Date Due: 18 March 99

Surface	Observed Intensity mR/hr	Surface Correction Factor		Adjusted Intensity mR/hr
Top	*	1.16	Capacity Correction Factor: 1.21	*
Right		1.28		
Front		1.13		
Left		1.28		
Rear		1.13		
Bottom		1.19		

Inspector: * Date: 1 April 98 NCR #: N/A

Final Profile

Source Model: T10163 Source SN: X0018 Activity: 106.6 Ci | Mass of Device: N/A Lbs.

Survey Inst.: AN/PDR27T SN: SM392401 Date Cal.: 18 March 98 Date Due: 18 March 99

Surface	Observed Intensity mR/hr: At Surface	Surface Corr. Factor	At One Meter		Adjusted Intensity mR/hr: At Surface	At One Meter
Top	70 ~~105~~	1.16	.6	Capacity Correction Factor: 1.31	106	.8
Right	MCB 22 April 98 80	1.28	.5		134	.7
Front	110	1.13	1.2		134	1.6
Left	65	1.28	.4		109	.5
Rear	105	1.13	1.0		155	1.3
Bottom	65	1.19	.5		101	.7

Inspector: MCBryol Date: 27 April 98 NCR #: N/A

QI6-1/1

Comments: * See Original SPIF Attached

Amersham QSA

Contents

List of Figures, Tables and Worksheets iii

1.0 Background 1

2.0 Transport Package 2

3.0 System Failures and Orientations 3

3.1 Package Orientations 4

3.2 Test Specimen Temperature 5

4.0 Test Specimen 6

5.0 Material and Equipment List 6

6.0 Test Procedure 7

6.1 Roles and Responsibilities 7

6.2 Test Specimen Preparation and Inspection 8

6.3 Four-foot Free Drop Test (10 CFR 71.71 (7)) 8

6.3.1 Four-foot Free Drop Setup 8

6.3.2 Four-foot Drop Orientation for Specimens A1 and A2 10

6.3.3 Four-foot Drop Orientation for Specimens B1 and B2 11

6.3.4 Four-foot Drop Orientation for Specimens C1 and C2 12

6.3.5 Four-foot Drop Orientation for Specimens D1 and D2 13

6.3.6 Four-foot Free Drop Assessment 13

6.4 30-foot Free Drop Test (10 CFR 71.73 (1)) 14

6.4.1 30-foot Free Drop Setup 14

6.4.2 30-foot Drop Orientation for Specimens A1 and A2 15

6.4.3 30-foot Drop Orientation for Specimens B1 and B2 16

6.4.4 30-foot Drop Orientation for Specimens C1 and C2 17

6.4.5 30-foot Drop Orientation for Specimens D1 and D2 18

6.4.6 30-foot Free Drop Test Assessment 19

6.5 Puncture Test (10 CFR 71.73 (3)) 19

6.5.1 Puncture Test Setup 20
6.5.2 Puncture Test Orientation for Specimens A1 and A2 21
6.5.3 Puncture Test Orientation for Specimens B1 and B2 23
6.5.4 Puncture Test Orientation for Specimens C1 and C2 24
6.5.5 Puncture Test Orientation for Specimens D1 and D2 26
6.5.6 Puncture Test Assessment 27
6.6 Intermediate Test Inspection 27
6.7 Thermal Test (10 CFR 71.73 4) 28
6.7.1 Thermal Test Procedure 28
6.7.2 Thermal Test Assessment 30
6.8 Final Test Inspection 30
6.9 Final Assessment 31
7.0 Worksheets 32
7.1 Temperature Measurement Points 32

Appendix A: Drawings

Appendix B: Thermal Test Airflow Calculations

Conditions for Projector-Only Tests B-1
Conditions for Tests with Projector and Container B-3

List of Figures, Tables and Worksheets

Table 1: Insert Foam Thickness 2
Figure 1: Side View of a Model 660 Series Projector in the Shipping Container 3
Table 2: Test Specimen Containers and Orientation 6
Figure 2: BRE Orientation for the Four-Foot Free Drop 10
Figure 3: ITP Orientation for the Four-Foot Free Drop 11
Figure 4: Rear Latch Orientation for the Four-Foot Free Drop 12
Figure 5: TRE Orientation for the Four-Foot Free Drop 13
Figure 6: BRE Orientation for the 30-Foot Free Drop 15
Figure 7: ITP Orientation for the 30-Foot Free Drop 16
Figure 8: Rear Latch Orientation for the 30-Foot Free Drop 17
Figure 9: TRE Orientation for the 30-Foot Free Drop 18
Figure 10: BRE Orientation for the Puncture Test 21
Figure 11: Projector-Only BRE Orientation for the Puncture Test 22
Figure 12: NTP Orientation for the Puncture Test 23
Figure 13: Rear Latch Orientation for the Puncture Test 24
Figure 14: Specimen C1 and C2 Projector-Only Orientation for the Puncture Test 25
Figure 15: TRE Orientation for the Puncture Test 26
Figure 16: Alternate Source Location Method 30
Table 3: Test Specimen Temperature Measurement 32
Equipment List 1: Four-foot Free Drop 33
Checklist 1: Four-foot Free Drop 34
Checklist 2: Four-foot Free Drop 36
Equipment List 2: 30-foot Free Drop 38
Checklist 3: 30-foot Free Drop 39
Checklist 4: 30-foot Free Drop 42
Equipment List 3: Puncture Test 45

Checklist 5: Puncture Test 46
Checklist 6: Puncture Test 49
Equipment List 4: Thermal Test 52
Checklist 7: Thermal Test 53
Checklist 8: Thermal Test 56

Amersham Test Plan #76

This document describes Type B(U) transport package testing of the SENTINEL Model 660 Series projector in a steel shipping container. The purpose of the testing is to demonstrate that the projector in this container meets the NRC requirements for Type B(U) packages under Hypothetical Accident Conditions (10 CFR 71.73) and the criteria stated in IAEA, Safety Series 6 (1985, as amended 1990).

This test plan outlines the testing scenario, justifies the package orientations and provides test worksheets to record key steps in the testing sequence.

1.0 Background

During 1997, the Model 660 Series projector was tested in accordance with 10 CFR 71 and Amersham Test Plans #70, #73 and #74.

Test Plan #70 subjected the Model 660 Series projector in its NRC approved configuration to the Normal Conditions of Transport and Hypothetical Accident Conditions tests specified in 10 CFR 71. One unit failed because of shield oxidation after the thermal test. The failure was caused by the loss of two carbon steel end-plate screws during the 30-foot drop that targeted the bottom rear edge of the projector. Once the handle melted away, the missing end-plate screws allowed the end-plate to pivot away from the unit, exposing the rigid foam to the heating elements. The foam burned away leaving the depleted uranium shield to oxidize during the four-day cooling process. We concluded the oxidized shield would not provide sufficient shielding to meet the acceptance criteria of 1 R/hr at a meter.

Test Plan #73 demonstrated the Model 660 Series projector with the stainless steel end-plate screws instead of the carbon steel screws satisfies the Normal Conditions of Transport requirements of 10 CFR 71.71.

Test Plan #74 demonstrated the Model 660 Series projector with stainless steel screws kept the end-plates attached to the unit. The test results show one unit had measured radiation levels over 1 R/hr at a meter. It appears that the shield shifted either during the thermal test or during transport from the testing facility in Tennessee to Amersham in Massachusetts. The circumstances of the shift are not known because source position measurements were not taken immediately after the thermal test.

Test Plan #76 will demonstrate the Model 660 Series projector in a padded steel box meets the Type B(U) transport test requirements of 10 CFR 71 and the criteria stated in IAEA, Safety Series 6 (1985, as amended 1990).

The Hypothetical Accident Conditions tests (10 CFR 71.73) to be performed are the 30-foot free drop, puncture test and thermal test. The units will first undergo the four-foot free drop specified in 10 CFR 71.71.

The crush test (10 CFR 71.73 (c.) (2)) will not be performed because the radioactive contents are special-form radioactive material. The immersion test and all other conditions specified in 10 CFR 71.73 will be separately evaluated in accordance with Amersham Work Instruction WI-E08.

2.0 Transport Package

The transport package consists of the Model 660 Series projector secured in a steel shipping container with shock-absorbing polyethylene foam inserts inside the box and an insert made of foam and 1-7/8 inch plywood attached to the inside of the cover (Figure 1). The inserts secure the Model 660 Series projector in the center of the box. The foam insert in the box is partially lined with sheet metal. The density of the foam is 4 lbs/ft^3. Table 1 lists the thickness of the foam at various points around the projector.

Table 1: Insert Foam Thickness

Location	Foam Thickness
On top of the projector	2 3/4 in.
Underneath the projector	2 in.
Against the projector sides	1 3/16 in.
Against the projector end-plates	1 3/4 in.

Four of the containers will have front, rear and bottom lead panels. The purpose of the lead is to reduce measured radiation to less than 50 mR/hour at the surface and to less than 1 mR/hour at 1 meter in order to meet U.S. Department of Transportation Yellow II requirements (49 CFR Part 171 to 179).

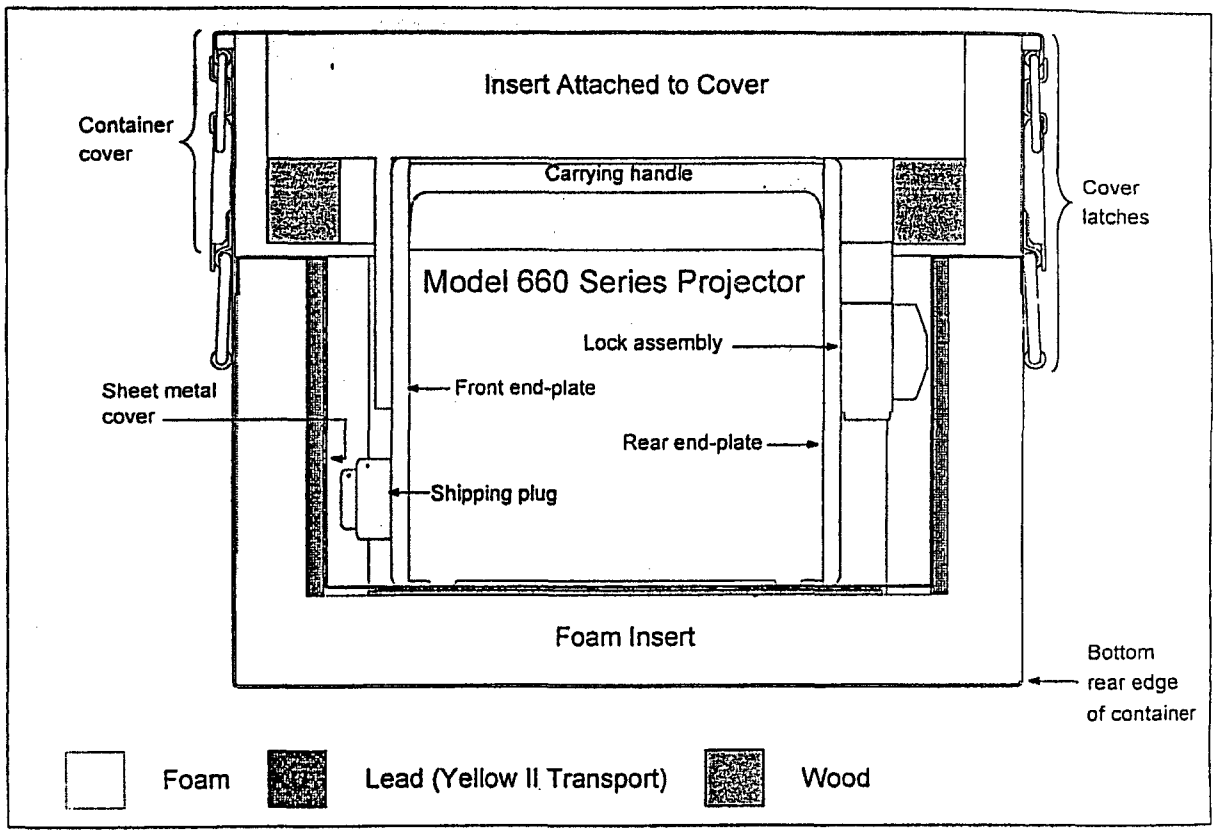

Figure 1: Side View of a Model 660 Series Projector in the Shipping Container

3.0 System Failures and Orientations

The objective of the mechanical tests is to separate the lid from the container and then attack the Model 660 Series projector without any protection. If the lid is removed as a result of one of the Hypothetical Accident Conditions tests, the projector will be tested without the container for all subsequent tests for the particular specimen. For purposes of this test plan, the lid will be considered removed if either latch is opened.

There are two objectives for the attack on the projector inside or outside of the container:

- Move the source from its ideal shielded position. If the source tube has been damaged or dislocated during the 30-foot drop or puncture test and if the projector foam has burned off during the thermal test, the shield may be able to move within the projector. If the source wire is engaged in the lock assembly when the shield moves, the source may be pulled from the center of the shield which provides maximum shielding. The displacement could result in elevated radiation levels.

- Remove an end-plate from the projector enough to expose the depleted uranium shield to the heating elements and oxygen during the thermal once the foam has burned off. Such exposure could lead to oxidation of the shield and increased levels of radiation.

3.1 Package Orientations

A total of eight packages are to be tested using four different orientations to test Yellow II and non Yellow II versions of the container:

- **Bottom Rear Edge (BRE)**

  This orientation targets the bottom rear edge of the container in the free drops and the puncture test. Previous test results indicated that BRE is the most damaging package orientation for the mechanical tests. The BRE orientation caused the failure of the rear end-plate screws and the subsequent shield failure in Test Plan #70.

  For this orientation, the test specimen temperature must be **at or below -40° C** at the time of impact.

  The package orientation for the thermal test will be determined during the preliminary assessment after the puncture test.

- **Inverted Transport Position (ITP)**

  The ITP orientation impacts the top of the container cover for the free drops and the puncture test. Experimental drops with the package indicate that the ITP orientation could cause the shell to move relative to the end-plates.

  The test specimen temperature must be **at or above 27° C** at the time of impact.

  Based on experimental testing, the container in the ITP orientation will be presumed to have opened as a result 30-foot drop regardless of the actual outcome of the drop. The projector will be removed from the container and undergo the puncture and thermal tests without the container. The puncture tests for ITP specimens will position the package in the normal transport position.

  The package orientation for the thermal test will be determined during the preliminary assessment after the puncture test.

- **Rear Latch**

  The third orientation provides a direct hit on the rear latch. If the lid is removed in the 30-foot free drop, the puncture test will target the lock assembly cover of the projector.

  The test specimen temperature must be **at or above 27° C** at the time of impact.

  The package orientation for the thermal test will be determined during the preliminary assessment after the puncture test.

- **Top Rear Edge (TRE)**

  This orientation targets the top rear edge of the container in an attempt to jar the cover off. If the lid is removed in the 30-foot free drop, the puncture test will target the bottom rear edge of the projector.

  The test specimen temperature must be **at or above 27° C** at the time of impact.

  The package orientation for the thermal test will be determined during the preliminary assessment after the puncture test.

3.2 Test Specimen Temperature

The temperature-at-impact specified for each orientation is the internal temperature of the test specimen.

- If the test specimen consists of a projector inside the container, measure the temperature of the container foam and the temperature of the projector foam. Both temperatures must be at the specified levels.
- If the test specimen consists of a projector removed from its container, measure the temperature of the foam inside the projector.

The thermal test requires that the specimen temperature exceed 800° C for the duration of the test.

- If the test specimen consists of a projector inside the container, monitor the temperature of the container foam.
- If the test specimen consists of a projector removed from its container, measure the temperature inside the source tube.

4.0 Test Specimen

The eight test specimens, as specified in SENTINEL Drawing TP76-X, Rev. D (TP76-X), each consist of a Model 660 Series projector in accordance with Certificate of Compliance 9033, packaged in a metal container. TP76-X is a tabulated drawing describing two versions of the container, C66060-1 and C66060-2.

TP76-X specifies a change in current manufacturing practice to ensure the Model 660 Series projector is in a worst-case condition. The shield is specially made to increase the weight of the specimen by adding depleted uranium to the *ears*, that is, to the source-tube exit portions of the shield. Supplemental lead is also wrapped symmetrically around the shield to further increase the weight. The added weight induces higher loads during dynamic testing.

Four of the specimens are to be constructed using C66060-1 containers that include front, rear and bottom lead panels for Yellow II Transport as shown in Figure 1 on page 3. The other four test specimens are to be assembled without the lead panels (part C66060-2).

Table 2 identifies the test specimens by container type and test orientation.

Table 2: Test Specimen Containers and Orientation

Orientation	C66060-1 Yellow II Container	C66060-2 Lead Panels Removed
BRE	A1	A2
ITP	B1	B2
Rear Latch	C1	C2
TRE	D1	D2

5.0 Material and Equipment List

The equipment checklists in Section 7.0 starting on page 32 list the key materials and equipment specified in 10 CFR 71 and the necessary measurement instruments.

When video recording is specified, select video cameras with the highest shutter speed practical to record testing.

Additional materials and equipment may be used to facilitate the tests.

6.0 Test Procedure

The tests follow this sequence:

1. Test specimen preparation and inspection
2. Four-foot free drop (10 CFR 71.71 (7))
3. 30-foot free drop (10 CFR 71.73 (1))
4. Puncture test (10 CFR 71.73 (3))
5. Intermediate test inspection
6. Thermal test (10 CFR 71.73 (4))
7. Final test inspection

Each test specimen must be put through the entire test sequence. If test conditions such as the orientation at impact are not met during the test of a particular specimen, it may be replaced with a specimen of equivalent construction. The replacement must go through the entire test sequence.

6.1 Roles and Responsibilities

The responsibilities of the groups identified in this plan are:

- Engineering executes the tests according to the test plan and summarizes the test results. Engineering also provides technical input to assist Regulatory Affairs and Quality Assurance as needed.
- Regulatory Affairs monitors the tests and reviews test reports for compliance with regulatory requirements.
- Quality Assurance oversees test execution and test report generation to ensure compliance with 10 CFR 71, other regulatory requirements and the Amersham Quality Assurance Program.
- Engineering, Regulatory Affairs and Quality Assurance are jointly responsible for assessing test and specimen conditions relative to 10 CFR 71.
- Quality Control, a function that reports directly to Quality Assurance, is responsible for measuring and recording test and specimen data throughout the test cycle.
- The managers directly responsible for Engineering, Regulatory Affairs and Quality Assurance will identify and document personnel who are qualified to represent their departments in carrying out this test plan.

6.2 Test Specimen Preparation and Inspection

To prepare the test units:

1. Manufacture each test specimen in accordance with TP76-X
2. Inspect the test units to ensure that they comply with the requirements of the TP76-X.
3. Perform and record the radiation profile in accordance with Amersham Work Instruction WI-Q09.
4. Measure and record the location of the source using tool BT10142, Rev. A.
5. Engineering, Regulatory Affairs and Quality Assurance will jointly verify that the test specimens comply with TP76-X, and the Amersham Quality Assurance Program.
6. Prepare the package for transport.

6.3 Four-foot Free Drop Test (10 CFR 71.71 (7))

The first test is the four-foot free drop as described in 10 CFR 71.71 (7). This Normal Conditions of Transport test is included to provide preliminary damage to the units.

Refer to Equipment List 1 on page 33 for information about required tools. Date and initial all action items, and record required data on the appropriate worksheet:

- For Specimens A1, A2, B1 and B2, refer to Test Procedure Checklist 1 starting on page 34.
- For Specimens C1, C2, D1 and D2, refer to Test Procedure Checklist 2 starting on page 36.

6.3.1 Four-foot Free Drop Setup

In this test, the package is released from a height of four feet and lands on the steel drop surface specified in Drawing AT10122, Rev. B.

NOTE: *Because each test is designed to add to damage inflicted on a specific component or assembly in the preceding test, it is important that each specimen maintain its identity throughout the battery of tests and that the setup instructions specific to the specimen are strictly followed.*

Specimens A1 and A2 must be at or below -40° C at the time of impact. All others must be at or above 27° C at impact. Follow the instructions in the appropriate checklist for measuring and recording the test specimen temperature before and after the drop.

To set up a package for the four-foot drop test:

1. Use the drop surface specified in Drawing AT10122, Rev B.
2. Measure and record the test specimen temperature to ensure that the package is at the specified level.
3. Place the specimen on the drop surface and position it according to the appropriate orientation:
   - Refer to Figure 2 on page 10 for Specimens A1 and A2
   - Refer to Figure 3 on page 11 for Specimens B1 and B2
   - Refer to Figure 4 on page 12 for Specimens C1 and C2
   - Refer to Figure 5 on page 13 for Specimens D1 and D2
4. Align the selected center-of-gravity marker as shown in the referenced drawing.
5. Raise the package so that the impact target is 4.0 to 4.5 feet above the drop surface.

6.3.2 Four-foot Drop Orientation for Specimens A1 and A2

Specimens A1 and A2 use the BRE orientation for the four-foot free drop (Figure 2). Align the center-of-gravity marker over the bottom rear edge of the container.

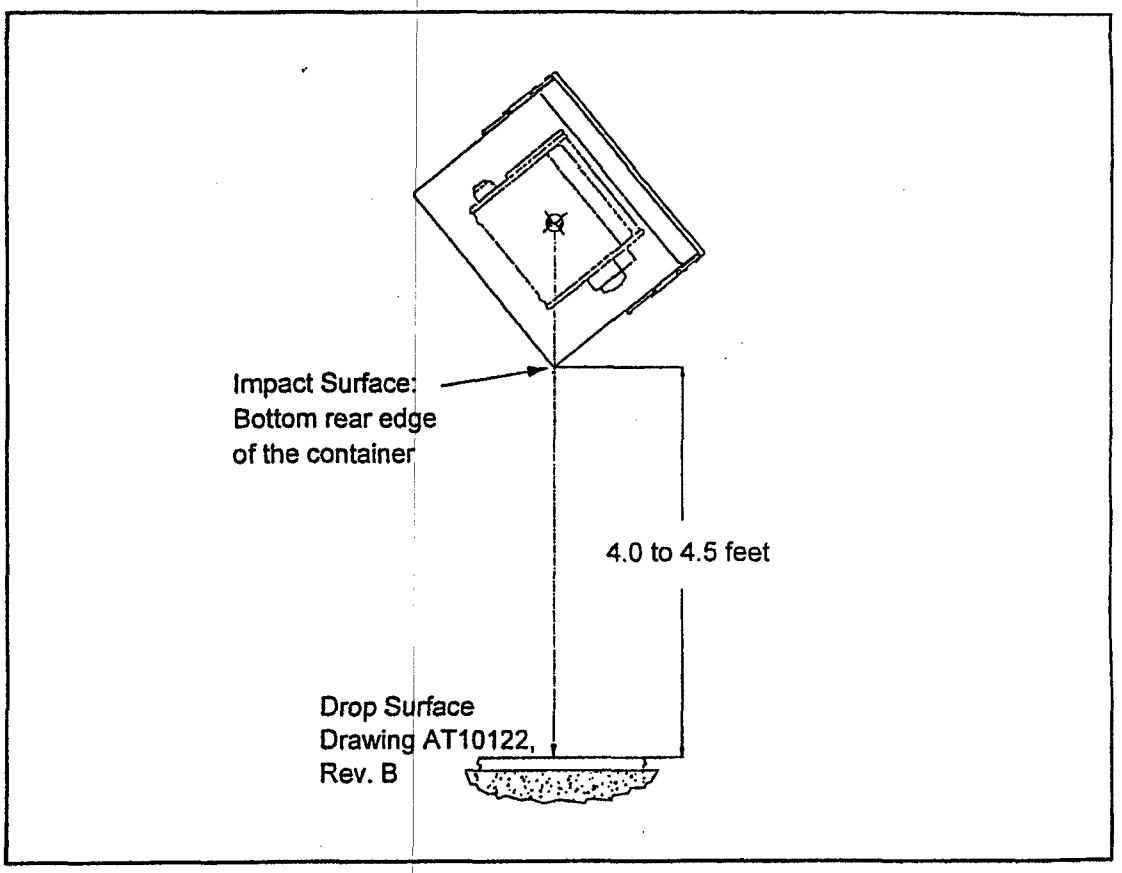

Figure 2: BRE Orientation for the Four-Foot Free Drop

6.3.3 Four-foot Drop Orientation for Specimens B1 and B2

Specimens B1 and B2 use the ITP orientation for the four-foot free drop (Figure 3).

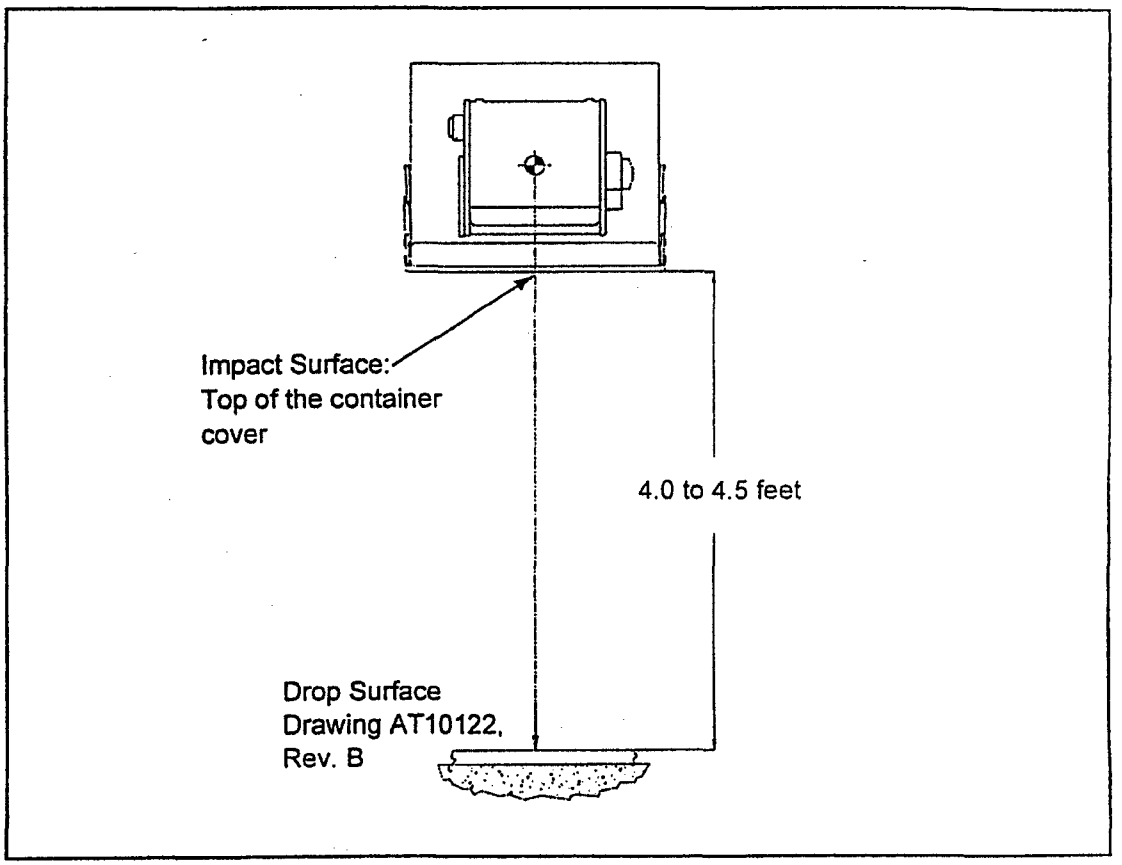

Figure 3: ITP Orientation for the Four-Foot Free Drop

6.3.4 Four-foot Drop Orientation for Specimens C1 and C2

Specimens C1 and C2 use the Rear Latch orientation for the four-foot free drop (Figure 4).

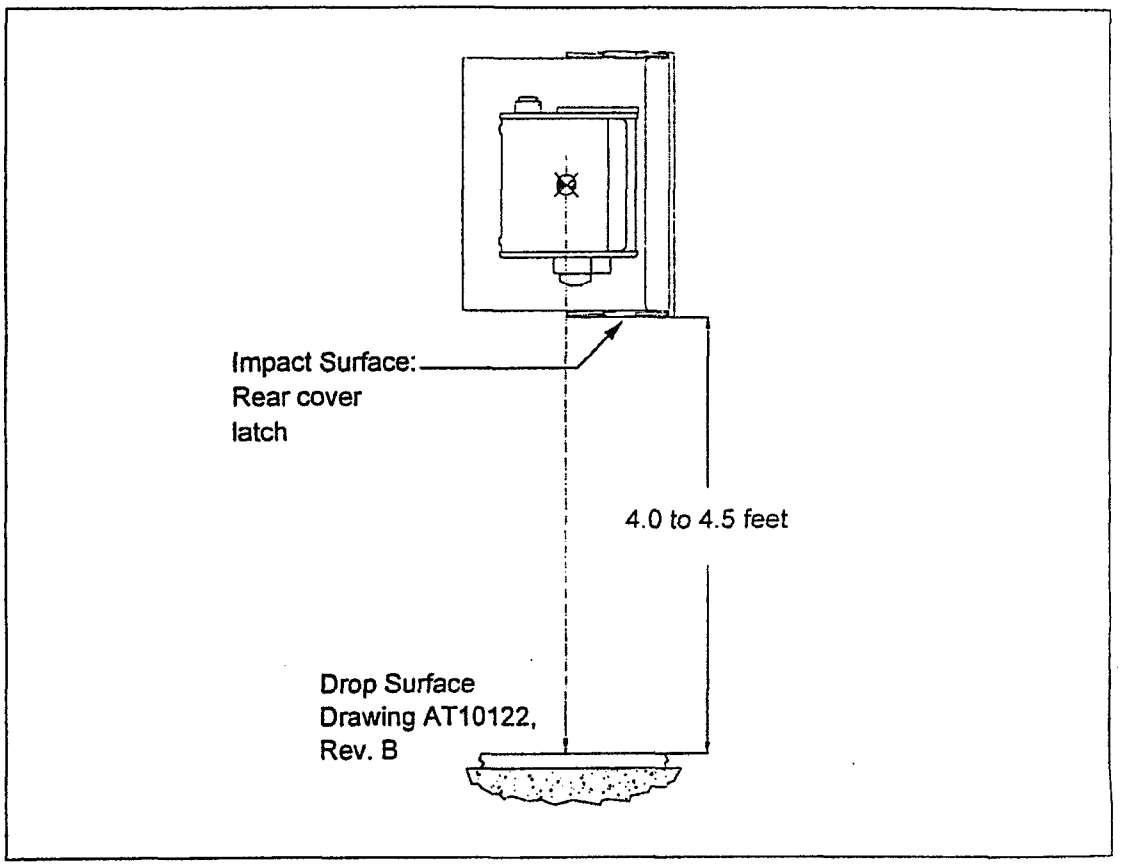

Figure 4: Rear Latch Orientation for the Four-Foot Free Drop

6.3.5 Four-foot Drop Orientation for Specimens D1 and D2

Specimens D1 and D2 use the TRE orientation for the four-foot free drop (Figure 5).

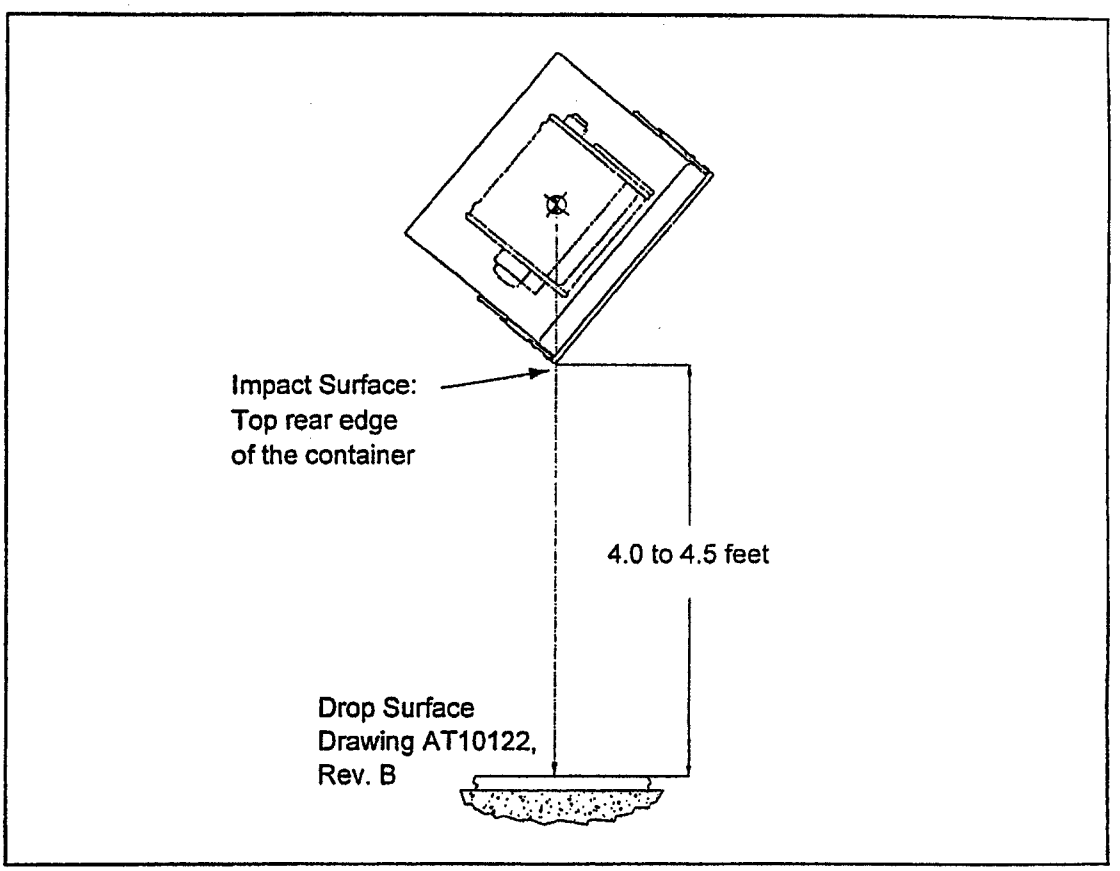

Figure 5: TRE Orientation for the Four-Foot Free Drop

6.3.6 Four-foot Free Drop Assessment

Upon completion of the test, Engineering, Regulatory Affairs and Quality Assurance team members will jointly perform the following tasks:

1. Review the test execution to ensure that the test was performed in accordance with 10 CFR 71.71.
2. Make a preliminary evaluation of the specimen relative to the requirements of 10 CFR 71.71.
3. Assess the damage to the specimen to decide whether testing of that specimen is to continue.
4. Evaluate the condition of the specimen to determine what changes are necessary in package orientation in the 30-foot free drop to achieve maximum damage.

6.4 30-foot Free Drop Test (10 CFR 71.73 (1))

The first Hypothetical Accident Conditions test is the 30-foot free drop as described in 10 CFR 71.73 (1). This drop uses the same orientations as the four-foot free drop and compounds any damage caused in that test.

Refer to Equipment List 2 on page 38 for information about required tools. Date and initial all action items, and record required data on the appropriate worksheet:

- For Specimens A1, A2, B1 and B2, refer to Test Procedure Checklist 3 starting on page 39.
- For Specimens C1, C2, D1 and D2, refer to Test Procedure Checklist 4 starting on page 42.

6.4.1 30-foot Free Drop Setup

In this test, the package is released from a height of 30 feet and lands on the steel drop surface specified in Drawing AT10122, Rev. B.

Specimens A1 and A2 must be at or below -40° C at the time of impact. All others must be at or above 27° C at impact. Follow the instructions in the appropriate checklist for measuring and recording the test specimen temperature before and after the drop.

To set up a package for the 30-foot free drop:

1. Use the drop surface specified in Drawing AT10122, Rev B.
2. Measure and record the test specimen temperature to ensure that the package is at the specified level.
3. Place the specimen on the drop surface and position it according to the appropriate orientation:
   - Refer to Figure 6 on page 15 for Specimens A1 and A2
   - Refer to Figure 7 on page 16 for Specimens B1 and B2
   - Refer to Figure 8 on page 17 for Specimens C1 and C2
   - Refer to Figure 9 on page 18 for Specimens D1 and D2
4. Align the selected center-of-gravity marker as shown in the referenced drawing.
5. Raise the package so that the impact target is 30 to 32 feet above the drop surface.

6.4.2 30-foot Drop Orientation for Specimens A1 and A2

Specimens A1 and A2 use the BRE orientation for the 30-foot free drop (Figure 6).

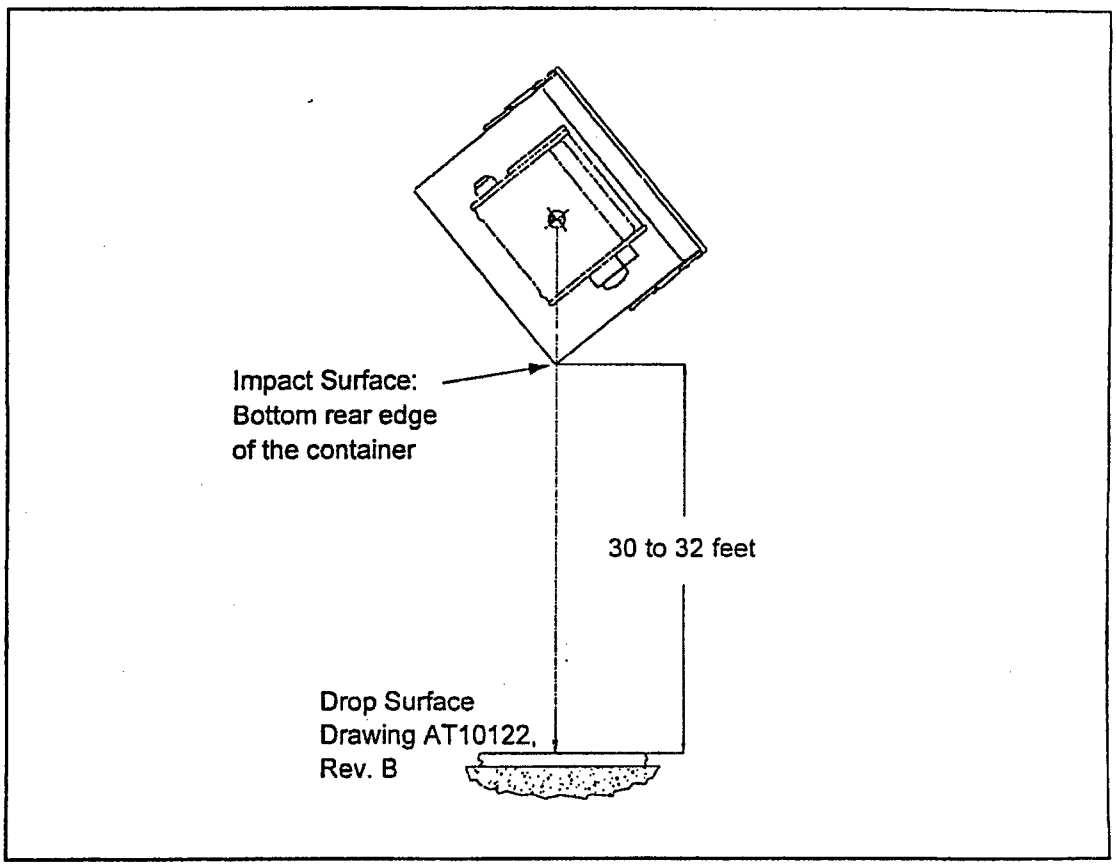

Figure 6: BRE Orientation for the 30-Foot Free Drop

6.4.3 30-foot Drop Orientation for Specimens B1 and B2

Specimens B1 and B2 use the ITP orientation for the 30-foot free drop (Figure 7).

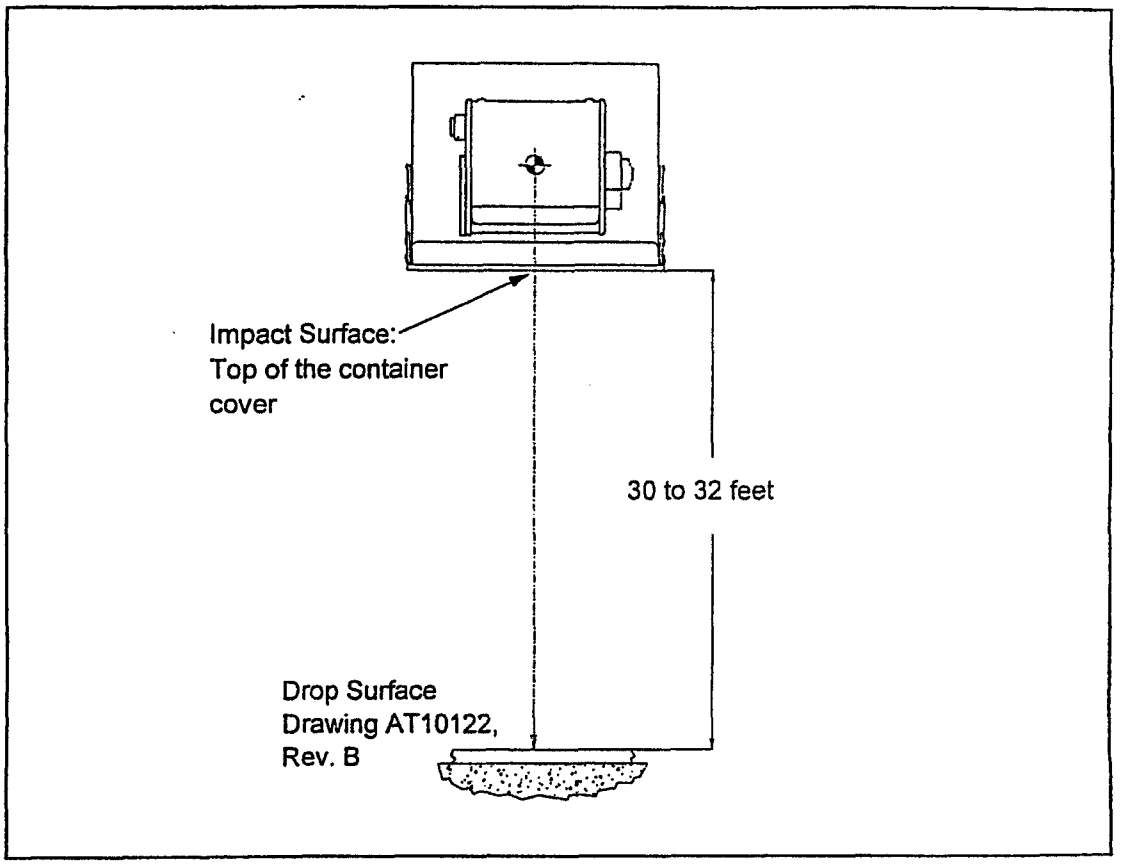

Figure 7: ITP Orientation for the 30-Foot Free Drop

6.4.4 30-foot Drop Orientation for Specimens C1 and C2

Specimens C1 and C2 use the Rear Latch orientation for the 30-foot free drop (Figure 8).

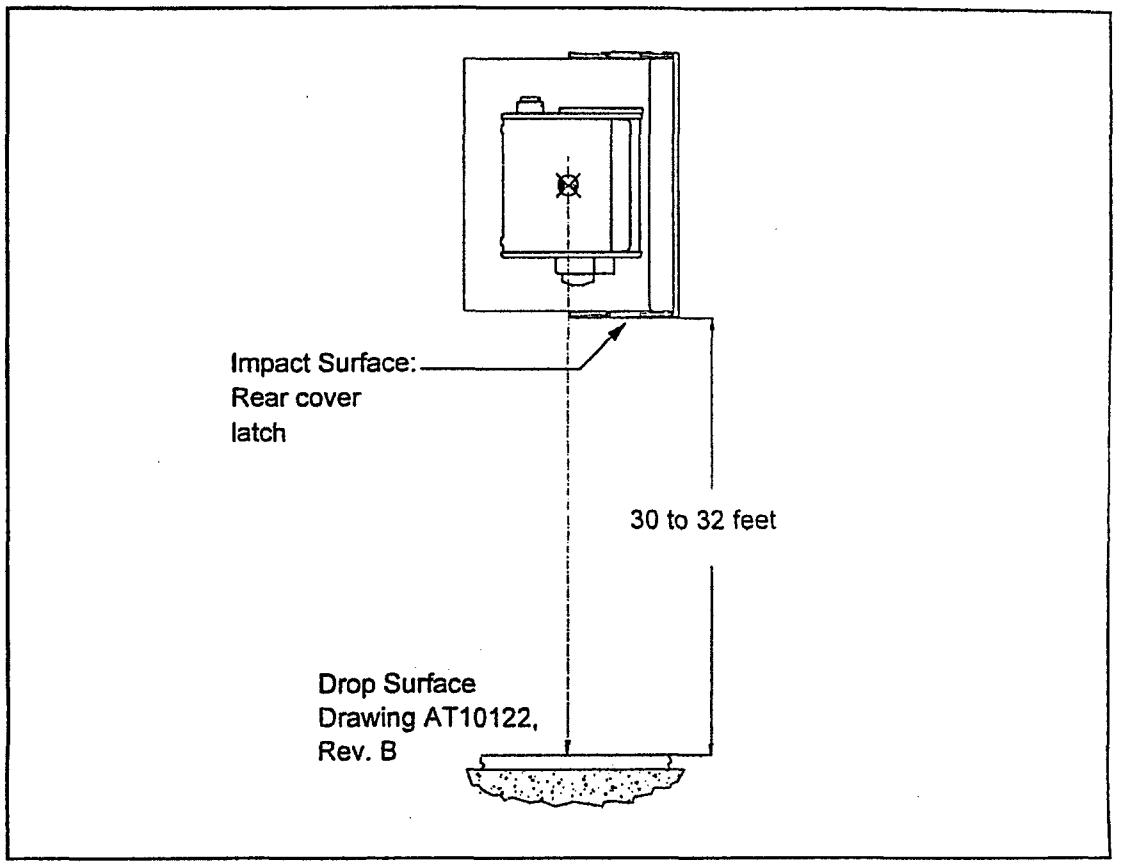

Figure 8: Rear Latch Orientation for the 30-Foot Free Drop

6.4.5 30-foot Drop Orientation for Specimens D1 and D2

Specimens D1 and D2 use the TRE orientation for the 30-foot free drop (Figure 9).

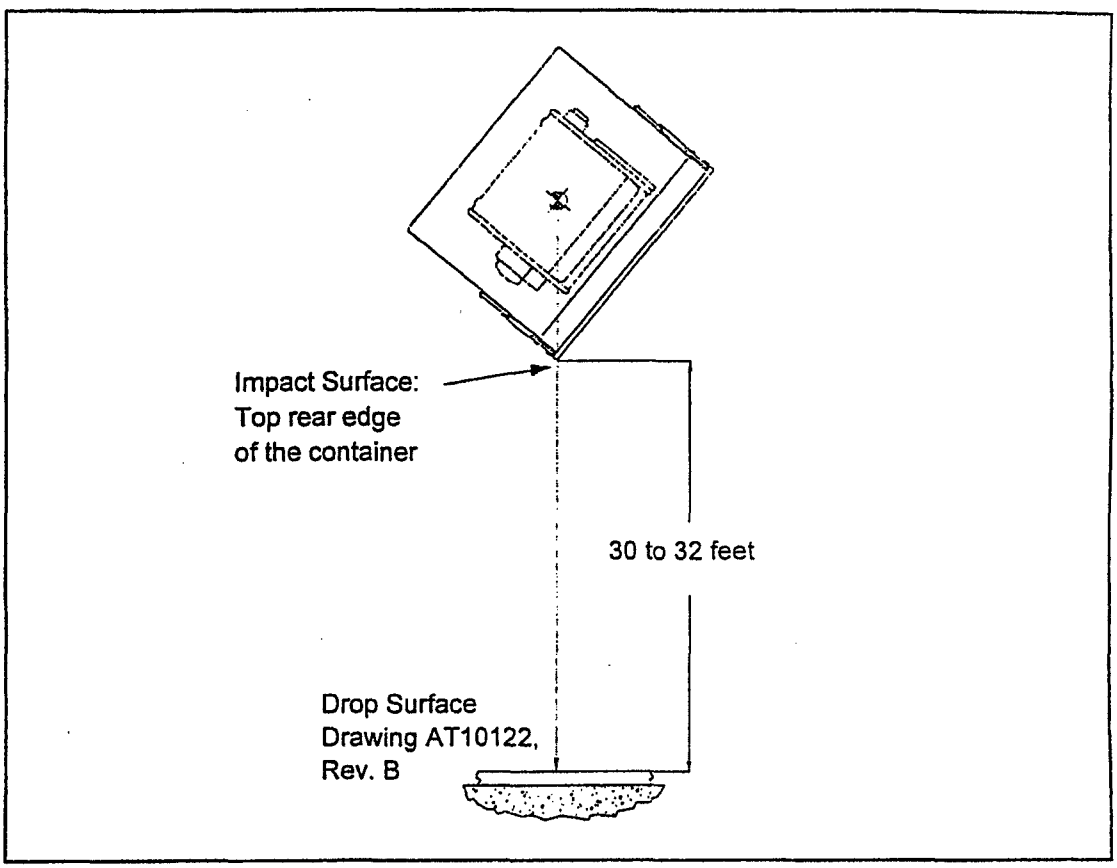

Figure 9: TRE Orientation for the 30-Foot Free Drop

6.4.6 30-foot Free Drop Test Assessment

Upon completion of the test, Engineering, Regulatory Affairs and Quality Assurance team members will jointly perform the following tasks:

- Review the test execution to ensure that the test was performed in accordance with 10 CFR 71.73, and in accordance with the impact orientation and other conditions specified in this plan.
- Make a preliminary evaluation of the specimen relative to the requirements of 10 CFR 71.73.
- Evaluate the condition of the specimen to determine if changes are necessary in package orientation in the puncture test to achieve maximum damage.
  - For specimens tested with the ITP orientation, remove projector from the container and test it without the container. Orient the projector in the normal transport position.
  - For all other test units, test the projector without the container if the cover was opened as a result of the 30-foot free drop.
  - Specify an alternate puncture test orientation for a specimen if assessment reveals a more vulnerable surface.

6.5 Puncture Test (10 CFR 71.73 (3))

The 30-foot free drop is followed by the puncture test per 10 CFR 71.73 (3), in which the package is dropped from a height of at least 40 inches onto the puncture billet specified in Drawing CT10119, Rev. C.

The billet is to be bolted to the drop surface used in the free drop tests (Figure 10 on page 21). The 12-inch high puncture billet meets the minimum height (8 inches) required in 10 CFR 71.73 (3). The specimen has no projections or overhanging members longer than 8 inches which could act as impact absorbers, thus allowing the billet to cause the maximum damage to the specimen. The billet has sufficient height to provide for unlatching the container cover.

Refer to Equipment List 3 on page 45 for information about required tools. Date and initial all action items, and record required data on the appropriate worksheet:

- For Specimens A1, A2, B1 and B2, refer to Test Procedure Checklist 5 starting on page 46.
- For Specimens C1, C2, D1 and D2, refer to Test Procedure Checklist 6 starting on page 49.

Specimens A1 and A2 must be at or below -40° C at the time of impact. All others must be at or above 27° C on impact. Follow the instructions in the appropriate checklist for measuring and recording the test specimen temperature before and after the drop.

6.5.1 Puncture Test Setup

To set up a test specimen for the puncture test:

1. Measure and record the weight of the test specimen.
2. Measure and record the test specimen temperature to ensure that the package is at the specified level.
3. Position the unit according to the appropriate orientation:
   - Refer to Figure 10 on page 21 for Specimens A1 and A2.

     If either lid latch has been opened as a result of the 30-foot free drop, remove the projector from the container and test it using the projector-only BRE orientation shown in Figure 11 on page 22.
   - Refer to Figure 12 on page 23 for Specimens B1 and B2.
   - Refer to Figure 13 on page 24 for Specimens C1 and C2.

     If the container has been opened as a result of the 30-foot free drop, remove the projector from the container and test it using the projector-only lock-hit orientation shown in Figure 14 on page 25.
   - Refer to Figure 15 on page 26 for Specimens D1 and D2.

     If the container has been opened as a result of the 30-foot free drop, remove the projector from the container and test it using the Projector-Only BRE orientation shown in Figure 11 on page 22.
4. Check the alignment of the specified center-of-gravity marker with the targeted point of impact.
5. Raise the package so that there are 40 to 42 inches between the package and the top of the puncture billet.

6.5.2 Puncture Test Orientation for Specimens A1 and A2

Specimens A1 and A2 use the BRE orientation for the puncture test (Figure 10).

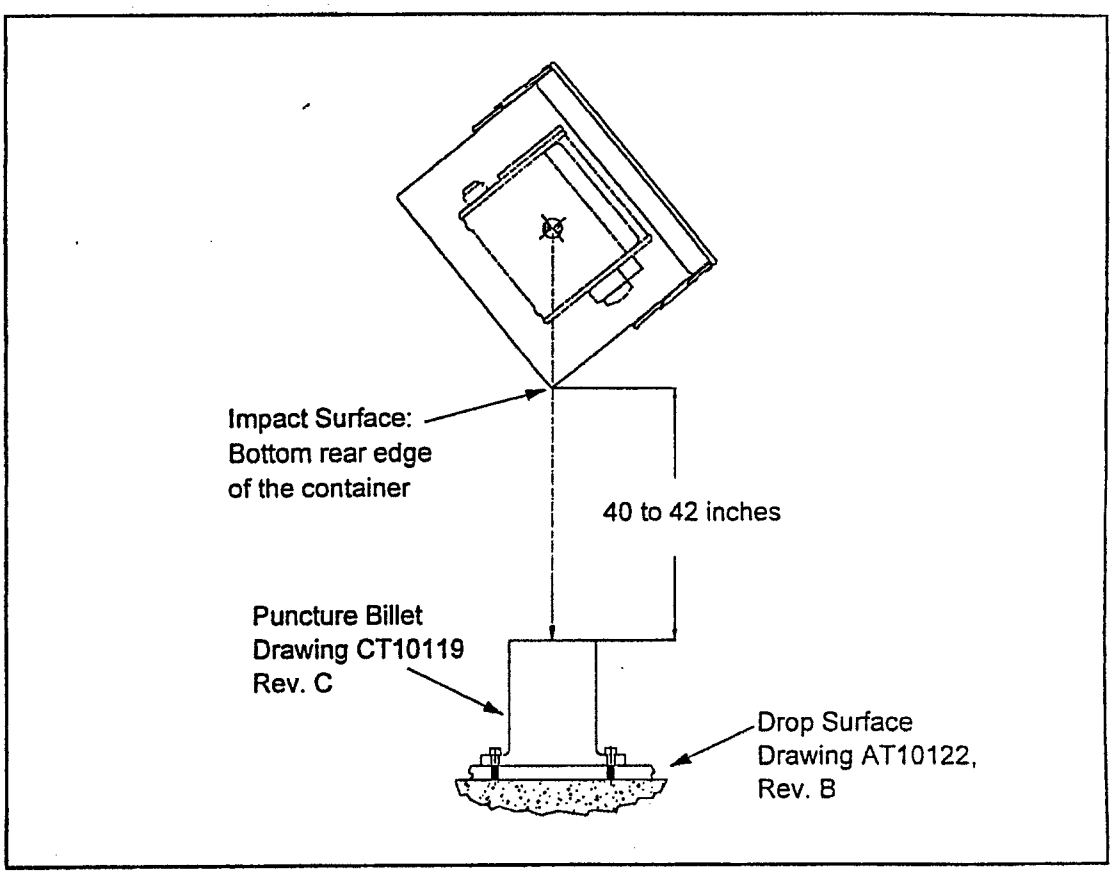

Figure 10: BRE Orientation for the Puncture Test

If the container has been opened as a result of the 30-foot free drop, remove projector from the container and test it without the container. Orient the projector as shown in Figure 11.

The projector-only BRE setup targets the bottom edge of the rear end-plate to distort the end-plate and loosen or shear the screws securing the end plate to the interior metal rods. The bottom edge provides the largest, unobstructed flat surface on the plate. The impact will crush the bottom of the end plate into the polyurethane foam, the softest material in the package, and cause the maximum distortion of the plate.

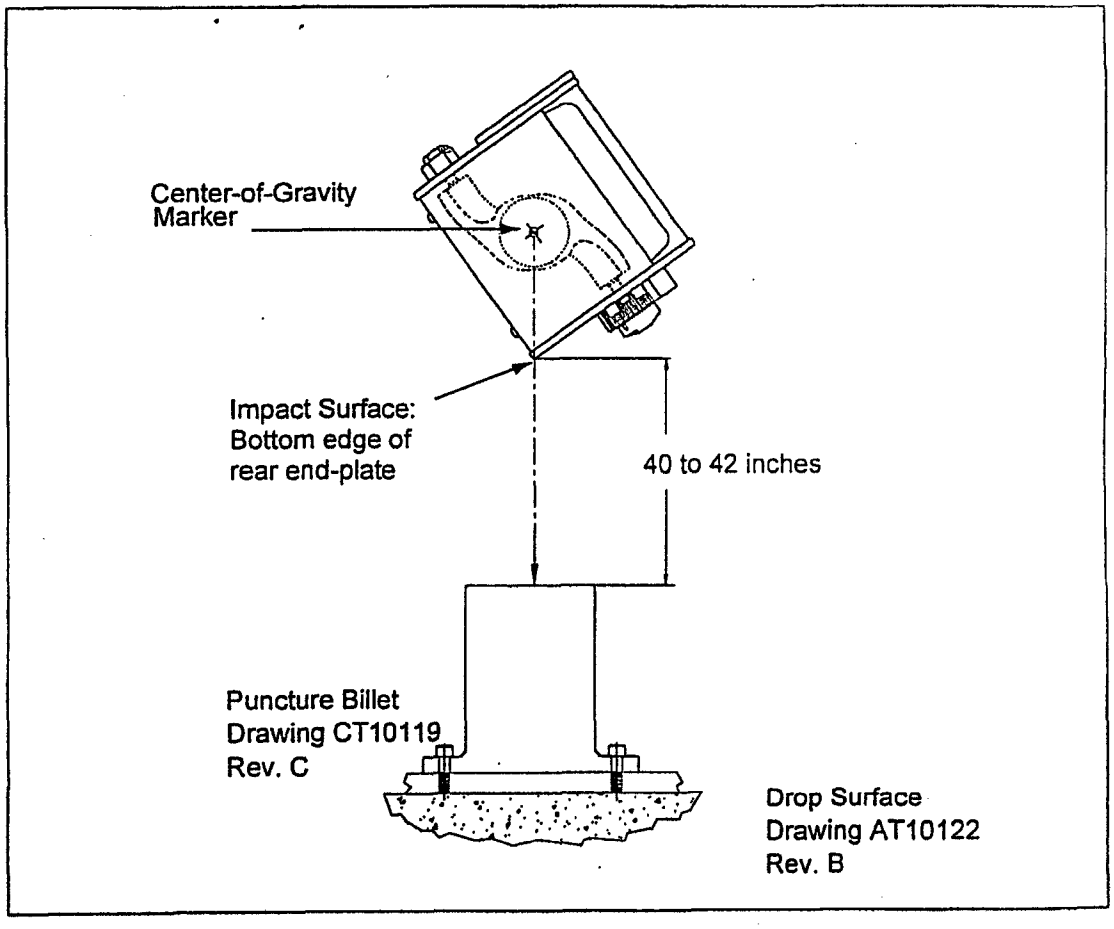

Figure 11: Projector-Only BRE Orientation for the Puncture Test

6.5.3 Puncture Test Orientation for Specimens B1 and B2

Specimens B1 and B2 are tested without the container. The projector is oriented in a normal transport position (NTP) orientation (Figure 12). Align the center-of-gravity marker over the billet.

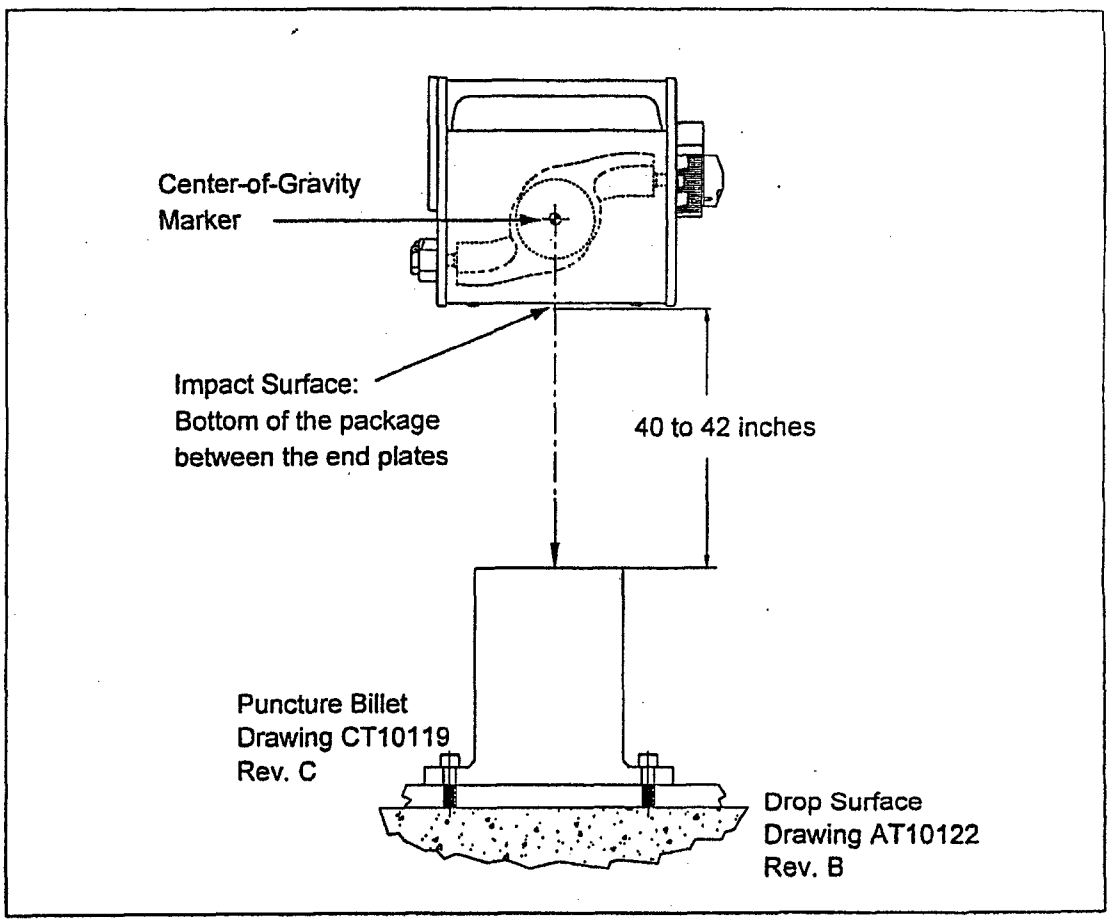

Figure 12: NTP Orientation for the Puncture Test

6.5.4 Puncture Test Orientation for Specimens C1 and C2

Specimens C1 and C2 use the Rear Latch orientation for the puncture test (Figure 13).

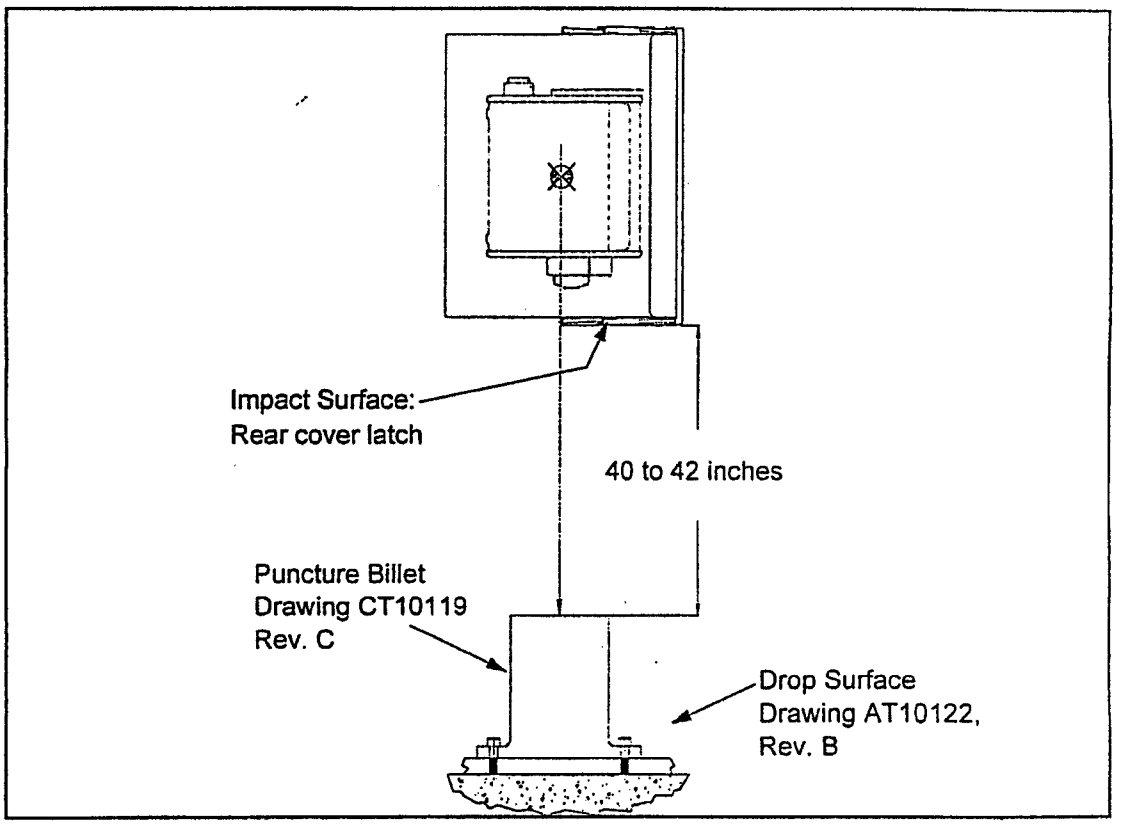

Figure 13: Rear Latch Orientation for the Puncture Test

If the container has been opened as a result of the 30-foot free drop, test the projector without the container. Orient the projector as shown in Figure 14 on page 25.

The projector-only orientation for Specimens C1 and C2 attacks the lock assembly on the rear end-plate. Align the center-of-gravity marker over the lock assembly and ensure that the plunger lock clears the top of the billet.

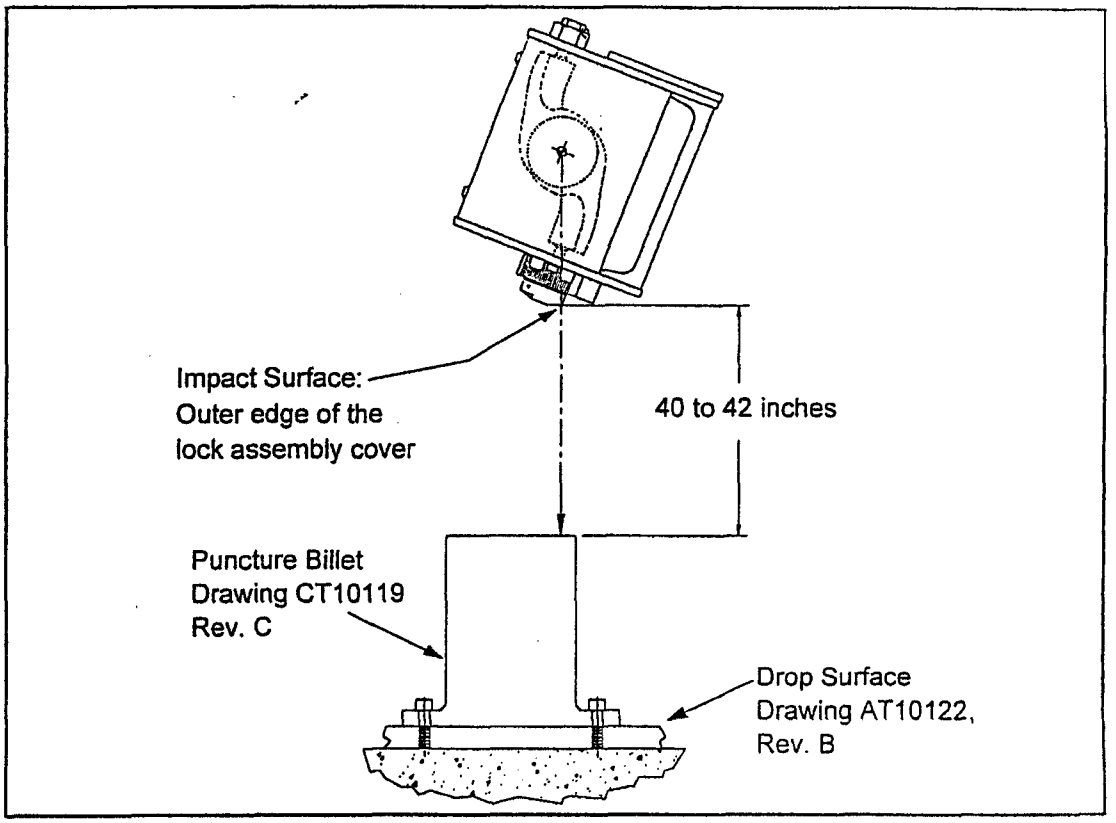

Figure 14: Specimen C1 and C2 Projector-Only Orientation for the Puncture Test

6.5.5 Puncture Test Orientation for Specimens D1 and D2

Specimens D1 and D2 use the TRE orientation for the puncture test (Figure 15).

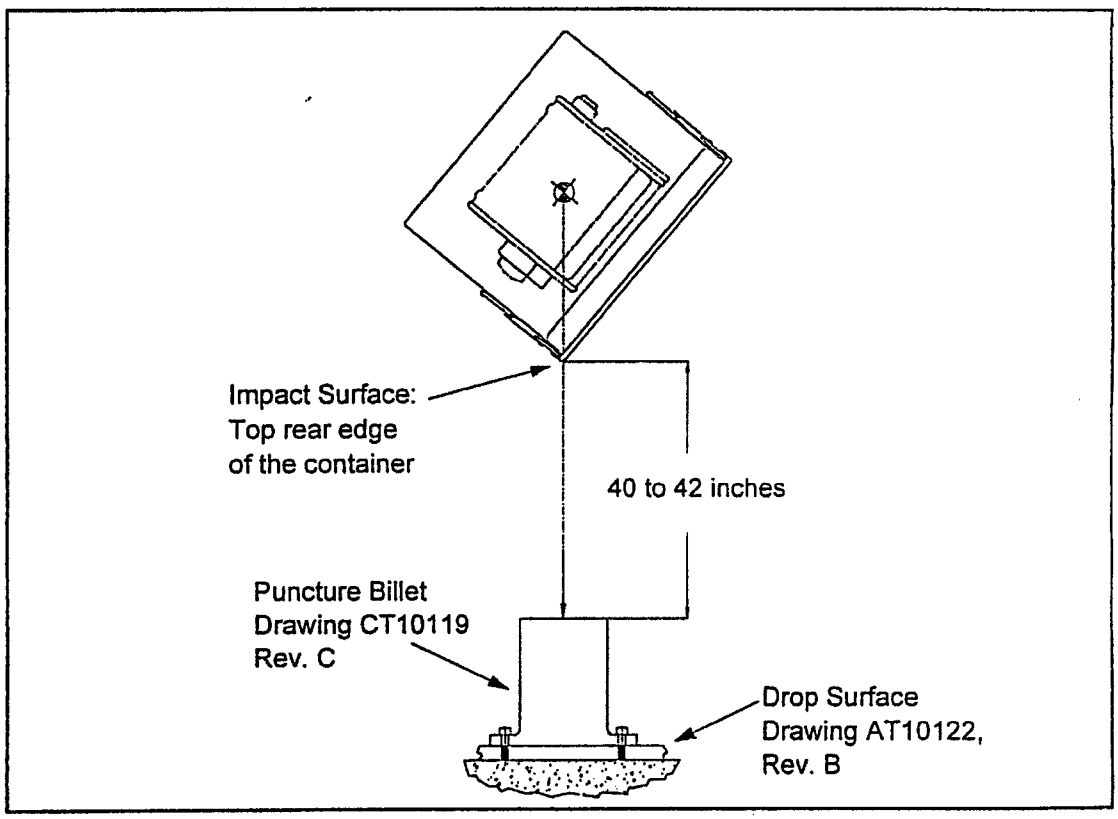

Figure 15: TRE Orientation for the Puncture Test

If the container has been opened as a result of the 30-foot free drop, test the projector without the container. Orient the projector as shown in Figure 11 on page 22.

6.5.6 Puncture Test Assessment

Upon completion of the test, Engineering, Regulatory Affairs and Quality Assurance team members will jointly perform the following tasks:

1. Review the test execution to ensure that the test was performed in accordance with 10 CFR 71.73, and in accordance with the impact orientation and other conditions specified in this plan.
2. Make a preliminary evaluation of the specimen relative to the requirements of 10 CFR 71.73.
3. Assess the damage to the specimen to decide whether testing of that specimen is to continue.
4. Evaluate the condition of the specimen to determine the package orientation for the thermal test to achieve maximum damage.
5. Based on the condition of the specimen, determine whether the projector should be subjected to the thermal test with or without the container.
6. As part of the evaluation, measure the weight of the specimen.

6.6 Intermediate Test Inspection

Perform an intermediate test inspection after the puncture test.

1. Radiograph the specimen.
2. Measure and record any damage to the test specimen.
3. If possible, measure and record the source location using tool BT10142, Rev. A.
4. Measure and record a radiation profile of the test specimen in accordance with Amersham Work Instruction WI-Q09, if possible without removing either projector end-plate.

6.7 Thermal Test (10 CFR 71.73 4)

The final requirement is the thermal test specified in 10 CFR 71.73 (4). At least one test specimen from each orientation – the one with the greater damage – will undergo the thermal test. For Specimens B1 and B2, the projector is tested without the protection of the container. The other test specimens consist of the projector inside the container. However, if the lid was opened as a result of the 30-foot drop or the puncture test, the projector will tested without the container.

Refer to Equipment List 4 on page 52 for tools required by the test. Date and initial all action items, and record required data on the appropriate worksheet:

- For Specimens A1, A2, B1 and B2, use Test Procedure Checklist 7 starting on page 53.
- For Specimens C1, C2, D1 and D2 use Test Procedure Checklist 8 starting on page 56.

To ensure sufficient heat input to the test specimens, each specimen will be preheated to a temperature of at least 800° C and held to at least that temperature for 30 minutes. This test condition provides heat input in excess of the requirements specified in 10 CFR 71.73(c)(4), which does not include a preheat condition. The preheat condition assures equivalent heat input regardless of emissivity and absorptivity coefficients.

The test environment is a vented electric oven operating at a temperature greater than 800° C. The test specimen temperature will be monitored throughout the test to ensure that the package remains at or above 800° C.

To promote combustion, maximize the airflow into the oven consistent with maintaining temperature above 800° C.

If the specimen is burning when it is removed, the unit is allowed to extinguish by itself and then cool naturally. The final evaluation of the package is performed when the specimen reaches ambient temperature.

6.7.1 Thermal Test Procedure

NOTE: *If the test specimen consists of a projector inside its container, test specimen temperature in the following instructions and on the related checklists refers to the temperature of the container foam.*

If the test specimen is a projector removed from its container, test specimen temperature in the following instructions and on the related checklists refers to the temperature inside the source tube.

To perform the thermal test:

1. Bring the oven temperature above 800° C.
2. Insert thermocouples into the test specimen's measurement locations.
3. Place the specimen in the oven and close the door.
4. When the test specimen temperature goes above 800° C, start air flow and start a 30-minute timer.
5. Measure and record the oven and test specimen temperatures, and the air flow rate. Record whether there is any visible combustion.
6. Monitor the test specimen and the oven temperatures throughout the 30-minute test period to ensure that both remain above 800° C.
7. Monitor the airflow rate throughout the test period to ensure the maximum airflow rate without cooling the oven specimen temperature below 800° C.
8. At the end of the 30 minutes, repeat Step 5.
9. Remove the test specimen from the oven.
10. Allow the package to self-extinguish and cool.
11. Radiograph the unit to determine the shield location.
12. Measure and record the source location using tool BT10142, Rev. A.

    If damage to the test specimen prevents use of the tool, measure and record the location of the source by removing the front end-plate and measuring the distance between the source and the front end of the shield (Figure 16). This procedure may require cutting the end of the source tube if it is crimped.

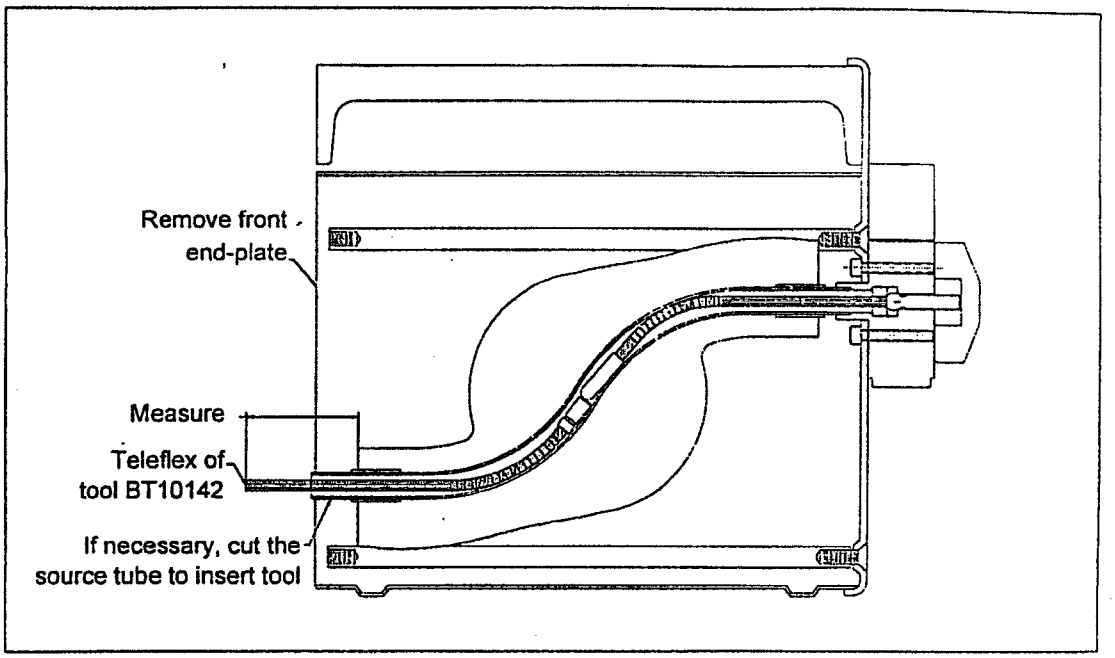

Figure 16: Alternate Source Location Method

NOTE: *This alternate method should only be used if tool BT10142, Rev. A, cannot be used.*

6.7.2 Thermal Test Assessment

Upon completion of the test, Engineering, Regulatory Affairs and Quality Assurance team members will jointly perform the following task:

- Review the test execution to ensure that the test was performed in accordance with 10 CFR 71 and the test conditions specified in this plan.

6.8 Final Test Inspection

Perform the following inspections after completion of the thermal test:

1. Radiograph the specimen.
2. Measure and record any damage to the test specimen.
3. Ensure that the source is in the same location it was immediately after the thermal test (see step 12 on page 29).
4. Profile the package using an active source in accordance with Amersham Work Instruction WI-Q09.
5. Assess radiation measurement at one meter from the package.

6. Determine whether it is necessary to dismantle the test specimen for inspection of hidden component damage or failure.
7. If the decision is to proceed with the inspection, record and photograph the process of removing any component.
8. Measure and record any damage or failure found in the process of dismantling the test specimen.

6.9 Final Assessment

Engineering, Regulatory Affairs and Quality Assurance team members will make a final assessment of the test specimen, and jointly determine whether the specimen meets the requirements of 10 CFR 71.73.

7.0 Worksheets

Use the following worksheets for executing these tests. There are three worksheets for each test: an equipment list and two test procedure checklists.

Use the test equipment list to record the serial number of each measurement device used. Attach a copy of the relevant inspection report or calibration certificate after you have verified the range and accuracy of the equipment.

Quality Control will initial each step on the checklist as it is executed and record data as required. The Engineering, Regulatory Affairs and Quality Assurance representatives must witness all testing to ensure the testing is performed in accordance with this test plan and 10 CFR 71.

Make copies of the forms for additional attempts. Maintain records of all attempts.

7.1 Temperature Measurement Points

Table 3 lists the measurement points for determining the test specimen temperature as required in the following worksheets.

Table 3: Test Specimen Temperature Measurement

Test	With Container	Without Container
Four-foot free drop	Container foam and projector foam	N/A
30-foot free drop	Container foam and projector foam	N/A
Puncture test	Container foam and projector foam	Projector foam
Thermal test	Container foam. Insert thermocouples into the top, the rear and one side of the container.	Insert a thermocouple into the storage tube for an external measurement and a thermocouple into the source tube for an internal measurement.

Equipment List 1: Four-foot Free Drop

Description	Enter the Model and Serial Number	Attach Inspection Report or Calibration Certificate
Drop Surface, Drawing AT10122, Rev. B		
Thermometer		
Thermocouple flexible probe		
Thermocouple surface probe		
Record any additional tools used to facilitate the test and attach the appropriate inspection report or calibration certificate.		
Verified by:	Signature	Date
Engineering		
Regulatory Affairs		
Quality Assurance		

Checklist 1: Four-foot Free Drop

Test Location: **Attempt Number:**

Step	A1	A2	B1	B2
1. Record the serial number of the test specimen.				
2. Prepare the specimen to bring its temperature to the specified level.	At or below -40° C	At or below -40° C	At or above 27° C	At or above 27° C
Steps 1 and 2 witnessed by:				
Engineering				
Regulatory Affairs				
Quality Assurance				
3. Measure the ambient temperature.				
Record ambient temperature:				
Note the instrument used:				
4. Attach the test specimen to the release mechanism.				
5. Begin video recording of test so that the impact is recorded.				
6. Measure the test specimen temperature and ensure that it is at the specified level.	At or below -40° C	At or below -40° C	At or above 27° C	At or above 27° C
Record the projector foam temperature:				
Note the instrument used:				
Record the container foam temperature:				
Note the instrument used:				
7. Lift and orient the test specimen as shown in the referenced figure for the specimen.	Figure 2 on page 10	Figure 2 on page 10	Figure 3 on page 11	Figure 3 on page 11
8. Inspect the orientation setup and verify drop height.				
Steps 3 through 8 witnessed by:				
Engineering				
Regulatory Affairs				
Quality Assurance				
9. Release the test specimen.				

Checklist 1: Four-foot Free Drop (Continued)

Test Location: **Attempt Number:**

Step	A1	A2	B1	B2
10. Measure the test specimen temperature.				
Record the projector foam temperature:				
Note the instrument used:				
Record the container foam temperature:				
Note the instrument used:				
11. Pause the video recorder. Ensure that the point of impact and orientation specified in the plan have been achieved and recorded.				
12. Record damage to test specimen on a separate sheet and attach.				
Steps 9 through 13 witnessed by:				
Engineering				
Regulatory Affairs				
Quality Assurance				
13. Engineering, Regulatory Affairs and Quality Assurance make a preliminary assessment relative to 10 CFR 71. Record the assessment on a separate sheet and attach. Determine what changes, if any, are necessary in package orientation for the 30-foot free drop to achieve maximum damage.				

Test Data Accepted by (Signature):	Date:
Engineering:	
Regulatory Affairs:	
Quality Assurance:	

Checklist 2: Four-foot Free Drop

Test Location: **Attempt Number:**

Step	C1	C2	D1	D2
1. Record the serial number of the test specimen.				
2. Prepare the specimen to bring its temperature to the specified level.	At or above 27° C	At or above 27° C	At or above 27° C	At or above 27° C
Steps 1 and 2 witnessed by:				
Engineering				
Regulatory Affairs				
Quality Assurance				
3. Measure the ambient temperature.				
Record ambient temperature:				
Note the instrument used:				
4. Attach the test specimen to the release mechanism.				
5. Begin video recording of test so that the impact is recorded.				
6. Measure the test specimen temperature and ensure that it is at the specified level.	At or above 27° C	At or above 27° C	At or above 27° C	At or above 27° C
Record the projector foam temperature:				
Note the instrument used:				
Record the container foam temperature:				
Note the instrument used:				
7. Lift and orient the test specimen as shown in the referenced figure for the specimen.	Figure 4 on page 12	Figure 4 on page 12	Figure 4 on page 12	Figure 4 on page 12
8. Inspect the orientation setup and verify drop height.				
Steps 3 through 8 witnessed by:				
Engineering				
Regulatory Affairs				
Quality Assurance				
9. Release the test specimen.				

Checklist 2: Four-foot Free Drop (Continued)

Test Location: **Attempt Number:**

Step	C1	C2	D1	D2
10. Measure the test specimen temperature.				
Record the projector foam temperature:				
Note the instrument used:				
Record the container foam temperature:				
Note the instrument used:				
11. Pause the video recorder. Ensure that the point of impact and orientation specified in the plan have been achieved and recorded.				
12. Record damage to test specimen on a separate sheet and attach.				
Steps 9 through 12 witnessed by:				
Engineering				
Regulatory Affairs				
Quality Assurance				
13. Engineering, Regulatory Affairs and Quality Assurance make a preliminary assessment relative to 10 CFR 71. Record the assessment on a separate sheet and attach. Determine what changes, if any, are necessary in package orientation for the 30-foot free drop to achieve maximum damage.				

Test Data Accepted by (Signature):	Date:
Engineering:	
Regulatory Affairs:	
Quality Assurance:	

Equipment List 2: 30-foot Free Drop

Description	Enter the Model and Serial Number	Attach Inspection Report or Calibration Certificate
Drop Surface, Drawing AT10122, Rev. B		
Weight Scale		
Thermometer		
Thermocouple flexible probe		
Thermocouple surface probe		
Record any additional tools used to facilitate the test and attach the appropriate inspection report or calibration certificate.		
Verified by:	Signature	Date
Engineering		
Regulatory Affairs		
Quality Assurance		

Checklist 3: 30-foot Free Drop

Test Location: **Attempt Number:**

Step	A1	A2	B1	B2
1. Record the serial number of the test specimen.				
2. Measure and record test specimen's weight.				
Record the specimen's weight:				
Note the instrument used:				
3. Prepare the test specimen to bring its temperature to the specified level.	At or below -40° C	At or below -40° C	At or above 27° C	At or above 27° C
Steps 1 through 3 witnessed by:				
Engineering				
Regulatory Affairs				
Quality Assurance				
4. Measure the ambient temperature.				
Record ambient temperature:				
Note the instrument used:				
5. Attach the test specimen to the release mechanism.				
6. Begin video recording of test so that the impact is recorded.				
7. Measure the test specimen temperature and ensure that is at the specified level.	At or below -40° C	At or below -40° C	At or above 27° C	At or above 27° C
Record the projector foam temperature:				
Note the instrument used:				
Record the container foam temperature:				
Note the instrument used:				
8. Lift and orient the test specimen as shown in the referenced figure for the specimen.	Figure 6, Page 15	Figure 6, Page 15	Figure 7, Page 16	Figure 7, Page 16
9. Inspect the orientation setup and verify the drop height.				

Checklist 3: 30-foot Free Drop (Continued)

Test Location: **Attempt Number:**

Step	A1	A2	B1	B2
Steps 4 through 9 witnessed by:				
Engineering				
Regulatory Affairs				
Quality Assurance				
10. Release the test specimen.				
11. Measure the test specimen temperature.				
Record the projector foam temperature:				
Note the instrument used:				
Record the container foam temperature:				
Note the instrument used:				
12. Measure and record the test specimen's weight.				
Record the specimen's weight:				
Note the instrument used:				
13. Pause the video recorder. Ensure that the point of impact and orientation specified in the plan have been achieved and recorded.				
14. Record damage to test specimen on a separate sheet and attach.				
Steps 10 through 14 witnessed by:				
Engineering				
Regulatory Affairs				
Quality Assurance				

Checklist 3: 30-foot Free Drop (Continued)

Test Location: **Attempt Number:**

Step	A1	A2	B1	B2
15. Engineering, Regulatory Affairs and Quality Assurance make a preliminary assessment relative to 10 CFR 71. Record the assessment on a separate sheet and attach. Determine what changes, if any, are necessary in package orientation for the puncture test to achieve maximum damage.				

Test Data Accepted by (Signature):	Date:
Engineering:	
Regulatory Affairs:	
Quality Assurance:	

Checklist 4: 30-foot Free Drop

Test Location: **Attempt Number:**

Step	C1	C2	D1	D2
1. Record the serial number of the test specimen.				
2. Measure and record test specimen's weight.				
Record the specimen's weight:				
Note the instrument used:				
3. Prepare the test specimen to bring its temperature to the specified level.	At or above 27° C	At or above 27° C	At or above 27° C	At or above 27° C
Steps 1 through 3 witnessed by:				
Engineering				
Regulatory Affairs				
Quality Assurance				
4. Measure the ambient temperature.				
Record ambient temperature:				
Note the instrument used:				
5. Attach the test specimen to the release mechanism.				
6. Begin video recording of test so that the impact is recorded.				
7. Measure the test specimen temperature and ensure that it is at the specified level.	At or above 27° C	At or above 27° C	At or above 27° C	At or above 27° C
Record the projector foam temperature:				
Note the instrument used:				
Record the container foam temperature:				
Note the instrument used:				
8. Lift and orient the test specimen as shown in the referenced figure for the specimen.	Figure 8, Page 17	Figure 8, Page 17	Figure 9, Page 18	Figure 9, Page 18
9. Inspect the orientation setup and verify the drop height.				

Checklist 4: 30-foot Free Drop (Continued)

Test Location: **Attempt Number:**

Step	C1	C2	D1	D2
Steps 4 through 9 witnessed by:				
Engineering				
Regulatory Affairs				
Quality Assurance				
10. Release the test specimen.				
11. Measure the test specimen temperature.				
Record the projector foam temperature:				
Note the instrument used:				
Record the container foam temperature:				
Note the instrument used:				
12. Measure and record the test specimen's weight.				
Record the specimen's weight:				
Note the instrument used:				
13. Pause the video recorder. Ensure that the point of impact and orientation specified in the plan have been achieved and recorded.				
14. Record damage to test specimen on a separate sheet and attach.				
Steps 10 through 14 witnessed by:				
Engineering				
Regulatory Affairs				
Quality Assurance				

Checklist 4: 30-foot Free Drop (Continued)

Test Location: **Attempt Number:**

Step	C1	C2	D1	D2
15. Engineering, Regulatory Affairs and Quality Assurance make a preliminary assessment relative to 10 CFR 71. Record the assessment on a separate sheet and attach. Determine what changes, if any, are necessary in package orientation for the puncture test to achieve maximum damage.				

Test Data Accepted by (Signature):	Date:
Engineering:	
Regulatory Affairs:	
Quality Assurance:	

Equipment List 3: Puncture Test

Description	Enter the Model and Serial Number	Attach Inspection Report or Calibration Certificate
Drop Surface, Drawing AT10122, Rev. B		
Puncture Billet, Drawing CT10119, Rev. C		
Weight Scale		
Thermometer		
Thermocouple flexible probe		
Thermocouple surface probe		
Record any additional tools used to facilitate the test and attach the appropriate inspection report or calibration certificate.		
Verified by:	Signature	Date
Engineering		
Regulatory Affairs		
Quality Assurance		

Checklist 5: Puncture Test

Test Location: **Attempt Number:**

Step	A1	A2	B1	B2
1. Record the serial number of the test specimen.				
2. Prepare the specimen to bring its temperature to the specified level.	At or below -40° C	At or below -40° C	At or above 27° C	At or above 27° C
Steps 1 and 2 witnessed by:				
Engineering				
Regulatory Affairs				
Quality Assurance				
3. Measure the weight of the specimen.				
Record the specimen's weight:				
Note instrument used:				
4. Measure the ambient temperature.				
Record ambient temperature:				
Note the instrument used:				
5. Attach the test specimen to the release mechanism.				
6. Begin video recording of test so that the impact is recorded.				
7. Measure the test specimen temperature and ensure that is it at the specified level.	At or below -40° C	At or below -40° C	At or above 27° C	At or above 27° C
Record the projector foam temperature:				
Note the instrument used:				
Record the container foam temperature:			N/A	N/A
Note the instrument used:			N/A	N/A
8. Lift and orient the test specimen as shown in the referenced figure for the specimen.	Figure 10, Page 21	Figure 10, Page 21	Figure 12, Page 23	Figure 12, Page 23
9. Inspect the orientation setup and verify drop height.				

Checklist 5: Puncture Test

Test Location: **Attempt Number:**

Step	A1	A2	B1	B2
Steps 3 through 9 witnessed by:				
Engineering				
Regulatory Affairs				
Quality Assurance				
10. Release the test specimen.				
11. Measure the test specimen temperature.				
Record the projector foam temperature:				
Note the instrument used:				
Record the container foam temperature:			N/A	N/A
Note the instrument used:			N/A	N/A
12. Measure and record the test specimen's weight.				
Record the specimen's weight:				
Note the instrument used:				
13. Pause the video recorder. Ensure that the point of impact and orientation specified in the plan have been achieved and recorded.				
14. Record damage to test specimen on a separate sheet and attach.				
Steps 10 through 14 witnessed by:				
Engineering				
Regulatory Affairs				
Quality Assurance				

Checklist 5: Puncture Test

Test Location: **Attempt Number:**

Step	A1	A2	B1	B2
15. Engineering, Regulatory Affairs and Quality Assurance make a preliminary assessment relative to 10 CFR 71. Record the assessment on a separate sheet and attach. Determine the package orientation for the thermal test that will achieve maximum damage. Determine whether the projector should be removed from the container for the thermal test.				

Test Data Accepted by (Signature):	Date:
Engineering:	
Regulatory Affairs:	
Quality Assurance:	

Checklist 6: Puncture Test

Test Location: **Attempt Number:**

Step	C1	C2	D1	D2
1. Record the serial number of the test specimen.				
2. Prepare the specimen to bring its temperature to the specified level.	At or above 27° C	At or above 27° C	At or above 27° C	At or above 27° C
Steps 1 and 2 witnessed by:				
Engineering				
Regulatory Affairs				
Quality Assurance				
3. Measure the weight of the specimen.				
Record the specimen's weight:				
Note instrument used:				
4. Measure the ambient temperature.				
Record ambient temperature:				
Note the instrument used:				
5. Attach the test specimen to the release mechanism.				
6. Begin video recording of test so that the impact is recorded.				
7. Measure the test specimen temperature and ensure that it is at the specified level.	At or above 27° C	At or above 27° C	At or above 27° C	At or above 27° C
Record the projector foam temperature:				
Note the instrument used:				
Record the container foam temperature:				
Note the instrument used:				
8. Lift and orient the test specimen as shown in the referenced figure for the specimen.	Figure 13, Page 24	Figure 13, Page 24	Figure 15, Page 26	Figure 15, Page 26
9. Inspect the orientation setup and verify drop height.				

Checklist 6: Puncture Test

Test Location: **Attempt Number:**

Step	C1	C2	D1	D2
Steps 3 through 9 witnessed by:				
Engineering				
Regulatory Affairs				
Quality Assurance				
10. Release the test specimen.				
11. Measure the tests specimen temperature.				
Record the projector foam temperature:				
Note the instrument used:				
Record the container foam temperature:				
Note the instrument used:				
12. Measure and record the test specimen's weight.				
Record the specimen's weight:				
Note the instrument used:				
13. Pause the video recorder. Ensure that the point of impact and orientation specified in the plan have been achieved and recorded.				
14. Record damage to test specimen on a separate sheet and attach.				
Steps 10 through 14 witnessed by:				
Engineering				
Regulatory Affairs				
Quality Assurance				

Checklist 6: Puncture Test

Test Location: **Attempt Number:**

Step	C1	C2	D1	D2
15. Engineering, Regulatory Affairs and Quality Assurance make a preliminary assessment relative to 10 CFR 71. Record the assessment on a separate sheet and attach. Determine the package orientation for the thermal test that will achieve maximum damage. Determine whether the projector should be removed from the container for the thermal test.				

Test Data Accepted by (Signature):	Date:
Engineering:	
Regulatory Affairs:	
Quality Assurance:	

Equipment List 4: Thermal Test

Description	Enter the Model and Serial Number	Attach Inspection Report or Calibration Certificate
Air Flowmeter		
Thermocouple 1		
Thermocouple 2		
Thermocouple 3		
Temperature recorder		
Record any additional tools used to facilitate the test and attach the appropriate inspection report or calibration certificate.		
Verified by:	Signature	Date
Engineering		
Regulatory Affairs		
Quality Assurance		

Checklist 7: Thermal Test

Test Location: **Attempt Number:**

Step	A1	A2	B1	B2
1. Record the serial number of the test specimen.				
2. Preheat the oven to a temperature above 800° C.				
3. Attach the thermocouples the specimen's measuring points.				
4. Place the package in the oven and close the oven door.				
Record the date and time that the package is placed in oven.				
5. When the test specimen temperature exceeds 800° C, start the air flow into the oven. Record the time.				
Steps 1 through 5 witnessed by:				
Engineering				
Regulatory Affairs				
Quality Assurance				
6. Measure the oven temperature, the test specimen temperature and the air flow rate.				
Record the oven temperature:				
Note instrument used:				
Record the test specimen temperature:				
Note instrument used:				
Record airflow rate:				
Note instrument used:				
7. Monitor the test specimen temperature and the oven temperature throughout the 30-minute period to ensure that they are above 800° C.				
8. Monitor the airflow throughout the 30-minute period to ensure the maximum rate without lowering the temperature below 800° C.				
9. At the end of the 30-minute period, repeat step 6 using the same measurement devices.				

Checklist 7: Thermal Test

Test Location: **Attempt Number:**

Step	A1	A2	B1	B2
Record the oven temperature:				
Record the test specimen temperature:				
Record intake air flow velocity:				
Steps 6 through 9 witnessed by:				
Engineering				
Regulatory Affairs				
Quality Assurance				
10. Remove test specimen from the oven.				
Record time the specimen is removed.				
Describe combustion when door is opened to remove specimen.				
NOTE: If specimen continues to burn, let it self-extinguish and cool naturally.				
11. Measure the ambient temperature.				
Record the ambient temperature:				
Note the instrument used:				
12. Photograph the test specimen and any subsequent damage.				
13. Record damage to test specimen on a separate sheet and attach.				
14. Radiograph the unit to determine the shield location.				
15. Measure and record the source location using tool BT10142, Rev. A., or using the alternate method described on page 29.				
Steps 10 through 15 witnessed by:				
Engineering				
Regulatory Affairs				
Quality Assurance				

Checklist 7: Thermal Test

Test Location: **Attempt Number:**

Step	A1	A2	B1	B2
16. Engineering, Regulatory Affairs and Quality Assurance make a preliminary assessment relative to 10 CFR 71. Record the assessment on a separate sheet and attach.				

Test Data Accepted by (Signature):	Date:
Engineering:	
Regulatory Affairs:	
Quality Assurance:	

Checklist 8: Thermal Test

Test Location: **Attempt Number:**

Step	C1	C2	D1	D2
1. Record the serial number of the test specimen.				
2. Preheat the oven to a temperature above 800° C.				
3. Attach the thermocouples the test specimen's measuring points.				
4. Place the package in the oven and close the oven door.				
Record the date and time that the package is placed in oven.				
5. When the test specimen temperature exceeds 800° C, start the air flow into the oven. Record the time.				
Steps 1 through 5 witnessed by:				
Engineering				
Regulatory Affairs				
Quality Assurance				
6. Measure the oven temperature, the test specimen temperature and the air flow rate.				
Record the oven temperature:				
Note instrument used:				
Record the test specimen temperature:				
Note instrument used:				
Record airflow rate:				
Note instrument used:				
7. Monitor the test specimen temperature and the oven temperature throughout the 30-minute period to ensure that they are above 800° C.				
8. Monitor the airflow throughout the 30-minute period to ensure the maximum rate without lowering the temperature below 800° C.				
9. At the end of the 30-minute period, repeat step 6 using the same measurement devices.				

Checklist 8: Thermal Test

Test Location: **Attempt Number:**

Step	C1	C2	D1	D2
Record the oven temperature:				
Record the test specimen temperature:				
Record intake air flow velocity:				
Steps 6 through 9 witnessed by:				
Engineering				
Regulatory Affairs				
Quality Assurance				
10. Remove test specimen from the oven.				
Record time the specimen is removed.				
Describe combustion when door is opened to remove specimen.				
NOTE: If specimen continues to burn, let it self-extinguish and cool naturally.				
11. Measure the ambient temperature.				
Record the ambient temperature:				
Note the instrument used:				
12. Photograph the test specimen and any subsequent damage				
13. Record damage to test specimen on a separate sheet and attach.				
14. Radiograph the unit to determine the shield location.				
15. Measure and record the source location using tool BT10142, Rev. A., or using the alternate method described on page 29.				
Steps 10 through 15 witnessed by:				
Engineering				
Regulatory Affairs				
Quality Assurance				

Checklist 8: Thermal Test

Test Location: **Attempt Number:**

Step	C1	C2	D1	D2
16. Engineering, Regulatory Affairs and Quality Assurance make a preliminary assessment relative to 10 CFR 71. Record the assessment on a separate sheet and attach.				

Test Data Accepted by (Signature):	Date:
Engineering:	
Regulatory Affairs:	
Quality Assurance:	

Appendix A: Drawings

Test Specimen Drawing
TP76-X, Rev. D (1 sheet)

Model 660 Shipping Container Decriptive Assembly
R66050, Rev. B. (2 sheets)

Military Specification, Shipping and Storage Container, Cartridge: 20MM, M548
MIL-S-23389B (14 sheets)

Model 660 Gamma Ray Projector Shipping Container Descriptive Assembly
C66025, Rev. F (3 sheets)

Model 660 Gamma Ray Projector Shipping Container Descriptive Assembly
C66025, Rev. B (4 sheets)

Model 660 Gamma Ray Projector Shipping Container Descriptive Assembly
C66030, Rev. D (3 sheets)

Model 660 Gamma Ray Projector Shipping Container Descriptive Assembly
C66030, Rev. A (3 sheets)

Model 660 Gamma Ray Projector Shipping Container Descriptive Assembly
C66030, Rev. – (4 sheets)

FIGURE WITHHELD UNDER 10 CFR 2.390

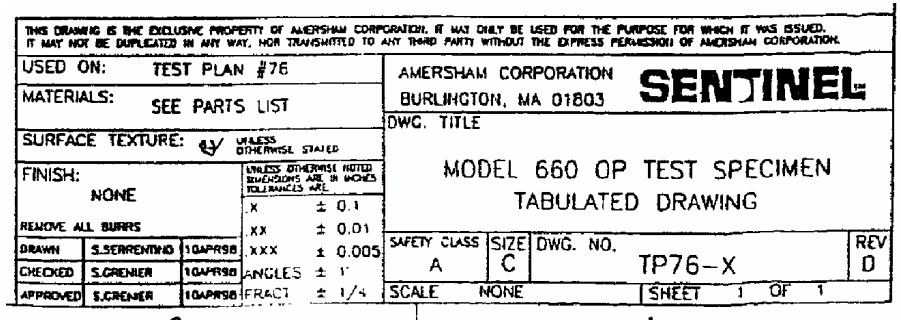

FIGURE WITHHELD UNDER 10 CFR 2.390

UNLESS OTHERWISE SPECIFIED: ALL DIMENSIONS IN INCHES.		TOLERANCES: DECIMALS = ± 02 FRACTIONS = ±1/4
SENTINEL™ Amersham Corporation 40 NORTH AVE, BURLINGTON, MA 01803		DESCRIPTIVE DRAWING
TITLE MODEL 660 SHIPPING CONTAINER		
SIZE A	DWG. NO. R 66050	REV B
	SCALE: NONE	SHEET 1 OF 2

FIGURE WITHHELD UNDER 10 CFR 2.390

UNLESS OTHERWISE SPECIFIED: ALL DIMENSIONS IN INCHES		TOLERANCES:	DECIMALS = ±.02 FRACTIONS = ±1/4
TITLE MODEL 660 SHIPPING CONTAINER			
SIZE A	DWG. NO. R 66050		REV B
	SCALE: NONE	SHEET 2 OF 2	

NOTICE
OF VALIDATION

MIL-S-23389B
NOTICE 1
15 JULY 1988

MILITARY SPECIFICATION

SHIPPING AND STORAGE CONTAINER,
CARTRIDGE: 20MM, M548

MIL-S-23389B, dated 29 September 1975, has been reviewed and determined to be valid for use in acquisition.

Preparing activity:
Army - AR

Custodians:
Army - AR
Air Force - 99

AMSC N/A
FSC 8140

DISTRIBUTION STATEMENT A. Approved for public release; distribution is unlimited.

4.4.3.3 Cover (see Dwg. D7258946, a detail of Dwg. D7258945).

Categories and Defects	Method of Inspection
Critical: None defined.	
Major:	
101. Thickness, metal	Gage
102. Width, inside cover (2 places)	Gage
Minor: None defined.	

4.4.3.4 Shipping and Storage Container, Painted (see Dwg. D7258943, D7258944, and D7258945, as applicable).

Categories and Defects	Method of Inspection
Critical: None defined.	
Major:	
101. Inside width, body assembly, min	Gage
102. Inside length, body assembly, min	Gage
103. Inside depth, body assembly, min	Gage
104. Interior or exterior paint inadequate	Visual 1/
105. Corrosion	Visual
106. Cracked or split component	Visual
107. Missing, incomplete, broken or mislocated metal component	Visual
108. Missing welds	Visual
109. Mutilated metal component	Visual 2/
110. Steel sliver, burr or sharp edge	Visual-Feel 3/
111. Missing, inverted, loose, misaligned or defective gasket	Visual-Manual 4/
Minor:	
201. Outside height	Gage
202. Outside length	Gage
203. Outside width	Gage
204. Marking incorrect, incomplete, illegible or missing	Visual
205. Foreign matter, except corrosion	Visual

1/ MIL-STD-406 shall be used as a guide to classify paint defects. In the standard defects classified as incidental shall be considered permissible; defects classified as minor shall be considered major. Missing, damaged or incomplete paint shall be classified a defect. Bare spots on any subassembly which do not accumulate to exceed 1/2 square inch in area or scratches which do not penetrate to the phosphate coating shall be disregarded.

2/ If the body or cover is severely dented or malformed, or the carrying or locking hardware is bent or otherwise distorted to cause a functional failure or become a personnel hazard, the sample unit shall be classed defective.

3/ If a steel sliver, burr or sharp edge which could injure unprotected hands is found on a ferrule, the bottom edge of a latch or cover skirt, or on the top or bottom edges of the body, the sample unit shall be classed defective.

4/ If the gasket is missing, inverted, broken, split or torn, contains a gross defect in texture or fit, or can be shifted horizontally within the gasket retainer by finger pressure or manual shake off the cover assembly, the sample unit shall be classed defective.

4.4.4 Tests.-The tests listed in Table I shall be performed on each lot in compliance with the test methods and procedures specified by 4.5. The sampling plans for the various tests shall be as specified by Table I. For acceptance, the results of each test shall apply with the applicable requirement(s).

Table I

Test		Sample Size	Item	Requirement
Phosphate coating	1/		3-Standard panels, TT-C-490	3.4.1
Paint adhesion	2/	3	Containers	3.4.2
Corrosion resistance	3/	2	Containers	3.4.3
Gasket compression	4/	10	Containers	3.5
Airtightness	5/	50	Containers	3.6
Functioning	6/	8	Containers	3.7
Weld security	7/	8	Containers	
Hasp			Body assemblies	3.8.1
Handle			Body assemblies	3.8.2
Latch			Cover assemblies	3.8.3
Concavity and convexity	8/	50	Containers	
			Cover assemblies	3.9.1
			Body assemblies	3.9.2

1/ Failure of the phosphate coating on the standard panels to comply with the applicable requirements for appearance and minimum weight, shall be cause for rejection of all container subassemblies phosphated since the preceding test.

2/ Failure of one or more units of the sample to comply with the requirements for paint adhesion shall be cause for rejection of the lot.

3/ Failure of one or more units of the sample to comply with the requirements for corrosion resistance shall be cause for rejection of the lot.

4/ A variables inspection plan from MIL-STD-414, Table B-3, an AQL of 1.50 percent shall be used to determine lot acceptability, applying the method of calculation as shown in Example B-3. Failure of the sample to meet the acceptability criterion shall be cause for rejection of the lot.

5/ Failure of four or more units of the sample to comply with the requirement for airtightness shall be cause for rejection of the lot. If two or three units of the sample fail to comply with the requirement, a second sample consisting of the same number of units as specified for the first sample shall be tested. If in the accumulated samples, five or more units fail to comply with the requirement, the lot shall be rejected. A stream or recurring succession of bubbles from any surface, seam or gasket junction shall be evidence of a defective container.

6/ Failure of two or more units of the sample to comply with the specified functioning requirements shall be cause for rejection of the lot. If one unit fails to comply with the requirements, a second sample consisting of the same number as specified for the first sample, shall be tested. If in the accumulated samples, two or more units fail to comply with the requirements for functioning, the lot shall be rejected.

7/ Failure of one or more units of the sample to comply with the specified requirements for weld security of hasp assemblies, latch assemblies or handle assemblies shall be cause for rejection of the lot.

8/ Failure of four or more units of the sample to comply with the requirement for convexity or concavity shall be cause for rejection of the lot. If two or three units of the sample fail to comply with the requirement, a second sample consisting of the same number of units as specified for the first sample shall be tested. If in the accumulated samples, five or more units fail to comply with the requirement, the lot shall be rejected. The sampling plan shall apply independently to cover and body assemblies.

4.4.5 Packaging, Packing and Marking Inspection.-There are no packaging or packing requirements applicable to this item.

4.4.6 Inspection equipment.-Index of Inspection Equipment List (IEL) 7259441 identifies the applicable Inspection Equipment Lists required to perform examination and tests prescribed herein. Equipment design(s) shall be in accordance with the applicable IEL code designations. The code designations are defined on Dwg. B1107528, a detail of IEL 7259441.

4.5 Test Methods and Procedures.

4.5.1 Phosphate Coating.-The method of test shall be as specified in the requirements of TT-C-490, as applicable to the type of phosphate used. The prescribed panels shall be processed with the cover or body assemblies to be represented, beginning with the start of daily production and at 4 hour intervals, maximum, thereafter. Appearance and weight of the phosphate coating on the panels shall be recorded against the batch of cover or body assemblies represented.

4.5.2 Paint Adhesion.-The method of test shall be as specified in the applicable requirements of TT-C-490. The test shall be performed on three randomly selected surfaces of each unit of the sample.

4.5.3 Corrosion Resistance.-The method of test shall be as specified in ASTM B117-64 - Method of Test for Salt Spray (Fog) Testing. Using a sharp instrument, one "X" 6 to 7 inches long shall be scored on a flat surface of the cover and one side of the body of each sample container. The samples shall be supported, one with the scored "X" in the upright position for the cover test and the other sample supported with the scored "X" in the upright position for the body side test. Traces of paint blistering or corrosion spots on component edges or sharp corners shall not be classed as protective coating failure.

4.5.4 Gasket Compression.-The method of test shall be as specified on Dwg. D11075090, a detail of IEL 7259441, to determine compliance to the requirement.

4.5.5 Airtightness.-The container shall be conditioned to ambient temperature and pressure prior to testing. The containers shall be tested in accordance with 4.5.5.1 or with permission of the procurement agency with 4.5.5.2. A wetting agent may be used to minimize air bubbles clinging to the exterior surface.

4.5.5.1 Vacuum Method.-The container shall be tested for leakage by immersing the closed container in the inverted position under water in a vacuum vessel and lower the pressure in the vessel to three pounds per square inch minimum below ambient pressure. Observation for leakage of air from the container interior shall be made for a minimum of 30 seconds after reduction of pressure.

4.5.5.2 Hot Water Method.-The container shall be tested for leakage by immersing the closed container, in the inverted position, to a depth of one inch below the surface of the water. The temperature of the water and the length of time of immersion shall be that which will assure an increase in pressure to a minimum of 3 psi above ambient pressure. Observation for air leakage from the container interior shall be made during the period of pressure buildup and for 30 seconds after the 3 psi pressure differential has been reached.

4.5.6 Functioning.-The container shall be inspected to assure compliance with the requirements of 3.7 through the following procedures:

a. Unlock and lock the cover assembly hardware by hand leverage. Note the locking and unlocking action for effectiveness and ease of operation.

b. Remove and replace the cover assembly. Note any misfit or bind with the body assembly.

c. Remove all cover assemblies. Inspect the gaskets for fit, security, cuts, and splits.

d. Note any sticking of gaskets to the top edges of the body assemblies.

e. Environmentally condition the container as specified in 3.7.3. After conditioning reinspect the container in accordance with a, b, c, and d, above.

4.5.7 Weld Security.

4.5.7.1 Hasp Assembly.-The sample body assembly resting on their bottoms shall be clamped in a suitable devise. The specified tensional force, utilizing the test fixture (see Dwg. D11075104, a detail of IEL 7259441) for hasp weld security, shall be slowly applied perpendicular to the bottom and against the underside of the offset of the hasp. The force shall be applied at a rate of .125 to .25 inch per minute and held for one minute. After removal of the force, examine the hasp for distortion and weld failure.

4.5.7.2 Handle Assembly.-With the sample body assembly resting on its bottom or on end, attach the test fixture (see Dwg. D11075103, a detail of IEL 7259441) for end handle security to each end handle. With one test fixture securely held, apply the specified tensional force through the other test fixture parallel to the container bottom against the ferrule of each handle. The force shall be applied at a rate of .125 to .25 inch per minute and held for one minute. After removal of the force, examine the handle and hasp for distortion and weld failure.

4.5.7.3 Latch Assembly.-Attach test fixture (see Dwg. D11075102, a detail of IEL 7259441) for latch assembly security to each latch on the cover assembly. Secure one test fixture and slowly apply a tensional force to the other parallel to the face of the cover. The force shall be applied at a rate of .125 to .25 inch per minute and held for one minute. The test fixtures apply the force against the surface of the latch links exposed on the underside of each latch. After removal of the force, examine the latches, latch links, latch link retainers and cover for distortion and weld failure.

4.5.8 Concavity and Convexity.

4.5.8.1 Cover Assembly.-The concavity and convexity shall be measured on the sample cover assemblies using test equipment (see Dwg. D7259439, a detail of IEL 7259441) along the length of the cover in the area above the cover gasket and the width adjacent to latch link retainer on the flat surface of the cover.

4.5.8.2 Body Assembly.-The concavity and convexity shall be measured on the sample bodies along the length and width of the top edge using test equipment (see Dwg. D7259440, a detail of IEL 7259441).

5. PREPARATION FOR DELIVERY

5.1 Packaging and Packing.-There are no packaging or packing requirements for this item.

5.2 Marking.-Each container shall be marked on the welded end in accordance with Dwg. D7258944 and each cover assembly in accordance with Dwg. D7258945.

5.3 Shipping Labels.-Shipping labels shall be affixed to each container on the welded end when shipment is made in less than full car or truck load quantities.

5.3.1 Labels.-The labels shall conform with MIL-L-19896 and shall be 4 inches square, approximately. The labels shall be marked with 1/4 inch high, minimum, letters and figures with the following information:

a. Consignee.
b. Manufacturer.
c. Item nomenclature.
d. Lot number.
e. Contractor number.

6. NOTES

6.1 Ordering Data.-Invitation for bids and contracts or orders will specify the following:

6.1.1 Title, number and date of this specification.

6.1.2 Place of inspection, if not place of manufacture.

6.1.3 First article sample requirements. (see 3.2 and 4.3)

6.1.4 Provisions for the submission and approval of the welding procedure.

6.2 AQL's.-The optional use of AQL values for either individual defects or classes of defects is intended to minimize inspection agency administrative burden which might result from an exclusive assignment of individual defect AQL's. The option also permits flexibility where sampling inspection for acceptance is integrated into the manufacturing process.

6.3 Intermediate Point Inspection.-The classification of defects identifies the defect characteristics (among other things) for acceptance inspection. It may be necessary to modify the sequence of inspection stations to best suit the manufacturing process. Inspection for defect characteristics which will be hidden or altered by subsequent processing operations (including unrelated operations) should be scheduled to prevent premature acceptance which could be detrimental to the attainment of optimum product quality in the end item.

6.4 Measurement for Gasket Compression.-Three point contact of the container resting on blocks may be used to overcome any rocking motion which might be encountered with the container resting on the surface plate. However, since the measurement technique relies upon relative distances, care should be taken to assure that there is no displacement on the referenced surfaces between the readings.

NOTE: Asterisks are not used in this revision to identify changes with respect to the previous issue due to the extensiveness of the changes.

Custodians:

Army - MU
Air Force - 70

Review Activities:

Army - MU
Air Force - 70

Preparing Activity:

Army - MU

Project No. 8140-0119

☆ U. S. GOVERNMENT PRINTING OFFICE: 1975 -603-766/1339

FIGURE WITHHELD UNDER 10 CFR 2.390

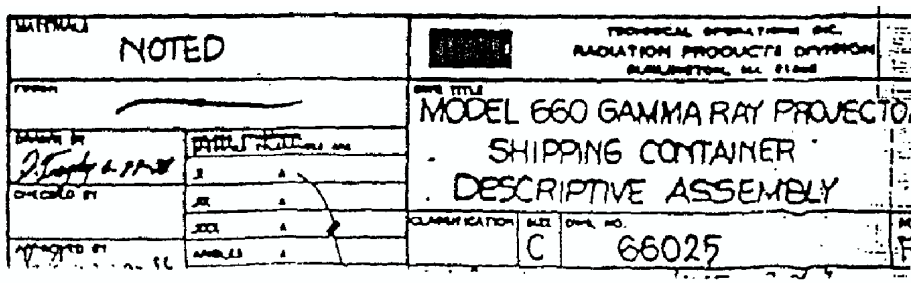

FIGURE WITHHELD UNDER 10 CFR 2.390

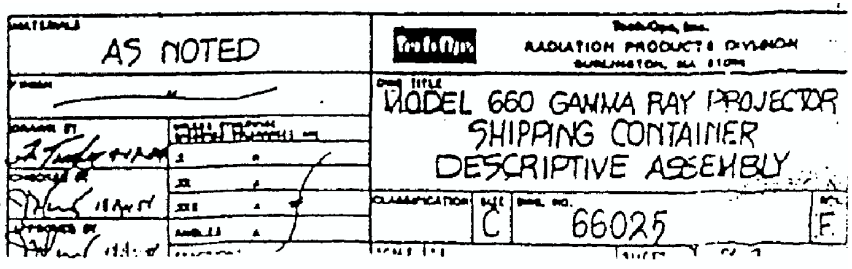

FIGURE WITHHELD UNDER 10 CFR 2.390

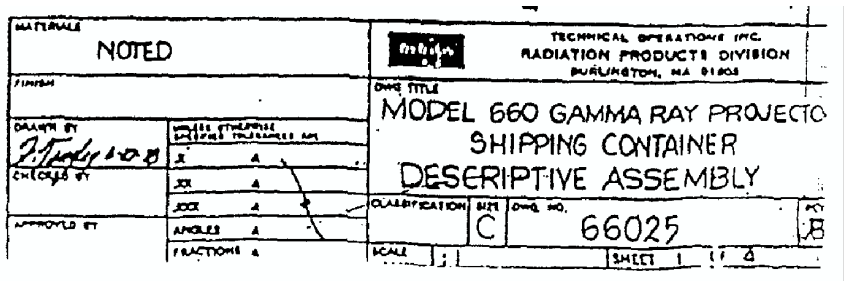

FIGURE WITHHELD UNDER 10 CFR 2.390

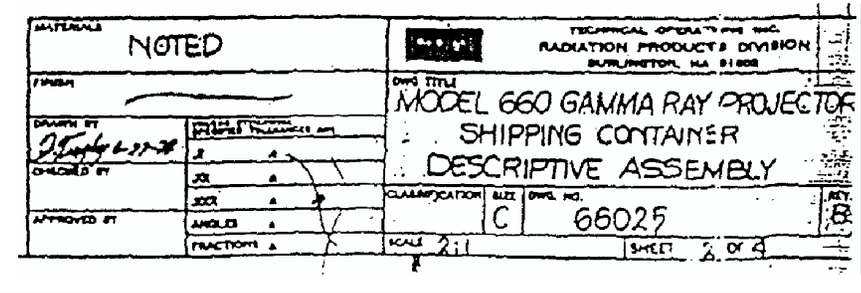

FIGURE WITHHELD UNDER 10 CFR 2.390

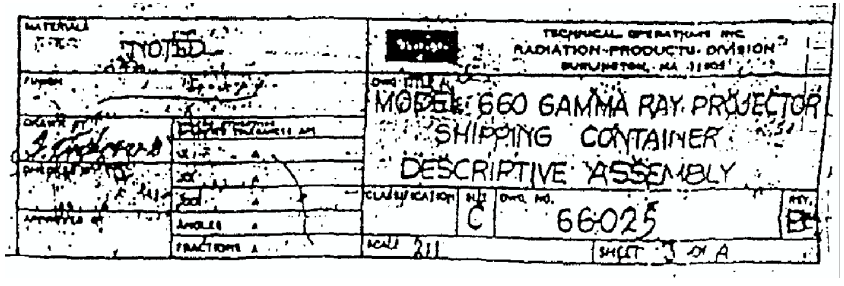

FIGURE WITHHELD UNDER 10 CFR 2.390

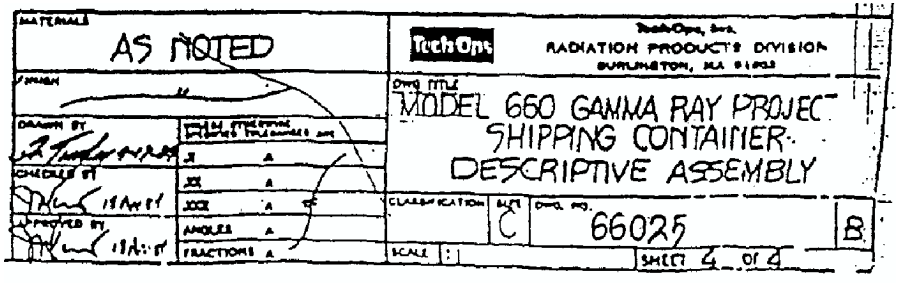

FIGURE WITHHELD UNDER 10 CFR 2.390

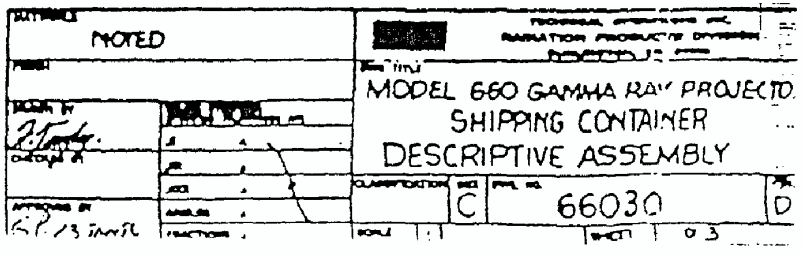

FIGURE WITHHELD UNDER 10 CFR 2.390

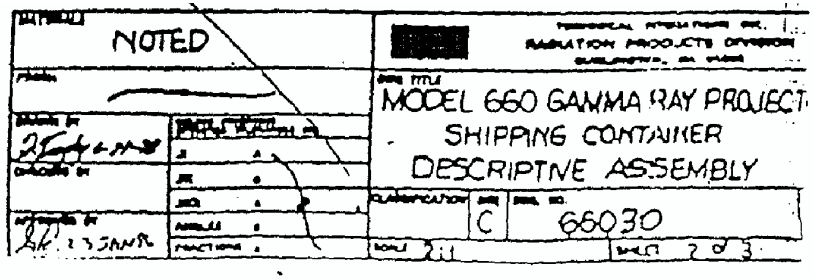

FIGURE WITHHELD UNDER 10 CFR 2.390

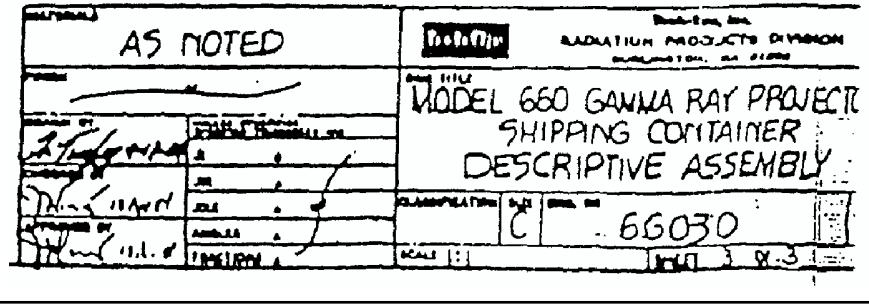

FIGURE WITHHELD UNDER 10 CFR 2.390

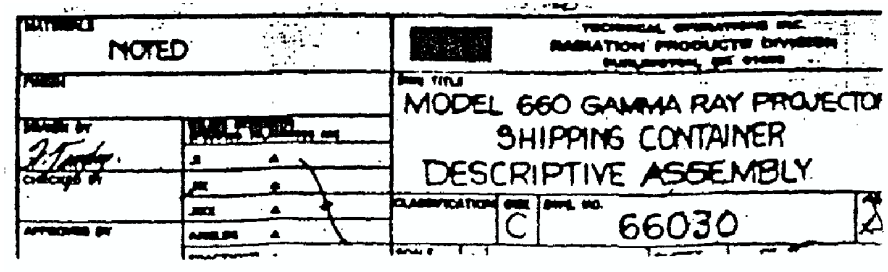

FIGURE WITHHELD UNDER 10 CFR 2.390

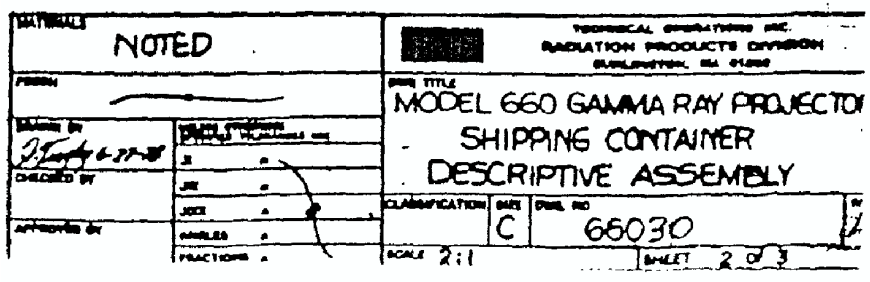

FIGURE WITHHELD UNDER 10 CFR 2.390

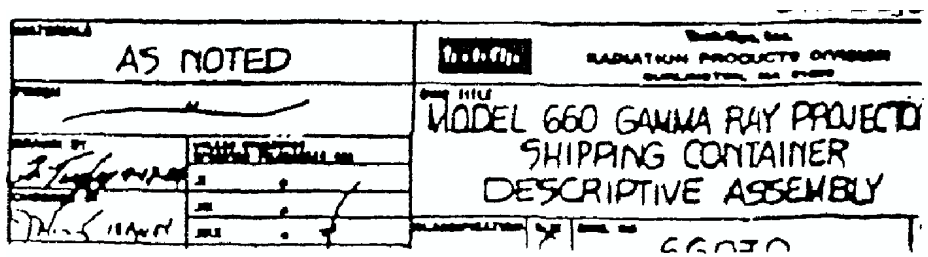

FIGURE WITHHELD UNDER 10 CFR 2.390

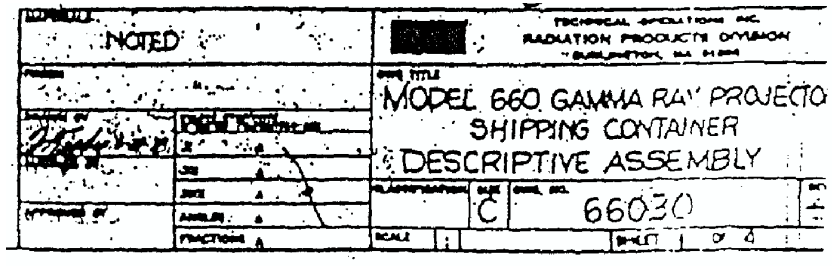

FIGURE WITHHELD UNDER 10 CFR 2.390

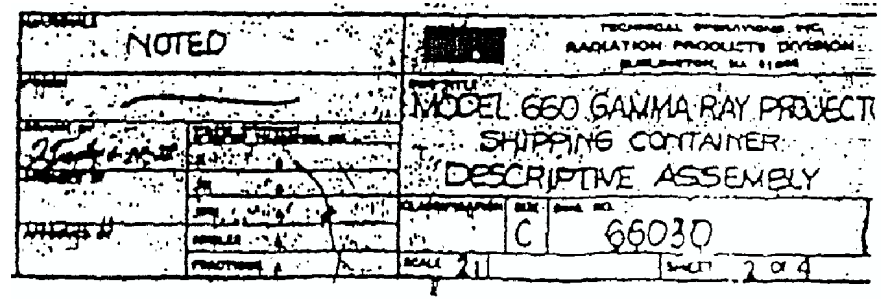

FIGURE WITHHELD UNDER 10 CFR 2.390

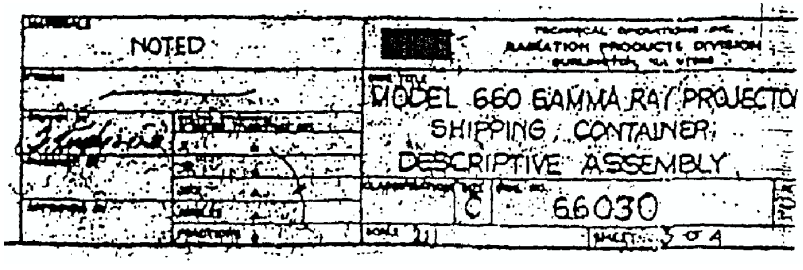

FIGURE WITHHELD UNDER 10 CFR 2.390

Appendix B: Thermal Test Airflow Calculations

Conditions for Projector-Only Tests

When the test specimen in the thermal test is a projector removed from its container, air will be forced into the oven at a minimum rate of 9.6 cubic feet per minute to ensure sufficient oxygen to fully combust the package materials that are capable of burning. This rate is based on the following analysis:

1. The only combustible material in the TP76-X projector is the polyurethane foam.
2. The chemical composition of polyurethane is $[C_{26}H_{33}NO_{13}]_n$.
3. The products of combustion are carbon dioxide (CO_2) and water (H_2O) and the molecular weights of the component materials are:

   C = 12 H = 1 O = 16 N = 14
4. The maximum mass of the polyurethane in a TP76-X projector is 988 grams. The maximum amounts of carbon and hydrogen present in the polyurethane are computed as follows:

Polyurethane	C_{26}	H_{33}	N	O_{13}
Molecular Weight	(26x12) +	(33x1)+	(1x14)+	(13x16)
567 =	312 +	33 +	14 +	208
Percent by Mass	55.0%	5.8%	2.5%	36.7%
988 g =	543g +	57g +	25g +	363g

5. The amount of oxygen required to fully combust the carbon to carbon dioxide is computed as follows:

Carbon Dioxide	C	O_2
Molecular Weight	(1x12) +	(2x16)
44 =	12 +	32

For a given mass of carbon, 32/12 = 2.67 times that mass of oxygen is required to fully combust the carbon to carbon dioxide. For a TP76-X projector containing 543 grams of carbon, full combustion would require 1450 grams of oxygen.

6. The amount of oxygen required to fully convert the hydrogen to water is computed as follows:

Water	H_2	O
Molecular Weight	(2x1) +	16
18 =	2 +	16

For a given mass of hydrogen, 16/2 = 8 times that mass of oxygen is required to fully convert the hydrogen to water. For a TP76-X projector with 57 grams of hydrogen, full combustion would require 456 grams of oxygen.

7. The sum of these oxygen requirements (1450 g + 456 g) less the oxygen supplied by the polyurethane (-363 g) equals 1543 grams of oxygen to assure sufficient oxygen to burn the polyurethane foam. At standard conditions, the composition of air is 23.2% oxygen by mass[1]. Therefore, 6650 grams of air are required.

8. The volume of air is computed at a density of 1.225 grams/liter to be 192 cubic feet:

   $6650g/1.225g/l = 5430\ l = 5.43m^3 = 192\ ft^3$

9. A 50% safety factor is added and the volume is distributed over the 30-minute test period to determine a minimum air flow rate of 9.6 cubic feet per minute:

   $(192\ ft^3)\ (1.5)\ /\ 30\ min. = 9.6\ ft^3/min.$

The air will be introduced as compressed air passing through a flowmeter and into the oven via metal tubing. A sufficient length of tubing will be inside the oven to ensure sufficient preheating.

---

1. Avallone, Eugene A., and Theodore Baumeister III, Editors, *Marks' Standard Handbook for Mechanical Engineers*, Ninth Edition (New York: McGraw-Hill Book Company, 1987), page 4-27:

   Air Required for Combustion. The composition of air is approximately 0.232 O_2 and 0.768 N_2 on a pound basis, or 0.21 O_2 and 0.79 N_2 by volume. For exact analysis, it may be necessary sometimes to take into account the water vapor mixed with the air, but ordinarily this may be neglected.

   The minimum amount of air required for combustion of 1 lb. of a fuel is the quantity of oxygen required, as found from the combustion equation, divided by 0.232. Likewise, the minimum volume of air required for the combustion of 1 ft^3 of a fuel gas is the volume of oxygen divided by 0.21.

Conditions for Tests with Projector and Container

When the test specimen in the thermal test consists of a projector inside the container, there are two additional combustible components, the polyethylene foam and the wood used in the container inserts, which require airflow rates of 29.9 ft^3/min. and 6 ft^3/min, respectively. Thus, the total airflow to burn all the materials in the test specimen is 45.5 ft^3/min.

Required airflow = 9.6 ft^3/min. + 29.9 ft^3/min. + 6.0 ft^3/min = 45.5 ft^3/min.

The following calculations show the airflow required to fully combust these materials.

Polyethylene Foam Combustion Calculation

This analysis estimates the airflow required to fully combust the polyethylene foam in the TP76-X container.

1. The chemical composition of polyethylene is $[C_2H_4]_n$.
2. The products of combustion are carbon dioxide (CO_2) and water (H_2O) and the molecular weights of the component materials are:

   C = 12 H = 1

3. The maximum mass of the polyethylene is 1,406 grams. The maximum amounts of carbon and hydrogen present in the polyethylene are computed as follows:

Polyethylene	C_2	H_4
Molecular Weight	(2x12) +	(4x1)
28 =	24 +	4
Percent by Mass	86%	14%
1406g =	1209g +	197g

4. The amount of oxygen required to fully combust the carbon to carbon dioxide is computed as follows:

Carbon Dioxide	C	O_2
Molecular Weight	(1x12) +	(2x16)
44 =	12 +	32

For a given mass of carbon, 32/12 = 2.67 times that mass of oxygen is required to fully combust the carbon to carbon dioxide. For 1,209 grams of carbon in the polyethylene, full combustion would require 3,228 grams of oxygen.

5. The amount of oxygen required to fully convert the hydrogen to water is computed as follows:

Water	H_2	O
Molecular Weight	(2x1) +	16
18 =	2 +	16

For a given mass of hydrogen, 16/2 = 8 times that mass of oxygen is required to fully convert the hydrogen to water. For the Polyethylene 197 grams of hydrogen, full combustion would require 1,576 grams of oxygen.

6. The sum of these oxygen requirements (3228g + 1576g) less the oxygen supplied by the polyethylene (0 g) equals 4,804 grams of oxygen to assure sufficient oxygen to burn the polyethylene foam. At standard conditions, the composition of air is 23.2% oxygen by mass. Therefore, 20,707 grams of air are required.

7. The volume of air is computed at a density of 1.225 grams/liter to be 597 cubic feet:

   20,707g/1.225g/l = 16,903 l = 16.9m^3= 597 ft^3

8. A 50% safety factor is added and the volume is distributed over the 30-minute test period to determine a minimum air flow rate of 29.9 cubic feet per minute:

   (597 ft^3) (1.5) / 30 min. = 29.9 ft^3/min.

Wood Combustion Calculation

The following analysis estimates the airflow required to fully combust the wood component in the TP76-X container.

1. The chemical composition of wood (cellulose) is $[C_6H_{10}O_5]_n$.

2. The products of combustion are carbon dioxide (CO_2) and water (H_2O) and the molecular weights of the component materials are:

   C = 12 H = 1 O = 16

3. The maximum mass of the wood is 816 grams. The maximum amounts of carbon and hydrogen present in the wood are computed as follows:

Wood	C_6	H_{10}	O_5
Molecular Weight	(6x12) +	(10x1)+	(5x16)
162 =	72 +	10+	80
Percent by Mass	44%	6%+	50%
816 g =	362g +	51g+	403g

4. The amount of oxygen required to fully combust the carbon to carbon dioxide is computed as follows:

Carbon Dioxide	C	O_2
Molecular Weight	(1x12) +	(2x16)
44 =	12 +	32

For a given mass of carbon, 32/12 = 2.67 times that mass of oxygen is required to fully combust the carbon to carbon dioxide. For the 362 grams of carbon in the wood, full combustion would require 967 grams of oxygen.

5. The amount of oxygen required to fully convert the hydrogen to water is computed as follows:

Water	H_2	O
Molecular Weight	(2x1) +	16
18 =	2 +	16

For a given mass of hydrogen, 16/2 = 8 times that mass of oxygen is required to fully convert the hydrogen to water. For the 51 grams of hydrogen in the wood, full combustion would require 408 grams of oxygen.

6. The sum of these oxygen requirements (967g + 408g) less the oxygen supplied by the wood (-403g) equals 972 grams of oxygen to assure sufficient oxygen to burn the wood. At standard conditions, the composition of air is 23.2% oxygen by mass. Therefore, 4,190 grams of air are required.

7. The volume of air is computed at a density of 1.225 grams/liter to be 120 cubic feet:

   $4190g/1.225g/l = 3420\ l = 3.42m^3 = 120\ ft^3$

8. A 50% safety factor is added and the volume is distributed over the 30-minute test period to determine a minimum air flow rate of 6 cubic feet per minute:

   $(120ft^3)\ (1.5)\ /\ 30\ min. = 6\ ft^3/min.$

NOTE: *The total airflow rate of 45.5 cubic feet per minute is not achievable using available test equipment without cooling the oven below the 800°C minimum. Even if it were possible, only a small amount of the oxygen provided by such an airflow would be available to the combustible materials inside a closed test specimen container. However, to promote combustion, the airflow rate will be maximized within the constraint of maintaining the test specimen temperature above 800°C for the duration of the test.*

MIL-S-23389B
29 September 1975
SUPERSEDING
MIL-S-23389A
6 March 1968

MILITARY SPECIFICATION

SHIPPING AND STORAGE CONTAINER, CARTRIDGE, 20MM, M548

This specification is approved for use by all departments and agencies of the Department of Defense.

1. SCOPE

1.1 This specification covers one model steel container for shipping and storing ammunition.

2. APPLICABLE DOCUMENTS

2.1 The following documents of the issue in effect on date of invitation for bids or request for proposal, form a part of this specification to the extent specified herein.

SPECIFICATIONS

FEDERAL

TT-C-490 - Cleaning Methods and Pretreatment of Ferrous Surfaces for Organic Coatings

MILITARY

MIL-L-19896 - Labels and Label Tape, Pressure Sensitive Adhesive, Paper, Water Resistant
MIL-W-12332 - Welding, Resistance, Spot, Seam, and Projection; for Fabricating Assemblies of Low-Carbon Steel

STANDARDS

MILITARY

MIL-STD-105 - Sampling Procedures and Tables for Inspection by Attributes
MIL-STD-109 - Quality Assurance Terms and Definitions
MIL-STD-406 - Visual Inspection Standards for Tern Plate Cans and Steel Boxes Used in Small Arms Ammunition Packaging.

FSC 8140

MIL-STD-414 - Sampling Procedures and Tables for Inspection by Variables for Percent Defective
MIL-STD-1235 - Single and Multilevel Continuous Sampling Procedures and Tables for Inspection by Attributes

DRAWINGS

ARMAMENT COMMAND

D7258943 - Shipping and Storage Container, Cartridge, 20mm, M548
D7258944 - Body Assembly
D7258945 - Cover Assembly
IEL 7259441 - Index of Inspection Equipment Lists for: Shipping and Storage Container, Cartridge, 20mm, M548

(Copies of specifications, standards, drawings, and publications required by suppliers in connection with specific procurement functions should be obtained from the procuring activity or as directed by the contracting officer.)

2.2 Other Publications.-The following documents form a part of this specification to the extent specified herein. Unless otherwise indicated, the issue in effect on date of invitation for bids or request for proposal shall apply.

American Society for Testing and Materials (ASTM)
ASTM B117-64 -- Method of Test for Salt Spray (Fog) Testing

(Application for copies should be addressed to the American Society for Testing and Materials, 1916 Race Street, Philadelphia, Pa. 19103)

Technical Society and Technical Association specifications and standards are generally available for reference from libraries. They are also distributed among technical groups and using Federal agencies.

3. REQUIREMENTS

3.1 General.-The container shall comply with the requirements of Drawing (Dwg.) D7258943, referenced specifications and other requirements specified herein.

3.2 First Article Sample.-Unless otherwise directed by the contracting officer, a first article sample shall be required.

3.3 Welding Procedure.-Fabrication of the container shall be in accordance with the recorded welding procedure requirements of MIL-W-12332.

3.4 Protective Coating.

3.4.1 Phosphate.-The cleaning method and pretreatment process used shall comply with the requirements of Dwgs. D7258944 and D7258945. The phosphate coating shall comply with the requirements of TT-C-490 for appearance and minimum weight, as applicable to the type of phosphate used.

3.4.2 Paint.-The paint coating shall comply with the requirements of Dwgs. D7258944 and D7258945. In addition, the coating shall be smooth, unbroken and free of blisters, runs, thin spots and foreign matter. Adhesion of the paint to the pretreated surfaces shall comply with applicable requirements of TT-C-490.

3.4.3 Corrosion Resistance.-The exterior surface of the container shall show no visible evidence of paint blistering, creepage (loss of adhesion), or corrosion of basis metal in excess of 1/8 inch from a test score, or more than five scattered blisters or corrosion spots having individual diameters greater than 3/16 inch in any 4 x 12 inch flat area, excluding score marks, after exposure to a 5% solution of salt spray for 80 hours.

3.5 Gasket Compression.-The gasket compression of the container shall be as specified by Dwg. D7258943. (see 6.4)

3.6 Airtightness.-The assembled container shall withstand, without leakage, an air pressure differential of three pounds per square inch (psi).

3.7 Functioning.

3.7.1 Cover Assembly.-The locking hardware shall be operable manually. The cover assembly shall be removable manually without the use of exorbitant force. The gasket shall remain secure in the correct position within the cover upon removal of the cover assembly. The gasket shall not stick to, be cut or split by contact against the top edge of the body assembly.

3.7.2 Hasp and Latch.-Mating parts of the body hasp and latches shall engage without requiring deformation of any container part, and the latches shall close and open freely. When closed the latches of the assembled container shall remain closed until manually opened.

3.7.3 Elevated Temperature Storage.-Following storage of the container in its closed position at an air temperature of 163 degrees Fahrenheit (°F) minimum for a period of 24 hours minimum and subsequent return to ambient temperature, the container shall function as required in 3.7.1 and 3.7.2.

3.8 Weld Security.

3.8.1 Hasp Assembly.-Each hasp of the body assembly shall comply with the security requirement of Dwg. D7258944 without permanent deformation or failure of a weld.

3.8.2 Handle Assembly.-The handles of the body assembly shall withstand a pull of 600 pounds without permanent deformation of a component or failure of a weld.

3.8.3 Latch Assembly.-The latch assemblies of the cover assembly shall comply with the security requirement of Dwg. D7258945 without breakage or permanent deformation of any of the components or welds.

3.9 Concavity and convexity.

3.9.1 Cover Assembly.-The cover assembly shall meet the requirements of Dwg. D7258945 for flatness.

3.9.2 Body Assembly.-The top edges of the body assembly shall meet the requirements of Dwg. D7258944 for straightness.

3.10 Workmanship.-The requirements for workmanship are as specified by applicable drawings, referenced specifications and the following:

3.10.1 Processing Defects.-The container shall be free of cracks, splits, sharp edges, slivers, burrs, severe dents, cuts and scratches, missing or defective welds and components and other forms of unsatisfactory workmanship.

3.10.2 Cleanliness.-The painted container shall be free of all foreign matter.

4. QUALITY ASSURANCE PROVISIONS

4.1 Responsibility for Inspection.-Unless otherwise specified in the contract or purchase order, the supplier is responsible for the performance of all inspection requirements as specified herein. Except as otherwise specified in the contract or order, the supplier may use his own or any other facilities suitable for the performance of the inspection requirements specified herein, unless disapproved by the Government. The Government reserves the right to perform any of the inspections set forth in the specification where such inspections are deemed necessary to assure supplies and services conform to prescribed requirements.

4.1.1 Quality Assurance Terms and Definitions.-Reference shall be made to MIL-STD-109 for definition of quality assurance terms.

4.2 Classification of Inspections.-The inspection requirements specified herein are classified as follows:

1. First Article Inspection (see 4.3)
2. Quality Conformance Inspection (see 4.4)

4.3 First Article Inspection.

4.3.1 First Article Sample.-At the beginning of production, a sample representative of the production material, equipment, processes and procedures shall be submitted in accordance with contract requirements and shall consist of 50 painted containers, three sets of unassembled component parts, and the welding procedure. Prior to approval of the first article sample, the acquisition of material or components for, or the commencement of production of the balance of the contract quantity shall be at the sole risk of the contractor.

4.3.1.1 First Article Inspection.-Prior to submission of the first article sample to the Government, the contractor shall inspect all components and assemblies for all contract, drawings and specification requirements. The contractor's inspection shall be subjected to verification by the Government representative.

4.3.1.2 Examination and Tests.-The first article sample will be inspected for all requirements of the drawings and specifications at a Government laboratory or such facility specified in the contract. Determination as to approval of any first article sample shall be based only upon results of initial examinations and tests.

4.3.1.3 First Article Sample Failure.-Failure of the sample to comply with requirements of the drawings and specifications will result in sample disapproval.

4.4 Quality Conformance Inspection.

4.4.1 Submission of Product.-The product shall be submitted in accordance with MIL-STD-105 or MIL-STD-1235, as applicable.

4.4.1.1 Lot.-A lot shall consist of assembled containers produced by one manufacturer in one unchanged process, in accordance with the contract, the same drawings and drawing revisions, and same specification and specification revision.

4.4.1.2 Lot Identification.-The cover and body assemblies of each container of the lot shall be identified as specified by Dwgs. D7258944 and D7258945, supplemented as directed by the procuring activity.

4.4.2 Examination.-Examination for major and minor defects shall be performed as specified herein. Each assembly found to be defective shall be rejected.

4.4.2.1 Sampling Plans.-The sampling plans of either MIL-STD-105 or MIL-STD-1235 shall apply at the option of the contractor. To determine product acceptability, major and minor defects as listed herein may be considered on a class basis, or they may be considered individually. (see 6.2) However, when three or less defect characteristics are listed in a classification, acceptability shall be determined on an individual basis for major defects. (see 6.2)

4.4.2.2 AQL's.-The following AQL's are assigned:

a. Individual defects

Major defects	0.25%
Minor defects	0.40%

b. Class basis

Major defects	1.50%
Minor defects	2.50%

4.4.3 Classification of Defects (see 6.3).-The classification of defects shall be as follows:

4.4.3.1 Body (see Dwg. D7258949, a detail of Dwg. D7258944).

Categories and Defects	Method of Inspection
Critical: None defined.	
Major:	
101. Thickness, metal	Gage
102. Convexity or concavity top edges of body	Gage
Minor:	
201. Height of body seam	Gage

4.4.3.2 Bottom (see Dwg. B7258950, a detail of Dwg. D7258944).

Categories and Defects	Method of Inspection
Critical: None defined.	
Major:	
101. Thickness, metal	Gage
102. Length	Gage
103. Width	Gage
Minor: None defined.	

Section 2.12.3 - Test Plan 78 and Test Report 78

SENTINEL

	TEST PLAN NO. 78
TEST PLAN COVER SHEET	
TEST TITLE: Amersham Test Plan #78	
PRODUCT MODEL: OPL-660 AND OP-660	
ORIGINATED BY: S. Sumter	DATE: 18 MAY 98
TEST PLAN REVIEW	
ENGINEERING APPROVAL: S. Gr	DATE: 19 MAY 98
QUALITY ASSURANCE APPROVAL: C. Rongman	DATE: 19 May 98
REGULATORY APPROVAL: L. Q. Dale	DATE: 19 May 98
COMMENTS:	
TEST RESULTS REVIEW	
ENGINEERING APPROVAL: S. Gr	DATE: 20 MAY 98
QUALITY ASSURANCE APPROVAL: K Nafaf	DATE: 20 MAY 98
REGULATORY APPROVAL: C. Rongman	DATE: 20 May 98

Amersham QSA

Amersham Test Plan #78

This document describes package testing for Amersham Model OPL-660 and OP-660 Shipping Container to meet tie-down standard requirements for all packages under 10 CFR 71.45 (b) (1).

This document outlines the testing scenario, justifies the package orientations, and provides test worksheets to record key steps in the testing sequence.

1.0 Introduction

The purpose of this test is to demonstrate the handles of the container used for the Model OPL-660 and Model OP-660 can withstand the tie-down requirement of 10 CFR 71.45 (b) (1). The maximum weight of either model is 88 lbs.

The handle is a rectangular-formed, 0.25-inch diameter rod. It's retained in the radius-formed dimple of the hasp. The hasp is spot welded to the package. The handle pivots 90° about the "Y" axis. It rotates from horizontal down to vertical towards the base. The hasp hinders its movement in the transverse and longitudinal directions.

The analysis performed on the handles as tie-downs indicated the worst orientation for the package would be as in figure 1. This orientation produces a resultant load of 10.32g's or 908 lbs. (10.32 x 88 lbs.) on one handle. The direction of the load is primarily in the longitudinal direction. This is due to the fact that one handle would be taking the full 10g's. The angle of the resultant load would be just over 14° from the "X" or longitudinal axis, 76° from the "Y" or transverse axis, and about 87° from the "Z" or vertical axis.

Tie-down wires connecting the package to the vehicle would be arranged to conserve equilibrium in the event this loading was to occur. The maximum load on the handle would be no less than the resulting reaction load of 908 lbs., regardless of the tie-down wire arrangement. The total force on the tie-down wires would have to equal the reaction load.

Therefore, a tensile load of 910 lbs. in the longitudinal direction would simulate the highest loading condition for the package handles.

2.0 System Failure and Orientation

The system failure is the removal of the container handle. The orientation for the test is to pull the handles along the longitudinal axis of the container. This orientation would closely simulate the natural tie-down arrangement, if the handle were used.

3.0 Test Specimen

Three test specimens will be tested. Each shall be certified to MIL-S-23389B.

4.0 Material and Equipment

The test worksheets in Section 8.0 list the key materials and equipment required and the necessary measurement instruments.

Additional materials and equipment may be used to facilitate the tests.

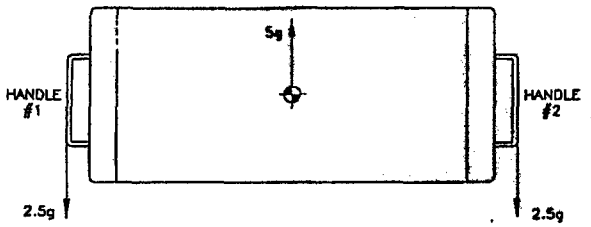

TRANSVERSE LOAD SHARED BY BOTH HANDLES.

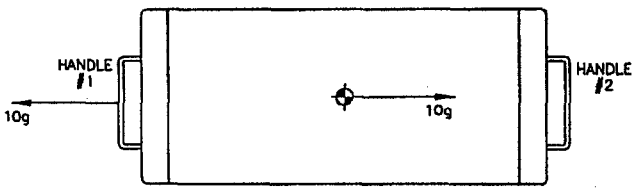

LONGITUDINAL LOAD TAKEN BY ONE HANDLE.

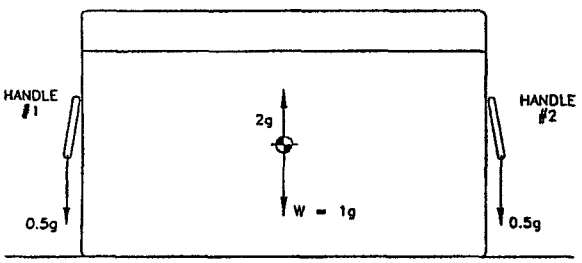

VERTICAL LOAD SHARED BY BOTH HANDLES AND PACKAGE WEIGHT.

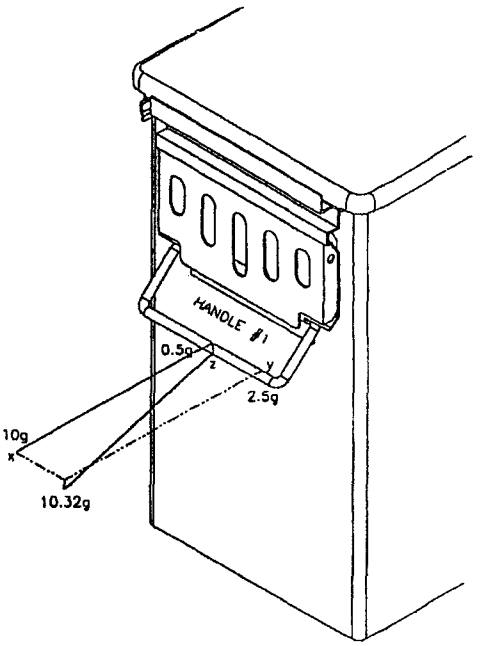

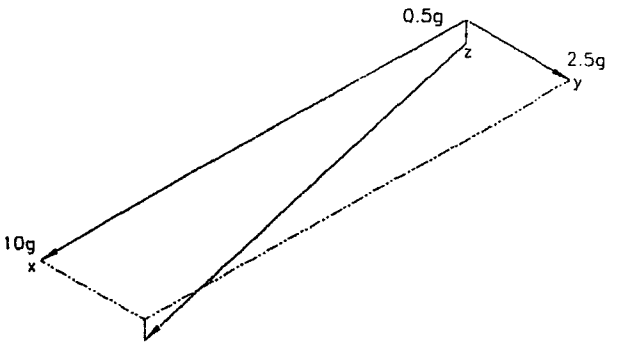

$R = (10g^2 + 2.5g^2 + .5g^2)^{0.5} = 10.32g$

$Ax = \cos^{-1}(10g / 10.32g) = 14.3°$

$Ay = \cos^{-1}(2.5g / 10.32g) = 76°$

$Az = \cos^{-1}(0.5g / 10.32g) = 87.2°$

FREE BODY DIAGRAM OF RESULTANT LOAD ON ONE HANDLE.

Figure 1. Transport Loading Diagram.

5.0 Roles and Responsibilities

The responsibilities of the groups identified in this plan are:

- Engineering executes the tests according to the test plan and summarizes the test results. Engineering also provides technical input to assist Regulatory Affairs and Quality Assurance as needed.

- Regulatory Affairs monitors the tests and reviews test reports for compliance with regulatory requirements.

- Quality Assurance oversees test execution and test report generation to ensure compliance with 10 CFR 71, other regulatory requirements and the Amersham Quality Assurance Program.

- Engineering, Regulatory Affairs and Quality Assurance are jointly responsible for assessing test and specimen conditions relative to 10 CFR 71.

- Quality Control, a function that reports directly to Quality Assurance, is responsible for measuring and recording test and specimen data throughout the test cycle.

- The managers directly responsible for Engineering, Regulatory Affairs and Quality Assurance will identify and document personnel who are qualified to represent their departments in carrying out this test plan.

6.0 Test Procedure

All test specimens shall follow the sequence below:

1. Inspect test specimen to ensure it is certified to MIL-S-23389B.
2. Mark each test specimen with a unique identification number. (TP78-A, TP78-B & TP78-C).
3. Place the test specimen into the pull test device.
4. Apply a tensile force to both handles. Record the rate of application.
5. When the force reaches 910 Lbs., stop and hold for 2 minutes.
6. Record final force measurement.
7. After 2 minutes, remove the force.
8. Remove the test specimen.
9. Record damage, if any.

7.0 Equipment List

Description Enter the Model and Serial Number

Force gage: _____

Attach Inspection Report or Calibration Certificate

Record any additional tools used to facilitate the test and attach the appropriate inspection report or calibration certificate.

	Verified by:	Signature	Date
Engineering			
Regulatory Affairs			
Quality Assurance			

8.0 Checklist

Test Location: _____

Test Specimen: _____

1. _____ Inspect test specimen to ensure it is certified to MIL-S-23389B.
2. _____ Place the test specimen into the pull test device.
3. _____ Photograph the test setup.
4. _____ Apply force and record the rate application.
5. _____ Apply force to 910 Lbs. and hold for 2 minutes.
6. _____ Remove the force after 2 minutes.
7. _____ Remove the test specimen and record damage, *if any*.
8. Engineering, Regulatory Affairs and Quality Assurance make an assessment relative to 10 CFR 71. Record the assessment on a separate sheet and attach.

Test Data Witnessed and Accepted by (Signature): Date:

Engineering: _____

Regulatory Affairs: _____

Quality Assurance: _____

S. G. 20 MAY 98
K. Naffey 20 MAY 98

Amersham Test Plan #78 Results

This document describes the package testing results for Amersham Model OPL-660 and OP-660 Shipping Container to meet tie-down standard requirements for all packages under 10 CFR 71.45 (b) (1).

1.0 Test Objective

The objective of this test is to demonstrate the handles of the container used for the Model OPL-660 and Model OP-660 can withstand the tie-down requirement of 10 CFR 71.45 (b) (1).

2.0 Test Setup

Based on the analysis of Test Plan #78, the highest load on either handle is 908 lbs., acting along the longitudinal axis of the package. The setup for the test is to pull the handles along the longitudinal axis of the container. This orientation would closely simulate the natural tie-down arrangement, if the handle were used.

The test apparatus consisted of the vertically mounted, pull test device located in the Quality Control department. The grip at the top of the apparatus is about an inch wide, while the grip at the bottom is about 4-1/4 inches wide. A force gage at the top measures the tension in the system as the two grips move away from each other. The bottom grip is pulled away from the top by means of a manually operated, jacking screw.

3.0 Test Specimen

Three test specimens, certified to MIL-S-23389B, were tested.

4.0 Results

All three test specimen handles remained attached and functioning after the test.

The damage and observations for each specimen was identical:

- The handle attached to the top grip deformed away from the box (1-inch).
- The handle at the bottom did not deform.
- Both handles pivot freely.
- The spot welds used in attaching the hasp and handle were pulled, but held.
- The plastic handle ferrules at the top grip were split, but usable.

5.0 Conclusion

Based on the above results, the handles achieved the objective by remaining attached and functioning after the test. Therefore, the handles of the Model OPL-660 and OP-660 meet the tie-down requirements of 10 CFR 71.45 (b) (1).

Section 3 - THERMAL EVALUATION

3.1 Description of Thermal Design

(Reference:

- *USNRC, 10 CFR 71.33(a)(5)(v) and 71.33(b)(7)*
- *IAEA TS-R-1, paragraphs 651(b) and 655)*

The Model OP-660 & OPL-660 transport packages are completely passive thermal devices having no mechanical cooling system or relief valves. All cooling of the transport package is through free convection and radiation. The maximum activity for this package is 140 Ci of Ir-192. Accounting for source absorption, this equals a maximum content activity of 322 Ci of Ir-192. The corresponding decay heat generation rate for the content activity is approximately 2.8 Watts (See Section 1.2.2).

3.1.1 Design Features

The Model OP-660 & OPL-660 package is described in Section 1. Features uniquely relevant to thermal performance are detailed below.

3.1.1.1 Wood and Foam Container Inserts

During a fire test, the foam and wood will tend to char and eventually ignite. If the outer container is present during the fire test, these materials will initially serve to slow the heat transfer to the inner 660 projector.

3.1.1.2 Thin Walled Steel Container

The thin walls of the outer container exhibits almost no thermal gradient. During a fire test, the entire steel structure will very quickly be at uniform temperature, eliminating stresses induced by thermal differentials within the material. Further, the container will move and flex easily, thus relieving any thermal expansion stress without rupture.

3.1.1.3 660 Projector

The 660 projector is a fully enclosed bolted steel structure. This structure prevents oxidation by severely limiting oxygen from getting to the depleted uranium shield.

3.1.2 Content's Decay Heat

From Section 1.2.2, a maximum of 2.8 Watts of energy is available to be absorbed by the package.

3.1.3 Summary Tables of Temperatures

Table 3.1.A: Summary Table of Temperatures

Temperature Condition	OP-660 or OPL-660	Comments
Insolation (38°C in full sun)	69°C (156°F)	Section 3.4.1.1.
Decay Heating (38°C in shade)	45.3°C (113.5°F)	Section 3.4.1.2
Maximum Fire Test Temperature	838°C (1,540°F)	Results based on maximum seen for inner device as described in Section 2.7.4.
Post-Fire Steady State (maximum)	838°C (1,540°F)	Results based on maximum seen for inner device as described in Section 2.7.4. Maximum did not exceed temperatures seen immediately before removal from oven.

3.1.4 Summary Tables of Maximum Pressures

All package components are vented to atmosphere. As such, no pressure will build up in the units under either Normal or Hypothetical Accident conditions. Normal operating conditions will generate negligible pressure differential within the package. The package has the ability to withstand elevated atmospheric pressure because all components except the special form source are open to the atmosphere.

Any pressure generated within the special form source is significantly below that which would be generated during the Hypothetical Accident Conditions thermal test, which is evaluated in Section 2.7.4 .3 to result in no loss of structural integrity or containment.

3.2 Material Properties and Component Specifications

3.2.1 Material Properties

Table 3.2.A lists the relevant thermal properties of the important materials in the package. The resources referred to in the last column are listed below the table.

Table 3.2.A: Thermal Properties of Principle Package Materials

Material	Density (lb/in^3)	Melting/Combustion Temperature	Thermal Expansion	Resource
Depleted Uranium (U-0.75 Ti)	0.68	2,071°F	8μin/in°F	Reference #2, p.20-35
Copper	0.32	1981°F	16.5μin/in°F	Reference #5, p.1203
Lead (99%)	0.41	621°F	16μin/in°F	Reference #2, p.1-46
Low Carbon Steel (nominal)	0.28	2,750°F	7μin/in°F	Reference #1, p.6-11
Titanium Tube, Ti-3Ai-2.5V	0.16	3,100°F	5μin/in°F	Reference #4
Stainless Steel-Type 304	0.29	2,600°F	9.9μin/in°F	Reference #1, p. 6-11
Polyurethane Foam	20 lb/ft^3 8 lb/ft^3	Unknown	120μin/in°F	Reference #1, p.6-199

Material	Density (lb/in^3)	Melting/Combustion Temperature	Thermal Expansion	Resource
Wood (12% moisture)	25 lb/ft^3	≈750°F	31μin/in°F	Reference #3, p.260-262

Resource references:

1. Eugene A. Avallone and Theodore Baumeister III, Editions, Mark's Standard Handbook for Mechanical Engineers, Tenth Edition. New York: McGraw-Hill, 1978

2. Howard E. Boyer and Timothy L. Gall, Editors, *Metals Handbook.* Metals Park, Ohio: American Society for Metals, 1985.

3. Lawrence H. Van Vlack, *Materials for Engineering: Concepts and Applicants.* Boston: Addison-Wesley Publishing Company, 1992.

4. Compact Disk: *Material Spec*, Volume 1.1 San Rafael, California: Autodesk Data Publishing, 1985.

3.2.2 Component Specifications

All components are specified and described on the Descriptive drawings included in Section 1.3.

3.3 Thermal Evaluation for Normal Conditions of Transport

Evaluations by analysis are described in the section they apply to in this Safety Analysis Report or when applicable in Test Plan Reports contained in Section 2.12. Evaluations by direct testing are documented in Test Plan Reports which are contained in Section 2.12.

Margins of safety are discussed in each section as appropriate. All testing and analysis resulted in no loss of source containment or securement in the transport packages. Though this demonstrates package compliance, it is difficult to quantify the margin related to these results. All physical testing used multiple specimens, with demonstrated results well within the regulatory requirements. Based on the results of the physical testing and the related analyses, we estimate the margin of safety for the Model OP-660 & OPL-660 packages as high.

3.3.1 Heat and Cold

3.3.1.1 Insolation and Decay Heat

This analysis determines the maximum surface temperature produced by solar heating of the Model OP-660 & OPL-660 transport package loaded at maximum activity in accordance with 10 CFR 71.71(c)(1) and IAEA TS-R-1. This will be compared to the Normal Transport test conditions temperature range to determine which is the most onerous for thermal stress considerations.

The model consists of taking a steady state heat balance over the surface of the package. In order to assure conservatism, the following assumptions are made:

- The package is assumed to undergo free convective heat transfer and radiative heat transfer from the top and four sides.
- The inside package faces are considered perfectly insulated so there is no conduction into the package. The faces are considered to be sufficiently thin so that no temperature gradients exist in the faces.
- The package is approximated as a rectangular solid, 17.38" (441 mm) long, 7 ½" (191 mm) wide and 14.31" (365 mm) high. (The package height does not include the contribution made by overlap of the lid to the box).
- The decay heat load (2.8 Watts) is added to the solar heat input load.
- The steel surface of the package is painted black and therefore the emissivity coefficient is taken to be 0.8.

Reference: Thermal Analysis using Fundamentals of Heat and Mass Transfer, F.P. Incropera, 4th Edition, 199.

The maximum surface temperature is computed using the steady state heat balance relationship; heat input (Q_{in}) equals heat output (Q_{out}).

$$Q_{in} = Q_{out}$$

Heat Input:

The total heat input is the sum of the solar heat input and decay heat.

Where ,

Solar heat input:

The solar heat input is the combined solar heating of the top horizontal surface and four vertical side surfaces multiplied by the absorptive constant ($\forall$) for the material. The insolation data, provided in 10 CFR 71.71(c)(1), is found in Table 3.3.A.

Table 3.3.A: Insolation Data

Surface	Insolation for a 12 hour period (g-cal/cm^2 or W/m^2)
Horizontal base	None
Other horizontal flat surfaces	800
Non-horizontal flat surfaces	200
Curved surfaces	400

Top surface heat input: $Q_{IT} = 800\ W/m^2 \times 0.084 = 78.3\ W$

Side surface heat input: $Q_{IS} = 200\ W/m^2 \times 0.459 = 98.6\ W$

Decay heat input: $Q_{DT} = 2.8\ W$

Absorptive constant $\forall = 1.0$ (most conservative)

Total heat input: $Q_{IN} = \forall\ (Q_{IT} + Q_{IS}) + Q_{DT} = 180\ W$

Heat Output:

The total heat output is the sum of the radiation and convection heat transfer (Reference: Heat Transfer, J.P. Holman, 4th Edition, 1976, p.253).

<u>Radiation heat transfer (Q_R):</u>

$$Q_R = B \times E \times A_{TS} \times \{(T_W + 273)^4 - (T_A + 273)^4\}$$

Where: Stefan Boltzmann Constant, $B = 5.669 \times 10^{-8}\ W/m^2\ °K^4$
Emissivity, $E = 0.8$
The top & side surface area of the package, $A_{TS} = 0.543\ m^2$
The maximum surface temperature of the package, T_W °K
The ambient temperature, $T_A = 38°C$ (311.15°K)

$$Q_R = 2.46 \times 10^{-8} \times (T_W{}^4 - T_A{}^4)$$

$$Q_R = 2.46 \times 10^{-8} \times \{T_W^4 - (311.15)^4\}$$

$$Q_R = 2.46 \times 10^{-8} \times (T_W^4 - 230)$$

<u>Top surface convection (Q_T):</u>

$$Q_T = H_T \times A_T \times (T_W - T_A)$$

Where: The top surface area, $A_T = 0.084\ m^2$
The free convection coefficient for a flat horizontal surface is H_T

From ; Engineering Thermodynamics, Work and Heat Transfer. 4th Edition, Rogers and Mayhew, page 585.

For a heated plate facing up,

$$H_T = 1.32\{(\theta/l)/[K/m]\}^{1/4}$$

Where: $\theta = T_W - T_A$
and $l = L_T$
L_T is the average length of the top surface $= (L + W)/2 = 0.316$ m

Therefore:

$$H_T = 1.32 \times \{(1/L_T)^{0.25} \times [(T_W - T_A)^{0.25}]\}$$
$$H_T = 1.32 \times \{(1/0.316)^{0.25} \times [(T_W - T_A)^{0.25}]\}$$
$$H_T = 1.76 \times [(T_W - T_A)^{0.25}]$$

Substituting gives:

$$Q_T = 0.148\ (T_W - T_A)^{1.25}$$

<u>Side surface convection (Q_S):</u>

$$Q_S = H_S \times A_S \times (T_S - T_A)$$

Where: A_S is the total side surface area , ($0.459\ m^2$)
H_S is the free convection coefficient for flat vertical surface

From; Engineering Thermodynamics, Work and Heat Transfer. 4th Edition, Rogers and Mayhew, page 585.

For a vertical plate,

$$H_S = 1.42\{(\theta/l)/[K/m]\}^{1/4}$$

Where: $\theta = T_W - T_A$
and $l = L_S$
L_S is the average side surface length = $(L_T + H)/2 = 0.351$ m

Therefore:

$$H_S = 1.42 \times \{(1/L_S)^{0.25} \times [(T_W - T_A)^{0.25}]\}$$

$$H_S = 1.85\ (T_W - T_A)^{0.25}$$

Substituting gives:

$$Q_S = 0.847\ (T_W - T_A)^{1.25}$$

<u>Total heat output</u>:

$$Q_{OUT} = Q_R + Q_T + Q_S$$

and

$$Q_{IN} = Q_R + Q_T + Q_S = 180\ W$$

Substituting for Q_R, Q_T and Q_S results in:

$$180 = 2.46 \times 10^{-8}\ (T_W^4) - 230 + 0.995\ (T_W - 311.15)^{1.25}$$

Iteration of this relationship yields a maximum wall temperature (T_w) of 69°C (156°F).

This temperature would not adversely affect the package during normal transport since the melting temperatures of all safety critical components are well above this temperature. Additionally the wooden inserts have an exothermic reaction temperature of approximately 273°C (523°F) and charring of the polyurethane foam will not begin to occur at such low temperatures.

3.3.1.2 <u>Still Air (shaded) Decay Heating</u>

This analysis demonstrates that the maximum surface temperature of the Model OP-660 & OPL-660 transport package will not exceed 50°C (122°

F) with the package in the shade and an ambient temperature of 38°C (100 °F).

To assure conservatism, the following assumptions are used:

- The entire decay heat (2.8 watts) is deposited in the exterior surfaces of the package.
- The interior of the package is perfectly insulated and heat transfer occurs only from the exterior surface to the environment.
- For conservatism, it is assumed that 100% of the total heat is deposited in the smallest face.
- The only heat transfer mechanism is free convection.
- The smallest face undergoes one-dimensional convective heat transfer.

Using these assumptions, the maximum wall temperature (T_W) is found from

$$T_W = (q/hA) + T_A$$

where

q is the heat deposited per unit time on the face, 2.8 watts
h is the free convection heat transfer coefficient for air: 5 watts/m^2
A is the surface area of the smallest face, 0.077 m^2
T_A is the ambient air temperature, 38°C (311.15°K)

From this relationship, the maximum temperature of the surface is 45.3°C (113.5°F) which is less than the maximum 50°C (122°F) allowed by 10 CFR 71.43(g).

3.3.1.3 Cold Effected Materials

Test Plan 70 (See Section 2.12.1) tested the 660 Series projectors at or below -40°C to evaluate the possibility of brittle fracture of the carbon steel components during Normal Conditions of Transport. As shown in Test Plan Report 70 (See Section 2.12.1) the projector can withstand normal conditions of transport at minimum temperature and still maintain structural integrity and shielding effectiveness.

In addition, in Test Plan 76 (See Section 2.12.2) the package was tested at or below -40°C. An inspection at the conclusion of the 1.2 m free drop showed no degradation of the package including the foam inserts in the container, therefore demonstrating that the use of the overpack container does not adversely affect the package performance at -40°C.

3.3.2 Maximum Normal Operating Pressure

Normal operating conditions will generate negligible internal pressures. As described in Section 2.7.4.3, the package has the ability to withstand elevated pressure because all structures, except the special form source are open to the atmosphere.

Any pressure generated is significantly below that which would be generated during the Hypothetical Accident Conditions thermal test which was demonstrated in Section 2.7.4.3 to result in no reduction in structural integrity of the capsule. Actual physical testing performed in Test Plan 76 (See Section 2.12.2) further demonstrated that pressures generated in the packaging during the thermal test produced no significant reduction in the shielding efficiency.

3.4 Thermal Evaluation Under Hypothetical Accident Conditions

3.4.1 Initial Conditions

The thermal test, as described in 10CFR71.73(c)(4), was deemed necessary for the reasons given below. In determining the maximum possible damage to the projector as a result of the thermal test, it was decided to test the projector without the overpack container

After investigation into the high temperature characteristics of materials used in the projector, scoping assessments of the shield support system, and bearing tests on the pyrolized foam, it was concluded that it would be difficult to develop a purely analytic basis to calculate potential shield movement. The presence of combustible materials (wood and polyurethane foam) in the overpack container and the associated possibility of their additional thermal input contribution to the projector was assessed as negligible in Test Plan 76 (See Section 2.12.2).

As a result, it was decided that the thermal test would be performed on one test specimen from each of the four free drop test orientations. The test specimens chosen would bound the untested units and be representative of the worst case package test configuration.

3.4.2 Fire Test Conditions

Four test specimens, one from each original 9 m drop orientation, were selected to undergo thermal testing based on having greater damage to the projector structure and to the source tube connections.

The test specimens were thermal tested without the protection of the steel overpack containers. The thermal test was performed using a furnace with additional air forced into the oven to assure adequate oxygen flow. Each unit was tested individually in its normal transport orientation. The specimen was placed in the furnace heated to 800°C. When the interior temperature of the projector reached 800°C, the 30 minute test period was started. At the conclusion of the 30 minutes with core temperature at or above 800°C, the specimens were removed and allowed to cool naturally.

3.4.3 Maximum Temperatures and Pressure

See Sections 3.1.3 and 3.1.4.

3.4.4 Maximum Thermal Stresses

The temperature and pressure variations described in Sections 3.4.1 and 3.4.2 will not adversely affect the transport package during normal transport since the melting temperatures of all safety critical components are well above these temperatures and the package will experience no pressures sufficient to cause package failure. It its therefore concluded that the Model OP-660 and OPL-660 transport packages will maintain their structural integrity and shielding effectiveness under the normal transport thermal stress conditions.

3.5.4 Accident Conditions for Fissile Material Packages for Air Transport

Not Applicable. This package is not used for transport of Type B quantities of fissile material.

3.5 Appendix

Not Applicable.

Section 4 – CONTAINMENT

4.1 Description of the Containment System

(Reference:

- *USNRC, 10 CFR 71.33(a)(4)*
- *IAEA TS-R-1, paragraph 501(a), 501(b), 639 through 643 and 645)*

For all Model 660 Projectors the source assembly is secured in position inside the source tube within the shield by the locking assembly. The source connector is designed so that the source cannot be exposed unless the source assembly is properly coupled to a drive control assembly. The lock assembly prevents unauthorized access to the coupling. The shipping plug and S-shaped source tube minimize radiation from the exit port when the source is properly stored.

The 660 device is secured inside the OP-660 & OPL-660 transport package by the transport container lid which has two latches. These latches are seal wired prior to transport to serve as a tamper indication seal of the container.

4.2 Containment Under Normal Conditions of Transport

(Reference:

- *USNRC, 10 CFR 71.51(a)(1)*
- *IAEA TS-R-1, paragraphs 656(a))*

As demonstrated in Test Plan Report 70 (See Section 2.12.1), after performance of the normal conditions of transport testing there was no breach of the source capsules contained in the package. Since the source capsules are the primary containment of the radioactive contents and no release from the source capsules occurred, the Model OP-660 & OPL-660 packages meet the requirements of this section.

4.3 Containment Under Hypothetical Accident Conditions

(Reference:

- *USNRC, 10 CFR 71.51(a)(2)*
- *IAEA TS-R-1, paragraphs 656(b))*

As demonstrated in Test Plan Reports 70 and 76 (See Section 2.12.) after performance of the hypothetical accident conditions of transport testing, the radiation level at one meter from the surface of the package did not exceed 1 R/hr. The Model OP-660 & OPL-660 packages therefore meet the requirements of this section.

4.4 Leakage Rate Tests for Type B Packages

(Reference:

- *USNRC, 10 CFR 71.51*
- *IAEA TS-R-1, paragraphs 656(a))*

The primary containment for the radioactive material in the Model OP-660 & OPL-660 transport packages are the radioactive source capsules. All source capsules authorized for Type B transport in the Model OP-660 & OPL-660 packages are certified as special form radioactive material under 10 CFR Part 71, 49 CFR Part 173 and IAEA TS-R-1. After manufacture and again once every six months thereafter prior to transport, the source capsule is leak tested in accordance with ISO9978:1992(E) (or more recent editions) to ensure that containment of the source does not allow release of more than 185 Bq (0.005 μCi) of radioactive material. These fabrication and periodic tests ensure that contamination release from the package does not exceed the regulatory limits.

4.5 Appendix: Reference ISO9978:1992(E) – Radiation Protection – Sealed Radioactive Sources – Leakage Test Methods.

Section 5 - SHIELDING EVALUATION

5.1 Description of Shielding Design

(Reference:
- *USNRC, 10 CFR 71.31*
- *IAEA TS-R-1, paragraph 701 and 702)*

5.1.1 Design Features

The principal shielding in the Model OP-660 & OPL-660 transport packages is depleted uranium augmented in some cases by lead. Dimensional information for the shield is contained in the drawings included in Section 1.3. Table 3.2.A lists the material densities of the packaging.

5.1.2 Summary Table of Maximum Radiation Levels

Tables in this Section include radiation profile data obtained from the test units used in Test Plans 70 and 76 (see Section 2.12). Dose rates are provided from the inner device transported within the overpack container. Dose rates from the OP-660 & OPL-660 transport packages will be less than the values measured from the inner 660 projector device and therefore compliant with the regulatory requirements.

Table 5.1.A: Normal Conditions of Transport
Model 660 Series Projector serial number B3582 External Radiation Levels Extrapolated to Capacity of 5.19 TBq (140 Ci) Ir-192 (Non-Exclusive Use)

Normal Conditions of Transport	Package Surface mSv/h (mrem/hr)			1 Meter from Package Surface mSv/h (mrem/h)		
Radiation	Top	Side	Bottom	Top	Side	Bottom
Gamma	1.26 (126)	1.93 (193)	1.15 (115)	0.006 (0.6)	0.016 (1.6)	0.007 (0.7)
Neutron	NA	NA	NA	NA	NA	NA
Total	1.26 (126)	1.93 (193)	1.15 (115)	0.006 (0.6)	0.016 (1.6)	0.007 (0.7)
10 CFR 71.47(a) Limit	2 (200)	2 (200)	2 (200)	0.1 (10)[1]	0.1 (10)[1]	0.1 (10)[1]

[1]Transport Index may not exceed 10.

Table 5.1.B: Hypothetical Accident Conditions of Transport Model 660 Series Projector serial number B3665 External Radiation Levels Extrapolated to Capacity of 5.19 TBq (140 Ci) Ir-192 (Non-Exclusive Use)

Hypothetical Accident Conditions	1 Meter from Package Surface mSv/h (mrem/h)		
Radiation	Top	Side	Bottom
Gamma	0.01 (1.1)	0.034 (3.4)	0.01 (1.0)
Neutron	NA	NA	NA
Total	0.01 (1.1)	0.034 (3.4)	0.01 (1.0)
10 CFR 71.51(a)(2) Limit	10 (1000)	10 (1000)	10 (1000)

NOTE: Survey results shown above were taken from the Model 660 outside of the outer steel box assembly which exhibited the highest dose rate at one meter from the surface of the device after testing to the Hypothetical Accident Conditions.

5.2 Source Specification

5.2.1 Gamma Source

(Reference:

- *USNRC, 10 CFR 71.33(b)(1) & (3))*
- *IAEA TS-R-1, Section IV & paragraph 807(a))*

The gamma sources allowed for transport in the Model OP-660 & OPL-660 transport package specified in Sections 1.2.2 and 2.10.

5.2.2 Neutron Source

Not Applicable. The Model OP-660 & OPL-660 transport packages are not used for the transportation of neutron emitting sources.

5.3 Shielding Model

5.3.1 Configuration of Source and Shielding

Not Applicable. A shielding model was not used in the justification for these packages. Shielding justification was based on direct measurement.

5.3.2 Material Properties

Not Applicable. A shielding model was not used in the justification for these packages. Shielding justification was based on direct measurement.

5.4 Shielding Evaluation

5.4.1 Methods

Shielding justification was based on direct measurement. See Test Plan Reports (see Section 2.12) for results of radiation surveys of the OP-660 & OPL-660 test specimens.

5.4.2 Input and Output Data

Direct radiation measurements contained in Test Plan Reports (see Appendix 2.12), were corrected for maximum container output activity capacity and instrument to container surface correction. Activity correction factors were obtained by taking a ratio of the Container Output Capacity Activity and dividing that by the profile output activity used for the measurements. Surface correction factors for the OP-660 & OPL-660 packages were obtained by correcting for the distance from the center of the detector probe to the surface of the detector probe.

5.4.3 Flux-to-Dose-Rate Conversion

Not Applicable. Flux rates were not used to convert to dose rates in any shielding evaluations.

5.4.4 External Radiation Levels

Radiation surveys for all 660 showed maximum surface and 1 meter radiation levels from the transport packages within regulatory limits. Radiation surveys of 660 projectors after undergoing normal and accident condition transport testing were also well within the regulatory limits. By inference, dose rates of the 660 projectors inside the OP-660 & OPL-660 outer steel container assemblies will also be within the applicable regulatory limits.

5.5 Appendix

Not Applicable.

Section 6 - CRITICALITY EVALUATION

All parts of this section are not applicable. The Model OP-660 & OPL-660 transport packages are not used for shipment of Type B quantities of fissile material.

Section 7 – Package Operations

Operation of the Model OP-660 & OPL-660 transport packages must be in accordance with the operating instructions supplied with the transport package, per 10 CFR 71.87 and 71.89.

(Reference:
- *USNRC, 10 CFR 71.87 and 71.89*
- *IAEA TS-R-1, paragraph 501(a), 502(e) and 503)*

7.1 Package Loading

7.1.1 Preparation for Loading

The Model OP-660 & OPL-660 packages must be loaded and closed in accordance with the following (or equivalent) written procedure. Maintenance and inspection of the Model OP-660 & OPL-660 packaging is in accordance with the requirements specified in Section 7.1.1.2.

7.1.1.1 Authorized Package Contents

(Reference:
- *USNRC, 10 CFR 71.87(a)*
- *IAEA TS-R-1, paragraph 502(f))*

Shipment of Type B quantities of radioactive material are authorized for sources specified in the Type B package approval certificate.

7.1.1.2 Packaging Maintenance and Inspection Prior to Loading

7.1.1.2.a Instructions for the 660 Projector

1. Inspect the labels for legibility and that they are securely fastened to the projector housing.

2. Ensure the shipping plug end plate assembly and the locking end plate assembly are securely attached to the projector housing with the hardware specified on the descriptive assembly drawings.

3. Check the shipping plug and assure that it threads fully and securely into the shipping plug end plate.

4. Ensure the dust cover installs properly onto the lock assembly.

5. Inspect the projector shell housing for signs of damage. Ensure visible welds are intact and that the end plates have no significant damage and are secured flush to the of the projector shell.

6. If the projector fails any of the inspections in steps 7.1.1.2.a.1-5, remove the container from use until it can be brought into compliance with the Type B certificate.

7.1.1.2.b Instructions for the Overpack and Overpack Inserts

1. Visually inspect the outer container to verify the following:

   a) The inserts are properly installed and secured within the container.

   b) The sides, top and bottom of the foam and wood inserts have no significant damage, and there are no missing pieces.

   c) Replace any missing or significantly damaged pieces.

   d) The outer container and lid are in good physical condition with no excessive rust, cracked welds, major dents or holes. DO NOT use the container if it is not in good condition.

   e) The latches are not broken and can be properly secured.

2. Inspect the labels for legibility and that they are securely fastened to the outer container.

3. If the outer container fails any of the inspections in steps 7.1.1.2.b.1-2, remove the container from use until it can be brought into compliance with the Type B certificate.

7.1.2 Loading of Contents

7.1.2.1 Prior to transportation, ensure the package and its contents meet the following requirements:

7.1.2.1.a The contents are authorized for use in the package.

7.1.2.1.b The package condition has been inspected in accordance with Section 7.1.1.2.

7.1.2.1.c Ensure that the source is secured into place in the inner device in accordance with the following requirements.

1. Removal and installation of radioactive material contained within the shield containers must be performed in a shielded cell/enclosure capable of holding the maximum isotope capacity of the container, or by using remote transfer operations. Container loading can only be performed by persons specifically authorized under an NRC or Agreement State license (or as otherwise authorized by an International Regulatory Authority). All necessary safety precautions and regulations must be observed to ensure safe transfer of the radioactive material.

2. Model 660 Projector

   i. Using remote handling techniques, load the source assembly so that it is fully retracted into the device shield and secured by the lock assembly. Once the source is loaded, install the lock cover, ensure the plunger lock is depressed and the key removed.

   ii. Fully thread the shipping plug into the nut on the shipping plug plate assembly. Attach a seal wire to the shipping plug and end plate connector as shown on the descriptive drawing.

3. Place the 660 projector into the container and attached the container lid to the container body.

4. Secure the latches of the lid and attach a seal wire to both latches of the lid as shown on the descriptive drawing for the container.

7.1.3 Preparation for Transport

(Reference:

- *10 CFR 71.87*
- *IAEA TS-R-1, applicable paragraphs of Section V)*

7.1.3.1 Ensure that all conditions of the certificate of compliance are met.

7.1.3.2 Ensure the non-fixed contamination on the accessible surface area of the package does not exceed 0.4 Bq/cm^2 (0.00001 μCi/cm^2) based on wiping an area of 300 cm^2 (or the entire package surface area is less than 300 cm^2).

7.1.3.3 Survey all exterior surfaces of the package to assure that the radiation level does not exceed 200 mR/hr at the surface. Measure the radiation level at one meter from all exterior surfaces to assure that the radiation level is less than 10 mR/hr.

7.1.3.4 Ship the container according to the procedure for transporting radioactive material as established in 49 CFR 171-178.

NOTE: The US Department of Transportation, in 49 CFR 173.22(c), requires each shipper of Type B quantities of radioactive material to provide prior notification to the consignee of the dates of shipment and expected arrival.

7.2 Package Unloading

7.2.1 Receipt of Package from Carrier

7.2.1.1 The consignee of a transport package of radioactive material must make arrangements to receive the transport package when it is delivered. If the transport package is to be picked up at the carrier's terminal, 10 CFR 20.1906 requires that this be done expeditiously upon notification of its arrival.

7.2.1.2 Upon receipt of a transport package of radioactive material:
(Reference:
- *IAEA TS-R-1, paragraph 510 and 511)*

7.2.1.2.a Survey the transport package with a survey meter as soon as possible, preferably at the time of pick-up and no more than three hours after it was received during normal working hours. Radiation levels should not exceed 200 mR/hr at the surface of the transport package, nor 10 mR/hr at a distance of 1 meter from the surface.

7.2.1.2.b Record the actual radiation levels on the receiving report.

7.2.1.2.c If the radiation levels exceed these limits, secure the container in a Restricted Area and notify the appropriate personnel in accordance with 10 CFR 20 or applicable Agreement State regulations.

7.2.1.2.d Inspect the outer container for physical damage or leaking. If the package is damaged or leaking or it is suspected that the package may have leaked or been damaged, restrict access to the package. As soon as possible, contact the Radiation Safety Office to perform a full assessment of the package condition and take necessary follow-up actions.

7.2.1.2.e Record the radioisotope, activity, model number, and serial number of the source and the transport package model number and serial number.

7.2.2 Removal of Contents

7.2.2.a. Remove the 660 projector from the outer overpack.

7.2.2.b. Transfer the 660 to a remote handling cell, or prepare the 660 projector for source transfer/exposure in accordance with the applicable licensing provisions for the user's facility related to radioactive material handling.

7.3 Preparation of Empty Package for Transport

(Reference:

- *IAEA TS-R-1, paragraph 520)*

In the following instructions, an *empty* transport package refers to a Model OP-660 & OPL-660 transport package without an active source contained within the shielded container. To ship an empty transport package:

7.3.1. Perform the following procedure to confirm that there are no unauthorized sources within the container:

7.3.1.1. Remove the authorized source assembly from the 660 Projector in accordance with the applicable licensing provisions for the user's facility related to radioactive material handling.

7.3.1.2. After removing the source and disconnecting the source assembly, attach the jumper (dummy connector without a serial number) to the male connector of the drive cable.

7.3.1.3. Return the drive cable and connector to the projector and disconnect the controls.

7.3.1.4. Insert dust cover cap, place selector ring in lock position, depress the lock and remove the key. Insert the shipping plug.

7.3.1.5. Remove the source ID tag and keep it with the source.

7.3.2 Ensure the non-fixed contamination on the accessible surface area of the package does not exceed 0.4 Bq/cm^2 (0.00001 μCi/cm^2) based on wiping an area of 300 cm^2 (or the entire package surface area is less than 300 cm^2).

7.3.3 Ensure the non-fixed contamination on the inside surface of the package does not exceed 40 Bq/cm^2 (0.001 μCi/cm^2) based on wiping an area of 300 cm^2 (or the entire package surface area is less than 300 cm^2).

7.3.4 When it is confirmed that the Model OP-660 & OPL-660 transport package is empty, prepare the transport package for shipment. Survey the assembled package to ensure the external surface radiation level does not exceed 0.5 mR/hr.

7.3.5 Ship the container according to the procedure for transporting radioactive material as established in 49 CFR 171-178.

7.4 Other Operations

7.4.1 Package Transportation By Consignor

(Reference:

- *IAEA TS-R-1, paragraph 508, 512 through 514)*

Persons transporting the Model OP-660 & OPL-660 transport package in their own conveyances should comply with the following:

7.4.1.1 For a conveyance and equipment used regularly for radioactive material transport, check to determine the level of contamination that may be present on these items. This contamination check is suggested if the package shows signs of damage upon receipt or during transport, or if a leak test on the special form source transported in the package exceeds the allowable limit of 185 Bq (0.005 μCi).

7.4.1.2 If contamination above 4 Bq/cm^2 (0.0001 μCi/cm^2) based on wiping an area of 300 cm^2 is detected on any part of a conveyance or equipment used regularly for radioactive material transport, or if a radiation level exceeding 0.5 mR/hr is detected on any conveyance or equipment surface, then remove the affected item from use until decontaminated or decayed to meets these limits.

7.4.1.3 Ensure the package is properly blocked and braced prior to transport to prevent movement within the conveyance during transport.

7.4.2 Emergency Response

(Reference:

- *IAEA TS-R-1, paragraph 308 and 309)*

In the event of a transport emergency or accident involving this package, follow the guidance contained in "2004 Emergency Response Guidebook: A Guidebook for First Responders During the Initial Phase of a Dangerous Goods/Hazardous Materials Incident", or equivalent guidance documentation.

7.5 Appendix

7.5.1 Reference: "2004 Emergency Response Guidebook: A Guidebook for First Responders During the Initial Phase of a Dangerous Goods/Hazardous Materials Incident"

Section 8 - ACCEPTANCE TESTS AND MAINTENANCE PROGRAM

8.1 Acceptance Test

8.1.1 Visual Inspections and Measurements

Visually inspect each transport package component to be shipped to assure the following:

8.1.1.1 The transport package was assembled properly to the applicable drawing.

8.1.1.2 Evaluate the 660 projector for shielding integrity to ensure the transport dose rate requirements are met when the container is loaded to capacity.

8.1.1.3 All fasteners as required by the applicable drawings are properly installed and secured.

8.1.1.4 The relevant labels are attached, contain the required information, and are marked in accordance with 10 CFR 20.1904, 10 CFR 40.13(c)(6)(i), 10 CFR 34, and 10 CFR 71 or equivalent Agreement State regulations.

8.1.1.5 Visual inspections and measurements will be performed in accordance with QSA Global Inc.'s USNRC approved Quality Assurance Program No. 0040.

8.1.2 Weld Examinations

Weld examinations will be performed in accordance with the applicable drawings requirements and in accordance with QSA Global Inc.'s USNRC approved Quality Assurance Program No. 0040.

8.1.3 Structural and Pressure Tests

(Reference:

- *10 CFR 71.85(a) and (b))*
- *IAEA TS-R-1, paragraph 501(a))*

Prior to first use as part of a OP-660 & OPL-660 transport package, container structural conformance will be evaluated in accordance with the applicable drawings requirements and in accordance with QSA Global Inc.'s USNRC approved Quality Assurance Program No. 0040. The containment system is not designed to require increased or decreased operating pressures to maintain containment during transport, therefore pressure tests of package components prior to first use is not required.

8.1.4 Leakage Tests

The source capsules (primary containment) are wipe tested for leakage of radioactive contamination upon initial manufacture. The removable contamination must be less than 185 Bq (0.005 μCi). The source capsules will also be subjected to leak tests under ISO9978:1992(E) (or more recent editions). The source capsules are not used if they fail any of these tests.

8.1.5 Component and Material Tests

Component and material compliance is achieved in accordance with the requirements in QSA Global Inc.'s USNRC approved Quality Assurance Program No. 0040.

8.1.6 Shielding Tests

The radiation levels at the surface of the transport package and at 1 meter from the surface are evaluated prior to first transport. These radiation levels, when extrapolated to the rated capacity of the transport package, must not exceed 200 mR/hr at the surface, nor 10 mR/hr at 1 meter from the surface of the transport package. Failure of this test will prevent use of the transport package as a Type B(U) package.

8.1.7 Thermal Tests

Not applicable. The source content of the Model OP-660 & OPL-660 packages has minimal effect on the package surface temperature and therefore no additional testing is necessary to evaluate thermal properties of the packaging.

8.1.8 Miscellaneous Tests

When applicable, subject the swage coupling between the source capsule and cable to a static tensile test with a load of 100 lbs (445 N). Failure of this test will prevent use of the source in the Type B(U) transport package.

8.2 Maintenance Program

8.2.1 Structural and Pressure Tests

Not applicable. Material certification is obtained for Safety Class A components used in the transport package prior to their initial use. Based on the construction of the design, no additional structural testing during the life of the package is necessary if the container shows no signs of defect when prepared for shipment in accordance with the requirements of Section 7 of the SAR.

The OP-660 & OPL-660 packaging system is not designed to require increased or decrease operating pressures to maintain containment during transport, therefore pressure tests of package components prior to individual shipment is not required.

8.2.2 Leakage Tests

As described in Section 8.1.4, "Leakage Tests," the radioactive source assembly is leak-tested at manufacture. In addition, the sources are leak tested in accordance with that Section at least once every six months thereafter if being transported to ensure that removable contamination is less than 185 Bq (0.005 μCi).

8.2.3 Component and Material Tests

The transport package is inspected for tightness of fasteners, proper seal wires, and general condition prior to each use as described in Section 7 of this SAR. No additional component or material testing is required prior to shipment.

8.2.4 Thermal Tests

Not applicable. The source content of the Model OP-660 & OPL-660 packages has minimal effect on the package surface temperature and therefore no additional testing is necessary to evaluate thermal properties of the packaging prior to shipment.

8.2.5 Miscellaneous Tests

Inspections and tests designed for secondary users of this transport package under the general license provisions of 10 CFR 71.17(b) are provided in Section 7.

8.3 Appendix

Not applicable.

Section 9 – IAEA TS-R-1 1996 Edition (Revised) Requirements not Otherwise Addressed – Section VI

9.1 General Package Design Requirements

9.1.1 *(Reference: IAEA TS-R-1, paragraph 609)*

As far as practicable, the packaging shall be so designed and finished that the external surfaces are free from protruding features and can be easily decontaminated.

The exterior surface of the OP-660 & OPL-660 packages is comprised of steel. The materials and fabrication of the outer container as well as the 660 projector can be easily decontaminated if necessary. There are no protruding features on the outer container.

9.1.2 *(Reference: IAEA TS-R-1, paragraph 610)*

As far as practicable, the outer layer of the package shall be so designed as to prevent the collection and the retention of water.

The exterior surface of the OP-660 & OPL-660 packages is comprised of steel. The materials and fabrication of the outer container are water resistant and prevent, as far as practicable, the collection and retention of water.

9.1.3 *(Reference: IAEA TS-R-1, paragraph 611)*

Any features added to the package at the time of transport which are not part of the package shall not reduce its safety.

There are no added features to the package other than transport labels, markings, etc. These items are standard in package shipment and will not reduce the package safety due to their presence.

9.1.4 *(Reference: IAEA TS-R-1, paragraph 614)*

All valves through which the radioactive contents could otherwise escape shall be protected against unauthorized operation.

Not applicable. This package does not incorporate the use of valves.

9.1.5 *(Reference: IAEA TS-R-1, paragraph 616)*

For radioactive material having other dangerous properties the package design shall take into account those properties; see paras 109 and 507.

Not applicable. The contents of this package do not have any other dangerous properties other than its radioactivity.

9.2 Requirements for Type A Packages (required by TS-R-1 paragraph 650)

9.2.1 *(Reference: IAEA TS-R-1, paragraph 644)*

All valves, other than pressure relief valves, shall be provided with an enclosure to retain any leakage from the valve.

Not applicable. This package does not incorporate the use of valves.

9.2.2 *(Reference: IAEA TS-R-1, paragraph 647)*

The design of a package intended for liquid radioactive material shall make provision for ullage to accommodate variations in the temperature of the contents, dynamic effects and filling dynamics.

Not applicable. This package is not used for the transport of liquids.

9.3 Requirements for Type B(U) Packages

9.3.1 *(Reference: IAEA TS-R-1, paragraph 659)*

A package shall not include a pressure relief system from the containment system which would allow the release of radioactive material to the environment under the conditions of the tests specified in paras 719-724 and 726-729.

Not applicable. This package does not incorporate a pressure relief system.

9.4 Appendix

Not Applicable.