HOLTEC INTERNATIONAL

Holtec Center, 555 Lincoln Drive West, Marlton, NJ 08053

Telephone (856) 797-0900

Fax (856) 797-0909

June 23, 2006

U.S. Nuclear Regulatory Commission
ATTN: Document Control Desk
Washington, DC 20555-0001

Reference:
1. USNRC Docket No. 72-1014 (HI-STORM 100)
2. Holtec Project 5014
3. Holtec Letter 5014587, dated February 18, 2006
4. Holtec Letter 5014595, dated April 30, 2006

Subject: Submittal of License Amendment Request #5 to HI-STORM 100 CoC

Dear Sir:

We are pleased to submit a request to amend the Certificate of Compliance for the HI-STORM 100 System (CoC 72-1014). This amendment request enhances the HI-STORM 100 System by adding site specific options for Indian Point Unit 1. Specifically, the HI-STORM 100S Version B, MPC-32, and HI-TRAC 100D have been shortened to accommodate site specific restrictions. A summary of the proposed changes, with detailed references to both the CoC and the HI-STORM 100 System FSAR, is attached. Given the client's need to move the fuel assemblies into dry cask storage and the small number of proposed changes in this license amendment request, we request an expedited review by the SFPO. It is our hope that the review and approval process for this focused amendment could be completed by March 2007.

We note that license amendment requests #3 and #4 to the HI-STORM CoC (References 3 and 4) are currently undergoing review by the SFPO. We have ensured that the changes requested in amendment #5 do not rely upon the changes requested in amendments #3 or #4. It should, therefore, be possible for the SFPO to review these amendment requests independently and in parallel.

Both the proposed CoC sections and the proposed revised FSAR sections are based on the latest official revisions of these documents (CoC Amendment 2 and FSAR Revision 4) and not on the proposed changed documents for amendments #3 or #4.

The following attachments are provided in electronic (Adobe PDF) format on the CD-ROM that accompanies this letter:

Document ID: 5014600

HOLTEC INTERNATIONAL

Holtec Center, 555 Lincoln Drive West, Marlton, NJ 08053

Telephone (856) 797-0900

Fax (856) 797-0909



Attachment 1: Summary of Proposed Changes

Attachment 2: Proposed CoC Sections in Markup Format – Deletions are shown in strikeout and insertions are shown in italics. Only changed portions of the CoC are included.

Attachment 3: Proposed Revised FSAR Sections – Deletions are shown in strikeout and insertions are shown in italics. Only changed portions of the FSAR are included. Information on the Indian Point Unit 1 specific enhancements are compiled in supplements to each chapter, each numbered as xx.II where xx is the chapter that is supplemented.

We appreciate the SFPO's attention to this application.

Sincerely,

Everett Redmond II, Ph.D.
Project Manager, LAR 1014-5

Approved:

Stefan Anton, Dr.-Ing.
Licensing Manager

cc: Mr. Christopher Regan, NRC

HOLTEC INTERNATIONAL

Holtec Center, 555 Lincoln Drive West, Marlton, NJ 08053

Telephone (856) 797-0900

Fax (856) 797-0909

U. S. Nuclear Regulatory Commission
ATTN: Document Control Desk
Document ID 5014600

# Holtec Letter 5014600 (LAR 1014-5)

# Attachment 1

# SUMMARY OF PROPOSED CHANGES

# (6 pages plus this cover sheet)

# LAR 1014-5, REVISION 0

## SUMMARY OF PROPOSED CHANGES

**Proposed Change No. 1**

Modify the HI-STORM 100 Cask System Certificate of Compliance (CoC) to incorporate minor changes to wording as follows:

- Sections 10.a and 10.e, add "or cask loading pool".
- Section 10.g, add "if applicable".

**Reason for Change**

Minor wording clarifications to eliminate potential conflicts.

- Indian Point Unit 1 has a separate pool referred to as a "cask loading pool" where the MPC will be loaded. This cask loading pool is connected to the spent fuel pool.
- Sites that will never be loading high burnup fuel will not be using the supplemental cooling system and therefore should not have to perform dry runs with the supplemental cooling system.

**Justification for Change**

These are editorial changes.

**Proposed Change No. 2**

Replace the words "to and from the ISFSI" with "after LOADING OPERATIONS or before UNLOADING OPERATIONS" in the definition of TRANSPORT OPERATIONS in Section 1.1 of Appendix A to the CoC and in Section 1.0 of Appendix B to the CoC.

**Reason for Change**

TRANSPORT OPERATIONS should encompass all movements of the loaded TRANSFER CASK and OVERPACK rather than only the movements to and from the ISFSI. See also Change 5, Number 3.

**Justification for Change**

This is an editorial changes.

# SUMMARY OF PROPOSED CHANGES

## Proposed Change No. 3

Modify LCO 3.3.1 in Appendix A to the CoC by specifying a soluble boron requirement of 0 ppmb for Array/Class 14x14E, and clarify that surveillance of the soluble boron is not necessary if the required concentration is 0 ppmb.

## Reason for Change

Array/Class 14x14E is only Indian Point Unit 1 fuel. The spent fuel pool at Indian Point Unit 1 does not currently have a significant level of soluble boron in the water and IP1 does not wish to increase the level of soluble boron if it is not necessary.

## Justification for Change

This change only affects the criticality analysis. Supplement 6.II provides the technical basis for this change. The bases in Chapter 12 have also been modified as result of this change.

## Proposed Change No. 4

Modify Table 3-2 in Appendix A to the CoC by adding separate backfill requirements for an MPC-32 containing Array/Class 14x14E.

## Reason for Change

The lower bound backfill pressure for an MPC-32 containing Array/Class 14x14E, Indian Point Unit 1 (IP1) fuel, has been decreased to provide more flexibility during loading operations.

## Justification for Change

Since the IP1 fuel has a long cooling time and low burnup the required heat load is low (less than 8 kw). As a result of this low heat load, the thermal analysis does not take credit for convection inside the MPC. This permits the lower bound backfill pressure to be reduced. Supplement 4.II documents the thermal analysis and provides the technical basis for the lower bound pressure specified for the MPC-32 with 14x14E fuel.

## Proposed Change No. 5

Modify Section 5.5 in Appendix A to the CoC in the following manner.

1. Modify Subsection 5.5.a.1 by adding the words “if applying the limits in Table 5-1” as noted in the attached markup to the CoC.
2. Modify Subsection 5.5.a.2 by removing the first part of the first sentence “For site specific … Table 2.2.9, “ as noted in the attached markup to the CoC.

3. Modify Subsection 5.5.a.3 by replacing "transportation between the FUEL BUILDING and the CTF and/or ISFSI pad" with "TRANSPORT OPERATIONS".
4. Modify Table 5-1 in Appendix A to the CoC to add Notes 4 and 5.

**Reason for Change**

1. The change to Section 5.5.a.1 clarifies that the drop height limits in Table 5-1 are applicable only if the transport route meets the requirements of either Set A or Set B in HI-STORM FSAR Table 2.2.9.
2. The change to Section 5.5.a.2 clarifies that a user may choose to perform a site specific analysis to determine a drop height even if the transport route meets the conditions of Set A or Set B in the HI-STORM FSAR Table 2.2.9. The current CoC only permits users to calculate a lift height requirement if the transport route is outside of Set A or Set B parameters. Performing the site specific analysis may provide a less restrictive drop height requirement than specified in Table 5-1.
3. Indian Point Unit 1 will be transferring the HI-TRAC from the FUEL BUILDING in Unit 1 to the FUEL BUILDING in Unit 2. This scenario is not explicitly covered by the current wording in Subsection 5.5.a.3. The proposed wording change in this subsection makes it more general and therefore applicable to Indian Point Unit 1.
4. Indian Point Unit 1 will be using shorter and lighter MPC and HI-TRAC and may be using a shorter HI-STORM overpack. As a result of these changes, the weight of the loaded HI-TRAC or HI-STORM overpack is reduced and the lift height is modified. Since the HI-TRAC will not be transported in the horizontal condition at IP1, this orientation is not permitted.

**Justification for Change**

1. Editorial change.
2. Editorial change.
3. Editorial change.
4. Supplement 2.II restates these requirements while Supplement 3.II provides the technical basis for the HI-STORM lift height requirement for an overpack containing IP1 fuel.

**Proposed Change No. 6**

Section 1.0, Definitions, in Appendix B to the CoC has been modified to add a fifth damaged fuel container design under the definition for Damaged Fuel Container.

**Reason for Change**

A different damaged fuel container design is necessary for the Indian Point Unit 1 fuel. Since the Indian Point Unit 1 fuel is smaller than the typical PWR fuel which is stored in an MPC, the

damaged fuel container has been reduced in size to limit the amount of free space around the fuel assembly.

**Justification for Change**

Supplement 2.II provides a figure of the new damaged fuel container for Indian Point Unit 1 fuel. Supplement 3.II provides the technical basis for the acceptability of the Indian Point Unit 1 damaged fuel container.

**Proposed Change No. 7**

Table 2.1-1 in Appendix B to the CoC was modified in the following manner.

1. Separate burnup, cooling time, and decay heat limits (30,000 MWD/MTU, 30 year cooling, 250 watts/assembly) for Array/Class 14x14E were added for the MPC-32 and MPC-32F.
2. Antimony-beryllium secondary sources are permitted to be stored with Indian Point Unit 1 fuel assemblies, Array/Class 14x14E.
3. All Indian Point Unit 1 fuel assemblies are required to be stored in damaged fuel containers and 32 DFCs with Indian Point Unit 1 fuel are permitted for storage.
4. Indian Point Unit 1 fuel debris is not permitted for storage in the MPC-32 or MPC-32F.

**Reason for Change**

1. Indian Point Unit 1 fuel has low burnup, long cooling time, and low decay heat. Therefore, the allowable limits in the CoC are being modified to recognize this situation and provide substantial margin for the change in the physical characteristics of the HI-STORM overpack, HI-TRAC transfer cask and MPC (see proposed change 9).
2. A number of Indian Point Unit 1 fuel assemblies contain antimony-beryllium secondary sources which must be stored with the fuel assemblies.
3. This change is being made because the plant records may not be sufficient to qualify the fuel assemblies as intact.
4. Indian Point Unit 1 does not have fuel debris, and the criticality analysis in Supplement 6.II does not support the storage of fuel debris.

**Justification for Change**

1. The shielding and thermal analyses have been modified to recognize the revised burnup, cooling time, and decay heat limits. Supplements 5.II and 4.II provide the technical justification for the revised allowable limits for Array/Class 14x14E.
2. This change only affects the shielding analysis. Supplement 5.II provides the technical justification for this proposed change.
3. This change predominantly affects criticality. Supplement 6.II provides the technical justification for this change.

4. This is an editorial change.

Conforming changes have also been made to Chapters 1, 2, 5, and 6 as a result of this change.

**Proposed Change No. 8**

Table 2.1-2 of Appendix B to the CoC was modified to reduce the maximum enrichment for Array/Class 14x14E from 5.0 to 4.5 wt% $^{235}$U.

**Reason for Change**

Proposed change 3 reduced the soluble boron level in the MPC-32 for Array/Class 14x14E to 0 ppm. This change necessitated a reduction in the enrichment to 4.5 wt% $^{235}$U. For consistency, the enrichment was changed for both the MPC-24 and MPC-32. This lower enrichment bounds all of the Indian Point Unit 1 fuel.

**Justification for Change**

Supplement 6.II provides the technical justification for a lower enrichment of 4.5 wt% $^{235}$U in the MPC-32 and MPC-32F.

**Proposed Change No. 9**

In Section 1.3, replace the reference to UST&D with a reference to the Holtec Manufacturing Division (HMD).

**Reason and Justification for Change**

UST&D is now a division of Holtec International.

**Proposed Change No. 10**

The following changes have been made to the licensing drawings in Section 1.5.

1. Notes have been added to MPC-32 drawing 3927 to differentiate the Indian Point Unit 1 (IP1) specific MPC-32 from the generic MPC-32.
2. Notes have been added to the MPC enclosure vessel drawing 3923 to differentiate the IP1 specific MPC enclosure vessel from the generic MPC enclosure vessel.
3. Notes have been added to the HI-STORM 100S Version B drawing 4116 to identify the HI-STORM 100S-185 variant for use at IP1.
4. A new licensing drawing for the HI-TRAC 100D Version IP1, drawing 4724, has been created.

## SUMMARY OF PROPOSED CHANGES

The approach of adding notes to differentiate the IP1 specific hardware from the generic hardware has been used previously in licensing efforts. For example, drawing 3923 identifies differences between the Trojan Plant MPC enclosure vessel and the generic MPC enclosure vessel.

The licensing drawings are being provided in Draft form for NRC review. Once the amendment is approved, the latest revision of the licensing drawings will be revised to include the proposed changes identified on these draft drawings.

**Reason for Change**

1. The IP1 fuel is shorter than standard PWR fuel. Therefore, the basket is being reduced in height to reduce the weight of the system.
2. The IP1 fuel is shorter than standard PWR fuel. Therefore, the enclosure vessel is being reduced in height to reduce the weight of the system.
3. Since the MPC is being shortened, the HI-STORM overpack is also being shortened for ease of operations.
4. In addition to the shorter IP1 fuel, the crane capacity at IP1 is limited to 75 tons. Therefore, the HI-TRAC 100D was shortened and the thickness of shielding was reduced to satisfy the crane limitations.

**Justification for Change**

The structural, thermal, shielding, and criticality analyses have been revised to reflect the new hardware options. Supplements 3.II, 4.II, 5.II, and 6.II provide the technical justification for the new IP1 specific HI-STORM 100 System option. Conforming changes have also been made to Chapter 1.

**Proposed Change No. 11**

A sentence was removed in Chapter 8, Section 8.0, that stated that DFCs would be loaded with a fuel assembly prior to placement in the MPC.

**Reason for Change**

It is more practical to load the DFCs into the MPC prior to placing the MPC and HI-TRAC into the spent fuel pool. The damaged fuel assembly will then be loaded directly into the DFC in the MPC.

**Justification for Change**

Editorial change.

HOLTEC INTERNATIONAL

Holtec Center, 555 Lincoln Drive West, Marlton, NJ 08053

Telephone (856) 797-0900

Fax (856) 797-0909

U. S. Nuclear Regulatory Commission
ATTN: Document Control Desk
Document ID 5014600

# Holtec Letter 5014600 (LAR 1014-5)

# Attachment 2

# PROPOSED COC SECTIONS

# (103 pages plus this cover sheet)

# CERTIFICATE OF COMPLIANCE FOR SPENT FUEL STORAGE CASKS



The U.S. Nuclear Regulatory Commission is issuing this Certificate of Compliance pursuant to Title 10 of the Code of Federal Regulations, Part 72, "Licensing Requirements for Independent Storage of Spent Nuclear Fuel and High-Level Radioactive Waste" (10 CFR Part 72). This certificate is issued in accordance with 10 CFR 72.238, certifying that the storage design and contents described below meet the applicable safety standards set forth in 10 CFR Part 72, Subpart L, and on the basis of the Final Safety Analysis Report (FSAR) of the cask design. This certificate is conditional upon fulfilling the requirements of 10 CFR Part 72, as applicable, and the conditions specified below.

| Certificate No. | Effective Date | Expiration Date | Docket No. | Amendment No. | Amendment Effective Date | Package Identification No. |
|---|---|---|---|---|---|---|
| 1014 | 05/31/00 | 06/01/20 | 72-1014 | ~~2~~*5* | ~~06/07/05~~*TBD* | USA/72-1014 |

Issued To: (Name/Address)

Holtec International
Holtec Center
555 Lincoln Drive West
Marlton, NJ 08053

Safety Analysis Report Title

Holtec International
Final Safety Analysis Report for the
HI-STORM 100 Cask System

## CONDITIONS

This certificate is conditioned upon fulfilling the requirements of 10 CFR Part 72, as applicable, the attached Appendix A (Technical Specifications) and Appendix B (Approved Contents and Design Features), and the conditions specified below:

1. CASK

a. Model No.: HI-STORM 100 Cask System

The HI-STORM 100 Cask System (the cask) consists of the following components: (1) interchangeable multi-purpose canisters (MPCs), which contain the fuel; (2) a storage overpack (HI-STORM), which contains the MPC during storage; and (3) a transfer cask (HI-TRAC), which contains the MPC during loading, unloading and transfer operations. The cask stores up to 32 pressurized water reactor (PWR) fuel assemblies or 68 boiling water reactor (BWR) fuel assemblies.

b. Description

The HI-STORM 100 Cask System is certified as described in the Final Safety Analysis Report (FSAR) and in the U.S. Nuclear Regulatory Commission's (NRC) Safety Evaluation Report (SER) accompanying the Certificate of Compliance. The cask comprises three discrete components: the MPC, the HI-TRAC transfer cask, and the HI-STORM storage overpack.

The MPC is the confinement system for the stored fuel. It is a welded, cylindrical canister with a honeycombed fuel basket, a baseplate, a lid, a closure ring, and the canister shell. It is made entirely of stainless steel except for the neutron absorbers and aluminum heat conduction elements (AHCEs), which are installed in some early-vintage MPCs. The canister shell, baseplate, lid, vent and drain port cover plates, and closure ring are the main confinement boundary components. The honeycombed basket, which is equipped with neutron absorbers, provides criticality control.

1. b. Description (continued)

There are eight types of MPCs: the MPC-24, MPC-24E, MPC-24EF, MPC-32, MPC-32F, MPC-68, MPC-68F, and MPC-68FF. The number suffix indicates the maximum number of fuel assemblies permitted to be loaded in the MPC. All eight MPC models have the same external diameter.

The HI-TRAC transfer cask provides shielding and structural protection of the MPC during loading, unloading, and movement of the MPC from the spent fuel pool to the storage overpack. The transfer cask is a multi-walled (carbon steel/lead/carbon steel) cylindrical vessel with a water jacket attached to the exterior. Two sizes of HI-TRAC transfer casks are available: the 125 ton-HI-TRAC and the 100 ton HI-TRAC. The weight designation is the maximum weight of a loaded transfer cask during any loading, unloading or transfer operation. Both transfer cask sizes have identical cavity diameters. The 125 ton HI-TRAC transfer cask has thicker lead and water shielding and larger outer dimensions than the 100 ton HI-TRAC transfer cask.

The HI-STORM 100 or 100S storage overpack provides shielding and structural protection of the MPC during storage. The HI-STORM 100S is a variation of the HI-STORM 100 overpack design that includes a modified lid which incorporates the air outlet ducts into the lid, allowing the overpack body to be shortened. The overpack is a heavy-walled steel and concrete, cylindrical vessel. Its side wall consists of plain (un-reinforced) concrete that is enclosed between inner and outer carbon steel shells. The overpack has four air inlets at the bottom and four air outlets at the top to allow air to circulate naturally through the cavity to cool the MPC inside. The inner shell has channels attached to its interior surface to guide the MPC during insertion and removal, provide a flexible medium to absorb impact loads, and allow cooling air to circulate through the overpack. A loaded MPC is stored within the HI-STORM 100 or 100S storage overpack in a vertical orientation. The HI-STORM 100A is a variant of the HI-STORM 100 family and is outfitted with an extended baseplate and gussets to enable the overpack to be anchored to the concrete storage pad in high seismic applications. The HI-STORM 100A applies to both the HI-STORM 100 and HI-STORM 100S overpacks that are classified as the HI-STORM 100A and HI-STORM 100SA, respectively.

2. OPERATING PROCEDURES

Written operating procedures shall be prepared for cask handling, loading, movement, surveillance, and maintenance. The user's site-specific written operating procedures shall be consistent with the technical basis described in Chapter 8 of the FSAR.

3. ACCEPTANCE TESTS AND MAINTENANCE PROGRAM

Written cask acceptance tests and maintenance program shall be prepared consistent with the technical basis described in Chapter 9 of the FSAR.

4. QUALITY ASSURANCE

Activities in the areas of design, purchase, fabrication, assembly, inspection, testing, operation, maintenance, repair, modification of structures, systems and components, and decommissioning that are important to safety shall be conducted in accordance with a Commission-approved quality assurance program which satisfies the applicable requirements of 10 CFR Part 72, Subpart G, and which is established, maintained, and executed with regard to the cask system.

5. HEAVY LOADS REQUIREMENTS

Each lift of an MPC, a HI-TRAC transfer cask, or any HI-STORM overpack must be made in accordance to the existing heavy loads requirements and procedures of the licensed facility at which the lift is made. A plant-specific regulatory review (under 10 CFR 50.59 or 10 CFR 72.48, if applicable) is required to show operational compliance with existing plant specific heavy loads requirements. Lifting operations outside of structures governed by 10 CFR Part 50 must be in accordance with Section 5.5 of Appendix A and/or Sections 3.4.6 and Section 3.5 of Appendix B to this certificate, as applicable.

6. APPROVED CONTENTS

Contents of the HI-STORM 100 Cask System must meet the fuel specifications given in Appendix B to this certificate.

7. DESIGN FEATURES

Features or characteristics for the site, cask, or ancillary equipment must be in accordance with Appendix B to this certificate.

8. CHANGES TO THE CERTIFICATE OF COMPLIANCE

The holder of this certificate who desires to make changes to the certificate, which includes Appendix A (Technical Specifications) and Appendix B (Approved Contents and Design Features), shall submit an application for amendment of the certificate.

9. SPECIAL REQUIREMENTS FOR FIRST SYSTEMS IN PLACE

The heat transfer characteristics of the cask system will be recorded by temperature measurements for the first HI-STORM Cask Systems (for each thermally unique MPC basket design - MPC-24/24E/24EF, MPC-32/32F, and MPC-68/68F/68FF) placed into service by any user with a heat load equal to or greater than 10 kW. An analysis shall be performed that demonstrates the temperature measurements validate the analytic methods and predicted thermal behavior described in Chapter 4 of the FSAR.

Validation tests shall be performed for each subsequent cask system that has a heat load that exceeds a previously validated heat load by more than 2 kW (e.g., if the initial test was conducted at 10 kW, then no additional testing is needed until the heat load exceeds 12 kW). No additional testing is required for a system after it has been tested at a heat load equal to or greater than 16 kW.

Each first time user of a HI-STORM 100 Cask System Supplemental Cooling System (SCS) that uses components or a system that is not essentially identical to components or a system that has been previously tested, shall measure and record coolant temperatures for the inlet and outlet of cooling provided to the annulus between the HI-TRAC and MPC and the coolant flow rate. The user shall also record the MPC operating pressure and decay heat. An analysis shall be performed, using this information, that validates the thermal methods described in the FSAR which were used to determine the type and amount of supplemental cooling necessary.

9. SPECIAL REQUIREMENTS FOR FIRST SYSTEMS IN PLACE (continued)

Letter reports summarizing the results of each thermal validation test and SCS validation test and analysis shall be submitted to the NRC in accordance with 10 CFR 72.4. Cask users may satisfy these requirements by referencing validation test reports submitted to the NRC by other cask users.

10. PRE-OPERATIONAL TESTING AND TRAINING EXERCISE

A dry run training exercise of the loading, closure, handling, unloading, and transfer of the HI-STORM 100 Cask System shall be conducted by the licensee prior to the first use of the system to load spent fuel assemblies. The training exercise shall not be conducted with spent fuel in the MPC. The dry run may be performed in an alternate step sequence from the actual procedures, but all steps must be performed. The dry run shall include, but is not limited to the following:

a. Moving the MPC and the transfer cask into the spent fuel pool *or cask loading pool*.

b. Preparation of the HI-STORM 100 Cask System for fuel loading.

c. Selection and verification of specific fuel assemblies to ensure type conformance.

d. Loading specific assemblies and placing assemblies into the MPC (using a dummy fuel assembly), including appropriate independent verification.

e. Remote installation of the MPC lid and removal of the MPC and transfer cask from the spent fuel pool *or cask loading pool*.

f. MPC welding, NDE inspections, pressure testing, draining, moisture removal (by vacuum drying or forced helium dehydration, as applicable), and helium backfilling. . (A mockup may be used for this dry-run exercise.)

g. Operation of the Supplemental Cooling System *if applicable.*

h. Transfer cask upending/downending on the horizontal transfer trailer or other transfer device, as applicable to the site's cask handling arrangement.

I. Transfer of the MPC from the transfer cask to the overpack.

j. Placement of the HI-STORM 100 Cask System at the ISFSI, for aboveground systems only.

k. HI-STORM 100 Cask System unloading, including cooling fuel assemblies, flooding MPC cavity, removing MPC lid welds. (A mockup may be used for this dry-run exercise.)

11. When the Supplemental Cooling System is in operation to provide for decay heat removal in accordance with Section 3.1.4 of Appendix A the licensee is exempt from the requirements of 10 CR 72.236(f).

12. AUTHORIZATION

The HI-STORM 100 Cask System, which is authorized by this certificate, is hereby approved for general use by holders of 10 CFR Part 50 licenses for nuclear reactors at reactor sites under the general license issued pursuant to 10 CFR 72.210, subject to the conditions specified by 10 CFR 72.212, and the attached Appendix A and Appendix B. The HI-STORM 100 Cask System may be fabricated and used in accordance with any approved amendment to CoC No. 1014 listed in 10 CFR 72.214. Each of the licensed HI-STORM 100 System components (i.e., the MPC, overpack, and transfer cask), if fabricated in accordance with any of the approved CoC Amendments, may be used with one another provided an assessment is performed by the CoC holder that demonstrates design compatibility.

FOR THE U. S. NUCLEAR REGULATORY COMMISSION

Robert Nelson, Chief
Licensing Section
Spent Fuel Project Office
Office of Nuclear Material Safety and Safeguards
Washington, DC 20555

Dated, ~~June 7, 2005~~*TBD*

Attachments:
1. Appendix A
2. Appendix B

# 1.0 USE AND APPLICATION

## 1.1 Definitions

----------NOTE----------
The defined terms of this section appear in capitalized type and are applicable throughout these Technical Specifications and Bases.
---

| Term | Definition |
|---|---|
| ACTIONS | ACTIONS shall be that part of a Specification that prescribes Required Actions to be taken under designated Conditions within specified Completion Times. |
| FUEL BUILDING | The FUEL BUILDING is the site-specific power plant facility, governed by the regulations of 10CFR Part 50, where the loaded OVERPACK or TRANSFER CASK is transferred to or from the transporter. |
| LOADING OPERATIONS | LOADING OPERATIONS include all licensed activities on an OVERPACK or TRANSFER CASK while it is being loaded with fuel assemblies. LOADING OPERATIONS begin when the first fuel assembly is placed in the MPC and end when the OVERPACK or TRANSFER CASK is suspended from or secured on the transporter. LOADING OPERATIONS does not included MPC transfer between the TRANSFER CASK and the OVERPACK. |
| MULTI-PURPOSE CANISTER (MPC) | MPCs are the sealed spent nuclear fuel canisters which consist of a honeycombed fuel basket contained in a cylindrical canister shell which is welded to a baseplate, lid with welded port cover plates, and closure ring. The MPC provides the confinement boundary for the contained radioactive materials. |

(continued)

1.1 Definitions (continued)

| | |
|---|---|
| OVERPACK | OVERPACKs are the casks which receive and contain the sealed MPCs for interim storage on the ISFSI. They provide gamma and neutron shielding, and provide for ventilated air flow to promote heat transfer from the MPC to the environs. The OVERPACK does not include the TRANSFER CASK. |
| SPENT FUEL STORAGE CASKS (SFSCs) | SFSCs are containers approved for the storage of spent fuel assemblies at the ISFSI. The HI-STORM 100 SFSC System consists of the OVERPACK and its integral MPC. |
| STORAGE OPERATIONS | STORAGE OPERATIONS include all licensed activities that are performed at the ISFSI while an SFSC containing spent fuel is sitting on a storage pad within the ISFSI perimeter. STORAGE OPERATIONS does not include MPC transfer between the TRANSFER CASK and the OVERPACK. |
| TRANSFER CASK | TRANSFER CASKs are containers designed to contain the MPC during and after loading of spent fuel assemblies and to transfer the MPC to or from the OVERPACK. The HI-STORM 100 System employs either the 125-Ton or the 100-Ton HI-TRAC TRANSFER CASK. |

(continued)

1.1 Definitions (continued)

| | |
|---|---|
| TRANSPORT OPERATIONS | TRANSPORT OPERATIONS include all licensed activities performed on an OVERPACK or TRANSFER CASK loaded with one or more fuel assemblies when it is being moved ~~to and from the ISFSI~~ *after LOADING OPERATIONS or before UNLOADING OPERATIONS*. TRANSPORT OPERATIONS begin when the OVERPACK or TRANSFER CASK is first suspended from or secured on the transporter and end when the OVERPACK or TRANSFER CASK is at its destination and no longer secured on or suspended from the transporter. TRANSPORT OPERATIONS includes transfer of the MPC between the OVERPACK and the TRANSFER CASK. |
| UNLOADING OPERATIONS | UNLOADING OPERATIONS include all licensed activities on an SFSC to be unloaded of the contained fuel assemblies. UNLOADING OPERATIONS begin when the OVERPACK or TRANSFER CASK is no longer suspended from or secured on the transporter and end when the last fuel assembly is removed from the SFSC. UNLOADING OPERATIONS does not include MPC transfer between the TRANSFER CASK and the OVERPACK. |

## 3.3 SFSC CRITICALITY CONTROL

### 3.3.1 Boron Concentration

LCO 3.3.1 As required by CoC Appendix B, Table 2.1-2, the concentration of boron in the water in the MPC shall meet the following limits for the applicable MPC model and the most limiting fuel assembly array/class and classification to be stored in the MPC:

a. MPC-24 with one or more fuel assemblies having an initial enrichment greater than the value in Table 2.1-2 for no soluble boron credit and < 5.0 wt% $^{235}$U: > 400 ppmb

b. MPC-24E or MPC-24EF (all INTACT FUEL ASSEMBLIES) with one or more fuel assemblies having an initial enrichment greater than the value in Table 2.1-2 for no soluble boron credit and < 5.0 wt% $^{235}$U: > 300 ppmb

c. Deleted.

d. Deleted.

e. MPC-24E or MPC-24EF (one or more DAMAGED FUEL ASSEMBLIES or FUEL DEBRIS) with one or more fuel assemblies having an initial enrichment > 4.0 wt% $^{235}$U and < 5.0 wt% $^{235}$ U: > 600 ppmb

f. MPC-32/32F: Minimum soluble boron concentration as required by the table below.

| Array/Class | All INTACT FUEL ASSEMBLIES | | One or more DAMAGED FUEL ASSEMBLIES or FUEL DEBRIS | |
|---|---|---|---|---|
| | Initial Enrichment < 4.1 wt% $^{235}$ U (ppmb) | Initial Enrichment > 4.1 wt% and < 5.0 wt% $^{235}$ U (ppmb) | Initial Enrichment < 4.1 wt% $^{235}$ U (ppmb) | Initial Enrichment > 4.1 wt% and < 5.0 wt% $^{235}$ U (ppmb) |
| 14x14A/B/C/D/~~E~~ | 1,300 | 1,900 | 1,500 | 2,300 |
| 15x15A/B/C/G | 1,800 | 2,500 | 1,900 | 2,700 |
| 15x15D/E/F/H | 1,900 | 2,600 | 2,100 | 2,900 |
| 16x16A | 1,300 | 1,900 | 1,500 | 2,300 |
| 17x17A/B/C | 1,900 | 2,600 | 2,100 | 2,900 |
| *14x14E* | *0* | *0* | *0* | *0* |

APPLICABILITY: During PWR fuel LOADING OPERATIONS with fuel and water in the MPC

AND

During PWR fuel UNLOADING OPERATIONS with fuel and water in the MPC.

ACTIONS

----------NOTE----------
Separate Condition entry is allowed for each MPC.
---

| CONDITION | REQUIRED ACTION | COMPLETION TIME |
|---|---|---|
| A. Boron concentration not within limit. | A.1 Suspend LOADING OPERATIONS or UNLOADING OPERATIONS. | Immediately |
| | AND | |
| | A.2 Suspend positive reactivity additions. | Immediately |
| | AND | |
| | A.3 Initiate action to restore boron concentration to within limit. | Immediately |

SURVEILLANCE REQUIREMENTS

| SURVEILLANCE | FREQUENCY |
|---|---|
| ----------NOTE---------- This surveillance is only required to be performed if the MPC is submerged in water or if water is to be added to, or recirculated through the MPC. ---------- | Once, within 4 hours prior to entering the Applicability of this LCO. |
| | AND |
| SR 3.3.1.1 Verify boron concentration is within the applicable limit using two independent measurements*, unless the specified boron concentration is 0 ppmb*. | Once per 48 hours thereafter. |

Table 3-2
MPC Helium Backfill Limits[1]

| MPC MODEL | LIMIT |
|---|---|
| MPC-24/24E/24EF | |
| i. Cask Heat Load ≤ 27.77 kW (MPC-24) or ≤ 28.17 kW (MPC-24E/EF) | 0.1212 +0/-10% g-moles/l<br>OR<br>≥ 29.3 psig and ≤ 33.3 psig |
| MPC-68/68F/68FF | |
| i. Cask Heat Load ≤ 28.19 kW | 0.1218 +0/-10% g-moles/l<br>OR<br>≥ 29.3 psig and ≤ 33.3 psig |
| MPC-32/32F | |
| Cask Heat Load ≤ 28.74 kW<br>*All arrays/classes except 14x14E* | ≥ 29.3 psig and ≤ 33.3 psig |
| *Cask Heat Load ≤ 8.0 kW*<br>*Array/class 14x14E* | *≥ 22.0 psig and ≤ 33.3 psig* |

[1] Helium used for backfill of MPC shall have a purity of ≥ 99.995%. Pressure range is at a reference temperature of 70°F

## 5.0 ADMINISTRATIVE CONTROLS AND PROGRAMS

The following programs shall be established, implemented and maintained.

5.1 Deleted.

5.2 Deleted.

5.3 Deleted.

5.4 Radioactive Effluent Control Program

This program implements the requirements of 10 CFR 72.44(d).

a. The HI-STORM 100 Cask System does not create any radioactive materials or have any radioactive waste treatment systems. Therefore, specific operating procedures for the control of radioactive effluents are not required. Specification 3.1.1, Multi-Purpose Canister (MPC), provides assurance that there are not radioactive effluents from the SFSC.

b. This program includes an environmental monitoring program. Each general license user may incorporate SFSC operations into their environmental monitoring programs for 10 CFR Part 50 operations.

c. An annual report shall be submitted pursuant to 10 CFR 72.44(d)(3).

(continued)

5.5 Cask Transport Evaluation Program

This program provides a means for evaluating various transport configurations and transport route conditions to ensure that the design basis drop limits are met. For lifting of the loaded TRANSFER CASK or OVERPACK using devices which are integral to a structure governed by 10 CFR Part 50 regulations, 10 CFR 50 requirements apply. This program is not applicable when the TRANSFER CASK or OVERPACK is in the FUEL BUILDING or is being handled by a device providing support from underneath (i.e., on a rail car, heavy haul trailer, air pads, etc.).

Pursuant to 10 CFR 72.212, this program shall evaluate the site-specific transport route conditions.

a. For free-standing OVERPACKS and the TRANSFER CASK, the following requirements apply:

1. The lift height above the transport route surface(s) shall not exceed the limits in Table 5-1 except as provided for in Specification 5.5.a.2. Also, *if applying the limits in Table 5-1,* the program shall ensure that the transport route conditions (i.e., surface hardness and pad thickness) are equivalent to or less limiting than either Set A or Set B in HI-STORM FSAR Table 2.2.9.

2. ~~For site-specific transport route surfaces that are not bounded by either the Set A or Set B parameters of FSAR Table 2.2.9, t~~*T*he program may determine lift heights by analysis based on the site-specific conditions to ensure that the impact loading due to design basis drop events does not exceed 45 g's at the top of the MPC fuel basket. These alternative analyses shall be commensurate with the drop analyses described in the Final Safety Analysis Report for the HI-STORM 100 Cask System. The program shall ensure that these alternative analyses are documented and controlled.

(continued)

5.5 Cask Transport Evaluation Program (continued)

3. The TRANSFER CASK or OVERPACK, when loaded with spent fuel, may be lifted to any height necessary during *TRANSPORT OPERATIONS*~~transportation between the FUEL BUILDING and the CTF and/or ISFSI pad~~, provided the lifting device is designed in accordance with ANSI N14.6 and has redundant drop protection features.

4. The TRANSFER CASK and MPC, when loaded with spent fuel, may be lifted to those heights necessary to perform cask handling operations, including MPC transfer, provided the lifts are made with structures and components designed in accordance with the criteria specified in Section 3.5 of Appendix B to Certificate of Compliance No. 1014, as applicable.

b. For the transport of OVERPACKS to be anchored to the ISFSI pad, the following requirements apply:

1. Except as provided in 5.5.b.2, user shall determine allowable OVERPACK lift height limit(s) above the transport route surface(s) based on site-specific transport route conditions. The lift heights shall be determined by evaluation or analysis, based on limiting the design basis cask deceleration during a postulated drop event to $\leq$ 45 g's at the top of the MPC fuel basket. Evaluations and/or analyses shall be performed using methodologies consistent with those in the HI-STORM 100 FSAR.

2. The OVERPACK, when loaded with spent fuel, may be lifted to any height necessary during transportation between the FUEL BUILDING and the CTF and/or ISFSI pad provided the lifting device is designed in accordance with ANSI N14.6 and has redundant drop protection features.

(continued)

5.5 Cask Transport Evaluation Program (continued)

Table 5-1

TRANSFER CASK and Free-Standing OVERPACK Lifting Requirements

| ITEM | ORIENTATION | LIFTING HEIGHT LIMIT (in.) |
|---|---|---|
| TRANSFER CASK | Horizontal | 42 (Notes 1*, 2* and ~~2~~*4*) |
| TRANSFER CASK | Vertical | None Established (Note 2) |
| OVERPACK | Horizontal | Not Permitted |
| OVERPACK | Vertical | 11 (Note 3 *and Note 5*) |

Notes:

1. To be measured from the lowest point on the TRANSFER CASK (i.e., the bottom edge of the cask/lid assemblage)
2. See Technical Specification 5.5.a.3 and 4
3. See Technical Specification 5.5.a.3.
4. *Not permitted for a TRANSFER CASK containing Indian Point Unit 1 fuel assemblies.*
5. *The lifting height limit for an OVERPACK containing Indian Point Unit 1 fuel assemblies is 8 Inches.*

(continued)

5.6 Deleted.

5.7 Radiation Protection Program

5.7.1 Each cask user shall ensure that the Part 50 radiation protection program appropriately addresses dry storage cask loading and unloading, as well as ISFSI operations, including transport of the loaded OVERPACK or TRANSFER CASK outside of facilities governed by 10 CFR Part 50. The radiation protection program shall include appropriate controls for direct radiation and contamination, ensuring compliance with applicable regulations, and implementing actions to maintain personnel occupational exposures As Low As Reasonably Achievable (ALARA). The actions and criteria to be included in the program are provided below.

5.7.2 As part of its evaluation pursuant to 10 CFR 72.212(b)(2)(i)(C), the licensee shall perform an analysis to confirm that the dose limits of 10 CFR 72.104(a) will be satisfied under the actual site conditions and ISFSI configuration, considering the planned number of casks to be deployed and the cask contents.

5.7.3 Based on the analysis performed pursuant to Section 5.7.2, the licensee shall establish individual cask surface dose rate limits for the HI-TRAC TRANSFER CASK and the HI-STORM OVERPACK to be used at the site. Total (neutron plus gamma) dose rate limits shall be established at the following locations:

a. The top of the TRANSFER CASK and the OVERPACK.
b. The side of the TRANSFER CASK and OVERPACK
c. The inlet and outlet ducts on the OVERPACK

5.7.4 Notwithstanding the limits established in Section 5.7.3, the measured dose rates on a loaded OVERPACK shall not exceed the following values:

a. 20 mrem/hr (gamma + neutron) on the top of the OVERPACK
b. 110 mrem/hr (gamma + neutron) on the side of the OVERPACK, excluding inlet and outlet ducts

5.7.5 The licensee shall measure the TRANSFER CASK and OVERPACK surface neutron and gamma dose rates as described in Section 5.7.8 for comparison against the limits established in Section 5.7.3 or Section 5.7.4, whichever are lower.

5.7 Radiation Protection Program (cont'd)

5.7.6 If the measured surface dose rates exceed the lower of the two limits established in Section 5.7.3 or Section 5.7.4, the licensee shall:

a. Administratively verify that the correct contents were loaded in the correct fuel storage cell locations.
b. Perform a written evaluation to verify whether placement of the as-loaded OVERPACK at the ISFSI will cause the dose limits of 10 CFR 72.104 to be exceeded.
c. Perform a written evaluation within 30 days to determine why the surface dose rate limits were exceeded.

5.7.7 If the evaluation performed pursuant to Section 5.7.6 shows that the dose limits of 10 CFR 72.104 will be exceeded, the OVERPACK shall not be placed into storage until appropriate corrective action is taken to ensure the dose limits are not exceeded.

5.7.8 TRANSFER CASK and OVERPACK surface dose rates shall be measured at approximately the following locations:

a. A minimum of four (4) dose rate measurements shall be taken on the side of the TRANSFER CASK approximately at the cask mid-height plane. The measurement locations shall be approximately 90 degrees apart around the circumference of the cask. Dose rates shall be measured between the radial ribs of the water jacket.

b. A minimum of four (4) TRANSFER CASK top lid dose rates shall be measured at locations approximately half way between the edge of the hole in the top lid and the outer edge of the top lid, 90 degrees apart around the circumference of the top lid.

c. A minimum of twelve (12) dose rate measurements shall be taken on the side of the OVERPACK in three sets of four measurements. One measurement set shall be taken approximately at the cask mid-height plane, 90 degrees apart around the circumference of the cask. The second and third measurement sets shall be taken approximately 60 inches above and below the mid-height plane, respectively, also 90 degrees apart around the circumference of the cask.

d. A minimum of five (5) dose rate measurements shall be taken on the top of the OVERPACK. One dose rate measurement shall be taken at approximately the center of the lid and four measurements shall be taken at locations on the top concrete shield, approximately half way between the center and the edge of the top concrete shield, 90 degrees apart around the circumference of the lid.

5.7 Radiation Protection Program (cont'd)

e. A dose rate measurement shall be taken on contact at the surface of each inlet and outlet vent duct screen.

## 1.0 Definitions

----------NOTE----------
The defined terms of this section appear in capitalized type and are applicable throughout these Technical Specifications and Bases.
---

| Term | Definition |
|---|---|
| CASK TRANSFER FACILITY (CTF) | The CASK TRANSFER FACILITY includes the following components and equipment: (1) a Cask Transfer Structure used to stabilize the TRANSFER CASK and MPC during lifts involving spent fuel not bounded by the regulations of 10 CFR Part 50, and (2) Either a stationary lifting device or a mobile lifting device used in concert with the stationary structure to lift the OVERPACK, TRANSFER CASK, and MPC |
| DAMAGED FUEL ASSEMBLY | DAMAGED FUEL ASSEMBLIES are fuel assemblies with known or suspected cladding defects, as determined by a review of records, greater than pinhole leaks or hairline cracks, empty fuel rod locations that are not filled with dummy fuel rods, or those that cannot be handled by normal means. Fuel assemblies that cannot be handled by normal means due to fuel cladding damage are considered FUEL DEBRIS. |
| DAMAGED FUEL CONTAINER (DFC) | DFCs are specially designed enclosures for DAMAGED FUEL ASSEMBLIES or FUEL DEBRIS which permit gaseous and liquid media to escape while minimizing dispersal of gross particulates. DFCs authorized for use in the HI-STORM 100 System are as follows:<br><br>1. Holtec Dresden Unit 1/Humboldt Bay design<br><br>2. Transnuclear Dresden Unit 1 design<br><br>3. Holtec Generic BWR design<br><br>4. Holtec Generic PWR design<br><br>*5. Holtec Indian Point Unit 1 design* |
| FUEL DEBRIS | FUEL DEBRIS is ruptured fuel rods, severed rods, loose fuel pellets or fuel assemblies with known or suspected defects which cannot be handled by normal means due to fuel cladding damage. |

(continued)

1.0 Definitions (continued)

| | |
|---|---|
| INTACT FUEL ASSEMBLY | INTACT FUEL ASSEMBLIES are fuel assemblies without known or suspected cladding defects greater than pinhole leaks or hairline cracks and which can be handled by normal means. Fuel assemblies without fuel rods in fuel rod locations shall not be classified as INTACT FUEL ASSEMBLIES unless dummy fuel rods are used to displace an amount of water greater than or equal to that displaced by the fuel rod(s). |
| LOADING OPERATIONS | LOADING OPERATIONS include all licensed activities on an OVERPACK or TRANSFER CASK while it is being loaded with fuel assemblies. LOADING OPERATIONS begin when the first fuel assembly is placed in the MPC and end when the OVERPACK or TRANSFER CASK is suspended from or secured on the transporter. LOADING OPERATIONS does not included MPC transfer between the TRANSFER CASK and the OVERPACK. |
| MINIMUM ENRICHMENT | MINIMUM ENRICHMENT is the minimum assembly average enrichment. Natural uranium blankets are not considered in determining minimum enrichment. |
| MULTI-PURPOSE CANISTER (MPC) | MPCs are the sealed spent nuclear fuel canisters which consist of a honeycombed fuel basket contained in a cylindrical canister shell which is welded to a baseplate, lid with welded port cover plates, and closure ring. The MPC provides the confinement boundary for the contained radioactive materials. |
| NON-FUEL HARDWARE | NON-FUEL HARDWARE is defined as Burnable Poison Rod Assemblies (BPRAs), Thimble Plug Devices (TPDs), Control Rod Assemblies (CRAs), Axial Power Shaping Rods (APSRs), Wet Annular Burnable Absorbers (WABAs), Rod Cluster Control Assemblies (RCCAs), Control Element Assemblies (CEAs), water displacement guide tube plugs, orifice rod assemblies, and vibration suppressor inserts. |
| OVERPACK | OVERPACKs are the casks which receive and contain the sealed MPCs for interim storage on the ISFSI. They provide gamma and neutron shielding, and provide for ventilated air flow to promote heat transfer from the MPC to the environs. The OVERPACK does not include the TRANSFER CASK. |

(continued)

1.0 Definitions (continued)

| | |
|---|---|
| PLANAR-AVERAGE INITIAL ENRICHMENT | PLANAR-AVERAGE INITIAL ENRICHMENT is the average of the distributed fuel rod initial enrichments within a given axial plane of the assembly lattice. |
| SPENT FUEL STORAGE CASKS (SFSCs) | An SFSC is a container approved for the storage of spent fuel assemblies at the ISFSI. The HI-STORM 100 SFSC System consists of the OVERPACK and its integral MPC. |
| TRANSFER CASK | TRANSFER CASKs are containers designed to contain the MPC during and after loading of spent fuel assemblies and to transfer the MPC to or from the OVERPACK. The HI-STORM 100 System employs either the 125-Ton or the 100-Ton HI-TRAC TRANSFER CASK. |
| TRANSPORT OPERATIONS | TRANSPORT OPERATIONS include all licensed activities performed on an OVERPACK or TRANSFER CASK loaded with one or more fuel assemblies when it is being moved~~ to and from the ISFSI~~ *after LOADING OPERATIONS or before UNLOADING OPERATIONS*. TRANSPORT OPERATIONS begin when the OVERPACK or TRANSFER CASK is first suspended from or secured on the transporter and end when the OVERPACK or TRANSFER CASK is at its destination and no longer secured on or suspended from the transporter. TRANSPORT OPERATIONS include transfer of the MPC between the OVERPACK and the TRANSFER CASK. |
| UNLOADING OPERATIONS | UNLOADING OPERATIONS include all licensed activities on an SFSC to be unloaded of the contained fuel assemblies. UNLOADING OPERATIONS begin when the OVERPACK or TRANSFER CASK is no longer suspended from or secured on the transporter and end when the last fuel assembly is removed from the SFSC. UNLOADING OPERATIONS does not include MPC transfer between the TRANSFER CASK and the OVERPACK. |
| ZR | ZR means any zirconium-based fuel cladding or fuel channel material authorized for use in a commercial nuclear power plant reactor. |

# 2.0 APPROVED CONTENTS

## 2.1 Fuel Specifications and Loading Conditions

### 2.1.1 Fuel To Be Stored In The HI-STORM 100 SFSC System

a. INTACT FUEL ASSEMBLIES, DAMAGED FUEL ASSEMBLIES, FUEL DEBRIS, and NON-FUEL HARDWARE meeting the limits specified in Table 2.1-1 and other referenced tables may be stored in the HI-STORM 100 SFSC System.

b. For MPCs partially loaded with stainless steel clad fuel assemblies, all remaining fuel assemblies in the MPC shall meet the decay heat generation limit for the stainless steel clad fuel assemblies.

c. For MPCs partially loaded with DAMAGED FUEL ASSEMBLIES or FUEL DEBRIS, all remaining ZR clad INTACT FUEL ASSEMBLIES in the MPC shall meet the decay heat generation limits for the DAMAGED FUEL ASSEMBLIES. This requirement applies only to uniform fuel loading.

a. For MPCs partially loaded with array/class 6x6A, 6x6B, 6x6C, 7x7A, or 8x8A fuel assemblies, all remaining ZR clad INTACT FUEL ASSEMBLIES in the MPC shall meet the decay heat generation limits for the 6x6A, 6x6B, 6x6C, 7x7A and 8x8A fuel assemblies.

b. All BWR fuel assemblies may be stored with or without ZR channels with the exception of array/class 10x10D and 10x10E fuel assemblies, which may be stored with or without ZR or stainless steel channels.

### 2.1.2 Uniform Fuel Loading

Any authorized fuel assembly may be stored in any fuel storage location, subject to other restrictions related to DAMAGED FUEL, FUEL DEBRIS, and NON-FUEL HARDWARE specified in the CoC.

(continued)

## 2.0 Approved Contents

2.1 Fuel Specifications and Loading Conditions (cont'd)

2.1.3 Regionalized Fuel Loading

Users may choose to store fuel using regionalized loading in lieu of uniform loading to allow higher heat emitting fuel assemblies to be stored than would otherwise be able to be stored using uniform loading. Regionalized loading is limited to those fuel assemblies with ZR cladding. Figures 2.1-1 through 2.1-4 define the regions for the MPC-24, MPC-24E, MPC-24EF, MPC-32, MPC-32F, MPC-68, and MPC-68FF models, respectively[1]. Fuel assembly burnup, decay heat, and cooling time limits for regionalized loading are specified in Section 2.4.2. Fuel assemblies used in regionalized loading shall meet all other applicable limits specified in Tables 2.1-1 through 2.1-3.

2.2 Violations

If any Fuel Specifications or Loading Conditions of 2.1 are violated, the following actions shall be completed:

2.2.1 The affected fuel assemblies shall be placed in a safe condition.

2.2.2 Within 24 hours, notify the NRC Operations Center.

2.2.3 Within 30 days, submit a special report which describes the cause of the violation, and actions taken to restore compliance and prevent recurrence.

[1] These figures are only intended to distinguish the fuel loading regions. Other details of the basket design are illustrative and may not reflect the actual basket design details. The design drawings should be consulted for basket design details.

LEGEND:

REGION 1:

REGION 2:

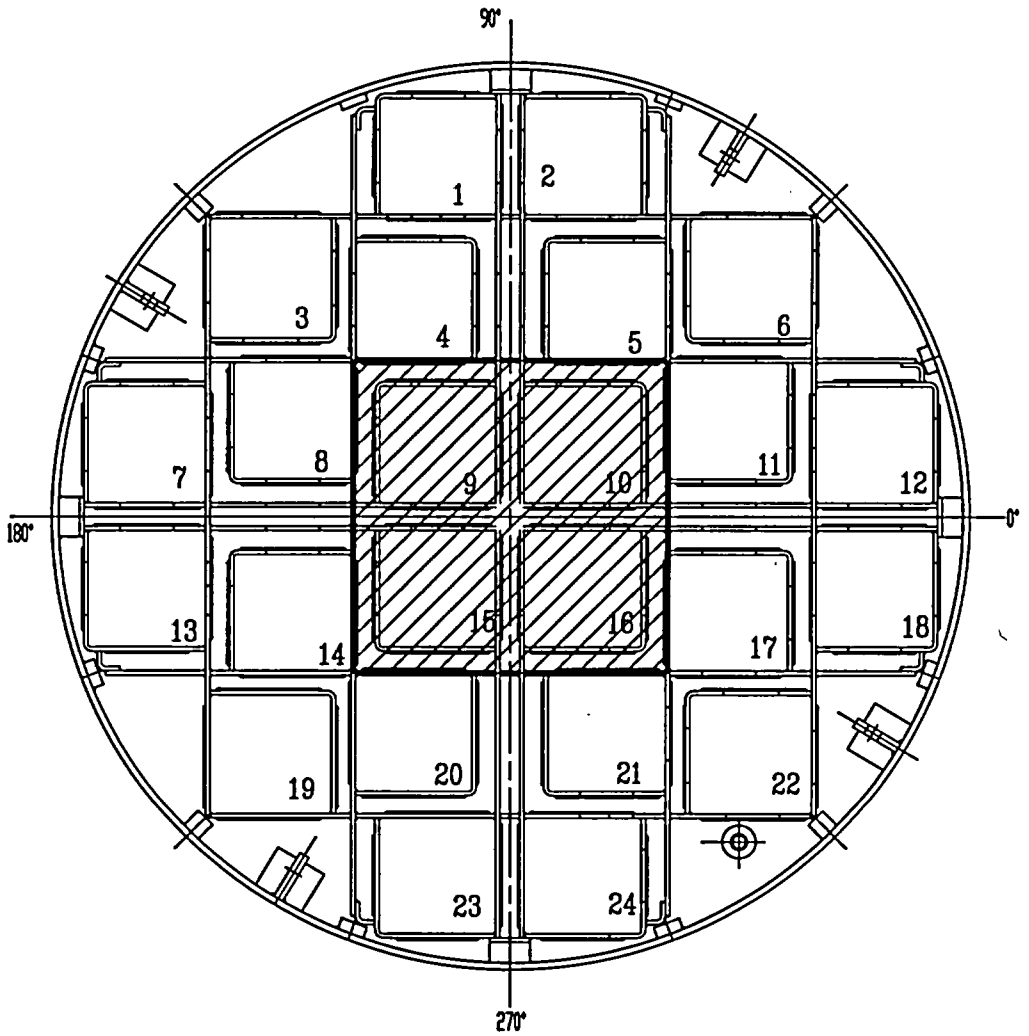


FIGURE 2.1-1
FUEL LOADING REGIONS - MPC-24

LEGEND:

REGION 1:

REGION 2:

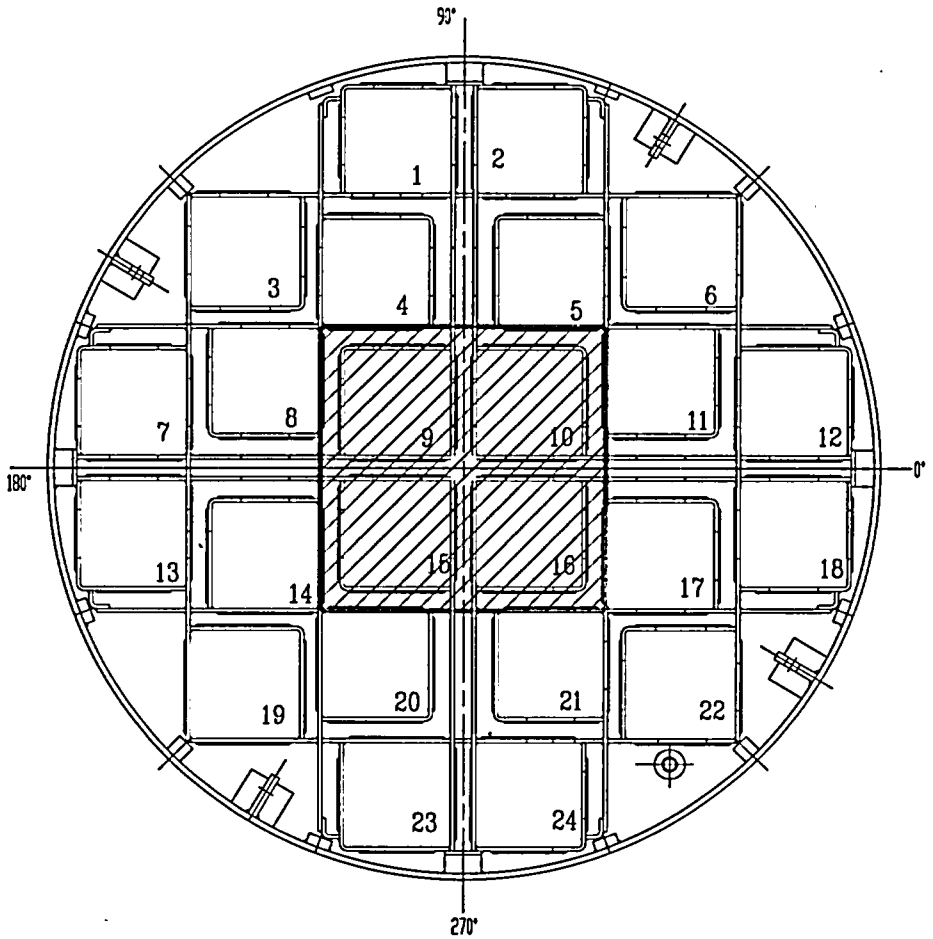


FIGURE 2.1-2

FUEL LOADING REGIONS - MPC-24E/24EF

LEGEND:

REGION 1:

REGION 2:

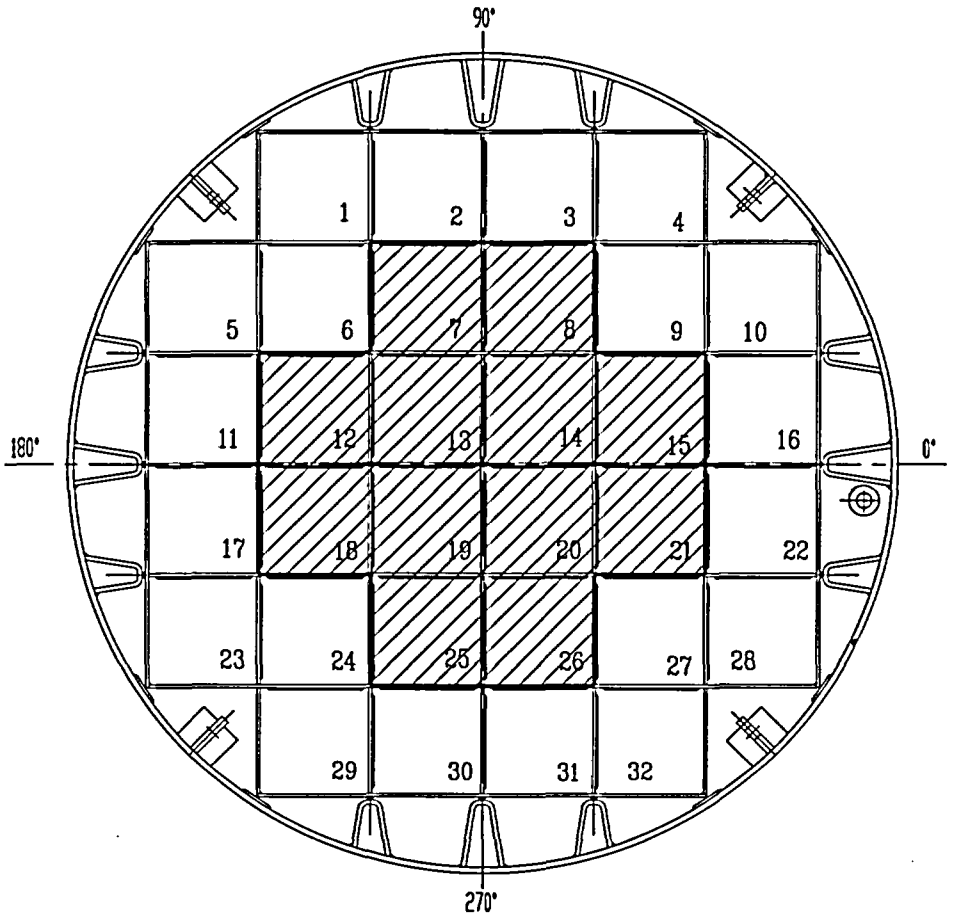


FIGURE 2.1-3

FUEL LOADING REGIONS - MPC-32/32F

LEGEND:

REGION 1:

REGION 2:

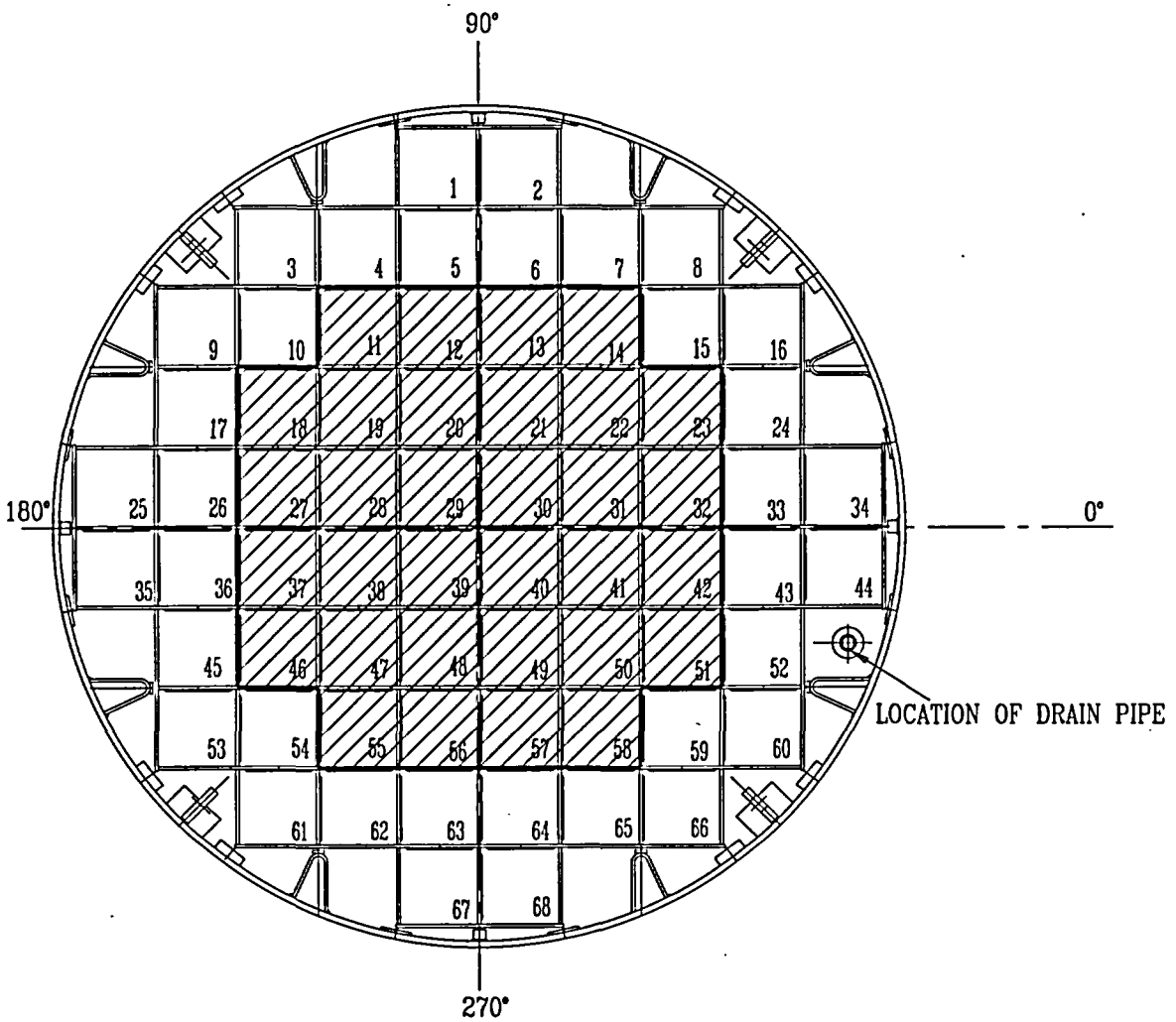


FIGURE 2.1-4

FUEL LOADING REGIONS - MPC-68/68FF

Table 2.1-1 (page 1 of 39)
Fuel Assembly Limits

I. MPC MODEL: MPC-24

A. Allowable Contents

1. Uranium oxide, PWR INTACT FUEL ASSEMBLIES listed in Table 2.1-2, with or without NON-FUEL HARDWARE and meeting the following specifications (Note 1):

| | |
|---|---|
| a. Cladding Type: | ZR or Stainless Steel (SS) as specified in Table 2.1-2 for the applicable fuel assembly array/class. |
| b. Initial Enrichment: | As specified in Table 2.1-2 for the applicable fuel assembly array/class. |
| c. Post-irradiation Cooling Time and Average Burnup Per Assembly: | |
| i. Array/Classes 14x14D,14x14E, and 15x15G | Cooling time ≥ 8 years and an average burnup ≤ 40,000 MWD/MTU. |
| ii. All Other Array/Classes | Cooling time and average burnup as specified in Section 2.4. |
| iii. NON-FUEL HARDWARE | As specified in Table 2.1-8. |

Table 2.1-1 (page 2 of 39)
Fuel Assembly Limits

I. MPC MODEL: MPC-24 (continued)

A. Allowable Contents (continued)

d. Decay Heat Per Fuel Storage Location:

| | |
|---|---|
| i. Array/Classes 14x14D, 14x14E, and 15x15G | ≤ 710 Watts |
| ii All Other Array/Classes | As specified in Section 2.4. |
| e. Fuel Assembly Length: | ≤ 176.8 inches (nominal design) |
| f. Fuel Assembly Width: | ≤ 8.54 inches (nominal design) |
| g. Fuel Assembly Weight: | ≤ 1,680 lbs (including NON-FUEL HARDWARE) |

B. Quantity per MPC: Up to 24 fuel assemblies.

C. Deleted.

D. Neutron sources and DAMAGED FUEL ASSEMBLIES and FUEL DEBRIS are not authorized for loading into the MPC-24.

Note 1: Fuel assemblies containing BPRAs, TPDs, WABAs, water displacement guide tube plugs, orifice rod assemblies, or vibration suppressor inserts may be stored in any fuel storage location. Fuel assemblies containing CRAs, RCCAs, CEAs, or APSRs may only be loaded in fuel storage locations 9, 10, 15, and/or 16. These requirements are in addition to any other requirements specified for uniform or regionalized fuel loading.

Table 2.1-1 (page 3 of 39)
Fuel Assembly Limits

II. MPC MODEL: MPC-68

A. Allowable Contents

1. Uranium oxide, BWR INTACT FUEL ASSEMBLIES listed in Table 2.1-3, with or without channels, and meeting the following specifications:

| | |
|---|---|
| a. Cladding Type: | ZR or Stainless Steel (SS) as specified in Table 2.1-3 for the applicable fuel assembly array/class. |
| b. Maximum PLANAR-AVERAGE INITIAL ENRICHMENT: | As specified in Table 2.1-3 for the applicable fuel assembly array/class. |
| c. Initial Maximum Rod Enrichment: | As specified in Table 2.1-3 for the applicable fuel assembly array/class. |
| d. Post-irradiation Cooling Time and Average Burnup Per Assembly: | |
| i. Array/Classes 6x6A, 6x6C, 7x7A, and 8x8A: | Cooling time ≥ 18 years and an average burnup ≤ 30,000 MWD/MTU |
| ii. Array/Class 8x8F | Cooling time ≥ 10 years and an average burnup ≤ 27,500 MWD/MTU. |
| iii. Array/Classes 10x10D and 10x10E | Cooling time ≥ 10 years and an average burnup ≤ 22,500 MWD/MTU. |
| iv. All Other Array/Classes | As specified in Section 2.4. |

Table 2.1-1 (page 4 of 39)
Fuel Assembly Limits

II. MPC MODEL: MPC-68 (continued)

A. Allowable Contents (continued)

e. Decay Heat Per Assembly:

| | |
|---|---|
| i. Array/Classes 6x6A, 6x6C, 7x7A, and 8x8A | ≤ 115 Watts |
| ii. Array/Class 8x8F | ≤ 183.5 Watts. |
| iii. Array/Classes 10x10D and 10x10E | ≤ 95 Watts |
| iv. All Other Array/Classes | As specified in Section 2.4. |

| | |
|---|---|
| f. Fuel Assembly Length: | ≤ 176.5 inches (nominal design) |
| g. Fuel Assembly Width: | ≤ 5.85 inches (nominal design) |
| h. Fuel Assembly Weight: | ≤ 700 lbs, including channels |

Table 2.1-1 (page 5 of 39)
Fuel Assembly Limits

II. MPC MODEL: MPC-68 (continued)

A. Allowable Contents (continued)

2. Uranium oxide, BWR DAMAGED FUEL ASSEMBLIES, with or without channels, placed in DAMAGED FUEL CONTAINERS. Uranium oxide BWR DAMAGED FUEL ASSEMBLIES shall meet the criteria specified in Table 2.1-3 and meet the following specifications:

| | |
|---|---|
| a. Cladding Type: | ZR or Stainless Steel (SS) as specified in Table 2.1-3 for the applicable fuel assembly array/class. |
| b. Maximum PLANAR-AVERAGE INITIAL ENRICHMENT: | |
| i. Array/Classes 6x6A, 6x6C, 7x7A, and 8x8A | As specified in Table 2.1-3 for the applicable fuel assembly array/class. |
| ii. All Other Array/Classes specified in Table 2.1-3 | 4.0 wt% $^{235}U$ |
| c. Initial Maximum Rod Enrichment: | As specified in Table 2.1-3 for the applicable fuel assembly array/class. |
| d. Post-irradiation Cooling Time and Average Burnup Per Assembly: | |
| i. Array/Classes 6x6A, 6x6C, 7x7A,and 8x8A | Cooling time $\geq$ 18 years and an average burnup $\leq$ 30,000 MWD/MTU. |
| ii. Array/Class 8x8F | Cooling time $\geq$ 10 years and an average burnup $\leq$ 27,500 MWD/MTU. |
| iii. Array/Classes 10x10D and 10x10E | Cooling time $\geq$ 10 years and an average burnup $\leq$ 22,500 MWD/MTU. |
| iv. All Other Array Classes | As specified in Section 2.4. |

Table 2.1-1 (page 6 of 39)
Fuel Assembly Limits

II. MPC MODEL: MPC-68 (continued)

A. Allowable Contents (continued)

e. Decay Heat Per Assembly:

| | | |
|---|---|---|
| i. | Array/Class 6x6A, 6x6C, 7x7A, and 8x8A | ≤ 115 Watts |
| ii. | Array/Class 8x8F | ≤ 183.5 Watts |
| iii. | Array/Classes 10x10D and 10x10E | ≤ 95 Watts |
| iv. | All Other Array/Classes | As specified in Section 2.4. |

f. Fuel Assembly Length:

| | | |
|---|---|---|
| i. | Array/Class 6x6A, 6x6C, 7x7A, or 8x8A | ≤ 135.0 inches (nominal design) |
| ii. | All Other Array/Classes | ≤ 176.5 inches (nominal design) |

g. Fuel Assembly Width:

| | | |
|---|---|---|
| i. | Array/Class 6x6A, 6x6C, 7x7A, or 8x8A | ≤ 4.70 inches (nominal design) |
| ii. | All Other Array/Classes | ≤ 5.85 inches (nominal design) |

h. Fuel Assembly Weight:

| | | |
|---|---|---|
| i. | Array/Class 6x6A, 6x6C, 7x7A, or 8x8A | ≤ 550 lbs, including channels and DFC |
| ii. | All Other Array/Classes | ≤ 700 lbs, including channels and DFC |

Table 2.1-1 (page 7 of 39)
Fuel Assembly Limits

II. MPC MODEL: MPC-68 (continued)

A. Allowable Contents (continued)

3. Mixed oxide (MOX), BWR INTACT FUEL ASSEMBLIES, with or without channels. MOX BWR INTACT FUEL ASSEMBLIES shall meet the criteria specified in Table 2.1-3 for fuel assembly array/class 6x6B, and meet the following specifications:

| | |
|---|---|
| a. Cladding Type: | ZR |
| b. Maximum PLANAR-AVERAGE INITIAL ENRICHMENT: | As specified in Table 2.1-3 for fuel assembly array/class 6x6B. |
| c. Initial Maximum Rod Enrichment: | As specified in Table 2.1-3 for fuel assembly array/class 6x6B. |
| d. Post-irradiation Cooling Time and Average Burnup Per Assembly: | Cooling time ≥ 18 years and an average burnup ≤ 30,000 MWD/MTIHM. |
| e. Decay Heat Per Assembly: | ≤ 115 Watts |
| f. Fuel Assembly Length: | ≤ 135.0 inches (nominal design) |
| g. Fuel Assembly Width: | ≤ 4.70 inches (nominal design) |
| h. Fuel Assembly Weight: | ≤ 400 lbs, including channels |

Table 2.1-1 (page 8 of 39)
Fuel Assembly Limits

II. MPC MODEL: MPC-68 (continued)

A. Allowable Contents (continued)

4. Mixed oxide (MOX), BWR DAMAGED FUEL ASSEMBLIES, with or without channels, placed in DAMAGED FUEL CONTAINERS. MOX BWR DAMAGED FUEL ASSEMBLIES shall meet the criteria specified in Table 2.1-3 for fuel assembly array/class 6x6B, and meet the following specifications:

| | |
|---|---|
| a. Cladding Type: | ZR |
| b. Maximum PLANAR-AVERAGE INITIAL ENRICHMENT: | As specified in Table 2.1-3 for array/class 6x6B. |
| c. Initial Maximum Rod Enrichment: | As specified in Table 2.1-3 for array/class 6x6B. |
| d. Post-irradiation Cooling Time and Average Burnup Per Assembly: | Cooling time ≥ 18 years and an average burnup ≤ 30,000 MWD/MTIHM. |
| e. Decay Heat Per Assembly: | ≤ 115 Watts |
| f. Fuel Assembly Length: | ≤ 135.0 inches (nominal design) |
| g. Fuel Assembly Width: | ≤ 4.70 inches (nominal design) |
| h. Fuel Assembly Weight: | ≤ 550 lbs, including channels and DFC |

Table 2.1-1 (page 9 of 39)
Fuel Assembly Limits

II. MPC MODEL: MPC-68 (continued)

A. Allowable Contents (continued)

5. Thoria rods ($ThO_2$ and $UO_2$) placed in Dresden Unit 1 Thoria Rod Canisters and meeting the following specifications:

| | |
|---|---|
| a. Cladding Type: | ZR |
| b. Composition: | 98.2 wt.% $ThO_2$, 1.8 wt. % $UO_2$ with an enrichment of 93.5 wt. % $^{235}U$. |
| c. Number of Rods Per Thoria Rod Canister: | $\leq$ 18 |
| d. Decay Heat Per Thoria Rod Canister: | $\leq$ 115 Watts |
| e. Post-irradiation Fuel Cooling Time and Average Burnup Per Thoria Rod Canister: | A fuel post-irradiation cooling time $\geq$ 18 years and an average burnup $\leq$ 16,000 MWD/MTIHM. |
| f. Initial Heavy Metal Weight: | $\leq$ 27 kg/canister |
| g. Fuel Cladding O.D.: | $\geq$ 0.412 inches |
| h. Fuel Cladding I.D.: | $\leq$ 0.362 inches |
| i. Fuel Pellet O.D.: | $\leq$ 0.358 inches |
| j. Active Fuel Length: | $\leq$ 111 inches |
| k. Canister Weight: | $\leq$ 550 lbs, including fuel |

Table 2.1-1 (page 10 of 39)
Fuel Assembly Limits

II. MPC MODEL: MPC-68 (continued)

B. Quantity per MPC:

1. Up to one (1) Dresden Unit 1 Thoria Rod Canister;

2. Up to 68 array/class 6x6A, 6x6B, 6x6C, 7x7A, or 8x8A DAMAGED FUEL ASSEMBLIES in DAMAGED FUEL CONTAINERS;

3. Up to sixteen (16) other BWR DAMAGED FUEL ASSEMBLIES in DAMAGED FUEL CONTAINERS in fuel storage locations 1, 2, 3, 8, 9, 16, 25, 34, 35, 44, 53, 60, 61, 66, 67, and/or 68; and/or

4. Any number of BWR INTACT FUEL ASSEMBLIES up to a total of 68.

C. Array/Class 10x10D and 10x10E fuel assemblies in stainless steel channels must be stored in fuel storage locations 19 - 22, 28 - 31, 38 -41, and/or 47 - 50.

D. Dresden Unit 1 fuel assemblies with one Antimony-Beryllium neutron source are authorized for loading in the MPC-68. The Antimony-Beryllium source material shall be in a water rod location.

E. FUEL DEBRIS is not authorized for loading in the MPC-68.

Table 2.1-1 (page 11 of 39)
Fuel Assembly Limits

III. MPC MODEL: MPC-68F

A. Allowable Contents

1. Uranium oxide, BWR INTACT FUEL ASSEMBLIES, with or without ZR channels. Uranium oxide BWR INTACT FUEL ASSEMBLIES shall meet the criteria specified in Table 2.1-3 for fuel assembly array class 6x6A, 6x6C, 7x7A or 8x8A, and meet the following specifications:

| | |
|---|---|
| a. Cladding Type: | ZR |
| b Maximum PLANAR-AVERAGE INITIAL ENRICHMENT: | As specified in Table 2.1-3 for the applicable fuel assembly array/class. |
| c. Initial Maximum Rod Enrichment: | As specified in Table 2.1-3 for the applicable fuel assembly array/class. |
| d. Post-irradiation Cooling Time and Average Burnup Per Assembly: | Cooling time ≥ 18 years and an average burnup ≤ 30,000 MWD/MTU. |
| e. Decay Heat Per Assembly | ≤ 115 Watts |
| f. Fuel Assembly Length: | ≤ 135.0 inches (nominal design) |
| g. Fuel Assembly Width: | ≤ 4.70 inches (nominal design) |
| h. Fuel Assembly Weight: | ≤ 400 lbs, including channels |

Table 2.1-1 (page 12 of 39)
Fuel Assembly Limits

III. MPC MODEL: MPC-68F (continued)

A. Allowable Contents (continued)

2. Uranium oxide, BWR DAMAGED FUEL ASSEMBLIES, with or without ZR channels, placed in DAMAGED FUEL CONTAINERS. Uranium oxide BWR DAMAGED FUEL ASSEMBLIES shall meet the criteria specified in Table 2.1-3 for fuel assembly array/class 6x6A, 6x6C, 7x7A, or 8x8A, and meet the following specifications:

| | |
|---|---|
| a. Cladding Type: | ZR |
| b. Maximum PLANAR-AVERAGE INITIAL ENRICHMENT: | As specified in Table 2.1-3 for the applicable fuel assembly array/class. |
| c. Initial Maximum Rod Enrichment: | As specified in Table 2.1-3 for the applicable fuel assembly array/class. |
| d. Post-irradiation Cooling Time and Average Burnup Per Assembly: | Cooling time ≥ 18 years and an average burnup ≤ 30,000 MWD/MTU. |
| e. Decay Heat Per Assembly: | ≤ 115 Watts |
| f. Fuel Assembly Length: | ≤ 135.0 inches (nominal design) |
| g. Fuel Assembly Width: | ≤ 4.70 inches (nominal design) |
| h. Fuel Assembly Weight: | ≤ 550 lbs, including channels and DFC |

Table 2.1-1 (page 13 of 39)
Fuel Assembly Limits

III. MPC MODEL: MPC-68F (continued)

A. Allowable Contents (continued)

3. Uranium oxide, BWR FUEL DEBRIS, with or without ZR channels, placed in DAMAGED FUEL CONTAINERS. The original fuel assemblies for the uranium oxide BWR FUEL DEBRIS shall meet the criteria specified in Table 2.1-3 for fuel assembly array/class 6x6A, 6x6C, 7x7A, or 8x8A, and meet the following specifications:

| | |
|---|---|
| a. Cladding Type: | ZR |
| b. Maximum PLANAR-AVERAGE INITIAL ENRICHMENT: | As specified in Table 2.1-3 for the applicable original fuel assembly array/class. |
| c Initial Maximum Rod Enrichment: | As specified in Table 2.1-3 for the applicable original fuel assembly array/class. |
| d. Post-irradiation Cooling Time and Average Burnup Per Assembly | Cooling time $\geq$ 18 years and an average burnup $\leq$ 30,000 MWD/MTU for the original fuel assembly. |
| e. Decay Heat Per Assembly | $\leq$ 115 Watts |
| f. Original Fuel Assembly Length | $\leq$ 135.0 inches (nominal design) |
| g. Original Fuel Assembly Width | $\leq$ 4.70 inches (nominal design) |
| h. Fuel Debris Weight | $\leq$ 550 lbs, including channels and DFC |

Table 2.1-1 (page 14 of 39)
Fuel Assembly Limits

III. MPC MODEL: MPC-68F (continued)

A. Allowable Contents (continued)

4. Mixed oxide (MOX), BWR INTACT FUEL ASSEMBLIES, with or without ZR channels. MOX BWR INTACT FUEL ASSEMBLIES shall meet the criteria specified in Table 2.1-3 for fuel assembly array/class 6x6B, and meet the following specifications:

| | |
|---|---|
| a. Cladding Type: | ZR |
| b. Maximum PLANAR-AVERAGE INITIAL ENRICHMENT: | As specified in Table 2.1-3 for fuel assembly array/class 6x6B. |
| c. Initial Maximum Rod Enrichment: | As specified in Table 2.1-3 for fuel assembly array/class 6x6B. |
| d. Post-irradiation Cooling Time and Average Burnup Per Assembly: | Cooling time ≥ 18 years and an average burnup ≤ 30,000 MWD/MTIHM. |
| e. Decay Heat Per Assembly | ≤ 115 Watts |
| f. Fuel Assembly Length: | ≤ 135.0 inches (nominal design) |
| g. Fuel Assembly Width: | ≤ 4.70 inches (nominal design) |
| h. Fuel Assembly Weight: | ≤ 400 lbs, including channels |

Table 2.1-1 (page 15 of 39)
Fuel Assembly Limits

III. MPC MODEL: MPC-68F (continued)

A. Allowable Contents (continued)

5. Mixed oxide (MOX), BWR DAMAGED FUEL ASSEMBLIES, with or without ZR channels, placed in DAMAGED FUEL CONTAINERS. MOX BWR DAMAGED FUEL ASSEMBLIES shall meet the criteria specified in Table 2.1-3 for fuel assembly array/class 6x6B, and meet the following specifications:

| | |
|---|---|
| a. Cladding Type: | ZR |
| b. Maximum PLANAR-AVERAGE INITIAL ENRICHMENT: | As specified in Table 2.1-3 for fuel assembly array/class 6x6B. |
| c. Initial Maximum Rod Enrichment: | As specified in Table 2.1-3 for fuel assembly array/class 6x6B. |
| d. Post-irradiation Cooling Time and Average Burnup Per Assembly: | Cooling time ≥ 18 years and an average burnup ≤ 30,000 MWD/MTIHM. |
| e. Decay Heat Per Assembly | ≤ 115 Watts |
| f. Fuel Assembly Length: | ≤ 135.0 inches (nominal design) |
| g. Fuel Assembly Width: | ≤ 4.70 inches (nominal design) |
| h. Fuel Assembly Weight: | ≤ 550 lbs, including channels and DFC |

Table 2.1-1 (page 16 of 39)
Fuel Assembly Limits

III. MPC MODEL: MPC-68F (continued)

A. Allowable Contents (continued)

6. Mixed Oxide (MOX), BWR FUEL DEBRIS, with or without ZR channels, placed in DAMAGED FUEL CONTAINERS. The original fuel assemblies for the MOX BWR FUEL DEBRIS shall meet the criteria specified in Table 2.1-3 for fuel assembly array/class 6x6B, and meet the following specifications:

| | |
|---|---|
| a. Cladding Type: | ZR |
| b. Maximum PLANAR-AVERAGE INITIAL ENRICHMENT: | As specified in Table 2.1-3 for original fuel assembly array/class 6x6B. |
| c. Initial Maximum Rod Enrichment: | As specified in Table 2.1-3 for original fuel assembly array/class 6x6B. |
| d. Post-irradiation Cooling Time and Average Burnup Per Assembly: | Cooling time ≥ 18 years and an average burnup ≤ 30,000 MWD/MTIHM for the original fuel assembly. |
| e. Decay Heat Per Assembly | ≤ 115 Watts |
| f. Original Fuel Assembly Length: | ≤ 135.0 inches (nominal design) |
| g. Original Fuel Assembly Width: | ≤ 4.70 inches (nominal design) |
| h. Fuel Debris Weight: | ≤ 550 lbs, including channels and DFC |

Table 2.1-1 (page 17 of 39)
Fuel Assembly Limits

III. MPC MODEL: MPC-68F (continued)

A. Allowable Contents (continued)

7. Thoria rods ($ThO_2$ and $UO_2$) placed in Dresden Unit 1 Thoria Rod Canisters and meeting the following specifications:

| | |
|---|---|
| a. Cladding Type: | ZR |
| b. Composition: | 98.2 wt.% $ThO_2$, 1.8 wt. % $UO_2$ with an enrichment of 93.5 wt. % $^{235}U$. |
| c. Number of Rods Per Thoria Rod Canister: | $\leq$ 18 |
| d. Decay Heat Per Thoria Rod Canister: | $\leq$ 115 Watts |
| e. Post-irradiation Fuel Cooling Time and Average Burnup Per Thoria Rod Canister: | A fuel post-irradiation cooling time $\geq$ 18 years and an average burnup $\leq$ 16,000 MWD/MTIHM. |
| f. Initial Heavy Metal Weight: | $\leq$ 27 kg/canister |
| g. Fuel Cladding O.D.: | $\geq$ 0.412 inches |
| h. Fuel Cladding I.D.: | $\leq$ 0.362 inches |
| i. Fuel Pellet O.D.: | $\leq$ 0.358 inches |
| j. Active Fuel Length: | $\leq$ 111 inches |
| k. Canister Weight: | $\leq$ 550 lbs, including fuel |

Table 2.1-1 (page 18 of 39)
Fuel Assembly Limits

III. MPC MODEL: MPC-68F (continued)

B. Quantity per MPC (up to a total of 68 assemblies):
(All fuel assemblies must be array/class 6x6A, 6x6B, 6x6C, 7x7A, or 8x8A):

Up to four (4) DFCs containing uranium oxide BWR FUEL DEBRIS or MOX BWR FUEL DEBRIS. The remaining MPC-68F fuel storage locations may be filled with fuel assemblies of the following type, as applicable:

1. Uranium oxide BWR INTACT FUEL ASSEMBLIES;

2. MOX BWR INTACT FUEL ASSEMBLIES;

3. Uranium oxide BWR DAMAGED FUEL ASSEMBLIES placed in DFCs;

4. MOX BWR DAMAGED FUEL ASSEMBLIES placed in DFCs; or

5. Up to one (1) Dresden Unit 1 Thoria Rod Canister.

C. Fuel assemblies with stainless steel channels are not authorized for loading in the MPC-68F.

D. Dresden Unit 1 fuel assemblies with one Antimony-Beryllium neutron source are authorized for loading in the MPC-68F. The Antimony-Beryllium source material shall be in a water rod location.

Table 2.1-1 (page 19 of 39)
Fuel Assembly Limits

IV. MPC MODEL: MPC-24E

A. Allowable Contents

1. Uranium oxide, PWR INTACT FUEL ASSEMBLIES listed in Table 2.1-2, with or without NON-FUEL HARDWARE and meeting the following specifications (Note 1):

| | |
|---|---|
| a. Cladding Type: | ZR or Stainless Steel (SS) as specified in Table 2.1-2 for the applicable fuel assembly array/class |
| b. Initial Enrichment: | As specified in Table 2.1-2 for the applicable fuel assembly array/class. |
| c. Post-irradiation Cooling Time and Average Burnup Per Assembly: | |
| i. Array/Classes 14x14D, 14x14E, and 15x15G | Cooling time $\geq$ 8 years and an average burnup $\leq$ 40,000 MWD/MTU. |
| ii. All Other Array/Classes | As specified in Section 2.4. |
| iii. NON-FUEL HARDWARE | As specified in Table 2.1-8. |

Table 2.1-1 (page 20 of 39)
Fuel Assembly Limits

IV. MPC MODEL: MPC-24E (continued)

A. Allowable Contents (continued)

| | |
|---|---|
| d. Decay Heat Per Fuel Storage Location: | |
| i. Array/Classes 14x14D, 14x14E, and 15x15G | ≤ 710 Watts. |
| ii. All other Array/Classes | As specified in Section 2.4. |
| e. Fuel Assembly Length: | ≤ 176.8 inches (nominal design) |
| f. Fuel Assembly Width: | ≤ 8.54 inches (nominal design) |
| g. Fuel Assembly Weight: | ≤ 1,680 lbs (including NON-FUEL HARDWARE) |

Table 2.1-1 (page 21 of 39)
Fuel Assembly Limits

IV. MPC MODEL: MPC-24E (continued)

A. Allowable Contents (continued)

2. Uranium oxide, PWR DAMAGED FUEL ASSEMBLIES, with or without NON-FUEL HARDWARE, placed in DAMAGED FUEL CONTAINERS. Uranium oxide PWR DAMAGED FUEL ASSEMBLIES shall meet the criteria specified in Table 2.1-2 and meet the following specifications (Note 1):

| | |
|---|---|
| a. Cladding Type: | ZR or Stainless Steel (SS) as specified in Table 2.1-2 for the applicable fuel assembly array/class |
| b. Initial Enrichment: | As specified in Table 2.1-2 for the applicable fuel assembly array/class. |
| c. Post-irradiation Cooling Time and Average Burnup Per Assembly: | |
| i. Array/Classes 14x14D, 14x14E, and 15x15G | Cooling time $\geq$ 8 years and an average burnup $\leq$ 40,000 MWD/MTU. |
| ii. All Other Array/Classes | As specified in Section 2.4. |
| iii. NON-FUEL HARDWARE | As specified in Table 2.1-8. |

Table 2.1-1 (page 22 of 39)
Fuel Assembly Limits

IV. MPC MODEL: MPC-24E (continued)

A. Allowable Contents (continued)

| | |
|---|---|
| d. Decay Heat Per Fuel Storage Location: | |
| i. Array/Classes 14x14D, 14x14E, and 15x15G | ≤ 710 Watts. |
| ii. All Other Array/Classes | As specified in Section 2.4. |
| e. Fuel Assembly Length | ≤ 176.8 inches (nominal design) |
| f. Fuel Assembly Width | ≤ 8.54 inches (nominal design) |
| g. Fuel Assembly Weight | ≤ 1,680 lbs (including NON-FUEL HARDWARE and DFC) |

B. Quantity per MPC: Up to four (4) DAMAGED FUEL ASSEMBLIES in DAMAGED FUEL CONTAINERS, stored in fuel storage locations 3, 6, 19 and/or 22. The remaining MPC-24E fuel storage locations may be filled with PWR INTACT FUEL ASSEMBLIES meeting the applicable specifications.

C. Neutron sources and FUEL DEBRIS are not authorized for loading in the MPC-24E.

Note 1: Fuel assemblies containing BPRAs, TPDs, WABAs, water displacement guide tube plugs, orifice rod assemblies, or vibration supressor inserts may be stored in any fuel storage location. Fuel assemblies containing CRAs, RCCAs, CEAs, or APSRs may only be loaded in fuel storage locations 9, 10, 15, and/or 16. These requirements are in addition to any other requirements specified for uniform or regionalized fuel loading.

Table 2.1-1 (page 23 of 39)
Fuel Assembly Limits

V. MPC MODEL: MPC-32

A. Allowable Contents

1. Uranium oxide, PWR INTACT FUEL ASSEMBLIES listed in Table 2.1-2, with or without NON-FUEL HARDWARE and meeting the following specifications (Note 1):

| | |
|---|---|
| a. Cladding Type: | ZR or Stainless Steel (SS) as specified in Table 2.1-2 for the applicable fuel assembly array/class |
| b. Initial Enrichment: | As specified in Table 2.1-2 for the applicable fuel assembly array/class. |
| c. Post-irradiation Cooling Time and Average Burnup Per Assembly | |
| i. Array/Classes 14x14D~~,~~ ~~14x14E,~~ and 15x15G | Cooling time ≥ 9 years and an average burnup ≤ 30,000 MWD/MTU or cooling time ≥ 20 years and an average burnup ≤ 40,000 MWD/MTU. |
| ii. *Array/Class 14x14E* | *Cooling time ≥ 30 years and an average burnup ≤ 30,000 MWD/MTU* |
| *iii.* All Other Array/Classes | As specified in Section 2.4. |
| *iv.* NON-FUEL HARDWARE | As specified in Table 2.1-8. |

Table 2.1-1 (page 24 of 39)
Fuel Assembly Limits

V. MPC MODEL: MPC-32 (continued)

A. Allowable Contents (continued)

d. Decay Heat Per Fuel Storage Location:

| | |
|---|---|
| i. Array/Classes 14x14D, ~~14x14E~~, and 15x15G | ≤ 500 Watts |
| ii. *Array/Class 14x14E* | *≤ 250 Watts* |
| *i*ii. All Other Array/Classes | As specified in Section 2.4. |
| e. Fuel Assembly Length | ≤ 176.8 inches (nominal design) |
| f. Fuel Assembly Width | ≤ 8.54 inches (nominal design) |
| g. Fuel Assembly Weight | ≤ 1,680 lbs (including NON-FUEL HARDWARE) |

Table 2.1-1 (page 25 of 39)
Fuel Assembly Limits

V. MPC MODEL: MPC-32 (continued)

A. Allowable Contents (continued)

2. Uranium oxide, PWR DAMAGED FUEL ASSEMBLIES, with or without NON-FUEL HARDWARE, placed in DAMAGED FUEL CONTAINERS. Uranium oxide PWR DAMAGED FUEL ASSEMBLIES shall meet the criteria specified in Table 2.1-2 and meet the following specifications (Note 1):

| | |
|---|---|
| a. Cladding Type: | ZR or Stainless Steel (SS) as specified in Table 2.1-2 for the applicable fuel assembly array/class |
| b. Initial Enrichment: | As specified in Table 2.1-2 for the applicable fuel assembly array/class. |
| c. Post-irradiation Cooling Time and Average Burnup Per Assembly: | |
| i. Array/Classes 14x14D~~,~~ ~~14x14E,~~ and 15x15G | Cooling time ≥ 9 years and an average burnup ≤ 30,000 MWD/MTU or cooling time ≥ 20 years and an average burnup ≤ 40,000 MWD/MTU. |
| ii. *Array/Class 14x14E* | *Cooling time ≥ 30 years and an average burnup ≤ 30,000 MWD/MTU* |
| *i*ii. All Other Array/Classes | As specified in Section 2.4. |
| iv~~ii~~. NON-FUEL HARDWARE | As specified in Table 2.1-8. |

Table 2.1-1 (page 26 of 39)
Fuel Assembly Limits

V. MPC MODEL: MPC-32 (continued)

A. Allowable Contents (continued)

d. Decay Heat Per Fuel Storage Location:

| | |
|---|---|
| i. Array/Classes 14x14D~~,~~ ~~14x14E,~~ and 15x15G | ≤ 500 Watts. |
| ii. *Array/Class 14x14E* | *≤ 250 Watts.* |
| *i*ii. All Other Array/Classes | As specified in Section 2.4. |
| e. Fuel Assembly Length | ≤ 176.8 inches (nominal design) |
| f. Fuel Assembly Width | ≤ 8.54 inches (nominal design) |
| g. Fuel Assembly Weight | ≤ 1,680 lbs (including NON-FUEL HARDWARE and DFC) |

B. Quantity per MPC: *With the exception of array/class 14x14E, u*~~U~~p to eight (8) DAMAGED FUEL ASSEMBLIES in DAMAGED FUEL CONTAINERS, stored in fuel storage locations 1, 4, 5, 10, 23, 28, 29, and/or 32. The remaining MPC-32 fuel storage locations may be filled with PWR INTACT FUEL ASSEMBLIES meeting the applicable specifications. *For array/class 14x14E, up to 32 INTACT FUEL ASSEMBLIES, and/or DAMAGED FUEL ASSEMBLIES stored in DAMAGED FUEL CONTAINERS.*

C. ~~Neutron sources and~~ FUEL DEBRIS ~~are~~ *is* not authorized for loading in the MPC-32.

D. *Array/class 14x14E, Indian Point Unit 1, fuel assemblies may contain an antimony-beryllium secondary source assembly. Up to 32 Indian Point Unit 1 secondary source assemblies may be stored in the MPC-32. Neutron sources are not authorized for loading in the MPC-32 with arrays/classes other than 14x14E.*

Note 1: Fuel assemblies containing BPRAs, TPDs, WABAs, water displacement guide tube plugs, orifice rod assemblies, or vibration suppressor inserts may be stored in any fuel storage location. Fuel assemblies containing CRAs, RCCAs, CEAs, or APSRs may only be loaded in fuel storage locations 13, 14, 19, and/or 20. These requirements are in addition to any other requirements specified for uniform or regionalized fuel loading.

Table 2.1-1 (page 27 of 39)
Fuel Assembly Limits

VI. MPC MODEL: MPC-68FF

A. Allowable Contents

1. Uranium oxide or MOX BWR INTACT FUEL ASSEMBLIES listed in Table 2.1-3, with or without channels and meeting the following specifications:

| | |
|---|---|
| a. Cladding Type: | ZR or Stainless Steel (SS) as specified in Table 2.1-3 for the applicable fuel assembly array/class |
| b. Maximum PLANAR-AVERAGE INITIAL ENRICHMENT: | As specified in Table 2.1-3 for the applicable fuel assembly array/class. |
| c. Initial Maximum Rod Enrichment | As specified in Table 2.1-3 for the applicable fuel assembly array/class. |
| e. Post-irradiation Cooling Time and Average Burnup Per Assembly | |
| i. Array/Classes 6x6A, 6x6B, 6x6C, 7x7A, and 8x8A | Cooling time ≥ 18 years and an average burnup ≤ 30,000 MWD/MTU (or MTU/MTIHM). |
| ii. Array/Class 8x8F | Cooling time ≥ 10 years and an average burnup ≤ 27,500 MWD/MTU. |
| iii. Array/Classes 10x10D and 10x10E | Cooling time ≥ 10 years and an average burnup ≤ 22,500 MWD/MTU. |
| iv. All Other Array/Classes | As specified in Section 2.4. |

Table 2.1-1 (page 28 of 39)
Fuel Assembly Limits

VI. MPC MODEL: MPC-68FF (continued)

A. Allowable Contents (continued)

e. Decay Heat Per Assembly

| | |
|---|---|
| i. Array/Classes 6x6A, 6X6b, 6x6C, 7x7A, and 8x8A | ≤ 115 Watts |
| ii. Array/Class 8x8F | ≤ 183.5 Watts |
| iii. Array/Classes 10x10D and 10x10E | ≤ 95 Watts |
| iv. All Other Array/Classes | As specified in Section 2.4. |

f. Fuel Assembly Length

| | |
|---|---|
| i. Array/Class 6x6A, 6x6B, 6x6C, 7x7A, or 8x8A | ≤ 135.0 inches (nominal design) |
| ii. All Other Array/Classes | ≤ 176.5 inches (nominal design) |

g. Fuel Assembly Width

| | |
|---|---|
| i. Array/Class 6x6A, 6x6B, 6x6C, 7x7A, or 8x8A | ≤ 4.70 inches (nominal design) |
| ii. All Other Array/Classes | ≤ 5.85 inches (nominal design) |

h. Fuel Assembly Weight

| | |
|---|---|
| i. Array/Class 6x6A, 6x6B, 6x6C, 7x7A, or 8x8A | ≤ 550 lbs, including channels |
| ii. All Other Array/Classes | ≤ 700 lbs, including channels |

Table 2.1-1 (page 29 of 39)
Fuel Assembly Limits

VI. MPC MODEL: MPC-68FF (continued)

A. Allowable Contents (continued)

2. Uranium oxide or MOX BWR DAMAGED FUEL ASSEMBLIES or FUEL DEBRIS, with or without channels, placed in DAMAGED FUEL CONTAINERS. Uranium oxide and MOX BWR DAMAGED FUEL ASSEMBLIES and FUEL DEBRIS shall meet the criteria specified in Table 2.1-3, and meet the following specifications:

| | |
|---|---|
| a. Cladding Type: | ZR or Stainless Steel (SS) in accordance with Table 2.1-3 for the applicable fuel assembly array/class. |
| b. Maximum PLANAR-AVERAGE INITIAL ENRICHMENT: | |
| i. Array/Classes 6x6A, 6x6B, 6x6C, 7x7A, and 8x8A. | As specified in Table 2.1-3 for the applicable fuel assembly array/class. |
| ii. All Other Array Classes | $\leq$ 4.0 wt.% $^{235}$U. |
| c. Initial Maximum Rod Enrichment | As specified in Table 2.1-3 for the applicable fuel assembly array/class. |
| d. Post-irradiation Cooling Time and Average Burnup Per Assembly: | |
| i. Array/Class 6x6A, 6x6B, 6x6C, 7x7A, or 8x8A | Cooling time $\geq$ 18 years and an average burnup $\leq$ 30,000 MWD/MTU (or MWD/MTIHM). |
| ii. Array/Class 8x8F | Cooling time $\geq$ 10 years and an average burnup $\leq$ 27,500 MWD/MTU. |
| iii. Array/Class 10x10D and 10x10E | Cooling time $\geq$ 10 years and an average burnup $\leq$ 22,500 MWD/MTU. |
| iv. All Other Array/Classes | As specified in Section 2.4. |

Table 2.1-1 (page 30 of 39)

Fuel Assembly Limits

VI. MPC MODEL: MPC-68FF (continued)

A. Allowable Contents (continued)

e. Decay Heat Per Assembly

| | | |
|---|---|---|
| i. | Array/Class 6x6A, 6x6B, 6x6C, 7x7A, or 8x8A | ≤ 115 Watts |
| ii. | Array/Class 8x8F | ≤ 183.5 Watts |
| iii. | Array/Classes 10x10D and 10x10E | ≤ 95 Watts |
| iv. | All Other Array/Classes | As specified in Section 2.4. |

f. Fuel Assembly Length

| | | |
|---|---|---|
| i. | Array/Class 6x6A, 6x6B, 6x6C, 7x7A, or 8x8A | ≤ 135.0 inches (nominal design) |
| ii. | All Other Array/Classes | ≤ 176.5 inches (nominal design) |

g. Fuel Assembly Width

| | | |
|---|---|---|
| i. | Array/Class 6x6A, 6x6B, 6x6C, 7x7A, or 8x8A | ≤ 4.70 inches (nominal design) |
| ii. | All Other Array/Classes | ≤ 5.85 inches (nominal design) |

h. Fuel Assembly Weight

| | | |
|---|---|---|
| i. | Array/Class 6x6A, 6x6B, 6x6C, 7x7A, or 8x8A | ≤ 550 lbs, including channels and DFC |
| ii. | All Other Array/Classes | ≤ 700 lbs, including channels and DFC |

Table 2.1-1 (page 31 of 39)
Fuel Assembly limits

VI. MPC MODEL: MPC-68FF (continued)

B. Quantity per MPC (up to a total of 68 assemblies)

1. For fuel assembly array/classes 6x6A, 6X6B, 6x6C, 7x7A, or 8x8A, up to 68 BWR INTACT FUEL ASSEMBLIES and/or DAMAGED FUEL ASSEMBLIES. Up to eight (8) DFCs containing FUEL DEBRIS from these array/classes may be stored.

2. For all other array/classes, up to sixteen (16) DFCs containing BWR DAMAGED FUEL ASSEMBLIES and/or up to eight (8) DFCs containing FUEL DEBRIS. DFCs shall be located only in fuel storage locations 1, 2, 3, 8, 9, 16, 25, 34, 35, 44, 53, 60, 61, 66, 67, and/or 68. The remaining MPC-68FF fuel storage locations may be filled with fuel assemblies of the following type:

   i. Uranium Oxide BWR INTACT FUEL ASSEMBLIES; or

   ii. MOX BWR INTACT FUEL ASSEMBLIES.

C. Dresden Unit 1 fuel assemblies with one Antimony-Beryllium neutron source are authorized for loading in the MPC-68FF. The Antimony-Beryllium source material shall be in a water rod location.

D. Array/Class 10x10D and 10x10E fuel assemblies in stainless steel channels must be stored in fuel storage locations 19 - 22, 28 - 31, 38 -41, and/or 47 - 50.

Table 2.1-1 (page 32 of 39)
Fuel Assembly Limits

VII. MPC MODEL: MPC-24EF

A. Allowable Contents

1. Uranium oxide, PWR INTACT FUEL ASSEMBLIES listed in Table 2.1-2, with or without NON-FUEL HARDWARE and meeting the following specifications (Note 1):

| | |
|---|---|
| a. Cladding Type: | ZR or Stainless Steel (SS) as specified in Table 2.1-2 for the applicable fuel assembly array/class |
| b. Initial Enrichment: | As specified in Table 2.1-2 for the applicable fuel assembly array/class. |
| c. Post-irradiation Cooling Time and Average Burnup Per Assembly: | |
| i. Array/Classes 14x14D, 14x14E, and 15x15G | Cooling time $\geq$ 8 years and an average burnup $\leq$ 40,000 MWD/MTU. |
| ii. All Other Array/Classes | As specified in Section 2.4. |
| iii. NON-FUEL HARDWARE | As specified in Table 2.1-8. |

Table 2.1-1 (page 33 of 39)
Fuel Assembly Limits

VII. MPC MODEL: MPC-24EF (continued)

A. Allowable Contents (continued)

| | |
|---|---|
| d. Decay Heat Per Fuel Storage Location: | |
| i. Array/Classes 14x14D, 14x14E, and 15x15G | ≤ 710 Watts. |
| ii. All other Array/Classes | As specified in Section 2.4. |
| e. Fuel Assembly Length: | ≤ 176.8 inches (nominal design) |
| f. Fuel Assembly Width: | ≤ 8.54 inches (nominal design) |
| g. Fuel Assembly Weight: | ≤ 1,680 lbs (including NON-FUEL HARDWARE) |

Table 2.1-1 (page 34 of 39)
Fuel Assembly Limits

VII. MPC MODEL: MPC-24EF (continued)

A. Allowable Contents (continued)

2. Uranium oxide, PWR DAMAGED FUEL ASSEMBLIES and FUEL DEBRIS, with or without NON-FUEL HARDWARE, placed in DAMAGED FUEL CONTAINERS. Uranium oxide PWR DAMAGED FUEL ASSEMBLIES and FUEL DEBRIS shall meet the criteria specified in Table 2.1-2 and meet the following specifications (Note 1):

| | |
|---|---|
| a. Cladding Type: | ZR or Stainless Steel (SS) as specified in Table 2.1-2 for the applicable fuel assembly array/class |
| b. Initial Enrichment: | As specified in Table 2.1-2 for the applicable fuel assembly array/class. |
| c. Post-irradiation Cooling Time and Average Burnup Per Assembly: | |
| i. Array/Classes 14x14D, 14x14E, and 15x15G | Cooling time $\geq$ 8 years and an average burnup $\leq$ 40,000 MWD/MTU. |
| ii. All Other Array/Classes | As specified in Section 2.4. |
| iii. NON-FUEL HARDWARE | As specified in Table 2.1-8. |

Table 2.1-1 (page 35 of 39)
Fuel Assembly Limits

VII. MPC MODEL: MPC-24EF (continued)

A. Allowable Contents (continued)

| | | |
|---|---|---|
| d. | Decay Heat Per Fuel Storage Location: | |
| | i. Array/Classes 14x14D, 14x14E, and 15x15G | ≤ 710 Watts. |
| | ii. All Other Array/Classes | As specified in Section 2.4. |
| e. | Fuel Assembly Length | ≤ 176.8 inches (nominal design) |
| f. | Fuel Assembly Width | ≤ 8.54 inches (nominal design) |
| g. | Fuel Assembly Weight | ≤ 1,680 lbs (including NON-FUEL HARDWARE and DFC) |

B. Quantity per MPC: Up to four (4) DAMAGED FUEL ASSEMBLIES and/or FUEL DEBRIS in DAMAGED FUEL CONTAINERS, stored in fuel storage locations 3, 6, 19 and/or 22. The remaining MPC-24EF fuel storage locations may be filled with PWR INTACT FUEL ASSEMBLIES meeting the applicable specifications.

C. Neutron sources are not permitted for loading in the MPC-24EF.

Note 1: Fuel assemblies containing BPRAs, TPDs, WABAs, water displacement guide tube plugs, orifice rod assemblies, or vibration suppressor inserts may be stored in any fuel storage location. Fuel assemblies containing CRAs, RCCAs, CEAs, or APSRs may only be loaded in fuel storage locations 9, 10, 15, and/or 16. These requirements are in addition to any other requirements specified for uniform or regionalized fuel loading.

Table 2.1-1 (page 36 of 39)
Fuel Assembly Limits

VIII. MPC MODEL: MPC-32F

A. Allowable Contents

1. Uranium oxide, PWR INTACT FUEL ASSEMBLIES listed in Table 2.1-2, with or without NON-FUEL HARDWARE and meeting the following specifications (Note 1):

| | |
|---|---|
| a. Cladding Type: | ZR or Stainless Steel (SS) as specified in Table 2.1-2 for the applicable fuel assembly array/class |
| b. Initial Enrichment: | As specified in Table 2.1-2 for the applicable fuel assembly array/class. |
| c. Post-irradiation Cooling Time and Average Burnup Per Assembly: | |
| i. Array/Classes 14x14D~~,~~ ~~14x14E,~~ and 15x15G | Cooling time ≥ 9 years and an average burnup ≤ 30,000 MWD/MTU or cooling time ≥ 20 years and an average burnup ≤ 40,000 MWD/MTU. |
| ii. *Array/Class 14x14E* | *Cooling time ≥ 30 years and an average burnup ≤ 30,000 MWD/MTU* |
| *iii.* All Other Array/Classes | As specified in Section 2.4. |
| *iv.* NON-FUEL HARDWARE | As specified in Table 2.1-8. |

Table 2.1-1 (page 37 of 39)
Fuel Assembly Limits

VIII. MPC MODEL: MPC-32F (cont'd)

A. Allowable Contents (cont'd)

d. Decay Heat Per Fuel Storage Location:

| | |
|---|---|
| i. Array/Classes 14x14D~~,~~ ~~14x14E,~~ and 15x15G | ≤ 500 Watts. |
| ii. *Array/Class 14x14E* | *≤ 250 Watts.* |
| *i*ii. All Other Array/Classes | As specified in Section 2.4. |
| e. Fuel Assembly Length | ≤ 176.8 inches (nominal design) |
| f. Fuel Assembly Width | ≤ 8.54 inches (nominal design) |
| g. Fuel Assembly Weight | ≤ 1,680 lbs (including NON-FUEL HARDWARE) |

Table 2.1-1 (page 38 of 39)
Fuel Assembly Limits

VIII. MPC MODEL: MPC-32F (cont'd)

A. Allowable Contents (cont'd)

2. Uranium oxide, PWR DAMAGED FUEL ASSEMBLIES and FUEL DEBRIS, with or without NON-FUEL HARDWARE, placed in DAMAGED FUEL CONTAINERS. Uranium oxide PWR DAMAGED FUEL ASSEMBLIES and FUEL DEBRIS shall meet the criteria specified in Table 2.1-2 and meet the following specifications (Note 1):

| | |
|---|---|
| a. Cladding Type: | ZR or Stainless Steel (SS) as specified in Table 2.1-2 for the applicable fuel assembly array/class |
| b. Initial Enrichment: | As specified in Table 2.1-2 for the applicable fuel assembly array/class. |
| c. Post-irradiation Cooling Time and Average Burnup Per Assembly: | |
| i. Array/Classes 14x14D~~,~~ ~~14x14E,~~ and 15x15G | Cooling time ≥ 9 years and an average burnup ≤ 30,000 MWD/MTU or cooling time ≥ 20 years and an average burnup ≤ 40,000 MWD/MTU. |
| ii. *Array/Class 14x14E* | *Cooling time ≥ 30 years and an average burnup ≤ 30,000 MWD/MTU* |
| *i*ii. All Other Array/Classes | As specified in Section 2.4. |
| iv~~ii~~. NON-FUEL HARDWARE | As specified in Table 2.1-8. |

Table 2.1-1 (page 39 of 39)
Fuel Assembly Limits

VIII. MPC MODEL: MPC-32F (cont'd)

A. Allowable Contents (cont'd)

d. Decay Heat Per Fuel Storage Location:

| | |
|---|---|
| i. Array/Classes 14x14D~~,~~ ~~14x14E,~~ and 15x15G | ≤ 500 Watts. |
| *ii. Array/Class 14x14E* | *≤ 250 Watts.* |
| *i*i. All Other Array/Classes | As specified in Section 2.3. |
| e. Fuel Assembly Length | ≤ 176.8 inches (nominal design) |
| f. Fuel Assembly Width | ≤ 8.54 inches (nominal design) |
| g. Fuel Assembly Weight | ≤ 1,680 lbs (including NON-FUEL HARDWARE and DFC) |

B. Quantity per MPC: *With the exception of array/class 14x14E, u*~~U~~p to eight (8) DAMAGED FUEL ASSEMBLIES and/or FUEL DEBRIS in DAMAGED FUEL CONTAINERS, stored in fuel storage locations 1, 4, 5, 10, 23, 28, 29, and/or 32. The remaining MPC-32F fuel storage locations may be filled with PWR INTACT FUEL ASSEMBLIES meeting the applicable specifications. *For array/class 14x14E, up to 32 INTACT FUEL ASSEMBLIES and/or DAMAGED FUEL ASSEMBLIES stored in DAMAGED FUEL CONTAINERS. FUEL DEBRIS from array/class 14x14E is not authorized for loading in the MPC-32F.*

C. *Array/class 14x14E, Indian Point Unit 1, fuel assemblies may contain an antimony-beryllium secondary source assembly. Up to 32 Indian Point Unit 1 secondary source assemblies may be stored in the MPC-32*. Neutron sources are not permitted for loading in the MPC-32F *with arrays/classes other than 14x14E*.

Note 1: Fuel assemblies containing BPRAs, TPDs, WABAs, water displacement guide tube plugs, orifice rod assemblies, or vibration suppressor inserts may be stored in any fuel storage location. Fuel assemblies containing CRAs, RCCAs, CEAs, or APSRs may only be loaded in fuel storage locations 13, 14, 19 and/or 20. These requirements are in addition to any other requirements specified for uniform or regionalized fuel loading.

Table 2.1-2 (page 1 of 4)
PWR FUEL ASSEMBLY CHARACTERISTICS (Note 1)

| **Fuel Assembly Array/Class** | **14x14A** | **14x14B** | **14x14C** | **14x14D** | **14x14E** |
|---|---|---|---|---|---|
| Clad Material | ZR | ZR | ZR | SS | SS |
| Design Initial U (kg/assy.) (Note 3) | ≤ 365 | ≤ 412 | ≤ 438 | ≤ 400 | ≤ 206 |
| Initial Enrichment (MPC-24, 24E and 24EF without soluble boron credit) (wt % $^{235}$U) (Note 7) | ≤ 4.6 (24)<br>≤ 5.0 (24E/24EF) | ≤ 4.6 (24)<br>≤ 5.0 (24E/24EF) | ≤ 4.6 (24)<br>≤ 5.0 (24E/24EF) | ≤ 4.0 (24)<br>≤ 5.0 (24E/24EF) | ≤ ~~5.0~~ *4.5* (24)<br>≤ ~~5.0~~ *4.5* (24E/24EF) |
| Initial Enrichment (MPC-24, 24E, 24EF, 32, or 32F with soluble boron credit - see Note 5) (wt % $^{235}$U) | ≤ 5.0 | ≤ 5.0 | ≤ 5.0 | ≤ 5.0 | ≤ ~~5.0~~ *4.5* |
| No. of Fuel Rod Locations | 179 | 179 | 176 | 180 | 173 |
| Fuel Rod Clad O.D. (in.) | ≥ 0.400 | ≥ 0.417 | ≥ 0.440 | ≥ 0.422 | ≥ 0.3415 |
| Fuel Rod Clad I.D. (in.) | ≤ 0.3514 | ≤ 0.3734 | ≤ 0.3880 | ≤ 0.3890 | ≤ 0.3175 |
| Fuel Pellet Dia. (in.) | ≤ 0.3444 | ≤ 0.3659 | ≤ 0.3805 | ≤ 0.3835 | ≤ 0.3130 |
| Fuel Rod Pitch (in.) | ≤ 0.556 | ≤ 0.556 | ≤ 0.580 | ≤ 0.556 | Note 6 |
| Active Fuel Length (in.) | ≤ 150 | ≤ 150 | ≤ 150 | ≤ 144 | ≤ 102 |
| No. of Guide and/or Instrument Tubes | 17 | 17 | 5 (Note 4) | 16 | 0 |
| Guide/Instrument Tube Thickness (in.) | ≥ 0.017 | ≥ 0.017 | ≥ 0.038 | ≥ 0.0145 | N/A |

Table 2.1-2 (page 2 of 4)
PWR FUEL ASSEMBLY CHARACTERISTICS (Note 1)

| **Fuel Assembly Array/Class** | **15x15A** | **15x15B** | **15x15C** | **15x15D** | **15x15E** | **15x15F** |
|---|---|---|---|---|---|---|
| Clad Material | ZR | ZR | ZR | ZR | ZR | ZR |
| Design Initial U (kg/assy.) (Note 3) | ≤ 473 | ≤ 473 | ≤ 473 | ≤ 495 | ≤ 495 | ≤ 495 |
| Initial Enrichment (MPC-24, 24E and 24EF without soluble boron credit) (wt % $^{235}$U) (Note 7) | ≤ 4.1 (24)<br>≤ 4.5 (24E/24EF) | ≤ 4.1 (24)<br>≤ 4.5 (24E/24EF) | ≤ 4.1 (24)<br>≤ 4.5 (24E/24EF) | ≤ 4.1 (24)<br>≤ 4.5 (24E/24EF) | ≤ 4.1 (24)<br>≤ 4.5 (24E/24EF) | ≤ 4.1 (24)<br>≤ 4.5 (24E/24EF) |
| Initial Enrichment (MPC-24, 24E, 24EF, 32, or 32F with soluble boron credit - see Note 5) (wt % $^{235}$U) | ≤ 5.0 | ≤ 5.0 | ≤ 5.0 | ≤ 5.0 | ≤ 5.0 | ≤ 5.0 |
| No. of Fuel Rod Locations | 204 | 204 | 204 | 208 | 208 | 208 |
| Fuel Rod Clad O.D. (in.) | ≥ 0.418 | ≥ 0.420 | ≥ 0.417 | ≥ 0.430 | ≥ 0.428 | ≥ 0.428 |
| Fuel Rod Clad I.D. (in.) | ≤ 0.3660 | ≤ 0.3736 | ≤ 0.3640 | ≤ 0.3800 | ≤ 0.3790 | ≤ 0.3820 |
| Fuel Pellet Dia. (in.) | ≤ 0.3580 | ≤ 0.3671 | ≤ 0.3570 | ≤ 0.3735 | ≤ 0.3707 | ≤ 0.3742 |
| Fuel Rod Pitch (in.) | ≤ 0.550 | ≤ 0.563 | ≤ 0.563 | ≤ 0.568 | ≤ 0.568 | ≤ 0.568 |
| Active Fuel Length (in.) | ≤ 150 | ≤ 150 | ≤ 150 | ≤ 150 | ≤ 150 | ≤ 150 |
| No. of Guide and/or Instrument Tubes | 21 | 21 | 21 | 17 | 17 | 17 |
| Guide/Instrument Tube Thickness (in.) | ≥ 0.0165 | ≥ 0.015 | ≥ 0.0165 | ≥ 0.0150 | ≥ 0.0140 | ≥ 0.0140 |

Table 2.1-2 (page 3 of 4)
PWR FUEL ASSEMBLY CHARACTERISTICS (Note 1)

| **Fuel Assembly Array/ Class** | **15x15G** | **15x15H** | **16x16A** | **17x17A** | **17x17B** | **17x17C** |
|---|---|---|---|---|---|---|
| Clad Material | SS | ZR | ZR | ZR | ZR | ZR |
| Design Initial U (kg/assy.) (Note 3) | ≤ 420 | ≤ 495 | ≤ 448 | ≤ 433 | ≤ 474 | ≤ 480 |
| Initial Enrichment (MPC-24, 24E, and 24EF without soluble boron credit) (wt % $^{235}$U) (Note 7) | ≤ 4.0 (24)<br>≤ 4.5 (24E/24EF) | ≤ 3.8 (24)<br>≤ 4.2 (24E/24EF) | ≤ 4.6 (24)<br>≤ 5.0 (24E/24EF) | ≤ 4.0 (24)<br>≤ 4.4 (24E/24EF) | ≤ 4.0 (24)<br>≤ 4.4 (24E/24EF) | ≤ 4.0 (24)<br>≤ 4.4 (24E/24EF) |
| Initial Enrichment (MPC-24, 24E, 24EF, 32, or 32F with soluble boron credit - see Note 5) (wt % $^{235}$U) | ≤ 5.0 | ≤ 5.0 | ≤ 5.0 | ≤ 5.0 | ≤ 5.0 | ≤ 5.0 |
| No. of Fuel Rod Locations | 204 | 208 | 236 | 264 | 264 | 264 |
| Fuel Rod Clad O.D. (in.) | ≥ 0.422 | ≥ 0.414 | ≥ 0.382 | ≥ 0.360 | ≥ 0.372 | ≥ 0.377 |
| Fuel Rod Clad I.D. (in.) | ≤ 0.3890 | ≤ 0.3700 | ≤ 0.3320 | ≤ 0.3150 | ≤ 0.3310 | ≤ 0.3330 |
| Fuel Pellet Dia. (in.) | ≤ 0.3825 | ≤ 0.3622 | ≤ 0.3255 | ≤ 0.3088 | ≤ 0.3232 | ≤ 0.3252 |
| Fuel Rod Pitch (in.) | ≤ 0.563 | ≤ 0.568 | ≤ 0.506 | ≤ 0.496 | ≤ 0.496 | ≤ 0.502 |
| Active Fuel Length (in.) | ≤ 144 | ≤ 150 | ≤ 150 | ≤ 150 | ≤ 150 | ≤ 150 |
| No. of Guide and/or Instrument Tubes | 21 | 17 | 5 (Note 4) | 25 | 25 | 25 |
| Guide/Instrument Tube Thickness (in.) | ≥ 0.0145 | ≥ 0.0140 | ≥ 0.0400 | ≥ 0.016 | ≥ 0.014 | ≥ 0.020 |

Table 2.1-2 (page 4 of 4)
PWR FUEL ASSEMBLY CHARACTERISTICS

Notes:

1. All dimensions are design nominal values. Maximum and minimum dimensions are specified to bound variations in design nominal values among fuel assemblies within a given array/class.

2. Deleted.

3. Design initial uranium weight is the nominal uranium weight specified for each assembly by the fuel manufacturer or reactor user. For each PWR fuel assembly, the total uranium weight limit specified in this table may be increased up to 2.0 percent for comparison with users' fuel records to account for manufacturer's tolerances.

4. Each guide tube replaces four fuel rods.

5. Soluble boron concentration per LCO 3.3.1.

6. This fuel assembly array/class includes only the Indian Point Unit 1 fuel assembly. This fuel assembly has two pitches in different sectors of the assembly. These pitches are 0.441 inches and 0.453 inches.

7. For those MPCs loaded with both INTACT FUEL ASSEMBLIES and DAMAGED FUEL ASSEMBLIES or FUEL DEBRIS, the maximum initial enrichment of the INTACT FUEL ASSEMBLIES, DAMAGED FUEL ASSEMBLIES and FUEL DEBRIS is 4.0 wt.% $^{235}U$.

Table 2.1-3 (page 1 of 5)
BWR FUEL ASSEMBLY CHARACTERISTICS (Note 1)

| **Fuel Assembly Array/Class** | **6x6A** | **6x6B** | **6x6C** | **7x7A** | **7x7B** | **8x8A** |
|---|---|---|---|---|---|---|
| Clad Material | ZR | ZR | ZR | ZR | ZR | ZR |
| Design Initial U (kg/assy.) (Note 3) | ≤ 110 | ≤ 110 | ≤ 110 | ≤ 100 | ≤ 198 | ≤ 120 |
| Maximum PLANAR-AVERAGE INITIAL ENRICHMENT (wt.% $^{235}U$) (Note 14) | ≤ 2.7 | ≤ 2.7 for the $UO_2$ rods. See Note 4 for MOX rods | ≤ 2.7 | ≤ 2.7 | ≤ 4.2 | ≤ 2.7 |
| Initial Maximum Rod Enrichment (wt.% $^{235}U$) | ≤ 4.0 | ≤ 4.0 | ≤ 4.0 | ≤ 5.5 | ≤ 5.0 | ≤ 4.0 |
| No. of Fuel Rod Locations | 35 or 36 | 35 or 36 (up to 9 MOX rods) | 36 | 49 | 49 | 63 or 64 |
| Fuel Rod Clad O.D. (in.) | ≥ 0.5550 | ≥ 0.5625 | ≥ 0.5630 | ≥ 0.4860 | ≥ 0.5630 | ≥ 0.4120 |
| Fuel Rod Clad I.D. (in.) | ≤ 0.5105 | ≤ 0.4945 | ≤ 0.4990 | ≤ 0.4204 | ≤ 0.4990 | ≤ 0.3620 |
| Fuel Pellet Dia. (in.) | ≤ 0.4980 | ≤ 0.4820 | ≤ 0.4880 | ≤ 0.4110 | ≤ 0.4910 | ≤ 0.3580 |
| Fuel Rod Pitch (in.) | ≤ 0.710 | ≤ 0.710 | ≤ 0.740 | ≤ 0.631 | ≤ 0.738 | ≤ 0.523 |
| Active Fuel Length (in.) | ≤ 120 | ≤ 120 | ≤ 77.5 | ≤ 80 | ≤ 150 | ≤ 120 |
| No. of Water Rods (Note 11) | 1 or 0 | 1 or 0 | 0 | 0 | 0 | 1 or 0 |
| Water Rod Thickness (in.) | > 0 | > 0 | N/A | N/A | N/A | ≥ 0 |
| Channel Thickness (in.) | ≤ 0.060 | ≤ 0.060 | ≤ 0.060 | ≤ 0.060 | ≤ 0.120 | ≤ 0.100 |

Table 2.1-3 (2 of 5)
BWR FUEL ASSEMBLY CHARACTERISTICS (Note 1)

| **Fuel Assembly Array/Class** | **8x8B** | **8x8C** | **8x8D** | **8x8E** | **8x8F** | **9x9A** |
|---|---|---|---|---|---|---|
| Clad Material | ZR | ZR | ZR | ZR | ZR | ZR |
| Design Initial U (kg/assy.) (Note 3) | ≤ 192 | ≤ 190 | ≤ 190 | < 190 | ≤ 191 | ≤ 180 |
| Maximum PLANAR-AVERAGE INITIAL ENRICHMENT (wt.% $^{235}U$) (Note 14) | ≤ 4.2 | ≤ 4.2 | ≤ 4.2 | ≤ 4.2 | ≤ 4.0 | ≤ 4.2 |
| Initial Maximum Rod Enrichment (wt.% $^{235}U$) | ≤ 5.0 | ≤ 5.0 | ≤ 5.0 | ≤ 5.0 | ≤ 5.0 | ≤ 5.0 |
| No. of Fuel Rod Locations | 63 or 64 | 62 | 60 or 61 | 59 | 64 | 74/66 (Note 5) |
| Fuel Rod Clad O.D. (in.) | ≥ 0.4840 | ≥ 0.4830 | ≥ 0.4830 | ≥ 0.4930 | ≥ 0.4576 | ≥ 0.4400 |
| Fuel Rod Clad I.D. (in.) | ≤ 0.4295 | ≤ 0.4250 | ≤ 0.4230 | ≤ 0.4250 | ≤ 0.3996 | ≤ 0.3840 |
| Fuel Pellet Dia. (in.) | ≤ 0.4195 | ≤ 0.4160 | ≤ 0.4140 | ≤ 0.4160 | ≤ 0.3913 | ≤ 0.3760 |
| Fuel Rod Pitch (in.) | ≤ 0.642 | ≤ 0.641 | ≤ 0.640 | ≤ 0.640 | ≤ 0.609 | ≤ 0.566 |
| Design Active Fuel Length (in.) | ≤ 150 | ≤ 150 | ≤ 150 | ≤ 150 | ≤ 150 | ≤ 150 |
| No. of Water Rods (Note 11) | 1 or 0 | 2 | 1 - 4 (Note 7) | 5 | N/A (Note 12) | 2 |
| Water Rod Thickness (in.) | ≥ 0.034 | > 0.00 | > 0.00 | ≥ 0.034 | ≥ 0.0315 | > 0.00 |
| Channel Thickness (in.) | ≤ 0.120 | ≤ 0.120 | ≤ 0.120 | ≤ 0.100 | ≤ 0.055 | ≤ 0.120 |

Table 2.1-3 (page 3 of 5)
BWR FUEL ASSEMBLY CHARACTERISTICS (Note 1)

| **Fuel Assembly Array/Class** | **9x9B** | **9x9C** | **9x9D** | **9x9E (Note 13)** | **9x9F (Note 13)** | **9x9G** |
|---|---|---|---|---|---|---|
| Clad Material | ZR | ZR | ZR | ZR | ZR | ZR |
| Design Initial U (kg/assy.) (Note 3) | ≤ 180 | ≤ 182 | ≤ 182 | ≤ 183 | ≤ 183 | ≤ 164 |
| Maximum PLANAR-AVERAGE INITIAL ENRICHMENT (wt.% $^{235}U$) (Note 14) | ≤ 4.2 | ≤ 4.2 | ≤ 4.2 | ≤ 4.0 | ≤ 4.0 | ≤ 4.2 |
| Initial Maximum Rod Enrichment (wt.% $^{235}U$) | ≤ 5.0 | ≤ 5.0 | ≤ 5.0 | ≤ 5.0 | ≤ 5.0 | ≤ 5.0 |
| No. of Fuel Rod Locations | 72 | 80 | 79 | 76 | 76 | 72 |
| Fuel Rod Clad O.D. (in.) | ≥ 0.4330 | ≥ 0.4230 | ≥ 0.4240 | ≥ 0.4170 | ≥ 0.4430 | ≥ 0.4240 |
| Fuel Rod Clad I.D. (in.) | ≤ 0.3810 | ≤ 0.3640 | ≤ 0.3640 | ≤ 0.3640 | ≤ 0.3860 | ≤ 0.3640 |
| Fuel Pellet Dia. (in.) | ≤ 0.3740 | ≤ 0.3565 | ≤ 0.3565 | ≤ 0.3530 | ≤ 0.3745 | ≤ 0.3565 |
| Fuel Rod Pitch (in.) | ≤ 0.572 | ≤ 0.572 | ≤ 0.572 | ≤ 0.572 | ≤ 0.572 | ≤ 0.572 |
| Design Active Fuel Length (in.) | ≤ 150 | ≤ 150 | ≤ 150 | ≤ 150 | ≤ 150 | ≤ 150 |
| No. of Water Rods (Note 11) | 1 (Note 6) | 1 | 2 | 5 | 5 | 1 (Note 6) |
| Water Rod Thickness (in.) | > 0.00 | ≥ 0.020 | ≥ 0.0300 | ≥ 0.0120 | ≥ 0.0120 | ≥ 0.0320 |
| Channel Thickness (in.) | ≤ 0.120 | ≤ 0.100 | ≤ 0.100 | ≤ 0.120 | ≤ 0.120 | ≤ 0.120 |

Table 2.1-3 (page 4 of 5)
BWR FUEL ASSEMBLY CHARACTERISTICS (Note 1)

| **Fuel Assembly Array/Class** | **10x10A** | **10x10B** | **10x10C** | **10x10D** | **10x10E** |
|---|---|---|---|---|---|
| Clad Material | ZR | ZR | ZR | SS | SS |
| Design Initial U (kg/assy.) (Note 3) | ≤ 188 | ≤ 188 | ≤ 179 | ≤ 125 | ≤ 125 |
| Maximum PLANAR-AVERAGE INITIAL ENRICHMENT (wt.% $^{235}U$) (Note 14) | ≤ 4.2 | ≤ 4.2 | ≤ 4.2 | ≤ 4.0 | ≤ 4.0 |
| Initial Maximum Rod Enrichment (wt.% $^{235}U$) | ≤ 5.0 | ≤ 5.0 | ≤ 5.0 | ≤ 5.0 | ≤ 5.0 |
| No. of Fuel Rod Locations | 92/78 (Note 8) | 91/83 (Note 9) | 96 | 100 | 96 |
| Fuel Rod Clad O.D. (in.) | ≥ 0.4040 | ≥ 0.3957 | ≥ 0.3780 | ≥ 0.3960 | ≥ 0.3940 |
| Fuel Rod Clad I.D. (in.) | ≤ 0.3520 | ≤ 0.3480 | ≤ 0.3294 | ≤ 0.3560 | ≤ 0.3500 |
| Fuel Pellet Dia. (in.) | ≤ 0.3455 | ≤ 0.3420 | ≤ 0.3224 | ≤ 0.3500 | ≤ 0.3430 |
| Fuel Rod Pitch (in.) | ≤ 0.510 | ≤ 0.510 | ≤ 0.488 | ≤ 0.565 | ≤ 0.557 |
| Design Active Fuel Length (in.) | ≤ 150 | ≤ 150 | ≤ 150 | ≤ 83 | ≤ 83 |
| No. of Water Rods (Note 11) | 2 | 1 (Note 6) | 5 (Note 10) | 0 | 4 |
| Water Rod Thickness (in.) | ≥ 0.0300 | > 0.00 | ≥ 0.031 | N/A | ≥ 0.022 |
| Channel Thickness (in.) | ≤ 0.120 | ≤ 0.120 | ≤ 0.055 | ≤ 0.080 | ≤ 0.080 |

Table 2.1-3 (page 5 of 5)
BWR FUEL ASSEMBLY CHARACTERISTICS

Notes:

1. All dimensions are design nominal values. Maximum and minimum dimensions are specified to bound variations in design nominal values among fuel assemblies within a given array/class.

2. Deleted.

3. Design initial uranium weight is the nominal uranium weight specified for each assembly by the fuel manufacturer or reactor user. For each BWR fuel assembly, the total uranium weight limit specified in this table may be increased up to 1.5 percent for comparison with users' fuel records to account for manufacturer tolerances.

4. $\leq$ 0.635 wt. % $^{235}U$ and $\leq$ 1.578 wt. % total fissile plutonium ($^{239}Pu$ and $^{241}Pu$), (wt. % of total fuel weight, i.e., $UO_2$ plus $PuO_2$).

5. This assembly class contains 74 total rods; 66 full length rods and 8 partial length rods.

6. Square, replacing nine fuel rods.

7. Variable.

8. This assembly contains 92 total fuel rods; 78 full length rods and 14 partial length rods.

9. This assembly class contains 91 total fuel rods; 83 full length rods and 8 partial length rods.

10. One diamond-shaped water rod replacing the four center fuel rods and four rectangular water rods dividing the assembly into four quadrants.

11. These rods may also be sealed at both ends and contain Zr material in lieu of water.

12. This assembly is known as "QUAD+." It has four rectangular water cross segments dividing the assembly into four quadrants.

13. For the SPC 9x9-5 fuel assembly, each fuel rod must meet either the 9x9E or the 9x9F set of limits for clad O.D., clad I.D., and pellet diameter.

14. For those MPCs loaded with both INTACT FUEL ASSEMBLIES and DAMAGED FUEL ASSEMBLIES or FUEL DEBRIS, the maximum PLANAR AVERAGE INITIAL ENRICHMENT for the INTACT FUEL ASSEMBLIES is limited to 3.7 wt.% $^{235}U$, as applicable.

Table 2.1-4

TABLE DELETED

Table 2.1-5

TABLE DELETED

Table 2.1-6 (page 1 of 2)

TABLE DELETED

Table 2.1-6 (page 2 of 2)

TABLE DELETED

Table 2.1-7 (page 1 of 2)

TABLE DELETED

Table 2.1-7 (page 2 of 2)

TABLE DELETED

Table 2.1-8
NON-FUEL HARDWARE COOLING AND AVERAGE BURNUP (Notes 1, 2, and 3)

| **Post-irradiation Cooling Time (years)** | **INSERTS** (Note 4) **BURNUP (MWD/MTU)** | **GUIDE TUBE HARDWARE** (Note 5) **BURNUP (MWD/MTU)** | **CONTROL COMPONENT** (Note 6) **BURNUP (MWD/MTU)** | **APSR BURNUP (MWD/MTU)** |
|---|---|---|---|---|
| ≥ 3 | ≤ 24,635 | NA (Note 7) | NA | NA |
| ≥ 4 | ≤ 30,000 | ≤ 20,000 | NA | NA |
| ≥ 5 | ≤ 36,748 | ≤ 25,000 | ≤ 630,000 | ≤ 45,000 |
| ≥ 6 | ≤ 44,102 | ≤ 30,000 | - | ≤ 54,500 |
| ≥ 7 | ≤ 52,900 | ≤ 40,000 | - | ≤ 68,000 |
| ≥ 8 | ≤ 60,000 | ≤ 45,000 | - | ≤ 83,000 |
| ≥ 9 | - | ≤ 50,000 | - | ≤ 111,000 |
| ≥ 10 | - | ≤ 60,000 | - | ≤ 180,000 |
| ≥ 11 | - | ≤ 75,000 | - | ≤ 630,000 |
| ≥ 12 | - | ≤ 90,000 | - | - |
| ≥ 13 | - | ≤ 180,000 | - | - |
| ≥ 14 | - | ≤ 630,000 | - | - |

Notes:
1. Burnups for NON-FUEL HARDWARE are to be determined based on the burnup and uranium mass of the fuel assemblies in which the component was inserted during reactor operation.
2. Linear interpolation between points is permitted, except that TPD and APSR burnups > 180,000 MWD/MTU and ≤ 630,000 MWD/MTU must be cooled ≥ 14 years and ≥ 11 years, respectively.
3. Applicable to uniform loading and regionalized loading.
4. Includes Burnable Poison Rod Assemblies (BPRAs), Wet Annular Burnable Absorbers (WABAs), and vibration suppressor inserts..
5. Includes Thimble Plug Devices (TPDs), water displacement guide tube plugs, and orifice rod assemblies.
6. Includes Control Rod Assemblies (CRAs), Control Element Assemblies (CEAs), and Rod Cluster Control Assemblies (RCCAs).
7. NA means not authorized for loading at this cooling time.

## 2.4 Decay Heat, Burnup, and Cooling Time Limits for ZR-Clad Fuel

This section provides the limits on ZR-clad fuel assembly decay heat, burnup, and cooling time for storage in the HI-STORM 100 System. A detailed discussion of how to calculate the limits and verify compliance, including examples, is provided in Chapter 12 of the HI-STORM 100 FSAR.

### 2.4.1 Uniform Fuel Loading Decay Heat Limits for ZR-clad fuel

Table 2.4-1 provides the maximum allowable decay heat per fuel storage location for ZR-clad fuel in uniform fuel loading for each MPC model.

Table 2.4-1

Maximum Allowable Decay Heat per Fuel Storage Location
(Uniform Loading, ZR-Clad)

| **MPC Model** | **Decay Heat per Fuel Storage Location** (kW) |
|---|---|
| Intact Fuel Assemblies | |
| MPC-24 | ≤ 1.157 |
| MPC-24E/24EF | ≤ 1.173 |
| MPC-32/32F | ≤ 0.898 |
| MPC-68/68FF | ≤ 0.414 |
| Damaged Fuel Assemblies and Fuel Debris | |
| MPC-24 | ≤ 1.099 |
| MPC-24E/24EF | ≤ 1.114 |
| MPC-32/32F | ≤ 0.718 |
| MPC-68/68FF | ≤ 0.393 |

### 2.4.2 Regionalized Fuel Loading Decay Heat Limits for ZR-Clad Fuel

Table 2.4-2 provides the maximum allowable decay heat per fuel storage location for ZR-clad fuel in regionalized loading for each MPC model.

2.4.2 Regionalized Fuel Loading Decay Heat Limits for ZR-Clad Fuel (cont'd)

Table 2.4-2

Fuel Storage Regions and Maximum Decay Heat per MPC

| MPC Model | Number of Fuel Storage Locations in Inner and Outer Regions | Inner Region Maximum Decay Heat per Assembly (kW) | Outer Region Maximum Decay Heat per Assembly (kW) |
|---|---|---|---|
| MPC-24 | 4 and 20 | 1.470 | 0.900 |
| MPC-24E/24EF | 4 and 20 | 1.540 | 0.900 |
| MPC-32/32F | 12 and 20 | 1.131 | 0.600 |
| MPC-68/68FF | 32 and 36 | 0.500 | 0.275 |

2.4.3 Burnup Limits as a Function of Cooling Time for ZR-Clad Fuel

The maximum allowable fuel assembly average burnup varies with the following parameters:

- Minimum fuel assembly cooling time
- Maximum fuel assembly decay heat
- Minimum fuel assembly average enrichment

The maximum allowable ZR-clad fuel assembly average burnup for a given MINIMUM ENRICHMENT is calculated as described below for minimum cooling times between 3 and 20 years using the maximum permissible decay heat determined in Section 2.4.1 or 2.4.2. Different fuel assembly average burnup limits may be calculated for different minimum enrichments (by individual fuel assembly) for use in choosing the fuel assemblies to be loaded into a given MPC.

2.4.3.1 Choose a fuel assembly minimum enrichment, $E_{235}$.

2.4.3.2 Calculate the maximum allowable fuel assembly average burnup for a minimum cooling time between 3 and 20 years using the equation below.

$$Bu = (A \times q) + (B \times q^2) + (C \times q^3) + [D \times (E_{235})^2] + (E \times q \times E_{235}) + (F \times q^2 \times E_{235}) + G$$

Equation 2.4.3

Where:

Bu = Maximum allowable average burnup per fuel assembly (MWD/MTU)

2.4.3 Burnup Limits as a Function of Cooling Time for ZR-Clad Fuel (cont'd)

q = Maximum allowable decay heat per fuel storage location determined in Section 2.4.1 or 2.4.2 (kW)

$E_{235}$ = Minimum fuel assembly average enrichment (wt. % $^{235}U$) (e.g., for 4.05 wt.%, use 4.05)

A through G = Coefficients from Tables 2.4-3 and 2.4-4 for the applicable fuel assembly array/class and minimum cooling time

2.4.3.3 Calculated burnup limits shall be rounded down to the nearest integer.

2.4.3.4 Calculated burnup limits greater than 68,200 MWD/MTU for PWR fuel and 65,000 MWD/MTU for BWR must be reduced to be equal to these values.

2.4.3.5 Linear interpolation of calculated burnups between cooling times for a given fuel assembly maximum decay heat and minimum enrichment is permitted. For example, the allowable burnup for a cooling time of 4.5 years may be interpolated between those burnups calculated for 4 year and 5 years.

2.4.3.6 Each ZR-clad fuel assembly to be stored must have a MINIMUM ENRICHMENT greater than or equal to the value used in Step 2.4.3.2.

2.4.4 When complying with the maximum fuel storage location decay heat limits, users must account for the decay heat from both the fuel assembly and any NON-FUEL HARDWARE, as applicable for the particular fuel storage location, to ensure the decay heat emitted by all contents in a storage location does not exceed the limit.

Table 2.4-3 (Page 1 of 8)

PWR Fuel Assembly Cooling Time-Dependent Coefficients
(ZR-Clad Fuel)

| Cooling Time (years) | Array/Class 14x14A | | | | | | |
|---|---|---|---|---|---|---|---|
| | A | B | C | D | E | F | G |
| ≥ 3 | 20277.1 | 303.592 | -68.329 | -139.41 | 2993.67 | -498.159 | -615.411 |
| ≥ 4 | 35560.1 | -6034.67 | 985.415 | -132.734 | 3578.92 | -723.721 | -609.84 |
| ≥ 5 | 48917.9 | -14499.5 | 2976.09 | -150.707 | 4072.55 | -892.691 | -54.8362 |
| ≥ 6 | 59110.3 | -22507 | 5255.61 | -177.017 | 4517.03 | -1024.01 | 613.36 |
| ≥ 7 | 67595.6 | -30158.1 | 7746.6 | -200.128 | 4898.71 | -1123.21 | 716.004 |
| ≥ 8 | 74424.9 | -36871.1 | 10169.4 | -218.676 | 5203.64 | -1190.24 | 741.163 |
| ≥ 9 | 81405.8 | -44093.1 | 12910.8 | -227.916 | 5405.34 | -1223.27 | 250.224 |
| ≥ 10 | 86184.3 | -49211.7 | 15063.4 | -237.641 | 5607.96 | -1266.21 | 134.435 |
| ≥ 11 | 92024.9 | -55666.8 | 17779.6 | -240.973 | 5732.25 | -1282.12 | -401.456 |
| ≥ 12 | 94775.8 | -58559.7 | 19249.9 | -246.369 | 5896.27 | -1345.42 | -295.435 |
| ≥ 13 | 100163 | -64813.8 | 22045.1 | -242.572 | 5861.86 | -1261.66 | -842.159 |
| ≥ 14 | 103971 | -69171 | 24207 | -242.651 | 5933.96 | -1277.48 | -1108.99 |
| ≥ 15 | 108919 | -75171.1 | 27152.4 | -243.154 | 6000.2 | -1301.19 | -1620.63 |
| ≥ 16 | 110622 | -76715.2 | 28210.2 | -240.235 | 6028.33 | -1307.74 | -1425.5 |
| ≥ 17 | 115582 | -82929.7 | 31411.9 | -235.234 | 5982.3 | -1244.11 | -1948.05 |
| ≥ 18 | 119195 | -87323.5 | 33881.4 | -233.28 | 6002.43 | -1245.95 | -2199.41 |
| ≥ 19 | 121882 | -90270.6 | 35713.7 | -231.873 | 6044.42 | -1284.55 | -2264.05 |
| ≥ 20 | 124649 | -93573.5 | 37853.1 | -230.22 | 6075.82 | -1306.57 | -2319.63 |

Table 2.4-3 (Page 2 of 8)

PWR Fuel Assembly Cooling Time-Dependent Coefficients
(ZR-Clad Fuel)

| Cooling Time (years) | Array/Class 14x14B | | | | | | |
|---|---|---|---|---|---|---|---|
| | A | B | C | D | E | F | G |
| ≥ 3 | 18937.9 | 70.2997 | -28.6224 | -130.732 | 2572.36 | -383.393 | -858.17 |
| ≥ 4 | 32058.7 | -4960.63 | 745.224 | -125.978 | 3048.98 | -551.656 | -549.108 |
| ≥ 5 | 42626.3 | -10804.1 | 1965.09 | -139.722 | 3433.49 | -676.643 | 321.88 |
| ≥ 6 | 51209.6 | -16782.3 | 3490.45 | -158.929 | 3751.01 | -761.524 | 847.282 |
| ≥ 7 | 57829.9 | -21982 | 5009.12 | -180.026 | 4066.65 | -846.272 | 1200.45 |
| ≥ 8 | 62758 | -26055.3 | 6330.88 | -196.804 | 4340.18 | -928.336 | 1413.17 |
| ≥ 9 | 68161.4 | -30827.6 | 7943.87 | -204.454 | 4500.52 | -966.347 | 1084.69 |
| ≥ 10 | 71996.8 | -34224.3 | 9197.25 | -210.433 | 4638.94 | -1001.83 | 1016.38 |
| ≥ 11 | 75567.3 | -37486.1 | 10466.9 | -214.95 | 4759.55 | -1040.85 | 848.169 |
| ≥ 12 | 79296.7 | -40900.3 | 11799.6 | -212.898 | 4794.13 | -1040.51 | 576.242 |
| ≥ 13 | 82257.3 | -43594 | 12935 | -212.8 | 4845.81 | -1056.01 | 410.807 |
| ≥ 14 | 83941.2 | -44915.2 | 13641 | -215.389 | 4953.19 | -1121.71 | 552.724 |
| ≥ 15 | 87228.5 | -48130 | 15056.9 | -212.545 | 4951.12 | -1112.5 | 260.194 |
| ≥ 16 | 90321.7 | -50918.3 | 16285.5 | -206.094 | 4923.36 | -1106.35 | -38.7487 |
| ≥ 17 | 92836.2 | -53314.5 | 17481.7 | -203.139 | 4924.61 | -1109.32 | -159.673 |
| ≥ 18 | 93872.8 | -53721.4 | 17865.1 | -202.573 | 4956.21 | -1136.9 | 30.0594 |
| ≥ 19 | 96361.6 | -56019.1 | 19075.9 | -199.068 | 4954.59 | -1156.07 | -125.917 |
| ≥ 20 | 98647.5 | -57795.1 | 19961.8 | -191.502 | 4869.59 | -1108.74 | -217.603 |

Table 2.4-3 (Page 3 of 8)

PWR Fuel Assembly Cooling Time-Dependent Coefficients
(ZR-Clad Fuel)

| Cooling Time (years) | Array/Class 14x14C | | | | | | |
|---|---|---|---|---|---|---|---|
| | A | B | C | D | E | F | G |
| ≥ 3 | 19176.9 | 192.012 | -66.7595 | -138.112 | 2666.73 | -407.664 | -1372.41 |
| ≥ 4 | 32040.3 | -4731.4 | 651.014 | -124.944 | 3012.63 | -530.456 | -890.059 |
| ≥ 5 | 43276.7 | -11292.8 | 2009.76 | -142.172 | 3313.91 | -594.917 | -200.195 |
| ≥ 6 | 51315.5 | -16920.5 | 3414.76 | -164.287 | 3610.77 | -652.118 | 463.041 |
| ≥ 7 | 57594.7 | -21897.6 | 4848.49 | -189.606 | 3940.67 | -729.367 | 781.46 |
| ≥ 8 | 63252.3 | -26562.8 | 6273.01 | -199.974 | 4088.41 | -732.054 | 693.879 |
| ≥ 9 | 67657.5 | -30350.9 | 7533.4 | -211.77 | 4283.39 | -772.916 | 588.456 |
| ≥ 10 | 71834.4 | -34113.7 | 8857.32 | -216.408 | 4383.45 | -774.982 | 380.243 |
| ≥ 11 | 75464.1 | -37382.1 | 10063 | -218.813 | 4460.69 | -776.665 | 160.668 |
| ≥ 12 | 77811.1 | -39425.1 | 10934.3 | -225.193 | 4604.68 | -833.459 | 182.463 |
| ≥ 13 | 81438.3 | -42785.4 | 12239.9 | -220.943 | 4597.28 | -803.32 | -191.636 |
| ≥ 14 | 84222.1 | -45291.6 | 13287.9 | -218.366 | 4608.13 | -791.655 | -354.59 |
| ≥ 15 | 86700.1 | -47582.6 | 14331.2 | -218.206 | 4655.34 | -807.366 | -487.316 |
| ≥ 16 | 88104.7 | -48601.1 | 14927.9 | -219.498 | 4729.97 | -849.446 | -373.196 |
| ≥ 17 | 91103.3 | -51332.5 | 16129 | -212.138 | 4679.91 | -822.896 | -654.296 |
| ≥ 18 | 93850.4 | -53915.8 | 17336.9 | -207.666 | 4652.65 | -799.697 | -866.307 |
| ≥ 19 | 96192.9 | -55955.8 | 18359.3 | -203.462 | 4642.65 | -800.315 | -1007.75 |
| ≥ 20 | 97790.4 | -57058.1 | 19027.7 | -200.963 | 4635.88 | -799.721 | -951.122 |

Table 2.4-3 (Page 4 of 8)

PWR Fuel Assembly Cooling Time-Dependent Coefficients
(ZR-Clad Fuel)

| Cooling Time (years) | Array/Class 15x15A/B/C | | | | | | |
|---|---|---|---|---|---|---|---|
| | A | B | C | D | E | F | G |
| ≥ 3 | 15789.2 | 119.829 | -21.8071 | -127.422 | 2152.53 | -267.717 | -580.768 |
| ≥ 4 | 26803.8 | -3312.93 | 415.027 | -116.279 | 2550.15 | -386.33 | -367.168 |
| ≥ 5 | 36403.6 | -7831.93 | 1219.66 | -126.065 | 2858.32 | -471.785 | 326.863 |
| ≥ 6 | 44046.1 | -12375.9 | 2213.52 | -145.727 | 3153.45 | -539.715 | 851.971 |
| ≥ 7 | 49753.5 | -16172.6 | 3163.61 | -166.946 | 3428.38 | -603.598 | 1186.31 |
| ≥ 8 | 55095.4 | -20182.5 | 4287.03 | -183.047 | 3650.42 | -652.92 | 1052.4 |
| ≥ 9 | 58974.4 | -23071.6 | 5156.53 | -191.718 | 3805.41 | -687.18 | 1025 |
| ≥ 10 | 62591.8 | -25800.8 | 5995.95 | -195.105 | 3884.14 | -690.659 | 868.556 |
| ≥ 11 | 65133.1 | -27747.4 | 6689 | -203.095 | 4036.91 | -744.034 | 894.607 |
| ≥ 12 | 68448.4 | -30456 | 7624.9 | -202.201 | 4083.52 | -753.391 | 577.914 |
| ≥ 13 | 71084.4 | -32536.4 | 8381.78 | -201.624 | 4117.93 | -757.16 | 379.105 |
| ≥ 14 | 73459.5 | -34352.3 | 9068.86 | -197.988 | 4113.16 | -747.015 | 266.536 |
| ≥ 15 | 75950.7 | -36469.4 | 9920.52 | -199.791 | 4184.91 | -779.222 | 57.9429 |
| ≥ 16 | 76929.1 | -36845.6 | 10171.3 | -197.88 | 4206.24 | -794.541 | 256.099 |
| ≥ 17 | 79730 | -39134.8 | 11069.4 | -190.865 | 4160.42 | -773.448 | -42.6853 |
| ≥ 18 | 81649.2 | -40583 | 11736.1 | -187.604 | 4163.36 | -785.838 | -113.614 |
| ≥ 19 | 83459 | -41771.8 | 12265.9 | -181.461 | 4107.51 | -758.496 | -193.442 |
| ≥ 20 | 86165.4 | -44208.8 | 13361.2 | -178.89 | 4107.62 | -768.671 | -479.778 |

Table 2.4-3 (Page 5 of 8)

PWR Fuel Assembly Cooling Time-Dependent Coefficients
(ZR-Clad Fuel)

| Cooling Time (years) | Array/Class 15x15D/E/F/H | | | | | | |
|---|---|---|---|---|---|---|---|
| | A | B | C | D | E | F | G |
| ≥ 3 | 15192.5 | 50.5722 | -12.3042 | -126.906 | 2009.71 | -235.879 | -561.574 |
| ≥ 4 | 25782.5 | -3096.5 | 369.096 | -113.289 | 2357.75 | -334.695 | -254.964 |
| ≥ 5 | 35026.5 | -7299.87 | 1091.93 | -124.619 | 2664 | -414.527 | 470.916 |
| ≥ 6 | 42234.9 | -11438.4 | 1967.63 | -145.948 | 2945.81 | -474.981 | 1016.84 |
| ≥ 7 | 47818.4 | -15047 | 2839.22 | -167.273 | 3208.95 | -531.296 | 1321.12 |
| ≥ 8 | 52730.7 | -18387.2 | 3702.43 | -175.057 | 3335.58 | -543.232 | 1223.61 |
| ≥ 9 | 56254.6 | -20999.9 | 4485.93 | -190.489 | 3547.98 | -600.64 | 1261.55 |
| ≥ 10 | 59874.6 | -23706.5 | 5303.88 | -193.807 | 3633.01 | -611.892 | 1028.63 |
| ≥ 11 | 62811 | -25848.4 | 5979.64 | -194.997 | 3694.14 | -618.968 | 862.738 |
| ≥ 12 | 65557.6 | -27952.4 | 6686.74 | -198.224 | 3767.28 | -635.126 | 645.139 |
| ≥ 13 | 67379.4 | -29239.2 | 7197.49 | -200.164 | 3858.53 | -677.958 | 652.601 |
| ≥ 14 | 69599.2 | -30823.8 | 7768.51 | -196.788 | 3868.2 | -679.88 | 504.443 |
| ≥ 15 | 71806.7 | -32425 | 8360.38 | -191.935 | 3851.65 | -669.917 | 321.146 |
| ≥ 16 | 73662.6 | -33703.5 | 8870.78 | -187.366 | 3831.59 | -658.419 | 232.335 |
| ≥ 17 | 76219.8 | -35898.1 | 9754.72 | -189.111 | 3892.07 | -694.244 | -46.924 |
| ≥ 18 | 76594.4 | -35518.2 | 9719.78 | -185.11 | 3897.04 | -712.82 | 236.047 |
| ≥ 19 | 78592.7 | -36920.8 | 10316.5 | -179.54 | 3865.84 | -709.551 | 82.478 |
| ≥ 20 | 80770.5 | -38599.9 | 11051.3 | -175.106 | 3858.67 | -723.211 | -116.014 |

Table 2.4-3 (Page 6 of 8)

PWR Fuel Assembly Cooling Time-Dependent Coefficients
(ZR-Clad Fuel)

| Cooling Time (years) | Array/Class 16X16A | | | | | | |
|---|---|---|---|---|---|---|---|
| | A | B | C | D | E | F | G |
| ≥ 3 | 17038.2 | 158.445 | -37.6008 | -136.707 | 2368.1 | -321.58 | -700.033 |
| ≥ 4 | 29166.3 | -3919.95 | 508.439 | -125.131 | 2782.53 | -455.722 | -344.199 |
| ≥ 5 | 40285 | -9762.36 | 1629.72 | -139.652 | 3111.83 | -539.804 | 139.67 |
| ≥ 6 | 48335.7 | -15002.6 | 2864.09 | -164.702 | 3444.97 | -614.756 | 851.706 |
| ≥ 7 | 55274.9 | -20190 | 4258.03 | -185.909 | 3728.11 | -670.841 | 920.035 |
| ≥ 8 | 60646.6 | -24402.4 | 5483.54 | -199.014 | 3903.29 | -682.26 | 944.913 |
| ≥ 9 | 64663.2 | -27753.1 | 6588.21 | -215.318 | 4145.34 | -746.822 | 967.914 |
| ≥ 10 | 69306.9 | -31739.1 | 7892.13 | -218.898 | 4237.04 | -746.815 | 589.277 |
| ≥ 11 | 72725.8 | -34676.6 | 8942.26 | -220.836 | 4312.93 | -750.85 | 407.133 |
| ≥ 12 | 76573.8 | -38238.7 | 10248.1 | -224.934 | 4395.85 | -757.914 | 23.7549 |
| ≥ 13 | 78569 | -39794.3 | 10914.9 | -224.584 | 4457 | -776.876 | 69.428 |
| ≥ 14 | 81559.4 | -42453.6 | 11969.6 | -222.704 | 4485.28 | -778.427 | -203.031 |
| ≥ 15 | 84108.6 | -44680.4 | 12897.8 | -218.387 | 4460 | -746.756 | -329.078 |
| ≥ 16 | 86512.2 | -46766.8 | 13822.8 | -216.278 | 4487.79 | -759.882 | -479.729 |
| ≥ 17 | 87526.7 | -47326.2 | 14221 | -218.894 | 4567.68 | -805.659 | -273.692 |
| ≥ 18 | 90340.3 | -49888.6 | 15349.8 | -212.139 | 4506.29 | -762.236 | -513.316 |
| ≥ 19 | 93218.2 | -52436.7 | 16482.4 | -207.653 | 4504.12 | -776.489 | -837.1 |
| ≥ 20 | 95533.9 | -54474.1 | 17484.2 | -203.094 | 4476.21 | -760.482 | -955.662 |

Table 2.4-3 (Page 7 of 8)

PWR Fuel Assembly Cooling Time-Dependent Coefficients
(ZR-Clad Fuel)

| Cooling Time (years) | Array/Class 17x17A | | | | | | |
|---|---|---|---|---|---|---|---|
| | A | B | C | D | E | F | G |
| ≥ 3 | 16784.4 | 3.90244 | -10.476 | -128.835 | 2256.98 | -287.108 | -263.081 |
| ≥ 4 | 28859 | -3824.72 | 491.016 | -120.108 | 2737.65 | -432.361 | -113.457 |
| ≥ 5 | 40315.9 | -9724 | 1622.89 | -140.459 | 3170.28 | -547.749 | 425.136 |
| ≥ 6 | 49378.5 | -15653.1 | 3029.25 | -164.712 | 3532.55 | -628.93 | 842.73 |
| ≥ 7 | 56759.5 | -21320.4 | 4598.78 | -190.58 | 3873.21 | -698.143 | 975.46 |
| ≥ 8 | 63153.4 | -26463.8 | 6102.47 | -201.262 | 4021.84 | -685.431 | 848.497 |
| ≥ 9 | 67874.9 | -30519.2 | 7442.84 | -218.184 | 4287.23 | -754.597 | 723.305 |
| ≥ 10 | 72676.8 | -34855.2 | 8928.27 | -222.423 | 4382.07 | -741.243 | 387.877 |
| ≥ 11 | 75623 | -37457.1 | 9927.65 | -232.962 | 4564.55 | -792.051 | 388.402 |
| ≥ 12 | 80141.8 | -41736.5 | 11509.8 | -232.944 | 4624.72 | -787.134 | -164.727 |
| ≥ 13 | 83587.5 | -45016.4 | 12800.9 | -230.643 | 4623.2 | -745.177 | -428.635 |
| ≥ 14 | 86311.3 | -47443.4 | 13815.2 | -228.162 | 4638.89 | -729.425 | -561.758 |
| ≥ 15 | 87839.2 | -48704.1 | 14500.3 | -231.979 | 4747.67 | -775.801 | -441.959 |
| ≥ 16 | 91190.5 | -51877.4 | 15813.2 | -225.768 | 4692.45 | -719.311 | -756.537 |
| ≥ 17 | 94512 | -55201.2 | 17306.1 | -224.328 | 4740.86 | -747.11 | -1129.15 |
| ≥ 18 | 96959 | -57459.9 | 18403.8 | -220.038 | 4721.02 | -726.928 | -1272.47 |
| ≥ 19 | 99061.1 | -59172.1 | 19253.1 | -214.045 | 4663.37 | -679.362 | -1309.88 |
| ≥ 20 | 100305 | -59997.5 | 19841.1 | -216.112 | 4721.71 | -705.463 | -1148.45 |

Table 2.4-3 (Page 8 of 8)

PWR Fuel Assembly Cooling Time-Dependent Coefficients
(ZR-Clad Fuel)

| Cooling Time (years) | Array/Class 17x17B/C | | | | | | |
|---|---|---|---|---|---|---|---|
| | A | B | C | D | E | F | G |
| ≥ 3 | 15526.8 | 18.0364 | -9.36581 | -128.415 | 2050.81 | -243.915 | -426.07 |
| ≥ 4 | 26595.4 | -3345.47 | 409.264 | -115.394 | 2429.48 | -350.883 | -243.477 |
| ≥ 5 | 36190.4 | -7783.2 | 1186.37 | -130.008 | 2769.53 | -438.716 | 519.95 |
| ≥ 6 | 44159 | -12517.5 | 2209.54 | -150.234 | 3042.25 | -489.858 | 924.151 |
| ≥ 7 | 50399.6 | -16780.6 | 3277.26 | -173.223 | 3336.58 | -555.743 | 1129.66 |
| ≥ 8 | 55453.9 | -20420 | 4259.68 | -189.355 | 3531.65 | -581.917 | 1105.62 |
| ≥ 9 | 59469.3 | -23459.8 | 5176.62 | -199.63 | 3709.99 | -626.667 | 1028.74 |
| ≥ 10 | 63200.5 | -26319.6 | 6047.8 | -203.233 | 3783.02 | -619.949 | 805.311 |
| ≥ 11 | 65636.3 | -28258.3 | 6757.23 | -214.247 | 3972.8 | -688.56 | 843.457 |
| ≥ 12 | 68989.7 | -30904.4 | 7626.53 | -212.539 | 3995.62 | -678.037 | 495.032 |
| ≥ 13 | 71616.6 | -32962.2 | 8360.45 | -210.386 | 4009.11 | -666.542 | 317.009 |
| ≥ 14 | 73923.9 | -34748 | 9037.75 | -207.668 | 4020.13 | -662.692 | 183.086 |
| ≥ 15 | 76131.8 | -36422.3 | 9692.32 | -203.428 | 4014.55 | -655.981 | 47.5234 |
| ≥ 16 | 77376.5 | -37224.7 | 10111.4 | -207.581 | 4110.76 | -703.37 | 161.128 |
| ≥ 17 | 80294.9 | -39675.9 | 11065.9 | -201.194 | 4079.24 | -691.636 | -173.782 |
| ≥ 18 | 82219.8 | -41064.8 | 11672.1 | -195.431 | 4043.83 | -675.432 | -286.059 |
| ≥ 19 | 84168.9 | -42503.6 | 12309.4 | -190.602 | 4008.19 | -656.192 | -372.411 |
| ≥ 20 | 86074.2 | -43854.4 | 12935.9 | -185.767 | 3985.57 | -656.72 | -475.953 |

Table 2.4-4 (Page 1 of 10)

BWR Fuel Assembly Cooling Time-Dependent Coefficients
(ZR-Clad Fuel)

| Cooling Time (years) | Array/Class 7x7B | | | | | | |
|---|---|---|---|---|---|---|---|
| | A | B | C | D | E | F | G |
| ≥ 3 | 26409.1 | 28347.5 | -16858 | -147.076 | 5636.32 | -1606.75 | 1177.88 |
| ≥ 4 | 61967.8 | -6618.31 | -4131.96 | -113.949 | 6122.77 | -2042.85 | -96.7439 |
| ≥ 5 | 91601.1 | -49298.3 | 17826.5 | -132.045 | 6823.14 | -2418.49 | -185.189 |
| ≥ 6 | 111369 | -80890.1 | 35713.8 | -150.262 | 7288.51 | -2471.1 | 86.6363 |
| ≥ 7 | 126904 | -108669 | 53338.1 | -167.764 | 7650.57 | -2340.78 | 150.403 |
| ≥ 8 | 139181 | -132294 | 69852.5 | -187.317 | 8098.66 | -2336.13 | 97.5285 |
| ≥ 9 | 150334 | -154490 | 86148.1 | -193.899 | 8232.84 | -2040.37 | -123.029 |
| ≥ 10 | 159897 | -173614 | 100819 | -194.156 | 8254.99 | -1708.32 | -373.605 |
| ≥ 11 | 166931 | -186860 | 111502 | -193.776 | 8251.55 | -1393.91 | -543.677 |
| ≥ 12 | 173691 | -201687 | 125166 | -202.578 | 8626.84 | -1642.3 | -650.814 |
| ≥ 13 | 180312 | -215406 | 137518 | -201.041 | 8642.19 | -1469.45 | -810.024 |
| ≥ 14 | 185927 | -227005 | 148721 | -197.938 | 8607.6 | -1225.95 | -892.876 |
| ≥ 15 | 191151 | -236120 | 156781 | -191.625 | 8451.86 | -846.27 | -1019.4 |
| ≥ 16 | 195761 | -244598 | 165372 | -187.043 | 8359.19 | -572.561 | -1068.19 |
| ≥ 17 | 200791 | -256573 | 179816 | -197.26 | 8914.28 | -1393.37 | -1218.63 |
| ≥ 18 | 206068 | -266136 | 188841 | -187.191 | 8569.56 | -730.898 | -1363.79 |
| ≥ 19 | 210187 | -273609 | 197794 | -182.151 | 8488.23 | -584.727 | -1335.59 |
| ≥ 20 | 213731 | -278120 | 203074 | -175.864 | 8395.63 | -457.304 | -1364.38 |

Table 2.4-4 (Page 2 of 10)

BWR Fuel Assembly Cooling Time-Dependent Coefficients
(ZR-Clad Fuel)

| Cooling Time (years) | Array/Class 8x8B | | | | | | |
|---|---|---|---|---|---|---|---|
| | A | B | C | D | E | F | G |
| ≥ 3 | 28219.6 | 28963.7 | -17616.2 | -147.68 | 5887.41 | -1730.96 | 1048.21 |
| ≥ 4 | 66061.8 | -10742.4 | -1961.82 | -123.066 | 6565.54 | -2356.05 | -298.005 |
| ≥ 5 | 95790.7 | -53401.7 | 19836.7 | -134.584 | 7145.41 | -2637.09 | -298.858 |
| ≥ 6 | 117477 | -90055.9 | 41383.9 | -154.758 | 7613.43 | -2612.69 | -64.9921 |
| ≥ 7 | 134090 | -120643 | 60983 | -168.675 | 7809 | -2183.3 | -40.8885 |
| ≥ 8 | 148186 | -149181 | 81418.7 | -185.726 | 8190.07 | -2040.31 | -260.773 |
| ≥ 9 | 159082 | -172081 | 99175.2 | -197.185 | 8450.86 | -1792.04 | -381.705 |
| ≥ 10 | 168816 | -191389 | 113810 | -195.613 | 8359.87 | -1244.22 | -613.594 |
| ≥ 11 | 177221 | -210599 | 131099 | -208.3 | 8810 | -1466.49 | -819.773 |
| ≥ 12 | 183929 | -224384 | 143405 | -207.497 | 8841.33 | -1227.71 | -929.708 |
| ≥ 13 | 191093 | -240384 | 158327 | -204.95 | 8760.17 | -811.708 | -1154.76 |
| ≥ 14 | 196787 | -252211 | 169664 | -204.574 | 8810.95 | -610.928 | -1208.97 |
| ≥ 15 | 203345 | -267656 | 186057 | -208.962 | 9078.41 | -828.954 | -1383.76 |
| ≥ 16 | 207973 | -276838 | 196071 | -204.592 | 9024.17 | -640.808 | -1436.43 |
| ≥ 17 | 213891 | -290411 | 211145 | -202.169 | 9024.19 | -482.1 | -1595.28 |
| ≥ 18 | 217483 | -294066 | 214600 | -194.243 | 8859.35 | -244.684 | -1529.61 |
| ≥ 19 | 220504 | -297897 | 219704 | -190.161 | 8794.97 | -10.9863 | -1433.86 |
| ≥ 20 | 227821 | -318395 | 245322 | -194.682 | 9060.96 | -350.308 | -1741.16 |

Table 2.4-4 (Page 3 of 10)

BWR Fuel Assembly Cooling Time-Dependent Coefficients
(ZR-Clad Fuel)

| Cooling Time (years) | Array/Class 8x8C/D/E | | | | | | |
|---|---|---|---|---|---|---|---|
| | A | B | C | D | E | F | G |
| ≥ 3 | 28592.7 | 28691.5 | -17773.6 | -149.418 | 5969.45 | -1746.07 | 1063.62 |
| ≥ 4 | 66720.8 | -12115.7 | -1154 | -128.444 | 6787.16 | -2529.99 | -302.155 |
| ≥ 5 | 96929.1 | -55827.5 | 21140.3 | -136.228 | 7259.19 | -2685.06 | -334.328 |
| ≥ 6 | 118190 | -92000.2 | 42602.5 | -162.204 | 7907.46 | -2853.42 | -47.5465 |
| ≥ 7 | 135120 | -123437 | 62827.1 | -172.397 | 8059.72 | -2385.81 | -75.0053 |
| ≥ 8 | 149162 | -152986 | 84543.1 | -195.458 | 8559.11 | -2306.54 | -183.595 |
| ≥ 9 | 161041 | -177511 | 103020 | -200.087 | 8632.84 | -1864.4 | -433.081 |
| ≥ 10 | 171754 | -201468 | 122929 | -209.799 | 8952.06 | -1802.86 | -755.742 |
| ≥ 11 | 179364 | -217723 | 137000 | -215.803 | 9142.37 | -1664.82 | -847.268 |
| ≥ 12 | 186090 | -232150 | 150255 | -216.033 | 9218.36 | -1441.92 | -975.817 |
| ≥ 13 | 193571 | -249160 | 165997 | -213.204 | 9146.99 | -1011.13 | -1119.47 |
| ≥ 14 | 200034 | -263671 | 180359 | -210.559 | 9107.54 | -694.626 | -1312.55 |
| ≥ 15 | 205581 | -275904 | 193585 | -216.242 | 9446.57 | -1040.65 | -1428.13 |
| ≥ 16 | 212015 | -290101 | 207594 | -210.036 | 9212.93 | -428.321 | -1590.7 |
| ≥ 17 | 216775 | -299399 | 218278 | -204.611 | 9187.86 | -398.353 | -1657.6 |
| ≥ 18 | 220653 | -306719 | 227133 | -202.498 | 9186.34 | -181.672 | -1611.86 |
| ≥ 19 | 224859 | -314004 | 235956 | -193.902 | 8990.14 | 145.151 | -1604.71 |
| ≥ 20 | 228541 | -320787 | 245449 | -200.727 | 9310.87 | -230.252 | -1570.18 |

Table 2.4-4 (Page 4 of 10)

BWR Fuel Assembly Cooling Time-Dependent Coefficients
(ZR-Clad Fuel)

| Cooling Time (years) | Array/Class 9x9A | | | | | | |
|---|---|---|---|---|---|---|---|
| | A | B | C | D | E | F | G |
| ≥ 3 | 30538.7 | 28463.2 | -18105.5 | -150.039 | 6226.92 | -1876.69 | 1034.06 |
| ≥ 4 | 71040.1 | -16692.2 | 1164.15 | -128.241 | 7105.27 | -2728.58 | -414.09 |
| ≥ 5 | 100888 | -60277.7 | 24150.1 | -142.541 | 7896.11 | -3272.86 | -232.197 |
| ≥ 6 | 124846 | -102954 | 50350.8 | -161.849 | 8350.16 | -3163.44 | -91.1396 |
| ≥ 7 | 143516 | -140615 | 76456.5 | -185.538 | 8833.04 | -2949.38 | -104.802 |
| ≥ 8 | 158218 | -171718 | 99788.2 | -196.315 | 9048.88 | -2529.26 | -259.929 |
| ≥ 9 | 172226 | -204312 | 126620 | -214.214 | 9511.56 | -2459.19 | -624.954 |
| ≥ 10 | 182700 | -227938 | 146736 | -215.793 | 9555.41 | -1959.92 | -830.943 |
| ≥ 11 | 190734 | -246174 | 163557 | -218.071 | 9649.43 | -1647.5 | -935.021 |
| ≥ 12 | 199997 | -269577 | 186406 | -223.975 | 9884.92 | -1534.34 | -1235.27 |
| ≥ 13 | 207414 | -287446 | 204723 | -228.808 | 10131.7 | -1614.49 | -1358.61 |
| ≥ 14 | 215263 | -306131 | 223440 | -220.919 | 9928.27 | -988.276 | -1638.05 |
| ≥ 15 | 221920 | -321612 | 239503 | -217.949 | 9839.02 | -554.709 | -1784.04 |
| ≥ 16 | 226532 | -331778 | 252234 | -216.189 | 9893.43 | -442.149 | -1754.72 |
| ≥ 17 | 232959 | -348593 | 272609 | -219.907 | 10126.3 | -663.84 | -1915.3 |
| ≥ 18 | 240810 | -369085 | 296809 | -219.729 | 10294.6 | -859.302 | -2218.87 |
| ≥ 19 | 244637 | -375057 | 304456 | -210.997 | 10077.8 | -425.446 | -2127.83 |
| ≥ 20 | 248112 | -379262 | 309391 | -204.191 | 9863.67 | 100.27 | -2059.39 |

Table 2.4-4 (Page 5 of 10)

BWR Fuel Assembly Cooling Time-Dependent Coefficients
(ZR-Clad Fuel)

| Cooling Time (years) | Array/Class 9x9B | | | | | | |
|---|---|---|---|---|---|---|---|
| | A | B | C | D | E | F | G |
| ≥ 3 | 30613.2 | 28985.3 | -18371 | -151.117 | 6321.55 | -1881.28 | 988.92 |
| ≥ 4 | 71346.6 | -15922.9 | 631.132 | -128.876 | 7232.47 | -2810.64 | -471.737 |
| ≥ 5 | 102131 | -60654.1 | 23762.7 | -140.748 | 7881.6 | -3156.38 | -417.979 |
| ≥ 6 | 127187 | -105842 | 51525.2 | -162.228 | 8307.4 | -2913.08 | -342.13 |
| ≥ 7 | 146853 | -145834 | 79146.5 | -185.192 | 8718.74 | -2529.57 | -484.885 |
| ≥ 8 | 162013 | -178244 | 103205 | -197.825 | 8896.39 | -1921.58 | -584.013 |
| ≥ 9 | 176764 | -212856 | 131577 | -215.41 | 9328.18 | -1737.12 | -1041.11 |
| ≥ 10 | 186900 | -235819 | 151238 | -218.98 | 9388.08 | -1179.87 | -1202.83 |
| ≥ 11 | 196178 | -257688 | 171031 | -220.323 | 9408.47 | -638.53 | -1385.16 |
| ≥ 12 | 205366 | -280266 | 192775 | -223.715 | 9592.12 | -472.261 | -1661.6 |
| ≥ 13 | 215012 | -306103 | 218866 | -231.821 | 9853.37 | -361.449 | -1985.56 |
| ≥ 14 | 222368 | -324558 | 238655 | -228.062 | 9834.57 | 3.47358 | -2178.84 |
| ≥ 15 | 226705 | -332738 | 247316 | -224.659 | 9696.59 | 632.172 | -2090.75 |
| ≥ 16 | 233846 | -349835 | 265676 | -221.533 | 9649.93 | 913.747 | -2243.34 |
| ≥ 17 | 243979 | -379622 | 300077 | -222.351 | 9792.17 | 1011.04 | -2753.36 |
| ≥ 18 | 247774 | -386203 | 308873 | -220.306 | 9791.37 | 1164.58 | -2612.25 |
| ≥ 19 | 254041 | -401906 | 327901 | -213.96 | 9645.47 | 1664.94 | -2786.2 |
| ≥ 20 | 256003 | -402034 | 330566 | -215.242 | 9850.42 | 1359.46 | -2550.06 |

Table 2.4-4 (Page 6 of 10)

BWR Fuel Assembly Cooling Time-Dependent Coefficients
(ZR-Clad Fuel)

| Cooling Time (years) | Array/Class 9x9C/D | | | | | | |
|---|---|---|---|---|---|---|---|
| | A | B | C | D | E | F | G |
| ≥ 3 | 30051.6 | 29548.7 | -18614.2 | -148.276 | 6148.44 | -1810.34 | 1006 |
| ≥ 4 | 70472.7 | -14696.6 | -233.567 | -127.728 | 7008.69 | -2634.22 | -444.373 |
| ≥ 5 | 101298 | -59638.9 | 23065.2 | -138.523 | 7627.57 | -2958.03 | -377.965 |
| ≥ 6 | 125546 | -102740 | 49217.4 | -160.811 | 8096.34 | -2798.88 | -259.767 |
| ≥ 7 | 143887 | -139261 | 74100.4 | -184.302 | 8550.86 | -2517.19 | -275.151 |
| ≥ 8 | 159633 | -172741 | 98641.4 | -194.351 | 8636.89 | -1838.81 | -486.731 |
| ≥ 9 | 173517 | -204709 | 124803 | -212.604 | 9151.98 | -1853.27 | -887.137 |
| ≥ 10 | 182895 | -225481 | 142362 | -218.251 | 9262.59 | -1408.25 | -978.356 |
| ≥ 11 | 192530 | -247839 | 162173 | -217.381 | 9213.58 | -818.676 | -1222.12 |
| ≥ 12 | 201127 | -268201 | 181030 | -215.552 | 9147.44 | -232.221 | -1481.55 |
| ≥ 13 | 209538 | -289761 | 203291 | -225.092 | 9588.12 | -574.227 | -1749.35 |
| ≥ 14 | 216798 | -306958 | 220468 | -222.578 | 9518.22 | -69.9307 | -1919.71 |
| ≥ 15 | 223515 | -323254 | 237933 | -217.398 | 9366.52 | 475.506 | -2012.93 |
| ≥ 16 | 228796 | -334529 | 250541 | -215.004 | 9369.33 | 662.325 | -2122.75 |
| ≥ 17 | 237256 | -356311 | 273419 | -206.483 | 9029.55 | 1551.3 | -2367.96 |
| ≥ 18 | 242778 | -369493 | 290354 | -215.557 | 9600.71 | 659.297 | -2589.32 |
| ≥ 19 | 246704 | -377971 | 302630 | -210.768 | 9509.41 | 1025.34 | -2476.06 |
| ≥ 20 | 249944 | -382059 | 308281 | -205.495 | 9362.63 | 1389.71 | -2350.49 |

Table 2.4-4 (Page 7 of 10)

BWR Fuel Assembly Cooling Time-Dependent Coefficients
(ZR-Clad Fuel)

| Cooling Time (years) | Array/Class 9x9E/F | | | | | | |
|---|---|---|---|---|---|---|---|
| | A | B | C | D | E | F | G |
| ≥ 3 | 30284.3 | 26949.5 | -16926.4 | -147.914 | 6017.02 | -1854.81 | 1026.15 |
| ≥ 4 | 69727.4 | -17117.2 | 1982.33 | -127.983 | 6874.68 | -2673.01 | -359.962 |
| ≥ 5 | 98438.9 | -58492 | 23382.2 | -138.712 | 7513.55 | -3038.23 | -112.641 |
| ≥ 6 | 119765 | -95024.1 | 45261 | -159.669 | 8074.25 | -3129.49 | 221.182 |
| ≥ 7 | 136740 | -128219 | 67940.1 | -182.439 | 8595.68 | -3098.17 | 315.544 |
| ≥ 8 | 150745 | -156607 | 88691.5 | -193.941 | 8908.73 | -2947.64 | 142.072 |
| ≥ 9 | 162915 | -182667 | 109134 | -198.37 | 8999.11 | -2531 | -93.4908 |
| ≥ 10 | 174000 | -208668 | 131543 | -210.777 | 9365.52 | -2511.74 | -445.876 |
| ≥ 11 | 181524 | -224252 | 145280 | -212.407 | 9489.67 | -2387.49 | -544.123 |
| ≥ 12 | 188946 | -240952 | 160787 | -210.65 | 9478.1 | -2029.94 | -652.339 |
| ≥ 13 | 193762 | -250900 | 171363 | -215.798 | 9742.31 | -2179.24 | -608.636 |
| ≥ 14 | 203288 | -275191 | 196115 | -218.113 | 9992.5 | -2437.71 | -1065.92 |
| ≥ 15 | 208108 | -284395 | 205221 | -213.956 | 9857.25 | -1970.65 | -1082.94 |
| ≥ 16 | 215093 | -301828 | 224757 | -209.736 | 9789.58 | -1718.37 | -1303.35 |
| ≥ 17 | 220056 | -310906 | 234180 | -201.494 | 9541.73 | -1230.42 | -1284.15 |
| ≥ 18 | 224545 | -320969 | 247724 | -206.807 | 9892.97 | -1790.61 | -1381.9 |
| ≥ 19 | 226901 | -322168 | 250395 | -204.073 | 9902.14 | -1748.78 | -1253.22 |
| ≥ 20 | 235561 | -345414 | 276856 | -198.306 | 9720.78 | -1284.14 | -1569.18 |

Table 2.4-4 (Page 8 of 10)

BWR Fuel Assembly Cooling Time-Dependent Coefficients
(ZR-Clad Fuel)

| Cooling Time (years) | Array/Class 9x9G | | | | | | |
|---|---|---|---|---|---|---|---|
| | A | B | C | D | E | F | G |
| ≥ 3 | 35158.5 | 26918.5 | -17976.7 | -149.915 | 6787.19 | -2154.29 | 836.894 |
| ≥ 4 | 77137.2 | -19760.1 | 2371.28 | -130.934 | 8015.43 | -3512.38 | -455.424 |
| ≥ 5 | 113405 | -77931.2 | 35511.2 | -150.637 | 8932.55 | -4099.48 | -629.806 |
| ≥ 6 | 139938 | -128700 | 68698.3 | -173.799 | 9451.22 | -3847.83 | -455.905 |
| ≥ 7 | 164267 | -183309 | 109526 | -193.952 | 9737.91 | -3046.84 | -737.992 |
| ≥ 8 | 182646 | -227630 | 146275 | -210.936 | 10092.3 | -2489.3 | -1066.96 |
| ≥ 9 | 199309 | -270496 | 184230 | -218.617 | 10124.3 | -1453.81 | -1381.41 |
| ≥ 10 | 213186 | -308612 | 221699 | -235.828 | 10703.2 | -1483.31 | -1821.73 |
| ≥ 11 | 225587 | -342892 | 256242 | -236.112 | 10658.5 | -612.076 | -2134.65 |
| ≥ 12 | 235725 | -370471 | 285195 | -234.378 | 10604.9 | 118.591 | -2417.89 |
| ≥ 13 | 247043 | -404028 | 323049 | -245.79 | 11158.2 | -281.813 | -2869.82 |
| ≥ 14 | 253649 | -421134 | 342682 | -243.142 | 11082.3 | 400.019 | -2903.88 |
| ≥ 15 | 262750 | -448593 | 376340 | -245.435 | 11241.2 | 581.355 | -3125.07 |
| ≥ 16 | 270816 | -470846 | 402249 | -236.294 | 10845.4 | 1791.46 | -3293.07 |
| ≥ 17 | 279840 | -500272 | 441964 | -241.324 | 11222.6 | 1455.84 | -3528.25 |
| ≥ 18 | 284533 | -511287 | 458538 | -240.905 | 11367.2 | 1459.68 | -3520.94 |
| ≥ 19 | 295787 | -545885 | 501824 | -235.685 | 11188.2 | 2082.21 | -3954.2 |
| ≥ 20 | 300209 | -556936 | 519174 | -229.539 | 10956 | 2942.09 | -3872.87 |

Table 2.4-4 (Page 9 of 10)

BWR Fuel Assembly Cooling Time-Dependent Coefficients
(ZR-Clad Fuel)

| Cooling Time (years) | Array/Class 10x10A/B | | | | | | |
|---|---|---|---|---|---|---|---|
| | A | B | C | D | E | F | G |
| ≥ 3 | 29285.4 | 27562.2 | -16985 | -148.415 | 5960.56 | -1810.79 | 1001.45 |
| ≥ 4 | 67844.9 | -14383 | 395.619 | -127.723 | 6754.56 | -2547.96 | -369.267 |
| ≥ 5 | 96660.5 | -55383.8 | 21180.4 | -137.17 | 7296.6 | -2793.58 | -192.85 |
| ≥ 6 | 118098 | -91995 | 42958 | -162.985 | 7931.44 | -2940.84 | 60.9197 |
| ≥ 7 | 135115 | -123721 | 63588.9 | -171.747 | 8060.23 | -2485.59 | 73.6219 |
| ≥ 8 | 148721 | -151690 | 84143.9 | -190.26 | 8515.81 | -2444.25 | -63.4649 |
| ≥ 9 | 160770 | -177397 | 104069 | -197.534 | 8673.6 | -2101.25 | -331.046 |
| ≥ 10 | 170331 | -198419 | 121817 | -213.692 | 9178.33 | -2351.54 | -472.844 |
| ≥ 11 | 179130 | -217799 | 138652 | -209.75 | 9095.43 | -1842.88 | -705.254 |
| ≥ 12 | 186070 | -232389 | 151792 | -208.946 | 9104.52 | -1565.11 | -822.73 |
| ≥ 13 | 192407 | -246005 | 164928 | -209.696 | 9234.7 | -1541.54 | -979.245 |
| ≥ 14 | 200493 | -265596 | 183851 | -207.639 | 9159.83 | -1095.72 | -1240.61 |
| ≥ 15 | 205594 | -276161 | 195760 | -213.491 | 9564.23 | -1672.22 | -1333.64 |
| ≥ 16 | 209386 | -282942 | 204110 | -209.322 | 9515.83 | -1506.86 | -1286.82 |
| ≥ 17 | 214972 | -295149 | 217095 | -202.445 | 9292.34 | -893.6 | -1364.97 |
| ≥ 18 | 219312 | -302748 | 225826 | -198.667 | 9272.27 | -878.536 | -1379.58 |
| ≥ 19 | 223481 | -310663 | 235908 | -194.825 | 9252.9 | -785.066 | -1379.62 |
| ≥ 20 | 227628 | -319115 | 247597 | -199.194 | 9509.02 | -1135.23 | -1386.19 |

Table 2.4-4 (Page 10 of 10)

BWR Fuel Assembly Cooling Time-Dependent Coefficients
(ZR-Clad Fuel)

| Cooling Time (years) | Array/Class 10x10C | | | | | | |
|---|---|---|---|---|---|---|---|
| | A | B | C | D | E | F | G |
| ≥ 3 | 31425.3 | 27358.9 | -17413.3 | -152.096 | 6367.53 | -1967.91 | 925.763 |
| ≥ 4 | 71804 | -16964.1 | 1000.4 | -129.299 | 7227.18 | -2806.44 | -416.92 |
| ≥ 5 | 102685 | -62383.3 | 24971.2 | -142.316 | 7961 | -3290.98 | -354.784 |
| ≥ 6 | 126962 | -105802 | 51444.6 | -164.283 | 8421.44 | -3104.21 | -186.615 |
| ≥ 7 | 146284 | -145608 | 79275.5 | -188.967 | 8927.23 | -2859.08 | -251.163 |
| ≥ 8 | 162748 | -181259 | 105859 | -199.122 | 9052.91 | -2206.31 | -554.124 |
| ≥ 9 | 176612 | -214183 | 133261 | -217.56 | 9492.17 | -1999.28 | -860.669 |
| ≥ 10 | 187756 | -239944 | 155315 | -219.56 | 9532.45 | -1470.9 | -1113.42 |
| ≥ 11 | 196580 | -260941 | 174536 | -222.457 | 9591.64 | -944.473 | -1225.79 |
| ≥ 12 | 208017 | -291492 | 204805 | -233.488 | 10058.3 | -1217.01 | -1749.84 |
| ≥ 13 | 214920 | -307772 | 221158 | -234.747 | 10137.1 | -897.23 | -1868.04 |
| ≥ 14 | 222562 | -326471 | 240234 | -228.569 | 9929.34 | -183.47 | -2016.12 |
| ≥ 15 | 228844 | -342382 | 258347 | -226.944 | 9936.76 | 117.061 | -2106.05 |
| ≥ 16 | 233907 | -353008 | 270390 | -223.179 | 9910.72 | 360.39 | -2105.23 |
| ≥ 17 | 244153 | -383017 | 304819 | -227.266 | 10103.2 | 380.393 | -2633.23 |
| ≥ 18 | 249240 | -395456 | 321452 | -226.989 | 10284.1 | 169.947 | -2623.67 |
| ≥ 19 | 254343 | -406555 | 335240 | -220.569 | 10070.5 | 764.689 | -2640.2 |
| ≥ 20 | 260202 | -421069 | 354249 | -216.255 | 10069.9 | 854.497 | -2732.77 |

HOLTEC INTERNATIONAL

Holtec Center, 555 Lincoln Drive West, Marlton, NJ 08053

Telephone (856) 797-0900

Fax (856) 797-0909

U. S. Nuclear Regulatory Commission
ATTN: Document Control Desk
Document ID 5014600

# Holtec Letter 5014600 (LAR 1014-5)

# Attachment 3

# PROPOSED REVISED FSAR SECTIONS

# (397 pages plus this cover sheet)

# LIST OF EFFECTIVE PAGES FOR HISTORM 100 LAR 1014-5

| Page(s) | Revision |
|---|---|
| | |
| ***1.0-1 through 1.0-31*** | ***4A*** |
| ***1.1-1 through 1.1-4*** | ***4A*** |
| Fig. 1.1.1 | 0 |
| Fig. 1.1.1A | 1 |
| Fig. 1.1.1B | 2 |
| Fig. 1.1.2 | 0 |
| Fig. 1.1.3 through 1.1.3A | 1 |
| Fig. 1.1.3B | 2 |
| Fig 1.1.4 through 1.1.5 | 1 |
| ***1.2-1 through 1.2-40*** | ***4A*** |
| Fig. 1.2.1 | 1 |
| Fig. 1.2.1A | 2 |
| Fig. 1.2.2 | 4 |
| Fig. 1.2.3 | 3 |
| Fig. 1.2.4 | 4 |
| Fig. 1.2.5 through 1.2.6 | 0 |
| Fig. 1.2.7 | 1 |
| Fig. 1.2.8 through 1.2.8A | 1 |
| Fig. 1.2.9 through 1.2.9A | 1 |
| Fig. 1.2.10 through 1.2.12 | 0 |
| Fig. 1.2.13 through 1.2.15 | Deleted |
| Fig. 1.2.16a through 1.2.16f | 0 |
| Fig. 1.2.17a through 1.2.16d | 0 |
| Fig. 1.2.18 | 1 |
| ***1.3-1*** | ***4A*** |
| 1.4-1 through 1.4-3 | 1 |
| Fig. 1.4.1 through 1.4.2 | 0 |
| ***1.5-1 through 1.5-2*** | ***4A*** |
| Drawings | See Section 1.5 |
| Bills-of-Material | See Section 1.5 |
| 1.6-1 through 1.6-2 | 3 |
| 1.A-1 through 1.A-7 | 4 |
| Fig. 1.A.1 through 1.A.5 | 0 |
| 1.B-1 through 1.B-3 | 3 |
| 1.C-1 | 2 |
| 1.C-2 through 1.C-5 | Deleted |
| 1.D-1 through 1.D-7 | 4 |
| ***1.II-1 through 1.II-4*** | ***4A*** |

# LIST OF EFFECTIVE PAGES FOR HISTORM 100 LAR 1014-5

| Page(s) | Revision |
|---|---|
| | |
| 2.0-1 through 2.0-36 | 4 |
| ***2.1-1 through 2.1-68*** | ***4A*** |
| Fig. 2.1.1 | 3 |
| Fig. 2.1.2 through 2.1.2C | 1 |
| Fig. 2.1.2D | 3 |
| Fig. 2.1.3 through 2.1.5 | 0 |
| Fig. 2.1.6 through 2.1.8 | Deleted |
| Fig. 2.1.9 | 3 |
| 2.2-1 through 2.2-58 | 4 |
| 2.3-1 through 2.3-22 | 4 |
| Fig. 2.3.1 through 2.3.4 | 0 |
| 2.4-1 through 2.4-3 | 3 |
| 2.5-1 | 0 |
| 2.6-1 through 2.6-3 | 3 |
| 2A-1 through 2.A-5 | 2 |
| Fig. 2.A.1 | 1 |
| 2.B-1 through 2.B-4 | 3 |
| Fig. 2.B.1 | 3 |
| 2.C-1 through 2.C-2 | 3 |
| Fig. 2.C.1 | 3 |
| ***2.II-1 through 2.II-5*** | ***4A*** |
| ***Fig. 2.II.1*** | ***4A*** |

| Page(s) | Revision |
|---|---|
| | |
| 3.0-1 through 3.0-10 | 4 |
| 3.1-1 through 3.1-46 | 4 |
| Fig. 3.1.1 through 3.1.3 | 1 |
| 3.2-1 through 3.2-14 | 4 |
| 3.3-1 through 3.3-11 | 3 |
| 3.4-1 through 3.4-135 | 4 |
| Fig. 3.4.1 | 0 |
| Fig. 3.4.2 | 1 |
| Fig. 3.4.3 through 3.4.4 | 0 |
| Fig. 3.4.5 | 1 |
| Fig. 3.4.6 through 3.4.9 | 0 |
| Fig. 3.4.10 | 1 |
| Fig. 3.4.11 through 3.4.29 | 0 |
| Fig. 3.4.30 through 3.4.49 | 1 |
| 3.5-1 through 3.5-19 | 0 |
| Fig. 3.5.1 through 3.5.9 | 0 |
| 3.6-1 through 3.6-9 | 3 |
| 3.7-1 through 3.7-8 | 3 |
| 3.8-1 through 3.8-2 | 2 |
| 3.A-1 through 3.A-15 | 1 |
| Fig. 3.A.1 through 3.A.18 | 0 |
| ***3.II-1 through 3.II-17*** | ***4A*** |
| ***Fig. 3.II.1*** | ***4A*** |

# LIST OF EFFECTIVE PAGES FOR HISTORM 100 LAR 1014-5

| Page(s) | Revision |
|---|---|
| | |
| 4.0-1 through 4.0-2 | 3 |
| 4.1-1 through 4.1-5 | 3 |
| 4.2-1 through 4.2-11 | 3 |
| Fig. 4.2.1 through 4.2.2 | Deleted |
| Fig. 4.2.3 | 3 |
| 4.3-1 through 4.3-2 | 3 |
| 4.4-1 through 4.4-65 | 3 |
| Fig. 4.4.1 through 4.4.6 | 0 |
| Fig. 4.4.7 | 2 |
| Fig. 4.4.8 | Deleted |
| Fig. 4.4.9 | 1 |
| Fig. 4.4.10 | 0 |
| Fig. 4.4.11 | Deleted |
| Fig. 4.4.12 through 4.4.13 | 0 |
| Fig. 4.4.14 through 4.4.15 | Deleted |
| Fig. 4.4.16 through 4.4.17 | 1 |
| Fig. 4.4.18 | Deleted |
| Fig. 4.4.19 through 4.4.20 | 1 |
| Fig. 4.4.21 through 4.4.23 | Deleted |
| Fig. 4.4.24 | 0 |
| Fig. 4.4.25 through 4.4.26 | 1 |
| Fig. 4.4.27 | 3 |
| 4.5-1 through 4.5-26 | 4 |
| Fig. 4.5.1 | 0 |
| Fig. 4.5.2 | 1 |
| 4.6-1 through 4.6-2 | 3 |
| 4.7-1 through 4.7-3 | 3 |
| 4.A-1 | Deleted |
| 4.B-1 through 4.B-9 | 3 |
| Fig. 4.B.1 through 4.B.8 | 1 |
| ***4.II-1 through 4.II-8*** | ***4A*** |

# LIST OF EFFECTIVE PAGES FOR HISTORM 100 LAR 1014-5

| Page(s) | Revision |
|---|---|
| | |
| 5.0-1 through 5.0-3 | 4 |
| 5.1-1 through 5.1-26 | 4 |
| Fig. 5.1.1 | 1 |
| Fig. 5.1.2 | 0 |
| Fig. 5.1.3 | 3 |
| Fig. 5.1.4 | 0 |
| Fig. 5.1.5 | 0 |
| Fig. 5.1.6 | 0 |
| Fig. 5.1.7 | 0 |
| Fig. 5.1.8 | 0 |
| Fig. 5.1.9 | 0 |
| Fig. 5.1.10 | 0 |
| Fig. 5.1.11 | 0 |
| Fig. 5.1.12 | 1 |
| Fig. 5.1.13 | 2 |
| ***5.2-1 through 5.2-58*** | ***4A*** |
| 5.3-1 through 5.3-15 | 4 |
| Fig. 5.3.1 | 1 |
| Fig. 5.3.2 | 0 |
| Fig. 5.3.3 | 0 |
| Fig. 5.3.4 | 2 |
| Fig. 5.3.5 | 0 |
| Fig. 5.3.6 | 0 |
| Fig. 5.3.7 | 1 |
| Fig. 5.3.8 | 0 |
| Fig. 5.3.9 | 0 |
| Fig. 5.3.10 | 3 |
| Fig. 5.3.11 | 1 |
| Fig. 5.3.12 | 4 |
| Fig. 5.3.13 | 4 |
| Fig. 5.3.14 | 4 |
| Fig. 5.3.15 | 1 |
| Fig. 5.3.16 | 1 |
| Fig. 5.3.17 | 1 |
| Fig. 5.3.18 | 1 |
| Fig. 5.3.19 | 2 |
| Fig. 5.3.20 | 1 |
| Fig. 5.3.21 | 1 |
| Fig. 5.3.22 | 2 |
| 5.4-1 through 5.4-35 | 4 |
| 5.5-1 | 0 |
| 5.6-1 through 5.6-3 | 3 |
| 5.A-1 through 5.A-4 | 0 |
| 5.B-1 through 5.B-7 | 0 |
| 5.C-1through 5.C-61 | 0 |
| 5.D-1 through 5.D-6 | 1 |
| 5.E-1 through 5.E-4 | 1 |
| 5.F-1 through 5.F-4 | 3 |
| Fig. 5.F.1 through 5.F.7 | 3 |
| ***5.II-1 through 5.II-8*** | ***4A*** |

# LIST OF EFFECTIVE PAGES FOR HISTORM 100 LAR 1014-5

| Page(s) | Revision |
|---|---|
| | |
| ***6.1-1 through 6.1-19*** | ***4A*** |
| 6.2-1 through 6.2-64 | 3 |
| 6.3-1 through 6.3-19 | 3 |
| Fig. 6.3.1 | 1 |
| Fig. 6.3.1A | 1 |
| Fig. 6.3.2 | 1 |
| Fig. 6.3.3 | 0 |
| Fig. 6.3.4 | 1 |
| Fig. 6.3.5 | 1 |
| Fig. 6.3.6 | 0 |
| Fig. 6.3.7 | 1 |
| ***6.4-1 through 6.4-34*** | ***4A*** |
| Fig. 6.4.1 | Deleted |
| Fig. 6.4.2 through 6.4.15 | 1 |
| Fig. 6.4.16 | 3 |
| Fig. 6.4.17 | 3 |
| 6.5-1 | 0 |
| 6.6-1 | 0 |
| 6.7-1 and 6.7-2 | 1 |
| 6.A-1 through 6.A-20 | 2 |
| Fig. 6.A.1 through 6.A.5 | 0 |
| Fig. 6.A.6 | 2 |
| 6.B-1 and 6.B-2 | 0 |
| ***6.C-1 through 6.C-16*** | ***4A*** |
| 6.D-1 through 6.D-35 | 1 |
| ***6.II-1 through 6.II-6*** | ***4A*** |
| ***Fig. 6.II.1*** | ***4A*** |

| Page(s) | Revision |
|---|---|
| | |
| 7.0-1 | 3 |
| 7.1-1 through 7.1-8 | 4 |
| Fig. 7.1.1 | 0 |
| 7.2-1 | 3 |
| 7.3-1 | 3 |
| 7.4-1 | 3 |
| ***7.II-1*** | ***4A*** |

# LIST OF EFFECTIVE PAGES FOR HISTORM 100 LAR 1014-5

| Page(s) | Revision |
|---|---|
| | |
| ***8.0-1 through 8.0-6*** | ***4A*** |
| 8.1-1 through 8.1-42 | 4 |
| Fig. 8.1.1 | 4 |
| Fig. 8.1.2a and 8.1.2b | 0 |
| Fig. 8.1.2c | 4 |
| Fig. 8.1.2d | 1 |
| Fig. 8.1.2e and 8.1.2f | 0 |
| Fig. 8.1.3 | 0 |
| Fig. 8.1.4 | 4 |
| Fig. 8.1.5 and 8.1.6 | 0 |
| Fig. 8.1.7 | 1 |
| Fig. 8.1.8 through 8.1.11 | 0 |
| Fig. 8.1.12 and 8.1.13 | 1 |
| Fig. 8.1.14 through 8.1.17 | 0 |
| Fig. 8.1.18 and 8.1.19 | 1 |
| Fig. 8.1.20 | 4 |
| Fig. 8.1.21 | 1 |
| Fig. 8.1.22a and 8.1.22b | 1 |
| Fig. 8.1.23 | 1 |
| Fig. 8.1.24 | 0 |
| Fig. 8.1.25 through 8.1.28 | 1 |
| Fig. 8.1.29a and 8.1.29b | 1 |
| Fig. 8.1.30 | 1 |
| Fig. 8.1.31 | 4 |
| Fig. 8.1.32 | 0 |
| Fig. 8.1.33 | 4 |
| Fig. 8.1.34a | 1 |
| Fig. 8.1.34b | Deleted |
| Fig. 8.1.35 and 8.1.36 | 0 |
| Fig. 8.1.37 | 4 |
| 8.2-1 | 4 |
| 8.3-1 through 8.3-11 | 4 |
| Fig. 8.3.1 and 8.3.2a | 4 |
| Fig. 8.3.2b through 8.3.2d | 0 |
| Fig. 8.3.3 | 0 |
| Fig. 8.3.4 | 1 |
| 8.4-1 through 8.4-3 | 4 |
| Fig. 8.4.1a | 0 |
| Fig. 8.4.1b | 4 |
| 8.5-1 through 8.5-5 | 4 |
| Fig. 8.5.1 | 0 |
| 8.6-1 | 1 |
| ***8.II-1*** | ***4A*** |

# LIST OF EFFECTIVE PAGES FOR HISTORM 100 LAR 1014-5

| Page(s) | Revision |
|---|---|
| | |
| 9.0-1 | 4 |
| 9.1-1 through 9.1-29 | 4 |
| 9.2-1 through 9.2-4 | 4 |
| 9.3-1 | 1 |
| 9.4-1 | 0 |
| ***9.II-1*** | ***4A*** |

| Page(s) | Revision |
|---|---|
| | |
| 10.1-1 through 10.1-8 | 4 |
| Fig. 10.1.1 | 4 |
| 10.2-1 | 3 |
| 10.3-1 through 10.3-42 | 4 |
| Fig. 10.3.1a | 4 |
| Fig. 10.3.1b | 4 |
| Fig. 10.3.1c | 4 |
| Fig. 10.3.1d | 4 |
| Fig. 10.3.1e | 4 |
| 10.4-1 through 10.4-5 | 3 |
| 10.5-1 | 0 |
| ***10.II-1*** | ***4A*** |

| Page(s) | Revision |
|---|---|
| | |
| 11.1-1 through 11.1-18 | 4 |
| 11.2-1 through 11.2-50 | 4 |
| Fig. 11.2.1 | 0 |
| Fig. 11.2.2 through 11.2.5 | Deleted |
| Fig. 11.2.6 | 1 |
| 11.3-1 | 1 |
| ***11.II-1 through 11.II-14*** | ***4A*** |

# LIST OF EFFECTIVE PAGES FOR HISTORM 100 LAR 1014-5

| Page(s) | Revision |
|---|---|
| | |
| 12.0-1 | 0 |
| 12.1-1 through 12.1-3 | 3 |
| 12.2-1 through 12.2-8 | 3 |
| 12.3-1 | 0 |
| 12.4-1 | 0 |
| 12.5-1 | 0 |
| Appendix 12.A Cover | 3 |
| TS Bases TOC | 3 |
| B 3.0-1 through B 3.0-9 | 0 |
| B 3.1.1-1 through B 3.1.1-7 | 4 |
| B 3.1.2-1 through B 3.1.2-7 | 3 |
| B 3.1.3-1 through B 3.1.3-5 | 3 |
| B 3.1.4-1 through B 3.1.4-3 | 3 |
| B 3.2.1-1 | 3 |
| B 3.2.2-1 through B 3.2.2-3 | 1 |
| B 3.2.3-1 | 3 |
| B 3.3.1-1 through B 3.3.1-5 | 3 |
| Appendix 12.B | Deleted |
| ***12.II-1*** | ***4A*** |

| Page(s) | Revision |
|---|---|
| | |
| 13.0-1 through 13.0-2 | 4 |
| 13.1-1 | Deleted |
| 13.2-1 | Deleted |
| 13.3-1 | Deleted |
| 13.4-1 | Deleted |
| 13.5-1 | Deleted |
| 13.6-1 | 4 |
| ***13.II-1*** | ***4A*** |

# CHAPTER 1†: GENERAL DESCRIPTION

## 1.0 GENERAL INFORMATION

This Final Safety Analysis Report (FSAR) for Holtec International's HI-STORM 100 System is a compilation of information and analyses to support a United States Nuclear Regulatory Commission (NRC) licensing review as a spent nuclear fuel (SNF) dry storage cask under requirements specified in 10CFR72 [1.0.1]. This FSAR describes the basis for NRC approval and issuance of a Certificate of Compliance (C of C) for storage under provisions of 10CFR72, Subpart L, for the HI-STORM 100 System to safely store spent nuclear fuel (SNF) at an Independent Spent Fuel Storage Installation (ISFSI). This report has been prepared in the format and content suggested in NRC Regulatory Guide 3.61 [1.0.2] and NUREG-1536 Standard Review Plan for Dry Cask Storage Systems [1.0.3] to facilitate the NRC review process.

The purpose of this chapter is to provide a general description of the design features and storage capabilities of the HI-STORM 100 System, drawings of the structures, systems, and components important to safety, and the qualifications of the certificate holder. This report is also suitable for incorporation into a site-specific Safety Analysis Report, which may be submitted by an applicant for a site-specific 10 CFR 72 license to store SNF at an ISFSI or a facility similar in objective and scope. Table 1.0.1 contains a listing of the terminology and notation used in this FSAR.

To aid NRC review, additional tables and references have been added to facilitate the location of information requested by NUREG-1536. Table 1.0.2 provides a matrix of the topics in NUREG-1536 and Regulatory Guide 3.61, the corresponding 10CFR72 requirements, and a reference to the applicable FSAR section that addresses each topic.

The HI-STORM 100 FSAR is in full compliance with the intent of all regulatory requirements listed in Section III of each chapter of NUREG-1536. However, an exhaustive review of the provisions in NUREG-1536, particularly Section IV (Acceptance Criteria) and Section V (Review Procedures) has identified certain deviations from a verbatim compliance to all guidance. A list of all such items, along with a discussion of their intent and Holtec International's approach for compliance with the underlying intent is presented in Table 1.0.3 herein. Table 1.0.3 also contains the justification for the alternative method for compliance adopted in this FSAR. The justification may be in the form of a supporting analysis, established industry practice, or other NRC guidance documents. Each chapter in this FSAR provides a clear statement with respect to the extent of compliance to the NUREG-1536 provisions. Chapter 1 is in full compliance with NUREG-1536; no exceptions are taken.

---

† This chapter has been prepared in the format and section organization set forth in Regulatory Guide 3.61. However, the material content of this chapter also fulfills the requirements of NUREG-1536. Pagination and numbering of sections, figures, and tables are consistent with the convention set down in Chapter 1, Section 1.0, herein. Finally, all terms-of-art used in this chapter are consistent with the terminology of the glossary (Table 1.0.1) and component nomenclature of the Bill-of-Materials (Section 1.5).

HOLTEC INTERNATIONAL COPYRIGHTED MATERIAL

The generic design basis and the corresponding safety analysis of the HI-STORM 100 System contained in this FSAR are intended to bound the SNF characteristics, design, conditions, and interfaces that exist in the vast majority of domestic power reactor sites and potential away-from-reactor storage sites in the contiguous United States. This FSAR also provides the basis for component fabrication and acceptance, and the requirements for safe operation and maintenance of the components, consistent with the design basis and safety analysis documented herein. In accordance with 10CFR72, Subpart K, site-specific implementation of the generically certified HI-STORM 100 System requires that the licensee perform a site-specific evaluation, as defined in 10CFR72.212. The HI-STORM 100 System FSAR identifies a limited number of conditions that are necessarily site-specific and are to be addressed in the licensee's 10CFR72.212 evaluation. These include:

- Siting of the ISFSI and design of the storage pad (including the embedment for anchored cask users) and security system. Site-specific demonstration of compliance with regulatory dose limits. Implementation of a site-specific ALARA program.

- An evaluation of site-specific hazards and design conditions that may exist at the ISFSI site or the transfer route between the plant's cask receiving bay and the ISFSI. These include, but are not limited to, explosion and fire hazards, flooding conditions, land slides, and lightning protection.

- Determination that the physical and nucleonic characteristics and the condition of the SNF assemblies to be dry stored meet the fuel acceptance requirements of the Certificate of Compliance.

- An evaluation of interface and design conditions that exist within the plant's fuel building in which canister fuel loading, canister closure, and canister transfer operations are to be conducted in accordance with the applicable 10CFR50 requirements and technical specifications for the plant.

- Detailed site-specific operating, maintenance, and inspection procedures prepared in accordance with the generic procedures and requirements provided in Chapters 8 and 9, and the technical specifications provided in the Certificate of Compliance.

- Performance of pre-operational testing.

- Implementation of a safeguards and accountability program in accordance with 10CFR73. Preparation of a physical security plan in accordance with 10CFR73.55.

- Review of the reactor emergency plan, quality assurance (QA) program, training program, and radiation protection program.

HOLTEC INTERNATIONAL COPYRIGHTED MATERIAL

The generic safety analyses contained in the HI-STORM 100 FSAR may be used as input and for guidance by the licensee in performing a 10CFR72.212 evaluation.

Within this report, all figures, tables and references cited are identified by the double decimal system m.n.i, where m is the chapter number, n is the section number, and i is the sequential number. Thus, for example, Figure 1.2.3 is the third figure in Section 1.2 of Chapter 1.

Revisions to this document are made on a section level basis. Complete sections have been replaced if any material in the section changed. The specific changes are noted with revision bars in the right margin. Figures are revised individually. Drawings are controlled separately within the Holtec QA program and have individual revision numbers. Bills-of-Material (BOMs) are considered separate drawings and are not necessarily at the same revision level as the drawing(s) to which they apply. If a drawing or BOM was revised in support of the current FSAR revision, that drawing/BOM is included in Section 1.5 at its latest revision level. Drawings and BOMs appearing in this FSAR may be revised between formal updates to the FSAR. Therefore, the revisions of drawings/BOMs in Section 1.5 may not be current.

*The HI-STORM 100 System has been expanded slightly to include options specific for Indian Point Unit 1. The affected components are the MPC enclosure vessel, MPC-32 and MPC-32F, HI-STORM 100S Version B and HI-TRAC 100D. Information pertaining to these changes is generally contained in supplements to each chapter identified by a Roman numeral "II" (i.e. Chapter 1 and Supplement 1.II). Certain sections of the main FSAR are also affected and are appropriately modified for continuity with the "II" supplements. Unless superseded or specifically modified by information in the "II" supplements, the information in the main FSAR chapters is applicable to the HI-STORM 100 System at Indian Point Unit 1.*

### 1.0.1 Engineering Change Orders

The changes authorized by the Holtec ECOs (with corresponding 10CFR72.48 evaluations, if applicable) listed in the following table are reflected in Revision 4 of this FSAR.

LIST OF ECO'S AND APPLICABLE 10CFR72.48 EVALUATIONS

| Affected Item | ECO Number | 72.48 Evaluation or Screening Number |
|---|---|---|
| MPC-68/68F/68FF Basket | 1021-63 | 718 |
| MPC-24/24E/24EF Basket | 1022-59 | 718 |
| MPC-32 Basket | 1023-32 | 718 |
| MPC Enclosure Vessel | 1021-71 | 634 |
| HI-STORM Overpack | 1024-95, 1024-103, 1024-115 | 736, 776 |
| HI-TRAC 100 and 100D Transfer Cask | 1026-30, 1026-31, 1026-32, 1026-40 | 670, 760 |
| HI-TRAC 125 and 125D Transfer Cask | - | - |
| General FSAR Changes | 5014-112, 5014-114, 5014-121, 5014-122, 5014-123, 5014-124, 5014-125, 5014-126, 5014-129 | 763, 751, 756, 762 |

Table 1.0.1

TERMINOLOGY AND NOTATION

**ALARA** is an acronym for As Low As Reasonably Achievable.

**Boral** is a generic term to denote an aluminum-boron carbide cermet manufactured in accordance with U.S. Patent No. 4027377. The individual material supplier may use another trade name to refer to the same product.

**Boral™** means Boral manufactured by AAR Advanced Structures.

**BWR** is an acronym for boiling water reactor.

**C.G.** is an acronym for center of gravity.

**Commercial Spent Fuel or CSF** refers to nuclear fuel used to produce energy in a commercial nuclear power plant.

**Confinement Boundary** means the outline formed by the sealed, cylindrical enclosure of the Multi-Purpose Canister (MPC) shell welded to a solid baseplate, a lid welded around the top circumference of the shell wall, the port cover plates welded to the lid, and the closure ring welded to the lid and MPC shell providing the redundant sealing.

**Confinement System** means the Multi-Purpose Canister (MPC) which encloses and confines the spent nuclear fuel during storage.

**Controlled Area** means that area immediately surrounding an ISFSI for which the owner/user exercises authority over its use and within which operations are performed.

**Cooling Time (or post-irradiation cooling time)** for a spent fuel assembly is the time between reactor shutdown and the time the spent fuel assembly is loaded into the MPC.

**DBE** means Design Basis Earthquake.

**DCSS** is an acronym for Dry Cask Storage System.

**Damaged Fuel Assembly** is a fuel assembly with known or suspected cladding defects, as determined by review of records, greater than pinhole leaks or hairline cracks, empty fuel rod locations that are not replaced with dummy fuel rods, or those that cannot be handled by normal means. Fuel assemblies that cannot be handled by normal means due to fuel cladding damage are considered fuel debris.

**Damaged Fuel Container (or Canister)** means a specially designed enclosure for damaged fuel or fuel debris which permits gaseous and liquid media to escape while minimizing dispersal of gross particulates. The Damaged Fuel Container/Canister (DFC) features a lifting location which is suitable for remote handling of a loaded or unloaded DFC.

HOLTEC INTERNATIONAL COPYRIGHTED MATERIAL

**Design Heat Load** is the computed heat rejection capacity of the HI-STORM system with a certified MPC loaded with CSF stored in *uniform storage* with the ambient at the normal temperature and the peak cladding temperature (PCT) at 400ºC. The Design Heat Load is less than the thermal capacity of the system by a suitable margin that reflects the conservatism in the system thermal analysis.

**Design Life** is the minimum duration for which the component is engineered to perform its intended function set forth in this FSAR, if operated and maintained in accordance with this FSAR.

**Design Report** is a document prepared, reviewed and QA validated in accordance with the provisions of 10CFR72 Subpart G. The Design Report shall demonstrate compliance with the requirements set forth in the Design Specification. A Design Report is mandatory for systems, structures, and components designated as Important to Safety. The FSAR serves as the Design Report for the HI-STORM 100 System.

**Design Specification** is a document prepared in accordance with the quality assurance requirements of 10CFR72 Subpart G to provide a complete set of design criteria and functional requirements for a system, structure, or component, designated as Important to Safety, intended to be used in the operation, implementation, or decommissioning of the HI-STORM 100 System. The FSAR serves as the Design Specification for the HI-STORM 100 System.

**Enclosure Vessel (or MPC Enclosure Vessel)** means the pressure vessel defined by the cylindrical shell, baseplate, port cover plates, lid, closure ring, and associated welds that provides confinement for the helium gas contained within the MPC. The Enclosure Vessel (EV) and the fuel basket together constitute the multi-purpose canister.

**Fracture Toughness** is a property which is a measure of the ability of a material to limit crack propagation under a suddenly applied load.

**FSAR** is an acronym for Final Safety Analysis Report (10CFR72).

**Fuel Basket** means a honeycombed structural weldment with square openings which can accept a fuel assembly of the type for which it is designed.

**Fuel Debris** refers to ruptured fuel rods, severed rods, loose fuel pellets, or fuel assemblies with known or suspected defects which cannot be handled by normal means due to fuel cladding damage.

**High Burnup Fuel, or HBF** is a commercial spent fuel assembly with an average burnup greater than 45,000 MWD/MTU.

**HI-TRAC transfer cask or HI-TRAC** means the transfer cask used to house the MPC during MPC fuel loading, unloading, drying, sealing, and on-site transfer operations to a HI-STORM storage overpack or HI-STAR storage/transportation overpack. The HI-TRAC shields the loaded MPC

HOLTEC INTERNATIONAL COPYRIGHTED MATERIAL

allowing loading operations to be performed while limiting radiation exposure to personnel. HI-TRAC is an acronym for **H**oltec **I**nternational **Tra**nsfer **C**ask. In this FSAR there are several HI-TRAC transfer casks, the 125-ton standard design HI-TRAC (HI-TRAC-125), the 125-ton dual-purpose lid design (HI-TRAC 125D), the 100-ton HI-TRAC (HI-TRAC-100) and the 100-ton dual purpose lid design (HI-TRAC 100D *including the HI-TRAC 100D Version IP1*). The 100-ton HI-TRAC is provided for use at sites with a maximum crane capacity of less than 125 tons. The term HI-TRAC is used as a generic term to refer to all HI-TRAC transfer cask designs, unless the discussion requires distinguishing among the designs. The HI-TRAC is equipped with a pair of lifting trunnions and the HI-TRAC 100 and HI-TRAC 125 designs also include pocket trunnions. The trunnions are used to lift and downend/upend the HI-TRAC with a loaded MPC.

**HI-STORM overpack** or storage overpack means the cask that receives and contains the sealed multi-purpose canisters containing spent nuclear fuel. It provides the gamma and neutron shielding, ventilation passages, missile protection, and protection against natural phenomena and accidents for the MPC. The term "overpack" as used in this FSAR refers to all overpack designs, including the standard design (HI-STORM 100) and two alternate designs (HI-STORM 100S and HI-STORM 100S Version B). The term "overpack" also applies to those overpacks designed for high seismic deployment (HI-STORM 100A or HI-STORM 100SA), unless otherwise clarified.

**HI-STORM 100 System** consists of any loaded MPC model placed within any design variant of the HI-STORM overpack.

**Holtite*TM*** is the trade name for all present and future neutron shielding materials formulated under Holtec International's R&D program dedicated to developing shielding materials for application in dry storage and transport systems. The Holtite development program is an ongoing experimentation effort to identify neutron shielding materials with enhanced shielding and temperature tolerance characteristics. Holtite-A™ is the first and only shielding material qualified under the Holtite R&D program. As such, the terms Holtite and Holtite-A may be used interchangeably throughout this FSAR.

**Holtite™-A** is a trademarked Holtec International neutron shield material.

**Important to Safety** (ITS) means a function or condition required to store spent nuclear fuel safely; to prevent damage to spent nuclear fuel during handling and storage, and to provide reasonable assurance that spent nuclear fuel can be received, handled, packaged, stored, and retrieved without undue risk to the health and safety of the public.

**Independent Spent Fuel Storage Installation (ISFSI)** means a facility designed, constructed, and licensed for the interim storage of spent nuclear fuel and other radioactive materials associated with spent fuel storage in accordance with 10CFR72.

**Intact Fuel Assembly** is defined as a fuel assembly without known or suspected cladding defects greater than pinhole leaks and hairline cracks, and which can be handled by normal means. Fuel

assemblies without fuel rods in fuel rod locations shall not be classified as Intact Fuel Assemblies unless dummy fuel rods are used to displace an amount of water greater than or equal to that displaced by the fuel rod(s).

**License Life** means the duration for which the system is authorized by virtue of its certification by the U.S. NRC.

**Long-term Storage** means the time beginning after on-site handling is complete and the loaded overpack is at rest in its designated storage location on the ISFSI pad and lasting up to the end of the licensed life of the HI-STORM 100 System (20 years).

**Lowest Service Temperature (LST)** is the minimum metal temperature of a part for the specified service condition.

**Maximum Reactivity** means the highest possible k-effective including bias, uncertainties, and calculational statistics evaluated for the worst-case combination of fuel basket manufacturing tolerances.

**METAMIC®** is a trade name for an aluminum/boron carbide composite neutron absorber material qualified for use in the MPCs.

**METCON™** is a trade name for the HI-STORM overpack. The trademark is derived from the **met**al-**con**crete composition of the HI-STORM overpack.

**MGDS** is an acronym for Mined Geological Disposal System.

**Minimum Enrichment** is the minimum assembly average enrichment. Natural uranium blankets are not considered in determining minimum enrichment.

**Moderate Burnup Fuel, or MBF** is a commercial spent fuel assembly with an average burnup less than or equal to 45,000 MWD/MTU.

**Multi-Purpose Canister (MPC)** means the sealed canister consisting of a honeycombed fuel basket for spent nuclear fuel storage, contained in a cylindrical canister shell (the MPC Enclosure Vessel). There are different MPCs with different fuel basket geometries for storing PWR or BWR fuel, but all MPCs have identical exterior ~~dimensions~~*diameters*. The MPC is the confinement boundary for storage conditions.

**NDT** is an acronym for Nil Ductility Transition Temperature, which is defined as the temperature at which the fracture stress in a material with a small flaw is equal to the yield stress in the same material if it had no flaws.

**Neutron Absorber Material** is a generic term used in this FSAR to indicate any neutron absorber

material qualified for use in the HI-STORM 100 System MPCs.

**Neutron Shielding** means a material used to thermalize and capture neutrons emanating from the radioactive spent nuclear fuel.

**Non-Fuel Hardware** is defined as Burnable Poison Rod Assemblies (BPRAs), Thimble Plug Devices (TPDs), Control Rod Assemblies (CRAs), Axial Power Shaping Rods (APSRs), Wet Annular Burnable Absorbers (WABAs), Rod Cluster Control Assemblies (RCCAs), water displacement guide tube plugs, orifice rod assemblies, and vibration suppressor inserts.

**Planar-Average Initial Enrichment** is the average of the distributed fuel rod initial enrichments within a given axial plane of the assembly lattice.

**Plain Concrete** is concrete that is unreinforced and is of density specified in this FSAR .

**Post-Core Decay Time (PCDT)** is synonymous with cooling time.

**PWR** is an acronym for pressurized water reactor.

**Reactivity** is used synonymously with effective neutron multiplication factor or k-effective.

**Regionalized Fuel Loading** is a term used to describe an optional fuel loading strategy used in lieu of uniform fuel loading. Regionalized fuel loading allows high heat emitting fuel assemblies to be stored in fuel storage locations in the center of the fuel basket provided lower heat emitting fuel assemblies are stored in the peripheral fuel storage locations. Users choosing regionalized fuel loading must also consider other restrictions in the CoC such as those for non-fuel hardware and damaged fuel containers. Regionalized fuel loading does not apply to the MPC-68F model.

**SAR** is an acronym for Safety Analysis Report (10CFR71).

**Service Life** means the duration for which the component is reasonably expected to perform its intended function, if operated and maintained in accordance with the provisions of this FSAR. Service Life may be much longer than the Design Life because of the conservatism inherent in the codes, standards, and procedures used to design, fabricate, operate, and maintain the component.

**Short-term Operations** means those normal operational evolutions necessary to support fuel loading or fuel unloading operations. These include, but are not limited to MPC cavity drying, helium backfill, MPC transfer, and onsite handling of a loaded HI-TRAC transfer cask.

**Single Failure Proof** means that the handling system is designed so that all directly loaded tension and compression members are engineered to satisfy the enhanced safety criteria of Paragraphs 5.1.6(1)(a) and (b) of NUREG-0612.

HOLTEC INTERNATIONAL COPYRIGHTED MATERIAL

Table 1.0.1 (continued)

TERMINOLOGY AND NOTATION

**SNF** is an acronym for spent nuclear fuel.

**SSC** is an acronym for Structures, Systems and Components.

**STP** is Standard Temperature and Pressure conditions.

**Thermal Capacity** of the HI-STORM system is defined as the amount of heat the storage system, containing an MPC loaded with CSF stored in *uniform storage,* will actually reject with the ambient environment at the normal temperature and the peak fuel cladding temperature (PCT) at 400ºC.

**Thermosiphon** is the term used to describe the buoyancy-driven natural convection circulation of helium within the MPC fuel basket maximum heat load during short-term operating conditions up to which no time limit or other restriction is imposed on the operating condition.

**Uniform Fuel Loading** is a fuel loading strategy where any authorized fuel assembly may be stored in any fuel storage location, subject to other restrictions in the CoC, such as those applicable to non-fuel hardware, and damaged fuel containers.

**ZPA** is an acronym for zero period acceleration.

**ZR** means any zirconium-based fuel cladding material authorized for use in a commercial nuclear power plant reactor. Any reference to Zircaloy fuel cladding in this FSAR applies to any zirconium-based fuel cladding material.

HOLTEC INTERNATIONAL COPYRIGHTED MATERIAL

Table 1.0.2

HI-STORM 100 SYSTEM FSAR REGULATORY COMPLIANCE
CROSS REFERENCE MATRIX

| Regulatory Guide 3.61 Section and Content | Associated NUREG-1536 Review Criteria | Applicable 10CFR72 or 10CFR20 Requirement | HI-STORM FSAR |
|---|---|---|---|
| **1. General Description** | | | |
| 1.1 Introduction | 1.III.1 General Description & Operational Features | 10CFR72.24(b) | 1.1 |
| 1.2 General Description | 1.III.1 General Description & Operational Features | 10CFR72.24(b) | 1.2 |
| 1.2.1 Cask Character-istics | 1.III.1 General Description & Operational Features | 10CFR72.24(b) | 1.2.1 |
| 1.2.2 Operational Features | 1.III.1 General Description & Operational Features | 10CFR72.24(b) | 1.2.2 |
| 1.2.3 Cask Contents | 1.III.3 DCSS Contents | 10CFR72.2(a)(1)<br>10CFR72.236(a) | 1.2.3 |
| 1.3 Identification of Agents & Contractors | 1.III.4 Qualification of the Applicant | 10CFR72.24(j)<br>10CFR72.28(a) | 1.3 |
| 1.4 Generic Cask Arrays | 1.III.1 General Description & Operational Features | 10CFR72.24(c)(3) | 1.4 |
| 1.5 Supplemental Data | 1.III.2 Drawings | 10CFR72.24(c)(3) | 1.5 |
| NA | 1.III.6 Consideration of Transport Requirements | 10CFR72.230(b)<br>10CFR72.236(m) | 1.1 |
| NA | 1.III.5 Quality Assurance | 10CFR72.24(n) | 1.3 |
| **2. Principal Design Criteria** | | | |
| 2.1 Spent Fuel To Be Stored | 2.III.2.a Spent Fuel Specifications | 10CFR72.2(a)(1)<br>10CFR72.236(a) | 2.1 |
| 2.2 Design Criteria for Environmental Conditions and Natural Phenomena | 2.III.2.b External Conditions,<br>2.III.3.b Structural,<br>2.III.3.c Thermal | 10CFR72.122(b) | 2.2 |
| | | 10CFR72.122(c) | 2.2.3.3, 2.2.3.10 |
| | | 10CFR72.122(b)(1) | 2.2 |
| | | 10CFR72.122(b)(2) | 2.2.3.11 |
| | | 10CFR72.122(h)(1) | 2.0 |
| 2.2.1 Tornado and Wind Loading | 2.III.2.b External Conditions | 10CFR72.122(b)(2) | 2.2.3.5 |

Table 1.0.2 (continued)

HI-STORM 100 SYSTEM FSAR REGULATORY COMPLIANCE
CROSS REFERENCE MATRIX

| Regulatory Guide 3.61 Section and Content | Associated NUREG-1536 Review Criteria | Applicable 10CFR72 or 10CFR20 Requirement | HI-STORM FSAR |
|---|---|---|---|
| | | | |
| 2.2.2 Water Level (Flood) | 2.III.2.b External Conditions<br>2.III.3.b Structural | 10CFR72.122(b)(2) | 2.2.3.6 |
| 2.2.3 Seismic | 2.III.3.b Structural | 10CFR72.102(f)<br>10CFR72.122(b)(2) | 2.2.3.7 |
| 2.2.4 Snow and Ice | 2.III.2.b External Conditions<br>2.III.3.b Structural | 10CFR72.122(b) | 2.2.1.6 |
| 2.2.5 Combined Load | 2.III.3.b Structural | 10CFR72.24(d)<br>10CFR72.122(b)(2)(ii) | 2.2.7 |
| NA | 2.III.1 Structures, Systems, and Components Important to Safety | 10CFR72.122(a)<br>10CFR72.24(c)(3) | 2.2.4 |
| NA | 2.III.2 Design Criteria for Safety Protection Systems | 10CFR72.236(g)<br>10CFR72.24(c)(1)<br>10CFR72.24(c)(2)<br>10CFR72.24(c)(4)<br>10CFR72.120(a)<br>10CFR72.236(b) | 2.0, 2.2 |
| NA | 2.III.3.c Thermal | 10CFR72.128(a)(4) | 2.3.2.2, 4.0 |
| NA | 2.III.3f Operating Procedures | 10CFR72.24(f)<br>10CFR72.128(a)(5) | 10.0, 8.0 |
| | | 10CFR72.236(h) | 8.0 |
| | | 10CFR72.24(1)(2) | 1.2.1, 1.2.2 |
| | | 10CFR72.236(1) | 2.3.2.1 |
| | | 10CFR72.24(e)<br>10CFR72.104(b) | 10.0, 8.0 |
| | 2.III.3.g Acceptance Tests & Maintenance | 10CFR72.122(1)<br>10CFR72.236(g)<br>10CFR72.122(f)<br>10CFR72.128(a)(1) | 9.0 |
| 2.3 Safety Protection Systems | -- | -- | 2.3 |

HOLTEC INTERNATIONAL COPYRIGHTED MATERIAL

Table 1.0.2 (continued)

HI-STORM 100 SYSTEM FSAR REGULATORY COMPLIANCE
CROSS REFERENCE MATRIX

| Regulatory Guide 3.61 Section and Content | Associated NUREG-1536 Review Criteria | Applicable 10CFR72 or 10CFR20 Requirement | HI-STORM FSAR |
|---|---|---|---|
| 2.3.1 General | -- | -- | 2.3 |
| 2.3.2 Protection by Multiple Confinement Barriers and Systems | 2.III.3.b Structural | 10CFR72.236(1) | 2.3.2.1 |
| | 2.III.3.c Thermal | 10CFR72.236(f) | 2.3.2.2 |
| | 2.III.3.d Shielding/ Confinement/ Radiation Protection | 10CFR72.126(a)<br>10CFR72.128(a)(2) | 2.3.5.2 |
| | | 10CFR72.128(a)(3) | 2.3.2.1 |
| | | 10CFR72.236(d) | 2.3.2.1, 2.3.5.2 |
| | | 10CFR72.236(e) | 2.3.2.1 |
| 2.3.3 Protection by Equipment & Instrument Selection | 2.III.3.d Shielding/ Confinement/ Radiation Protection | 10CFR72.122(h)(4)<br>10CFR72.122(i)<br>10CFR72.128(a)(1) | 2.3.5 |
| 2.3.4 Nuclear Criticality Safety | 2.III.3.e Criticality | 10CFR72.124(a)<br>10CFR72.236(c)<br>10CFR72.124(b) | 2.3.4, 6.0 |
| 2.3.5 Radiological Protection | 2.III.3.d Shielding/ Confinement/ Radiation Protection | 10CFR72.24(d)<br>10CFR72.104(a)<br>10CFR72.236(d) | 10.4.1 |
| | | 10CFR72.24(d)<br>10CFR72.106(b)<br>10CFR72.236(d) | 10.4.2 |
| | | 10CFR72.24(m) | 2.3.2.1 |
| 2.3.6 Fire and Explosion Protection | 2.III.3.b Structural | 10CFR72.122(c) | 2.3.6, 2.2.3.10 |
| 2.4 Decommissioning Considerations | 2.III.3.h Decommissioning | 10CFR72.24(f)<br>10CFR72.130<br>10CFR72.236(h) | 2.4 |
| | 14.III.1 Design | 10CFR72.130 | 2.4 |
| | 14.III.2 Cask Decontamination | 10CFR72.236(i) | 2.4 |

Table 1.0.2 (continued)

HI-STORM 100 SYSTEM FSAR REGULATORY COMPLIANCE
CROSS REFERENCE MATRIX

| Regulatory Guide 3.61 Section and Content | Associated NUREG-1536 Review Criteria | Applicable 10CFR72 or 10CFR20 Requirement | HI-STORM FSAR |
|---|---|---|---|
| | 14.III.3 Financial Assurance & Record Keeping | 10CFR72.30 | (1) |
| | 14.III.4 License Termination | 10CFR72.54 | (1) |
| **3. Structural Evaluation** | | | |
| 3.1 Structural Design | 3.III.1 SSC Important to Safety | 10CFR72.24(c)(3)<br>10CFR72.24(c)(4) | 3.1 |
| | 3.III.6 Concrete Structures | 10CFR72.24(c) | 3.1 |
| 3.2 Weights and Centers of Gravity | 3.V.1.b.2 Structural Design Features | -- | 3.2 |
| 3.3 Mechanical Properties of Materials | 3.V.1.c Structural Materials | 10CFR72.24(c)(3) | 3.3 |
| | 3.V.2.c Structural Materials | | |
| NA | 3.III.2 Radiation Shielding, Confinement, and Subcriticality | 10CFR72.24(d)<br>10CFR72.124(a)<br>10CFR72.236(c)<br>10CFR72.236(d)<br>10CFR72.236(1) | 3.4.4.3<br>3.4.7.3<br>3.4.10 |
| NA | 3.III.3 Ready Retrieval | 10CFR72.122(f)<br>10CFR72.122(h)<br>10CFR72.122(l) | 3.4.4.3 |
| NA | 3.III.4 Design-Basis Earthquake | 10CFR72.24(c)<br>10CFR72.102(f) | 3.4.7 |
| NA | 3.III.5 20 Year Minimum Design Length | 10CFR72.24(c)<br>10CFR72.236(g) | 3.4.11<br>3.4.12 |
| 3.4 General Standards for Casks | -- | -- | 3.4 |
| 3.4.1 Chemical and Galvanic Reactions | 3.V.1.b.2 Structural Design Features | -- | 3.4.1 |
| 3.4.2 Positive Closure | -- | -- | 3.4.2 |
| 3.4.3 Lifting Devices | 3.V.1.ii(4)(a) Trunnions<br>-- | -- | 3.4.3 |

Table 1.0.2 (continued)

HI-STORM 100 SYSTEM FSAR REGULATORY COMPLIANCE
CROSS REFERENCE MATRIX

| Regulatory Guide 3.61 Section and Content | Associated NUREG-1536 Review Criteria | Applicable 10CFR72 or 10CFR20 Requirement | HI-STORM FSAR |
|---|---|---|---|
| 3.4.4 Heat | 3.V.1.d Structural Analysis | 10CFR72.24(d)<br>10CFR72.122(b) | 3.4.4 |
| 3.4.5 Cold | 3.V.1.d Structural Analysis | 10CFR72.24(d)<br>10CFR72.122(b) | 3.4.5 |
| 3.5 Fuel Rods | -- | 10CFR72.122(h)(1) | 3.5 |
| **4. Thermal Evaluation** | | | |
| 4.1 Discussion | 4.III Regulatory Requirements | 10CFR72.24(c)(3)<br>10CFR72.128(a)(4)<br>10CFR72.236(f)<br>10CFR72.236(h) | 4.1 |
| 4.2 Summary of Thermal Properties of Materials | 4.V.4.b Material Properties | -- | 4.2 |
| 4.3 Specifications for Components | 4.IV Acceptance Criteria ISG-11, Revision 3 | 10CFR72.122(h)(1) | 4.3 |
| 4.4 Thermal Evaluation for Normal Conditions of Storage | 4.IV Acceptance Criteria ISG-11, Revision 3 | 10CFR72.24(d)<br>10CFR72.236(g) | 4.4, 4.5 |
| NA | 4.IV Acceptance Criteria | 10CFR72.24(d)<br>10CFR72.122(c) | 11.1, 11.2 |
| 4.5 Supplemental Data | 4.V.6 Supplemental Info. | -- | -- |
| **5. Shielding Evaluation** | | | |
| 5.1 Discussion and Results | -- | 10CFR72.104(a)<br>10CFR72.106(b) | 5.1 |
| 5.2 Source Specification | 5.V.2 Radiation Source Definition | -- | 5.2 |
| 5.2.1 Gamma Source | 5.V.2.a Gamma Source | -- | 5.2.1, 5.2.3 |

HOLTEC INTERNATIONAL COPYRIGHTED MATERIAL

Table 1.0.2 (continued)

HI-STORM 100 SYSTEM FSAR REGULATORY COMPLIANCE
CROSS REFERENCE MATRIX

| Regulatory Guide 3.61 Section and Content | Associated NUREG-1536 Review Criteria | Applicable 10CFR72 or 10CFR20 Requirement | HI-STORM FSAR |
|---|---|---|---|
| 5.2.2 Neutron Source | 5.V.2.b Neutron Source | -- | 5.2.2, 5.2.3 |
| 5.3 Model Specification | 5.V.3 Shielding Model Specification | -- | 5.3 |
| 5.3.1 Description of the Radial and Axial Shielding Configura-tions | 5.V.3.a Configuration of the Shielding and Source | 10CFR72.24(c)(3) | 5.3.1 |
| 5.3.2 Shield Regional Densities | 5.V.3.b Material Properties | 10CFR72.24(c)(3) | 5.3.2 |
| 5.4 Shielding Evaluation | 5.V.4 Shielding Analysis | 10CFR72.24(d)<br>10CFR72.104(a)<br>10CFR72.106(b)<br>10CFR72.128(a)(2)<br>10CFR72.236(d) | 5.4 |
| 5.5 Supplemental Data | 5.V.5 Supplemental Info. | -- | Appendices 5.A, 5.B, and 5.C |
| **6. Criticality Evaluation** | | | |
| 6.1 Discussion and Results | -- | -- | 6.1 |
| 6.2 Spent Fuel Loading | 6.V.2 Fuel Specification | -- | 6.1, 6.2 |
| 6.3 Model Specifications | 6.V.3 Model Specification | -- | 6.3 |
| 6.3.1 Description of Calcula-tional Model | 6.V.3.a Configuration | --<br>10CFR72.124(b)<br>10CFR72.24(c)(3) | 6.3.1 |

Table 1.0.2 (continued)

HI-STORM 100 SYSTEM FSAR REGULATORY COMPLIANCE
CROSS REFERENCE MATRIX

| Regulatory Guide 3.61 Section and Content | Associated NUREG-1536 Review Criteria | Applicable 10CFR72 or 10CFR20 Requirement | HI-STORM FSAR |
|---|---|---|---|
| 6.3.2 Cask Regional Densities | 6.V.3.b Material Properties | 10CFR72.24(c)(3)<br>10CFR72.124(b)<br>10CFR72.236(g) | 6.3.2 |
| 6.4 Criticality Calculations | 6.V.4 Criticality Analysis | 10CFR72.124 | 6.4 |
| 6.4.1 Calculational or Experimental Method | 6.V.4.a Computer Programs and<br>6.V.4.b Multiplication Factor | 10CFR72.124 | 6.4.1 |
| 6.4.2 Fuel Loading or Other Contents Loading Optimization | 6.V.3.a Configuration | -- | 6.4.2, 6.3.3 |
| 6.4.3 Criticality Results | 6.IV Acceptance Criteria | 10CFR72.24(d)<br>10CFR72.124<br>10CFR72.236(c) | 6.1, 6.2, 6.3.1, 6.3.2 |
| 6.5 Critical Benchmark Experiments | 6.V.4.c Benchmark Comparisons | -- | 6.5, Appendix 6.A, 6.4.3 |
| 6.6 Supplemental Data | 6.V.5 Supplemental Info. | -- | Appendices 6.B,6.C, and 6.D |
| **7. Confinement** | | | |
| 7.1 Confinement Boundary | 7.III.1 Description of Structures, Systems and Components Important to Safety<br>ISG-18 | 10CFR72.24(c)(3)<br>10CFR72.24(1) | 7.0, 7.1 |
| 7.1.1 Confinement Vessel | 7.III.2 Protection of Spent Fuel Cladding | 10CFR72.122(h)(l) | 7.1, 7.1.1 |
| 7.1.2 Confinement Penetrations | -- | -- | 7.1.2 |
| 7.1.3 Seals and Welds | -- | -- | 7.1.3 |

Table 1.0.2 (continued)

HI-STORM 100 SYSTEM FSAR REGULATORY COMPLIANCE
CROSS REFERENCE MATRIX

| Regulatory Guide 3.61 Section and Content | Associated NUREG-1536 Review Criteria | Applicable 10CFR72 or 10CFR20 Requirement | HI-STORM FSAR |
|---|---|---|---|
| 7.1.4 Closure | 7.III.3 Redundant Sealing | 10CFR72.236(e) | 7.1.1, 7.1.4 |
| 7.2 Requirements for Normal Conditions of Storage | 7.III.7 Evaluation of Confinement System ISG-18 | 10CFR72.24(d) 10CFR72.236(1) | 7.1 |
| 7.2.1 Release of Radioactive Material | 7.III.6 Release of Nuclides to the Environment | 10CFR72.24(1)(1) | 7. 1 |
| | 7.III.4 Monitoring of Confinement System | 10CFR72.122(h)(4) 10CFR72.128(a)(l) | 7.1.4 |
| | 7.III.5 Instrumentation | 10CFR72.24(l) 10CFR72.122(i) | 7.1.4 |
| | 7.III.8 Annual Dose ISG-18 | 10CFR72.104(a) | 7.1 |
| 7.2.2 Pressurization of Confinement Vessel | -- | -- | 7.1 |
| 7.3 Confinement Requirements for Hypothetical Accident Conditions | 7.III.7 Evaluation of Confinement System ISG-18 | 10CFR72.24(d) 10CFR72.122(b) 10CFR72.236(l) | 7.1 |
| 7.3.1 Fission Gas Products | -- | -- | 7.1 |
| 7.3.2 Release of Contents | ISG-18 | -- | 7.1 |
| NA | -- | 10CFR72.106(b) | 7.1 |
| 7.4 Supplemental Data | 7.V Supplemental Info. | -- | -- |
| **8. Operating Procedures** | | | |
| 8.1 Procedures for Loading the Cask | 8.III.1 Develop Operating Procedures | 10CFR72.40(a)(5) | 8.1 to 8.5 |
| | 8.III.2 Operational Restrictions for ALARA | 10CFR72.24(e) 10CFR72.104(b) | 8.1.5 |
| | 8.III.3 Radioactive Effluent Control | 10CFR72.24(1)(2) | 8.1.5, 8.5.2 |

Table 1.0.2 (continued)

HI-STORM 100 SYSTEM FSAR REGULATORY COMPLIANCE
CROSS REFERENCE MATRIX

| Regulatory Guide 3.61 Section and Content | Associated NUREG-1536 Review Criteria | Applicable 10CFR72 or 10CFR20 Requirement | HI-STORM FSAR |
|---|---|---|---|
| | 8.III.4 Written Procedures | 10CFR72.212(b)(9) | 8.0 |
| | 8.III.5 Establish Written Procedures and Tests | 10CFR72.234(f) | 8.0 Introduction |
| | 8.III.6 Wet or Dry Loading and Unloading Compatibility | 10CFR72.236(h) | 8.0 Introduction |
| | 8.III.7 Cask Design to Facilitate Decon | 10CFR72.236(i) | 8.1, 8.3 |
| 8.2 Procedures for Unloading the Cask | 8.III.1 Develop Operating Procedures | 10CFR72.40(a)(5) | 8.3 |
| | 8.III.2 Operational Restrictions for ALARA | 10CFR72.24(e)<br>10CFR72.104(b) | 8.3 |
| | 8.III.3 Radioactive Effluent Control | 10CFR72.24(1)(2) | 8.3.3 |
| | 8.III.4 Written Procedures | 10CFR72.212(b)(9) | 8.0 |
| | 8.III.5 Establish Written Procedures and Tests | 10CFR72.234(f) | 8.0 |
| | 8.III.6 Wet or Dry Loading and Unloading Compatibility | 10CFR72.236(h) | 8.0 |
| | 8.III.8 Ready Retrieval | 10CFR72.122(1) | 8.3 |
| 8.3 Preparation of the Cask | -- | -- | 8.3.2 |
| 8.4 Supplemental Data | -- | -- | Tables 8.1.1 to 8.1.10 |
| NA | 8.III.9 Design to Minimize Radwaste | 10CFR72.24(f)<br>10CFR72.128(a)(5) | 8.1, 8.3 |
| | 8.III.10 SSCs Permit Inspection, Maintenance, and Testing | 10CFR72.122(f) | Table 8.1.6 |
| **9. Acceptance Criteria and Maintenance Program** | | | |
| 9.1 Acceptance Criteria | 9.III.1.a Preoperational Testing & Initial Operations | 10CFR72.24(p) | 8.1, 9.1 |

Table 1.0.2 (continued)

HI-STORM 100 SYSTEM FSAR REGULATORY COMPLIANCE
CROSS REFERENCE MATRIX

| Regulatory Guide 3.61 Section and Content | Associated NUREG-1536 Review Criteria | Applicable 10CFR72 or 10CFR20 Requirement | HI-STORM FSAR |
|---|---|---|---|
| | 9.III.1.c SSCs Tested and Maintained to Appropriate Quality Standards | 10CFR72.24(c)<br>10CFR72.122(a) | 9.1 |
| | 9.III.1.d Test Program | 10CFR72.162 | 9.1 |
| | 9.III.1.e Appropriate Tests | 10CFR72.236(1) | 9.1 |
| | 9.III.1.f Inspection for Cracks, Pinholes, Voids and Defects | 10CFR72.236(j) | 9.1 |
| | 9.III.1.g Provisions that Permit Commission Tests | 10CFR72.232(b) | 9.1[(2)] |
| 9.2 Maintenance Program | 9.III.1.b Maintenance | 10CFR72.236(g) | 9.2 |
| | 9.III.1.c SSCs Tested and Maintained to Appropriate Quality Standards | 10CFR72.122(f)<br>10CFR72.128(a)(1) | 9.2 |
| | 9.III.1.h Records of Maintenance | 10CFR72.212(b)(8) | 9.2 |
| NA | 9.III.2 Resolution of Issues Concerning Adequacy of Reliability | 10CFR72.24(i) | [(3)] |
| | 9.III.1.d Submit Pre-Op Test Results to NRC | 10CFR72.82(e) | [(4)] |
| | 9.III.1.i Casks Conspicuously and Durably Marked | 10CFR72.236(k) | 9.1.7, 9.1.1.(12) |
| | 9.III.3 Cask Identification | | |
| **10. Radiation Protection** | | | |
| 10.1 Ensuring that Occupational Exposures are as Low as Reasonably Achievable (ALARA) | 10.III.4 ALARA | 10CFR20.1101<br>10CFR72.24(e)<br>10CFR72.104(b)<br>10CFR72.126(a) | 10.1 |
| 10.2 Radiation Protection Design Features | 10.V.1.b Design Features | 10CFR72.126(a)(6) | 10.2 |

Table 1.0.2 (continued)

HI-STORM 100 SYSTEM FSAR REGULATORY COMPLIANCE
CROSS REFERENCE MATRIX

| Regulatory Guide 3.61 Section and Content | Associated NUREG-1536 Review Criteria | Applicable 10CFR72 or 10CFR20 Requirement | HI-STORM FSAR |
|---|---|---|---|
| 10.3 Estimated Onsite Collective Dose Assessment | 10.III.2 Occupational Exposures | 10CFR20.1201<br>10CFR20.1207<br>10CFR20.1208<br>10CFR20.1301 | 10.3 |
| N/A | 10.III.3 Public Exposure | 10CFR72.104<br>10CFR72.106 | 10.4 |
| | 10.III.1 Effluents and Direct Radiation | 10CFR72.104 | |
| **11. Accident Analyses** | | | |
| 11.1 Off-Normal Operations | 11.III.2 Meet Dose Limits for Anticipated Events | 10CFR72.24(d)<br>10CFR72.104(a)<br>10CFR72.236(d) | 11.1 |
| | 11.III.4 Maintain Subcritical Condition | 10CFR72.124(a)<br>10CFR72.236(c) | 11.1 |
| | 11.III.7 Instrumentation and Control for Off-Normal Condition | 10CFR72.122(i) | 11.1 |
| 11.2 Accidents | 11.III.1 SSCs Important to Safety Designed for Accidents | 10CFR72.24(d)(2)<br>10CFR72.122b(2)<br>10CFR72.122b(3)<br>10CFR72.122(d)<br>10CFR72.122(g) | 11.2 |
| | 11.III.5 Maintain Confinement for Accident | 10CFR72.236(1) | 11.2 |
| | 11.III.4 Maintain Subcritical Condition | 10CFR72.124(a)<br>10CFR72.236(c) | 11.2, 6.0 |
| | 11.III.3 Meet Dose Limits for Accidents | 10CFR72.24(d)(2)<br>10CFR72.24(m)<br>10CFR72.106(b) | 11.2, 5.1.2, 7.3 |

HOLTEC INTERNATIONAL COPYRIGHTED MATERIAL

Table 1.0.2 (continued)

HI-STORM 100 SYSTEM FSAR REGULATORY COMPLIANCE
CROSS REFERENCE MATRIX

| Regulatory Guide 3.61 Section and Content | Associated NUREG-1536 Review Criteria | Applicable 10CFR72 or 10CFR20 Requirement | HI-STORM FSAR |
|---|---|---|---|
| | 11.III.6 Retrieval | 10CFR72.122(l) | 8.3 |
| | 11.III.7 Instrumentation and Control for Accident Conditions | 10CFR72.122(i) | (5) |
| NA | 11.III.8 Confinement Monitoring | 10CFR72.122h(4) | 7.1.4 |
| **12. Operating Controls and Limits** | | | |
| 12.1 Proposed Operating Controls and Limits | -- | 10CFR72.44(c) | 12.0 |
| | 12.III.1.e Administrative Controls | 10CFR72.44(c)(5) | 12.0 |
| 12.2 Development of Operating Controls and Limits | 12.III.1 General Requirement for Technical Specifications | 10CFR72.24(g)<br>10CFR72.26<br>10CFR72.44(c)<br>10CFR72 Subpart E<br>10CFR72 Subpart F | 12.0 |
| 12.2.1 Functional and Operating Limits, Monitoring Instruments, and Limiting Control Settings | 12.III.1.a Functional/ Operating Units, Monitoring Instruments and Limiting Controls | 10CFR72.44(c)(1) | Appendix 12.A |
| 12.2.2 Limiting Conditions for Operation | 12.III.1.b Limiting Controls | 10CFR72.44(c)(2) | Appendix 12.A |
| | 12.III.2.a Type of Spent Fuel | 10CFR72.236(a) | Appendix 12.A |
| | 12.III.2.b Enrichment | | |
| | 12.III.2.c Burnup | | |
| | 12.III.2.d Minimum Acceptance Cooling Time | | |
| | 12.III.2.f Maximum Spent Fuel Loading Limit | | |
| | 12.III.2g Weights and Dimensions | | |
| | 12.III.2.h Condition of Spent Fuel | | |
| | 12.III.2e Maximum Heat Dissipation | 10CFR72.236(a) | Appendix 12.A |

Table 1.0.2 (continued)

HI-STORM 100 SYSTEM FSAR REGULATORY COMPLIANCE
CROSS REFERENCE MATRIX

| Regulatory Guide 3.61 Section and Content | Associated NUREG-1536 Review Criteria | Applicable 10CFR72 or 10CFR20 Requirement | HI-STORM FSAR |
|---|---|---|---|
| | 12.III.2.i Inerting Atmosphere Requirements | 10CFR72.236(a) | Appendix 12.A |
| 12.2.3 Surveillance Specifications | 12.III.1.c Surveillance Requirements | 10CFR72.44(c)(3) | Chapter 12 |
| 12.2.4 Design Features | 12.III.1.d Design Features | 10CFR72.44(c)(4) | Chapter 12 |
| 12.2.4 Suggested Format for Operating Controls and Limits | -- | -- | Appendix 12.A |
| NA | 12.III.2 SCC Design Bases and Criteria | 10CFR72.236(b) | 2.0 |
| NA | 12.III.2 Criticality Control | 10CFR72.236(c) | 2.3.4, 6.0 |
| NA | 12.III.2 Shielding and Confinement | 10CFR20<br>10CFR72.236(d) | 2.3.5, 7.0, 5.0, 10.0 |
| NA | 12.III.2 Redundant Sealing | 10CFR72.236(e) | 7.1, 2.3.2 |
| NA | 12.III.2 Passive Heat Removal | 10CFR72.236(f) | 2.3.2.2, 4.0 |
| NA | 12.III.2 20 Year Storage and Maintenance | 10CFR72.236(g) | 1.2.1.5, 9.0, 3.4.10, 3.4.11 |
| NA | 12.III.2 Decontamination | 10CFR72.236(i) | 8.0, 10.1 |
| NA | 12.III.2 Wet or Dry Loading | 10CFR72.236(h) | 8.0 |
| NA | 12.III.2 Confinement Effectiveness | 10CFR72.236(j) | 9.0 |
| NA | 12.III.2 Evaluation for Confinement | 10CFR72.236(l) | 7.1, 7.2, 9.0 |
| **13. Quality Assurance** | | | |
| 13.1 Quality Assurance | 13.III Regulatory Requirements | 10CFR72.24(n)<br>10CFR72.140(d) | 13.0 |
| | 13.IV Acceptance Criteria | 10CFR72, Subpart G | |

Table 1.0.2 (continued)

HI-STORM 100 SYSTEM FSAR REGULATORY COMPLIANCE
CROSS REFERENCE MATRIX

Notes:

(1) The stated requirement is the responsibility of the licensee (i.e., utility) as part of the ISFSI pad and is therefore not addressed in this application.

(2) It is assumed that approval of the FSAR by the NRC is the basis for the Commission's acceptance of the tests defined in Chapter 9.

(3) Not applicable to HI-STORM 100 System. The functional adequacy of all important to safety components is demonstrated by analyses.

(4) The stated requirement is the responsibility of licensee (i.e., utility) as part of the ISFSI and is therefore not addressed in this application.

(5) The stated requirement is not applicable to the HI-STORM 100 System. No monitoring is required for accident conditions.

"—" There is no corresponding NUREG-1536 criteria, no applicable 10CFR72 or 10CFR20 regulatory requirement, or the item is not addressed in the FSAR.

"NA" There is no Regulatory Guide 3.61 section that corresponds to the NUREG-1536, 10CFR72, or 10CFR20 requirement being addressed.

Table 1.0.3

HI-STORM 100 SYSTEM FSAR CLARIFICATIONS AND EXCEPTIONS TO NUREG-1536

| NUREG-1536 Requirement | Alternate Method to Meet NUREG-1536 Intent | Justification |
|---|---|---|
| 2.V.2.(b)(1) "The NRC accepts as the maximum and minimum "normal" temperatures the highest and lowest ambient temperatures recorded in each year, averaged over the years of record." | Exception: Section 2.2.1.4 for environmental temperatures utilizes an upper bounding value of 80°F on the annual average ambient temperatures for the United States. | The 80°F temperature set forth in Table 2.2.2 is greater than the annual average ambient temperature at any location in the continental United States. Inasmuch as the primary effect of the environmental temperature is on the computed fuel cladding temperature to establish long-term fuel cladding integrity, the annual average ambient temperature for each ISFSI site should be below 80°F. The large thermal inertia of the HI-STORM 100 System ensures that the daily fluctuations in temperatures do not affect the temperatures of the system. Additionally, the 80°F ambient temperature is combined with insolation in accordance with 10CFR71.71 averaged over 24 hours. |
| 2.V.2.(b)(3)(f) "10CFR Part 72 identifies several other natural phenomena events (including seiche, tsunami, and hurricane) that should be addressed for spent fuel storage." | Clarification: A site-specific safety analysis of the effects of seiche, tsunami, and hurricane on the HI-STORM 100 System must be performed prior to use if these events are applicable to the site. | In accordance with NUREG-1536, 2.V.(b)(3)(f), if seiche, tsunami, and hurricane are not addressed in the SAR and they prove to be applicable to the site, a safety analysis is required prior to approval for use of the DCSS under either a site specific, or general license. |

HOLTEC INTERNATIONAL COPYRIGHTED MATERIAL

Table 1.0.3 (continued)

HI-STORM 100 SYSTEM FSAR CLARIFICATIONS AND EXCEPTIONS TO NUREG-1536

| NUREG-1536 Requirement | Alternate Method to Meet NUREG-1536 Intent | Justification |
|---|---|---|
| 3.V.1.d.i.(2)(a), page 3-11, "Drops with the axis generally vertical should be analyzed for both the conditions of a flush impact and an initial impact at a corner of the cask..." | Clarification: As stated in NUREG-1536, 3.V.(d), page 3-11, "Generally, applicants establish the design basis in terms of the maximum height to which the cask is lifted outside the spent fuel building, or the maximum deceleration that the cask could experience in a drop." The maximum deceleration for a corner drop is specified as 45g's for the HI-STORM overpack. No carry height limit is specified for the corner drop. | In Chapter 3, the MPC and HI-STORM overpack are evaluated under a 45g radial loading. A 45g axial loading on the MPC is bounded by the analysis presented in the HI-STAR FSAR, Docket 72-1008, under a 60g loading, and is not repeated in this FSAR. In Chapter 3, the HI-STORM overpack is evaluated under a 45g axial loading. Therefore, the HI-STORM overpack and MPC are qualified for a 45g loading as a result of a corner drop. Depending on the design of the lifting device, the type of rigging used, the administrative vertical carry height limit, and the stiffness of the impacted surface, site-specific analyses may be required to demonstrate that the deceleration limit of 45g's is not exceeded. |
| 3.V.2.b.i.(1), Page 3-19, Para. 1, “All concrete used in storage cask system ISFSIs, and subject to NRC review, should be reinforced...”<br><br>3.V.2.b.i.(2)(b), Page 3-20, Para. 1, “The NRC accepts the use of ACI 349 for the design, material selection and specification, and construction of all reinforced concrete structures that are not addressed within the scope of ACI 359".<br><br>3.V.2.c.i, Page 3-22, Para. 3, “Materials and material properties used for the design and construction of reinforced concrete structures important to safety but not within the scope | Exception: The HI-STORM overpack concrete is not reinforced. However, ACI 349 [1.0.4] is used as guidance for the material selection and specification, and placement of the plain concrete. Appendix 1.D provides the relevant sections of ACI 349 applicable to the plain concrete in the overpack, including clarifications on implementation of this code. ACI 318-95 [1.0.5] is used for the calculation of the compressive strength of the plain concrete. | Concrete is provided in the HI-STORM overpack primarily for the purpose of radiation shielding during normal operations. During lifting and handling operations and under certain accident conditions, the compressive strength of the concrete (which is not impaired by the absence of reinforcement) is utilized. However, since the structural reliance under loadings which produce section flexure and tension is entirely on the steel structure of the overpack, reinforcement in the concrete will serve no useful purpose.<br><br>To ensure the quality of the shielding concrete, all relevant provisions of ACI 349 are imposed as clarified in Appendix 1.D. The temperature limits for normal conditions are per Paragraph A.4.3 of Appendix A to ACI 349 and temperature limits for |

HOLTEC INTERNATIONAL COPYRIGHTED MATERIAL

Table 1.0.3 (continued)

HI-STORM 100 SYSTEM FSAR CLARIFICATIONS AND EXCEPTIONS TO NUREG-1536

| NUREG-1536 Requirement | Alternate Method to Meet NUREG-1536 Intent | Justification |
|---|---|---|
| of ACI 359 should comply with the requirements of ACI 349". | | off-normal and accident conditions are per Paragraph A.4.2 of Appendix A to ACI 349.<br><br>Finally, the Fort St. Vrain ISFSI (Docket No. 72-9) also utilized plain concrete for shielding purposes, which is important to safety. |
| 3.V.3.b.i.(2), Page 3-29, Para. 1, "The NRC accepts the use of ANSI/ANS-57.9 (together with the codes and standards cited therein) as the basic reference for ISFSI structures important to safety that are not designed in accordance with Section III of the ASME B&PV Code." | Clarification: The HI-STORM overpack steel structure is designed in accordance with the ASME B&PV Code, Section III, Subsection NF, Class 3. Any exceptions to the Code are listed in Table 2.2.15. | The overpack structure is a steel weldment consisting of "plate and shell type" members. As such, it is appropriate to design the structure to Section III, Class 3 of Subsection NF. The very same approach has been used in the structural evaluation of the "intermediate shells" in the HI-STAR 100 overpack (Docket Number 72-1008) previously reviewed and approved by the USNRC. |
| 4.IV.5, Page 4-2 "for each fuel type proposed for storage, the DCSS should ensure a very low probability (e.g., 0.5 percent per fuel rod) of cladding breach during long-term storage."<br><br>4.IV.1, Page 4-3, Para. 1 "the staff should verify that cladding temperatures for each fuel type proposed for storage will be below the expected damage thresholds for normal conditions of storage."<br><br>4.IV.1, Page 4-3, Para. 2 "fuel cladding limits for each fuel type should be defined in the SAR with thermal restrictions in the DCSS technical specifications."<br><br>4.V.1, Page 4-3, Para. 4 "the applicant should | Clarification: As described in Section 4.3, all fuel array types authorized for storage are assigned a single peak fuel cladding temperature limit. | As described in Section 4.3, all fuel array types authorized for storage have been evaluated for the peak normal fuel cladding temperature limit of 400$^{o}$C. |

HOLTEC INTERNATIONAL COPYRIGHTED MATERIAL

Table 1.0.3 (continued)

HI-STORM 100 SYSTEM FSAR CLARIFICATIONS AND EXCEPTIONS TO NUREG-1536

| NUREG-1536 Requirement | Alternate Method to Meet NUREG-1536 Intent | Justification |
|---|---|---|
| verify that these cladding temperature limits are appropriate for all fuel types proposed for storage, and that the fuel cladding temperatures will remain below the limit for facility operations (e.g., fuel transfer) and the worst-case credible accident." | | |
| 4.V.4.a, Page 4-6, Para. 6 "the basket wall temperature of the hottest assembly can then be used to determine the peak rod temperature of the hottest assembly using the Wooten-Epstein correlation." | Clarification: As discussed in Subsection 4.4.2, conservative maximum fuel temperatures are obtained directly from the cask thermal analysis. The peak fuel cladding temperatures are then used to determine the corresponding peak basket wall temperatures using a finite-element based update of Wooten-Epstein (described in Subsection 4.4.1.1.2) | The finite-element based thermal conductivity is greater than a Wooten-Epstein based value. This larger thermal conductivity minimizes the fuel-to-basket temperature difference. Since the basket temperature is less than the fuel temperature, minimizing the temperature difference conservatively maximizes the basket wall temperature. |
| | | |
| 4.V.4.b, Page 4-7, Para. 2 "high burnup effects should also be considered in determining the fuel region effective thermal conductivity." | Exception: All calculations of fuel assembly effective thermal conductivities, described in Subsection 4.4.1.1.2, use nominal fuel design dimensions, neglecting wall thinning associated with high burnup. | Within Subsection 4.4.1.1.2, the calculated effective thermal conductivities based on nominal design fuel dimensions are compared with available literature values and are demonstrated to be conservative by a substantial margin. |
| 4.V.4.c, Page 4-7, Para. 5 "a heat balance on the surface of the cask should be given and the results presented." | Clarification: No additional heat balance is performed or provided. | The FLUENT computational fluid dynamics program used to perform evaluations of the HI-STORM Overpack and HI-TRAC transfer cask, which uses a |

HOLTEC INTERNATIONAL COPYRIGHTED MATERIAL

Table 1.0.3 (continued)

HI-STORM 100 SYSTEM FSAR CLARIFICATIONS AND EXCEPTIONS TO NUREG-1536

| NUREG-1536 Requirement | Alternate Method to Meet NUREG-1536 Intent | Justification |
|---|---|---|
| | | discretized numerical solution algorithm, enforces an energy balance on all discretized volumes throughout the computational domain. This solution method, therefore, ensures a heat balance at the surface of the cask. |
| 4.V.5.a, Page 4-8, Para. 2 "the SAR should include input and output file listings for the thermal evaluations." | Exception: No input or output file listings are provided in Chapter 4. | A complete set of computer program input and output files would be in excess of three hundred pages. All computer files are considered proprietary because they provide details of the design and analysis methods. In order to minimize the amount of proprietary information in the FSAR, computer files are provided in the proprietary calculation packages. |
| 4.V.5.c, Page 4-10, Para. 3 "free volume calculations should account for thermal expansion of the cask internal components and the fuel when subjected to accident temperatures. | Exception: All free volume calculations use nominal confinement boundary dimensions, but the volume occupied by the fuel assemblies is calculated using maximum weights and minimum densities. | Calculating the volume occupied by the fuel assemblies using maximum weights and minimum densities conservatively overpredicts the volume occupied by the fuel and correspondingly underpredicts the remaining free volume. |

HOLTEC INTERNATIONAL COPYRIGHTED MATERIAL

Table 1.0.3 (continued)

HI-STORM 100 SYSTEM FSAR CLARIFICATIONS AND EXCEPTIONS TO NUREG-1536

| NUREG-1536 Requirement | Alternate Method to Meet NUREG-1536 Intent | Justification |
|---|---|---|
| 7.V.4 “Confinement Analysis. Review the applicant’s confinement analysis and the resulting annual dose at the controlled area boundary.” | Exception: No confinement analysis is performed and no effluent dose at the controlled area boundary is calculated. | The MPC uses redundant closures to assure that there is no release of radioactive materials under all credible conditions. Analyses presented in Chapters 3 and 11 demonstrate that the confinement boundary does not degrade under all normal, off-normal, and accident conditions. Multiple inspection methods are used to verify the integrity of the confinement boundary (e.g.,non-destructive examinations and pressure testing).<br><br>Pursuant to ISG-18, the Holtec MPC is constructed in a manner that supports leakage from the confinement boundary being non-credible. Therefore, no confinement analysis is required. |
| 9.V.1.a, Page 9-4, Para. 4 "Acceptance criteria should be defined in accordance with NB/NC-5330, "Ultrasonic Acceptance Standards"." | Clarification: Section 9.1.1.1 and the Design Drawings specify that the ASME Code, Section III, Subsection NB, Article NB-5332 will be used for the acceptance criteria for the volumetric examination of the MPC lid-to-shell weld. | In accordance with the first line on page 9-4, the NRC endorses the use of "...appropriate acceptance criteria as defined by either the ASME code, or an alternative approach..." The ASME Code, Section III, Subsection NB, Paragraph NB-5332 is appropriate acceptance criteria for pre-service examination. |

HOLTEC INTERNATIONAL COPYRIGHTED MATERIAL

Table 1.0.3 (continued)

HI-STORM 100 SYSTEM FSAR CLARIFICATIONS AND EXCEPTIONS TO NUREG-1536

| NUREG-1536 Requirement | Alternate Method to Meet NUREG-1536 Intent | Justification |
|---|---|---|
| 9.V.1.d, Para. 1 "Tests of the effectiveness of both the gamma and neutron shielding may be required if, for example, the cask contains a poured lead shield or a special neutron absorbing material." | Exception: Subsection 9.1.5 describes the control of special processes, such as neutron shield material installation, to be performed in lieu of scanning or probing with neutron sources. | The dimensional compliance of all shielding cavities is verified by inspection to design drawing requirements prior to shield installation.<br><br>The Holtite-A shield material is installed in accordance with written, approved, and qualified special process procedures.<br><br>The composition of the Holtite-A is confirmed by inspection and tests prior to first use.<br><br>Following the first loading for the HI-TRAC transfer cask and each HI-STORM overpack, a shield effectiveness test is performed in accordance with written approved procedures, as specified in Section 9.1. |
| 13.III, " the application must include, at a minimum, a description that satisfies the requirements of 10 CFR Part 72, Subpart G, 'Quality Assurance'..." | Exception: Section 13.0 incorporates the NRC-approved Holtec International Quality Assurance Program Manual by reference rather than describing the Holtec QA program in detail. | The NRC has approved Revision 13 of the Holtec Quality Assurance Program Manual under 10 CFR 71 (NRC QA Program Approval for Radioactive Material Packages No. 0784, Rev. 3). Pursuant to 10 CFR 72.140(d), Holtec will apply this QA program to all important-to-safety dry storage cask activities. Incorporating the Holtec QA Program Manual by reference eliminates duplicate documentation. |

HOLTEC INTERNATIONAL COPYRIGHTED MATERIAL

## 1.1 INTRODUCTION

HI-STORM 100 (acronym for Holtec International Storage and Transfer Operation Reinforced Module) is a spent nuclear fuel storage system designed to be in full compliance with the requirements of 10CFR72. The annex "100" is a model number designation which denotes a system weighing over 100 tons. The HI-STORM 100 System consists of a sealed metallic canister, herein abbreviated as the "MPC", contained within an overpack. Its design features are intended to simplify and reduce on-site SNF loading, handling, and monitoring operations, and to provide for radiological protection and maintenance of structural and thermal safety margins.

The HI-STORM 100S and HI-STORM 100S Version B overpack designs are variants of the HI-STORM 100 overpack design and have their own drawings in Section 1.5. The “S” suffix indicates an enhanced overpack design, as described later in this section. “Version B” indicates an enhanced HI-STORM 100S overpack design. The HI-STORM 100S and 100S Version B accept the same MPCs and fuel types as the HI-STORM 100 overpack and the basic structural, shielding, and thermal-hydraulic characteristics remain unchanged. Hereafter in this FSAR reference to HI-STORM 100 System or the HI-STORM overpack is construed to apply to the HI-STORM 100, the HI-STORM 100S, and the HI-STORM 100S Version B. Where necessary, the text distinguishes among the three overpack designs. See Figures 1.1.1A and 1.1.3A for pictorial views of the HI-STORM 100S overpack design. See Figures 1.1.1B and 1.1.3B for pictorial views of the HI-STORM 100S Version B design.

The HI-STORM 100A overpack is a variant of two of the three HI-STORM 100 System overpack designs and is specially outfitted with an extended baseplate and gussets to enable the overpack to be anchored to the ISFSI pad in high seismic applications. In the following, the modified structure of the HI-STORM 100A, in each of four quadrants, is denoted as a “sector lug.” The HI-STORM 100A anchor design is applicable to the HI-STORM 100S overpack design, in which case the assembly would be named HI-STORM 100SA. The HI-STORM 100A anchor design is not applicable to the HI-STORM 100S Version B overpack design. Therefore, the HI-STORM 100S Version B overpack cannot be deployed in the anchored configuration at this time. Hereafter in the text, discussion of HI-STORM 100A applies to both the standard (HI-STORM 100A) and HI-STORM 100SA overpacks, unless otherwise clarified.

The HI-STORM 100 System is designed to accommodate a wide variety of spent nuclear fuel assemblies in a single basic overpack design by utilizing different MPCs. The external ~~dimensions~~ *diameters* of all MPCs are identical to allow the use of a single overpack. Each of the MPCs has different internals (baskets) to accommodate distinct fuel characteristics. Each MPC is identified by the maximum quantity of fuel assemblies it is capable of receiving. The MPC-24, MPC-24E, and MPC-24EF contain a maximum of 24 PWR fuel assemblies; the MPC-32 and MPC-32F contain a maximum of 32 PWR fuel assemblies; and the MPC-68, MPC-68F, and MPC-68FF contain a maximum of 68 BWR fuel assemblies.

The HI-STORM overpack is constructed from a combination of steel and concrete, both of which are materials with long, proven histories of usage in nuclear applications. The HI-STORM overpack incorporates and combines many desirable features of previously-approved concrete and metal

HOLTEC INTERNATIONAL COPYRIGHTED MATERIAL

module designs. In essence, the HI-STORM overpack is a hybrid of metal and concrete systems, with the design objective of emulating the best features and dispensing with the drawbacks of both. The HI-STORM overpack is best referred to as a METCON™ (metal/concrete composite) system.

Figures 1.1.1, 1.1.1A, and 1.1.1B show the HI-STORM 100 System with two of its major constituents, the MPC and the storage overpack, in a cut-away view. The MPC, shown partially withdrawn from the storage overpack, is an integrally welded pressure vessel designed to meet the stress limits of the ASME Boiler and Pressure Vessel Code, Section III, Subsection NB [1.1.1]. The MPC defines the confinement boundary for the stored spent nuclear fuel assemblies with respect to 10CFR72 requirements and attendant review considerations. The HI-STORM storage overpack provides mechanical protection, cooling, and radiological shielding for the contained MPC.

In essence, the HI-STORM 100 System is the storage-only counterpart of the HI-STAR 100 System (Docket Numbers 72-1008 (Ref. [1.1.2]) and 71-9261 (Ref. [1.1.3])). Both HI-STORM and HI-STAR are engineered to house identical MPCs. Since the MPC is designed to meet the requirements of both 10CFR71 and 10CFR72 for transportation and storage, respectively, the HI-STORM 100 System allows rapid decommissioning of the ISFSI by simply transferring the loaded MPC's directly into HI-STAR 100 overpacks for off-site transport. This alleviates the additional fuel handling steps required by storage-only casks to unload the cask and repackage the fuel into a suitable transportation cask.

In contrast to the HI-STAR 100 overpack, which provides a containment boundary for the SNF during transport, the HI-STORM storage overpack does not constitute a containment or confinement enclosure. The HI-STORM overpack is equipped with large penetrations near its lower and upper extremities to permit natural circulation of air to provide for the passive cooling of the MPC and the contained radioactive material. The HI-STORM overpack is engineered to be an effective barrier against the radiation emitted by the stored materials, and an efficiently configured metal/concrete composite to attenuate the loads transmitted to the MPC during a natural phenomena or hypothetical accident event. Other auxiliary functions of the HI-STORM 100 overpack include isolation of the SNF from abnormal environmental or man-made events, such as impact of a tornado borne missile. As the subsequent chapters of this FSAR demonstrate, the HI-STORM overpack is engineered with large margins of safety with respect to cooling, shielding, and mechanical/structural functions.

The HI-STORM 100 System is autonomous inasmuch as it provides SNF and radioactive material confinement, radiation shielding, criticality control and passive heat removal independent of any other facility, structures, or components. The surveillance and maintenance required by the plant's staff is minimized by the HI-STORM 100 System since it is completely passive and is composed of materials with long proven histories in the nuclear industry. The HI-STORM 100 System can be used either singly or as the basic storage module in an ISFSI. The site for an ISFSI can be located either at a reactor or away from a reactor.

The information presented in this report is intended to demonstrate the acceptability of the HI-STORM 100 System for use under the general license provisions of Subpart K by meeting the criteria set forth in 10CFR72.236.

HOLTEC INTERNATIONAL COPYRIGHTED MATERIAL

The modularity of the HI-STORM 100 System accrues several advantages. Different MPCs, identical in ~~exterior dimensions~~*external diameter*, manufacturing requirements, and handling features, but different in their SNF arrangement details, are designed to fit a common overpack *design*. Even though the different MPCs have fundamentally identical design and manufacturing attributes, qualification of HI-STORM 100 requires consideration of the variations in the characteristics of the MPCs. In most cases, however, it is possible to identify the most limiting MPC geometry and the specific loading condition for the safety evaluation, and the detailed analyses are then carried out for that bounding condition. In those cases where this is not possible, multiple parallel analyses are performed.

The HI-STORM overpack is not engineered for transport and, therefore, will not be submitted for 10CFR Part 71 certification. HI-STORM 100, however, is designed to possess certain key elements of flexibility.

For example:

- The HI-STORM overpack is stored at the ISFSI pad in a vertical orientation, which helps minimize the size of the ISFSI and leads to an effective natural convection cooling flow around the MPC.

- The HI-STORM overpack can be loaded with a loaded MPC using the HI-TRAC transfer cask inside the 10CFR50 [1.1.4] facility, prepared for storage, transferred to the ISFSI, and stored in a vertical configuration, or directly loaded using the HI-TRAC transfer cask at or nearby the ISFSI storage pad.

The version of the HI-STORM overpack equipped with sector lugs to anchor it to the ISFSI pad is labeled HI-STORM 100A, shown in Figure 1.1.4. Figure 1.1.5 shows the sector lugs and anchors used to fasten the overpack to the pad in closer view. Details on HI-STORM 100A are presented in the drawing and BOM contained in Section 1.5. Users may employ a double nut arrangement as an option. The HI-STORM 100A overpack will be deployed at those ISFSI sites where the postulated seismic event (defined by the three orthogonal ZPAs) exceeds the maximum limit permitted for free-standing installation. The design of the ISFSI pad and the embedment are necessarily site-specific and the responsibility of the ISFSI owner. These designs shall be in accordance with the requirements specified in Appendix 2.A. The jurisdictional boundary between the anchored cask design and the embedment design is defined in Table 2.0.5. Additional description of the HI-STORM 100A configuration is provided in Subsection 1.2.1.2.1. The anchored design is applicable to the HI-STORM 100 and the HI-STORM 100S overpack designs only.

The MPC is a multi-purpose SNF storage device both with respect to the type of fuel assemblies and its versatility of use. The MPC is engineered as a cylindrical prismatic structure with square cross section storage cavities. The number of storage locations depends on the type of fuel. Regardless of the storage cell count, the construction of the MPC is fundamentally the same; it is built as a honeycomb of cellular elements positioned within a circumscribing cylindrical canister shell. The manner of cell-to-cell weld-up and cell-to-canister shell interface employed in the MPC imparts extremely high structural stiffness to the assemblage, which is an important attribute for

HOLTEC INTERNATIONAL COPYRIGHTED MATERIAL

mechanical accident events. Figure 1.1.2 shows an elevation cross section of an MPC.

The MPC enclosure vessel is identical *in external diameter* to those presented in References [1.1.2] and [1.1.3]. However, certain fuel basket models may not be certified for storage or transportation in the HI-STAR 100 System. The Part 71 and 72 CoCs for HI-STAR 100 should be consulted for the MPC models that are certified for that system. Referencing these documents, as applicable, avoids repetition of information on the MPCs which is comprehensively set forth in the above-mentioned Holtec International documents docketed with the NRC. However, sufficient information and drawings are presented in this report to maintain clarity of exposition of technical data.

The HI-STORM storage overpack is designed to provide the necessary neutron and gamma shielding to comply with the provisions of 10CFR72 for dry storage of SNF at an ISFSI. Cross sectional views of the HI-STORM storage overpacks are presented in Figures 1.1.3,1.1.3A, and 1.1.3B. A HI-TRAC transfer cask is required for loading of the MPC and movement of the loaded MPC from the cask loading area of a nuclear plant spent fuel pool to the storage overpack. The HI-TRAC is engineered to be emplaced with an empty MPC into the cask loading area of nuclear plant spent fuel pools for fuel loading (or unloading). The HI-TRAC/MPC assembly is designed to preclude intrusion of pool water into the narrow annular space between the HI-TRAC and the MPC while the assembly is submerged in the pool water. The HI-TRAC transfer cask also allows dry loading (or unloading) of SNF into the MPC.

To summarize, the HI-STORM 100 System has been engineered to:

- minimize handling of the SNF;
- provide shielding and physical protection for the MPC;
- permit rapid and unencumbered decommissioning of the ISFSI;
- require minimal ongoing surveillance and maintenance by plant staff;
- minimize dose to operators during loading and handling;
- allow transfer of the loaded MPC to a HI-STAR overpack for transportation.

HOLTEC INTERNATIONAL COPYRIGHTED MATERIAL

## 1.2 GENERAL DESCRIPTION OF HI-STORM 100 System

### 1.2.1 System Characteristics

The basic HI-STORM 100 System consists of interchangeable MPCs providing a confinement boundary for BWR or PWR spent nuclear fuel, a storage overpack providing a structural and radiological boundary for long-term storage of the MPC placed inside it, and a transfer cask providing a structural and radiological boundary for transfer of a loaded MPC from a nuclear plant spent fuel storage pool to the storage overpack. Figures 1.2.1 and 1.2.1A provide example cross sectional views of the HI-STORM 100 System with an MPC inserted into HI-STORM 100 and HI-STORM 100S storage overpacks, respectively. Figure 1.1.1B provides similar information for the HI-STORM 100 System using a HI-STORM 100S Version B overpack. Each of these components is described below, including information with respect to component fabrication techniques and designed safety features. All structures, systems, and components of the HI-STORM 100 System, which are identified as Important to Safety are specified in Table 2.2.6. This discussion is supplemented with a full set of drawings in Section 1.5.

The HI-STORM 100 System is comprised of three discrete components:

i. multi-purpose canister (MPC)
ii. storage overpack (HI-STORM)
iii. transfer cask (HI-TRAC)

Necessary auxiliaries required to deploy the HI-STORM 100 System for storage are:

i. vacuum drying (or other moisture removal) system
ii. helium (He) backfill system (or other system capable of the same backfill condition)
iii. lifting and handling systems
iv welding equipment
v. transfer vehicles/trailer

All MPCs have identical ~~exterior dimensions~~*external diameters* ~~that render them interchangeable~~. The outer diameter of the MPC is 68-3/8 inches[†] and the *maximum* overall length is 190-1/2 inches. See Section 1.5 for the MPC drawings. Due to the differing storage contents of each MPC, the maximum loaded weight differs among MPCs. See Table 3.2.1 for each MPC weight. However, the maximum weight of a loaded MPC is approximately 44-1/2 tons. Tables 1.2.1 and 1.2.2 contain the key system data and parameters for the MPCs.

[†] Dimensions discussed in this section are considered nominal values.

A single, base HI-STORM overpack design is provided which is capable of storing each type of MPC. The overpack inner cavity is sized to accommodate the MPCs. The inner diameter of the overpack inner shell is 73-1/2 inches and the height of the cavity is 191-1/2 inches. The overpack inner shell is provided with channels distributed around the inner cavity to present an inside diameter of 69-1/2 inches. The channels are intended to offer a flexible medium to absorb some of the impact during a non-mechanistic tip-over, while still allowing the cooling air flow through the ventilated overpack. The outer diameter of the overpack is 132-1/2 inches. The overall height of the HI-STORM 100 overpack is 239-1/2 inches.

There are two variants of the HI-STORM 100S overpack, differing from each other only in height and weight. The HI-STORM 100S(232) is 232 inches high, and the HI-STORM 100S(243) is 243 inches high. The HI-STORM 100S(243) is approximately 10,100 lbs heavier assuming standard density concrete. Hereafter in the text, these two versions of the HI-STORM 100S overpack will only be referred to as HI-STORM 100S and will be discussed separately only if the design feature being discussed is different between the two overpacks. See Section 1.5 for drawings.

There are also ~~two~~ variants of the HI-STORM 100S Version B overpack, differing from each other only in height and weight. The HI-STORM 100S-218 is 218 inches high, and the HI-STORM 100S-229 is 229 inches high. The HI-STORM 100S-229 is approximately 8,700 lbs heavier, including standard density concrete. Hereafter in the text, ~~these~~*the* ~~two~~ versions of the HI-STORM 100S Version B overpack will only be referred to as HI-STORM 100S Version B and will be discussed separately only if the design feature being discussed is different between the ~~two~~ overpacks. See Section 1.5 for drawings.

The weight of the overpack without an MPC varies from approximately 135 tons to 160 tons. See Table 3.2.1 for the detailed weights.

Before proceeding to present detailed physical data on the HI-STORM 100 System, it is of contextual importance to summarize the design attributes which enhance the performance and safety of the system. Some of the principal features of the HI-STORM 100 System which enhance its effectiveness as an SNF storage device and a safe SNF confinement structure are:

- the honeycomb design of the MPC fuel basket;
- the effective distribution of neutron and gamma shielding materials within the system;
- the high heat dissipation capability;
- engineered features to promote convective heat transfer;
- the structural robustness of the steel-concrete-steel overpack construction.

The honeycomb design of the MPC fuel baskets renders the basket into a multi-flange plate weldment where all structural elements (i.e., box walls) are arrayed in two orthogonal sets of plates. Consequently, the walls of the cells are either completely co-planar (i.e., no offset) or orthogonal with each other. There is complete edge-to-edge continuity between the contiguous cells.

Among the many benefits of the honeycomb construction is the uniform distribution of the metal mass of the basket over the entire length of the basket. Physical reasoning suggests that a uniformly distributed mass provides a more effective shielding barrier than can be obtained from a nonuniform basket. In other words, the honeycomb basket is a most effective radiation attenuation device. The complete cell-to-cell connectivity inherent in the honeycomb basket structure provides an uninterrupted heat transmission path, making the MPC an effective heat rejection device.

The composite shell construction in the overpack, steel-concrete-steel, allows ease of fabrication and eliminates the need for the sole reliance on the strength of concrete.

A description of each of the components is provided in the following sections, along with information with respect to its fabrication and safety features. This discussion is supplemented with the full set of drawings in Section 1.5.

#### 1.2.1.1 Multi-Purpose Canisters

The MPCs are welded cylindrical structures as shown in cross sectional views of Figures 1.2.2 through 1.2.4. The outer diameter ~~and cylindrical height~~ of each MPC ~~are~~ *is* fixed. Each spent fuel MPC is an assembly consisting of a honeycombed fuel basket, a baseplate, canister shell, a lid, and a closure ring, as depicted in the MPC cross section elevation view, Figure 1.2.5. The number of spent nuclear fuel storage locations in each of the MPCs depends on the fuel assembly characteristics.

There are eight MPC models, distinguished by the type and number of fuel assemblies authorized for loading. Section 1.2.3 and Table 1.2.1 summarize the allowable contents for each MPC model. Section 2.1.9 provides the detailed specifications for the contents authorized for storage in the HI-STORM 100 System. Drawings for the MPCs are provided in Section 1.5.

The MPC provides the confinement boundary for the stored fuel. Figure 1.2.6 provides an elevation view of the MPC confinement boundary. The confinement boundary is defined by the MPC baseplate, shell, lid, port covers, and closure ring. The confinement boundary is a strength-welded enclosure of all stainless steel construction.

The PWR MPC-24, MPC-24E and MPC-24EF differ in construction from the MPC-32 (including the MPC-32F) and the MPC-68 (including the MPC-68F and MPC-68FF) in one important aspect: the fuel storage cells in the MPC-24 series are physically separated from one another by a "flux trap", for criticality control. The PWR MPC-32 and -32F are designed similar to the MPC-68 (without flux traps) and its design includes credit for soluble boron in the MPC water during wet fuel loading and unloading operations for criticality control.

HOLTEC INTERNATIONAL COPYRIGHTED MATERIAL

The MPC fuel baskets of non-flux trap construction (namely, MPC-68, MPC-68F, MPC-68FF, MPC-32, and MPC-32F) are formed from an array of plates welded to each other at their intersections. In the flux-trap type fuel baskets (MPC-24, MPC-24E, and MPC-24EF), formed angles are interposed onto the orthogonally configured plate assemblage to create the required flux-trap channels (see MPC-24 and MPC-24E fuel basket drawings in Section 1.5). In both configurations, two key attributes of the basket are preserved:

i. The cross section of the fuel basket simulates a multi-flanged closed section beam, resulting in extremely high bending rigidity.

ii. The principal structural frame of the basket consists of co-planar plate-type members (i.e., no offset).

This structural feature eliminates the source of severe bending stresses in the basket structure by eliminating the offset between the cell walls that must transfer the inertia load of the stored SNF to the basket/MPC interface during the various postulated accident events (e.g., non-mechanistic tipover, uncontrolled lowering of a cask during on-site transfer, or off-site transport events, etc.).

The MPC fuel basket is positioned and supported within the MPC shell by a set of basket supports welded to the inside of the MPC shell. Between the periphery of the basket, the MPC shell, and the basket supports, optional aluminum heat conduction elements (AHCEs) may have been installed in the early vintage MPCs fabricated, certified, and loaded under the original version or Amendment 1 of the HI-STORM 100 System CoC. The presence of these aluminum heat conduction elements is acceptable for MPCs loaded under the original CoC or Amendment 1, since the governing thermal analysis for Amendment 1 conservatively modeled the AHCEs as restrictions to convective flow in the basket, but took no credit for heat transfer through them. The heat loads authorized under Amendment 1 bound those for the original CoC, with the same MPC design. For MPCs loaded under Amendment 2 or a later version of the HI-STORM 100 CoC, the aluminum heat conduction elements shall not be installed. MPCs both with and without aluminum heat conduction elements installed are compatible with all HI-STORM overpacks. If used, these heat conduction elements are fabricated from thin aluminum alloy 1100 in shapes and a design that allows a snug fit in the confined spaces and ease of installation. If used, the heat conduction elements are installed along the full length of the MPC basket except at the drain pipe location to create a nonstructural thermal connection that facilitates heat transfer from the basket to shell. In their operating condition, the heat conduction elements contact the MPC shell and basket walls.

Lifting lugs attached to the inside surface of the MPC canister shell serve to permit placement of the empty MPC into the HI-TRAC transfer cask. The lifting lugs also serve to axially locate the MPC lid prior to welding. These internal lifting lugs are not used to handle a loaded MPC. Since the MPC lid is installed prior to any handling of a loaded MPC, there is no access to the lifting lugs once the MPC is loaded.

The top end of the MPC incorporates a redundant closure system. Figure 1.2.6 shows the MPC closure details. The MPC lid is a circular plate (fabricated from one piece, or two pieces - split top and bottom) edge-welded to the MPC outer shell. If the two-piece lid design is employed, only the

HOLTEC INTERNATIONAL COPYRIGHTED MATERIAL

top piece is analyzed as part of the enclosure vessel pressure boundary. The bottom piece acts as a radiation shield and is attached to the top piece with a non-structural, non-pressure retaining weld. The lid is equipped with vent and drain ports that are utilized to remove moisture and air from the MPC, and backfill the MPC with a specified amount of inert gas (helium). The vent and drain ports are covered and seal welded before the closure ring is installed. The closure ring is a circular ring edge-welded to the MPC shell and lid. The MPC lid provides sufficient rigidity to allow the entire MPC loaded with SNF to be lifted by threaded holes in the MPC lid.

For fuel assemblies that are shorter than the design basis length, upper and lower fuel spacers (as appropriate) maintain the axial position of the fuel assembly within the MPC basket. The upper fuel spacers are threaded into the underside of the MPC lid as shown in Figure 1.2.5. The lower fuel spacers are placed in the bottom of each fuel basket cell. The upper and lower fuel spacers are designed to withstand normal, off-normal, and accident conditions of storage. An axial clearance of approximately 2 to 2-1/2 inches is provided to account for the irradiation and thermal growth of the fuel assemblies. The suggested values for the upper and lower fuel spacer lengths are listed in Tables 2.1.9 and 2.1.10 for each fuel assembly type. The actual length of fuel spacers will be determined on a site-specific or fuel assembly-specific basis.

The MPC is constructed entirely from stainless steel alloy materials (except for the neutron absorber and optional aluminum heat conduction elements). No carbon steel parts are permitted in the MPC. Concerns regarding interaction of coated carbon steel materials and various MPC operating environments [1.2.1] are not applicable to the MPC. All structural components in a MPC shall be made of Alloy X, a designation which warrants further explanation.

Alloy X is a material that is expected to be acceptable as a Mined Geological Disposal System (MGDS) waste package and which meets the thermophysical properties set forth in this document.

At this time, there is considerable uncertainty with respect to the material of construction for an MPC that would be acceptable as a waste package for the MGDS. Candidate materials being considered for acceptability by the DOE include:

- Type 316
- Type 316LN
- Type 304
- Type 304LN

The DOE material selection process is primarily driven by corrosion resistance in the potential environment of the MGDS. As the decision regarding a suitable material to meet disposal requirements is not imminent, the MPC design allows the use of any one of the four Alloy X materials.

For the MPC design and analysis, Alloy X (as defined in this FSAR) may be one of the following materials. Any steel part in an MPC may be fabricated from any of the acceptable Alloy X materials listed below, except that the steel pieces comprising the MPC shell (i.e., the 1/2" thick cylinder) must be fabricated from the same Alloy X stainless steel type.

HOLTEC INTERNATIONAL COPYRIGHTED MATERIAL

- Type 316
- Type 316LN
- Type 304
- Type 304LN

The Alloy X approach is accomplished by qualifying the MPC for all mechanical, structural, neutronic, radiological, and thermal conditions using material thermophysical properties that are the least favorable for the entire group for the analysis in question. For example, when calculating the rate of heat rejection to the outside environment, the value of thermal conductivity used is the lowest for the candidate material group. Similarly, the stress analysis calculations use the lowest value of the ASME Code allowable stress intensity for the entire group. Stated differently, we have defined a material, which is referred to as Alloy X, whose thermophysical properties, from the MPC design perspective, are the least favorable of the candidate materials.

The evaluation of the Alloy X constituents to determine the least favorable properties is provided in Appendix 1.A.

The Alloy X approach is conservative because no matter which material is ultimately utilized in the MPC construction, the Alloy X approach guarantees that the performance of the MPC will exceed the analytical predictions contained in this document.

#### 1.2.1.2 Overpacks

##### 1.2.1.2.1 HI-STORM Overpack

The HI-STORM overpacks are rugged, heavy-walled cylindrical vessels. Figures 1.1.3B, 1.2.7, 1.2.8, and 1.2.8A provide cross sectional views of the HI-STORM 100 System, showing all of the overpack designs. The HI-STORM 100A overpack design is an anchored variant of the HI-STORM 100 and -100S designs and hereinafter is identified by name only when the discussion specifically applies to the anchored overpack. The HI-STORM 100A differs only in the diameter of the overpack baseplate and the presence of bolt holes and associated anchorage hardware (see Figures 1.1.4 and 1.1.5).The main structural function of the storage overpack is provided by carbon steel, and the main shielding function is provided by plain concrete. The overpack plain concrete is enclosed by cylindrical steel shells, a thick steel baseplate, and a top plate. The overpack lid has appropriate concrete shielding to provide neutron and gamma attenuation in the vertical direction.

The storage overpack provides an internal cylindrical cavity of sufficient height and diameter for housing an MPC. The inner shell of the overpack has channels attached to its inner diameter. The channels provide guidance for MPC insertion and removal and a flexible medium to absorb impact loads during the non-mechanistic tip-over, while still allowing the cooling air flow to circulate through the overpack. Shims may be attached to channels to allow the proper inner diameter dimension to be obtained.

HOLTEC INTERNATIONAL COPYRIGHTED MATERIAL

The storage system has air ducts to allow for passive natural convection cooling of the contained MPC. A minimum of four air inlets and four air outlets are located at the lower and upper extremities of the storage system, respectively. The location of the air outlets in the HI-STORM 100 and the HI-STORM 100S (including Version B) design differ in that the outlet ducts for the HI-STORM 100 overpack are located in the overpack body and are aligned vertically with the inlet ducts at the bottom of the overpack body. The air outlet ducts in the HI-STORM 100S and –100S Version B are integral to the lid assembly and are not in vertical alignment with the inlet ducts. See the drawings in Section 1.5 for details of the overpack air inlet and outlet duct designs. The air inlets and outlets are covered by a screen to reduce the potential for blockage. Routine inspection of the screens (or, alternatively, temperature monitoring) ensures that blockage of the screens themselves will be detected and removed in a timely manner. Analysis, described in Chapter 11 of this FSAR, evaluates the effects of partial and complete blockage of the air ducts.

The air inlets and air outlets are penetrations through the thick concrete shielding provided by the HI-STORM 100 overpack. The outlet air ducts for the HI-STORM 100S and –100S Version B overpack designs, integral to the lid, present a similar break in radial shielding. Within the air inlets and outlets, an array of gamma shield cross plates are installed (see Figure 5.3.19 for a pictorial representation of the gamma shield cross plate designs). These gamma shield cross plates are designed to scatter any radiation traveling through the ducts. The result of scattering the radiation in the ducts is a significant decrease in the local dose rates around the air inlets and air outlets. The configuration of the gamma shield cross plates is such that the increase in the resistance to flow in the air inlets and outlets is minimized. For the HI-STORM 100 and –100S overpack designs, the shielding analysis conservatively credits only the mandatory version of the gamma shield cross plate design because they provide less shielding than the optional design. Conversely, the thermal analysis conservatively evaluates the optional gamma shield cross plate design because it conservatively provides greater resistance to flow than the mandatory design. There is only one gamma shield cross plate design employed with the HI-STORM 100S Version B overpack design, which has been appropriately considered in the shielding and thermal analyses.

Four threaded anchor blocks at the top of the overpack are provided for lifting. The anchor blocks are integrally welded to the radial plates, which in turn are full-length welded to the overpack inner shell, outer shell, and baseplate (HI-STORM 100) or the inlet air duct horizontal plates (HI-STORM 100S) (see Figure 1.2.7). The HI-STORM 100S Version B overpack design incorporates partial-length radial plates at the top of the overpack to secure the anchor blocks and uses both gussets and partial-length radial plates at the bottom of the overpack for structural stability. Details of this arrangement are shown in the drawings in Section 1.5.

The four anchor blocks are located on $90^{o}$ arcs around the circumference of the top of the overpack lid. The overpack may also be lifted from the bottom using specially-designed lifting transport devices, including hydraulic jacks, air pads, Hillman rollers, or other design based on site-specific needs and capabilities. Slings or other suitable devices mate with lifting lugs that are inserted into threaded holes in the top surface of the overpack lid to allow lifting of the overpack lid. After the lid is bolted to the storage overpack main body, these lifting bolts shall be removed and replaced with flush plugs.

HOLTEC INTERNATIONAL COPYRIGHTED MATERIAL

The plain concrete between the overpack inner and outer steel shells is specified to provide the necessary shielding properties (dry density) and compressive strength. The concrete shall be in accordance with the requirements specified in Appendix 1.D.

The principal function of the concrete is to provide shielding against gamma and neutron radiation. However, in an implicit manner it helps enhance the performance of the HI-STORM overpack in other respects as well. For example, the massive bulk of concrete imparts a large thermal inertia to the HI-STORM overpack, allowing it to moderate the rise in temperature of the system under hypothetical conditions when all ventilation passages are assumed to be blocked. The case of a postulated fire accident at the ISFSI is another example where the high thermal inertia characteristics of the HI-STORM concrete control the temperature of the MPC. Although the annular concrete mass in the overpack shell is not a structural member, it does act as an elastic/plastic filler of the inter-shell space, such that, while its cracking and crushing under a tip-over accident is not of significant consequence, its deformation characteristics are germane to the analysis of the structural members.

Density and compressive strength are the key parameters that delineate the performance of concrete in the HI-STORM System. The density of concrete used in the inter-shell annulus, pedestal (HI-STORM 100 and –100S overpacks only), and overpack lid has been set as defined in Appendix 1.D. For evaluating the physical properties of concrete for completing the analytical models, conservative formulations of Reference [1.0.5] are used.

To ensure the stability of the concrete at temperature, the concrete composition has been specified in accordance with NUREG-1536, "Standard Review Plan for Dry Cask Storage Systems" [1.0.3]. Thermal analyses, presented in Chapter 4, show that the temperatures during normal storage conditions do not threaten the physical integrity of the HI-STORM overpack concrete.

There are three base HI-STORM overpack designs - HI-STORM 100, HI-STORM 100S, and HI-STORM 100S Version B. The significant differences among the three are overpack height, MPC pedestal height, location of the air outlet ducts, and the vertical alignment of the inlet and outlet air ducts. The HI-STORM 100 overpack is approximately 240 inches high from the bottom of the baseplate to the top of the lid bolts and 227 inches high without the lid installed. There are two variants of the HI-STORM 100S overpack design, differing only in height and weight. The HI-STORM 100S(232) is approximately 232 inches high from the bottom of the baseplate to the top of the lid in its final storage configuration and approximately 211 inches high without the lid installed. The HI-STORM 100S(243) is approximately 243 inches high from the bottom of the baseplate to the top of the lid in its final storage configuration and approximately 222 inches high without the lid installed. There are also ~~two~~ variants of the HI-STORM 100S Version B overpack design, differing only in height and weight. The HI-STORM 100S-218 is approximately 218 inches high from the bottom of the baseplate to the top of the lid in its final storage configuration and approximately 199 inches high without the lid installed. The HI-STORM 100S-229 is approximately 229 inches high from the bottom of the baseplate to the top of the lid in its final storage configuration and 210 inches high without the lid installed.

The HI-STORM 100S Version B overpack design does not include a concrete-filled pedestal to support the MPC. Instead, the MPC rests upon a steel plate that maintains the MPC sufficiently

HOLTEC INTERNATIONAL COPYRIGHTED MATERIAL

above the inlet air ducts to prevent direct radiation shine through the ducts. To facilitate this change, the inlet air ducts for the HI-STORM 100S Version B are shorter in height but larger in width. See the drawings in Section 1.5 for details.

The anchored embodiment of the HI-STORM overpack is referred to as HI-STORM 100A or HI-STORM 100SA. The HI-STORM 100S version B overpack design may not be deployed in the anchored configuration at this time. As explained in the foregoing, the HI-STORM overpack is a steel weldment, which makes it a relatively simple matter to extend the overpack baseplate, form lugs, and then anchor the cask to the reinforced concrete structure of the ISFSI. In HI-STORM terminology, these lugs are referred to as "sector lugs." The sector lugs, as shown in Figure 1.1.5 and the drawing in Section 1.5, are formed by extending the HI-STORM overpack baseplate, welding vertical gussets to the baseplate extension and to the overpack outer shell and, finally, welding a horizontal lug support ring in the form of an annular sector to the vertical gussets and to the outer shell. The baseplate is equipped with regularly spaced clearance holes (round or slotted) through which the anchor studs can pass. The sector lugs are bolted to the ISFSI pad using anchor studs that are made of a creep-resistant, high-ductility, environmentally compatible material. The bolts are pre-loaded to a precise axial stress using a "stud tensioner" rather than a torque wrench. Pre-tensioning the anchors using a stud tensioner eliminates any shear stress in the bolt, which is unavoidable if a torquing device is employed (Chapter 3 of the text "Mechanical Design of Heat Exchangers and Pressure Vessel Components", by Arcturus Publishers, 1984, K.P. Singh and A.I. Soler, provides additional information on stud tensioners). The axial stress in the anchors induced by pre-tensioning is kept below 75% of the material yield stress, such that during the seismic event the maximum bolt axial stress remains below the limit prescribed for bolts in the ASME Code, Section III, Subsection NF (for Level D conditions). Figures 1.1.4 and 1.1.5 provide visual depictions of the anchored HI-STORM 100A configuration. This configuration also applies to the HI-STORM 100SA.

The anchor studs pass through liberal clearance holes (circular or slotted) in the sector lugs (0.75" minimum clearance) such that the fastening of the studs to the ISFSI pad can be carried out without mechanical interference from the body of the sector lug. The two clearance hole configurations give the ISFSI pad designer flexibility in the design of the anchor embedment in the ISFSI concrete. The axial force in the anchors produces a compressive load at the overpack/pad interface. This compressive force, F, imputes a lateral load bearing capacity to the cask/pad interface that is equal to $\mu F$ ($\mu \leq 0.53$ per Table 2.2.8). As is shown in Chapter 3 of this FSAR, the lateral load-bearing capacity of the HI-STORM/pad interface ($\mu F$) is many times greater than the horizontal (sliding) force exerted on the cask under the postulated DBE seismic event. Thus, the potential for lateral sliding of the HI-STORM 100A System during a seismic event is precluded, as is the potential for any bending action on the anchor studs.

The seismic loads, however, will produce an overturning moment on the overpack that would cause a redistribution of the compressive contact pressure between the pad and the overpack. To determine the pulsation in the tensile load in the anchor studs and in the interface contact pressure, bounding static analysis of the preloaded configuration has been performed. The results of the static analysis demonstrate that the initial preloading minimizes pulsations in the stud load. A confirmatory non-linear dynamic analysis has also been performed using the time-history methodology described in Chapter 3, wherein the principal nonlinearities in the cask system are incorporated and addressed.

HOLTEC INTERNATIONAL COPYRIGHTED MATERIAL

The calculated results from the dynamic analysis confirm the static analysis results and that the presence of pre-stress helps minimize the pulsation in the anchor stud stress levels during the seismic event, thus eliminating any concern with regard to fatigue failure under extended and repetitive seismic excitations.

The sector lugs in HI-STORM 100A are made of the same steel material as the baseplate and the shell (SA516- Gr. 70) which helps ensure high quality fillet welds used to join the lugs to the body of the overpack. The material for the anchor studs can be selected from a family of allowable stud materials listed in the ASME Code (Section II). A representative sampling of permitted materials is listed in Table 1.2.7. The menu of materials will enable the ISFSI owner to select a fastener material that is resistant to corrosion in the local ISFSI environment. For example, for ISFSIs located in marine environments (e.g., coastal reactor sites), carbon steel studs would not be recommended without concomitant periodic inspection and coating maintenance programs. Table 1.2.7 provides the chemical composition of several acceptable fastener materials to help the ISFSI owner select the most appropriate material for his site. The two mechanical properties, ultimate strength $\sigma_u$ and yield strength $\sigma_y$ are also listed. For purposes of structural evaluations, the lower bound values of $\sigma_u$ and $\sigma_y$ from the menu of materials listed in Table 1.2.7 are used (see Table 3.4.10).

As shown in the drawing, the anchor studs are spaced sufficiently far apart such that a practical reinforced concrete pad with embedded receptacles can be designed to carry the axial pull from the anchor studs without overstressing the enveloping concrete monolith. The design specification and supporting analyses in this FSAR are focused on qualifying the overpack structures, including the sector lugs and the anchor studs. The design of the ISFSI pad, and its anchor receptacle will vary from site to site, depending on the geology and seismological characteristics of the sub-terrain underlying the ISFSI pad region. The data provided in this FSAR, however, provide the complete set of factored loads to which the ISFSI pad, its sub-grade, and the anchor receptacles must be designed within the purview of ACI-349-97 [1.0.4]. Detailed requirements on the ISFSI pads for anchored casks are provided in Section 2.0.4.

#### 1.2.1.2.2 HI-TRAC (Transfer Cask) - Standard Design

Like the storage overpack, the HI-TRAC transfer cask is a rugged, heavy-walled cylindrical vessel. The main structural function of the transfer cask is provided by carbon steel, and the main neutron and gamma shielding functions are provided by water and lead, respectively. The transfer cask is a steel, lead, steel layered cylinder with a water jacket attached to the exterior. Figure 1.2.9 provides a typical cross section of the standard design HI-TRAC-125 with the pool lid installed. See Section 1.2.1.2.3 for discussion of the optional HI-TRAC 100D and 125D designs.

The transfer cask provides an internal cylindrical cavity of sufficient size for housing an MPC. The top lid of the HI-TRAC 125 has additional neutron shielding to provide neutron attenuation in the vertical direction (from SNF in the MPC below). The MPC access hole through the HI-TRAC top lid is provided to allow the lowering/raising of the MPC between the HI-TRAC transfer cask, and the HI-STORM or HI-STAR overpacks. The standard design HI-TRAC (comprised of HI-TRAC 100 and HI-TRAC 125) is provided with two bottom lids, each used separately. The pool lid is bolted to the bottom flange of the HI-TRAC and is utilized during MPC fuel loading and sealing

operations. In addition to providing shielding in the axial direction, the pool lid incorporates a seal that is designed to hold clean demineralized water in the HI-TRAC inner cavity, thereby preventing contamination of the exterior of the MPC by the contaminated fuel pool water. After the MPC has been drained, dried, and sealed, the pool lid is removed and the HI-TRAC transfer lid is attached (standard design only). The transfer lid incorporates two sliding doors that allow the opening of the HI-TRAC bottom for the MPC to be raised/lowered. Figure 1.2.10 provides a cross section of the HI-TRAC with the transfer lid installed.

In the standard design, trunnions are provided for lifting and rotating the transfer cask body between vertical and horizontal positions. The lifting trunnions are located just below the top flange and the pocket trunnions are located above the bottom flange. The two lifting trunnions are provided to lift and vertically handle the HI-TRAC, and the pocket trunnions provide a pivot point for the rotation of the HI-TRAC for downending or upending.

Two standard design HI-TRAC transfer casks of different weights are provided to house the MPCs. The 125 ton HI-TRAC weight does not exceed 125 tons during any loading or transfer operation. The 100 ton HI-TRAC weight does not exceed 100 tons during any loading or transfer operation. The internal cylindrical cavities of the two standard design HI-TRACs are identical. However, the external dimensions are different. The 100ton HI-TRAC has a reduced thickness of lead and water shielding and consequently, the external dimensions are different. The structural steel thickness is identical in the two HI-TRACs. This allows most structural analyses of the 125 ton HI-TRAC to bound the 100 ton HI-TRAC design. Additionally, as the two HI-TRACs are identical except for a reduced thickness of lead and water, the 125 ton HI-TRAC has a larger thermal resistance than the smaller and lighter 100 ton HI-TRAC. Therefore, for normal conditions the 125 ton HI-TRAC thermal analysis bounds that of the 100 ton HI-TRAC. Separate shielding analyses are performed for each HI-TRAC since the shielding thicknesses are different between the two.

#### 1.2.1.2.3 HI-TRAC 100D and 125D Transfer Casks

As an option to using either of the standard HI-TRAC transfer cask designs, users may choose to use the optional HI-TRAC 100D or 125D designs. Figure 1.2.9A provides a typical cross section of the HI-TRAC-125D with the pool lid installed. The HI-TRAC 100D (figure not shown) is similar to the HI-TRAC 125D except for the top lid (which contains no Holtite). Like the standard designs, the optional designs are designed and constructed in accordance with ASME III, Subsection NF, with certain NRC-approved alternatives, as discussed in Section 2.2.4. Functionally equivalent, the major differences between the HI-TRAC 100D and 125D designs and the standard designs are as follows:

- No pocket trunnions are provided for downending/upending
- The transfer lid is not required
- A new ancillary, the HI-STORM mating device (Figure 1.2.18) is required during MPC transfer operations
- A wider baseplate with attachment points for the mating device is provided
- The baseplate incorporates gussets for added structural strength
- The number of pool lid bolts is reduce

The interface between the MPC and the transfer cask is the same between the standard designs and the optional designs. The optional designs are capable of withstanding all loads defined in the design basis for the transfer cask during normal, off-normal, and accident modes of operation with adequate safety margins. In lieu of swapping the pool lid for the transfer lid to facilitate MPC transfer, the pool lids remain on the HI-TRAC 100D and 125D until MPC transfer is required. The HI-STORM mating device is located between, and secured with bolting (if required by seismic analysis), to the top of the HI-STORM overpack and the HI-TRAC 100D or 125D transfer cask. The mating device is used to remove the pool lid to provide a pathway for MPC transfer between the overpack and the transfer cask. Section 1.2.2.2 provides additional detail on the differences between the standard transfer cask designs and the optional HI-TRAC 100D or 125D designs during operations.

#### 1.2.1.3 Shielding Materials

The HI-STORM 100 System is provided with shielding to ensure the radiation and exposure requirements in 10CFR72.104 and 10CFR72.106 are met. This shielding is an important factor in minimizing the personnel doses from the gamma and neutron sources in the SNF in the MPC for ALARA considerations during loading, handling, transfer, and storage. The fuel basket structure of edge-welded composite boxes and neutron absorber panels attached to the fuel storage cell vertical surfaces provide the initial attenuation of gamma and neutron radiation emitted by the radioactive spent fuel. The MPC shell, baseplate, lid and closure ring provide additional thicknesses of steel to further reduce the gamma flux at the outer canister surfaces.

In the HI-STORM storage overpack, the primary shielding in the radial direction is provided by concrete and steel. In addition, the storage overpack has a thick circular concrete slab attached to the lid, and the HI-STORM 100 and –100S have a thick circular concrete pedestal upon which the MPC rests. This concrete pedestal is not necessary in the HI-STORM 100S Version B overpack design. These slabs provide gamma and neutron attenuation in the axial direction. The thick overpack lid and concrete shielding integral to the lid provide additional gamma attenuation in the upward direction, reducing both direct radiation and skyshine. Several steel plate and shell elements provide additional gamma shielding as needed in specific areas, as well as incremental improvements in the overall shielding effectiveness. Gamma shield cross plates, as depicted in Figure 5.3.19, provide attenuation of scattered gamma radiation as it exits the inlet and outlet air ducts.

In the HI-TRAC transfer cask radial direction, gamma and neutron shielding consists of steel-lead-steel and water, respectively. In the axial direction, shielding is provided by the top lid, and the pool or transfer lid, as applicable. In the HI-TRAC pool lid, layers of steel-lead-steel provide an additional measure of gamma shielding to supplement the gamma shielding at the bottom of the MPC. In the transfer lid, layers of steel-lead-steel provide gamma attenuation. For the HI-TRAC 125 transfer lid, the neutron shield material, Holtite-A, is also provided. The HI-TRAC 125 and HI-TRAC 125D top lids are composed of steel-neutron shield-steel, with the neutron shield material being Holtite-A. The HI-TRAC 100 and HI-TRAC 100D top lids are composed of steel only providing gamma attenuation.

HOLTEC INTERNATIONAL COPYRIGHTED MATERIAL

1.2.1.3.1 Fixed Neutron Absorbers

1.2.1.3.1.1 Boral™

Boral is a thermal neutron poison material composed of boron carbide and aluminum (aluminum powder and plate). Boron carbide is a compound having a high boron content in a physically stable and chemically inert form. The boron carbide contained in Boral is a fine granulated powder that conforms to ASTM C-750-80 nuclear grade Type III. The Boral cladding is made of alloy aluminum, a lightweight metal with high tensile strength which is protected from corrosion by a highly resistant oxide film. The two materials, boron carbide and aluminum, are chemically compatible and ideally suited for long-term use in the radiation, thermal, and chemical environment of a nuclear reactor, spent fuel pool, or dry cask.

The documented historical applications of Boral, in environments comparable to those in spent fuel pools and fuel storage casks, dates to the early 1950s (the U.S. Atomic Energy Commission's AE-6 Water-Boiler Reactor [1.2.2]). Technical data on the material was first printed in 1949, when the report "Boral: A New Thermal Neutron Shield" was published [1.2.3]. In 1956, the first edition of the Reactor Shielding Design Manual [1.2.4] was published and it contained a section on Boral and its properties.

In the research and test reactors built during the 1950s and 1960s, Boral was frequently the material of choice for control blades, thermal-column shutters, and other items requiring very good thermal-neutron absorption properties. It is in these reactors that Boral has seen its longest service in environments comparable to today's applications.

Boral found other uses in the 1960s, one of which was a neutron poison material in baskets used in the shipment of irradiated, enriched fuel rods from Canada's Chalk River laboratories to Savannah River. Use of Boral in shipping containers continues, with Boral serving as the poison in current British Nuclear Fuels Limited casks and the Storable Transport Cask by Nuclear Assurance Corporation [1.2.5].

Boral has been licensed by the NRC for use in numerous BWR and PWR spent fuel storage racks and has been extensively used in international nuclear installations.

Boral has been exclusively used in fuel storage applications in recent years. Its use in spent fuel pools as the neutron absorbing material can be attributed to its proven performance and several unique characteristics, such as:

- The content and placement of boron carbide provides a very high removal cross section for thermal neutrons.

- Boron carbide, in the form of fine particles, is homogeneously dispersed throughout the central layer of the Boral panels.

- The boron carbide and aluminum materials in Boral do not degrade as a result of long-term exposure to radiation.

- The neutron absorbing central layer of Boral is clad with permanently bonded surfaces of aluminum.

- Boral is stable, strong, durable, and corrosion resistant.

Boral absorbs thermal neutrons without physical change or degradation of any sort from the anticipated exposure to gamma radiation and heat. The material does not suffer loss of neutron attenuation capability when exposed to high levels of radiation dose.

Holtec International's QA Program ensures that Boral is manufactured under the control and surveillance of a Quality Assurance/Quality Control Program that conforms to the requirements of 10CFR72, Subpart G. Holtec International has procured over 200,000 panels of Boral from AAR Advanced Structures in over 30 projects. Boral has always been purchased with a minimum $^{10}B$ loading requirement. Coupons extracted from production runs were tested using the wet chemistry procedure. The actual $^{10}B$ loading, out of thousands of coupons tested, has never been found to fall below the design specification. The size of this coupon database is sufficient to provide reasonable assurance that all future Boral procurements will continue to yield Boral with full compliance with the stipulated minimum loading. Furthermore, the surveillance, coupon testing, and material tracking processes which have so effectively controlled the quality of Boral are expected to continue to yield Boral of similar quality in the future. Nevertheless, to add another layer of insurance, only 75% $^{10}B$ credit of the fixed neutron absorber is assumed in the criticality analysis consistent with Chapter 6.0, IV, 4.c of NUREG-1536, Standard Review Plan for Dry Cask Storage Systems.

Operating experience in nuclear plants with fuel loading of Boral equipped MPCs as well as laboratory test data indicate that the aluminium used in the manufacture of the Boral may react with water, resulting in the generation of hydrogen. The numerous variables (i.e., aluminium particle size, pool temperature, pool chemistry, etc.) that influence the extent of the hydrogen produced make it impossible to predict the amount of hydrogen that may be generated during MPC loading or unloading at a particular plant. Therefore, due to the variability in hydrogen generation from the Boral-water reaction, the operating procedures in Chapter 8 require monitoring for combustible gases and either exhausting or purging the space beneath the MPC lid during loading and unloading operations when an ignition event could occur (i.e., when the space beneath the MPC lid is open to the welding or cutting operation).

#### 1.2.1.3.1.2 METAMIC®

METAMIC® is a neutron absorber material developed by the Reynolds Aluminum Company in the mid-1990s for spent fuel reactivity control in dry and wet storage applications. Metallurgically, METAMIC® is a metal matrix composite (MMC) consisting of a matrix of 6061 aluminum alloy reinforced with Type 1 ASTM C-750 boron carbide. METAMIC® is characterized by extremely fine aluminum (325 mesh or better) and boron carbide powder. Typically, the average $B_4C$ particle size

is between 10 and 15 microns. As described in the U.S. patents held by METAMIC, Inc.[*†], the high performance and reliability of METAMIC® derives from the particle size distribution of its constituents, rendered into a metal matrix composite by the powder metallurgy process. This yields excellent and uniform homogeneity.

The powders are carefully blended without binders or other additives that could potentially adversely influence performance. The maximum percentage of $B_4C$ that can be dispersed in the aluminum alloy 6061 matrix is approximately 40 wt.%, although extensive manufacturing and testing experience is limited to approximately 31 wt.%. The blend of powders is isostatically compacted into a green billet under high pressure and vacuum sintered to near theoretical density.

According to the manufacturer, billets of any size can be produced using this technology. The billet is subsequently extruded into one of a number of product forms, ranging from sheet and plate to angle, channel, round and square tube, and other profiles. For the METAMIC® sheets used in the MPCs, the extruded form is rolled down into the required thickness.

METAMIC® has been subjected to an extensive array of tests sponsored by the Electric Power Research Institute (EPRI) that evaluated the functional performance of the material at elevated temperatures (up to 900ºF) and radiation levels (1E+11 rads gamma). The results of the tests documented in an EPRI report (Ref. [1.2.11]) indicate that METAMIC® maintains its physical and neutron absorption properties with little variation in its properties from the unirradiated state. The main conclusions provided in the above-referenced EPRI report are summarized below:

- The metal matrix configuration produced by the powder metallurgy process with a complete absence of open porosity in METAMIC® ensures that its density is essentially equal to the theoretical density.

- The physical and neutronic properties of METAMIC® are essentially unaltered under exposure to elevated temperatures ($750^o$ F - $900^o$ F).

- No detectable change in the neutron attenuation characteristics under accelerated corrosion test conditions has been observed.

In addition, independent measurements of boron carbide particle distribution show extremely small particle-to-particle distance[†] and near-perfect homogeneity.

An evaluation of the manufacturing technology underlying METAMIC® as disclosed in the above-

[*] U.S. Patent No. 5,965,829, "Radiation Absorbing Refractory Composition".
[†] U.S. Patent No. 6,042,779, "Extrusion Fabrication Process for Discontinuous Carbide Particulate Metal Matrix Composites and Super, Hypereutectic Al/Si."
[†] Medium measured neighbor-to-neighbor distance is 10.08 microns according to the article, "METAMIC Neutron Shielding", by K. Anderson, T. Haynes, and R. Kazmier, EPRI Boraflex Conference, November 19-20, 1998.

HOLTEC INTERNATIONAL COPYRIGHTED MATERIAL

referenced patents and of the extensive third-party tests carried out under the auspices of EPRI makes METAMIC® an acceptable neutron absorber material for use in the MPCs. Holtec's technical position on METAMIC® is also supported by the evaluation carried out by other organizations (see, for example, USNRC's SER on NUHOMS-61BT, Docket No. 72-1004).

Consistent with its role in reactivity control, all METAMIC® material procured for use in the Holtec MPCs will be qualified as important-to-safety (ITS) Category A item. ITS category A manufactured items, as required by Holtec's NRC-approved Quality Assurance program, must be produced to essentially preclude the potential of an error in the procurement of constituent materials and the manufacturing processes. Accordingly, material and manufacturing control processes must be established to eliminate the incidence of errors, and inspection steps must be implemented to serve as an independent set of barriers to ensure that all critical characteristics defined for the material by the cask designer are met in the manufactured product.

All manufacturing and in-process steps in the production of METAMIC® shall be carried out using written procedures. As required by the company's quality program, the material manufacturer's QA program and its implementation shall be subject to review and ongoing assessment, including audits and surveillances as set forth in the applicable Holtec QA procedures to ensure that all METAMIC® panels procured meet with the requirements appropriate for the quality genre of the MPCs. Additional details pertaining to the qualification and production tests for METAMIC® are summarized in Subsection 9.1.5.3.

Because of the absence of interconnected porosities, the time required to dehydrate a METAMIC®-equipped MPC is expected to be less compared to an MPC containing Boral.

NUREG/CR-5661 (Ref. [1.2.14]) recommends limiting poison material credit to 75% of the minimum $^{10}B$ loading because of concerns for potential "streaming" of neutrons, and allows for greater percentage credit in criticality analysis "if comprehensive acceptance tests, capable of verifying the presence and uniformity of the neutron absorber, are implemented". The value of 75% is characterized in NUREG/CR-5661 as a very conservative value, based on experiments with neutron poison containing relatively large $B_4C$ particles, such as BORAL with an average particle size in excess of 100 microns. METAMIC®, however, has a much smaller particle size of typically between 10 and 15 microns on average. Any streaming concerns would therefore be drastically reduced.

Analyses performed by Holtec International show that the streaming due to particle size is practically non-existent in METAMIC®. Further, EPRI's neutron attenuation measurements on 31 and 15 $B_4C$ weight percent METAMIC® showed that METAMIC® exhibits very uniform $^{10}B$ areal density. This makes it easy to reliably establish and verify the presence and microscopic and macroscopic uniformity of the $^{10}B$ in the material. Therefore, 90% credit is applied to the minimum $^{10}B$ areal density in the criticality calculations, i.e. a 10% penalty is applied. This 10% penalty is considered conservative since there are no significant remaining uncertainties in the $^{10}B$ areal density. In Chapter 9 the qualification and on production tests for METAMIC® to support 90% $^{10}B$ credit are specified. With 90% credit, the target weight percent of boron carbide in METAMIC® is 31 for all MPCs, as summarized in Table 1.2.8, consistent with the test coupons used in the EPRI

evaluations [1.2.11]. The maximum permitted value is 33.0 wt% to allow for necessary fabrication flexibility.

Because METAMIC® is a solid material, there is no capillary path through which spent fuel pool water can penetrate METAMIC® panels and chemically react with aluminum in the interior of the material to generate hydrogen. Any chemical reaction of the outer surfaces of the METAMIC® neutron absorber panels with water to produce hydrogen occurs rapidly and reduces to an insignificant amount in a short period of time. Nevertheless, combustible gas monitoring for METAMIC® -equipped MPCs and purging or exhausting the space under the MPC lid during welding and cutting operations, is required until sufficient field experience is gained that confirms that little or no hydrogen is released by METAMIC® during these operations.

Mechanical properties of 31 wt.% METAMIC® based on coupon tests of the material in the as-fabricated condition and after 48 hours of an elevated temperature state at 900ºF are summarized below from the EPRI report [1.2.11].

| Mechanical Properties of 31wt.% $B_4C$ METAMIC | | |
|---|---|---|
| Property | As-Fabricated | After 48 hours of 900ºF Temperature Soak |
| Yield Strength (psi) | 32937 ± 3132 | 28744 ± 3246 |
| Ultimate Strength (psi) | 40141 ± 1860 | 34608 ± 1513 |
| Elongation (%) | 1.8 ± 0.8 | 5.7 ± 3.1 |

The required flexural strain of the neutron absorber to ensure that it will not fracture when the supporting basket wall flexes due to the worst case lateral loading is 0.2%, which is the flexural strain of the Alloy X basket panel material. The 1% minimum elongation of 31wt.% $B_4C$ METAMIC® indicated by the above table means that a large margin of safety against cracking exists, so there is no need to perform testing of the METAMIC® for mechanical properties.

EPRI's extensive characterization effort [1.2.11], which was focused on 15 and 31 wt.% $B_4C$ METAMIC® served as the principal basis for a recent USNRC SER for 31wt.% $B_4C$ METAMIC for used in wet storage [1.2.12]. Additional studies on METAMIC® [1.2.13], EPRI's and others work provide the confidence that 31wt.% $B_4C$ METAMIC® will perform its intended function in the MPCs.

1.2.1.3.1.3 <u>Locational Fixity of Neutron Absorbers</u>

Both Boral and METAMIC® neutron absorber panels are completely enclosed in Alloy X (stainless steel) sheathing that is stitch welded to the MPC basket cell walls along their entire periphery. The edges of the sheathing are bent toward the cell wall to make the edge weld. Thus, the neutron absorber is contained in a tight, welded pocket enclosure. The shear strength of the pocket weld joint, which is an order of magnitude greater than the weight of a fuel assembly, guarantees that the neutron absorber and its enveloping sheathing pocket will maintain their as-installed position under

all loading, storage, and transient evolutions. Finally, the pocket joint detail ensures that fuel assembly insertion or withdrawal into or out of the MPC basket will not lead to a disconnection of the sheathing from the cell wall.

1.2.1.3.2 Neutron Shielding

The specification of the HI-STORM overpack and HI-TRAC transfer cask neutron shield material is predicated on functional performance criteria. These criteria are:

- Attenuation of neutron radiation to appropriate levels;
- Durability of the shielding material under normal conditions, in terms of thermal, chemical, mechanical, and radiation environments;
- Stability of the homogeneous nature of the shielding material matrix;
- Stability of the shielding material in mechanical or thermal accident conditions to the desired performance levels; and
- Predictability of the manufacturing process under adequate procedural control to yield an in-place neutron shield of desired function and uniformity.

Other aspects of a shielding material, such as ease of handling and prior nuclear industry use, are also considered, within the limitations of the main criteria. Final specification of a shield material is a result of optimizing the material properties with respect to the main criteria, along with the design of the shield system, to achieve the desired shielding results.

Neutron attenuation in the HI-STORM overpack is provided by the thick walls of concrete contained in the steel vessel, lid, and pedestal (only for the HI-STORM 100 and –100S overpack designs). Concrete is a shielding material with a long proven history in the nuclear industry. The concrete composition has been specified to ensure its continued integrity at the long term temperatures required for SNF storage.

The HI-TRAC transfer cask is equipped with a water jacket providing radial neutron shielding. Demineralized water will be utilized in the water jacket. To ensure operability for low temperature conditions, ethylene glycol (25% in solution) will be added to reduce the freezing point for low temperature operations (e.g., below 32$^{o}$F) [1.2.7].

Neutron shielding in the HI-TRAC 125 and 125D transfer casks in the axial direction is provided by Holtite-A within the top lid. HI-TRAC 125 also contains Holtite-A in the transfer lid. Holtite-A is a poured-in-place solid borated synthetic neutron-absorbing polymer. Holtite-A is specified with a nominal $B_4C$ loading of 1 weight percent for the HI-STORM 100 System. Appendix 1.B provides the Holtite-A material properties germane to its function as a neutron shield. Holtec has performed confirmatory qualification tests on Holtite-A under the company's QA program.

In the following, a brief summary of the performance characteristics and properties of Holtite-A is provided.

Density

The specific gravity of Holtite-A is 1.68 g/cm$^3$ as specified in Appendix 1.B. To conservatively bound any potential weight loss at the design temperature and any inability to reach the theoretical density, the density is reduced by 4% to 1.61 g/cm$^3$. The density used for the shielding analysis is conservatively assumed to be 1.61 g/cm$^3$ to underestimate the shielding capabilities of the neutron shield.

Hydrogen

The weight concentration of hydrogen is 6.0%. However, all shielding analyses conservatively assume 5.9% hydrogen by weight in the calculations.

Boron Carbide

Boron carbide dispersed within Holtite-A in finely dispersed powder form is present in 1% (nominal) weight concentration. Holtite-A may be specified with a $B_4C$ content of up to 6.5 weight percent. For the HI-STORM 100 System, Holtite-A is specified with a nominal $B_4C$ weight percent of 1%.

Design Temperature

The design temperatures of Holtite-A are provided in Table 1.B.1.. The maximum spatial temperatures of Holtite-A under all normal operating conditions must be demonstrated to be below these design temperatures, as applicable.

Thermal Conductivity

The Holtite-A neutron shielding material is stable below the design temperature for the long term and provides excellent shielding properties for neutrons. A conservative, lower bound conductivity is stipulated for use in the thermal analyses of Chapter 4 (Section 4.2) based on information in the technical literature.

1.2.1.3.3 Gamma Shielding Material

For gamma shielding, the HI-STORM 100 storage overpack primarily relies on massive concrete sections contained in a robust steel vessel. A carbon steel plate, the shield shell, is located adjacent to the overpack inner shell to provide additional gamma shielding (Figure 1.2.7)[†]. Carbon steel supplements the concrete gamma shielding in most portions of the storage overpack, most notably the pedestal (HI-STORM 100 and –100S overpack designs only) and the lid. To reduce the radiation streaming through the overpack air inlets and outlets, gamma shield cross plates are installed in the ducts (Figures 1.2.8 and 1.2.8A) to scatter the radiation. This scattering acts to significantly reduce the local dose rates adjacent to the overpack air inlets and outlets. See Figure 5.3.19 and the drawings in Section 1.5 for more details of the gamma shield cross plate designs for each overpack design.

In the HI-TRAC transfer cask, the primary gamma shielding is provided by lead. As in the storage overpack, carbon steel supplements the lead gamma shielding of the HI-TRAC transfer cask.

1.2.1.4 Lifting Devices

Lifting of the HI-STORM 100 System may be accomplished either by attachment at the top of the storage overpack ("top lift"), as would typically be done with a crane, or by attachment at the bottom ("bottom lift"), as would be effected by a number of lifting/handling devices.

For a top lift, the storage overpack is equipped with four threaded anchor blocks arranged circumferentially around the overpack. These anchor blocks are used for overpack lifting as well as securing the overpack lid to the overpack body. The storage overpack may be lifted with a lifting device that engages the anchor blocks with threaded studs and connects to a crane or similar equipment.

A bottom lift of the HI-STORM 100 storage overpack is effected by the insertion of four hydraulic jacks underneath the inlet vent horizontal plates (Figure 1.2.1). A slot in the overpack baseplate allows the hydraulic jacks to be placed underneath the inlet vent horizontal plate. The hydraulic jacks lift the loaded overpack to provide clearance for inserting or removing a device for transportation.

The standard design HI-TRAC transfer cask is equipped with two lifting trunnions and two pocket trunnions. The HI-TRAC 100D and 125D are equipped with only lifting trunnions. The lifting trunnions are positioned just below the top forging. The two pocket trunnions are located above the bottom forging and attached to the outer shell. The pocket trunnions are designed to allow rotation of the HI-TRAC. All trunnions are built from a high strength alloy with proven corrosion and non-galling characteristics. The lifting trunnions are designed in accordance with NUREG-0612 and

[†] The shield shell design feature was deleted in June, 2001 after overpack serial number 7 was fabricated. Those overpacks without the shield shell are required to have a higher concrete density in the overpack body to provide compensatory shielding. See Table 1.D.1.

ANSI N14.6. The lifting trunnions are installed by threading into tapped holes just below the top forging.

The top of the MPC lid is equipped with four threaded holes that allow lifting of the loaded MPC. These holes allow the loaded MPC to be raised/lowered through the HI-TRAC transfer cask using lifting cleats. The threaded holes in the MPC lid are designed in accordance with NUREG-0612 and ANSI N14.6.

#### 1.2.1.5 Design Life

The design life of the HI-STORM 100 System is 40 years. This is accomplished by using material of construction with a long proven history in the nuclear industry and specifying materials known to withstand their operating environments with little to no degradation. A maintenance program, as specified in Chapter 9, is also implemented to ensure the HI-STORM 100 System will exceed its design life of 40 years. The design considerations that assure the HI-STORM 100 System performs as designed throughout the service life include the following:

HI-STORM Overpack and HI-TRAC Transfer Cask

- Exposure to Environmental Effects
- Material Degradation
- Maintenance and Inspection Provisions

MPC

- Corrosion
- Structural Fatigue Effects
- Maintenance of Helium Atmosphere
- Allowable Fuel Cladding Temperatures
- Neutron Absorber Boron Depletion

The adequacy of the HI-STORM 100 System for its design life is discussed in Sections 3.4.11 and 3.4.12.

### 1.2.2 Operational Characteristics

#### 1.2.2.1 Design Features

The HI-STORM 100 System incorporates some unique design improvements. These design innovations have been developed to facilitate the safe long term storage of SNF. Some of the design originality is discussed in Subsection 1.2.1 and below.

The free volume of the MPCs is inerted with 99.995% pure helium gas during the spent nuclear fuel loading operations. Table 1.2.2 specifies the helium fill requirements for the MPC internal cavity.

HOLTEC INTERNATIONAL COPYRIGHTED MATERIAL

The HI-STORM overpack has been designed to synergistically combine the benefits of steel and concrete. The steel-concrete-steel construction of the HI-STORM overpack provides ease of fabrication, increased strength, and an optimal radiation shielding arrangement. The concrete is primarily provided for radiation shielding and the steel is primarily provided for structural functions.

The strength of concrete in tension and shear is conservatively neglected. Only the compressive strength of the concrete is accounted for in the analyses.

The criticality control features of the HI-STORM 100 are designed to maintain the neutron multiplication factor k-effective (including uncertainties and calculational bias) at less than 0.95 under all normal, off-normal, and accident conditions of storage as analyzed in Chapter 6. This level of conservatism and safety margins is maintained, while providing the highest storage capacity.

#### 1.2.2.2 Sequence of Operations

Table 1.2.6 provides the basic sequence of operations necessary to defuel a spent fuel pool using the HI-STORM 100 System. The detailed sequence of steps for storage-related loading and handling operations is provided in Chapter 8 and is supported by the drawings in Section 1.5. A summary of the general actions needed for the loading and unloading operations is provided below. Figures 1.2.16 and 1.2.17 provide a pictorial view of typical loading and unloading operations, respectively.

Loading Operations

At the start of loading operations, the HI-TRAC transfer cask is configured with the pool lid installed. The HI-TRAC water jacket is filled with demineralized water or a 25% ethylene glycol solution depending on the ambient temperature conditions. The lift yoke is used to position HI-TRAC in the designated preparation area or setdown area for HI-TRAC inspection and MPC insertion. The annulus is filled with plant demineralized water, and an inflatable annulus seal is installed. The inflatable seal prevents contact between spent fuel pool water and the MPC shell reducing the possibility of contaminating the outer surfaces of the MPC. The MPC is then filled with water (borated if necessary). Based on the MPC model and fuel enrichment, this may be borated water or plant demineralized water (see Section 2.1). HI-TRAC and the MPC are lowered into the spent fuel pool for fuel loading using the lift yoke. Pre-selected assemblies are loaded into the MPC and a visual verification of the assembly identification is performed.

While still underwater, a thick shielding lid (the MPC lid) is installed. The lift yoke is remotely engaged to the HI-TRAC lifting trunnions and is used to lift the HI-TRAC close to the spent fuel pool surface. As an ALARA measure, dose rates are measured on the top of the HI-TRAC and MPC prior to removal from the pool to check for activated debris on the top surface. The MPC lift bolts (securing the MPC lid to the lift yoke) are removed. As HI-TRAC is removed from the spent fuel pool, the lift yoke and HI-TRAC are sprayed with demineralized water to help remove contamination.

HOLTEC INTERNATIONAL COPYRIGHTED MATERIAL

HI-TRAC is removed from the pool and placed in the designated preparation area. The top surfaces of the MPC lid and the upper flange of HI-TRAC are decontaminated. The inflatable annulus seal is removed, and an annulus shield is installed. The annulus shield provides additional personnel shielding at the top of the annulus and also prevents small items from being dropped into the annulus. The Automated Welding System baseplate shield (if used) is installed to reduce dose rates around the top of the cask. The MPC water level is lowered slightly and the MPC lid is seal-welded using the Automated Welding System (AWS) or other approved welding process. Liquid penetrant examinations are performed on the root and final passes. A multi-layer liquid penetrant or volumetric examination is also performed on the MPC lid-to-shell weld. The MPC water is displaced from the MPC by blowing pressurized helium or nitrogen gas into the vent port of the MPC, thus displacing the water through the drain line. At the appropriate time in the sequence of activities, based on the type of test performed (hydrostatic or pneumatic), a pressure test of the MPC enclosure vessel is performed.

For MPCs containing all moderate burnup fuel, a Vacuum Drying System (VDS) may be used to remove moisture from the MPC cavity. The VDS is connected to the MPC and is used to remove liquid water from the MPC in a stepped evacuation process. The stepped evacuation process is used to preclude the formation of ice in the MPC and Vacuum Drying System lines. The internal pressure is reduced and held for a duration to ensure that all liquid water has evaporated. This process is continued until the pressure in the MPC meets the technical specification limit and can be held there for the required amount of time.

For storage of high burnup fuel and as an option for storage of moderate burnup fuel, the reduction of residual moisture in the MPC to trace amounts is accomplished using a Forced Helium Dehydration (FHD) system, as described in Appendix 2.B. Relatively warm and dry helium is recirculated through the MPC cavity, which helps maintain the SNF in a cooled condition while moisture is being removed. The warm, dry gas is supplied to the MPC drain port and circulated through the MPC cavity where it absorbs moisture. The humidified gas travels out of the MPC and through appropriate equipment to cool and remove the absorbed water from the gas. The dry gas may be heated prior to its return to the MPC in a closed loop system to accelerate the rate of moisture removal in the MPC. This process is continued until the temperature of the gas exiting the demoisturizing module described in Appendix 2.B meets the specified limit.

Following moisture removal, the MPC is backfilled with a predetermined amount of helium gas. The helium backfill ensures adequate heat transfer during storage and provides an inert atmosphere for long-term fuel integrity. Cover plates are installed and seal-welded over the MPC vent and drain ports with liquid penetrant examinations performed on the root and final passes.

The MPC closure ring is then placed on the MPC, aligned, tacked in place, and seal welded, providing redundant closure of the MPC lid and cover plates confinement closure welds. Tack welds are visually examined, and the root and final welds are inspected using the liquid penetrant examination technique to ensure weld integrity. The annulus shield is removed and the remaining water in the annulus is drained. The AWS Baseplate shield is removed. The MPC lid and accessible areas of the top of the MPC shell are smeared for removable contamination and HI-TRAC dose rates

HOLTEC INTERNATIONAL COPYRIGHTED MATERIAL

are measured. The HI-TRAC top lid is installed and the bolts are torqued. The MPC lift cleats are installed on the MPC lid. The MPC lift cleats are the primary lifting point of the MPC.

Rigging is installed between the MPC lift cleats and the lift yoke. . The rigging supports the MPC within HI-TRAC while the pool lid is replaced with the transfer lid. For the standard design transfer cask, the HI-TRAC is manipulated to replace the pool lid with the transfer lid. The MPC lift cleats and rigging support the MPC during the transfer operations.

MPC transfer from the HI-TRAC transfer cask into the overpack may be performed inside or outside the fuel building. Similarly, HI-TRAC and HI-STORM may be transferred to the ISFSI in several different ways. The loaded HI-TRAC may be handled in the vertical or horizontal orientation. The loaded HI-STORM can only be handled vertically.

For MPC transfers inside the fuel building, the empty HI-STORM overpack is inspected and staged with the lid removed, the alignment device positioned, and, for the HI-STORM 100 overpack, the vent duct shield inserts installed. If using HI-TRAC 100D or 125D, the HI-STORM mating device is placed (bolted if required by generic or site specific seismic evaluation) to the top of the empty overpack (Figure 1.2.18). The loaded HI-TRAC is placed using the fuel building crane on top of HI-STORM, or the mating device, as applicable. After the HI-TRAC is positioned atop the HI-STORM or positioned (bolted if required by generic or site specific seismic evaluation) atop the mating device, as applicable, the MPC is raised slightly. With the standard HI-TRAC design, the transfer lid door locking pins are removed and the doors are opened. With the HI-TRAC 100D and 125D, the pool lid is removed using the mating device. The MPC is lowered into HI-STORM. Following verification that the MPC is fully lowered, slings are disconnected and lowered onto the MPC lid. For the HI-STORM 100, the doors are closed and the HI-TRAC is prepared for removal from on top of HI-STORM (with HI-TRAC 100D and 125D, the transfer cask must first be disconnected from the mating device). For the HI-STORM 100S and HI-STORM 100S Version B, the standard design HI-TRAC may need to be lifted above the overpack to a height sufficient to allow closure of the transfer lid doors without interfering with the MPC lift cleats. The HI-TRAC is then removed and placed in its designated storage location. The MPC lift cleats and slings are removed from atop the MPC. The alignment device, vent duct shield inserts, and/or mating device is/are removed, as applicable. The pool lid is removed from the mating device and re-attached to the HI-TRAC 100D or 125D prior to its next use. The HI-STORM lid is installed, and the upper vent screens and gamma shield cross plates are installed. The HI-STORM lid studs are installed and torqued.

For MPC transfers outside of the fuel building, the empty HI-STORM overpack is inspected and staged with the lid removed, the alignment device positioned, and, for the HI-STORM 100, the vent duct shield inserts installed. For HI-TRAC 100D and 125D, the mating device is positioned (bolted if required by generic or site specific seismic evaluation) atop the overpack. The loaded HI-TRAC is transported to the cask transfer facility in the vertical or horizontal orientation. A number of methods may be utilized as long as the handling limitations prescribed in the technical specifications are not exceeded.

To place the loaded HI-TRAC in a horizontal orientation, a transport frame or “cradle” is utilized. If the cradle is equipped with rotation trunnions they are used to engage the HI-TRAC 100 or 125

HOLTEC INTERNATIONAL COPYRIGHTED MATERIAL

pocket trunnions. While the loaded HI-TRAC is lifted by the lifting trunnions, the HI-TRAC is lowered onto the cradle rotation trunnions. Then, the crane lowers and the HI-TRAC pivots around the pocket trunnions and is placed in the horizontal position in the cradle.

The HI-TRAC 100D and 125D do not include pocket trunnions in their designs. Therefore, the user must downend the transfer cask onto the transport frame using appropriately designed rigging in accordance with the site's heavy load control program.

If the loaded HI-TRAC is transferred to the cask transfer facility in the horizontal orientation, the HI-TRAC transport frame and/or cradle are placed on a transport vehicle. The transport vehicle may be an air pad, railcar, heavy-haul trailer, dolly, etc. If the loaded HI-TRAC is transferred to the cask transfer facility in the vertical orientation, the HI-TRAC may be lifted by the lifting trunnions or seated on the transport vehicle. During the transport of the loaded HI-TRAC, standard plant heavy load handling practices shall be applied including administrative controls for the travel path and tie-down mechanisms.

For MPCs containing any HBF, the Supplemental Cooling System (SCS) is required to be operational during the time the loaded and backfilled MPC is in HI-TRAC to ensure fuel cladding temperatures remain within limits. The SCS is discussed in detail in Section 4.5 and the design criteria for the system are provided in Appendix 2.C. The SCS is not required when the MPC is inside the overpack, regardless of decay heat load.

After the loaded HI-TRAC arrives at the cask transfer facility, the HI-TRAC is upended by a crane if the HI-TRAC is in a horizontal orientation. The loaded HI-TRAC is then placed, using the crane located in the transfer area, on top of HI-STORM, which has been inspected and staged with the lid removed, vent duct shield inserts installed, the alignment device positioned, and the mating device installed, as applicable.

After the HI-TRAC is positioned atop the HI-STORM or the mating device, the MPC is raised slightly. In the standard design, the transfer lid door locking pins are removed and the doors are opened. With the HI-TRAC 100D and 125D, the pool lid is removed using the mating device. The MPC is lowered into HI-STORM. Following verification that the MPC is fully lowered, slings are disconnected and lowered onto the MPC lid. For the HI-STORM 100, the doors are closed and HI-TRAC is removed from on top of HI-STORM or disconnected from the mating device, as applicable. For the HI-STORM 100S and the HI-STORM 100S Version B, the standard design HI-TRAC may need to be lifted above the overpack to a height sufficient to allow closure of the transfer lid doors without interfering with the MPC lift cleats. The HI-TRAC is then removed and placed in its designated storage location. The MPC lift cleats and slings are removed from atop the MPC. The alignment device, vent duct shield inserts, and mating device is/are removed, as applicable. The pool lid is removed from the mating device and re-attached to the HI-TRAC 100D or 125D prior to its next use. The HI-STORM lid is installed, and the upper vent screens and gamma shield cross plates are installed. The HI-STORM lid studs and nuts are installed.

After the HI-STORM has been loaded either within the fuel building or at a dedicated cask transfer facility, the HI-STORM is then moved to its designated position on the ISFSI pad. The HI-STORM

overpack may be moved using a number of methods as long as the handling limitations listed in the technical specifications are not exceeded. The loaded HI-STORM must be handled in the vertical orientation, and may be lifted from the top by the anchor blocks or from the bottom by the inlet vents. After the loaded HI-STORM is lifted, it may be placed on a transport mechanism or continue to be lifted by the lid studs and transported to the storage location. The transport mechanism may be an air pad, crawler, railcar, heavy-haul trailer, dolly, etc. During the transport of the loaded HI-STORM, standard plant heavy load handling practices shall be applied including administrative controls for the travel path and tie-down mechanisms. Once in position at the storage pad, vent operability testing is performed to ensure that the system is functioning within its design parameters.

In the case of HI-STORM 100A, the anchor studs are installed and fastened into the anchor receptacles in the ISFSI pad in accordance with the design requirements.

Unloading Operations

The HI-STORM 100 System unloading procedures describe the general actions necessary to prepare the MPC for unloading, cool the stored fuel assemblies in the MPC, flood the MPC cavity, remove the lid welds, unload the spent fuel assemblies, and recover HI-TRAC and empty the MPC. Special precautions are outlined to ensure personnel safety during the unloading operations, and to prevent the risk of MPC overpressurization and thermal shock to the stored spent fuel assemblies.

The MPC is recovered from HI-STORM either at the cask transfer facility or the fuel building using any of the methodologies described in Section 8.1. The HI-STORM lid is removed, the alignment device positioned, and, for the HI-STORM 100, the vent duct shield inserts are installed, and the MPC lift cleats are attached to the MPC. For HI-TRAC 100D and 125D, the mating device is installed. Rigging is attached to the MPC lift cleats. For the HI-STORM 100S and HI-STORM 100S Version B with the standard HI-TRAC design, the transfer doors may need to be opened to avoid interfering with the MPC lift cleats. For the HI-TRAC 100D and 125D, the mating device (possibly containing the pool lid) is secured to the top of the overpack. HI-TRAC is raised and positioned on top of HI-STORM or bolted (if necessary) to the mating device, as applicable. For the HI-TRAC 100D and 125D, the pool lid is ensured to be out of the transfer path for the MPC. The MPC is raised into HI-TRAC. Once the MPC is raised into HI-TRAC, the standard design HI-TRAC transfer lid doors are closed and the locking pins are installed. For the HI-TRAC 100D and 125D, the pool lid is installed and the transfer cask is unsecured from the mating device. HI-TRAC is removed from on top of HI-STORM. As required based on the presence of high burnup fuel, the Supplemental Cooling System is installed and placed into operation.

The HI-TRAC is brought into the fuel building and, for the standard design, manipulated for bottom lid replacement. The transfer lid is replaced with the pool lid. The MPC lift cleats and rigging support the MPC during lid transfer operations.

HI-TRAC and its enclosed MPC are returned to the designated preparation area and the rigging, MPC lift cleats, and HI-TRAC top lid are removed. The annulus is filled with plant demineralized water (borated, if necessary). The annulus and HI-TRAC top surfaces are protected from debris that will be produced when removing the MPC lid.

HOLTEC INTERNATIONAL COPYRIGHTED MATERIAL

The MPC closure ring and vent and drain port cover plates are core drilled. Local ventilation is established around the MPC ports. The RVOAs are attached to the vent and drain port. The RVOAs allow access to the inner cavity of the MPC, while providing a hermetic seal. The MPC is cooled using appropriate means, if necessary, to reduce the MPC internal temperature to allow water flooding. Following the fuel cool-down, the MPC is flooded with borated or unborated water, as required.. The MPC lid-to-MPC shell weld is removed. Then, all weld removal equipment is removed with the MPC lid left in place.

The MPC lid is rigged to the lift yoke and the lift yoke is engaged to HI-TRAC lifting trunnions. If weight limitations require, the neutron shield jacket is drained. HI-TRAC is placed in the spent fuel pool and the MPC lid is removed. All fuel assemblies are returned to the spent fuel storage racks and the MPC fuel cells are vacuumed to remove any assembly debris. HI-TRAC and MPC are returned to the designated preparation area where the MPC water is removed. The annulus water is drained and the MPC and HI-TRAC are decontaminated in preparation for re-utilization.

### 1.2.2.3 Identification of Subjects for Safety and Reliability Analysis

#### 1.2.2.3.1 Criticality Prevention

Criticality is controlled by geometry and neutron absorbing materials in the fuel basket. The MPC-24/24E/24EF (all with lower enriched fuel) and the MPC-68/68F/68FF do not rely on soluble boron credit during loading or the assurance that water cannot enter the MPC during storage to meet the stipulated criticality limits.

Each MPC model is equipped with neutron absorber plates affixed to the fuel cell walls as shown on the drawings in Section 1.5. The minimum $^{10}B$ areal density specified for the neutron absorber in each MPC model is shown in Table 1.2.2. These values are chosen to be consistent with the assumptions made in the criticality analyses.

The MPC-24, MPC-24E and 24EF(all with higher enriched fuel) and the MPC-32 and MPC-32F take credit for soluble boron in the MPC water for criticality prevention during wet loading and unloading operations. Boron credit is only necessary for these PWR MPCs during loading and unloading operations that take place under water. During storage, with the MPC cavity dry and sealed from the environment, criticality control measures beyond the fixed neutron poisons affixed to the storage cell walls are not necessary because of the low reactivity of the fuel in the dry, helium filled canister and the design features that prevent water from intruding into the canister during storage.

#### 1.2.2.3.2 Chemical Safety

There are no chemical safety hazards associated with operations of the HI-STORM 100 dry storage system. A detailed evaluation is provided in Section 3.4.

#### 1.2.2.3.3 Operation Shutdown Modes

The HI-STORM 100 System is totally passive and consequently, operation shutdown modes are unnecessary. Guidance is provided in Chapter 8, which outlines the HI-STORM 100 unloading procedures, and Chapter 11, which outlines the corrective course of action in the wake of postulated accidents.

#### 1.2.2.3.4 Instrumentation

As stated earlier, the HI-STORM 100 confinement boundary is the MPC, which is seal welded, non-destructively examined and pressure tested. The HI-STORM 100 is a completely passive system with appropriate margins of safety; therefore, it is not necessary to deploy any instrumentation to monitor the cask in the storage mode. At the option of the user, temperature elements may be utilized to monitor the air temperature of the HI-STORM overpack exit vents in lieu of routinely inspecting the ducts for blockage. See Subsection 2.3.3.2 for additional details.

#### 1.2.2.3.5 Maintenance Technique

Because of their passive nature, the HI-STORM 100 System requires minimal maintenance over its lifetime. No special maintenance program is required. Chapter 9 describes the acceptance criteria and maintenance program set forth for the HI-STORM 100.

### 1.2.3 Cask Contents

The HI-STORM 100 System is designed to house different types of MPCs. The MPCs are designed to store both BWR and PWR spent nuclear fuel assemblies. Tables 1.2.1 and 1.2.2 provide key system data and parameters for the MPCs. A description of acceptable fuel assemblies for storage in the MPCs is provided in Section 2.1. This includes fuel assemblies classified as damaged fuel assemblies and fuel debris in accordance with the definitions of these terms in Table 1.0.1. A summary of the types of fuel authorized for storage in each MPC model is provided below. All fuel assemblies, non-fuel hardware, and neutron sources must meet the fuel specifications provided in Section 2.1. All fuel assemblies classified as damaged fuel or fuel debris must be stored in damaged fuel containers.

MPC-24

The MPC-24 is designed to accommodate up to twenty-four (24) PWR fuel assemblies classified as intact fuel assemblies, with or without non-fuel hardware.

MPC-24E

The MPC-24E is designed to accommodate up to twenty-four (24) PWR fuel assemblies, with or without non-fuel hardware. Up to four (4) fuel assemblies may be classified as damaged fuel assemblies, with the balance being classified as intact fuel assemblies. Damaged fuel assemblies must be stored in fuel storage locations 3, 6, 19, and/or 22 (see Figure 1.2.4).

HOLTEC INTERNATIONAL COPYRIGHTED MATERIAL

MPC-24EF

The MPC-24EF is designed to accommodate up to twenty-four (24) PWR fuel assemblies, with or without non-fuel hardware. Up to four (4) fuel assemblies may be classified as damaged fuel assemblies or fuel debris, with the balance being classified as intact fuel assemblies. Damaged fuel assemblies and fuel debris must be stored in fuel storage locations 3, 6, 19, and/or 22 (see Figure 1.2.4).

MPC-32

The MPC-32 is designed to accommodate up to thirty-two (32) PWR fuel assemblies with or without non-fuel hardware. Up to eight (8) of these assemblies may be classified as damaged fuel assemblies, with the balance being classified as intact fuel assemblies. Damaged fuel assemblies must be stored in fuel storage locations 1, 4, 5, 10, 23, 28, 29, and/or 32 (see Figure 1.2.3).

MPC-32F

The MPC-32F is designed to store up to thirty two (32) PWR fuel assemblies with or without non-fuel hardware. Up to eight (8) of these assemblies may be classified as damaged fuel assemblies or fuel debris, with the balance being classified as intact fuel assemblies. Damaged fuel assemblies and fuel debris must be stored in fuel storage locations 1, 4, 5, 10, 23, 28, 29, and/or 32 (see Figure 1.2.3).

MPC-68

The MPC-68 is designed to accommodate up to sixty-eight (68) BWR intact and/or damaged fuel assemblies, with or without channels. For the Dresden Unit 1 or Humboldt Bay plants, the number of damaged fuel assemblies may be up to a total of 68. For damaged fuel assemblies from plants other than Dresden Unit 1 and Humboldt Bay, the number of damaged fuel assemblies is limited to sixteen (16) and must be stored in fuel storage locations 1, 2, 3, 8, 9, 16, 25, 34, 35, 44, 53, 60, 61, 66, 67, and/or 68 (see Figure 1.2.2).

MPC-68F

The MPC-68F is designed to accommodate up to sixty-eight (68) Dresden Unit 1 or Humboldt Bay BWR fuel assemblies (with or without channels) made up of any combination of fuel assemblies classified as intact fuel assemblies, damaged fuel assemblies, and up to four (4) fuel assemblies classified as fuel debris.

MPC-68FF

The MPC-68FF is designed to accommodate up to sixty-eight (68) BWR fuel assemblies with or without channels. Any number of these fuel assemblies may be Dresden Unit 1 or Humboldt

HOLTEC INTERNATIONAL COPYRIGHTED MATERIAL

Bay BWR fuel assemblies classified as intact fuel or damaged fuel. Dresden Unit 1 and Humboldt Bay fuel debris is limited to eight (8) DFCs. DFCs containing Dresden Unit 1 or Humboldt Bay fuel debris may be stored in any fuel storage location. For BWR fuel assemblies from plants other than Dresden Unit 1 and Humboldt Bay, the total number of fuel assemblies classified as damaged fuel assemblies or fuel debris is limited to sixteen (16), with up to eight (8) of the 16 fuel assemblies classified as fuel debris. These fuel assemblies must be stored in fuel storage locations 1, 2, 3, 8, 9, 16, 25, 34, 35, 44, 53, 60, 61, 66, 67, and/or 68 (see Figure 1.2.2). The balance of the fuel storage locations may be filled with intact BWR fuel assemblies, up to a total of 68.

Table 1.2.1

KEY SYSTEM DATA FOR HI-STORM 100 SYSTEM

| ITEM | QUANTITY | NOTES |
|---|---|---|
| Types of MPCs included in this revision of the submittal | 8 | 5 for PWR<br>3 for BWR |
| MPC storage capacity†: | MPC-24<br><br>MPC-24E<br><br>MPC-24EF | Up to 24 intact ZR or stainless steel clad PWR fuel assemblies with or without non-fuel hardware. Up to four damaged fuel assemblies may be stored in the MPC-24E and up to four (4) damaged fuel assemblies and/or fuel assemblies classified as fuel debris may be stored in the MPC-24EF<br><br>OR |
| | MPC-32<br><br>MPC-32F<br>*(See Note 1 on next page)* | Up to 32 intact ZR or stainless steel clad PWR fuel assemblies with or without non-fuel hardware. Up to 8 damaged fuel assemblies may be stored in the MPC-32 and up to 8 damaged fuel assemblies and/or fuel assemblies classified as fuel debris may be stored in the MPC-32F. |
| | MPC-68 | Any combination of Dresden Unit 1 or Humboldt Bay damaged fuel assemblies in damaged fuel containers and intact fuel assemblies, up to a total of 68. For damaged fuel other than Dresden Unit 1 and Humboldt Bay, the number of fuel assemblies is limited to 16, with the balance being intact fuel assemblies.<br><br>OR |

† See Section 2.1 for a complete description of authorized cask contents and fuel specifications.

Table 1.2.1 (continued)
KEY SYSTEM DATA FOR HI-STORM 100 SYSTEM

| ITEM | QUANTITY | NOTES |
|---|---|---|
| MPC storage capacity: | MPC-68F | Up to 4 damaged fuel containers with ZR clad Dresden Unit 1 (D-1) or Humboldt Bay (HB) BWR fuel debris and the complement damaged ZR clad Dresden Unit 1 or Humboldt Bay BWR fuel assemblies in damaged fuel containers or intact Dresden Unit 1 or Humboldt Bay BWR intact fuel assemblies.<br><br>OR |
| | MPC-68FF | Up to 68 Dresden Unit 1 or Humboldt Bay intact fuel or damaged fuel and up to 8 damaged fuel containers containing D-1 or HB fuel debris. For other BWR plants, up to 16 damaged fuel containers containing BWR damaged fuel and/or fuel debris with the complement intact fuel assemblies, up to a total of 68. The number of damaged fuel containers containing BWR fuel debris is limited to eight (8) for all BWR plants. |

*Notes:*

1. *The stated information does not apply to the Indian Point Unit 1 MPC-32s. Supplement 1.II provides the storage capacity for the IP1 MPC-32s.*

Table 1.2.2

KEY PARAMETERS FOR HI-STORM 100 MULTI-PURPOSE CANISTERS

| | PWR | BWR |
|---|---|---|
| Pre-disposal service life (years) | 40 | 40 |
| Design temperature, max./min. ($^{o}$F) | 725$^{o\dagger}$/-40$^{o\dagger\dagger}$ | 725$^{o\dagger}$/-40$^{o\dagger\dagger}$ |
| Design internal pressure (psig) | | |
| Normal conditions | 100 | 100 |
| Off-normal conditions | 110 | 110 |
| Accident Conditions | 200 | 200 |
| Total heat load, max. (kW) | 28.74 | 28.19 |
| Maximum permissible peak fuel cladding temperature: | | |
| Long Term Normal ($^{o}$F) | 752 | 752 |
| Short Term Operations ($^{o}$F) | 752 or 1058$^{\dagger\dagger\dagger}$ | 752 or 1058$^{\dagger\dagger\dagger}$ |
| Off-normal and Accident ($^{o}$F) | 1058 | 1058 |

† Maximum normal condition design temperatures for the MPC fuel basket. A complete listing of design temperatures for all components is provided in Table 2.2.3.

†† Temperature based on off-normal minimum environmental temperatures specified in Section 2.2.2.2 and no fuel decay heat load.

††† See Section 4.5 for discussion of the applicability of the 1058$^{o}$F temperature limit during MPC drying.

Table 1.2.2 (cont'd)

KEY PARAMETERS FOR HI-STORM 100 MULTI-PURPOSE CANISTERS

| | PWR | BWR |
|---|---|---|
| MPC internal environment Helium fill<br>(99.995% fill helium purity) | (all pressure ranges are at a reference temperature of 70°F) | (all pressure ranges are at a reference temperature of 70°F) |
| MPC-24<br>(heat load ≤ 27.77 kW) | ≥ 29.3 psig and ≤ 33.3 psig<br>OR<br>0.1212 +/-10% g-moles/liter | |
| MPC-24E/24EF<br>(heat load ≤ 28.17 kW) | ≥ 29.3 psig and ≤ 33.3 psig<br>OR<br>0.1212 +/-10% g-moles/liter | |
| MPC-68/68F/68FF<br>(heat load ≤ 28.19 kW) | | ≥ 29.3 psig and ≤ 33.3 psig<br>OR<br>0.1218 +/-10% g-moles/liter |
| MPC-32/32F<br>(heat load ≤ 28.74 kW)<br>*(See Note 2)* | ≥ 29.3 psig and ≤ 33.3 psig<br>OR<br>0.1212 +/-10% g-moles/liter | |
| Maximum permissible multiplication factor ($k_{eff}$) including all uncertainties and biases | < 0.95 | < 0.95 |
| Fixed Neutron Absorber $^{10}B$ Areal Density (g/cm$^2$)<br><br>Boral/Metamic | 0.0267/0.0223 (MPC-24)<br><br>0.0372/0.0310 (MPC-24E, MPC-24EF MPC-32 & MPC-32F) | 0.0372/0.0310<br>(MPC-68 & MPC-68FF)<br><br>0.01/NA (MPC-68F)<br>(See Note 1) |
| End closure(s) | Welded | Welded |
| Fuel handling | Opening compatible with standard grapples | Opening compatible with standard grapples |
| Heat dissipation | Passive | Passive |

NOTES:

1. All MPC-68F canisters are equipped with Boral neutron absorber.
2. *The stated requirements do not apply to the Indian Point Unit 1 MPC-32s. Supplement 1.II provides Helium fill requirements for Indian Point Unit 1 MPC-32s.*

Table 1.2.3

INTENTIONALLY DELETED

Table 1.2.4

INTENTIONALLY DELETED

Table 1.2.5

INTENTIONALLY DELETED

Table 1.2.6

HI-STORM 100 OPERATIONS SEQUENCE

| | |
|---|---|
| Site-specific handling and operations procedures will be prepared, reviewed, and approved by each owner/user. | |
| 1 | HI-TRAC and MPC lowered into the fuel pool without lids |
| 2 | Fuel assemblies transferred into the MPC fuel basket |
| 3 | MPC lid lowered onto the MPC |
| 4 | HI-TRAC/MPC assembly moved to the decon pit and MPC lid welded in place, volumetrically or multi-layer PT examined, and pressure tested |
| 5 | MPC dewatered, moisture removed, backfilled with helium, and the closure ring welded |
| 6 | HI-TRAC annulus drained and external surfaces decontaminated |
| 7 | MPC lifting cleats installed and MPC weight supported by rigging |
| 8 | HI-TRAC pool lid removed and transfer lid attached (not applicable to HI-TRAC 100D or 125D) |
| 9 | MPC lowered and seated on HI-TRAC transfer lid (not applicable to HI-TRAC 100D or 125D) |
| 9a | HI-STORM mating device secured to top of empty HI-STORM overpack (HI-TRAC 100D and 125D only) |
| 10 | HI-TRAC/MPC assembly transferred to atop the HI-STORM overpack or mating device, as applicable |
| 11 | MPC weight supported by rigging and transfer lid doors opened (standard design HI-TRAC) or pool lid removed (HI-TRAC 100D and 125D) |
| 12 | MPC lowered into HI-STORM overpack, and HI-TRAC removed from atop the HI-STORM overpack/mating device |
| 12a | HI-STORM mating device removed (HI-TRAC 100D and 125D only) |
| 13 | HI-STORM overpack lid installed and bolted in place |
| 14 | HI-STORM overpack placed in storage at the ISFSI pad |
| 15 | For HI-STORM 100A (or 100SA) users, the overpack is anchored to the ISFSI pad by installation of nuts onto studs and torquing to the minimum required torque. |

Table 1.2.7

REPRESENTATIVE ASME BOLTING AND THREADED ROD MATERIALS ACCEPTABLE
FOR THE HI-STORM 100A ANCHORAGE SYSTEM

ASME MATERIALS FOR BOLTING

| Composition | I.D. | Type Grade or UNC No. | Ultimate Strength (ksi) | Yield Strength (ksi) | Code Permitted Size Range† |
|---|---|---|---|---|---|
| C | SA-354 | BC K04100 | 125 | 109 | t ≤ 2.5” |
| ¾ Cr | SA-574 | 51B37M | 170 | 135 | t ≥ 5/8” |
| 1 Cr – 1/5 Mo | SA-574 | 4142 | 170 | 135 | t ≥ 5/8” |
| 1 Cr-1/2 Mo-V | SA-540 | B21 (K 14073) | 165 | 150 | t ≤ 4” |
| 5 Cr – ½ Mo | SA-193 | B7 | 125 | 105 | t ≤ 2.5” |
| $2N_i$ – ¾ Cr – ¼ Mo | SA-540 | B23 (H-43400) | 135 | 120 | |
| $2N_i$ – ¾ Cr – 1/3 Mo | SA-540 | B-24 (K-24064) | 135 | 120 | |
| 17Cr-4Ni-4Cu | SA-564 | 630 (H-1100) | 140 | 115 | |
| 17Cr-4Ni-4Cu | SA-564 | 630 (H-1075) | 145 | 125 | |
| 25Ni-15Cr-2Ti | SA-638 | 660 | 130 | 85 | |
| 22CR-13Ni-5Mn | SA-479 | XM-19 (S20910) | 135 | 105 | |

Note: The materials listed in this table are representative of acceptable materials and have been abstracted from the ASME Code, Section II, Part D, Table 3. Other materials listed in the Code are also acceptable as long as they meet the size requirements, the minimum requirements on yield and ultimate strength (see Table 2.0.4), and are suitable for the environment.

† Nominal diameter of the bolt (or rod) as listed in the Code tables. Two-inch diameter studs/rods are specified for the HI-STORM 100A.

HOLTEC INTERNATIONAL COPYRIGHTED MATERIAL

Table 1.2.8

METAMIC® DATA FOR HOLTEC MPCs

| MPC Type | Min. B-10 areal density required by criticality analysis ($g/cm^2$) | Nominal Weight Percent of $B_4C$ and Reference *METAMIC®* Panel Thickness | | | |
|---|---|---|---|---|---|
| | | 100% Credit | 90% Credit | 75% Credit | Ref. Thickness (inch) (see note) |
| MPC-24 | 0.020 | 27.6 | 31 | 37.2 | 0.075 |
| MPC-68, -68FF, -32, -32F, -24E, and -24EF | 0.0279 | 27.8 | 31 | 37.4 | 0.104 |

Note: The drawings in Section 1.5 show slightly larger thickness to ensure that the minimum B-10 areal density is conservative under all conditions.

## 1.3 IDENTIFICATION OF AGENTS AND CONTRACTORS

Holtec International is a specialty engineering company with a principal focus on spent fuel storage technologies. Holtec has carried out turnkey wet storage capacity expansions (engineering, licensing, fabrication, removal of existing racks, performance of underwater modifications, volume reduction of the old racks and hardware, installation of new racks, and commissioning of the pool for increased storage capacity) in numerous plants around the world. Over 45 plants in the U.S., Britain, Brazil, Korea, and Taiwan have utilized Holtec's wet storage technology to extend their in-pool storage capacity.

Holtec's corporate engineering consists of experts with advanced degrees (Ph.D.'s) in every discipline germane to the fuel storage technologies, namely structural mechanics, heat transfer, computational fluid dynamics, and nuclear physics. All engineering analyses for Holtec's fuel storage projects (including HI-STORM 100) are carried out in-house.

Holtec International's quality assurance program was originally developed to meet NRC requirements delineated in 10CFR50, Appendix B, and was expanded to include provisions of 10CFR71, Subpart H, and 10CFR72, Subpart G, for structures, systems, and components designated as important to safety. The Holtec quality assurance program, which satisfies all 18 criteria in 10CFR72, Subpart G, that apply to the design, fabrication, construction, testing, operation, modification, and decommissioning of structures, systems, and components important to safety is incorporated by reference into this FSAR as described in Chapter 13.

It is currently planned that the HI-STORM 100 System will be fabricated by *Holtec Manufacturing Division (HMD)* ~~U.S. Tool & Die, Inc. (UST&D) of~~*located in* Pittsburgh, Pennsylvania. ~~UST&D is an N-Stamp holder and a highly respected fabricator of nuclear components. UST&D is on Holtec's Approved Vendors List (AVL) and has a quality assurance program meeting 10CFR50 Appendix B criteria. Extensive prototypical fabrication of the MPCs has been carried out at the UST&D shop to resolve fixturing and tolerance issues.~~ If another fabricator is to be used for the fabrication of any part of the HI-STORM 100 System, the proposed fabricator will be evaluated and audited in accordance with Holtec International's quality assurance program.

Construction, assembly, and operations on-site may be performed by Holtec or a licensee as the prime contractor. A licensee shall be suitably qualified and experienced to perform selected activities. Typical licensees are technically qualified and experienced in commercial nuclear power plant construction and operation activities under a quality assurance program meeting 10CFR50 Appendix B criteria.

HOLTEC INTERNATIONAL COPYRIGHTED MATERIAL

## 1.5 DRAWINGS

The following HI-STORM 100 System drawings and bills of materials are provided on subsequent pages in this subsection:

| Drawing Number/Sheet | Description | Rev. |
|---|---|---|
| 3923 | MPC Enclosure Vessel | ~~14~~*15* |
| 3925 | MPC-24E/EF Fuel Basket Assembly | 5 |
| 3926 | MPC-24 Fuel Basket Assembly | 7 |
| 3927 | MPC-32 Fuel Basket Assembly | ~~9~~*10* |
| 3928 | MPC-68/68F/68FF Basket Assembly | 8 |
| 1495 Sht 1/6 | HI-STORM 100 Assembly | 13 |
| 1495 Sht 2/6 | Cross Section "Z" - "Z" View of HI-STORM | 18 |
| 1495 Sht 3/6 | Section "Y" - "Y" of HI-STORM | 12 |
| 1495 Sht 4/6 | Section "X" -"X" of HI-STORM | 13 |
| 1495 Sht 5/6 | Section "W" -"W" of HI-STORM | 15 |
| 1561 Sht 1/6 | View "A" -"A" of HI-STORM | 11 |
| 1561 Sht 2/6 | Detail "B" of HI-STORM | 15 |
| 1561 Sht 3/6 | Detail of Air Inlet of HI-STORM | 11 |
| 1561 Sht 4/6 | Detail of Air Outlet of HI-STORM | 12 |
| 3669 | HI-STORM 100S Assembly | 9 |
| 1880 Sht 1/10 | 125 Ton HI-TRAC Outline with Pool Lid | 9 |
| 1880 Sht 2/10 | 125 Ton HI-TRAC Body Sectioned Elevation | 10 |
| 1880 Sht 3/10 | 125 Ton HI-TRAC Body Sectioned Elevation "B" - "B" | 9 |
| 1880 Sht 4/10 | 125 Ton Transfer Cask Detail of Bottom Flange | 10 |
| 1880 Sht 5/10 | 125 Ton Transfer Cask Detail of Pool Lid | 10 |
| 1880 Sht 6/10 | 125 Ton Transfer Cask Detail of Top Flange | 10 |
| 1880 Sht 7/10 | 125 Ton Transfer Cask Detail of Top Lid | 9 |
| 1880 Sht 8/10 | 125 Ton Transfer Cask View "Y" - "Y" | 9 |
| 1880 Sht 9/10 | 125 Ton Transfer Cask Lifting Trunnion and Locking Pad | 7 |
| 1880 Sht 10/10 | 125 Ton Transfer Cask View "Z" - "Z" | 9 |
| 1928 Sht 1/2 | 125 Ton HI-TRAC Transfer Lid Housing Detail | 11 |
| 1928 Sht 2/2 | 125 Ton HI-TRAC Transfer Lid Door Detail | 10 |
| 2145 Sht 1/10 | 100 Ton HI-TRAC Outline with Pool Lid | 8 |
| 2145 Sht 2/10 | 100 Ton HI-TRAC Body Sectioned Elevation | 8 |
| 2145 Sht 3/10 | 100 Ton HI-TRAC Body Sectioned Elevation 'B-B' | 8 |
| 2145 Sht 4/10 | 100 Ton HI-TRAC Detail of Bottom Flange | 7 |
| 2145 Sht 5/10 | 100 Ton HI-TRAC Detail of Pool Lid | 6 |
| 2145 Sht 6/10 | 100 Ton HI-TRAC Detail of Top Flange | 8 |
| 2145 Sht 7/10 | 100 Ton HI-TRAC Detail of Top Lid | 8 |
| 2145 Sht 8/10 | 100 Ton HI-TRAC View Y-Y | 8 |
| 2145 Sht 9/10 | 100 Ton HI-TRAC Lifting Trunnions and Locking Pad | 5 |
| 2145 Sht 10/10 | 100 Ton HI-TRAC View Z-Z | 7 |
| 2152 Sht 1/2 | 100 Ton HI-TRAC Transfer Lid Housing Detail | 10 |

HOLTEC INTERNATIONAL COPYRIGHTED MATERIAL

| Drawing Number/Sheet | Description | Rev. |
|---|---|---|
| 2152 Sht 2/2 | 100 Ton HI-TRAC Transfer Lid Door Detail | 8 |
| 3187 | Lug and Anchoring Detail for HI-STORM 100A | 2 |
| BM-1575, Sht 1/2 | Bill-of-Materials HI-STORM 100 Storage Overpack | 19 |
| BM-1575, Sht 2/2 | Bill-of-Materials HI-STORM 100 Storage Overpack | 19 |
| BM-1880, Sht 1/2 | Bill-of-Material for 125 Ton HI-TRAC | 9 |
| BM-1880, Sht 2/2 | Bill-of-Material for 125 Ton HI-TRAC | 7 |
| BM-1928, Sht 1/1 | Bill-of-Material for 125 Ton HI-TRAC Transfer Lid | 10 |
| BM-2145 Sht 1/2 | Bill-of-Material for 100 Ton HI-TRAC | 6 |
| BM-2145 Sht 2/2 | Bill-of-Material for 100 Ton HI-TRAC | 5 |
| BM-2152 Sht 1/1 | Bill-of-Material for 100 Ton HI-TRAC Transfer Lid | 8 |
| 3768 | 125 Ton HI-TRAC 125D Assembly | 7 |
| 4116 | HI-STORM 100S Version B | ~~11~~*12* |
| 4128 | 100 Ton HI-TRAC 100D Assembly | 4 |
| *4724* | *100 Ton HI-TRAC 100D Version IP1 Assembly* | *0* |

HOLTEC INTERNATIONAL COPYRIGHTED MATERIAL

| CLIENT | GENERAL | | |
|---|---|---|---|
| PROJECT NO. | 5014 | P.O. NO. | N/A |
| DRAWING PACKAGE I.D. | 3923 | TOTAL SHEETS | 6 |

# LICENSING DRAWING PACKAGE COVER SHEET

## LICENSING DRAWING PACKAGE CONTENTS:

| SHEET | DESCRIPTION |
|---|---|
| 1 | COVER SHEET |
| 2 | MPC ENCLOSURE VESSEL GENERAL ARRANGEMENT |
| 3 | MPC ENCLOSURE VESSEL ELEVATION DETAILS |
| 4 | MPC ENCLOSURE VESSEL LID DETAILS |
| 5 | MPC FUEL SPACER DETAILS |
| 6 | MPC SERIAL #1021-040 ENCLOSURE VESSEL LID DETAILS |

## REVISION LOG

| REV | AFFECTED DRAWING SHEET NUMBERS | SUMMARY OF CHANGES/ AFFECTED ECOs | PREPARED BY | APPROVAL DATE | VIR# † |
|---|---|---|---|---|---|
| 11 | ALL | 1021-61, REV. 0, 1022-57, REV. 0, 1023-30, REV. 0 | S.L.C | 9/27/04 | 89001 |
| 12 | SHEETS 4 & 6 | ECO 5014-117, REV. 0 | JJB | 04/11/05 | 79255 |
| 13 | SHEET 5 | ECO 1023-30, REV. 1 | S.L.C | 04/27/05 | 67405 |
| 14 | SHEET 6 | ECO 1021-71, REV. 0 | JJB | 06/17/05 | 47815 |
| 15 | SHEETS 1 & 3 | DRAFT | JJB | --/--/-- | ----- |

† THE VALIDATION IDENTIFICATION RECORD (VIR) NUMBER IS A COMPUTER GENERATED RANDOM NUMBER WHICH CONFIRMS THAT ALL APPROPRIATE REVIEWS OF THIS DRAWING ARE DOCUMENTED IN COMPANY'S NETWORK.

NOTES CON'T:

11. THIS COMPONENT IS CLASSIFIED AS ITS-A BASED ON THE HIGHEST CLASSIFICATION OF ANY SUBCOMPONENT. SUBCOMPONENT CLASSIFICATIONS ARE PROVIDED IN SAR TABLE 1.3.3 (TRANSPORTATION) AND FSAR TABLE 2.2.6 (STORAGE).
12. DELETED
13. LOCAL GRINDING OF THE MPC SHELL SHALL NOT RESULT IN GREATER THAN 10% LOSS IN BASE METAL THICKNESS OVER ANY AREA WHICH EXCEEDS 4 INCHES IN THE LONGITUDINAL OR CIRCUMFERENTIAL DIRECTION. FOR THE WELD AREA AND ADJACENT BASE METAL, AN ADDITIONAL ALLOWANCE OF 0.02" LOSS IN NOMINAL BASE METAL THICKNESS IS ALLOWED OVER THE ENTIRE LENGTH OF THE WELD. THE SUM OF ALL AREAS OF LOCAL METAL LOSS SHALL NOT EXCEED 10% OF THE OVERALL INSIDE SURFACE AREA OF THE MPC SHELL. FINAL THICKNESSES IN LOCAL AREAS OF GRINDING SHALL BE CONFIRMED BY UT EXAMINATION, AS APPROPRIATE.
14. FOR NON-CODE WELDS, THE PROVISIONS OF EITHER ASME IX OR AWS MAY BE FOLLOWED.
15. TOLERANCES FOR THICKNESS OF ASME CODE MPC ENCLOSURE VESSEL MATERIAL ARE SPECIFIED IN ASME SECTION II.
16. REFER TO THE COMPONENT COMPLETION RECORD (CCR) FOR THE COMPLETE LIST OF APPROVED DESIGN DEVIATIONS FOR EACH INDIVIDUAL SERIAL NUMBER.
17. DIMENSIONS NOTED AS NOMINAL ("NOM.") IN THIS DRAWING ARE FOR INFORMATION ONLY, IN ORDER TO INDICATE THE GENERAL SIZE OF THE COMPONENT OR PART. NOMINAL DIMENSIONS HAVE NO SPECIFIC TOLERANCE, BUT ARE MET THROUGH FABRICATION IN ACCORDANCE WITH OTHER DIMENSIONS THAT ARE TOLERANCED AND INSPECTED. NOMINAL DIMENSIONS ARE NOT SPECIFICALLY VERIFIED DURING THE FABRICATION PROCESS.
18. (15) DIFFERENCES BETWEEN THE GENERIC MPC ENCLOSURE VESSEL AND THE IP1 MPC ENCLOSURE VESSEL ARE SPECIFICALLY NOTED (FOR PART 72 USE ONLY).

GENERAL NOTES:

1. THE EQUIPMENT DESIGN DOCUMENTED IN THIS DRAWING PACKAGE HAS BEEN CONFIRMED BY HOLTEC INTERNATIONAL TO COMPLY WITH THE SAFETY ANALYSES DESCRIBED IN THE SAFETY ANALYSIS REPORT.
2. DIMENSIONAL TOLERANCES ON THIS DRAWING ARE PROVIDED TO ENSURE THAT THE EQUIPMENT DESIGN IS CONSISTENT WITH THE SUPPORTING ANALYSES. HARDWARE IS FABRICATED IN ACCORDANCE WITH THE DESIGN DRAWINGS, WHICH MAY HAVE MORE RESTRICTIVE TOLERANCES, TO ENSURE COMPONENT FIT-UP. DO NOT USE WORST-CASE TOLERANCE STACK-UP FROM THIS DRAWING TO DETERMINE COMPONENT FIT-UP.
3. THE REVISION LEVEL OF EACH INDIVIDUAL SHEET IN THIS PACKAGE IS THE SAME AS THE REVISION LEVEL OF THIS COVER SHEET. A REVISION TO ANY SHEET(S) IN THIS PACKAGE REQUIRES UPDATING OF REVISION NUMBERS OF ALL SHEETS TO THE NEXT REVISION NUMBER.
4. THE ASME BOILER AND PRESSURE VESSEL CODE (ASME CODE), 1995 EDITION WITH ADDENDA THROUGH 1997 IS THE GOVERNING CODE FOR THE MPC ENCLOSURE VESSEL, WITH CERTAIN APPROVED ALTERNATIVES AS LISTED IN SAR TABLE 1.3.2 (TRANSPORTATION) AND FSAR TABLE 2.2.15 (STORAGE). THE MPC ENCLOSURE VESSEL IS CONSTRUCTED IN ACCORDANCE WITH ASME SECTION III, SUBSECTION NB WITH CERTAIN APPROVED CODE ALTERNATIVES AS DESCRIBED IN THE SAR (TRANSPORTATION) AND FSAR (STORAGE). NEW OR REVISED ASME CODE ALTERNATIVES REQUIRE PRIOR NRC APPROVAL BEFORE IMPLEMENTATION.
5. ALL MPC ENCLOSURE VESSEL STRUCTURAL MATERIALS ARE "ALLOY X" UNLESS OTHERWISE NOTED. ALLOY X IS ANY OF THE FOLLOWING STAINLESS STEEL TYPES: 316, 316LN, 304, AND 304LN. ALLOY X MATERIAL MUST COMPLY WITH ASME SECTION II, PART A. WELD MATERIAL COMPLIES WITH ASME SECTION II, PART C. MPC ENCLOSURE VESSEL WALL (I.E. CYCLINDER SHELL) WILL BE FABRICATED OF PIECES MADE FROM THE SAME TYPE OF STAINLESS STEEL.
6. ALL WELDS REQUIRE VISUAL EXAMINATION (VT). ADDITIONAL NDE INSPECTIONS ARE NOTED ON THE DRAWING AS REQUIRED. NDE TECHNIQUES AND ACCEPTANCE CRITERIA ARE GOVERNED BY ASME SECTIONS V AND III, RESPECTIVELY, AS CLARIFIED IN THE APPLICABLE SAFETY ANALYSIS REPORTS.
7. UNLESS OTHERWISE NOTED, FULL PENETRATION WELDS MAY BE MADE FROM EITHER SIDE OF A COMPONENT.
8. FUEL BASKET SUPPORTS ARE ILLUSTRATIVE. ACTUAL FUEL BASKET SUPPORT ARRANGEMENTS ARE SHOWN ON THE INDIVIDUAL FUEL BASKET DRAWINGS.
9. DIFFERENCES BETWEEN THE GENERIC MPC ENCLOSURE VESSEL AND THE TROJAN PLANT MPC ENCLOSURE VESSEL ARE SPECIFICALLY NOTED (FOR PART 71 USE ONLY).
10. ALL WELD SIZES ARE MINIMUMS. LARGER WELDS ARE PERMITTED. LOCAL AREAS OF UNDERSIZE WELDS ARE ACCEPTABLE WITHIN THE LIMITS SPECIFIED IN THE ASME CODE, AS APPLICABLE.

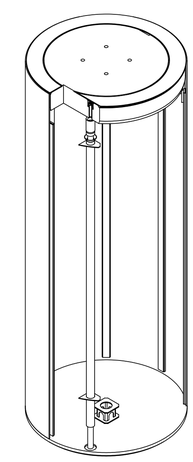

MPC ENCLOSURE VESSEL
ISOMETRIC VIEW

HOLTEC INTERNATIONAL
HOLTEC CENTER
555 LINCOLN DRIVE WEST
MARLTON, NJ 08053

| CLIENT | GENERAL | | |
|---|---|---|---|
| DESCRIPTION | MPC ENCLOSURE VESSEL | | |
| PROJECT NO. 5014 | DRAWING NO. 3923 | SHEET 1 | TOTAL SHEETS 6 |
| P.O. NO. N/A | FILE PATH: G:\DRAWINGS\5014\3923 | | |

# FIGURE WITHHELD UNDER 10 CFR 2.390

HOLTEC INTERNATIONAL
HOLTEC CENTER
555 LINCOLN DRIVE WEST
MARLTON, NJ 08053

| | |
|---|---|
| CLIENT | GENERAL |
| DESCRIPTION | MPC ENCLOSURE VESSEL GENERAL ARRANGEMENT |
| PROJECT NO. | 5014 |
| | N/A |
| COMPANION DRAWINGS: | 3925, 3926, 3927, 3928 |
| SIZE | D |
| DRAWING NO. | 3923 |
| SHEET | 2 |
| REV. | 15 |
| SCALE | NONE |
| FILE PATH: | N:\DRAWINGS\0-LAR-1014-5\3923 |

# FIGURE WITHHELD UNDER 10 CFR 2.390

HOLTEC INTERNATIONAL
HOLTEC CENTER
555 LINCOLN DRIVE WEST
MARLTON, NJ 08053

| | |
|---|---|
| CLIENT | GENERAL |
| DESCRIPTION | MPC ENCLOSURE ENCLOSURE VESSEL ELEVATION DETAILS |
| PROJECT NO. | 5014 |
| | N/A |
| COMPANION DRAWINGS: | 3925, 3926, 3927, 3928 |
| SIZE | D |
| DRAWING NO. | 3923 |
| SHEET | 3 |
| REV | 15 |
| SCALE | NONE |
| FILE PATH: | N:\DRAWINGS\0-LAR-1014-5\3923 |

# FIGURE WITHHELD UNDER 10 CFR 2.390

# FIGURE WITHHELD UNDER 10 CFR 2.390

# FIGURE WITHHELD UNDER 10 CFR 2.390

| CLIENT | GENERAL | | |
|---|---|---|---|
| PROJECT NO. | 1023 | P.O. NO. | N/A |
| DRAWING PACKAGE I.D. | 3927 | TOTAL SHEETS | 5 |

# LICENSING DRAWING PACKAGE COVER SHEET

## DESIGN DRAWING PACKAGE CONTENTS:

| SHEET | DESCRIPTION |
|---|---|
| 1 | COVER SHEET |
| 2 | FUEL BASKET ARRANGEMENT |
| 3 | FUEL BASKET LAYOUT AND WELD DETAILS |
| 4 | STANDARD FUEL BASKET SUPPORTS |
| 5 | OPTIONAL FUEL BASKET SUPPORTS |

## REVISION LOG

IT IS MANDATORY AT EACH REVISION TO COMPLETE THE REVIEW & APPROVAL LOG STORED IN HOLTEC'S DIRECTORY N:\PDOXWIN\WORKING\DBAL BY ALL RELEVANT TECHNICAL DISCIPLINES. PM AND QA PERSONNEL. EACH ATTACHED DRAWING SHEET CONTAINS ANNOTATED TRIANGLES INDICATING THE REVISION TO THE DRAWING.

| REV | AFFECTED DRAWING SHEET NUMBERS | SUMMARY OF CHANGES/ AFFECTED ECOs | PREPARED BY | APPROVAL DATE | VIR# † |
|---|---|---|---|---|---|
| 9 | SHEETS 1& 2 | 1023-32, REV. 1 | JJB | 06/17/05 | 80623 |
| 10 | SHEETS 1, 2, 4 & 5 | DRAFT | JJB | --/--/-- | ----- |

† THE VALIDATION IDENTIFICATION RECORD (VIR) NUMBER IS A COMPUTER GENERATED RANDOM NUMBER WHICH CONFIRMS THAT ALL APPROPRIATE REVIEWS OF THIS DRAWING ARE DOCUMENTED IN COMPANY'S NETWORK.

GENERAL NOTES:

1. THE EQUIPMENT DESIGN DOCUMENTED IN THIS DRAWING PACKAGE HAS BEEN CONFIRMED BY HOLTEC INTERNATIONAL TO COMPLY WITH THE SAFETY ANALYSES DESCRIBED IN THE SAFETY ANALYSIS REPORT.
2. DIMENSIONAL TOLERANCES ON THIS DRAWING ARE PROVIDED TO ENSURE THAT THE EQUIPMENT DESIGN IS CONSISTENT WITH THE SUPPORTING ANALYSIS. HARDWARE IS FABRICATED IN ACCORDANCE WITH THE DESIGN DRAWINGS, WHICH MAY HAVE MORE RESTRICTIVE TOLERANCES, TO ENSURE COMPONENT FIT-UP. DO NOT USE WORST-CASE TOLERANCE STACK-UP FROM THIS DRAWING TO DETERMINE COMPONENT FIT-UP.
3. THE REVISION LEVEL OF EACH INDIVIDUAL SHEET IN THIS PACKAGE IS THE SAME AS THE REVISION LEVEL OF THIS COVER SHEET. A REVISION TO ANY SHEET(S) IN THIS PACKAGE REQUIRES UPDATING OF REVISION NUMBERS OF ALL SHEETS TO THE NEXT REVISION NUMBER.
4. THE ASME BOILER AND PRESSURE VESSEL CODE (ASME CODE), 1995 EDITION WITH ADDENDA THROUGH 1997, IS THE GOVERNING CODE FOR THE HI-STAR 100 SYSTEM, WITH CERTAIN APPROVED ALTERNATIVES AS LISTED IN SAR TABLE 1.3.2 (TRANSPORTATION) AND FSAR TABLE 2.2.15 (STORAGE). THE MPC FUEL BASKET IS CONSTRUCTED IN ACCORDANCE WITH ASME SECTION III, SUBSECTION NG AS DESCIBED IN THE SAR (TRANSPORTATION) AND FSAR (STORAGE). NEW OR REVISED ASME CODE ALTERNATIVES REQUIRE PRIOR NRC APPROVAL BEFORE IMPLEMENTATION.
5. ALL MPC BASKET STRUCTURAL MATERIALS COMPLY WITH THE REQUIREMENTS OF ASME SECTION II, PART A. WELD MATERIAL COMPLIES WITH THE REQUIREMENTS OF ASME SECTION II, PART C.
6. ALL WELDS REQUIRE VISUAL EXAMINATION (VT). ADDITIONAL NDE INSPECTIONS ARE NOTED ON THE DRAWING AS REQUIRED. NDE TECHNIQUES AND ACCEPTANCE CRITERIA ARE PROVIDED IN THE APPLICABLE CODES AS CLARIFIED IN THE APPLICABLE SAFETY ANALYSIS REPORTS.
7. FABRICATOR MAY ADD WELDS TO STITCH WELDS AT THEIR DISCRETION.
8. DO NOT MAKE A CONTINUOUS SEAL WELD BETWEEN THE SHEATHING AND THE CELL WALL.
9. ALL STRUCTURAL MATERIALS ARE "ALLOY X" UNLESS OTHERWISE NOTED. ALLOY X IS ANY OF THE FOLLOWING STAINLESS STEEL TYPES: 316, 316 LN, 304, AND 304 LN.
10. NEUTRON ABSORBER PANELS ARE INTENDED TO HAVE NO SIGNIFICANT FLAWS. HOWEVER, TO ACCOUNT FOR MANUFACTURING DEVIATIONS OCCURING DURING INSTALLATION OF THE PANELS INTO THE MPC FUEL BASKET, NEUTRON ABSORBER DAMAGE OF UP TO THE EQUIVALENT OF A 1" DIAMETER HOLE IN EACH PANEL HAS BEEN ANALYZED AND FOUND TO BE ACCEPTABLE.
11. THIS COMPONENT IS CLASSIFIED AS ITS-A BASED ON THE HIGHEST CLASSIFICATION OF ANY SUBCOMPONENT. SUBCOMPONENT CLASSIFICATIONS ARE PROVIDED IN SAR TABLE 1.3.3 (TRANSPORTATION) AND FSAR TABLE 2.2.6 (STORAGE).
12. DELETED.
13. TOLERANCES FOR THICKNESS OF ASME CODE MATERIAL ARE SPECIFIED IN ASME SECTION II.
14. ALL WELD SIZES ARE MINIMUMS. LARGER WELDS ARE PERMITTED. LOCAL AREAS OF UNDERSIZE WELDS ARE ACCEPTABLE WITHIN THE LIMITS SPECIFIED IN THE ASME CODE, AS CLARIFIED IN THE (F)SAR.
15. REFER TO THE COMPONENT COMPLETION RECORD (CCR) FOR THE COMPLETE LIST OF APPROVED DESIGN DEVIATIONS FOR EACH INDIVIDUAL SERIAL NUMBER.
16. THE MPC-32 IS CERTIFIED FOR STORAGE AND TRANSPORTATION OF INTACT PWR FUEL, AS SPECIFIED IN COCs 72-1014, AND 71-9261.
17. DIMENSIONS NOTED AS NOMINAL ("NOM.") IN THE DRAWING ARE FOR INFORMATION ONLY, IN ORDER TO INDICATE THE GENERAL SIZE OF THE COMPONENT OR PART. NOMINAL DIMENSIONS HAVE NO SPECIFIC TOLERANCE, BUT ARE MET THROUGH FABRICATION IN ACCORDANCE WITH OTHER DIMENSIONS THAT ARE TOLERANCED AND INSPECTED. NOMINAL DIMENSIONS ARE NOT SPECIFICALLY VERIFIED DURING THE FABRICATION PROCESS.
18. (10) DIFFERENCES BETWEEN THE GENERIC MPC-32 AND THE IP1 MPC-32 ARE SPECIFICALLY NOTED (FOR PART 72 USE ONLY).

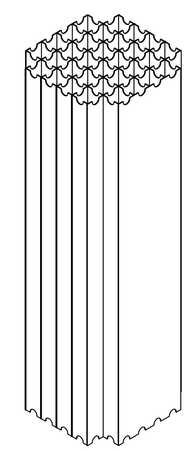

MPC-32 FUEL BASKET
ISOMETRIC VIEW

HOLTEC INTERNATIONAL
HOLTEC CENTER
555 LINCOLN DRIVE WEST
MARLTON, NJ 08053

| | |
|---|---|
| CLIENT | GENERAL |
| DESCRIPTION | MPC-32 FUEL BASKET ASSEMBLY |
| PROJECT NO. | 1023 |
| P.O. NO. | N/A |
| DRAWING NO. | 3927 |
| SHEET | 1 |
| TOTAL SHEETS | 5 |
| FILE PATH: | N:\DRAWINGS\0-LAR-1014-5\3927 |

# FIGURE WITHHELD UNDER 10 CFR 2.390

HOLTEC INTERNATIONAL
HOLTEC CENTER
555 LINCOLN DRIVE WEST
MARLTON, NJ 08053

| | | | | | |
|---|---|---|---|---|---|
| PROJECT NO. 1023 | COMPANION DRAWINGS: 3923 | CLIENT: GENERAL | | | |
| N/A | | DESCRIPTION: MPC-32 FUEL BASKET ASSEMBLY | | | |
| | | SIZE D | DRAWING NO. 3927 | SHEET 2 | REV 10 |
| | | SCALE NONE | FILE PATH: N:\DRAWINGS\0-LAR-1014-5\3927 | | |

# FIGURE WITHHELD UNDER 10 CFR 2.390

NOTE:

1. DELETED.
2. LENGTH AND SPACING OF WELD ON SIDES OF SHEATHING CAN VARY PROVIDED TOTAL VERTICAL SHEATHING WELD PER PIECE IS NOT LESS THAN 65" AND THERE IS A MINIMUM OF 19" OF WELD ALONG EACH SIDE OF THE SHEATHING PANEL.

HOLTEC INTERNATIONAL
HOLTEC CENTER
555 LINCOLN DRIVE WEST
MARLTON, NJ 08053

CLIENT: GENERAL

DESCRIPTION: MPC-32 FUEL BASKET LAYOUT AND WELD DETAILS

| PROJECT NO. | COMPANION DRAWINGS: | SIZE | DRAWING NO. | SHEET | REV |
|---|---|---|---|---|---|
| 1023 | 3923 | D | 3927 | 3 | 10 |
| N/A | | SCALE: NONE | FILE PATH: N:\DRAWINGS\0-LAR-1014-5\3927 | | |

# FIGURE WITHHELD UNDER 10 CFR 2.390

HOLTEC INTERNATIONAL
HOLTEC CENTER
555 LINCOLN DRIVE WEST
MARLTON, NJ 08053

| | | | | | |
|---|---|---|---|---|---|
| CLIENT | GENERAL | | | | |
| DESCRIPTION | MPC-32 FUEL BASKET SUPPORT | | | | |
| PROJECT NO. 1023 | COMPANION DRAWINGS: 3923 | SIZE D | DRAWING NO. 3927 | SHEET 4 | REV 10 |
| N/A | | SCALE NONE | FILE PATH: N:\DRAWINGS\0-LAR-1014-5\3927 | | |

**FIGURE WITHHELD UNDER 10 CFR 2.390**

**FIGURE WITHHELD UNDER 10 CFR 2.390**

# FIGURE WITHHELD UNDER 10 CFR 2.390

HOLTEC INTERNATIONAL
HOLTEC CENTER
555 LINCOLN DRIVE WEST
MARLTON, NJ 08053

CLIENT: GENERAL

DESCRIPTION: HI-STORM 100S VERSION B ASSEMBLY

| PROJECT NO. | COMPANION DRAWINGS: | SIZE | DRAWING NO. | SHEET | REV |
|---|---|---|---|---|---|
| 1024 | - | D | 4116 | 2 | 12 |
| N/A | | SCALE: NONE | FILE PATH: N:\DRAWINGS\0-LAR-1014-5\4116 | | |

# FIGURE WITHHELD UNDER 10 CFR 2.390

HOLTEC INTERNATIONAL
HOLTEC CENTER
555 LINCOLN DRIVE WEST
MARLTON, NJ 08053

CLIENT: GENERAL

DESCRIPTION: HI-STORM 100S VERSION B ASSEMBLY

| PROJECT NO. | COMPANION DRAWINGS: | SIZE | DRAWING NO. | SHEET | REV |
|---|---|---|---|---|---|
| 1024 | - | D | 4116 | 3 | 12 |
| N/A | | SCALE: NONE | FILE PATH: N:\DRAWINGS\0-LAR-1014-5\4116 | | |

# FIGURE WITHHELD UNDER 10 CFR 2.390

HOLTEC INTERNATIONAL
HOLTEC CENTER
555 LINCOLN DRIVE WEST
MARLTON, NJ 08053

| | |
|---|---|
| CLIENT | GENERAL |
| DESCRIPTION | HI-STORM 100S VER. B BASE INLET ASSEMBLY |
| PROJECT NO. | 1024 |
| | N/A |
| COMPANION DRAWINGS: | - |
| SIZE | D |
| DRAWING NO. | 4116 |
| SHEET | 4 |
| REV | 12 |
| SCALE | NONE |
| FILE PATH: | N:\DRAWINGS\0-LAR-1014-5\4116 |

# FIGURE WITHHELD UNDER 10 CFR 2.390

HOLTEC INTERNATIONAL
HOLTEC CENTER
555 LINCOLN DRIVE WEST
MARLTON, NJ 08053

CLIENT: GENERAL

DESCRIPTION: HI-STORM 100S VER. B BASE INLET DETAILS

| PROJECT NO. | COMPANION DRAWINGS: | SIZE | DRAWING NO. | SHEET | REV |
|---|---|---|---|---|---|
| 1024 | - | D | 4116 | 5 | 12 |
| N/A | | SCALE: NONE | FILE PATH: N:\DRAWINGS\0-LAR-1014-5\4116 | | |

# FIGURE WITHHELD UNDER 10 CFR 2.390

HOLTEC INTERNATIONAL
HOLTEC CENTER
555 LINCOLN DRIVE WEST
MARLTON, NJ 08053

CLIENT: GENERAL

DESCRIPTION: HI-STORM 100S VER. B CASK BODY ASSEMBLY

| PROJECT NO. | COMPANION DRAWINGS: | SIZE | DRAWING NO. | SHEET | REV |
|---|---|---|---|---|---|
| 1024 | - | D | 4116 | 6 | 12 |
| N/A | | SCALE: NONE | FILE PATH: N:\DRAWINGS\0-LAR-1014-5\4116 | | |

| X=HEIGHT (INCHES) | |
|---|---|
| CASK TYPE | X VALUE |
| 185 | 160 1/8" |
| 218 | 193.5 |
| 229 | 204.5 |

12

# FIGURE WITHHELD UNDER 10 CFR 2.390

HOLTEC INTERNATIONAL
HOLTEC CENTER
555 LINCOLN DRIVE WEST
MARLTON, NJ 08053

CLIENT: GENERAL

DESCRIPTION: HI-STORM 100S VER. B OVERPACK BODY DETAILS

PROJECT NO. 1024

N/A

COMPANION DRAWINGS: -

SIZE D | DRAWING NO. 4116 | SHEET 7 | REV 12

SCALE NONE | FILE PATH: N:\DRAWINGS\0-LAR-1014-5\4116

# FIGURE WITHHELD UNDER 10 CFR 2.390

HOLTEC INTERNATIONAL
HOLTEC CENTER
555 LINCOLN DRIVE WEST
MARLTON, NJ 08053

CLIENT: GENERAL

DESCRIPTION: HI-STORM 100S VER. B CLOSURE LID ASSEMBLY

| PROJECT NO. | COMPANION DRAWINGS: | SIZE | DRAWING NO. | SHEET | REV |
|---|---|---|---|---|---|
| 1024 | - | D | 4116 | 8 | 12 |
| N/A | | SCALE: NONE | FILE PATH: N:\DRAWINGS\0-LAR-1014-5\4116 | | |

# FIGURE WITHHELD UNDER 10 CFR 2.390

HOLTEC INTERNATIONAL
HOLTEC CENTER
555 LINCOLN DRIVE WEST
MARLTON, NJ 08053

CLIENT: GENERAL

DESCRIPTION: HI-STORM 100S VER. B CLOSURE LID DETAILS

| PROJECT NO. | COMPANION DRAWINGS: | SIZE | DRAWING NO. | SHEET | REV |
|---|---|---|---|---|---|
| 1024 | - | D | 4116 | 9 | 12 |
| N/A | | SCALE: NONE | FILE PATH: N:\DRAWINGS\0-LAR-1014-5\4116 | | |

# FIGURE WITHHELD UNDER 10 CFR 2.390

# FIGURE WITHHELD UNDER 10 CFR 2.390

HOLTEC INTERNATIONAL
HOLTEC CENTER
555 LINCOLN DRIVE WEST
MARLTON, NJ 08053

CLIENT: GENERAL

DESCRIPTION: HI-STORM 100S VER. B CASK BODY WELDS

| PROJECT NO. | COMPANION DRAWINGS: | SIZE | DRAWING NO. | SHEET | REV |
|---|---|---|---|---|---|
| 1024 | - | D | 4116 | 11 | 12 |
| N/A | | SCALE: NONE | FILE PATH: N:\DRAWINGS\0-LAR-1014-5\4116 | | |

# FIGURE WITHHELD UNDER 10 CFR 2.390

HOLTEC INTERNATIONAL
HOLTEC CENTER
555 LINCOLN DRIVE WEST
MARLTON, NJ 08053

| | |
|---|---|
| CLIENT | GENERAL |
| DESCRIPTION | HI-STORM 100S VER. B CLOSURE LID WELDS |
| PROJECT NO. | 1024 |
| | N/A |
| COMPANION DRAWINGS: | - |
| SIZE | D |
| DRAWING NO. | 4116 |
| SHEET | 12 |
| REV | 12 |
| SCALE | NONE |
| FILE PATH: | N:\DRAWINGS\0-LAR-1014-5\4116 |

# FIGURE WITHHELD UNDER 10 CFR 2.390

HOLTEC INTERNATIONAL
HOLTEC CENTER
555 LINCOLN DRIVE WEST
MARLTON, NJ 08053

CLIENT: GENERAL

DESCRIPTION: HI-STORM 100S-VER. B
GAMMA CROSS SHIELD
INLET & OUTLET ASSEMBLIES

| PROJECT NO. | COMPANION DRAWINGS: | SIZE | DRAWING NO. | SHEET | REV |
|---|---|---|---|---|---|
| 1024 | - | D | 4116 | 13 | 12 |
| N/A | | SCALE: NONE | FILE PATH: N:\DRAWINGS\0-LAR-1014-5\4116 | | |

| | |
|---|---|
| CLIENT | ENTERGY<br>IPEC 1 |
| PROJECT NO. 1535 | P.O. NO. 4500545692 |
| DRAWING PACKAGE I.D. 4724 | TOTAL SHEETS 10 |

# LICENSING DRAWING PACKAGE COVER SHEET

## LICENSING DRAWING PACKAGE CONTENTS:

| SHEET | DESCRIPTION |
|---|---|
| 1 | COVER SHEET |
| 2 | ASSEMBLY DRAWING AND BILL OF MATERIALS |
| 3 | OVERALL DIMENSIONS |
| 4 | POOL LID ASSEMBLY |
| 5 | BASE PLATE ASSEMBLY |
| 6 | OUTER SHELL ASSEMBLY |
| 7 | TOP FLANGE DETAILS |
| 8 | TRUNNION AND INNER SHELL ASSEMBLY |
| 9 | WATER JACKET SHELL ASSEMBLY |
| 10 | TOP LID ASSEMBLY |

## REVISION LOG

| REV | AFFECTED DRAWING SHEET NUMBERS | SUMMARY OF CHANGES/ AFFECTED ECOs | PREPARED BY | APPROVAL DATE | VIR# † |
|---|---|---|---|---|---|
| 0 | INITIAL ISSUE | DRAFT | JJB | --/--/-- | ----- |
| | | | | | |
| | | | | | |
| | | | | | |
| | | | | | |
| | | | | | |
| | | | | | |
| | | | | | |
| | | | | | |
| | | | | | |

† THE VALIDATION IDENTIFICATION RECORD (VIR) NUMBER IS A COMPUTER GENERATED RANDOM NUMBER WHICH CONFIRMS THAT ALL APPROPRIATE REVIEWS OF THIS DRAWING ARE DOCUMENTED IN COMPANY'S NETWORK.

NOTES:

1. THE EQUIPMENT DOCUMENTED IN THIS DRAWING PACKAGE HAS BEEN CONFIRMED BY HOLTEC INTERNATIONAL TO COMPLY WITH THE SAFETY ANALYSES DESCRIBED IN THE HI-STORM FSAR.
2. DIMENSIONAL TOLERANCES ON THIS DRAWING ARE PROVIDED SOLELY FOR LICENSING PURPOSES TO DEFINE REASONABLE LIMITS ON THE NOMINAL DIMENSIONS USED IN LICENSING WORK. HARDWARE IS FABRICATED IN ACCORDANCE WITH THE DESIGN DRAWINGS, WHICH HAVE MORE RESTRICTIVE TOLERANCES, TO ENSURE COMPONENT FIT-UP. DO NOT USE WORST-CASE TOLERANCE STACK-UP FROM THIS DRAWING TO DETERMINE COMPONENT FIT-UP.
3. THE REVISION LEVEL OF EACH INDIVIDUAL SHEET IN THE PACKAGE IS THE SAME AS THE REVISION LEVEL OF THIS COVER SHEET. A REVISION TO ANY SHEET(S) IN THIS PACKAGE REQUIRES UPDATING OF REVISION NUMBERS OF ALL SHEETS TO THE NEXT REVISION NUMBER.
4. APPLICABLE CODES AND STANDARDS ARE DELINEATED IN FSAR SECTION 2.2.4.
5. ALL WELDS REQUIRE VISUAL EXAMINATION. ADDITIONAL NDE INSPECTIONS ARE NOTED ON THE DRAWING. NDE TECHNIQUES AND ACCEPTANCE CRITERIA ARE PROVIDED IN FSAR TABLE 9.1.4.
6. UNLESS OTHEWISE NOTED, FULL PENETRATION WELDS MAY BE MADE FROM EITHER SIDE OF A COMPONENT.
7. THIS COMPONENT IS IMPORTANT-TO-SAFETY, CATEGORY A, BASED ON THE HIGHEST CLASSIFICATION OF ANY SUBCOMPONENT. SUBCOMPONENT CLASSIFICATIONS ARE PROVIDED ON THE DESIGN DRAWING.
8. ALL WELD SIZES ARE MINIMUMS EXCEPT AS ALLOWED BY APPLICABLE CODES AS CLARIFIED IN THE FSAR. FABRICATOR MAY ADD WELDS WITH HOLTEC APPROVAL.

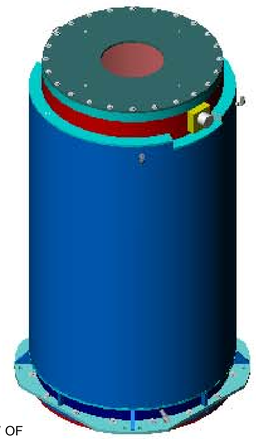

ISOMETRIC VIEW OF HI-TRAC 100D TRANSFER CASK

"NOTICE: CERTAIN DESIGN AND OPERATIONAL FEATURES OF THIS EQUIPMENT ARE PROTECTED UNDER U.S. PATENT NO. 6,587,536. AN INFRINGEMENT BY ANY ENTITY IS UNLAWFUL."

HOLTEC INTERNATIONAL
HOLTEC CENTER
555 LINCOLN DRIVE WEST
MARLTON, NJ 08053

| | |
|---|---|
| CLIENT | ENTERGY<br>IPEC 1 |
| DESCRIPTION | 100 TON<br>HI-TRAC 100D VER. IP1<br>ASSEMBLY |
| PROJECT NO. 1535 | DRAWING NO. 4724 / SHEET 1 / TOTAL SHEETS 10 |
| P.O. NO. 4500545692 | FILE PATH: N:\DRAWINGS\0-LAR-1014-5\4724 |

# FIGURE WITHHELD UNDER 10 CFR 2.390

"NOTICE: CERTAIN DESIGN AND OPERATIONAL FEATURES OF THIS EQUIPMENT ARE PROTECTED UNDER U.S. PATENT NO. 6,587,536. AN INFRINGEMENT BY ANY ENTITY IS UNLAWFUL."

HOLTEC INTERNATIONAL
HOLTEC CENTER
555 LINCOLN DRIVE WEST
MARLTON, NJ 08053

CLIENT: ENTERGY IPEC 1

DESCRIPTION: 100 TON HI-TRAC 100D VER. IP1 ASSEMBLY

| PROJECT NO. | COMPANION DRAWINGS: | SIZE | DRAWING NO. | SHEET | REV |
|---|---|---|---|---|---|
| 1535 | - | D | 4724 | 2 | 0 |
| 4500545692 | | SCALE: NONE | FILE PATH: N:\DRAWINGS\0-LAR-1014-5\4724 | | |

# FIGURE WITHHELD UNDER 10 CFR 2.390

89" (REF.) POOL LID
SECTION B-B

"NOTICE: CERTAIN DESIGN AND OPERATIONAL FEATURES OF THIS EQUIPMENT ARE PROTECTED UNDER U.S. PATENT NO. 6,587,536. AN INFRINGEMENT BY ANY ENTITY IS UNLAWFUL."

HOLTEC INTERNATIONAL
HOLTEC CENTER
555 LINCOLN DRIVE WEST
MARLTON, NJ 08053

CLIENT: ENTERGY IPEC 1

DESCRIPTION: 100 TON HI-TRAC 100D VER. IP1 ASSEMBLY

| PROJECT NO. | COMPANION DRAWINGS: | SIZE | DRAWING NO. | SHEET | REV |
|---|---|---|---|---|---|
| 1535 | - | D | 4724 | 3 | 0 |
| 4500545692 | | SCALE: NONE | FILE PATH: N:\DRAWINGS\0-LAR-1014-5\4724 | | |

# FIGURE WITHHELD UNDER 10 CFR 2.390

"NOTICE: CERTAIN DESIGN AND OPERATIONAL FEATURES OF THIS EQUIPMENT ARE PROTECTED UNDER U.S. PATENT NO. 6,587,536. AN INFRINGEMENT BY ANY ENTITY IS UNLAWFUL."

HOLTEC INTERNATIONAL
HOLTEC CENTER
555 LINCOLN DRIVE WEST
MARLTON, NJ 08053

CLIENT: ENTERGY IPEC 1

DESCRIPTION: 100 TON HI-TRAC 100D VER. IP1 POOL LID ASSEMBLY

| PROJECT NO. | COMPANION DRAWINGS: | SIZE | DRAWING NO. | SHEET | REV |
|---|---|---|---|---|---|
| 1535 | - | D | 4724 | 4 | 0 |
| 4500545692 | | SCALE: NONE | FILE PATH: N:\DRAWINGS\0-LAR-1014-5\4724 | | |

# FIGURE WITHHELD UNDER 10 CFR 2.390

SECTION R-R
SCALE 1 : 4

"NOTICE: CERTAIN DESIGN AND OPERATIONAL FEATURES OF THIS EQUIPMENT ARE PROTECTED UNDER U.S. PATENT NO. 6,587,536. AN INFRINGEMENT BY ANY ENTITY IS UNLAWFUL."

HOLTEC INTERNATIONAL
HOLTEC CENTER
555 LINCOLN DRIVE WEST
MARLTON, NJ 08053

CLIENT: ENTERGY IPEC 1

DESCRIPTION: 100 TON HI-TRAC-100D VER. IP1 BASE PLATE ASSEMBLY

PROJECT NO. 1535
4500545692

COMPANION DRAWINGS:

SIZE D | DRAWING NO. 4724 | SHEET 5 | REV 0

SCALE 1:1 | FILE PATH: N:\DRAWINGS\0-LAR-1014-5\4724

# FIGURE WITHHELD UNDER 10 CFR 2.390

"NOTICE: CERTAIN DESIGN AND OPERATIONAL FEATURES OF THIS EQUIPMENT ARE PROTECTED UNDER U.S. PATENT NO. 6,587,536. AN INFRINGEMENT BY ANY ENTITY IS UNLAWFUL."

HOLTEC INTERNATIONAL
HOLTEC CENTER
555 LINCOLN DRIVE WEST
MARLTON, NJ 08053

CLIENT: ENTERGY IPEC 1

DESCRIPTION: 100 TON HI-TRAC 100D VER. IP1 OUTER SHELL ASSEMBLY

| PROJECT NO. | COMPANION DRAWINGS: | SIZE | DRAWING NO. | SHEET | REV |
|---|---|---|---|---|---|
| 1535 | - | D | 4724 | 6 | 0 |
| 4500545692 | | SCALE: NONE | FILE PATH: N:\DRAWINGS\0-LAR-1014-5\4724 | | |

# FIGURE WITHHELD UNDER 10 CFR 2.390

"NOTICE: CERTAIN DESIGN AND OPERATIONAL FEATURES OF THIS EQUIPMENT ARE PROTECTED UNDER U.S. PATENT NO. 6,587,536. AN INFRINGEMENT BY ANY ENTITY IS UNLAWFUL."

HOLTEC INTERNATIONAL
HOLTEC CENTER
555 LINCOLN DRIVE WEST
MARLTON, NJ 08053

CLIENT: ENTERGY IPEC 1

DESCRIPTION: 100 TON HI-TRAC 100D VER. IP1 TOP FLANGE ASSEMBLY

| PROJECT NO. | COMPANION DRAWINGS: | SIZE | DRAWING NO. | SHEET | REV |
|---|---|---|---|---|---|
| 1535 | - | D | 4724 | 7 | 0 |
| 4500545692 | | SCALE: NONE | FILE PATH: N:\DRAWINGS\0-LAR-1014-5\4724 | | |

# FIGURE WITHHELD UNDER 10 CFR 2.390

"NOTICE: CERTAIN DESIGN AND OPERATIONAL FEATURES OF THIS EQUIPMENT ARE PROTECTED UNDER U.S. PATENT NO. 6,587,536. AN INFRINGEMENT BY ANY ENTITY IS UNLAWFUL."

HOLTEC INTERNATIONAL
HOLTEC CENTER
555 LINCOLN DRIVE WEST
MARLTON, NJ 08053

CLIENT: ENTERGY IPEC 1

DESCRIPTION: 100 TON HI-TRAC 100D VER. IP1 TRUNNION & SHELL ASSEMBLY

| PROJECT NO. | COMPANION DRAWINGS: | SIZE | DRAWING NO. | SHEET | REV |
|---|---|---|---|---|---|
| 1535 | - | D | 4724 | 8 | 0 |
| 4500545692 | | SCALE: NONE | FILE PATH: N:\DRAWINGS\0-LAR-1014-5\4724 | | |

# FIGURE WITHHELD UNDER 10 CFR 2.390

LOWER WATER JACKET DRAIN VALVE

(ACTUAL CONFIGURATION MAY VARY)

"NOTICE: CERTAIN DESIGN AND OPERATIONAL FEATURES OF THIS EQUIPMENT ARE PROTECTED UNDER U.S. PATENT NO. 6,587,536. AN INFRINGEMENT BY ANY ENTITY IS UNLAWFUL."

HOLTEC INTERNATIONAL
HOLTEC CENTER
555 LINCOLN DRIVE WEST
MARLTON, NJ 08053

| | |
|---|---|
| CLIENT | ENTERGY IPEC 1 |
| DESCRIPTION | 100 TON HI-TRAC 100D VER. IP1 ASSEMBLY |
| PROJECT NO. | 1535 |
| | 4500545692 |
| COMPANION DRAWINGS: | - |
| SIZE | D |
| DRAWING NO. | 4724 |
| SHEET | 9 |
| REV | 0 |
| SCALE | NONE |
| FILE PATH: | N:\DRAWINGS\0-LAR-1014-5\4724 |

# FIGURE WITHHELD UNDER 10 CFR 2.390

TOP CLOSURE LID

"NOTICE: CERTAIN DESIGN AND OPERATIONAL FEATURES OF THIS EQUIPMENT ARE PROTECTED UNDER U.S. PATENT NO. 6,587,536. AN INFRINGEMENT BY ANY ENTITY IS UNLAWFUL."

HOLTEC INTERNATIONAL
HOLTEC CENTER
555 LINCOLN DRIVE WEST
MARLTON, NJ 08053

CLIENT: ENTERGY IPEC 1

DESCRIPTION: 100 TON HI-TRAC 100D VEER. IP1 TOP CLOSURE LID

| PROJECT NO. | COMPANION DRAWINGS: | SIZE | DRAWING NO. | SHEET | REV |
|---|---|---|---|---|---|
| 1535 | - | D | 4724 | 10 | 0 |
| 4500545692 | | SCALE: NONE | FILE PATH: N:\DRAWINGS\0-LAR-1014-5\4724 | | |

## *SUPPLEMENT 1.II*

## *GENERAL DESCRIPTION OF HI-STORM 100 SYSTEM FOR IP1*

### *1.II.0 GENERAL INFORMATION*

*The HI-STORM 100 System has been expanded to include options specific for Indian Point Unit 1. Indian Point Unit 1 (IP1) fuel assemblies are approximately 137 inches in length which is considerably shorter than most PWR fuel assemblies. As a result of the shorter fuel assemblies and a reduced crane capacity at IP1, the HI-STORM 100 System now includes a shorter HI-STORM overpack, MPC, and HI-TRAC for IP1. Information pertaining to the HI-STORM 100 System modifications for IP1 is generally contained in the "II" supplements to each chapter of this FSAR. Certain sections of the main FSAR are also affected and are appropriately modified for continuity with the "II" supplements. Unless superseded or specifically modified by information in the "II" supplements, the information in the main FSAR is applicable to the HI-STORM 100 System for use at IP1.*

### *1.II.1 INTRODUCTION*

*The HI-STORM 100 System as deployed at Indian Point Unit 1 will consist of a HI-STORM 100S Version B overpack, an MPC-32, and a HI-TRAC 100D.*

### *1.II.2 GENERAL DESCRIPTION OF HI-STORM 100 SYSTEM FOR IP1*

#### *1.II.2.1 System Characteristics*

*The HI-STORM 100S Version B, MPC-32, and HI-TRAC 100D have been shortened for use at Indian Point Unit 1.*

*The HI-STORM 100S Version B overpack was shortened by approximately 33 inches. The other physical characteristics (e.g. inlet and outlet vents, inner and outer shells, and lid) of the HI-STORM 100S Version B overpack remain unchanged. This reduction in height creates another variant of the HI-STORM 100S Version B overpack, differing from the others variants by only height and weight. The variant for IP1 is referred to as the HI-STORM 100S-185 and is approximately 185 inches high.*

*The MPC-32 basket and shell, for use at IP1, were shortened by approximately 33 inches. The neutron absorber panels and sheathing were shortened by approximately 20 inches. The neutron absorber panels in the MPC-32 for IP1 effectively cover the entire height of the basket. Since the primary features that define an MPC-32 (e.g. cell opening, cell pitch, basket wall thickness, neutron absorber thickness and B-10 loading) are unchanged for use at IP1, the basket is still designated as an MPC-32. The MPC-32 for IP1 may be used with both the HI-STORM 100S-185 and the standard height HI-STORM 100S Version B (the HI-STORM 100S-218 also referred to as the HI-STORM 100S Version B (218)).*

HOLTEC INTERNATIONAL COPYRIGHTED MATERIAL

*The HI-TRAC 100D was also shortened by approximately 33 inches. Due to a crane capacity of 75 tons at IP1 it was also necessary to reduce the thickness of the outer steel shell by a 1/4 inch and reduce the lead thickness by 3/8 inch. The water jacket thickness, pool lid, and bottom flange were not modified. This variant of the HI-TRAC 100D is referred to as the HI-TRAC 100D Version IP1.*

*Table 1.II.1 contains the key parameters for the HI-STORM 100 System that are unique for its use at IP1.*

*1.II.2.2 Operational Characteristics*

*With the exception of the helium fill requirements specified in Table 1.II.1, the operational characteristics of the IP1 specific HI-STORM 100 System and the generic HI-STORM 100 System (as described in Section 1.2.2) are identical.*

*I.II.2.2.1 Criticality Prevention*

*Criticality is controlled by geometry and neutron absorbing materials in the fuel basket. The MPC-32 for IP1 does not rely on soluble boron credit during loading or the assurance that water cannot enter the MPC during storage to meet the stipulated criticality limits.*

*Each MPC model is equipped with neutron absorber plates affixed to the fuel cell walls as shown on the drawings in Section 1.5. The minimum $^{10}B$ areal density specified for the neutron absorber in each MPC model is shown in Table 1.2.2 in Section 1.2. These values are chosen to be consistent with the assumptions made in the criticality analyses.*

*1.II.2.3 Cask Contents*

*The MPC-32 and MPC-32F for IP1 are designed to accommodate up to thirty-two IP1 PWR fuel assemblies. All thirty-two of these fuel assemblies may be classified as intact or damaged fuel assemblies. Fuel debris is not permitted to be stored in the MPC-32 or MPC-32F for IP1.*

*1.II.3 IDENTIFICATION OF AGENTS AND CONTRACTORS*

*Same as in Section 1.3.*

*1.II.4 GENERIC CASK ARRAYS*

*Same as in Section 1.4.*

### *1.II.5 DRAWINGS*

*The drawings of the HI-STORM 100S Version B, MPC enclosure vessel, and MPC-32 provided in Section 1.5, contain notes regarding the IP1 specific variants. A separate drawing is provided in Section 1.5 for the HI-TRAC 100D Version IP1.*

HOLTEC INTERNATIONAL COPYRIGHTED MATERIAL

*Table 1.II.1*
*KEY PARAMETERS FOR HI-STORM 100 SYSTEM SPECIFIC TO IP1*

| *Item* | *Value* |
|---|---|
| *IP1 MPC-32/32F storage capacity* | *Up to 32 intact or damaged stainless steel clad IP1 fuel assemblies with or without non-fuel hardware.* |
| *MPC internal environment Helium fill (99.995% fill helium purity)*<br><br>*MPC-32/32F (heat load ≤ 8.0 kW)* | *(all pressure ranges are at a reference temperature of 70°F)*<br><br>*≥ 22.0 psig and ≤ 33.3 psig* |

## 2.1 SPENT FUEL TO BE STORED

### 2.1.1 Determination of The Design Basis Fuel

The HI-STORM 100 System is designed to store most types of fuel assemblies generated in the commercial U.S. nuclear industry. Boiling-water reactor (BWR) fuel assemblies have been supplied by The General Electric Company (GE), Siemens, Exxon Nuclear, ANF, UNC, ABB Combustion Engineering, and Gulf Atomic. Pressurized-water reactor (PWR) fuel assemblies are generally supplied by Westinghouse, Babcock & Wilcox, ANF, and ABB Combustion Engineering. ANF, Exxon, and Siemens are historically the same manufacturing company under different ownership. Within this report, SPC is used to designate fuel manufactured by ANF, Exxon, or Siemens. Publications such as Refs. [2.1.1] and [2.1.2] provide a comprehensive description of fuel discharged from U.S. reactors. A central object in the design of the HI-STORM 100 System is to ensure that a majority of SNF discharged from the U.S. reactors can be stored in one of the MPCs.

The cell openings and lengths in the fuel basket have been sized to accommodate the BWR and PWR assemblies listed in Refs. [2.1.1] and [2.1.2] except as noted below. Similarly, the cavity length of the multi-purpose canisters has been set at a dimension, which permits storing most types of PWR fuel assemblies and BWR fuel assemblies with or without fuel channels. The one exception is as follows:

i. The South Texas Units 1 & 2 SNF, and CE 16x16 System 80 SNF are too long to be accommodated in the available MPC cavity length.

In addition to satisfying the cross sectional and length compatibility, the active fuel region of the SNF must be enveloped in the axial direction by the neutron absorber located in the MPC fuel basket. Alignment of the neutron absorber with the active fuel region is ensured by the use of upper and lower fuel spacers suitably designed to support the bottom and restrain the top of the fuel assembly. The spacers axially position the SNF assembly such that its active fuel region is properly aligned with the neutron absorber in the fuel basket. Figure 2.1.5 provides a pictorial representation of the fuel spacers positioning the fuel assembly active fuel region. Both the upper and lower fuel spacers are designed to perform their function under normal, off-normal, and accident conditions of storage.

In summary, the geometric compatibility of the SNF with the MPC designs does not require the definition of a design basis fuel assembly. This, however, is not the case for structural, confinement, shielding, thermal-hydraulic, and criticality criteria. In fact, a particular fuel type in a category (PWR or BWR) may not control the cask design in all of the above-mentioned criteria. To ensure that no SNF listed in Refs. [2.1.1] and [2.1.2] which is geometrically admissible in the MPC is precluded, it is necessary to determine the governing fuel specification for each analysis criterion. To make the necessary determinations, potential candidate fuel assemblies for each qualification criterion were considered. Table 2.1.1 lists the PWR fuel assemblies that were evaluated. These fuel assemblies were evaluated to define the governing design criteria for PWR fuel. The BWR fuel assembly designs evaluated are listed in Table 2.1.2. Tables 2.1.3 and 2.1.4 provide the fuel characteristics determined to be acceptable for storage in the HI-STORM 100 System. Section 2.1.9 summarizes the authorized contents for the HI-STORM 100 System. Any fuel assembly that has fuel

characteristics within the range of Tables 2.1.3 and 2.1.4 and meets the other limits specified in Section 2.1.9 is acceptable for storage in the HI-STORM 100 System. Tables 2.1.3 and 2.1.4 present the groups of fuel assembly types defined as "array/classes" as described in further detail in Chapter 6. Table 2.1.5 lists the BWR and PWR fuel assembly designs, which are found to govern for three qualification criteria, namely reactivity, shielding, and thermal. Substantiating results of analyses for the governing assembly types are presented in the respective chapters dealing with the specific qualification topic. Additional information on the design basis fuel definition is presented in the following subsections.

### 2.1.2 Intact SNF Specifications

Intact fuel assemblies are defined as fuel assemblies without known or suspected cladding defects greater than pinhole leaks and hairline cracks, and which can be handled by normal means. The design payload for the HI-STORM 100 System is intact ZR or stainless steel (SS) clad fuel assemblies with the characteristics listed in Tables 2.1.17 through 2.1.24.

Intact fuel assemblies without fuel rods in fuel rod locations cannot be loaded into the HI-STORM 100 unless dummy fuel rods, which occupy a volume greater than or equal to the original fuel rods, replace the missing rods prior to loading. Any intact fuel assembly that falls within the geometric, thermal, and nuclear limits established for the design basis intact fuel assembly, as defined in Section 2.1.9 can be safely stored in the HI-STORM 100 System.

The range of fuel characteristics specified in Tables 2.1.3 and 2.1.4 have been evaluated in this FSAR and are acceptable for storage in the HI-STORM 100 System within the decay heat, burnup, and cooling time limits specified in Section 2.1.9 for intact fuel assemblies.

### 2.1.3 Damaged SNF and Fuel Debris Specifications

Damaged fuel and fuel debris are defined in Table 1.0.1.

To aid in loading and unloading, damaged fuel assemblies and fuel debris will be loaded into stainless steel damaged fuel containers (DFCs) provided with 250 x 250 fine mesh screens, for storage in the HI-STORM 100 System (see Figures 2.1.1 and 2.1.2B, C, and D). The MPC-24E and MPC 32 are designed to accommodate PWR damaged fuel. The MPC-24EF and MPC-32F are designed to accommodate PWR damaged fuel and fuel debris. The MPC-68 is designed to accommodate BWR damaged fuel. The MPC-68F and MPC-68FF are designed to accommodate BWR damaged fuel and fuel debris. The appropriate structural, thermal, shielding, criticality, and confinement analyses have been performed to account for damaged fuel and fuel debris and are described in their respective chapters that follow. The limiting design characteristics for damaged fuel assemblies and restrictions on the number and location of damaged fuel containers authorized for loading in each MPC model are provided in Section 2.1.9. Dresden Unit 1 fuel assemblies contained in Transnuclear-designed damaged fuel canisters and one Dresden Unit 1 thoria rod canister have been approved for storage directly in the HI-STORM 100 System without re-packaging (see Figures 2.1.2 and 2.1.2A).

MPC contents classified as fuel debris are required to be stored in DFCs and in the applicable "F" model MPC as specified in Section 2.1.9. The "F"(or "FF") indicates the MPC is qualified for storage of intact fuel, damaged fuel, and fuel debris, in quantities and locations specified in Section 2.1.9. The basket designs for the standard and "F" model MPCs are identical. The lid and shell designs of the "F" models are unique in that the upper shell portion of the canister is thickened for additional strength needed under hypothetical accident conditions of transportation under 10 CFR 71. This design feature is not required for dry storage, but must be considered in fuel loading for dry storage to ensure the dual-purpose function of the MPC by eliminating the need to re-package the fuel for transportation. Figure 2.1.9 shows the details of the differences between the standard and "F" model MPC shells. These details are common for both the PWR and BWR series MPC models.

### 2.1.4 Deleted

### 2.1.5 Structural Parameters for Design Basis SNF

The main physical parameters of an SNF assembly applicable to the structural evaluation are the fuel assembly length, envelope (cross sectional dimensions), and weight. These parameters, which define the mechanical and structural design, are specified in Section 2.1.9. The centers of gravity reported in Section 3.2 are based on the maximum fuel assembly weight. Upper and lower fuel spacers (as appropriate) maintain the axial position of the fuel assembly within the MPC basket and, therefore, the location of the center of gravity. The upper and lower fuel spacers are designed to withstand normal, off-normal, and accident conditions of storage. An axial clearance of approximately 2 to 2-1/2 inches is provided to account for the irradiation and thermal growth of the fuel assemblies. The suggested upper and lower fuel spacer lengths are listed in Tables 2.1.9 and 2.1.10. In order to qualify for storage in the MPC, the SNF must satisfy the physical parameters listed in Section 2.1.9.

### 2.1.6 Thermal Parameters for Design Basis SNF

The principal thermal design parameter for the stored fuel is the peak fuel cladding temperature, which is a function of the maximum heat generation rate per assembly and the decay heat removal capabilities of the HI-STORM 100 System. No attempt is made to link the maximum allowable decay heat per fuel assembly with burnup, enrichment, or cooling time. Rather, the decay heat per fuel assembly is adjusted to yield peak fuel cladding temperatures with an allowance for margin to the temperature limit. The same fuel assembly decay heats are used for all fuel assembly designs within a given class of fuel assemblies (i.e., ZR clad PWR, stainless steel clad BWR, etc.).

To ensure the permissible fuel cladding temperature limits are not exceeded, Section 2.1.9 specifies the allowable decay heat per assembly for each MPC model. For both uniform and regionalized loading of moderate and high burnup fuel assemblies, the allowable decay heat per assembly is presented in Section 2.1.9.

Section 2.1.9 also includes separate cooling time, burnup, and decay heat limits for uniform fuel loading and regionalized fuel loading. Regionalized loading allows higher heat emitting fuel assemblies to be stored in the center fuel storage locations than would otherwise be authorized for storage under uniform loading conditions.

HOLTEC INTERNATIONAL COPYRIGHTED MATERIAL

The fuel cladding temperature is also affected by the heat transfer characteristics of the fuel assemblies. There is no single fuel assembly design used in all thermal calculations that is bounding of all others. Instead, each thermal calculation, comprising the overall thermal analysis presented in Chapter 4, was performed using the fuel assembly design that results in the most conservative result for the individual calculation. By always using the fuel assembly design that is most conservative for a particular calculation, it is ensured that each calculation is bounding for all fuel assembly designs. The bounding fuel assembly design for each thermal calculation and fuel type is provided in Table 2.1.5.

Finally, the axial variation in the heat generation rate in the design basis fuel assembly is defined based on the axial burnup distribution. For this purpose, the data provided in Refs. [2.1.7] and [2.1.8] are utilized and summarized in Table 2.1.11 and Figures 2.1.3 and 2.1.4 for reference. These distributions are representative of fuel assemblies with the design basis burnup levels considered. These distributions are used for analyses only, and do not provide a criteria for fuel assembly acceptability for storage in the HI-STORM 100 System.

Except for MPC-68F, fuel may be stored in the MPC using one of two storage strategies, namely, uniform loading and regionalized loading. Uniform loading allows storage of any fuel assembly in any fuel storage location, subject to additional restrictions, such as those for loading of fuel assemblies containing non-fuel hardware as defined in Table 1.0.1. Regionalized fuel loading allows for higher heat emitting fuel assemblies to be stored in the central core basket storage locations (inner region) with lower heat emitting fuel assemblies in the peripheral fuel storage locations (outer region). Regionalized loading allows storage of higher heat emitting fuel assemblies than would otherwise be permitted using the uniform loading strategy. The definition of the regions for each MPC model provided in Table 2.1.13. Regionalized fuel loading is not permitted in MPC-68F.

### 2.1.7 Radiological Parameters for Design Basis SNF

The principal radiological design criteria for the HI-STORM 100 System are the 10CFR72.104 site boundary dose rate limits and maintaining operational dose rates as low as reasonably achievable (ALARA). The radiation dose is directly affected by the gamma and neutron source terms of the SNF assembly.

The gamma and neutron sources are separate and are affected differently by enrichment, burnup, and cooling time. It is recognized that, at a given burnup, the radiological source terms increase monotonically as the initial enrichment is reduced. The shielding design basis fuel assembly, therefore, is evaluated at conservatively high burnups, low cooling times, and low enrichments, as discussed in Chapter 5. The shielding design basis fuel assembly thus bounds all other fuel assemblies.

The design basis dose rates can be met by a variety of burnup levels and cooling times. Section 2.1.9 provides the procedure for determining burnup and cooling time limits for all of the authorized fuel assembly array/classes for both uniform fuel loading and regionalized loading. Table 2.1.11 and Figures 2.1.3 and 2.1.4 provide the axial distribution for the radiological source terms for PWR and BWR fuel assemblies based on the axial burnup distribution. The axial burnup distributions are

HOLTEC INTERNATIONAL COPYRIGHTED MATERIAL

representative of fuel assemblies with the design basis burnup levels considered. These distributions are used for analyses only, and do not provide a criteria for fuel assembly acceptability for storage in the HI-STORM 100 System.

Thoria rods placed in Dresden Unit 1 Thoria Rod Canisters meeting the requirements of Table 2.1.12 and Dresden Unit 1 fuel assemblies with one Antimony-Beryllium neutron source have been qualified for storage. Up to one Thoria Rod Canister is authorized for storage in combination with other intact and damaged fuel, and fuel debris as specified in Section 2.1.9.

Non-fuel hardware, as defined in Table 1.0.1, has been evaluated and is authorized for storage in the PWR MPCs as specified in Section 2.1.9.

### 2.1.8 Criticality Parameters for Design Basis SNF

As discussed earlier, the MPC-68, MPC-68F, MPC-68FF, MPC-32 and MPC-32F feature a basket without flux traps. In the aforementioned baskets, there is one panel of neutron absorber between two adjacent fuel assemblies. The MPC-24, MPC-24E, and MPC-24EF employ a construction wherein two neighboring fuel assemblies are separated by two panels of neutron absorber with a water gap between them (flux trap construction).

The minimum $^{10}B$ areal density in the neutron absorber panels for each MPC model is shown in Table 2.1.15.

For all MPCs, the $^{10}B$ areal density used for the criticality analysis is conservatively established below the minimum values shown in Table 2.1.15. For Boral, the value used in the analysis is 75% of the minimum value, while for METAMIC, it is 90% of the minimum value. This is consistent with NUREG-1536 [2.1.5] which suggests a 25% reduction in $^{10}B$ areal density credit when subject to standard acceptance tests, and which allows a smaller reduction when more comprehensive tests of the areal density are performed.

The criticality analyses for the MPC-24, MPC-24E and MPC-24EF (all with higher enriched fuel) and for the MPC-32 and MPC-32F were performed with credit taken for soluble boron in the MPC water during wet loading and unloading operations. Table 2.1.14 and 2.1.16 provide the required soluble boron concentrations for these MPCs.

### 2.1.9 Summary of Authorized Contents

Tables 2.1.3, 2.1.4, 2.1.12, and 2.1.17 through 2.1.29 together specify the limits for spent fuel and non-fuel hardware authorized for storage in the HI-STORM 100 System. The limits in these tables are derived from the safety analyses described in the following chapters of this FSAR. Fuel classified as damaged fuel assemblies or fuel debris must be stored in damaged fuel containers for storage in the HI-STORM 100 System.

Tables 2.1.17 through 2.1.24 are the baseline tables that specify the fuel assembly limits for each of the MPC models, with appropriate references to the other tables in this section for certain other limits. Tables 2.1.17 through 2.1.24 refer to Section 2.1.9.1 for ZR-clad fuel limits on minimum

HOLTEC INTERNATIONAL COPYRIGHTED MATERIAL

cooling time, maximum decay heat, and maximum burnup for uniform and regionalized fuel loading. Limits on decay heat, burnup, and cooling time for stainless steel-clad fuel are provided in Tables 2.1.17 through 2.1.24.

### 2.1.9.1 Decay Heat, Burnup, and Cooling Time Limits for ZR-Clad Fuel

Each ZR-clad fuel assembly and any PWR integral non-fuel hardware (NFH) to be stored in the HI-STORM 100 System must meet the following limits, in addition to meeting the physical limits specified elsewhere in this section, to be authorized for storage in the HI-STORM 100 System. The contents of each fuel storage location (fuel assembly and NFH) to be stored must be verified to have, as applicable:

- A decay heat less than or equal to the maximum allowable value.
- An assembly average enrichment greater than or equal to the minimum value used in determining the maximum allowable burnup.
- A burnup less than or equal to the maximum allowable value.
- A cooling time greater than or equal to the minimum allowable value.

The maximum allowable ZR-clad fuel storage location decay heat values are determined using the methodology described in Section 2.1.9.1.1 or 2.1.9.1.2 depending on whether uniform fuel loading or regionalized fuel loading is being implemented[†]. The decay heat limits are independent of burnup, cooling time, or enrichment and are based strictly on the thermal analysis described in Chapter 4. Decay heat limits must be met for all contents in a fuel storage location (i.e., fuel and PWR non-fuel hardware, as applicable).

The maximum allowable average burnup per fuel storage location is determined by calculation as a function of minimum enrichment, maximum allowable decay heat, and minimum cooling time from 3 to 20 years, as described in Section 2.1.9.1.3.

Section 12.2.10 describes how compliance with these limits may be verified, including practical examples.

#### 2.1.9.1.1 Uniform Fuel Loading Decay Heat Limits for ZR-Clad Fuel

Table 2.1.26 provides the maximum allowable decay heat per fuel storage location for ZR-clad fuel in uniform fuel loading for each MPC model.

---

† Note that the stainless steel-clad fuel limits apply to all fuel in the MPC, if a mixture of stainless steel and ZR-clad fuel is stored in the same MPC. The stainless steel-clad fuel assembly decay heat limits may be found in Table 2.1.17 through 2.1.24

2.1.9.1.2 Regionalized Fuel Loading Decay Heat Limits for ZR-Clad Fuel

Table 2.1.27 provides the maximum allowable decay heat per fuel storage location for ZR-clad fuel in both the inner and outer regions for regionalized fuel loading in each MPC model.

2.1.9.1.3 Burnup Limits as a Function of Cooling Time for ZR-Clad Fuel

The maximum allowable ZR-clad fuel assembly average burnup varies with the following parameters, based on the shielding analysis in Chapter 5:

- Minimum required fuel assembly cooling time
- Maximum allowable fuel assembly decay heat
- Minimum fuel assembly average enrichment

The calculation described in this section is used to determine the maximum allowable fuel assembly burnup for minimum cooling times between 3 and 20 years, using maximum decay heat and minimum enrichment as input values. This calculation may be used to create multiple burnup versus cooling time tables for a particular fuel assembly array/class and different minimum enrichments. The allowable maximum burnup for a specific fuel assembly may be calculated based on the assembly's particular enrichment and cooling time.

(i) Choose a fuel assembly minimum enrichment, $E_{235}$.

(ii) Calculate the maximum allowable fuel assembly average burnup for a minimum cooling time between 3 and 20 years using the equation below:

$$Bu = (A \times q) + (B \times q^2) + (C \times q^3) + [D \times (E_{235})^2] + (E \times q \times E_{235}) + (F \times q^2 \times E_{235}) + G$$

Equation 2.1.9.3

Where:

Bu = Maximum allowable assembly average burnup (MWD/MTU)

q = Maximum allowable decay heat per fuel storage location determined in Section 2.1.9.1 or 2.1.9.2 (kW)

$E_{235}$ = Minimum fuel assembly average enrichment (wt. % $^{235}U$)
(e.g., for 4.05 wt. %, use 4.05)

A through G = Coefficients from Tables 2.1.28 or 2.1.29 for the applicable fuel assembly array/class and minimum cooling time.

2.1.9.1.4 Other Considerations

In computing the allowable maximum fuel storage location decay heats and fuel assembly average burnups, the following requirements apply:

- Calculated burnup limits shall be rounded down to the nearest integer

- Calculated burnup limits greater than 68,200 MWD/MTU for PWR fuel and 65,000 MWD/MTU for BWR fuel must be reduced to be equal to these values.

- Linear interpolation of calculated burnups between cooling times for a given fuel assembly maximum decay heat and minimum enrichment is permitted. For example, the allowable burnup for a minimum cooling time of 4.5 years may be interpolated between those burnups calculated for 4 and 5 years.

- ZR-clad fuel assemblies must have a minimum enrichment, as defined in Table 1.0.1, greater than or equal to the value used in determining the maximum allowable burnup per Section 2.1.9.1.3 to be authorized for storage in the MPC.

- When complying with the maximum fuel storage location decay heat limits, users must account for the decay heat from both the fuel assembly and any PWR non-fuel hardware, as applicable for the particular fuel storage location, to ensure the decay heat emitted by all contents in a storage location does not exceed the limit.

Section 12.2.10 provides a practical example of determining fuel storage location decay heat, burnup, and cooling time limits and verifying compliance for a set of example fuel assemblies.

HOLTEC INTERNATIONAL COPYRIGHTED MATERIAL

Table 2.1.1

PWR FUEL ASSEMBLIES EVALUATED TO DETERMINE DESIGN BASIS SNF

| **Assembly Class** | **Array Type** |
|---|---|
| B&W 15x15 | All |
| B&W 17x17 | All |
| CE 14x14 | All |
| CE 16x16 | All except System 80™ |
| WE 14x14 | All |
| WE 15x15 | All |
| WE 17x17 | All |
| St. Lucie | All |
| Ft. Calhoun | All |
| Haddam Neck (Stainless Steel Clad) | All |
| San Onofre 1 (Stainless Steel Clad) | All |
| Indian Point 1 | All |

Table 2.1.2

BWR FUEL ASSEMBLIES EVALUATED TO DETERMINE DESIGN BASIS SNF

| **Assembly Class** | **Array Type** | | | |
|---|---|---|---|---|
| GE BWR/2-3 | All 7x7 | All 8x8 | All 9x9 | All 10x10 |
| GE BWR/4-6 | All 7x7 | All 8x8 | All 9x9 | All 10x10 |
| Humboldt Bay | All 6x6 | All 7x7 (ZR Clad) | | |
| Dresden-1 | All 6x6 | All 8x8 | | |
| LaCrosse (Stainless Steel Clad) | All | | | |

Table 2.1.3
PWR FUEL ASSEMBLY CHARACTERISTICS (Note 1)

| **Fuel Assembly Array/ Class** | **14x14 A** | **14x14 B** | **14x14 C** | **14x14 D** | **14x14E** |
|---|---|---|---|---|---|
| Clad Material (Note 2) | ZR | ZR | ZR | SS | SS |
| Design Initial U (kg/assy.) (Note 3) | ≤ 365 | ≤ 412 | ≤ 438 | ≤ 400 | ≤ 206 |
| Initial Enrichment (MPC-24, 24E, and 24EF without soluble boron credit) (wt % $^{235}$U) (Note 7) | ≤ 4.6 (24)<br>≤ 5.0 (24E/24EF) | ≤ 4.6 (24)<br>≤ 5.0 (24E/24EF) | ≤ 4.6 (24)<br>≤ 5.0 (24E/24EF) | ≤ 4.0 (24)<br>≤ 5.0 (24E/24EF) | ≤ ~~5.0~~*4.5* (24)<br>≤ ~~5.0~~*4.5* (24E/24EF) |
| Initial Enrichment (MPC-24, 24E, 24EF, 32 or 32F with soluble boron credit - see Note 5) (wt % $^{235}$U) | ≤ 5.0 | ≤ 5.0 | ≤ 5.0 | ≤ 5.0 | ≤ ~~5.0~~*4.5* |
| No. of Fuel Rod Locations | 179 | 179 | 176 | 180 | 173 |
| Fuel Clad O.D. (in.) | ≥ 0.400 | ≥ 0.417 | ≥ 0.440 | ≥ 0.422 | ≥ 0.3415 |
| Fuel Clad I.D. (in.) | ≤ 0.3514 | ≤ 0.3734 | ≤ 0.3880 | ≤ 0.3890 | ≤ 0.3175 |
| Fuel Pellet Dia. (in.) | ≤ 0.3444 | ≤ 0.3659 | ≤ 0.3805 | ≤ 0.3835 | ≤ 0.3130 |
| Fuel Rod Pitch (in.) | ≤ 0.556 | ≤ 0.556 | ≤ 0.580 | ≤ 0.556 | Note 6 |
| Active Fuel Length (in.) | ≤ 150 | ≤ 150 | ≤ 150 | ≤ 144 | ≤ 102 |
| No. of Guide and/or Instrument Tubes | 17 | 17 | 5 (Note 4) | 16 | 0 |
| Guide/Instrument Tube Thickness (in.) | ≥ 0.017 | ≥ 0.017 | ≥ 0.038 | ≥ 0.0145 | N/A |

Table 2.1.3 (continued)
PWR FUEL ASSEMBLY CHARACTERISTICS (Note 1)

| **Fuel Assembly Array/Class** | **15x15 A** | **15x15 B** | **15x15 C** | **15x15 D** | **15x15 E** | **15x15 F** |
|---|---|---|---|---|---|---|
| Clad Material (Note 2) | ZR | ZR | ZR | ZR | ZR | ZR |
| Design Initial U (kg/assy.) (Note 3) | ≤ 473 | ≤ 473 | ≤ 473 | ≤ 495 | ≤ 495 | ≤ 495 |
| Initial Enrichment (MPC-24, 24E, and 24EF without soluble boron credit) (wt % $^{235}$U) (Note 7) | ≤ 4.1 (24)<br>≤ 4.5 (24E/24EF) | ≤ 4.1 (24)<br>≤ 4.5 (24E/24EF) | ≤ 4.1 (24)<br>≤ 4.5 (24E/24EF) | ≤ 4.1 (24)<br>≤ 4.5 (24E/24EF) | ≤ 4.1 (24)<br>≤ 4.5 (24E/24EF) | ≤ 4.1 (24)<br>≤ 4.5 (24E/24EF) |
| Initial Enrichment (MPC-24, 24E, 24EF, 32 or 32F with soluble boron credit – see Note 5) (wt % $^{235}$U) | ≤ 5.0 | ≤ 5.0 | ≤ 5.0 | ≤ 5.0 | ≤ 5.0 | ≤ 5.0 |
| No. of Fuel Rod Locations | 204 | 204 | 204 | 208 | 208 | 208 |
| Fuel Clad O.D. (in.) | ≥ 0.418 | ≥ 0.420 | ≥ 0.417 | ≥ 0.430 | ≥ 0.428 | ≥ 0.428 |
| Fuel Clad I.D. (in.) | ≤ 0.3660 | ≤ 0.3736 | ≤ 0.3640 | ≤ 0.3800 | ≤ 0.3790 | ≤ 0.3820 |
| Fuel Pellet Dia. (in.) | ≤ 0.3580 | ≤ 0.3671 | ≤ 0.3570 | ≤ 0.3735 | ≤ 0.3707 | ≤ 0.3742 |
| Fuel Rod Pitch (in.) | ≤ 0.550 | ≤ 0.563 | ≤ 0.563 | ≤ 0.568 | ≤ 0.568 | ≤ 0.568 |
| Active Fuel Length (in.) | ≤ 150 | ≤ 150 | ≤ 150 | ≤ 150 | ≤ 150 | ≤ 150 |
| No. of Guide and/or Instrument Tubes | 21 | 21 | 21 | 17 | 17 | 17 |
| Guide/Instrument Tube Thickness (in.) | ≥ 0.0165 | ≥ 0.015 | ≥ 0.0165 | ≥ 0.0150 | ≥ 0.0140 | ≥ 0.0140 |

HOLTEC INTERNATIONAL COPYRIGHTED MATERIAL

Table 2.1.3 (continued)
PWR FUEL ASSEMBLY CHARACTERISTICS (Note 1)

| **Fuel Assembly Array and Class** | **15x15 G** | **15x15H** | **16x16 A** | **17x17A** | **17x17 B** | **17x17 C** |
|---|---|---|---|---|---|---|
| Clad Material (Note 2) | SS | ZR | ZR | ZR | ZR | ZR |
| Design Initial U (kg/assy.) (Note 3) | ≤ 420 | ≤ 495 | ≤ 448 | ≤ 433 | ≤ 474 | ≤ 480 |
| Initial Enrichment (MPC-24, 24E, and 24EF without soluble boron credit) (wt % $^{235}$U) (Note 7) | ≤ 4.0 (24)<br>≤ 4.5 (24E/24EF) | ≤ 3.8 (24)<br>≤ 4.2 (24E/24EF) | ≤ 4.6 (24)<br>≤ 5.0 (24E/24EF) | ≤ 4.0 (24)<br>≤ 4.4 (24E/24EF) | ≤ 4.0 (24)<br>≤ 4.4 (24E/24EF) | ≤ 4.0 (24)<br>≤ 4.4 (24E/24EF) |
| Initial Enrichment (MPC-24, 24E, 24EF, 32 or 32F with soluble boron credit – see Note 5) (wt % $^{235}$U) | ≤ 5.0 | ≤ 5.0 | ≤ 5.0 | ≤ 5.0 | ≤ 5.0 | ≤ 5.0 |
| No. of Fuel Rod Locations | 204 | 208 | 236 | 264 | 264 | 264 |
| Fuel Clad O.D. (in.) | ≥ 0.422 | ≥ 0.414 | ≥ 0.382 | ≥ 0.360 | ≥ 0.372 | ≥ 0.377 |
| Fuel Clad I.D. (in.) | ≤ 0.3890 | ≤ 0.3700 | ≤ 0.3320 | ≤ 0.3150 | ≤ 0.3310 | ≤ 0.3330 |
| Fuel Pellet Dia. (in.) | ≤ 0.3825 | ≥ 0.3622 | ≤ 0.3255 | ≤ 0.3088 | ≤ 0.3232 | ≤ 0.3252 |
| Fuel Rod Pitch (in.) | ≤ 0.563 | ≤ 0.568 | ≤ 0.506 | ≤ 0.496 | ≤ 0.496 | ≤ 0.502 |
| Active Fuel length (in.) | ≤ 144 | ≤ 150 | ≤ 150 | ≤ 150 | ≤ 150 | ≤ 150 |
| No. of Guide and/or Instrument Tubes | 21 | 17 | 5 (Note 4) | 25 | 25 | 25 |
| Guide/Instrument Tube Thickness (in.) | ≥ 0.0145 | ≥ 0.140 | ≥ 0.0400 | ≥ 0.016 | ≥ 0.014 | ≥ 0.020 |

Table 2.1.3 (continued)
PWR FUEL ASSEMBLY CHARACTERISTICS

Notes:

1. All dimensions are design nominal values. Maximum and minimum dimensions are specified to bound variations in design nominal values among fuel assemblies within a given array/class.

2. See Table 1.0.1 for the definition of "ZR."

3. Design initial uranium weight is the nominal uranium weight specified for each assembly by the fuel manufacturer or reactor user. For each PWR fuel assembly, the total uranium weight limit specified in this table may be increased up to 2.0 percent for comparison with users' fuel records to account for manufacturer's tolerances.
4. Each guide tube replaces four fuel rods.

5. Soluble boron concentration per Tables 2.1.14 and 2.1.16, as applicable.

6. This fuel assembly array/class includes only the Indian Point Unit 1 fuel assembly. This fuel assembly has two pitches in different sectors of the assembly. These pitches are 0.441 inches and 0.453 inches.

7. For those MPCs loaded with both intact fuel assemblies and damaged fuel assemblies or fuel debris, the maximum initial enrichment of the intact fuel assemblies, damaged fuel assemblies and fuel debris is 4.0 wt.% $^{235}U$.

HOLTEC INTERNATIONAL COPYRIGHTED MATERIAL

Table 2.1.4
BWR FUEL ASSEMBLY CHARACTERISTICS (Note 1)

| **Fuel Assembly Array and Class** | **6x6 A** | **6x6 B** | **6x6 C** | **7x7 A** | **7x7 B** | **8x8 A** |
|---|---|---|---|---|---|---|
| Clad Material (Note 2) | ZR | ZR | ZR | ZR | ZR | ZR |
| Design Initial U (kg/assy.) (Note 3) | ≤ 110 | ≤ 110 | ≤ 110 | ≤ 100 | ≤ 198 | ≤ 120 |
| Maximum Planar-Average Initial Enrichment (wt.% $^{235}U$) (Note 14) | ≤ 2.7 | ≤ 2.7 for $UO_2$ rods. See Note 4 for MOX rods | ≤ 2.7 | ≤ 2.7 | ≤ 4.2 | ≤ 2.7 |
| Initial Maximum Rod Enrichment (wt.% $^{235}U$) | ≤ 4.0 | ≤ 4.0 | ≤ 4.0 | ≤ 5.5 | ≤ 5.0 | ≤ 4.0 |
| No. of Fuel Rod Locations | 35 or 36 | 35 or 36 (up to 9 MOX rods) | 36 | 49 | 49 | 63 or 64 |
| Fuel Clad O.D. (in.) | ≥ 0.5550 | ≥ 0.5625 | ≥ 0.5630 | ≥ 0.4860 | ≥ 0.5630 | ≥ 0.4120 |
| Fuel Clad I.D. (in.) | ≤ 0.5105 | ≤ 0.4945 | ≤ 0.4990 | ≤ 0.4204 | ≤ 0.4990 | ≤ 0.3620 |
| Fuel Pellet Dia. (in.) | ≤ 0.4980 | ≤ 0.4820 | ≤ 0.4880 | ≤ 0.4110 | ≤ 0.4910 | ≤ 0.3580 |
| Fuel Rod Pitch (in.) | ≤ 0.710 | ≤ 0.710 | ≤ 0.740 | ≤ 0.631 | ≤ 0.738 | ≤ 0.523 |
| Active Fuel Length (in.) | ≤ 120 | ≤ 120 | ≤ 77.5 | ≤ 80 | ≤ 150 | ≤ 120 |
| No. of Water Rods (Note 11) | 1 or 0 | 1 or 0 | 0 | 0 | 0 | 1 or 0 |
| Water Rod Thickness (in.) | > 0 | > 0 | N/A | N/A | N/A | ≥ 0 |
| Channel Thickness (in.) | ≤ 0.060 | ≤ 0.060 | ≤ 0.060 | ≤ 0.060 | ≤ 0.120 | ≤ 0.100 |

HOLTEC INTERNATIONAL COPYRIGHTED MATERIAL

Table 2.1.4 (continued)
BWR FUEL ASSEMBLY CHARACTERISTICS (Note 1)

| **Fuel Assembly Array and Class** | **8x8 B** | **8x8 C** | **8x8 D** | **8x8 E** | **8x8F** | **9x9 A** |
|---|---|---|---|---|---|---|
| Clad Material (Note 2) | ZR | ZR | ZR | ZR | ZR | ZR |
| Design Initial U (kg/assy.) (Note 3) | ≤ 192 | ≤ 190 | ≤ 190 | ≤ 190 | ≤ 191 | ≤ 180 |
| Maximum Planar-Average Initial Enrichment (wt.% $^{235}U$) (Note 14) | ≤ 4.2 | ≤ 4.2 | ≤ 4.2 | ≤ 4.2 | ≤ 4.0 | ≤ 4.2 |
| Initial Maximum Rod Enrichment (wt.% $^{235}U$) | ≤ 5.0 | ≤ 5.0 | ≤ 5.0 | ≤ 5.0 | ≤ 5.0 | ≤ 5.0 |
| No. of Fuel Rod Locations | 63 or 64 | 62 | 60 or 61 | 59 | 64 | 74/66 (Note 5) |
| Fuel Clad O.D. (in.) | ≥ 0.4840 | ≥ 0.4830 | ≥ 0.4830 | ≥ 0.4930 | ≥ 0.4576 | ≥ 0.4400 |
| Fuel Clad I.D. (in.) | ≤ 0.4295 | ≤ 0.4250 | ≤ 0.4230 | ≤ 0.4250 | ≤ 0.3996 | ≤ 0.3840 |
| Fuel Pellet Dia. (in.) | ≤ 0.4195 | ≤ 0.4160 | ≤ 0.4140 | ≤ 0.4160 | ≤ 0.3913 | ≤ 0.3760 |
| Fuel Rod Pitch (in.) | ≤ 0.642 | ≤ 0.641 | ≤ 0.640 | ≤ 0.640 | ≤ 0.609 | ≤ 0.566 |
| Design Active Fuel Length (in.) | ≤ 150 | ≤ 150 | ≤ 150 | ≤ 150 | ≤ 150 | ≤ 150 |
| No. of Water Rods (Note 11) | 1 or 0 | 2 | 1 - 4 (Note 7) | 5 | N/A (Note 12) | 2 |
| Water Rod Thickness (in.) | ≥ 0.034 | > 0.00 | > 0.00 | ≥ 0.034 | ≥ 0.0315 | > 0.00 |
| Channel Thickness (in.) | ≤ 0.120 | ≤ 0.120 | ≤ 0.120 | ≤ 0.100 | ≤ 0.055 | ≤ 0.120 |

HOLTEC INTERNATIONAL COPYRIGHTED MATERIAL

Table 2.1.4 (continued)
BWR FUEL ASSEMBLY CHARACTERISTICS (Note 1)

| **Fuel Assembly Array and Class** | **9x9 B** | **9x9 C** | **9x9 D** | **9x9 E (Note 13)** | **9x9 F (Note 13)** | **9x9 G** |
|---|---|---|---|---|---|---|
| Clad Material (Note 2) | ZR | ZR | ZR | ZR | ZR | *ZR* |
| Design Initial U (kg/assy.) (Note 3) | ≤ 180 | ≤ 182 | ≤ 182 | ≤ 183 | ≤ 183 | ≤ 164 |
| Maximum Planar-Average Initial Enrichment (wt.% $^{235}U$) (Note 14) | ≤ 4.2 | ≤ 4.2 | ≤ 4.2 | ≤ 4.0 | ≤ 4.0 | ≤ 4.2 |
| Initial Maximum Rod Enrichment (wt.% $^{235}U$) | ≤ 5.0 | ≤ 5.0 | ≤ 5.0 | ≤ 5.0 | ≤ 5.0 | ≤ 5.0 |
| No. of Fuel Rod Locations | 72 | 80 | 79 | 76 | 76 | 72 |
| Fuel Clad O.D. (in.) | ≥ 0.4330 | ≥ 0.4230 | ≥ 0.4240 | ≥ 0.4170 | ≥ 0.4430 | ≥ 0.4240 |
| Fuel Clad I.D. (in.) | ≤ 0.3810 | ≤ 0.3640 | ≤ 0.3640 | ≤ 0.3640 | ≤ 0.3860 | ≤ 0.3640 |
| Fuel Pellet Dia. (in.) | ≤ 0.3740 | ≤ 0.3565 | ≤ 0.3565 | ≤ 0.3530 | ≤ 0.3745 | ≤ 0.3565 |
| Fuel Rod Pitch (in.) | ≤ 0.572 | ≤ 0.572 | ≤ 0.572 | ≤ 0.572 | ≤ 0.572 | ≤ 0.572 |
| Design Active Fuel Length (in.) | ≤ 150 | ≤ 150 | ≤ 150 | ≤ 150 | ≤ 150 | ≤ 150 |
| No. of Water Rods (Note 11) | 1 (Note 6) | 1 | 2 | 5 | 5 | 1 (Note 6) |
| Water Rod Thickness (in.) | > 0.00 | ≥ 0.020 | ≥ 0.0300 | ≥ 0.0120 | ≥ 0.0120 | ≥ 0.0320 |
| Channel Thickness (in.) | ≤ 0.120 | ≤ 0.100 | ≤ 0.100 | ≤ 0.120 | ≤ 0.120 | ≤ 0.120 |

HOLTEC INTERNATIONAL COPYRIGHTED MATERIAL

Table 2.1.4 (continued)
BWR FUEL ASSEMBLY CHARACTERISTICS (Note 1)

| **Fuel Assembly Array and Class** | **10x10 A** | **10x10 B** | **10x10 C** | **10x10 D** | **10x10 E** |
|---|---|---|---|---|---|
| Clad Material (Note 2) | ZR | ZR | ZR | SS | SS |
| Design Initial U (kg/assy.) (Note 3) | ≤ 188 | ≤ 188 | ≤ 179 | ≤ 125 | ≤ 125 |
| Maximum Planar-Average Initial Enrichment (wt.% $^{235}U$) (Note 14) | ≤ 4.2 | ≤ 4.2 | ≤ 4.2 | ≤ 4.0 | ≤ 4.0 |
| Initial Maximum Rod Enrichment (wt.% $^{235}U$) | ≤ 5.0 | ≤ 5.0 | ≤ 5.0 | ≤ 5.0 | ≤ 5.0 |
| No. of Fuel Rod Locations | 92/78 (Note 8) | 91/83 (Note 9) | 96 | 100 | 96 |
| Fuel Clad O.D. (in.) | ≥ 0.4040 | ≥ 0.3957 | ≥ 0.3780 | ≥ 0.3960 | ≥ 0.3940 |
| Fuel Clad I.D. (in.) | ≤ 0.3520 | ≤ 0.3480 | ≤ 0.3294 | ≤ 0.3560 | ≤ 0.3500 |
| Fuel Pellet Dia. (in.) | ≤ 0.3455 | ≤ 0.3420 | ≤ 0.3224 | ≤ 0.3500 | ≤ 0.3430 |
| Fuel Rod Pitch (in.) | ≤ 0.510 | ≤ 0.510 | ≤ 0.488 | ≤ 0.565 | ≤ 0.557 |
| Design Active Fuel Length (in.) | ≤ 150 | ≤ 150 | ≤ 150 | ≤ 83 | ≤ 83 |
| No. of Water Rods (Note 11) | 2 | 1 (Note 6) | 5 (Note 10) | 0 | 4 |
| Water Rod Thickness (in.) | ≥ 0.030 | > 0.00 | ≥ 0.031 | N/A | ≥ 0.022 |
| Channel Thickness (in.) | ≤ 0.120 | ≤ 0.120 | ≤ 0.055 | ≤ 0.080 | ≤ 0.080 |

HOLTEC INTERNATIONAL COPYRIGHTED MATERIAL

Table 2.1.4 (continued)
BWR FUEL ASSEMBLY CHARACTERISTICS

NOTES:

1. All dimensions are design nominal values. Maximum and minimum dimensions are specified to bound variations in design nominal values among fuel assemblies within a given array/class.

2. See Table 1.0.1 for the definition of "ZR."

3. Design initial uranium weight is the nominal uranium weight specified for each assembly by the fuel manufacturer or reactor user. For each BWR fuel assembly, the total uranium weight limit specified in this table may be increased up to 1.5 percent for comparison with users' fuel records to account for manufacturer tolerances.

4. $\leq$ 0.635 wt. % $^{235}U$ and $\leq$ 1.578 wt. % total fissile plutonium ($^{239}Pu$ and $^{241}Pu$), (wt. % of total fuel weight, i.e., $UO_2$ plus $PuO_2$)

5. This assembly class contains 74 total rods; 66 full length rods and 8 partial length rods.

6. Square, replacing nine fuel rods.

7. Variable.

8. This assembly contains 92 total fuel rods; 78 full length rods and 14 partial length rods.

9. This assembly class contains 91 total fuel rods; 83 full length rods and 8 partial length rods.

10. One diamond-shaped water rod replacing the four center fuel rods and four rectangular water rods dividing the assembly into four quadrants.

11. These rods may also be sealed at both ends and contain Zr material in lieu of water.

12. This assembly is known as "QUAD+." It has four rectangular water cross segments dividing the assembly into four quadrants.

13. For the SPC 9x9-5 fuel assembly, each fuel rod must meet either the 9x9E or the 9x9F set of limits or clad O.D., clad I.D., and pellet diameter.

14. For those MPCs loaded with both intact fuel assemblies and damaged fuel assemblies or fuel debris, the maximum planar average initial enrichment for the intact fuel assemblies is limited to 3.7 wt.% $^{235}U$, as applicable.

HOLTEC INTERNATIONAL COPYRIGHTED MATERIAL

Table 2.1.5

DESIGN BASIS FUEL ASSEMBLY FOR EACH DESIGN CRITERION

| Criterion | BWR | PWR |
|---|---|---|
| Reactivity (Criticality) | GE12/14 10x10 with Partial Length Rods (Array/Class 10x10A) | B&W 15x15 (Array/Class 15x15F) |
| Shielding | GE 7x7 | B&W 15x15 |
| Fuel Assembly Effective Planar Thermal Conductivity | GE-11 9x9 | W 17x17 OFA |
| Fuel Basket Effective Axial Thermal Conductivity | GE 7x7 | W 14x14 OFA |
| MPC Density and Heat Capacity | Dresden 6x6 | W 14x14 OFA |
| MPC Fuel Basket Axial Resistance to Thermosiphon Flow | GE-11 9x9 | W 17x17 OFA |

HOLTEC INTERNATIONAL COPYRIGHTED MATERIAL

Table 2.1.6

TABLE INTENTIONALLY DELETED

Table 2.1.7

TABLE INTENTIONALLY DELETED

Table 2.1.8

TABLE INTENTIONALLY DELETED

Table 2.1.9

SUGGESTED PWR UPPER AND LOWER FUEL SPACER LENGTHS

| Fuel Assembly Type | Assembly Length w/o NFH[1] (in.) | Location of Active Fuel from Bottom (in.) | Max. Active Fuel Length (in.) | Upper Fuel Spacer Length (in.) | Lower Fuel Spacer Length (in.) |
|---|---|---|---|---|---|
| CE 14x14 | 157 | 4.1 | 137 | 9.5 | 10.0 |
| CE 16x16 | 176.8 | 4.7 | 150 | 0 | 0 |
| BW 15x15 | 165.7 | 8.4 | 141.8 | 6.7 | 4.1 |
| W 17x17 OFA | 159.8 | 3.7 | 144 | 8.2 | 8.5 |
| W 17x17 Std | 159.8 | 3.7 | 144 | 8.2 | 8.5 |
| W 17x17 V5H | 160.1 | 3.7 | 144 | 7.9 | 8.5 |
| W 15x15 | 159.8 | 3.7 | 144 | 8.2 | 8.5 |
| W 14x14 Std | 159.8 | 3.7 | 145.2 | 9.2 | 7.5 |
| W 14x14 OFA | 159.8 | 3.7 | 144 | 8.2 | 8.5 |
| Ft. Calhoun | 146 | 6.6 | 128 | 10.25 | 20.25 |
| St. Lucie 2 | 158.2 | 5.2 | 136.7 | 10.25 | 8.05 |
| B&W 15x15 SS | 137.1 | 3.873 | 120.5 | 19.25 | 19.25 |
| W 15x15 SS | 137.1 | 3.7 | 122 | 19.25 | 19.25 |
| W 14x14 SS | 137.1 | 3.7 | 120 | 19.25 | 19.25 |
| Indian Point 1 | 137.2 | 17.705 | 101.5 | 18.75 | 20.0 |

Note: Each user shall specify the fuel spacer length based on their fuel assembly length, presence of a DFC, and allowing an approximate two to 2-1/2 inch gap under the MPC lid. Fuel spacers shall be sized to ensure that the active fuel region of intact fuel assemblies remains within the neutron poison region of the MPC basket with water in the MPC.

[1] NFH is an abbreviation for non-fuel hardware, including control components. Fuel assemblies with control components may require shorter fuel spacers.

Table 2.1.10

SUGGESTED BWR UPPER AND LOWER FUEL SPACER LENGTHS

| Fuel Assembly Type | Assembly Length (in.) | Location of Active Fuel from Bottom (in.) | Max. Active Fuel Length (in.) | Upper Fuel Spacer Length (in.) | Lower Fuel Spacer Length (in.) |
|---|---|---|---|---|---|
| GE/2-3 | 171.2 | 7.3 | 150 | 4.8 | 0 |
| GE/4-6 | 176.2 | 7.3 | 150 | 0 | 0 |
| Dresden 1 | 134.4 | 11.2 | 110 | 18.0 | 28.0 |
| Humboldt Bay | 95.0 | 8.0 | 79 | 40.5 | 40.5 |
| Dresden 1 Damaged Fuel or Fuel Debris | 142.1† | 11.2 | 110 | 17.0 | 16.9 |
| Humboldt Bay Damaged Fuel or Fuel Debris | 105.5† | 8.0 | 79 | 35.25 | 35.25 |
| LaCrosse | 102.5 | 10.5 | 83 | 37.0 | 37.5 |

Note: Each user shall specify the fuel spacer length based on their fuel assembly length, presence of a DFC, and allowing an approximate two to 2-1/2 inch gap under the MPC lid. Fuel spacers shall be sized to ensure that the active fuel region of intact fuel assemblies remains within the neutron poison region of the MPC basket with water in the MPC.

† Fuel assembly length includes the damaged fuel container.

Table 2.1.11
NORMALIZED DISTRIBUTION BASED ON BURNUP PROFILE

| PWR DISTRIBUTION[1] | | |
|---|---|---|
| **Interval** | **Axial Distance From Bottom of Active Fuel (% of Active Fuel Length)** | **Normalized Distribution** |
| 1 | 0% to 4-1/6% | 0.5485 |
| 2 | 4-1/6% to 8-1/3% | 0.8477 |
| 3 | 8-1/3% to 16-2/3% | 1.0770 |
| 4 | 16-2/3% to 33-1/3% | 1.1050 |
| 5 | 33-1/3% to 50% | 1.0980 |
| 6 | 50% to 66-2/3% | 1.0790 |
| 7 | 66-2/3% to 83-1/3% | 1.0501 |
| 8 | 83-1/3% to 91-2/3% | 0.9604 |
| 9 | 91-2/3% to 95-5/6% | 0.7338 |
| 10 | 95-5/6% to 100% | 0.4670 |

| BWR DISTRIBUTION[2] | | |
|---|---|---|
| **Interval** | **Axial Distance From Bottom of Active Fuel (% of Active Fuel Length)** | **Normalized Distribution** |
| 1 | 0% to 4-1/6% | 0.2200 |
| 2 | 4-1/6% to 8-1/3% | 0.7600 |
| 3 | 8-1/3% to 16-2/3% | 1.0350 |
| 4 | 16-2/3% to 33-1/3% | 1.1675 |
| 5 | 33-1/3% to 50% | 1.1950 |
| 6 | 50% to 66-2/3% | 1.1625 |
| 7 | 66-2/3% to 83-1/3% | 1.0725 |
| 8 | 83-1/3% to 91-2/3% | 0.8650 |
| 9 | 91-2/3% to 95-5/6% | 0.6200 |
| 10 | 95-5/6% to 100% | 0.2200 |

[1] Reference 2.1.7
[2] Reference 2.1.8

Table 2.1.12

DESIGN CHARACTERISTICS FOR THORIA RODS IN D-1 THORIA ROD CANISTERS

| PARAMETER | MPC-68 or MPC-68F |
|---|---|
| Cladding Type | Zircaloy |
| Composition | 98.2 wt.% $ThO_2$, 1.8 wt.% $UO_2$ with an enrichment of 93.5 wt. % $^{235}U$ |
| Number of Rods Per Thoria Canister | $\leq$ 18 |
| Decay Heat Per Thoria Canister | $\leq$ 115 watts |
| Post-Irradiation Fuel Cooling Time and Average Burnup Per Thoria Canister | Cooling time $\geq$ 18 years and average burnup $\leq$ 16,000 MWD/MTIHM |
| Initial Heavy Metal Weight | $\leq$ 27 kg/canister |
| Fuel Cladding O.D. | $\geq$ 0.412 inches |
| Fuel Cladding I.D. | $\leq$ 0.362 inches |
| Fuel Pellet O.D. | $\leq$ 0.358 inches |
| Active Fuel Length | $\leq$ 111 inches |
| Canister Weight | $\leq$ 550 lbs., including Thoria Rods |
| Canister Material | Type 304 SS |

Table 2.1.13
MPC Fuel Loading Regions

| MPC MODEL | REGION 1 FUEL STORAGE LOCATIONS* | REGION 2 FUEL STORAGE LOCATIONS |
|---|---|---|
| MPC-24, 24E and 24EF | 9, 10, 15, and 16 | All Other Locations |
| MPC-32/32F | 7, 8,<br>12 through 15,<br>18 through 21,<br>25, and 26 | All Other Locations |
| MPC-68/68F/68FF | 11 through 14,<br>18 through 23,<br>27 through 32,<br>37 through 42,<br>46 through 51,<br>55 through 58 | All Other Locations |

*Note: Refer to Figures 1.2.2 through 1.2.4

Table 2.1.14

Soluble Boron Requirements for MPC-24/24E/24EF Fuel Wet Loading and Unloading Operations

| **MPC MODEL** | **FUEL ASSEMBLY MAXIMUM AVERAGE ENRICHMENT (wt % $^{235}$U)** | **MINIMUM SOLUBLE BORON CONCENTRATION (ppmb)** |
|---|---|---|
| MPC-24 | All fuel assemblies with initial enrichment[1] less than the prescribed value for soluble boron credit | 0 |
| MPC-24 | One or more fuel assemblies with an initial enrichment[1] greater than or equal to the prescribed value for no soluble boron credit and $\leq$ 5.0 wt. % | $\geq$ 400 |
| MPC-24E/24EF | All fuel assemblies with initial enrichment[1] less than the prescribed value for soluble boron credit | 0 |
| MPC-24E/24EF | All fuel assemblies classified as intact fuel assemblies and one or more fuel assemblies with an initial enrichment[1] greater than or equal to the prescribed value for no soluble boron credit and $\leq$ 5.0 wt. % | $\geq$ 300 |
| | | |
| MPC-24E/24EF | One or more fuel assemblies classified as damaged fuel or fuel debris and one or more fuel assemblies with initial enrichment > 4.0 wt.% and $\leq$ 5.0 wt.% | $\geq$ 600 |
| | | |

[1]Refer to Table 2.1.3 for these enrichments.

Table 2.1.15

MINIMUM BORAL $^{10}B$ LOADING IN NEUTRON ABSORBER PANELS

| **MPC MODEL** | **MINIMUM $^{10}B$ LOADING ($g/cm^2$)** | |
|---|---|---|
| | **Boral Neutron Absorber Panels** | **METAMIC Neutron Absorber Panels** |
| MPC-24 | 0.0267 | 0.0223 |
| MPC-24E and MPC-24EF | 0.0372 | 0.0310 |
| MPC-32/32F | 0.0372 | 0.0310 |
| MPC-68 and MPC-68FF | 0.0372 | 0.0310 |
| MPC-68F | 0.01 | N/A (Note 1) |

Notes:

1. All MPC-68F canisters are equipped with Boral neutron absorber panels.

Table 2.1.16

Soluble Boron Requirements for MPC-32 and MPC-32F Wet Loading and Unloading Operations

| **Fuel Assembly Array/Class** ***(Note 1)*** | **All Intact Fuel Assemblies** | | **One or More Damaged Fuel Assemblies or Fuel Debris** | |
|---|---|---|---|---|
| | **Initial Enrichment ≤ 4.1 wt.% $^{235}$U (ppmb)** | **Initial Enrichment > 4.1 wt.% and ≤ 5.0 wt.% $^{235}$U (ppmb)** | **Initial Enrichment ≤ 4.1 wt.% $^{235}$U (ppmb)** | **Initial Enrichment > 4.1 wt.% and ≤ 5.0 wt.% $^{235}$U (ppmb)** |
| 14x14A/B/C/D~~/E~~ | 1,300 | 1,900 | 1,500 | 2,300 |
| 15x15A/B/C/G | 1,800 | 2,500 | 1,900 | 2,700 |
| 15x15D/E/F/H | 1,900 | 2,600 | 2,100 | 2,900 |
| 16x16A | 1,300 | 1,900 | 1,500 | 2,300 |
| 17x17A/B/C | 1,900 | 2,600 | 2,100 | 2,900 |

*Notes:*

1. *The soluble boron requirements for array/class 14x14E are specified in Supplement 2.II.*

Table 2.1.17

LIMITS FOR MATERIAL TO BE STORED IN MPC-24

| PARAMETER | VALUE |
|---|---|
| Fuel Type | Uranium oxide, PWR intact fuel assemblies meeting the limits in Table 2.1.3 for the applicable array/class |
| Cladding Type | ZR or Stainless Steel (SS) as specified in Table 2.1.3 for the applicable array/class |
| Maximum Initial Enrichment per Assembly | As specified in Table 2.1.3 for the applicable array/class |
| Post-irradiation Cooling Time and Average Burnup per Assembly | ZR clad: As specified in Section 2.1.9.1<br><br>SS clad: $\geq$ 8 years and $\leq$ 40,000 MWD/MTU |
| Decay Heat Per Fuel Storage Location | ZR clad: As specified in Section 2.1.9.1<br><br>SS clad: $\leq$ 710 Watts |
| Non-Fuel Hardware Burnup and Cooling Time | As specified in Table 2.1.25 |
| Fuel Assembly Length | $\leq$ 176.8 in. (nominal design) |
| Fuel Assembly Width | $\leq$ 8.54 in. (nominal design) |
| Fuel Assembly Weight | $\leq$ 1,680 lbs (including non-fuel hardware) |
| Other Limitations | ▪ Quantity is limited to up to 24 PWR intact fuel assemblies.<br>▪ Neutron sources, damaged fuel assemblies and fuel debris are not permitted for storage in MPC-24.<br>▪ BPRAs, TPDs, WABAs, water displacement guide tube plugs, orifice rod assemblies, and/or vibration suppressor inserts may be stored with fuel assemblies in any fuel cell location.<br>▪ CRAs, RCCAs, CEAs, and/or APSRs may be stored with fuel assemblies in fuel cell locations 9, 10, 15, and/or 16<br>▪ Soluble boron requirements during wet loading and unloading are specified in Table 2.1.14. |

Table 2.1.18

LIMITS FOR MATERIAL TO BE STORED IN MPC-68

| PARAMETER | VALUE (Note 1) | | | |
|---|---|---|---|---|
| Fuel Type(s) | Uranium oxide, BWR intact fuel assemblies meeting the limits in Table 2.1.4 for the applicable array/class, with or without channels | Uranium oxide, BWR damaged fuel assemblies meeting the limits in Table 2.1.4 for the applicable array/class, with or without channels, placed in Damaged Fuel Containers (DFCs) | Mixed Oxide (MOX) BWR intact fuel assemblies meeting the limits in Table 2.1.4 for array/class 6x6B, with or without channels | Mixed Oxide (MOX) BWR damaged fuel assemblies meeting the limits in Table 2.1.4 for array/class 6x6B, with or without channels, placed in Damaged Fuel Containers (DFCs) |
| Cladding Type | ZR or Stainless Steel (SS) as specified in Table 2.1.4 for the applicable array/class | ZR or Stainless Steel (SS) as specified in Table 2.1.4 for the applicable array/class | ZR | ZR |
| Maximum Initial Planar-Average Enrichment per Assembly and Rod Enrichment | As specified in Table 2.1.4 for the applicable array/class | Planar Average:<br><br>$\leq$ 2.7 wt% $^{235}$U for array/classes 6x6A, 6x6C, 7x7A, and 8x8A;<br><br>$\leq$ 4.0 wt% $^{235}$U for all other array/classes<br><br>Rod:<br><br>As specified in Table 2.1.4 | As specified in Table 2.1.4 for array/class 6x6B | As specified in Table 2.1.4 for array/class 6x6B |

Table 2.1.18 (cont'd)

LIMITS FOR MATERIAL TO BE STORED IN MPC-68

| PARAMETER | VALUE (Note 1) | | | |
|---|---|---|---|---|
| Post-irradiation Cooling Time and Average Burnup per Assembly | ZR clad: As specified in Section 2.1.9.1; except as provided in Notes 2 and 3.<br><br>SS clad: Note 4 | ZR clad: As specified in Section 2.1.9.1; except as provided in Notes 2 and 3.<br><br>SS clad: Note 4. | Cooling time ≥ 18 years and average burnup ≤ 30,000 MWD/MTIHM. | Cooling time ≥ 18 years and average burnup ≤ 30,000 MWD/MTIHM. |
| Decay Heat Per Fuel Storage Location | *ZR clad:* As specified in Section 2.1.9.1; except as provided in Notes 2 and 3.<br><br>SS clad: ≤ 95 Watts | *ZR clad:* As specified in Section 2.1.9.1; except as provided in Notes 2 and 3.<br><br>SS clad: ≤ 95 Watts | ≤ 115 Watts | ≤ 115 Watts |
| Fuel Assembly Length | ≤ 176.5 in. (nominal design) | Array/classes 6x6A, 6x6C, 7x7A, and 8x8A: ≤ 135.0 in. (nominal design)<br><br>All Other array/classes: ≤ 176.5 in. (nominal design) | ≤ 135.0 in. (nominal design) | ≤ 135.0 in. (nominal design) |
| Fuel Assembly Width | ≤ 5.85 in. (nominal design) | Array/classes 6x6A, 6x6C, 7x7A, and 8x8A: ≤ 4.7 in. (nominal design)<br><br>All Other array/classes: ≤ 5.85 in. (nominal design) | ≤ 4.70 in. (nominal design) | ≤ 4.70 in. (nominal design) |

Table 2.1.18 (cont'd)

LIMITS FOR MATERIAL TO BE STORED IN MPC-68

| PARAMETER | VALUE (Note 1) | | | |
|---|---|---|---|---|
| Fuel Assembly Weight | ≤ 700 lbs. (including channels) | Array/classes 6x6A, 6x6C, 7x7A, and 8x8A: ≤ 550 lbs. (including channels and DFC)<br><br>All Other array/classes: ≤ 700 lbs. (including channels and DFC) | ≤ 400 lbs, including channels | ≤ 550 lbs, including channels and DFC |
| Other Limitations | ▪ Quantity is limited to up to one (1) Dresden Unit 1 thoria rod canister meeting the specifications listed in Table 2.1.12 plus any combination of array/class 6x6A, 6x6B, 6x6C, 7x7A, and/or 8x8A damaged fuel assemblies in DFCs and intact fuel assemblies up to a total of 68.<br>▪ Up to 16 damaged fuel assemblies from plants other than Dresden Unit 1 or Humboldt Bay may be stored in DFCs in fuel cell locations 1, 2, 3, 8, 9, 16, 25, 34, 35, 44, 53, 60, 61, 66, 67, and/or 68, with the balance comprised of intact fuel assemblies up to a total of 68<br>▪ SS-clad fuel assemblies with stainless steel channels must be stored in fuel cell locations 19 through 22, 28 through 31, 38 through 41, and/or 47 through 50.<br>▪ Dresden Unit 1 fuel assemblies with one antimony-beryllium neutron source are permitted. The antimony-beryllium neutron source material shall be in a water rod location.<br>▪ Fuel debris is not permitted for storage in MPC-68. | | | |

Notes:

1. A fuel assembly must meet the requirements of any one column and the other limitations to be authorized for storage.

2. Array/class 6x6A, 6x6C, 7x7A, and 8x8A fuel assemblies shall have a cooling time ≥ 18 years, an average burnup ≤ 30,000 MWD/MTU, and a maximum decay heat ≤ 115 Watts.

3. Array/class 8x8F fuel assemblies shall have a cooling time ≥ 10 years, an average burnup ≤ 27,500 MWD/MTU, and a maximum decay ≤ 183.5 Watts.

4. SS-clad fuel assemblies shall have a cooling time ≥ 10 years, and an average burnup ≤ 22,500 MWD/MTU.

Table 2.1.19

LIMITS FOR MATERIAL TO BE STORED IN MPC-68F

| PARAMETER | VALUE (Notes 1 and 2) | | | |
|---|---|---|---|---|
| Fuel Type(s) | Uranium oxide, BWR intact fuel assemblies meeting the limits in Table 2.1.4 for array/class 6x6A, 6x6C, 7x7A, or 8x8A, with or without Zircaloy channels | Uranium oxide, BWR damaged fuel assemblies or fuel debris meeting the limits in Table 2.1.4 for array/class 6x6A, 6x6C, 7x7A, or 8x8A, with or without Zircaloy channels, placed in Damaged Fuel Containers (DFCs) | Mixed Oxide (MOX) BWR intact fuel assemblies meeting the limits in Table 2.1.4 for array/class 6x6B, with or without Zircaloy channels | Mixed Oxide (MOX) BWR damaged fuel assemblies or fuel debris meeting the limits in Table 2.1.4 for array/class 6x6B, with or without Zircaloy channels, placed in Damaged Fuel Containers (DFCs)) |
| Cladding Type | ZR | ZR | ZR | ZR |
| Maximum Initial Planar-Average Enrichment per Assembly and Rod Enrichment | As specified in Table 2.1.4 for the applicable array/class | As specified in Table 2.1.4 for the applicable array/class | As specified in Table 2.1.4 for array/class 6x6B | As specified in Table 2.1.4 for array/class 6x6B |
| Post-irradiation Cooling Time, Average Burnup, and Minimum Initial Enrichment per Assembly | Cooling time ≥ 18 years and average burnup ≤ 30,000 MWD/MTU. | Cooling time ≥ 18 years and average burnup ≤ 30,000 MWD/MTU. | Cooling time ≥ 18 years and average burnup ≤ 30,000 MWD/MTIHM. | Cooling time ≥ 18 years and average burnup ≤ 30,000 MWD/MTIHM. |
| Decay Heat Per Fuel Storage Location | ≤ 115 Watts | ≤ 115 Watts | ≤ 115 Watts | ≤ 115 Watts |
| Fuel Assembly Length | ≤ 135.0 in. (nominal design) | ≤ 135.0 in. (nominal design) | ≤ 135.0 in. (nominal design) | ≤ 135.0 in. (nominal design) |
| Fuel Assembly Width | ≤ 4.70 in. (nominal design) | ≤ 4.70 in. (nominal design) | ≤ 4.70 in. (nominal design) | ≤ 4.70 in. (nominal design) |
| Fuel Assembly Weight | ≤ 400 lbs, (including channels) | ≤ 550 lbs, (including channels and DFC) | ≤ 400 lbs, (including channels) | ≤ 550 lbs, (including channels and DFC) |

Table 2.1.19 (cont'd)

LIMITS FOR MATERIAL TO BE STORED IN MPC-68F

| PARAMETER | VALUE |
|---|---|
| Other Limitations | ▪ Quantity is limited to up to four (4) DFCs containing Dresden Unit 1 or Humboldt Bay uranium oxide or MOX fuel debris. The remaining fuel storage locations may be filled with array/class 6x6A, 6x6B, 6x6C, 7x7A, and 8x8A fuel assemblies of the following type, as applicable:<br>- uranium oxide BWR intact fuel assemblies<br>- MOX BWR intact fuel assemblies<br>- uranium oxide BWR damaged fuel assemblies in DFCs<br>- MOX BWR damaged fuel assemblies in DFCs<br>- up to one (1) Dresden Unit 1 thoria rod canister meeting the specifications listed in Table 2.1.12.<br>▪ Stainless steel channels are not permitted.<br>▪ Dresden Unit 1 fuel assemblies with one antimony-beryllium neutron source are permitted. The antimony-beryllium neutron source material shall be in a water rod location. |

Notes:

1. A fuel assembly must meet the requirements of any one column and the other limitations to be authorized for storage.

2. Only fuel from the Dresden Unit 1 and Humboldt Bay plants are permitted for storage in the MPC-68F.

Table 2.1.20

LIMITS FOR MATERIAL TO BE STORED IN MPC-24E

| PARAMETER | VALUE (Note 1) | |
|---|---|---|
| Fuel Type | Uranium oxide PWR intact fuel assemblies meeting the limits in Table 2.1.3 for the applicable array/class | Uranium oxide PWR damaged fuel assemblies meeting the limits in Table 2.1.3 for the applicable array/class, placed in a Damaged Fuel Container (DFC) |
| Cladding Type | ZR or Stainless Steel (SS) assemblies as specified in Table 2.1.3 for the applicable array/class | ZR or Stainless Steel (SS) assemblies as specified in Table 2.1.3 for the applicable array/class |
| Maximum Initial Enrichment per Assembly | As specified in Table 2.1.3 for the applicable array/class | As specified in Table 2.1.3 for the applicable array/class |
| Post-irradiation Cooling Time, and Average Burnup per Assembly | ZR clad: As specified in Section 2.1.9.1<br><br>SS clad: ≥ 8 yrs and ≤ 40,000 MWD/MTU | ZR clad: As specified in Section 2.1.9.1<br><br>SS clad: ≥ 8 yrs and ≤ 40,000 MWD/MTU |
| Decay Heat Per Fuel Storage Location | ZR clad: As specified in Section 2.1.9.1<br><br>SS clad: ≤ 710 Watts | ZR clad: As specified in Section 2.1.9.1<br><br>SS clad: ≤ 710 Watts |
| Non-fuel hardware post-irradiation Cooling Time and Burnup | As specified in Table 2.1.25 | As specified in Table 2.1.25 |
| Fuel Assembly Length | ≤ 176.8 in. (nominal design) | ≤ 176.8 in. (nominal design) |
| Fuel Assembly Width | ≤ 8.54 in. (nominal design) | ≤ 8.54 in. (nominal design) |
| Fuel Assembly Weight | ≤ 1680 lbs (including non-fuel hardware) | ≤ 1680 lbs (including DFC and non-fuel hardware) |

Table 2.1.20 (cont'd)

LIMITS FOR MATERIAL TO BE STORED IN MPC-24E

| PARAMETER | VALUE |
|---|---|
| Other Limitations | ▪ Quantity is limited to up to 24 PWR intact fuel assemblies or up to four (4) damaged fuel assemblies in DFCs may be stored in fuel storage locations 3, 6, 19, and/or 22. The remaining fuel storage locations may be filled with intact fuel assemblies.<br>▪ Fuel debris and neutron sources are not authorized for storage in the MPC-24E.<br>▪ BPRAs, TPDs, WABAs, water displacement guide tube plugs, orifice rod assemblies, and/or vibration suppressor inserts may be stored with fuel assemblies in any fuel cell location.<br>▪ CRAs, RCCAs, CEAs, and/or APSRs may be stored with fuel assemblies in fuel cell locations 9, 10, 15, and/or 16.<br>▪ Soluble boron requirements during wet loading and unloading are specified in Table 2.1.14. |

Notes:

1. A fuel assembly must meet the requirements of any one column and the other limitations to be authorized for storage.

Table 2.1.21

LIMITS FOR MATERIAL TO BE STORED IN MPC-32

| **PARAMETER** | **VALUE (Notes 1 *and 2*)** | |
|---|---|---|
| Fuel Type | Uranium oxide, PWR intact fuel assemblies meeting the limits in Table 2.1.3 for the applicable fuel assembly array/class. | Uranium oxide, PWR damaged fuel assemblies meeting the limits in Table 2.1.3 for the applicable fuel assembly array/class. |
| Cladding Type | ZR or Stainless Steel (SS) assemblies as specified in Table 2.1.3 for the applicable array/class | ZR or Stainless Steel (SS) assemblies as specified in Table 2.1.3 for the applicable array/class |
| Maximum Initial Enrichment per Assembly | As specified in Table 2.1.3 for the applicable fuel assembly array/class | As specified in Table 2.1.3 for the applicable fuel assembly array/class |
| Post-irradiation Cooling Time and Average Burnup per Assembly | ZR clad: As specified in Section 2.1.9.1<br><br>SS clad: ≥ 9 years and ≤ 30,000 MWD/MTU or ≥ 20 years and ≤ 40,000 MWD/MTU | ZR clad: As specified in Section 2.1.9.1<br><br>SS clad: ≥ 9 years and ≤ 30,000 MWD/MTU or ≥ 20 years and ≤ 40,000 MWD/MTU |
| Decay Heat Per Fuel Storage Location | ZR-clad: As specified in Section 2.1.9.1<br><br>SS-clad: ≤ 500 Watts | ZR-clad: As specified in Section 2.1.9.1<br><br>SS-clad: ≤ 500 Watts |
| Non-fuel hardware post-irradiation cooling time and burnup | As specified in Table 2.1.25 | As specified in Table 2.1.25 |
| Fuel Assembly Length | ≤ 176.8 in. (nominal design) | ≤ 176.8 in. (nominal design) |
| Fuel Assembly Width | ≤ 8.54 in. (nominal design) | ≤ 8.54 in. (nominal design) |
| Fuel Assembly Weight | ≤ 1,680 lbs (including non-fuel hardware) | ≤ 1,680 lbs (including DFC and non-fuel hardware) |

Table 2.1.21 (cont'd)

LIMITS FOR MATERIAL TO BE STORED IN MPC-32

| PARAMETER | VALUE |
|---|---|
| Other Limits | ▪ Quantity is limited to up to 32 PWR intact fuel assemblies and/or up to eight (8) damaged fuel assemblies in DFCs in fuel cell locations 1, 4, 5, 10, 23, 28, 29, and/or 32, with the balance intact fuel assemblies up to a total of 32.<br>▪ Fuel debris and neutron sources are not permitted for storage in MPC-32.<br>▪ BPRAs, TPDs, WABAs, water displacement guide tube plugs, orifice rod assemblies, and/or vibration suppressor inserts may be stored with fuel assemblies in any fuel cell location.<br>▪ CRAs, RCCAs, CEAs, and/or APSRs may be stored with fuel assemblies in fuel cell locations 13, 14, 19, and/or 20.<br>▪ Soluble boron requirements during wet loading and unloading are specified in Table 2.1.16. |

NOTES:

1. A fuel assembly must meet the requirements of any one column and the other limitations to be authorized for storage.
2. *The requirements stated in this table, with the exception of fuel assembly length, width, and weight, do not apply to array/class 14x14E, Indian Point Unit 1 fuel. Supplement 2.II provides the limits for array/class 14x14E fuel assemblies to be stored in the MPC-32.*

Table 2.1.22

LIMITS FOR MATERIAL TO BE STORED IN MPC-68FF

| PARAMETER | VALUE (Note 1) | |
|---|---|---|
| Fuel Type | Uranium oxide or MOX BWR intact fuel assemblies meeting the limits in Table 2.1.4 for the applicable array/class, with or without channels. | Uranium oxide or MOX BWR damaged fuel assemblies or fuel debris meeting the limits in Table 2.1.4 for the applicable array/class, with or without channels, in DFCs. |
| Cladding Type | ZR or Stainless Steel (SS) assemblies as specified in Table 2.1.4 for the applicable array/class | ZR or Stainless Steel (SS) assemblies as specified in Table 2.1.4 for the applicable array/class |
| Maximum Initial Planar Average Enrichment per Assembly and Rod Enrichment | As specified in Table 2.1.4 for the applicable fuel assembly array/class | Planar Average:<br><br>$\leq$ 2.7 wt% $^{235}$U for array/classes 6x6A, 6x6B, 6x6C, 7x7A, and 8x8A;<br><br>$\leq$ 4.0 wt% $^{235}$U for all other array/classes<br><br>Rod:<br><br>As specified in Table 2.1.4 |
| Post-irradiation cooling time and average burnup per Assembly | ZR clad: As specified in Section 2.1.9.1; except as provided in Notes 2 and 3.<br><br>SS clad: Note 4 | ZR clad: As specified in Section 2.1.9.1; except as provided in Notes 2 and 3.<br><br>SS clad: Note 4. |
| Decay Heat Per Fuel Storage Location | ZR clad: As specified in Section 2.1.9.1; except as provided in Notes 2 and 3.<br><br>SS clad: $\leq$ 95 Watts | ZR clad: As specified in Section 2.1.9.1; except as provided in Notes 2 and 3.<br><br>SS clad: $\leq$ 95 Watts |
| Fuel Assembly Length | Array/classes 6x6A, 6x6B, 6x6C, 7x7A, and 8x8A: $\leq$ 135.0 in. (nominal design)<br><br>All Other array/classes: $\leq$ 176.5 in. (nominal design) | Array/classes 6x6A, 6x6B, 6x6C, 7x7A, and 8x8A: $\leq$ 135.0 in. (nominal design)<br><br>All Other array/classes: $\leq$ 176.5 in. (nominal design) |

Table 2.1.22 (cont'd)

LIMITS FOR MATERIAL TO BE STORED IN MPC-68FF

| PARAMETER | VALUE (Note 1) | |
|---|---|---|
| Fuel Assembly Width | Array/classes 6x6A, 6x6B, 6x6C, 7x7A, and 8x8A: ≤ 4.7 in. (nominal design)<br><br>All Other array/classes:<br>≤ 5.85 in. (nominal design) | Array/classes 6x6A, 6x6B, 6x6C, 7x7A, and 8x8A: ≤ 4.7 in. (nominal design)<br><br>All Other array/classes:<br>≤ 5.85 in. (nominal design) |
| Fuel Assembly Weight | Array/classes 6x6A, 6x6B, 6x6C, 7x7A, and 8x8A: ≤ 550 lbs. (including channels)<br><br>All Other array/classes:<br>≤ 700 lbs. (including channels) | Array/classes 6x6A, 6x6B, 6x6C, 7x7A, and 8x8A: ≤ 550 lbs. (including channels and DFC)<br><br>All Other array/classes:<br>≤ 700 lbs. (including channels and DFC) |
| Other Limitations | ▪ Quantity is limited to up to one (1) Up to eight (8) Dresden Unit 1 or Humboldt Bay fuel assemblies classified as fuel debris in DFCs, and any combination of Dresden Unit 1 or Humboldt Bay damaged fuel assemblies in DFCs and intact fuel assemblies up to a total of 68.<br><br>▪ Up to 16 damaged fuel assemblies and/or up to eight (8) fuel assemblies classified as fuel debris from plants other than Dresden Unit 1 or Humboldt Bay may be stored in DFCs in MPC-68FF. DFCs shall be located only in fuel cell locations 1, 2, 3, 8, 9, 16, 25, 34, 35, 44, 53, 60, 61, 66, 67, and/or 68, with the balance comprised of intact fuel assemblies meeting the above specifications, up to a total of 68.<br><br>▪ SS-clad fuel assemblies with stainless steel channels must be stored in fuel cell locations 19 through 22, 28 through 31, 38 through 41, and/or 47 through 50.<br><br>▪ Dresden Unit 1 fuel assemblies with one antimony-beryllium neutron source are permitted. The antimony-beryllium neutron source material shall be in a water rod location. | |

NOTES:

1. A fuel assembly must meet the requirements of any one column and the other limitations to be authorized for storage.

2. Array/class 6x6A, 6x6B, 6x6C, 7x7A, and 8x8A fuel assemblies shall have a cooling time ≥ 18 years, an average burnup ≤ 30,000 MWD/MTU, and a maximum decay heat ≤ 115 Watts.

3. Array/class 8x8F fuel assemblies shall have a cooling time ≥ 10 years, an average burnup ≤ 27,500 MWD/MTU, and a maximum decay ≤ 183.5 Watts.

4. SS-clad fuel assemblies shall have a cooling time ≥ 10 years, and an average burnup ≤ 22,500 MWD/MTU.

Table 2.1.23

LIMITS FOR MATERIAL TO BE STORED IN MPC-24EF

| PARAMETER | VALUE (Note 1) | |
|---|---|---|
| Fuel Type | Uranium oxide PWR intact fuel assemblies meeting the limits in Table 2.1.3 for the applicable array/class | Uranium oxide PWR damaged fuel assemblies and/or fuel debris meeting the limits in Table 2.1.3 for the applicable array/class, placed in a Damaged Fuel Container (DFC) |
| Cladding Type | ZR or Stainless Steel (SS) assemblies as specified in Table 2.1.3 for the applicable array/class | ZR or Stainless Steel (SS) assemblies as specified in Table 2.1.3 for the applicable array/class |
| Maximum Initial Enrichment per Assembly | As specified in Table 2.1.3 for the applicable array/class | As specified in Table 2.1.3 for the applicable array/class |
| Post-irradiation Cooling Time, and Average Burnup per Assembly | ZR clad: As specified in Section 2.1.9.1<br><br>SS clad: $\geq$ 8 yrs and $\leq$ 40,000 MWD/MTU | ZR clad: As specified in Section 2.1.9.1<br><br>SS clad: $\geq$ 8 yrs and $\leq$ 40,000 MWD/MTU |
| Decay Heat Per Fuel Storage Location | ZR clad: As specified in Section 2.1.9.1<br><br>SS clad: $\leq$ 710 Watts | ZR clad: As specified in Section 2.1.9.1<br><br>SS clad: $\leq$ 710 Watts |
| Non-fuel hardware post-irradiation Cooling Time and Burnup | As specified in Table 2.1.25 | As specified in Table 2.1.25 |
| Fuel Assembly Length | $\leq$ 176.8 in. (nominal design) | $\leq$ 176.8 in. (nominal design) |
| Fuel Assembly Width | $\leq$ 8.54 in. (nominal design) | $\leq$ 8.54 in. (nominal design) |
| Fuel Assembly Weight | $\leq$ 1680 lbs (including non-fuel hardware) | $\leq$ 1680 lbs (including DFC and non-fuel hardware) |

Table 2.1.23 (cont'd)

LIMITS FOR MATERIAL TO BE STORED IN MPC-24EF

| PARAMETER | VALUE |
|---|---|
| Other Limitations | ▪ Quantity per MPC: up to 24 PWR intact fuel assemblies or up to four (4) damaged fuel assemblies and/or fuel classified as fuel debris in DFCs may be stored in fuel storage locations 3, 6, 19, and/or 22. The remaining fuel storage locations may be filled with intact fuel assemblies.<br>▪ Neutron sources are not authorized for storage in the MPC-24EF.<br>▪ BPRAs, TPDs, WABAs, water displacement guide tube plugs, orifice rod assemblies, and/or vibration suppressor inserts may be stored with fuel assemblies in any fuel cell location.<br>▪ CRAs, RCCAs, CEAs, and/or APSRs may be stored with fuel assemblies in fuel cell locations 9, 10, 15, and/or 16.<br>▪ Soluble boron requirements during wet loading and unloading are specified in Table 2.1.14. |

Notes:

1. A fuel assembly must meet the requirements of any one column and the other limitations to be authorized for storage.

Table 2.1.24

LIMITS FOR MATERIAL TO BE STORED IN MPC-32F

| **PARAMETER** | **VALUE (Notes 1 *and 2*)** | |
|---|---|---|
| Fuel Type | Uranium oxide, PWR intact fuel assemblies meeting the limits in Table 2.1.3 for the applicable fuel assembly array/class | Uranium oxide, PWR damaged fuel assemblies and fuel debris in DFCs meeting the limits in Table 2.1.3 for the applicable fuel assembly array/class |
| Cladding Type | ZR or Stainless Steel (SS) as specified in Table 2.1.3 for the applicable fuel assembly array/class | ZR or Stainless Steel (SS) as specified in Table 2.1.3 for the applicable fuel assembly array/class |
| Maximum Initial Enrichment per Assembly | As specified in Table 2.1.3 | As specified in Table 2.1.3 |
| Post-irradiation Cooling Time, Average Burnup, and Minimum Initial Enrichment per Assembly | ZR clad: As specified in Section 2.1.9.1<br><br>SS clad: ≥ 9 years and ≤ 30,000 MWD/MTU or ≥ 20 years and ≤ 40,000MWD/MTU | ZR clad: As specified in Section 2.1.9.1<br><br>SS clad: ≥ 9 years and ≤ 30,000 MWD/MTU or ≥ 20 years and ≤ 40,000MWD/MTU |
| Decay Heat Per Fuel Storage Location | ZR clad: As specified in Section 2.1.9.1<br><br>SS clad: ≤ 500 Watts | ZR clad: As specified in Section 2.1.9.1<br><br>SS clad: ≤ 500 Watts |
| Non-fuel hardware post-irradiation Cooling Time and Burnup | As specified in Table 2.1.25 | As specified in Table 2.1.25 |
| Fuel Assembly Length | ≤ 176.8 in. (nominal design) | ≤ 176.8 in. (nominal design) |
| Fuel Assembly Width | ≤ 8.54 in. (nominal design) | ≤ 8.54 in. (nominal design) |
| Fuel Assembly Weight | ≤ 1,680 lbs (including non-fuel hardware) | ≤ 1,680 lbs (including DFC and non-fuel hardware) |

Table 2.1.24 (cont'd)

LIMITS FOR MATERIAL TO BE STORED IN MPC-32F

| PARAMETER | VALUE |
|---|---|
| *Other Limitations* | ▪ Quantity is limited to up to 32 PWR intact fuel assemblies and/or up to eight (8) damaged fuel assemblies in DFCs in fuel cell locations 1, 4, 5, 10, 23, 28, 29, and/or 32, with the balance intact fuel assemblies up to a total of 32.<br>▪ Neutron sources are not permitted for storage in MPC-32.<br>▪ BPRAs, TPDs, WABAs, water displacement guide tube plugs, orifice rod assemblies, and/or vibration suppressor inserts may be stored with fuel assemblies in any fuel cell location.<br>▪ CRAs, RCCAs, CEAs, and/or APSRs may be stored with fuel assemblies in fuel cell locations 13, 14, 19, and/or 20.<br>▪ Soluble boron requirements during wet loading and unloading are specified in Table 2.1.16. |

NOTES:

1. A fuel assembly must meet the requirements of any one column and the other limitations to be authorized for storage.
2. *The requirements stated in this table, with the exception of fuel assembly length, width, and weight, do not apply to array/class 14x14E, Indian Point Unit 1 fuel. Supplement 2.II provides the limits for array/class 14x14E fuel assemblies to be stored in the MPC-32F.*

Table 2.1.25

NON-FUEL HARDWARE BURNUP AND COOLING TIME LIMITS (Notes 1, 2, and 3)

| **Post-irradiation Cooling Time (yrs)** | **Inserts (Note 4) Maximum Burnup (MWD/MTU)** | **Guide Tube Hardware (Note 5) Maximum Burnup (MWD/MTU)** | **Control Component (Note 6) Maximum Burnup (MWD/MTU)** | **APSR Maximum Burnup (MWD/MTU)** |
|---|---|---|---|---|
| ≥ 3 | ≤ 24,635 | N/A (Note 7) | N/A | N/A |
| ≥ 4 | ≤ 30,000 | ≤ 20,000 | N/A | N/A |
| ≥ 5 | ≤ 36,748 | ≤ 25,000 | ≤ 630,000 | ≤ 45,000 |
| ≥ 6 | ≤ 44,102 | ≤ 30,000 | - | ≤ 54,500 |
| ≥ 7 | ≤ 52,900 | ≤ 40,000 | - | ≤ 68,000 |
| ≥ 8 | ≤ 60,000 | ≤ 45,000 | - | ≤ 83,000 |
| ≥ 9 | - | ≤ 50,000 | - | ≤ 111,000 |
| ≥ 10 | - | ≤ 60,000 | - | ≤ 180,000 |
| ≥ 11 | - | ≤ 75,000 | - | ≤ 630,000 |
| ≥ 12 | - | ≤ 90,000 | - | - |
| ≥ 13 | - | ≤ 180,000 | - | - |
| ≥ 14 | - | ≤ 630,000 | - | - |

NOTES:

1. Burnups for non-fuel hardware are to be determined based on the burnup and uranium mass of the fuel assemblies in which the component was inserted during reactor operation.

2. Linear interpolation between points is permitted, except that TPD and APSR burnups > 180,000 MWD/MTU and ≤ 630,000 MWD/MTU must be cooled ≥ 14 years and ≥ 11 years, respectively.

3. Applicable to uniform loading and regionalized loading.

4. Includes Burnable Poison Rod Assemblies (BPRAs), Wet Annular Burnable Absorbers (WABAs), and vibration suppressor inserts.

5. Includes Thimble Plug Devices (TPDs), water displacement guide tube plugs, and orifice rod assemblies.

6. Includes Control Rod Assemblies (CRAs), Control Element Assemblies (CEAs), and Rod Cluster Control Assemblies (RCCAs).

7. N/A means not authorized for loading at this cooling time.

Table 2.1.26

MAXIMUM ALLOWABLE DECAY HEAT PER FUEL STORAGE LOCATION
(UNIFORM LOADING, ZR-CLAD)

| **MPC Model** | **Decay Heat per Fuel Assembly (kW)** |
|---|---|
| Intact Fuel Assemblies | |
| MPC-24 | ≤ 1.157 |
| MPC-24E/24EF | ≤ 1.173 |
| MPC-32/32F | ≤ 0.898 |
| MPC-68/68FF | ≤ 0.414 |
| Damaged Fuel Assemblies and Fuel Debris | |
| MPC-24 | ≤ 1.099 |
| MPC-24E/24EF | ≤ 1.114 |
| MPC-32/32F | ≤ 0.718 |
| MPC-68/68FF | ≤ 0.393 |

Table 2.1.27

MPC FUEL STORAGE REGIONS AND MAXIMUM DECAY HEAT

| **MPC Model** | **Number of Fuel Storage Locations in Inner and Outer Regions** | **Inner Region Maximum Decay Heat per Assembly (kW)** | **Outer Region Maximum Decay Heat per Assembly (kW)** |
|---|---|---|---|
| MPC-24 | 4 and 20 | 1.470 | 0.900 |
| MPC-24E/24EF | 4 and 20 | 1.540 | 0.900 |
| MPC-32/32F | 12 and 20 | 1.131 | 0.600 |
| MPC-68/68FF | 32 and 36 | 0.500 | 0.275 |

Note: These limits apply to intact fuel assemblies, damaged fuel assemblies and fuel debris.

Table 2.1.28

PWR FUEL ASSEMBLY COOLING TIME-DEPENDENT COEFFICIENTS
(ZR-CLAD FUEL)

| Cooling Time **(years)** | **Array/Class 14x14A** | | | | | | |
|---|---|---|---|---|---|---|---|
| | **A** | **B** | **C** | **D** | **E** | **F** | **G** |
| ≥ 3 | 20277.1 | 303.592 | -68.329 | -139.41 | 2993.67 | -498.159 | -615.411 |
| ≥ 4 | 35560.1 | -6034.67 | 985.415 | -132.734 | 3578.92 | -723.721 | -609.84 |
| ≥ 5 | 48917.9 | -14499.5 | 2976.09 | -150.707 | 4072.55 | -892.691 | -54.8362 |
| ≥ 6 | 59110.3 | -22507 | 5255.61 | -177.017 | 4517.03 | -1024.01 | 613.36 |
| ≥ 7 | 67595.6 | -30158.1 | 7746.6 | -200.128 | 4898.71 | -1123.21 | 716.004 |
| ≥ 8 | 74424.9 | -36871.1 | 10169.4 | -218.676 | 5203.64 | -1190.24 | 741.163 |
| ≥ 9 | 81405.8 | -44093.1 | 12910.8 | -227.916 | 5405.34 | -1223.27 | 250.224 |
| ≥ 10 | 86184.3 | -49211.7 | 15063.4 | -237.641 | 5607.96 | -1266.21 | 134.435 |
| ≥ 11 | 92024.9 | -55666.8 | 17779.6 | -240.973 | 5732.25 | -1282.12 | -401.456 |
| ≥ 12 | 94775.8 | -58559.7 | 19249.9 | -246.369 | 5896.27 | -1345.42 | -295.435 |
| ≥ 13 | 100163 | -64813.8 | 22045.1 | -242.572 | 5861.86 | -1261.66 | -842.159 |
| ≥ 14 | 103971 | -69171 | 24207 | -242.651 | 5933.96 | -1277.48 | -1108.99 |
| ≥ 15 | 108919 | -75171.1 | 27152.4 | -243.154 | 6000.2 | -1301.19 | -1620.63 |
| ≥ 16 | 110622 | -76715.2 | 28210.2 | -240.235 | 6028.33 | -1307.74 | -1425.5 |
| ≥ 17 | 115582 | -82929.7 | 31411.9 | -235.234 | 5982.3 | -1244.11 | -1948.05 |
| ≥ 18 | 119195 | -87323.5 | 33881.4 | -233.28 | 6002.43 | -1245.95 | -2199.41 |
| ≥ 19 | 121882 | -90270.6 | 35713.7 | -231.873 | 6044.42 | -1284.55 | -2264.05 |
| ≥ 20 | 124649 | -93573.5 | 37853.1 | -230.22 | 6075.82 | -1306.57 | -2319.63 |

HOLTEC INTERNATIONAL COPYRIGHTED MATERIAL

Table 2.1.28 (cont'd)

PWR FUEL ASSEMBLY COOLING TIME-DEPENDENT COEFFICIENTS
(ZR-CLAD FUEL)

| Cooling Time **(years)** | **Array/Class 14x14B** | | | | | | |
|---|---|---|---|---|---|---|---|
| | **A** | **B** | **C** | **D** | **E** | **F** | **G** |
| ≥ 3 | 18937.9 | 70.2997 | -28.6224 | -130.732 | 2572.36 | -383.393 | -858.17 |
| ≥ 4 | 32058.7 | -4960.63 | 745.224 | -125.978 | 3048.98 | -551.656 | -549.108 |
| ≥ 5 | 42626.3 | -10804.1 | 1965.09 | -139.722 | 3433.49 | -676.643 | 321.88 |
| ≥ 6 | 51209.6 | -16782.3 | 3490.45 | -158.929 | 3751.01 | -761.524 | 847.282 |
| ≥ 7 | 57829.9 | -21982 | 5009.12 | -180.026 | 4066.65 | -846.272 | 1200.45 |
| ≥ 8 | 62758 | -26055.3 | 6330.88 | -196.804 | 4340.18 | -928.336 | 1413.17 |
| ≥ 9 | 68161.4 | -30827.6 | 7943.87 | -204.454 | 4500.52 | -966.347 | 1084.69 |
| ≥ 10 | 71996.8 | -34224.3 | 9197.25 | -210.433 | 4638.94 | -1001.83 | 1016.38 |
| ≥ 11 | 75567.3 | -37486.1 | 10466.9 | -214.95 | 4759.55 | -1040.85 | 848.169 |
| ≥ 12 | 79296.7 | -40900.3 | 11799.6 | -212.898 | 4794.13 | -1040.51 | 576.242 |
| ≥ 13 | 82257.3 | -43594 | 12935 | -212.8 | 4845.81 | -1056.01 | 410.807 |
| ≥ 14 | 83941.2 | -44915.2 | 13641 | -215.389 | 4953.19 | -1121.71 | 552.724 |
| ≥ 15 | 87228.5 | -48130 | 15056.9 | -212.545 | 4951.12 | -1112.5 | 260.194 |
| ≥ 16 | 90321.7 | -50918.3 | 16285.5 | -206.094 | 4923.36 | -1106.35 | -38.7487 |
| ≥ 17 | 92836.2 | -53314.5 | 17481.7 | -203.139 | 4924.61 | -1109.32 | -159.673 |
| ≥ 18 | 93872.8 | -53721.4 | 17865.1 | -202.573 | 4956.21 | -1136.9 | 30.0594 |
| ≥ 19 | 96361.6 | -56019.1 | 19075.9 | -199.068 | 4954.59 | -1156.07 | -125.917 |
| ≥ 20 | 98647.5 | -57795.1 | 19961.8 | -191.502 | 4869.59 | -1108.74 | -217.603 |

HOLTEC INTERNATIONAL COPYRIGHTED MATERIAL

Table 2.1.28 (cont'd)

PWR FUEL ASSEMBLY COOLING TIME-DEPENDENT COEFFICIENTS
(ZR-CLAD FUEL)

| Cooling Time **(years)** | **Array/Class 14x14C** | | | | | | |
|---|---|---|---|---|---|---|---|
| | **A** | **B** | **C** | **D** | **E** | **F** | **G** |
| ≥ 3 | 19176.9 | 192.012 | -66.7595 | -138.112 | 2666.73 | -407.664 | -1372.41 |
| ≥ 4 | 32040.3 | -4731.4 | 651.014 | -124.944 | 3012.63 | -530.456 | -890.059 |
| ≥ 5 | 43276.7 | -11292.8 | 2009.76 | -142.172 | 3313.91 | -594.917 | -200.195 |
| ≥ 6 | 51315.5 | -16920.5 | 3414.76 | -164.287 | 3610.77 | -652.118 | 463.041 |
| ≥ 7 | 57594.7 | -21897.6 | 4848.49 | -189.606 | 3940.67 | -729.367 | 781.46 |
| ≥ 8 | 63252.3 | -26562.8 | 6273.01 | -199.974 | 4088.41 | -732.054 | 693.879 |
| ≥ 9 | 67657.5 | -30350.9 | 7533.4 | -211.77 | 4283.39 | -772.916 | 588.456 |
| ≥ 10 | 71834.4 | -34113.7 | 8857.32 | -216.408 | 4383.45 | -774.982 | 380.243 |
| ≥ 11 | 75464.1 | -37382.1 | 10063 | -218.813 | 4460.69 | -776.665 | 160.668 |
| ≥ 12 | 77811.1 | -39425.1 | 10934.3 | -225.193 | 4604.68 | -833.459 | 182.463 |
| ≥ 13 | 81438.3 | -42785.4 | 12239.9 | -220.943 | 4597.28 | -803.32 | -191.636 |
| ≥ 14 | 84222.1 | -45291.6 | 13287.9 | -218.366 | 4608.13 | -791.655 | -354.59 |
| ≥ 15 | 86700.1 | -47582.6 | 14331.2 | -218.206 | 4655.34 | -807.366 | -487.316 |
| ≥ 16 | 88104.7 | -48601.1 | 14927.9 | -219.498 | 4729.97 | -849.446 | -373.196 |
| ≥ 17 | 91103.3 | -51332.5 | 16129 | -212.138 | 4679.91 | -822.896 | -654.296 |
| ≥ 18 | 93850.4 | -53915.8 | 17336.9 | -207.666 | 4652.65 | -799.697 | -866.307 |
| ≥ 19 | 96192.9 | -55955.8 | 18359.3 | -203.462 | 4642.65 | -800.315 | -1007.75 |
| ≥ 20 | 97790.4 | -57058.1 | 19027.7 | -200.963 | 4635.88 | -799.721 | -951.122 |

HOLTEC INTERNATIONAL COPYRIGHTED MATERIAL

Table 2.1.28 (cont'd)

PWR FUEL ASSEMBLY COOLING TIME-DEPENDENT COEFFICIENTS
(ZR-CLAD FUEL)

| Cooling Time **(years)** | **Array/Class 15x15A/B/C** | | | | | | |
|---|---|---|---|---|---|---|---|
| | **A** | **B** | **C** | **D** | **E** | **F** | **G** |
| ≥ 3 | 15789.2 | 119.829 | -21.8071 | -127.422 | 2152.53 | -267.717 | -580.768 |
| ≥ 4 | 26803.8 | -3312.93 | 415.027 | -116.279 | 2550.15 | -386.33 | -367.168 |
| ≥ 5 | 36403.6 | -7831.93 | 1219.66 | -126.065 | 2858.32 | -471.785 | 326.863 |
| ≥ 6 | 44046.1 | -12375.9 | 2213.52 | -145.727 | 3153.45 | -539.715 | 851.971 |
| ≥ 7 | 49753.5 | -16172.6 | 3163.61 | -166.946 | 3428.38 | -603.598 | 1186.31 |
| ≥ 8 | 55095.4 | -20182.5 | 4287.03 | -183.047 | 3650.42 | -652.92 | 1052.4 |
| ≥ 9 | 58974.4 | -23071.6 | 5156.53 | -191.718 | 3805.41 | -687.18 | 1025 |
| ≥ 10 | 62591.8 | -25800.8 | 5995.95 | -195.105 | 3884.14 | -690.659 | 868.556 |
| ≥ 11 | 65133.1 | -27747.4 | 6689 | -203.095 | 4036.91 | -744.034 | 894.607 |
| ≥ 12 | 68448.4 | -30456 | 7624.9 | -202.201 | 4083.52 | -753.391 | 577.914 |
| ≥ 13 | 71084.4 | -32536.4 | 8381.78 | -201.624 | 4117.93 | -757.16 | 379.105 |
| ≥ 14 | 73459.5 | -34352.3 | 9068.86 | -197.988 | 4113.16 | -747.015 | 266.536 |
| ≥ 15 | 75950.7 | -36469.4 | 9920.52 | -199.791 | 4184.91 | -779.222 | 57.9429 |
| ≥ 16 | 76929.1 | -36845.6 | 10171.3 | -197.88 | 4206.24 | -794.541 | 256.099 |
| ≥ 17 | 79730 | -39134.8 | 11069.4 | -190.865 | 4160.42 | -773.448 | -42.6853 |
| ≥ 18 | 81649.2 | -40583 | 11736.1 | -187.604 | 4163.36 | -785.838 | -113.614 |
| ≥ 19 | 83459 | -41771.8 | 12265.9 | -181.461 | 4107.51 | -758.496 | -193.442 |
| ≥ 20 | 86165.4 | -44208.8 | 13361.2 | -178.89 | 4107.62 | -768.671 | -479.778 |

HOLTEC INTERNATIONAL COPYRIGHTED MATERIAL

Table 2.1.28 (cont'd)

PWR FUEL ASSEMBLY COOLING TIME-DEPENDENT COEFFICIENTS
(ZR-CLAD FUEL)

| Cooling Time **(years)** | **Array/Class 15x15D/E/F/H** | | | | | | |
|---|---|---|---|---|---|---|---|
| | **A** | **B** | **C** | **D** | **E** | **F** | **G** |
| ≥ 3 | 15192.5 | 50.5722 | -12.3042 | -126.906 | 2009.71 | -235.879 | -561.574 |
| ≥ 4 | 25782.5 | -3096.5 | 369.096 | -113.289 | 2357.75 | -334.695 | -254.964 |
| ≥ 5 | 35026.5 | -7299.87 | 1091.93 | -124.619 | 2664 | -414.527 | 470.916 |
| ≥ 6 | 42234.9 | -11438.4 | 1967.63 | -145.948 | 2945.81 | -474.981 | 1016.84 |
| ≥ 7 | 47818.4 | -15047 | 2839.22 | -167.273 | 3208.95 | -531.296 | 1321.12 |
| ≥ 8 | 52730.7 | -18387.2 | 3702.43 | -175.057 | 3335.58 | -543.232 | 1223.61 |
| ≥ 9 | 56254.6 | -20999.9 | 4485.93 | -190.489 | 3547.98 | -600.64 | 1261.55 |
| ≥ 10 | 59874.6 | -23706.5 | 5303.88 | -193.807 | 3633.01 | -611.892 | 1028.63 |
| ≥ 11 | 62811 | -25848.4 | 5979.64 | -194.997 | 3694.14 | -618.968 | 862.738 |
| ≥ 12 | 65557.6 | -27952.4 | 6686.74 | -198.224 | 3767.28 | -635.126 | 645.139 |
| ≥ 13 | 67379.4 | -29239.2 | 7197.49 | -200.164 | 3858.53 | -677.958 | 652.601 |
| ≥ 14 | 69599.2 | -30823.8 | 7768.51 | -196.788 | 3868.2 | -679.88 | 504.443 |
| ≥ 15 | 71806.7 | -32425 | 8360.38 | -191.935 | 3851.65 | -669.917 | 321.146 |
| ≥ 16 | 73662.6 | -33703.5 | 8870.78 | -187.366 | 3831.59 | -658.419 | 232.335 |
| ≥ 17 | 76219.8 | -35898.1 | 9754.72 | -189.111 | 3892.07 | -694.244 | -46.924 |
| ≥ 18 | 76594.4 | -35518.2 | 9719.78 | -185.11 | 3897.04 | -712.82 | 236.047 |
| ≥ 19 | 78592.7 | -36920.8 | 10316.5 | -179.54 | 3865.84 | -709.551 | 82.478 |
| ≥ 20 | 80770.5 | -38599.9 | 11051.3 | -175.106 | 3858.67 | -723.211 | -116.014 |

HOLTEC INTERNATIONAL COPYRIGHTED MATERIAL

Table 2.1.28 (cont'd)

PWR FUEL ASSEMBLY COOLING TIME-DEPENDENT COEFFICIENTS
(ZR-CLAD FUEL)

| Cooling Time **(years)** | **Array/Class 16x16A** | | | | | | |
|---|---|---|---|---|---|---|---|
| | **A** | **B** | **C** | **D** | **E** | **F** | **G** |
| ≥ 3 | 17038.2 | 158.445 | -37.6008 | -136.707 | 2368.1 | -321.58 | -700.033 |
| ≥ 4 | 29166.3 | -3919.95 | 508.439 | -125.131 | 2782.53 | -455.722 | -344.199 |
| ≥ 5 | 40285 | -9762.36 | 1629.72 | -139.652 | 3111.83 | -539.804 | 139.67 |
| ≥ 6 | 48335.7 | -15002.6 | 2864.09 | -164.702 | 3444.97 | -614.756 | 851.706 |
| ≥ 7 | 55274.9 | -20190 | 4258.03 | -185.909 | 3728.11 | -670.841 | 920.035 |
| ≥ 8 | 60646.6 | -24402.4 | 5483.54 | -199.014 | 3903.29 | -682.26 | 944.913 |
| ≥ 9 | 64663.2 | -27753.1 | 6588.21 | -215.318 | 4145.34 | -746.822 | 967.914 |
| ≥ 10 | 69306.9 | -31739.1 | 7892.13 | -218.898 | 4237.04 | -746.815 | 589.277 |
| ≥ 11 | 72725.8 | -34676.6 | 8942.26 | -220.836 | 4312.93 | -750.85 | 407.133 |
| ≥ 12 | 76573.8 | -38238.7 | 10248.1 | -224.934 | 4395.85 | -757.914 | 23.7549 |
| ≥ 13 | 78569 | -39794.3 | 10914.9 | -224.584 | 4457 | -776.876 | 69.428 |
| ≥ 14 | 81559.4 | -42453.6 | 11969.6 | -222.704 | 4485.28 | -778.427 | -203.031 |
| ≥ 15 | 84108.6 | -44680.4 | 12897.8 | -218.387 | 4460 | -746.756 | -329.078 |
| ≥ 16 | 86512.2 | -46766.8 | 13822.8 | -216.278 | 4487.79 | -759.882 | -479.729 |
| ≥ 17 | 87526.7 | -47326.2 | 14221 | -218.894 | 4567.68 | -805.659 | -273.692 |
| ≥ 18 | 90340.3 | -49888.6 | 15349.8 | -212.139 | 4506.29 | -762.236 | -513.316 |
| ≥ 19 | 93218.2 | -52436.7 | 16482.4 | -207.653 | 4504.12 | -776.489 | -837.1 |
| ≥ 20 | 95533.9 | -54474.1 | 17484.2 | -203.094 | 4476.21 | -760.482 | -955.662 |

HOLTEC INTERNATIONAL COPYRIGHTED MATERIAL

Table 2.1.28 (cont'd)

PWR FUEL ASSEMBLY COOLING TIME-DEPENDENT COEFFICIENTS
(ZR-CLAD FUEL)

| Cooling Time **(years)** | **Array/Class 17x17A** | | | | | | |
|---|---|---|---|---|---|---|---|
| | **A** | **B** | **C** | **D** | **E** | **F** | **G** |
| ≥ 3 | 16784.4 | 3.90244 | -10.476 | -128.835 | 2256.98 | -287.108 | -263.081 |
| ≥ 4 | 28859 | -3824.72 | 491.016 | -120.108 | 2737.65 | -432.361 | -113.457 |
| ≥ 5 | 40315.9 | -9724 | 1622.89 | -140.459 | 3170.28 | -547.749 | 425.136 |
| ≥ 6 | 49378.5 | -15653.1 | 3029.25 | -164.712 | 3532.55 | -628.93 | 842.73 |
| ≥ 7 | 56759.5 | -21320.4 | 4598.78 | -190.58 | 3873.21 | -698.143 | 975.46 |
| ≥ 8 | 63153.4 | -26463.8 | 6102.47 | -201.262 | 4021.84 | -685.431 | 848.497 |
| ≥ 9 | 67874.9 | -30519.2 | 7442.84 | -218.184 | 4287.23 | -754.597 | 723.305 |
| ≥ 10 | 72676.8 | -34855.2 | 8928.27 | -222.423 | 4382.07 | -741.243 | 387.877 |
| ≥ 11 | 75623 | -37457.1 | 9927.65 | -232.962 | 4564.55 | -792.051 | 388.402 |
| ≥ 12 | 80141.8 | -41736.5 | 11509.8 | -232.944 | 4624.72 | -787.134 | -164.727 |
| ≥ 13 | 83587.5 | -45016.4 | 12800.9 | -230.643 | 4623.2 | -745.177 | -428.635 |
| ≥ 14 | 86311.3 | -47443.4 | 13815.2 | -228.162 | 4638.89 | -729.425 | -561.758 |
| ≥ 15 | 87839.2 | -48704.1 | 14500.3 | -231.979 | 4747.67 | -775.801 | -441.959 |
| ≥ 16 | 91190.5 | -51877.4 | 15813.2 | -225.768 | 4692.45 | -719.311 | -756.537 |
| ≥ 17 | 94512 | -55201.2 | 17306.1 | -224.328 | 4740.86 | -747.11 | -1129.15 |
| ≥ 18 | 96959 | -57459.9 | 18403.8 | -220.038 | 4721.02 | -726.928 | -1272.47 |
| ≥ 19 | 99061.1 | -59172.1 | 19253.1 | -214.045 | 4663.37 | -679.362 | -1309.88 |
| ≥ 20 | 100305 | -59997.5 | 19841.1 | -216.112 | 4721.71 | -705.463 | -1148.45 |

HOLTEC INTERNATIONAL COPYRIGHTED MATERIAL

Table 2.1.28 (cont'd)

PWR FUEL ASSEMBLY COOLING TIME-DEPENDENT COEFFICIENTS
(ZR-CLAD FUEL)

| Cooling Time **(years)** | **Array/Class 17x17B/C** | | | | | | |
|---|---|---|---|---|---|---|---|
| | **A** | **B** | **C** | **D** | **E** | **F** | **G** |
| ≥ 3 | 15526.8 | 18.0364 | -9.36581 | -128.415 | 2050.81 | -243.915 | -426.07 |
| ≥ 4 | 26595.4 | -3345.47 | 409.264 | -115.394 | 2429.48 | -350.883 | -243.477 |
| ≥ 5 | 36190.4 | -7783.2 | 1186.37 | -130.008 | 2769.53 | -438.716 | 519.95 |
| ≥ 6 | 44159 | -12517.5 | 2209.54 | -150.234 | 3042.25 | -489.858 | 924.151 |
| ≥ 7 | 50399.6 | -16780.6 | 3277.26 | -173.223 | 3336.58 | -555.743 | 1129.66 |
| ≥ 8 | 55453.9 | -20420 | 4259.68 | -189.355 | 3531.65 | -581.917 | 1105.62 |
| ≥ 9 | 59469.3 | -23459.8 | 5176.62 | -199.63 | 3709.99 | -626.667 | 1028.74 |
| ≥ 10 | 63200.5 | -26319.6 | 6047.8 | -203.233 | 3783.02 | -619.949 | 805.311 |
| ≥ 11 | 65636.3 | -28258.3 | 6757.23 | -214.247 | 3972.8 | -688.56 | 843.457 |
| ≥ 12 | 68989.7 | -30904.4 | 7626.53 | -212.539 | 3995.62 | -678.037 | 495.032 |
| ≥ 13 | 71616.6 | -32962.2 | 8360.45 | -210.386 | 4009.11 | -666.542 | 317.009 |
| ≥ 14 | 73923.9 | -34748 | 9037.75 | -207.668 | 4020.13 | -662.692 | 183.086 |
| ≥ 15 | 76131.8 | -36422.3 | 9692.32 | -203.428 | 4014.55 | -655.981 | 47.5234 |
| ≥ 16 | 77376.5 | -37224.7 | 10111.4 | -207.581 | 4110.76 | -703.37 | 161.128 |
| ≥ 17 | 80294.9 | -39675.9 | 11065.9 | -201.194 | 4079.24 | -691.636 | -173.782 |
| ≥ 18 | 82219.8 | -41064.8 | 11672.1 | -195.431 | 4043.83 | -675.432 | -286.059 |
| ≥ 19 | 84168.9 | -42503.6 | 12309.4 | -190.602 | 4008.19 | -656.192 | -372.411 |
| ≥ 20 | 86074.2 | -43854.4 | 12935.9 | -185.767 | 3985.57 | -656.72 | -475.953 |

HOLTEC INTERNATIONAL COPYRIGHTED MATERIAL

Table 2.1.29

BWR FUEL ASSEMBLY COOLING TIME-DEPENDENT COEFFICIENTS
(ZR-CLAD FUEL)

| Cooling Time **(years)** | **Array/Class 7x7B** | | | | | | |
|---|---|---|---|---|---|---|---|
| | **A** | **B** | **C** | **D** | **E** | **F** | **G** |
| ≥ 3 | 26409.1 | 28347.5 | -16858 | -147.076 | 5636.32 | -1606.75 | 1177.88 |
| ≥ 4 | 61967.8 | -6618.31 | -4131.96 | -113.949 | 6122.77 | -2042.85 | -96.7439 |
| ≥ 5 | 91601.1 | -49298.3 | 17826.5 | -132.045 | 6823.14 | -2418.49 | -185.189 |
| ≥ 6 | 111369 | -80890.1 | 35713.8 | -150.262 | 7288.51 | -2471.1 | 86.6363 |
| ≥ 7 | 126904 | -108669 | 53338.1 | -167.764 | 7650.57 | -2340.78 | 150.403 |
| ≥ 8 | 139181 | -132294 | 69852.5 | -187.317 | 8098.66 | -2336.13 | 97.5285 |
| ≥ 9 | 150334 | -154490 | 86148.1 | -193.899 | 8232.84 | -2040.37 | -123.029 |
| ≥ 10 | 159897 | -173614 | 100819 | -194.156 | 8254.99 | -1708.32 | -373.605 |
| ≥ 11 | 166931 | -186860 | 111502 | -193.776 | 8251.55 | -1393.91 | -543.677 |
| ≥ 12 | 173691 | -201687 | 125166 | -202.578 | 8626.84 | -1642.3 | -650.814 |
| ≥ 13 | 180312 | -215406 | 137518 | -201.041 | 8642.19 | -1469.45 | -810.024 |
| ≥ 14 | 185927 | -227005 | 148721 | -197.938 | 8607.6 | -1225.95 | -892.876 |
| ≥ 15 | 191151 | -236120 | 156781 | -191.625 | 8451.86 | -846.27 | -1019.4 |
| ≥ 16 | 195761 | -244598 | 165372 | -187.043 | 8359.19 | -572.561 | -1068.19 |
| ≥ 17 | 200791 | -256573 | 179816 | -197.26 | 8914.28 | -1393.37 | -1218.63 |
| ≥ 18 | 206068 | -266136 | 188841 | -187.191 | 8569.56 | -730.898 | -1363.79 |
| ≥ 19 | 210187 | -273609 | 197794 | -182.151 | 8488.23 | -584.727 | -1335.59 |
| ≥ 20 | 213731 | -278120 | 203074 | -175.864 | 8395.63 | -457.304 | -1364.38 |

HOLTEC INTERNATIONAL COPYRIGHTED MATERIAL

Table 2.1.29 (cont'd)

BWR FUEL ASSEMBLY COOLING TIME-DEPENDENT COEFFICIENTS
(ZR-CLAD FUEL)

| Cooling Time **(years)** | **Array/Class 8x8B** | | | | | | |
|---|---|---|---|---|---|---|---|
| | **A** | **B** | **C** | **D** | **E** | **F** | **G** |
| ≥ 3 | 28219.6 | 28963.7 | -17616.2 | -147.68 | 5887.41 | -1730.96 | 1048.21 |
| ≥ 4 | 66061.8 | -10742.4 | -1961.82 | -123.066 | 6565.54 | -2356.05 | -298.005 |
| ≥ 5 | 95790.7 | -53401.7 | 19836.7 | -134.584 | 7145.41 | -2637.09 | -298.858 |
| ≥ 6 | 117477 | -90055.9 | 41383.9 | -154.758 | 7613.43 | -2612.69 | -64.9921 |
| ≥ 7 | 134090 | -120643 | 60983 | -168.675 | 7809 | -2183.3 | -40.8885 |
| ≥ 8 | 148186 | -149181 | 81418.7 | -185.726 | 8190.07 | -2040.31 | -260.773 |
| ≥ 9 | 159082 | -172081 | 99175.2 | -197.185 | 8450.86 | -1792.04 | -381.705 |
| ≥ 10 | 168816 | -191389 | 113810 | -195.613 | 8359.87 | -1244.22 | -613.594 |
| ≥ 11 | 177221 | -210599 | 131099 | -208.3 | 8810 | -1466.49 | -819.773 |
| ≥ 12 | 183929 | -224384 | 143405 | -207.497 | 8841.33 | -1227.71 | -929.708 |
| ≥ 13 | 191093 | -240384 | 158327 | -204.95 | 8760.17 | -811.708 | -1154.76 |
| ≥ 14 | 196787 | -252211 | 169664 | -204.574 | 8810.95 | -610.928 | -1208.97 |
| ≥ 15 | 203345 | -267656 | 186057 | -208.962 | 9078.41 | -828.954 | -1383.76 |
| ≥ 16 | 207973 | -276838 | 196071 | -204.592 | 9024.17 | -640.808 | -1436.43 |
| ≥ 17 | 213891 | -290411 | 211145 | -202.169 | 9024.19 | -482.1 | -1595.28 |
| ≥ 18 | 217483 | -294066 | 214600 | -194.243 | 8859.35 | -244.684 | -1529.61 |
| ≥ 19 | 220504 | -297897 | 219704 | -190.161 | 8794.97 | -10.9863 | -1433.86 |
| ≥ 20 | 227821 | -318395 | 245322 | -194.682 | 9060.96 | -350.308 | -1741.16 |

Table 2.1.29 (cont'd)

BWR FUEL ASSEMBLY COOLING TIME-DEPENDENT COEFFICIENTS
(ZR-CLAD FUEL)

| Cooling Time **(years)** | **Array/Class 8x8C/D/E** | | | | | | |
|---|---|---|---|---|---|---|---|
| | **A** | **B** | **C** | **D** | **E** | **F** | **G** |
| ≥ 3 | 28592.7 | 28691.5 | -17773.6 | -149.418 | 5969.45 | -1746.07 | 1063.62 |
| ≥ 4 | 66720.8 | -12115.7 | -1154 | -128.444 | 6787.16 | -2529.99 | -302.155 |
| ≥ 5 | 96929.1 | -55827.5 | 21140.3 | -136.228 | 7259.19 | -2685.06 | -334.328 |
| ≥ 6 | 118190 | -92000.2 | 42602.5 | -162.204 | 7907.46 | -2853.42 | -47.5465 |
| ≥ 7 | 135120 | -123437 | 62827.1 | -172.397 | 8059.72 | -2385.81 | -75.0053 |
| ≥ 8 | 149162 | -152986 | 84543.1 | -195.458 | 8559.11 | -2306.54 | -183.595 |
| ≥ 9 | 161041 | -177511 | 103020 | -200.087 | 8632.84 | -1864.4 | -433.081 |
| ≥ 10 | 171754 | -201468 | 122929 | -209.799 | 8952.06 | -1802.86 | -755.742 |
| ≥ 11 | 179364 | -217723 | 137000 | -215.803 | 9142.37 | -1664.82 | -847.268 |
| ≥ 12 | 186090 | -232150 | 150255 | -216.033 | 9218.36 | -1441.92 | -975.817 |
| ≥ 13 | 193571 | -249160 | 165997 | -213.204 | 9146.99 | -1011.13 | -1119.47 |
| ≥ 14 | 200034 | -263671 | 180359 | -210.559 | 9107.54 | -694.626 | -1312.55 |
| ≥ 15 | 205581 | -275904 | 193585 | -216.242 | 9446.57 | -1040.65 | -1428.13 |
| ≥ 16 | 212015 | -290101 | 207594 | -210.036 | 9212.93 | -428.321 | -1590.7 |
| ≥ 17 | 216775 | -299399 | 218278 | -204.611 | 9187.86 | -398.353 | -1657.6 |
| ≥ 18 | 220653 | -306719 | 227133 | -202.498 | 9186.34 | -181.672 | -1611.86 |
| ≥ 19 | 224859 | -314004 | 235956 | -193.902 | 8990.14 | 145.151 | -1604.71 |
| ≥ 20 | 228541 | -320787 | 245449 | -200.727 | 9310.87 | -230.252 | -1570.18 |

HOLTEC INTERNATIONAL COPYRIGHTED MATERIAL

Table 2.1.29 (cont'd)

BWR FUEL ASSEMBLY COOLING TIME-DEPENDENT COEFFICIENTS
(ZR-CLAD FUEL)

| Cooling Time **(years)** | **Array/Class 9x9A** | | | | | | |
|---|---|---|---|---|---|---|---|
| | **A** | **B** | **C** | **D** | **E** | **F** | **G** |
| ≥ 3 | 30538.7 | 28463.2 | -18105.5 | -150.039 | 6226.92 | -1876.69 | 1034.06 |
| ≥ 4 | 71040.1 | -16692.2 | 1164.15 | -128.241 | 7105.27 | -2728.58 | -414.09 |
| ≥ 5 | 100888 | -60277.7 | 24150.1 | -142.541 | 7896.11 | -3272.86 | -232.197 |
| ≥ 6 | 124846 | -102954 | 50350.8 | -161.849 | 8350.16 | -3163.44 | -91.1396 |
| ≥ 7 | 143516 | -140615 | 76456.5 | -185.538 | 8833.04 | -2949.38 | -104.802 |
| ≥ 8 | 158218 | -171718 | 99788.2 | -196.315 | 9048.88 | -2529.26 | -259.929 |
| ≥ 9 | 172226 | -204312 | 126620 | -214.214 | 9511.56 | -2459.19 | -624.954 |
| ≥ 10 | 182700 | -227938 | 146736 | -215.793 | 9555.41 | -1959.92 | -830.943 |
| ≥ 11 | 190734 | -246174 | 163557 | -218.071 | 9649.43 | -1647.5 | -935.021 |
| ≥ 12 | 199997 | -269577 | 186406 | -223.975 | 9884.92 | -1534.34 | -1235.27 |
| ≥ 13 | 207414 | -287446 | 204723 | -228.808 | 10131.7 | -1614.49 | -1358.61 |
| ≥ 14 | 215263 | -306131 | 223440 | -220.919 | 9928.27 | -988.276 | -1638.05 |
| ≥ 15 | 221920 | -321612 | 239503 | -217.949 | 9839.02 | -554.709 | -1784.04 |
| ≥ 16 | 226532 | -331778 | 252234 | -216.189 | 9893.43 | -442.149 | -1754.72 |
| ≥ 17 | 232959 | -348593 | 272609 | -219.907 | 10126.3 | -663.84 | -1915.3 |
| ≥ 18 | 240810 | -369085 | 296809 | -219.729 | 10294.6 | -859.302 | -2218.87 |
| ≥ 19 | 244637 | -375057 | 304456 | -210.997 | 10077.8 | -425.446 | -2127.83 |
| ≥ 20 | 248112 | -379262 | 309391 | -204.191 | 9863.67 | 100.27 | -2059.39 |

HOLTEC INTERNATIONAL COPYRIGHTED MATERIAL

Table 2.1.29 (cont'd)

BWR FUEL ASSEMBLY COOLING TIME-DEPENDENT COEFFICIENTS
(ZR-CLAD FUEL)

| Cooling Time **(years)** | **Array/Class 9x9B** | | | | | | |
|---|---|---|---|---|---|---|---|
| | **A** | **B** | **C** | **D** | **E** | **F** | **G** |
| ≥ 3 | 30613.2 | 28985.3 | -18371 | -151.117 | 6321.55 | -1881.28 | 988.92 |
| ≥ 4 | 71346.6 | -15922.9 | 631.132 | -128.876 | 7232.47 | -2810.64 | -471.737 |
| ≥ 5 | 102131 | -60654.1 | 23762.7 | -140.748 | 7881.6 | -3156.38 | -417.979 |
| ≥ 6 | 127187 | -105842 | 51525.2 | -162.228 | 8307.4 | -2913.08 | -342.13 |
| ≥ 7 | 146853 | -145834 | 79146.5 | -185.192 | 8718.74 | -2529.57 | -484.885 |
| ≥ 8 | 162013 | -178244 | 103205 | -197.825 | 8896.39 | -1921.58 | -584.013 |
| ≥ 9 | 176764 | -212856 | 131577 | -215.41 | 9328.18 | -1737.12 | -1041.11 |
| ≥ 10 | 186900 | -235819 | 151238 | -218.98 | 9388.08 | -1179.87 | -1202.83 |
| ≥ 11 | 196178 | -257688 | 171031 | -220.323 | 9408.47 | -638.53 | -1385.16 |
| ≥ 12 | 205366 | -280266 | 192775 | -223.715 | 9592.12 | -472.261 | -1661.6 |
| ≥ 13 | 215012 | -306103 | 218866 | -231.821 | 9853.37 | -361.449 | -1985.56 |
| ≥ 14 | 222368 | -324558 | 238655 | -228.062 | 9834.57 | 3.47358 | -2178.84 |
| ≥ 15 | 226705 | -332738 | 247316 | -224.659 | 9696.59 | 632.172 | -2090.75 |
| ≥ 16 | 233846 | -349835 | 265676 | -221.533 | 9649.93 | 913.747 | -2243.34 |
| ≥ 17 | 243979 | -379622 | 300077 | -222.351 | 9792.17 | 1011.04 | -2753.36 |
| ≥ 18 | 247774 | -386203 | 308873 | -220.306 | 9791.37 | 1164.58 | -2612.25 |
| ≥ 19 | 254041 | -401906 | 327901 | -213.96 | 9645.47 | 1664.94 | -2786.2 |
| ≥ 20 | 256003 | -402034 | 330566 | -215.242 | 9850.42 | 1359.46 | -2550.06 |

HOLTEC INTERNATIONAL COPYRIGHTED MATERIAL

Table 2.1.29 (cont'd)

BWR FUEL ASSEMBLY COOLING TIME-DEPENDENT COEFFICIENTS
(ZR-CLAD FUEL)

| Cooling Time **(years)** | **Array/Class 9x9C/D** | | | | | | |
|---|---|---|---|---|---|---|---|
| | **A** | **B** | **C** | **D** | **E** | **F** | **G** |
| ≥ 3 | 30051.6 | 29548.7 | -18614.2 | -148.276 | 6148.44 | -1810.34 | 1006 |
| ≥ 4 | 70472.7 | -14696.6 | -233.567 | -127.728 | 7008.69 | -2634.22 | -444.373 |
| ≥ 5 | 101298 | -59638.9 | 23065.2 | -138.523 | 7627.57 | -2958.03 | -377.965 |
| ≥ 6 | 125546 | -102740 | 49217.4 | -160.811 | 8096.34 | -2798.88 | -259.767 |
| ≥ 7 | 143887 | -139261 | 74100.4 | -184.302 | 8550.86 | -2517.19 | -275.151 |
| ≥ 8 | 159633 | -172741 | 98641.4 | -194.351 | 8636.89 | -1838.81 | -486.731 |
| ≥ 9 | 173517 | -204709 | 124803 | -212.604 | 9151.98 | -1853.27 | -887.137 |
| ≥ 10 | 182895 | -225481 | 142362 | -218.251 | 9262.59 | -1408.25 | -978.356 |
| ≥ 11 | 192530 | -247839 | 162173 | -217.381 | 9213.58 | -818.676 | -1222.12 |
| ≥ 12 | 201127 | -268201 | 181030 | -215.552 | 9147.44 | -232.221 | -1481.55 |
| ≥ 13 | 209538 | -289761 | 203291 | -225.092 | 9588.12 | -574.227 | -1749.35 |
| ≥ 14 | 216798 | -306958 | 220468 | -222.578 | 9518.22 | -69.9307 | -1919.71 |
| ≥ 15 | 223515 | -323254 | 237933 | -217.398 | 9366.52 | 475.506 | -2012.93 |
| ≥ 16 | 228796 | -334529 | 250541 | -215.004 | 9369.33 | 662.325 | -2122.75 |
| ≥ 17 | 237256 | -356311 | 273419 | -206.483 | 9029.55 | 1551.3 | -2367.96 |
| ≥ 18 | 242778 | -369493 | 290354 | -215.557 | 9600.71 | 659.297 | -2589.32 |
| ≥ 19 | 246704 | -377971 | 302630 | -210.768 | 9509.41 | 1025.34 | -2476.06 |
| ≥ 20 | 249944 | -382059 | 308281 | -205.495 | 9362.63 | 1389.71 | -2350.49 |

HOLTEC INTERNATIONAL COPYRIGHTED MATERIAL

Table 2.1.29 (cont'd)

BWR FUEL ASSEMBLY COOLING TIME-DEPENDENT COEFFICIENTS
(ZR-CLAD FUEL)

| Cooling Time **(years)** | **Array/Class 9x9E/F** | | | | | | |
|---|---|---|---|---|---|---|---|
| | **A** | **B** | **C** | **D** | **E** | **F** | **G** |
| ≥ 3 | 30284.3 | 26949.5 | -16926.4 | -147.914 | 6017.02 | -1854.81 | 1026.15 |
| ≥ 4 | 69727.4 | -17117.2 | 1982.33 | -127.983 | 6874.68 | -2673.01 | -359.962 |
| ≥ 5 | 98438.9 | -58492 | 23382.2 | -138.712 | 7513.55 | -3038.23 | -112.641 |
| ≥ 6 | 119765 | -95024.1 | 45261 | -159.669 | 8074.25 | -3129.49 | 221.182 |
| ≥ 7 | 136740 | -128219 | 67940.1 | -182.439 | 8595.68 | -3098.17 | 315.544 |
| ≥ 8 | 150745 | -156607 | 88691.5 | -193.941 | 8908.73 | -2947.64 | 142.072 |
| ≥ 9 | 162915 | -182667 | 109134 | -198.37 | 8999.11 | -2531 | -93.4908 |
| ≥ 10 | 174000 | -208668 | 131543 | -210.777 | 9365.52 | -2511.74 | -445.876 |
| ≥ 11 | 181524 | -224252 | 145280 | -212.407 | 9489.67 | -2387.49 | -544.123 |
| ≥ 12 | 188946 | -240952 | 160787 | -210.65 | 9478.1 | -2029.94 | -652.339 |
| ≥ 13 | 193762 | -250900 | 171363 | -215.798 | 9742.31 | -2179.24 | -608.636 |
| ≥ 14 | 203288 | -275191 | 196115 | -218.113 | 9992.5 | -2437.71 | -1065.92 |
| ≥ 15 | 208108 | -284395 | 205221 | -213.956 | 9857.25 | -1970.65 | -1082.94 |
| ≥ 16 | 215093 | -301828 | 224757 | -209.736 | 9789.58 | -1718.37 | -1303.35 |
| ≥ 17 | 220056 | -310906 | 234180 | -201.494 | 9541.73 | -1230.42 | -1284.15 |
| ≥ 18 | 224545 | -320969 | 247724 | -206.807 | 9892.97 | -1790.61 | -1381.9 |
| ≥ 19 | 226901 | -322168 | 250395 | -204.073 | 9902.14 | -1748.78 | -1253.22 |
| ≥ 20 | 235561 | -345414 | 276856 | -198.306 | 9720.78 | -1284.14 | -1569.18 |

HOLTEC INTERNATIONAL COPYRIGHTED MATERIAL

Table 2.1.29 (cont'd)

BWR FUEL ASSEMBLY COOLING TIME-DEPENDENT COEFFICIENTS
(ZR-CLAD FUEL)

| Cooling Time **(years)** | **Array/Class 9x9G** | | | | | | |
|---|---|---|---|---|---|---|---|
| | **A** | **B** | **C** | **D** | **E** | **F** | **G** |
| ≥ 3 | 35158.5 | 26918.5 | -17976.7 | -149.915 | 6787.19 | -2154.29 | 836.894 |
| ≥ 4 | 77137.2 | -19760.1 | 2371.28 | -130.934 | 8015.43 | -3512.38 | -455.424 |
| ≥ 5 | 113405 | -77931.2 | 35511.2 | -150.637 | 8932.55 | -4099.48 | -629.806 |
| ≥ 6 | 139938 | -128700 | 68698.3 | -173.799 | 9451.22 | -3847.83 | -455.905 |
| ≥ 7 | 164267 | -183309 | 109526 | -193.952 | 9737.91 | -3046.84 | -737.992 |
| ≥ 8 | 182646 | -227630 | 146275 | -210.936 | 10092.3 | -2489.3 | -1066.96 |
| ≥ 9 | 199309 | -270496 | 184230 | -218.617 | 10124.3 | -1453.81 | -1381.41 |
| ≥ 10 | 213186 | -308612 | 221699 | -235.828 | 10703.2 | -1483.31 | -1821.73 |
| ≥ 11 | 225587 | -342892 | 256242 | -236.112 | 10658.5 | -612.076 | -2134.65 |
| ≥ 12 | 235725 | -370471 | 285195 | -234.378 | 10604.9 | 118.591 | -2417.89 |
| ≥ 13 | 247043 | -404028 | 323049 | -245.79 | 11158.2 | -281.813 | -2869.82 |
| ≥ 14 | 253649 | -421134 | 342682 | -243.142 | 11082.3 | 400.019 | -2903.88 |
| ≥ 15 | 262750 | -448593 | 376340 | -245.435 | 11241.2 | 581.355 | -3125.07 |
| ≥ 16 | 270816 | -470846 | 402249 | -236.294 | 10845.4 | 1791.46 | -3293.07 |
| ≥ 17 | 279840 | -500272 | 441964 | -241.324 | 11222.6 | 1455.84 | -3528.25 |
| ≥ 18 | 284533 | -511287 | 458538 | -240.905 | 11367.2 | 1459.68 | -3520.94 |
| ≥ 19 | 295787 | -545885 | 501824 | -235.685 | 11188.2 | 2082.21 | -3954.2 |
| ≥ 20 | 300209 | -556936 | 519174 | -229.539 | 10956 | 2942.09 | -3872.87 |

HOLTEC INTERNATIONAL COPYRIGHTED MATERIAL

Table 2.1.29 (cont'd)

BWR FUEL ASSEMBLY COOLING TIME-DEPENDENT COEFFICIENTS
(ZR-CLAD FUEL)

| Cooling Time **(years)** | **Array/Class 10x10A/B** | | | | | | |
|---|---|---|---|---|---|---|---|
| | **A** | **B** | **C** | **D** | **E** | **F** | **G** |
| ≥ 3 | 29285.4 | 27562.2 | -16985 | -148.415 | 5960.56 | -1810.79 | 1001.45 |
| ≥ 4 | 67844.9 | -14383 | 395.619 | -127.723 | 6754.56 | -2547.96 | -369.267 |
| ≥ 5 | 96660.5 | -55383.8 | 21180.4 | -137.17 | 7296.6 | -2793.58 | -192.85 |
| ≥ 6 | 118098 | -91995 | 42958 | -162.985 | 7931.44 | -2940.84 | 60.9197 |
| ≥ 7 | 135115 | -123721 | 63588.9 | -171.747 | 8060.23 | -2485.59 | 73.6219 |
| ≥ 8 | 148721 | -151690 | 84143.9 | -190.26 | 8515.81 | -2444.25 | -63.4649 |
| ≥ 9 | 160770 | -177397 | 104069 | -197.534 | 8673.6 | -2101.25 | -331.046 |
| ≥ 10 | 170331 | -198419 | 121817 | -213.692 | 9178.33 | -2351.54 | -472.844 |
| ≥ 11 | 179130 | -217799 | 138652 | -209.75 | 9095.43 | -1842.88 | -705.254 |
| ≥ 12 | 186070 | -232389 | 151792 | -208.946 | 9104.52 | -1565.11 | -822.73 |
| ≥ 13 | 192407 | -246005 | 164928 | -209.696 | 9234.7 | -1541.54 | -979.245 |
| ≥ 14 | 200493 | -265596 | 183851 | -207.639 | 9159.83 | -1095.72 | -1240.61 |
| ≥ 15 | 205594 | -276161 | 195760 | -213.491 | 9564.23 | -1672.22 | -1333.64 |
| ≥ 16 | 209386 | -282942 | 204110 | -209.322 | 9515.83 | -1506.86 | -1286.82 |
| ≥ 17 | 214972 | -295149 | 217095 | -202.445 | 9292.34 | -893.6 | -1364.97 |
| ≥ 18 | 219312 | -302748 | 225826 | -198.667 | 9272.27 | -878.536 | -1379.58 |
| ≥ 19 | 223481 | -310663 | 235908 | -194.825 | 9252.9 | -785.066 | -1379.62 |
| ≥ 20 | 227628 | -319115 | 247597 | -199.194 | 9509.02 | -1135.23 | -1386.19 |

HOLTEC INTERNATIONAL COPYRIGHTED MATERIAL

Table 2.1.29 (cont'd)

BWR FUEL ASSEMBLY COOLING TIME-DEPENDENT COEFFICIENTS
(ZR-CLAD FUEL)

| Cooling Time **(years)** | **Array/Class 10x10C** | | | | | | |
|---|---|---|---|---|---|---|---|
| | **A** | **B** | **C** | **D** | **E** | **F** | **G** |
| ≥ 3 | 31425.3 | 27358.9 | -17413.3 | -152.096 | 6367.53 | -1967.91 | 925.763 |
| ≥ 4 | 71804 | -16964.1 | 1000.4 | -129.299 | 7227.18 | -2806.44 | -416.92 |
| ≥ 5 | 102685 | -62383.3 | 24971.2 | -142.316 | 7961 | -3290.98 | -354.784 |
| ≥ 6 | 126962 | -105802 | 51444.6 | -164.283 | 8421.44 | -3104.21 | -186.615 |
| ≥ 7 | 146284 | -145608 | 79275.5 | -188.967 | 8927.23 | -2859.08 | -251.163 |
| ≥ 8 | 162748 | -181259 | 105859 | -199.122 | 9052.91 | -2206.31 | -554.124 |
| ≥ 9 | 176612 | -214183 | 133261 | -217.56 | 9492.17 | -1999.28 | -860.669 |
| ≥ 10 | 187756 | -239944 | 155315 | -219.56 | 9532.45 | -1470.9 | -1113.42 |
| ≥ 11 | 196580 | -260941 | 174536 | -222.457 | 9591.64 | -944.473 | -1225.79 |
| ≥ 12 | 208017 | -291492 | 204805 | -233.488 | 10058.3 | -1217.01 | -1749.84 |
| ≥ 13 | 214920 | -307772 | 221158 | -234.747 | 10137.1 | -897.23 | -1868.04 |
| ≥ 14 | 222562 | -326471 | 240234 | -228.569 | 9929.34 | -183.47 | -2016.12 |
| ≥ 15 | 228844 | -342382 | 258347 | -226.944 | 9936.76 | 117.061 | -2106.05 |
| ≥ 16 | 233907 | -353008 | 270390 | -223.179 | 9910.72 | 360.39 | -2105.23 |
| ≥ 17 | 244153 | -383017 | 304819 | -227.266 | 10103.2 | 380.393 | -2633.23 |
| ≥ 18 | 249240 | -395456 | 321452 | -226.989 | 10284.1 | 169.947 | -2623.67 |
| ≥ 19 | 254343 | -406555 | 335240 | -220.569 | 10070.5 | 764.689 | -2640.2 |
| ≥ 20 | 260202 | -421069 | 354249 | -216.255 | 10069.9 | 854.497 | -2732.77 |

HOLTEC INTERNATIONAL COPYRIGHTED MATERIAL

## *SUPPLEMENT 2.II*

## *PRINCIPAL DESIGN CRITERIA FOR THE HI-STORM 100 SYSTEM FOR IP1*

### *2.II.0 OVERVIEW OF THE PRINCIPAL DESIGN CRITERIA*

*General*

*A description of the HI-STORM 100 System as expanded for Indian Point Unit 1 (IP1) is provided in Supplement 1.II. The design criteria presented in Section 2.0 for all components are applicable to the HI-STORM 100 System at IP1 unless otherwise noted below. Drawings of the components shortened for IP1 (HI-STORM 100S Version B, MPC-32, and HI-TRAC 100D Version IP1) are provided in Section 1.5.*

*Thermal*

*The MPC-32 for IP1 is designed for a bounding uniformly distributed thermal source term. Regionalized fuel loading is not considered in the MPC-32 for IP1.*

### *2.II.1 SPENT FUEL TO BE STORED*

*Indian Point Unit 1 fuel, array/class 14x14E, is authorized for loading into the MPC-24, MPC-24E, and MPC-24EF as described in Chapter 2. IP1 fuel is also authorized for loading into the IP1 MPC-32 as outlined in this supplement. The requirements in this supplement supersede the requirements in Chapter 2 for the MPC-32 for array/class 14x14E. Requirements from Chapter 2 that are not superseded in this supplement remain in effect.*

*Table 2.1.3 in Chapter 2 provides the acceptable fuel characteristics for the IP1 fuel assemblies, array/class 14x14E, for storage in the HI-STORM 100 System.*

#### *2.II.1.1 Intact SNF, Damaged SNF, and Fuel Debris Specifications*

*Fuel debris from Indian Point Unit 1 is not authorized for storage in the IP1 MPC-32 or IP1 MPC-32F. Section 2.II.1.4 specifies the acceptable limits for IP1 fuel assemblies to be stored in the IP1 MPC-32 or MPC-32F.*

*In order to simplify the fuel selection and fuel placement in an MPC-32 or MPC-32F at IP1, all IP1 fuel assemblies are required to be stored in a damaged fuel container (DFC). Figure 2.II.1 describes the Holtec designed damaged fuel container for IP1 fuel.*

*Since the MPC-32 and MPC-32F for IP1 have been shortened, fuel spacers will not be necessary inside the MPC.*

HOLTEC INTERNATIONAL COPYRIGHTED MATERIAL

*2.II.1.2 Radiological Parameters for Design Basis SNF*

*Indian Point Unit 1 used Antimony-Beryllium as a secondary source during reactor operations. These secondary source devices were installed in the fuel assemblies and replaced a single fuel rod. Supplement 5.II discusses the acceptability of storing these devices.*

*2.II.1.3 Criticality Parameters for Design Basis SNF*

*The minimum $^{10}B$ areal density in the neutron absorber panels for each MPC model is shown in Table 2.1.15 in Chapter 2.*

*The criticality analyses for the IP1 specific MPC-32 and MPC-32F were performed without credit for soluble boron in the MPC water during wet loading and unloading operations. Therefore the required soluble boron level in the IP1 MPC-32 or MPC-32F water is 0 ppmb.*

*2.II.1.4 Summary of Authorized Contents*

*Table 2.II.1 specifies the limits for Indian Point Unit 1 fuel, array/class 14x14E, for storage in the IP1 MPC-32 and MPC-32F. The limits in these tables are derived from the safety analyses described in the following chapters and supplements of this FSAR. All IP1 fuel assemblies classified as intact or damaged must be stored in damaged fuel containers for storage in the IP1 MPC-32 and IP1 MPC-32F. Indian Point Unit 1 fuel debris is not permitted for storage in these MPCs.*

*2.II.2 HI-STORM 100 DESIGN CRITERIA*

*2.II.2.1 Handling Accident*

*A loaded HI-STORM 100S Version B overpack containing Indian Point Unit 1 fuel will be lifted so that the bottom of the cask is at a height less than the vertical lift limit (see Table 2.II.2) above the ground. The use of lifting devices designed in accordance with ANSI N14.6 having redundant drop protection features to lift the loaded overpack will eliminate the lift height limit. The lift height limit is dependent on the characteristics of the impacting surface, which are specified in Table 2.2.9 in Chapter 2. For site-specific conditions, which are not encompassed by Table 2.2.9, the licensee shall evaluate the site-specific conditions to ensure that the drop accident loads do not exceed 45 g's. Even if the site specific conditions are encompassed by Table 2.2.9, the licensee may choose to determine a site specific drop height which ensures that the drop accident loads do not exceed 45 g's. The methodology used in this alternative analysis shall be commensurate with the analyses in Appendix 3.A and shall be reviewed by the Certificate Holder.*

*The loaded HI-TRAC 100D Version IP1, when lifted in the vertical position outside of the Part 50 facility shall be lifted with devices designed in accordance with ANSI N14.6 and having redundant drop protection features unless a site-specific analysis has been performed to determine a lift height limit. Horizontal lifting of a loaded HI-TRAC 100D Version IP1 is not permitted.*

### *2.II.3 SAFETY PROTECTION SYSTEMS*

*Same as in Section 2.3.*

### *2.II.4 DECOMMISSIONING CONSIDERATIONS*

*Same as in Section 2.4.*

### *2.II.5 REGULATORY COMPLIANCE*

*Same as in Section 2.5.*

*Table 2.II.1*

*LIMITS FOR MATERIAL TO BE STORED IN IP1 MPC-32 OR IP1 MPC-32F*

| ***PARAMETER*** | ***VALUE*** |
|---|---|
| *Fuel Type* | *Uranium oxide, PWR intact and damaged fuel assemblies meeting the limits in Table 2.1.3 for the array/class 14x14E* |
| *Cladding Type* | *Stainless Steel (SS)* |
| *Maximum Initial Enrichment per Assembly* | *As specified in Table 2.1.3 for the array/class 14x14E* |
| *Post-irradiation Cooling Time and Average Burnup per Assembly* | *≥ 30 years and*<br>*≤ 30,000 MWD/MTU* |
| *Decay Heat Per Fuel Storage Location* | *≤ 250 Watts* |
| *Other Limits* | ▪ *Quantity is limited to up to 32 PWR intact fuel assemblies and/or damaged fuel assemblies.*<br>▪ *Both intact and damaged fuel assemblies must be stored in a damaged fuel container.*<br>▪ *Fuel debris is not permitted for storage in IP1 MPC-32 or IP1 MPC-32F.*<br>▪ *Each fuel assembly may contain a single Antimony-Beryllium secondary source that replaces a fuel rod.* |

*Table 2.II.2*

*ADDITIONAL DESIGN INPUT DATA FOR ACCIDENT CONDITIONS*

| ***Item*** | ***Condition*** | ***Value*** |
|---|---|---|
| *Vertical Lift Height Limit for a HI-STORM 100S Version B Overpack Loaded With Indian Point Unit 1 Fuel (in.)* | *Accident* | *8*[†] |
| *HI-TRAC 100D Version IP1 Transfer Cask Horizontal Lift Height Limit (in.)* | *Accident* | *Not permitted* |

[†] *For ISFSI and subgrade design parameter Sets A and B specified in Table 2.2.9 of Chapter 2. Users may also develop a site-specific lift height limit.*

NOTES:
1. ALL DIMENSIONS ARE IN INCHES AND ARE APPROXIMATE.
2. ALL MATERIAL IS STAINLESS STEEL.

# FIGURE WITHHELD UNDER 10 CFR 2.390

**FIGURE 2.II.1; HOLTEC IP1 DAMAGED FUEL CONTAINER FOR PWR SNF IN MPC-32/32F**

## *SUPPLEMENT 3.II*

## *STRUCTURAL EVALUATION OF THE HI-STORM 100 SYSTEM FOR IP1*

### *3.II.0 OVERVIEW*

*In this supplement, the structural adequacy of the HI-STORM 100 System for Indian Point Unit 1 (IP1) is evaluated pursuant to the guidelines of NUREG-1536.*

*The organization of technical information in this supplement mirrors the format and content of Chapter 3 except that it only contains material directly pertinent to the HI-STORM 100 System for IP1.*

*The HI-STORM 100 System for IP1 consists of shortened versions of the HI-STORM 100S Version B overpack (referred to as HI-STORM 100S-185), the MPC-32, and the HI-TRAC 100D transfer cask (referred to as HI-TRAC 100D Version IP1). The outer steel shell and lead thickness of the HI-TRAC 100D Version IP1 are also reduced to accommodate the crane capacity at IP1. Section 1.II.2 contains a complete description of the IP1 components. Alternatively, the HI-STORM 100S Version B(218) overpack (also referred to as HI-STORM 100S-218) may be substituted for the HI-STORM 100S-185 at IP1.*

*The applicable codes, standards, and practices governing the structural analysis of the HI-STORM 100 System for IP1 as well as the design criteria, are presented in Supplement 2.II. Throughout this supplement, the term "safety factor" is defined as the ratio of the allowable stress (load) or displacement for the applicable load combination to the maximum computed stress (load) or displacement. Where applicable, bounding safety factors are computed using values that bound the calculated results.*

### *3.II.1 STRUCTURAL DESIGN*

#### *3.II.1.1 Discussion*

*A general discussion of the structural features of the MPC, the storage overpack, and the HI-TRAC transfer cask is provided in Section 3.1.1, and it applies equally to the HI-STORM 100 System for IP1. The drawings of the HI-STORM 100S Version B, MPC enclosure vessel, and MPC-32 provided in Section 1.5 contain notes regarding the IP1 specific variants. A separate drawing is provided in Section 1.5 for the HI-TRAC 100D Version IP1.*

#### *3.II.1.2 Design Criteria*

*Same as in Section 3.1.2, including all of its subsections, except as modified in Subsection 2.II.2.1 for handling accident loads.*

HOLTEC INTERNATIONAL COPYRIGHTED MATERIAL

*3.II.2 WEIGHTS AND CENTERS OF GRAVITY*

*Table 3.II.1 provides bounding weights for the individual HI-STORM 100 components for IP1 as well as the total system weights.*

*The locations of the calculated centers of gravity (CGs) are presented in Table 3.II.2. All centers of gravity are located on the cask centerline since the non-axisymmetric effects of the cask system plus contents are negligible.*

*3.II.3 MECHANICAL PROPERTIES OF MATERIALS*

*Same as in Section 3.3 (including all subsections and tables).*

*3.II.4 GENERAL STANDARDS FOR CASKS*

*3.II.4.1 Chemical and Galvanic Reactions*

*Same as in Subsection 3.4.1.*

*3.II.4.2 Positive Closure*

*There are no quick-connect/disconnect ports in the confinement boundary of the HI-STORM 100 System for IP1. The only access to the MPC is through the storage overpack lid, which weighs roughly 29,000 pounds (see Table 3.II.1). The lid is fastened to the storage overpack with large bolts. Inadvertent opening of the storage overpack is not feasible; opening a storage overpack requires mobilization of special tools and heavy-load lifting equipment.*

*3.II.4.3 Lifting Devices*

*3.II.4.3.1 HI-TRAC 100D Version IP1 Lifting Analysis*

*The lifting trunnions and the trunnion blocks for the HI-TRAC 100D Version IP1 are identical to the trunnions analyzed for the HI-TRAC 125 in Subsections 3.4.3.1 and 3.4.3.2. However, the outer shell geometry (outer diameter and thickness) is different. A calculation similar to what was previously performed for the HI-TRAC 100, and summarized in Subsection 3.4.3.4, provides justification that, despite the difference in local structure at the attachment points, the stresses in the body of the HI-TRAC 100D Version IP1 meet the stress allowables set forth in Subsection 3.1.2.2.*

*Figure 3.II.1 illustrates the differences in geometry, loads, and trunnion moment arms between the body of the HI-TRAC 125 and the body of the HI-TRAC 100D Version IP1. It is reasonable to assume that the level of stress in the HI-TRAC 100D Version IP1 body, in the immediate vicinity of the interface (Section X-X in Figure 3.II.1), is proportional to the applied force and the bending moment applied. In the figure, the subscripts 1 and 0 refer to HI-TRAC 100D*

HOLTEC INTERNATIONAL COPYRIGHTED MATERIAL

*Version IP1 and HI-TRAC 125 transfer casks, respectively. Figure 3.II.1 shows the location of the area centroid (with respect to the outer surface) and the loads and moment arms associated with each construction. Conservatively, neglecting all other interfaces between the top of the trunnion block and the top flange and between the sides of the trunnion block and the shells, equilibrium is maintained by developing a force and a moment in the section comprised of the two shell segments interfacing with the base of the trunnion block.*

*The most limiting stress state is in the outer shell at the trunnion block base interface. The stress level in the outer shell at Section X-X is proportional to P/A + Mc/I. Evaluating the stress for a unit width of section permits an estimate of the stress state in the HI-TRAC 100D Version IP1 outer shell if the corresponding stress state in the HI-TRAC 125 is known (the only changes are the applied load, the moment arm and the geometry). Using the geometry shown in Figure 3.II.1 gives the result as:*

*Stress (HI-TRAC 100D Version IP1 outer shell) = 1.337 x Stress (HI-TRAC 125 outer shell)*

*The tabular results from Subsection 3.4.3.3 can be adjusted accordingly and are reported below:*

| ***HI-TRAC 100D Version IP1 Near Trunnion (Region A and Region B)*** | |
|---|---|
| ***Item*** | ***Safety Factor*** |
| *Membrane Stress* | *2.01* |
| *Membrane plus Bending Stress* | *2.25* |
| *Membrane Stress (3D*)* | *1.32* |

*3.II.4.3.2 <u>HI-STORM 100 Lifting Analyses</u>*

*The HI-STORM 100S-185 is identical to the HI-STORM 100S Version B (218), except that its inside cavity length is shorter by approximately 33 inches and it is lighter when fully loaded. Therefore, the HI-STORM lifting analyses presented in Subsection 3.4.3.5 for the HI-STORM 100S Version B overpack conservatively bound the HI-STORM 100S-185.*

*3.II.4.3.3 <u>MPC Lifting Analysis</u>*

*The MPC-32 for IP1 is identical to the standard MPC-32, except that its inside cavity length is shorter by approximately 33 inches, and it is lighter when fully loaded. Therefore, the MPC lifting analyses presented in Subsection 3.4.3.6 bound the MPC-32 for IP1.*

HOLTEC INTERNATIONAL COPYRIGHTED MATERIAL

*3.II.4.3.4 Miscellaneous Lid Lifting Analyses*

*Same as in Subsection 3.4.3.7.*

*3.II.4.3.5 HI-TRAC Pool Lid Analysis*

*The pool lid for the HI-TRAC 100D Version IP1 is identical to the HI-TRAC 100D pool lid. Therefore, since the MPC-32 for IP1 weighs less than the typical MPC, the results of the pool lid analysis for the HI-TRAC 100D reported in Subsection 3.4.3.8 are bounding for the HI-TRAC 100D Version IP1.*

*3.II.4.3.6 HI-TRAC Bottom Flange Evaluation*

*The bottom flange design of the HI-TRAC 100D Version IP1 is identical to that of the HI-TRAC 100D. Therefore, the HI-TRAC 100D bottom flange evaluation presented in Subsection 3.4.3.10 bounds the HI-TRAC 100D Version IP1.*

*3.II.4.4 Heat*

*The thermal evaluation of the HI-STORM 100 System for IP1 is reported in Supplement 4.II.*

*3II.4.4.1 Summary of Pressures and Temperatures*

*The design pressures and design temperatures listed in Tables 2.2.1 and 2.2.3, respectively, are applicable to the HI-STORM 100 System for IP1.*

*3.II.4.4.2 Differential Thermal Expansion*

*Same as in Subsection 3.4.4.2 (including all subsections).*

*3.II.4.4.3 Stress Calculations*

*The HI-STORM 100 System for IP1 has many similarities with the generic HI-STORM 100 System analyzed in Chapter 3. Therefore, the stress calculations reported in Subsection 3.4.4.3 are not repeated here unless geometry or load changes warrant new analysis or discussion. For example, analysis of the HI-STORM lid under accident conditions (e.g., vertical end drop and tipover) is not included in this supplement since neither the HI-STORM lid geometry nor the maximum loading is different for the HI-STORM 100S-185 at IP1. Unless a new analysis is presented in this subsection, the results in Subsection 3.4.4.3 for the MPC-32, HI-STORM 100S Version B, and the HI-TRAC 100D bound the IP1 specific variants.*

HOLTEC INTERNATIONAL COPYRIGHTED MATERIAL

*3.II.4.4.3.1 Structural Integrity of Damaged Fuel Container for IP1*

*The damaged fuel container (DFC) to be deployed in the HI-STORM 100 System at IP1, which is depicted in Figure 2.II.1, has been evaluated to demonstrate that the container is structurally adequate to support the mechanical loads postulated during normal lifting operations, while in long-term storage, and during a hypothetical end drop.*

*The structural load path is evaluated using a combination of basic strength of materials formulations and finite element analysis. The various structural components are modeled as axial or bending members and their stresses are computed. The load path includes components such as the container sleeve and collar, various structural welds, load tabs, closure components and lifting bolt. Axial plus bending stresses are computed, together with applicable bearing stresses and weld stresses. Comparisons are then made with the appropriate allowable strengths at temperature. The design temperature for lifting evaluations is set at 150$^o$F (since the DFC is in the spent fuel pool). The design temperature for accident conditions is set at 300$^o$F.*

*The upper closure assembly must meet the requirements set forth for special lifting devices used in nuclear applications [3.1.2]. The remaining components of the damaged fuel container are governed by the stress limits of the ASME Code Section III, Subsection NG [3.4.10] and Section III, Appendix F [3.4.3], as applicable.*

*The analysis demonstrates that the DFC is structurally adequate to support the mechanical loads postulated during normal lifting operations and during a hypothetical end drop. Moreover, since the HI-STAR design basis handling accident bounds the corresponding load for HI-STORM (60g vs. 45g), the DFC has the ability to be carried safely in both the HI-STAR and HI-STORM Systems.*

*3.II.4.4.3.2 Lead Slump in HI-TRAC 100D Version IP1*

*Horizontal lifting of the HI-TRAC 100D Version IP1 is not permitted. Therefore, a horizontal drop accident of the transfer cask, causing the lead shielding to slump between the inner and outer shell annulus, is not credible. Notwithstanding this handling restriction, the lead slump analysis performed in Subsection 3.4.4.3.3.2 for the HI-TRAC 125 is considered bounding for the HI-TRAC 100D Version IP1 because of the reduced lead thickness and the lower weight of the MPC-32 associated with HI-STORM 100 System at IP1.*

*3.II.4.5 Cold*

*Same as in Subsection 3.4.5.*

HOLTEC INTERNATIONAL COPYRIGHTED MATERIAL

### 3.II.4.6 HI-STORM 100 Kinematic Stability under Flood Condition (Load Case A in Table 3.1.1)

*The flood condition subjects the HI-STORM 100 System to external pressure, together with a horizontal load due to water velocity. Because the HI-STORM 100 storage overpack is equipped with ventilation openings, the hydrostatic pressure from flood submergence acts only on the MPC. As stated in Subsection 3.1.2.1.1.3, the design external pressure for the MPC bounds the hydrostatic pressure from flood submergence. Subsection 3.4.4.5.2 reports a positive safety factor against instability from external pressure in excess of that expected from a complete flood submergence.*

*The water velocity associated with flood produces a horizontal drag force, which may act to cause sliding or tip-over. In accordance with the provisions of ANSI/ANS 57.9, the acceptable upper bound flood velocity, V, must provide a minimum factor of safety of 1.1 against overturning and sliding. For the HI-STORM 100, the design basis flood velocity is set at 15 ft/sec. The following calculations conservatively assume that the flow velocity is uniform over the height of the storage overpack.*

*From Subsection 3.4.6, the safety factor against sliding is given by:*

$$\beta_1 = \frac{F_f}{F} = \frac{\mu KW}{Cd\ A\ V^*}$$

*where $\mu$= 0.25, Cd = 0.5, K = 0.64, and $V^*$ = 218.01 lb per sq. ft. The values of A and W for the HI-STORM 100S-185 overpack are:*

*A = height x diameter of HI-STORM 100S-185 = 170.34 $ft^2$*

*W = empty weight of HI-STORM 100S-185 w/ lid = 218,000 lb (from Table 3.II.1)*

*Therefore,*

$\beta_1 = 1.88 > 1.1$ *(required)*

*For determining the margin of safety against overturning, the cask is assumed to pivot about a fixed point located at the outer edge of the contact circle at the interface between the HI-STORM 100S-185 and the ISFSI. From Subsection 3.4.6, the safety factor against overturning is given by:*

$$\beta_2 = \frac{F_T}{F} = \frac{KWD}{2H^* Cd\ A\ V^*}$$

HOLTEC INTERNATIONAL COPYRIGHTED MATERIAL

*where*

*D = diameter of HI-STORM 100S-185 = 132.5"*

*$H^*$ = CG height of empty HI-STORM 100S-185 = 91.20" (from Table 3.II.2)*

*Therefore,*

*$\beta_2$ = 5.46 > 1.1 (required)*

*If the MPC-32 for IP1 is loaded inside a HI-STORM 100S Version B(218) overpack, instead of a HI-STORM 100S-185, then the safety factors against sliding and overturning calculated in Subsection 3.4.6 are bounding.*

*As explained in Subsection 3.4.6, the circumferential stress in the HI-STORM inner and outer shells, and the degree to which they ovalize, due to the flood load is bounded by the results of the seismic event analysis.*

*3.II.4.7 Seismic Event and Explosion*

*Since the HI-STORM 100S-185 has a lower of center of gravity than the HI-STORM overpacks analyzed in Chapter 3, while maintaining the same diameter at its base and cross-sectional properties as the HI-STORM 100S Version B, the seismic event and explosion analyses presented in Section 3.4.7 (including all subsections) are bounding for the HI-STORM 100S-185 at IP1, as well as for the HI-STORM 100S Version B(218) loaded with an MPC-32 for IP1.*

*3.II.4.8 Tornado Wind and Missile Impact (Load Case B in Table 3.1.1 and Load Case 04 in Table 3.1.5)*

*During a tornado event, the HI-STORM 100 System at IP1 is assumed to be subjected to a constant wind force. It is also subject to impacts by postulated missiles. The maximum wind speed is specified in Table 2.2.4 and the three missiles, designated as large, intermediate, and small, are described in Table 2.2.5.*

*The post impact response of the HI-STORM 100 System at IP1 is required to assess stability. Both the HI-STORM 100S-185 storage overpack and the HI-TRAC 100D Version IP1 transfer cask are assessed for missile penetration.*

*The results for the post-impact response of the HI-STORM 100S-185 overpack demonstrate that the combination of tornado missile plus either steady tornado wind or instantaneous tornado pressure drop causes a rotation of the overpack to a maximum angle of inclination less than 3 degrees from vertical. This is much less than the angle required to overturn the cask.*

HOLTEC INTERNATIONAL COPYRIGHTED MATERIAL

*The maximum force (not including the initial pulse due to missile impact) acting on the projected area of the storage overpack is computed to be:*

$$F = 73{,}590 \text{ lb}$$

*The instantaneous impulsive force due to the missile strike is not computed here; its effect is felt as an initial angular velocity imparted to the storage overpack at time equal to zero. The net resultant force due to the simultaneous pressure drop is not an all-around distributed loading that has a net resultant, but rather is more likely to be distributed only over 180 degrees (or less) of the storage overpack periphery. The circumferential stress and deformation field will be of the same order of magnitude as that induced by a seismic loading. Since the magnitude of the force F is less than the magnitude of the net seismically induced force considered in Subsection 3.4.7, the storage overpack global stress analysis performed in Subsection 3.4.7 remains governing.*

*If the MPC-32 for IP1 is loaded inside a HI-STORM 100S Version B(218) overpack, instead of a HI-STORM 100S-185, then the results from Subsection 3.4.8 for a freestanding HI-STORM 100 overpack are applicable.*

*3.II.4.8.1 <u>HI-STORM 100S-185 Storage Overpack</u>*

*Since the HI-STORM 100S-185 overpack is nothing more than a shortened version of the HI-STORM 100S Version B overpack, with an identical lid, the missile impact analyses performed in Subsection 3.4.8.1 are bounding for the HI-STORM 100S-185.*

*3.II.4.8.2 <u>HI-TRAC 100D Version IP1 Transfer Cask</u>*

*3.II.4.8.2.1 <u>Intermediate Missile Strike</u>*

*The HI-TRAC 100D Version IP1 is always held by the handling system in a vertical orientation while outside of the fuel building (see Subsection 2.II.2.1). Therefore, considerations of instability due to a tornado missile strike are not applicable. However, the structural implications of a missile strike require consideration.*

*Since the HI-TRAC 100D Version IP1 can only be handled in the vertical orientation, a direct missile strike on the pool lid is not credible. However, the potential for the 8" diameter missile to penetrate the lead backed outer shell of the HI-TRAC 100D Version IP1 (Load Case 04 in Table 3.1.5) is examined.*

*It is shown that there is no penetration consequence that would lead to a radiological release. The following paragraphs summarize the analysis results for the small and intermediate missiles.*

*a. The small missile will dent any surface it impacts, but no significant puncture force is generated.*

b. *The following table summarizes the denting and penetration analysis performed for the intermediate missile. Denting connotes a local deformation mode encompassing material beyond the impacting missile envelope, while penetration connotes a plug type failure mechanism involving only the target material immediately under the impacting missile.*

| ***Location*** | ***Denting (in)*** | ***Thru-Thickness Penetration*** |
|---|---|---|
| *Outer Shell - lead backed* | *0.498* | *No (< 0.75 in.)* |

*When the transfer cask is in a horizontal orientation, the MPC lid is potentially vulnerable to a direct missile strike through the center hole in the HI-TRAC top lid. Notwithstanding the vertical handling restriction, and assuming no protective plate is installed, the capacity of the MPC lid peripheral groove weld to resist an intermediate missile impact is analyzed for the HI-STORM 100 System at IP1. The calculated result is as follows:*

| ***Item*** | ***Value (lb)*** | ***Capacity (lb)*** | ***Safety Factor = Capacity/Value*** |
|---|---|---|---|
| *MPC Lid Weld* | *2,262,000* | *2,631,000* | *1.16* |

*The final calculation in this subsection is an evaluation of the circumferential stress and deformation consequences of the horizontal missile strike on the periphery of the HI-TRAC 100D Version IP1. It is assumed that the HI-TRAC is simply supported at its ends (while in transit) and is subject to a direct impact from the 8" diameter missile. To compute stresses, the peak impact force of 248,800 lb calculated in Subsection 3.4.8.2.1 for the HI-TRAC 100 is conservatively used here for analysis of the HI-TRAC 100D Version IP1. The reason that this is conservative is because the target stiffness used to determine the impact force in Subsection 3.4.8.2.1 is based on the HI-TRAC 100 shell geometry, which has a thicker outer shell and more lead between the steel shells. Consequently, since the impact force is greater for larger stiffness values, the force calculated for the HI-TRAC 100 is bounding for the HI-TRAC 100D Version IP1.*

*The only portions of the HI-TRAC cylindrical body that are assumed to resist the impact load are the inner and outer shells. The effect of the water jacket to aid in the dissipation of the impact force is conservatively neglected. Meanwhile, the lead is assumed only to act as a separator to maintain the spacing between the shells. The results from the lead slump analysis in Subsection 3.4.4.3.3.2 demonstrate that this assumption regarding the lead behavior is valid.*

*As in Subsection 3.4.7.1, classical formulas for the deformation of rings under specified surface loadings are used to estimate circumferential behavior of the HI-TRAC shells under impact. Specifically, the solution for a point-supported ring subject to a uniform body load is implemented. The effective width of ring that balances the impact load is conservatively set as the diameter of the impacting missile (8") plus the effective length of the "bending boundary layer".*

*Consequently, the maximum circumferential stress due to the bending moment in the ring, away from the impact location, is:*

*19,780 psi*

*At the same location, the tangential force in the ring adds a primary stress component, which equals (area is based on the effective width of the ring):*

*2,314 psi*

*Therefore, the safety factor against excessive stress in the ring section that is assumed to resist the impact is:*

*SF = 39,750 psi/(2,314 psi + 19,780 psi) = 1.80*

*The allowable primary membrane stress intensity for this safety factor calculation is obtained from Table 3.1.12 for a Level D event at 350ºF. Since the circumferential stress in the ring remains in the elastic range, it is concluded that the MPC remains readily retrievable after the impact since there is no permanent ovalization of the cavity after the event. As noted previously, the presence of the water jacket adds an additional structural barrier that has been conservatively neglected in this analysis.*

*3.II.4.8.2.2 <u>Large Missile Strike</u>*

*The effects of a large tornado missile strike on the side (water jacket outer enclosure) of a loaded HI-TRAC 100 transfer cask have been evaluated, using the transient finite element code LSDYNA3D, in Subsection 3.4.8.2.2. The results show that:*

*a. The retrievability of the MPC in the wake of a large tornado missile strike is not adversely affected since the inner shell does not experience <u>any</u> plastic deformation.*

*b. The maximum primary stress intensity, away from the impact interface on the HI-TRAC water jacket, is below 50% of the applicable ASME Code Level D allowable limit for NF, Class 3 structures.*

*Based on the large margins of safety associated with the above results, and the small differences in the cylindrical wall assembly (in the radial direction) between the HI-TRAC 100 and the HI-TRAC 100D Version IP1, it is concluded that a large missile strike on the HI-TRAC 100D Version IP1 transfer cask will not prevent ready retrievability of the MPC or cause primary stress levels (away from the point of impact) to exceed the applicable ASME Code limits. The fact that the HI-TRAC 100D Version IP1 is approximately 33 inches shorter than the HI-TRAC 100, which tends to make for a stiffer structure, further validates this conclusion.*

*3.II.4.9 HI-TRAC Drop Events*

*As discussed in Subsection 2.II.2.1, unless a site-specific analysis has been performed to determine a lift height limit, the HI-TRAC 100D Version IP1 shall only be lifted in the vertical orientation using devices designed in accordance with ANSI N14.6 and having redundant drop protection features. Thus, an accidental drop of the HI-TRAC 100D Version IP1 in any orientation is not credible.*

*3.II.4.10 HI-STORM 100 Non-Mechanistic Tip-over and Vertical Drop Event (Load Cases 02.a and 02.c in Table 3.1.5)*

*Pursuant to the provision in NUREG-1536, a non-mechanistic tip-over of a loaded HI-STORM 100 System at IP1 on to the ISFSI pad is considered in this supplement. Calculations are also performed to determine the maximum vertical carry height limit such that the deceleration sustained by a vertical free fall of a loaded HI-STORM 100S-185 onto the ISFSI pad is less than design basis deceleration limit specified in Table 3.1.2.*

*The tipover analysis performed in Appendix 3.A is based on the HI-STORM 100 geometry and a bounding weight. The fact that the HI-STORM 100S-185 is shorter and has a lower center of gravity suggests that the impact kinetic energy is reduced so that the target would absorb the energy with a lower maximum deceleration. However, since the actual weight of a HI-STORM 100S-185 is less than that of a HI-STORM 100 by a significant amount, the predicted maximum rigid body deceleration would tend to increase slightly. Since there are two competing mechanisms at work, it is not a foregone conclusion that the maximum rigid body deceleration level is, in fact, reduced if a HI-STORM 100S-185 suffers a non-mechanistic tipover onto the identical target as the HI-STORM 100. In what follows, we present a summary of the analysis undertaken to demonstrate conclusively that the result for maximum deceleration level in the HI-STORM 100 tipover event does bound the corresponding value for the HI-STORM 100S-185, as well as for the HI-STORM 100S Version B(218) loaded with IP1 fuel, and therefore we need only perform a detailed dynamic finite element analysis for the HI-STORM 100. The analysis employs the methodology previously established in Subsection 3.4.10 for analyzing the HI-STORM 100S overpack.*

*Appendix 3.A presents a result for the angular velocity of the cylindrical body representing a HI-STORM 100 just prior to impact with the defined target. The result is expressed in Subsection 3.A.6 in terms of the cask geometry, and the ratio of the mass divided by the mass moment of*

*inertia about the corner point that serves as the rotation origin. Since the mass moment of inertia is also linearly related to the mass, the angular velocity at the instant just prior to target contact is independent of the cask mass. Subsequent to target impact, we investigate post-impact response by considering the cask as a cylinder rotating into a target that provides a resistance force that varies linearly with distance from the rotation point. We measure "time" as starting at the instant of impact, and develop a one-degree-of freedom equation for the post-impact response (for the rotation angle into the target) as:*

$$\ddot{\theta} + \omega^2\theta = 0$$

*where*

$$\omega^2 = \frac{kL^3}{3I_A}$$

*The initial conditions at time zero are: the initial angle is zero and the initial angular velocity is equal to the rigid body angular velocity acquired by the tipover from the center-of-gravity over corner position. In the above relation, L is the length of the overpack, I is the mass moment of inertia defined in Appendix 3.A, and k is a "spring constant"associated with the target resistance. If we solve for the maximum angular acceleration subsequent to time zero, we obtain the result in terms of the initial angular velocity as:*

$$\ddot{\theta}_{max} = \omega\dot{\theta}_0$$

*If we form the maximum linear acceleration at the top of the overpack lid, we can finally relate the decelerations of the HI-STORM 100 and the HI-STORM 100S-185 solely in terms of their geometry properties and their mass ratio. The value of "k", the target spring rate is the same for both overpacks so it does not appear in the relationship between the two decelerations. After substituting the appropriate geometry and calculated masses, we determine that the ratio of maximum rigid body decelerations at the top surface of the lids is:*

$$A_{HI\text{-}STORM\ 100S\text{-}185}/A_{HI\text{-}STORM\ 100} = 0.844$$

*If the MPC-32 for IP1 is loaded inside a HI-STORM 100S Version B(218) overpack, instead of a HI-STORM 100S-185, then the ratio of maximum rigid body decelerations at the top surface of the lids is:*

$$A_{HI\text{-}STORM\ 100S\text{-}218}/A_{HI\text{-}STORM\ 100} = 0.985$$

*Therefore, as postulated, there is no need to perform a separate DYNA3D analysis for the non-mechanistic tipover of a HI-STORM 100S-185 overpack or a HI-STORM 100S Version B(218) overpack loaded with IP1 fuel.*

HOLTEC INTERNATIONAL COPYRIGHTED MATERIAL

*Moreover, according to Appendix 3.A, analysis of a single mass impacting a spring with a given initial velocity shows that the maximum deceleration "$a_M$" of the mass is related to the dropped weight "w" and the drop height "h" as follows:*

$$a_M \sim \frac{\sqrt{h}}{\sqrt{w}}$$

*In other words, as the dropped weight decreases, the maximum deceleration of the mass increases for a fixed drop height. Since the HI-STORM 100 System at IP1 weighs considerably less than the HI-STORM 100 System analyzed in Appendix 3.A, the vertical carry height limit for HI-STORM 100S-185 overpack must be reduced to satisfy the design basis deceleration limit. From the above relationship, the maximum vertical carry height limit for the HI-STORM 100S-185 is determined as:*

$$h_{185} = \frac{w_{185}}{w_{100}} h_{100}$$

*where $w_{185}$ is the lower bound weight of a loaded HI-STORM 100S-185 overpack, $w_{100}$ is the weight of a loaded HI-STORM 100 overpack as analyzed in Appendix 3.A, and $h_{100}$ is the vertical drop height of the HI-STORM 100 from Appendix 3.A. The above equation yields the following result:*

$$h_{185} = 8.03"$$

*Therefore, by restricting the vertical carry height for the HI-STORM 100 System at IP1 to 8" or less, the maximum cask decelerations for the HI-STORM 100S-185 are bounded by the rigid body decelerations calculated in Appendix 3.A for the HI-STORM 100 overpack. Since the HI-STORM 100S Version B(218) weighs more than the HI-STORM 100S-185, the 8" vertical carry height limit is also bounding for the alternate system configuration, wherein the MPC-32 for IP1 is loaded inside a HI-STORM 100S Version B(218) overpack. The preceding result is valid for all surfaces along the travel path to the ISFSI pad that meet either the Set "A" or Set "B" design parameters as defined in Table 2.2.9. As discussed in Subsection 2.II.2.1, the licensee may choose to perform a site-specific analysis to establish a new vertical carry height limit based on their site-specific conditions, even if their ISFSI pad design complies with the general design parameters of Table 2.2.9. The site-specific drop analysis, however, must use the same methodology as employed in Appendix 3.A.*

*Subsection 3.4.10 provides the results of a simple elastic strength of materials calculation, which demonstrates that the cylindrical storage overpack will not permanently deform to the extent that the MPC cannot be removed by normal means after a tip-over event. Those results are bounding for the HI-STORM 100 System at IP1 since they are calculated using upper bound impact decelerations and lower bound section properties for the shell geometry.*

HOLTEC INTERNATIONAL COPYRIGHTED MATERIAL

*3.II.4.11 Storage Overpack and HI-TRAC Transfer Cask Service Life*

*Same as in Subsection 3.4.11 (including all subsections).*

*3.II.4.12 MPC Service Life*

*Same as in Subsection 3.4.12.*

*3.II.4.13 Design and Service Life*

*Same as in Subsection 3.4.13.*

*3.II.5 FUEL RODS*

*Same as in Section 3.5.*

*3.II.6 SUPPLEMENTAL DATA*

*3.II.6.1 Additional Codes and Standards Referenced in HI-STORM 100 System Design and Fabrication*

*Same as in Subsection 3.6.1.*

*3.II.6.2 Computer Programs*

*ANSYS 9.0, which is a public domain finite element code, has been utilized to perform structural analyses documented in this supplement.*

*3.II.6.3 Appendices Included in Supplement 3.II*

*None.*

*3.II.6.4 Calculation Packages*

*A calculation package containing the structural calculations supporting Supplement 3.II has been prepared, reviewed, and archived according to Holtec International's quality assurance program (see Chapter 13).*

*3.II.7 COMPLIANCE WITH NUREG-1536*

*The material in this supplement for the HI-STORM 100 System at IP1 provides the same information as previously provided for the HI-STORM 100 Systems in Chapter 3. Therefore, to the extent applicable, the information provided is in compliance with NUREG-1536.*

## *3.II.8 REFERENCES*

*Same as in Section 3.8.*

## *TABLE 3.II.1*
## *WEIGHT DATA FOR IP1 HI-STORM 100 SYSTEM*

| *Item* | *Bounding Weight (lb)* |
|---|---|
| ***MPC-32*** | |
| • *Without SNF* | *29,000* |
| • *Fully loaded with SNF and Damaged Fuel Containers* | *58,000* |
| ***HI-STORM 100S-185 Overpack*** | |
| • *Overpack top lid* | *29,000* |
| • *Overpack w/ lid (empty)* | *218,000* |
| • *Overpack w/ fully loaded MPC-32* | *276,000* |
| ***HI-TRAC 100D Version IP1 Transfer Cask*** | |
| • *Top lid* | *1,250* |
| • *Pool lid* | *8,150* |
| • *HI-TRAC w/ Top Lid and Pool Lid (water jacket filled)* | *80,000* |
| • *HI-TRAC w/ Top Lid, Pool Lid, and fully loaded MPC-32 (water jacket filled)* | *138,000* |
| • *Lifted Weight Above Pool with HI-TRAC 100D Version IP1* | *150,000* |

HOLTEC INTERNATIONAL COPYRIGHTED MATERIAL

***TABLE 3.II.2***
***CENTERS OF GRAVITY OF HI-STORM SYSTEM CONFIGURATIONS FOR IP1***

| ***Component*** | ***Height of CG Above Datum (in)*** |
|---|---|
| *MPC-32 (empty)* | *94.40* |
| *HI-STORM 100S-185 Overpack (empty)* | *91.20* |
| *HI-STORM 100S-185 Overpack w/ fully loaded MPC-32* | *91.22* |
| *HI-TRAC 100D Version IP1 Transfer Cask w/ Top Lid and Pool Lid (water jacket filled)* | *73.43* |
| *HI-TRAC 100D Version IP1 Transfer Cask w/ Top Lid, Pool Lid, and fully loaded MPC-32 (water jacket filled)* | *79.27* |

*Notes:*

1. *The datum used for calculations involving the HI-STORM is the bottom of the overpack baseplate. The datum used for calculations involving the HI-TRAC is the bottom of the pool lid.*

2. *The datum used for calculations involving only the MPC is the bottom of the MPC baseplate.*

3. *The CG height of the HI-STORM overpack is calculated based on standard density concrete (i.e., 166 pcf dry) in the radial cavity. At higher densities, the CG height is slightly lower, which makes the HI-STORM overpack less prone to tipping.*

HOLTEC INTERNATIONAL COPYRIGHTED MATERIAL

**FIGURE WITHHELD UNDER 10 CFR 2.390**

# SUPPLEMENT 4.II

# THERMAL EVALUATION OF HI-STORM 100 SYSTEM FOR IP1

## 4.II.1 INTRODUCTION

The HI-STORM 100S-185 is a shorter version of the generic HI-STORM 100S Version B overpack specifically designed to store Indian Point 1 (IP1) spent nuclear fuel assemblies. A shorter version of MPC-32 (MPC-32-IP1) is designed for the shorter IP1 fuel assemblies and a shorter version of HI-TRAC 100D (HI-TRAC 100D Version IP1) is designed for short-term transfer operations. All the fuel assemblies will be stored in Damaged Fuel Containers in the MPC-32-IP1. The MPC-32-IP1 may also be stored in the generic HI-STORM 100 version B overpack. In this supplement, compliance of the HI-STORM 100S-185, MPC-32-IP1 and HI-TRAC 100D Version IP1 systems to 10CFR72 and ISG-11, Rev. 3 thermal requirements are evaluated for storage. The analysis considers passive rejection of decay heat from the spent nuclear fuel. The IP1 fuel storage system is evaluated for normal storage, short-term transfer and accident scenarios defined in the principal design criteria in Chapter 2. The regulatory requirements and acceptance criteria for these evaluations are listed in Section 2.2 and 4.0.

## 4.II.2 THERMAL PROPERTIES OF MATERIALS

The materials of construction of the HI-STORM 100S-185 system, HI-TRAC 100D Version IP1 and MPC-32-IP1 are the same as those for the generic HI-STORM 100 System, HI-TRAC 100D and MPC-32. The thermophysical data compiled in Section 4.2 of the FSAR provides the required materials information for all components of the system.

## 4.II.3 TECHNICAL SPECIFICATIONS OF COMPONENTS

The HI-STORM 100S-185 system materials and components to be maintained within safe operating limits are listed in Section 4.3. The temperature limits specified in Section 2.2 of the FSAR are adopted for this evaluation.

## 4.II.4 NORMAL STORAGE THERMAL EVALUATION

The HI-STORM 100S-185 cask features an all-welded multi-purpose canister (MPC-32-IP1) containing spent nuclear fuel emplaced in a steel-concrete overpack. From a thermal standpoint the IP1 specific cask components are identical to their generic counterparts except that the height of the HI-STORM 100S-185, MPC-32-IP1 and HI-TRAC 100D Version IP1 are shorter to be compatible with the short-length IP1 fuel. The thermal payload of the MPC-32-IP1 is given in Table 4.II.1.

HOLTEC INTERNATIONAL COPYRIGHTED MATERIAL

4.II.4.1 Thermal Model

Thermal modeling of the HI-STORM 100S-185 and the HI-TRAC 100D Version IP1 adopts the same methodologies used for the evaluation of the generic HI-STORM 100 System presented in Section 4.4 of the FSAR and the HI-TRAC 100D thermal evaluation presented in Section 4.5 of the FSAR. Two-dimensional axisymmetric Computational Fluid Dynamics (CFD) models of the IP1 fuel storage system are used in these evaluations. For a conservative portrayal of cask system temperatures, the thermal evaluation incorporates the following assumptions:

1. No credit is taken for motion of helium in the MPC fuel storage cells.

2. The decay heat load used in this thermal evaluation is 8 kW. The IP1 cask heat load will be less than 5 kW.

3. The most severe levels of environmental factors for long-term normal storage, which are an ambient temperature of 80$^{o}$F and 10CFR71 insolation levels, were coincidentally imposed on the system.

4. No credit was considered for contact between fuel assemblies and the MPC basket wall or between the MPC basket and the basket supports. The fuel assemblies and MPC basket were conservatively considered to be in concentric alignment.

5. Axial heat transfer through fuel pellets is ignored.

6. Heat dissipation by fuel assembly grid spacers and top & bottom fittings is ignored.

7. Insolation heating assumed with a bounding absorbtivity (=1.0).

8. A margin between the computed peak cladding temperature and 400$^{o}$C limit is provided.

9. Conservative values of the inlet and outlet debris screen flow resistances were used in the analyses.

10. Conservatively, the IP1 fuel rod fill gas amount is assumed to be the same as the B&W 15x15 PWR fuel assembly. This assumption is very conservative since the IP1 fuel assemblies are much shorter and lighter than this fuel assembly.

Thermal analysis results are provided in the next sections.

4.II.4.2 Maximum Temperatures

Steady-state thermal analysis of HI-STORM 100S-185 containing an MPC-32-IP1 is performed for normal conditions of long-term storage (normal ambient temperature of 80°F, maximum

HOLTEC INTERNATIONAL COPYRIGHTED MATERIAL

insolation and quiescent air). Table 4.II.2 presents the results of the analysis. All MPC and HI-STORM component temperatures are lower than the allowable limits presented in Section 2.2. Based on the results in Table 4.II.2 and those presented in Section 4.4, the following conclusions can be made:

a) Fuel temperatures are bounded by generic HI-STORM.
b) Confinement boundary temperatures are bounded by generic HI-STORM.
c) Surface temperatures are bounded by generic HI-STORM.
d) MPC internal pressure is bounded by generic HI-STORM.

As the HI-STORM 100S-185 temperatures and pressure are bounded by the generic HI-STORM 100 System evaluation and the generic HI-STORM 100 System complies with 10CFR Part 72 and ISG 11, Rev. 3 requirements (see Section 4.4), it can be concluded that the HI-STORM 100S-185 system is in compliance with the 10CFR Part 72 and ISG 11, Rev. 3 requirements for normal storage.

Placement of the MPC-32-IP1 in a generic HI-STORM 100 overpack is bounded by the evaluation presented above, since the generic overpack has a larger height. This will allow for more efficient heat transfer from the top of the MPC-32-IP1 due to the larger airflow area between the MPC lid and the overpack lid, increased air flow due to an increase in the chimney height and a larger heat transfer area on the overpack surface.

### 4.II.4.3 Minimum Temperatures

As specified in 10CFR72, the minimum ambient temperature conditions for the HI-STORM 100 and HI-TRAC 100D System are -40°F and 0°F, respectively. The HI-STORM 100 System and HI-TRAC 100D System design does not have any minimum decay heat load restrictions for transport. Therefore, under bounding cold conditions (zero decay heat and no insolation), the cask components temperatures will approach ambient conditions. All HI-STORM 100 System and HI-TRAC 100D System materials of construction satisfactorily perform their intended function at these cold temperatures. Evaluations in Chapter 3 demonstrate the acceptable structural performance of the overpack and MPC steel materials at low temperature. Shielding and criticality functions of the cask materials are unaffected by cold.

### 4.II.4.4 Maximum Internal Pressures

The IP1 multi-purpose canister is pressurized with helium prior to sealing the lid ports. In Table 4.II.3 the initial backfill pressures are listed. In response to higher than ambient storage temperatures the helium pressure rises above the initial backfill pressures. For conservatism the maximum normal operating pressure (MNOP) is computed assuming 100% fuel rods rupture and the MPC-32-IP1 is assumed to be backfilled at the maximum backfill pressure (See Table 4.II.3). The MNOP for normal storage condition is provided in Table 4.II.2 and is less than the allowable limit.

HOLTEC INTERNATIONAL COPYRIGHTED MATERIAL

4.II.4.5 Maximum Thermal Stresses

Thermal expansion induced mechanical stresses are evaluated, using bounding temperature distributions, in Chapter 4.

## 4.II.5 THERMAL EVALUATION OF SHORT TERM OPERATIONS

The heat load in the MPC-32-IP1 to be transported in the HI-TRAC 100D Version IP1 is much lower (8kW) as compared to that allowed for the generic HI-TRAC 100D. The short-term evaluations presented in Section 4.5 bound short-term operations in a HI-TRAC 100D Version IP1 overpack.

## 4.II.6 THERMAL EVALUATION OF OFF-NORMAL AND ACCIDENT CONDITIONS

### 4.II.6.1 Off-Normal Conditions

(a) Elevated Ambient Air Temperature

The off-normal ambient condition is defined in Chapter 2 as an ambient temperature of 100°F. This is 20°F higher than the normal condition ambient temperature of 80°F. This condition is conservatively evaluated by adding 20°F to the calculated normal condition fuel cladding and component temperatures. Results for this off-normal condition are presented in Table 4.II.4. The results are confirmed to be less than short-term temperature limits for fuel cladding, concrete, and ASME Code materials.

(b) Partial Blockage of Air Inlets

Since the MPC-32-IP1 and HI-STORM 100S-185 component temperatures are all lower than those for the generic HI-STORM system, the effect of 50% inlet ducts blockage discussed in Chapter 11 for the generic HI-STORM remain bounding.

### 4.II.6.2 Accident Conditions

(a) Fire

The fire accident is defined in Table 2.0.2 as a 1475°F fire lasting 217 seconds. This is the same intensity and duration as the fire accident discussed in Chapter 11 of this FSAR for the generic

HOLTEC INTERNATIONAL COPYRIGHTED MATERIAL

HI-STORM 100 System. The existing fire evaluation therein bounds the HI-STORM 100S-185 fire event, for the following reasons:

| Observation | Basis |
|---|---|
| Fire heat input to HI-STORM 100S-185 overpack is bounded by the generic HI-STORM 100 System | Exposed area of overpack is bounded by larger generic design |
| Start of fire conditions are bounded by generic HI-STORM 100 System. | See Section 4.II.4.2 |
| Rate of MPC heatup is bounded by generic HI-STORM 100 System. | Heat load in the MPC-IP1 is much lower than that permitted in the generic HI-STORM 100 System. Moreover, the reduction in the permitted heat load in the MPC-IP1 is much greater than the reduction in the thermal inertia of the HI-STORM 100S-185 cask as compared to the generic HI-STORM 100 system (about 30%). |

(b) Burial Under Debris

The burial under debris accident is defined in Table 2.0.2. The generic burial under debris described in Chapter 11 bounds the HI-STORM 100S-185 burial under debris event because the permissible heat load in the MPC-32-IP1 is much lower than the generic MPC-32 placed in a HI-STORM 100 System. Moreover, the reduction in the permitted heat load in the MPC-IP1 is much greater than the reduction in the thermal inertia of the HI-STORM 100S-185 cask as compared to the generic HI-STORM 100 system (about 30%).

(c) 100% Blockage of Air Ducts

The 100% air ducts blockage accident is defined in Table 2.0.2 as the blockage of 100% of the air inlet duct flow area. The initial condition for this transient thermal evaluation is the long-tem normal storage condition results. As the normal storage results for HI-STORM 100S-185 temperatures and pressure are bounded by the generic HI-STORM 100 System results and the heat load in the generic HI-STORM 100 System is higher, the transient evaluation discussed in Chapter 11 for the generic HI-STORM 100 system remain bounding.

HOLTEC INTERNATIONAL COPYRIGHTED MATERIAL

(d) Extreme Environmental Temperature

The extreme environmental temperature accident condition is defined in Table 2.0.2 as an ambient temperature of 125°F. This is 45°F higher than the normal condition ambient temperature of 80°F. This condition is conservatively evaluated by adding 45°F to the calculated normal condition fuel cladding and component temperatures. Results for this off-normal condition are presented in Table 4.II.5. The results are confirmed to be less than accident temperature limits for fuel cladding, concrete, and ASME Code materials.

## 4.II.7 REGULATORY COMPLIANCE

As required by ISG-11, the fuel cladding temperature at the beginning of dry cask storage is maintained below the anticipated damage-threshold temperatures for normal conditions for the licensed life of the HI-STORM System.

As required by NUREG-1536 (4.0,IV,3), the maximum internal pressure of the cask remains within its design pressure for normal, off-normal, and accident conditions. Design pressures are summarized in Table 2.2.1.

As required by NUREG-1536 (4.0,IV,4), all cask materials and fuel cladding are maintained within their temperature limits for normal, off-normal and accident conditions. Material temperature limits are summarized in Tables 2.2.3.

As required by NUREG-1536 (4.0,IV,5), the cask system ensures a very low probability of cladding breach during long-term storage. For long-term normal conditions, the maximum CSF cladding temperature is below the ISG-11 limit of 400 $^{o}$C (752$^{o}$F).

As required by NUREG-1536 (4.0,IV,7), the cask system is passively cooled. All heat rejection mechanisms described in this supplement, including conduction, natural convection, and thermal radiation, are passive.

As required by NUREG-1536 (4.0,IV,8), the thermal performance of the cask is within the allowable design criteria specified in Chapter 2 for normal, off-normal and accident conditions. All thermal results are within the allowable limits for all conditions of storage.

HOLTEC INTERNATIONAL COPYRIGHTED MATERIAL

Table 4.II.1: MPC-32-IP1 Thermal Payload

| | |
|---|---|
| Total Decay Heat | 8 kW |

Table 4.II.2: Bounding HI-STORM 100S-185 System Long-Term Normal Storage Maximum Temperatures and Pressure

| **Component** | **Temperature ($^{o}$F)** |
|---|---|
| Fuel Cladding | 498 |
| Fuel Basket | 492 |
| Fuel Basket Periphery | 247 |
| MPC Shell | 210 |
| MPC Lid | 213 |
| Lid Concrete | 182 |
| Average Air Outlet Temperature | 96 |
| Pressure (psig) | |
| MPC | 83 |

Table 4.II.3: Helium Backfill Pressures

| | |
|---|---|
| Minimum Pressure | 22.0 psig @ 70$^{o}$F |
| Maximum Pressure | 33.3 psig @ 70$^{o}$F |

HOLTEC INTERNATIONAL COPYRIGHTED MATERIAL

Table 4.II.4: Results for Elevated Ambient Air Temperature Off-Normal Event

| Component | Temperature ($^oF$) |
|---|---|
| Fuel Cladding | 518 |
| Fuel Basket | 512 |
| Fuel Basket Periphery | 267 |
| MPC Shell | 230 |
| MPC Lid | 233 |
| Lid Concrete | 202 |
| Average Air Outlet Temperature | 116 |
| Pressure (psig) | |
| MPC | 86 |

Table 4.II.5: Results for Extreme Environmental Temperature Accident

| Component | Temperature ($^oF$) |
|---|---|
| Fuel Cladding | 543 |
| Fuel Basket | 537 |
| Fuel Basket Periphery | 292 |
| MPC Shell | 255 |
| MPC Lid | 258 |
| Lid Concrete | 227 |
| Average Air Outlet Temperature | 141 |
| Pressure (psig) | |
| MPC | 89 |

HOLTEC INTERNATIONAL COPYRIGHTED MATERIAL

## 5.2 SOURCE SPECIFICATION

The neutron and gamma source terms, decay heat values, and quantities of radionuclides available for release were calculated with the SAS2H and ORIGEN-S modules of the SCALE 4.3 system [5.1.2, 5.1.3]. SAS2H has been extensively compared to experimental isotopic validations and decay heat measurements. References [5.2.8] through [5.2.12] and [5.2.15] present isotopic comparisons for PWR and BWR fuels for burnups ranging to 47 GWD/MTU and reference [5.2.13] presents results for BWR measurements to a burnup of 57 GWD/MTU. A comparison of calculated and measured decays heats is presented in reference [5.2.14]. All of these studies indicate good agreement between SAS2H and measured data. Additional comparisons of calculated values and measured data are being performed by various institutions for high burnup PWR and BWR fuel. These new results, when published, are expected to further confirm the validity of SAS2H for the analysis of PWR and BWR fuel.

Sample input files for SAS2H and ORIGEN-S are provided in Appendices 5.A and 5.B, respectively. The gamma source term is actually comprised of three distinct sources. The first is a gamma source term from the active fuel region due to decay of fission products. The second source term is from $^{60}$Co activity of the steel structural material in the fuel element above and below the active fuel region. The third source is from (n,γ) reactions described below.

A description of the design basis zircaloy clad fuel for the source term calculations is provided in Table 5.2.1. The PWR fuel assembly described is the assembly that produces the highest neutron and gamma sources and the highest decay heat load for a given burnup and cooling time from the following fuel assembly classes listed in Table 2.1.1: B&W 15x15, B&W 17x17, CE 14x14, CE 16x16, WE 14x14, WE 15x15, WE 17x17, St. Lucie, and Ft. Calhoun. The BWR fuel assembly described is the assembly that produces the highest neutron and gamma sources and the highest decay heat load for a given burnup and cooling time from the following fuel assembly classes listed in Table 2.1.2: GE BWR/2-3, GE BWR/4-6, Humboldt Bay 7x7, and Dresden 1 8x8. Multiple SAS2H and ORIGEN-S calculations were performed to confirm that the B&W 15x15 and the GE 7x7, which have the highest $UO_2$ mass, bound all other PWR and BWR fuel assemblies, respectively. Section 5.2.5 discusses, in detail, the determination of the design basis fuel assemblies.

The design basis Humboldt Bay and Dresden 1 6x6 fuel assembly is described in Table 5.2.2. The fuel assembly type listed produces the highest total neutron and gamma sources from the fuel assemblies at Dresden 1 and Humboldt Bay. Table 5.2.21 provides a description of the design basis Dresden 1 MOX fuel assembly used in this analysis. The design basis 6x6 and MOX fuel assemblies which are smaller than the GE 7x7, are assumed to have the same hardware characteristics as the GE 7x7. This is conservative because the larger hardware mass of the GE 7x7 results in a larger $^{60}$Co activity.

The design basis stainless steel clad fuel assembly for the Indian Point 1, Haddam Neck, and San Onofre 1 assembly classes is described in Table 5.2.3. This table also describes the design basis stainless steel clad LaCrosse fuel assembly. *For Indian Point 1 fuel, the analysis in this chapter*

*is applicable only to the MPC-24. Supplement 5.II discusses storage of the Indian Point 1 fuel in the MPC-32.*

The design basis assemblies mentioned above are the design basis assemblies for both intact and damaged fuel and fuel debris for their respective array classes. Analyses of damaged fuel is presented in Section 5.4.2.

In performing the SAS2H and ORIGEN-S calculations, a single full power cycle was used to achieve the desired burnup. This assumption, in conjunction with the above-average specific powers listed in Tables 5.2.1, 5.2.2, 5.2.3, and 5.2.21 resulted in conservative source term calculations.

Sections 5.2.1 and 5.2.2 describe the calculation of gamma and neutron source terms for zircaloy clad fuel while Section 5.2.3 discusses the calculation of the gamma and neutron source terms for the stainless steel clad fuel.

### 5.2.1 Gamma Source

Tables 5.2.4 through 5.2.6 provide the gamma source in MeV/s and photons/s as calculated with SAS2H and ORIGEN-S for the design basis zircaloy clad fuels at varying burnups and cooling times. Tables 5.2.7 and 5.2.22 provides the gamma source in MeV/s and photons/s for the design basis 6x6 and MOX fuel, respectively.

Specific analysis for the HI-STORM 100 System, which includes the HI-STORM storage overpacks and the HI-TRAC transfer casks, was performed to determine the dose contribution from gammas as a function of energy. This analysis considered dose locations external to the 100-ton HI-TRAC transfer cask and the HI-STORM 100 overpack and vents. The results of this analysis have revealed that, due to the magnitude of the gamma source at lower energies, gammas with energies as low as 0.45 MeV must be included in the shielding analysis. The effect of gammas with energies above 3.0 MeV, on the other hand, was found to be insignificant (less than 1% of the total gamma dose at all high dose locations). This is due to the fact that the source of gammas in this range (i.e., above 3.0 MeV) is extremely low (less than 1% of the total source). Therefore, all gammas with energies in the range of 0.45 to 3.0 MeV are included in the shielding calculations. Dose rate contributions from above and below this range were evaluated and found to be negligible. Photons with energies below 0.45 MeV are too weak to penetrate the HI-STORM overpack or HI-TRAC, and photons with energies above 3.0 MeV are too few to contribute significantly to the external dose.

The primary source of activity in the non-fuel regions of an assembly arises from the activation of $^{59}$Co to $^{60}$Co. The primary source of $^{59}$Co in a fuel assembly is impurities in the steel structural material above and below the fuel. The zircaloy in these regions is neglected since it does not have a significant $^{59}$Co impurity level. Reference [5.2.2] indicates that the impurity level in steel is 800 ppm or 0.8 gm/kg. Conservatively, the impurity level of $^{59}$Co was assumed to be 1000

ppm or 1.0 gm/kg. Therefore, Inconel and stainless steel in the non-fuel regions are both conservatively assumed to have the same 1.0 gm/kg impurity level.

Holtec International has gathered information from utilities and vendors which shows that the 1.0 gm/kg impurity level is very conservative for fuel which has been manufactured since the mid-to-late 1980s after the implementation of an industry wide cobalt reduction program. The typical Cobalt-59 impurity level for fuel since the late 1980s is less than 0.5 gm/kg. Based on this, fuel with a short cooling time, 5 to 9 years, would have a Cobalt-59 impurity level less than 0.5 gm/kg. Therefore, the use of a bounding Cobalt-59 impurity level of 1.0 gm/kg is very conservative, particularly for recently manufactured assemblies. Analysis in Reference [5.2.3] indicates that the cobalt impurity in steel and inconel for fuel manufactured in the 1970s ranged from approximately 0.2 gm/kg to 2.2 gm/kg. However, older fuel manufactured with higher cobalt impurity levels will also have a corresponding longer cooling time and therefore will be bounded by the analysis presented in this chapter. As confirmation of this statement, Appendix D presents a comparison of the dose rates around the 100-ton HI-TRAC and the HI-STORM with the MPC-24 for a short cooling time (5 years) using the 1.0 gm/kg mentioned above and for a long cooling time (9 years) using a higher cobalt impurity level of 4.7 gm/kg for inconel. These results confirm that the dose rates for the longer cooling time with the higher impurity level are essentially equivalent to (within 11%) or bounded by the dose rates for the shorter cooling time with the lower impurity level. Therefore, the analysis in this chapter is conservative.

Some of the PWR fuel assembly designs (B&W and WE 15x15) utilized inconel in-core grid spacers while other PWR fuel designs use zircaloy in-core grid spacers. In the mid 1980s, the fuel assembly designs using inconel in-core grid spacers were altered to use zircaloy in-core grid spacers. Since both designs may be loaded into the HI-STORM 100 system, the gamma source for the PWR zircaloy clad fuel assembly includes the activation of the in-core grid spacers. Although BWR assembly grid spacers are zircaloy, some assembly designs have inconel springs in conjunction with the grid spacers. The gamma source for the BWR zircaloy clad fuel assembly includes the activation of these springs associated with the grid spacers.

The non-fuel data listed in Table 5.2.1 were taken from References [5.2.2], [5.2.4], and [5.2.5]. As stated above, a Cobalt-59 impurity level of 1 gm/kg (0.1 wt%) was used for both inconel and stainless steel. Therefore, there is little distinction between stainless steel and inconel in the source term generation and since the shielding characteristics are similar, stainless steel was used in the MCNP calculations instead of inconel. The BWR masses are for an 8x8 fuel assembly. These masses are also appropriate for the 7x7 assembly since the masses of the non-fuel hardware from a 7x7 and an 8x8 are approximately the same. The masses listed are those of the steel components. The zircaloy in these regions was not included because zircaloy does not produce significant activation. The masses are larger than most other fuel assemblies from other manufacturers. This, in combination with the conservative $^{59}$Co impurity level and the use of conservative flux weighting fractions (discussed below) results in an over-prediction of the non-fuel hardware source that bounds all fuel for which storage is requested.

The masses in Table 5.2.1 were used to calculate a $^{59}$Co impurity level in the fuel assembly material. The grams of impurity were then used in ORIGEN-S to calculate a $^{60}$Co activity level for the desired burnup and decay time. The methodology used to determine the activation level was developed from Reference [5.2.3] and is described here.

1. The activity of the $^{60}$Co is calculated using ORIGEN-S. The flux used in the calculation was the in-core fuel region flux at full power.

2. The activity calculated in Step 1 for the region of interest was modified by the appropriate scaling factors listed in Table 5.2.10. These scaling factors were taken from Reference [5.2.3].

Tables 5.2.11 through 5.2.13 provide the $^{60}$Co activity utilized in the shielding calculations for the non-fuel regions of the assemblies in the MPC-32, MPC-24, and the MPC-68 for varying burnup and cooling times. The design basis 6x6 and MOX fuel assemblies are conservatively assumed to have the same $^{60}$Co source strength as the BWR design basis fuel. This is a conservative assumption as the design basis 6x6 fuel and MOX fuel assemblies are limited to a significantly lower burnup and longer cooling time than the design basis fuel.

In addition to the two sources already mentioned, a third source arises from (n,γ) reactions in the material of the MPC and the overpack. This source of photons is properly accounted for in MCNP when a neutron calculation is performed in a coupled neutron-gamma mode.

There is some uncertainty associated with the ORIGEN-S calculations due to uncertainty in the physics data (e.g. cross sections, decay constants, etc.) and the modeling techniques. References [5.2.9], [5.2.10], and [5.2.15] perform comparisons between calculations and experimental isotopic measurement data. These comparisons indicate that calculated to measured ratios for Cs-134 and Eu-154, two of the major contributors to the gamma source, range from 0.79 to 1.009 and 0.79 to 0.98, respectively. These values provide representative insight into the entire range of possible error in the source term calculations. However, any non-conservatism associated with the uncertainty in the source term calculations is offset by the conservative nature of the source term and shielding calculations performed in this chapter, and therefore no adjustments were made to the calculated values.

### 5.2.2 Neutron Source

It is well known that the neutron source strength increases as enrichment decreases, for a constant burnup and decay time. This is due to the increase in Pu content in the fuel, which increases the inventory of other transuranium nuclides such as Cm. The gamma source also varies with enrichment, although only slightly. Because of this effect and in order to obtain conservative source terms, low initial fuel enrichments were chosen for the BWR and PWR design basis fuel assemblies. The enrichments are appropriately varied as a function of burnup. Table 5.2.24 presents the $^{235}$U initial enrichments for various burnup ranges from 20,000 - 75,000 MWD/MTU for PWR and 20,000 - 70,000 MWD/MTU for BWR zircaloy clad fuel.

These enrichments are based on References [5.2.6] and [5.2.7]. Table 8 of reference [5.2.6] presents average enrichments for burnup ranges. The initial enrichments chosen in Table 5.2.24, for burnups up to 50,000 MWD/MTU, are approximately the average enrichments from Table 8 of reference [5.2.6] for the burnup range that is 5,000 MWD/MTU less than the ranges listed in Table 5.2.24. These enrichments are below the enrichments typically required to achieve the burnups that were analyzed. For burnups greater than 50,000 MWD/MTU, the data on historical and projected burnups available in the LWR Quantities Database in reference [5.2.7] and some additional data from nuclear plants was reviewed and conservatively low enrichments were chosen for each burnup range above 50,000 MWD/MTU.

Inherent to this approach of selecting minimum enrichments that bound the vast majority of discharged fuel is the fact that a small number of atypical assemblies will not be bounded. However, these atypical assemblies are very few in number (as evidenced by the referenced discharge data), and thus, it is unlikely that a single cask would contain several of these outlying assemblies. Further, because the approach is based on using minimum enrichments for given burnup ranges, any atypical assemblies that may exist are expected to have enrichments that are very near to the minimum enrichments used in the analysis. Therefore, the result is an insignificant effect on the calculated dose rates. Consequently, the minimum enrichment values used in the shielding analysis are adequate to bound the fuel authorized by the limits in Section 2.1.9 for loading in the HI-STORM system. Since the enrichment does affect the source term evaluation, it is recommended that the site-specific dose evaluation consider the enrichment for the fuel being stored.

The neutron source calculated for the design basis fuel assemblies for the MPC-24, MPC-32, and MPC-68 and the design basis 6x6 fuel are listed in Tables 5.2.15 through 5.2.18 in neutrons/s for varying burnup and cooling times. Table 5.2.23 provides the neutron source in neutrons/sec for the design basis MOX fuel assembly. $^{244}$Cm accounts for approximately 92-97% of the total number of neutrons produced. Alpha,n reactions in isotopes other than $^{244}$Cm account for approximately 0.3-2% of the neutrons produced while spontaneous fission in isotopes other than $^{244}$Cm account for approximately 2-8% of the neutrons produced within the $UO_2$ fuel. In addition, any neutrons generated from subcritical multiplication, (n,2n) or similar reactions are properly accounted for in the MCNP calculation.

There is some uncertainty associated with the ORIGEN-S calculations due to uncertainty in the physics data (e.g. cross sections, decay constants, etc.) and the modeling techniques. References [5.2.9], [5.2.10], and [5.2.15] perform comparisons between calculations and experimental isotopic measurement data. These comparisons indicate that calculated to measured ratios for Cm-244 ranges from 0.81 to 0.95. These values provide representative insight into the entire range of possible error in the source term calculations. However, any non-conservatism associated with the uncertainty in the source term calculations is offset by the conservative nature of the source term and shielding calculations performed in this chapter, and therefore no adjustments were made to the calculated values.

### 5.2.3 Stainless Steel Clad Fuel Source

Table 5.2.3 lists the characteristics of the design basis stainless steel clad fuel. The fuel characteristics listed in this table are the input parameters that were used in the shielding calculations described in this chapter. The active fuel length listed in Table 5.2.3 is actually longer than the true active fuel length of 122 inches for the WE 15x15 and 83 inches for the LaCrosse 10x10. Since the true active fuel length is shorter than the design basis zircaloy clad active fuel length, it would be incorrect to calculate source terms for the stainless steel fuel using the correct fuel length and compare them directly to the zircaloy clad fuel source terms because this does not reflect the potential change in dose rates. As an example, if it is assumed that the source strength for both the stainless steel and zircaloy fuel is 144 neutrons/s and that the active fuel lengths of the stainless steel fuel and zircaloy fuel are 83 inches and 144 inches, respectively; the source strengths per inch of active fuel would be different for the two fuel types, 1.73 neutrons/s/inch and 1 neutron/s/inch for the stainless steel and zircaloy fuel, respectively. The result would be a higher neutron dose rate at the center of the cask with the stainless steel fuel than with the zircaloy clad fuel; a conclusion that would be overlooked by just comparing the source terms. This is an important consideration because the stainless steel clad fuel differs from the zircaloy clad in one important aspect: the stainless steel cladding will contain a significant photon source from Cobalt-60 which will be absent from the zircaloy clad fuel.

In order to eliminate the potential confusion when comparing source terms, the stainless steel clad fuel source terms were calculated with the same active fuel length as the design basis zircaloy clad fuel. Reference [5.2.2] indicates that the Cobalt-59 impurity level in steel is 800 ppm or 0.8 gm/kg. This impurity level was used for the stainless steel cladding in the source term calculations. It is assumed that the end fitting masses of the stainless steel clad fuel are the same as the end fitting masses of the zircaloy clad fuel. Therefore, separate source terms are not provided for the end fittings of the stainless steel fuel.

Tables 5.2.8, 5.2.9, 5.2.19, and 5.2.20 list the gamma and neutron source strengths for the design basis stainless steel clad fuel. It is obvious from these source terms that the neutron source strength for the stainless steel fuel is lower than for the zircaloy fuel. However, this is not true for all photon energy groups. The peak energy group is from 1.0 to 1.5 MeV, which results from the large Cobalt activation in the cladding. Since some of the source strengths are higher for the stainless steel fuel, Section 5.4.4 presents the dose rates at the center of the overpack for the stainless steel fuel. The center dose location is the only location of concern since the end fittings are assumed to be the same mass as the end fittings for the zircaloy clad fuel. In addition, the burnup is lower and the cooling time is longer for the stainless steel fuel compared to the zircaloy clad fuel.

### 5.2.4 Non-fuel Hardware

Burnable poison rod assemblies (BPRAs), thimble plug devices (TPDs), control rod assemblies (CRAs), and axial power shaping rods (APSRs) are permitted for storage in the HI-STORM 100

System as an integral part of a PWR fuel assembly. BPRAs and TPDs may be stored in any fuel location while CRAs and APSRs are restricted to the inner four fuel storage locations in the MPC-24, MPC-24E, and the MPC-32.

### 5.2.4.1 BPRAs and TPDs

Burnable poison rod assemblies (BPRA) (including wet annular burnable absorbers) and thimble plug devices (TPD) (including orifice rod assemblies, guide tube plugs, and water displacement guide tube plugs) are an integral, yet removable, part of a large portion of PWR fuel. The TPDs are not used in all assemblies in a reactor core but are reused from cycle to cycle. Therefore, these devices can achieve very high burnups. In contrast, BPRAs are burned with a fuel assembly in core and are not reused. In fact, many BPRAs are removed after one or two cycles before the fuel assembly is discharged. Therefore, the achieved burnup for BPRAs is not significantly different than fuel assemblies. Vibration suppressor inserts are considered to be in the same category as BPRAs for the purposes of the analysis in this chapter since these devices have the same configuration (long non-absorbing thimbles which extend into the active fuel region) as a BPRA without the burnable poison.

TPDs are made of stainless steel and contain a small amount of inconel. These devices extend down into the plenum region of the fuel assembly but do not extend into the active fuel region with the exception of the W 14x14 water displacement guide tube plugs. Since these devices are made of stainless steel, there is a significant amount of cobalt-60 produced during irradiation. This is the only significant radiation source from the activation of steel and inconel.

BPRAs are made of stainless steel in the region above the active fuel zone and may contain a small amount of inconel in this region. Within the active fuel zone the BPRAs may contain 2-24 rodlets which are burnable absorbers clad in either zircaloy or stainless steel. The stainless steel clad BPRAs create a significant radiation source (Co-60) while the zircaloy clad BPRAs create a negligible radiation source. Therefore the stainless steel clad BPRAs are bounding.

SAS2H and ORIGEN-S were used to calculate a radiation source term for the TPDs and BPRAs. In the ORIGEN-S calculations the cobalt-59 impurity level was conservatively assumed to be 0.8 gm/kg for stainless steel and 4.7 gm/kg for inconel. These calculations were performed by irradiating the appropriate mass of steel and inconel using the flux calculated for the design basis B&W 15x15 fuel assembly. The mass of material in the regions above the active fuel zone was scaled by the appropriate scaling factors listed in Table 5.2.10 in order to account for the reduced flux levels above the fuel assembly. The total curies of cobalt were calculated for the TPDs and BPRAs as a function of burnup and cooling time. For burnups beyond 45,000 MWD/MTU, it was assumed, for the purpose of the calculation, that the burned fuel assembly was replaced with a fresh fuel assembly every 45,000 MWD/MTU. This was achieved in ORIGEN-S by resetting the flux levels and cross sections to the 0 MWD/MTU condition after every 45,000 MWD/MTU.

Since the HI-STORM 100 cask system is designed to store many varieties of PWR fuel, a bounding TPD and BPRA had to be determined for the purposes of the analysis. This was

accomplished by analyzing all of the BPRAs and TPDs (Westinghouse and B&W 14x14 through 17x17) found in references [5.2.5] and [5.2.7] to determine the TPD and BPRA which produced the highest Cobalt-60 source term and decay heat for a specific burnup and cooling time. The bounding TPD was determined to be the Westinghouse 17x17 guide tube plug and the bounding BPRA was actually determined by combining the higher masses of the Westinghouse 17x17 and 15x15 BPRAs into a singly hypothetical BPRA. The masses of this TPD and BPRA are listed in Table 5.2.30. As mentioned above, reference [5.2.5] describes the Westinghouse 14x14 water displacement guide tube plug as having a steel portion which extends into the active fuel zone. This particular water displacement guide tube plug was analyzed and determined to be bounded by the design basis TPD and BPRA.

Once the bounding BPRA and TPD were determined, the allowable Co-60 source and decay heat from the BPRA and TPD were specified as: 50 curies Co-60 and 0.77 watts for each TPD and 895 curies Co-60 and 14.4 watts for each BPRA. Table 5.2.31 shows the curies of Co-60 that were calculated for BPRAs and TPDs in each region of the fuel assembly (e.g. incore, plenum, top). An allowable burnup and cooling time, separate from the fuel assemblies, is used for BPRAs and TPDs. These burnup and cooling times assure that the Cobalt-60 activity remains below the allowable levels specified above. It should be noted that at very high burnups, greater than 200,000 MWD/MTU the TPD Co-60 source actually decreases as the burnup continues to increase. This is due to a decrease in the Cobalt-60 production rate as the initial Cobalt-59 impurity is being depleted. Conservatively, a constant cooling time has been specified for burnups from 180,000 to 630,000 MWD/MTU for the TPDs.

Section 5.4.6 discusses the increase in the cask dose rates due to the insertion of BPRAs or TPDs into fuel assemblies.

#### 5.2.4.2 CRAs and APSRs

Control rod assemblies (CRAs) (including control element assemblies and rod cluster control assemblies) and axial power shaping rod assemblies (APSRs) are an integral portion of a PWR fuel assembly. These devices are utilized for many years ( upwards of 20 years) prior to discharge into the spent fuel pool. The manner in which the CRAs are utilized vary from plant to plant. Some utilities maintain the CRAs fully withdrawn during normal operation while others may operate with a bank of rods partially inserted (approximately 10%) during normal operation. Even when fully withdrawn, the ends of the CRAs are present in the upper portion of the fuel assembly since they are never fully removed from the fuel assembly during operation. The result of the different operating styles is a variation in the source term for the CRAs. In all cases, however, only the lower portion of the CRAs will be significantly activated. Therefore, when the CRAs are stored with the PWR fuel assembly, the activated portion of the CRAs will be in the lower portion of the cask. CRAs are fabricated of various materials. The cladding is typically stainless steel, although inconel has been used. The absorber can be a single material or a combination of materials. AgInCd is possibly the most common absorber although $B_4C$ in aluminum is used, and hafnium has also been used. AgInCd produces a noticeable source term in

the 0.3-1.0 MeV range due to the activation of Ag. The source term from the other absorbers is negligible, therefore the AgInCd CRAs are the bounding CRAs.

APSRs are used to flatten the power distribution during normal operation and as a result these devices achieve a considerably higher activation than CRAs. There are two types of B&W stainless steel clad APSRs: gray and black. According to reference [5.2.5], the black APSRs have 36 inches of AgInCd as the absorber while the gray ones use 63 inches of inconel as the absorber. Because of the cobalt-60 source from the activation of inconel, the gray APSRs produce a higher source term than the black APSRs and therefore are the bounding APSR.

Since the level of activation of CRAs and APSRs can vary, the quantity that can be stored in an MPC is being limited to four CRAs and/or APSRs. These four devices are required to be stored in the inner four locations in the MPC-24, MPC-24E, MPC-24EF, and MPC-32 as outlined in Section 2.1.9.

In order to determine the impact on the dose rates around the HI-STORM 100 System, source terms for the CRAs and APSRs were calculated using SAS2H and ORIGEN-S. In the ORIGEN-S calculations the cobalt-59 impurity level was conservatively assumed to be 0.8 gm/kg for stainless steel and 4.7 gm/kg for inconel. These calculations were performed by irradiating 1 kg of steel, inconel, and AgInCd using the flux calculated for the design basis B&W 15x15 fuel assembly. The total curies of cobalt for the steel and inconel and the 0.3-1.0 MeV source for the AgInCd were calculated as a function of burnup and cooling time to a maximum burnup of 630,000 MWD/MTU. For burnups beyond 45,000 MWD/MTU, it was assumed, for the purpose of the calculation, that the burned fuel assembly was replaced with a fresh fuel assembly every 45,000 MWD/MTU. This was achieved in ORIGEN-S by resetting the flux levels and cross sections to the 0 MWD/MTU condition after every 45,000 MWD/MTU. The sources were then scaled by the appropriate mass using the flux weighting factors for the different regions of the assembly to determine the final source term. Two different configurations were analyzed for both the CRAs and APSRs with an additional third configuration analyzed for the APSRs. The configurations, which are summarized below, are described in Tables 5.2.32 for the CRAs and Table 5.2.33 for the APSR. The masses of the materials listed in these tables were determined from a review of [5.2.5] with bounding values chosen. The masses listed in Tables 5.2.32 and 5.2.33 do not match exact values from [5.2.5] because the values in the reference were adjusted to the lengths shown in the tables.

<u>Configuration 1: CRA and APSR</u>
This configuration had the lower 15 inches of the CRA and APSR activated at full flux with two regions above the 15 inches activated at a reduced power level. This simulates a CRA or APSR which was operated at 10% insertion. The regions above the 15 inches reflect the upper portion of the fuel assembly.

Configuration 2: CRA and APSR
This configuration represents a fully removed CRA or APSR during normal core operations. The activated portion corresponds to the upper portion of a fuel assembly above the active fuel length with the appropriate flux weighting factors used.

Configuration 3: APSR
This configuration represents a fully inserted gray APSR during normal core operations. The region in full flux was assumed to be the 63 inches of the absorber.

Tables 5.2.34 and 5.2.35 present the source terms, including decay heat, that were calculated for the CRAs and APSRs respectively. The only significant source from the activation of inconel or steel is Co-60 and the only significant source from the activation of AgInCd is from 0.3-1.0 MeV. The source terms for CRAs, Table 5.2.34, were calculated for a maximum burnup of 630,000 MWD/MTU and a minimum cooling time of 5 years. Because of the significant source term in APSRs that have seen extensive in-core operations, the source term in Table 5.2.35 was calculated to be a bounding source term for a variable burnup and cooling time as outlined in Section 2.1.9. The very larger Cobalt-60 activity in configuration 3 in Table 5.2.35 is due to the assumed Cobalt-59 impurity level of 4.7 gm/kg. If this impurity level were similar to the assumed value for steel, 0.8 gm/kg, this source would decrease by approximately a factor of 5.8.

Section 5.4.6 discusses the effect on dose rate of the insertion of APSRs and CRAs into the inner four fuel assemblies in the MPC-24 or MPC-32.

### 5.2.5 Choice of Design Basis Assembly

The analysis presented in this chapter was performed to bound the fuel assembly classes listed in Tables 2.1.1 and 2.1.2. In order to perform a bounding analysis, a design basis fuel assembly must be chosen. Therefore, a fuel assembly from each fuel class was analyzed and a comparison of the neutrons/sec, photons/sec, and thermal power (watts) was performed. The fuel assembly that produced the highest source for a specified burnup, cooling time, and enrichment was chosen as the design basis fuel assembly. A separate design basis assembly was chosen for the PWR MPCs (MPC-24 and MPC-32) and the BWR MPCs (MPC-68).

#### 5.2.5.1 PWR Design Basis Assembly

Table 2.1.1 lists the PWR fuel assembly classes that were evaluated to determine the design basis PWR fuel assembly. Within each class, the fuel assembly with the highest $UO_2$ mass was analyzed. Since the variations of fuel assemblies within a class are very minor (pellet diameter, clad thickness, etc.), it is conservative to choose the assembly with the highest $UO_2$ mass. For a given class of assemblies, the one with the highest $UO_2$ mass will produce the highest radiation source because, for a given burnup (MWD/MTU) and enrichment, the highest $UO_2$ mass will have produced the most energy and therefore the most fission products.

Table 5.2.25 presents the characteristics of the fuel assemblies analyzed to determine the design

basis zircaloy clad PWR fuel assembly. The corresponding fuel assembly array class from Section 2.1.9 is also listed in the table. The fuel assembly listed for each class is the assembly with the highest $UO_2$ mass. The St. Lucie and Ft. Calhoun classes are not present in Table 5.2.25. These assemblies are shorter versions of the CE 16x16 and CE 14x14 assembly classes, respectively. Therefore, these assemblies are bounded by the CE 16x16 and CE 14x14 classes and were not explicitly analyzed. Since the Indian Point 1, Haddam Neck, and San Onofre 1 classes are stainless steel clad fuel, these classes were analyzed separately and are discussed below. All fuel assemblies in Table 5.2.25 were analyzed at the same burnup and cooling time. The initial enrichment used in the analysis is consistent with Table 5.2.24. The results of the comparison are provided in Table 5.2.27. These results indicate that the B&W 15x15 fuel assembly has the highest radiation source term of the zircaloy clad fuel assembly classes considered in Table 2.1.1. This fuel assembly also has the highest $UO_2$ mass (see Table 5.2.25) which confirms that, for a given initial enrichment, burnup, and cooling time, the assembly with the highest $UO_2$ mass produces the highest radiation source term. The power/assembly values used in Table 5.2.25 were calculated by dividing 110% of the thermal power for commercial PWR reactors using that array class by the number of assemblies in the core. The higher thermal power, 110%, was used to account for potential power uprates. The power level used for the B&W15 is an additional 17% higher for consistency with previous revisions of the FSAR which also used this assembly as the design basis assembly.

The Haddam Neck and San Onofre 1 classes are shorter stainless steel clad versions of the WE 15x15 and WE 14x14 classes, respectively. Since these assemblies have stainless steel clad, they were analyzed separately as discussed in Section 5.2.3. Based on the results in Table 5.2.27, which show that the WE 15x15 assembly class has a higher source term than the WE 14x14 assembly class, the Haddam Neck, WE 15x15, fuel assembly was analyzed as the bounding PWR stainless steel clad fuel assembly. The Indian Point 1 fuel assembly is a unique 14x14 design with a smaller mass of fuel and clad than the WE14x14. Therefore, it is also bounded by the WE 15x15 stainless steel fuel assembly.

As discussed below in Section 5.2.5.3, the allowable burnup limits in Section 2.1.9 were calculated for different array classes rather than using the design basis assembly to calculate the allowable burnups for all array classes. As mentioned above, the design basis assembly has the highest neutron and gamma source term of the various array classes for the same burnup and cooling time. In order to account for the fact that different array classes have different allowable burnups for the same cooling time, burnups which bound the 14x14A array class were used with the design basis assembly for the analysis in this chapter because those burnups bound the burnups from all other PWR array classes. This approach assures that the calculated source terms and dose rates will be conservative.

#### 5.2.5.2 BWR Design Basis Assembly

Table 2.1.2 lists the BWR fuel assembly classes that were evaluated to determine the design basis BWR fuel assembly. Since there are minor differences between the array types in the GE BWR/2-3 and GE BWR/4-6 assembly classes, these assembly classes were not considered

individually but rather as a single class. Within that class, the array types, 7x7, 8x8, 9x9, and 10x10 were analyzed to determine the bounding BWR fuel assembly. Since the Humboldt Bay 7x7 and Dresden 1 8x8 are smaller versions of the 7x7 and 8x8 assemblies they are bounded by the 7x7 and 8x8 assemblies in the GE BWR/2-3 and GE BWR/4-6 classes. Within each array type, the fuel assembly with the highest $UO_2$ mass was analyzed. Since the variations of fuel assemblies within an array type are very minor, it is conservative to choose the assembly with the highest $UO_2$ mass. For a given array type of assemblies, the one with the highest $UO_2$ mass will produce the highest radiation source because, for a given burnup (MWD/MTU) and enrichment, it will have produced the most energy and therefore the most fission products. The Humboldt Bay 6x6, Dresden 1 6x6, and LaCrosse assembly classes were not considered in the determination of the bounding fuel assembly. However, these assemblies were analyzed explicitly as discussed below.

Table 5.2.26 presents the characteristics of the fuel assemblies analyzed to determine the design basis zircaloy clad BWR fuel assembly. The corresponding fuel assembly array class from Section 2.1.9 is also listed in the table. The fuel assembly listed for each array type is the assembly that has the highest $UO_2$ mass. All fuel assemblies in Table 5.2.26 were analyzed at the same burnup and cooling time. The initial enrichment used in these analyses is consistent with Table 5.2.24. The results of the comparison are provided in Table 5.2.28. These results indicate that the 7x7 fuel assembly has the highest radiation source term of the zircaloy clad fuel assembly classes considered in Table 2.1.2. This fuel assembly also has the highest $UO_2$ mass which confirms that, for a given initial enrichment, burnup, and cooling time, the assembly with the highest $UO_2$ mass produces the highest radiation source term. According to Reference [5.2.6], the last discharge of a 7x7 assembly was in 1985 and the maximum average burnup for a 7x7 during their operation was 29,000 MWD/MTU. This clearly indicates that the existing 7x7 assemblies have an average burnup and minimum cooling time that is well within the burnup and cooling time limits in Section 2.1.9. Therefore, the 7x7 assembly has never reached the burnup level analyzed in this chapter. However, in the interest of conservatism the 7x7 was chosen as the bounding fuel assembly array type. The power/assembly values used in Table 5.2.26 were calculated by dividing 120% of the thermal power for commercial BWR reactors by the number of assemblies in the core. The higher thermal power, 120%, was used to account for potential power uprates. The power level used for the 7x7 is an additional 4% higher for consistency with previous revisions of the FSAR which also used this assembly as the design basis assembly.

Since the LaCrosse fuel assembly type is a stainless steel clad 10x10 assembly it was analyzed separately. The maximum burnup and minimum cooling time for this assembly are limited to 22,500 MWD/MTU and 10-year cooling as specified in Section 2.1.9. This assembly type is discussed further in Section 5.2.3.

The Humboldt Bay 6x6 and Dresden 1 6x6 fuel are older and shorter fuel than the other array types analyzed and therefore are considered separately. The Dresden 1 6x6 was chosen as the design basis fuel assembly for the Humboldt Bay 6x6 and Dresden 1 6x6 fuel assembly classes because it has the higher $UO_2$ mass. Dresden 1 also contains a few 6x6 MOX fuel assemblies, which were explicitly analyzed as well.

Reference [5.2.6] indicates that the Dresden 1 6x6 fuel assembly has a higher $UO_2$ mass than the Dresden 1 8x8 or the Humboldt Bay fuel (6x6 and 7x7). Therefore, the Dresden 1 6x6 fuel assembly was also chosen as the bounding assembly for damaged fuel and fuel debris for the Humboldt Bay and Dresden 1 fuel assembly classes.

Since the design basis 6x6 fuel assembly can be intact or damaged, the analysis presented in Section 5.4.2 for the damaged 6x6 fuel assembly also demonstrates the acceptability of storing intact 6x6 fuel assemblies from the Dresden 1 and Humboldt Bay fuel assembly classes.

As discussed below in Section 5.2.5.3, the allowable burnup limits in Section 2.1.9 were calculated for different array classes rather than using the design basis assembly to calculate the allowable burnups for all array classes. As mentioned above, the design basis assembly has the highest neutron and gamma source term of the various array classes for the same burnup and cooling time. In order to account for the fact that different array classes have different allowable burnups for the same cooling time, burnups which bound the 9x9G array class were used with the design basis assembly for the analysis in this chapter because those burnups bound the burnups from all other BWR array classes. This approach assures that the calculated source terms and dose rates will be conservative.

### 5.2.5.3 Decay Heat Loads and Allowable Burnup and Cooling Times

Section 2.1.6 describes the calculation of the MPC maximum decay heat limits per assembly. These limits, which differ for uniform and regionalized loading, are presented in Section 2.1.9. The allowable burnup and cooling time limits are derived based on the allowable decay heat limits. Since the decay heat of an assembly will vary slightly with enrichment for a fixed burnup and cooling time, an equation is used to represent burnup as a function of decay heat and enrichment. This equation is of the form:

$$B_u = A * q + B * q^2 + C * q^3 + D * E_{235}{}^2 + E * E_{235} * q + F * E_{235} * q^2 + G$$

where:
$B_u$ = Burnup in MWD/MTU
q = assembly decay heat (kW)
$E_{235}$ = wt.% $^{235}U$

The coefficients for this equation were developed by fitting ORIGEN-S calculated data for a specific cooling time using GNUPLOT [5.2.16]. ORIGEN-S calculations were performed for enrichments ranging from 0.7 to 5.0 wt.% $^{235}U$ and burnups from 10,000 to 65,000 MWD/MTU for BWRs and 10,000 to 70,000 MWD/MTU for PWRs. The burnups were increased in 2,500 MWD/MTU increments. Using the ORIGEN-S data, the coefficients A through G were determined and then the constant, G, was adjusted so that all data points were bounded (i.e. calculated burnup less than or equal to ORIGEN-S value) by the fit. The coefficients were calculated using ORIGEN-S data for cooling times from 3 years to 20 years. As a result, Section

2.1.9 provides different equation coefficients for each cooling time from 3 to 20 years. Additional discussion on the determination of the equation coefficients is provided in Appendix 5.F. Since the decay heat increases as the enrichment decreases, the allowable burnup will decrease as the enrichment decreases. Therefore, the enrichment used to calculated the allowable burnups becomes a minimum enrichment value and assemblies with an enrichment higher than the value used in the equation are acceptable for storage assuming they also meet the corresponding burnup and decay heat requirements.

Different array classes or combinations of classes were analyzed separately to determine the allowable burnup as a function of cooling time for the specified allowable decay heat limits. Calculating allowable burnups for individual array classes is appropriate because even two assemblies with the same MTU may have a different allowable burnup for the same allowable cooling time and permissible decay heat. The heavy metal mass specified in Table 5.2.25 and 5.2.26 and Section 2.1.9 for the various array classes is the value that was used in the determination of the coefficients as a function of cooling time and is the maximum for the respective assembly class. Equation coefficients for each array class listed in Tables 5.2.25 and 5.2.26 were developed. In the end, the equation for the 17x17B and 17x17C array classes resulted in almost identical burnups. Therefore, in Section 2.1.9 these array classes were combined and the coefficients for the 17x17C array class were used since these coefficients produce slightly lower allowable burnups.

There is some uncertainty associated with the ORIGEN-S calculations due to uncertainty in the physics data (e.g. cross sections, decay constants, etc.) and the modeling techniques. To estimate this uncertainty, an approach similar to the one in Reference [5.2.14] was used. As a result, the potential error in the ORIGEN-S decay heat calculations was estimated to be in the range of 3.5 to 5.5% at 3 year cooling time and 1.5 to 3.5% at 20 year cooling. The difference is due to the change in isotopes important to decay heat as a function of cooling time. In order to be conservative in the derivation of the coefficients for the burnup equation, a 5% decay heat penalty was applied for the BWR array classes. A penalty was not applied to the PWR array classes since the thermal analysis in Chapter 4 has more than a 5% margin in the calculated allowable decay heat.

As a demonstration that the decay heat values used to determine the allowable burnups are conservative, a comparison between these calculated decay heats and the decay heats reported in Reference [5.2.7] are presented in Table 5.2.29. This comparison is made for a burnup of 30,000 MWD/MTU and a cooling time of 5 years. The burnup was chosen based on the limited burnup data available in Reference [5.2.7].

As mentioned above, the fuel assembly burnup and cooling times in Section 2.1.9 were calculated using the decay heat limits which are also stipulated in Section 2.1.9. The burnup and cooling times for the non-fuel hardware, in Section 2.1.9, were chosen based on the radiation source term calculations discussed previously. The fuel assembly burnup, decay heat, and enrichment equations were derived without consideration for the decay heat from BPRAs, TPDs,

CRAs, or APSRs. This is acceptable since the user of the HI-STORM 100 system is required to demonstrate compliance with the assembly decay heat limits in Section 2.1.9 regardless of the heat source (assembly or non-fuel hardware) and the actual decay heat from the non-fuel hardware is expected to be minimal. In addition, the shielding analysis presented in this chapter conservatively calculates the dose rates using both the burnup and cooling times for the fuel assemblies and non-fuel hardware. Therefore, the safety of the HI-STORM 100 system is guaranteed through the bounding analysis in this chapter, represented by the burnup and cooling time limits in the CoC, and the bounding thermal analysis in Chapter 4, represented by the decay heat limits in the CoC.

### 5.2.6 Thoria Rod Canister

Dresden Unit 1 has a single DFC containing 18 thoria rods which have obtained a relatively low burnup, 16,000 MWD/MTU. These rods were removed from two 8x8 fuel assemblies which contained 9 rods each. The irradiation of thorium produces an isotope which is not commonly found in depleted uranium fuel. Th-232 when irradiated produces U-233. The U-233 can undergo an (n,2n) reaction which produces U-232. The U-232 decays to produce Tl-208 which produces a 2.6 MeV gamma during Beta decay. This results in a significant source in the 2.5-3.0 MeV range which is not commonly present in depleted uranium fuel. Therefore, this single DFC container was analyzed to determine if it was bounded by the current shielding analysis.

A radiation source term was calculated for the 18 thoria rods using SAS2H and ORIGEN-S for a burnup of 16,000 MWD/MTU and a cooling time of 18 years. Table 5.2.36 describes the 8x8 fuel assembly that contains the thoria rods. Table 5.2.37 and 5.2.38 show the gamma and neutron source terms, respectively, that were calculated for the 18 thoria rods in the thoria rod canister. Comparing these source terms to the design basis 6x6 source terms for Dresden Unit 1 fuel in Tables 5.2.7 and 5.2.18 clearly indicates that the design basis source terms bound the thoria rods source terms in all neutron groups and in all gamma groups except the 2.5-3.0 MeV group. As mentioned above, the thoria rods have a significant source in this energy range due to the decay of Tl-208.

Section 5.4.8 provides a further discussion of the thoria rod canister and its acceptability for storage in the HI-STORM 100 System.

### 5.2.7 Fuel Assembly Neutron Sources

Neutron sources are used in reactors during initial startup of reactor cores. There a different types of neutron sources (e.g. californium, americium-beryllium, plutonium-beryllium, antimony-beryllium). These neutron sources are typically inserted into the water rod of a fuel assembly and are usually removable.

Dresden Unit 1 has a few antimony-beryllium neutron sources. These sources have been analyzed in Section 5.4.7 to demonstrate that they are acceptable for storage in the HI-STORM

100 System. Currently these are the only neutron source permitted for storage in the HI-STORM 100 System.

### 5.2.8 Stainless Steel Channels

The LaCrosse nuclear plant used two types of channels for their BWR assemblies: stainless steel and zircaloy. Since the irradiation of zircaloy does not produce significant activation, there are no restrictions on the storage of these channels and they are not explicitly analyzed in this chapter. The stainless steel channels, however, can produce a significant amount of activation, predominantly from Co-60. LaCrosse has thirty-two stainless steel channels, a few of which, have been in the reactor core for, approximately, the lifetime of the plant. Therefore, the activation of the stainless steel channels was conservatively calculated to demonstrate that they are acceptable for storage in the HI-STORM 100 system. For conservatism, the number of stainless steel channels in an MPC-68 is being limited to sixteen and Section 2.1.9 requires that these channels be stored in the inner sixteen locations.

The activation of a single stainless steel channel was calculated by simulating the irradiation of the channels with ORIGEN-S using the flux calculated from the LaCrosse fuel assembly. The mass of the steel channel in the active fuel zone (83 inches) was used in the analysis. For burnups beyond 22,500 MWD/MTU, it was assumed, for the purpose of the calculation, that the burned fuel assembly was replaced with a fresh fuel assembly every 22,500 MWD/MTU. This was achieved in ORIGEN-S by resetting the flux levels and cross sections to the 0 MWD/MTU condition after every 22,500 MWD/MTU.

LaCrosse was commercially operated from November 1969 until it was shutdown in April 1987. Therefore, the shortest cooling time for the assemblies and the channels is 13 years. Assuming the plant operated continually from 11/69 until 4/87, approximately 17.5 years or 6388 days, the accumulated burnup for the channels would be 186,000 MWD/MTU (6388 days times 29.17 MW/MTU from Table 5.2.3). Therefore, the cobalt activity calculated for a single stainless steel channel irradiated for 180,000 MWD/MTU was calculated to be 667 curies of Co-60 for 13 years cooling. This is equivalent to a source of 4.94E+13 photons/sec in the energy range of 1.0-1.5 MeV.

In order to demonstrate that sixteen stainless steel channels are acceptable for storage in an MPC-68, a comparison of source terms is performed. Table 5.2.8 indicates that the source term for the LaCrosse design basis fuel assembly in the 1.0-1.5 MeV range is 6.34E+13 photons/sec for 10 years cooling, assuming a 144 inch active fuel length. This is equivalent to 4.31E+15 photons/sec/cask. At 13 years cooling, the fuel source term in that energy range decreases to 4.31E+13 photons/sec which is equivalent to 2.93E+15 photons/sec/cask. If the source term from the stainless steel channels is scaled to 144 inches and added to the 13 year fuel source term the result is 4.30E+15 photons/sec/cask (2.93E+15 photons/sec/cask + 4.94E+13 photons/sec/channel x 144 inch/83 inch x 16 channels/cask). This number is equivalent to the 10 year 4.31E+15 photons/sec/cask source calculated from Table 5.2.8 and used in the shielding

analysis in this chapter. Therefore, it is concluded that the storage of 16 stainless steel channels in an MPC-68 is acceptable.

Table 5.2.1

DESCRIPTION OF DESIGN BASIS ZIRCALOY CLAD FUEL

| | **PWR** | **BWR** |
|---|---|---|
| Assembly type/class | B&W 15×15 | GE 7×7 |
| Active fuel length (in.) | 144 | 144 |
| No. of fuel rods | 208 | 49 |
| Rod pitch (in.) | 0.568 | 0.738 |
| Cladding material | Zircaloy-4 | Zircaloy-2 |
| Rod diameter (in.) | 0.428 | 0.570 |
| Cladding thickness (in.) | 0.0230 | 0.0355 |
| Pellet diameter (in.) | 0.3742 | 0.488 |
| Pellet material | $UO_2$ | $UO_2$ |
| Pellet density (gm/cc) | 10.412 (95% of theoretical) | 10.412 (95% of theoretical) |
| Enrichment (w/o $^{235}U$) | 3.6 | 3.2 |
| | | |
| | | |
| Specific power (MW/MTU) | 40 | 30 |
| Weight of $UO_2$ (kg)[††] | 562.029 | 225.177 |
| Weight of U (kg)[††] | 495.485 | 198.516 |

Notes:

1. The B&W 15x15 is the design basis assembly for the following fuel assembly classes listed in Table 2.1.1: B&W 15x15, B&W 17x17, CE 14x14, CE 16x16, WE 14x14, WE 15x15, WE 17x17, St. Lucie, and Ft. Calhoun.
2. The GE 7x7 is the design basis assembly for the following fuel assembly classes listed in Table 2.1.2: GE BWR/2-3, GE BWR/4-6, Humboldt Bay 7x7, and Dresden 1 8x8.

[††] Derived from parameters in this table.

Table 5.2.1 (continued)

DESCRIPTION OF DESIGN BASIS FUEL

| | **PWR** | **BWR** |
|---|---|---|
| No. of Water Rods | 17 | 0 |
| Water Rod O.D. (in.) | 0.53 | N/A |
| Water Rod Thickness (in.) | 0.016 | N/A |
| Lower End Fitting (kg) | 8.16 (steel)<br>1.3 (inconel) | 4.8 (steel) |
| Gas Plenum Springs (kg) | 0.48428 (inconel)<br>0.23748 (steel) | 1.1 (steel) |
| Gas Plenum Spacer (kg) | 0.82824 | N/A |
| Expansion Springs (kg) | N/A | 0.4 (steel) |
| Upper End Fitting (kg) | 9.28 (steel) | 2.0 (steel) |
| Handle (kg) | N/A | 0.5 (steel) |
| Incore Grid Spacers (kg) | 4.9 (inconel) | 0.33 (inconel springs) |

HOLTEC INTERNATIONAL COPYRIGHTED MATERIAL

Table 5.2.2

DESCRIPTION OF DESIGN BASIS GE 6x6 ZIRCALOY CLAD FUEL

| | **BWR** |
|---|---|
| Fuel type | GE 6x6 |
| Active fuel length (in.) | 110 |
| No. of fuel rods | 36 |
| Rod pitch (in.) | 0.694 |
| Cladding material | Zircaloy-2 |
| Rod diameter (in.) | 0.5645 |
| Cladding thickness (in.) | 0.035 |
| Pellet diameter (in.) | 0.494 |
| Pellet material | $UO_2$ |
| Pellet density (gm/cc) | 10.412 (95% of theoretical) |
| Enrichment (w/o $^{235}U$) | 2.24 |
| Burnup (MWD/MTU) | 30,000 |
| Cooling Time (years) | 18 |
| Specific power (MW/MTU) | 16.5 |
| Weight of $UO_2$ (kg)† | 129.5 |
| Weight of U (kg)† | 114.2 |

Notes:

1. The 6x6 is the design basis damaged fuel assembly for the Humboldt Bay (all array types) and the Dresden 1 (all array types) damaged fuel assembly classes. It is also the design basis fuel assembly for the intact Humboldt Bay 6x6 and Dresden 1 6x6 fuel assembly classes.
2. This design basis damaged fuel assembly is also the design basis fuel assembly for fuel debris.

† Derived from parameters in this table.

Table 5.2.3

DESCRIPTION OF DESIGN BASIS STAINLESS STEEL CLAD FUEL

| | **PWR** | **BWR** |
|---|---|---|
| Fuel type | WE 15x15 | LaCrosse 10x10 |
| Active fuel length (in.) | 144 | 144 |
| No. of fuel rods | 204 | 100 |
| Rod pitch (in.) | 0.563 | 0.565 |
| Cladding material | 304 SS | 348H SS |
| Rod diameter (in.) | 0.422 | 0.396 |
| Cladding thickness (in.) | 0.0165 | 0.02 |
| Pellet diameter (in.) | 0.3825 | 0.35 |
| Pellet material | $UO_2$ | $UO_2$ |
| Pellet density (gm/cc) | 10.412 (95% of theoretical) | 10.412 (95% of theoretical) |
| Enrichment (w/o $^{235}U$) | 3.5 | 3.5 |
| Burnup (MWD/MTU)† | 40,000 (MPC-24 and 32) | 22,500 (MPC-68) |
| Cooling Time (years)† | 8 (MPC-24), 9 (MPC-32) | 10 (MPC-68) |
| Specific power (MW/MTU) | 37.96 | 29.17 |
| No. of Water Rods | 21 | 0 |
| Water Rod O.D. (in.) | 0.546 | N/A |
| Water Rod Thickness (in.) | 0.017 | N/A |

Notes:
1. The WE 15x15 is the design basis assembly for the following fuel assembly classes listed in Table 2.1.1: Indian Point 1, Haddam Neck, and San Onofre 1.
2. The LaCrosse 10x10 is the design basis assembly for the following fuel assembly class listed in Table 2.1.2: LaCrosse.

† Burnup and cooling time combinations are equivalent to or conservatively bound the limits in Section 2.1.9.

Table 5.2.4

CALCULATED MPC-32 PWR FUEL GAMMA SOURCE PER ASSEMBLY
FOR DESIGN BASIS ZIRCALOY CLAD FUEL
FOR VARYING BURNUPS AND COOLING TIMES

| **Lower Energy** | **Upper Energy** | **35,000 MWD/MTU 3 Year Cooling** | | **75,000 MWD/MTU 8 Year Cooling** | |
|---|---|---|---|---|---|
| (MeV) | (MeV) | (MeV/s) | (Photons/s) | (MeV/s) | (Photons/s) |
| 0.45 | 0.7 | 2.30E+15 | 4.00E+15 | 2.52E+15 | 4.39E+15 |
| 0.7 | 1.0 | 9.62E+14 | 1.13E+15 | 5.41E+14 | 6.36E+14 |
| 1.0 | 1.5 | 2.18E+14 | 1.75E+14 | 1.66E+14 | 1.33E+14 |
| 1.5 | 2.0 | 2.45E+13 | 1.40E+13 | 7.51E+12 | 4.29E+12 |
| 2.0 | 2.5 | 3.57E+13 | 1.59E+13 | 6.94E+11 | 3.08E+11 |
| 2.5 | 3.0 | 9.59E+11 | 3.49E+11 | 4.99E+10 | 1.81E+10 |
| Total | | 3.54E+15 | 5.34E+15 | 3.24E+15 | 5.16E+15 |

HOLTEC INTERNATIONAL COPYRIGHTED MATERIAL

Table 5.2.5

CALCULATED MPC-24 PWR FUEL GAMMA SOURCE PER ASSEMBLY
FOR DESIGN BASIS ZIRCALOY CLAD FUEL
FOR VARYING BURNUPS AND COOLING TIMES

| **Lower Energy** | **Upper Energy** | **46,000 MWD/MTU 3 Year Cooling** | | **47,500 MWD/MTU 3 Year Cooling** | | **75,000 MWD/MTU 5 Year Cooling** | |
|---|---|---|---|---|---|---|---|
| (MeV) | (MeV) | (MeV/s) | (Photons/s) | (MeV/s) | (Photons/s) | (MeV/s) | (Photons/s) |
| 0.45 | 0.7 | 3.14E+15 | 5.45E+15 | 3.25E+15 | 5.65E+15 | 3.55E+15 | 6.17E+15 |
| 0.7 | 1.0 | 1.43E+15 | 1.68E+15 | 1.49E+15 | 1.75E+15 | 1.36E+15 | 1.60E+15 |
| 1.0 | 1.5 | 3.07E+14 | 2.46E+14 | 3.17E+14 | 2.53E+14 | 2.94E+14 | 2.35E+14 |
| 1.5 | 2.0 | 2.97E+13 | 1.70E+13 | 3.03E+13 | 1.73E+13 | 1.50E+13 | 8.59E+12 |
| 2.0 | 2.5 | 3.80E+13 | 1.69E+13 | 3.83E+13 | 1.70E+13 | 7.63E+12 | 3.39E+12 |
| 2.5 | 3.0 | 1.16E+12 | 4.22E+11 | 1.19E+12 | 4.33E+11 | 3.72E+11 | 1.35E+11 |
| Total | | 4.94E+15 | 7.42E+15 | 5.12E+15 | 7.69E+15 | 5.23E+15 | 8.02E+15 |

HOLTEC INTERNATIONAL COPYRIGHTED MATERIAL

Table 5.2.6

CALCULATED MPC-68 BWR FUEL GAMMA SOURCE PER ASSEMBLY
FOR DESIGN BASIS ZIRCALOY CLAD FUEL
FOR VARYING BURNUPS AND COOLING TIMES

| **Lower Energy** | **Upper Energy** | **39,000 MWD/MTU 3 Year Cooling** | | **40,000 MWD/MTU 3 Year Cooling** | | **70,000 MWD/MTU 6 Year Cooling** | |
|---|---|---|---|---|---|---|---|
| (MeV) | (MeV) | (MeV/s) | (Photons/s) | (MeV/s) | (Photons/s) | (MeV/s) | (Photons/s) |
| 0.45 | 0.7 | 1.00E+15 | 1.74E+15 | 1.02E+15 | 1.78E+15 | 1.10E+15 | 1.91E+15 |
| 0.7 | 1.0 | 4.25E+14 | 4.99E+14 | 4.37E+14 | 5.14E+14 | 3.21E+14 | 3.78E+14 |
| 1.0 | 1.5 | 9.18E+13 | 7.35E+13 | 9.40E+13 | 7.52E+13 | 7.67E+13 | 6.13E+13 |
| 1.5 | 2.0 | 9.19E+12 | 5.25E+12 | 9.27E+12 | 5.30E+12 | 3.55E+12 | 2.03E+12 |
| 2.0 | 2.5 | 1.17E+13 | 5.18E+12 | 1.17E+13 | 5.21E+12 | 1.03E+12 | 4.57E+11 |
| 2.5 | 3.0 | 3.69E+11 | 1.34E+11 | 3.70E+11 | 1.35E+11 | 5.83E+10 | 2.12E+10 |
| Total | | 1.54E+15 | 2.32E+15 | 1.58E+15 | 2.38E+15 | 1.50E+15 | 2.35E+15 |

HOLTEC INTERNATIONAL COPYRIGHTED MATERIAL

Table 5.2.7

CALCULATED MPC-68 BWR FUEL GAMMA SOURCE PER ASSEMBLY
FOR DESIGN BASIS ZIRCALOY CLAD GE 6x6 FUEL

| **Lower Energy** | **Upper Energy** | **30,000 MWD/MTU 18-Year Cooling** | |
|---|---|---|---|
| (MeV) | (MeV) | (MeV/s) | (Photons/s) |
| 4.5e-01 | 7.0e-01 | 1.53e+14 | 2.65e+14 |
| 7.0e-01 | 1.0 | 3.97e+12 | 4.67e+12 |
| 1.0 | 1.5 | 3.67e+12 | 2.94e+12 |
| 1.5 | 2.0 | 2.20e+11 | 1.26e+11 |
| 2.0 | 2.5 | 1.35e+09 | 5.99e+08 |
| 2.5 | 3.0 | 7.30e+07 | 2.66e+07 |
| Totals | | 1.61e+14 | 2.73e+14 |

Table 5.2.8

CALCULATED BWR FUEL GAMMA SOURCE PER ASSEMBLY
FOR STAINLESS STEEL CLAD FUEL

| **Lower Energy** | **Upper Energy** | **22,500 MWD/MTU 10-Year Cooling** | |
|---|---|---|---|
| (MeV) | (MeV) | (MeV/s) | (Photons/s) |
| 4.5e-01 | 7.0e-01 | 2.72e+14 | 4.74+14 |
| 7.0e-01 | 1.0 | 1.97e+13 | 2.31e+13 |
| 1.0 | 1.5 | 7.93e+13 | 6.34e+13 |
| 1.5 | 2.0 | 4.52e+11 | 2.58e+11 |
| 2.0 | 2.5 | 3.28e+10 | 1.46e+10 |
| 2.5 | 3.0 | 1.69e+9 | 6.14e+8 |
| Totals | | 3.72e+14 | 5.61e+14 |

Note: These source terms were calculated for a 144-inch fuel length. The limits in Section 2.1.9 are based on the actual 83-inch active fuel length.

Table 5.2.9

CALCULATED PWR FUEL GAMMA SOURCE PER ASSEMBLY
FOR STAINLESS STEEL CLAD FUEL

| **Lower Energy** | **Upper Energy** | **40,000 MWD/MTU 8-Year Cooling** | | **40,000 MWD/MTU 9-Year Cooling** | |
|---|---|---|---|---|---|
| (MeV) | (MeV) | (MeV/s) | (Photons/s) | (MeV/s) | (Photons/s) |
| 4.5e-01 | 7.0e-01 | 1.37e+15 | 2.38e+15 | 1.28E+15 | 2.22E+15 |
| 7.0e-01 | 1.0 | 2.47e+14 | 2.91e+14 | 1.86E+14 | 2.19E+14 |
| 1.0 | 1.5 | 4.59e+14 | 3.67e+14 | 4.02E+14 | 3.21E+14 |
| 1.5 | 2.0 | 3.99e+12 | 2.28e+12 | 3.46E+12 | 1.98E+12 |
| 2.0 | 2.5 | 5.85e+11 | 2.60e+11 | 2.69E+11 | 1.20E+11 |
| 2.5 | 3.0 | 3.44e+10 | 1.25e+10 | 1.77E+10 | 6.44E+09 |
| Totals | | 2.08e+15 | 3.04e+15 | 1.87E+15 | 2.76E+15 |

Note: These source terms were calculated for a 144-inch fuel length. The limits in Section 2.1.9 are based on the actual 122-inch active fuel length.

Table 5.2.10

SCALING FACTORS USED IN CALCULATING THE $^{60}$Co SOURCE

| **Region** | **PWR** | **BWR** |
|---|---|---|
| Handle | N/A | 0.05 |
| Upper End Fitting | 0.1 | 0.1 |
| Gas Plenum Spacer | 0.1 | N/A |
| Expansion Springs | N/A | 0.1 |
| Gas Plenum Springs | 0.2 | 0.2 |
| Incore Grid Spacer | 1.0 | 1.0 |
| Lower End Fitting | 0.2 | 0.15 |

Table 5.2.11

CALCULATED MPC-32 $^{60}$Co SOURCE PER ASSEMBLY FOR DESIGN BASIS ZIRCALOY CLAD FUEL
AT DESIGN BASIS BURNUP AND COOLING TIME

| **Location** | **35,000 MWD/MTU and 3-Year Cooling (curies)** | **75,000 MWD/MTU and 8-Year Cooling (curies)** |
|---|---|---|
| Lower End Fitting | 184.28 | 147.77 |
| Gas Plenum Springs | 14.06 | 11.27 |
| Gas Plenum Spacer | 8.07 | 6.47 |
| Expansion Springs | N/A | N/A |
| Incore Grid Spacers | 477.26 | 382.69 |
| Upper End Fitting | 90.39 | 72.48 |
| Handle | N/A | N/A |

Table 5.2.12

CALCULATED MPC-24 $^{60}$Co SOURCE PER ASSEMBLY FOR DESIGN BASIS ZIRCALOY CLAD FUEL AT DESIGN BASIS BURNUP AND COOLING TIME

| **Location** | **46,000 MWD/MTU and 3-Year Cooling (curies)** | **47,500 MWD/MTU and 3-Year Cooling (curies)** | **75,000 MWD/MTU and - 5 Year Cooling (curies)** |
|---|---|---|---|
| Lower End Fitting | 221.36 | 227.04 | 219.47 |
| Gas Plenum Springs | 16.89 | 17.32 | 16.74 |
| Gas Plenum Spacer | 9.69 | 9.94 | 9.61 |
| Expansion Springs | N/A | N/A | N/A |
| Incore Grid Spacers | 573.30 | 588.00 | 568.40 |
| Upper End Fitting | 108.58 | 111.36 | 107.65 |
| Handle | N/A | N/A | N/A |

Table 5.2.13

CALCULATED MPC-68 $^{60}$Co SOURCE PER ASSEMBLY FOR DESIGN BASIS ZIRCALOY CLAD FUEL AT DESIGN BASIS BURNUP AND COOLING TIME

| **Location** | **39,000 MWD/MTU and 3-Year Cooling (curies)** | **40,000 MWD/MTU and 3-Year Cooling (curies)** | **70,000 MWD/MTU and 6-Year Cooling (curies)** |
|---|---|---|---|
| Lower End Fitting | 82.47 | 82.69 | 68.73 |
| Gas Plenum Springs | 25.20 | 25.27 | 21.00 |
| Gas Plenum Spacer | N/A | N/A | N/A |
| Expansion Springs | 4.58 | 4.59 | 3.82 |
| Grid Spacer Springs | 37.80 | 37.90 | 31.50 |
| Upper End Fitting | 22.91 | 22.97 | 19.09 |
| Handle | 2.86 | 2.87 | 2.39 |

Table 5.2.14

THIS TABLE INTENTIONALLY DELETED

Table 5.2.15

CALCULATED MPC-32 PWR NEUTRON SOURCE PER ASSEMBLY
FOR DESIGN BASIS ZIRCALOY CLAD FUEL
FOR VARYING BURNUPS AND COOLING TIMES

| **Lower Energy (MeV)** | **Upper Energy (MeV)** | **35,000 MWD/MTU 3-Year Cooling (Neutrons/s)** | **75,000 MWD/MTU 8-Year Cooling (Neutrons/s)** |
|---|---|---|---|
| 1.0e-01 | 4.0e-01 | 7.80E+06 | 5.97E+07 |
| 4.0e-01 | 9.0e-01 | 3.99E+07 | 3.05E+08 |
| 9.0e-01 | 1.4 | 3.65E+07 | 2.79E+08 |
| 1.4 | 1.85 | 2.70E+07 | 2.05E+08 |
| 1.85 | 3.0 | 4.79E+07 | 3.61E+08 |
| 3.0 | 6.43 | 4.33E+07 | 3.29E+08 |
| 6.43 | 20.0 | 3.82E+06 | 2.92E+07 |
| Totals | | 2.06E+08 | 1.57E+09 |

Table 5.2.16

CALCULATED MPC-24 PWR NEUTRON SOURCE PER ASSEMBLY
FOR DESIGN BASIS ZIRCALOY CLAD FUEL
FOR VARYING BURNUPS AND COOLING TIMES

| **Lower Energy (MeV)** | **Upper Energy (MeV)** | **46,000 MWD/MTU 3-Year Cooling (Neutrons/s)** | **47,500 MWD/MTU 3-Year Cooling (Neutrons/s)** | **75,000 MWD/MTU 5-Year Cooling (Neutrons/s)** |
|---|---|---|---|---|
| 1.0e-01 | 4.0e-01 | 1.96E+07 | 2.19E+07 | 6.82E+07 |
| 4.0e-01 | 9.0e-01 | 1.00E+08 | 1.12E+08 | 3.48E+08 |
| 9.0e-01 | 1.4 | 9.16E+07 | 1.02E+08 | 3.18E+08 |
| 1.4 | 1.85 | 6.75E+07 | 7.54E+07 | 2.34E+08 |
| 1.85 | 3.0 | 1.19E+08 | 1.33E+08 | 4.11E+08 |
| 3.0 | 6.43 | 1.08E+08 | 1.21E+08 | 3.75E+08 |
| 6.43 | 20.0 | 9.60E+06 | 1.07E+07 | 3.34E+07 |
| Totals | | 5.16E+08 | 5.76E+08 | 1.79E+09 |

Table 5.2.17

CALCULATED MPC-68 BWR NEUTRON SOURCE PER ASSEMBLY
FOR DESIGN BASIS ZIRCALOY CLAD FUEL
FOR VARYING BURNUPS AND COOLING TIMES

| **Lower Energy (MeV)** | **Upper Energy (MeV)** | **39,000 MWD/MTU 3-Year Cooling (Neutrons/s)** | **40,000 MWD/MTU 3-Year Cooling (Neutrons/s)** | **70,000 MWD/MTU 6-Year Cooling (Neutrons/s)** |
|---|---|---|---|---|
| 1.0e-01 | 4.0e-01 | 5.22E+06 | 5.45E+06 | 1.98E+07 |
| 4.0e-01 | 9.0e-01 | 2.67E+07 | 2.78E+07 | 1.01E+08 |
| 9.0e-01 | 1.4 | 2.44E+07 | 2.55E+07 | 9.26E+07 |
| 1.4 | 1.85 | 1.80E+07 | 1.88E+07 | 6.81E+07 |
| 1.85 | 3.0 | 3.18E+07 | 3.32E+07 | 1.20E+08 |
| 3.0 | 6.43 | 2.89E+07 | 3.02E+07 | 1.09E+08 |
| 6.43 | 20.0 | 2.56E+06 | 2.67E+06 | 9.71E+06 |
| Totals | | 1.37E+08 | 1.44E+08 | 5.20E+08 |

Table 5.2.18

CALCULATED MPC-68 BWR NEUTRON SOURCE PER ASSEMBLY
FOR DESIGN BASIS ZIRCALOY CLAD GE 6x6 FUEL

| **Lower Energy (MeV)** | **Upper Energy (MeV)** | **30,000 MWD/MTU 18-Year Cooling (Neutrons/s)** |
|---|---|---|
| 1.0e-01 | 4.0e-01 | 8.22e+5 |
| 4.0e-01 | 9.0e-01 | 4.20e+6 |
| 9.0e-01 | 1.4 | 3.87e+6 |
| 1.4 | 1.85 | 2.88e+6 |
| 1.85 | 3.0 | 5.18e+6 |
| 3.0 | 6.43 | 4.61e+6 |
| 6.43 | 20.0 | 4.02e+5 |
| Total | | 2.20e+7 |

Table 5.2.19

CALCULATED BWR NEUTRON SOURCE PER ASSEMBLY
FOR STAINLESS STEEL CLAD FUEL

| **Lower Energy (MeV)** | **Upper Energy (MeV)** | **22,500 MWD/MTU 10-Year Cooling (Neutrons/s)** |
|---|---|---|
| 1.0e-01 | 4.0e-01 | 2.23e+5 |
| 4.0e-01 | 9.0e-01 | 1.14e+6 |
| 9.0e-01 | 1.4 | 1.07e+6 |
| 1.4 | 1.85 | 8.20e+5 |
| 1.85 | 3.0 | 1.56e+6 |
| 3.0 | 6.43 | 1.30e+6 |
| 6.43 | 20.0 | 1.08e+5 |
| Total | | 6.22e+6 |

Note: These source terms were calculated for a 144-inch fuel length. The limits in Section 2.1.9 are based on the actual 83-inch active fuel length.

Table 5.2.20

CALCULATED PWR NEUTRON SOURCE PER ASSEMBLY
FOR STAINLESS STEEL CLAD FUEL

| **Lower Energy (MeV)** | **Upper Energy (MeV)** | **40,000 MWD/MTU 8-Year Cooling (Neutrons/s)** | **40,000 MWD/MTU 9-Year Cooling (Neutrons/s)** |
|---|---|---|---|
| 1.0e-01 | 4.0e-01 | 1.04e+7 | 1.01E+07 |
| 4.0e-01 | 9.0e-01 | 5.33e+7 | 5.14E+07 |
| 9.0e-01 | 1.4 | 4.89e+7 | 4.71E+07 |
| 1.4 | 1.85 | 3.61e+7 | 3.48E+07 |
| 1.85 | 3.0 | 6.41e+7 | 6.18E+07 |
| 3.0 | 6.43 | 5.79e+7 | 5.58E+07 |
| 6.43 | 20.0 | 5.11e+6 | 4.92E+06 |
| Totals | | 2.76e+8 | 2.66E+08 |

Note: These source terms were calculated for a 144-inch fuel length. The limits in Section 2.1.9 are based on the actual 122-inch active fuel length.

Table 5.2.21

DESCRIPTION OF DESIGN BASIS ZIRCALOY CLAD MIXED OXIDE FUEL

| | **BWR** |
|---|---|
| Fuel type | GE 6x6 |
| Active fuel length (in.) | 110 |
| No. of fuel rods | 36 |
| Rod pitch (in.) | 0.696 |
| Cladding material | Zircaloy-2 |
| Rod diameter (in.) | 0.5645 |
| Cladding thickness (in.) | 0.036 |
| Pellet diameter (in.) | 0.482 |
| Pellet material | $UO_2$ and $PuUO_2$ |
| No. of $UO_2$ Rods | 27 |
| No. of $PuUO_2$ rods | 9 |
| Pellet density (gm/cc) | 10.412 (95% of theoretical) |
| Enrichment (w/o $^{235}U$)† | 2.24 ($UO_2$ rods)<br>0.711 ($PuUO_2$ rods) |
| Burnup (MWD/MTU) | 30,000 |
| Cooling Time (years) | 18 |
| Specific power (MW/MTU) | 16.5 |
| Weight of $UO_2$,$PuUO_2$ (kg)†† | 123.3 |
| Weight of U,Pu (kg)†† | 108.7 |

† See Table 5.3.3 for detailed composition of $PuUO_2$ rods.

†† Derived from parameters in this table.

Table 5.2.22

CALCULATED MPC-68 BWR FUEL GAMMA SOURCE PER ASSEMBLY
FOR DESIGN BASIS ZIRCALOY CLAD MIXED OXIDE FUEL

| **Lower Energy** | **Upper Energy** | **30,000 MWD/MTU 18-Year Cooling** | |
|---|---|---|---|
| (MeV) | (MeV) | (MeV/s) | (Photons/s) |
| 4.5e-01 | 7.0e-01 | 1.45e+14 | 2.52e+14 |
| 7.0e-01 | 1.0 | 3.87e+12 | 4.56e+12 |
| 1.0 | 1.5 | 3.72e+12 | 2.98e+12 |
| 1.5 | 2.0 | 2.18e+11 | 1.25e+11 |
| 2.0 | 2.5 | 1.17e+9 | 5.22e+8 |
| 2.5 | 3.0 | 9.25e+7 | 3.36e+7 |
| Totals | | 1.53e+14 | 2.60e+14 |

Table 5.2.23

CALCULATED MPC-68 BWR NEUTRON SOURCE PER ASSEMBLY
FOR DESIGN BASIS ZIRCALOY CLAD MIXED OXIDE FUEL

| **Lower Energy (MeV)** | **Upper Energy (MeV)** | **30,000 MWD/MTU 18-Year Cooling (Neutrons/s)** |
|---|---|---|
| 1.0e-01 | 4.0e-01 | 1.24e+6 |
| 4.0e-01 | 9.0e-01 | 6.36e+6 |
| 9.0e-01 | 1.4 | 5.88e+6 |
| 1.4 | 1.85 | 4.43e+6 |
| 1.85 | 3.0 | 8.12e+6 |
| 3.0 | 6.43 | 7.06e+6 |
| 6.43 | 20.0 | 6.07e+5 |
| Totals | | 3.37e+7 |

Table 5.2.24

INITIAL ENRICHMENTS USED IN THE SOURCE TERM CALCULATIONS

| **Burnup Range (MWD/MTU)** | **Initial Enrichment (wt.% $^{235}$U)** |
|---|---|
| **BWR Fuel** | |
| 20,000-25,000 | 2.1 |
| 25,000-30,000 | 2.4 |
| 30,000-35,000 | 2.6 |
| 35,000-40,000 | 2.9 |
| 40,000-45,000 | 3.0 |
| 45,000-50,000 | 3.2 |
| 50,000-55,000 | 3.6 |
| 55,000-60,000 | 4.0 |
| 60,000-65,000 | 4.4 |
| 65,000-70,000 | 4.8 |
| **PWR Fuel** | |
| 20,000-25,000 | 2.3 |
| 25,000-30,000 | 2.6 |
| 30,000-35,000 | 2.9 |
| 35,000-40,000 | 3.2 |
| 40,000-45,000 | 3.4 |
| 45,000-50,000 | 3.6 |
| 50,000-55,000 | 3.9 |
| 55,000-60,000 | 4.2 |
| 60,000-65,000 | 4.5 |
| 65,000-70,000 | 4.8 |
| 70,000-75,000 | 5.0 |

Note: The burnup ranges do not overlap. Therefore, 20,000-25,000 MWD/MTU means 20,000-24,999.9 MWD/MTU, etc. This note does not apply to the maximum burnups of 70,000 and 75,000 MWD/MTU.

Table 5.2.25 (page 1 of 2)

DESCRIPTION OF EVALUATED ZIRCALOY CLAD PWR FUEL

| Assembly | WE 14×14 | WE 14x14 | WE 15×15 | WE 17×17 | WE 17x17 |
|---|---|---|---|---|---|
| Fuel assembly array class | 14x14B | 14x14A | 15x15ABC | 17x17B | 17x17A |
| Active fuel length (in.) | 144 | 144 | 144 | 144 | 144 |
| No. of fuel rods | 179 | 179 | 204 | 264 | 264 |
| Rod pitch (in.) | 0.556 | 0.556 | 0.563 | 0.496 | 0.496 |
| Cladding material | Zr-4 | Zr-4 | Zr-4 | Zr-4 | Zr-4 |
| Rod diameter (in.) | 0.422 | 0.4 | 0.422 | 0.374 | 0.36 |
| Cladding thickness (in.) | 0.0243 | 0.0243 | 0.0245 | 0.0225 | 0.0225 |
| Pellet diameter (in.) | 0.3659 | 0.3444 | 0.3671 | 0.3232 | 0.3088 |
| Pellet material | $UO_2$ | $UO_2$ | $UO_2$ | $UO_2$ | $UO_2$ |
| Pellet density (gm/cc) (% of theoretical) | 10.522 (96%) | 10.522 (96%) | 10.522 (96%) | 10.522 (96%) | 10.522 (96%) |
| Enrichment (wt.% $^{235}U$) | 3.4 | 3.4 | 3.4 | 3.4 | 3.4 |
| Burnup (MWD/MTU) | 40,000 | 40,000 | 40,000 | 40,000 | 40,000 |
| Cooling time (years) | 5 | 5 | 5 | 5 | 5 |
| Power/assembly (MW) | 15.0 | 15.0 | 18.6 | 20.4 | 20.4 |
| Specific power (MW/MTU) | 36.409 | 41.097 | 39.356 | 43.031 | 47.137 |
| Weight of $UO_2$ (kg)† | 467.319 | 414.014 | 536.086 | 537.752 | 490.901 |
| Weight of U (kg)† | 411.988 | 364.994 | 472.613 | 474.082 | 432.778 |
| No. of Guide Tubes | 17 | 17 | 21 | 25 | 25 |
| Guide Tube O.D. (in.) | 0.539 | 0.539 | 0.546 | 0.474 | 0.474 |
| Guide Tube Thickness (in.) | 0.0170 | 0.0170 | 0.0170 | 0.0160 | 0.0160 |

† Derived from parameters in this table.

Table 5.2.25 (page 2 of 2)

DESCRIPTION OF EVALUATED ZIRCALOY CLAD PWR FUEL

| Assembly | CE 14×14 | CE 16×16 | B&W 15×15 | B&W 17×17 |
|---|---|---|---|---|
| Fuel assembly array class | 14x14C | 16x16A | 15x15DEFH | 17x17C |
| Active fuel length (in.) | 144 | 150 | 144 | 144 |
| No. of fuel rods | 176 | 236 | 208 | 264 |
| Rod pitch (in.) | 0.580 | 0.5063 | 0.568 | 0.502 |
| Cladding material | Zr-4 | Zr-4 | Zr-4 | Zr-4 |
| Rod diameter (in.) | 0.440 | 0.382 | 0.428 | 0.377 |
| Cladding thickness (in.) | 0.0280 | 0.0250 | 0.0230 | 0.0220 |
| Pellet diameter (in.) | 0.3805 | 0.3255 | 0.3742 | 0.3252 |
| Pellet material | $UO_2$ | $UO_2$ | $UO_2$ | $UO_2$ |
| Pellet density (gm/cc) (95% of theoretical) | 10.522 (96%) | 10.522 (96%) | 10.412 (95%) | 10.522 (96%) |
| Enrichment (wt.% $^{235}U$) | 3.4 | 3.4 | 3.4 | 3.4 |
| Burnup (MWD/MTU) | 40,000 | 40,000 | 40,000 | 40,000 |
| Cooling time (years) | 5 | 5 | 5 | 5 |
| Power/assembly (MW) | 13.7 | 17.5 | 19.819 | 20.4 |
| Specific power (MW/MTU) | 31.275 | 39.083 | 40 | 42.503 |
| Weight of $UO_2$ (kg)† | 496.887 | 507.9 | 562.029 | 544.428 |
| Weight of U (kg)† | 438.055 | 447.764 | 495.485 | 479.968 |
| No. of Guide Tubes | 5 | 5 | 17 | 25 |
| Guide Tube O.D. (in.) | 1.115 | 0.98 | 0.53 | 0.564 |
| Guide Tube Thickness (in.) | 0.0400 | 0.0400 | 0.0160 | 0.0175 |

† Derived from parameters in this table.

Table 5.2.26 (page 1 of 2)

DESCRIPTION OF EVALUATED ZIRCALOY CLAD BWR FUEL

| Array Type | 7×7 | 8×8 | 8x8 | 9x9 | 9x9 |
|---|---|---|---|---|---|
| Fuel assembly array class | 7x7B | 8x8B | 8x8CDE | 9x9A | 9x9B |
| Active fuel length (in.) | 144 | 144 | 150 | 144 | 150 |
| No. of fuel rods | 49 | 64 | 62 | 74 | 72 |
| Rod pitch (in.) | 0.738 | 0.642 | 0.64 | 0.566 | 0.572 |
| Cladding material | Zr-2 | Zr-2 | Zr-2 | Zr-2 | Zr-2 |
| Rod diameter (in.) | 0.570 | 0.484 | 0.493 | 0.44 | 0.433 |
| Cladding thickness (in.) | 0.0355 | 0.02725 | 0.034 | 0.028 | 0.026 |
| Pellet diameter (in.) | 0.488 | 0.4195 | 0.416 | 0.376 | 0.374 |
| Pellet material | $UO_2$ | $UO_2$ | $UO_2$ | $UO_2$ | $UO_2$ |
| Pellet density (gm/cc) (% of theoretical) | 10.412 (95%) | 10.412 (95%) | 10.412 (95%) | 10.522 (96%) | 10.522 (96%) |
| Enrichment (wt.% $^{235}U$) | 3.0 | 3.0 | 3.0 | 3.0 | 3.0 |
| Burnup (MWD/MTU) | 40,000 | 40,000 | 40,000 | 40,000 | 40,000 |
| Cooling time (years) | 5 | 5 | 5 | 5 | 5 |
| Power/assembly (MW) | 5.96 | 5.75 | 5.75 | 5.75 | 5.75 |
| Specific power (MW/MTU) | 30 | 30 | 30.24 | 31.97 | 31.88 |
| Weight of $UO_2$ (kg)† | 225.177 | 217.336 | 215.673 | 204.006 | 204.569 |
| Weight of U (kg)† | 198.516 | 191.603 | 190.137 | 179.852 | 180.348 |
| No. of Water Rods | 0 | 0 | 2 | 2 | 1 |
| Water Rod O.D. (in.) | n/a | n/a | 0.493 | 0.98 | 1.516 |
| Water Rod Thickness (in.) | n/a | n/a | 0.034 | 0.03 | 0.0285 |

† Derived from parameters in this table.

Table 5.2.26 (page 1 of 2)

DESCRIPTION OF EVALUATED ZIRCALOY CLAD BWR FUEL

| Array Type | 9x9 | 9×9 | 9x9 | 10×10 | 10x10 |
|---|---|---|---|---|---|
| Fuel assembly array class | 9x9CD | 9x9EF | 9x9G | 10x10AB | 10x10C |
| Active fuel length (in.) | 150 | 144 | 150 | 144 | 150 |
| No. of fuel rods | 80 | 76 | 72 | 92 | 96 |
| Rod pitch (in.) | 0.572 | 0.572 | 0.572 | 0.510 | 0.488 |
| Cladding material | Zr-2 | Zr-2 | Zr-2 | Zr-2 | Zr-2 |
| Rod diameter (in.) | 0.423 | 0.443 | 0.424 | 0.404 | 0.378 |
| Cladding thickness (in.) | 0.0295 | 0.0285 | 0.03 | 0.0260 | 0.0243 |
| Pellet diameter (in.) | 0.3565 | 0.3745 | 0.3565 | 0.345 | 0.3224 |
| Pellet material | $UO_2$ | $UO_2$ | $UO_2$ | $UO_2$ | $UO_2$ |
| Pellet density (gm/cc) (% of theoretical) | 10.522 (96%) | 10.522 (96%) | 10.522 (96%) | 10.522 (96%) | 10.522 (96%) |
| Enrichment (wt.% $^{235}U$) | 3.0 | 3.0 | 3.0 | 3.0 | 3.0 |
| Burnup (MWD/MTU) | 40,000 | 40,000 | 40,000 | 40,000 | 40,000 |
| Cooling time (years) | 5 | 5 | 5 | 5 | 5 |
| Power/assembly (MW) | 5.75 | 5.75 | 5.75 | 5.75 | 5.75 |
| Specific power (MW/MTU) | 31.58 | 31.38 | 35.09 | 30.54 | 32.18 |
| Weight of $UO_2$ (kg)† | 206.525 | 207.851 | 185.873 | 213.531 | 202.687 |
| Weight of U (kg)† | 182.073 | 183.242 | 163.865 | 188.249 | 178.689 |
| No. of Water Rods | 1 | 5 | 1 | 2 | 1 |
| Water Rod O.D. (in.) | 0.512 | 0.546 | 1.668 | 0.980 | Note 1 |
| Water Rod Thickness (in.) | 0.02 | 0.0120 | 0.032 | 0.0300 | Note 1 |

Note 1: 10x10C has a diamond shaped water rod with 4 additional segments dividing the fuel rods into four quadrants.

† Derived from parameters in this table.

Table 5.2.27

COMPARISON OF SOURCE TERMS FOR ZIRCALOY CLAD PWR FUEL
3.4 wt.% $^{235}U$ - 40,000 MWD/MTU - 5 years cooling

| Assembly | WE 14×14 | WE 14×14 | WE 15×15 | WE 17×17 | WE 17×17 | CE 14×14 | CE 16×16 | B&W 15×15 | B&W 17×17 |
|---|---|---|---|---|---|---|---|---|---|
| Array class | 14x14A | 14x14B | 15x15 ABC | 17x17A | 17x17B | 14x14C | 16x16A | 15x15 DEFH | 17x17C |
| Neutrons/sec | 1.76E+8<br>1.78E+8 | 2.32E+8<br>2.35E+8 | 2.70E+8<br>2.73E+8 | 2.18E+8 | 2.68E+8 | 2.32E+8 | 2.38E+8 | 2.94E+8 | 2.68E+8 |
| Photons/sec (0.45-3.0 MeV) | 2.88E+15<br>2.93E+15 | 3.28E+15<br>3.32E+15 | 3.80E+15<br>3.86E+15 | 3.49E+15 | 3.85E+15 | 3.37E+15 | 3.57E+15 | 4.01E+15 | 3.89E+15 |
| Thermal power (watts) | 809.5<br>820.7 | 923.5933.<br>7 | 10731086 | 985.6 | 1090 | 946.6 | 1005 | 1137 | 1098 |

Note:
The WE 14x14 and WE 15x15 have both zircaloy and stainless steel guide tubes. The first value presented is for the assembly with zircaloy guide tubes and the second value is for the assembly with stainless steel guide tubes.

HOLTEC INTERNATIONAL COPYRIGHTED MATERIAL

Table 5.2.28

COMPARISON OF SOURCE TERMS FOR ZIRCALOY CLAD BWR FUEL
3.0 wt.% $^{235}U$ - 40,000 MWD/MTU - 5 years cooling

| Assembly | 7×7 | 8x8 | 8x8 | 9x9 | 9x9 | 9x9 | 9x9 | 9x9 | 10x10 | 10x10 |
|---|---|---|---|---|---|---|---|---|---|---|
| Array Class | 7x7B | 8x8B | 8x8CDE | 9x9A | 9x9B | 9x9CD | 9x9EF | 9x9G | 10x10AB | 10x10C |
| Neutrons/sec | 1.33E+8 | 1.22E+8 | 1.22E+8 | 1.13E+8 | 1.06E+8 | 1.09E+8 | 1.24E+8 | 9.15E+7 | 1.24E+8 | 1.07E+8 |
| Photons/sec (0.45-3.0 MeV) | 1.55E+15 | 1.49E+15 | 1.48E+15 | 1.41E+15 | 1.40E+15 | 1.42E+15 | 1.45E+15 | 1.28E+15 | 1.48E+15 | 1.40E+15 |
| Thermal power (watts) | 435.5 | 417.3 | 414.2 | 394.2 | 389.8 | 395 | 405.8 | 356.9 | 413.5 | 389.2 |

HOLTEC INTERNATIONAL COPYRIGHTED MATERIAL

Table 5.2.29

COMPARISON OF CALCULATED DECAY HEATS FOR DESIGN BASIS FUEL AND VALUES REPORTED IN THE DOE CHARACTERISTICS DATABASE† FOR 30,000 MWD/MTU AND 5-YEAR COOLING

| **Fuel Assembly Class** | **Decay Heat from the DOE Database (watts/assembly)** | **Decay Heat from Source Term Calculations (watts/assembly)** |
|---|---|---|
| **PWR Fuel** | | |
| B&W 15x15 | 752.0 | 827.5 |
| B&W 17x17 | 732.9 | 802.7 |
| CE 16x16 | 653.7 | 734.3 |
| CE 14x14 | 601.3 | 694.9 |
| WE 17x17 | 742.5 | 795.4 |
| WE 15x15 | 762.2 | 796.2 |
| WE 14x14 | 649.6 | 682.9 |
| **BWR Fuel** | | |
| 7x7 | 310.9 | 315.7 |
| 8x8 | 296.6 | 302.8 |
| 9x9 | 275.0 | 286.8 |

Notes:

1. The decay heat from the source term calculations is the maximum value calculated for that fuel assembly class.
2. The decay heat values from the database include contributions from in-core material (e.g. spacer grids).
3. Information on the 10x10 was not available in the DOE database. However, based on the results in Table 5.2.28, the actual decay heat values from the 10x10 would be very similar to the values shown above for the 8x8.
4. The enrichments used for the column labeled "Decay Heat from Source Term Calculations" were consistent with Table 5.2.24.

† Reference [5.2.7].

Table 5.2.30

DESCRIPTION OF DESIGN BASIS BURNABLE POISON ROD ASSEMBLY AND THIMBLE PLUG DEVICE

| **Region** | **BPRA** | **TPD** |
|---|---|---|
| Upper End Fitting (kg of steel) | 2.62 | 2.3 |
| Upper End Fitting (kg of inconel) | 0.42 | 0.42 |
| Gas Plenum Spacer (kg of steel) | 0.77488 | 1.71008 |
| Gas Plenum Springs (kg of steel) | 0.67512 | 1.48992 |
| In-core (kg of steel) | 13.2 | N/A |

Table 5.2.31

DESIGN BASIS COBALT-60 ACTIVITIES FOR BURNABLE POISON ROD ASSEMBLIES AND THIMBLE PLUG DEVICES

| **Region** | **BPRA** | **TPD** |
|---|---|---|
| Upper End Fitting (curies Co-60) | 32.7 | 25.21 |
| Gas Plenum Spacer (curies Co-60) | 5.0 | 9.04 |
| Gas Plenum Springs (curies Co-60) | 8.9 | 15.75 |
| In-core (curies Co-60) | 848.4 | N/A |

Table 5.2.32

DESCRIPTION OF DESIGN BASIS CONTROL ROD ASSEMBLY CONFIGURATIONS FOR SOURCE TERM CALCULATIONS

| **Axial Dimensions Relative to Bottom of Active Fuel** | | | **Flux Weighting Factor** | **Mass of cladding (kg Inconel)** | **Mass of absorber (kg AgInCd)** |
|---|---|---|---|---|---|
| **Start (in)** | **Finish (in)** | **Length (in)** | | | |
| **Configuration 1 - 10% Inserted** | | | | | |
| 0.0 | 15.0 | 15.0 | 1.0 | 1.32 | 7.27 |
| 15.0 | 18.8125 | 3.8125 | 0.2 | 0.34 | 1.85 |
| 18.8125 | 28.25 | 9.4375 | 0.1 | 0.83 | 4.57 |
| **Configuration 2 - Fully Removed** | | | | | |
| 0.0 | 3.8125 | 3.8125 | 0.2 | 0.34 | 1.85 |
| 3.8125 | 13.25 | 9.4375 | 0.1 | 0.83 | 4.57 |

Table 5.2.33

DESCRIPTION OF DESIGN BASIS AXIAL POWER SHAPING ROD CONFIGURATION S FOR SOURCE TERM CALCULATIONS

| **Axial Dimensions Relative to Bottom of Active Fuel** | | | **Flux Weighting Factor** | **Mass of cladding (kg Steel)** | **Mass of absorber (kg Inconel)** |
|---|---|---|---|---|---|
| **Start (in)** | **Finish (in)** | **Length (in)** | | | |
| **Configuration 1 - 10% Inserted** | | | | | |
| 0.0 | 15.0 | 15.0 | 1.0 | 1.26 | 5.93 |
| 15.0 | 18.8125 | 3.8125 | 0.2 | 0.32 | 1.51 |
| 18.8125 | 28.25 | 9.4375 | 0.1 | 0.79 | 3.73 |
| **Configuration 2 - Fully Removed** | | | | | |
| 0.0 | 3.8125 | 3.8125 | 0.2 | 0.32 | 1.51 |
| 3.8125 | 13.25 | 9.4375 | 0.1 | 0.79 | 3.73 |
| **Configuration 3 - Fully Inserted** | | | | | |
| 0.0 | 63.0 | 63.0 | 1.0 | 5.29 | 24.89 |
| 63.0 | 66.8125 | 3.8125 | 0.2 | 0.32 | 1.51 |
| 66.8125 | 76.25 | 9.4375 | 0.1 | 0.79 | 3.73 |

Table 5.2.34

DESIGN BASIS SOURCE TERMS FOR CONTROL ROD ASSEMBLY CONFIGURATIONS

| **Axial Dimensions Relative to Bottom of Active Fuel** | | | **Photons/sec from AgInCd** | | | **Curies Co-60 from Inconel** |
|---|---|---|---|---|---|---|
| **Start (in)** | **Finish (in)** | **Length (in)** | **0.3-0.45 MeV** | **0.45-0.7 MeV** | **0.7-1.0 MeV** | |
| **Configuration 1 - 10% Inserted - 80.8 watts decay heat** | | | | | | |
| 0.0 | 15.0 | 15.0 | 1.91e+14 | 1.78e+14 | 1.42e+14 | 1111.38 |
| 15.0 | 18.8125 | 3.8125 | 9.71e+12 | 9.05e+12 | 7.20e+12 | 56.50 |
| 18.8125 | 28.25 | 9.4375 | 1.20e+13 | 1.12e+13 | 8.92e+12 | 69.92 |
| **Configuration 2 - Fully Removed - 8.25 watts decay heat** | | | | | | |
| 0.0 | 3.8125 | 3.8125 | 9.71e+12 | 9.05e+12 | 7.20e+12 | 56.50 |
| 3.8125 | 13.25 | 9.4375 | 1.20e+13 | 1.12e+13 | 8.92e+12 | 69.92 |

Table 5.2.35

DESIGN BASIS SOURCE TERMS FROM AXIAL POWER SHAPING ROD CONFIGURATIONS

| **Axial Dimensions Relative to Bottom of Active Fuel** | | | **Curies of Co-60** |
|---|---|---|---|
| **Start (in)** | **Finish (in)** | **Length (in)** | |
| **Configuration 1 - 10% Inserted - 46.2 watts decay heat** | | | |
| 0.0 | 15.0 | 15.0 | 2682.57 |
| 15.0 | 18.8125 | 3.8125 | 136.36 |
| 18.8125 | 28.25 | 9.4375 | 168.78 |
| **Configuration 2 - Fully Removed - 4.72 watts decay heat** | | | |
| 0.0 | 3.8125 | 3.8125 | 136.36 |
| 3.8125 | 13.25 | 9.4375 | 168.78 |
| **Configuration 3 - Fully Inserted - 178.9 watts decay heat** | | | |
| 0.0 | 63.0 | 63.0 | 11266.80 |
| 63.0 | 66.8125 | 3.8125 | 136.36 |
| 66.8125 | 76.25 | 9.4375 | 168.78 |

Table 5.2.36

DESCRIPTION OF FUEL ASSEMBLY USED TO ANNALYZE THORIA RODS IN THE THORIA ROD CANISTER

| | **BWR** |
|---|---|
| Fuel type | 8x8 |
| Active fuel length (in.) | 110.5 |
| No. of $UO_2$ fuel rods | 55 |
| No. of $UO_2/ThO_2$ fuel rods | 9 |
| Rod pitch (in.) | 0.523 |
| Cladding material | zircaloy |
| Rod diameter (in.) | 0.412 |
| Cladding thickness (in.) | 0.025 |
| Pellet diameter (in.) | 0.358 |
| Pellet material | 98.2% $ThO_2$ and 1.8% $UO_2$ for $UO_2/ThO_2$ rods |
| Pellet density (gm/cc) | 10.412 |
| Enrichment (w/o $^{235}U$) | 93.5 in $UO_2$ for $UO_2/ThO_2$ rods<br>and<br>1.8 for $UO_2$ rods |
| Burnup (MWD/MTIHM) | 16,000 |
| Cooling Time (years) | 18 |
| Specific power (MW/MTIHM) | 16.5 |
| Weight of $THO_2$ and $UO_2$ (kg)† | 121.46 |
| Weight of U (kg)† | 92.29 |
| Weight of Th (kg)† | 14.74 |

† Derived from parameters in this table.

Table 5.2.37

CALCULATED FUEL GAMMA SOURCE FOR THORIA ROD CANISTER CONTAINING EIGHTEEN THORIA RODS

| **Lower Energy** | **Upper Energy** | **16,000 MWD/MTIHM 18-Year Cooling** | |
|---|---|---|---|
| (MeV) | (MeV) | (MeV/s) | (Photons/s) |
| 4.5e-01 | 7.0e-01 | 3.07e+13 | 5.34e+13 |
| 7.0e-01 | 1.0 | 5.79e+11 | 6.81e+11 |
| 1.0 | 1.5 | 3.79e+11 | 3.03e+11 |
| 1.5 | 2.0 | 4.25e+10 | 2.43e+10 |
| 2.0 | 2.5 | 4.16e+8 | 1.85e+8 |
| 2.5 | 3.0 | 2.31e+11 | 8.39e+10 |
| Totals | | 1.23e+12 | 1.09e+12 |

Table 5.2.38

CALCULATED FUEL NEUTRON SOURCE FOR THORIA ROD CANISTER CONTAINING EIGHTEEN THORIA RODS

| **Lower Energy (MeV)** | **Upper Energy (MeV)** | **16,000 MWD/MTIHM 18-Year Cooling (Neutrons/s)** |
|---|---|---|
| 1.0e-01 | 4.0e-01 | 5.65e+2 |
| 4.0e-01 | 9.0e-01 | 3.19e+3 |
| 9.0e-01 | 1.4 | 6.79e+3 |
| 1.4 | 1.85 | 1.05e+4 |
| 1.85 | 3.0 | 3.68e+4 |
| 3.0 | 6.43 | 1.41e+4 |
| 6.43 | 20.0 | 1.60e+2 |
| Totals | | 7.21e+4 |

## *SUPPLEMENT 5.II*

## *SHIELDING EVALUATION OF THE HI-STORM 100 SYSTEM FOR IP1*

### *5.II.0 INTRODUCTION*

*Indian Point Unit 1 (IP1) fuel assemblies, which have a maximum burnup of 30,000 MWD/MTU and a minimum cooling time of 30 years, are considerably shorter (approximately 137 inches) than most PWR assemblies. As a result of this reduced height and a crane capacity of 75 tons at IP1, the HI-STORM 100 System has been expanded to include options specific for use at IP1 as described in Supplement 1.II.*

*This supplement is focused on providing a shielding evaluation of the HI-STORM 100 system as modified for IP1. The evaluation presented herein supplements those evaluations of the HI-STORM overpacks contained in the main body of Chapter 5 of this FSAR and information in the main body of Chapter 5 that remains applicable to the HI-STORM 100 system at IP1 is not repeated in this supplement. To aid the reader, the sections in this supplement are numbered in the same fashion as the corresponding sections in the main body of this chapter, i.e., Sections 5.II.1 through 5.II.5 correspond to Sections 5.1 through 5.5. Tables and figures in this supplement are labeled sequentially.*

### *5.II.1 DISCUSSION AND RESULTS*

*The HI-STORM 100 system for IP1 differs slightly from the HI-STORM system evaluated in the main body of this chapter. From a shielding perspective, the only difference in the overpack and MPC is the height. The top and bottom and radial thickness are identical. Therefore, considering the low burnup and long cooling time of the IP1 fuel, the dose rates from a HI-STORM 100S Version B overpack at IP1 containing the IP1 MPC-32 are bounded by the results presented in the main body of the chapter. Therefore, no specific analysis is provided in this supplement for the HI-STORM 100S Version B at IP1.*

*The HI-TRAC 100D Version IP1 is also shorter than the HI-TRAC 100D analyzed in the main body of this chapter. In addition to a shorter height, the radial thickness of the lead and outer shell have been reduced. However, the top and bottom of the HI-TRAC 100D Version IP1 are identical to the HI-TRAC 100D. Section 5.II.3 describes the HI-TRAC 100D Version IP1 as it was modeled in this supplement.*

*Shielding analyses were performed for the HI-TRAC 100D Version IP1 loaded with an IP1 MPC-32. A single burnup and cooling time combination of 30,000 MWD/MTU and 30 years was analyzed. Table 5.II.1 presents the results for normal condition at the midplane of the overpack. Since the only change in shielding between the HI-TRAC 100D and the 100D Version IP1 is in the radial direction, it is reasonable to present only the dose rates at the midplane of the overpack. A comparison of the results in Table 5.II.1 to the results in Tables 5.4.11 and 5.4.12*

HOLTEC INTERNATIONAL COPYRIGHTED MATERIAL

*demonstrate that the dose rates from the HI-TRAC 100D Version IP1 are considerably less than and bounded by the dose rates from the HI-TRAC 100D with design basis fuel.*

## *5.II.2 SOURCE SPECIFICATION*

*The characteristics of the Indian Point Unit 1 fuel assembly are shown in Table 5.II.2. The maximum length of the active fuel zone in this assembly is 102 inches. However, the source term was calculated assuming an active fuel length of 144 inches. The longer active fuel length was used for ease of modeling as described in Section 5.II.3. The end fittings above and below the active fuel zone were assumed to be identical to the end fittings of the design basis zircaloy PWR fuel assembly described in Section 5.2. Tables 5.II.3 and 5.II.4 presents the neutron and gamma source term for the active fuel region of the IP1 fuel assemblies.*

*IP1 fuel assemblies resemble BWR fuel assemblies in that they have a shroud which encompasses the fuel rods similar to the channel around BWR fuel. However, unlike BWR channels, the shroud is perforated with uniformly spaced holes. The source term from the activation of this shroud was considered in this analysis and is included in Table 5.II.4.*

### *5.II.2.1 Secondary Sources*

*Antimony-beryllium sources were used as secondary (regenerative) neutron sources in IP1. The Sb-Be source produces neutrons from a gamma-n reaction in the beryllium, where the gamma originates from the decay of neutron-activated antimony. The very short half-life of $^{124}$Sb, 60.2 days, however results in a complete decay of the initial amount generated in the reactor within a few years after removal from the reactor. The production of neutrons by the Sb-Be source through regeneration in the MPC is orders of magnitude lower than the design-basis fuel assemblies. Therefore Sb-Be sources do not contribute to the total neutron source in the MPC and are not specifically analyzed in this supplement.*

*Indian Point Unit 1 secondary source devices were not removable inserts. Instead, these devices replaced a fuel rod in the fuel assembly. Therefore, the secondary sources were in the core for the same amount of time as the assembly in which they were placed. As a result, the source term from a fuel assembly containing all fuel rods bounds the source term from a fuel assembly containing a secondary source device.*

## *5.II.3 MODEL SPECIFICATIONS*

*The shielding analyses of the HI-TRAC 100D Version IP1 are performed with MCNP-4A, which is the same code used for the analyses presented in the main body of this chapter.*

*Section 1.5 provides the drawings that describe the HI-TRAC 100D Version IP1. These drawings, using nominal dimensions, were used to create the MCNP models used in the radiation transport calculations. Since the HI-TRAC 100D Version IP1 is a variation of the HI-TRAC 100D, the model of the 100D was modified by appropriately reducing the radial*

HOLTEC INTERNATIONAL COPYRIGHTED MATERIAL

*dimensions of the 100D model. Conservatively, the axial height was not changed. Table 5.II.5 shows the radial thicknesses of the shielding materials in the 100D Version IP1 compared to the 100D.*

*In order to represent the IP1 fuel assemblies, the 144 inch active fuel region of the design basis PWR fuel assembly was not changed to represent the IP1 fuel assemblies. This conservatively modeled the active fuel region as 144 inches in length rather than 102 inches. The shielding effect of the shroud around the fuel assembly was conservatively neglected in the MCNP model.*

*IP1 fuel assemblies are considered intact and have all been inspected with no visible damage identified. However, it may not be possible to classify these assemblies as intact due to insufficient records. Therefore, all IP1 fuel assemblies are required to be stored in a damaged fuel container. Conservatively, the damaged fuel container was neglected in the MCNP model. Since the IP1 fuel assemblies are considered intact, the analysis in this supplement treated the fuel assemblies as intact.*

### *5.II.4 SHIELDING EVALUATION*

*Table 5.II.1 provides dose rates adjacent to and at 1 meter distance from the midplane of the HI-TRAC 100D Version IP1 during normal conditions for the MPC-32. These results demonstrate that the dose rates around the HI-TRAC 100D Version IP1 are considerably lower than the HI-TRAC 100D as documented in Section 5.4.*

### *5.II.5 REGULATORY COMPLIANCE*

*In summary it can be concluded that dose rates from the HI-STORM 100 system as modified for IP1 are bounded by the dose rates for the overpacks analyzed in the main body of the report. The shielding system of the HI-STORM 100 system is therefore in compliance with 10CFR72 and satisfies the applicable design and acceptance criteria including 10CFR20. Thus, the shielding evaluation presented in this supplement provides reasonable assurance that the HI-STORM 100 system for IP1 will allow safe storage of IP1 spent fuel.*

HOLTEC INTERNATIONAL COPYRIGHTED MATERIAL

*Table 5.II.1*

*DOSE RATES ADJACENT TO AND 1 METER FROM THE HI-TRAC 100D VERSION IP1 FOR NORMAL CONDITIONS MPC-32 WITH IP1 FUEL 30,000 MWD/MTU AND 30-YEAR COOLING*

| ***Dose Point† Location*** | ***Fuel Gammas†† (mrem/hr)*** | ***$^{60}$Co Gammas (mrem/hr)*** | ***Neutrons (mrem/hr)*** | ***Totals (mrem/hr)*** |
|---|---|---|---|---|
| *ADJACENT TO HI-TRAC 100D VERSION IP1* | | | | |
| *2* | *235.56* | *0.09* | *10.68* | *246.33* |
| *ONE METER FROM HI-TRAC 100D VERSION IP1* | | | | |
| *2* | *4.02* | *100.61* | *0.81* | *105.44* |

† *Refer to Figure 5.1.4.*

†† *Gammas generated by neutron capture are included with fuel gammas.*

HOLTEC INTERNATIONAL COPYRIGHTED MATERIAL

*Table 5.II.2*

*DESCRIPTION OF DESIGN BASIS STAINLESS STEEL CLAD FUEL*

| ***Description*** | ***Value*** |
|---|---|
| *Fuel type* | *14x14* |
| *Active fuel length (in.)* | *144* |
| *No. of fuel rods* | *173* |
| *Rod pitch (in.)* | *0.441* |
| *Cladding material* | *Stainless steel* |
| *Rod diameter (in.)* | *0.3415* |
| *Cladding thickness (in.)* | *0.012* |
| *Pellet diameter (in.)* | *0.313* |
| *Pellet material* | $UO_2$ |
| *Pellet density (gm/cc)* | *10.412 (95% of theoretical)* |
| *Enrichment (w/o $^{235}U$)* | *3.5* |
| *Burnup (MWD/MTU)* | *30,000* |
| *Cooling Time (years)* | *30* |
| *Specific power (MW/MTU)* | *25.09* |
| *No. of guide tubes* | *0* |
| *Shroud material* | *Stainless steel* |
| *Shroud thickness (in.)* | *0.035* |
| *Percent open area of shroud* | *47* |

HOLTEC INTERNATIONAL COPYRIGHTED MATERIAL

*Table 5.II.3*

*CALCULATED NEUTRON SOURCE PER ASSEMBLY FOR STAINLESS STEEL CLAD IP1 FUEL*

| ***Lower Energy (MeV)*** | ***Upper Energy (MeV)*** | ***30,000 MWD/MTU 30-Year Cooling (Neutrons/s)*** |
|---|---|---|
| *1.0e-01* | *4.0e-01* | *7.76e+05* |
| *4.0e-01* | *9.0e-01* | *3.97e+06* |
| *9.0e-01* | *1.4* | *3.72e+06* |
| *1.4* | *1.85* | *2.86e+06* |
| *1.85* | *3.0* | *5.47e+06* |
| *3.0* | *6.43* | *4.55e+06* |
| *6.43* | *20.0* | *3.78e+05* |
| *Total* | | *2.17e+07* |

HOLTEC INTERNATIONAL COPYRIGHTED MATERIAL

*Table 5.II.4*

*CALCULATED FUEL GAMMA SOURCE PER ASSEMBLY FOR STAINLESS STEEL CLAD IP1 FUEL*

| ***Lower Energy*** | ***Upper Energy*** | ***30,000 MWD/MTU 30-Year Cooling*** | |
|---|---|---|---|
| *(MeV)* | *(MeV)* | *(MeV/s)* | *(Photons/s)* |
| *4.5e-01* | *7.0e-01* | *2.94e+14* | *5.10e+14* |
| *7.0e-01* | *1.0* | *4.38e+12* | *5.15e+12* |
| *1.0* | *1.5* | *1.44e+13* | *1.15e+13* |
| *1.5* | *2.0* | *2.94e+11* | *1.68e+11* |
| *2.0* | *2.5* | *2.82e+09* | *1.25e+09* |
| *2.5* | *3.0* | *1.85e+08* | *6.72e+07* |
| *Totals* | | *3.13e+14* | *5.27e+14* |

HOLTEC INTERNATIONAL COPYRIGHTED MATERIAL

*Table 5.II.5*

*A COMPARISON OF THE RADIAL SHIELDING THICKNESSES OF THE HI-TRAC 100D VERSION IP1 AND THE HI-TRAC 100D*

| ***Shielding Material*** | ***HI-TRAC 100D*** | ***HI-TRAC 100D Version IP1*** |
|---|---|---|
| *Inner steel shell (in.)* | *0.75* | *0.75* |
| *Lead (in.)* | *2.875* | *2.5* |
| *Outer steel shell (in.)* | *1.0* | *0.75* |
| *Water in water jacket (in.)* | *5.0* | *5.0* |
| *Steel water jacket enclosure (in.)* | *0.375* | *0.375* |
| *Total thickness (in.)* | *10.0* | *9.375* |

HOLTEC INTERNATIONAL COPYRIGHTED MATERIAL

# CHAPTER 6[†]: CRITICALITY EVALUATION

This chapter documents the criticality evaluation of the HI-STORM 100 System for the storage of spent nuclear fuel in accordance with 10CFR72.124. The results of this evaluation demonstrate that the HI-STORM 100 System is consistent with the Standard Review Plan for Dry Cask Storage Systems, NUREG-1536, and thus, fulfills the following acceptance criteria:

1. The multiplication factor ($k_{eff}$), including all biases and uncertainties at a 95-percent confidence level, should not exceed 0.95 under all credible normal, off-normal, and accident conditions.

2. At least two unlikely, independent, and concurrent or sequential changes to the conditions essential to criticality safety, under normal, off-normal, and accident conditions, should occur before an accidental criticality is deemed to be possible.

3. When practicable, criticality safety of the design should be established on the basis of favorable geometry, permanent fixed neutron-absorbing materials (poisons), or both.

4. Criticality safety of the cask system should not rely on use of the following credits:

    a. burnup of the fuel
    b. fuel-related burnable neutron absorbers
    c. more than 75 percent for fixed neutron absorbers when subject to standard acceptance test[††].

In addition to demonstrating that the criticality safety acceptance criteria are satisfied, this chapter describes the HI-STORM 100 System design structures and components important to criticality safety and defines the limiting fuel characteristics in sufficient detail to identify the package accurately and provide a sufficient basis for the evaluation of the package. Analyses for the HI-STAR 100 System, which are applicable to the HI-STORM 100 System, have been previously submitted to the USNRC under Docket Numbers 72-1008 and 71-9261.

---

[†] This chapter has been prepared in the format and section organization set forth in Regulatory Guide 3.61. However, the material content of this chapter also fulfills the requirements of NUREG-1536. Pagination and numbering of sections, figures, and tables are consistent with the convention set down in *Chapter 1,* Section 1.0, herein. Finally, all terms-of-art used in this chapter are consistent with the terminology of the glossary (Table 1.0.1) and component nomenclature of the Bill-of-Materials (Section 1.5).

[††] For greater credit allowance, fabrication tests capable of verifying the presence and uniformity of the neutron absorber are needed.

HOLTEC INTERNATIONAL COPYRIGHTED MATERIAL

## 6.1 DISCUSSION AND RESULTS

In conformance with the principles established in NUREG-1536 [6.1.1], 10CFR72.124 [6.1.2], and NUREG-0800 Section 9.1.2 [6.1.3], the results in this chapter demonstrate that the effective multiplication factor ($k_{eff}$) of the HI-STORM 100 System, including all biases and uncertainties evaluated with a 95% probability at the 95% confidence level, does not exceed 0.95 under all credible normal, off-normal, and accident conditions. Moreover, these results demonstrate that the HI-STORM 100 System is designed and maintained such that at least two unlikely, independent, and concurrent or sequential changes must occur to the conditions essential to criticality safety before a nuclear criticality accident is possible. These criteria provide a large subcritical margin, sufficient to assure the criticality safety of the HI-STORM 100 System when fully loaded with fuel of the highest permissible reactivity.

Criticality safety of the HI-STORM 100 System depends on the following four principal design parameters:

1. The inherent geometry of the fuel basket designs within the MPC (and the flux-trap water gaps in the MPC-24, MPC-24E and MPC-24EF);

2. The incorporation of permanent fixed neutron-absorbing panels in the fuel basket structure;

3. An administrative limit on the maximum enrichment for PWR fuel and maximum planar-average enrichment for BWR fuel; and

4. An administrative limit on the minimum soluble boron concentration in the water for loading/unloading fuel with higher enrichments in the MPC-24, MPC-24E and MPC-24EF, and for loading/unloading fuel in the MPC-32 and MPC-32F.

The off-normal and accident conditions defined in Chapter 2 and considered in Chapter 11 have no adverse effect on the design parameters important to criticality safety, and thus, the off-normal and accident conditions are identical to those for normal conditions.

The HI-STORM 100 System is designed such that the fixed neutron absorber will remain effective for a storage period greater than 20 years, and there are no credible means to lose it. Therefore, in accordance with 10CFR72.124(b), there is no need to provide a surveillance or monitoring program to verify the continued efficacy of the neutron absorber.

HOLTEC INTERNATIONAL COPYRIGHTED MATERIAL

Criticality safety of the HI-STORM 100 System does not rely on the use of any of the following credits:

- burnup of fuel
- fuel-related burnable neutron absorbers
- more than 75 percent of the B-10 content for the Boral fixed neutron absorber
- more than 90 percent of the B-10 content for the Metamic fixed neutron absorber, with comprehensive fabrication tests as described in Section 9.1.5.3.2.

The following four interchangeable basket designs are available for use in the HI-STORM 100 System:

- a 24-cell basket (MPC-24), designed for intact PWR fuel assemblies with a specified maximum enrichment and, for higher enrichments, a minimum soluble boron concentration in the pool water for loading/unloading operations,
- a 24-cell basket (MPC-24E) for intact and damaged PWR fuel assemblies. This is a variation of the MPC-24, with an optimized cell arrangement, increased $^{10}B$ content in the fixed neutron absorber and with four cells capable of accommodating either intact fuel or a damaged fuel container (DFC). Additionally, a variation in the MPC-24E, designated MPC-24EF, is designed for intact and damaged PWR fuel assemblies and PWR fuel debris. The MPC-24E and MPC-24EF are designed for fuel assemblies with a specified maximum enrichment and, for higher enrichments, a minimum soluble boron concentration in the pool water for loading/unloading operations,
- a 32-cell basket (MPC-32), designed for intact and damaged PWR fuel assemblies of a specified maximum enrichment and minimum soluble boron concentration for loading/unloading. Additionally, a variation in the MPC-32, designated MPC-32F, is designed for intact and damaged PWR fuel assemblies and PWR fuel debris. And
- a 68-cell basket (MPC-68), designed for both intact and damaged BWR fuel assemblies with a specified maximum planar-average enrichment. Additionally, variations in the MPC-68, designated MPC-68F and MPC-68FF, are designed for intact and damaged BWR fuel assemblies and BWR fuel debris with a specified maximum planar-average enrichment.

Two interchangeable neutron absorber materials are used in these baskets, Boral and Metamic. For Boral, 75 percent of the minimum B-10 content is credited in the criticality analysis, while for Metamic, 90 percent of the minimum B-10 content is credited, based on the neutron absorber tests specified in Section 9.1.5.3. However, the B-10 content in Metamic is chosen to be lower

HOLTEC INTERNATIONAL COPYRIGHTED MATERIAL

than the B-10 content in Boral, and is chosen so that the absolute B-10 content credited in the criticality analysis is the same for the two materials. This makes the two materials identical from a criticality perspective. This is confirmed by comparing results for a selected number of cases that were performed with both materials (see Section 6.4.11). Calculations in this chapter are therefore only performed for the Boral neutron absorber, with results directly applicable to Metamic.

The HI-STORM 100 System includes the HI-TRAC transfer cask and the HI-STORM storage cask. The HI-TRAC transfer cask is required for loading and unloading fuel into the MPC and for transfer of the MPC into the HI-STORM storage cask. HI-TRAC uses a lead shield for gamma radiation and a water-filled jacket for neutron shielding. The HI-STORM storage cask uses concrete as a shield for both gamma and neutron radiation. Both the HI-TRAC transfer cask and the HI-STORM storage cask, as well as the HI-STAR System[†], accommodate the interchangeable MPC designs. The three cask designs (HI-STAR, HI-STORM, and HI-TRAC) differ only in the overpack reflector materials (steel for HI-STAR, concrete for HI-STORM, and lead for HI-TRAC), which do not significantly affect the reactivity. Consequently, analyses for the HI-STAR System are directly applicable to the HI-STORM 100 system and vice versa. Therefore, the majority of criticality calculations to support both the HI-STAR and the HI-STORM System have been performed for only one of the two systems, namely the HI-STAR System. Only a selected number of analyses has been performed for both systems to demonstrate that this approach is valid. Therefore, unless specifically noted otherwise, all analyses documented throughout this chapter have been performed for the HI-STAR System. For the cases where analyses were performed for both the HI-STORM and HI-STAR System, this is clearly indicated.

The HI-STORM 100 System for storage (concrete overpack) is dry (no moderator), and thus, the reactivity is very low ($k_{eff}$ <0.52). However, the HI-STORM 100 System for cask transfer (HI-TRAC, lead overpack) is flooded for loading and unloading operations, and thus, represents the limiting case in terms of reactivity.

The MPC-24EF, MPC-32F and MPC-68FF contain the same basket as the MPC-24E, MPC-32 and MPC-68, respectively. More specifically, all dimensions relevant to the criticality analyses are identical between the MPC-24E and MPC-24EF, the MPC-32 and MPC-32F, and the MPC-68 and MPC-68FF. Therefore, all criticality results obtained for the MPC-24E, MPC-32 and MPC-68 are valid for the MPC-24EF, MPC-32F and MPC-68FF, respectively, and no separate analyses for the MPC-24EF, MPC-32F and MPC-68FF are necessary. Therefore, throughout this chapter and unless otherwise noted, 'MPC-68' refers to 'MPC-68 and/or MPC-68FF', 'MPC-24E' or 'MPC-24E/EF' refers to 'MPC-24E and/or MPC-24EF', and 'MPC-32' or 'MPC-32/32F' refers to 'MPC-32 and/or MPC-32F'.

---

† Analyses for the HI-STAR System have previously been submitted to the USNRC under Docket Numbers 72-1008 and 71-9261.

HOLTEC INTERNATIONAL COPYRIGHTED MATERIAL

Confirmation of the criticality safety of the HI-STORM 100 System was accomplished with the three-dimensional Monte Carlo code MCNP4a [6.1.4]. Independent confirmatory calculations were made with NITAWL-KENO5a from the SCALE-4.3 package [6.4.1]. KENO5a [6.1.5] calculations used the 238-group SCALE cross-section library in association with the NITAWL-II program [6.1.6], which adjusts the uranium-238 cross sections to compensate for resonance self-shielding effects. The Dancoff factors required by NITAWL-II were calculated with the CELLDAN code [6.1.13], which includes the SUPERDAN code [6.1.7] as a subroutine. K-factors for one-sided statistical tolerance limits with 95% probability at the 95% confidence level were obtained from the National Bureau of Standards (now NIST) Handbook 91 [6.1.8].

To assess the incremental reactivity effects due to manufacturing tolerances, CASMO-3, a two-dimensional transport theory code [6.1.9-6.1.12] for fuel assemblies, and MCNP4a [6.1.4] were used. The CASMO-3 and MCNP4a calculations identify those tolerances that cause a positive reactivity effect, enabling the subsequent Monte Carlo code input to define the worst case (most conservative) conditions. CASMO-3 was not used for quantitative information, but only to qualitatively indicate the direction and approximate magnitude of the reactivity effects of the manufacturing tolerances.

Benchmark calculations were made to compare the primary code packages (MCNP4a and KENO5a) with experimental data, using critical experiments selected to encompass, insofar as practical, the design parameters of the HI-STORM 100 System. The most important parameters are (1) the enrichment, (2) the water-gap size (MPC-24, MPC-24E and MPC-24EF) or cell spacing (MPC-32, MPC-32F, MPC-68, MPC-68F and MPC-68FF), (3) the $^{10}B$ loading of the neutron absorber panels, and (4) the soluble boron concentration in the water. The critical experiment benchmarking is presented in Appendix 6.A.

Applicable codes, standards, and regulations, or pertinent sections thereof, include the following:

- NUREG-1536, Standard Review Plan for Dry Cask Storage Systems, USNRC, Washington D.C., January 1997.

- 10CFR72.124, Criteria For Nuclear Criticality Safety.

- Code of Federal Regulations, Title 10, Part 50, Appendix A, General Design Criterion 62, Prevention of Criticality in Fuel Storage and Handling.

- USNRC Standard Review Plan, NUREG-0800, Section 9.1.2, Spent Fuel Storage, Rev. 3, July 1981.

To assure the true reactivity will always be less than the calculated reactivity, the following conservative design criteria and assumptions were made:

- The MPCs are assumed to contain the most reactive fresh fuel authorized to be loaded into a

HOLTEC INTERNATIONAL COPYRIGHTED MATERIAL

specific basket design.

- Consistent with NUREG-1536, no credit for fuel burnup is assumed, either in depleting the quantity of fissile nuclides or in producing fission product poisons.

- Consistent with NUREG-1536, the criticality analyses assume 75% of the manufacturer's minimum Boron-10 content for the Boral neutron absorber and 90% of the manufacturer's minimum Boron-10 content for the Metamic neutron absorber.

- The fuel stack density is conservatively assumed to be at least 96% of theoretical (10.522 g/cm$^3$) for all criticality analyses. Fuel stack density is approximately equal to 98% of the pellet density. Therefore, while the pellet density of some fuels may be slightly greater than 96% of theoretical, the actual stack density will be less.

- No credit is taken for the $^{234}$U and $^{236}$U in the fuel.

- When flooded, the moderator is assumed to be water, with or without soluble boron, at a temperature and density corresponding to the highest reactivity within the expected operating range.

- When credit is taken for soluble boron, a $^{10}$B content of 18.0 wt% in boron is assumed.

- Neutron absorption in minor structural members and optional heat conduction elements is neglected, i.e., spacer grids, basket supports, and optional aluminum heat conduction elements are replaced by water.

- Consistent with NUREG-1536, the worst hypothetical combination of tolerances (most conservative values within the range of acceptable values), as identified in Section 6.3, is assumed.

- When flooded, the fuel rod pellet-to-clad gap regions are assumed to be flooded with pure unborated water.

- Planar-averaged enrichments are assumed for BWR fuel. (Consistent with NUREG-1536, analysis is presented in Appendix 6.B to demonstrate that the use of planar-average enrichments produces conservative results.)

- Consistent with NUREG-1536, fuel-related burnable neutron absorbers, such as the Gadolinia normally used in BWR fuel and IFBA normally used in PWR fuel, are neglected.

- For evaluation of the bias, all benchmark calculations that result in a $k_{eff}$ greater than 1.0 are conservatively truncated to 1.0000, consistent with NUREG-1536.

HOLTEC INTERNATIONAL COPYRIGHTED MATERIAL

- The water reflector above and below the fuel is assumed to be unborated water, even if borated water is used in the fuel region.

- For fuel assemblies that contain low-enriched axial blankets, the governing enrichment is that of the highest planar average, and the blankets are not included in determining the average enrichment.

- Regarding the position of assemblies in the basket, configurations with centered and eccentric positioning of assemblies in the fuel storage locations are considered. For further discussions see Section 6.3.3.

- For intact fuel assemblies, as defined in Table 1.0.1, missing fuel rods must be replaced with dummy rods that displace a volume of water that is equal to, or larger than, that displaced by the original rods.

Results of the design basis criticality safety calculations for single internally flooded HI-TRAC transfer casks with full water reflection on all sides (limiting cases for the HI-STORM 100 System), and for single unreflected, internally flooded HI-STAR casks (limiting cases for the HI-STAR 100 System), loaded with intact fuel assemblies are listed in Tables 6.1.1 through 6.1.8, conservatively evaluated for the worst combination of manufacturing tolerances (as identified in Section 6.3), and including the calculational bias, uncertainties, and calculational statistics. Comparing corresponding results for the HI-TRAC and HI-STAR demonstrates that the overpack material does not significantly affect the reactivity. Consequently, analyses for the HI-STAR System are directly applicable to the HI-STORM 100 System and vice versa. In addition, a few results for single internally dry (no moderator) HI-STORM storage casks with full water reflection on all external surfaces of the overpack, including the annulus region between the MPC and overpack, are listed to confirm the low reactivity of the HI-STORM 100 System in storage.

For each of the MPC designs, minimum soluble boron concentration (if applicable) and fuel assembly classes[††], Tables 6.1.1 through 6.1.8 list the bounding maximum $k_{eff}$ value, and the associated maximum allowable enrichment. The maximum allowed enrichments and the minimum soluble boron concentrations are also listed in Section 2.1.9. The candidate fuel assemblies, that are bounded by those listed in Tables 6.1.1 through 6.1.8, are given in Section 6.2.

---

[††] For each array size (e.g., 6x6, 7x7, 14x14, etc.), the fuel assemblies have been subdivided into a number of assembly classes, where an assembly class is defined in terms of the (1) number of fuel rods; (2) pitch; (3) number and location of guide tubes (PWR) or water rods (BWR); and (4) cladding material. The assembly classes for BWR and PWR fuel are defined in Section 6.2.

HOLTEC INTERNATIONAL COPYRIGHTED MATERIAL

Results of the design basis criticality safety calculations for single unreflected, internally flooded casks (limiting cases) loaded with damaged fuel assemblies or a combination of intact and damaged fuel assemblies are listed in Tables 6.1.9 through 6.1.12. The results include the calculational bias, uncertainties, and calculational statistics. For each of the MPC designs qualified for damaged fuel and/or fuel debris (MPC-24E, MPC-24EF, MPC-68, MPC-68F, MPC-68FF, MPC-32 and MPC-32F), Tables 6.1.9 through 6.1.12 indicate the maximum number of DFCs and list the fuel assembly classes, the bounding maximum $k_{eff}$ value, the associated maximum allowable enrichment, and if applicable the minimum soluble boron concentration. For the permissible location of DFCs see Subsection 6.4.4.2. The maximum allowed enrichments are also listed in Section 2.1.9.

A table listing the maximum $k_{eff}$ (including bias, uncertainties, and calculational statistics), calculated $k_{eff}$, standard deviation, and energy of the average lethargy causing fission (EALF) for each of the candidate fuel assemblies and basket configurations is provided in Appendix 6.C. These results confirm that the maximum $k_{eff}$ values for the HI-STORM 100 System are below the limiting design criteria ($k_{eff} < 0.95$) when fully flooded and loaded with any of the candidate fuel assemblies and basket configurations. Analyses for the various conditions of flooding that support the conclusion that the fully flooded condition corresponds to the highest reactivity, and thus is most limiting, are presented in Section 6.4. The capability of the HI-STORM 100 System to safely accommodate damaged fuel and fuel debris is demonstrated in Subsection 6.4.4.

Accident conditions have also been considered and no credible accident has been identified that would result in exceeding the design criteria limit on reactivity. After the MPC is loaded with spent fuel, it is seal-welded and cannot be internally flooded. The HI-STORM 100 System for storage is dry (no moderator) and the reactivity is very low. For arrays of HI-STORM storage casks, the radiation shielding and the physical separation between overpacks due to the large diameter and cask pitch preclude any significant neutronic coupling between the casks.

HOLTEC INTERNATIONAL COPYRIGHTED MATERIAL

Table 6.1.1

BOUNDING MAXIMUM $k_{eff}$ VALUES FOR EACH ASSEMBLY CLASS IN THE MPC-24
(no soluble boron)

| **Fuel Assembly Class** | **Maximum Allowable Enrichment (wt% $^{235}$U)** | **Maximum† $k_{eff}$** | | |
|---|---|---|---|---|
| | | **HI-STORM** | **HI-TRAC** | **HI-STAR** |
| 14x14A | 4.6 | 0.3080 | 0.9283 | 0.9296 |
| 14x14B | 4.6 | --- | 0.9237 | 0.9228 |
| 14x14C | 4.6 | --- | 0.9274 | 0.9287 |
| 14x14D | 4.0 | --- | 0.8531 | 0.8507 |
| 14x14E | 5.0‡ | --- | 0.7627 | 0.7627 |
| 15x15A | 4.1 | --- | 0.9205 | 0.9204 |
| 15x15B | 4.1 | --- | 0.9387 | 0.9388 |
| 15x15C | 4.1 | --- | 0.9362 | 0.9361 |
| 15x15D | 4.1 | --- | 0.9354 | 0.9367 |
| 15x15E | 4.1 | --- | 0.9392 | 0.9368 |
| 15x15F | 4.1 | 0.3648 | 0.9393†† | 0.9395††† |
| 15x15G | 4.0 | --- | 0.8878 | 0.8876 |
| 15x15H | 3.8 | --- | 0.9333 | 0.9337 |
| 16x16A | 4.6 | 0.3447 | 0.9273 | 0.9287 |
| 17x17A | 4.0 | 0.3243 | 0.9378 | 0.9368 |
| 17x17B | 4.0 | --- | 0.9318 | 0.9324 |
| 17x17C | 4.0 | --- | 0.9319 | 0.9336 |

Note: The HI-STORM results are for internally dry (no moderator) HI-STORM storage casks with full water reflection on all sides, the HI-TRAC results are for internally fully flooded HI-TRAC transfer casks (which are part of the HI-STORM 100 System) with full water reflection on all sides, and the HI-STAR results are for unreflected, internally fully flooded HI-STAR casks.

† The term "maximum $k_{eff}$ " as used here, and elsewhere in this document, means the highest possible k-effective, including bias, uncertainties, and calculational statistics, evaluated for the worst case combination of manufacturing tolerances.

‡ *For Assembly Class 14x14E, the maximum enrichment is limited to 4.5 wt% in Section 2.1.9.*

†† KENO5a verification calculation resulted in a maximum $k_{eff}$ of 0.9383.

††† KENO5a verification calculation resulted in a maximum $k_{eff}$ of 0.9378.

HOLTEC INTERNATIONAL COPYRIGHTED MATERIAL

Table 6.1.2

BOUNDING MAXIMUM $k_{eff}$ VALUES FOR EACH ASSEMBLY CLASS IN THE MPC-24 WITH 400 PPM SOLUBLE BORON

| **Fuel Assembly Class** | **Maximum Allowable Enrichment (wt% $^{235}$U)** | **Maximum† $k_{eff}$** | | |
|---|---|---|---|---|
| | | **HI-STORM** | **HI-TRAC** | **HI-STAR** |
| 14x14A | 5.0 | --- | --- | 0.8884 |
| 14x14B | 5.0 | --- | --- | 0.8900 |
| 14x14C | 5.0 | --- | --- | 0.8950 |
| 14x14D | 5.0 | --- | --- | 0.8518 |
| 14x14E | 5.0‡ | --- | --- | 0.7132 |
| 15x15A | 5.0 | --- | --- | 0.9119 |
| 15x15B | 5.0 | --- | --- | 0.9284 |
| 15x15C | 5.0 | --- | --- | 0.9236 |
| 15x15D | 5.0 | --- | --- | 0.9261 |
| 15x15E | 5.0 | --- | --- | 0.9265 |
| 15x15F | 5.0 | 0.4013 | 0.9301 | 0.9314 |
| 15x15G | 5.0 | --- | --- | 0.8939 |
| 15x15H | 5.0 | --- | 0.9345 | 0.9366 |
| 16x16A | 5.0 | --- | --- | 0.8955 |
| 17x17A | 5.0 | --- | --- | 0.9264 |
| 17x17B | 5.0 | --- | --- | 0.9284 |
| 17x17C | 5.0 | --- | 0.9296 | 0.9294 |

Note: The HI-STORM results are for internally dry (no moderator) HI-STORM storage casks with full water reflection on all sides, the HI-TRAC results are for internally fully flooded HI-TRAC transfer casks (which are part of the HI-STORM 100 System) with full water reflection on all sides, and the HI-STAR results are for unreflected, internally fully flooded HI-STAR casks.

† The term "maximum $k_{eff}$" as used here, and elsewhere in this document, means the highest possible k-effective, including bias, uncertainties, and calculational statistics, evaluated for the worst case combination of manufacturing tolerances.

‡ *For Assembly Class 14x14E, the maximum enrichment is limited to 4.5 wt% in Section 2.1.9.*

HOLTEC INTERNATIONAL COPYRIGHTED MATERIAL

Table 6.1.3

BOUNDING MAXIMUM $k_{eff}$ VALUES FOR EACH ASSEMBLY CLASS IN THE MPC-24E AND MPC-24EF (no soluble boron)

| **Fuel Assembly Class** | **Maximum Allowable Enrichment (wt% $^{235}$U)** | **Maximum† $k_{eff}$** | | |
|---|---|---|---|---|
| | | **HI-STORM** | **HI-TRAC** | **HI-STAR** |
| 14x14A | 5.0 | --- | --- | 0.9380 |
| 14x14B | 5.0 | --- | --- | 0.9312 |
| 14x14C | 5.0 | --- | --- | 0.9356 |
| 14x14D | 5.0 | --- | --- | 0.8875 |
| 14x14E | 5.0‡ | --- | --- | 0.7651 |
| 15x15A | 4.5 | --- | --- | 0.9336 |
| 15x15B | 4.5 | --- | --- | 0.9465 |
| 15x15C | 4.5 | --- | --- | 0.9462 |
| 15x15D | 4.5 | --- | --- | 0.9440 |
| 15x15E | 4.5 | --- | --- | 0.9455 |
| 15x15F | 4.5 | 0.3699 | 0.9465 | 0.9468 |
| 15x15G | 4.5 | --- | --- | 0.9054 |
| 15x15H | 4.2 | --- | --- | 0.9423 |
| 16x16A | 5.0 | --- | --- | 0.9341 |
| 17x17A | 4.4 | --- | 0.9467 | 0.9447 |
| 17x17B | 4.4 | --- | --- | 0.9421 |
| 17x17C | 4.4 | --- | --- | 0.9433 |

Note: The HI-STORM results are for internally dry (no moderator) HI-STORM storage casks with full water reflection on all sides, the HI-TRAC results are for internally fully flooded HI-TRAC transfer casks (which are part of the HI-STORM 100 System) with full water reflection on all sides, and the HI-STAR results are for unreflected, internally fully flooded HI-STAR casks.

† The term "maximum $k_{eff}$ " as used here, and elsewhere in this document, means the highest possible k-effective, including bias, uncertainties, and calculational statistics, evaluated for the worst case combination of manufacturing tolerances.

‡ *For Assembly Class 14x14E, the maximum enrichment is limited to 4.5 wt% in Section 2.1.9.*

HOLTEC INTERNATIONAL COPYRIGHTED MATERIAL

Table 6.1.4

BOUNDING MAXIMUM $k_{eff}$ VALUES FOR EACH ASSEMBLY CLASS IN THE MPC-24E AND MPC-24EF WITH 300 PPM SOLUBLE BORON

| **Fuel Assembly Class** | **Maximum Allowable Enrichment (wt% $^{235}$U)** | **Maximum† $k_{eff}$** | | |
|---|---|---|---|---|
| | | **HI-STORM** | **HI-TRAC** | **HI-STAR** |
| 14x14A | 5.0 | --- | --- | 0.8963 |
| 14x14B | 5.0 | --- | --- | 0.8974 |
| 14x14C | 5.0 | --- | --- | 0.9031 |
| 14x14D | 5.0 | --- | --- | 0.8588 |
| 14x14E | 5.0‡ | --- | --- | 0.7249 |
| 15x15A | 5.0 | --- | --- | 0.9161 |
| 15x15B | 5.0 | --- | --- | 0.9321 |
| 15x15C | 5.0 | --- | --- | 0.9271 |
| 15x15D | 5.0 | --- | --- | 0.9290 |
| 15x15E | 5.0 | --- | --- | 0.9309 |
| 15x15F | 5.0 | 0.3897 | 0.9333 | 0.9332 |
| 15x15G | 5.0 | --- | --- | 0.8972 |
| 15x15H | 5.0 | --- | 0.9399 | 0.9399 |
| 16x16A | 5.0 | --- | --- | 0.9021 |
| 17x17A | 5.0 | --- | 0.9320 | 0.9332 |
| 17x17B | 5.0 | --- | --- | 0.9316 |
| 17x17C | 5.0 | --- | --- | 0.9312 |

Note: The HI-STORM results are for internally dry (no moderator) HI-STORM storage casks with full water reflection on all sides, the HI-TRAC results are for internally fully flooded HI-TRAC transfer casks (which are part of the HI-STORM 100 System) with full water reflection on all sides, and the HI-STAR results are for unreflected, internally fully flooded HI-STAR casks.

† The term "maximum $k_{eff}$ " as used here, and elsewhere in this document, means the highest possible k-effective, including bias, uncertainties, and calculational statistics, evaluated for the worst case combination of manufacturing tolerances.

‡ *For Assembly Class 14x14E, the maximum enrichment is limited to 4.5 wt% in Section 2.1.9.*

HOLTEC INTERNATIONAL COPYRIGHTED MATERIAL

Table 6.1.5

BOUNDING MAXIMUM $k_{eff}$ VALUES FOR EACH ASSEMBLY CLASS IN THE MPC-32 AND MPC-32F FOR 4.1% ENRICHMENT

| **Fuel Assembly Class** | **Maximum Allowable Enrichment (wt% $^{235}$U)** | **Minimum Soluble Boron Concentration (ppm)** | **Maximum† $k_{eff}$** | | |
|---|---|---|---|---|---|
| | | | **HI-STORM** | **HI-TRAC** | **HI-STAR** |
| 14x14A | 4.1 | 1300 | --- | --- | 0.9041 |
| 14x14B | 4.1 | 1300 | --- | --- | 0.9257 |
| 14x14C | 4.1 | 1300 | --- | --- | 0.9423 |
| 14x14D | 4.1 | 1300 | --- | --- | 0.8970 |
| 14x14E†† | *n/a* | *n/a* | *n/a* | *n/a* | *n/a* |
| 15x15A | 4.1 | 1800 | --- | --- | 0.9206 |
| 15x15B | 4.1 | 1800 | --- | --- | 0.9397 |
| 15x15C | 4.1 | 1800 | --- | --- | 0.9266 |
| 15x15D | 4.1 | 1900 | --- | --- | 0.9384 |
| 15x15E | 4.1 | 1900 | --- | --- | 0.9365 |
| 15x15F | 4.1 | 1900 | 0.4691 | 0.9403 | 0.9411 |
| 15x15G | 4.1 | 1800 | --- | --- | 0.9147 |
| 15x15H | 4.1 | 1900 | --- | --- | 0.9276 |
| 16x16A | 4.1 | 1300 | --- | --- | 0.9468 |
| 17x17A | 4.1 | 1900 | --- | --- | 0.9111 |
| 17x17B | 4.1 | 1900 | --- | --- | 0.9309 |
| 17x17C | 4.1 | 1900 | --- | 0.9365 | 0.9355 |

Note: The HI-STORM results are for internally dry (no moderator) HI-STORM storage casks with full water reflection on all sides, the HI-TRAC results are for internally fully flooded HI-TRAC transfer casks (which are part of the HI-STORM 100 System) with full water reflection on all sides, and the HI-STAR results are for unreflected, internally fully flooded HI-STAR casks.

† The term "maximum $k_{eff}$ " as used here, and elsewhere in this document, means the highest possible k-effective, including bias, uncertainties, and calculational statistics, evaluated for the worst case combination of manufacturing tolerances.

†† *The 14x14E class in the MPC-32 is analyzed in Supplement 6.II*

HOLTEC INTERNATIONAL COPYRIGHTED MATERIAL

Table 6.1.6

BOUNDING MAXIMUM $k_{eff}$ VALUES FOR EACH ASSEMBLY CLASS IN THE MPC-32 AND MPC-32F FOR 5.0% ENRICHMENT

| **Fuel Assembly Class** | **Maximum Allowable Enrichment (wt% $^{235}$U)** | **Minimum Soluble Boron Concentration (ppm)** | **Maximum† $k_{eff}$** | | |
|---|---|---|---|---|---|
| | | | **HI-STORM** | **HI-TRAC** | **HI-STAR** |
| 14x14A | 5.0 | 1900 | --- | --- | 0.9000 |
| 14x14B | 5.0 | 1900 | --- | --- | 0.9214 |
| 14x14C | 5.0 | 1900 | --- | --- | 0.9480 |
| 14x14D | 5.0 | 1900 | --- | --- | 0.9050 |
| 14x14E†† | *n/a* | *n/a* | *n/a* | *n/a* | *n/a* |
| 15x15A | 5.0 | 2500 | --- | --- | 0.9230 |
| 15x15B | 5.0 | 2500 | --- | --- | 0.9429 |
| 15x15C | 5.0 | 2500 | --- | --- | 0.9307 |
| 15x15D | 5.0 | 2600 | --- | --- | 0.9466 |
| 15x15E | 5.0 | 2600 | --- | --- | 0.9434 |
| 15x15F | 5.0 | 2600 | 0.5142 | 0.9470 | 0.9483 |
| 15x15G | 5.0 | 2500 | --- | --- | 0.9251 |
| 15x15H | 5.0 | 2600 | --- | --- | 0.9333 |
| 16x16A | 5.0 | 1900 | --- | --- | 0.9474 |
| 17x17A | 5.0 | 2600 | --- | --- | 0.9161 |
| 17x17B | 5.0 | 2600 | --- | --- | 0.9371 |
| 17x17C | 5.0 | 2600 | --- | 0.9436 | 0.9437 |

Note: The HI-STORM results are for internally dry (no moderator) HI-STORM storage casks with full water reflection on all sides, the HI-TRAC results are for internally fully flooded HI-TRAC transfer casks (which are part of the HI-STORM 100 System) with full water reflection on all sides, and the HI-STAR results are for unreflected, internally fully flooded HI-STAR casks.

† The term "maximum $k_{eff}$ " as used here, and elsewhere in this document, means the highest possible k-effective, including bias, uncertainties, and calculational statistics, evaluated for the worst case combination of manufacturing tolerances.

†† *The 14x14E class in the MPC-32 is analyzed in Supplement 6.II*

HOLTEC INTERNATIONAL COPYRIGHTED MATERIAL

Table 6.1.7

BOUNDING MAXIMUM $k_{eff}$ VALUES FOR EACH ASSEMBLY CLASS IN THE MPC-68 AND MPC-68FF

| Fuel Assembly Class | Maximum Allowable Planar-Average Enrichment (wt% $^{235}U$) | Maximum† $k_{eff}$ | | |
|---|---|---|---|---|
| | | HI-STORM | HI-TRAC | HI-STAR |
| 6x6A | 2.7†† | --- | 0.7886 | 0.7888††† |
| 6x6B‡ | 2.7†† | --- | 0.7833 | 0.7824††† |
| 6x6C | 2.7†† | 0.2759 | 0.8024 | 0.8021††† |
| 7x7A | 2.7†† | --- | 0.7963 | 0.7974††† |
| 7x7B | 4.2 | 0.4061 | 0.9385 | 0.9386 |
| 8x8A | 2.7†† | --- | 0.7690 | 0.7697††† |
| 8x8B | 4.2 | 0.3934 | 0.9427 | 0.9416 |
| 8x8C | 4.2 | 0.3714 | 0.9429 | 0.9425 |
| 8x8D | 4.2 | --- | 0.9408 | 0.9403 |
| 8x8E | 4.2 | --- | 0.9309 | 0.9312 |
| 8x8F | 4.0 | --- | 0.9396 | 0.9411 |

Note: The HI-STORM results are for internally dry (no moderator) HI-STORM storage casks with full water reflection on all sides, the HI-TRAC results are for internally fully flooded HI-TRAC transfer casks (which are part of the HI-STORM 100 System) with full water reflection on all sides, and the HI-STAR results are for unreflected, internally fully flooded HI-STAR casks.

† The term "maximum $k_{eff}$ " as used here, and elsewhere in this document, means the highest possible k-effective, including bias, uncertainties, and calculational statistics, evaluated for the worst case combination of manufacturing tolerances.

†† This calculation was performed for 3.0% planar-average enrichment, however, the authorized contents are limited to a maximum planar-average enrichment of 2.7%. Therefore, the listed maximum $k_{eff}$ value is conservative.

††† This calculation was performed for a $^{10}B$ loading of 0.0067 g/cm$^2$, which is 75% of a minimum $^{10}B$ loading of 0.0089 g/cm$^2$. The minimum $^{10}B$ loading in the MPC-68 is at least 0.0310 g/cm$^2$. Therefore, the listed maximum $k_{eff}$ value is conservative.

‡ Assemblies in this class contain both MOX and $UO_2$ pins. The composition of the MOX fuel pins is given in Table 6.3.4. The maximum allowable planar-average enrichment for the MOX pins is given in the specification of authorized contents in Section 2.1.9.

HOLTEC INTERNATIONAL COPYRIGHTED MATERIAL

Table 6.1.7 (continued)

BOUNDING MAXIMUM $k_{eff}$ VALUES FOR EACH ASSEMBLY CLASS IN THE MPC-68 AND MPC-68FF

| **Fuel Assembly Class** | **Maximum Allowable Planar-Average Enrichment (wt% $^{235}U$)** | **Maximum† $k_{eff}$** | | |
|---|---|---|---|---|
| | | **HI-STORM** | **HI-TRAC** | **HI-STAR** |
| 9x9A | 4.2 | 0.3365 | 0.9434 | 0.9417 |
| 9x9B | 4.2 | --- | 0.9417 | 0.9436 |
| 9x9C | 4.2 | --- | 0.9377 | 0.9395 |
| 9x9D | 4.2 | --- | 0.9387 | 0.9394 |
| 9x9E | 4.0 | | 0.9402 | 0.9401 |
| 9x9F | 4.0 | --- | 0.9402 | 0.9401 |
| 9x9G | 4.2 | --- | 0.9307 | 0.9309 |
| 10x10A | 4.2 | 0.3379 | 0.9448‡‡ | 0.9457* |
| 10x10B | 4.2 | --- | 0.9443 | 0.9436 |
| 10x10C | 4.2 | --- | 0.9430 | 0.9433 |
| 10x10D | 4.0 | --- | 0.9383 | 0.9376 |
| 10x10E | 4.0 | --- | 0.9157 | 0.9185 |

Note: The HI-STORM results are for internally dry (no moderator) HI-STORM storage casks with full water reflection on all sides, the HI-TRAC results are for internally fully flooded HI-TRAC transfer casks (which are part of the HI-STORM 100 System) with full water reflection on all sides, and the HI-STAR results are for unreflected, internally fully flooded HI-STAR casks.

† The term "maximum $k_{eff}$ " as used here, and elsewhere in this document, means the highest possible k-effective, including bias, uncertainties, and calculational statistics, evaluated for the worst case combination of manufacturing tolerances.

‡‡ KENO5a verification calculation resulted in a maximum $k_{eff}$ of 0.9451.

* KENO5a verification calculation resulted in a maximum $k_{eff}$ of 0.9453.

HOLTEC INTERNATIONAL COPYRIGHTED MATERIAL

Table 6.1.8

BOUNDING MAXIMUM $k_{eff}$ VALUES FOR EACH ASSEMBLY CLASS IN THE MPC-68F

| **Fuel Assembly Class** | **Maximum Allowable Planar-Average Enrichment (wt% $^{235}U$)** | **Maximum† $k_{eff}$** | | |
|---|---|---|---|---|
| | | **HI-STORM** | **HI-TRAC** | **HI-STAR** |
| 6x6A | 2.7†† | --- | 0.7886 | 0.7888 |
| 6x6B††† | 2.7 | --- | 0.7833 | 0.7824 |
| 6x6C | 2.7 | 0.2759 | 0.8024 | 0.8021 |
| 7x7A | 2.7 | --- | 0.7963 | 0.7974 |
| 8x8A | 2.7 | --- | 0.7690 | 0.7697 |

Notes:

1. The HI-STORM results are for internally dry (no moderator) HI-STORM storage casks with full water reflection on all sides, the HI-TRAC results are for internally fully flooded HI-TRAC transfer casks (which are part of the HI-STORM 100 System) with full water reflection on all sides, and the HI-STAR results are for unreflected, internally fully flooded HI-STAR casks.

2. These calculations were performed for a $^{10}B$ loading of 0.0067 g/cm$^2$, which is 75% of a minimum $^{10}B$ loading of 0.0089 g/cm$^2$. The minimum $^{10}B$ loading in the MPC-68F is 0.010 g/cm$^2$. Therefore, the listed maximum $k_{eff}$ values are conservative.

† The term "maximum $k_{eff}$ " as used here, and elsewhere in this document, means the highest possible k-effective, including bias, uncertainties, and calculational statistics, evaluated for the worst case combination of manufacturing tolerances.

†† These calculations were performed for 3.0% planar-average enrichment, however, the authorized contents are limited to a maximum planar-average enrichment of 2.7%. Therefore, the listed maximum $k_{eff}$ values are conservative.

††† Assemblies in this class contain both MOX and $UO_2$ pins. The composition of the MOX fuel pins is given in Table 6.3.4. The maximum allowable planar-average enrichment for the MOX pins is specified in the specification of authorized contents in Section 2.1.9.

HOLTEC INTERNATIONAL COPYRIGHTED MATERIAL

Table 6.1.9

BOUNDING MAXIMUM $k_{eff}$ VALUES FOR THE MPC-24E AND MPC-24EF WITH UP TO 4 DFCs

| Fuel Assembly Class | Maximum Allowable Enrichment (wt% $^{235}U$) | | Minimum Soluble Boron Concentration (ppm) | Maximum $k_{eff}$ | |
|---|---|---|---|---|---|
| | Intact Fuel | Damaged Fuel and Fuel Debris | | HI-TRAC | HI-STAR |
| All PWR Classes | 4.0 | 4.0 | 0 | 0.9486 | 0.9480 |
| All PWR Classes[‡] | 5.0 | 5.0 | 600 | 0.9177 | 0.9185 |

Table 6.1.10

BOUNDING MAXIMUM $k_{eff}$ VALUES FOR THE MPC-68, MPC-68F AND MPC-68FF WITH UP TO 68 DFCs

| Fuel Assembly Class | Maximum Allowable Planar-Average Enrichment (wt% $^{235}U$) | | Maximum $k_{eff}$ | |
|---|---|---|---|---|
| | Intact Fuel | Damaged Fuel and Fuel Debris | HI-TRAC | HI-STAR |
| 6x6A, 6x6B, 6x6C, 7x7A, 8x8A | 2.7 | 2.7 | 0.8024 | 0.8021 |

Table 6.1.11

BOUNDING MAXIMUM $k_{eff}$ VALUES FOR THE MPC-68 AND MPC-68FF WITH UP TO 16 DFCs

| Fuel Assembly Class | Maximum Allowable Planar-Average Enrichment (wt% $^{235}U$) | | Maximum $k_{eff}$ | |
|---|---|---|---|---|
| | Intact Fuel | Damaged Fuel and Fuel Debris | HI-TRAC | HI-STAR |
| All BWR Classes | 3.7 | 4.0 | 0.9328 | 0.9328 |

[‡] *For Assembly Class 14x14E, the maximum enrichment is limited to 4.5 wt% in Section 2.1.9.*

HOLTEC INTERNATIONAL COPYRIGHTED MATERIAL

Table 6.1.12

BOUNDING MAXIMUM $k_{eff}$ VALUES FOR THE MPC-32 AND MPC-32F WITH UP TO 8 DFCs

| **Fuel Assembly Class of Intact Fuel** | **Maximum Allowable Enrichment for Intact Fuel and Damaged Fuel/Fuel Debris (wt% $^{235}$U)** | **Minimum Soluble Boron Content (ppm)** | **Maximum $k_{eff}$** | |
|---|---|---|---|---|
| | | | **HI-TRAC** | **HI-STAR** |
| 14x14A, B, C, D~~, E~~ | 4.1 | 1500 | --- | 0.9336 |
| | 5.0 | 2300 | --- | 0.9269 |
| 15x15A, B, C, G | 4.1 | 1900 | 0.9349 | 0.9350 |
| | 5.0 | 2700 | --- | 0.9365 |
| 15x15D, E, F, H | 4.1 | 2100 | --- | 0.9340 |
| | 5.0 | 2900 | 0.9382 | 0.9397 |
| 16x16A | 4.1 | 1500 | --- | 0.9335 |
| | 5.0 | 2300 | --- | 0.9289 |
| 17x17A, B, C | 4.1 | 2100 | --- | 0.9294 |
| | 5.0 | 2900 | --- | 0.9367 |

HOLTEC INTERNATIONAL COPYRIGHTED MATERIAL

## 6.4 CRITICALITY CALCULATIONS

### 6.4.1 Calculational or Experimental Method

#### 6.4.1.1 Basic Criticality Safety Calculations

The principal method for the criticality analysis is the general three-dimensional continuous energy Monte Carlo N-Particle code MCNP4a [6.1.4] developed at the Los Alamos National Laboratory. MCNP4a was selected because it has been extensively used and verified and has all of the necessary features for this analysis. MCNP4a calculations used continuous energy cross-section data based on ENDF/B-V, as distributed with the code [6.1.4]. Independent verification calculations were performed with NITAWL-KENO5a [6.1.5], which is a three-dimensional multigroup Monte Carlo code developed at the Oak Ridge National Laboratory. The KENO5a calculations used the 238-group cross-section library, which is based on ENDF/B-V data and is distributed as part of the SCALE-4.3 package [6.4.1], in association with the NITAWL-II program [6.1.6], which adjusts the uranium-238 cross sections to compensate for resonance self-shielding effects. The Dancoff factors required by NITAWL-II were calculated with the CELLDAN code [6.1.13], which includes the SUPERDAN code [6.1.7] as a subroutine.

The convergence of a Monte Carlo criticality problem is sensitive to the following parameters: (1) number of histories per cycle, (2) the number of cycles skipped before averaging, (3) the total number of cycles and (4) the initial source distribution. The MCNP4a criticality output contains a great deal of useful information that may be used to determine the acceptability of the problem convergence. This information was used in parametric studies to develop appropriate values for the aforementioned criticality parameters to be used in the criticality calculations for this submittal. Based on these studies, a minimum of 5,000 histories were simulated per cycle, a minimum of 20 cycles were skipped before averaging, a minimum of 100 cycles were accumulated, and the initial source was specified as uniform over the fueled regions (assemblies). Further, the output was examined to ensure that each calculation achieved acceptable convergence. These parameters represent an acceptable compromise between calculational precision and computational time. Appendix 6.D provides sample input files for the MPC-24 and MPC-68 basket in the HI-STORM 100 System.

CASMO-3 [6.1.9] was used for determining the small incremental reactivity effects of manufacturing tolerances. Although CASMO-3 has been extensively benchmarked, these calculations are used only to establish direction of reactivity uncertainties due to manufacturing tolerances (and their magnitude). This allows the MCNP4a calculational model to use the worst combination of manufacturing tolerances. Table 6.3.1 shows results of the CASMO-3 calculations.

HOLTEC INTERNATIONAL COPYRIGHTED MATERIAL

## 6.4.2 Fuel Loading or Other Contents Loading Optimization

The basket designs are intended to safely accommodate fuel with enrichments indicated in Tables 6.1.1 through 6.1.8 . These calculations were based on the assumption that the HI-STORM 100 System (HI-TRAC transfer cask) was fully flooded with clean unborated water or water containing specific minimum soluble boron concentrations. In all cases, the calculations include bias and calculational uncertainties, as well as the reactivity effects of manufacturing tolerances, determined by assuming the worst case geometry.

### 6.4.2.1 Internal and External Moderation

As required by NUREG-1536, calculations in this section demonstrate that the HI-STORM 100 System remains subcritical for all credible conditions of moderation.

#### 6.4.2.1.1 Unborated Water

With a neutron absorber present (i.e., the fixed neutron absorber sheets or the steel walls of the storage compartments), the phenomenon of a peak in reactivity at a hypothetical low moderator density (sometimes called "optimum" moderation) does not occur to any significant extent. In a definitive study, Cano, et al. [6.4.2] has demonstrated that the phenomenon of a peak in reactivity at low moderator densities does not occur in the presence of strong neutron absorbing material or in the absence of large water spaces between fuel assemblies in storage. Nevertheless, calculations for a single reflected cask were made to confirm that the phenomenon does not occur with low density water inside or outside the casks.

Calculations for the MPC designs with internal and external moderators of various densities are shown in Table 6.4.1. For comparison purposes, a calculation for a single unreflected cask (Case 1) is also included in Table 6.4.1. At 100% external moderator density, Case 2 corresponds to a single fully-flooded cask, fully reflected by water. Figure 6.4.10 plots calculated $k_{eff}$ values ($\pm 2\sigma$) as a function of internal moderator density for both MPC designs with 100% external moderator density (i.e., full water reflection). Results listed in Table 6.4.1 support the following conclusions:

- For each type of MPC, the calculated $k_{eff}$ for a fully-flooded cask is independent of the external moderator (the small variations in the listed values are due to statistical uncertainties which are inherent to the calculational method (Monte Carlo)), and

- For each type of MPC, reducing the internal moderation results in a monotonic reduction

HOLTEC INTERNATIONAL COPYRIGHTED MATERIAL

in reactivity, with no evidence of any optimum moderation. Thus, the fully flooded condition corresponds to the highest reactivity, and the phenomenon of optimum low-density moderation does not occur and is not applicable to the HI-STORM 100 System.

For each of the MPC designs, the maximum $k_{eff}$ values are shown to be less than or statistically equal to that of a single internally flooded unreflected cask and are below the regulatory limit of 0.95.

6.4.2.1.2 Borated Water

With the presence of a soluble neutron absorber in the water, the discussion in the previous section is not always applicable. Calculations were made to determine the optimum moderator density for the MPC designs that require a minimum soluble boron concentration.

Calculations for the MPC designs with various internal moderator densities are shown in Table 6.4.6. As shown in the previous section, the external moderator density has a negligible effect on the reactivity, and is therefore not varied. Water containing soluble boron has a slightly higher density than pure water. Therefore, water densities up to 1.005 g/cm$^3$ were analyzed for the higher soluble boron concentrations. Additionally, for the higher soluble boron concentrations, analysis have been performed with empty (voided) guide tubes. This variation is discussed in detail in Section 6.4.8. Results listed in the Table 6.4.6 support the following conclusions:

- For all cases with a soluble boron concentration of up to 1900ppm, and for a soluble boron concentration of 2600ppm assuming voided guide tubes, the conclusion of the Section 6.4.2.1.1 applies, i.e. the maximum reactivity is corresponds to 100% moderator density.

- For 2600ppm soluble boron concentration with filled guide tubes, the results presented in Table 6.4.6 indicate that there is a maximum of the reactivity somewhere between 0.90 g/cm$^3$ and 1.00 g/cm$^3$ moderator density. However, a distinct maximum can not be identified, as the reactivities in this range are very close. For the purpose of the calculations with 2600ppm soluble boron concentration, a moderator density of 0.93 g/cm$^3$ was chosen, which corresponds to the highest calculated reactivity listed in Table 6.4.6.

The calculations documented in this chapter also use soluble boron concentrations other than 1900 ppm and 2600 ppm in the MPC-32/32F. For the MPC-32 loaded with intact fuel only, soluble boron concentrations between 1300 ppm and 2600 ppm are used. For the MPC-32/32F loaded with intact fuel, damaged fuel and fuel debris, soluble boron concentrations between 1500 ppm and 2900 ppm are used. In order to determine the optimum moderation condition for

HOLTEC INTERNATIONAL COPYRIGHTED MATERIAL

each assembly class at the corresponding soluble boron level, evaluations are performed with filled and voided guide tubes, and for water densities of 1.0 g/cm$^3$ and 0.93 g/cm$^3$ for each class and enrichment level. Results for the MPC-32 loaded with intact fuel only are listed in Table 6.4.10 for an initial enrichment of 5.0 wt% $^{235}$U and in Table 6.4.11 for an initial enrichment of 4.1 wt% $^{235}$U. Corresponding results for the MPC-32/32F loaded with intact fuel, damaged fuel and fuel debris are listed in Table 6.4.14. The highest value listed in these tables for each assembly class is listed as the bounding value in Section 6.1.

#### 6.4.2.2 Partial Flooding

As required by NUREG-1536, calculations in this section address partial flooding in the HI-STORM 100 System and demonstrate that the fully flooded condition is the most reactive.

The reactivity changes during the flooding process were evaluated in both the vertical and horizontal positions for all MPC designs. For these calculations, the cask is partially filled (at various levels) with full density (1.0 g/cc) water and the remainder of the cask is filled with steam consisting of ordinary water at partial density (0.002 g/cc), as suggested in NUREG-1536. Results of these calculations are shown in Table 6.4.2. In all cases, the reactivity increases monotonically as the water level rises, confirming that the most reactive condition is fully flooded.

#### 6.4.2.3 Clad Gap Flooding

As required by NUREG-1536, the reactivity effect of flooding the fuel rod pellet-to-clad gap regions, in the fully flooded condition, has been investigated. Table 6.4.3 presents maximum $k_{eff}$ values that demonstrate the positive reactivity effect associated with flooding the pellet-to-clad gap regions. These results confirm that it is conservative to assume that the pellet-to-clad gap regions are flooded. For all cases that involve flooding, the pellet-to-clad gap regions are assumed to be flooded with clean, unborated water.

#### 6.4.2.4 Preferential Flooding

Two different potential conditions of preferential flooding are considered: preferential flooding of the MPC basket itself (i.e. different water levels in different basket cells), and preferential flooding involving Damaged Fuel Containers.

Preferential flooding of the MPC basket itself for any of the MPC fuel basket designs is not possible because flow holes are present on all four walls of each basket cell and on the two flux trap walls at both the top and bottom of the MPC basket. The flow holes are sized to ensure that

HOLTEC INTERNATIONAL COPYRIGHTED MATERIAL

they cannot be blocked by crud deposits (see Chapter 11). Because the fuel cladding temperatures remain below their design limits (as demonstrated in Chapter 4) and the inertial loading remains below 63g's (the inertial loadings associated with the design basis drop accidents discussed in Chapter 11 are limited to 45g's), the cladding remains intact (see Section 3.5). For damaged fuel assemblies and fuel debris, the assemblies or debris are pre-loaded into stainless steel Damaged Fuel Containers fitted with 250x250 fine mesh screens which prevent damaged fuel assemblies or fuel debris from blocking the basket flow holes. Therefore, the flow holes cannot be blocked.

However, when DFCs are present in the MPC, a condition could exist during the draining of the MPC, where the DFCs are still partly filled with water while the remainder of the MPC is dry. This condition would be the result of the water tension across the mesh screens. The maximum water level inside the DFCs for this condition is calculated from the dimensions of the mesh screen and the surface tension of water. The wetted perimeter of the screen openings is 50 ft per square inch of screen. With a surface tension of water of 0.005 lbf/ft, this results in a maximum pressure across the screen of 0.25 psi, corresponding to a maximum water height in the DFC of 7 inches. For added conservativism, a value of 12 inches is used. Assuming this condition, calculations are performed for all three possible DFC configurations:

- MPC-68 or MPC-68F with 68 DFCs (Assembly Classes 6x6A/B/C, 7x7A and 8x8A)
- MPC-68 or MPC-68FF with 16 DFCs (All BWR Assembly Classes)
- MPC-24E or MPC-24EF with 4 DFCs (All PWR Assembly Classes)
- MPC-32 or MPC-32F with 8 DFCs (All PWR Assembly Classes)

For each configuration, the case resulting in the highest maximum $k_{eff}$ for the fully flooded condition (see Section 6.4.4) is re-analyzed assuming the preferential flooding condition. For these analyses, the lower 12 inches of the active fuel in the DFCs and the water region below the active fuel (see Figure 6.3.7) are filled with full density water (1.0 g/cc). The remainder of the cask is filled with steam consisting of ordinary water at partial density (0.002 g/cc). Table 6.4.4 lists the maximum $k_{eff}$ for the four configurations in comparison with the maximum $k_{eff}$ for the fully flooded condition. For all configurations, the preferential flooding condition results in a lower maximum $k_{eff}$ than the fully flooded condition. Thus, the preferential flooding condition is bounded by the fully flooded condition.

Once established, the integrity of the MPC confinement boundary is maintained during all credible off-normal and accident conditions, and thus, the MPC cannot be flooded. In summary, it is concluded that the MPC fuel baskets cannot be preferentially flooded, and that the potential preferential flooding conditions involving DFCs are bounded by the result for the fully flooded condition listed in Section 6.4.4.

HOLTEC INTERNATIONAL COPYRIGHTED MATERIAL

### 6.4.2.5 Design Basis Accidents

The analyses presented in Chapters 3 and 11 demonstrate that the damage resulting from the design basis accidents is limited to a loss of the water jacket for the HI-TRAC transfer cask and minor damage to the concrete radiation shield for the HI-STORM storage cask, which have no adverse effect on the design parameters important to criticality safety.

As reported in Chapter 3, Table 3.4.4, the minimum factor of safety for either MPC as a result of the hypothetical cask drop or tip-over accident is 1.1 against the Level D allowables for Subsection NG, Section III of the ASME Code. Therefore, because the maximum box wall stresses are well within the ASME Level D allowables, the flux-trap gap change will be insignificant compared to the characteristic dimension of the flux trap.

In summary, the design basis accidents have no adverse effect on the design parameters important to criticality safety, and therefore, there is no increase in reactivity as a result of any of the credible off-normal or accident conditions involving handling, packaging, transfer or storage. Consequently, the HI-STORM 100 System is in full compliance with the requirement of 10CRF72.124, which states that "before a nuclear criticality accident is possible, at least two unlikely, independent, and concurrent or sequential changes have occurred in the conditions essential to nuclear criticality safety."

## 6.4.3 Criticality Results

Results of the design basis criticality safety calculations for the condition of full flooding with water (limiting cases) are presented in section 6.2 and summarized in Section 6.1. To demonstrate the applicability of the HI-STAR analyses, results of the design basis criticality safety calculations for the HI-STAR cask (limiting cases) are also summarized in Section 6.1 for comparison. These data confirm that for each of the candidate fuel types and basket configurations the effective multiplication factor ($k_{eff}$), including all biases and uncertainties at a 95-percent confidence level, do not exceed 0.95 under all credible normal, off-normal, and accident conditions.

Additional calculations (CASMO-3) at elevated temperatures confirm that the temperature coefficients of reactivity are negative as shown in Table 6.3.1. This confirms that the calculations for the storage baskets are conservative.

In calculating the maximum reactivity, the analysis used the following equation:

$$k_{eff}^{max} = k_c + K_c \sigma_c + Bias + \sigma_B$$

HOLTEC INTERNATIONAL COPYRIGHTED MATERIAL

where:

- ⇒ $k_c$ is the calculated $k_{eff}$ under the worst combination of tolerances;
- ⇒ $K_c$ is the K multiplier for a one-sided statistical tolerance limit with 95% probability at the 95% confidence level [6.1.8]. Each final $k_{eff}$ value calculated by MCNP4a (or KENO5a) is the result of averaging 100 (or more) cycle $k_{eff}$ values, and thus, is based on a sample size of 100. The K multiplier corresponding to a sample size of 100 is 1.93. However, for this analysis a value of 2.00 was assumed for the K multiplier, which is larger (more conservative) than the value corresponding to a sample size of 100;
- ⇒ $\sigma_c$ is the standard deviation of the calculated $k_{eff}$, as determined by the computer code (MCNP4a or KENO5a);
- ⇒ ***Bias*** is the systematic error in the calculations (code dependent) determined by comparison with critical experiments in Appendix 6.A; and
- ⇒ $\sigma_B$ is the standard error of the bias (which includes the K multiplier for 95% probability at the 95% confidence level; see Appendix 6.A).

The critical experiment benchmarking and the derivation of the bias and standard error of the bias (95% probability at the 95% confidence level) are presented in Appendix 6.A.

### 6.4.4 Damaged Fuel and Fuel Debris

Damaged fuel assemblies and fuel debris are required to be loaded into Damaged Fuel Containers (DFCs) prior to being loaded into the MPC. Five (5) different DFC types with different cross sections are analyzed. Three (3) of these DFCs are designed for BWR fuel assemblies, two (2) are designed for PWR fuel assemblies. Two of the DFCs for BWR fuel are specifically designed for fuel assembly classes 6x6A, 6x6B, 6x6C, 7x7A and 8x8A. These assemblies have a smaller cross section, a shorter active length and a low initial enrichment of 2.7 wt% $^{235}U$, and therefore a low reactivity. The analysis for these assembly classes is presented in the following Section 6.4.4.1. The remaining three DFCs are generic DFCs designed for all BWR and PWR assembly classes. The criticality analysis for these generic DFCs is presented in Section 6.4.4.2.

#### 6.4.4.1 MPC-68, MPC-68F or MPC-68FF loaded with Assembly Classes 6x6A, 6x6B, 6x6C, 7x7A and 8x8A

This section only addresses criticality calculations and results for assembly classes 6x6A, 6x6B, 6x6C, 7x7A and 8x8A, loaded into the MPC-68, MPC-68F or MPC-68FF. Up to 68 DFCs with these assembly classes are permissible to be loaded into the MPC. Two different DFC types with slightly different cross-sections are analyzed. DFCs containing fuel debris must be stored in the

HOLTEC INTERNATIONAL COPYRIGHTED MATERIAL

MPC-68F or MPC-68FF. DFCs containing damaged fuel assemblies may be stored in either the MPC-68, MPC-68F or MPC-68FF. Evaluation of the capability of storing damaged fuel and fuel debris (loaded in DFCs) is limited to very low reactivity fuel in the MPC-68F. Because the MPC-68 and MPC-68FF have a higher specified $^{10}B$ loading, the evaluation of the MPC-68F conservatively bounds the storage of damaged BWR fuel assemblies in a standard MPC-68 or MPC-68FF. Although the maximum planar-average enrichment of the damaged fuel is limited to 2.7% $^{235}U$ as specified in Section 2.1.9, analyses have been made for three possible scenarios, conservatively assuming fuel[††] of 3.0% enrichment. The scenarios considered included the following:

1. Lost or missing fuel rods, calculated for various numbers of missing rods in order to determine the maximum reactivity. The configurations assumed for analysis are illustrated in Figures 6.4.2 through 6.4.8.
2. Broken fuel assembly with the upper segments falling into the lower segment creating a close-packed array (described as a 8x8 array). For conservatism, the array analytically retained the same length as the original fuel assemblies in this analysis. This configuration is illustrated in Figure 6.4.9.
3. Fuel pellets lost from the assembly and forming powdered fuel dispersed through a volume equivalent to the height of the original fuel. (Flow channel and clad material assumed to disappear).

Results of the analyses, shown in Table 6.4.5, confirm that, in all cases, the maximum reactivity is well below the regulatory limit. There is no significant difference in reactivity between the two DFC types. Collapsed fuel reactivity (simulating fuel debris) is low because of the reduced moderation. Dispersed powdered fuel results in low reactivity because of the increase in $^{238}U$ neutron capture (higher effective resonance integral for $^{238}U$ absorption).

The loss of fuel rods results in a small increase in reactivity (i.e., rods assumed to collapse, leaving a smaller number of rods still intact). The peak reactivity occurs for 8 missing rods, and a smaller (or larger) number of intact rods will have a lower reactivity, as indicated in Table 6.4.5.

The analyses performed and summarized in Table 6.4.5 provides the relative magnitude of the effects on the reactivity. This information coupled with the maximum $k_{eff}$ values listed in Table 6.1.3 and the conservatism in the analyses, demonstrate that the maximum $k_{eff}$ of the damaged fuel in the most adverse post-accident condition will remain well below the regulatory requirement of $k_{eff} < 0.95$.

---

[††] 6x6A01 and 7x7A01 fuel assemblies were used as representative assemblies.

HOLTEC INTERNATIONAL COPYRIGHTED MATERIAL

### 6.4.4.2 Generic BWR and PWR Damaged Fuel and Fuel Debris

The MPC-24E, MPC-24EF, MPC-32, MPC-32F, MPC-68 and MPC-68FF are designed to contain PWR and BWR damaged fuel and fuel debris, loaded into generic DFCs. The number of generic DFCs is limited to 16 for the MPC-68 and MPC-68FF, to 4 for the MPC-24E and MPC-24EF, and to 8 for the MPC-32 and MPC-32F. The permissible locations of the DFCs are shown in Figure 6.4.11 for the MPC-68/68FF, in Figure 6.4.12 for the MPC-24E/24EF and in Figure 6.4.16 for the MPC-32/32F.

Damaged fuel assemblies are assemblies with known or suspected cladding defects greater than pinholes or hairlines, or with missing rods, but excluding fuel assemblies with gross defects (for a full definition see Table 1.0.1). Therefore, apart from possible missing fuel rods, damaged fuel assemblies have the same geometric configuration as intact fuel assemblies and consequently the same reactivity. Missing fuel rods can result in a slight increase of reactivity. After a drop accident, however, it can not be assumed that the initial geometric integrity is still maintained. For a drop on either the top or bottom of the cask, the damaged fuel assemblies could collapse. This would result in a configuration with a reduced length, but increased amount of fuel per unit length. For a side drop, fuel rods could be compacted to one side of the DFC. In either case, a significant relocation of fuel within the DFC is possible, which creates a greater amount of fuel in some areas of the DFC, whereas the amount of fuel in other areas is reduced. Fuel debris can include a large variety of configurations ranging from whole fuel assemblies with severe damage down to individual fuel pellets.

In the cases of fuel debris or relocated damaged fuel, there is the potential that fuel could be present in axial sections of the DFCs that are outside the basket height covered with the fixed neutron absorber. However, in these sections, the DFCs are not surrounded by any intact fuel, only by basket cell walls, non-fuel hardware, water and for the MPC-68/68FF by a maximum of one other DFC. Studies have shown that this condition does not result in any significant effect on reactivity, compared to a condition where the damaged fuel and fuel debris is restricted to the axial section of the basket covered by the fixed neutron absorber. All calculations for generic BWR and PWR damaged fuel and fuel debris are therefore performed assuming that fuel is present only in the axial sections covered by the fixed neutron absorber, and the results are directly applicable to any situation where damaged fuel and fuel debris is located outside these sections in the DFCs.

To address all the situations listed above and identify the configuration or configurations leading to the highest reactivity, it is impractical to analyze a large number of different geometrical configurations for each of the fuel classes. Instead, a bounding approach is taken which is based on the analysis of regular arrays of bare fuel rods without cladding. Details and results of the analyses are discussed in the following sections.

HOLTEC INTERNATIONAL COPYRIGHTED MATERIAL

All calculations for generic damaged fuel and fuel debris are performed using a full cask model with the maximum permissible number of Damaged Fuel Containers. For the MPC-68 and MPC-68FF, the model therefore contains 52 intact assemblies, and 16 DFCs in the locations shown in Figure 6.4.11. For the MPC-24E and MPC-24EF, the model consists of 20 intact assemblies, and 4 DFCs in the locations shown in Figure 6.4.12. For the MPC-32 and MPC-32, the model consists of 24 intact assemblies, and 8 DFCs in the locations shown in Figure 6.4.16. The bounding assumptions regarding the intact assemblies and the modeling of the damaged fuel and fuel debris in the DFCs are discussed in the following sections.

Note that since a modeling approach is used that bounds both damaged fuel and fuel debris without distinguishing between these two conditions, the term 'damaged fuel' as used throughout this chapter designates both damaged fuel and fuel debris.

6.4.4.2.1 Bounding Intact Assemblies

Intact BWR assemblies stored together with DFCs are limited to a maximum planar average enrichment of 3.7 wt% $^{235}$U, regardless of the fuel class. The results presented in Table 6.1.7 are for different enrichments for each class, ranging between 2.7 and 4.2 wt% $^{235}$U, making it difficult to identify the bounding assembly. Therefore, additional calculations were performed for the bounding assembly in each assembly class with a planar average enrichment of 3.7 wt%. The results are summarized in Table 6.4.7 and demonstrate that the assembly classes 9x9E and 9x9F have the highest reactivity. These two classes share the same bounding assembly (see footnotes for Tables 6.2.33 and 6.2.34 for further details). This bounding assembly is used as the intact BWR assembly for all calculations with DFCs.

Intact PWR assemblies stored together with DFCs in the MPC-24E are limited to a maximum enrichment of 4.0 wt% $^{235}$U without credit for soluble boron and to a maximum enrichment of 5.0 wt% with credit for soluble boron, regardless of the fuel class. The results presented in Table 6.1.3 are for different enrichments for each class, ranging between 4.2 and 5.0 wt% $^{235}$U, making it difficult to directly identify the bounding assembly. However, Table 6.1.4 shows results for an enrichment of 5.0 wt% for all fuel classes, with a soluble boron concentration of 300 ppm. The assembly class 15x15H has the highest reactivity. This is consistent with the results in Table 6.1.3, where the assembly class 15x15H is among the classes with the highest reactivity, but has the lowest initial enrichment. Therefore, in the MPC-24E, the 15x15H assembly is used as the intact PWR assembly for all calculations with DFCs.

Intact PWR assemblies stored together with DFCs in the MPC-32 are limited to a maximum enrichment of 5.0 wt%, regardless of the fuel class. Table 6.1.5 and Table 6.1.6 shows results for enrichments of 4.1 wt% and 5.0 wt%, respectively, for all fuel classes. Since different minimum soluble boron concentrations are used for different groups of assembly classes, the assembly

class with the highest reactivity in each group is used as the intact assembly for the calculations with DFCs in the MPC-32. These assembly classes are

- 14x14C for all 14x14 assembly classes;
- 15x15B for assembly classes 15x15A, B, C and G;
- 15x15F for assembly classes 15x15D, E, F and H;
- 16x16A; and
- 17x17C for all 17x17 assembly classes.

6.4.4.2.2 Bare Fuel Rod Arrays

A conservative approach is used to model both damaged fuel and fuel debris in the DFCs, using arrays of bare fuel rods:

- Fuel in the DFCs is arranged in regular, rectangular arrays of bare fuel rods, i.e. all cladding and other structural material in the DFC is replaced by water.

- For cases with soluble boron, additional calculations are performed with reduced water density in the DFC. This is to demonstrate that replacing all cladding and other structural material with borated water is conservative.

- The active length of these rods is chosen to be the maximum active fuel length of all fuel assemblies listed in Section 6.2, which is 155 inch for BWR fuel and 150 inch for PWR fuel.

- To ensure the configuration with optimum moderation and highest reactivity is analyzed, the amount of fuel per unit length of the DFC is varied over a large range. This is achieved by changing the number of rods in the array and the rod pitch. The number of rods are varied between 9 (3x3) and 189 (17x17) for BWR fuel, and between 64 (8x8) and 729 (27x27) for PWR fuel.

- Analyses are performed for the minimum, maximum and typical pellet diameter of PWR and BWR fuel.

This is a very conservative approach to model damaged fuel, and to model fuel debris configurations such as severely damaged assemblies and bundles of individual fuel rods, as the absorption in the cladding and structural material is neglected.

This is also a conservative approach to model fuel debris configurations such as bare fuel pellets due to the assumption of an active length of 155 inch (BWR) or 150 inch (PWR). The actual

HOLTEC INTERNATIONAL COPYRIGHTED MATERIAL

height of bare fuel pellets in a DFC would be significantly below these values due to the limitation of the fuel mass for each basket position.

To demonstrate the level of conservatism, additional analyses are performed with the DFC containing various realistic assembly configurations such as intact assemblies, assemblies with missing fuel rods and collapsed assemblies, i.e. assemblies with increased number of rods and decreased rod pitch.

As discussed in Section 6.4.4.2, all calculations are performed for full cask models, containing the maximum permissible number of DFCs together with intact assemblies.

As an example of the damaged fuel model used in the analyses, Figure 6.4.17 shows the basket cell of an MPC-32 with a DFC containing a 17x17 array of bare fuel rods.

Graphical presentations of the calculated maximum $k_{eff}$ for typical cases as a function of the fuel mass per unit length of the DFC are shown in Figures 6.4.13 (BWR) and 6.4.14 (PWR, MPC-24E/EF with pure water). The results for the bare fuel rods show a distinct peak in the maximum $k_{eff}$ at about 2 kg $UO_2$/inch for BWR fuel, and at about 3.5 kg$UO_2$/inch for PWR fuel.

The realistic assembly configurations are typically about 0.01 (delta-k) or more below the peak results for the bare fuel rods, demonstrating the conservatism of this approach to model damaged fuel and fuel debris configurations such as severely damaged assemblies and bundles of fuel rods.

For fuel debris configurations consisting of bare fuel pellets only, the fuel mass per unit length would be beyond the value corresponding to the peak reactivity. For example, for DFCs filled with a mixture of 60 vol% fuel and 40 vol% water the fuel mass per unit length is 3.36 kg$UO_2$/inch for the BWR DFC and 7.92 kg$UO_2$/inch for the PWR DFC. The corresponding reactivities are significantly below the peak reactivies. The difference is about 0.005 (delta-k) for BWR fuel and 0.01 (delta-k) or more for PWR fuel. Furthermore, the filling height of the DFC would be less than 70 inches in these examples due to the limitation of the fuel mass per basket position, whereas the calculation is conservatively performed for a height of 155 inch (BWR) or 150 inch (PWR). These results demonstrate that even for the fuel debris configuration of bare fuel pellets, the model using bare fuel rods is a conservative approach.

#### 6.4.4.2.3 Distributed Enrichment in BWR Fuel

BWR fuel usually has an enrichment distribution in each planar cross section, and is characterized by the maximum planar average enrichment. For intact fuel it has been shown that using the average enrichment for each fuel rod in a cross section is conservative, i.e. the reactivity is higher than calculated for the actual enrichment distribution (See Appendix 6.B).

HOLTEC INTERNATIONAL COPYRIGHTED MATERIAL

For damaged fuel assemblies, additional configurations are analyzed to demonstrate that the distributed enrichment does not have a significant impact on the reactivity of the damaged assembly under accident conditions. Specifically, the following two scenarios were analyzed:

- As a result of an accident, fuel rods with lower enrichment relocate from the top part to the bottom part of the assembly. This results in an increase of the average enrichment in the top part, but at the same time the amount of fuel in that area is reduced compared to the intact assembly.
- As a result of an accident, fuel rods with higher enrichment relocate from the top part to the bottom part of the assembly. This results in an increase of the average enrichment in the bottom part, and at the same time the amount of fuel in that area is increased compared to the intact assembly, leading to a reduction of the water content.

In both scenarios, a compensation of effects on reactivity is possible, as the increase of reactivity due to the increased planar average enrichment might be offset by the possible reduction of reactivity due to the change in the fuel to water ratio. A selected number of calculations have been performed for these scenarios and the results show that there is only a minor change in reactivity. These calculations are shown in Figure 6.4.13 in the group of the explicit assemblies. Consequently, it is appropriate to qualify damaged BWR fuel assemblies and fuel debris based on the maximum planar average enrichment. For assemblies with missing fuel rods, this maximum planar average enrichment has to be determined based on the enrichment and number of rods still present in the assembly when loaded into the DFC.

#### 6.4.4.2.4 Results for MPC-68 and MPC-68FF

The MPC-68 and MPC-68FF allows the storage of up to sixteen DFCs in the shaded cells on the periphery of the basket shown in Figure 6.4.11. In the MPC-68FF, up to 8 of these cells may contain DFCs with fuel debris. The various configurations outlined in Sections 6.4.4.2.2 and 6.4.4.2.3 are analyzed with an enrichment of the intact fuel of 3.7% $^{235}$U and an enrichment of damaged fuel or fuel debris of 4.0% $^{235}$U. For the intact assembly, the bounding assembly of the 9x9E and 9x9F fuel classes was chosen. This assembly has the highest reactivity of all BWR assembly classes for the initial enrichment of 3.7 wt% $^{235}$U, as demonstrated in Table 6.4.7. The results for the various configurations are summarized in Figure 6.4.13 and in Table 6.4.8. Figure 6.4.13 shows the maximum $k_{eff}$, including bias and calculational uncertainties, for various actual and hypothetical damaged fuel or fuel debris configurations as a function of the fuel mass per unit length of the DFC. Table 6.4.8 lists the highest maximum $k_{eff}$ for the various configurations. All maximum $k_{eff}$ values are below the 0.95 regulatory limit.

HOLTEC INTERNATIONAL COPYRIGHTED MATERIAL

6.4.4.2.5 Results for MPC-24E and MPC-24EF

The MPC-24E allows the storage of up to four DFCs with damaged fuel in the four outer fuel baskets cells shaded in Figure 6.4.12. The MPC-24EF allows storage of up to four DFCs with damaged fuel or fuel debris in these locations. These locations are designed with a larger box ID to accommodate the DFCs. For an enrichment of 4.0 wt% $^{235}U$ for the intact fuel, damaged fuel and fuel debris, and assuming no soluble boron, the results for the various configurations outlined in Section 6.4.4.2.2 are summarized in Figure 6.4.14 and in Table 6.4.9. Figure 6.4.14 shows the maximum $k_{eff}$, including bias and calculational uncertainties, for various actual and hypothetical damaged fuel and fuel debris configurations as a function of the fuel mass per unit length of the DFC. For the intact assemblies, the 15x15H assembly class was chosen. This assembly class has the highest reactivity of all PWR assembly classes for a given initial enrichment. This is demonstrated in Table 6.1.4. Table 6.4.9 lists the highest maximum $k_{eff}$ for the various configurations. All maximum $k_{eff}$ values are below the 0.95 regulatory limit.

For an enrichment of 5.0 wt% $^{235}U$ for the intact fuel, damaged fuel and fuel debris, a minimum soluble boron concentration of 600 ppm is required. For this condition, calculations are performed for various hypothetical fuel debris configurations (i.e. bare fuel rods) as a function of the fuel mass per unit length of the DFC. Additionally, calculations are performed with reduced water densities in the DFC. The various conditions of damaged fuel, such as assemblies with missing rods or collapsed assemblies, were not analyzed, since the results in Figure 6.4.14 clearly demonstrate that these conditions are bounded by the hypothetical model for fuel debris based on regular arrays of bare fuel rods. Again, the 15x15H assembly class was chosen as the intact assembly since this assembly class has the highest reactivity of all PWR assembly classes as demonstrated in Table 6.1.4. The results are summarized in Table 6.4.12. Similar to the calculations with pure water (see Figure 6.4.14), the results for borated water show a distinct peak of the maximum $k_{eff}$ as a function of the fuel mass per unit length. Therefore, for each condition, the table lists only the highest maximum $k_{eff}$, including bias and calculational uncertainties, i.e. the point of optimum moderation. The results show that the reactivity decreases with decreasing water density. This demonstrates that replacing all cladding and other structural material with water is conservative even in the presence of soluble boron in the water. All maximum $k_{eff}$ values are below the 0.95 regulatory limit.

6.4.4.2.6 Results for MPC-32 and MPC-32F

The MPC-32 allows the storage of up to eight DFCs with damaged fuel in the outer fuel basket cells shaded in Figure 6.4.16. The MPC-32F allows storage of up to eight DFCs with damaged fuel or fuel debris in these locations. For the MPC-32 and MPC-32F, additional cases are analyzed due to the high soluble boron level required for this basket:

- The assembly classes of the intact assemblies are grouped, and minimum required soluble

HOLTEC INTERNATIONAL COPYRIGHTED MATERIAL

boron levels are determined separately for each group. The analyses are performed for the bounding assembly class in each group. The bounding assembly classes are listed in Section 6.4.4.2.1.

- Evaluations of conditions with voided and filled guide tubes and various water densities in the MPC and DFC are performed to identify the most reactive condition.

In general, all calculations performed for the MPC-32 show the same principal behavior as for the MPC-24 (see Figure 6.4.14), i.e. the reactivity as a function of the fuel mass per unit length for the bare fuel rod array shows a distinct peak. Therefore, for each condition analyzed, only the highest maximum $k_{eff}$, i.e. the calculated peak reactivity, is listed in the tables. Evaluations of different diameters of the bare fuel pellets and the reduced water density in the DFC have been performed for a representative case using the 15x15F assembly class as the intact assembly, with voided guide tubes, a water density of 1.0 g/cc in the DFC and MPC, 2900 ppm soluble boron, and an enrichment of 5.0 wt% $^{235}U$ for the intact and damaged fuel and fuel debris. For this case, results are summarized in Table 6.4.13. For each condition, the table lists the highest maximum $k_{eff}$, including bias and calculational uncertainties, i.e. the point of optimum moderation. The results show that the fuel pellet diameter in the DFC has an insignificant effect on reactivity, and that reactivity decreases with decreasing water density. The latter demonstrates that replacing all cladding and other structural material with water is conservative even in the presence of soluble boron in the water. Therefore, a typical fuel pellet diameter and a water density of 1.0 in the DFCs are used for all further analyses. Two enrichment levels are analyzed, 4.1 wt% $^{235}U$ and 5.0 wt% $^{235}U$, consistent with the analyses for intact fuel only. In any calculation, the same enrichment is used for the intact fuel and the damaged fuel and fuel debris. For both enrichment levels, analyses are performed with voided and filled guide tubes, each with water densities of 0.93 and 1.0 g/cm$^3$ in the MPC. In all cases, the water density inside the DFCs is assumed to be 1.0 g/cm$^3$, since this is the most reactive condition as shown in Table 6.4.13. Results are summarized in Table 6.4.14. For each group of assembly classes, the table shows the soluble boron level and the highest maximum $k_{eff}$ for the various moderation conditions of the intact assembly. The highest maximum $k_{eff}$ is the highest value of any of the hypothetical fuel debris configurations, i.e. various arrays of bare fuel rods. All maximum $k_{eff}$ values are below the 0.95 regulatory limit. Conditions of damaged fuel such as assemblies with missing rods or collapsed assemblies were not analyzed in the MPC-32, since the results in Figure 6.4.14 clearly demonstrate that these conditions are bounded by the hypothetical model for fuel debris based on regular arrays of bare fuel rods.

### 6.4.5 Fuel Assemblies with Missing Rods

For fuel assemblies that are qualified for damaged fuel storage, missing and/or damaged fuel rods are acceptable. However, for fuel assemblies to meet the limitations of intact fuel assembly

HOLTEC INTERNATIONAL COPYRIGHTED MATERIAL

storage, missing fuel rods must be replaced with dummy rods that displace a volume of water that is equal to, or larger than, that displaced by the original rods.

### 6.4.6 Thoria Rod Canister

The Thoria Rod Canister is similar to a DFC with an internal separator assembly containing 18 intact fuel rods. The configuration is illustrated in Figure 6.4.15. The $k_{eff}$ value for an MPC-68F filled with Thoria Rod Canisters is calculated to be 0.1813. This low reactivity is attributed to the relatively low content in $^{235}U$ (equivalent to $UO_2$ fuel with an enrichment of approximately 1.7 wt% $^{235}U$), the large spacing between the rods (the pitch is approximately 1", the cladding OD is 0.412") and the absorption in the separator assembly. Together with the maximum $k_{eff}$ values listed in Tables 6.1.7 and 6.1.8 this result demonstrates, that the $k_{eff}$ for a Thoria Rod Canister loaded into the MPC-68 or the MPC-68F together with other approved fuel assemblies or DFCs will remain well below the regulatory requirement of $k_{eff} < 0.95$.

### 6.4.7 Sealed Rods replacing BWR Water Rods

Some BWR fuel assemblies contain sealed rods filled with a non-fissile material instead of water rods. Compared to the configuration with water rods, the configuration with sealed rods has a reduced amount of moderator, while the amount of fissile material is maintained. Thus, the reactivity of the configuration with sealed rods will be lower compared to the configuration with water rods. Any configuration containing sealed rods instead of water rods is therefore bounded by the analysis for the configuration with water rods and no further analysis is required to demonstrate the acceptability. Therefore, for all BWR fuel assemblies analyzed, it is permissible that water rods are replaced by sealed rods filled with a non-fissile material.

### 6.4.8 Non-fuel Hardware in PWR Fuel Assemblies

Non-fuel hardware such as Thimble Plugs (TPs), Burnable Poison Rod Assemblies (BPRAs), Control Rod Assemblies (CRAs), Axial Power Shaping Rods (APSRs) and similar devices are permitted for storage with all PWR fuel types. Non-fuel hardware is inserted in the guide tubes of the assemblies. For pure water, the reactivity of any PWR assembly with inserts is bounded by (i.e. lower than) the reactivity of the same assembly without the insert. This is due to the fact that the insert reduces the amount of moderator in the assembly, while the amount of fissile material remains unchanged. This conclusion is supported by the calculation listed in Table 6.2.4, which shows a significant reduction in reactivity as a result of voided guide tubes, i.e. the removal of the water from the guide tubes.

HOLTEC INTERNATIONAL COPYRIGHTED MATERIAL

With the presence of soluble boron in the water, non-fuel hardware not only displaces water, but also the neutron absorber in the water. It is therefore possible that the insertion results in an increase of reactivity, specifically for higher soluble boron concentrations. As a bounding approach for the presence of non-fuel hardware, analyses were performed with empty (voided) guide tubes, i.e. any absorption of the hardware is neglected. If assemblies contain an instrument tube, this tube remains filled with borated water. Table 6.4.6 shows results for the variation in water density for cases with filled and voided guide tubes. These results show that the optimum moderator density depends on the soluble boron concentration, and on whether the guide tubes are filled or assumed empty. For the MPC-24 with 400 ppm and the MPC-32 with 1900 ppm, voiding the guide tubes results in a reduction of reactivity. All calculations for the MPC-24 and MPC-24E are therefore performed with water in the guide tubes. For the MPC-32 with 2600 ppm, the reactivity for voided guide tubes slightly exceeds the reactivity for filled guide tubes. However, this effect is not consistent across all assembly classes. Table 6.4.10, Table 6.4.11 and Table 6.4.14 show results with filled and voided guide tubes for all assembly classes in the MPC-32/32F at 4.1 wt% $^{235}$U and 5.0 wt% $^{235}$U. Some classes show an increase, other classes show a decrease as a result of voiding the guide tubes. Therefore, for the results presented in the Section 6.1, Table 6.1.5, Table 6.1.6 and Table 6.1.12, the maximum value for each class is chosen for each enrichment level.

In summary, from a criticality safety perspective, non-fuel hardware inserted into PWR assemblies are acceptable for all allowable PWR types, and, depending on the assembly class, can increase the safety margin.

### 6.4.9 Neutron Sources in Fuel Assemblies

Fuel assemblies containing start-up neutron sources are permitted for storage in the HI-STORM 100 System. The reactivity of a fuel assembly is not affected by the presence of a neutron source (other than by the presence of the material of the source, which is discussed later). This is true because in a system with a keff less than 1.0, any given neutron population at any time, regardless of its origin or size, will decrease over time. Therefore, a neutron source of any strength will not increase reactivity, but only the neutron flux in a system, and no additional criticality analyses are required. Sources are inserted as rods into fuel assemblies, i.e. they replace either a fuel rod or water rod (moderator). Therefore, the insertion of the material of the source into a fuel assembly will not lead to an increase of reactivity either.

### 6.4.10 Applicability of HI-STAR Analyses to HI-STORM 100 System

Calculations previously supplied to the NRC in applications for the HI-STAR 100 System (Docket Numbers 71-9261 and 72-1008) are directly applicable to the HI-STORM storage and

HOLTEC INTERNATIONAL COPYRIGHTED MATERIAL

HI-TRAC transfer casks. The MPC designs are identical. The cask systems differ only in the overpack shield material. The limiting condition for the HI-STORM 100 System is the fully flooded HI-TRAC transfer cask. As demonstrated by the comparative calculations presented in Tables 6.1.1 through 6.1.8, the shield material in the overpack (steel and lead for HI-TRAC, steel for HI-STAR) has a negligible impact on the eigenvalue of the cask systems. As a result, this analysis for the 125-ton HI-TRAC transfer cask is applicable to the 100-ton HI-TRAC transfer cask. In all cases, for the reference fuel assemblies, the maximum $k_{eff}$ values are in good agreement and are conservatively less than the limiting $k_{eff}$ value (0.95).

### 6.4.11 Fixed Neutron Absorber Material

The MPCs in the HI-STORM 100 System can be manufactured with one of two possible neutron absorber materials: Boral or Metamic. Both materials are made of aluminum and $B_4C$ powder. Boral has an inner core consisting of $B_4C$ and aluminum between two outer layers consisting of aluminum only. This configuration is explicitly modeled in the criticality evaluation and shown in Figures 6.3.1 through 6.3.3 for each basket. Metamic is a single layer material with a slightly higher overall thickness and the same credited $^{10}B$ loading (in g/cm$^2$) for each basket. The majority of the criticality evaluations documented in this chapter are performed using Boral as the fixed neutron absorber. For a selected number of bounding cases, analyses are also performed using Metamic instead of Boral. (Note that the Metamic cases use the same absorber thickness as the corresponding Boral case, instead of the slightly increased thickness for Metamic. This is acceptable since analyses of slight thickness increases for a fixed $^{10}B$ loading (in g/cm$^2$) indicate that such increases have a negligible effect on reactivity.) The results for these cases are listed in Table 6.4.15, together with the corresponding result using Boral and the difference between the two materials for each case. Individual cases show small differences for the two materials. However, the differences are mostly below two times the standard deviation (the standard deviation is about 0.0008 for all cases in Table 6.4.15), indicating that the results are statistically equivalent. Furthermore, the average difference is well below one standard deviation, and all cases are below the regulatory limit of 0.95. In some cases listed in Table 6.4.15, the reactivity difference between Metamic and Boral might be larger than expected for two equivalent materials. Also, for four out of the five cases with MPC-24 type baskets, Metamic shows the higher reactivity, which could potentially indicate a trend rather than a statistical variation. Therefore, in order to confirm that the materials are equivalent, a second set of calculations was performed for Metamic, which was statistically independent from the set shown in Table 6.4.15. This was achieved by selecting a different starting value for the random number generator in the Monte Carlo calculations. The second set also shows some individual variations of the differences, and a low average difference. However, there is no apparent trend regarding the MPC-24 type baskets compared to the MPC-32 and MPC-68, and the maximum positive reactivity difference for Metamic in an MPC-24 type basket is only 0.0005. Overall, the calculations demonstrate that the two fixed neutron absorber materials are identical from a

HOLTEC INTERNATIONAL COPYRIGHTED MATERIAL

criticality perspective. All results obtained for Boral are therefore directly applicable to Metamic and no further evaluations using Metamic are required.

HOLTEC INTERNATIONAL COPYRIGHTED MATERIAL

Table 6.4.1

MAXIMUM REACTIVITIES WITH REDUCED WATER DENSITIES FOR CASK ARRAYS†

| | **Water Density** | | **MCNP4a Maximum $k_{eff}$ ††** | |
|---|---|---|---|---|
| **Case Number** | **Internal** | **External** | **MPC-24 (17x17A01 @ 4.0%)** | **MPC-68 (8x8C04 @ 4.2%)** |
| 1 | 100% | single cask | 0.9368 | 0.9348 |
| 2 | 100% | 100% | 0.9354 | 0.9339 |
| 3 | 100% | 70% | 0.9362 | 0.9339 |
| 4 | 100% | 50% | 0.9352 | 0.9347 |
| 5 | 100% | 20% | 0.9372 | 0.9338 |
| 6 | 100% | 10% | 0.9380 | 0.9336 |
| 7 | 100% | 5% | 0.9351 | 0.9333 |
| 8 | 100% | 0% | 0.9342 | 0.9338 |
| 9 | 70% | 0% | 0.8337 | 0.8488 |
| 10 | 50% | 0% | 0.7426 | 0.7631 |
| 11 | 20% | 0% | 0.5606 | 0.5797 |
| 12 | 10% | 0% | 0.4834 | 0.5139 |
| 13 | 5% | 0% | 0.4432 | 0.4763 |
| 14 | 10% | 100% | 0.4793 | 0.4946 |

† For an infinite square array of casks with 60cm spacing between cask surfaces.

†† Maximum $k_{eff}$ includes the bias, uncertainties, and calculational statistics, evaluated for the worst case combination of manufacturing tolerances.

HOLTEC INTERNATIONAL COPYRIGHTED MATERIAL

Table 6.4.2

REACTIVITY EFFECTS OF PARTIAL CASK FLOODING

| **MPC-24 (17x17A01 @ 4.0% ENRICHMENT) (no soluble boron)** | | | |
|---|---|---|---|
| Flooded Condition (% Full) | Vertical Orientation | Flooded Condition (% Full) | Horizontal Orientation |
| 25 | 0.9157 | 25 | 0.8766 |
| 50 | 0.9305 | 50 | 0.9240 |
| 75 | 0.9330 | 75 | 0.9329 |
| 100 | 0.9368 | 100 | 0.9368 |
| **MPC-68 (8x8C04 @ 4.2% ENRICHMENT)** | | | |
| Flooded Condition (% Full) | Vertical Orientation | Flooded Condition (% Full) | Horizontal Orientation |
| 25 | 0.9132 | 23.5 | 0.8586 |
| 50 | 0.9307 | 50 | 0.9088 |
| 75 | 0.9312 | 76.5 | 0.9275 |
| 100 | 0.9348 | 100 | 0.9348 |
| **MPC-32 (15x15F @ 5.0 % ENRICHMENT) 2600ppm Soluble Boron** | | | |
| Flooded Condition (% Full) | Vertical Orientation | Flooded Condition (% Full) | Horizontal Orientation |
| 25 | 0.8927 | 31.25 | 0.9213 |
| 50 | 0.9215 | 50 | 0.9388 |
| 75 | 0.9350 | 68.75 | 0.9401 |
| 100 | 0.9445 | 100 | 0.9445 |

Notes:

1. All values are maximum $k_{eff}$ which include bias, uncertainties, and calculational statistics, evaluated for the worst case combination of manufacturing tolerances.

HOLTEC INTERNATIONAL COPYRIGHTED MATERIAL

Table 6.4.3

REACTIVITY EFFECT OF FLOODING THE PELLET-TO-CLAD GAP

| Pellet-to-Clad Condition | MPC-24 17x17A01 4.0% Enrichment | MPC-68 8x8C04 4.2% Enrichment |
|---|---|---|
| dry | 0.9295 | 0.9279 |
| flooded with unborated water | 0.9368 | 0.9348 |

Notes:

1. All values are maximum $k_{eff}$ which includes bias, uncertainties, and calculational statistics, evaluated for the worst case combination of manufacturing tolerances.

HOLTEC INTERNATIONAL COPYRIGHTED MATERIAL

Table 6.4.4

REACTIVITY EFFECT OF PREFERENTIAL FLOODING OF THE DFCs

| DFC Configuration | Preferential Flooding | Fully Flooded |
|---|---|---|
| MPC-68 or MPC-68F with 68 DFCs (Assembly Classes 6x6A/B/C, 7x7A and 8x8A) | 0.6560 | 0.7857 |
| MPC-68 or MPC-68FF with 16 DFCs (All BWR Assembly Classes) | 0.6646 | 0.9328 |
| MPC-24E or MPC-24EF with 4 DFCs (All PWR Assembly Classes) | 0.7895 | 0.9480 |
| MPC-32 or MPC-32 with 8 DFCs (All PWR Assembly Classes) | 0.7213 | 0.9378 |

Notes:

1. All values are maximum $k_{eff}$ which includes bias, uncertainties, and calculational statistics, evaluated for the worst case combination of manufacturing tolerances.

HOLTEC INTERNATIONAL COPYRIGHTED MATERIAL

Table 6.4.5

MAXIMUM $k_{eff}$ VALUES† IN THE DAMAGED FUEL CONTAINER

| **Condition** | **MCNP4a Maximum†† $k_{eff}$** | |
|---|---|---|
| | **DFC Dimensions: ID 4.93" THK. 0.12"** | **DFC Dimensions: ID 4.81" THK. 0.11"** |
| 6x6 Fuel Assembly | | |
| 6x6 Intact Fuel | 0.7086 | 0.7016 |
| w/32 Rods Standing | 0.7183 | 0.7117 |
| w/28 Rods Standing | 0.7315 | 0.7241 |
| w/24 Rods Standing | 0.7086 | 0.7010 |
| w/18 Rods Standing | 0.6524 | 0.6453 |
| Collapsed to 8x8 array | 0.7845 | 0.7857 |
| Dispersed Powder | 0.7628 | 0.7440 |
| 7x7 Fuel Assembly | | |
| 7x7 Intact Fuel | 0.7463 | 0.7393 |
| w/41 Rods Standing | 0.7529 | 0.7481 |
| w/36 Rods Standing | 0.7487 | 0.7444 |
| w/25 Rods Standing | 0.6718 | 0.6644 |

† These calculations were performed with a planar-average enrichment of 3.0% and a $^{10}B$ loading of 0.0067 g/cm$^2$, which is 75% of a minimum $^{10}B$ loading of 0.0089 g/cm$^2$. The minimum $^{10}B$ loading in the MPC-68F is 0.010 g/cm$^2$. Therefore, the listed maximum $k_{eff}$ values are conservative

†† Maximum $k_{eff}$ includes bias, uncertainties, and calculational statistics, evaluated for the worst case combination of manufacturing tolerances.

HOLTEC INTERNATIONAL COPYRIGHTED MATERIAL

Table 6.4.6

MAXIMUM $k_{eff}$ VALUES WITH REDUCED BORATED WATER DENSITIES

| **Internal Water Density† in g/cm$^3$** | **Maximum $k_{eff}$** | | | | |
|---|---|---|---|---|---|
| | **MPC-24 (400ppm) @ 5.0 %** | **MPC-32 (1900ppm) @ 4.1 %** | | **MPC-32 (2600ppm) @ 5.0 %** | |
| Guide Tubes | filled | filled | void | filled | void |
| 1.005 | NC†† | 0.9403 | 0.9395 | NC | 0.9481 |
| 1.00 | 0.9314 | 0.9411 | 0.9400 | 0.9445 | 0.9483 |
| 0.99 | NC | 0.9393 | 0.9396 | 0.9438 | 0.9462 |
| 0.98 | 0.9245 | 0.9403 | 0.9376 | 0.9447 | 0.9465 |
| 0.97 | NC | 0.9397 | 0.9391 | 0.9453 | 0.9476 |
| 0.96 | NC | NC | NC | 0.9446 | 0.9466 |
| 0.95 | 0.9186 | 0.9380 | 0.9384 | 0.9451 | 0.9468 |
| 0.94 | NC | NC | NC | 0.9445 | 0.9467 |
| 0.93 | 0.9130 | 0.9392 | 0.9352 | 0.9465 | 0.9460 |
| 0.92 | NC | NC | NC | 0.9458 | 0.9450 |
| 0.91 | NC | NC | NC | 0.9447 | 0.9452 |
| 0.90 | 0.9061 | 0.9384 | NC | 0.9449 | 0.9454 |
| 0.80 | 0.8774 | 0.9322 | NC | 0.9431 | 0.9390 |
| 0.70 | 0.8457 | 0.9190 | NC | 0.9339 | 0.9259 |
| 0.60 | 0.8095 | 0.8990 | NC | 0.9194 | 0.9058 |
| 0.40 | 0.7225 | 0.8280 | NC | 0.8575 | 0.8410 |
| 0.20 | 0.6131 | 0.7002 | NC | 0.7421 | 0.7271 |
| 0.10 | 0.5486 | 0.6178 | NC | 0.6662 | 0.6584 |

† External moderator is modeled at 0%. This is consistent with the results demonstrated in Table 6.4.1.
†† NC: Not Calculated

HOLTEC INTERNATIONAL COPYRIGHTED MATERIAL

Table 6.4.7

MAXIMUM $k_{eff}$ VALUES FOR INTACT BWR FUEL ASSEMBLIES WITH A MAXIMUM PLANAR AVERAGE ENRICHMENT OF 3.7 wt% $^{235}U$

| **Fuel Assembly Class** | **Maximum $k_{eff}$** |
|---|---|
| 6x6A | 0.8287 |
| 6x6C | 0.8436 |
| 7x7A | 0.8399 |
| 7x7B | 0.9109 |
| 8x8A | 0.8102 |
| 8x8B | 0.9131 |
| 8x8C | 0.9115 |
| 8x8D | 0.9125 |
| 8x8E | 0.9049 |
| 8x8F | 0.9233 |
| 9x9A | 0.9111 |
| 9x9B | 0.9134 |
| 9x9C | 0.9103 |
| 9x9D | 0.9096 |
| 9x9E | 0.9237 |
| 9x9F | 0.9237 |
| 9x9G | 0.9005 |
| 10x10A | 0.9158 |
| 10x10B | 0.9156 |
| 10x10C | 0.9152 |
| 10x10D | 0.9182 |
| 10x10E | 0.8970 |

HOLTEC INTERNATIONAL COPYRIGHTED MATERIAL

Table 6.4.8

MAXIMUM $k_{eff}$ VALUES IN THE GENERIC BWR DAMAGED FUEL CONTAINER FOR A MAXIMUM INITIAL ENRICHMENT OF 4.0 wt% $^{235}U$ FOR DAMAGED FUEL AND 3.7 wt% $^{235}U$ FOR INTACT FUEL

| **Model Configuration inside the DFC** | **Maximum $k_{eff}$** |
|---|---|
| Intact Assemblies<br>(4 assemblies analyzed) | 0.9241 |
| Assemblies with missing rods<br>(7 configurations analyzed) | 0.9240 |
| Assemblies with distributed enrichment<br>(4 configurations analyzed) | 0.9245 |
| Collapsed Assemblies<br>(6 configurations analyzed) | 0.9258 |
| Regular Arrays of Bare Fuel Rods<br>(31 configurations analyzed) | 0.9328 |

HOLTEC INTERNATIONAL COPYRIGHTED MATERIAL

Table 6.4.9

MAXIMUM $k_{eff}$ VALUES IN THE MPC-24E/EF WITH THE GENERIC PWR DAMAGED FUEL CONTAINER FOR A MAXIMUM INITIAL ENRICHMENT OF 4.0 wt% $^{235}U$ AND NO SOLUBLE BORON.

| **Model Configuration inside the DFC** | **Maximum $k_{eff}$** |
|---|---|
| Intact Assemblies<br>(2 assemblies analyzed) | 0.9340 |
| Assemblies with missing rods<br>(4 configurations analyzed) | 0.9350 |
| Collapsed Assemblies<br>(6 configurations analyzed) | 0.9360 |
| Regular Arrays of Bare Fuel Rods<br>(36 configurations analyzed) | 0.9480 |

Table 6.4.10

MAXIMUM $k_{eff}$ VALUES WITH FILLED AND VOIDED GUIDE TUBES FOR THE MPC-32 AT 5.0 wt% ENRICHMENT

| **Fuel Class** | **Minimum Soluble Boron Content (ppm)** | **MPC-32 @ 5.0 %** | | | |
|---|---|---|---|---|---|
| | | **Guide Tubes Filled,** | | **Guide Tubes Voided,** | |
| | | **1.0 g/cm$^3$** | **0.93 g/cm$^3$** | **1.0 g/cm$^3$** | **0.93 g/cm$^3$** |
| 14x14A | 1900 | 0.8984 | 0.9000 | 0.8953 | 0.8943 |
| 14x14B | 1900 | 0.9210 | 0.9214 | 0.9164 | 0.9118 |
| 14x14C | 1900 | 0.9371 | 0.9376 | 0.9480 | 0.9421 |
| 14x14D | 1900 | 0.9050 | 0.9027 | 0.8947 | 0.8904 |
| ~~14x14E~~ | ~~1900~~ | ~~0.7415~~ | ~~0.7301~~ | ~~n/a~~ | ~~n/a~~ |
| 15x15A | 2500 | 0.9210 | 0.9223 | 0.9230 | 0.9210 |
| 15x15B | 2500 | 0.9402 | 0.9420 | 0.9429 | 0.9421 |
| 15x15C | 2500 | 0.9258 | 0.9292 | 0.9307 | 0.9293 |
| 15x15D | 2600 | 0.9426 | 0.9419 | 0.9466 | 0.9440 |
| 15x15E | 2600 | 0.9394 | 0.9415 | 0.9434 | 0.9442 |
| 15x15F | 2600 | 0.9445 | 0.9465 | 0.9483 | 0.9460 |
| 15x15G | 2500 | 0.9228 | 0.9244 | 0.9251 | 0.9243 |
| 15X15H | 2600 | 0.9271 | 0.9301 | 0.9317 | 0.9333 |
| 16X16A | 1900 | 0.9460 | 0.9450 | 0.9474 | 0.9434 |
| 17x17A | 2600 | 0.9105 | 0.9145 | 0.9160 | 0.9161 |
| 17x17B | 2600 | 0.9345 | 0.9358 | 0.9371 | 0.9356 |
| 17X17C | 2600 | 0.9417 | 0.9431 | 0.9437 | 0.9430 |

HOLTEC INTERNATIONAL COPYRIGHTED MATERIAL

Table 6.4.11

MAXIMUM $k_{eff}$ VALUES WITH FILLED AND VOIDED GUIDE TUBES FOR THE MPC-32 AT 4.1 wt% ENRICHMENT

| **Fuel Class** | **Minimum Soluble Boron Content (ppm)** | **MPC-32 @ 4.1 %** | | | |
|---|---|---|---|---|---|
| | | **Guide Tubes Filled** | | **Guide Tubes Voided** | |
| | | **1.0 g/cm$^3$** | **0.93 g/cm$^3$** | **1.0 g/cm$^3$** | **0.93 g/cm$^3$** |
| 14x14A | 1300 | 0.9041 | 0.9029 | 0.8954 | 0.8939 |
| 14x14B | 1300 | 0.9257 | 0.9205 | 0.9128 | 0.9074 |
| 14x14C | 1300 | 0.9402 | 0.9384 | 0.9423 | 0.9365 |
| 14x14D | 1300 | 0.8970 | 0.8943 | 0.8836 | 0.8788 |
| ~~14x14E~~ | ~~1300~~ | ~~0.7340~~ | ~~0.7204~~ | ~~n/a~~ | ~~n/a~~ |
| 15x15A | 1800 | 0.9199 | 0.9206 | 0.9193 | 0.9134 |
| 15x15B | 1800 | 0.9397 | 0.9387 | 0.9385 | 0.9347 |
| 15x15C | 1800 | 0.9266 | 0.9250 | 0.9264 | 0.9236 |
| 15x15D | 1900 | 0.9375 | 0.9384 | 0.9380 | 0.9329 |
| 15x15E | 1900 | 0.9348 | 0.9340 | 0.9365 | 0.9336 |
| 15x15F | 1900 | 0.9411 | 0.9392 | 0.9400 | 0.9352 |
| 15x15G | 1800 | 0.9147 | 0.9128 | 0.9125 | 0.9062 |
| 15X15H | 1900 | 0.9267 | 0.9274 | 0.9276 | 0.9268 |
| 16X16A | 1300 | 0.9468 | 0.9425 | 0.9433 | 0.9384 |
| 17x17A | 1900 | 0.9105 | 0.9111 | 0.9106 | 0.9091 |
| 17x17B | 1900 | 0.9309 | 0.9307 | 0.9297 | 0.9243 |
| 17X17C | 1900 | 0.9355 | 0.9347 | 0.9350 | 0.9308 |

HOLTEC INTERNATIONAL COPYRIGHTED MATERIAL

Table 6.4.12

MAXIMUM $k_{eff}$ VALUES IN THE MPC-24E/24EF WITH THE GENERIC PWR DAMAGED FUEL CONTAINER FOR A MAXIMUM INITIAL ENRICHMENT OF 5.0 wt% $^{235}U$ AND 600 PPM SOLUBLE BORON.

| **Water Density inside the DFC** | **Bare Fuel Pellet Diameter** | **Maximum $k_{eff}$** |
|---|---|---|
| 1.00 | minimum | 0.9185 |
| 1.00 | typical | 0.9181 |
| 1.00 | maximum | 0.9171 |
| 0.95 | typical | 0.9145 |
| 0.90 | typical | 0.9125 |
| 0.60 | typical | 0.9063 |
| 0.10 | typical | 0.9025 |
| 0.02 | typical | 0.9025 |

HOLTEC INTERNATIONAL COPYRIGHTED MATERIAL

Table 6.4.13

MAXIMUM $k_{eff}$ VALUES IN THE MPC-32/32F WITH THE GENERIC PWR DAMAGED FUEL CONTAINER FOR A MAXIMUM INITIAL ENRICHMENT OF 5.0 wt% $^{235}U$, 2900 PPM SOLUBLE BORON AND THE 15x15F ASSEMBLY CLASS AS INTACT ASSEMBLY.

| **Water Density inside the DFC** | **Bare Fuel Pellet Diameter** | **Maximum $k_{eff}$** |
|---|---|---|
| 1.00 | minimum | 0.9374 |
| 1.00 | typical | 0.9372 |
| 1.00 | maximum | 0.9373 |
| 0.95 | typical | 0.9369 |
| 0.90 | typical | 0.9365 |
| 0.60 | typical | 0.9308 |
| 0.10 | typical | 0.9295 |
| 0.02 | typical | 0.9283 |

HOLTEC INTERNATIONAL COPYRIGHTED MATERIAL

Table 6.4.14

BOUNDING MAXIMUM $k_{eff}$ VALUES FOR THE MPC-32 AND MPC-32F WITH UP TO 8 DFCs UNDER VARIOUS MODERATION CONDITIONS.

| **Fuel Assembly Class of Intact Fuel** | **Initial Enrichment (wt% $^{235}$U)** | **Minimum Soluble Boron Content (ppm)** | **Maximum $k_{eff}$** | | | |
|---|---|---|---|---|---|---|
| | | | **Filled Guide Tubes** | | **Voided Guide Tubes** | |
| | | | **1.0 g/cm$^3$** | **0.93 g/cm$^3$** | **1.0 g/cm$^3$** | **0.93 g/cm$^3$** |
| 14x14A through 14x14~~E~~*D* | 4.1 | 1500 | 0.9277 | 0.9283 | 0.9336 | 0.9298 |
| | 5.0 | 2300 | 0.9139 | 0.9180 | 0.9269 | 0.9262 |
| 15x15A, B, C, G | 4.1 | 1900 | 0.9345 | 0.9350 | 0.9350 | 0.9326 |
| | 5.0 | 2700 | 0.9307 | 0.9346 | 0.9347 | 0.9365 |
| 15x15D, E, F, H | 4.1 | 2100 | 0.9322 | 0.9336 | 0.9340 | 0.9329 |
| | 5.0 | 2900 | 0.9342 | 0.9375 | 0.9385 | 0.9397 |
| 16x16A | 4.1 | 1500 | 0.9322 | 0.9321 | 0.9335 | 0.9302 |
| | 5.0 | 2300 | 0.9198 | 0.9239 | 0.9289 | 0.9267 |
| 17x17A, B, C | 4.1 | 2100 | 0.9284 | 0.9290 | 0.9294 | 0.9285 |
| | 5.0 | 2900 | 0.9308 | 0.9338 | 0.9355 | 0.9367 |

HOLTEC INTERNATIONAL COPYRIGHTED MATERIAL

Table 6.4.15

COMPARISON OF MAXIMUM $k_{eff}$ VALUES FOR DIFFERENT FIXED NEUTRON ABSORBER MATERIALS

| **Case** | **Maximum $k_{eff}$** | | **Reactivity Difference** |
|---|---|---|---|
| | **BORAL** | **METAMIC** | |
| MPC-68, Intact Assemblies | 0.9457 | 0.9452 | -0.0005 |
| MPC-68, with 16 DFCs | 0.9328 | 0.9315 | -0.0013 |
| MPC-68F with 68 DFCs | 0.8021 | 0.8019 | -0.0002 |
| MPC-24, 0ppm | 0.9478 | 0.9491 | +0.0013 |
| MPC-24, 400ppm | 0.9447 | 0.9457 | +0.0010 |
| MPC-24E, Intact Assemblies, 0ppm | 0.9468 | 0.9494 | +0.0026 |
| MPC-24E, Intact Assemblies, 300ppm | 0.9399 | 0.9410 | +0.0011 |
| MPC-24E, with 4 DFCs, 0ppm | 0.9480 | 0.9471 | -0.0009 |
| MPC-32, Intact Assemblies, 1900ppm | 0.9411 | 0.9397 | -0.0014 |
| MPC-32, Intact Assemblies, 2600ppm | 0.9483 | 0.9471 | -0.0012 |
| **Average Difference** | | | **+0.0001** |

HOLTEC INTERNATIONAL COPYRIGHTED MATERIAL

# APPENDIX 6.C: CALCULATIONAL SUMMARY

The following table lists the maximum $k_{eff}$ (including bias, uncertainties, and calculational statistics), MCNP calculated $k_{eff}$, standard deviation, and energy of average lethargy causing fission (EALF) for each of the candidate fuel types and basket configurations.

Table 6.C.1
CALCULATIONAL SUMMARY FOR ALL CANDIDATE FUEL TYPES
AND BASKET CONFIGURATIONS

| MPC-24 | | | | | |
|---|---|---|---|---|---|
| **Fuel Assembly Designation** | **Cask** | **Maximum $k_{eff}$** | **Calculated $k_{eff}$** | **Std. Dev. (1-sigma)** | **EALF (eV)** |
| 14x14A01 | HI-STAR | 0.9295 | 0.9252 | 0.0008 | 0.2084 |
| 14x14A02 | HI-STAR | 0.9286 | 0.9242 | 0.0008 | 0.2096 |
| 14x14A03 | HI-STORM | 0.3080 | 0.3047 | 0.0003 | 3.37E+04 |
| 14x14A03 | HI-TRAC | 0.9283 | 0.9239 | 0.0008 | 0.2096 |
| 14x14A03 | HI-STAR | 0.9296 | 0.9253 | 0.0008 | 0.2093 |
| 14x14B01 | HI-STAR | 0.9159 | 0.9117 | 0.0007 | 0.2727 |
| 14x14B02 | HI-STAR | 0.9169 | 0.9126 | 0.0008 | 0.2345 |
| 14x14B03 | HI-STAR | 0.9110 | 0.9065 | 0.0009 | 0.2545 |
| 14x14B04 | HI-STAR | 0.9084 | 0.9039 | 0.0009 | 0.2563 |
| B14x14B01 | HI-TRAC | 0.9237 | 0.9193 | 0.0008 | 0.2669 |
| B14x14B01 | HI-STAR | 0.9228 | 0.9185 | 0.0008 | 0.2675 |
| 14x14C01 | HI-TRAC | 0.9273 | 0.9230 | 0.0008 | 0.2758 |
| 14x14C01 | HI-STAR | 0.9258 | 0.9215 | 0.0008 | 0.2729 |
| 14x14C02 | HI-STAR | 0.9265 | 0.9222 | 0.0008 | 0.2765 |
| 14x14C03 | HI-TRAC | 0.9274 | 0.9231 | 0.0008 | 0.2839 |
| 14x14C03 | HI-STAR | 0.9287 | 0.9242 | 0.0009 | 0.2825 |

HOLTEC INTERNATIONAL COPYRIGHTED MATERIAL

Table 6.C.1 (continued)
CALCULATIONAL SUMMARY FOR ALL CANDIDATE FUEL TYPES
AND BASKET CONFIGURATIONS

| MPC-24 | | | | | |
|---|---|---|---|---|---|
| **Fuel Assembly Designation** | **Cask** | **Maximum $k_{eff}$** | **Calculated $k_{eff}$** | **Std. Dev. (1-sigma)** | **EALF (eV)** |
| 14x14D01 | HI-TRAC | 0.8531 | 0.8488 | 0.0008 | 0.3316 |
| 14x14D01 | HI-STAR | 0.8507 | 0.8464 | 0.0008 | 0.3308 |
| 14x14E01 | HI-STAR | 0.7598 | 0.7555 | 0.0008 | 0.3890 |
| 14x14E02 | HI-TRAC | 0.7627 | 0.7586 | 0.0007 | 0.3591 |
| 14x14E02 | HI-STAR | 0.7627 | 0.7586 | 0.0007 | 0.3607 |
| 14x14E03 | HI-STAR | 0.6952 | 0.6909 | 0.0008 | 0.2905 |
| 15x15A01 | HI-TRAC | 0.9205 | 0.9162 | 0.0008 | 0.2595 |
| 15x15A01 | HI-STAR | 0.9204 | 0.9159 | 0.0009 | 0.2608 |
| 15x15B01 | HI-STAR | 0.9369 | 0.9326 | 0.0008 | 0.2632 |
| 15C15B02 | HI-STAR | 0.9338 | 0.9295 | 0.0008 | 0.2640 |
| 15x15B03 | HI-STAR | 0.9362 | 0.9318 | 0.0008 | 0.2632 |
| 15x15B04 | HI-STAR | 0.9370 | 0.9327 | 0.0008 | 0.2612 |
| 15x15B05 | HI-STAR | 0.9356 | 0.9313 | 0.0008 | 0.2606 |
| 15x15B06 | HI-STAR | 0.9366 | 0.9324 | 0.0007 | 0.2638 |
| B15x15B01 | HI-TRAC | 0.9387 | 0.9344 | 0.0008 | 0.2616 |
| B15x15B01 | HI-STAR | 0.9388 | 0.9343 | 0.0009 | 0.2626 |
| 15x15C01 | HI-STAR | 0.9255 | 0.9213 | 0.0007 | 0.2493 |
| 15x15C02 | HI-STAR | 0.9297 | 0.9255 | 0.0007 | 0.2457 |
| 15x15C03 | HI-STAR | 0.9297 | 0.9255 | 0.0007 | 0.2440 |
| 15x15C04 | HI-STAR | 0.9311 | 0.9268 | 0.0008 | 0.2435 |
| B15x15C01 | HI-TRAC | 0.9362 | 0.9319 | 0.0008 | 0.2374 |
| B15x15C01 | HI-STAR | 0.9361 | 0.9316 | 0.0009 | 0.2385 |

HOLTEC INTERNATIONAL COPYRIGHTED MATERIAL

Table 6.C.1 (continued)
CALCULATIONAL SUMMARY FOR ALL CANDIDATE FUEL TYPES
AND BASKET CONFIGURATIONS

| MPC-24 | | | | | |
|---|---|---|---|---|---|
| **Fuel Assembly Designation** | **Cask** | **Maximum $k_{eff}$** | **Calculated $k_{eff}$** | **Std. Dev. (1-sigma)** | **EALF (eV)** |
| 15x15D01 | HI-STAR | 0.9341 | 0.9298 | 0.0008 | 0.2822 |
| 15x15D02 | HI-STAR | 0.9367 | 0.9324 | 0.0008 | 0.2802 |
| 15x15D03 | HI-STAR | 0.9354 | 0.9311 | 0.0008 | 0.2844 |
| 15x15D04 | HI-TRAC | 0.9354 | 0.9309 | 0.0009 | 0.2963 |
| 15x15D04 | HI-STAR | 0.9339 | 0.9292 | 0.0010 | 0.2958 |
| 15x15E01 | HI-TRAC | 0.9392 | 0.9349 | 0.0008 | 0.2827 |
| 15x15E01 | HI-STAR | 0.9368 | 0.9325 | 0.0008 | 0.2826 |
| 15x15F01 | HI-STORM | 0.3648 | 0.3614 | 0.0003 | 3.03E+04 |
| 15x15F01 | HI-TRAC | 0.9393 | 0.9347 | 0.0009 | 0.2925 |
| 15x15F01 | HI-STAR | 0.9395 | 0.9350 | 0.0009 | 0.2903 |
| 15x15G01 | HI-TRAC | 0.8878 | 0.8836 | 0.0007 | 0.3347 |
| 15x15G01 | HI-STAR | 0.8876 | 0.8833 | 0.0008 | 0.3357 |
| 15x15H01 | HI-TRAC | 0.9333 | 0.9288 | 0.0009 | 0.2353 |
| 15x15H01 | HI-STAR | 0.9337 | 0.9292 | 0.0009 | 0.2349 |
| 16x16A01 | HI-STORM | 0.3447 | 0.3412 | 0.0004 | 3.15E+04 |
| 16x16A01 | HI-TRAC | 0.9273 | 0.9228 | 0.0009 | 0.2710 |
| 16x16A01 | HI-STAR | 0.9287 | 0.9244 | 0.0008 | 0.2704 |
| 16x16A02 | HI-STAR | 0.9263 | 0.9221 | 0.0007 | 0.2702 |
| 17x17A01 | HI-STORM | 0.3243 | 0.3210 | 0.0003 | 3.23E+04 |
| 17x17A01 | HI-TRAC | 0.9378 | 0.9335 | 0.0008 | 0.2133 |
| 17x17A01 | HI-STAR | 0.9368 | 0.9325 | 0.0008 | 0.2131 |
| 17x17A02 | HI-STAR | 0.9329 | 0.9286 | 0.0008 | 0.2018 |

HOLTEC INTERNATIONAL COPYRIGHTED MATERIAL

Table 6.C.1 (continued)
CALCULATIONAL SUMMARY FOR ALL CANDIDATE FUEL TYPES
AND BASKET CONFIGURATIONS

| MPC-24 | | | | | |
|---|---|---|---|---|---|
| **Fuel Assembly Designation** | **Cask** | **Maximum $k_{eff}$** | **Calculated $k_{eff}$** | **Std. Dev. (1-sigma)** | **EALF (eV)** |
| 17x17B01 | HI-STAR | 0.9288 | 0.9243 | 0.0009 | 0.2607 |
| 17x17B02 | HI-STAR | 0.9290 | 0.9247 | 0.0008 | 0.2596 |
| 17x17B03 | HI-STAR | 0.9243 | 0.9199 | 0.0008 | 0.2625 |
| 17x17B04 | HI-STAR | 0.9324 | 0.9279 | 0.0009 | 0.2576 |
| 17x17B05 | HI-STAR | 0.9266 | 0.9222 | 0.0008 | 0.2539 |
| 17x17B06 | HI-TRAC | 0.9318 | 0.9275 | 0.0008 | 0.2570 |
| 17x17B06 | HI-STAR | 0.9311 | 0.9268 | 0.0008 | 0.2593 |
| 17x17C01 | HI-STAR | 0.9293 | 0.9250 | 0.0008 | 0.2595 |
| 17x17C02 | HI-TRAC | 0.9319 | 0.9274 | 0.0009 | 0.2610 |
| 17x17C02 | HI-STAR | 0.9336 | 0.9293 | 0.0008 | 0.2624 |

Table 6.C.1 (continued)
CALCULATIONAL SUMMARY FOR ALL CANDIDATE FUEL TYPES
AND BASKET CONFIGURATIONS

| MPC-68 | | | | | |
|---|---|---|---|---|---|
| **Fuel Assembly Designation** | **Cask** | **Maximum $k_{eff}$** | **Calculated $k_{eff}$** | **Std. Dev. (1-sigma)** | **EALF (eV)** |
| 6x6A01 | HI-STAR | 0.7539 | 0.7498 | 0.0007 | 0.2754 |
| 6x6A02 | HI-STAR | 0.7517 | 0.7476 | 0.0007 | 0.2510 |
| 6x6A03 | HI-STAR | 0.7545 | 0.7501 | 0.0008 | 0.2494 |
| 6x6A04 | HI-STAR | 0.7537 | 0.7494 | 0.0008 | 0.2494 |
| 6x6A05 | HI-STAR | 0.7555 | 0.7512 | 0.0008 | 0.2470 |
| 6x6A06 | HI-STAR | 0.7618 | 0.7576 | 0.0008 | 0.2298 |
| 6x6A07 | HI-STAR | 0.7588 | 0.7550 | 0.0005 | 0.2360 |
| 6x6A08 | HI-STAR | 0.7808 | 0.7766 | 0.0007 | 0.2527 |
| B6x6A01 | HI-TRAC | 0.7732 | 0.7691 | 0.0007 | 0.2458 |
| B6x6A01 | HI-STAR | 0.7727 | 0.7685 | 0.0007 | 0.2460 |
| B6x6A02 | HI-TRAC | 0.7785 | 0.7741 | 0.0008 | 0.2411 |
| B6x6A02 | HI-STAR | 0.7782 | 0.7738 | 0.0008 | 0.2408 |
| B6x6A03 | HI-TRAC | 0.7886 | 0.7846 | 0.0007 | 0.2311 |
| B6x6A03 | HI-STAR | 0.7888 | 0.7846 | 0.0007 | 0.2310 |
| 6x6B01 | HI-STAR | 0.7604 | 0.7563 | 0.0007 | 0.2461 |
| 6x6B02 | HI-STAR | 0.7618 | 0.7577 | 0.0007 | 0.2450 |
| 6x6B03 | HI-STAR | 0.7619 | 0.7578 | 0.0007 | 0.2439 |
| 6x6B04 | HI-STAR | 0.7686 | 0.7644 | 0.0008 | 0.2286 |
| 6x6B05 | HI-STAR | 0.7824 | 0.7785 | 0.0006 | 0.2184 |
| B6x6B01 | HI-TRAC | 0.7833 | 0.7794 | 0.0006 | 0.2181 |
| B6x6B01 | HI-STAR | 0.7822 | 0.7783 | 0.0006 | 0.2190 |

Table 6.C.1 (continued)
CALCULATIONAL SUMMARY FOR ALL CANDIDATE FUEL TYPES
AND BASKET CONFIGURATIONS

| MPC-68 | | | | | |
|---|---|---|---|---|---|
| **Fuel Assembly Designation** | **Cask** | **Maximum $k_{eff}$** | **Calculated $k_{eff}$** | **Std. Dev. (1-sigma)** | **EALF (eV)** |
| 6x6C01 | HI-STORM | 0.2759 | 0.2726 | 0.0003 | 1.59E+04 |
| 6x6C01 | HI-TRAC | 0.8024 | 0.7982 | 0.0008 | 0.2135 |
| 6x6C01 | HI-STAR | 0.8021 | 0.7980 | 0.0007 | 0.2139 |
| 7x7A01 | HI-TRAC | 0.7963 | 0.7922 | 0.0007 | 0.2016 |
| 7x7A01 | HI-STAR | 0.7974 | 0.7932 | 0.0008 | 0.2015 |
| 7x7B01 | HI-STAR | 0.9372 | 0.9330 | 0.0007 | 0.3658 |
| 7x7B02 | HI-STAR | 0.9301 | 0.9260 | 0.0007 | 0.3524 |
| 7x7B03 | HI-STAR | 0.9313 | 0.9271 | 0.0008 | 0.3438 |
| 7x7B04 | HI-STAR | 0.9311 | 0.9270 | 0.0007 | 0.3816 |
| 7x7B05 | HI-STAR | 0.9350 | 0.9306 | 0.0008 | 0.3382 |
| 7x7B06 | HI-STAR | 0.9298 | 0.9260 | 0.0006 | 0.3957 |
| B7x7B01 | HI-TRAC | 0.9367 | 0.9324 | 0.0008 | 0.3899 |
| B7x7B01 | HI-STAR | 0.9375 | 0.9332 | 0.0008 | 0.3887 |
| B7x7B02 | HI-STORM | 0.4061 | 0.4027 | 0.0003 | 2.069E+04 |
| B7x7B02 | HI-TRAC | 0.9385 | 0.9342 | 0.0008 | 0.3952 |
| B7x7B02 | HI-STAR | 0.9386 | 0.9344 | 0.0007 | 0.3983 |
| 8x8A01 | HI-TRAC | 0.7662 | 0.7620 | 0.0008 | 0.2250 |
| 8x8A01 | HI-STAR | 0.7685 | 0.7644 | 0.0007 | 0.2227 |
| 8x8A02 | HI-TRAC | 0.7690 | 0.7650 | 0.0007 | 0.2163 |
| 8x8A02 | HI-STAR | 0.7697 | 0.7656 | 0.0007 | 0.2158 |
| 8x8B01 | HI-STAR | 0.9310 | 0.9265 | 0.0009 | 0.2935 |
| 8x8B02 | HI-STAR | 0.9227 | 0.9185 | 0.0007 | 0.2993 |

Table 6.C.1 (continued)
CALCULATIONAL SUMMARY FOR ALL CANDIDATE FUEL TYPES
AND BASKET CONFIGURATIONS

| MPC-68 | | | | | |
|---|---|---|---|---|---|
| **Fuel Assembly Designation** | **Cask** | **Maximum $k_{eff}$** | **Calculated $k_{eff}$** | **Std. Dev. (1-sigma)** | **EALF (eV)** |
| 8x8B03 | HI-STAR | 0.9299 | 0.9257 | 0.0008 | 0.3319 |
| 8x8B04 | HI-STAR | 0.9236 | 0.9194 | 0.0008 | 0.3700 |
| B8x8B01 | HI-TRAC | 0.9352 | 0.9310 | 0.0008 | 0.3393 |
| B8x8B01 | HI-STAR | 0.9346 | 0.9301 | 0.0009 | 0.3389 |
| B8x8B02 | HI-TRAC | 0.9401 | 0.9359 | 0.0007 | 0.3331 |
| B8x8B02 | HI-STAR | 0.9385 | 0.9343 | 0.0008 | 0.3329 |
| B8x8B03 | HI-STORM | 0.3934 | 0.3900 | 0.0004 | 1.815E+04 |
| B8x8B03 | HI-TRAC | 0.9427 | 0.9385 | 0.0008 | 0.3278 |
| B8x8B03 | HI-STAR | 0.9416 | 0.9375 | 0.0007 | 0.3293 |
| 8x8C01 | HI-STAR | 0.9315 | 0.9273 | 0.0007 | 0.2822 |
| 8x8C02 | HI-STAR | 0.9313 | 0.9268 | 0.0009 | 0.2716 |
| 8x8C03 | HI-STAR | 0.9329 | 0.9286 | 0.0008 | 0.2877 |
| 8x8C04 | HI-STAR | 0.9348 | 0.9307 | 0.0007 | 0.2915 |
| 8x8C05 | HI-STAR | 0.9353 | 0.9312 | 0.0007 | 0.2971 |
| 8x8C06 | HI-STAR | 0.9353 | 0.9312 | 0.0007 | 0.2944 |
| 8x8C07 | HI-STAR | 0.9314 | 0.9273 | 0.0007 | 0.2972 |
| 8x8C08 | HI-STAR | 0.9339 | 0.9298 | 0.0007 | 0.2915 |
| 8x8C09 | HI-STAR | 0.9301 | 0.9260 | 0.0007 | 0.3183 |
| 8x8C10 | HI-STAR | 0.9317 | 0.9275 | 0.0008 | 0.3018 |
| 8x8C11 | HI-STAR | 0.9328 | 0.9287 | 0.0007 | 0.3001 |
| 8x8C12 | HI-STAR | 0.9285 | 0.9242 | 0.0008 | 0.3062 |
| B8x8C01 | HI-TRAC | 0.9348 | 0.9305 | 0.0008 | 0.3114 |

HOLTEC INTERNATIONAL COPYRIGHTED MATERIAL

Table 6.C.1 (continued)
CALCULATIONAL SUMMARY FOR ALL CANDIDATE FUEL TYPES
AND BASKET CONFIGURATIONS

| MPC-68 | | | | | |
|---|---|---|---|---|---|
| **Fuel Assembly Designation** | **Cask** | **Maximum $k_{eff}$** | **Calculated $k_{eff}$** | **Std. Dev. (1-sigma)** | **EALF (eV)** |
| B8x8C01 | HI-STAR | 0.9357 | 0.9313 | 0.0009 | 0.3141 |
| B8x8C02 | HI-STORM | 0.3714 | 0.3679 | 0.0004 | 2.30E+04 |
| B8x8C02 | HI-TRAC | 0.9402 | 0.9360 | 0.0008 | 0.3072 |
| B8x8C02 | HI-STAR | 0.9425 | 0.9384 | 0.0007 | 0.3081 |
| B8x8C03 | HI-TRAC | 0.9429 | 0.9386 | 0.0008 | 0.3045 |
| B8x8C03 | HI-STAR | 0.9418 | 0.9375 | 0.0008 | 0.3056 |
| 8x8D01 | HI-STAR | 0.9342 | 0.9302 | 0.0006 | 0.2733 |
| 8x8D02 | HI-STAR | 0.9325 | 0.9284 | 0.0007 | 0.2750 |
| 8x8D03 | HI-STAR | 0.9351 | 0.9309 | 0.0008 | 0.2731 |
| 8x8D04 | HI-STAR | 0.9338 | 0.9296 | 0.0007 | 0.2727 |
| 8x8D05 | HI-STAR | 0.9339 | 0.9294 | 0.0009 | 0.2700 |
| 8x8D06 | HI-STAR | 0.9365 | 0.9324 | 0.0007 | 0.2777 |
| 8x8D07 | HI-STAR | 0.9341 | 0.9297 | 0.0009 | 0.2694 |
| 8x8D08 | HI-STAR | 0.9376 | 0.9332 | 0.0009 | 0.2841 |
| B8x8D01 | HI-TRAC | 0.9408 | 0.9368 | 0.0006 | 0.2773 |
| B8x8D01 | HI-STAR | 0.9403 | 0.9363 | 0.0007 | 0.2778 |
| 8x8E01 | HI-TRAC | 0.9309 | 0.9266 | 0.0008 | 0.2834 |
| 8x8E01 | HI-STAR | 0.9312 | 0.9270 | 0.0008 | 0.2831 |
| 8x8F01 | HI-TRAC | 0.9396 | 0.9356 | 0.0006 | 0.2255 |
| 8x8F01 | HI-STAR | 0.9411 | 0.9366 | 0.0009 | 0.2264 |
| 9x9A01 | HI-STAR | 0.9353 | 0.9310 | 0.0008 | 0.2875 |
| 9x9A02 | HI-STAR | 0.9388 | 0.9345 | 0.0008 | 0.2228 |

HOLTEC INTERNATIONAL COPYRIGHTED MATERIAL

Table 6.C.1 (continued)
CALCULATIONAL SUMMARY FOR ALL CANDIDATE FUEL TYPES
AND BASKET CONFIGURATIONS

| MPC-68 | | | | | |
|---|---|---|---|---|---|
| **Fuel Assembly Designation** | **Cask** | **Maximum $k_{eff}$** | **Calculated $k_{eff}$** | **Std. Dev. (1-sigma)** | **EALF (eV)** |
| 9x9A03 | HI-STAR | 0.9351 | 0.9310 | 0.0007 | 0.2837 |
| 9x9A04 | HI-STAR | 0.9396 | 0.9355 | 0.0007 | 0.2262 |
| B9x9A01 | HI-STORM | 0.3365 | 0.3331 | 0.0003 | 1.78E+04 |
| B9x9A01 | HI-TRAC | 0.9434 | 0.9392 | 0.0007 | 0.2232 |
| B9x9A01 | HI-STAR | 0.9417 | 0.9374 | 0.0008 | 0.2236 |
| 9x9B01 | HI-STAR | 0.9380 | 0.9336 | 0.0008 | 0.2576 |
| 9x9B02 | HI-STAR | 0.9373 | 0.9329 | 0.0009 | 0.2578 |
| 9x9B03 | HI-STAR | 0.9417 | 0.9374 | 0.0008 | 0.2545 |
| B9x9B01 | HI-TRAC | 0.9417 | 0.9376 | 0.0007 | 0.2504 |
| B9x9B01 | HI-STAR | 0.9436 | 0.9394 | 0.0008 | 0.2506 |
| 9x9C01 | HI-TRAC | 0.9377 | 0.9335 | 0.0008 | 0.2697 |
| 9x9C01 | HI-STAR | 0.9395 | 0.9352 | 0.0008 | 0.2698 |
| 9x9D01 | HI-TRAC | 0.9387 | 0.9343 | 0.0008 | 0.2635 |
| 9x9D01 | HI-STAR | 0.9394 | 0.9350 | 0.0009 | 0.2625 |
| 9x9E01 | HI-STAR | 0.9334 | 0.9293 | 0.0007 | 0.2227 |
| 9x9E02 | HI-STORM | 0.3676 | 0.3642 | 0.0003 | 2.409E+04 |
| 9x9E02 | HI-TRAC | 0.9402 | 0.9360 | 0.0008 | 0.2075 |
| 9x9E02 | HI-STAR | 0.9401 | 0.9359 | 0.0008 | 0.2065 |
| 9x9F01 | HI-STAR | 0.9307 | 0.9265 | 0.0007 | 0.2899 |
| 9x9F02 | HI-STORM | 0.3676 | 0.3642 | 0.0003 | 2.409E+04 |
| 9x9F02 | HI-TRAC | 0.9402 | 0.9360 | 0.0008 | 0.2075 |
| 9x9F02 | HI-STAR | 0.9401 | 0.9359 | 0.0008 | 0.2065 |

HOLTEC INTERNATIONAL COPYRIGHTED MATERIAL

Table 6.C.1 (continued)
CALCULATIONAL SUMMARY FOR ALL CANDIDATE FUEL TYPES
AND BASKET CONFIGURATIONS

| MPC-68 | | | | | |
|---|---|---|---|---|---|
| **Fuel Assembly Designation** | **Cask** | **Maximum $k_{eff}$** | **Calculated $k_{eff}$** | **Std. Dev. (1-sigma)** | **EALF (eV)** |
| 9x9G01 | HI-TRAC | 0.9307 | 0.9265 | 0.0007 | 0.2193 |
| 9x9G01 | HI-STAR | 0.9309 | 0.9265 | 0.0008 | 0.2191 |
| 10x10A01 | HI-STAR | 0.9377 | 0.9335 | 0.0008 | 0.3170 |
| 10x10A02 | HI-STAR | 0.9426 | 0.9386 | 0.0007 | 0.2159 |
| 10x10A03 | HI-STAR | 0.9396 | 0.9356 | 0.0007 | 0.3169 |
| B10x10A01 | HI-STORM | 0.3379 | 0.3345 | 0.0003 | 1.74E+04 |
| B10x10A01 | HI-TRAC | 0.9448 | 0.9405 | 0.0008 | 0.2214 |
| B10x10A01 | HI-STAR | 0.9457 | 0.9414 | 0.0008 | 0.2212 |
| 10x10B01 | HI-STAR | 0.9384 | 0.9341 | 0.0008 | 0.2881 |
| 10x10B02 | HI-STAR | 0.9416 | 0.9373 | 0.0008 | 0.2333 |
| 10x10B03 | HI-STAR | 0.9375 | 0.9334 | 0.0007 | 0.2856 |
| B10x10B01 | HI-TRAC | 0.9443 | 0.9401 | 0.0007 | 0.2380 |
| B10x10B01 | HI-STAR | 0.9436 | 0.9395 | 0.0007 | 0.2366 |
| 10x10C01 | HI-TRAC | 0.9430 | 0.9387 | 0.0008 | 0.2424 |
| 10x10C01 | HI-STAR | 0.9433 | 0.9392 | 0.0007 | 0.2416 |
| 10x10D01 | HI-TRAC | 0.9383 | 0.9343 | 0.0007 | 0.3359 |
| 10x10D01 | HI-STAR | 0.9376 | 0.9333 | 0.0008 | 0.3355 |
| 10x10E01 | HI-TRAC | 0.9157 | 0.9116 | 0.0007 | 0.3301 |
| 10x10E01 | HI-STAR | 0.9185 | 0.9144 | 0.0007 | 0.2936 |

Table 6.C.1 (continued)
CALCULATIONAL SUMMARY FOR ALL CANDIDATE FUEL TYPES
AND BASKET CONFIGURATIONS

| MPC-24 400PPM SOLUBLE BORON | | | | | |
|---|---|---|---|---|---|
| **Fuel Assembly Designation** | **Cask** | **Maximum $k_{eff}$** | **Calculated $k_{eff}$** | **Std. Dev. (1-sigma)** | **EALF (eV)** |
| 14x14A03 | HI-STAR | 0.8884 | 0.8841 | 0.0008 | 0.2501 |
| B14x14B01 | HI-STAR | 0.8900 | 0.8855 | 0.0009 | 0.3173 |
| 14x14C03 | HI-STAR | 0.8950 | 0.8907 | 0.0008 | 0.3410 |
| 14x14D01 | HI-STAR | 0.8518 | 0.8475 | 0.0008 | 0.4395 |
| 14x14E02 | HI-STAR | 0.7132 | 0.7090 | 0.0007 | 0.4377 |
| 15x15A01 | HI-STAR | 0.9119 | 0.9076 | 0.0008 | 0.3363 |
| B15x15B01 | HI-STAR | 0.9284 | 0.9241 | 0.0008 | 0.3398 |
| B15x15C01 | HI-STAR | 0.9236 | 0.9193 | 0.0008 | 0.3074 |
| 15x15D04 | HI-STAR | 0.9261 | 0.9218 | 0.0008 | 0.3841 |
| 15x15E01 | HI-STAR | 0.9265 | 0.9221 | 0.0008 | 0.3656 |
| 15x15F01 | HI-STORM (DRY) | 0.4013 | 0.3978 | 0.0004 | 28685 |
| 15x15F01 | HI-TRAC | 0.9301 | 0.9256 | 0.0009 | 0.3790 |
| 15x15F01 | HI-STAR | 0.9314 | 0.9271 | 0.0008 | 0.3791 |
| 15x15G01 | HI-STAR | 0.8939 | 0.8897 | 0.0007 | 0.4392 |
| 15x15H01 | HI-TRAC | 0.9345 | 0.9301 | 0.0008 | 0.3183 |
| 15x15H01 | HI-STAR | 0.9366 | 0.9320 | 0.0009 | 0.3175 |
| 16x16A01 | HI-STAR | 0.8955 | 0.8912 | 0.0008 | 0.3227 |
| 17x17A01 | HI-STAR | 0.9264 | 0.9221 | 0.0008 | 0.2801 |
| 17x17B06 | HI-STAR | 0.9284 | 0.9241 | 0.0008 | 0.3383 |
| 17x17C02 | HI-TRAC | 0.9296 | 0.9250 | 0.0009 | 0.3447 |
| 17x17C02 | HI-STAR | 0.9294 | 0.9249 | 0.0009 | 0.3433 |

HOLTEC INTERNATIONAL COPYRIGHTED MATERIAL

Table 6.C.1 (continued)
CALCULATIONAL SUMMARY FOR ALL CANDIDATE FUEL TYPES
AND BASKET CONFIGURATIONS

| MPC-24E/MPC-24EF, UNBORATED WATER | | | | | |
|---|---|---|---|---|---|
| **Fuel Assembly Designation** | **Cask** | **Maximum $k_{eff}$** | **Calculated $k_{eff}$** | **Std. Dev. (1-sigma)** | **EALF (eV)** |
| 14x14A03 | HI-STAR | 0.9380 | 0.9337 | 0.0008 | 0.2277 |
| B14x14B01 | HI-STAR | 0.9312 | 0.9269 | 0.0008 | 0.2927 |
| 14x14C01 | HI-STAR | 0.9356 | 0.9311 | 0.0009 | 0.3161 |
| 14x14D01 | HI-STAR | 0.8875 | 0.8830 | 0.0009 | 0.4026 |
| 14x14E02 | HI-STAR | 0.7651 | 0.7610 | 0.0007 | 0.3645 |
| 15x15A01 | HI-STAR | 0.9336 | 0.9292 | 0.0008 | 0.2879 |
| B15x15B01 | HI-STAR | 0.9465 | 0.9421 | 0.0008 | 0.2924 |
| B15x15C01 | HI-STAR | 0.9462 | 0.9419 | 0.0008 | 0.2631 |
| 15x15D04 | HI-STAR | 0.9440 | 0.9395 | 0.0009 | 0.3316 |
| 15x15E01 | HI-STAR | 0.9455 | 0.9411 | 0.0009 | 0.3178 |
| 15x15F01 | HI-STORM (DRY) | 0.3699 | 0.3665 | 0.0004 | 3.280e+04 |
| 15x15F01 | HI-TRAC | 0.9465 | 0.9421 | 0.0009 | 0.3297 |
| 15x15F01 | HI-STAR | 0.9468 | 0.9424 | 0.0008 | 0.3270 |
| 15x15G01 | HI-STAR | 0.9054 | 0.9012 | 0.0007 | 0.3781 |
| 15x15H01 | HI-STAR | 0.9423 | 0.9381 | 0.0008 | 0.2628 |
| 16x16A01 | HI-STAR | 0.9341 | 0.9297 | 0.0009 | 0.3019 |
| 17x17A01 | HI-TRAC | 0.9467 | 0.9425 | 0.0008 | 0.2372 |
| 17x17A01 | HI-STAR | 0.9447 | 0.9406 | 0.0007 | 0.2374 |
| 17x17B06 | HI-STAR | 0.9421 | 0.9377 | 0.0008 | 0.2888 |
| 17x17C02 | HI-STAR | 0.9433 | 0.9390 | 0.0008 | 0.2932 |

HOLTEC INTERNATIONAL COPYRIGHTED MATERIAL

Table 6.C.1 (continued)
CALCULATIONAL SUMMARY FOR ALL CANDIDATE FUEL TYPES
AND BASKET CONFIGURATIONS

| MPC-24E/MPC-24EF, 300PPM BORATED WATER | | | | | |
|---|---|---|---|---|---|
| **Fuel Assembly Designation** | **Cask** | **Maximum $k_{eff}$** | **Calculated $k_{eff}$** | **Std. Dev. (1-sigma)** | **EALF (eV)** |
| 14x14A03 | HI-STAR | 0.8963 | 0.8921 | 0.0008 | 0.2231 |
| B14x14B01 | HI-STAR | 0.8974 | 0.8931 | 0.0008 | 0.3214 |
| 14x14C01 | HI-STAR | 0.9031 | 0.8988 | 0.0008 | 0.3445 |
| 14x14D01 | HI-STAR | 0.8588 | 0.8546 | 0.0007 | 0.4407 |
| 14x14E02 | HI-STAR | 0.7249 | 0.7205 | 0.0008 | 0.4186 |
| 15x15A01 | HI-STAR | 0.9161 | 0.9118 | 0.0008 | 0.3408 |
| B15x15B01 | HI-STAR | 0.9321 | 0.9278 | 0.0008 | 0.3447 |
| B15x15C01 | HI-STAR | 0.9271 | 0.9227 | 0.0008 | 0.3121 |
| 15x15D04 | HI-STAR | 0.9290 | 0.9246 | 0.0009 | 0.3950 |
| 15x15E01 | HI-STAR | 0.9309 | 0.9265 | 0.0009 | 0.3754 |
| 15x15F01 | HI-STORM (DRY) | 0.3897 | 0.3863 | 0.0003 | 3.192E+04 |
| 15x15F01 | HI-TRAC | 0.9333 | 0.9290 | 0.0008 | 0.3900 |
| 15x15F01 | HI-STAR | 0.9332 | 0.9289 | 0.0008 | 0.3861 |
| 15x15G01 | HI-STAR | 0.8972 | 0.8930 | 0.0007 | 0.4473 |
| 15x15H01 | HI-TRAC | 0.9399 | 0.9356 | 0.0008 | 0.3235 |
| 15x15H01 | HI-STAR | 0.9399 | 0.9357 | 0.0008 | 0.3248 |
| 16x16A01 | HI-STAR | 0.9021 | 0.8977 | 0.0009 | 0.3274 |
| 17x17A01 | HI-STAR | 0.9332 | 0.9287 | 0.0009 | 0.2821 |
| 17x17B06 | HI-STAR | 0.9316 | 0.9273 | 0.0008 | 0.3455 |
| 17x17C02 | HI-TRAC | 0.9320 | 0.9277 | 0.0008 | 0.2819 |
| 17x17C02 | HI-STAR | 0.9312 | 0.9270 | 0.0007 | 0.3530 |

Table 6.C.1 (continued)
CALCULATIONAL SUMMARY FOR ALL CANDIDATE FUEL TYPES
AND BASKET CONFIGURATIONS

| MPC-32, 4.1% Enrichment, Bounding Cases | | | | | |
|---|---|---|---|---|---|
| **Fuel Assembly Designation** | **Cask** | **Maximum $k_{eff}$** | **Calculated $k_{eff}$** | **Std. Dev. (1-sigma)** | **EALF (eV)** |
| 14x14A03 | HI-STAR | 0.9041 | 0.9001 | 0.0006 | 0.3185 |
| B14x14B01 | HI-STAR | 0.9257 | 0.9216 | 0.0007 | 0.4049 |
| 14x14C01 | HI-STAR | 0.9423 | 0.9382 | 0.0007 | 0.4862 |
| 14x14D01 | HI-STAR | 0.8970 | 0.8931 | 0.0006 | 0.5474 |
| ~~14x14E02~~ | ~~HI-STAR~~ | ~~0.7340~~ | ~~0.7300~~ | ~~0.0006~~ | ~~0.6817~~ |
| 15x15A01 | HI-STAR | 0.9206 | 0.9167 | 0.0006 | 0.5072 |
| B15x15B01 | HI-STAR | 0.9397 | 0.9358 | 0.0006 | 0.4566 |
| B15x15C01 | HI-STAR | 0.9266 | 0.9227 | 0.0006 | 0.4167 |
| 15x15D04 | HI-STAR | 0.9384 | 0.9345 | 0.0006 | 0.5594 |
| 15x15E01 | HI-STAR | 0.9365 | 0.9326 | 0.0006 | 0.5403 |
| 15x15F01 | HI-STORM (DRY) | 0.4691 | 0.4658 | 0.0003 | 1.207E+04 |
| 15x15F01 | HI-TRAC | 0.9403 | 0.9364 | 0.0006 | 0.4938 |
| 15x15F01 | HI-STAR | 0.9411 | 0.9371 | 0.0006 | 0.4923 |
| 15x15G01 | HI-STAR | 0.9147 | 0.9108 | 0.0006 | 0.5880 |
| 15x15H01 | HI-STAR | 0.9276 | 0.9237 | 0.0006 | 0.4710 |
| 16x16A01 | HI-STAR | 0.9468 | 0.9427 | 0.0007 | 0.3925 |
| 17x17A01 | HI-STAR | 0.9111 | 0.9072 | 0.0006 | 0.4055 |
| 17x17B06 | HI-STAR | 0.9309 | 0.9269 | 0.0006 | 0.4365 |
| 17x17C02 | HI-TRAC | 0.9365 | 0.9327 | 0.0006 | 0.4468 |
| 17x17C02 | HI-STAR | 0.9355 | 0.9317 | 0.0006 | 0.4469 |

HOLTEC INTERNATIONAL COPYRIGHTED MATERIAL

Table 6.C.1 (continued)
CALCULATIONAL SUMMARY FOR ALL CANDIDATE FUEL TYPES
AND BASKET CONFIGURATIONS

| MPC-32, 5.0% Enrichment, Bounding Cases | | | | | |
|---|---|---|---|---|---|
| **Fuel Assembly Designation** | **Cask** | **Maximum $k_{eff}$** | **Calculated $k_{eff}$** | **Std. Dev. (1-sigma)** | **EALF (eV)** |
| 14x14A03 | HI-STAR | 0.9000 | 0.8959 | 0.0007 | 0.4651 |
| B14x14B01 | HI-STAR | 0.9214 | 0.9175 | 0.0006 | 0.6009 |
| 14x14C01 | HI-STAR | 0.9480 | 0.9440 | 0.0006 | 0.6431 |
| 14x14D01 | HI-STAR | 0.9050 | 0.9009 | 0.0007 | 0.7276 |
| ~~14x14E02~~ | ~~HI-STAR~~ | ~~0.7415~~ | ~~0.7375~~ | ~~0.0006~~ | ~~0.9226~~ |
| 15x15A01 | HI-STAR | 0.9230 | 0.9189 | 0.0007 | 0.7143 |
| B15x15B01 | HI-STAR | 0.9429 | 0.9390 | 0.0006 | 0.7234 |
| B15x15C01 | HI-STAR | 0.9307 | 0.9268 | 0.0006 | 0.6439 |
| 15x15D04 | HI-STAR | 0.9466 | 0.9425 | 0.0007 | 0.7525 |
| 15x15E01 | HI-STAR | 0.9434 | 0.9394 | 0.0007 | 0.7215 |
| 15x15F01 | HI-STORM (DRY) | 0.5142 | 0.5108 | 0.0004 | 1.228E+04 |
| 15x15F01 | HI-TRAC | 0.9470 | 0.9431 | 0.0006 | 0.7456 |
| 15x15F01 | HI-STAR | 0.9483 | 0.9443 | 0.0007 | 0.7426 |
| 15x15G01 | HI-STAR | 0.9251 | 0.9212 | 0.0006 | 0.9303 |
| 15x15H01 | HI-STAR | 0.9333 | 0.9292 | 0.0007 | 0.7015 |
| 16x16A01 | HI-STAR | 0.9474 | 0.9434 | 0.0006 | 0.5936 |
| 17x17A01 | HI-STAR | 0.9161 | 0.9122 | 0.0006 | 0.6141 |
| 17x17B06 | HI-STAR | 0.9371 | 0.9331 | 0.0006 | 0.6705 |
| 17x17C02 | HI-TRAC | 0.9436 | 0.9396 | 0.0006 | 0.6773 |
| 17x17C02 | HI-STAR | 0.9437 | 0.9399 | 0.0006 | 0.6780 |

Table 6.C.1 (continued)
CALCULATIONAL SUMMARY FOR ALL CANDIDATE FUEL TYPES
AND BASKET CONFIGURATIONS

| ***MPC-32, 4.5% Enrichment, Bounding Cases*** | | | | | |
|---|---|---|---|---|---|
| ***Fuel Assembly Designation*** | ***Cask*** | ***Maximum $k_{eff}$*** | ***Calculated $k_{eff}$*** | ***Std. Dev. (1-sigma)*** | ***EALF (eV)*** |
| *14x14E02* | *HI-STAR* | *0.8770* | *0.8729* | *0.0007* | *0.4364* |

Note: Maximum $k_{eff}$ = Calculated $k_{eff}$ + $K_c \times \sigma_c$ + Bias + $\sigma_B$
where:

$K_c$ = 2.0
$\sigma_c$ = Std. Dev. (1-sigma)
Bias = 0.0021
$\sigma_B$ = 0.0006

See Subsection 6.4.3 for further explanation.

## *SUPPLEMENT 6.II*

## *CRITICALITY EVALUATION OF INDIAN POINT 1 FUEL IN THE MPC-32*

### *6.II.0 INTRODUCTION*

*This supplement is focused on providing additional criticality evaluations for Indian Point Unit 1 fuel (Array class 14x14E) in the MPC-32. The evaluation presented herein supplements those evaluations contained in the main body of Chapter 6 of this FSAR, and information in the main body of Chapter 6 is not repeated in this supplement. To aid the reader, the sections in this supplement are numbered in the same fashion as the corresponding sections in the main body of this chapter, i.e., Sections 6.II.1 through 6.II.6 correspond to Sections 6.1 through 6.6. Tables and figures in this supplement are labeled sequentially.*

### *6.II.1 DISCUSSION AND RESULTS*

*Indian Point Unit 1 (IP1) is a nuclear power plant that was shut down in 1974. IP1 used a unique fuel assembly type identified as assembly class 14x14E in the main body of this chapter. IP1 fuel assemblies are currently stored in the IP1 spent fuel pool and need to be transferred into dry storage. The spent fuel pool at IP1 does normally not contain any soluble boron, and, while the assemblies are considered technically intact, they might not meet the requirements of intact fuel as defined in Chapter 1 of this FSAR. Specifically, records available for these assemblies are not sufficient to show that fuel assemblies have no cladding failures larger than pinhole leaks or hairline cracks, and further leakage tests of these assemblies might not be conclusive due to the age and low burnup of these assemblies. Therefore, all IP1 assemblies are required to be stored in DFCs. To qualify IP1 assemblies for dry storage in the MPC-32, this supplement therefore evaluates the following conditions:*

> *Assembly class 14x14E in the MPC-32 filled with pure unborated water, with intact assemblies, or assumed damaged assemblies in any location. Intact assemblies are not modeled in DFCs, while damaged assemblies are modeled in DFCs.*

*Results of the evaluations are summarized in Table 6.II.1 below, for intact assemblies, and for a bounding condition where all basket locations are filled with damaged fuel. The results demonstrate that the effective multiplication factor ($k_{eff}$) of the HI-STORM 100 System under the bounding conditions for IP1 fuel, including all biases and uncertainties evaluated with a 95% probability at the 95% confidence level, does not exceed 0.95 under all credible conditions.*

### *6.II.2 SPENT FUEL LOADING*

*Calculations in this supplement are only performed for assembly class 14x14E, as characterized in the main part of this chapter in Section 6.2. Note that the calculations in this supplement are performed with an enrichment of 4.5 wt% $^{235}U$, which bounds the enrichment of the actual fuel to*

HOLTEC INTERNATIONAL COPYRIGHTED MATERIAL

*be loaded, instead of the maximum value of 5 wt% $^{235}U$ used in the main part of this chapter. This is reflected in the definition of the authorized contents in Chapter 2.*

## *6.II.3 MODEL SPECIFICATION*

*Calculations in this supplement are only performed for the MPC-32, using the conservative modeling assumptions described in the main part of this chapter in Section 6.3. Calculations are performed with assemblies centered in each cell, and for an eccentric condition where all assemblies are moved towards the center of the basket. Note that the active length of the fuel is conservatively assumed to be 150 inches, while the actual active fuel length is only 102 inches. The same assumption is made in the main part of this chapter for this assembly class (see Table 6.2.10). The DFCs contain outer spacers to minimize lateral movement of the DFCs in the cells. While these spacers are ½ inch thick, they are modeled as 3/8 inch for calculations with DFCs and eccentric positioning. This is conservative since it places fuel closer to each other in the center of the basket for this eccentric fuel positioning. Additionally, for the eccentric positioning, it is assumed that the content of the DFC is moved closest to the center of the basket. A single basket cell showing this condition is depicted in Figure 6.II.1. For the details on the modeling assumptions for the damaged fuel inside the DFC see the discussion in the following Section 6.II.4. This section also lists the detailed results of the calculations.*

*Note that all calculations in this supplement are performed for the HI-STAR overpack under fully flooded conditions. This bounds the HI-STORM storage condition, and is statistically equivalent to the condition in the HI-TRAC, as discussed in the main part of this chapter.*

## *6.II.4 CRITICALITY CALCULATIONS*

### *6.II.4.1 Intact Assemblies*

*The calculations for intact assemblies are identical to the calculations in the main part of this chapter, except that the borated water is replaced by pure water. Results of the calculations are listed in Table 6.II.2 for centered and eccentric conditions. As expected, based on the evaluations presented in the main part of this Chapter in Section 6.3, the eccentric position results in the higher reactivity. Nevertheless, all maximum $k_{eff}$ values are below the regulatory limit by a substantial margin.*

### *6.II.4.2 Damaged Assemblies*

*IP1 fuel assemblies have a stainless steel shroud/channel that surround all fuel rods, similar to BWR assemblies, although for the IP1 assembly this channel is perforated. The grid straps are apparently connected to the inside of this channel. The channel and grid straps therefore form the support structure for the assembly. In case of any damage to fuel rods, the broken rods would therefore be predominantly confined to the inside of this channel. Note that the fuel*

HOLTEC INTERNATIONAL COPYRIGHTED MATERIAL

*cladding of the IP1 fuel is also made from stainless steel, which has a much higher resistance to damage than the zirconium alloys used in other fuel types. Cladding damage to IP1 fuel is therefore much less likely. Nevertheless, cladding damage is conservatively assumed to occur. Local damage to individual rods would merely create slight relocation of rods within the rod array, which would have little if any effect on reactivity. More extensive damage, however, could result in the relocation of fuel rods within the assembly, i.e. create areas with reduced and increased numbers of rods within the assembly. This would have an effect on the local fuel-to-water ratio, which can significantly affect reactivity since intact PWR fuel assemblies are under-moderated, i.e. removing rods increases reactivity. To evaluate the reactivity effect of removing each individual fuel rod would be highly impractical. Instead, the damaged fuel approach models different array sizes of rods within the assembly, where each array size has a pitch so that it fills the inside of the channel. A total of 7 arrays, from 9x9 to 15x15 fuel rods are evaluated. Note that the outer dimension of the rod array is taken as the outside dimension of the channel around the rods, and the channel itself is neglected. This is conservative since it increases the area occupied by fuel and neglects steel which would provide some additional neutron absorption. Figure 6.II.1 shows the calculational model for a 12x12 array of rods. The results are shown in Table 6.II.3. In all cases, the condition is assumed to exist in all 32 assemblies of the MPC, and along the entire active length. As expected, an optimum moderation condition exists. This condition corresponds to a 12x12 array. For this condition, the reactivity is higher than for the intact assembly. However, even in this conservative and practically non-credible condition, the maximum $k_{eff}$ is well below the regulatory limit by a substantial margin. Note that since the model assumes the cladding to remain in the fuel channel, it does not bound fuel debris. Fuel debris is therefore not qualified for the 14x14E in the MPC-32.*

## *6.II.5 CRITICALITY BENCHMARKS*

*Fuel, fuel conditions, basket design and moderation conditions are bounded by the corresponding conditions in the main body of Chapter 6. The benchmark calculations in the main body are therefore directly applicable to the calculations performed in this supplement.*

## *6.II.6 REGULATORY COMPLIANCE*

*In summary, the evaluation presented in this supplement demonstrate that the HI-STORM 100 System is in full compliance with the criticality requirements of 10CFR72 and consistent with NUREG-1536.*

HOLTEC INTERNATIONAL COPYRIGHTED MATERIAL

*Table 6.II.1*

*BOUNDING MAXIMUM $k_{eff}$ VALUES FOR ASSEMBLY CLASS 14x14E IN THE MPC-32 WITHOUT SOLUBLE BORON*

| ***Fuel Condition*** | ***Maximum Allowable Enrichment (wt% $^{235}U$)*** | ***Maximum† $k_{eff}$*** |
|---|---|---|
| *Intact* | *4.5* | *0.8770* |
| *Damaged* | *4.5* | *0.9181* |

† The term "maximum $k_{eff}$ " as used here, and elsewhere in this document, means the highest possible k-effective, including bias, uncertainties, and calculational statistics, evaluated for the worst case combination of manufacturing tolerances.

*Table 6.II.2*

*MAXIMUM $k_{eff}$ VALUES FOR ASSEMBLY CLASS 14x14E IN THE MPC-32 WITHOUT SOLUBLE BORON FOR INTACT ASSEMBLIES*

| ***Fuel Location*** | ***Maximum Allowable Enrichment (wt% $^{235}U$)*** | ***Maximum† $k_{eff}$*** |
|---|---|---|
| *Cell Centered* | *4.5* | *0.8410* |
| *Eccentric location, moved towards basket center* | *4.5* | *0.8770* |

† The term "maximum $k_{eff}$ " as used here, and elsewhere in this document, means the highest possible k-effective, including bias, uncertainties, and calculational statistics, evaluated for the worst case combination of manufacturing tolerances.

*Table 6.II.3*

*MAXIMUM $k_{eff}$ VALUES FOR ASSEMBLY CLASS 14x14E IN THE MPC-32 WITHOUT SOLUBLE BORON FOR ROD ARRAYS SIMULATING DAMAGED FUEL ASSEMBLIES*

| ***Rod Array*** | ***Maximum Allowable Enrichment (wt% $^{235}U$)*** | ***Maximum† $k_{eff}$*** | |
|---|---|---|---|
| | | *Cell Centered* | *Eccentric* |
| *9x9* | *4.5* | *0.8381* | *0.8587* |
| *10x10* | *4.5* | *0.8722* | *0.8971* |
| *11x11* | *4.5* | *0.8882* | *0.9160* |
| *12x12* | *4.5* | *0.8906* | *0.9181* |
| *13x13* | *4.5* | *0.8808* | *0.9079* |
| *14x14* | *4.5* | *0.8615* | *0.8894* |
| *15x15* | *4.5* | *0.8335* | *0.8627* |

† The term "maximum $k_{eff}$ " as used here, and elsewhere in this document, means the highest possible k-effective, including bias, uncertainties, and calculational statistics, evaluated for the worst case combination of manufacturing tolerances.

HOLTEC INTERNATIONAL COPYRIGHTED MATERIAL

**FIGURE WITHHELD UNDER 10 CFR 2.390**

## *SUPPLEMENT 7.II*

## *CONFINEMENT*

*The main body of this chapter remains fully applicable for the IP1 specific options of the HI-STORM 100 System.*

# CHAPTER 8: OPERATING PROCEDURES†

## 8.0 INTRODUCTION:

This chapter outlines the loading, unloading, and recovery procedures for the HI-STORM 100 System for storage operations. The procedures provided in this chapter are prescriptive to the extent that they provide the basis and general guidance for plant personnel in preparing detailed, written, site-specific, loading, handling, storage and unloading procedures. Users may add, modify the sequence of, perform in parallel, or delete steps as necessary provided that the intent of this guidance is met and the requirements of the CoC are met. The information provided in this chapter meets all requirements of NUREG-1536 [8.0.1].

Section 8.1 provides the guidance for loading the HI-STORM 100 System in the spent fuel pool. Section 8.2 provides the procedures for ISFSI operations and general guidance for performing maintenance and responding to abnormal events. Responses to abnormal events that may occur during normal loading operations are provided with the procedure steps. Section 8.3 provides the procedure for unloading the HI-STORM 100 System in the spent fuel pool. Section 8.4 provides the guidance for MPC transfer to the HI-STAR 100 Overpack for transport or storage. Section 8.4 can also be used for recovery of a breached MPC for transport or storage. Section 8.5 provides the guidance for transfer of the MPC into HI-STORM from the HI-STAR 100 transport overpack. Equipment specific operating details such as Vacuum Drying System, valve manipulation and Transporter operation are not within the scope of this FSAR and will be provided to users based on the specific equipment selected by the users and the configuration of the site.

The procedures contained herein describe acceptable methods for performing HI-STORM 100 loading and unloading operations. Unless otherwise stated, references to the HI-STORM 100 apply equally to the HI-STORM 100, 100S and 100S Version B. Users may alter these procedures to allow alternate methods and operations to be performed in parallel or out of sequence as long as the general intent of the procedure is met. In the figures following each section, acceptable configurations of rigging, piping, and instrumentation are shown. In some cases, the figures are artists renditions. Users may select alternate configurations, equipment and methodology to accommodate their specific needs provided that the intent of this guidance is met and the requirements of the CoC are met. All rigging should be approved by the user's load handling authority prior to use. User-developed procedures and the design and operation of any alternate equipment must be reviewed by the Certificate holder prior to implementation.

Licensees (Users) will utilize the procedures provided in this chapter, equipment-specific operating instructions, and plant working procedures and apply them to develop the site specific written, loading and unloading procedures.

The loading and unloading procedures in Section 8.1 and 8.3 can also be appropriately revised

---

† This chapter has been prepared in the format and section organization set forth in Regulatory Guide 3.61. However, the material content of this chapter also fulfills the requirements of NUREG 1536. Pagination and numbering of sections, figures, and tables are consistent with the convention set down in Chapter 1, Section 1.0, herein. Finally, all terms-of-art used in this chapter are consistent with the terminology of the glossary (Table 1.0.1) and component nomenclature of the Bill-of-Materials (Section 1.5).

HOLTEC INTERNATIONAL COPYRIGHTED MATERIAL

into written site-specific procedures to allow dry loading and unloading of the system in a hot cell or other remote handling facility. The Dry Transfer Facility (DTF) loading and unloading procedures are essentially the same with respect to loading removing moisture, and inerting, of the MPC. The dry transfer facility shall develop the appropriate site-specific procedures as part of the DTF facility license.

Tables 8.1.1 through 8.1.4 provide the handling weights for each of the HI-STORM 100 System major components and the loads to be lifted during various phases of the operation of the HI-STORM 100 System. Users shall take appropriate actions to ensure that the lift weights do not exceed user-supplied lifting equipment rated loads. Table 8.1.5 provides the HI-STORM 100 System bolt torque and sequencing requirements. Table 8.1.6 provides an operational description of the HI-STORM 100 System ancillary equipment along with its safety designation, where applicable. Fuel assembly selection and verification shall be performed by the licensee in accordance with written, approved procedures which ensure that only SNF assemblies authorized in the Certificate of Compliance and as defined in Section 2.1.9 are loaded into the HI-STORM 100 System.

In addition to the requirements set forth in the CoC, users will be required to develop or modify existing programs and procedures to account for the operation of an ISFSI. Written procedures will be required to be developed or modified to account for such things as nondestructive examination (NDE) of the MPC welds, handling and storage of items and components identified as Important to Safety, 10CFR72.48 [8.1.1] programs, specialized instrument calibration, special nuclear material accountability at the ISFSI, security modifications, fuel handling procedures, training and emergency response, equipment and process qualifications. Users are required to take necessary actions to prevent boiling of the water in the MPC. This may be accomplished by performing a site-specific analysis to identify a time limitation to ensure that water boiling will not occur in the MPC prior to the initiation of draining operations. Chapter 4 of the FSAR provides some sample time limits for the time to initiation of draining for various spent fuel pool water temperatures using design basis heat loads. Users are also required to take necessary actions to prevent the fuel cladding from exceeding temperature limits during drying operations and during handling of the MPC in the HI-TRAC transfer cask. Section 4.5 of the FSAR provides requirements on the necessary actions, if any, based on the heat load of the MPC.

Table 8.1.7 summarizes some of the instrumentation used to load and unload the HI-STORM 100 System. Tables 8.1.8, 8.1.9, and 8.1.10 provide sample receipt inspection checklists for the HI-STORM 100 overpack, the MPC, and the HI-TRAC Transfer Cask, respectively. Users may develop site-specific receipt inspection checklists, as required for their equipment. Fuel handling, including the handling of fuel assemblies in the Damaged Fuel Container (DFC) shall be performed in accordance with written site-specific procedures. ~~DFCs shall be loaded in the spent fuel pool racks prior to placement into the MPC.~~

HOLTEC INTERNATIONAL COPYRIGHTED MATERIAL

**Technical and Safety Basis for Loading and Unloading Procedures**

The procedures herein are developed for the loading, storage, unloading, and recovery of spent fuel in the HI-STORM 100 System. The activities involved in loading of spent fuel in a canister system, if not carefully performed, may present risks. The design of the HI-STORM 100 System, including these procedures, the ancillary equipment and the Technical Specifications, serve to minimize risks and mitigate consequences of potential events. To summarize, consideration is given in the loading and unloading systems and procedures to the potential events listed in Table 8.0.1.

The primary objective is to reduce the risk of occurrence and/or to mitigate the consequences of the event. The procedures contain Notes, Warnings, and Cautions to notify the operators to upcoming situations and provide additional information as needed. The Notes, Warnings and Cautions are purposely bolded and boxed and immediately precede the applicable steps.

In the event of an extreme abnormal condition (e.g., cask drop or tip-over event) the user shall have appropriate procedural guidance to respond to the situation. As a minimum, the procedures shall address establishing emergency action levels, implementation of emergency action program, establishment of personnel exclusions zones, monitoring of radiological conditions, actions to mitigate or prevent the release of radioactive materials, and recovery planning and execution and reporting to the appropriate regulatory agencies, as required.

HOLTEC INTERNATIONAL COPYRIGHTED MATERIAL

Table 8.0.1
OPERATIONAL CONSIDERATIONS

| POTENTIAL EVENTS | METHODS USED TO ADDRESS EVENT | COMMENTS/ REFERENCES |
|---|---|---|
| Cask Drop During Handling Operations | Cask lifting and handling equipment is designed to ANSI N14.6. Procedural guidance is given for cask handling, inspection of lifting equipment, and proper engagement to the trunnions. | See Section 8.1.2. |
| Cask Tip-Over Prior to welding of the MPC lid | The Lid Retention System is available to secure the MPC lid during movement between the spent fuel pool and the cask preparation area. | See Section 8.1.5. See Figure 8.1.15. |
| Contamination of the MPC external shell | The annulus seal, pool lid, and Annulus Overpressure System minimize the potential for the MPC external shell to become contaminated from contact with the spent fuel pool water. | See Figures 8.1.13 and 8.1.14. |
| Contamination spread from cask process system exhausts | Processing systems are equipped with exhausts that can be directed to the plant's processing systems. | See Figures 8.1.19-8.1.22. |
| Damage to fuel assembly cladding from oxidation/thermal shock | Fuel assemblies are never subjected to air or oxygen during loading and unloading operations. Cool-Down System brings fuel assembly bulk temperatures to below water boiling temperature prior to flooding. | See Section 8.1.5, and Section 8.3.3 |
| Damage to Vacuum Drying System vacuum gauges from positive pressure | Vacuum Drying System is separate from pressurized gas and water systems. | See Figure 8.1.22 and 8.1.23. |
| Ignition of combustible mixtures of gas (e.g., hydrogen) during MPC lid welding or cutting | The area around MPC lid shall be appropriately monitored for combustible gases prior to, and during welding or cutting activities. The space below the MPC lid shall be evacuated or purged prior to, and during these activities. | See Section 8.1.5 and Section 8.3.3. |

HOLTEC INTERNATIONAL COPYRIGHTED MATERIAL

Table 8.0.1
OPERATIONAL CONSIDERATIONS
(CONTINUED)

| POTENTIAL EVENTS | METHODS USED TO ADDRESS EVENT | COMMENTS/ REFERENCES |
|---|---|---|
| Excess dose from failed fuel assemblies | MPC gas sampling allows operators to determine the integrity of the fuel cladding prior to opening the MPC. This allows preparation and planning for failed fuel. The RVOAs allow the vent and drain ports to be operated like valves and prevent the need to hot tap into the penetrations during unloading operation. | See Figure 8.1.16 and Section 8.3.3. |
| Excess dose to operators | The procedures provide ALARA Notes and Warnings when radiological conditions may change. | See ALARA Notes and Warnings throughout the procedures. |
| Excess generation of radioactive waste | The HI-STORM system uses process systems that minimize the amount of radioactive waste generated. Such features include smooth surfaces for ease of decontamination efforts, prevention of avoidable contamination, and procedural guidance to reduce decontamination requirements. Where possible, items are installed by hand and require no tools. | Examples: HI-TRAC bottom protective cover, bolt plugs in empty holes, pre-wetting of components. |
| Fuel assembly misloading event | Procedural guidance is given to perform assembly selection verification and a post-loading visual verification of assembly identification prior to installation of the MPC lid. | See Section 8.1.4. |
| Incomplete moisture removal from MPC | The vacuum drying process reduces the MPC pressure in stages to prevent the formation of ice. Vacuum is held below 3 torr for 30 minutes with the vacuum pump isolated to assure dryness. If the forced helium dehydration process used, the temperature of the gas exiting the demoisturizer is held below 21 $^{o}$F for a minimum of 30 minutes. The TS require the surveillance requirement for moisture removal to be met before entering transport operations | See Section 8.1.5 |

HOLTEC INTERNATIONAL COPYRIGHTED MATERIAL

Table 8.0.1
OPERATIONAL CONSIDERATIONS
(CONTINUED)

| POTENTIAL EVENTS | METHODS USED TO ADDRESS EVENT | COMMENTS/ REFERENCES |
|---|---|---|
| Incorrect MPC lid installation | Procedural guidance is given to visually verify correct MPC lid installation prior to HI-TRAC removal from the spent fuel pool. | See Section 8.1.5. |
| Load Drop | Rigging diagrams and procedural guidance are provided for all lifts. Component weights are provided in Tables 8.1.1 through 8.1.4. | See Figures 8.1.6, 8.1.7, 8.1.9, 8.1.25 and 8.1.27. See Tables 8.1.1 through 8.1.4. |
| Over-pressurization of MPC during loading and unloading | Pressure relief valves in the water and gas processing systems limit the MPC pressure to acceptable levels. | See Figures 8.1.20, 8.1.21, 8.1.23 and 8.3.4. |
| Overstressing MPC lift lugs from side loading | The MPC is upended using the upending frame. | See Figure 8.1.6 and Section 8.1.2. |
| Overweight cask lift | Procedural guidance is given to alert operators to potential overweight lifts. | See Section 8.1.7 for example. See Tables 8.1.1 through 8.1.4. |
| Personnel contamination by cutting/grinding activities | Procedural guidance is given to warn operators prior to cutting or grinding activities. | See Section 8.1.5 and Section 8.3.3. |
| Transfer cask carrying hot particles out of the spent fuel pool | Procedural guidance is given to scan the transfer cask prior to removal from the spent fuel pool. | See Section 8.1.3 and Section 8.1.5. |
| Unplanned or uncontrolled release of radioactive materials | The MPC vent and drain ports are equipped with metal-to-metal seals to minimize the leakage during moisture removal and helium backfill operations. Unlike elastomer seals, the metal seals resist degradation due to temperature and radiation and allow future access to the MPC ports without hot tapping. The RVOAs allow the port to be opened and closed like a valve so gas sampling may be performed. | See Figure 8.1.11 and 8.1.16. See Section 8.3.3. |

HOLTEC INTERNATIONAL COPYRIGHTED MATERIAL

## *SUPPLEMENT 8.II*

## *OPERATING PROCEDURES*

*The main body of this chapter remains fully applicable for the IP1 specific options of the HI-STORM 100 System.*

## *SUPPLEMENT 9.II*

## *ACCEPTANCE CRITERIA AND MAINTENANCE PROGRAM*

*The main body of this chapter remains fully applicable for the IP1 specific options of the HI-STORM 100 System.*

## *SUPPLEMENT 10.II*

## *RADIATION PROTECTION*

*The HI-STORM 100 System has been expanded to include options specific for Indian Point Unit 1 (IP1). Supplement 5.II demonstrates that the dose rates from the HI-STORM 100 System for IP1, including the shorter HI-STORM 100S Version B overpack (HI-STORM 100S (185)) and the HI-TRAC 100D Version IP1, are bounded by the dose rates from the HI-STORM 100 System with design basis PWR fuel. Therefore, the off-site dose rates from the HI-STORM 100S Version B and HI-TRAC 100D Version IP1 containing IP1 fuel is bounded by the analysis in the main part of this chapter.*

*The IP1 specific options in the HI-STORM 100 System do not affect the operational sequence. Therefore, the estimated operational dose rates in the main body of the chapter are bounding. The actual dose rate from loading IP1 fuel will be considerably less due to the low burnup and long cooling time of the IP1 fuel.*

HOLTEC INTERNATIONAL COPYRIGHTED MATERIAL

## *SUPPLEMENT 11.II*

## *OFF-NORMAL AND ACCIDENT EVALUATION FOR HI-STORM 100S-185*

### *11.II.0 INTRODUCTION*

*This supplement is focused on the off-normal and accident condition evaluations of the HI-STORM 100S-185 System for storage of IP1 fuel. The evaluations described herein parallel those of the HI-STORM 100 System contained in the main body of Chapter 11 of this FSAR. To ensure readability, the sections in this supplement are numbered to be directly analogous to the sections in the main body of the chapter. For example, the fire accident evaluation presented in Supplement Subsection 11.II.2.4 for the HI-STORM 100S-185 is analogous to the evaluation presented in Subsection 11.2.4 of the main body of Chapter 11 for the HI-STORM 100.*

### *11.II.1 OFF-NORMAL EVENTS*

*A general discussion of off-normal events is presented in Section 11.1 of the main body of Chapter 11. The following off-normal events are discussed in this supplement:*

*Off-Normal Pressure*
*Off-Normal Environmental Temperature*
*Leakage of One MPC Seal Weld*
*Partial Blockage of Air Inlets*
*Off-Normal Handling of HI-TRAC Transfer Cask*
*FHD System Failure*

*The results of the evaluations presented herein demonstrate that the HI-STORM 100S-185 System can withstand the effects of off-normal events without affecting its ability to perform its intended function, and is in compliance with the applicable acceptance criteria.*

#### *11.II.1.1 Off-Normal Pressure*

*A discussion of this off-normal condition is presented in Subsection 11.1.1 of the main body of Chapter 11. A description of the cause of, detection of, corrective actions for and radiological impact of this event is presented therein.*

*Structural*

*The structural evaluation of the MPC enclosure vessel for off-normal internal pressure conditions is discussed in Section 3.4. The applicable pressure boundary stress limits are confirmed to bound the stresses resulting from the off-normal pressure.*

*Thermal*

HOLTEC INTERNATIONAL COPYRIGHTED MATERIAL

*The off-normal event is evaluated for the generic HI-STORM in Section 4.6.1 This evaluation is bounding as the MPC temperatures and pressures in a HI-STORM 100S-185 are bounded by the generic HI-STORM System.*

*Shielding*

*There is no effect on the shielding performance of the system as a result of this off-normal event.*

*Criticality*

*There is no effect on the criticality control features of the system as a result of this off-normal event.*

*Confinement*

*There is no effect on the confinement function of the MPC as a result of this off-normal event. As discussed in the structural evaluation mentioned above, all stresses remain within allowable values, assuring confinement boundary integrity.*

*Radiation Protection*

*Since there is no degradation in shielding or confinement capabilities as discussed above, there is no effect on occupational or public exposures as a result of this off-normal event.*

*Based on this evaluation, it is concluded that the off-normal pressure does not affect the safe operation of the HI-STORM 100S-185 System.*

*11.II.1.2 Off-Normal Environmental Temperatures*

*A discussion of this off-normal condition is presented in Subsection 11.1.2 of the main body of Chapter 11. A description of the cause of, detection of, corrective actions for and radiological impact of this event is presented therein.*

*Structural*

*The effect on the MPC for the upper off-normal thermal conditions (i.e., 100°F) is an increase in the internal pressure. The resultant pressure is below the off-normal design pressure (Table 2.2.1).*

*Thermal*

*The effect of off-normal ambient temperature on HI-STORM temperatures and pressures is evaluated in Section 4.II.6.*
*Shielding*

HOLTEC INTERNATIONAL COPYRIGHTED MATERIAL

*There is no effect on the shielding performance of the system as a result of this off-normal event.*

*Criticality*

*There is no effect on the criticality control features of the system as a result of this off-normal event.*

*Confinement*

*There is no effect on the confinement function of the MPC as a result of this off-normal event.*

*Radiation Protection*

*Since there is no degradation in shielding or confinement capabilities as discussed above, there is no effect on occupational or public exposures as a result of this off-normal event.*

*Based on this evaluation, it is concluded that the specified off-normal environmental temperatures do not affect the safe operation of the HI-STORM 100S-185 System.*

*11.II.1.3 Leakage of One MPC Seal Weld*

*A discussion of this off-normal condition is presented in Subsection 11.1.3 of the main body of Chapter 11. The discussion presented therein is applicable in its entirety to an MPC in a HI-STORM 100S-185.*

*11.II.1.4 Partial Blockage of Air Inlets*

*A discussion of this off-normal condition is presented in Subsection 11.1.4 of the main body of Chapter 11. A description of the cause of, detection of, corrective actions for and radiological impact of this event is presented therein.*

*Structural*

*There are no structural consequences as a result of this off-normal event.*

*Thermal*

*Partial air inlets blockage is evaluated in Section 4.II.6.*

*Shielding*

*There is no effect on the shielding performance of the system as a result of this off-normal event.*

HOLTEC INTERNATIONAL COPYRIGHTED MATERIAL

*Criticality*

*There is no effect on the criticality control features of the system as a result of this off-normal event.*

*Confinement*

*There is no effect on the confinement function of the MPC as a result of this off-normal event.*

*Radiation Protection*

*Since there is no degradation in shielding or confinement capabilities as discussed above, there is no effect on occupational or public exposures as a result of this off-normal event.*

*Based on this evaluation, it is concluded that the specified off-normal partial blockage of air inlet ducts event does not affect the safe operation of the HI-STORM 100S-185 System.*

### *11.II.1.5 Off-Normal Handling of HI-TRAC*

*A discussion of this off-normal condition is presented in Subsection 11.1.5 of the main body of Chapter 11. This off-normal condition does not apply to the HI-TRAC 100D Version IP1, which does not have lower pocket trunnions. Upending and downending of the HI-TRAC 100D Version IP1 is performed using an L-frame.*

### *11.II.1.6 Failure of FHD System*

*A discussion of this off-normal condition is presented in Subsection 11.1.6 of the main body of Chapter 11. The discussion presented therein is also applicable to the IP1 cask system.*

## *11.II.2 ACCIDENT EVENTS*

*A general discussion of accident events is presented in Section 11.1 of the main body of Chapter 11. The following accident events are discussed in this supplement section:*

*HI-TRAC Transfer Cask Handling Accident*
*HI-STORM 100S-185 Overpack Handling Accident*
*Tip-Over*
*Fire Accident*
*Partial Blockage of MPC Basket Vent Holes*
*Tornado*
*Flood*
*Earthquake*
*100% Fuel Rod Rupture*
*Confinement Boundary Leakage*
*Explosion*
*Lightning*

HOLTEC INTERNATIONAL COPYRIGHTED MATERIAL

*100% Blockage of Air Inlets*
*Burial Under Debris*
*Extreme Environmental Temperature*

*The results of the evaluations performed herein demonstrate that the HI-STORM 100S-185 System can withstand the effects of all credible and hypothetical accident conditions and natural phenomena without affecting safety function, and is in compliance with the applicable acceptance criteria.*

*11.II.2.1 HI-TRAC Transfer Cask Handling Accident*

*A discussion of this accident condition is presented in Subsection 11.2.1 of the main body of Chapter 11. Unless a site-specific analysis has been performed to determine a lift height limit, ~~T~~the HI-TRAC 100D Version IP1 shall be transported and handled only in the vertical orientation using a device designed in accordance with ANSI N14.6 and having redundant drop protection features~~the criteria specified in Subsection 2.3.3.1~~. Therefore, a drop of the loaded HI-TRAC 100D Version IP1 is not a credible accident.*

*11.II.2.2 HI-STORM Overpack Handling Accident*

*A discussion of this accident condition is presented in Subsection 11.2.1 of the main body of Chapter 11. The discussion presented therein applies to the HI-STORM 100S-185 System, except that the height of the loaded overpack above the ground shall be limited to below the vertical handling height limit determined in Supplement 3.II.*

*11.II.2.3 Tip-Over*

*A discussion of this accident condition is presented in Subsection 11.2.1 of the main body of Chapter 11. The discussion presented therein applies to the HI-STORM 100S-185 System, except that the tip-over analysis of the HI-STORM 100S-185 overpack is provided in Supplement 3.II, Section 3.II.4.*

*11.II.2.4 Fire Accident*

*A discussion of this accident condition is presented in Subsection 11.2.4 of the main body of Chapter 11. A description of the cause of and corrective actions for this event is presented therein.*

*Structural*

*There are no structural consequences as a result of the fire accident condition.*

*Thermal*

HOLTEC INTERNATIONAL COPYRIGHTED MATERIAL

*Supplement 4.II, Section 4.II.6 evaluates fire accidents for the HI-STORM 100S-185 System. As justified therein, the evaluation of fires on a generic HI-STORM System presented in Section 11.2 bound the effects on the HI-STORM 100S-185 System.*

*Shielding*

*With respect to concrete damage from a fire, NUREG-1536 (4.0,V,5.b) states: "the loss of a small amount of shielding material is not expected to cause a storage system to exceed the regulatory requirements in 10 CFR 72.106 and, therefore, need not be estimated or evaluated in the SAR."*

*Criticality*

*There is no effect on the criticality control features of the system as a result of this accident event.*

*Confinement*

*There is no effect on the confinement function of the MPC as a result of this accident event.*

*Radiation Protection*

*Since there is a very localized reduction in shielding and no effect on the confinement capabilities as discussed above, there is no effect on occupational or public exposures as a result of this accident event.*

*Based on this evaluation, it is concluded that the fire accident does not affect the safe operation of the HI-STORM 100S-185 System.*

### *11.II.2.5 Partial Blockage of MPC Basket Vent Holes*

*A discussion of this accident condition is presented in Subsection 11.2.5 of the main body of Chapter 11. The discussion presented therein applies to an MPC-32-IP1 in a HI-STORM 100S-185.*

### *11.II.2.6 Tornado*

*A discussion of this accident condition is presented in Subsection 11.2.6 of the main body of Chapter 11. A description of the cause of and corrective actions for this event is presented therein.*

*Structural*

*Analyses presented in Supplement 3.II, Section 3.II.4 show that the impact of tornado and tornado borne missiles on the HI-STORM 100S-185 System does not result in tip-over or a direct missile strike on the MPC.*

HOLTEC INTERNATIONAL COPYRIGHTED MATERIAL

*Thermal*

*There are no thermal consequences as a result of the tornado.*

*Shielding*

*A tornado missile may cause localized damage to the HI-STORM 100S 185 Overpack. As the overpack is heavily shielded, the overall damage consequences (site boundary doses) are insignificant.*

*Criticality*

*There is no effect on the criticality control features of the system as a result of this accident event.*

*Confinement*

*There is no effect on the confinement function of the MPC as a result of this accident event.*

*Radiation Protection*

*There is no degradation in confinement capabilities of the MPC, since the tornado missiles do not impact the MPC, as discussed above. A tornado missile may cause localized damage in the HI-STORM 100S 185 overpack. However, the damage will have a negligible effect on the site boundary dose.*

*Based on this evaluation, it is concluded that the tornado accident does not affect the safe operation of the HI-STORM 100S-185 System.*

### *11.II.2.7 Flood*

*A discussion of this accident condition is presented in Subsection 11.2.7 of the main body of Chapter 11. A description of the cause of this event is presented therein.*

*Structural*

*The structural evaluation of the MPC for the accident condition external pressure (Table 2.2.1) is presented in Section 3.4 and the resulting stresses from this event are shown to be well within the allowable values.*

*Thermal*

*The thermal consequences of flood are bounded by the all inlet ducts blocked accident.*

HOLTEC INTERNATIONAL COPYRIGHTED MATERIAL

*Shielding*

*There is no effect on the shielding performance of the system as a result of this accident event. The floodwater provides additional shielding which reduces radiation dose.*

*Criticality*

*There is no effect on the criticality control features of the system as a result of this accident event. The criticality analysis is unaffected because under the flooding condition water does not enter the MPC cavity and therefore the reactivity would be less than the loading condition in the spent fuel pool, which is presented in Section 6.1.*

*Confinement*

*There is no effect on the confinement function of the MPC as a result of this accident event. As discussed in the structural evaluation above, all stresses remain within allowable values, assuring confinement boundary integrity.*

*Radiation Protection*

*Since there is no degradation in shielding or confinement capabilities as discussed above, there is no effect on occupational or public exposures as a result of this accident event.*

*Based on this evaluation, it is concluded that the flood accident does not affect the safe operation of the HI-STORM 100S-185 System.*

*Flood Accident Corrective Action*

*The HI-STORM 100S 185 System is unaffected by flood. Upon recession of floodwaters, exposed surfaces may need debris and adherent foreign matter removal.*

### *11.II.2.8 Earthquake*

*A discussion of this accident condition is presented in Subsection 11.2.8 of the main body of Chapter 11. A description of the cause of and corrective actions for this event is presented therein.*

*Structural*

*An evaluation presented in Supplement 3.II, Section 3.II.4 shows that the HI-STORM 100S-185 does not tip over. It continues to render its intended function during and after the earthquake and the overpack is unaffected by the event.*

HOLTEC INTERNATIONAL COPYRIGHTED MATERIAL

*Thermal*

*There is no effect on the thermal performance of the system as a result of this accident event.*

*Shielding*

*There is no effect on the shielding performance of the system as a result of this accident event.*

*Criticality*

*There is no effect on the criticality control features of the system as a result of this accident event.*

*Confinement*

*There is no effect on the confinement function of the MPC as a result of this accident event.*

*Radiation Protection*

*Since there is no degradation in shielding or confinement capabilities as discussed above, there is no effect on occupational or public exposures as a result of this accident event.*

*Based on this evaluation, it is concluded that the earthquake does not affect the safe operation of the HI-STORM 100S-185 System.*

*11.II.2.9 100% Fuel Rod Rupture*

*A discussion of this accident condition is presented in Subsection 11.2.9 of the main body of Chapter 11. A description of the cause of and corrective actions for this event is presented therein.*

*Structural*

*The MPC accident pressure is below the design pressure of the MPC (Table 2.2.1).*

*Thermal*

*The 100% fuel rods rupture accident pressure is evaluated in Supplement II, Section 4.II.4.4. The MPC accident pressure is below the vessel design pressure (Table 2.2.1).*

*Shielding*

*There is no effect on the shielding performance of the system as a result of this accident event.*

HOLTEC INTERNATIONAL COPYRIGHTED MATERIAL

*Criticality*

*There is no effect on the criticality control features of the system as a result of this accident event.*

*Confinement*

*There is no effect on the confinement function of the MPC as a result of this accident event. As discussed in the structural evaluation above, all stresses remain within allowable values, assuring confinement boundary integrity.*

*Radiation Protection*

*Since there is no degradation in shielding or confinement capabilities as discussed above, there is no effect on occupational or public exposures as a result of this accident event.*

*Based on this evaluation, it is concluded that the non-mechanistic 100% fuel rod rupture accident does not affect the safe operation of the HI-STORM 100S-185 System.*

*11.II.2.10 Confinement Boundary Leakage*

*A discussion of this accident condition is presented in Subsection 11.2.10 of the main body of Chapter 11. The discussion presented therein also applies to the MPC-32-IP1.*

*11.II.2.11 Explosion*

*A discussion of this accident condition is presented in Subsection 11.2.11 of the main body of Chapter 11. A description of the cause of and corrective actions for this event is presented therein.*

*Structural*

*The structural evaluations for the MPC accident condition external pressure and overpack pressure differential are presented in Section 3.4 and demonstrate that all stresses are within allowable limits.*

*Thermal*

*There is no effect on the thermal performance of the system as a result of this accident event.*

*Shielding*

*There is no effect on the shielding performance of the system as a result of this accident event.*

HOLTEC INTERNATIONAL COPYRIGHTED MATERIAL

*Criticality*

*There is no effect on the criticality control features of the system as a result of this accident event.*

*Confinement*

*There is no effect on the confinement function of the MPC as a result of this accident event. As discussed in the structural evaluation above, all stresses remain well within allowable values, assuring confinement boundary integrity.*

*Radiation Protection*

*Since there is no degradation in shielding or confinement capabilities as discussed above, there is no effect on occupational or public exposures as a result of this accident event.*

*Based on this evaluation, it is concluded that the explosion accident does not affect the safe operation of the HI-STORM 100S-185 System.*

*11.II.2.12 Lightning*

*A discussion of this accident condition is presented in Subsection 11.2.12 of the main body of Chapter 11. The discussion presented therein also applies to the HI-STORM 100S-185.*

*11.II.2.13 100% Blockage of Air Inlets*

*A discussion of this accident condition is presented in Subsection 11.2.13 of the main body of Chapter 11. A description of the cause of and corrective actions for this event is presented therein.*

*Structural*

*There are no structural consequences as a result of this accident event.*

*Thermal*

*The 100% air inlets blockage accident is evaluated in Supplement II, Section 4.II.6.*

*Shielding*

*There is no effect on the shielding performance of the system as a result of this accident event, since the concrete temperatures do not exceed the accident temperature limit.*

HOLTEC INTERNATIONAL COPYRIGHTED MATERIAL

*Criticality*

*There is no effect on the criticality control features of the system as a result of this accident event.*

*Confinement*

*There is no effect on the confinement function of the MPC as a result of this accident event.*

*Radiation Protection*

*Since there is no degradation in shielding or confinement capabilities as discussed above, there is no effect on occupational or public exposures as a result of this accident event.*

*Based on this evaluation, it is concluded that the 100% blockage of air inlets accident does not affect the safe operation of the HI-STORM 100S-185 System, if the blockage is removed in the specified time period.*

*11.II.2.14 Burial Under Debris*

*A discussion of this accident condition is presented in Subsection 11.2.14 of the main body of Chapter 11. A description of the cause of and corrective actions for this event is presented therein.*

*Structural*

*The structural evaluation of the MPC enclosure vessel for accident internal pressure conditions bounds the pressure calculated herein. Therefore, the resulting stresses from this event are well within the allowable values, as demonstrated in Section 3.4.*

*Thermal*

*The burial under debris accident is evaluated in Supplement II, Section 4.II.6.*

*Shielding*

*There is no adverse effect on the shielding performance of the system as a result of this accident event.*

*Criticality*

*There is no effect on the criticality control features of the system as a result of this accident event.*

HOLTEC INTERNATIONAL COPYRIGHTED MATERIAL

*Confinement*

*There is no effect on the confinement function of the MPC as a result of this accident event. As discussed in the structural evaluation above, all stresses remain within allowable values, assuring confinement boundary integrity.*

*Radiation Protection*

*Since there is no degradation in shielding or confinement capabilities as discussed above, there is no effect on occupational or public exposures as a result of this accident event.*

*Based on this evaluation, it is concluded that the burial under debris accident does not affect the safe operation of the HI-STORM 100S-185 System, if the debris is removed within the specified time period.*

### *11.II.2.15 Extreme Environmental Temperature*

*A discussion of this accident condition is presented in Subsection 11.2.15 of the main body of Chapter 11. A description of the cause of and corrective actions for this event is presented therein.*

*Structural*

*The structural evaluation of the MPC enclosure vessel for accident condition internal pressure bounds the pressure resulting from this event. Therefore, the resulting stresses from this event are bounded by the design-basis internal pressure and are well within the allowable values, as discussed in Section 3.4.*

*Thermal*

*The extreme ambient temperature accident is evaluated in Supplement 4.II, Section 4.II.6.*

*Shielding*

*There is no effect on the shielding performance of the system as a result of this accident event, since the concrete temperature does not exceed the short-term temperature limit specified in Table 2.2.3.*

*Criticality*

*There is no effect on the criticality control features of the system as a result of this accident event.*

HOLTEC INTERNATIONAL COPYRIGHTED MATERIAL

*Confinement*

*There is no effect on the confinement function of the MPC as a result of this accident event. As discussed in the structural evaluation above, all stresses remain within allowable values, assuring confinement boundary integrity.*

*Radiation Protection*

*Since there is no degradation in shielding or confinement capabilities as discussed above, there is no effect on occupational or public exposures as a result of this accident event.*

*Based on this evaluation, it is concluded that the extreme environment temperature accident does not affect the safe operation of the HI-STORM 100S-185 System.*

HOLTEC INTERNATIONAL COPYRIGHTED MATERIAL

## B 3.3 SFSC Criticality Control

### B 3.3.1 Boron Concentration

BASES

BACKGROUND

A TRANSFER CASK with an empty MPC is placed in the spent fuel pool and loaded with fuel assemblies meeting the requirements of the Certificate of Compliance. A lid is then placed on the MPC. The TRANSFER CASK and MPC are raised to the top of the spent fuel pool surface. The TRANSFER CASK and MPC are then moved into the cask preparation area where the MPC lid is welded to the MPC shell and the welds are inspected and tested. The water is drained from the MPC cavity and drying is performed. The MPC cavity is backfilled with helium. Then, the MPC vent and drain cover plates and closure ring are installed and welded. Inspections are performed on the welds. The TRANSFER CASK bottom pool lid is replaced with the transfer lid to allow eventual transfer of the MPC into the OVERPACK.

For those MPCs containing PWR fuel assemblies of relatively high initial enrichment, credit is taken in the criticality analyses for boron in the water within the MPC. To preserve the analysis basis, users must verify that the boron concentration of the water in the MPC meets specified limits when there is fuel and water in the MPC. This may occur during LOADING OPERATIONS and UNLOADING OPERATIONS.

APPLICABLE SAFETY ANALYSIS

The spent nuclear fuel stored in the SFSC is required to remain subcritical ($k_{eff}$ < 0.95) under all conditions of storage. The HI-STORM 100 SFSC is analyzed to store a wide variety of spent nuclear fuel assembly types with differing initial enrichments. For ~~all~~ *most* PWR fuel loaded in the MPC-32 and MPC-32F, and for relatively high enrichment PWR fuel loaded in the MPC-24, -24E, and -24EF, credit was taken in the criticality analyses for neutron poison in the form of soluble boron in the water within the MPC. Compliance with this LCO preserves the assumptions made in the criticality analyses regarding credit for soluble boron.

(continued)

HOLTEC INTERNATIONAL COPYRIGHTED MATERIAL

BASES (continued)

LCO

Compliance with this LCO ensures that the stored fuel will remain subcritical with a $k_{eff} \leq 0.95$ while water is in the MPC. LCOs 3.3.1.a and 3.3.1.b provide the minimum concentration of soluble boron required in the MPC water for the MPC-24, and MPC-24E/24EF, respectively, for MPCs containing all INTACT FUEL ASSEMBLIES. The limits are applicable to the respective MPCs if one or more fuel assemblies to be loaded in the MPC had an initial enrichment of U-235 greater than the value in Table 2.1-2 of Appendix B to the CoC for loading with no soluble boron credit.

LCO 3.3.1.e provides the minimum concentration of soluble boron required in the MPC water for the MPC-24E and MPC-24EF containing at least one DAMAGED FUEL ASSEMBLY or one fuel assembly classified as FUEL DEBRIS.

LCO 3.3.1.f provides the minimum concentration of soluble boron required in the MPC water for the MPC-32 and MPC-32F based on the fuel assembly array/class and the classification of the fuel as a DAMAGED FUEL ASSEMBLY or FUEL DEBRIS.

All fuel assemblies loaded into the MPC-24, MPC-24E, MPC-24EF, MPC-32, and MPC-32F are limited by analysis to maximum enrichments ~~of~~ *not exceeding* 5.0 wt.% U-235.

The LCO also requires that the minimum soluble boron concentration for the most limiting fuel assembly array/class and classification to be stored in the same MPC be used. This means that the highest minimum soluble boron concentration limit for all fuel assemblies in the MPC applies in cases where fuel assembly array/classes and fuel classifications (intact vs. damaged) are mixed in the same MPC. The ensures the assumptions pertaining to soluble born used in the criticality analyses are preserved.

(continued)

HOLTEC INTERNATIONAL COPYRIGHTED MATERIAL

BASES

APPLICABILITY

The boron concentration LCO is applicable whenever an MPC-24, -24E, -24EF, -32, or -32F has at least one PWR fuel assembly in a storage location and water in the MPC, For the MPC-24 and MPC-24E/24EF, when all fuel assemblies to be loaded have initial enrichments less than the limit for no soluble boron credit as provided in CoC Appendix B, Table 2.1-2, the boron concentration requirement is implicitly understood to be zero.

During LOADING OPERATIONS, the LCO is applicable immediately upon the loading of the first fuel assembly in the MPC. It remains applicable until the MPC is drained of water

During UNLOADING OPERATIONS, the LCO is applicable when the MPC is re-flooded with water after helium cooldown operations. Note that compliance with SR 3.0.4 assures that the water to be used to flood the MPC is of the correct boron concentration to ensure the LCO is upon entering the Applicability.

ACTIONS

A note has been added to the ACTIONS which states that, for this LCO, separate Condition entry is allowed for each MPC. This is acceptable since the Required Actions for each Condition provide appropriate compensatory measures for each MPC not meeting the LCO. Subsequent MPCs that do not meet the LCO are governed by subsequent Condition entry and application of associated Required Actions.

A.1 and A.2

Continuation of LOADING OPERATIONS, UNLOADING OPERATIONS or positive reactivity additions (including actions to reduce boron concentration) is contingent upon maintaining the SFSC in compliance with the LCO. If the boron concentration of water in the MPC is less than its limit, all activities LOADING OPERATIONS, UNLOADING OPERATIONS or positive reactivity additions must be suspended immediately.

(continued)

HOLTEC INTERNATIONAL COPYRIGHTED MATERIAL

BASES

ACTIONS (continued)

A.3

In addition to immediately suspending LOADING OPERATIONS, UNLOADING OPERATIONS and positive reactivity additions, action to restore the concentration to within the limit specified in the LCO must be initiated immediately.

One means of complying with this action is to initiate boration of the affected MPC. In determining the required combination of boration flow rate and concentration, there is no unique design basis event that must be satisfied; only that boration be initiated without delay. In order to raise the boron concentration as quickly as possible, the operator should begin boration with the best source available for existing plant conditions.

Once boration is initiated, it must be continued until the boron concentration is restored. The restoration time depends on the amount of boron that must be injected to reach the required concentration.

SURVEILLANCE REQUIREMENTS (continued)

SR 3.3.1.1

The boron concentration in the MPC water must be verified to be within the applicable limit within four hours prior to entering the Applicability of the LCO. For LOADING OPERATIONS, this means within four hours of loading the first fuel assembly into the cask.

For UNLOADING OPERATIONS, this means verifying the source of borated water to be used to re-flood the MPC within four hours of commencing re-flooding operations. This ensures that when the LCO is applicable (upon introducing water into the MPC), the LCO will be met.

(continued)

HOLTEC INTERNATIONAL COPYRIGHTED MATERIAL

BASES

SURVEILLANCE REQUIREMENTS (continued)

Surveillance Requirement 3.3.1.1 is modified by a note which states that SR 3.3.1.1 is only required to be performed if the MPC is submerged in water or if water is to be added to, or recirculated through the MPC. This reflects the underlying premise of this SR which is to ensure, once the correct boron concentration is established, it need only be verified thereafter if the MPC is in a state where the concentration could be changed.

There is no need to re-verify the boron concentration of the water in the MPC after it is removed from the spent fuel pool unless water is to be added to, or recirculated through the MPC, because these are the only credible activities that could potentially change the boron concentration during this time. This note also prevents the interference of unnecessary sampling activities while lid closure welding and other MPC storage preparation activities are taking place in an elevated radiation area atop the MPC. Plant procedures should ensure that any water to be added to, or recirculated through the MPC is at a boron concentration greater than or equal to the minimum boron concentration specified in the LCO

REFERENCES

1. FSAR Chapter 6.

HOLTEC INTERNATIONAL COPYRIGHTED MATERIAL

## *SUPPLEMENT 12.II*

## *OPERATING CONTROLS AND LIMITS*

*The main body of this chapter remains fully applicable for the IP1 specific options of the HI-STORM 100 System.*

## *SUPPLEMENT 13.II*

## *QUALITY ASSURANCE*

*The main body of this chapter remains fully applicable for the IP1 specific options of the HI-STORM 100 System.*