MODEL BM06E

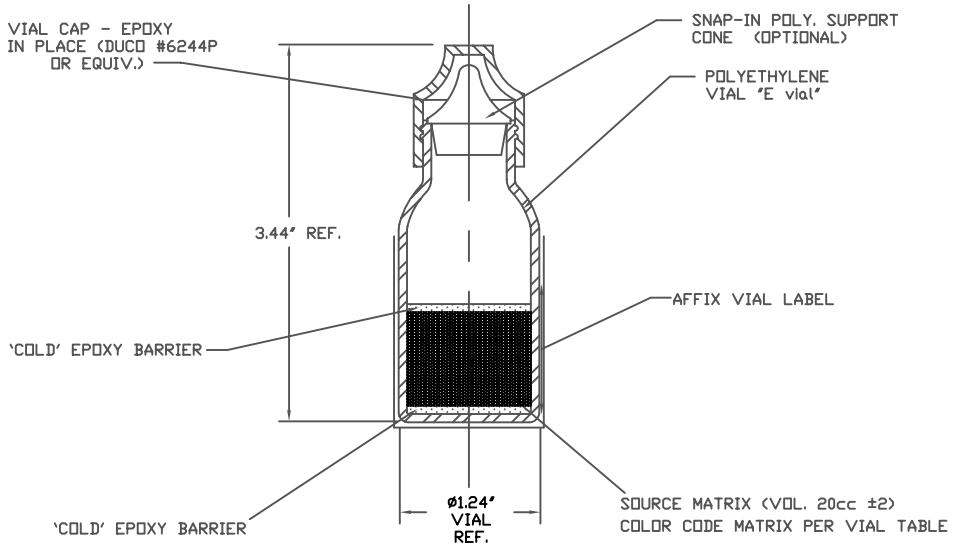

MODEL BM06S

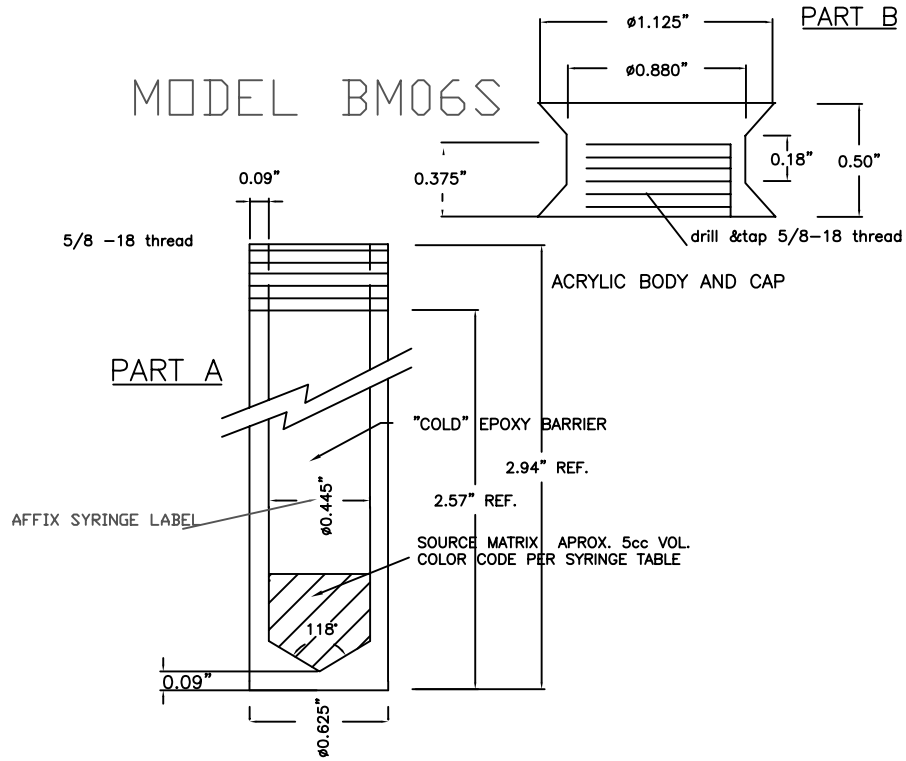

VIAL STANDARD MODEL TABLE				
ASS'Y. P/N	MODEL NO.	NUCLIDE	MAXIMUM ACTIVITY	COLOR CODE
-01	BM06E-22	Na-22	0.50 mCi	YELLOW
-02	BM06E-60	Co-60	0.10 mCi	BLUE
-03	BM06E-37	Cs-137	0.50 mCi	GREEN
-04	BM06E-33	Ba-133	0.50 mCi	BLK/GRY
-05	BM06E-57	Co-57	15.0 mCi	RED
-06	BM06E-68	Ge-68	0.50 mCi	WHITE

NOTES

1. SOURCE ACTIVITY CONSISTS OF RADIONUCLIDE DISPERSED UNIFORMLY IN A HIGH IMPACT EPOXY RESIN. RESIN MAYBE COLOR CODED PER TABLE USING EPOXY COLORING APPROPRIATE FOR STYCAST EPOXY (OR EQUIV).
2. PRODUCT ACTIVITY SHALL BE REFERENCED TO LABEL DATE. PRODUCT ACTIVITY TOLERANCE SHALL NOT BE > +20% NOR < -10% AT TIME OF SHIPMENT.
3. CONTAMINATION/LEAKAGE TESTING OF EACH SOURCE SHALL BE PER PROCEDURE FOR CONTAM./LEAK. TEST OF REF. SOURCES'. LIMIT 5 X 10^{-3} uCi.
4. ANSI N43.6-1997 PERFORMANCE CLASSIFICATION OF 96C22212 FOR CALIBRATION SOURCES

SYRINGE STANDARD MODEL TABLE				
ASS'Y. P/N	MODEL NO.	NUCLIDE	MAXIMUM ACTIVITY	COLOR CODE
-01	BM06S-22	Na-22	0.50 mCi	YELLOW
-02	BM06S-60	Co-60	0.10 mCi	BLUE
-03	BM06S-37	Cs-137	0.50 mCi	GREEN
-04	BM06S-33	Ba-133	0.50 mCi	BLK/GRY
-05	BM06S-57	Co-57	15.0 mCi	RED
-06	BM06S-68	Ge-68	0.50 mCi	WHITE