71-5862
Rec'd w/ltr
dtd 06/26/85

STRUCTURAL AND THERMAL EVALUATION OF SENTINEL 100F

INSD-3080

JUNE 1985

Original Issue - August 10, 1971

Revision 1 - September 7, 1971
(Pages 45 - 49 inclusive)

Revision 2 - September 24, 1971

Revision 3 - October 22, 1971

Revision 4 - June 1985

TELEDYNE ENERGY SYSTEMS

110 West Timonium Road
Timonium, Maryland 21093

8510110145 851004
PDR ADOCK 07105862
B PDR

25454

TABLE OF CONTENTS

		Page	
	PREFACE	ii	R4
I.	INTRODUCTION	1	
II.	DESIGN CRITERIA	2	
III.	GENERATOR DESCRIPTION	3	
	A. Fuel Capsule	5	
	B. Heat Source	5	
	C. Generator Housing	7	
	D. Shipping Pallet and Cage	7	
IV.	INTERSTATE SHIPPING SAFETY STANDARDS	9	
V.	ENVIRONMENTAL RESPONSE	12	
	A. Normal Conditions of Transport	12	
	B. Hypothetical Accident Conditions	14	
	C. Special Form Material	14	
	D. Shield Standards	15	
	E. Package Standards	15	
VI.	IAEA TRANSPORT REGULATIONS - SERIES 6	17	
VII.	CONCLUSIONS	19	
	REFERENCES	19	
VIII.	ADDITIONAL SUPPORT DATA	20	
APPENDIX A,	STRUCTURAL ANALYSES	22	
APPENDIX B,	THERMAL ANALYSES	65	
APPENDIX C,	ANALYSES OF SHIELD LID ATTACHING BOLTS	105	R3 R4
APPENDIX D,	LIST OF DRAWINGS	110	

PREFACE

R4

This report consists of a consolidation of relevant material originally submitted by Teledyne Energy Systems (TES) over the period August 10, 1971 through January 19, 1972 for purposes of obtaining a transport license for the SENTINEL-100 F Radioisotope Thermoelectric Generator (RTG). By this submittal, TES requests an extension of Certificate of Compliance No. 5862 for transport of the SENTINEL-100F unit.

This consolidated report was prepared in accordance with current U. S. Nuclear Regulatory Commission requirements for a single consolidated report. The information contained herein is that originally submitted over the above cited time froma (1971-1972) which addresses the specific requirements for the transport package of that period. No new analysis is presented. Text added in this issue (designated R4), including this preface, is provided only for purposes of explanation or clarification.

References on the current Certificate of Compliances (dated September 6, 1983) are as follows.

Isotopes, Inc., application dated August 10, 1971. Supplements dated:

a. September 24, 1971
b. October 22, 1971
c. November 30, 1971
d. December 20, 1971
e. January 19, 1972

Supplements (a) and (b) provided revised and additional structural analyses. These revisions are indicated by designations R1, R2, and R3 in the text of the report. In particular, Appendix C provides additional analysis requested by the licensing agency regarding loading of the bolts which attach the shield lid to the body of the biological shield given impact from the 30 foot drop. The analysis is provided to show that the heat source (consisting of the fuel capsule, shield body and lid) will remain intact under this environment. An explanatory note (R4) has been added to this appendix.

Supplements (c), (d) and (e) provide additional thermal information. TES documents related to the original licensing effort indicate that the licensing agency intended to have a third agency (ORNL) conduct separate thermal response analysis for the standard fire. Apparently, the additional thermal information of these supplements was provided in support of this intent. All relevent information in these supplements along with the letter requesting the information have been added to Appendix B of this report. Supplement (d) included a copy of the users manual for the thermal analyzer program used by TES for the thermal analysis reported in Appendix D - namely: INSD-3084, "User's Manual for the Thermal Analyzer Program TAP-3," compiled and edited by R. Hannah, November 1971, Teledyne Isotopes. This 55 page report has not been included with this submittal. The report is available at TES and may be furnished on request.

Construction drawings which define the transport package (as listed on the current Certificate of Compliance) have been included with the report. The included drawings are listed in Appendix D.

To reiterate, the current version of the report consists of a complilation of relevant information originally submitted over the period August 10, 1971 through January 19, 1972. Editorial remarks have been included for clarification. No new analysis is presented. The report addresses the USAEC, IAEA and DOT regulations which were in effect in the late 1971, early 1972 time period for transport of a Type B ( ) package. These conditions and requirements are summarized in the body of the report.

I. INTRODUCTION

The objective of this report is to substantiate the safety aspect of possessing and transporting a designated SENTINEL 100F Terrestrial Radioisotopic powered generator. The approach used to achieve the above objective was initiated with the listing of the safety design criteria as given in Chapter II. This is followed by a general description of the SENTINEL generator and a more detail description of the major components. The interstate regulations and conditions, dictated by the United States Atomic Energy Commission Title 10 and the Federal Register Title 49, which must be satisfied are delineated in Chapter IV. The response of the SENTINEL system (the generator and shipping pallet and/or the fuel capsule) to these requirements and conditions is given in Chapter V.

The regulations and conditions regarding the international transport of the SENTINEL generator were taken from IAEA Safety Series 6 and are discussed in Chapter VI along with the systems response to these additional requirements. Chapter VII summarizes the conclusions reached as a result of this study. Some analyses were conducted which were not required to satisfy any of the regulations or conditions but were made available as supplemental support data. The results obtained from these analyses can be found in Chapter VIII. The details of the structural analyses and thermal analyses are presented in Appendix A and B, respectively.

II. DESIGN CRITERIA

Safety design criteria were established for the operation, storage and transport of the SENTINEL 100F generator. These design criteria to which the generator package or fuel capsule (where specified) were designed are as follows:

(1) Ambient air temperature -40° F to + 130° F.

(2) The fuel capsule shall be capable of sustaining a hydrostatic pressure of 14,500 psi.

(3) Any combination of natural atmospheric pressure and humidity.

(4) The generator housing must have the structural capacity to sustain a seawater pressure at a depth of 2000 feet.

(5) The requirements imposed by U.S.A.E.C. Title 10 and D.O.T. Title 49.

(6) Certification of conformance with applicable requirements of IAEA Safety Series 6.

III. GENERATOR DESCRIPTION

The SENTINEL 100F radioisotopic powered generator is shown in the cutaway sketch in Figure III-1. This design is basically an enlarged version of the SENTINEL 25F with minor modifications. The minor modifications consist of a larger size, a different material for the retaining ring (Inconel) and the addition of a load plate under the tungsten biological shield.

The SENTINEL 100F, as shown in Figure III-1, is 45.5 inches in height and has a base diameter of 24.5 inches (not including the mounting pads). The generator weighs approximately 2600 pounds. Details of the generator can be found on the top assembly drawing (Reference 1). The strontium 90 titanate pellets are housed in a stainless steel liner. The liner is contained by the fuel capsule which provides a positive seal. The fuel capsule is inserted into the tungsten biological shield and the shield plug is bolted into place. The load plate distributes the weight of the tungsten shield over the Min-K 1301 thermal insulation and the load bearing Glasrock. The tungsten shield is held in the horizontal position by the Min-K which is sized to fit within the aluminum housing. The retaining ring is used to preload the Min-K and dampen any vibration loads.

The generator is bolted to the pallet for transportation using four 3/4-inch bolts. A cage is provided which fits over the generator and attaches to the pallet. The cage precludes physical contact with the generator during transportation and storage. It is not required to meet structural requirements since safe transport is not dependent on the integrity of the cage.

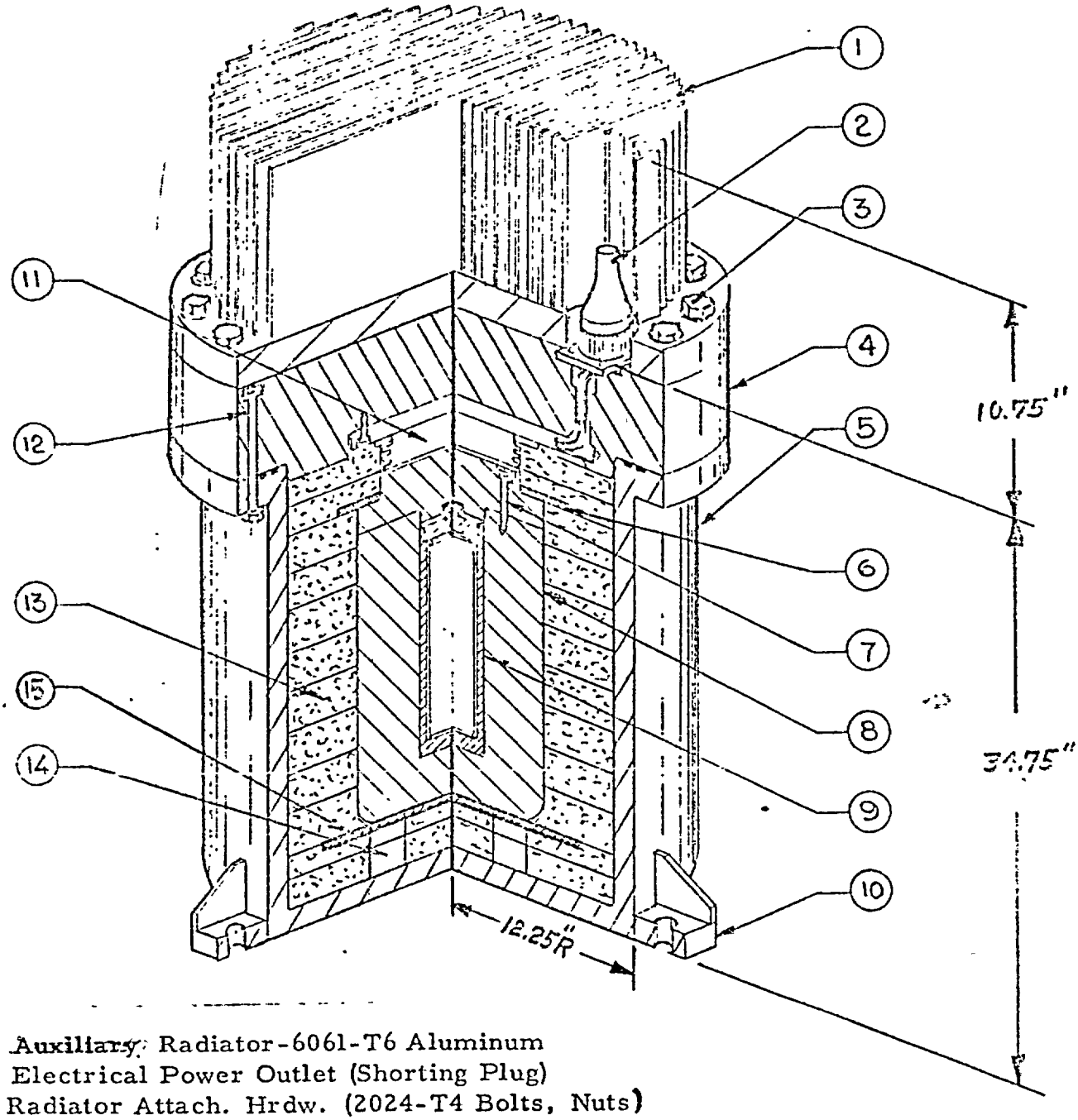

1. Auxiliary Radiator-6061-T6 Aluminum
2. Electrical Power Outlet (Shorting Plug)
3. Radiator Attach. Hrdw. (2024-T4 Bolts, Nuts)
4. Lid Assembly-6061 T6 Aluminum
5. Housing Assembly-6061 T6 Aluminum
6. Retaining Ring - Inconel
7. Shield Bolt-CRES-A-286 (Plated)
8. Biological Shield-Tungsten Alloy
9. Fuel Capsule Assembly
10. Mounting Pad-6061 T6 Aluminum
11. Thermoelectric Module Assy
12. Lid Attach. Hrdw (2024-T4 Bolts, Nuts)
13. Thermal Insulation (Min-K 1301)
14. Load Bearing Insulation (Glasrock)
15. Load Plate - Inconel

FIGURE III-1, SENTINEL 100F GENERATOR

A. FUEL CAPSULE

The fuel capsule consists of a liner and strength member which were designed to contain the strontium 90 titanate fuel form under normal operational and specified accident conditions. The fuel capsule assembly along with dimensions are shown on Figure III-2. Details of the capsule assembly and components can be seen in Reference 2.

The liner, which houses the strontium fuel, is constructed from stainless steel tubing. The sole purpose of the liner is to facilitate handling of the fuel and may be eliminated at the discretion of the fueling facility. No credit is taken for any additional protection offered by the liner.

The fuel capsule structural member which houses the liner is machined out of bar stock. The liner is loaded into the fuel capsule and the cap is fusion-welded to give a positive seal. The fuel capsule material is Hastelloy C, Hastelloy C-276, or Uniloy HC to material specification AMS-5750. The details of the fuel, materials and assembly are covered in the SENTINEL 100 fuel and encapsulation specification, (Reference 3).

B. HEAT SOURCE

The heat source consists of the fuel, fuel capsule and a tungsten biological shield. The heat source measures 13.837 inches in diameter and has a length of 19.705 inches. The tungsten biological shield is given a hard chromium plating (4 - 6 mils thick) using a dip process prior to assembly. After the fuel capsule is inserted into the biological shield, the shield plug is put in place and securely fastened to the shield housing

FIGURE WITHHELD UNDER 10 CFR 2.390

FIGURE III-2, FUEL CAPSULE ASSEMBLY

INSD-3080

with 3-1/2-20 UNF bolts (A-286) steel. The purpose of the tungsten shield is to provide uniform heat distribution and the radiation shielding required to meet the radiation safety standards. Details of the biological shield are shown in Reference 4.

C. GENERATOR HOUSING

The 6061 aluminum housing (T6 condition) forms the outer protective shell of the generator. Prior to the generator assembly the housing, heat sink and finned head are anodized and the housing and heat sink are finished with epoxy paint. The base of the generator housing has four aluminum 6061-T6 mounting pads for attachment to the shipping pallet.

D. SHIPPING PALLET AND CAGE

The shipping pallet used for the SENTINEL 100F is the same as was used previously with generators weighing approximately 4000 pounds. The pallet overall dimensions are 43 inches by 50.76 inches and is constructed from square structural steel tubing. Each of four bolts which attach the generator to the pallet is rated for 33,730 pounds tensile yield and 33,150 pounds single shear. Details of the shipping pallet can be found in Reference 5.

The shipping cage fits over the generator and assures physical separation from the generator. The shipping cage frame is constructed from 2 by 4 inch, No. 1 fir or pine. Wire mesh screen (2 by 2 inch) is attached

to the frame to prevent access to the generator. The base of the cage measures approximately 48 by 48 inches and has a height of 51 inches. A detailed description of the shipping cage can be found in Reference 6.

Specifically, use of the shipping cage provides a package which limits the exterior surface temperatures --- see Section IV, page 17. Its use is only required when the package is shipped as general cargo. R4

IV. INTERSTATE SHIPPING SAFETY STANDARDS

To transport the SENTINEL 100F specific conditions and requirements have to be satisfied. The SENTINEL 100F is considered a type B package and falls under the Group II classification as a special form material. The conditions and requirements the package must satisfy are covered by the following documents.

(1) Title 49 Code of Federal Register

(2) Title 10 Code of Federal Regulations

(3) International Atomic Energy Agency Safety Series 6

Covered in these documents are the normal transport conditions, special form requirements, shielding standards and hypothetical accident conditions. A study was made of the specific conditions which must be satisfied. Those which were found to be the governing cases or more severe events were selected for evaluation and are shown in Table IV-1.

TABLE IV-1, CONDITIONS OF TRANSPORT

Environment	Post Test Conditions
A. Normal Transport Conditions (Type B Package)	
1. Direct sunlight at an ambient temperature of 130°F in still air. 2. Cold - An ambient temperature of -40°F in still air and shade. 3. Pressure - Atmospheric pressure of 0.5 times standard atmospheric pressure. 4. Vibration - Vibration normally incident to transportation. 5. Water Spray - Keep entire surface (except bottom) wet for a 30 minute period. 6. Drop Test - 4 foot drop onto an unyielding surface at package critical angle. 7. Penetration - 40 inch drop of a 1-1/2 inch diameter steel cylinder weighing 13 pounds. Long axis of cylinder is perpendicular to the most vulnerable part of package. 8. Compression - A compression load equal to 5 times the package weight or 2 psi times the maximum horizontal cross section, whichever is greater. Load is applied at top and bottom of package in normal shipping position for 24 hours. 9. Meet the hypothetical accident conditions.	1. The reduction of shielding would not be enough to increase the radiation dose rate at 3 feet from the external surface of the package to more than 1,000 millirem per hour. 2. No radioactive material would be released from packages containing Type B quantities of radioactive material. The allowable release of radioactivity from packages containing large quantities of radioactive material is limited to gases and contaminated coolant containing total radioactivity of the package contents nor 0.10 curie of Group I radionuclides, 0.5 curie of Group II radionuclides, and 10 curies of Groups III and IV radionuclides, except that for inert gases the limit is 1,000 curies.
B. Hypothetical Accident Conditions	
1. Drop test - 30 foot drop onto unyielding surface at critical angle. 2. Puncture - 40 inch drop at critical angle onto vertical cylinder = 8 inches long, 6 inches in diameter with flat impacting surface whose edge radius is 1/2 inch or less. Cylinder is mounted on an unyielding base. 3. Thermal - 1475°F fire for 30 minutes with an emissivity coefficient of 0.9 and a package absorption coefficient of 0.8. Package shall not be cooled artificially for 3 hours.	1. The reduction of shielding would not be sufficient to increase the external radiation dose rate to more than 1,000 millirems per hour at 3 feet from the external surface of the package. 2. No radioactive material would be released from the package except for gases and contaminated coolant containing total radioactivity exceeding neither (i) 0.1 percent of the total radioactivity of the package contents; nor (ii) 0.01 curie of Group I radionuclides, 0.5 curie of Group II radionuclides, 10 curies of Group III radionuclides, 10 curies of Group IV radionuclides, and 1,000 curies of inert gases irrespective of transport group.

TABLE IV-1, CONDITIONS OF TRANSPORT (Continued)

C. Special Form

1. Drop Test - 30 foot drop onto a flat unyielding surface at critical angle.
2. Percussion - impact of a flat cylinder rod (1 inch diameter) weighing 3 pounds from a height of 40 inches onto the capsule which is supported by a lead sheet (Vickers #3.5 to 4.5) not more than one inch thick, supported by an unyielding surface.
3. Heating - 1475°F in air for 10 minutes.
4. Immersion - 24 hours in water at room temperature. PH6-PH8 water with a maximum conductivity of 10 micromhos/centimeter.

The capsule must retain its contents when subjected to all the performance tests prescribed in this section, and must not melt, sublime, or ignite at temperature below 1,475°F.

D. Shielding Standards

1. 200 mr/hr (maximum) at any point on surface of package.
2. 10 mr/hr at 3 feet from surface of the package.

E. Package Standards

1. The package lifting devices shall be capable of supporting 3 times the weight of the loaded package without exceeding the materials yield strength.
2. Failure at the lifting devices under heavy load shall not impair the containment or shielding properties of the package.
3. Tiedown devices - Without exceeding the yield strength of the package material, apply a static force to the center of gravity of the package with a vertical component equal to 2 times the weight of the package, a horizontal component along the direction the vehicle travels of 10 times the weight of the package and a horizontal component in the transverse direction of 5 times the weight of the package.
4. Load resistance - Simple beam supported at ends along any major axis, package shall be capable of withstanding a static load normal to and uniformly distributed along its length, equal to 5 times its fully loaded weight without exceeding the yield strength of the package.
5. External pressure - Containment vessel will suffer no loss of contents when subjected to an external pressure of 25 psig.

V. ENVIRONMENTAL RESPONSE

In the preceeding section, the environments were described according to (1) Normal test condition, (2) Hypothetical accident condition, (3) Special form material, (4) Shielding standards, and (5) Package standards. The purpose of this section is to show by analysis, test or relation to a more severe environment, that the fuel will be contained and radiation does not exceed 1000 millirem at 3 feet from the surface under all specified conditions.

The following describes the response of the generator to the environments in the sequence given in Table IV-1.

A. NORMAL TRANSPORT CONDITIONS

1. The environment on which this analysis was based (Item A. 1) consisted of the generator on short circuit in direct sunlight at ambient temperature of 130°F in still air. Exposure of the generator to this environment results in a maximum temperature of 1493°F for the capsule structural member and 1279°F for the biological shield (see Appendix B). These temperatures will not cause any adverse effects on the safety aspects of the system.

2. The design of the generator and materials used eliminate any detrimental safety effects occurring by having the generator exposed to a -40°F temperature in still air and shade as described in Item A. 2.

3. An atmospheric pressure 0.5 times the standard atmospheric pressure (Item A. 3) is far less severe than the case analyzed for the external pressure case given in Appendix A.

4. The vibration loads normally incident to transportation (Item A. 4) were not specified. In view of the far more severe requirements given in Table IV-1 and particularly the requirement given for the tiedown case, the vibration requirement was taken as a less severe condition.

5. The requirement given in Item A. 5 is of no concern since the generator was designed to sustain a seawater pressure at a depth of 2000 feet (See Appendix A).

6. A drop of four feet at the package critical angle on an unyielding surface as stated in Item A. 6 would not cause any damage which would effect the containment of the fuel or reduction in the biological shield (See Appendix A).

7. The energy available from a 13 pound cylinder dropping through a distance of 40 inches (520 inch-pounds) as described in Item A. 7 would at most cause a slight dent in the aluminum housing. The other impact cases are of a higher energy magnitude.

8. A compression load equal to five times the package weight applied to both the top and bottom of the package was found to be a less severe environment than the hydrostatic requirement (1300 psi) analyzed in Appendix A.

9. See section V-B for hypothetical accident cases.

B. HYPOTHETICAL ACCIDENT CONDITIONS

1. An analysis was conducted for the generator dropping 30 feet onto an unyielding surface at the generator's critical angle. The approach used was considered conservative in that no credit was taken for the impact capability of the generator aluminum housing. The results showed that the total energy capability of the insulation and shield (705,000 inch-pounds) is greater than that available from impact of the generator (620,000 inch-pounds) (see analysis in Appendix A). Additional analysis provided in Appendix C showed that stresses at impact on the shield lid attaching bolts are below their yield value. Therefore, failure of the heat shield will not occur nor will the biological shielding characteristics of the heat shield be impaired. R4

2. A 40 inch drop of the generator onto a 6 inch diameter cylinder would result in the load being spread over the thick walled aluminum housing. This case is of a much lower energy level than the previous case. Release of fuel or reduction in the radiation shield will not occur.

3. The 1475°F fire as described in Section IV will not cause fuel release or effect the radiation shielding characteristics of the heat shield. The analysis described in Appendix B was considered conservative in that the initial conditions were taken from the results obtained from the nominal test conditions (Item A. 1). The resulting maximum temperature prior to a 3 hour elapse time was approximately 1400°F for the shield and 1580°F for the capsule. This temperature will not effect the heat shield or capsule.

C. SPECIAL FORM MATERIAL

1. Impact of the fuel capsule from 30 feet results in an impact velocity of 43.5 fps. The critical impact velocity for the fuel capsule was calculated to be 248 fps. (See Appendix A). Failure of the fuel capsule will not occur.

2. The Puncture Case (hypothetical accident conditions) as discussed in case 2 above was found to be more severe.

3. The thermal environment analyzed above (1475 ^{o}F) was far more severe.

4. The SENTINEL 100F was designed to sustain seawater pressure at a depth of 2000 feet. A structural analysis was conducted (Appendix A) using an external pressure of 1300 psi. The results of this analysis showed that the generator would retain its integrity. The capsule was evaluated using an external pressure of 14,500 psi. The results given in Appendix A show the capsule will retain its integrity. Immersion in water for 24 hours is a far less severe condition.

D. SHIELDING STANDARDS

The tungsten biological shield was designed to meet the AEC radiation standards as given in Table IV-1. Analysis have shown that these standards will be satisfied.

E. PACKAGE STANDARDS

1. The package lifting device will be proof tested to 10,500 pounds as per Reference 7.

2. Failure of the lifting devices will not impair the containment or shielding properties of the package. Failure of the lifting devices would result in a far less severe environment than that described in Chapter IV. B. 1.

3. The structural analysis given in Appendix A showed that for the environment described in Item E. 3. the generator tiedowns would be capable of handling greater loads.

4. The loading described in Item E.4 was found to be far less severe than the 1300 psi external environment analyzed in Appendix A.

5. The generator and capsule were evaluated under far more severe external pressure environments.

VI. IAEA TRANSPORT REGULATIONS - SAFETY SERIES 6

The preceeding chapters covered the requirements for interstate transport of the SENTINEL 100F generator. This chapter is concerned with the additional requirements which must be satisfied in order to obtain the international transport permit.

Most of the requirements set forth in Safety Series No. 6 were covered by the interstate safety standards covered in Chapter IV. Minor variations required for shipment as general cargo are:

(1) In still air and direct sunlight at ambient temperature (38°C), the package surface temperature may not exceed 122°F.

(2) Radiation originating from the package shall not exceed 200 mr/hr on the surface and 10 mr/hr at a distance of one meter from the center of the package.

The first requirement is assured by the protective cage over the generator, but there is no generator safety problem in any case. The radiation level at one meter from the center is marginal, but should it exceed 10 mr, the generator can still be shipped by observing special handling requirements.

Safety Series 6, C-6.2.3, also lists specific requirements regarding the package design. These were reviewed and the following resolutions established.

(1) An analysis was conducted which showed that the generator would retain its integrity under all of the requirements of Annex IV, I-2, I-4 and C-2.3.1(a).

(2) No filters are used in the SENTINEL 100F design.

(3) No vents are provided or required in this design.

(4) Cooling is accomplished within the basic passive design. Even complete loss of cooling fins would not present a hazard.

(5) The fuel capsule does not require a pressure relief system. A seal weld assures positive containment.

(6) The containment vessel is designed to withstand much higher pressures.

(7) The generator and capsule were designed to take into account any build-up of internal pressure. Actually, external operating pressures will be more severe.

(8) Heat transfer is through metallic components in all cases.

(9) Not applicable to this design.

(10) Not applicable to this design.

(11) Not applicable to this design.

VII. CONCLUSIONS

This report describes all requirements pertinent to the interstate or international transport of the SENTINEL 100F. By means of analysis test or by comparison to a less severe requirement, all requirements have been satisfied. In view of the conservatism used in the analysis and past experience in transporting SENTINEL generators, there appears to be no reason why the SENTINEL 100F cannot be safely transported.

REFERENCES - SECTION I THROUGH VII

1. Generator Top Assembly Drawing No. 010-F10000
2. Fuel Capsule Assembly Drawing No. 010-20000
3. SENTINEL 100 Fuel and Encapsulation Specification Drawing No. 010-80000
4. Biological Shield Drawing No. 010-70003 and Drawing No. 010-70004
5. Shipping Pallet Drawing No. 001-90039
6. Shipping Cage Drawing No. 001-900064

VIII. ADDITIONAL SUPPORT DATA

Although not specifically required for obtaining either the interstate or international licenses, some additional studies were conducted. As part of the design criteria, the generator housing was evaluated (Appendix A) in an external pressure environment of 1300 psi. The analytical results showed that the generator housing has the capability of sustaining this external pressure. The design criteria also specified that the fuel capsule would retain its integrity in a 14,500 psi external pressure envieonment. The results given in Appendix A verify the fuel capsule's capability to meet the criteria.

An analysis was conducted to evaluate the thermal shock capability of the fuel capsule (Appendix A). The capsule was taken as being at its operating temperature and then plunged into water at 0° C for a duration of 10 minutes. The results show that the fuel capsule will retain its integrity.

APPENDIX A

STRUCTURAL ANALYSES

I. INTRODUCTION

The following analyses present an evaluation of the SENTINEL 100F thermoelectric generator and/or fuel capsule. Based upon the requirements described in Chapter IV, the following conditions were analyzed.

A. GENERATOR

1. Free drop through a distance of four feet onto a flat unyielding surface.
2. Forty inch drop of a vertical steel cylinder 1-1/4 inches in diameter and weighing 13 pounds. Impact occurs on most vulnerable area of package.
3. Nine meter drop onto unyielding surface at critical angle.
4. Forty inch drop of generator onto a 6 inch diameter steel bar supported by an unyielding surface. The bar length is 8 inches with the edges of the flat end being rounded to a maximum radius of 1/4 inch.
5. Exposure of the generator housing to an external hydrostatic pressure of 1300 psi.
6. Without exceeding the yield strength of the package tie downs, apply a static force through the package center of gravity of two times the package weight vertically, 10 times the weight horizontally and five times the weight of the package in the transverse direction.

B. FUEL CAPSULE

1. Response to an external pressure of 10,000 psi to meet design requirements.
2. Response to an external pressure of 14,500 psi.

3. Response to an impact resulting from a nine meter drop onto a non-yielding surface.

4. Response of dropping a steel rod weighing seven kilograms from a height of one meter.

5. Thermal shock capability of the fuel capsule.

II. SUPPORT DATA

Figure A-1 provides a sketch of the generator cross-section and the pertinent dimensions and data used in the above analyses.

In support of these analyses, structural properties of the various components at temperature are required. The shield is fabricated from a tungsten alloy where the operational soak temperature is ~1130°F. Minimum values of strength and elongation at 1300°F given in Reference A-1 are as follows:

Ultimate Strength	30,000 psi
Compression Yield (@0.2%)	25,500 psi
Elongation	4%

In addition, the density is 0.61 lbs/in^3 and the elastic modulus at 1300°F is 38×10^6 psi.

With reference to Figure A-1, the upper ring and lower plate are employed to increase the volume of effective crushable thermal insulation under impact conditions. These components are fabricated from Inconel 700 or equivalent. The operating temperature is ~1100°F. At this temperature, the following structural properties are provided (Reference A-2).

FIGURE WITHHELD UNDER 10 CFR 2.390

FIGURE A1

SENTINEL 100 F

INSD-3080

ıate Strength	145,000 psi
ɪ Strength	95,000 psi
tic Modulus	27×10^6 psi
gation	25%

ıaterials are utilized, Min-K 1301 and Glasrock Foam

ılus of Min-K 1301 is ~5400 psi and the stress-strain

ɪ and unrestrained Min-K are provided in Attachment 1.

the crushing capability of Glasrock is 1000 psi.

I. GENERATOR ANALYSES

impact analysis for the generator falling through a dis-

to a rigid surface, the structural capability is based

eld and the surrounding insulation. For conservatism,

ıbility of the aluminum housing is neglected.

e shield, capsule and fuel is ~1750 pounds.* Thus, for

gy becomes 1750 (9)(39.37) or 620,000 inch-pounds.

ed with this drop height is,

$$\sqrt{2gh}$$

$$[2(386)(9)(39.37)]^{1/2} = 524 \text{ in/sec.}$$

· the shield may be derived from the wave equation,

$$\tau = \frac{\partial \sigma}{\partial x}$$

-e displacement and σ is the stress magnitude.

:. Actual design weight is 1604 pounds. R4

Assuming a bilinear stress-strain curve for the material of interest, a critical impact velocity associated with stress wave propagation can be derived. This derivation is provided in Attachment 2. The critical velocity becomes,

$$V_{cr} = \frac{\sigma_y}{\sqrt{\rho E}} + \frac{\sigma_u - \sigma_y}{\sqrt{\rho F}}$$

where: E = elastic modulus

F = plastic modulus

ρ = mass density of material

σ_y = yield strength

σ_u = ultimate strength

For Kennestrium W-10 at temperature, the following stress-strain curve is obtained.

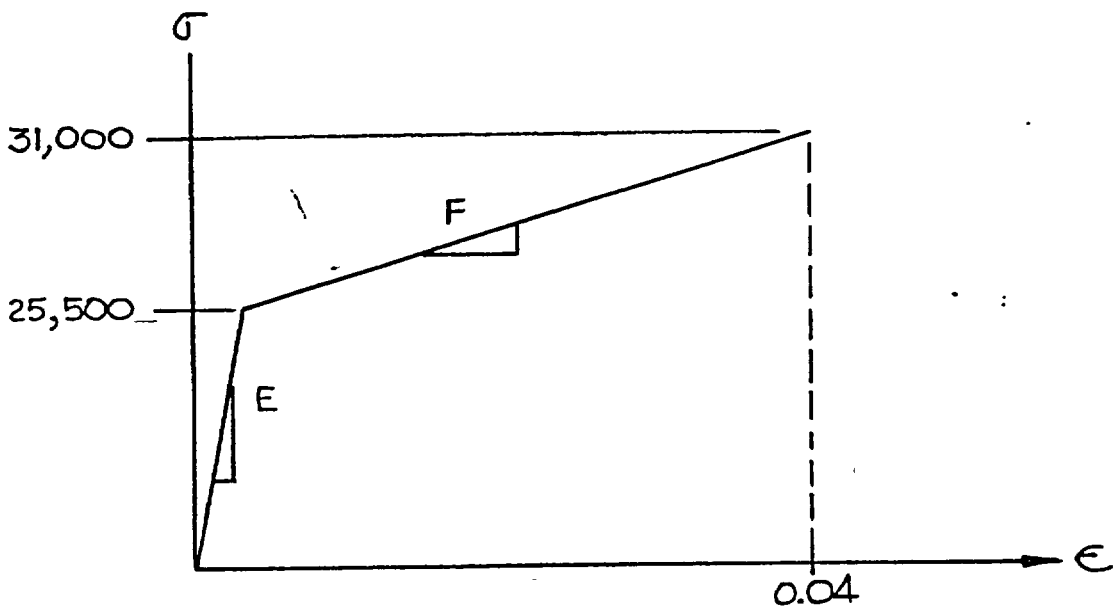

The plastic modulus or slope of the strain-hardening portion is derived from the curve geometry.

$$\therefore F = \frac{31000 - 25500}{.04 - \frac{25500}{38 \times 10^6}} = 14.0 \times 10^4 \text{ psi}$$

The elastic modulus and material density are 38×10^6 psi and 0.61 lb/in^3, respectively. Substituting into the equation for critical velocity,

$$V'_{cr} = \frac{25500}{\sqrt{\left(\frac{.61}{386}\right)\left(38 \times 10^6\right)}} + \frac{31000 - 25500}{\sqrt{\left(\frac{.61}{386}\right)\left(14 \times 10^4\right)}}$$

$$= 474 \text{ in/sec.}$$

The equivalent energy is,

$$E = 1/2\ mV^2 = \frac{1750}{2(386)} \left(474\right)^2 = 5.09 \times 10^5 \text{ in-lbs.}$$

A substantial amount of available energy is absorbed by the compressibility of the insulation. For the impact of the generator in the upright orientation, the lower plate of 16.38 inch OD becomes an effective load path to an equivalent area of insulation. The plate is effective to the limit of its structural capability where abnormal deflection would take place. The loading would be nearly a uniform pressure load reacted by an annular simple support at 8.84 inch shield diameter (See Figure A-2).

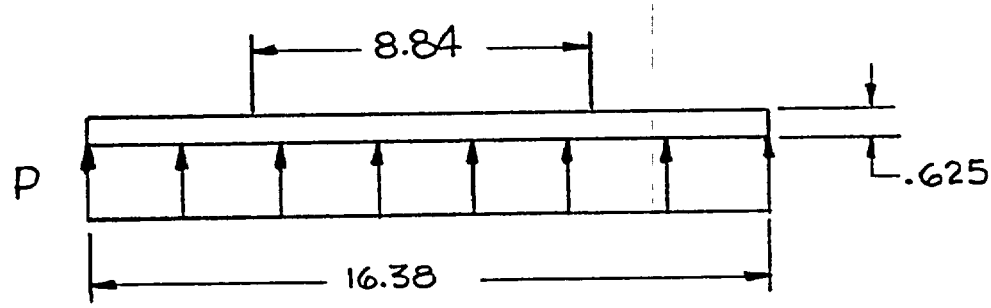

FIGURE A-2 ANNULAR SIMPLE SUPPORT

From Reference A-4, the radial and tangential bending moments are given by,

At r = o:

$$M_r = M_t = \frac{pa^2}{16}(3+\nu) - \frac{W}{4\pi}(1+\nu)\left[\frac{1}{2}\left(\frac{1-\nu}{1+\nu}\right)\left(1-\frac{b^2}{a^2}\right) + \ln\frac{a}{b}\right]$$

At $a \geq r \geq b$:

$$M_r = \frac{pa^2}{16}(3+\nu)\left(1-\frac{r^2}{a^2}\right) - \frac{W}{4\pi}(1+\nu)\left[\frac{1}{2}\left(\frac{1-\nu}{1+\nu}\right)\left(\frac{b^2}{r^2}-\frac{b^2}{a^2}\right) + \ln\frac{a}{r}\right]$$

$$M_t = \frac{pa^2}{16}(3+\nu)\left[1-\left(\frac{1+3\nu}{3+\nu}\right)\frac{r^2}{a^2}\right] - \frac{W}{4\pi}(1+\nu)\left[\frac{1}{2}\left(\frac{1-\nu}{1+\nu}\right)\left(2-\frac{b^2}{r^2}-\frac{b^2}{a^2}\right) + \ln\frac{a}{r}\right]$$

where: $W = \pi pa^2$

a = outer radius = 8.19"

b = support radius = 4.42"

The maximum bending moment occurs in the radial direction at r = 4.42. In a unit pressure and $\nu = 0.3$ the maximum moment becomes,

M_{max} = 7.808 in-lbs./inch.

The stress-moment relationship is,

$$\sigma = \frac{6M}{t^2}$$

With a bending factor of 1.5, a yield stress at temperature of 95,000 psi for Inconel 700 and a plate thickness of 0.625 inches, the equivalent pressure loading is,

$$p = \frac{1.5\,(\sigma_y)t^2}{6(7.808)} = \frac{1.5\,(95000)(.625)^2}{6(7.808)}$$

= 1188 psi.

This represents a conservative loading since in a bending mode the plate rigidity and capability is above yielding.

The majority of available energy would be taken up by the Min-K insulation rather than the Glasrock. The total volume of insulation under the plate is,

$$v = \pi(4)(8.19)^2 = 841 \text{ cu. in.}$$

The strain energy capability per unit volume of the insulation is represented by the area under the stress-strain curve. With a limit load of 1188 psi, the area under the stress-strain curve is obtained from Figure 1A of Attachment 1. The area is ~ 233 in-lbs./in^3. For 841 cubic inches, the total available energy is,

$$E = 841 \text{ in}^3 \ (233 \text{ in-lbs/in}^3)$$

$$= 196,000 \text{ in-lbs.}$$

The total energy capability of the insulation and shield for the vertical drop is 196,000 and 509,000 in-lbs., respectively, for a total of 705,000 in-lbs. This value is greater than the 620,000 in-lbs. of available energy associated with the nine meter drop. In other words, the shield will decelerate through the insulation and the impact velocity of the shield will not exceed the 474 in/sec limit.

A far more conservative approach is to apply only the Min-K insulation where the volume is 450 in^3; 450(233) equals 105,000 inch-pounds. This value coupled with the 509,000 inch-pounds associated with the shielding yields a total of 614,000 inch-pounds. Certainly the large volume of Glasrock will absorb much more than the 6000 inch-pounds remaining.

Secondly, the 233 inch-pounds per cubic inch of Min-K is conservative. In reality, the shield enclosed within the insulation would never see a "hard" impact (high g-level).

When considering impact on the side of the generator, it can be shown that the effective volume of insulation is considerably higher than for any other impact orientation.

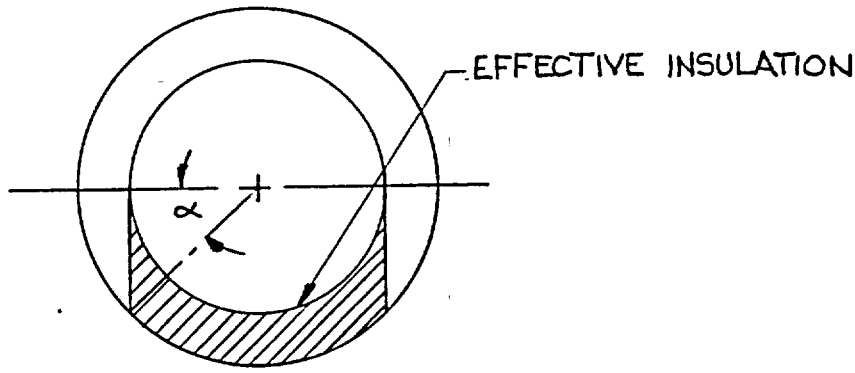

For every inch of shield length, the effective crushable insulation volume is,

$$v_I = \frac{1}{2}\left[\frac{\pi}{4} D_o^2 - \frac{\pi}{4} D_1^2 - \left(\frac{D_o}{2}\right)^2 (2\alpha - \sin 2\alpha)\right]$$

$$= \frac{1}{2}\left[\frac{\pi(20.63)^2}{4} - \frac{\pi(13.84)^2}{4} - (10.315)^2 (1.676 - .994)\right]$$

$$= 55.7 \text{ in}^3$$

Hence, for a shield of ~19.7 inches in length, the total effective insulation is 1097 cubic inches.

For an impact where the generator is inverted, the upper ring (17.5"OD, 13.03" ID) is applied as a load path to crushable insulation. Its limit load in bending is derived from the equation,

$$\sigma_{max} = K\rho \frac{a^2}{t^2} \qquad \text{(Reference A-5)}$$

Where 'a' is the outer radius of the plate and t is the plate thickness. For $a/b = (\frac{17.5}{2})(\frac{2}{13.03}) = 1.34$, $k \cong 0.90$. Applying a similar analysis as performed for the lower plate, the limit load becomes,

$$P = \frac{1.5\ \sigma_y\ t^2}{k\ a^2} = \frac{1.5\ (95000)(.75)^2}{.90\ (8.75)^2}$$

$$= 1164 \text{ psi.}$$

The volume of effective insulation is,

$$v = 3.88(\tfrac{\pi}{4}) \left[(17.5)^2 - (13.03)^2\right] + \frac{\pi}{4}\ (13.5)^2(0.6) = 501 \text{ in.}^3$$

The strain energy associated with this loading and volume of Min-K 1301 is,

$$E \cong 501\ (233) = 116,700 \text{ in-lbs.}$$

Similarly,

$$509,000 + 116,700 = 625,700 \text{ in-lbs.} > 620,000 \text{ in-lbs available.}$$

The above comparison between strain energy capability and available energy from a nine meter drop is not marginal. The energy absorbed by the compression of the module springs and the energy absorbed by the housing were conservatively omitted from the analysis. The latter is certainly significant.

The other impact conditions defined in the beginning of this report are not significant. A free drop through a distance of four feet to a rigid surface defines an energy level below that previously evaluated. The condition of a 40 inch free drop onto a six inch diameter bar pertains to a lower available energy. The diameter of the bar is of a magnitude where local bending would take place as opposed to penetration. The shield will not see any local loading effect. The thick walled housing will effectively spread the load such that only energy levels need be compared.

A similar argument may be used for the percussion condition where a 13 pound steel cylinder goes through a drop height of 40 inches. Hence, we have only 13(40) or 520 inch-pounds; a negligible energy that should provide no more damage than causing a slight dent in the housing surface.

IV. HOUSING ANALYSES

The following delineates a structural evaluation of the SENTINEL 100F RTG housing under conditions of external hydrostatic pressure. A sketch of the housing is provided in Figure A-3 per INSD Drawings 010-40000 and 010-70000. The external proof pressure is 1300 psi where the housing lid deflection is limited to .020 inches.

The generator housing (23.88" OD and 20.62" ID) is fabricated from 6061-T6 aluminum alloy with the following minimum structural properties per Reference A-6 for parent material and weld test data:

Parent Material	Weld Material
F_{tu} = 42000 psi	F_{tu} = 25000 psi
F_{ty} = 35000 psi	F_a = 16600 psi
$E = 9.9 \times 10^6$ psi.	

The maximum stress in the cylindrical shell occurs at the inner surface in the circumferential direction. This stress is given by,

$$\sigma_{\theta m} = \frac{2pb^2}{b^2 - a^2}$$

For an external pressure of 1300 psi (the proof pressure),

$$\sigma_{\theta m} = \frac{2(-1300)(11.94)^2}{(11.94)^2 - (10.31)^2} = -10,200$$

This value is well below the 35000 psi yield strength.

FIGURE WITHHELD UNDER 10 CFR 2.390

FIGURE A3

SENTINEL 100F HOUSING

FIGURE WITHHELD UNDER 10 CFR 2.390

FIGURE A3

SENTINEL 100F HOUSING

Solving for Q_o and M_o,

$$Q_o = 3.784 \text{ lbs/in.}$$

$$M_o = -8.523 \text{ in-lbs/in.}$$

The combined stresses are given by the following expressions:

$$\sigma_x = \frac{-a^2}{b^2 - a^2} \pm \frac{6}{t_c^2} \left[M_o \phi + \frac{1}{\beta} Q_o \Omega \right]$$

where upper sign indicates inside surface and lower sign the outside surface.

$$\sigma_\theta \text{ (inside)} = \frac{-2b^2}{b^2 - a^2} + \left[2\beta^2 \frac{R}{t_c} \psi + \frac{6\nu}{t_c^2} \phi \right] M_o$$

$$+ \left[\frac{2\beta R}{t_c} \theta + \frac{6\nu}{\beta t_c^2} \Omega \right] Q_o$$

$$\sigma_\theta \text{ (outside)} = \frac{-(a^2 + b^2)}{b^2 - a^2} + \left[2\beta^2 \frac{R}{t_c} \psi - \frac{6\nu}{t_c^2} \phi \right] M_o$$

$$+ \left[\frac{2\beta R}{t_c} \theta - \frac{6\nu}{\beta t_c^2} \Omega \right] Q_o$$

where $\beta = \frac{3(1 - \nu^2)^{\frac{1}{2}}}{R^2 t_c^2} = 0.302$

θ, Ω, ψ and ϕ are functions of x (per Figure A-4) and the attenuation length $1/\beta$. These functions are found in graphical form in Reference A-7. Substituting into the above equations, the combined stresses on both surfaces and in both directions can be obtained for the unit external pressure. The results as a function of x are shown in Figure A-5.

The maximum stress per Figure A-5 is ~ 12.5 psi per unit pressure. This occurs in the axial direction at the inside surface. For the proof pressure of 1300 psi, the resulting peak stress is 1300 (12.5) or 16250 psi which is below the allowable stress in the weld material.

FIGURE A-5

COMBINED MEMBRANE & DISCONTINUITY STRESSES VS. X FOR A UNIT EXTERNAL PRESSURE

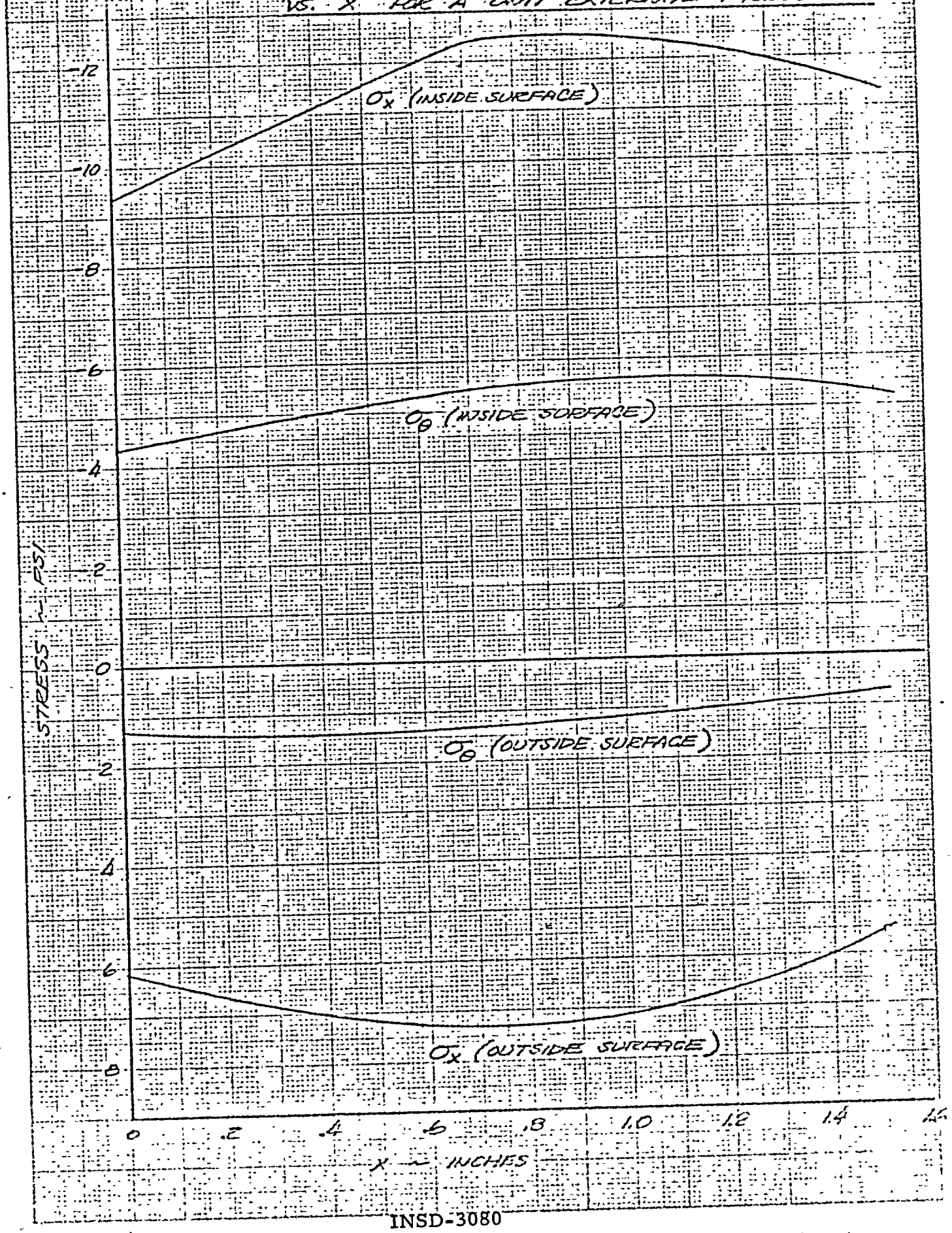

The closure head is essentially a clamped circular plate where its edge fixity is dependent upon the moment M_o. From Reference A-8, the stress at the center of the plate becomes,

$$\sigma_r = \frac{3W}{8\pi mt^2}(3m+1) - \frac{6M_o}{t^2}$$

where $W = \pi pR^2$ and $m = \frac{1}{\nu}$. In this instance the effective plate radius is 11.125 inches. Therefore,

$$\sigma_r = \frac{3(\pi)(1300)(11.125)^2(11)}{8\pi(3.33)(3.25)^2} - \frac{6(1300)(8.53)}{(3.25)^2}$$

$$= 18850 - 6300 = 12,550 \text{ psi.}$$

At the edge (with increased thickness), the radial stress is simply $6\ M_o/t^2$ where t = 3.5 inches.

$$\therefore \sigma_r = \frac{6(8.53)(1300)}{(3.5)^2} = 5430 \text{ psi}$$

The housing lid is also fabricated from 6061-T6 aluminum alloy with an effective diameter and thickness of 20.38 and 4.517 inches respectively. The lid is held to the housing shell by eighteen 5/8" diameter aluminum bolts on a 25.625 inch bolt circle. As was previously stated, the design of the lid or cover is based upon a maximum permissible deflection of .020 inches from an external proof pressure of 1300 psi.

From the eighteen lid bolts, the boundary condition for the circular lid is between clamped and simply supported. The bolts are relatively wide spaced such that the fixity tends toward the latter condition. Secondly, it is conservative to obtain the center deflection on the simply supported assumption. The maximum deflection for a simply supported circular

plate is given by the equation (Reference 3),

$$y_{max} = \frac{3W(m-1)(5m+1)R^2}{16\pi E m^2 t^3}$$

Therefore, for 1300 psi,

$$y_{max} = \frac{3(1300)(\pi)(10.31)^2(2.33)(17.67)(10.31)^2}{16\pi(9.9 \times 10^6)(3.33)^2(4.517)^3}$$

$$= .0112 \text{ inches} \quad < .020 \text{ inches}$$

The stresses in the plate in the radial and tangential directions are also conservative with the simple support assumption. The maximum stress which would occur at the center of the plate is,

$$\sigma_{max} = \frac{3W(3m+1)}{8\pi mt^2}$$

$$= \frac{3(1300)(\pi)(10.31)^2(11)}{8\pi(3.33)(4.517)^2} = 8400 \text{ psi.}$$

This magnitude is also well below the yeild capability of 35,000 psi.

The stress in the bolts is limited to the potential deflection of the lid at the bolt circle. If the lid was simply supported, the slope of the lid at the 10.31 inch radius would be,

$$\theta = \frac{3W(m-1)R}{2\pi E mt^3}$$

$$= \frac{3(1300)(\pi)(10.31)^2(2.33)(10.31)}{2\pi(9.9 \times 10^6)(3.33)(4.517)^3} = .00164 \text{ radians.}$$

Since the angle is small, $\theta \cong \sin\theta \cong \tan\theta$. The distance between the shell ID and the bolt circle is 12.813 - 10.310 or 2.503 inches. Thus, the maximum possible bolt elongation is,

$$\delta = 2.503\ (.00164) = .00411 \text{ inch.}$$

The effective bolt length is ~ 6.12 inches and hence the strain becomes,

$$\epsilon = \frac{.00411}{6.12} = .000672 \text{ in/in.}$$

The bolts are 2024-T4 aluminum having an elastic modulus of 10.5×10^6 psi. Therefore,

$$\sigma = E\epsilon = 10.5 \times 10^6\ (.000672)$$

$$= 7050 \text{ psi.}$$

The yield strength of 2024-T4 is 42000 psi (minimum).

V. STRUCTURAL ANALYSIS - TIE DOWN FITTINGS

Four channel fittings as illustrated in Figure A-6 provide a tie down capability to the generator pallet. The fittings of 6061-T6 aluminum alloy are welded to the base periphery of the housing with a generous weld bead at all interface surfaces such that the critical area is in the parent material.

An analysis of end pad bending is based upon the approach given in Reference A-9 for tension type fittings.

$$\frac{r_i}{a} = \frac{.531}{3.25} = .1635$$

$$\frac{b}{a} = \frac{4.75}{3.25} = 1.462$$

$$\rightarrow K \cong 0.76$$

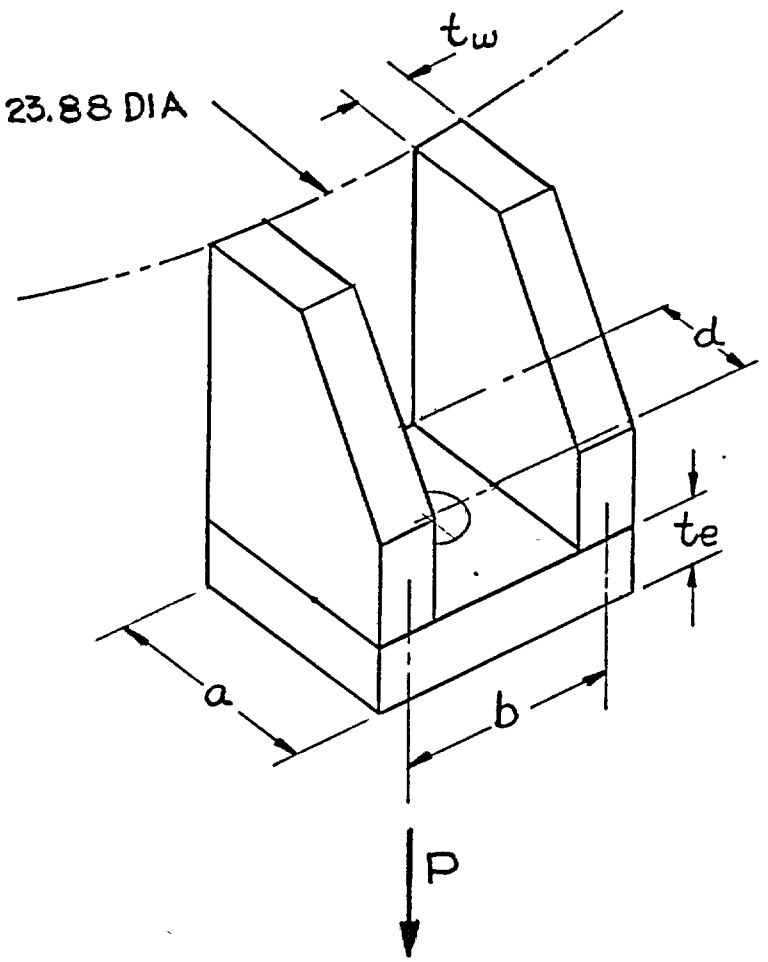

r_i = hole radius = .531"
te = 1.0" minimum
b = 4.75"
t_w = .75"
d = 1.747"
a ≅ 3.25"

FIGURE A6

CHANNEL FITTING

The bending stress is,

$$\sigma_b = \frac{2P\,d\,K}{a t_e^2}$$

where P is the applied load.

Neglecting the bending form factor the load to yield the material is derived where the yield strength is 35,000 psi minimum.

$$\therefore P_y = \frac{\sigma_y\, a\, t_e^2}{2\, d\, K}$$

$$= \frac{35000(3.25)(1.0)^2}{2(1.747)(0.76)} = 42,800 \text{ pounds.}$$

The ultimate shear stress for 6061 heat treated to the T6 condition is 27000 psi (Reference 6). Assuming that an approximate shear yield can be derived from the ratio between ultimate and yield in tension,

$$\tau_y \cong 27000 \left(\frac{35000}{42000}\right) = 22,500 \text{ psi}$$

The minimum shear area is,

$$A_s = 2(3.25)(.75) + 5.5\,(1) = 10.375 \text{ in}^2$$

The associated load becomes,

$$P = 22500\,(10.375) = 233,000 \text{ pounds.}$$

The weight of the SENTINEL 100F generator is approximately 2600 pounds. Conservatively taking 42,800 pounds as a design limit load for each lug, this is equivalent to the following g-loading in the vertical direction:

$$G = \frac{4(42,800)}{2600} \cong 66 \text{ g's}$$

The shipping and handling conditions are next examined where the design g-loads are:

2 g's = vertical

5 g's - lateral

10 g's - fore and aft.

The C.G. of the generator is approximately 18 inches above the pallet. Combining the lateral and longitudinal g-loads, the maximum g-load vector in the horizontal plane becomes,

$$G_H = \sqrt{(5)^2 + (10)^2} = 11.18 \text{ g's}$$

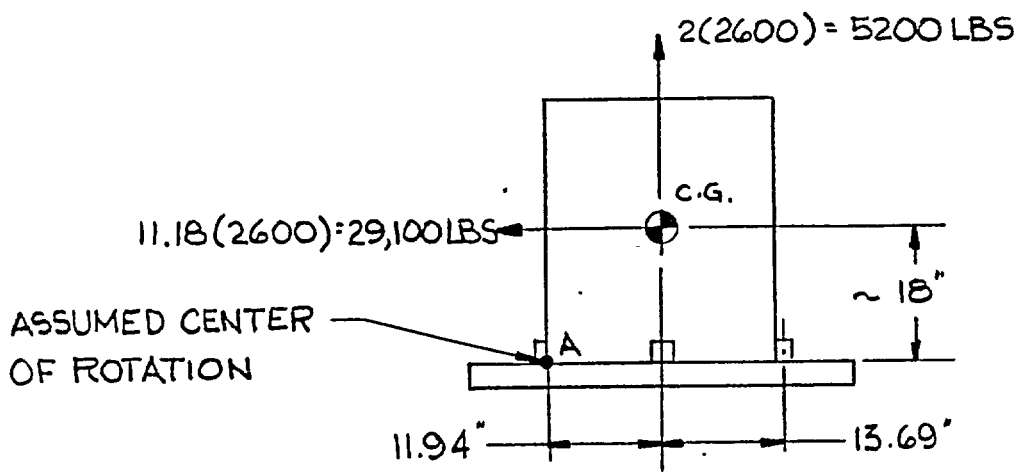

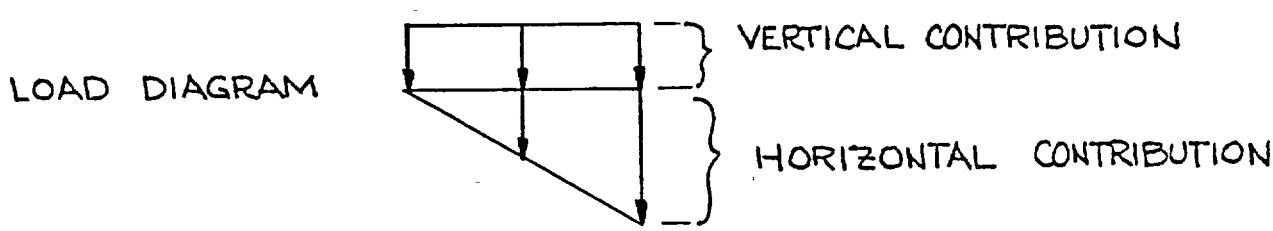

Taking summation of moments about point A for the horizontal load contribution, the maximum lug load is derived.

$$18(29100) = P_1 (13.69 + 11.94) + P_1 (11.94)$$

$$\therefore P_1 \doteq 13,930 \text{ pounds.}$$

The contribution from the vertical force is,

$$P_2 = \frac{5200}{4} = 1300 \text{ pounds.}$$

Superimposing, the maximum lug load becomes,

$$P_{max} = P_1 + P_2 = 13930 + 1300$$

$$= 15,200 \text{ pounds.}$$

This loading is far below the 42,800 pound limit load. Additional loadings can be evaluated as a function of generator-pallet orientation. However, the ratio of lug capability to lug load is very high and further examination is not justified.

VI. FUEL CAPSULE ANALYSES

A. EXTERNAL HYDROSTATIC PRESSURE OF 10,000 PSI

For an external hydrostatic design pressure of 10,000 psi, the calculated stresses must meet the following criteria:

σ (primary membrane) $\leq 0.9\ F_{ty}$

σ (load primary membrane) $\leq 1.35\ F_{ty}$

σ (secondary membrane) $\leq 2.7\ F_{ty}$

σ (buckling) $\leq 0.5\ \sigma_{cr}$

From Reference 10, the following room temperature structural properties are given for solution heat treated Hastelloy C. All values are guaranteed minimums.

Tensile strength, F_{tu}	= 100,000 psi
Yield strength, F_{ty}	= 46,000 psi
Elongation, ℓ	= 20% in two inches
Elastic modulus, E	= 28.5×10^6 psi

The wall thickness and inside radius of the capsule are 0.668 and 2.1125 inches, respectively. Assuming the Mises criterion for ductile materials, the maximum circumferential stress, occurring at the inner surface is given by the equation:

$$\sigma_\theta = \frac{1.732\, p r_o^2}{r_o^2 - r_i^2}$$ Reference A-8

where $r_o = r_i + t$

substituting,

$$\sigma_\theta = \frac{1.732(10,000)(2.790)^2}{(2.790)^2 - (2.1225)^2} = 41,115 \text{ psi}$$ $|R_1$

$$\underline{M.S.} = \frac{0.9(46,000)}{41115} - 1 = .007$$ $|R_1$

In order to investigate buckling capability, the critical buckling stress per Reference 11 is utilized where the effective cylindrical shell length is ~10.0 inches and R is the mean radius.

$$\frac{L^2}{Rt} = \frac{(10)^2}{2.4565\,(.668)} = 60.94$$ $|R_1$

∴ Cylinder is of short or transition length.

For hydrostatic pressure, the critical buckling stress is:

$$\sigma_{cr} = \frac{K \pi^2 \; Et^2}{12(1 - \nu^2)L^2}$$ $|R_1$

where K is a constant: $K = f(L, R, t)$; $\nu = 0.3$

$$Z_L = \frac{L^2}{Rt}(1 - \nu^2)^{\frac{1}{2}} = 60.94\,(.955) = 58.2$$ $|R_1$

∴ $K \cong 8$

$$\therefore \sigma_{cr} = \frac{8(\pi)^2(28.5 \times 10^6)(.688)^2}{12(.91)(10)^2} = 0.917 \times 10^6 \text{ psi}$$

Rather than iterate with a tangent or reduced modulus to obtain an exact solution based upon stress-modulus compatibility, it is evident that the capsule would yield long before it would fail from instability.

Discontinuity stresses at the closure head-cylinder interface are next examined. As a result of a pressure loading on the capsule and a requirement for strain compatibility at the head-cylinder junction, a discontinuity moment M_o and shear Q_o must be superimposed with the general membrane solution. From Reference A-7,

$$M_o = -\frac{R^2 p}{8\lambda_c} \left\{ \frac{2\,C^3 \lambda_c^{\,3} + 0.7\,C^4 \lambda_c^{\,2} + 4.42}{2\,C^3 \lambda_c^{\,2} + [.7\,C^4 + 1.3]\,\lambda_c + .91C} \right\}$$

$$Q_o = \frac{Rp}{4} \left\{ \frac{C^3 \lambda_c^{\,3} + 3.4\,C^3 \lambda_c + 4.42}{2C^3 \lambda_c^{\,2} + [.7\,C^4 + 1.3]\,\lambda_c + .91C} \right\}$$

where R= mean radius = 2.4565 inches | R_1

$$C = \frac{t_c}{t_h} = \frac{.668}{1.0} = .668$$

$$\lambda_c = \left[\frac{3(1 - \nu^2)\,R^2}{t_c^{\,2}} \right]^{\frac{1}{4}} = 2.465$$ | R_1

Solving for the discontinuity forces,

$M_o = -5585$ | R_1

$Q_o = 9000$ | R_1

The resulting stresses at the interface for the longitudinal and circumferential directions are,

$$\sigma_x = \pm \frac{6\,M_o}{t_c^{\,2}} - \frac{p\,R}{2\,t_c} = \begin{cases} -93487 \text{ psi} \\ +56713 \text{ psi} \end{cases}$$ | R_1

$$\text{Margin of Safety (M. S.)} = \frac{2.7(46,000)}{93487} - 1 = 0.328 \qquad R_1$$

$$\sigma_\theta = \left[\frac{2\beta^2 R}{t_c} \pm \frac{1.8}{t_c^2}\right] M_o + \frac{2\beta R Q_o}{t_c} - \frac{pR}{t_c}$$

$$\text{where } \beta = \left[\frac{3(1-\nu^2)}{R^2 t_c^2}\right]^{\frac{1}{4}} = 1.0138 \qquad R_1$$

$$\therefore \sigma_\theta = \left[\frac{2(1.0138)^2(2.4565)}{.668} \pm \frac{1.8}{(.668)^2}\right](-5585) \qquad R_1$$

$$+ \frac{2(1.0138)(2.4565)(9000)}{.668} - \frac{10,000(2.4565)}{.668} \qquad R_1$$

$$= \begin{cases} -34,415 \text{ psi} \\ +10,644 \text{ psi} \end{cases} \qquad R_1$$

$$\text{M. S.} = \frac{1.35(46,000)}{34,415} - 1 = 0.804 \qquad R_1$$

An investigation of the fusion weld for the capsule lid makes use of the discontinuity moment M_o as shown below where the weld is in tension.

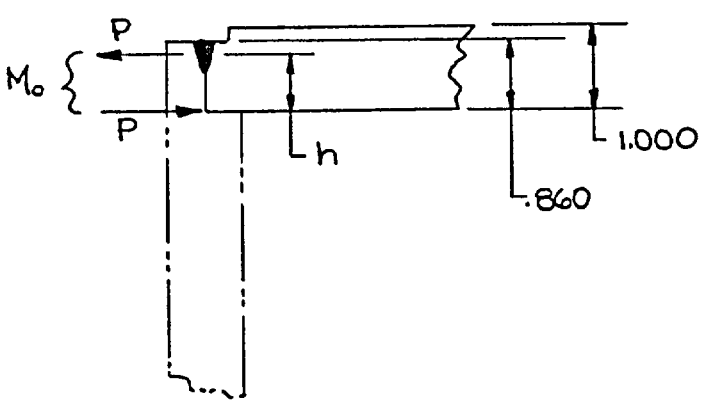

$M_o = hP = 5585$ in-lbs/in. R_1

weld length (min.) = .180 in.

$h = .860 - \frac{.180}{2} = .770$ in.

$$\therefore P = \frac{5585}{.770} = 7253 \text{ lbs/in.} \qquad R_1$$

The stress becomes,

$$\sigma = \frac{P}{A} = \frac{7253}{.180} = 40,294 \text{ psi}$$ R_1

$$M.S. = \frac{.90(46,000)}{40,294} - 1 = 0.027$$ R_1

The lower closure is loaded as shown below

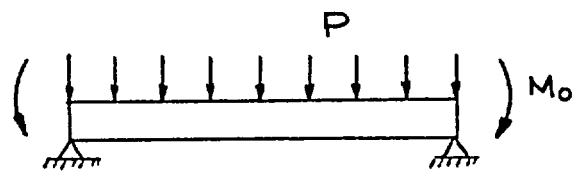

t = 1.0 in.

The bending stress at the edge is,

$$\sigma_b/\text{edge} = \frac{6\,M_o}{t^2} = \frac{6(5585)}{(1)^2} = 33,510 \text{ psi}$$ R_1

At the center per Reference A-7.

$$\sigma_b/\text{ center} = \frac{3W}{8\,\pi\,mt^2}\,(3m+1) - \frac{6\,M_o}{t^2}$$

where: $W = \rho\,\pi R^2$

$$= 10,000\,\pi\,(2.4565)^2 = 189,576 \text{ pounds}$$ R_1

$$m = \frac{1}{\nu} = \frac{1}{0.3} = 3.333$$

$$\sigma_b/\text{center} = \frac{3(189,576)(10)}{8\,\pi\,(3.333)(1)^2} - 33,300 = 34,594 \text{ psi}$$ R_1

$$M.S. = \frac{1.35(46,000)}{34,594} - 1 = 0.795$$ R_1

A similar state of stress occurs at the upper closure or lid. The bending stress in the center is 34,594 psi and the stress across the weld was found to be 40,294 psi. R_1 R_1

B. EXTERNAL HYDROSTATIC PRESSURE OF 14,500 PSI

An elastic-plastic analysis was performed for a similar capsule per Reference A12 where the pressure was derived to initiate a plastic "front" on the inside surface in the circumferential direction.

$$\rho^* = \frac{\sigma_o}{2} \left(1 - \frac{r_i^2}{r_o^2}\right)$$

An estimate of the wall capability is obtained by letting σ_o equal the ultimate strength of 100,000 psi. Thus, the failure pressure becomes,

$$\rho_{ult.} = \frac{100,000}{2} \left[1 - \frac{(2.1225)^2}{(2.790)^2}\right] = 21,063 \text{ psi} \qquad R_1$$

This value is significantly higher than the requirement of 14,500 psi and is conservative for at least two reasons.

(1) The 100,000 psi ultimate strength is a minimum guaranteed value. Actual material strength should be somewhat higher.

(2) The capsule is allowed to deform until it contacts the fuel, hence achieving an elastic foundation restricting elongation.

The maximum stress in the system occurs at the closure-cylinder interface in the axial direction due to membrane and discontinuity loads.

This stress becomes,

$$\sigma = \frac{14,500}{10,000} (93487) = 135,556 \text{ psi} \qquad R_1$$

Applying a 1.5 bending form factor, the ultimate capability is 1.5(100,000) = 150,000 psi (minimum).

C. CAPSULE IMPACT

The fuel capsule must survive an impact consisting of a nine meter drop onto a hard surface. The shock resistance shall be determined on the basis of a critical impact velocity as a function of stress wave propagation. The environment of the capsule is conservatively assumed at ~1800°F. The critical impact velocity from Attachment 2 is,

$$\sigma_{cr} = \frac{\sigma_y}{\sqrt{\rho E}} + \frac{\sigma_u - \sigma_y}{\sqrt{\rho F}}$$

where E is the elastic modulus and F is the plastic modulus. The idealized linear strain hardening stress-strain curve for Hastelloy C at 1800°F is shown below (Reference A-13).

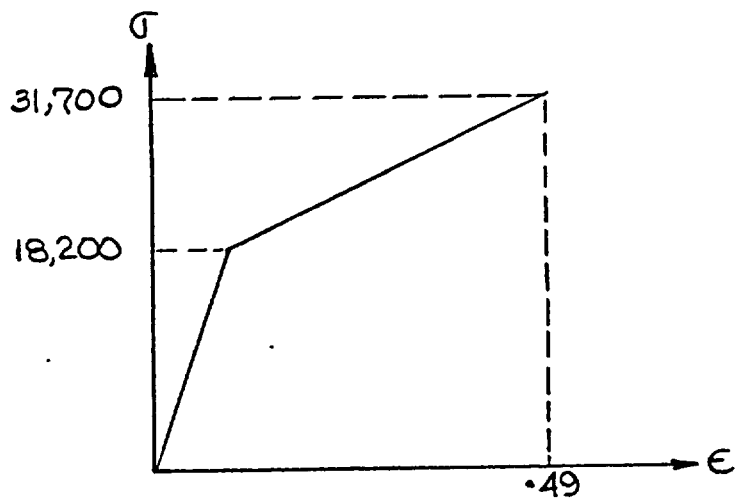

At 1800°F, $E = 15 \times 10^6$. The plastic modulus, F, is obtained by stress-strain curve geometry.

$$F = \frac{31700 - 18200}{.49 - \frac{18200}{15 \times 10^6}} = 27630 \text{ psi}$$

The mass density ρ is,

$$\rho = .323 \left(\frac{1}{386}\right) = 0.837 \times 10^{-3} \text{ lb-sec}^2/\text{in}^4$$

Solving for the critical impact velocity,

$$V_{cr} = \frac{18200}{\sqrt{(.837 \times 10^{-3})(15 \times 10^6)}} + \frac{135}{\sqrt{(.837 \times 10^{-3})(27630)}}$$

$$= 2975 \text{ in/sec} = 248 \text{ ft/sec.}$$

From 9 meters or 29.5 feet, the velocity at impact is,

$$V = \sqrt{2\,gh} = \sqrt{2(32.16)(29.5)} = 43.5 \text{ ft/sec.}$$

Since $V_{cr} > 43.5$ ft/sec, no capsule failure should result.

D. PERCUSSION

The capsule should maintain its structural integrity after an impact where seven kilograms of steel fall through a distance of one meter. The flat face of the falling body is 2.5 centimeters in diameter.

Since the diameter is 2.5 centimeters or approximately one inch in diameter, the falling body is of the same dimensional magnitude as the capsule. Hence, it does not fall in the category associated with a penetrating medium nor is there a significant concentrated load to cause adverse deflection or deformation. The response of the capsule should be the same as that resulting from a capsule impacting a flat surface. In order to evaluate the structural integrity of the capsule to withstand a percussion test, the energy available from the seven kilogram weight will be compared to the impact energy capability derived previously.

For seven kilograms through a distance of one meter, the available energy becomes,

$$E_{avail} = 1\left(\frac{39.37}{12}\right)\left(\frac{7000}{451}\right) = 50.9 \text{ ft.-lbs.}$$

From the impact analysis of Section B, the critical impact velocity was found to be 248 ft/sec. With a capsule weight of 68.6 pounds, the equivalent energy is,

$$E_{cr} = \frac{1}{2}\left(\frac{68.6}{32.16}\right)(248)^2 = 6.56 \times 10^4 \text{ ft-lbs.}$$

$$\therefore \quad E_{cr} >> E_{avail}$$

E. THERMAL SHOCK

When investigating the capability of ductile materials to thermal shock, ultimate failure is dependent upon the mechanism of thermal fatigue. That is, for materials such as Hastelloy C, failure from thermal shock only occurs after N cycles where N is quite large. The capsule is thick walled; therefore, there is no possibility of distortion or thermal buckling.

Assuming a ΔT of 1800 -32 or 1768°F, the maximum strain is,

$$\epsilon_{max} = \frac{\alpha \Delta T}{1 - \lambda}$$

$$= \frac{8.5 \times 10^{-6}(1768)}{1-0.3} = .0215 \text{ in/in.}$$

A strain of .0215 in/in is at least one magnitude below the strain to failure for Hastelloy C. It is also important to note that the solution heat treatment for Hastelloy C is a water quench where the material is heated to approximately 2200°F.

ATTACHMENT 1

COMPRESSION AND IMPACT CAPABILITY

MIN-K 1301

Min-K 1301 not only represents an effective thermal insulator but has desirable structural characteristics to protect RTG components from shock and impact environments. When evaluating impact conditions the strain energy capability of Min-K is useful to apply since the area under the stress-strain curve represents the energy capability per unit volume of material. Data available in the literature (Reference A-14 and others) has been limited to a stress level of approximately 300 psi. In reality, the material has a useful capability at considerably higher stress levels. In support of this statement two test programs were conducted to stress levels in the vicinity of 1000 psi.

The first test program involved the compression of three quasi-unrestrained samples of Min-K 1301. The samples were cylindrical disks of four inches in diameter and averaged about two inches in height. The ID of the test chamber was four inches with a piston diameter of 3.75 inches. Hence, the geometry and amount of restraint was simulated to the application of interest. Loads were applied in increments over a range from zero to 12,000 pounds. The resulting data is presented in the stress-strain form in Figure A-7.

During April of this year, two additional cylindrical specimens were tested in a fully restrained condition. The length and diameter were one inch and .943 inch, respectively. A hydraulic press and a Dillon mechanical

force gauge were utilized. The resulting stress-strain curve is shown in Figure A-8. Load was applied in steps of approximately 28 pounds. Beyond approximately 140 psi, a load relaxation was observed during the interval of time (5 - 10 seconds) required to obtain the displacement readings. However, for dynamic or impact evaluations, this load relaxation should have little or no significance. All tests were performed at room temperature.

FIGURE A-7

STRESS + STRAIN CURVE
FOR MIN-K-1301
UNRESTRAINED, ROOM TEMP.

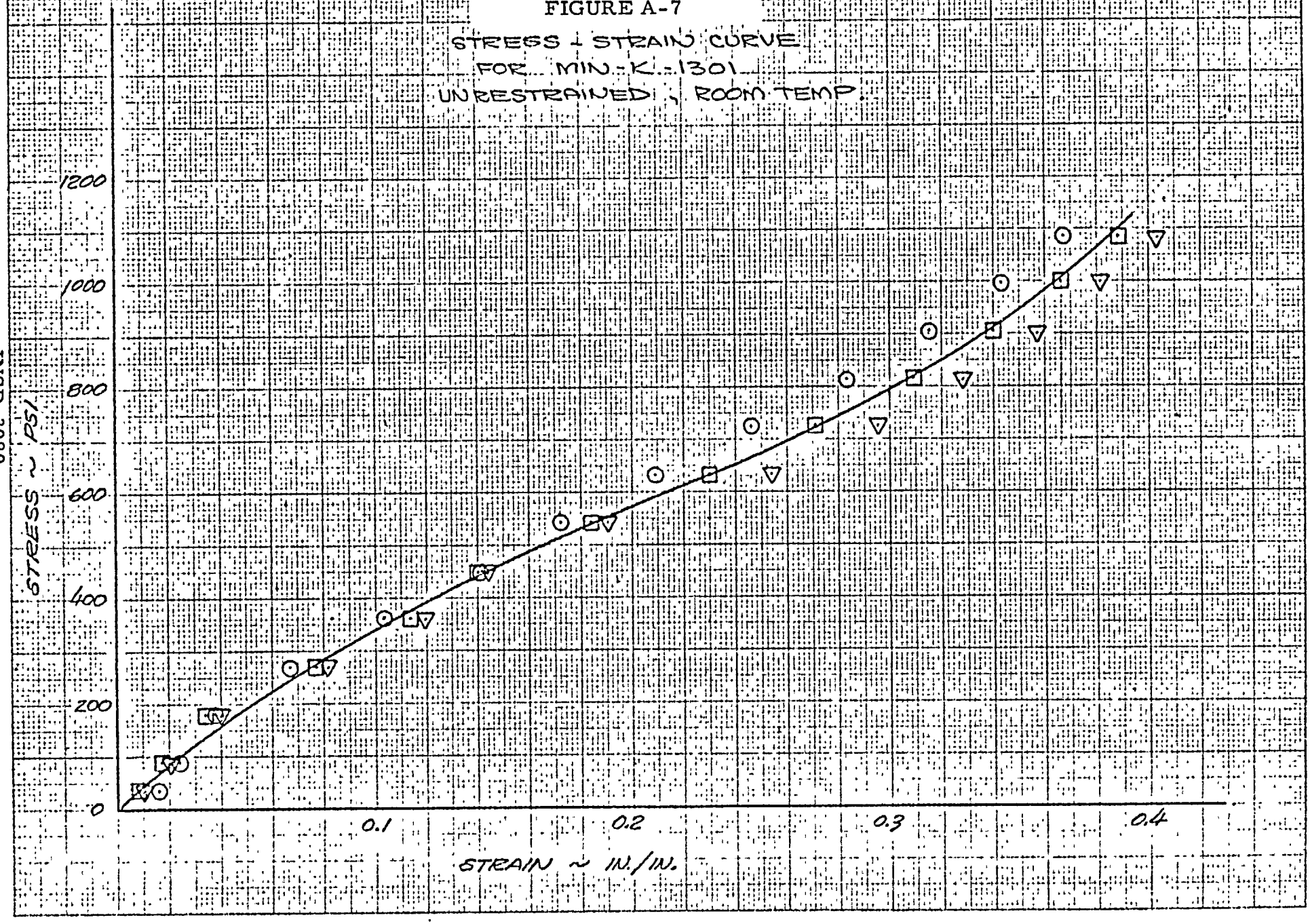

FIGURE A-8

STRESS - STRAIN CURVE
FOR MIN-K 1301
RESTRAINED, ROOM TEMP.

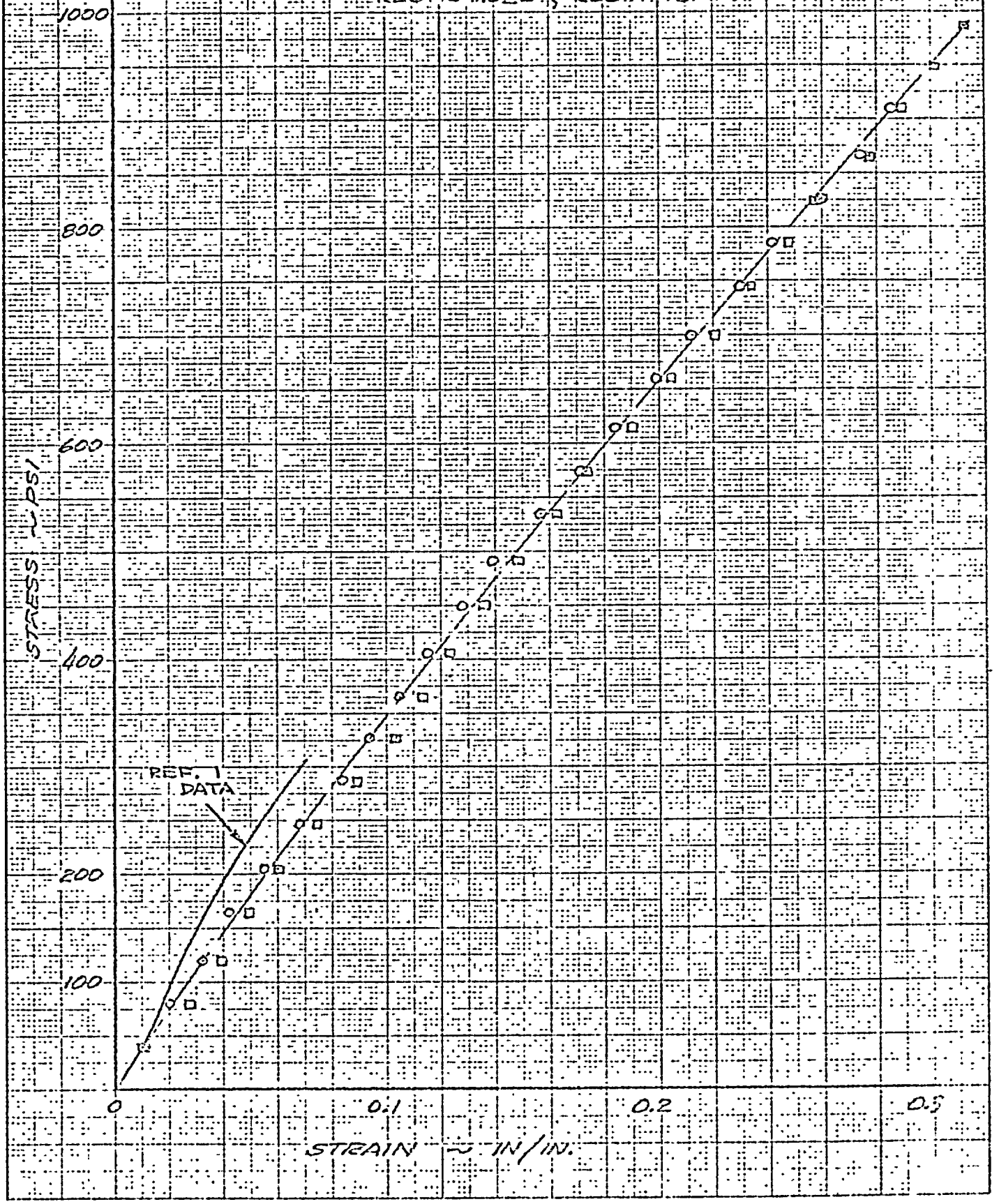

K&E 10 X 10 TO THE CENTIMETER 46 1512
19 X 25 CM. MADE IN U.S.A.
KEUFFEL & ESSER CO.

ATTACHMENT 2

IMPACT - STRESS WAVE PROPAGATION

Development of the One-Dimensional GDE (Elastic):

Dependent Variables : σ, ϵ , v

Independent Variables : x, t

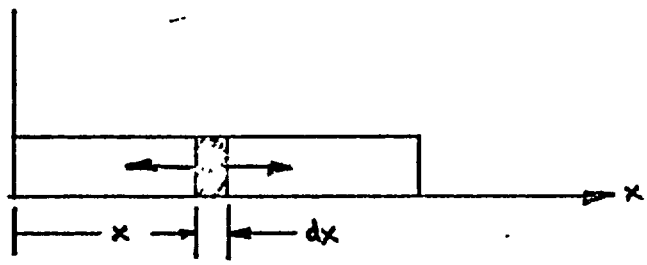

Consider the prismatical bar shown of uniform cross-section. The force at x is,

$$F\Big|_x = \sigma A$$

At x + dx, the force is,

$$F\Big|_{x+dx} = \sigma A + \frac{\partial \sigma A}{\partial x} dx$$

$$= A\left[\sigma + \frac{\partial \sigma}{\partial x} dx\right]$$

Equating the net force equal to the element inertia,

$$A\left[\sigma + \frac{\partial \sigma}{\partial x} dx\right] - \sigma A = (\rho A\, dx)\frac{\partial^2 u}{\partial_t^2}$$

$$\therefore \frac{\partial \sigma}{\partial x} = \rho \frac{\partial^2 u}{\partial_t^2}$$

From Hookes' Law and the definition of strain,

$$\sigma = E\epsilon \qquad \epsilon = \frac{\partial u}{\partial x}$$

Therefore,

$$E\frac{\partial \epsilon}{\partial x} = \rho\frac{\partial^2 u}{\partial_t^2}$$

$$E\frac{\partial\left(\frac{\partial u}{\partial x}\right)}{\partial x} = \rho\frac{\partial^2 u}{\partial_t^2}$$

$$\frac{\partial^2 u}{\partial_x^2} = \frac{\rho}{E}\frac{\partial^2 u}{\partial_t^2}$$

However, the speed of sound within the material is defined as $c = \sqrt{\frac{E}{\rho}}$. Thus, the general differential equation becomes the wave equation,

$$\boxed{\frac{\partial^2 u}{\partial_t^2} = c^2\frac{\partial^2 u}{\partial_x^2}}$$

The general solution has the form,

$$u = f(x + ct) + f_1(x-ct)$$

This represents two waves traveling along the x axis in opposite directions with constant velocity c. f and f_1 are determined by initial condition at t = o.

Example:

Initial conditions: $u\Big|_{t=o} = F(x)$

$$\frac{\partial u}{\partial t}\Big|_{t=o} = o$$

$$u\Big|_{t=o} = f(x) + f_1(x) = F(x)$$

$$\frac{\partial u}{\partial t}\Big|_{t=o} = c\,[f'(x) - f_1'(x)] = o$$

$$\therefore\ f(x) = f_1(x) = \frac{1}{2}F(x)$$

The initial displacement will be split into halves and propagated as waves in two opposite directions.

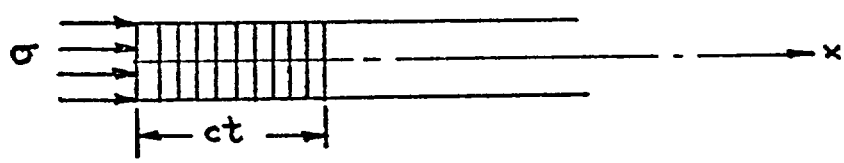

For the shaded zone, the decrease in lengths is $\epsilon\,(ct)$.

Particle velocity is distance/time.

$$\therefore\ v = \frac{\epsilon\,(ct)}{t} = \epsilon c.$$

Derivation of c:

Momentum of shaded portion of bar $= A\,c\,t\rho v$

Impulse of shaded portion of bar $= A\,\sigma t$

Equating impulse and momentum, (Ft = mv)

$$A\sigma t = A c t\ v$$

$$\sigma = c\rho v$$

$$\frac{Ev}{c} = c\rho v$$

$$\Longrightarrow \quad c = \sqrt{\frac{E}{\rho}}$$

Stain energy = $\dfrac{A c t \sigma^2}{2E}$

Kinetic energy = $\dfrac{A c t \rho v^2}{2} = \dfrac{A c t \sigma^2}{2E}$

Obviously strain energy = kinetic energy.

Wave propagation:

At a free end, a compressive wave is reflected as a similar tension wave.

At a fixed end, a wave is reflected entirely unchanged.

<u>Impact Critical Velocity</u>

From Hooke's Law, the relationship of stress and strain is given by,

$$\sigma = E\epsilon = \frac{\partial\sigma}{\partial\epsilon}\,\epsilon$$

However, $v = \epsilon c$

$$\therefore\ \sigma = \frac{\partial\sigma}{\partial\epsilon}\,\frac{v}{c} = E\ \cdot \frac{v}{\sqrt{\frac{E}{\rho}}} \qquad \text{(elastic)}$$

For elastic or plastic ranges,

$$\sigma = \frac{\partial\sigma}{\partial\epsilon}\ \frac{v}{\sqrt{\frac{\partial\sigma}{\partial\epsilon}/\rho}}$$

Thus, the particle velocity is,

$$v = \frac{\sigma}{\frac{\partial \sigma}{\partial \epsilon}} \sqrt{\frac{\partial \sigma / \partial \epsilon}{\rho}}$$

Consider an elastic linear strain hardening material where the elastic modulus is E and the plastic modulus is F as shown below.

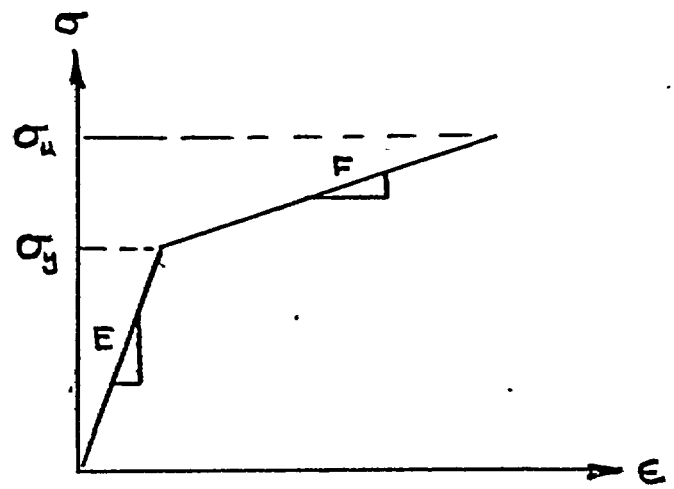

The velocity may be subdivided into two parts, elastic velocity up to yield and plastic velocity.

$$v = V_E + v_o$$

$$\therefore \; v = \frac{\sigma_y}{E}\sqrt{\frac{E}{\rho}} + \frac{\sigma_u - \sigma_y}{F}\sqrt{\frac{F}{\rho}}$$

$$\boxed{v = \frac{\sigma_y}{\sqrt{\rho E}} + \frac{\sigma_u - \sigma_y}{\sqrt{\rho F}}}$$

When taken to failure, σ_u then $v = v_{cr.}$ where $v_{cr.}$ is the critical impact velocity.

Another approach begins with the definition of wave velocity where,

$$c = \sqrt{\frac{\partial \sigma}{\partial \epsilon} / \rho}$$

Also $v = \epsilon c$

$$\therefore v = \epsilon \sqrt{\frac{\partial \sigma}{\partial \epsilon} / \rho}$$

$$= \int_0^{\epsilon} \sqrt{\frac{\partial o}{\partial \epsilon} / \rho} \, d\epsilon$$

When $v = v_{cr.}$, a plot of ϵ vs $\frac{\partial o}{\partial \epsilon} / \rho$ will produce an area under the curve. The area between o and ϵ_u represents the critical velocity.

REFERENCES

A-1. INSD Material Specification 001-80003

A-2. ASD-TDR 63-741, "Aerospace Structural Metals Handbook, Volume IIA," March 1967.

A-3. Data Sheets from Glasrock Products, Inc.

A-4. AEC-TID-23984, "Formulas for Circular Plates Subjected to Symmetrical Loads and Temperatures," by J. C. Heap, Dec. 1966.

A-5. "Theory of Plates and Shells," by S. Timoshenko and S. Woinosky-Krieger, McGraw Hill, 1959.

A-6. MIL-HDBK-5A, "Metallic Materials and Elements for Aerospace Vehicle Structures," February 1966.

A-7. NASA Report R-103, "Theoretical Elastic Stress Distributions Arising from Discontinuities and Edge Loads in Several Shell-Type Structures," by R. Johns and T. Orange.

A-8. "Formulas for Stress and Strain," by R. Roark, McGraw-Hill, 1954.

A-9. Lockheed Acft Stress Memo #88a, "Tension Type Fittings," September 1955.

A-10. AMS 5750 A, Aerospace Material Specification, "Alloy Bars, Forgins and Rings, Corrosion and Heat Resistant Nickel Base -15.5 Cr -16Mo -4W -6 Fe Solution Treated," Society of Automotive Engineers, June 30, 1964.

A-11. NASA TN 3783, "Handbook of Structural Stability, Volume III, Curved Plates and Shells," by G. Gerard and H. Becker.

REFERENCES (Cont'd)

A-12. INSD Report 3015, "Fuel Capsule Plastic Stress Analysis, " by F. Schumann, December 1968.

A-13. "Haynes High Temperature Alloys," Union Carbide Stellite Corp., 1963.

A-14. Martin Report MND-3169-45, "Structural Evaluation of Min-K 1301," by D. R. Thomas, January 1965.

APPENDIX B

THERMAL ANALYSIS

I. HYPOTHETICAL ACCIDENT FIRE ANALYSIS

A. SUMMARY

The SENTINEL 100F generator is shown to be capable of experiencing a standard transportation fire without impairing its basic structural integrity. The biological shield and fuel capsule will remain intact and at temperatures well below their respective melt temperatures for at least a period of three hours after a standard one-half hour transportation fire accident. Although the internal temperatures are still slowly rising three hours after the fire, fuel containment is assured for an indefinite period even without artificial external cooling.

The analyses presented herein gives predicted temperatures for normal operation, operation on short circuit in a 130°F ambient with solar load, and operation on open circuit in a standard transportation fire for two cases. The two fire cases presented include one in which the heat of fusion of the aluminum housing is included and one in which it is neglected. Critical component temperatures are compared in Table B-1.

One additional case (Case 4) was examined. This case consisted of the finned head of the generator being buried in the earth as a consequence of an accident. No credit was taken for heat transfer to the ground. For the conditions given for Case 4, the resulting steady state temperature for the fuel capsule was calculated to be 1724°F.

TABLE B-1

PREDICTED VS CRITICAL** COMPONENT TEMPERATURES

Component	Critical Temp.(°F)	Predicted Temperatures *	
		Case 3a(°F)	Case 3b(°F)
Fuel Liner	2550	1812	1832
Fuel Capsule	2320	1606	1645
Biological Shield	6170	1416	1456

* 3 hours after a one-half hour fire

** The liner is not a critical component. It is used at the discretion of the fueling facility. If not used, the fuel capsule temperatures shown on Table B-1 will not be appreciably affected.

NOTE: Case 3a - includes heat of fusion of aluminum housing

Case 3b - neglects heat of fusion of aluminum housing

B. DESCRIPTION OF ANALYSIS

1. Thermal Model

The thermal model nodal map used for computer analysis of the SENTINEL 100F generator is presented in Figure B-1. Assuming symmetry about the cylindrical axis the generator is divided into 160 nodes plus node 161 which is used to represent the ambient heat sink. The thermoelectric module is approximated by nine nodes, six represent the thermoelectric elements and three represent the module insulation. The conductance values of the 96 thermoelectric elements are "dummied" to agree with the results of Teledyne Isotopes' thermoelectric code runs for these type elements. Conductances at key interfaces such as the biological shield-to-module hot plate interface, the hot plate-to-hot junction interfaces, cold junction-to-module heat sink interfaces and module heat sink-to-generator head interface are based on previous experience with SENTINEL generators utilizing hardware of similar design. To be conservative maximum gaps between the biological shield and the capsule outer wall, and between the capsule inner wall and the liner outer wall were assumed. Heat transfer through these gaps is considered to be by radiation and conduction through the argon gas. The inert gas in all gaps, insulation, and the module is assumed to be 100 percent argon. Radiation and natural convection are assumed at all external surfaces. For convection and radiation from the finned shipping head, the heat transfer coefficients used are based on the results of heat rejection tests conducted at Teledyne Isotopes on a typical finned head configuration.

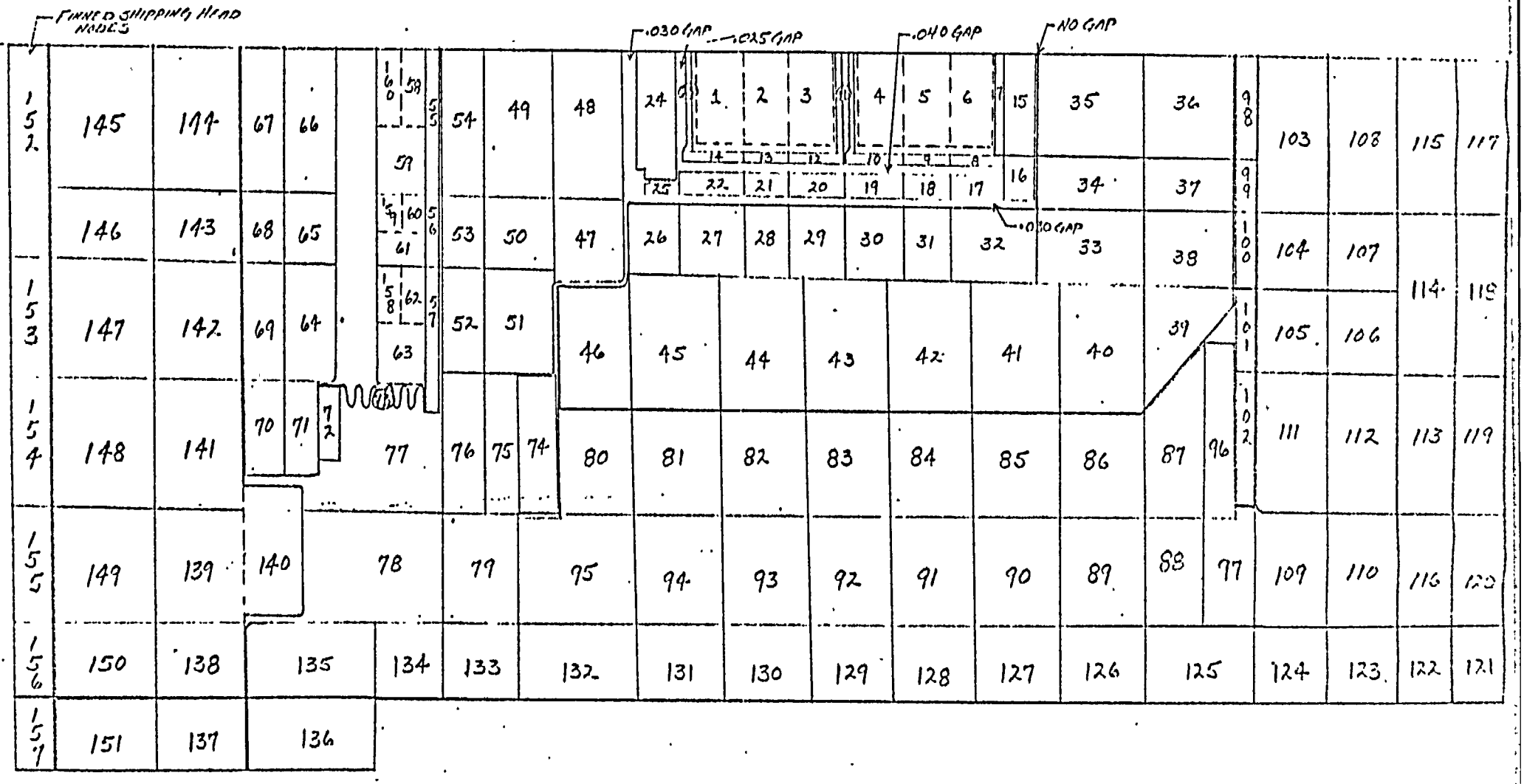

SENTINEL 100F NODAL MAP

FIG. B1

2. Conditions Analyzed

In order to insure the validity of the thermal model, the generator steady state temperature map and heat balance was determined for normal operating conditions as follows:

Case 1 - Normal Operation

Nominal Fuel Inventory	2100 watts
Electrical Power Output	150 watts
Ambient Temperature	75°F
No Solar Load	
Finned Shipping Head in Place	

The nodal temperatures obtained from this analysis are presented in Attachment 3, case 1, for comparison with the results of the transient fire accident analysis.

The second case analyzed consisted of determining the nodal temperature map and heat balance for the generator under typical shipping conditions which would exist prior to an accidental fire. In this case, the generator is normally on short circuit and the ambient temperature may be as high as 130°F. For additional conservatism it was assumed that the fuel inventory was 2500 watts which represents a practical limit to the inventory which could be loaded into this size capsule if a higher power density fuel form were to be used. The conditions thus assumed for the pre-fire case are as follows:

Case 2 - Pre-Fire Condition

Fuel Inventory	2500 watts
Short Circuit Condition, $P_{(e)} \neq 0$	
Ambient temperature	$130^{\circ}F$
Solar Load (uniform)	65 BTU/hr-ft^2
Finned Shipping Head in Place	

The resulting equilibrium nodal temperatures from the above case were used as input conditions for the fire accident analysis.

The final case analyzed was the hypothetical accidental fire condition. For this case, it is assumed that the thermoelectric module is immediately on an open circuit condition. The heat flux to all external surfaces of the generator was assumed to be that radiated from a $1475^{\circ}F$ source having an emittance of 0.9 for a period of 30 minutes. During the 30 minute fire simulation, reradiation from the exposed surfaces at an assumed emittance of 0.8 was permitted but convective cooling was assumed to be zero. At the end of the 30 minute fire, natural convection to a $130^{\circ}F$ ambient sink is restored, and a solar load is applied to all external surfaces. The nodal temperatures are then determined for a subsequent three hour period following the fire. The conditions used for the fire accident analyses were as follows:

Case 3 - Transportation Fire Accident

Fuel Inventory 2500 watts.

Open Circuit Operation, P(e) = 0

Fire: 1475°F radiation source, emissivity = 0.9

uniform impingement on all external surfaces

Exposure to Fire = 30 minutes

External Surfaces - Emittance = 0.8

Post Fire: Ambient Temperature = 130°F

Solar Load (uniform) 65 BTU/hr-ft^2

Three (3) Hour Period of Exposure

Case 4 was defined as a result of a transport accident where the finned head of the generator is embedded into the ground. The conditions used for this analysis were as follows:

Case 4 - Partial Burial Condition

Fuel Inventory = 2300 watts

Open Circuit Condition, P(e) = 0

Ambient Temperature = 130°F

Solar Load (uniform) = 65 BTU/hr-ft^2

Finned Head Buried

3. Computer Code

The four cases discussed above were analyzed using Teledyne Isotopes Thermal Analyzer Program called TAP 3. The TAP 3 program is a digital computer code (Fortran extended) which solves three-dimensional

transient heat transfer problems through the use of networks of conductors and capacitors. Steady state problems are also readily solved using this program by assigning zero values to the capacitors and running the transient calculation until a heat balance is achieved.

This code is extremely flexible for heat transfer problems in that each of the parameters (i.e., temperature, internal or external heat generation, capacity, and conductance) can be made to depend upon time or any of the other parameters in the network in any desired manner. This makes possible the solution of problems involving variable material properties, phase changes, ablation, convection and radiation. A programming feature within the code allows the automatic removal of melted or ablated surface nodes and automatic switching of external heat inputs, radiation and convection functions to the nodes beneath the removed ones. The code solves the heat diffusion equation by a forward finite difference technique.

The code is a descendant of the Lockheed Thermal Analyzer Program, and has been used in various forms throughout the Industry by companies such as Lockheed, North American Aviation, Atomics International, S&ID, and Rocketdyne Divisions. (See References B-1, B-2 and B-3.) Teledyne Isotopes' version of the code was originally obtained from the Atomics International Division of NAA, Inc. and has been revised and improved since that time.

The material properties used for the analysis described herein are presented in Attachment 4, along with other pertinent assumptions.

4. Discussion of Results of Transport Fire and Burial Analysis

Analysis of the fire accident case is complicated by the presence of the aluminum housing in the SENTINEL 100F design. The aluminum sufface nodes possess considerable heat capacity in the form of latent heat of fusion. Since previous analyses have often neglected this energy absorbing potential of the housing under the assumption that it is conservative, it was decided to conduct the analyses of the SENTINEL 100F unit both ways to determine if this actually was a conservative approach. It was felt that the immediate removal of surface nodes upon their reaching melting temperature removes a large reservoir of thermal energy from the external nodes. The inclusion of this reservoir in the analysis, it was felt, might actually drive the internal temperatures higher during the post-fire-soak period if not removed. Therefore for the first fire case analyzed (see Case 3a, Attachment 3, and Figure B-2), only those nodes which completed their phase change were removed from the problem. The results of this analysis show that only one node (Node 121), a corner node, actually completely melted. This node melts because the fire heat flux is assumed to be uniformly impinging on all external surfaces (very conservative) and the corner node is thus exposed to the heat flux on two sides (sides and bottom). This fact coupled with the fact that it cannot conduct the heat away from this corner as readily as, for example, the upper corner node (Node 157) is able to, results in a complete melt of this node. As shown in Attachment 3 all the external aluminum nodes reach melt temperature and partially melt

during the one-half hour fire period except three of the finned head nodes. For the finned head nodes, the volume of the fins was neglected in determining the heat capacity of these nodes during the fire. Table B-1 presents a comparison of the predicted maximum temperatures (three hours after the fire) of certain critical materials of the generator with their melt temperatures. Three hours after the end of the fire, the external surface nodes are cooling down but the majority of the internal nodes are still slowly rising. Figure B-2 presents a temperature history of some pertinent nodal temperatures for this case.

The second fire case analysis, Case 3b, was conducted by removing the aluminum nodes from the problem as soon as they reached a melt temperature of 1140°F. The first nodes reached melt temperature about 18+ minutes into the fire period for the model shown in Figure B-1. Although most of the exterior aluminum nodes reached melt temperature during the fire period and were removed from the problem, very few of the second layer of aluminum nodes actually reached melt temperature except the bottom nodes 113 through 116. At the end of the fire period, housing nodes 138 through 150, nodes 152 through 154 and the module heat sink nodes 64 through 71 had not reached melt temperature. Figure B-3 presents a temperature history of some pertinent nodal temperatures for Case 3b. It should be noted that this case resulted in internal component temperatures after three and one-half hours (i.e., liner, capsule and biological shield) which are from 20 to 40°F higher than the first case,

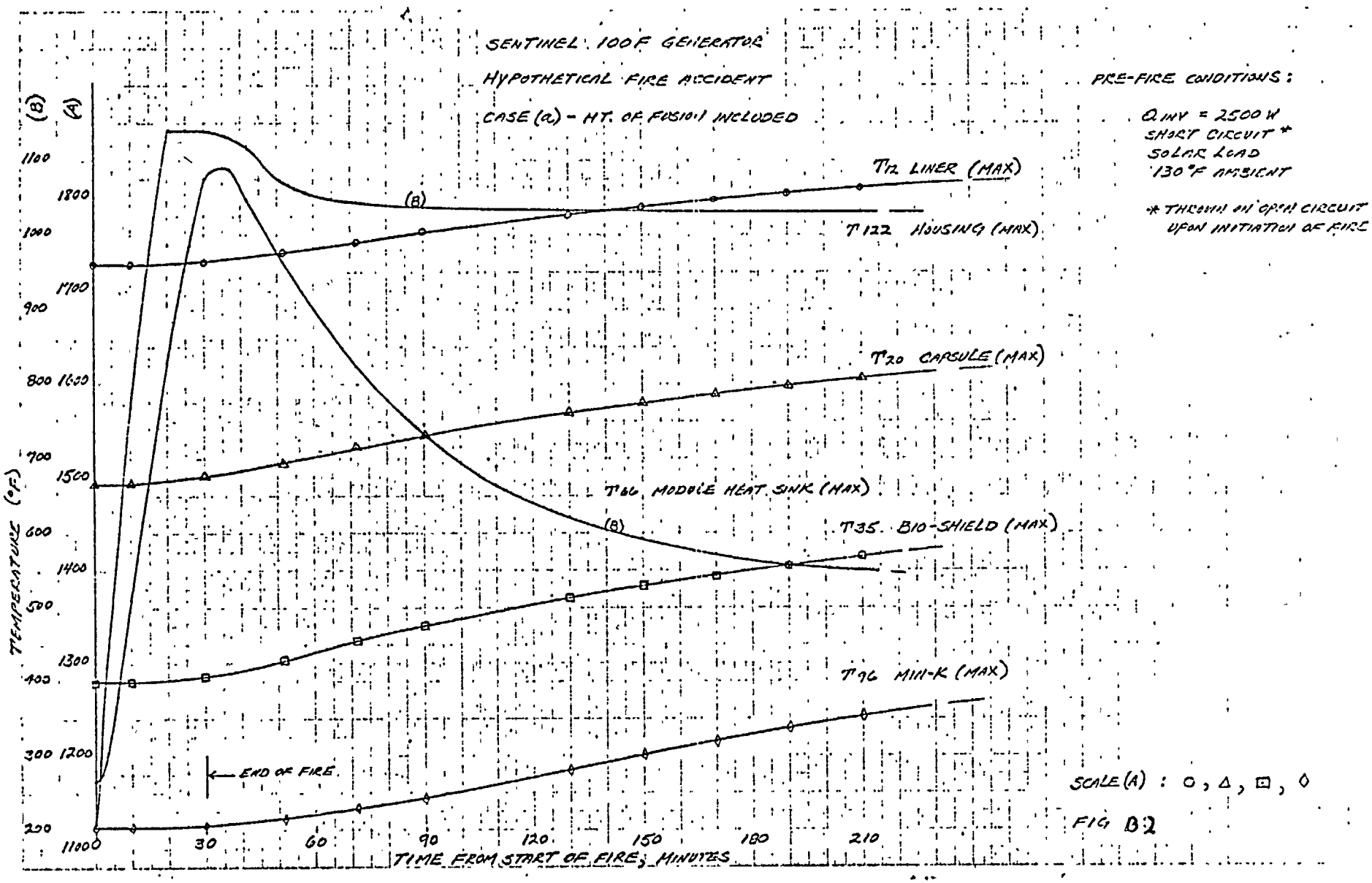
SENTINEL 100F GENERATOR
HYPOTHETICAL FIRE ACCIDENT
CASE (a) - HT. OF FUSION INCLUDED
PRE-FIRE CONDITIONS:
Q INV = 2500 W
SHORT CIRCUIT *
SOLAR LOAD
130°F AMBIENT
* THROWN ON OPEN CIRCUIT UPON INITIATION OF FIRE
T12 LINER (MAX)
T122 HOUSING (MAX)
T20 CAPSULE (MAX)
T66 MODULE HEAT SINK (MAX)
T35 BIO-SHIELD (MAX)
T96 MIN-K (MAX)
END OF FIRE
TEMPERATURE (°F)
TIME FROM START OF FIRE, MINUTES
SCALE (A) : ○, △, □, ◇
FIG B2

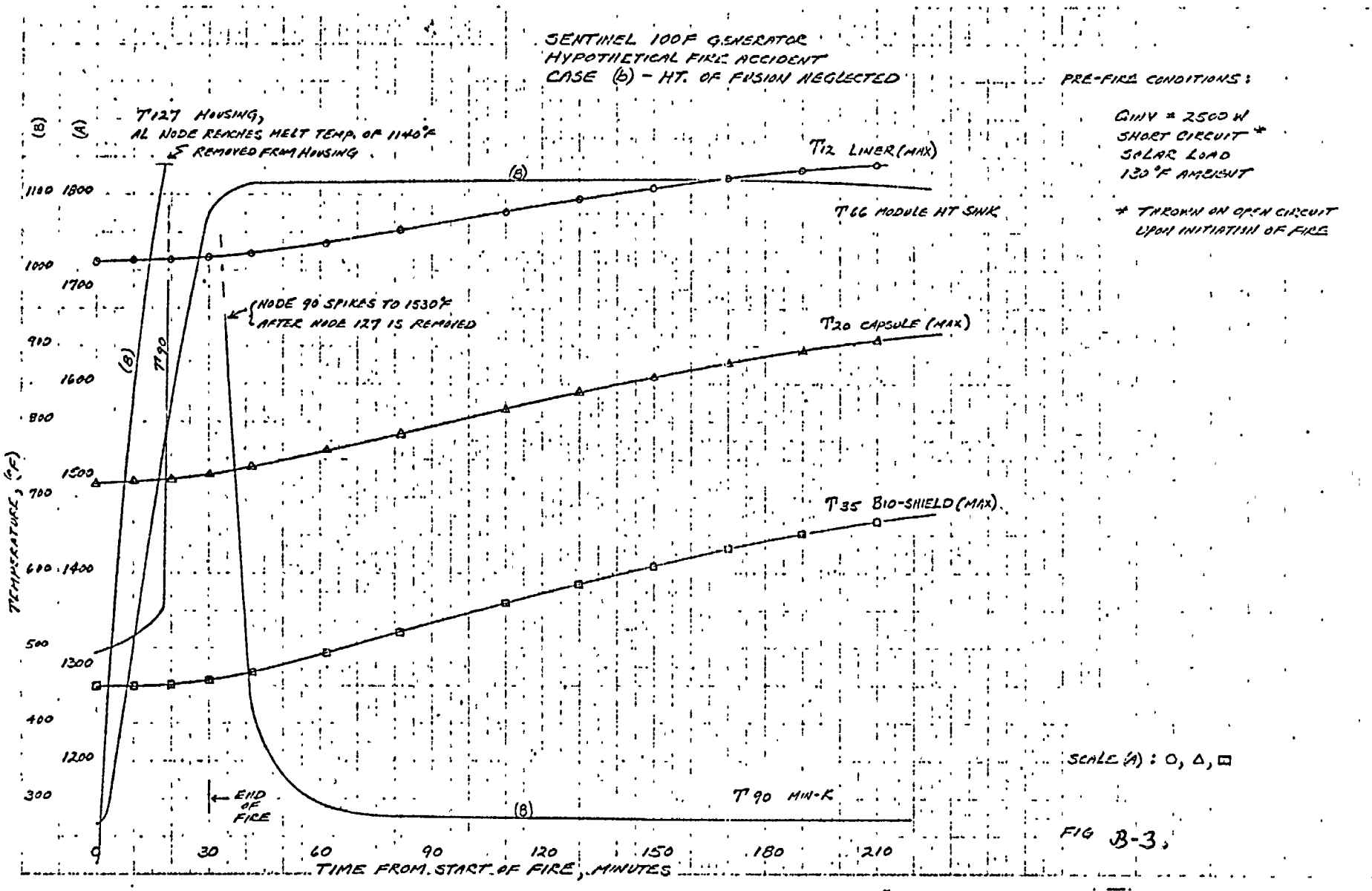
SENTINEL 100F GENERATOR
HYPOTHETICAL FIRE ACCIDENT
CASE (b) - HT. OF FUSION NEGLECTED
PRE-FIRE CONDITIONS:
QINV = 2500 W
SHORT CIRCUIT *
SOLAR LOAD
130°F AMBIENT
* THROWN ON OPEN CIRCUIT UPON INITIATION OF FIRE
T127 HOUSING,
AL NODE REACHES MELT TEMP. OF 1140°F & REMOVED FROM HOUSING
T12 LINER (MAX)
T66 MODULE HT SINK
NODE 90 SPIKES TO 1530°F AFTER NODE 127 IS REMOVED
T20 CAPSULE (MAX)
T35 BIO-SHIELD (MAX)
T90
T90 MIN-K
END OF FIRE
(A)
(B)
TEMPERATURE, (°F)
TIME FROM START OF FIRE, MINUTES
SCALE (A): O, Δ, □

FIG B-3.

Case 3a. Therefore, it appears that, for all practical purposes, from a safety standpoint, the assumption of either case is justified for this type of analysis.

The burial case resulted in a steady state temperature of 1724°F (max.) for the fuel capsule. The fuel capsule was used since its melt temperature is ~2500°F compared to ~6000°F for the shield. It should be noted that the initial conditions, such as no credit taken for heat transfer to the ground and the maximum inventory being used, represent a conservative approach.

5. Conclusions

It is concluded that the SENTINEL 100F generator is capable of surviving a standard transportation fire without damage to either the biological shield or the fuel capsule and thus fuel containment is assured.

REFERENCES

B-1. Abrahams, R.S. and Fick, J.L., "Engineering Utiliqation Manual -- Thermal Network Analyzer Program -- IBM 709-7090 Computer," Lockheed Aircraft Corp. Missiles and Space Div. TM-59-24-1, April 28, 1961.

B-2. Baughn, J. and Elliott, R., "Thermal Analyzer Program (TAP), NAA-SR-TDR 7710, September 10, 1962.

B-3. Segard, R.O. and Alexander, H.V., "Thermal Network Analyzer Program," NAA S&ID, SID 63-332, 30 April 1963.

ATTACHMENT 3

PREDICTED SENTINEL 100 RTG TEMPERATURES

(NOTE: Fractions of Degrees Not Shown)

	NODE	CASE 1	CASE 2	CASE 3a (3 hrs. aft. 30 min. transportation fire accident)	CASE 4
		Normal 2100w INV. P(e)=150w AMB=75°F No Solar	Short Circuit 2500w INV. P(e) = 0 AMB = 130°F Solar Load	Open Circuit 2500w INV. P(e) = 0 AMB = 130°F Solar Load	Open Circuit 2300w INV. P(e) = 0 AMB = 130°F Solar Load Head Buried
1	Fuel	1763 °F	1915 °F	2005	2069
2		1927	2112	2199	2254
3		1952	2141	2225	2281
4		1906	2092	2182	2246
5		1829	2012	2112	2190
6		1518	1729	1843	1951
7	Liner	1321	1423	1545	1677
8		1362	1466	1579	1702
9		1493	1602	1697	1798
10		1533	1641	1730	1823
11		1876	2048	2133	2195
12		1613	1729	1812	1895
13		1554	1662	1748	1833
14		1494	1595	1687	1775
15	Capsule	1262	1359	1486	1627
16		1226	1318	1449	1595
17		1273	1370	1494	1633
18		1328	1431	1549	1677
19		1361	1465	1579	1701
20		1386	1493	1606	1724
21		1369	1472	1586	1700
22		1338	1436	1554	1667
23	Liner	1564	1673	1762	1840
24	Capsule	1334	1431	1554	1663
25	Capsule	1310	1403	1526	1640
26	Bioshield	1124	1203	1362	1501
27		1135	1216	1371	1513
28		1146	1228	1380	1525
29		1154	1238	1387	1533
30		1160	1245	1391	1539

NODE		CASE 1	CASE 2	CASE 3a	CASE 4
31	Bioshield	1164 °F	1250 °F	1394 °F	1544
32		1168	1254	1395	1547
33		1174	1261	1399	1551
34		1181	1268	1406	1558
35		1190	1279	1416	1567
36		1180	1268	1404	1557
37		1176	1263	1400	1553
38		1173	1260	1397	1550
39		1170	1257	1394	1547
40		1169	1256	1394	1547
41		1166	1252	1393	1545
42		1161	1246	1389	1540
43		1153	1236	1384	1532
44		1141	1223	1375	1519
45		1127	1206	1363	1504
46		1114	1191	1353	1491
47		113	1190	1353	1490
48		1109	1185	1351	1486
49		1100	1174	1342	1475
50		1102	1177	1344	1478
51		1104	1179	1345	1480
52		1094	1167	1337	1468
53		1090	1163	1334	1464
54		1088	1160	1333	1463
55	Hot Plate	1060	1127	1311	1432
56		1062	1130	1312	1434
57		1076	1146	1323	1448
58	Hot Junction	996	1054	1267	1374
59	Module Min-k	685	758	977	997
60	Hot Junction	998	1057	1269	1377
61	Module Min-k	684	756	976	996
62	Hot Junction	1011	1071	1278	1390
63	Module Min-k	691	764	981	1003
64	Module Ht. Sink	172	254	541	369
65		179	262	546	377
66		185	269	550	3384

NODE		CASE 1	CASE 2	CASE 3a	CASE 4
67	Module Ht. Sink	178 °F	260 °F	545°F	376
68		173	254	542	370
69		168	248	538	364
70		162	241	533	357
71		163	242	534	358
72	Module Ring	163	243	535	359
73	Bellows	619	694	929	944
74	Holo Down Ring	1112	1188	1348	1489
75	Gen.Min-k	1008	1083	1230	1415
76		818	892	1056	1167
77		397	473	738	756
78		196	273	608	440
79		310	885	676	510
80		878	954	1110	1222
81		872	949	1099	1216
82		873	952	1099	1214
83		880	961	1107	1222
84		887	967	1115	1229
85		895	979	1125	1238
86		919	1003	1146	1265
87		974	1059	1179	1328
88		489	568	913	724
89		438	516	863	662
90		416	494	824	637
91		410	488	800	632
92		408	485	782	633
93		405	481	766	631
94		396	472	750	624
95		332	407	699	545
96		1038	1123	1243	1401
97		595	674	974	855
98	Shield Support Plate	1185	1275	1403	1556
99		1175	1262	1399	1552
100		1172	1259	1396	1549
101		1162	1248	1382	1536

NODE		CASE 1	CASE 2	CASE 3a Time Node Reaches Melt Temp. Seconds	CASE 4
102	Shield Plate Support	1129 °F	1214 °F	1345 °F	1502
103	Gen.Min-k	940	1023	1158	1309
104		927	1010	1146	1285
105		914	998	1137	1251
106		440	520	948	655
107		450	530	930	668
108		460	550	924	680
109		649	726	951	915
110		358	434	924	545
111	Glass Rock Support	888	964	1155	1199
112		430	514	1002	643
113	Aluminum Housing	135	213	991	268
114		135	213	976	267
115		135	213	970	267
116		135	213	1007	267
117		135	213	966 * (1343)	267
118		135	213	972 * (1332)	267
119		135	213	985 * (1300)	267
120		135	212.5	993 * (1265)	267
121		135	212	Completely Melted @ 1793 Sec. (1194)	267
122		135	212	1031 * (1220)	268
123		135.5	212	955 * (1174)	269
124		136	213	883 * (1138)	271
125		137	214	812 * (1112)	275
126		138	215	750 * (1100)	279
127		138	216	702 * (1100)	283
128		139	217	663 * (1112)	287
129		141	218	630 * (1141)	292
130		142	219	603 * (1200)	298
131		143	220	581 * (1303)	305
132		145	222	562 * (1493)	313
133		147	224	546 * (1639)	322
134		148	225	537 * (1773)	328
135		150	226	529	336
136		150	226	525 * (1730)	336

* Indicates partially melted nodes

NODE	CASE 1	CASE 2	CASE 3a	Time Node Reaches Melt Temp. Seconds	CASE 4
137 Aluminum Housing	150 °F	227 °F	522 °F *	(1739)	339
138	151	227	524		341
139	152	229	526		344
140	152	228	527		341
141	157	235	529		352
142	162	241	533		358
143	165	244	535		362
144	168	248	538		367
145	161	239	532		360
146	159	237	530		358
147	157	234	529		354
148	154	231	526		350
149	151	228	524		345
150	150	226	522		342
151	150	226	520 *	(1730)	341
152 Alum. Finned Head	156	226	529		358
153	153	233	525		353
154	151	230	523		349
155	149	227	521 *	(1785)	345
156	148	225	519 *	(1724)	343
157	149	225	517 *	(1645)	342
158 Cold Junction	214	306	572		414
159	220	313	577		421
160	225	319	581		427
161 Ambient	75	130	130		130

* Indicates partially melted nodes (NOTE: Fire ends at 1805 seconds)

ATTACHMENT 4

MATERIAL PROPERTY DATA

TABLE	TEMPERATURE (°F)	PROPERTY VALUES	MATERIAL/PROPERTY TYPE (UNITS)
1	440.	5.43E-04	FUEL COND. VS TEMP. (BTU / FT-SEC-F) $Sr_2 T_1 O_4$
	890.	5.153E-04	
	1340.	4.90E-04	
	2240.	4.465E-04	
	3140.	4.10E-04	
2	200.	2.594E-03	LINER COND. VS TEMP. 304SS
	500.	2.985E-03	
	800.	3.375E-03	
	1200.	3.894E-03	
	1600.	4.416E-03	
	2000.	4.939E-03	
	2400.	5.460E-03	
3	400.	2.053E-03	CAPSULE COND VS TEMP. Hastelloy C
	800.	2.612E-03	
	1200.	3.171E-03	
	1600.	3.730E-03	
	2000.	4.289E-03	
	2400.	4.848E-03	
4	500.	2.222E-02	BIO-SHIELD COND VS TEMP. Tungsten
	1000.	2.028E-02	
	1540.	1.889E-02	
	2000.	1.722E-02	
	3040.	1.661E-02	
5	100.	3.630E-06	MIN-K COND. VS TEMP. J-M 1301
	500.	4.755E-06	
	800.	5.614E-06	
	1100.	6.580E-06	
	1300.	7.480E-06	
	1600.	9.620E-06	
6	75.	2.686E-02	ALUMINUM COND. VS TEMP. 6061 T-6
	212.	2.778E-02	
	572.	3.000E-02	
	932.	3.139E-02	
	1200.	3.222E-02	
7	75.	1.407E-05	GLASSROCK COND. VS TEMP. GR # 50
	300.	1.900E-05	
	500.	2.300E-05	
	800.	3.000E-05	
	1000.	3.200E-05	
	1300.	3.500E-05	
	1600.	4.200E-05	
	1800.	4.900E-05	
	2000.	6.500E-05	
8	50.	2.500E-04	T/E ELEM COND. 2N-TAGS
	1500.	2.500E-04	

TABLE	TEMP. (°F)	VALUE	MATERIAL TYPE
9	440.	41.586	
	890.	43.72	FUEL HT CAP. TIMES RHO
	1340.	45.15	
	2240.	47.49	
	3140.	49.64	(BTU / CU.FT.-F)
10	0.0	60.0	
	200.	62.12	
	500.	67.13	
	800.	71.39	LINER CP TIMES RHO
	1200.	75.90	
	1600.	79.76	
	2000.	83.40	
	2400.	87.67	
11	200.	61.38	
	600.	73.10	CAPSULE CP TIMES RHO
	1000.	84.81	
	1400.	96.53	
	1800.	108.25	
	2200.	119.97	
12	400.	42.15	
	800.	43.96	SHIELD CP TIMES RHO
	1200.	45.767	
	1600.	48.17	
	2400.	52.39	
	3200.	55.89	
13	100.	3.80	
	200.	4.02	MIN-K CP TIMES RHO
	400.	4.40	
	600.	4.68	
	800.	4.92	
	1000.	5.12	
	1400.	5.38	
	1800.	5.60	
	2000.	5.68	
14	32.	35.59	
	212.	37.60	
	392.	39.61	ALUM. CP TIMES RHO
	572.	41.625	
	752.	43.636	
	932.	45.664	
	1112.	47.675	
	1200.	43.77	
15	75.	9.0	
	300.	9.9	GLASSROCK CP TIMES RHO (50)
	500.	10.8	
	800.	11.7	
	1000.	12.15	
	1300.	12.6	
	1600.	13.05	
	1800.	13.275	
	2000.	13.50	
16	100.	18.64	
	300.	20.04	T/E ELEMENTS CP TIMES RHO
	500.	21.44	
	700.	22.834	
	900.	24.23	
	1100.	25.63	
	1300.	27.03	
	1500.	28.43	

TABLE	TEMP. (°F)	VALUE	MATERIAL TYPE
17	200.	0.44	LINER EMISS. VS TEMP.
	600.	0.492	
	1000.	0.544	
	1400.	0.596	
	1800.	0.648	
	2000.	0.674	
	2400.	0.726	
18	200.	0.50	CAPSULE EMISS. VS TEMP.
	600.	0.567	
	1000.	0.634	
	1400.	0.701	
	1800.	0.768	
	2200.	0.835	
19	400.	0.188	SHIELD EMISS. VS TEMP.
	800.	0.210	
	1200.	0.232	
	1600.	0.254	
	2400.	0.298	
	3200.	0.342	
20	75.	0.55	ALUM. EMISS. VS TEMP.
	100.	0.57	
	225.	0.60	
	300.	0.80	
	600.	0.80	
	1200.	0.80	
21	0.0	0.0	FIRE HT FLUX
	5.0	6.0037	
	1800.	6.0037	
	1805.	0.018	SOLAR HT FLUX
	14400.	0.018	
23	0.0	0.8	MIN-K E VS TEMP.
	1500.	0.8	
24	0.	1.805E-03	BASE PLATE, HOLD DOWN RING - COND . VS TEMP. (BTU/FT-SEC-°F) INCONEL 750
	400.	2.22E-03	
	800.	2.83E-03	
	1200.	3.47E-03	
	1600.	4.305E-03	
25	0.0	51.5	BASE PLATE, HDR HT.CAP.TIMES RHO (BTU/FT^3°F)
	400.	59.23	
	800.	65.4	
	1200.	71.06	
	1600.	90.12	
	1800.	101.45	

NODE	MELT TEMP(°F)	BTU PER NODE	
113	1140.	2915.	HT OF FUSION (Aluminum)
114	1140.	2691.4	HT OF FUSION
115	1140.	675.4	HT OF FUSION
116	1140.	2743.3	HT OF FUSION
117	1140.	675.4	HT OF FUSION
118	1140.	2691.4	HT OF FUSION
119	1140.	2915.	HT OF FUSION
120	1140.	2743.3	HT OF FUSION
121	1140.	3069.	HT OF FUSION
122	1140.	3069.	HT OF FUSION
123	1140.	3774.	HT OF FUSION
124	1140.	3774.	HT OF FUSION
125	1140.	4189.2	HT OF FUSION
126	1140.	3085.3	HT OF FUSION
127	1140.	4717.6	HT OF FUSION
128	1140.	4717.6	HT OF FUSION
129	1140.	4717.6	HT OF FUSION
130	1140.	4717.6	HT OF FUSION
131	1140.	4717.6	HT OF FUSION
132	1140.	3396.7	HT OF FUSION
133	1140.	3604.3	HT OF FUSION
134	1140.	1086.	HT OF FUSION
135	1140.	4721.8	HT OF FUSION
136	1140.	6081.	HT OF FUSION
137	1140.	5472.9	HT OF FUSION
138	1140.	3636.1	HT OF FUSION
139	1140.	3248.7	HT OF FUSION
140	1140.	2294.4	HT OF FUSION
141	1140.	4059.5	HT OF FUSION
142	1140.	2467.9	HT OF FUSION
143	1140.	1184.8	HT OF FUSION
144	1140.	935.2	HT OF FUSION
145	1140.	935.2	HT OF FUSION
146	1140.	1184.8	HT OF FUSION
147	1140.	2467.9	HT OF FUSION
148	1140.	4059.5	HT OF FUSION
149	1140.	3248.7	HT OF FUSION
150	1140.	3636.1	HT OF FUSION
151	1140.	5472.9	HT OF FUSION
152	1140.	757.5	HT OF FUSION
153	1140.	822.6	HT OF FUSION
154	1140.	1370.4	HT OF FUSION
155	1140.	1265.3	HT OF FUSION
156	1140.	1416.5	HT OF FUSION
157	1140.	1817.2	HT OF FUSION
64	1140.	670.2	HT OF FUSION
65	1140.	321.5	HT OF FUSION
66	1140.	254.0	HT OF FUSION
67	1140.	270.1	HT OF FUSION
68	1140.	342.3	HT OF FUSION
69	1140.	712.9	HT OF FUSION
70	1140.	873.8	HT OF FUSION
71	1140.	1109.1	HT OF FUSION

INSD=3080

INTERFACE	CONDUCTANCE PER UNIT AREA (BTU/FT^2-HR-°F)
Bioshield-To-Hot Plate	575
Hot Plate-To-Hot Junction	325
Cold Junction-To-Module Ht.Sink	425
Module Heat Sink-To-Housing Lid	1500 (greased interface)
T/E Elements (Open Circuit)	20.25

C. SUPPLEMENTARY THERMAL INFORMATION

R4

Included in this section is additional thermal data which was originally supplied as supplements dated November 30 and December 20, 1971 and January 19, 1972 at the request of the licensing agency. For clarity, all written correspondance has been included. The section begins with the request from the licensing agency - letter DML:RHO (19-01398-34) and continues in chronological order with the data submittals and their cover letters. Only Attachment B (TAP 3 User's Manual) of letter TPS-CNY-254 (supplement dated 20 December 1971) has been omitted as explained in the Preface of this report.

UNITED STATES
ATOMIC ENERGY COMMISSION
WASHINGTON, D.C. 20545

NOV 15 1971

DML:RHO
(19-01398-34)

Isotopes, Incorporated
Nuclear Systems Division
ATTN: Mr. C. Young
110 West Timonium Road
Timonium, Maryland 21093

Gentlemen:

This refers to your application dated August 10, 1971, pertaining to the Sentinel 100F thermoelectric generator. In connection with our review of this application, please submit the information identified in the enclosure to this letter.

A word of explanation is in order concerning your interpretation of the thermal analysis requirements of Appendix B of Part 71. The transient analysis was followed for only three hours after the end of the thermal test even though the temperatures of the fuel capsule were still rising. These temperatures should have been followed until they started to fall or reached steady state. However, it is true that in this case there is little probability that the fuel capsule temperature will rise much further if indeed the temperature at three hours is only 1646°F.

Apparently, the misinterpretation arose from the statement in Appendix B in 10 CFR 71 which states that a package shall not be cooled artificially until three hours after the test period unless the temperature within the package begins to fall in less than three hours. This statement in the regulation is related to extinguishing the fire on the outside of a package, as from a wooden overpack, and does not relate to cooling of an internal heat source.

Sincerely,

D. A. Nussbaumer

D. A. Nussbaumer, Chief
Fuel Fabrication and
Transportation Branch
Division of Materials Licensing

Enclosure:
As stated

Isotopes, Incorporated
Timonium, Maryland 21093
License Number 19-01398-34
Enclosure to Letter Dated NOV 1 5 1971

1. References for all relevant thermal properties for all the materials listed on pages 84 through 86. Information concerning the fuel, bioshield, MIN-K, glassrock, and the emissivities of all materials, is essential to our review.

2. Descriptions of experiments, computer code, and calculations used for evaluating the effective thermal properties of the thermoelectric elements.

3. Description of tests and calculations used to evaluate the effective conductances of key interfaces as listed on page 88.

4. Does the effective conductivity of the thermoelectric elements given on page 84 include the interface resistances given on page 88? Please explain.

5. The thermal properties for nodes 55 through 73 and 158 through 160 as a function of temperature.

6. Description of correlations and values used for all the boundary conditions (radiation and natural convection heat transfer coefficients).

7. Description of tests conducted for evaluating the heat transfer from the finned shipping head. Also, state the fin dimensions and calculate the actual external surface area.

8. Justification for the value of 65 $Btu/hr \cdot ft^2$ used for the solar heat load. State the value of solar absorptivity used for the cask surface.

9. Two copies of the latest users manual for the TAP3 computer program. Please indicate and explain all revisions to the program made since the manual was published.

10. Explanation as to how the TAP3 program handles both fire and internal gap radiative heat transfer. The table on page 86 indicates a constant heat flux from 5°F to 1800°F. The fire heat flux is a function of the cask surface temperature and is normally calculated by the program.

TELEDYNE
ISOTOPES

110 WEST TIMONIUM ROAD
TIMONIUM MARYLAND 21093
TELEPHONE. (304) 252-8220
TELEX 87-780

Supplement Dated Nov. 30, 1971

Refer to: TPS-CNY-239
30 November 1971

Mr. D. A. Nussbaumer, Chief
Fuel Fabrication and Transportation Branch
Division of Materials Licensing
U. S. Atomic Energy Commission
Washington, D. C. 20545

Gentlemen:

In response to your letter of 15 November 1971, reference DML:RHO (19-01398-34), we are submitting the enclosed data. Each item has been answered individually; but, because of the general nature of some requests, it has been necessary to limit the reply to what we believe to be the pertinent facts. Complete documentation would require a very lengthy report.

The TAP3 Computer Program Users Manual (Item 9 in your letter) is currently being rewritten to incorporate all existing amendments. It is expected that this work will be completed within the next two weeks. Two copies will be forwarded to you as soon as the manual becomes available.

We trust that this data will meet your requirements. If you have further questions, please do not hesitate to ask.

Sincerely,

NUCLEAR SYSTEMS DIVISION

C. N. Young

C. N. Young

/mb

Enclosure

REFERENCES FOR ITEM 1.

(a) "Properties and Fabrication of Curium-244 and Strontium-90 Fuel Forms," by R. E. McHenry, Oak Ridge National Laboratory. Published in Symposium on Materials for Radioisotope Heat Sources 10/2/68, Vol. 14 Nuclear Metallurgy.

(b) ORNL-4043, AEC Research & Development Report, "Strontium-90 Data Sheets," by S. J. Rimshaw and E. E. Ketchen (Conf.)

(c) Aerospace Structural Metals Handbook, ASD-TDR 63-741, Vol's I, II and IIa, March 1967, Air Force Materials Lab., Research and Technology Division, Air Force Systems Command, Wright-Patterson Air Force Base, Ohio.

(d) GlasRock Products, Inc. Bulletins dated 1/6/70, GlasRock Products, Inc., 2210 Marietta Boulevard N.W., Atlanta, Georgia 30318.

(e) Johns-Manville Product Bulletins IN-758A and ALO-3633-7, AEC Research and Development Report Phase I Final Report, Oct. 2, 1967, by J. O. Collins, J. M. Research and Engineering Center.

(f) Johns-Manville Product Bulletin IN-502A.

(g) Thermophysical Properties of Matter, The TPRC Data Series Vol. 7, Thermal Radiative Properties, Metallic Elements and Alloys, by Y. S. Touloukian and D. P. Dewitt, IFI/Plenum NY-Wash. 1970.

1. References for all relevant thermal properties for all the materials listed on pages 84 through 86. Information concerning the fuel, bioshield, MIN-K, glassrock, and the emissivities of all materials, is essential to our review.

Material	Property	Reference
(1) FUEL ($SR_2T_1O_4$) (4.93 g/cm^3)	Conductivity Specific Heat	(a) (b)
(2) LINER (304SS) (8.029 g/cm^3)	Conductivity Specific Heat Emissivity	(c) Vol. I. (c) Vol. I. (c) Vol. I.
(3) CAPSULE (Hastelloy-C) (8.492 g/cm^3)	Conductivity Specific Heat Emissivity	(c) Vol. II.a. (c) Vol. II.a. (c) Vol. II.a.
(4) BIO-SHIELD (Tungsten) (19.3 g/cc)	Conductivity Specific Heat Emissivity**	(c) Vol. II.a. (c) Vol. II.a. (g)
(5) INSULATION (Johns-Manville) (Min-K 1301) (20 lbs/ft^3)	Conductivity* Specific Heat	(e) (f)
(6) HOUSING, HEAT SINK, SHIPPING HEAD (6061-T-6 Aluminum) (169 lbs/ft^3)	Conductivity Specific Heat Emissivity**	(c) Vol. II. (c) Vol. II. **Specified as .8 for fire analysis
(7) SHIELD SUPPORT INSULATION (Glass Rock #50) (45 lbs/ft^3)	Conductivity Specific Heat	(d) (d)
(8) SHIELD BASE PLATE & HOLD DOWN RING (Inconel 750) (8.253 g/cm^3)	Conductivity Specific Heat	(c) Vol. II.a. (c) Vol. II.a.

* Thermal conductivity is modified to account for our experience with argon gas filled Min-K formulations. Analysis of RTG performance data indicates R-values should be about 10% higher than published values.

** The tungsten biological shield is chrome plated on all inner & outer surfaces.

2. Descriptions of experiments, computer code, and calculations used for evaluating the effective thermal properties of the thermoelectric elements.

The thermoelectric code used by Teledyne Isotopes NSD is called "VINCE-TOM" and is based upon the evaluation of the following differential equation for the temperature distribution through the T/E elements:

$$\frac{d}{dx}\left(k A \frac{dT}{dx}\right) + \frac{I^2 \rho}{A} + \tau I \frac{dT}{dx} = 0$$

This equation considers all heat transport effects including conduction, Joule heating and Thompson heating and is solved by the code for both elements of the couple. The code also calculates the heat required for the thermoelectric elements, and the electrical power output for any number of couples in any series, parallel or series-parallel configuration for any external load situation. The major inputs to the code are couple geometry and material properties. The property data for the 2N/TAGS/SnTe materials system used in the SENTINEL 100F module is well known and documented. These materials have been utilized in a number of the SNAP 19, Viking and Pioneer space generators, and in the SNAP 29 generators. Numerous tests and correlations of generator and couple performance have established the validity of the thermoelectric property data and the ability of the code to predict their performance.

The 2N/TAGS/SnTe couple used in the SENTINEL 100F is a single doped N-element and a segmented P-element. Since the thermal conductivity of these three materials exhibit different shaped curves as a function of temperature, the only practical way to define the conductance for the thermal code is to use the predicted heat flow and ΔT_{HJ-CJ} from the T/E code; i.e.,

$$C = \frac{Q_{T/E}}{\Delta T_{HJ-CJ}}$$

3. Description of tests and calculations used to evaluate the effective conductances of key interfaces as listed on page 88.

The interfaces listed on page 88 exist on nearly every SENTINEL and SNAP generator built by Teledyne Isotopes and this includes some 25 SENTINEL types and a dozen SNAP type generators.

The hardware in each is practically identical except for size. The properties of the thermoelectric materials are well know using

these in our thermoelectric code, good agreement is found between the electrical power generated and predicted at measured hot and cold junction temperatures in a generator configuration. Therefore, the heat flow through the thermoelectric elements is known. Since we also measure hot plate temperature and fin root temperature on our generators, the interface conductances are readily calculated.

In the past, we have conducted heat transfer tests on instrumented cold end hardware and these were found to be in good agreement with values measured in the generator configuration. Currently, we have been testing a partial mock up of the SENTINEL 100F T/E module. This module is fully instrumented to provide cold end temperature drops using the exact hardware that will exist in the SENTINEL 100F module. Analysis of this data indicates that the cold end conductance will be even higher than assumed for the fire analysis so the initial internal temperatures will be lower than those presented.

In addition to the above, an in-house program was conducted about six months ago in which the effective conductance of various generator type interfaces were evaluated. These tests included evaluations of dry interfaces and interfaces employing various types of thermal greases or compounds. The grease currently being employed is Dow Corning DC-340 thermal compound.

4. Does the effective conductivity of the thermoelectric elements given on page 84 include the interface resistances given on page 88? Please explain.

No, it represents the effective conductivity of the T/E elements on open circuit. The interface resistances presented on page 88 represent our experience with the various hardware interfaces presented. The conductances are based on either the common area between the nodes involved or on the element area in the case of the hot plate-to-hot junction and cold junction-to-module heat sink conductances.

5. The thermal properties for nodes 55 through 73 and 158 through 160 as a function of temperature.

Nodes (55, 56, 57), 72 and 73 are the module hot plate, bellows and lower ring of bellows assembly and are 300 series stainless steel. Properties are given in tables presented in INSD-3080 attachment 4. Nodes 58, 60, 62 and 158, 159, 160 represent the thermoelectric elements. Nodes 58, 60 and 62 are the hot junctions and 158, 159 and 160 are the cold junctions. Nodes 59, 61 and 63 represent the Min-K insulation (inside the sealed module) which surrounds the thermoelectric elements and is argon gas filled as is the Min-K insulation in the generator.

For normal operation; i.e., steady state, with electrical power being generated, the conductance of the thermoelectric elements and the electrical power generation is varied until a match is obtained between the results of the thermoelectric code runs and the thermal code runs. The electrical power is removed at the cold junction in the thermal model since this is thermal energy which has been converted to electrical energy. The flow of current through the thermoelectric elements increases the effective conductance of the elements so it is not possible to use straight conductivity values for the elements under normal operation. For the fire analysis, open circuit is assumed so there are no current effects.

6. Description of correlations and values used for all the boundary conditions (radiation and natural convection heat transfer coefficients).

For natural convection from the exterior surfaces of the housing, the following correlations were used:

$$h = C \left(\frac{\Delta T}{L}\right)^n$$

where C = .12 for downward facing and horizontal surfaces
C = .29 for vertical surfaces and upward facing horizontal surfaces
n = 0.25

These equations were programmed into the code runs. Natural convection was only assumed for the steady state runs and for the transient periods after the fire.

The radiation heat transfer from the external surfaces was calculated by the code using the tabular values of emissivity and radiating to 130°F ambient in the case of the fire analysis.

7. Description of tests conducted for evaluating the heat transfer from the finned shipping head. Also, state the fin dimensions and calculate the actual external surface area.

This question is not pertinent to the fire analysis but only to the steady state cases which were analyzed. In the case of the fire analysis, the volume of the fins was neglected as stated in INSD-3080. The justification for this is that because of the very large exposed surface area of the fins, the fins will reach melt temperature in about 30 seconds if the fire heat flux is assumed to impinge uniformly on their total surface area. Therefore for the fire analysis only the base of the finned shipping head was included in the model.

For the steady state analyses, the performance of the finned head was based on the results of tests of a typical finned head configuration over a range of fin root temperatures. For this test, the test apparatus consisted of a finned shipping head electrically heated under the base by an insulated heater plate about the size of the module. The parasitic losses were determined and found to be a very small percentage (approximately 0.8 percent) of the total electrical heat input. The test results were analyzed and it was determined that the effective heat transfer coefficient over the range of fin root temperatures of interest (100 to 225°F) could be expressed as $h_{eff} = 0.11 (T_{FR} - T_{AMB})^{0.34}$ BTU/HR-°F-Ft^2. This equation was programmed into the steady state code runs to simulate the performance of the finned shipping head. The fin configuration consists of 48 anodized aluminum fins, 10 inches high and 1/8 inch thick, located in a 24.25" diameter area and having a total surface area of 125 square feet.

8. Justification for the value of 65 Btu/hr·ft^2 used for the solar heat load. State the value of solar absorptivity used for the cask surface.

The solar heat load was determined as follows. From Reference (1)*, a conservative value of direct solar irradiation on a surface normal to the sun's rays at the earth's surface on a cloudless day was selected as 320 BTU/HR-Ft^2. Since no more than half of the total generator surface area (actually less) can be exposed to the direct rays of the sun this irradiation was reduced to one-half or 160 BUT/HR-Ft^2. A value of absorptance for solar radiation of 0.4** for the surface was assumed.

$$\frac{Q_{solar}}{A} = 320\ (.5)(.4) \cong 65 \text{ BTU/HR-Ft}^2 \text{ absorbed}$$

* Reference (1): Heat and Mass Transfer, E. R. G. Eckert & R. M. Drake, Jr., McGraw-Hill Book Co., Inc. 1959.

** The SENTINEL 100F housing is protected by an epoxy-polyamide coating system.

9. Two copies of the latest users manual for the TAP3 computer program. Please indicate and explain all revisions to the program made since the manual was published.

To be forwarded under separate enclosure.

10. Explanation as to how the TAP3 program handles both fire and internal gap radiative heat transfer. The table on page 86 indicates a constant heat flux from 5°F to 1800°F. The fire heat flux is a function of the cask surface temperature and is normally calculated by the program.

The table on page 86; i.e., Table 21, which specifies the fire heat flux in BTU/Ft^{2}Sec should have the abscissa labeled as time instead of temperature. The time is given in seconds and defines the fire as starting at 5 seconds and continuing until 1800 seconds. From 1800 to 1805 the fire heat flux is assumed to decay to the solar heat flux. These tables were spliced together from the computer print out and the time label for this table was inadvertently left out. The abscissa for all the other tables given on pages 84 to 86 is temperature as indicated.

The fire heat flux shown in Table 21 is the heat flux impinging on the exterior surfaces. In the TAP3 program, this heat input is handled by assuming that this heat is internally generated in the surface nodes. The net heat flux is of course a function of the housing surface temperature and is calculated by the program. As can be seen, this method of handling the fire heat input is conservative.

The method by which TAP3 handles internal gap radiative heat transfer is controlled by the programmer. For the analyses presented, equations are programmed into the code which evaluate the emissivity of each of the two surfaces from the tabular input data as a function of their respective temperatures, combine these into an effective emittance or overall exchange factor as desired, and calculate the radiation heat transfer in the normal manner; i.e.,

$$Q_{rad} = F_{12}A_1 \quad \sigma(T_1^4 - T_2^4)$$

where F_{12} is the overall interchange factor.

Supplement Dated December 20, 1971

TELEDYNE ISOTOPES
110 WEST TIMONIUM ROAD
TIMONIUM, MARYLAND 21093
TELEPHONE (301) 252-9220
TELEX 87-780

Refer to: TPS-CNY-254
20 December 1971

U.S. Atomic Energy Commission
Division of Materials Licensing
Washington, D. C. 20545

Attention: Mr. D. A. Nussbaumer, Chief
Fuel Fabrication and Transportation Branch

Gentlemen:

This letter is intended to furnish further data in support of our SENTINEL 100F license application. Please refer to the following references:

a. DML:RHO (19-01398-34) dated 11/15/71, letter U.S. Atomic Energy Commission to Isotopes, Inc.
b. TPS-CNY-239 dated 11/30/71, letter Isotopes, Inc. to U.S. Atomic Energy Commission.

Attachment A amplifies our answers to questions 2 and 3 of reference a. The test data referenced has been taken largely from a special module evaluation test conducted especially for the SENTINEL 100F and therefore is directly applicable to this application. Data from the SENTINEL 8S program is also presented as further correlation between the code analysis and generator performance. Except for thermal and electrical power, the generators are quite similar. The Dow Corning thermal grease is used to reduce the gradients across the thermal interfaces. As mentioned, we have considerable operating experience with this compound.

Attachment B is a copy of the users manual for the TAP-3 computer program as promised in reference b.

Sincerely,

NUCLEAR SYSTEMS DIVISION

C. N. Young

C. N. Young
Project Engineer
Terrestrial Power Systems Division

/mb

Enclosures: (2)

ATTACHMENT A

ADDITIONAL DATA FOR QUESTION 2 & QUESTION 3 OF REFERENCE a:

In order to elaborate further on the ability of the thermoelectric computer code used by INSD to predict the performance of the thermoelectric module, the following data is offered. Six of the couples fabricated for the SENTINEL 100F module were drawn from the production run and assembled and bonded into a 6-couple module for performance and life testing. The 6-couple module was designed to be tested in an electrically heated test fixture specifically tailored for this test. The module itself was fully instrumented, having four hot junction thermocouples, three cold junction thermocouples as well as voltage taps on every element. The test fixture was provided with cold end hardware identical to that being utilized in the 100F module; i.e., pistons, springs and aluminum heat sink. The cold end hardware was also instrumented with thermocouples on the pistons and the heat sink so that the cold end hardware temperature drop could be measured directly. Prior to installation of the module, the parasitic heat losses through the fixture were determined experimentally so that the heat flow through the thermoelectric elements could also be determined from the test data. Parametric testing of this module was performed some months ago and since then it has been on a life test. Arbitrarily selecting one of the parametric data points, it was shown that the performance measured could be predicted by the code. The measured data point for example is shown below:

Hot junction temperature (avg.)	993°F
Cold junction temperature (avg.)	226°F
Current	20.08a
Load Voltage	0.486 VDC
Open circuit voltage	1.016 VDC
Load resistance	24.203 mΩ
Internal resistance	26.394mΩ
Electrical power output	9.76 w(e)
Electrical heat input	157 w(th)
Piston temperature (avg.)	213°F
Heat sink (avg.)	208°F
∴Cold end $\Delta T_{CJ-H/S}$	18°F
Heat to T/E elements (based on parasitic heat loss curve)	122.0 w(th)

When the boundary conditions shown above; i.e., hot and cold junction temperatures and external load are used as inputs to the T/E code, the predicted heat flow to the T/E elements is 121.1 watts which is within less than 1% of the measured heat flow. The conductance of the T/E elements of the module is thus established by computing the ratio of the heat flow to the thermoelectric elements to the temperature drop from the hot-to-cold junction.

The SENTINEL 100F was designed to produce 150 w(e) at B. O. L. when operating at hot junction/cold junction of 1000/225°F. At these conditions, the predicted heat flow to the thermoelectrics at the matched load condition is 1800 watts thermal. Thus the conductance is 7.932 Btu/hr-°F. Since the conductance is essentially $\frac{kA}{L}$, any combination of these parameters which give the proper conductance can be used in the thermal model. For the analyses presented, we elected to hold the conductivity constant (in the tables) and vary the A/L ratio and the electrical power output for the different operating conditions. The electrical power output is dumped to a heat sink at the cold junction in the thermal model. As a general rule, the effective conductance of the elements on short circuit (Pe = 0) and on open circuit (Pe = 0) is between 20 - 30% higher and lower respectively than when on load.

ADDITIONAL INTERFACE DATA

a. Cold End - As can be noted from the measured data presented earlier, the cold-end temperature drop (i.e., from the cold junction to the heat sink) is 18°F. The heat flowing through this cold end hardware is the heat to the thermoelectrics less the electrical power output or 122 - 10 watts = 112 watts. The conductance per unit area based on element area is thus

$$\frac{112\ (3.4152)(144)}{(18)(2.9316)} = \frac{Q}{\Delta T\ (Ael)} = 1044\ \text{Btu/hr-ft}^2\text{-}^\circ\text{F}.$$

Although conductances this high have been measured on some SENTINEL generators in the past, the fabrication tolerances of the parts making up the cold end hardware causes variations in cold end conductances. Therefore for the SENTINEL 100F analyses we elected to choose a more conservative (and more typical) value of cold end conductance of 425 Btu/ft^2-hr-°F as shown in INSD-3080, page 88.

b. Module Heat Sink-To Housing Lid Interface - This interface is an aluminum-to-aluminum interface with Dow Corning 340 grease in the interface. Interface tests were conducted at INSD in March and April of 1971 using a calibrated test apparatus on the effects of various types of thermal greases or compounds on the conductance of aluminum-to-aluminum interfaces when compared with a dry interface. The test apparatus was designed to measure the heat flow through the interface and the temperature drops. The tests were conducted using plain silicon grease, aluminum grease, Dow Corning 340 grease and others and were conducted over a range of interface heat fluxes and interface temperatures. The Dow Corning 340 grease, which is also utilized in our standard TELAN generators, was found to be as good as any of the compounds tested and better than most. The value of conductance shown in INSD-3080, page 88, of 1500 Btu/hr-ft^2-°F is typical of measurements

made during these tests. The tests encompassed interface heat fluxes as high as 45 watts/in^2 which are considerably higher than anticipated for this interface. The interface pressure (mechanical) for the tests was low and of the order of 25 - 30 psi which is typical for these interfaces. This data is also applicable to the interface between the finned shipping head and the housing lid.

c. Biological Shield - This path encompasses four interfaces as well as the module hot plate. These are the interface between the biological shield and hot plate, hot plate and getter, getter and mica, and the mica to hot shoe interface. The exact breakdown of the total temperature drop between the biological shield and hot junction is not known, but the overall effect has been measured on several generators. For example, the SENTINEL 8S electrically heated generator was instrumented with thermocouples on the biological shield, hot junction, cold junction, etc. and was tested extensively. The table shown below compares the data taken on the SENTINEL 8S with the assumptions used in the thermal model for the SENTINEL 100F (see case 1, INSD-3080).

	8S	100F
Q_{inv}(w)	301	2100
Biological Shield T(^{o}F)	959	1090.6
Hot Juntion (^{o}F)	900	1001.6
Total ΔT (^{o}F)	59	89
Interface Q(w)	250	1873
Common Area (in^2)	25.967	132.733
Effective Btu/hr-ft^2-^{o}F nonductance	80.25	78

The conductances shown in INSD-3080, page 88, for the module hot plate-to-hot junction and biological shield-to-hot plate interfaces are obtained by making allowances for the conductances of the hot plate and biological shield portion of the path (based on published data), and assuming the individual interface ΔT to be one quarter of the total interface ΔT. As shown in the table above, the net result is to give an effective conductance close to that measured for the SENTINEL 8S.

d. Other Tests - In addition to the previous test data, each thermoelectric module is tested in a thermally calibrated electrically heated test fixture prior to installation in a fueled generator. This test is primarily intended to check the electrical performance without the restrictions required when using a radioactive heat source. However, it is instrumented for thermal evaluation also and, in fact, is verification for the radioactive fuel inventory selection.

Supplement Dated January 19, 1972

TELEDYNE ISOTOPES 0195

110 WEST TIMONIUM ROAD
TIMONIUM, MARYLAND 21093
TELEPHONE. (301) 252-8220

Refer to: TPS-CNY-262
19 January 1972

71-5862

U. S. Atomic Energy Commission
Division of Materials Licensing
Washingtin, D. C. 20545

Attention: Mr. D. A. Nussbaumer, Chief
Fuel Fabrication and Transportation Branch

Gentlemen:

This letter is to confirm thermal property data as relayed to Mr. R. Odegaarden by telephone as of this date. This data is in reference to Teledyne Isotopes' application for a SENTINEL 100F license, and amplifies our letter TPS-CNY-254 dated 12/20/71.

The thermal conductivity of the thermoelectric elements varies not only as a function of temperature but is also dependent upon the current flow through the elements. The current flow is a function of the mode of operation, and the effective conductivity for each mode is shown below.

Mode of Operation	Effective Conductivity of Elements Btu/ft-hr-°F
Normal	0.90
Short Circuit	1.2182
Open Circuit	0.8333

Sincerely,

NUCLEAR SYSTEMS DIVISION

C. N. Young
Project Engineer
Terrestrial Power Systems

/mb

COPIES SENT TO COMPLIANCE

393

APPENDIX C

ANALYSIS OF SHIELD LID ATTACHING BOLTS

R_3, R_4

This appendix provides analysis which addresses the loading of the bolts used to attach the shield lid to the body of the tungsten biological shield under conditions of impact froma 30 foot drop. The evaluation assumes the most critical angle of impact. Under highly conservative assumptions, the analysis shows a positive safety margin when the resultant stress is compared to the yield stress of the bolts. Thus, the analysis shows that the shield body, lid and fuel capsule configuration will remain intact given the drop environment. The balance of this appendix is as per Revision 3, dated October 22, 1971.

R_4

ANALYSIS OF SHIELD LID ATTACHING BOLTS

It is assumed that the shield assembly impacts on the edge of the lid (Point 0) with the center of gravity of the shield body in line with the path of motion as shown in Figure 1. Although the edge of the shield plug has been cut back as shown, the point of impact may be considered to lie on the line AO. This is because the shield plug is immediately against the Min-K insulation which will allow the sharp edges to sink in making the effective point of impact on the line of action.

In the following analysis the shield plug is treated as a free body as shown in Figure 1. The analysis is based on static equilibrium, since the distribution is proportional for higher G loadings. In order for tension, T, to exist in the bolt there must be a separation between the body and the lid such that contact exists only at point C.

$$OA = 13.17 \text{ inches}$$

$$F_1 = 1267 \text{ pounds}$$

$$F_2 = 263 \text{ pounds}$$

$$F_3 = 73.4 \left(\frac{11.21}{13.17}\right)^2 = 53.2 \text{ pounds}$$

Solve for F_4 by taking moments about point O.

$$M_o = (1267)(1.067) - 263\,(5.022) - 53.2\,(3.940) + F_4\,(9.251)$$

$$F_4 = +19.30 \text{ pounds}$$

The positive sign indicates that the bolt is indeed in tension, and it is necessary to apply the proper G loading to determine if the bolts are adequate.

FIGURE WITHHELD UNDER 10 CFR 2.390

FIGURE C-1, SHIELD GEOMETRY

The G loading is given by the following equation.*

$$G = \frac{72}{t} \sqrt{h}$$

G = acceleration, g

t = shock rise time, milliseconds

h = drop height, inches.

The most severe condition given is for rigid steel against concrete, which, for a point (corner) impact, has a rise time of two milliseconds. The case under consideration is more like the condition of product case against one inch felt which has a rise time of 30 milliseconds for a point contact. The shield under consideration actually has three to four inches of fibrous insulation to cushion the impact. Looking at the worst case,

$$G = \frac{72}{2} \sqrt{(30)(12)} = 683 \text{ g}$$

Multiplying the g loading by the static loading in the bolt yields the potential loading in the bolt at impact.

$$P = (19.30)(683) = 13,182 \text{ pounds.}$$

The bolt is a 1/2-20 which has a tensile area, A, of 0.1597 square inch. The stress is:

$$S = \frac{P}{A} = \frac{13,182}{0.1597} = 82,542 \text{ psi}$$

The bolts are made from A-286 which has the following properties at 1000°F:

Ultimate stress	131,000 psi
Yield stress	88,000 psi

*Magner, R.T., "Design for Shock Resistances," Product Engineering Magazine

The margin of safety is:

$$MS = \frac{88,000}{82,542} - 1 = 0.066$$

Further, it should be noted that this analysis is highly conservative in that a very fast shock rise time has been used, and that the load has been reacted entirely in one bolt.

APPENDIX D

LIST OF DRAWINGS

R4

The following drawings are included with this report as part of the license application. These drawings are the current versions (as of June 1985). The packaging is constructed in accordance with these drawings:

010F10000	Sheets 1-3 (Rev. C), Generator Assembly 100F
010F20000	Sheets 1-2 (Rev. B), Fuel Capsule Assembly
010F70003	(Rev. A), Shield Body
010F70004	(Rev. A), Shield Plug
001-90064	Sheets 1-2, (Rev. A), Shipping Crate Sentinel RTG
001-90039	Sheets 1-4, (Rev. J), Pallet Assembly

THIS PAGE IS AN OVERSIZED DRAWING OR FIGURE,

THAT CAN BE VIEWED AT THE RECORD TITLED: DWG. NO. 010F10000 GENERATOR ASSEMBLY SENTINEL 100F SHEET 1 OF 3 WITHIN THIS PACKAGE...OR, BY SEARCHING USING THE DRAWING NUMBER: 010F10000

NOTE: Because of this page's large file size, it may be more convenient to copy the file to a local drive and use the Imaging (Wang) viewer, which can be accessed from the Programs/Accessories menu.

THIS PAGE IS AN OVERSIZED DRAWING OR FIGURE,

THAT CAN BE VIEWED AT THE RECORD TITLED: DWG. NO. 010F10000 GENERATOR ASSEMBLY SENTINEL 100F SHEET 2 OF 3 WITHIN THIS PACKAGE...OR, BY SEARCHING USING THE DRAWING NUMBER: 010F10000

NOTE: Because of this page's large file size, it may be more convenient to copy the file to a local drive and use the Imaging (Wang) viewer, which can be accessed from the Programs/Accessories menu.

THIS PAGE IS AN OVERSIZED DRAWING OR FIGURE,

THAT CAN BE VIEWED AT THE RECORD TITLED: DWG. NO. 010F10000 GENERATOR ASSEMBLY SENTINEL 100F SHEET 3 OF 3 WITHIN THIS PACKAGE...OR, BY SEARCHING USING THE DRAWING NUMBER: 010F10000

NOTE: Because of this page's large file size, it may be more convenient to copy the file to a local drive and use the Imaging (Wang) viewer, which can be accessed from the Programs/Accessories menu.

THIS PAGE IS AN OVERSIZED DRAWING OR FIGURE,

THAT CAN BE VIEWED AT THE RECORD TITLED: DWG. NO. 010-20000 FUEL CAPSULE ASSEMBLY SHEET 1 OF 2 WITHIN THIS PACKAGE...OR, BY SEARCHING USING THE DRAWING NUMBER: 010-20000

NOTE: Because of this page's large file size, it may be more convenient to copy the file to a local drive and use the Imaging (Wang) viewer, which can be accessed from the Programs/Accessories menu.

THIS PAGE IS AN OVERSIZED DRAWING OR FIGURE,

THAT CAN BE VIEWED AT THE RECORD TITLED: DWG. NO. 010-20000 FUEL CAPSULE ASSEMBLY SHEET 2 OF 2 WITHIN THIS PACKAGE...OR, BY SEARCHING USING THE DRAWING NUMBER: 010-20000

NOTE: Because of this page's large file size, it may be more convenient to copy the file to a local drive and use the Imaging (Wang) viewer, which can be accessed from the Programs/Accessories menu.

THIS PAGE IS AN OVERSIZED DRAWING OR FIGURE,

THAT CAN BE VIEWED AT THE RECORD TITLED: DWG. NO. 010F70003 SHIELD BODY WITHIN THIS PACKAGE...OR, BY SEARCHING USING THE DRAWING NUMBER: 010F70003

NOTE: Because of this page's large file size, it may be more convenient to copy the file to a local drive and use the Imaging (Wang) viewer, which can be accessed from the Programs/Accessories menu.

THIS PAGE IS AN OVERSIZED DRAWING OR FIGURE,

THAT CAN BE VIEWED AT THE RECORD TITLED: DWG. NO. 010F70004 SHIELD PLUG WITHIN THIS PACKAGE...OR, BY SEARCHING USING THE DRAWING NUMBER: 010F70004

NOTE: Because of this page's large file size, it may be more convenient to copy the file to a local drive and use the Imaging (Wang) viewer, which can be accessed from the Programs/Accessories menu.

THIS PAGE IS AN OVERSIZED DRAWING OR FIGURE,

THAT CAN BE VIEWED AT THE RECORD TITLED: DWG. NO. 001-90064 SHIPPING CRATE SENTINEL RTG SHEET 1 OF 2 WITHIN THIS PACKAGE...OR, BY SEARCHING USING THE DRAWING NUMBER: 001-90064

NOTE: Because of this page's large file size, it may be more convenient to copy the file to a local drive and use the Imaging (Wang) viewer, which can be accessed from the Programs/Accessories menu.

THIS PAGE IS AN OVERSIZED DRAWING OR FIGURE,

THAT CAN BE VIEWED AT THE RECORD TITLED:
DWG. NO. 010-90064
SHIPPING CRATE
SENTINEL RTG
SHEET 2 OF 2
WITHIN THIS PACKAGE...OR, BY SEARCHING USING THE DRAWING NUMBER:
010-90064

NOTE: Because of this page's large file size, it may be more convenient to copy the file to a local drive and use the Imaging (Wang) viewer, which can be accessed from the Programs/Accessories menu.

THIS PAGE IS AN OVERSIZED DRAWING OR FIGURE,

THAT CAN BE VIEWED AT THE RECORD TITLED:
DWG. NO. 001-90039
PALLET ASSY
SHEET 1 OF 4
WITHIN THIS PACKAGE...OR, BY SEARCHING USING THE DRAWING NUMBER:
001-90039

NOTE: Because of this page's large file size, it may be more convenient to copy the file to a local drive and use the Imaging (Wang) viewer, which can be accessed from the Programs/Accessories menu.

THIS PAGE IS AN OVERSIZED DRAWING OR FIGURE,

THAT CAN BE VIEWED AT THE RECORD TITLED:
DWG. NO. 001-90039
PALLET ASSY
SHEET 2 OF 4
WITHIN THIS PACKAGE...OR, BY SEARCHING USING THE DRAWING NUMBER:
001-90039

NOTE: Because of this page's large file size, it may be more convenient to copy the file to a local drive and use the Imaging (Wang) viewer, which can be accessed from the Programs/Accessories menu.

THIS PAGE IS AN OVERSIZED DRAWING OR FIGURE,

THAT CAN BE VIEWED AT THE RECORD TITLED:
DWG. NO. 001-90039
PALLET ASSY
SHEET 3 OF 4
WITHIN THIS PACKAGE...OR, BY SEARCHING USING THE DRAWING NUMBER:
001-90039

NOTE: Because of this page's large file size, it may be more convenient to copy the file to a local drive and use the Imaging (Wang) viewer, which can be accessed from the Programs/Accessories menu.

THIS PAGE IS AN OVERSIZED DRAWING OR FIGURE,

THAT CAN BE VIEWED AT THE RECORD TITLED:
DWG. NO. 001-90039
PALLET ASSY
SHEET 4 OF 4
WITHIN THIS PACKAGE...OR, BY SEARCHING USING THE DRAWING NUMBER:
001-90039

NOTE: Because of this page's large file size, it may be more convenient to copy the file to a local drive and use the Imaging (Wang) viewer, which can be accessed from the Programs/Accessories menu.