Technology MATTERS™

Presentation to USNRC
Oct. 18th 2006

Resolution of GSI 191
Overview of CCI chemical testing

Presented by: Tobias E. Zieger
Deputy Director Nuclear Division
CCI AG Switzerland

Basic layout of MFT loop

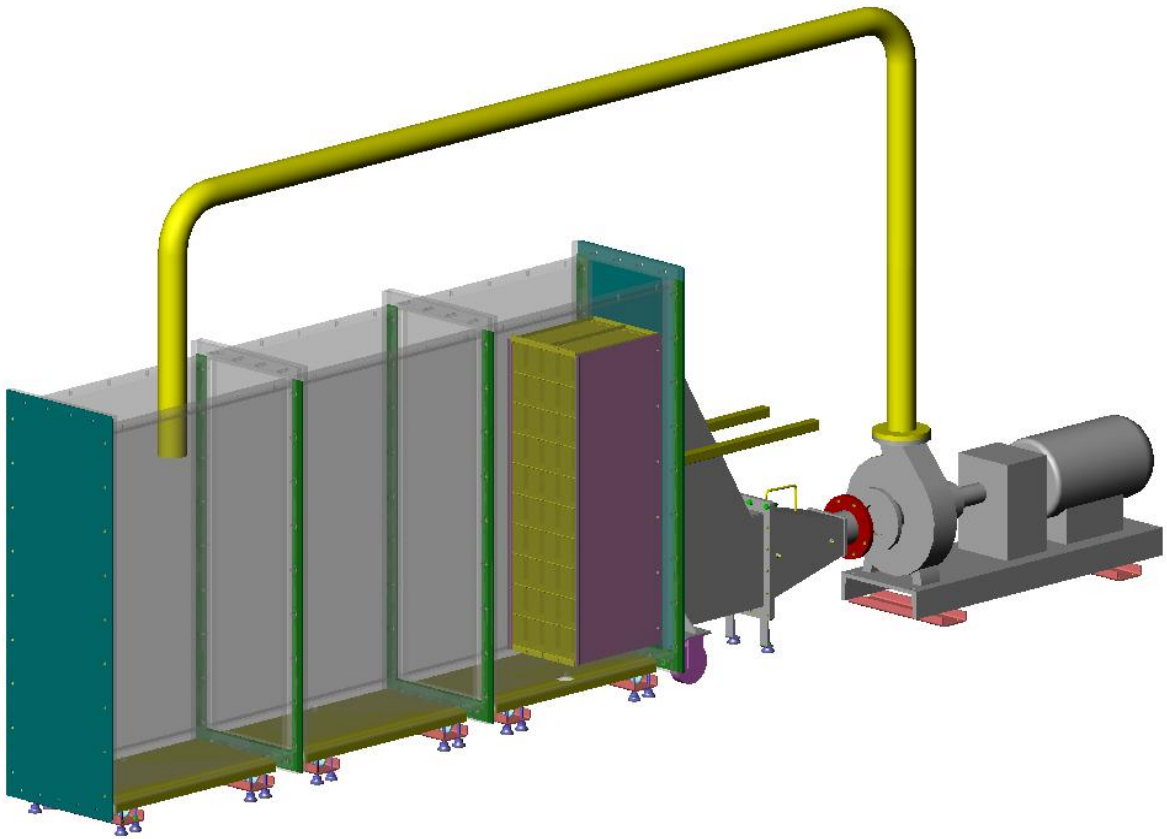

© 2003. CCI – Control Components

Basic layout of MFT loop

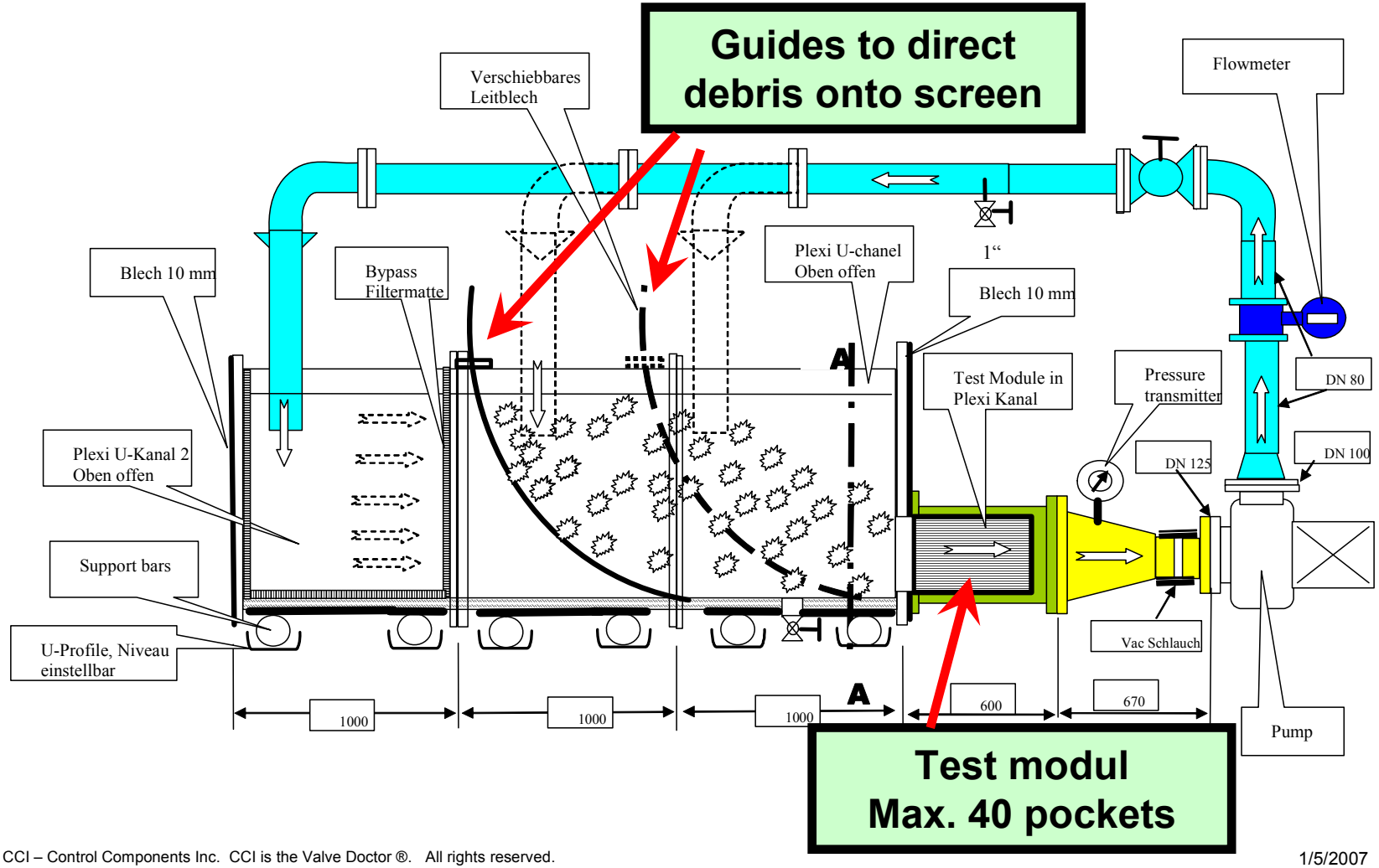

© 2003. CCI – Control Components Inc. CCI is the Valve Doctor ®. All rights reserved.

Head Loss due to Chemical Effects

- Head loss testing was done with chemical precipitants on Aluminum basis
- The chemical particulate generator is the loop itself
- Consideration of two scaling factors :
  - Pool water volume scaling
  - Screen size and flow rate scaling

© 2003. CCI – Control Components Inc. CCI is the Valve Doctor ®. All rights reserved.

Chemical Effects Test Input Data

- Dissolved post-LOCA sump chemical quantities based on WCAP-16530-NP
- 30 day integrated value for chemical quantities
- Primary precipitants (for NaOH buffer):
  - Aluminum Oxyhydroxide
  - Sodium Aluminum Silicate

© 2003. CCI – Control Components Inc. CCI is the Valve Doctor ®. All rights reserved.

Chemical Effects Test Input Data (ctd.)

- Transient sump & spray temperature & pH
- Insulation inventory (fiber, calcium silicate, etc.) based on debris generation calculation
- Detailed aluminum inventory (submerged & non-submerged)
- Detailed concrete inventory (submerged & non-submerged)
- Latent debris (fiber & concrete) based on walkdowns

© 2003. CCI – Control Components Inc. CCI is the Valve Doctor ®. All rights reserved.

Head Loss due to Chemical Effects

- Surrogate chemistry in test :
  - Boric acid (2500 ppm as boron)
  - Add Sodium Aluminate solution
  - Add Calcium Chloride solution
  - Add Sodium Silicate solution

→ **Precipitation of Aluminum Hydroxide as chemical surrogate of Aluminum Oxyhydroxide**

© 2003. CCI – Control Components Inc. CCI is the Valve Doctor ®. All rights reserved.

Chemical laboratory bench tests

- Influence of tap water chemistry:
  - Chemical assay of tap water
  - Lab test of precipitants formation with tap and deionized water

  → **No difference was found**

- Investigation on surrogate material stone flour (for coatings)
  - Chemical assay of surrogate
  - Dissolution test in boric acid

  → **Using stone flour is conservative**

- Integral chemical tests with all chemical contributors
  - Solution samples taken for further analysis

  → **Perform test with tap water and maintain pH**

© 2003. CCI – Control Components Inc. CCI is the Valve Doctor ®. All rights reserved.

Chemical laboratory bench tests (ctd.)

Performed at room temperature
Continuously stirred
Solution pH and viscosity measured after each chemical addition

- Determine if pH adjustment required to match plant sump pH
- Determination of total suspended solids
- Determination of total amounts of Na, Ca, Al, and Si
- Precipitate settling rates analyses
- Precipitate size analyses
- Precipitate filterability

Was found to be consistent with WCAP data

© 2003. CCI – Control Components Inc. CCI is the Valve Doctor ®. All rights reserved.

Head Loss due to Chemical Effects

- Filter surface approach velocity 0,0117 ft / s
- Equivalent fiber bed thickness 0,054 inch
- Test performed at ambient temperature
- Test matrix:

Test	RMI	Stone Flour	Zinc Dust	Transco	Glass	Boric Acid	Sodium Aluminat	Calzium Clorid	Sodium Silicate	Sodium Hydroxide	Nitric Acid
(Nr.)	(kg)	(kg)	(kg)	(kg)	(kg)	(kg)	(kg)	(kg)	(kg)	(kg)	(kg)
1	13.243	51.9	104.73	0.253	0.407						
2	13.243	76.6	37.37	0.253	0.407						
3	13.243	51.9	104.73	0.253	0.407	31.033	65.414	4.794	1.85	2.399	26.4
4		51.9	104.73	0.253	0.407	31.629	64.13	4.701	1.812	0	17.363
5	13.246	51.9	104.73	0.253	0.407	31.323	64.288	4.712	1.82	0	19.615

© 2003. CCI – Control Components Inc. CCI is the Valve Doctor ®. All rights reserved.

Head Loss testing with chemicals

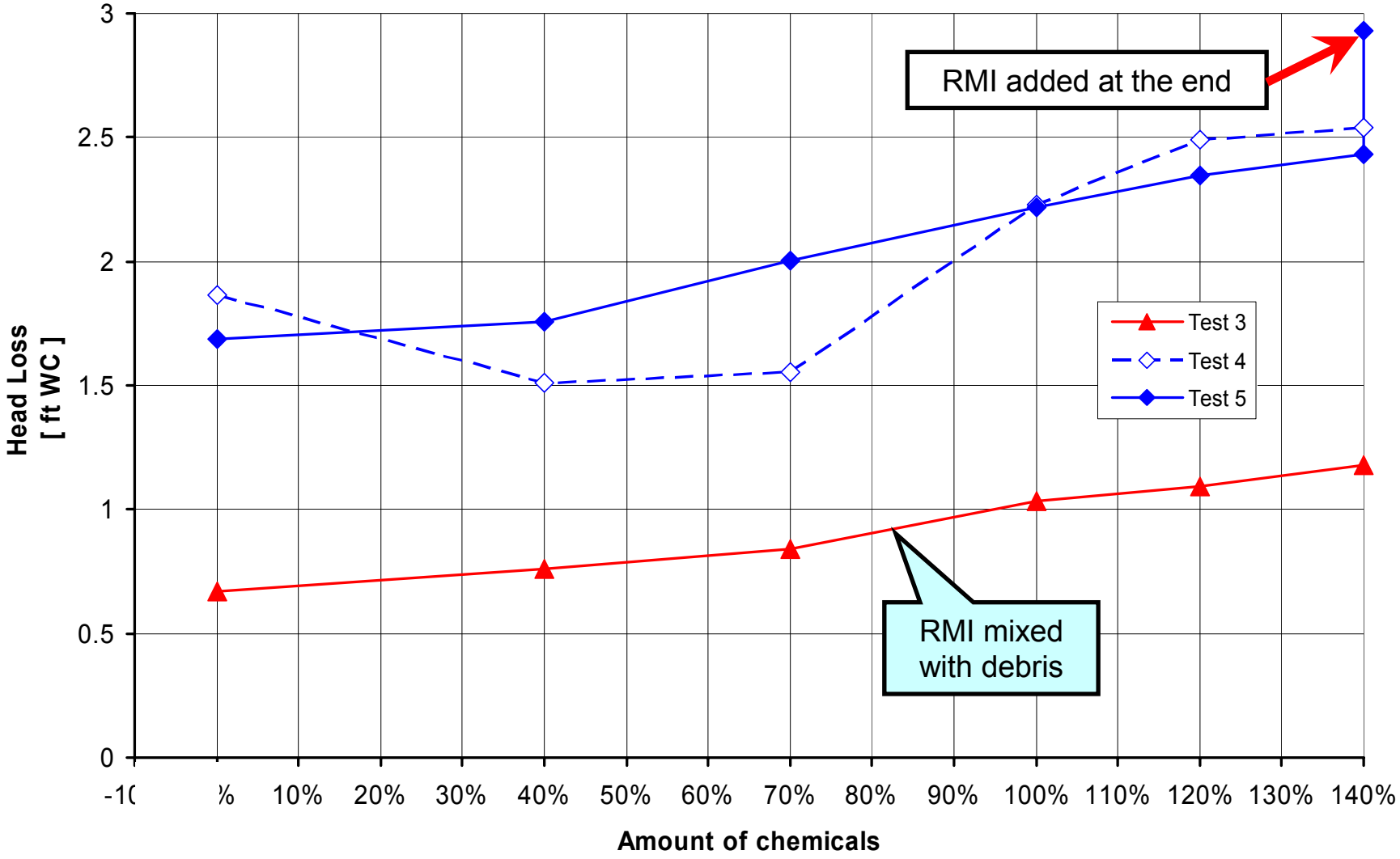

© 2003. CCI – Control Components Inc. CCI is the Valve Doctor ®. All rights reserved.

RMI introduced with debris (Test 3)

Strainer submerged under RMI

© 2003. CCI – Control Components Inc. CCI is the Valve Doctor ®. All rights reserved.

Test 4 without RMI

© 2003. CCI – Control Components Inc. CCI is the Valve Doctor ®. All rights reserved.

Head Loss due to Chemical Effects Conclusions

- Tests performed by CCI so far didn't show significant increase in Headloss
- Repeatability for tests with same conditions is relatively good
- If fibers and particulates are mixed with RMI Headloss is significantly less than without RMI

© 2003. CCI – Control Components Inc. CCI is the Valve Doctor ®. All rights reserved.