GE Nuclear Energy

26A6642AK
Revision 2
October 2006

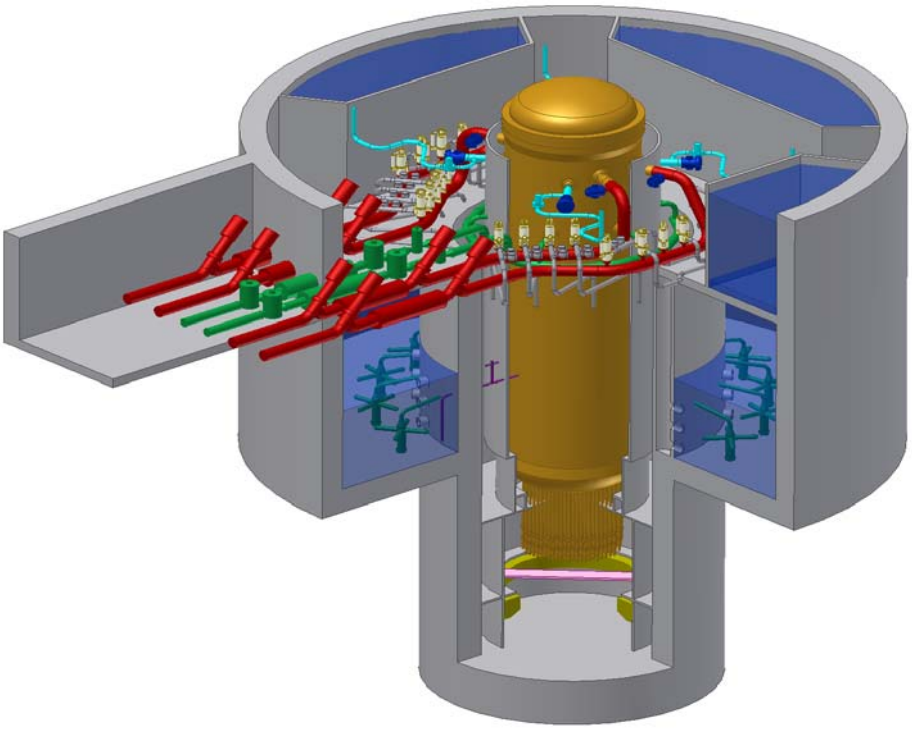

ESBWR Design Control Document

Tier 2

Chapter 3

Design of Structures, Components, Equipment, and Systems

Sections 3.9 - 3.11

Contents

3.9 Mechanical Systems and Components 3.9-1
3.9.1 Special Topics for Mechanical Components 3.9-1
3.9.1.1 Design Transients 3.9-1
3.9.1.2 Computer Programs Used in Analyses 3.9-2
3.9.1.3 Experimental Stress Analysis 3.9-2
3.9.1.4 Considerations for the Evaluation of Faulted Condition 3.9-2
3.9.2 Dynamic Testing and Analysis of Systems, Components and Equipment 3.9-5
3.9.2.1 Piping Vibration, Thermal Expansion and Dynamic Effects 3.9-5
3.9.2.2 Seismic Qualification of Safety-Related Mechanical Equipment (Including Other RBV Induced Loads) 3.9-10
3.9.2.3 Dynamic Response of Reactor Internals Under Operational Flow Transients and Steady-State Conditions 3.9-15
3.9.2.4 Initial Startup Flow-Induced Vibration Testing of Reactor Internals 3.9-16
3.9.2.5 Dynamic System Analysis of Reactor Internals Under Faulted Conditions 3.9-17
3.9.2.6 Correlations of Reactor Internals Vibration Tests with the Analytical Results 3.9-18
3.9.3 ASME Code Class 1, 2 and 3 Components, Component Supports and Core Support Structures 3.9-19
3.9.3.1 Loading Combinations, Design Transients and Stress Limits 3.9-19
3.9.3.2 Reactor Pressure Vessel Assembly 3.9-22
3.9.3.3 Main Steam (MS) System Piping 3.9-22
3.9.3.4 Other Components 3.9-23
3.9.3.5 Valve Operability Assurance 3.9-24
3.9.3.6 Design and Installation of Pressure Relief Devices 3.9-28
3.9.3.7 Component Supports 3.9-30
3.9.3.8 Other ASME III Component Supports 3.9-35
3.9.4 Control Rod Drive (CRD) System 3.9-36
3.9.4.1 Descriptive Information on CRD System 3.9-37
3.9.4.2 Applicable CRD System Design Specification 3.9-37
3.9.4.3 Design Loads and Stress Limits 3.9-37
3.9.4.4 CRD Performance Assurance Program 3.9-37
3.9.5 Reactor Pressure Vessel Internals 3.9-38
3.9.5.1 Core Support Structures 3.9-39
3.9.5.2 Internal Structures 3.9-40
3.9.5.3 Loading Conditions 3.9-42
3.9.5.4 Design Bases 3.9-43
3.9.6 In-Service Testing of Pumps and Valves 3.9-45
3.9.6.1 In-Service Testing of Safety-Related Valves 3.9-46
3.9.7 Risk-Informed In-Service Testing 3.9-47
3.9.8 Risk-Informed In-Service Inspection of Piping 3.9-47
3.9.9 COL Information 3.9-47
3.9.9.1 Reactor Internals Vibration Analysis, Measurement and Inspection Program 3.9-47
3.9.9.2 ASME Class 2 or 3 or Quality Group D Components with 60 Year Design Life 3.9-48
3.9.9.3 Pump and Valve In-Service Testing Program 3.9-48

3.9.9.4 Audit of Design Specification and Design Reports 3.9-48
3.9.10 References 3.9-48
3.10 Seismic and Dynamic Qualification of Mechanical and Electrical Equipment 3.10-1
3.10.1 Seismic and Dynamic Qualification Criteria 3.10-2
3.10.1.1 Selection of Qualification Method 3.10-2
3.10.1.2 Input Motion 3.10-3
3.10.1.3 Dynamic Qualification Program 3.10-3
3.10.2 Methods and Procedures for Qualifying Electrical Equipment 3.10-3
3.10.2.1 Qualification by Testing 3.10-4
3.10.2.2 Qualification by Analysis 3.10-6
3.10.2.3 Qualification by Combined Testing and Analysis 3.10-7
3.10.2.4 Qualification by Experience 3.10-8
3.10.3 Analysis or Testing of Electrical Equipment Supports 3.10-8
3.10.3.1 NSSS Electrical Equipment Supports (Other than Motors and Valve-Mounted Equipment) 3.10-9
3.10.3.2 Other Electrical Equipment Supports 3.10-10
3.10.4 Combined Operating License Information 3.10-11
3.10.5 References 3.10-11
3.11 Environmental Qualification of Mechanical and Electrical Equipment 3.11-1
3.11.1 Equipment Identification 3.11-3
3.11.2 Environmental Conditions 3.11-3
3.11.2.1 General Requirements 3.11-3
3.11.2.2 Qualification Program, Methods and Documentation 3.11-5
3.11.3 Loss of Heating, Ventilating and Air Conditioning 3.11-5
3.11.4 Estimated Chemical and Radiation Environment 3.11-6
3.11.5 Combined Operating License Information 3.11-6
3.11.6 References 3.11-7

List of Tables

Table 3.9-1 Plant Events
Table 3.9-2 Load Combinations and Acceptance Criteria for Safety-Related, ASME Code Class 1, 2 and 3 Components, Component Supports, and Class CS Structures
Table 3.9-3 Pressure Differentials Across Reactor Vessel Internals
Table 3.9-4 Deformation Limit for Safety Class Reactor Internal Structures Only
Table 3.9-5 Primary Stress Limit for Safety Class Reactor Internal Structures Only
Table 3.9-6 Buckling Stability Limit for Safety Class Reactor Internal Structures Only
Table 3.9-7 Fatigue Limit for Safety Class Reactor Internal Structures Only
Table 3.9-8 In-Service Testing
Table 3.9-9 Load Combinations and Acceptance Criteria for Class 1 Piping Systems
Table 3.9-10 Snubber Loads
Table 3.9-11 Strut Loads
Table 3.9-12 Linear Type (Anchor and Guide) Main Steam Piping Support

List of Illustrations

Figure 3.9-1. Stress-Strain Curve for Blowout Restraints
Figure 3.9-2. Minimum Floodable Volume
Figure 3.9-3. Recirculation Flow Path
Figure 3.9-4. Fuel Support Pieces
Figure 3.9-5. Pressure Nodes for Depressurization Analysis

Abbreviations And Acronyms

Term	Definition
10 CFR	Title 10, Code of Federal Regulations
A/D	Analog-to-Digital
AASHTO	American Association of Highway and Transportation Officials
AB	Auxiliary Boiler
ABS	Auxiliary Boiler System
ABWR	Advanced Boiling Water Reactor
ac / AC	Alternating Current
AC	Air Conditioning
ACF	Automatic Control Function
ACI	American Concrete Institute
ACS	Atmospheric Control System
AD	Administration Building
ADS	Automatic Depressurization System
AEC	Atomic Energy Commission
AFIP	Automated Fixed In-Core Probe
AGMA	American Gear Manufacturer's Association
AHS	Auxiliary Heat Sink
AISC	American Institute of Steel Construction
AISI	American Iron and Steel Institute
AL	Analytical Limit
ALARA	As Low As Reasonably Achievable
ALWR	Advanced Light Water Reactor
ANS	American Nuclear Society
ANSI	American National Standards Institute
AOO	Anticipated Operational Occurrence
AOV	Air Operated Valve
API	American Petroleum Institute
APLHGR	Average Planar Linear Heat Generation Rate
APRM	Average Power Range Monitor
APR	Automatic Power Regulator
APRS	Automatic Power Regulator System
ARI	Alternate Rod Insertion
ARMS	Area Radiation Monitoring System
ASA	American Standards Association
ASD	Adjustable Speed Drive
ASHRAE	American Society of Heating, Refrigerating, and Air Conditioning Engineers
ASME	American Society of Mechanical Engineers
AST	Alternate Source Term
ASTM	American Society of Testing Methods

Term	Definition
AT	Unit Auxiliary Transformer
ATLM	Automated Thermal Limit Monitor
ATWS	Anticipated Transients Without Scram
AV	Allowable Value
AWS	American Welding Society
AWWA	American Water Works Association
B&PV	Boiler and Pressure Vessel
BAF	Bottom of Active Fuel
BHP	Brake Horse Power
BOP	Balance of Plant
BPU	Bypass Unit
BPWS	Banked Position Withdrawal Sequence
BRE	Battery Room Exhaust
BRL	Background Radiation Level
BTP	NRC Branch Technical Position
BTU	British Thermal Unit
BWR	Boiling Water Reactor
BWROG	Boiling Water Reactor Owners Group
CAV	Cumulative Absolute Velocity
C&FS	Condensate and Feedwater System
C&I	Control and Instrumentation
C/C	Cooling and Cleanup
CB	Control Building
CBHVAC	Control Building HVAC
CCI	Core-Concrete Interaction
CDF	Core Damage Frequency
CFR	Code of Federal Regulations
CIRC	Circulating Water System
CIS	Containment Inerting System
CIV	Combined Intermediate Valve
CLAVS	Clean Area Ventilation Subsystem of Reactor Building HVAC
CM	Cold Machine Shop
CMS	Containment Monitoring System
CMU	Control Room Multiplexing Unit
COL	Combined Operating License
COLR	Core Operating Limits Report
CONAVS	Controlled Area Ventilation Subsystem of Reactor Building HVAC
CPR	Critical Power Ratio
CPS	Condensate Purification System
CPU	Central Processing Unit

Term	Definition
CR	Control Rod
CRD	Control Rod Drive
CRDA	Control Rod Drop Accident
CRDH	Control Rod Drive Housing
CRDHS	Control Rod Drive Hydraulic System
CRGT	Control Rod Guide Tube
CRHA	Control Room Habitability Area
CRT	Cathode Ray Tube
CS&TS	Condensate Storage and Transfer System
CSDM	Cold Shutdown Margin
CS / CST	Condensate Storage Tank
CT	Main Cooling Tower
CTVCF	Constant Voltage Constant Frequency
CUF	Cumulative usage factor
CWS	Chilled Water System
D-RAP	Design Reliability Assurance Program
DAC	Design Acceptance Criteria
DAW	Dry Active Waste
DBA	Design Basis Accident
dc / DC	Direct Current
DCS	Drywell Cooling System
DCIS	Distributed Control and Information System
DEPSS	Drywell Equipment and Pipe Support Structure
DF	Decontamination Factor
D/F	Diaphragm Floor
DG	Diesel-Generator
DHR	Decay Heat Removal
DM&C	Digital Measurement and Control
DOF	Degree of freedom
DOI	Dedicated Operators Interface
DOT	Department of Transportation
dPT	Differential Pressure Transmitter
DPS	Diverse Protection System
DPV	Depressurization Valve
DQR	Dynamic Qualification Report
DR&T	Design Review and Testing
DTM	Digital Trip Module
DW	Drywell
EB	Electrical Building
EBAS	Emergency Breathing Air System

Term	Definition
EBHV	Electrical Building HVAC
ECCS	Emergency Core Cooling System
E-DCIS	Essential DCIS (Distributed Control and Information System)
EDO	Environmental Qualification Document
EFDS	Equipment and Floor Drainage System
EFPY	Effective full power years
EHC	Electrohydraulic Control (Pressure Regulator)
ENS	Emergency Notification System
EOC	Emergency Operations Center
EOC	End of Cycle
EOF	Emergency Operations Facility
EOP	Emergency Operating Procedures
EPDS	Electric Power Distribution System
EPG	Emergency Procedure Guidelines
EPRI	Electric Power Research Institute
EQ	Environmental Qualification
EQD	Environmental Qualification Document
ERICP	Emergency Rod Insertion Control Panel
ERIP	Emergency Rod Insertion Panel
ESF	Engineered Safety Feature
ETS	Emergency Trip System
FAC	Flow-Accelerated Corrosion
FAPCS	Fuel and Auxiliary Pools Cooling System
FATT	Fracture Appearance Transition Temperature
FB	Fuel Building
FBHV	Fuel Building HVAC
FCI	Fuel-Coolant Interaction
FCM	File Control Module
FCS	Flammability Control System
FCU	Fan Cooling Unit
FDDI	Fiber Distributed Data Interface
FFT	Fast Fourier Transform
FFWTR	Final Feedwater Temperature Reduction
FHA	Fire Hazards Analysis
FIV	Flow-Induced Vibration
FMCRD	Fine Motion Control Rod Drive
FMEA	Failure Modes and Effects Analysis
FPS	Fire Protection System
FO	Diesel Fuel Oil Storage Tank
FOAKE	First-of-a-Kind Engineering

Term	Definition
FPE	Fire Pump Enclosure
FTDC	Fault-Tolerant Digital Controller
FTS	Fuel Transfer System
FW	Feedwater
FWCS	Feedwater Control System
FWS	Fire Water Storage Tank
GCS	Generator Cooling System
GDC	General Design Criteria
GDCS	Gravity-Driven Cooling System
GE	General Electric Company
GE-NE	GE Nuclear Energy
GEN	Main Generator System
GETAB	General Electric Thermal Analysis Basis
GL	Generic Letter
GM	Geiger-Mueller Counter
GM-B	Beta-Sensitive GM Detector
GSIC	Gamma-Sensitive Ion Chamber
GSOS	Generator Sealing Oil System
GWSR	Ganged Withdrawal Sequence Restriction
HAZ	Heat-Affected Zone
HCU	Hydraulic Control Unit
HCW	High Conductivity Waste
HDVS	Heater Drain and Vent System
HEI	Heat Exchange Institute
HELB	High Energy Line Break
HEP	Human error probability
HEPA	High Efficiency Particulate Air/Absolute
HFE	Human Factors Engineering
HFF	Hollow Fiber Filter
HGCS	Hydrogen Gas Cooling System
HIC	High Integrity Container
HID	High Intensity Discharge
HIS	Hydraulic Institute Standards
HM	Hot Machine Shop & Storage
HP	High Pressure
HPNSS	High Pressure Nitrogen Supply System
HPT	High-pressure turbine
HRA	Human Reliability Assessment
HSI	Human-System Interface
HSSS	Hardware/Software System Specification

Term	Definition
HVAC	Heating, Ventilation and Air Conditioning
HVS	High Velocity Separator
HWCS	Hydrogen Water Chemistry System
HWS	Hot Water System
HX	Heat Exchanger
I&C	Instrumentation and Control
I/O	Input/Output
IAS	Instrument Air System
IASCC	Irradiation Assisted Stress Corrosion Cracking
IBC	International Building Code
IBL	Intermediate Break LOCA
IC	Isolation Condenser
ICD	Interface Control Diagram
ICS	Isolation Condenser System
IE	Inspection and Enforcement
IEB	Inspection and Enforcement Bulletin
IED	Instrument and Electrical Diagram
IEEE	Institute of Electrical and Electronic Engineers
IGSCC	Intergranular Stress Corrosion Cracking
IIS	Iron Injection System
ILRT	Integrated Leak Rate Test
IOP	Integrated Operating Procedure
IOT	Infrequent Operational Transient
IMC	Induction Motor Controller
IMCC	Induction Motor Controller Cabinet
IRM	Intermediate Range Monitor
ISA	Instrument Society of America
ISI	In-Service Inspection
ISLT	In-Service Leak Test
ISM	Independent Support Motion
ISMA	Independent Support Motion Response Spectrum Analysis
ISO	International Standards Organization
ITA	Inspections, Tests or Analyses
ITAAC	Inspections, Tests, Analyses and Acceptance Criteria
ITA	Initial Test Program
LAPP	Loss of Alternate Preferred Power
LCO	Limiting Conditions for Operation
LCW	Low Conductivity Waste
LD	Logic Diagram
LDA	Lay down Area

Term	Definition
LD&IS	Leak Detection and Isolation System
LERF	Large early release frequency
LFCV	Low Flow Control Valve
LHGR	Linear Heat Generation Rate
LLRT	Local Leak Rate Test
LMU	Local Multiplexer Unit
LO	Dirty/Clean Lube Oil Storage Tank
LOCA	Loss-of-Coolant-Accident
LOFW	Loss-of-Feedwater
LOOP	Loss of Offsite Power
LOPP	Loss of Preferred Power
LP	Low Pressure
LPCI	Low Pressure Coolant Injection
LPCRD	Locking Piston Control Rod Drive
LPMS	Loose Parts Monitoring System
LPRM	Local Power Range Monitor
LPSP	Low Power Setpoint
LWMS	Liquid Waste Management System
MAAP	Modular Accident Analysis Program
MAPLHGR	Maximum Average Planar Linear Head Generation Rate
MAPRAT	Maximum Average Planar Ratio
MBB	Motor Built-In Brake
MCC	Motor Control Center
MCES	Main Condenser Evacuation System
MCPR	Minimum Critical Power Ratio
MCR	Main Control Room
MCRP	Main Control Room Panel
MELB	Moderate Energy Line Break
MLHGR	Maximum Linear Heat Generation Rate
MMI	Man-Machine Interface
MMIS	Man-Machine Interface Systems
MOV	Motor-Operated Valve
MPC	Maximum Permissible Concentration
MPL	Master Parts List
MS	Main Steam
MSIV	Main Steam Isolation Valve
MSL	Main Steamline
MSLB	Main Steamline Break
MSLBA	Main Steamline Break Accident
MSR	Moisture Separator Reheater

Term	Definition
MSV	Mean Square Voltage
MT	Main Transformer
MTTR	Mean Time To Repair
MWS	Makeup Water System
NBR	Nuclear Boiler Rated
NBS	Nuclear Boiler System
NCIG	Nuclear Construction Issues Group
NDE	Nondestructive Examination
NE-DCIS	Non-Essential Distributed Control and Information System
NDRC	National Defense Research Committee
NDT	Nil Ductility Temperature
NFPA	National Fire Protection Association
NIST	National Institute of Standard Technology
NLF	Non-LOCA Fault
NMS	Neutron Monitoring System
NOV	Nitrogen Operated Valve
NPHS	Normal Power Heat Sink
NPSH	Net Positive Suction Head
NRC	Nuclear Regulatory Commission
NRHX	Non-Regenerative Heat Exchanger
NS	Non-seismic
NSSS	Nuclear Steam Supply System
NT	Nitrogen Storage Tank
NTSP	Nominal Trip Setpoint
O&M	Operation and Maintenance
O-RAP	Operational Reliability Assurance Program
OBCV	Overboard Control Valve
OBE	Operating Basis Earthquake
OGS	Offgas System
OHLHS	Overhead Heavy Load Handling System
OIS	Oxygen Injection System
OLMCPR	Operating Limit Minimum Critical Power Ratio
OLU	Output Logic Unit
OOS	Out-of-service
ORNL	Oak Ridge National Laboratory
OSC	Operational Support Center
OSHA	Occupational Safety and Health Administration
OSI	Open Systems Interconnect
P&ID	Piping and Instrumentation Diagram
PA/PL	Page/Party-Line

Term	Definition
PABX	Private Automatic Branch (Telephone) Exchange
PAM	Post Accident Monitoring
PAR	Passive Autocatalytic Recombiner
PAS	Plant Automation System
PASS	Post Accident Sampling Subsystem of Containment Monitoring System
PCC	Passive Containment Cooling
PCCS	Passive Containment Cooling System
PCT	Peak cladding temperature
PCV	Primary Containment Vessel
PFD	Process Flow Diagram
PGA	Peak Ground Acceleration
PGCS	Power Generation and Control Subsystem of Plant Automation System
PH	Pump House
PL	Parking Lot
PM	Preventive Maintenance
PMCS	Performance Monitoring and Control Subsystem of NE-DCIS
PMF	Probable Maximum Flood
PMP	Probable Maximum Precipitation
PQCL	Product Quality Check List
PRA	Probabilistic Risk Assessment
PRMS	Process Radiation Monitoring System
PRNM	Power Range Neutron Monitoring
PS	Plant Stack
PSD	Power Spectra Density
PSS	Process Sampling System
PSWS	Plant Service Water System
PT	Pressure Transmitter
PWR	Pressurized Water Reactor
QA	Quality Assurance
RACS	Rod Action Control Subsystem
RAM	Reliability, Availability and Maintainability
RAPI	Rod Action and Position Information
RAT	Reserve Auxiliary Transformer
RB	Reactor Building
RBC	Rod Brake Controller
RBCC	Rod Brake Controller Cabinet
RBCWS	Reactor Building Chilled Water Subsystem
RBHV	Reactor Building HVAC
RBS	Rod Block Setpoint
RBV	Reactor Building Vibration

Term	Definition
RC&IS	Rod Control and Information System
RCC	Remote Communication Cabinet
RCCV	Reinforced Concrete Containment Vessel
RCCWS	Reactor Component Cooling Water System
RCPB	Reactor Coolant Pressure Boundary
RCS	Reactor Coolant System
RDA	Rod Drop Accident
RDC	Resolver-to-Digital Converter
REPAVS	Refueling and Pool Area Ventilation Subsystem of Fuel Building HVAC
RFP	Reactor Feed Pump
RG	Regulatory Guide
RHR	Residual Heat Removal (function)
RHX	Regenerative Heat Exchanger
RMS	Root Mean Square
RMS	Radiation Monitoring Subsystem
RMU	Remote Multiplexer Unit
RO	Reverse Osmosis
ROM	Read-only Memory
RPS	Reactor Protection System
RPV	Reactor Pressure Vessel
RRPS	Reference Rod Pull Sequence
RRS	Required Response Spectra
RSM	Rod Server Module
RSPC	Rod Server Processing Channel
RSS	Remote Shutdown System
RSSM	Reed Switch Sensor Module
RSW	Reactor Shield Wall
RTIF	Reactor Trip and Isolation Function(s)
RT_{NDT}	Reference Temperature of Nil-Ductility Transition
RTP	Reactor Thermal Power
RV	Relief Valve
RW	Radwaste Building
RWCU/SDC	Reactor Water Cleanup/Shutdown Cooling
RWE	Rod Withdrawal Error
RWM	Rod Worth Minimizer
SA	Severe Accident
SAR	Safety Analysis Report
SB	Service Building
SBL	Small Break LOCA
S/C	Digital Gamma-Sensitive GM Detector

Term	Definition
SC	Suppression Chamber
S/D	Scintillation Detector
S/DRSRO	Single/Dual Rod Sequence Restriction Override
S/N	Signal-to-Noise
S/P	Suppression Pool
SAS	Service Air System
SB&PC	Steam Bypass and Pressure Control System
SBO	Station Blackout
SBWR	Simplified Boiling Water Reactor
SCEW	System Component Evaluation Work
SCRRI	Selected Control Rod Run-in
SDC	Shutdown Cooling
SDM	Shutdown Margin
SDS	System Design Specification
SEOA	Sealed Emergency Operating Area
SER	Safety Evaluation Report
SF	Service Water Building
SFP	Spent fuel pool
SIL	Service Information Letter
SIT	Structural Integrity Test
SIU	Signal Interface Unit
SJAE	Steam Jet Air Ejector
SLC	Standby Liquid Control
SLCS	Standby Liquid Control System
SLMCPR	Safety Limit Minimum Critical Power Ratio
SMU	SSLC Multiplexing Unit
SOT	System Operational Transient
SOV	Solenoid Operated Valve
SP	Setpoint
SPC	Suppression Pool Cooling
SPDS	Safety Parameter Display System
SPTMS	Suppression Pool Temperature Monitoring Subsystem of Containment Monitoring System
SR	Surveillance Requirement
SRM	Source Range Monitor
SRNM	Startup Range Neutron Monitor
SRO	Senior Reactor Operator
SRP	Standard Review Plan
SRS	Software Requirements Specification
SRSRO	Single Rod Sequence Restriction Override
SRSS	Square Root of the Sum of the Squares

Term	Definition
SRV	Safety Relief Valve
SRVDL	Safety relief valve discharge line
SSAR	Standard Safety Analysis Report
SSC(s)	Structure, System and Component(s)
SSE	Safe Shutdown Earthquake
SSLC	Safety System Logic and Control
SSPC	Steel Structures Painting Council
ST	Spare Transformer
STP	Sewage Treatment Plant
STRAP	Scram Time Recording and Analysis Panel
STRP	Scram Time Recording Panel
SV	Safety Valve
SWH	Static water head
SWMS	Solid Waste Management System
SY	Switch Yard
TAF	Top of Active Fuel
TASS	Turbine Auxiliary Steam System
TB	Turbine Building
TBCE	Turbine Building Compartment Exhaust
TBE	Turbine Building Exhaust
TBLOE	Turbine Building Lube Oil Area Exhaust
TBS	Turbine Bypass System
TBHV	Turbine Building HVAC
TBV	Turbine Bypass Valve
TC	Training Center
TCCWS	Turbine Component Cooling Water System
TCS	Turbine Control System
TCV	Turbine Control Valve
TDH	Total Developed Head
TEMA	Tubular Exchanger Manufacturers' Association
TFSP	Turbine first stage pressure
TG	Turbine Generator
TGSS	Turbine Gland Seal System
THA	Time-history accelerograph
TLOS	Turbine Lubricating Oil System
TLU	Trip Logic Unit
TMI	Three Mile Island
TMSS	Turbine Main Steam System
TRAC	Transient Reactor Analysis Code
TRM	Technical Requirements Manual

Term	Definition
TS	Technical Specification(s)
TSC	Technical Support Center
TSI	Turbine Supervisory Instrument
TSV	Turbine Stop Valve
UBC	Uniform Building Code
UHS	Ultimate Heat Sink
UL	Underwriter's Laboratories Inc.
UPS	Uninterruptible Power Supply
USE	Upper Shelf Energy
USM	Uniform Support Motion
USMA	Uniform Support Motion Response Spectrum Analysis
USNRC	United States Nuclear Regulatory Commission
USS	United States Standard
UV	Ultraviolet
V&V	Verification and Validation
Vac / VAC	Volts Alternating Current
Vdc / VDC	Volts Direct Current
VDU	Video Display Unit
VW	Vent Wall
VWO	Valves Wide Open
WD	Wash Down Bays
WH	Warehouse
WS	Water Storage
WT	Water Treatment
WW	Wetwell
XMFR	Transformer
ZPA	Zero Period Acceleration

3.9 MECHANICAL SYSTEMS AND COMPONENTS

3.9.1 Special Topics for Mechanical Components

This subsection addresses information concerning methods of analysis for seismic Category I components and supports, including both those designated as the American Society of Mechanical Engineers (ASME) Boiler and Pressure Vessel Code, Section III, Division 1 (hereinafter "the Code") Class 1, 2, 3, or CS and those not covered by the Code as discussed in SRP 3.9.1 Draft R3. Information is also presented concerning design transients for Code Class 1 and CS components and supports.

The plant design meets the relevant requirements of the following regulations:

(1) General Design Criterion 1 (GDC 1) as it is related to safety-related components being designed, fabricated, erected, constructed, tested and inspected in accordance with the requirements of applicable codes and standards commensurate with the importance of the safety function to be performed.

(2) GDC 2 as it relates to safety related mechanical components of systems being designed to withstand seismic events without loss of capability to perform their safety function.

(3) GDC 14 as it relates to the reactor coolant pressure boundary being designed so as to have an extremely low probability of abnormal leakage, of rapidly propagating failure, and of gross rupture.

(4) GDC 15 as it relates to the mechanical components of the reactor coolant system being designed with sufficient margin to ensure that the design conditions of the reactor coolant pressure boundary are not exceeded during any condition of normal operation, including anticipated operational occurrences.

(5) 10 CFR 50, Appendix B as it relates to design quality control.

(6) 10 CFR 100, Appendix A as it relates to the suitability of the plant design bases for mechanical components established in consideration of site seismic characteristics.

3.9.1.1 Design Transients

The plant events affecting the mechanical systems, components and equipment are summarized in Table 3.9-1 in two groups: (1) plant operating events during which thermal-hydraulic transients occur, and (2) dynamic loading events caused by accidents, earthquakes and certain operating conditions. The number of cycles associated with each event for the design of the RPV, as an example, is listed in Table 3.9-1. The plant operating conditions are identified as normal, upset, emergency, faulted, or testing as defined in Subsection 3.9.3. Appropriate Service Levels (A, B, C, D or testing) as defined in the Code, are designated for design limits. The design and analyses of safety-related piping and equipment using specific applicable thermal-hydraulic transients, which are derived from the system behavior during the events listed in Table 3.9-1, are documented in the design specifications and/or stress reports of the respective equipment. Table 3.9-2 shows the load combinations and the standard acceptance criteria. Table 3.9-9 shows the specific load combinations and acceptance criteria for Class 1 piping systems.

3.9.1.2 Computer Programs Used in Analyses

The computer programs used in the analysis of the major safety-related components are described in Appendix 3D.

The computer programs used in the analyses of Seismic Category I components are maintained either by GE or by outside computer program developers. In either case, the quality of the programs and the computed results are controlled. The programs are verified for their application by appropriate methods, such as hand calculations, or comparison with results from similar programs, experimental tests or published literature including analytical results or numerical results to the benchmark problems.

3.9.1.3 Experimental Stress Analysis

The following subsections list those NSSS components for which experimental stress analysis is performed in conjunction with analytical evaluation. The experimental stress analysis methods are used in compliance with the provisions of Appendix II of the Code.

Piping Snubbers and Restraints

The following components have been tested to verify their design adequacy:

(1) piping seismic snubbers, and

(2) pipe whip restraints.

Descriptions of the snubber and whip restraint tests are contained in Subsection 3.9.3 and Section 3.6, respectively.

Fine Motion Control Rod Drive (FMCRD)

Experimental data were used in verifying the hydraulic analysis computer code used for normal, transient and scram performance evaluations (Subsection 3D.2.1). The output of the computer code is also used for input to the dynamic analysis of both the Code and non-Code parts. Pressures used in the analysis of these parts are also determined during actual testing of the prototype FMCRD.

3.9.1.4 Considerations for the Evaluation of Faulted Condition

All Seismic Category I equipment are evaluated for the faulted (Service Level D) loading conditions identified in Tables 3.9-1 and 3.9-2. In all cases, the calculated actual stresses are within the allowable Service Level D limits. The following subsections address the evaluation methods and stress limits used for the equipment and identify the major components evaluated for faulted conditions. Additional discussion of faulted analysis can be found in Subsections 3.9.2, 3.9.3 and 3.9.5.

Deformations under faulted conditions are evaluated in critical areas and the necessary design deformation limits, such as clearance limits, are satisfied.

Fine Motion Control Rod Drive (FMCRD)

The FMCRD major components that are part of the reactor coolant pressure boundary are analyzed and evaluated for the faulted conditions in accordance with the Code, Appendix F.

Hydraulic Control Unit (HCU)

The HCU is analyzed and tested for withstanding the faulted condition loads. Dynamic tests establish the "g" loads in horizontal and vertical directions as the HCU capability for the frequency range that is likely to be experienced in the plant. These tests also ensure that the scram function of the HCU can be performed under these loads. Dynamic analysis of the HCU with the mounting beams is performed to assure that the maximum faulted condition loads remain below the HCU capability.

Reactor Pressure Vessel Assembly

The reactor pressure vessel assembly includes: (1) the reactor pressure vessel boundary out to and including the nozzles and housings for FMCRD and in-core instrumentation; (2) sliding support and (3) the shroud support brackets. The design and analysis of these three parts complies with subsections NB, NF and NG, respectively, of the Code. For faulted conditions, the reactor vessel is evaluated using elastic analysis. For the sliding supports and shroud support, an elastic analysis is performed, and buckling is evaluated for compressive load cases for certain locations in the assembly.

Core Support Structures and Other Safety-Related Reactor Internal Components

The core support structures and other safety-related reactor internal components are evaluated for faulted conditions. The basis for determining the faulted loads for seismic events and other dynamic events is given in Section 3.7 and Subsection 3.9.5, respectively. The allowable Service Level D limits for evaluation of these structures are provided in Subsection 3.9.5.

RPV Stabilizer and FMCRD and In-Core Housing Restraints (Supports)

The calculated maximum stresses meet the allowable stress limits based on the Code, Subsection NF, for the RPV stabilizer and supports for the FMCRD housing and in-core housing for faulted conditions. These supports restrain the components during earthquake, pipe rupture or other reactor building vibration events.

Main Steam Isolation Valve, Safety/Relief Valve and Other ASME Class 1 Valves

Elastic analysis methods and standard design rules, as defined in the Code, are utilized in the analysis of the pressure boundary, Seismic Category I, ASME Class 1 valves. The Code-allowable stresses are applied to assure integrity under applicable loading conditions including faulted condition. Subsection 3.9.3 discusses the operability qualification of the major active valves including main steam isolation valve and the main steam safety/relief valve for seismic and other dynamic conditions.

Fuel Storage and Refueling Equipment

Refueling and servicing equipment and other equipment, which in the case of a failure would degrade a safety-related component, are defined in Section 9.1, and are classified per Table 3.2-1. These components are subjected to an elastic dynamic finite-element analysis to generate loadings. This analysis utilizes appropriate floor response spectra and combines loads at frequencies up to ZPA defined in Subsection 3.7.2.7 in three directions. Imposed stresses are generated and combined for normal, upset, and faulted conditions. Stresses are compared, depending on the specific equipment, to Industrial Codes (ASME, ANSI), or Industrial Standards (AISC) allowables.

Fuel Assembly (Including Channel)

GE ESBWR fuel assembly (including channel) design bases, and analytical and evaluation methods including those applicable to the faulted conditions are similar to those contained in References 3.9-1 and 3.9-2.

ASME Class 2 and 3 Vessels

Elastic analysis methods are used for evaluating faulted loading conditions for Class 2 and 3 vessels. The equivalent allowable stresses using elastic techniques are obtained from NC/ND-3300 and NC-3200 of the Code. These allowables are above elastic limits.

ASME Class 2 and 3 Pumps

Elastic analysis methods are used for evaluating faulted loading conditions for Class 2 and 3 pumps. The equivalent allowable stresses for nonactive pumps using elastic techniques are obtained from NC/ND-3400 the Code. These allowables are above elastic limits.

ASME Class 2 and 3 Valves

Elastic analysis methods and standard design rules are used for evaluating faulted loading conditions for Class 2 and 3 valves. The equivalent allowable stresses for nonactive valves using elastic techniques are obtained from NC/ND-3500 of the Code. These allowables are above elastic limits.

ASME Class 1, 2 and 3 Piping

Elastic analysis methods are used for evaluating faulted loading conditions for Class 1, 2, and 3 piping. The equivalent allowable stresses using elastic techniques are obtained from Appendix F (for Class 1) and NC/ND-3600 (for Class 2 and 3 piping) of the Code. These allowables are above elastic limits. The allowables for functional capability of the essential piping are provided in a footnote to Table 3.9-2.

Inelastic Analysis Methods

Inelastic analysis is only applied to ESBWR components to demonstrate the acceptability of two types of postulated events. Each event is an extremely low-probability occurrence and the equipment affected by these events would not be reused. These two events are as follows:

- postulated gross piping failure; and
- postulated blowout of a CRD housing caused by a weld failure.

The loading combinations and design criteria for pipe whip restraints utilized to mitigate the effects of postulated piping failures are provided in Subsection 3.6.2. Except for pipe whip restraints, inelastic analysis methods are not used in the ESBWR piping design and analysis.

The mitigation of the CRD housing attachment weld failure relies on components with regular functions to mitigate the weld failure effect. The components are specifically:

- core support plate;
- control rod guide tube;
- control rod drive housing;

- control rod drive outer tube; and
- bayonet fingers.

Only the bodies of the control rod guide tube, control rod drive housing and control rod drive outer tube are analyzed for energy absorption by inelastic deformation.

Inelastic analyses for the CRD housing attachment weld failure, together with the criteria used for evaluation, are consistent with the procedures described in Subsection 3.6.2 for the different components of a pipe whip restraint. Figure 3.9-1 shows the stress-strain curve used for the inelastic analysis.

3.9.2 Dynamic Testing and Analysis of Systems, Components and Equipment

This subsection presents the criteria, testing procedures, and dynamic analyses employed to ensure the structural and functional integrity of piping systems, mechanical equipment, reactor internals, and their supports (including supports for conduit and cable trays, and ventilation ducts) under vibratory loadings, including those due to fluid flow and postulated seismic events discussed in SRP 3.9.2 draft R3.

The plant meets the following requirements:

(1) GDC 1 as it relates to the testing and analysis of systems, components, and equipment with appropriate safety functions being performed to appropriate quality standards.

(2) GDC 2 as it relates to safety-related systems, components and equipment being designed to withstand appropriate combinations of the effects of normal and accident conditions with the effects of natural phenomena (SSE).

(3) GDC 4 as it relates to safety-related systems and components being appropriately protected against the dynamic effects of discharging fluids.

(4) GDC 14 as it relates to systems and components of the reactor coolant pressure boundary being designed to have an extremely low probability of rapidly propagating failure or of gross rupture.

(5) GDC 15 as it relates to the reactor coolant system being designed with sufficient margin to ensure that the reactor coolant pressure boundary is not breached during normal operating conditions, including anticipated operational occurrences.

3.9.2.1 Piping Vibration, Thermal Expansion and Dynamic Effects

The overall test program is divided into two phases: the preoperational test phase and the initial startup test phase. Piping vibration, thermal expansion and dynamic effects testing is performed during both of these phases as described in Chapter 14. Discussed below are the general requirements for this testing. It should be noted that because one goal of the dynamic effects testing is to verify the adequacy of the piping support system, such components are addressed in the subsections that follow. However, the more specific requirements for the design and testing of the piping support system are described in Subsection 3.9.3.7.

3.9.2.1.1 Vibration and Dynamic Effects Testing

The purpose of these tests is to confirm that the piping, components, restraints and supports of specified high- and moderate-energy systems have been designed to withstand the dynamic effects of steady state flow-induced vibration and anticipated operational transient conditions. The general requirements for vibration and dynamic effects testing of piping systems are specified in Regulatory Guide 1.68, "Initial Test Programs for Water-Cooled Nuclear Power Plants". More specific vibration testing requirements are defined in ASME OM S/G Part 3, "Requirements for Preoperational and Initial Startup Vibration Testing of Nuclear Power Plant Piping Systems." Detailed test specifications shall be in accordance with this standard and address such issues as prerequisites, test conditions, precautions, measurement techniques, monitoring requirements, test hold points and acceptance criteria. The development and specification of the types of measurements required, the systems and locations to be monitored, the test acceptance criteria, and the corrective actions that may be necessary are discussed in more detail below.

Measurement Techniques

There are essentially three methods available for determining the acceptability of steady state and transient vibration for the affected systems. These are visual observation, local measurements, and remotely monitored/recorded measurements. The technique used depends on such factors as the safety significance of the particular system, the expected mode and/or magnitude of the vibration, the accessibility of the system during designated testing conditions, or the need for a time-history recording of the vibratory behavior. Typically, the systems where vibration has the greatest safety implication are subject to more rigorous testing and precise instrumentation requirements and, therefore, require remote monitoring techniques. Local measurement techniques, such as the use of a hand-held vibrometer, are more appropriate in cases where it is expected that the vibration is less complex and of lower magnitude. Many systems that are accessible during the preoperational test phase and that do not show significant intersystem interactions fall into this category. Visual observations are used where vibration is expected to be minimal and the need for a time history record of transient behavior is not anticipated. However, unexpected visual observations or local indications may require that a more sophisticated technique be used. Also, the issue of accessibility is considered. Application of these measurement techniques is detailed in each testing specification consistent with the guidelines contained in ASME OM S/G Part 3.

Monitoring Requirements

As described in Chapter 14, all safety-related piping systems shall be subjected to steady state and transient vibration measurements. The scope of such testing shall include safety-related instrumentation piping and attached small-bore piping (branch piping). Monitoring location selection considerations include the proximity of isolation valves, pressure or flow control valves, flow orifices, distribution headers, pumps and other elements where shock or high turbulence may be of concern. Location and orientation of instrumentation and/or measurements is detailed in each test specification. Monitored data includes actual deflections and frequencies as well as related system operating conditions. Time duration of data recording should be sufficient to indicate whether the vibration is continuous or transient. Steady state monitoring is performed at critical conditions such as minimum or maximum flow, or abnormal combinations or configurations of system pumps or valves. Transient monitoring includes anticipated system

and total plant operational transients where critical piping or components are expected to show significant response. Steady state conditions and transient events to be monitored are detailed in the appropriate testing specification consistent with ASME OM S/G Part 3 guidelines.

Test Evaluation and Acceptance Criteria

The piping response to test conditions is considered acceptable if the review of the test results indicates that the piping responds in a manner consistent with predictions of the stress report and/or that piping stresses are within the Code (NB, NC, ND-3600) limits. Acceptable limits are determined after the completion of piping systems stress analysis and are provided in the piping test specifications.

To ensure test data integrity and test safety, criteria have been established to facilitate assessment of the test while it is in progress. For steady state and transient vibration the pertinent acceptance criteria are usually expressed in terms of maximum allowable displacement/deflection. Visual observation is only used to confirm the absence of significant levels of vibration and not to determine acceptability of any potentially excessive vibration. Therefore, in some cases other measurement techniques are required with appropriate quantitative acceptance criteria.

There are two stress levels of acceptance criteria for allowable vibration displacements/deflections. Level 1 criteria are bounding type criteria associated with safety limits, while Level 2 criteria are stricter criteria associated with system or component expectations. For steady state vibration, the Level 1 criteria are based on 68.95 MPa (10,000 psi) maximum stress to assure no failure from fatigue over the life of the plant. The corresponding Level 2 criteria are based on one half the 68.95 MPa (10,000 psi) or 34.5 MPa (5,000 psi) maximum stress. For transient vibration, the Level 1 criteria are based on either the ASME-III code upset primary stress limit or the applicable snubber load capacity. Level 2 criteria are based on a given tolerance about the expected deflection value.

Reconciliation and Corrective Actions

During the course of the tests, the remote measurements are regularly checked to verify compliance with acceptance criteria. If trends indicate that criteria may be violated, the measurements are monitored at more frequent intervals. The test is held for Level 2 criteria violations and terminated as soon as Level 1 criteria are violated. As soon as possible after the test hold or termination, appropriate investigative and corrective actions are taken. If practicable, a walkdown of the piping and suspension system is made in an attempt to identify potential obstructions, improperly operating suspension components, or sensor malfunction. Hangers and snubbers should be positioned such that they can accommodate the expected deflections without bottoming out or extending fully. All signs of damage to piping supports or anchors are investigated.

Instrumentation indicating criteria failure is checked for proper operation and calibration including comparison with other instrumentation located in the proximity of the excessive vibration. The assumptions used in the calculations that generated the applicable limits are verified against actual conditions and discrepancies noted are accounted for in the criteria limits. This may require a reanalysis at actual system conditions.

Should the investigation of instrumentation and calculations fail to reconcile the criteria violations, physical corrective actions may be required. This might include identification and

reduction or elimination of offending forcing functions, detuning of resonant piping spans by modifications, addition of bracing, or changes in operating procedures to avoid troublesome conditions. Any such modifications require retest to verify that vibrations have been sufficiently reduced.

3.9.2.1.2 Thermal Expansion Testing

A thermal expansion preoperational and startup testing program verifies that normal unrestrained thermal movement occurs in specified safety-related high- and moderate-energy piping systems. The testing is performed through the use of visual observation and remote sensors. The purpose of this program is to ensure the following:

- The piping system during system heatup and cooldown is free to expand and move without unplanned obstruction or restraint in the x, y, and z directions.
- The piping system does shake down after a few thermal expansion cycles.
- The piping system is working in a manner consistent with the predictions of the stress analysis.
- There is adequate agreement between calculated values and measured values of displacements.
- There is consistency and repeatability in thermal displacements during heatup and cooldown of the systems.

The general requirements for thermal expansion testing of piping systems are specified in Regulatory Guide 1.68, " Initial Test Programs for Water-Cooled Nuclear Power Plants." More specific requirements are defined in ASME OM S/G Part 7 "Requirements for Thermal Expansion Testing of Nuclear Power Plant Piping Systems." Detailed test specifications are prepared in full accordance with this standard and address such issues as prerequisites, test conditions, precautions, measurement techniques, monitoring requirements, test hold points and acceptance criteria. The development and specification of the types of measurements required, the systems and locations to be monitored, the test acceptance criteria, and the corrective actions that may be necessary are discussed in more detail below.

In addition to thermal expansion testing, the initial ESBWR plant shall also perform thermal stratification testing for the feedwater system piping. This testing shall be performed using external thermocouples on the pipe to confirm that the thermal stratification inputs to the piping analysis were conservative.

Measurement Techniques

Verification of acceptable thermal expansion of specified piping systems can be accomplished by several methods. One method is to walk down the piping system and verify visually that free thermal movement is unrestrained. This might include verification that piping supports such as snubbers and spring hangers are not fully extended or bottomed out and that the piping (including branch lines and instrument lines) and its insulation is not in hard contact with other piping or support structures. Another method involves local measurements, using a hand-held scale or ruler, against a fixed reference or by recording the position of a snubber or spring can. A more precise method uses permanent or temporary instrumentation that directly measures displacement, such as a lanyard potentiometer, that is monitored via a remote indicator or

recording device. The technique used depends on such factors as the amount of movement predicted and the accessibility of the piping.

Measurement of piping temperature is also important when evaluating thermal expansion. This is accomplished either indirectly by measuring the temperature of the process fluid or by direct measurement of the piping wall temperature. Such measurements may be obtained either locally or remotely. The choice of technique used depends on such considerations as the accuracy required and the accessibility of the piping.

Monitoring Requirements

As described in Chapter 14, all safety-related piping is included in the thermal expansion testing program. Thermal expansion of specified piping systems is measured at both the cold and hot extremes of their expected operating conditions. Walkdowns and recording of hanger and snubber positions are conducted where possible, considering accessibility and local environmental and radiological conditions in the hot and cold states. Displacements and appropriate piping/process temperatures are recorded for those systems and conditions specified. Sufficient time shall have passed before taking such measurements to ensure the piping system is at a steady-state condition. In selecting locations for monitoring piping response, consideration is given to the maximum responses predicted by the piping analysis. Specific consideration is also given to the first run of pipe attached to component nozzles and pipe adjacent to structures requiring a controlled gap.

Test Evaluation and Acceptance Criteria

To ensure test data integrity and test safety, criteria have been established to facilitate assessment of the test while it is in progress. Limits of thermal expansion displacements are established prior to start of piping testing to which the actual measured displacements are compared to determine acceptability of the actual motion. If the measured displacement does not vary from the acceptance limits values by more than the specified tolerance, the piping system is responding in a manner consistent with the predictions and is therefore acceptable. The piping response to test conditions is considered acceptable if the test results indicate that the piping responds in a manner consistent with the predictions of the stress report and/or that piping stresses are within the Code (NB, NC, ND-3600) limits. Acceptable thermal expansion limits are determined after the completion of piping system stress analysis and are provided in the piping test specifications. Level 1 criteria are bounding based on ASME-III Code stress limits. Level 2 criteria are stricter based on the predicted movements using the calculated deflections plus a selected tolerance.

Reconciliation and Corrective Actions

During the course of the tests, the remote measurements are regularly checked to verify compliance with acceptance criteria. If trends indicate that criteria may be violated, the measurements are monitored at more frequent intervals. The test is held for Level 2 criteria violations, and terminated as soon as Level 1 criteria are violated. As soon as possible after the test hold or termination, investigative and corrective actions are taken. If practicable, a walkdown of the affected piping and suspension system is made to identify potential obstruction to free piping movement. Hangers and snubbers should be positioned within their expected cold and hot settings. All signs of damage to piping or supports are investigated.

Instrumentation indicating criteria failure is checked for proper operation and calibration, including comparison with other instrumentation located in the proximity of the out-of-bounds movement. Assumptions, such as piping temperature, used in the calculations that generated the applicable limits are compared with actual test conditions. Discrepancies noted are accounted for in the criteria limits including possible reanalysis.

Should the investigation of instrumentation and calculations fail to reconcile the criteria violations or should the visual inspection reveal an unintended restraint, physical corrective actions may be required. This might include complete or partial removal of an interfering structure; replacing, readjusting, adding or repositioning piping system supports; modifying the pipe routing; or modifying system operating procedures to avoid the temperature conditions that resulted in the unacceptable thermal expansion.

3.9.2.2 Seismic Qualification of Safety-Related Mechanical Equipment (Including Other RBV Induced Loads)

This subsection describes the criteria for dynamic qualification of safety-related mechanical equipment and associated supports, and the qualification testing and/or analysis applicable to the major components on a component by component basis. Seismic and other events that may induce reactor building vibration (RBV) are considered. In some cases, a module or assembly consisting of mechanical and electrical equipment is qualified as a unit (e.g., Hydraulic Control Unit). These modules are generally discussed completely in this subsection and Subsection 3.9.3.5 rather than providing a separate discussion of the electrical parts in Section 3.10. Electrical supporting equipment such as control consoles, cabinets, and panels are discussed in Section 3.10.

3.9.2.2.1 Tests and Analysis Criteria and Methods

The ability of equipment to perform its safety function during and after the application of a dynamic load is demonstrated by tests and/or analysis. The analysis is performed in accordance with Section 3.7. Selection of testing, analysis or a combination of the two is determined by the type, size, shape, and complexity of the equipment being considered. When practical, operability is demonstrated by testing. Otherwise, operability is demonstrated by mathematical analysis or by a combination between analysis and test.

Equipment, which is large, simple, and/or consumes large amounts of power, is usually qualified by analysis or static bend tests to show that the loads, stresses and deflections are less than the allowable maximum. Analysis and/or static bend testing is also used to show there are no natural frequencies below ZPA defined in Subsection 3.7.2.7. If a natural frequency lower than ZPA defined in Subsection 3.7.2.7 in the case of other RBV induced loads is discovered, dynamic tests and/or mathematical dynamic analyses may be used to verify operability and structural integrity at the required dynamic input conditions.

When the equipment is qualified by dynamic test, the response spectrum or time history of the attachment point is used in determining input motion.

Natural frequency may be determined by running a continuous sweep frequency search using a sinusoidal steady-state input of low magnitude. Dynamic load conditions are simulated by testing, using random vibration input or single frequency input (within equipment capability)

over the frequency range of interest. Whichever method is used, the input amplitude during testing envelops the actual input amplitude expected during the dynamic loading condition.

The equipment being dynamically tested is mounted on a fixture, which simulates the intended service mounting and causes no dynamic coupling to the equipment. Other interface loads (nozzle loads, weights of internal and external components attached) are simulated.

Equipment having an extended structure, such as a valve operator, is analyzed by applying static equivalent dynamic loads at the center of gravity of the extended structure. In cases where the equipment structural complexity makes mathematical analysis impractical, a static bend test is used to determine spring constant and operational capability at maximum equivalent dynamic load conditions.

Random Vibration Input

When random vibration input is used, the actual input motion envelops the appropriate floor input motion at the individual modes. However, single frequency input such as sine beats can be used provided one of the following conditions are met:

- the characteristics of the required input motion is dominated by one frequency;
- the anticipated response of the equipment is adequately represented by one mode; or
- the input has sufficient intensity and duration to excite all modes to the required magnitude so that the testing response spectra envelops the corresponding response spectra of the individual modes.

Application of Input Modes

When dynamic tests are performed, the input motion is applied to the vertical and one horizontal axis simultaneously. However, if the equipment response along the vertical direction is not sensitive to the vibratory motion along the horizontal direction and vice versa, then the input motion is applied to one direction at a time. In the case of single frequency input, the time phasing of the inputs in the vertical and horizontal directions are such that a purely rectilinear resultant input is avoided.

Fixture Design

The fixture design simulates the actual service mounting and causes no dynamic coupling to the equipment.

Prototype Testing

When possible equipment testing is conducted on prototypes of the equipment to be installed in the plant. If not, a detailed inspection and justification of the capacity of the equipment tested shall be made.

3.9.2.2.2 Qualification of Safety-Related Mechanical Equipment

The following subsections discuss the testing or analytical qualification of the safety-related major mechanical equipment, and other ASME III equipment including equipment supports.

CRD and CRD Housing

The qualification of the CRD housing (with enclosed CRD) is done analytically, and the stress results of the analysis establish the structural integrity of these components. Dynamic tests are conducted to verify the operability of the control rod drive during a dynamic event. A simulated test, imposing dynamic deflection in the fuel channels up to values greater than the expected seismic response, is performed.

The correlation of the test with analysis is via the channel deflection, not the housing structural analysis, because insertability is controlled by channel deflection, not housing deflection.

Core Support (Fuel Support and CR Guide Tube)

A detailed analysis imposing dynamic effects due to seismic and other RBV events is performed to show that the maximum stresses developed during these events are much lower than the maximum allowed for the component material.

Hydraulic Control Unit (HCU)

The HCU is analyzed for the seismic and other RBV loads faulted condition and the maximum stress on the HCU frame is calculated to be below the maximum allowable for the faulted condition. As discussed in Subsection 3.9.1.4, the faulted condition loads are calculated to be below the HCU maximum capability.

Fuel Assembly (Including Channel)

GE ESBWR fuel channel design bases, analytical methods, and seismic considerations are similar to those contained in References 3.9-1 and 3.9-2. The resulting combined acceleration profiles, including fuel lift for all normal/upset and faulted events are to be shown less than the respective design basis acceleration profiles.

Standby Liquid Control Accumulator

The standby liquid control accumulator is a cylindrical vessel. The standby liquid control accumulator is qualified by analysis for seismic and other RBV loads.

The results of this analysis confirm that the calculated stresses at all investigated locations are less than their corresponding allowable values

Main Steamline Isolation Valves

The main steamline isolation valves (MSIV) are qualified for seismic and other RBV loads. The fundamental requirement of the MSIV following an SSE or other faulted RBV loadings is to close and remain closed after the event. This capability is demonstrated by the test and analysis as outlined in Subsection 3.9.3.5.

Standby Liquid Control Valve (Injection Valve)

The standby liquid control injection valve is qualified by type test to IEEE 344 for seismic and other RBV loads. The qualification test as discussed in Subsection 3.9.3.5 demonstrates the ability to remain operable after the application of horizontal and vertical dynamic loading in excess of the required response spectra. The valve is qualified by dynamic analysis and the results of the analysis indicate that the valve is capable of sustaining the dynamic loads without overstressing the pressure retaining components.

Main Steam Safety/Relief Valves

Due to the complexity of the structure and the performance requirements of the valve, the total assembly of the SRV (including electrical and pressure devices) is tested at dynamic accelerations equal to or greater than the combined SSE and other RBV loadings determined for the plant. Tests and analysis as discussed in Subsection 3.9.3.5 demonstrate the satisfactory operation of the valves during and after the test.

Other ASME Code Section III Equipment

Other equipment, including associated supports, is qualified for seismic and other RBV loads to ensure its functional integrity during and after the dynamic event. The equipment is tested, if necessary, to ensure its ability to perform its specified function before, during, and following a test.

Dynamic load qualification is done by a combination of test and/or analysis as described in Subsection 3.9.2.2. Natural frequency, when determined by an exploratory test, is in the form of a single-axis continuous-sweep frequency search using a sinusoidal steady-state input at the lowest possible amplitude, which is capable of determining resonance. The search is conducted on each principal axis with a minimum of two continuous sweeps over the frequency range of interest at a rate no greater than one octave per minute. If no resonances are located, then the equipment is considered rigid and single frequency tests at every 1/3 octave frequency interval are acceptable. Also, if all natural frequencies of the equipment are greater than ZPA defined in Subsection 3.7.2.7, the equipment may be considered rigid and analyzed statically as such. In this static analysis, the dynamic forces on each component are obtained by concentrating the mass at the center of gravity and multiplying the mass by the appropriate floor acceleration. The dynamic stresses are then added to the operating stresses and a determination made of the adequacy of the strength of the equipment. The search for the natural frequency is done analytically if the equipment shape can be defined mathematically and/or by prototype testing.

If the equipment is a rigid body while its support is flexible, the overall system can be modeled as a single-degree-of-freedom system consisting of a mass and a spring. The natural frequency of the system is computed; then the acceleration is determined from the floor response spectrum curve using the appropriate damping value. A static analysis is then performed using this acceleration value. In lieu of calculating the natural frequency, the peak acceleration from the spectrum curve is used. The critical damping values for welded steel structures from Table 3.7-1 are employed.

If the equipment cannot be considered as a rigid body, it can be modeled as a multi-degree-of-freedom system. It is divided into a sufficient number of mass points to ensure adequate representation. The mathematical model can be analyzed using modal analysis technique or direct integration of the equations of motion. Specified structural damping is used in the analysis unless justification for other values can be provided. A stress analysis is performed using the appropriate inertial forces or equivalent static loads obtained from the dynamic analysis of each mode.

For a multi-degree-of-freedom modal analysis, the modal response accelerations can be taken directly from the applicable floor response spectrum. The maximum spectral values within ±10% band of the calculated frequencies of the equipment are used for computation of modal dynamic response inertial loading. The total dynamic stress is obtained by combining the modal

stresses. The dynamic stresses are added to the operating stresses using the loading combinations stipulated in the specific equipment specification and then compared with the allowable stress levels.

If the equipment being analyzed has no definite orientation, the worst possible orientation is considered. Furthermore, equipment is considered to be in its operational configuration (i.e., filled with the appropriate fluid and/or solid). The investigation ensures that the point of maximum stress is considered. Lastly, a check is made to ensure that partially filled or empty equipment does not result in higher response than the operating condition. The analysis includes evaluation of the effects of the calculated stresses on mechanical strength, alignment, electrical performance (microphonics, contact bounce, etc.) and non-interruption of function. Maximum displacements are computed and interference effects determined and justified.

Individual devices are tested separately, when necessary, in their operating condition. Then the component to which the device is assembled is tested with a similar but inoperative device installed upon it.

The equipment, component, or device to be tested is mounted on the vibration generator in a manner that simulates the final service mounting. If the equipment is too large, other means of simulating the service mounting are used. Support structures such as consoles, racks, etc., may be vibration tested without the equipment and/or devices being in operation provided they are performance tested after the vibration test. However, the components are in their operational configuration during the vibration test. The goal is to determine that, at the specified vibratory accelerations, the support structure does not amplify the forces beyond that level to which the devices have been qualified.

Alternatively, equipment may be qualified by presenting historical performance data, which demonstrates that the equipment satisfactorily sustains dynamic loads which are equal to greater than those specified for the equipment and that the equipment performs a function equal to or better than that specified for it.

Equipment for which continued function is not required after a seismic and other RBV loads event, but whose postulated failure could produce an unacceptable influence on the performance of systems having a primary safety function, are also evaluated. Such equipment is qualified to the extent required to ensure that an SSE including other RBV loads, in combination with normal operating conditions, would not cause unacceptable failure. Qualification requirements are satisfied by ensuring that the equipment in its functional configuration, complete with attached appurtenances, remains structurally intact and affixed to the interface. The structural integrity of internal components is not required; however, the enclosure of such components is required to be adequate to ensure their confinement. Where applicable, fluid or pressure boundary integrity is demonstrated. With a few exceptions, simplified analytical techniques are adequate for this purpose.

Historically, it has been shown that the main cause for equipment damage during a dynamic excitation has been the failure of its anchorage. Stationary equipment is designed with anchor bolts or other suitable fastening strong enough to prevent overturning or sliding. The effect of friction on the ability to resist sliding is neglected. The effect of upward dynamic loads on overturning forces and moments is considered. Unless specifically specified otherwise,

anchorage devices are designed in accordance with the requirements of the Code, Subsection NF, or ANSI/AISC - N690 and ACI 349.

Dynamic design data are provided in the form of acceleration response spectra for each floor area of the equipment. Dynamic data for the ground or building floor to which the equipment is attached are used. For the case of equipment having supports with different dynamic motions, the most severe floor response spectrum is applied to all of the supports.

Refer to Subsection 3.9.3.5 for additional information on the dynamic qualification of valves.

Supports

Subsections 3.9.3.7 and 3.9.3.8 address analyses or tests that are performed for component supports to assure their structural capability to withstand the seismic and other dynamic excitations.

3.9.2.3 Dynamic Response of Reactor Internals Under Operational Flow Transients and Steady-State Conditions

The major reactor internal components within the vessel are subjected to extensive testing, coupled with dynamic system analyses, to properly evaluate the resulting flow-induced vibration phenomena during normal reactor operation and from anticipated operational transients.

In general, the vibration forcing functions for operational flow transients and steady-state conditions are not predetermined by detailed analysis. Special analysis of the response signals measured for reactor internals of many similar designs is performed to obtain the parameters, which determine the amplitude and modal contributions in the vibration responses. This study provides useful predictive information for extrapolating the results from tests of components with similar designs to components of different designs. This vibration prediction method is appropriate where standard hydrodynamic theory cannot be applied due to complexity of the structure and flow conditions. Elements of the vibration prediction method are outlined as follows:

- Dynamic modal analysis of major components and subassemblies is performed to identify vibration modes and frequencies. The analysis models used for Seismic Category I structures are similar to those outlined in Subsection 3.7.2.
- Data from previous plant vibration measurements are assembled and examined to identify predominant vibration response modes of major components. In general, response modes are similar but response amplitudes vary among BWRs of differing size and design.
- Parameters are identified which are expected to influence vibration response amplitudes among the several reference plants. These include hydraulic parameters such as velocity and steam flow rates and structural parameters such as natural frequency and significant dimensions.
- Correlation functions of the variable parameters are developed which, multiplied by response amplitudes, tend to minimize the statistical variability between plants. A correlation function is obtained for each major component and response mode.
- Predicted vibration amplitudes for components of the prototype plant are obtained from these correlation functions based on applicable values of the parameters for the prototype

plant. The predicted amplitude for each dominant response mode is stated in terms of a range, taking into account the degree of statistical variability in each of the correlations. The predicted mode and frequency are obtained from the dynamic modal analyses.

The dynamic modal analysis forms the basis for interpretation of the initial startup test results (Subsection 3.9.2.4). Modal stresses are calculated and relationships are obtained between sensor response amplitudes and peak component stresses for each of the lower normal modes. The allowable amplitude in each mode is that which produces a peak stress amplitude of ±68.95 MPa (±10,000 psi).

Vibratory loads are continuously applied during normal operation and the stresses are limited to ±68.95 MPa (±10,000 psi) to prevent fatigue failure. Prediction of vibration amplitudes, mode shapes, and frequencies of normal reactor operations are based on statistical extrapolation of actual measured results on the same or similar components in reactors now in operation.

The dynamic loads caused by flow-induced vibration from the feedwater jet impingement have no significant effect on the steam separator assembly. Analysis is performed to show that the impingement feedwater jet velocity is below the critical velocity. Also, it can be shown that the excitation frequency of the steam separator skirt is very different from the natural frequency of the skirt.

3.9.2.4 Initial Startup Flow-Induced Vibration Testing of Reactor Internals

Reactor internals vibration measurement and inspection program is conducted only during initial startup testing. This meets the guidelines of Regulatory Guide 1.20 with the exception of those requirements related to preoperational testing which cannot be performed for a natural circulation reactor.

Initial Startup Testing

Vibration measurements are made during reactor startup at conditions up to 100% rated flow and power. Steady state and transient conditions of natural circulation flow operation are evaluated. The primary purpose of this test series is to verify the anticipated effect of single- and two-phase flow on the vibration response of internals.

Vibration sensor types may include strain gauges, displacement sensors (linear variable transformers), and accelerometers.

Accelerometers are provided with double integration signal conditioning to give a displacement output. Sensor locations include the following:

- Chimney and partitions, lateral displacements and accelerations;
- Chimney head, lateral displacements and accelerations;
- Control rod drive housings, bending strain, lateral;
- In-core housings and guide tubes, bending strain, lateral; and
- SLC internal piping, bending strain, lateral.

In all plant vibration measurements, only the dynamic component of strain or displacement is recorded. Data are recorded and provision is made for selective on-line analysis to verify the overall quality and level of the data. Interpretation of the data requires identification of the

dominant vibration modes of each component by the test engineer using frequency, phase, and amplitude information for the component dynamic analyses. Comparison of measured vibration amplitudes to predicted and allowable amplitudes is then to be made on the basis of the analytically obtained normal mode that best approximates the observed mode.

The visual inspections conducted prior to, and remote inspections conducted following startup testing are for damage, excessive wear, or loose parts. At the completion of initial startup testing, remote inspections of major components are performed on a selected basis. The remote inspections cover the chimney, chimney head, core support structures, the peripheral control rod drive and incore housings. Access is provided to the reactor lower plenum for these inspections.

The analysis, design and/or equipment that are to be utilized for ESBWR comply with Regulatory Guide 1.20 as explained below.

Regulatory Guide 1.20 describes a comprehensive vibration assessment program for reactor internals during preoperational and initial startup testing. The vibration assessment program meets the requirements of Criterion 1, Quality Standards and Record, Appendix A to 10 CFR 50. This Regulatory Guide is applicable to the core support structures and other reactor internals.

Vibration testing of reactor internals is performed on all GE-BWR plants. Since the original issue of Regulatory Guide 1.20, test programs for compliance have been instituted for preoperational and startup testing. The first ESBWR plant is instrumented for testing. However, it can be subjected to startup flow testing only to demonstrate that flow-induced vibrations similar to those expected during operation do not cause damage. Subsequent plants, which have internals similar to those of the first plant, are also tested in compliance with the requirements of Regulatory Guide 1.20. GE is committed to confirm satisfactory vibration performance of internals in these plants through startup flow testing followed by inspection. Extensive vibration measurements in prototype plants together with satisfactory operating experience in all BWR plants have established the adequacy of reactor internal designs. GE continues these test programs for the generic plants to verify structural integrity and to establish the margin of safety.

Refer to Subsection 3.9.7.1 for the information to be provided by the utility to the NRC on the reactor internals vibration testing program.

3.9.2.5 Dynamic System Analysis of Reactor Internals Under Faulted Conditions.

The faulted events that are evaluated are defined in Subsection 3.9.5.3. The loads that occur as a result of these events and the analysis performed to determine the response of the reactor internals are as follows:

(1) Reactor Internal Pressures — The reactor internal pressure differentials (Table 3.9-3) due to assumed break of main steam or feedwater line are determined by analysis as described in Subsection 3.9.5.3. In order to assure that no significant dynamic amplification of load occurs as a result of the oscillatory nature of the blowdown forces during an accident, a comparison is made of the periods of the applied forces and the natural periods of the core support structures being acted upon by the applied forces. These periods are determined from a comprehensive vertical dynamic model of the RPV and internals. Besides the real masses of the RPV and core support structures, account is made for the water inside the RPV.

(2) External Pressure and Forces on the Reactor Vessel — An assumed break of the main steamline, the feedwater line or the RWCU/SDC line at the reactor vessel nozzle results in jet reaction and impingement forces on the vessel and asymmetrical pressurization of the annulus between the reactor vessel and the shield wall. These time-varying pressures are applied to the dynamic model of the reactor vessel system. Except for the nature and locations of the forcing functions, the dynamic model and the dynamic analysis method are identical to those for seismic analysis as described below. The resulting loads on the reactor internals, defined as LOCA loads, are considered as shown in Table 3.9-1.

(3) Safety/Relief Valve Loads (SRV Loads) — The discharge of the SRVs results in reactor building vibrations (RBV) due to suppression pool dynamics as described in Appendix 3B. The response of the reactor internals to the RBV is also determined with the dynamic model and dynamic analysis method described below for seismic analysis.

(4) LOCA Loads — The assumed LOCA also results in RBV due to suppression pool dynamics as described in Appendix 3B and the response of the reactor internals are again determined with the dynamic model and dynamic analysis method used for seismic analysis. Various types of LOCA loads are identified on Table 3.9-1.

(5) Seismic Loads — The theory, methods, and computer codes used for dynamic analysis of the reactor vessel, internals, attached piping and adjoining structures are described in Section 3.7 and Subsection 3.9.1.2. Dynamic analysis is performed by coupling the lumped-mass model of the reactor vessel and internals with the building model to determine the system natural frequencies and mode shapes. The relative displacement, acceleration, and load response is then determined by either the time-history method or the response-spectrum method. The loads on the reactor internals due to faulted event SSE are obtained from this analysis.

The above loads are considered in combination as defined in Table 3.9-2. The SRV, LOCA (SBL, IBL or LBL) and SSE loads as defined in Table 3.9-1 are all assumed to act in the same direction. The peak colinear responses of the reactor internals to each of these loads are added by the square root of the sum of the squares (SRSS) method. The resultant stresses in the reactor internal structures are directly added with stress resulting from the static and steady state loads in the faulted load combination, including the stress due to peak reactor internal pressure differential during the LOCA. The reactor internals satisfy the stress deformation and fatigue limits as defined in Subsection 3.9.5.4.

3.9.2.6 Correlations of Reactor Internals Vibration Tests with the Analytical Results

Prior to initiation of the instrumented vibration measurement program for the prototype plant, extensive dynamic analyses of the reactor and internals are performed. The results of these analyses are used to generate the allowable vibration levels during the vibration test. The vibration data obtained during the test are to be analyzed in detail.

The results of the data analyses, vibration amplitudes, natural frequencies, and mode shapes are then compared to those obtained from the theoretical analysis.

Such comparisons provide the analysts with added insight into the dynamic behavior of the reactor internals. The additional knowledge gained from previous vibration tests has been used in the generation of the dynamic models for seismic and loss-of-coolant accident (LOCA)

analyses for this plant. The models used for this plant are similar to those used for the vibration analysis of earlier prototype BWR plants.

3.9.3 ASME Code Class 1, 2 and 3 Components, Component Supports and Core Support Structures

This subsection discusses the structural integrity of pressure-retaining components, their supports, and core support structures which are designed in accordance with the rules of the American Society of Mechanical Engineers (ASME) Boiler and Pressure Vessel Code, Section III, Division 1 (hereinafter "the Code") and General Design Criteria 1, 2, 4, 14, and 15 as discussed in SRP 3.9.3 draft R2.

The plant design meets the relevant requirements of the following regulations:

(1) 10 CFR Part 50.55a and GDC1 as they relate to structures and components being designed, fabricated, erected, constructed, tested, and inspected to quality standards commensurate with the importance of the safety function to be performed.

(2) GDC 2 as it relates to safety-related structures and components being designed to withstand the effects of earthquakes combined with the effects of normal or accident conditions.

(3) GDC 4 as it relates to safety-related structures and components being designed to accommodate the effects of and to be compatible with the environmental conditions of normal and accident conditions.

(4) GDC 14 as it relates to the reactor coolant pressure boundary being designed, fabricated, erected, and tested to have an extremely low probability of abnormal leakage, of rapidly propagating failure, and of gross rupture.

(5) GDC 15 as it relates to the reactor coolant system being designed with sufficient margin to ensure that the design conditions are not exceeded.

3.9.3.1 Loading Combinations, Design Transients and Stress Limits

This section delineates the criteria for selection and definition of design limits and loading combination associated with normal operation, postulated accidents, and specified seismic and other reactor building vibration (RBV) events for the design of safety-related ASME Code components (except containment components which are discussed in Section 3.8).

This section discusses the ASME Class 1, 2, and 3 equipment and associated pressure-retaining parts and identifies the applicable loadings, calculation methods, calculated stresses, and allowable stresses. A discussion of major equipment is included on a component-by-component basis to provide examples. Design transients and dynamic loading for ASME Class 1, 2 and 3 equipment are covered in Subsection 3.9.1.1. Seismic-related loads and dynamic analyses are discussed in Section 3.7. The suppression pool-related RBV loads are described in Appendix 3B. Table 3.9-1 presents the plant events to be considered for the design and analysis of all ESBWR ASME Code Class 1, 2, and 3 components, component supports, core support structures and equipment. Specific loading combinations considered for evaluation of each specific equipment are derived from Table 3.9-2 and are contained in the design specifications and/or design reports of the respective equipment (see Subsection 3.9.9.4 for COL information).

Specific load combinations and acceptance criteria for Class 1 piping are shown in Table 3.9-9. Also for Class 1 piping, all the operating temperatures above ambient or below ambient are included in the fatigue analysis. Even the ambient temperature is included as a load set with defined cycles. The stress free state for the piping system is defined as a temperature of 21°C (70°F) for Class 1, 2, 3 or B31.1 piping. For Class 2,3 or B31.1 piping, no thermal expansion analysis will be performed for a piping system operating at 65°C (150°F) or less.

The design life for the ESBWR Standard Plant is 60 years. A 60-year design life is a requirement for all major plant components with reasonable expectation of meeting this design life. However, all plant operational components and equipment except the reactor vessel are designed to be replaceable, design life not withstanding. The design life requirement allows for refurbishment and repair, as appropriate, to assure that the design life of the overall plant is achieved. In effect, essentially all piping systems, components and equipment are designed for a 60-year design life. Many of these components are classified as ASME Class 2 or 3 or Quality Group D.

In the event any non-Class 1 component is subjected to cyclic loadings of a magnitude and/or duration so severe that the 60-year design life cannot be assured by required Code calculations, applicants referencing the ESBWR design shall identify these components and either provide an appropriate analysis to demonstrate the required design life, or provide designs to mitigate the magnitude or duration of the cyclic loads. For example, thermal sleeves may be required to protect the pressure boundary from severe cyclic thermal stress, at points where mixing of hot and cold fluids occur.

3.9.3.1.1 Plant Conditions

All events that the plant might credibly experience during a reactor year are evaluated to establish design basis for plant equipment. These events are divided into four plant conditions. The plant conditions described in the following paragraphs are based on event probability (i.e., frequency of occurrence as discussed below and correlated to service levels for design limits defined in the ASME Boiler and Pressure Vessel Code Section III as shown in Tables 3.9-1 and 3.9-2.

Normal Condition

Normal conditions are any conditions in the course of system startup, operation in the design power range, normal hot standby (with condenser available), and system shutdown other than upset, emergency, faulted, or testing.

Upset Condition

An upset condition is any deviation from normal conditions anticipated to occur often enough that design should include a capability to withstand the conditions without operational impairment. The upset conditions include system operational transients (SOT), which result from any single operator error or control malfunction, from a fault in a system component requiring its isolation from the system, or from a loss of load or power. Hot standby with the main condenser isolated is an upset condition.

Emergency Condition

An emergency condition includes deviations from normal conditions that require shutdown for correction of the condition(s) or repair of damage in the reactor coolant pressure boundary (RCPB). Such conditions have a low probability of occurrence but are included to provide assurance that no gross loss of structural integrity results as a concomitant effect of any damage developed in the system. Emergency condition events include but are not limited to infrequent operational transients (IOT) caused by one of the following: (a) a multiple valve blowdown of the reactor vessel; (b) LOCA from a small break or crack (SBL) which does not depressurize the reactor systems, does not automatically actuate the GDCS and Automatic Depressurization Subsystem (ADS), and does not result in leakage beyond normal make-up system capacity, but which requires the safety functions of isolation of containment and shutdown and may involve inadvertent actuation of the ADS; (c) improper assembly of the core during refueling; or (d) depressurization valve blowdown. An anticipated transient without scram (ATWS) or reactor overpressure with delayed scram (Tables 3.9-1 and 3.9-2) is an IOT classified as an emergency condition.

Faulted Condition

A faulted condition is any of those combinations of conditions associated with extremely low-probability postulated events whose consequences are such that the integrity and operability of the system may be impaired to the extent that considerations of public health and safety are involved. Faulted conditions encompass events, such as a LOCA, that are postulated because their consequences would include the potential for the release of significant amounts of radioactive material. These events are the most drastic that must be considered in the design and thus represent limiting design bases. Faulted condition events include but are not limited to one of the following: (a) a control rod drop accident; (b) a fuel-handling accident; (c) a main steamline or feedwater line break; (d) the combination of any small/intermediate break LOCA (SBL or IBL) with the safe shutdown earthquake, and a loss of off-site power; or (e) the safe shutdown (SSE) earthquake plus large break LOCA (LBL) plus a loss of off-site power.

The IBL classification covers those breaks for which the GDCS operation occurs during the blowdown. The LBL classification covers the sudden, double ended severance of a main steamline inside or outside the containment that results in transient reactor depressurization, or any pipe rupture of equivalent flow cross sectional area with similar effects.

Correlation of Plant Condition with Event Probability

The probability of an event occurring per reactor year associated with the plant conditions is listed below. This correlation identifies the appropriate plant conditions and assigns the appropriate ASME Section III service levels for any hypothesized event or sequence of events.

Plant Condition	ASME Code Service Level	Event Encounter Probability per Reactor Year
Normal (planned)	A	1.0
Upset (moderate probability)	B	$1.0 > P \geq 10^{-2}$
Emergency (low probability)	C	$10^{-2} > P \geq 10^{-4}$
Faulted (extremely low probability)	D	$10^{-4} > P > 10^{-6}$

Safety-Related Functional Criteria

For any normal or upset design condition event, safety-related equipment and piping (Subsection 3.2.1) shall be capable of accomplishing its safety function as required by the event and shall incur no permanent changes that could deteriorate its ability to accomplish its safety function as required by any subsequent design condition event.

For any emergency or faulted design condition event, safety-related equipment and piping shall be capable of accomplishing its safety function as required by the event but repairs could be required to ensure its ability to accomplish its safety function as required by any subsequent design condition event.

3.9.3.2 Reactor Pressure Vessel Assembly

The reactor vessel assembly consists of the reactor pressure vessel, vessel sliding support, and shroud support.

The reactor pressure vessel, vessel sliding support, and shroud support are designed and constructed in accordance with the Code. The shroud support consists of the shroud support brackets. The reactor pressure vessel assembly components are classified as ASME Class 1. Complete stress reports on these components are prepared in accordance with the Code requirements. NUREG-0619 is also considered for feedwater nozzle and other such RPV inlet nozzle designs.

The stress analysis is performed on the reactor pressure vessel, vessel sliding support, and shroud support for various plant operating conditions (including faulted conditions) by using the elastic methods, except as noted in Subsection 3.9.1.4. Loading conditions, design stress limits, and methods of stress analysis for the core support structures and other reactor internals are discussed in Subsection 3.9.5.

3.9.3.3 Main Steam (MS) System Piping

The piping systems extending from the reactor pressure vessel to and including the outboard main steam isolation valve are designed and constructed in accordance with the ASME Boiler and Pressure Vessel Code Section III, Class 1 criteria. Stresses are calculated on an elastic basis for each service level and evaluated in accordance with NB-3600 of the Code. Table 3.9-9 shows the specific load combinations and acceptance criteria for Class 1 piping that apply to this piping. For the main steam Class 1 piping, the thermal loads per Equation 12 of NB-3600 are

less than 2.4 S_m, and are more limiting than the dynamic loads that are required to be analyzed per Equation 13 of NB-3600.

The MS system piping extending from the outboard main steam isolation valve to the turbine stop valve is constructed in accordance with the Code, Class 2 Criteria.

3.9.3.4 Other Components

Standby Liquid Control (SLC) Accumulator

The standby liquid control accumulator is designed and constructed in accordance with the requirements of the Code, Class 2 component.

SLC Injection Valve

The SLC injection valve is designed and constructed in accordance with the requirements for the Code, Class 1 component.

Gravity Driven Cooling System (GDCS) Piping and Valves

The GDCS valves connected with the RPV, including squib valves, and up to and including the biased-open check valve are designed and constructed in accordance with the requirements of the Code, Class 1 components. Other valves in the system are class 2 components.

Main Steamline Isolation, Safety/Relief, and Depressurization Valves

The main steamline isolation valves, SRVs, and DPVs are designed and constructed in accordance with the Code, Subsection NB-3500 requirements for Class 1 components.

Safety Relief Valve Piping

The relief valve discharge piping extending from the relief valve discharge flange to the vent wall penetration is designed and constructed in accordance with the Code requirements for Class 3 components. The relief valve discharge piping extending from the diaphragm floor penetration to the quenchers is designed and constructed in accordance with the Code requirements for Class 3 components.

Passive Containment Cooling Heat Exchangers

The PCC heat exchanger and associated piping are designed and constructed in accordance with the Code requirements for Class 2 components and piping.

Isolation Condenser System (ICS) Condenser and Piping

The ICS piping inside the primary containment between the reactor pressure vessel and the condenser isolation valve is designed and constructed in accordance with the Code requirements for Class 1 piping. The isolation condenser and piping outside containment is designed and constructed in accordance with Class 2 requirements.

Reactor Water Cleanup/Shutdown Cooling (RWCU/SDC) System Pump and Heat Exchangers

The RWCU/SDC pump and heat exchangers (regenerative and nonregenerative) are not part of a safety system. However, the pumps and heat exchanger are Seismic Category I equipment. The Code requirements for Class 3 components are used in the design and construction of the RWCU System pump and heat exchanger components.

ASME Class 2 and 3 Vessels

The Class 2 and 3 vessels (all vessels not previously discussed) are constructed in accordance with the Code. The stress analysis of these vessels is performed using elastic methods.

ASME Class 1, 2 and 3 Valves

The Class 1, 2, and 3 valves (all valves not previously discussed) are constructed in accordance with the Code.

All valves and their extended structures are designed to withstand the accelerations due to seismic and other RBV loads. The attached piping is supported so that these accelerations are not exceeded. The stress analysis of these valves is performed using elastic methods. Refer to Subsection 3.9.3.5 for additional information on valve operability.

ASME Class 1, 2 and 3 Piping

The Class 1, 2 and 3 piping (all piping not previously discussed) is constructed in accordance with the Code. For Class 1 piping, stresses are calculated on an elastic basis and evaluated in accordance with NB-3600 of the Code. For Class 2 and 3 piping, stresses are calculated on an elastic basis and evaluated in accordance with NC/ND-3600 of the Code. In the event that a NB-3600 analysis is performed for Class 2 or 3 pipe, all the analysis requirements for Class 1 pipe as specified in this document and the ASME code will be performed. Table 3.9-9 shows the specific load combinations and acceptance criteria for Class 1 piping systems. For the Class 1 piping that experiences the most significant stresses during operating conditions, the thermal loads per Equation 12 of NB-3600 are less than 2.4 S_y, and are more limiting than the dynamic loads that are required to be analyzed per Equation 13 of NB-3600. The piping considered in this category is the RWCU/SDC, feedwater, main steam, and isolation condenser steam piping within the containment. These were evaluated to be limiting based on differential thermal expansion, pipe size, transient thermal conditions and high energy line conditions. If Code Case N-122-2 is used for analysis of a class 1 pipe, the analysis complying with this Case will be included in the Design Report for the piping system.

3.9.3.5 Valve Operability Assurance

Active mechanical (with or without electrical operation) equipment designed to perform a mechanical motion for its safety-related function is Seismic Category I. Equipment with faulted condition functional requirements includes active pumps and valves in fluid systems such as the RHR System, ECCS, and MS system.

This subsection discusses operability assurance of active Code valves, including the actuator that is a part of the valve (Subsection 3.9.2.2).

Safety-related valves are qualified by testing and analysis and by satisfying the stress and deformation criteria at the critical locations within the valves. Operability is assured by meeting the requirements of the programs defined in Subsection 3.9.2.2, Section 3.10, Section 3.11 and the following subsections.

Section 4.4 of GE's Environmental Qualification Program (Reference 3.9-3) applies to this subsection, and the seismic qualification methodology presented therein is applicable to mechanical as well as electrical equipment.

3.9.3.5.1 Major Active Valves

Some of the major safety-related active valves (Tables 6.2-21, 6.2-42 and 3.2-1) discussed in this subsection for illustration are the main steamline isolation valves and safety/relief valves, and standby liquid control valves and depressurization valves. These valves are designed to meet the Code requirements and perform their mechanical motion in conjunction with a dynamic (SSE and other RBV) load event. These valves are supported entirely by the piping (i.e., the valve operators are not used as attachment points for piping supports) (Subsection 3.9.3.7). The dynamic qualification for operability is unique for each valve type; therefore, each method of qualification is detailed individually below.

Main Steamline Isolation Valves (MSIVs)

The typical Y-pattern MSIVs described in Subsection 5.4.5.2 are evaluated by analysis and test for capability to operate under the design loads that envelop the predicted loads during a design basis accident and safe shutdown earthquake.

The valve body is designed, analyzed and tested in accordance with the Code, Class 1 requirements. The MSIVs are modeled mathematically in the main steamline system analysis. The loads, amplified accelerations and resonance frequencies of the valves are determined from the overall steamline analysis. The piping supports (snubbers, rigid restraints, etc.) are located and designed to limit amplified accelerations of and piping loads in the valves to the design limits.

As described in Subsection 5.4.5.3, the MSIV and associated electrical equipment (wiring, solenoid valves, and position switches) are dynamically qualified to operate during an accident condition.

Main Steam Safety/Relief Valves

The typical SRV design described in Subsection 5.2.2.2 is qualified by type test to IEEE 344 for operability during a dynamic event. Structural integrity of the configuration during a dynamic event is demonstrated by both the Code Class 1 analysis and test.

- The valve is designed for maximum moments on inlet and outlet, which may be imposed when installed in service. These moments are resultants due to dead weight plus dynamic loading of both valve and connecting pipe, thermal expansion of the connecting pipe, and reaction forces from valve discharge.
- A production SRV is demonstrated for operability during a dynamic qualification (shake table) type test with moment and “g” loads applied greater than the required equipment’s design limit loads and conditions.

A mathematical model of this valve is included in the main steamline system analysis, as with the MSIVs. This analysis ensures the equipment design limits are not exceeded.

Standby Liquid Control Valve (Injection Valve)

The typical SLC injection valve design is qualified by type test to IEEE 344. The valve body is designed, analyzed and tested per the Code, Class 1. The qualification test demonstrates the ability to remain operable after the application of the horizontal and vertical dynamic loading exceeding the predicted dynamic loading.

Depressurization Valves (DPV)

The DPV design described in Subsection 6.3.2.8 is qualified by test to IEEE 344 for operability during a dynamic event. Structural integrity of the configuration during dynamic events is demonstrated by both the Code Class 1 analysis and test.

- The valve is designed for maximum moments on the inlet that may be imposed when installed in service. These moments are resultants due to dead weight plus dynamic loading of both valve and connecting pipe, thermal expansion of the connecting pipe, and reaction forces from valve discharge.
- A production DPV is demonstrated for operability after the performance of a dynamic qualification (shake table) type test with moment and "g" loads applied greater than the required equipment's design limit loads and conditions.

A mathematical model of this valve is included in the main steamline system analysis and in the analysis of stub lines attached directly to the reactor vessel. These analyses assure that the equipment design limits are not exceeded.

3.9.3.5.2 Other Active Valves

Other safety-related active valves are ASME Class 1, 2 or 3 and are designed to perform their mechanical motion during dynamic loading conditions. The operability assurance program ensures that these valves operate during a dynamic seismic and other RBV event.

Procedures

Qualification tests accompanied by analyses are conducted for all active valves. Procedures for qualifying electrical and instrumentation components, which are depended upon to cause the valve to accomplish its intended function, are described in Subsection 3.9.3.5.

Tests

Prior to installation of the safety-related valves, the following tests are performed: (1) shell hydrostatic test to the Code requirements; (2) back seat and main seat leakage tests; (3) disk hydrostatic test; (4) functional tests to verify that the valve opens and closes within the specified time limits when subject to the design differential pressure; and (5) operability qualification of valve actuators for the environmental conditions over the installed life. Environmental qualification procedures for operation follow those specified in Section 3.11. The results of all required tests are properly documented and included as a part of the operability acceptance documentation package.

Dynamic Load Qualification

The functionality of an active valve during and after a seismic and other RBV event may be demonstrated by an analysis or by a combination of analysis and test. The qualification of electrical and instrumentation components controlling valve actuation is discussed in Subsection 3.9.3.5. The valves are designed using either stress analyses or the pressure temperature rating requirements based upon design conditions. An analysis of the extended structure is performed for static equivalent dynamic loads applied at the center of gravity of the extended structure. Refer to Subsection 3.9.2.2 for further details.

The maximum stress limits allowed in these analyses confirm structural integrity and are the limits developed and accepted by the ASME for the particular ASME Class of valve analyzed.

Dynamic load qualification is accomplished in the following way:

(1) The active valves are designed to have a fundamental frequency that is greater than the high frequency asymptote (ZPA) of the dynamic event. This is shown by suitable test or analysis.

(2) The actuator and yoke of the valve system is statically loaded to an amount greater than that due to a dynamic event. The load is applied at the center of gravity to the actuator alone in the direction of the weakest axis of the yoke. The simulated operational differential pressure is simultaneously applied to the valve during the static deflection tests.

(3) The valve is then operated while in the deflected position (i.e., from the normal operating position to the safe position). The valve is verified to perform its safety-related function within the specified operating time limits.

(4) Motor operators and other electrical appurtenances necessary for operation are qualified as operable during a dynamic event by appropriate qualification tests prior to installation on the valve. These motor operators then have individual Seismic Category I supports attached to decouple the dynamic loads between the operators and valves themselves.

The piping, stress analysis, and pipe support designs maintain the motor operator accelerations below the qualification levels with adequate margin of safety.

If the fundamental frequency of the valve, by test or analysis, is less than that for the ZPA, a dynamic analysis of the valve is performed to determine the equivalent acceleration to be applied during the static test. The analysis provides the amplification of the input acceleration considering the natural frequency of the valve and the frequency content of the applicable plant floor response spectra. The adjusted accelerations have been determined using the same conservatism contained in the horizontal and vertical accelerations used for rigid valves. The adjusted acceleration is then used in the static analysis and the valve operability is assured by the methods outlined in Steps (2) through (4), using the modified acceleration input. Alternatively, the valve, including the actuator and all other accessories, is qualified by shake table test.

Valves that are safety-related but can be classified as not having an overhanging structure, such as check valves and pressure-relief valves, are considered as follows:

Check Valves

Due to the particular simple characteristics of the check valves, the active check valves are qualified by a combination of the following tests and analysis:

- Stress analysis including the dynamic loads where applicable;
- In-shop hydrostatic tests;
- In-shop seat leakage test; and
- Periodic in-situ valve exercising and inspection to assure the functional capability of the valve.

Pressure-Relief Valves

The active pressure relief valves (RVs) are qualified by the following procedures. These valves are subjected to test and analysis similar to check valves, stress analyses including the dynamic loads, in-shop hydrostatic seat leakage, and performance tests. In addition to these tests, periodic in-situ valve inspection, as applicable, and periodic valve removal, refurbishment, performance testing, and reinstallation are performed to assure the functional capability of the valve. Tests of the RV under dynamic loading conditions demonstrate that valve actuation can occur during application of the loads. The tests include pressurizing the valve inlet with nitrogen and subjecting the valve to accelerations equal to or greater than the dynamic event (SSE plus other RBV) loads.

Qualification of Electrical and Instrumentation Components Controlling Valve Actuation

A practical problem arises in attempting to describe tests for devices (relays, motors, sensors, etc.) as well as for complex assemblies such as control panels. It is reasonable to assume that a device, as an integral part of an assembly, can be subjected to dynamic loads tests while in an operating condition and its performance monitored during the test. However, in the case of complex panels, such a test is not always practical. In such a situation, the following alternate approach may be followed.

The individual devices are tested separately in an operating condition and the test levels recorded as the qualification levels of the devices. The panel, with similar devices installed but inoperative, is vibration tested to determine if the panel response accelerations, as measured by accelerometers installed at the device attachment locations, are less than the levels at which the devices were qualified. Installing the non-operating devices assures that the test panel has representative structural characteristics. If the acceleration levels at the device locations are found to be less than the levels to which the device is qualified, then the total assembly is considered qualified. Otherwise, either the panel is redesigned to reduce the acceleration level to the device locations and retested, or the devices are requalified to the higher levels.

Documentation

All of the preceding requirements are satisfied to demonstrate that functionality is assured for active valves. The documentation is prepared in a format that clearly shows that each consideration has been properly evaluated, and a designated quality assurance representative has validated the tests. The analysis is included as a part of the certified stress report for the assembly.

3.9.3.6 Design and Installation of Pressure Relief Devices

Main Steam Safety/Relief Valves

SRV lift in the main steam (MS) piping system results in a transient that produces momentary unbalanced forces acting on the MS and SRV discharge piping system for the period from opening of the SRV until a steady discharge flow from the reactor pressure vessel to the suppression pool is established. This period includes clearing of the water slug from the end of the discharge piping submerged in the suppression pool. Pressure waves traveling through the main steam and discharge piping following the relatively rapid opening of the SRV cause this piping to vibrate.

The analysis of the MS and discharge piping transient due to SRV discharge consists of a stepwise time-history solution of the fluid flow equation to generate a time history of the fluid properties at numerous locations along the pipe. The fluid transient properties are calculated based on the maximum set pressure specified in the steam system specification and the value of the Code flow rating, increased by a factor to account for the conservative method of establishing the rating. Simultaneous discharge of all valves in a MS line is assumed in the analysis because simultaneous discharge is considered to induce maximum stress in the piping. Reaction loads on the pipe are determined at each location corresponding to the position of an elbow. These loads are composed of pressure-times-area, momentum-change, and fluid-friction terms.

The method of analysis applied to determine response of the MS piping system, including the SRV discharge line, to relief valve operation is time-history integration. The forces are applied at locations on the piping system where fluid flow changes direction, thus causing momentary reactions. The resulting loads on the SRV, the main steamline, and the discharge piping are combined with loads due to other effects as specified in Subsection 3.9.3.1. In accordance with Tables 3.9-1 and 3.9-2, the Code stress limits for service levels corresponding to load combination classification as normal, upset, emergency, and faulted are applied to the main steam and discharge pipe.

Many of the SRV design parameters and criteria are specified in Sections 5.2 and 15.2. The procurement specification for the SRV, that will be prepared by GE, define the SRV requirements that are necessary to be consistent with the SRV parameters used in the steam line stress analysis.

Other Safety/Relief and Vacuum Breaker Valves

An SRV is identified as a pressure relief valve or vacuum breaker. SRVs in the reactor components and subsystems are described and identified in Subsection 5.4.13.

The operability assurance program discussed in Subsection 3.9.3.5 applies to safety/relief valves.

ESBWR safety/relief valves and vacuum breakers are designed and manufactured in accordance with the Code requirements.

The design of ESBWR SRVs incorporates SRV opening and pipe reaction load considerations required by ASME III, Appendix O, and including the additional criteria of SRP, Section 3.9.3, Paragraph II.2 and those identified under Subsection NB-3658 for pressure and structural integrity. Safety/relief and vacuum relief valve and vacuum relief operability is demonstrated either by dynamic testing or analysis of similarly tested valves or a combination of both in compliance with the requirements of SRP Subsection 3.9.3.

Depressurization Valves

The instantaneous opening of the DPV due to the explosion of the DPV operator results in a transient that produces impact loads and momentary unbalanced forces acting on the MS and DPV piping system. The impact load forcing functions associated with DPV operation used in the piping analyses are determined by test. From the test data a representative force time-history is developed and applied as input to a time-history analysis of the piping. If these loads are defined to act in each of the three orthogonal directions, the responses are combined by the SRSS method. The momentary unbalanced forces acting on the piping system are calculated and analyzed using the methods described in Subsection 3.9.3.6 for SRV lift analysis.

The resulting loads on the DPV, the main steamline, and the DPV piping are combined with loads due to other effects as specified in Subsection 3.9.3.1. In accordance with Tables 3.9-1 and 3.9-2, the code stress limits for service levels corresponding to load combination classification as normal, upset, emergency, and faulted are applied to the main steam, stub tube, and DPV discharge piping.

3.9.3.7 Component Supports

ASME Section III component supports shall be designed, manufactured, installed and tested in accordance with all applicable codes and standards. Supports include hangers, snubbers, struts, spring hangers, frames, energy absorbers and limit stops. Pipe whip restraints are not considered as pipe supports.

The design of bolts for component supports is specified in the Code, Subsection NF. Stress limits for bolts are given in NF-3225. The rules and stress limits which must be satisfied are those given in NF-3324.6 multiplied by the appropriate stress limit factor for the particular service loading level and stress category specified in Table NF-3225.2-1.

Moreover, on equipment which is to be, or may be, mounted on a concrete support, sufficient holes for anchor bolts are provided to limit the anchor bolt stress to less than 68.95 MPa (10,000 psi) on the nominal bolt area in shear or tension.

Concrete expansion anchor bolts, with regard to safety factor and anchor plates flexibility, will follow all aspects of IE Bulletin 79-02, "Pipe Support Base Plate Designs Using Concrete Expansion Anchor Bolts," Revision 2 dated November 8, 1979. Expansion anchor bolts shall not be used for any safety related system components. The design and installation of all anchor bolts will be performed in accordance with Appendix B to ACI 349-01 "Anchoring to Concrete", subject to the conditions and limitations specified in RG 1.199 and all applicable requirements of IE Bulletin 79-02, Rev. 2.

It is preferable to attach pipe supports to embedded plates; however, surface-mounted base plates with undercut anchor bolts can be used in the design and installation of supports for safety related.

Pipe support base plate flexibility shall be accounted for in calculation of concrete anchor bolt loads, in accordance with IE Bulleting 79-02.

Mortar grout used for shim on the pipe support, when placed in contention areas, must be free of organic links in its composition.

3.9.3.7.1 Piping Supports

Supports and their attachments for essential Code Class 1, 2, and 3 piping are designed in accordance with Subsection NF up to the interface of the building structure, with jurisdictional boundaries as defined by Subsection NF. The applicable loading combinations and allowables used for design of supports are shown on Tables 3.9-10, -11, and –12. The stress limits are per ASME III, Subsection NF and Appendix F. Supports are generally designed either by load rating method per paragraph NF-3280 or by the stress limits for linear supports per paragraph NF-3143. The critical buckling loads for the Class 1 piping supports subjected to faulted loads

that are more severe than normal, upset and emergency loads, are determined by using the methods discussed in Appendices F and XVII of the Code. To avoid buckling in the piping supports, the allowable loads are limited to two thirds of the determined critical buckling loads.

Maximum calculated static and dynamic deflections of the piping at support locations do not exceed the allowable limits specified in the piping design specification. The purpose of the allowable limits is to preclude failure of the pipe supports due to piping deflections.

The design of supports for the non-nuclear piping satisfies the requirements of ASME/ANSI B31.1 Power Piping Code, Paragraphs 120 and 121.

For the major active valves identified in Subsection 3.9.3.5, the valve operators are not used as attachment points for piping supports.

The friction loads caused by unrestricted motion of the piping due to thermal displacements are considered to act on the support with a friction coefficient of 0.3, in the case of steel-to-steel friction. For stainless steel, Teflon, and other materials, the friction coefficient could be less. The friction loads are not considered during seismic or dynamic loading evaluation of pipe support structures.

For the design of piping supports, a deflection limit of 1.6 mm for erection and operation loadings is used, based on WRC-353 paragraph 2.3.2. For the consideration of loads due to SSE and in the cases involving springs, the deflection limit is increased to 3.2 mm.

For frame type supports for directions that are loaded, the total gap is limited to 1/8 inch. In general, this gap is adequate to avoid thermal binding due to radial thermal expansion of the pipe. For large pipes with higher temperatures, this gap will be evaluated to assure that no thermal bending occurs.

The small bore lines (e.g. small branch and instrumentation lines) are supported taking into account the flexibility, and thermal and dynamic motion requirements of the pipe to which they connect. Subsection 3.7.3.16 provides details for the support design and criteria for instrumentation lines 50 mm and less where it is acceptable practice by the regulatory agency to use piping handbook methodology.

The design criteria and dynamic testing requirements for the ASME III piping supports are as follows:

(1) Piping Supports—All piping supports are designed, fabricated, and assembled so that they cannot become disengaged by the movement of the supported pipe or equipment after they have been installed. All piping supports are designed in accordance with the rules of Subsection NF of the Code up to the building structure interface as defined by the jurisdictional boundaries in Subsection NF.

(2) Spring Hangers—The operating load on spring hangers is the load caused by dead weight. The hangers are calibrated to ensure that they support the operating load at both their hot and cold load settings. Spring hangers provide a specified down travel and up travel in excess of the specified thermal movement.

(3) Snubbers—The operating loads on snubbers are the loads caused by dynamic events (e.g., seismic, RBV due to LOCA, SRV and DPV discharge, discharge through a relief valve line or valve closure) during various operating conditions. Snubbers restrain piping against

response to the dynamic excitation and to the associated differential movement of the piping system support anchor points. The criteria for locating snubbers and ensuring adequate load capacity, the structural and mechanical performance parameters used for snubbers and the installation and inspection considerations for the snubbers are as follows:

a. Required Load Capacity and Snubber Location

The loads calculated in the piping dynamic analysis, described in Subsection 3.7.3.8, cannot exceed the snubber load capacity for design, normal, upset, emergency and faulted conditions.

Snubbers are generally used in situations where dynamic support is required because thermal growth of the piping prohibits the use of rigid supports. The snubber locations and support directions are first decided by estimation so that the stresses in the piping system have acceptable values. The snubber locations and support directions are refined by performing the dynamic analysis of the piping and support system as described above in order that the piping stresses and support loads meet the Code requirements.

The pipe support design specification requires that snubbers be provided with position indicators to identify the rod position. This indicator facilitates the checking of hot and cold settings of the snubber, as specified in the installation manual, during plant preoperational and startup testing.

b. Inspection, Testing, Repair and/or Replacement of Snubbers

The pipe support design specification requires that the snubber supplier prepare an installation instruction manual. This manual is required to contain complete instructions for the testing, maintenance, and repair of the snubber. It also contains inspection points and the period of inspection.

The pipe support design specification requires that hydraulic snubbers be equipped with a fluid level indicator so that the level of fluid in the snubber can be ascertained easily.

The spring constant achieved by the snubber supplier for a given load capacity snubber is compared against the spring constant used in the piping system model. If the spring constants are the same, then the snubber location and support direction become confirmed. If the spring constants are not in agreement, they are brought in agreement, and the system analysis is redone to confirm the snubber loads. This iteration is continued until all snubber load capacities and spring constants are reconciled.

c. Snubber Design and Testing

To assure that the required structural and mechanical performance characteristics and product quality are achieved, the following requirements for design and testing are imposed by the design specification:

(i) The snubbers are required by the pipe support design specification to be designed in accordance with the rules and regulations of the Code, Subsection NF. This design requirement includes analysis for the normal, upset, emergency, and faulted loads. These calculated loads are then compared against the allowable loads to make sure that the stresses are below the code allowable limit.

(ii) The snubbers are tested to ensure that they can perform as required during the seismic and other RBV events, and under anticipated operational transient loads or other mechanical loads associated with the design requirements for the plant. The following test requirements are included:

- Snubbers are subjected to force or displacement versus time loading at frequencies within the range of significant modes of the piping system.
- Dynamic cyclic load tests are conducted for hydraulic snubbers to determine the operational characteristics of the snubber control valve.
- Displacements are measured to determine the performance characteristics specified.
- Tests are conducted at various temperatures to ensure operability over the specified range.
- Peak test loads in both tension and compression are required to be equal to or higher than the rated load requirements.
- The snubbers are tested for various abnormal environmental conditions. Upon completion of the abnormal environmental transient test, the snubber is tested dynamically at a frequency within a specified frequency range. The snubber must operate normally during the dynamic test.

d. Snubber Installation Requirements

An installation instruction manual is required by the pipe support design specification. This manual is required to contain instructions for storage, handling, erection, and adjustments (if necessary) of snubbers. Each snubber has an installation location drawing that contains the installation location of the snubber on the pipe and structure, the hot and cold settings, and additional information needed to install the particular snubber.

e. Snubber Pre-service Examination

The pre-service examination plan of all snubbers covered by the plant-specific Technical Specifications is prepared. This examination is made after snubber installation but not more than 6 months prior to initial system pre-operational testing. The pre-service examination verifies the following:

(i) There are no visible signs of damage or impaired operability as a result of storage, handling, or installation.

(ii) The snubber location, orientation, position setting, and configuration (attachments, extensions, etc.) are according to design drawings and specifications.

(iii) Snubbers are not seized, frozen or jammed.

(iv) Adequate swing clearance is provided to allow snubber movements.

(v) If applicable, fluid is to the recommended level and is not to be leaking from the snubber system.

(vi) Structural connections such as pins, fasteners and other connecting hardware such as lock nuts, tabs, wire, cotter pins are installed correctly.

If the period between the initial pre-service examination and initial system pre-operational tests exceeds 6 months, reexamination of Items i, iv, and v is performed. Snubbers, which are installed incorrectly or otherwise fail to meet the above requirements, are repaired or replaced and re-examined in accordance with the above criteria.

(4) Struts — Struts are defined as ASME Section III, Subsection NF, Component Standard Supports. They consist of rigid rods pinned to a pipe clamp or lug at the pipe and pinned to a clevis attached to the building structure or supplemental steel at the other end. Struts, including the rod, clamps, clevises, and pins, are designed in accordance with the Code, Subsection NF-3000.

Struts are passive supports, requiring little maintenance and in-service inspection, and are normally used instead of snubbers where dynamic supports are required and the movement of the pipe due to thermal expansion and/or anchor motions is small. Struts are not used at locations where restraint of pipe movement to thermal expansion significantly increases the secondary piping stress ranges or equipment nozzle loads.

Because of the pinned connections at the pipe and structure, struts carry axial loads only. The design loads on struts may include those loads caused by thermal expansion, dead weight, and the inertia and anchor motion effects of all dynamic loads. As in the case of other supports, the forces on struts are obtained from an analysis, and are confirmed not to exceed the design loads for various operating conditions.

(5) Frame Type (Linear) Pipe Supports — Frame type pipe supports are linear supports as defined as ASME Section III, Subsection NF, Component Standard Supports. They consist of frames constructed of structural steel elements that are not attached to the pipe. They act as guides to allow axial and rotational movement of the pipe but act as rigid restraints to lateral movement in either one or two directions. Frame type pipe supports are designed in accordance with the Code, Subsection NF-3000.

Frame type pipe supports are passive supports, requiring little maintenance and in-service inspection, and are normally used instead of struts when they are more economical or where environmental conditions are not suitable for the ball bushings at the pinned connections of struts. Similar to struts, frame type supports are not used at locations where restraint of pipe movement to thermal expansion significantly increases the secondary piping stress ranges or equipment nozzle loads.

The design loads on frame type pipe supports include those loads caused by thermal expansion, dead weight, and the inertia and anchor motion effects of all dynamic loads. As in the case of other supports, the forces on frame type supports are obtained from an analysis, which are assured not to exceed the design loads for various operating conditions.

For insulated pipes, special pipe guides with one or two way restraint (two or four trunnions welded to a pipe clamp) may be used in order to minimize the heat loss of piping systems. For small bore pipe guides, it could be acceptable to cut the insulation around the support frame, although this must be indicated in the support specification.

(6) Special Engineered Pipe Supports — In an effort to minimize the use and application of snubbers there may be instances where special engineered pipe supports are used where either struts or frame-type supports cannot be applied. Examples of special engineered supports are Energy Absorbers, and Limit Stops.

Limit Stops — are passive seismic pipe support devices consisting of limit stops with gaps sized to allow for thermal expansion while preventing large seismic displacements. Limit stops are linear supports as defined as ASME Section III, Subsection NF, and are designed in accordance with the Code, Subsection NF-3000. They consist of box frames constructed of structural steel elements that are not attached to the pipe. The box frames allow free movement in the axial direction but limit large displacements in the lateral direction.

Subsection 3.7.3.3.3 provides the analytical requirements for special engineered pipe supports.

3.9.3.7.2 Reactor Pressure Vessel Sliding Supports

The ESBWR RPV sliding supports are sliding supports as defined by section NF-3124 of the Code and are designed as an ASME Code Class 1 component support per the requirements of the Code, Subsection NF. The loading conditions and stress criteria are given in Tables 3.9-1 and 3.9-2, and the calculated stresses shall meet the Code allowable stresses at all locations for various plant operating conditions. The stress level margins assure the adequacy of the RPV sliding supports.

3.9.3.7.3 Reactor Pressure Vessel Stabilizer

The RPV stabilizer is designed as a safety-related linear type component support in accordance with the requirements of ASME Boiler and Pressure Vessel Code Section III, Subsection NF. The stabilizer provides a reaction point near the upper end of the RPV to resist horizontal loads caused by effects such as earthquake, pipe rupture, and RBV. The design loading conditions and stress criteria are given in Table 3.9-2, and the calculated stresses meet the Code allowable stresses in the critical support areas for various plant operating conditions.

3.9.3.7.4 Floor-Mounted Major Equipment

Because the major active valves are supported by piping and not tied to building structures, valve "supports" do not exist (Subsection 3.9.3.7).

The PCC and IC heat exchangers are analyzed to verify the adequacy of their support structure under various plant operating conditions. In all cases, the load stresses in the critical support areas are within ASME Code allowables.

3.9.3.8 Other ASME III Component Supports

The ASME III component supports and their attachments (other than those discussed in the preceding subsection) are designed in accordance with Subsection NF of the Code up to the interface with the building structure. The building structure component supports are designed in

accordance with the AISC Specification for the Design, Fabrication, and Erection of Structural Steel for Buildings. The loading combinations for the various operating conditions correspond to those used to design the supported component. The component loading combinations are discussed in Subsection 3.9.3.1. Active component supports are discussed in Subsection 3.9.3.5. The stress limits are per ASME III, Subsection NF and Appendix F. The supports are evaluated for buckling in accordance with ASME III.

3.9.4 Control Rod Drive (CRD) System

This subsection addresses the Control Rod Drive system as discussed in SRP 3.9.4. The Control Rod Drive (CRD) system consists of the control rods and the related mechanical components that provide the means for mechanical movement. As discussed in General Design Criteria 26 and 27, the CRD system provides one of the independent reactivity control systems. The rods and the drive mechanism are capable of reliably controlling reactivity changes either under conditions of anticipated operational occurrences, or under postulated accident conditions. A positive means for inserting the rods is always maintained to ensure appropriate margin for malfunction, such as stuck rods. Because the CRD system is a safety-related system and portions of the CRD system are a part of the reactor coolant pressure boundary (RCPB), the system is designed, fabricated, and tested to quality standards commensurate with the safety functions to be performed. This provides an extremely high probability of accomplishing the safety functions either in the event of anticipated operational occurrences or in withstanding the effects of postulated accidents and natural phenomena such as earthquakes, as discussed in General Design Criteria (GDC) 1, 2, 14, and 29 and 10 CFR 50.55a.

The plant design meets the requirements of the following regulations:

(1) GDC 1 and 10 CFR 50.55a, as it relates to the CRD system being designed to quality standards commensurate with the importance of the safety functions to be performed.

(2) GDC 2, as it relates to the CRD system being designed to withstand the effects of an earthquake without loss of capability to perform its safety functions.

(3) GDC 14, as it relates to the RCPB portion of the CRD system being designed, constructed, and tested for the extremely low probability of leakage or gross rupture.

(4) GDC 26, as it relates to the CRD system being one of the independent reactivity control systems that is designed with appropriate margin to assure its reactivity control function under conditions of normal operation including anticipated operational occurrences.

(5) GDC 27, as it relates to the CRD system being designed with appropriate margin, and in conjunction with the emergency core cooling system, be capable of controlling reactivity and cooling the core under postulated accident conditions.

(6) GDC 29, as its relates to the CRD system, in conjunction with reactor protection systems, being designed to assure an extremely high probability of accomplishing its safety functions in the event of anticipated operational occurrences.

The CRD system includes electrohydraulic fine-motion CRD (FMCRD) mechanisms, the HCU assemblies, the condensate supply system, and power for FMCRD motors. The system extends inside RPV to the coupling interface with the control rod blades.

3.9.4.1 Descriptive Information on CRD System

Descriptive information on the FMCRDs as well as the entire CRD system is contained in Subsection 4.6.1.

3.9.4.2 Applicable CRD System Design Specification

The CRD system, which is designed to meet the functional design criteria outlined in Subsection 4.6.1, consists of the following:

- electro-hydraulic fine motion control rod drive;
- hydraulic control unit;
- hydraulic power supply (pumps);
- electric power supply (for FMCRD motors);
- interconnecting piping;
- flow and pressure and isolation valves; and
- instrumentation and electrical controls.

Those components of the CRD system forming part of the primary pressure boundary are designed according to the Code, Class 1 requirements.

The quality group classification of the components of the CRD system is outlined in Table 3.2-1 and they are designed to the codes and standards, per Table 3.2-3, in accordance with their individual quality groups.

Pertinent aspects of the design and qualification of the CRD system components are discussed in the following locations: transients in Subsection 3.9.1.1, faulted conditions in Subsection 3.9.1.4, and seismic testing in Subsection 3.9.2.2.

3.9.4.3 Design Loads and Stress Limits

Allowable Deformations

The ASME III Code components of the CRD system have been evaluated analytically and the design loading conditions, and stress criteria are as given in Tables 3.9-1 and 3.9-2, and the calculated stresses meet the Code allowable stresses. For the non-Code components, the ASME III Code requirements are used as guidelines and experimental testing is used to determine the CRD performance under all possible conditions as described in Subsection 3.9.4.4.

3.9.4.4 CRD Performance Assurance Program

The following CRD tests are described within Section 4.6:

- factory quality control tests;
- functional tests;
- operational tests;
- acceptance tests; and

- surveillance tests.

3.9.5 Reactor Pressure Vessel Internals

This subsection addresses the Reactor Pressure Vessel (RPV) internals as discussed in SRP 3.9.5 draft R3. Reactor pressure vessel internals consist of all the structural and mechanical elements inside the reactor vessel. Safety-related structures and components are constructed and tested to quality standards commensurate with the importance of the safety functions to be performed, and designed with appropriate margins to withstand effects of anticipated operational occurrences, normal operation; natural phenomena such as earthquakes; postulated accidents including loss-of-coolant accidents (LOCA), and from events and conditions outside the nuclear power unit as discussed in General Design Criteria 1, 2, 4 and 10 and 10 CFR 50.55a.

The plant meets the requirements of the following regulations:

(1) GDC 1 and 10 CFR 50.55a, as they relate to reactor internals, the reactor internals are designed to quality standards commensurate with the importance of the safety functions to be performed.

(2) GDC 2, as it relates to reactor internals, the reactor internals are designed to withstand the effects of earthquakes without loss of capability to perform their safety functions.

(3) GDC 4, as it relates to reactor internals, reactor internals are designed to accommodate the effects of and to be compatible with the environmental conditions associated with normal operations, maintenance, testing, and postulated LOCA. Dynamic effects associated with postulated pipe ruptures are excluded from the design basis when analyses demonstrate that the probability of fluid system piping rupture is extremely low under conditions consistent with the design basis for the piping.

(4) GDC 10, as it relates to reactor internals, reactor internals are designed with appropriate margin to assure that specified acceptable fuel design limits are not exceeded during any condition of normal operation, including the effects of anticipated operational occurrences.

This subsection identifies and discusses the structural and functional integrity of the major reactor pressure vessel (RPV) internals, including core support structures.

The core support structures and reactor vessel internals (exclusive of fuel, control rods, and incore nuclear instrumentation) are as follows:

- Core Support Structures
  - shroud;
  - shroud support;
  - core plate (and core plate hardware);
  - top guide (and top guide hardware);
  - fuel supports (orificed fuel supports and peripheral fuel supports);
  - control rod guide tubes; and
  - non-pressure boundary portion of control rod drive housings.

- Internal Structures (Components marked with an * are nonsafety-related.)
  - chimney* and partitions*;
  - chimney head* and steam separator assembly*;
  - steam dryers assembly*;
  - feedwater spargers*;
  - SLC header and spargers and piping;
  - RPV vent assembly*;
  - in-core guide tubes and stabilizers;
  - surveillance sample holders*; and
  - non-pressure boundary portion of in-core housings.

A general assembly drawing of the important reactor components is shown in Figure 5.3-2.

The floodable inner volume of the reactor pressure vessel can be seen in Figure 3.9-2. It is the volume up to the level of the GDCS equalizing nozzles.

The design arrangement of the reactor internals, such as the shroud, chimney, steam separators and guide tubes, is such that one end is unrestricted and thus free to expand.

3.9.5.1 Core Support Structures

The core support structures consist of those items listed in Section 3.9.5 and are safety-related as defined within Section 3.2. These structures form partitions within the reactor vessel to sustain pressure differentials across the partitions, direct the flow of the coolant water, and laterally locate and support the fuel assemblies. Figure 3.9-3 shows the reactor vessel internal flow paths.

Shroud

The shroud and chimney make up a stainless steel cylindrical assembly that provides a partition to separate the upward flow of coolant through the core from the downward recirculation flow. This partition separates the core region from the downcomer annulus. The volume enclosed by this assembly is characterized by three regions. The upper region or chimney surrounds the core discharge plenum, which is bounded by the chimney head on top and the top guide plate below. The central region of the shroud surrounds the active fuel. This section is bounded at the top by the top guide plate and at the bottom by the core plate. The lower region, surrounding part of the lower plenum, is welded to the reactor pressure vessel shroud support brackets. The shroud provides the horizontal support for the core by supporting the core plate and top guide.

Shroud Support

The RPV shroud support is designed to support the shroud and the components connected to the shroud. The RPV shroud support is a series of horizontal brackets welded to the vessel wall to provide support to the shroud and core. The brackets are welded to the vessel wall and the lower region of the shroud.

Core Plate

The core plate consists of a circular stainless steel plate with round openings and is stiffened with a rim and beam structure. The core plate provides lateral support and guidance for the control rod guide tubes, in-core flux monitor guide tubes, peripheral fuel supports, and startup neutron sources. The last two items are also supported vertically by the core plate. The entire assembly is bolted to a support ledge or flange in the lower region of the shroud.

Top Guide

The top guide consists of a circular plate with square openings for fuel. Each opening provides lateral support and guidance for four fuel assemblies or, in the case of peripheral fuel, less than four fuel assemblies. Holes are provided in the bottom of the support intersections to anchor the in-core flux monitors and startup neutron sources. The top guide is mechanically attached to the top of the shroud and provides a flat surface for the chimney flange. The chimney is bolted to the top surface of the top guide.

Fuel Supports

The Fuel supports (Figure 3.9-4) are of two basic types: peripheral supports and orificed fuel supports. The peripheral fuel supports are located at the outer edge of the active core and are not adjacent to control rods. Each peripheral fuel support supports one fuel assembly and contains an orifice designed to assure proper coolant flow to the peripheral fuel assembly. Each orificed fuel support holds four fuel assemblies vertically upward and horizontally and has four orifices to provide proper coolant flow distribution to each rod-controlled fuel assembly. The orificed fuel supports rest on the top a control rod guide tube. The control rods pass through cruciform openings in the center of the orificed fuel support. This locates the four fuel assemblies surrounding a control rod. A control rod and the four adjacent fuel assemblies represent a core cell.

Control Rod Guide Tubes

The control rod guide tubes (CRGTs) located inside the vessel extend from the top of the CRD housings up through holes in the core plate. Each guide tube is designed as the guide for the lower end of a control rod and as the support for an orificed fuel support. This locates the four fuel assemblies surrounding the control rod. The bottom of the guide tube is supported by the CRD housing, which, in turn, transmits the weight of the guide tube, fuel support, and fuel assemblies to the reactor vessel bottom head. The control rod guide tubes (CRGTs) also include coolant flow holes near the top that are aligned with the coolant flow holes in the orificed fuel supports.

3.9.5.2 Internal Structures

The internal structures consist of those items listed in Subsection 3.9.5 (2), and are safety-related or nonsafety-related as noted. These components direct and control coolant flow through the core or support safety-related and nonsafety-related functions.

Chimney and Partitions

These components are nonsafety-related internal components. The chimney is a long cylinder mounted to the top guide that supports the steam separator assembly. The chimney provides the driving head necessary to sustain the natural circulation flow. The chimney forms the annulus

separating the subcooled recirculation flow returning downward from the steam separators and feedwater from the upward steam-water mixture flow exiting the core. The chimney cylinder is flanged at the bottom and top for attachment to the top guide and the chimney head, respectively. Inside the chimney are partitions that separate groups of 16 fuel assemblies. These partitions act to channel the mixed steam and water flow exiting the core into smaller chimney sections, limiting cross flow and flow instabilities, which could result from a much larger diameter open chimney. The partitions do not extend to the top of the chimney, thereby forming a plenum or mixing chamber for the steam/water mixture prior to entering the steam separators.

Chimney Head and Steam Separators Assembly

The chimney head and standpipes/steam separators are nonsafety-related internal components. The chimney head and steam separators assembly includes the upper flanges and bolts, and forms the top of the core discharge mixture plenum. The discharge plenum provides a mixing chamber for the steam/water mixture before it enters the steam separators. Individual stainless steel axial flow steam separators are supported on and attached to the top of standpipes that are welded into the chimney head. The steam separators have no moving parts. In each separator, the steam/water mixture rising through the standpipe passes vanes that impart a spin and establish a vortex separating the water from the steam. The separated water flows from the lower portion of the steam separator into the downcomer annulus. The separator assembly is removable from the reactor pressure vessel on a routine basis.

Steam Dryer Assembly

The steam dryer assembly is a nonsafety-related component. The steam dryer removes moisture from the wet steam leaving the steam separators. The extracted moisture flows down the dryer vanes to the collecting troughs, then flows through drain ducts into the downcomer annulus.

The steam dryer assembly consists of multiple banks of dryer units mounted on a common structure, which is removable from the reactor pressure vessel as an integral unit. The dryer assembly includes the dryer banks, dryer supply and discharge ducting, drain collecting trough, drain duct, and a skirt that forms a water seal extending below the separator reference zero elevation. Upward and radial movement of the dryer assembly under the action of blowdown and seismic loads are limited by reactor vessel internal stops, which are arranged to permit differential expansion growth of the dryer assembly with respect to the reactor pressure vessel.

Feedwater Spargers

These are nonsafety-related components. Each of two feedwater lines is connected to spargers through three RPV nozzles. The feedwater spargers deliver makeup water to the reactor during plant start up, power generation and plant shutdown modes of operation. The reactor water cleanup/shutdown cooling system and CRD system, upon low water level, also utilize the feedwater spargers.

The feedwater spargers are stainless steel headers located in the mixing plenum above the downcomer annulus. A separate sparger in two halves is fitted to each feedwater nozzle by a tee and is shaped to conform to the curve of the vessel wall. The sparger tee inlet is connected to the thermal sleeve arrangement. Sparger end brackets are pinned to vessel brackets to support the spargers. Feedwater flow enters the center of the spargers and is discharged radially inward to mix the cooler feedwater with the downcomer flow from the steam separators and steam dryer.

The feedwater also serves to condense steam in the region above the downcomer annulus and to subcool the water flowing down the annulus region.

SLC Header and Sparger and Piping

These are safety-related components. Each of two SLC nozzles supplies vertical piping extending down from the SLC nozzles to a header. Each header supplies two distribution lines extending down from the header to about the bottom of the fuel, and four injection lines with nozzles penetrating the shroud at four different levels (elevations). The injection lines enable the sodium pentaborate solution to be injected around the periphery of the core.

RPV Vent Assembly

This is designed as a nonsafety-related component. Only the piping external to the vessel is a reactor coolant pressure boundary, and the vent function is not a safety-related operation.

The head vent assembly passes steam and noncondensable gases from the reactor head to the steamlines during startup and operation. During shutdown and filling for hydrostatic testing, steam and noncondensable gases may be vented to the drywell equipment sump while the connection to the steamline is blocked. When draining the vessel during shutdown, air enters the vessel through the vent.

In-Core Guide Tubes and Stabilizers

These are safety-related components. The guide tubes protect the in-core instrumentation from flow of water in the bottom head plenum and provide a means of positioning fixed detectors in the core. The in-core flux monitor guide tubes extend from the top of the in-core flux monitor housing to the top of the core plate. The power range detectors for the power range monitoring units and the startup range neutron monitor detectors are inserted through the guide tubes.

A latticework of clamps, tie bars, and spacers give lateral support and rigidity to the guide tubes.

Surveillance Sample Holders

These are nonsafety-related components. The surveillance sample holders are welded baskets containing impact and tensile specimen capsules. The baskets hang from the brackets that are attached to the inside of the reactor vessel wall and extend to mid-height of the active core. The radial positions are chosen to expose the specimens to the same environment and maximum neutron fluxes experienced by the reactor vessel itself.

3.9.5.3 Loading Conditions

Events to be Evaluated

Examination of the spectrum of conditions for which the safety design bases (Subsection 3.9.5.4) must be satisfied by core support structures and safety-related internal components reveals three significant load events:

- RPV Line Break Accident — a break in any one line between the reactor vessel nozzle and the isolation valve (the accident results in significant pressure differentials across some of the structures within the reactor and reactor building vibration caused by suppression pool dynamics).

- Earthquake — subjects the core support structures and reactor internals to significant forces as a result of ground motion and consequent RBV.
- Safety/Relief Valve or Depressurization Valve Discharge — RBV caused by suppression pool dynamics and structural feedback.

The faulted conditions for the reactor pressure vessel internals are discussed in Subsection 3.9.1.4. Loading combination and analysis for safety-related reactor internals including core support structures are discussed in Subsection 3.9.5.4.

Reactor Internal Pressure Differences

For reactor internal pressure differences, the events at normal, upset, emergency and faulted conditions are considered.

The TRACG computer code is used to analyze the transient conditions within the reactor vessel following AOOs, infrequent events and accidents (e.g., LOCA). The analytical model of the vessel consists of axial and radial nodes, which are connected to the necessary adjoining nodes by flow paths having the required resistance and inertial characteristics. The program solves the energy and mass conservation equations for each node to give the depressurization rates and pressures in the various regions of the reactor.

In order to determine the maximum pressure differences across the reactor internals, a two sigma statistical uncertainty study is performed to determine the upper bound pressure difference adders that are applied to the nominal pressure differences.

Table 3.9-3 summarizes the maximum pressure differentials that result from the limiting events among the AOOs, infrequent events and accidents (e.g., LOCA).

Seismic and Other Reactor Building Vibration Events

The loads due to earthquake and other reactor building vibration (RBV) acting on the structure within the reactor vessel are based on a dynamic analysis methods described in Section 3.7.

3.9.5.4 Design Bases

Safety Design Bases

The reactor internals, including core support structures, shall meet the following safety design bases:

- The reactor vessel nozzles and internals shall be so arranged as to provide a floodable volume in which the core can be adequately cooled in the event of a breach in the nuclear system process barrier external to the reactor vessel.
- Deformation of internals shall be limited to assure that the control rods and core standby cooling systems can perform their safety-related functions.
- Mechanical design of applicable structures shall assure that the above safety design bases are satisfied so that the safe shutdown of the plant and removal of decay heat are not impaired.

Power Generation Design Bases

The reactor internals, including core support structures, shall be designed to the following power generation design bases:

- The internals shall provide the proper coolant distribution during all anticipated normal operating conditions to full power operation of the core without fuel damage.
- The internals shall be arranged to facilitate refueling operations.
- The internals shall be designed to facilitate inspection.

Design Loading Categories

The basis for determining faulted dynamic event loads on the reactor internals is shown in Section 3.7. Table 3.9-2 shows the load combinations used in the analysis.

Core support structures and safety class internals stress limits are consistent with the Code, Subsection NG. For these components, Level A, B, C and D service limits are applied to the normal, upset, emergency, and faulted loading conditions, respectively, as defined in the design specification. Stress intensity and other design limits are discussed in the following paragraphs.

Stress and Fatigue Limits for Core Support Structures

The design and construction of the core support structures are in accordance with the Code, Subsection NG.

Stress, Deformation, and Fatigue Limits for Safety Class and Other Reactor Internals (Except Core Support Structures)

For safety-related reactor internals, the stress deformation and fatigue criteria listed in Tables 3.9-4 through Table 3.9-7 are based on the criteria established in applicable codes and standards for similar equipment, by manufacturers' standards, or by empirical methods based on field experience and testing. For the quantity SF_{min} (minimum safety factor) appearing in those tables, the following values are used:

Service Level	Service Condition	SF_{min}
A	Normal	2.25
B	Upset	2.25
C	Emergency	1.5
D	Faulted	1.125

Components inside the reactor pressure vessel such as control rods, which must move during accident condition, are examined to determine if adequate clearances exist during emergency and faulted conditions. The forcing functions applicable to the reactor internals are discussed in Subsection 3.9.2.

The design criteria, loading conditions, and analyses that provide the basis for the design of the safety class reactor internals other than the core support structures meet the guidelines of NG-3000 and are constructed so as not to adversely affect the integrity of the core support structures (NG-1122).

The design requirements for equipment classified as non-safety (other) class internals (e.g., steam dryers, separators and chimney) are specified with appropriate consideration of the intended service of the equipment and expected plant and environmental conditions under which it operates. Where Code design requirements are not applicable, accepted industry or engineering practices are used.

3.9.6 In-Service Testing of Pumps and Valves

This subsection considers in-service testing of certain safety-related pumps and valves typically designated as Class 1, 2, or 3 under the Code as discussed in SRP 3.9.6 draft R3. Other pumps and valves not categorized as Code Class 1, 2, or 3 may be included if they are considered to be safety related. The in-service testing of pumps and valves is in conformance with the relevant requirements of 10 CFR Part 50, Appendix A, General Design Criteria 1, 37, 40, 43, 46, 54, and 10 CFR 50.55a(f). The relevant requirements are as follows:

(1) GDC 1, as it relates to testing safety-related components to quality standards commensurate with the importance of the safety functions to be performed.

(2) GDC 37, as it relates to periodic functional testing of the emergency core cooling system to ensure the leak tight integrity and performance of its active components.

(3) GDC 40, as it relates to periodic functional testing of the containment heat removal system to ensure the leak tight integrity and performance of its active components.

(4) GDC 43, as it relates to periodic functional testing of the containment atmospheric cleanup systems to ensure the leak tight integrity and the performance of the active components, such as pumps and valves.

(5) GDC 46, as it relates to periodic functional testing of the cooling water system to ensure the leak tight integrity and performance of the active components.

(6) GDC 54, as it relates to piping systems penetrating containment being designed with the capability to test periodically the operability of the isolation and determine valve leakage acceptability.

(7) Subsection 50.55a(f) of 10 CFR, as it relates to including pumps and valves whose function is required for safety in the in-service testing program to verify operational readiness by periodic testing.

Additional guidance regarding the development and implementation of in-service testing programs for pumps and valves provided in NUREG-1482, "Guidelines for Inservice Testing at Nuclear Power Plants," has been considered and implemented as appropriate. ASME Code cases that refer to in-service testing of pumps and valves are used as endorsed in Regulatory Guide 1.192.

This subsection outlines the in-service testing program plan based on the requirements of ASME OM Code, Subsections ISTB, ISTC, and (mandatory) Appendix I. The ESBWR design does not use pumps to mitigate the consequences of an accident or to maintain the reactor in a safe shutdown condition. Therefore, there are no pumps listed in Table 3.9-8. Table 3.9-8 lists the in-service testing parameters, frequencies, and exemptions for the safety-related valves. Valves having a containment isolation function are also noted in the listing. In-service inspection is discussed in Subsection 5.2.4 and Section 6.6.

Details of the in-service testing program, including test schedules and frequencies, are reported in the in-service inspection and testing plan, which shall be provided by the COL holder referencing the ESBWR design. The plan integrates the applicable test requirements for safety-related valves listed in Table 3.9-8. This plan includes baseline pre-service testing to support the periodic in-service testing of the components. Depending on the test results, the plan provides a commitment to disassemble and inspect the safety-related valves when the OM Code limits are exceeded, as described in the following paragraphs. The primary elements of this plan, including the requirements of Generic Letter 89-10 for motor-operated valves, are delineated in the subsections to follow. (Refer to Subsection 3.9.9.3 for COL information requirements.)

3.9.6.1 In-Service Testing of Safety-Related Valves

Check Valves

All safety-related piping systems incorporate provisions for testing to demonstrate the operability of the check valves under design conditions. In-service testing incorporates the use of advance non-intrusive techniques to periodically assess degradation and the performance characteristics of the check valves in accordance with the provisions of ISTC. The Subsection ISTC tests are performed, and check valves that fail to exhibit the required performance may be disassembled for evaluation. The Code provides criteria limits for the test parameters identified in Table 3.9-8. A program shall be developed by the COL holder referencing the ESBWR design, to establish the frequency and the extent of each disassembly. The program may be revised throughout the plant life to minimize disassembly based on past disassembly experience. (Refer to Subsection 3.9.9.3 (1) for COL information requirements.)

Motor-Operated Valves

The motor-operated valve (MOV) equipment specifications require the incorporation of the results of either in-situ or prototype testing with full flow and pressure or full differential pressure to verify the proper sizing and correct switch settings of the valves. Guidelines to justify prototype testing are contained in Generic Letter 89-10, Supplement 1, Questions 22 and 24 through 28. The COL holder referencing the ESBWR design shall perform a study to determine the optimal frequency for valve stroking during in-service testing such that unnecessary testing and damage is not done to the valve as a result of the testing. (Refer to Subsection 3.9.9.3 (1) for COL information requirements).

The concerns and issues identified in Generic Letter 89-10 for MOVs shall be addressed prior to plant startup. The method of assessing the loads, the method of sizing the actuators, and the setting of the torque and limit switches, are specifically addressed. (Refer to Subsection 3.9.9.3 (1) for COL information requirements.)

The in-service testing of MOVs relies on diagnostic techniques that are consistent with the state of the art and which permit an assessment of the performance of the valve under actual loading. Periodic testing per Subsection ISTC is conducted under adequate differential pressure and flow conditions that allow a justifiable demonstration of continuing MOV capability for design basis conditions, including recovery from inadvertent valve positioning. MOVs that fail the acceptance criteria, and are “declared inoperable,” for stroke tests and leakage rate can be disassembled for evaluation. The Code provides criteria limits for the test parameters identified in Table 3.9-8. A program shall be developed by the COL holder referencing the ESBWR

design to establish the frequency and the extent of disassembly and inspection based on suspected degradation of all safety-related MOVs, including the basis for the frequency and the extent of each disassembly. The program may be revised throughout the plant life based on past disassembly experience. (Refer to Subsection 3.9.9.3 (1) for COL information requirements.)

Isolation Valve Leak Tests

The leaktight integrity is verified for each valve relied upon to provide a leaktight function. These valves include:

(1) Pressure Isolation Valves — valves that provide isolation of pressure differential from one part of a system from another or between systems.

(2) Temperature Isolation Valves — whose leakage may cause unacceptable thermal loading on supports or stratification in the piping and thermal loading on supports or whose leakage may cause steam binding of pumps.

(3) Containment Isolation Valves — valves that perform a containment isolation function in accordance with Evaluation Against Criterion 54, Subsection 3.1.2.5.5.2, including valves that may be exempted from Appendix J, Type C testing but whose leakage may cause loss of suppression pool water inventory.

Leakage rate testing of valves is in accordance with Subsection ISTC, Paragraph ISTC-3600.

3.9.7 Risk-Informed In-Service Testing

COL holder scope of supply.

3.9.8 Risk-Informed In-Service Inspection of Piping

COL holder scope of supply.

3.9.9 COL Information

3.9.9.1 Reactor Internals Vibration Analysis, Measurement and Inspection Program

The first COL holder shall provide, at the time of application, the results of the vibration assessment program for the ESBWR prototype internals. These results shall include the following information specified in Regulatory Guide 1.20.

USNRC Reg Guide 1.20 Criterion	Subject
C.2.1	Vibration Analysis Program
C.2.2	Vibration Measurement Program
C.2.3	Inspection Program
C.2.4	Documentation of Results

NRC review and approval of the above information on the first COL holder's docket shall complete the vibration assessment program requirements for prototype reactor internals.

In addition to the information tabulated above, the first COL holder shall provide the information on the schedules in accordance with the applicable portions of position C.3 of Regulatory Guide 1.20 for non-prototype internals.

Subsequent COL holders need only provide the information on the schedules in accordance with the applicable portions of position C.3 of Regulatory Guide 1.20 for non-prototype internals (Subsection 3.9.2.4).

3.9.9.2 ASME Class 2 or 3 or Quality Group D Components with 60 Year Design Life

COL holders shall identify ASME Class 2 or 3 Quality Group D components that are subjected to loadings, which could result in thermal or dynamic fatigue and provide the analyses required by the Code, Subsection NB.

3.9.9.3 Pump and Valve In-Service Testing Program

COL holders shall provide a plan for the detailed pump and valve in-service testing and inspection program. This plan:

(1) Includes baseline pre-service testing to support the periodic in-service testing of the components required by technical specifications. Provisions are included to test the pumps, valves, and MOVs in accordance with the O&M Code (Reference 3.9-5) and safety-related classification as necessary, depending on test results.

(2) Provides a study to determine the optimal frequency for valve stroking during in-service testing.

(3) Address the concerns and issues identified in Generic Letter 89-10; specifically, the method of assessment of the loads, the method of sizing the actuators, and the setting of the torque and limit switches.

3.9.9.4 Audit of Design Specification and Design Reports

COL holders shall make available to the NRC staff design specification and design reports required by the Code for vessels, pumps, valves and piping systems for the purpose of audit (Subsection 3.9.3).

3.9.10 References

3.9-1 General Electric Company, “BWR Fuel Channel Mechanical Design and Deflection,” NEDE-21354-P, September 1976 (GE proprietary) and NEDO-21354, September 1976 (Non-proprietary).

3.9-2 GE Nuclear Energy, “BWR Fuel Assembly Evaluation of Combined Safe Shutdown Earthquakes (SSE) and Loss-of-Coolant Accident (LOCA) Loadings (Amendment 3),” NEDE-21175-3-P-A, October 1984 (GE proprietary) and NEDO-21175-3-A, October 1984 (Non-proprietary).

3.9-3 GE Nuclear Energy, “General Electric Environmental Qualification Program,” NEDE-24326-1-P, Proprietary Document, January 1983.

3.9-4 M.A. Miner, “Cumulative Damage in Fatigue,” Journal of Applied Mechanics, Vol. 12, ASME, Vol. 67, pages A159-A164, September 1945.

3.9-5 American Society of Mechanical Engineers Code for Operation and Maintenance of Nuclear Power Plants, 2001 Edition with 2003 Addenda.

Table 3.9-1

Plant Events

		ASME Code Service Limit[8]	No. of Events[1]
A. Plant Operating Events			
1.	Boltup[1]	A	45
2. a.	Hydrostatic Test (two test cycles for each boltup cycle)	Testing	90
b.	Hydrostatic Test (shop and field)	Testing	3
3.	Startup (55.6°C/hr Heatup Rate)[2]	A	180
4.	Turbine Roll and Increase to Rated Power	A	180
5.	Daily and Weekly Reduction to 50% Power[1]	A	20,200
6.	Control Rod Pattern Change[1]	A	300
7.	Loss of Feedwater Heaters	B	60
8.	Scram:		
a.	Turbine Generator Trip, Feedwater On, and Other Scrams	B	60
b.	Loss of Feedwater Flow, MSIV Closure	B	60
9.	Reduction to 0% Power, Hot Standby, Shutdown (55.6°C/hr Cooldown Rate)[2]	A	172
10.	Refueling Shutdown and Unbolt[1]	A	45
11.	Scram:		
a.	Reactor Overpressure with Delayed Scram (Anticipated Transient Without Scram, ATWS)	C	1[3]
b.	Automatic Blowdown	C	1[3]
12.	Improper Plant Startup	C	1[3]
B. Dynamic Loading Events[6]			
13.	Safe Shutdown Earthquake (SSE) at Rated Power Operating Conditions	B[4]	2 Events[5] 10 Cycles/ Event
14.	Safe Shutdown Earthquake (SSE) at Rated Power Operating Conditions	D[7]	1 Cycle[3]

Table 3.9-1

Plant Events

		ASME Code Service Limit[8]	No. of Events[1]
15.	Safety/Relief Valve (SRV) Actuation (One) or single DPV actuation with depressurization (scram)	B	8
16.	Loss-of-Coolant Accident (LOCA):		
	Worst of small break LOCA (SBL), intermediate break LOCA (IBL), or large break LOCA (LBL)	D[7]	1[3]

Notes:

(1) Some events apply to reactor pressure vessel (RPV) only. The number of events/cycles applies to RPV as an example.

(2) Bulk average vessel coolant temperature change in any one-hour period.

(3) The annual encounter probability of a single event is $< 10^{-2}$ for a Level C event and $< 10^{-4}$ for a Level D event. Refer to Subsection 3.9.3.1.

(4) The effects of displacement-limited, seismic anchor motions (SAM) due to SSE shall be evaluated for safety-related ASME Code Class 1, 2, and 3 components and component supports. See Table 3.9-2 for stress limits to be used to evaluate the SAM effects.

(5) Use 20 peak SSE cycles for evaluation of ASME Class 1 components and core support structures for Service Level B fatigue analysis. Alternatively, an equivalent number of fractional SSE cycles may be used in accordance with Subsection 3.7.3.2.

(6) Table 3.9-2 shows the evaluation basis combination of these dynamic loadings.

(7) Appendix F or other appropriate requirements of the ASME Code are used to determine the Service Level D limits, as described in Subsection 3.9.1.4.

(8) These ASME Code Service Limits apply to ASME Code Class 1, 2 and 3 components, component supports and Class CS structures. Different limits apply to Class MC and CC containment vessels and components, as discussed in Section 3.8.

Table 3.9-2

Load Combinations and Acceptance Criteria for Safety-Related, ASME Code Class 1, 2 and 3 Components, Component Supports, and Class CS Structures

Plant Event	Service Loading Combination (1), (2), (3)	ASME Service Level (4)
1. Normal Operation (NO)	N	A
2. Plant/System Operating Transients (SOT)	(a) N + TSV	B
	(b) N + SRV(5)	B
3. NO + SSE	N + SSE	B(11), (12)
4. Infrequent Operating Transient (IOT), ATWS, DPV	(a) N(6) + SRV(5)	C(13)
	(b) N + DPV(7)	C(13)
5. SBL	N + SRV(8) + SBL(9)	C(13)
6. SBL or IBL + SSE	N + SBL (or IBL)(9) + SSE + SRV(8)	D(13)
7. LBL + SSE	N + LBL(9) + SSE	D(13)
8. NLF	N + SRV(5) + TSV(10)	D(13)

Notes:

(1) See Legend on the following pages for definition of terms. Refer to Table 3.9-1 for plant events and cycles information.

The service loading combination also applies to Seismic Category I Instrumentation and electrical equipment (refer to Section 3.10).

(2) For vessels, loads induced by the attached piping are included as identified in their design specification.

For piping systems, water (steam) hammer loads are included as identified in their design specification.

(3) The method of combination of the loads is in accordance with NUREG-0484, Revision 1.

(4) The service levels are as defined in appropriate subsection of ASME Section III, Division 1.

(5) The most limiting load combination case among SRV(1), SRV(2) and SRV (ALL). For main steam and branch piping evaluation, additional loads associated with relief line clearing and blowdown into the suppression pool are included.

(6) The reactor coolant pressure boundary is evaluated using in the load combination the maximum pressure expected to occur during ATWS.

(7) This applies only to the Main Steam and Isolation Condenser systems. The loads from this event are combined with loads associated with the pressure and temperature concurrent with the event.

(8) The most limiting load combination case among SRV(1), SRV(2) and SRV (ADS). See Note (5) for main steam and branch piping.

(9) The piping systems that are qualified to the leak-before-break criteria of Subsection 3.6.3 are excluded from the pipe break events to be postulated for design against LOCA dynamic effects, viz., SBL, IBL and LBL.

(10) This applies only to the main steamlines and components mounted on it. The low probability that the TSV closure and SRV loads can exist at the same time results in this combination being considered under service level D.

(11) Applies only to fatigue evaluation of ASME Code Class 1 components and core support structures. See Dynamic Loading Event No. 13, Table 3.9-1, and Note 5 of Table 3.9-1 for number of cycles.

(12) For ASME Code Class 2 and 3 piping the following changes and additions to ASME Code Section III Subsection NC-3600 and ND-3600 are necessary and shall be evaluated to meet the following stress limits:

$$S_{SAM} = i \frac{M_c}{Z} \leq 3.0\ S_h \quad (\leq 2.0 S_y) \qquad \text{Eq. (12a)}$$

Where: S_{SAM} is the nominal value of seismic anchor motion stress

M_c is the combined moment range equal to the greater of (1) the resultant range of thermal and thermal anchor movements plus one-half the range of the SSE anchor motion, or (2) the resultant range of moment due to the full range of the SSE anchor motions alone.

i and Z are defined in ASME Code Subsections NC/ND-3600

SSE inertia and seismic anchor motion loads shall not be included in the calculation of ASME Code Subsections NC/ND-3600 Equation (9), Service Levels A and B and Equations (10) and (11).

(13) ASME Code Class 1, 2 and 3 Piping systems, which are essential for safe shutdown under the postulated events are designed to meet the requirements of NUREG-1367. Piping system dynamic moments can be calculated using an elastic response spectrum or time history analysis.

Load Definition Legend for Table 3.9-2	
Normal (N)	Normal and/or abnormal loads associated with the system operating conditions, including thermal loads, depending on acceptance criteria.
SOT	System Operational Transient (Subsection 3.9.3.1).
IOT	Infrequent Operational Transient (Subsection 3.9.3.1).
ATWS	Anticipated Transient Without Scram.
TSV	Turbine stop valve closure induced loads in the main steam piping and components integral to or mounted thereon.
RBV Loads	Dynamic loads in structures, systems and components because of reactor building vibration (RBV) induced by a dynamic event.
NLF	Non-LOCA Fault.
SSE	RBV loads induced by safe shutdown earthquake.
SRV(1), SRV(2)	RBV loads induced by safety/relief valve (SRV) discharge of one or two adjacent valves, respectively.
SRV (ALL)	RBV loads induced by actuation of all safety/relief valves, which activate within milliseconds of each other (e.g., turbine trip operational transient).

Load Definition Legend for Table 3.9-2	
SRV (ADS)	RBV loads induced by the actuation of safety/relief valves in Automatic Depressurization Subsystem operation, which actuate within milliseconds of each other during the postulated small or intermediate break LOCA, or SSE.
DPV	Depressurization Valve opening induced loads in the stub tubes and Main Steam system piping and pipe-mounted equipment.
LOCA	The loss-of-coolant accident associated with the postulated pipe failure of a high-energy reactor coolant line. The load effects are defined by LOCA1 through LOCA7. LOCA events are grouped in three categories, SBL, IBL or LBL, as defined here.
LOCA1	Pool swell (PS) drag/fallback loads on essential piping and components located between the main vent discharge outlet and the suppression pool water upper surface.
LOCA2	Pool swell (PS) impact loads acting on essential piping and components located above the suppression pool water upper surface.
LOCA3	(a) Oscillating pressure induced loads on submerged essential piping and components during main vent clearing (VLC), condensation oscillations (COND), or chugging (CHUG), or (b) Jet impingement (JI) load on essential piping and components as a result of a postulated IBL or LBL event. Piping and components are defined essential, if they are required for shutdown of the reactor or to mitigate consequences of the postulated pipe failure without off-site power (refer to introduction to Subsection 3.6).
LOCA4	RBV load from main vent clearing (VLC).
LOCA5	RBV loads from condensation oscillations (COND).
LOCA6	RBV loads from chugging (CHUG).
LOCA7	Annulus pressurization (AP) loads due to a postulated line break in the annulus region between the RPV and shieldwall. Vessel depressurization loads on reactor internals (Subsection 3.9.2.4) and other loads due to reactor blowdown reaction and jet impingement and pipe whip restraint reaction from the broken pipe are included with the AP loads.
SBL	Loads induced by small break LOCA (Subsection 3.9.3.1); the loads are: LOCA3(a), LOCA4 and LOCA6. See Note (9).
IBL	Loads induced by intermediate break LOCA (Subsection 3.9.3.1); the loads are: LOCA3(a) or LOCA3(b), LOCA4, LOCA5 and LOCA6. See Note 9 of Table 3.9-2.
LBL	Loads induced by large break LOCA (Subsection 3.9.3.1); the loads are: LOCA1 through LOCA7. See Note (9).

Table 3.9-3

Pressure Differentials Across Reactor Vessel Internals

Reactor Component[2]	Maximum Pressure Differences[1] (kPaD)
1. Core plate and guide tube	74.9
2. Shroud support and lower shroud (beneath the core plate)	51.3
3. Chimney head (at marked elevation)	76.5
4. Upper shroud (just below top guide)	107.1
5. Core averaged power fuel bundle (bulge at bottom of bundle)	44.8
5. Core averaged power fuel bundle (collapse at bottom of top guide)	66.6
6. Maximum power fuel bundle (bulge at bottom of bundle)	71.1
7. Top guide	74.6
8. Steam Dryer	11.2
• Chimney head to water level, for points (a) to (b), irreversible pressure drop	60.0
• Chimney head to water level, from points (a) to (b), elevation pressure drop	50.0

Notes:

(1) At 100% rated core power, 100% rated steam flow, and 100% rated core flow with two sigma statistical calculations.

(2) Item numbers in this column correspond to the location (node) numbers identified in Figure 3.9-5.

Table 3.9-4

Deformation Limit for Safety Class Reactor Internal Structures Only

Either One Of (Not Both)		General Limit
a.	$\frac{\text{Permissible deformation, DP}}{\text{Analyzed deformation causing loss of function, DL}}$	$\leq \frac{0.90}{SF_{min}}$
b.**	$\frac{\text{Permissible deformation, DP}}{\text{Experimental deformation causing loss of function, DE}}$	$\leq \frac{1.00}{SF_{min}}$

where:

DP = Permissible deformation under stated conditions of Service Levels A, B, C or D (normal, upset, emergency or fault).

DL = Analyzed deformation which could cause a system loss of function*.

DE = Experimentally determined deformation which could cause a system loss of function.

SF_{min} = Minimum safety factor (refer to Subsection 3.9.5.4).

Notes:

* "Loss of Function" can only be defined quite generally until attention is focused on the component of interest. In cases of interest, where deformation limits can affect the function of equipment and components, they may be specifically delineated. From a practical viewpoint, it is convenient to interchange some deformation condition at which function is assured with the loss of function condition if the required safety margins from the functioning conditions can be achieved. Therefore, it is often unnecessary to determine the actual loss of function condition because this interchange procedure produces conservative and safe designs. Examples where deformation limits apply are control rod drive alignment and clearances for proper insertion, or excess leakage of any component.

** Equation b is be used unless supporting data are provided to the NRC.

Table 3.9-5

Primary Stress Limit for Safety Class Reactor Internal Structures Only

	Any One of (No More than One Required)		General Limit
a.	Elastic evaluated primary stresses, PE / Permissible primary stresses, PN	≤	2.25 / SF_{min}
b.	Permissible load, LP / Largest lower bound limit load, CL	≤	1.5 / SFmin
c.	Elastic evaluated primary stress, PE / Conventional ultimate strength at temperature, US	≤	0.75 / SFmin
d.	Elastic-plastic evaluated nominal primary stress, EP / Conventional ultimate strength at temperature, US	≤	0.9 / SFmin
e.	Permissible load, LP* / Plastic instability load, PL	≤	0.9 / SFmin
f.	Permissible load, LP* / Ultimate load from fracture analysis, UF	≤	0.9 / SFmin
g.	Permissible load, LP* / Ultimate load or loss of function load from test, LE	≤	1.0 / SFmin

where:

PE = Primary stresses evaluated on an elastic basis. The effective membrane stresses are to be averaged through the load carrying section of interest. The simplest average bending, shear or torsion stress distribution, which supports the external loading, is added to the membrane stresses at the section of interest.

PN = Permissible primary stress levels under service level A or B (normal or upset) conditions under ASME Boiler and Pressure Vessel Code, Section III.

LP = Permissible load under stated conditions of service level A, B, C or D (normal, upset, emergency or faulted).

CL = Lower bound limit load with yield point equal to 1.5 Sm where Sm is the tabulated value of allowable stress at temperature of the ASME III code or its equivalent. The "lower bound limit load" is here defined as that produced from the analysis of an ideally plastic (non-strain hardening) material where deformations increase with no further increase in applied load. The lower bound load is one in which the material everywhere satisfies equilibrium and nowhere exceeds the defined material yield strength using either a shear theory or a strain energy of distortion theory to relate multiaxial yield to the uniaxial case.

US = Conventional ultimate strength at temperature or loading which would cause a system malfunction, whichever is more limiting.

EP = Elastic plastic evaluated nominal primary stress. Strain hardening of the material may be used for the actual monotonic stress strain curve at the temperature of loading or any approximation to the actual stress curve which everywhere has a lower stress for the same strain as the actual monotonic curve may be used. Either the shear or strain energy of distortion flow rule may be used.

PL = Plastic instability loads. The "Plastic Instability Load" is defined here as the load at which any load bearing section begins to diminish its cross-sectional area at a faster rate than the strain hardening can accommodate the loss in area. This type analysis requires a true-stress/true-strain curve or a close approximation based on monotonic loading at the temperature of loading.

UF = Ultimate load from fracture analyses. For components, which involve sharp discontinuities (local theoretical stress concentration), the use of a "Fracture Mechanics" analysis where applicable utilizing measurements of plane strain fracture toughness may be applied to compute fracture loads. Correction for finite plastic zones and thickness effects as well as gross yielding may be necessary. The methods of linear elastic stress analysis may be used in the fracture analysis where its use is clearly conservative or supported by experimental evidence. Examples where "Fracture Mechanics" may be applied are for fillet welds or end of fatigue life crack propagation.

LE = Ultimate load or loss of function load as determined from experiment. In using this method, account shall be taken of the dimensional tolerances, which may exist between the actual part and the tested part or parts as well as differences, which may exist in the ultimate tensile strength of the actual part and the tested parts. The guide to be used in each of these areas is that the experimentally determined load shall be adjusted to account for material property and dimension variations, each of which has no greater probability than 0.1 of being exceeded in the actual part.

SF_{min} =Minimum safety factor (Subsection 3.9.5.4).

Notes:

* Equations e, f, or g are be used unless supporting data are provided to the NRC.

Table 3.9-6

Buckling Stability Limit for Safety Class Reactor Internal Structures Only

Any One Of (No More Than One Required)		General Limit
a.	$\frac{\text{Permissible load, LP}}{\text{Service level A (normal) permissible load, PN}}$	$\leq \frac{2.25}{SF_{min}}$
b.	$\frac{\text{Permissible load, LP}}{\text{Stability analysis load, SL}}$	$\leq \frac{0.9}{SFmin}$
c.*	$\frac{\text{Permissible load, LP}}{\text{Ultimate buckling collapse load from test, SET}}$	$\leq \frac{1.0}{SFmin}$

where:

LP = permissible load under stated conditions of service levels A, B, C or D (normal, upset, emergency or faulted)

PN = applicable Service Level A (normal) event permissive load

SL = Stability analysis load. The ideal buckling analysis is often sensitive to otherwise minor deviations from ideal geometry and boundary conditions. These effects shall be accounted for in the analysis of the buckling stability loads. Examples of this are ovality in externally pressurized shells or eccentricity on column members.

SET = Ultimate buckling collapse load as determined from experiment. In using this method, account shall be taken of the dimensional tolerances, which may exist between the actual part and the tested part. The guide to be used in each of these areas is that the experimentally determined load shall be adjusted to account for material property and dimension variations, each of which has no greater probability than 0.1 of being exceeded in the actual part.

SF_{min} = minimum safety factor (refer to Subsection 3.9.5.4)

Notes:

* Equation c is not used unless supporting data are provided to the NRC.

Table 3.9-7

Fatigue Limit for Safety Class Reactor Internal Structures Only

Cumulative Damage in Fatigue*	Limit for Service Levels A&B (Normal and Upset Conditions)
Design fatigue cycle usage from analysis using the method of the ASME Code	≤ 1.0

* Reference 3.9-4.

Table 3.9-8

In-Service Testing

No.	Qty	Description (g)	Code Class (a)	Code Cat. (c)	Valve Func. (d)	Test Para. (e)	Test Freq. (f)
B21 Nuclear Boiler System Valves							
F709	1	Manual valve – RPV shutdown range water level instrument reference leg line	2	B	P		E1
F710	1	Excess flow check valve – RPV shutdown range water level instrument reference leg line (g3)	2	A, C	I, A	L, S	R0
F700	4	Manual valve – RPV water level instrument reference leg line	2	B	P		E1
F701	4	Excess flow check valve – RPV water level instrument reference leg line (g3),	2	A, C	I, A	L, S	R0
F702	4	Manual valve – RPV narrow range water level instrument sensing line	2	B	P		E1
F703	4	Excess flow check valve – RPV narrow range water level instrument sensing line (g3),	2	A, C	I, A	L, S	R0
F704	4	Manual valve – RPV wide range water level instrument sensing line	2	B	P		E1
F705	4	Excess flow check valve – RPV wide range water level instrument sensing line (g3),	2	A, C	I, A	L, S	R0
F706	4	Manual valve – RPV fuel zone range water level instrument sensing line	2	B	P		E1

Table 3.9-8

In-Service Testing

No.	Qty	Description (g)	Code Class (a)	Code Cat. (c)	Valve Func. (d)	Test Para. (e)	Test Freq. (f)
F707	4	Excess flow check valve – RPV fuel zone range water level instrument sensing line	2	A, C	I, A	L, S	R0
F100	2	Feedwater (FW) discharge line upstream maintenance valve	2	B	P	P	RO
F101	2	FW discharge line upstream (first) check valve (g3)	2	A, C	A	L, S	R0
F102	2	FW discharge line outboard air-operated (AO) check valve (g1)	1	A, C	I, A	L, S, P	R0
F103	2	FW discharge line inboard check valve (g1)	1	A, C	I, A	L, S	R0
F104	2	FW discharge line downstream maintenance valve	1	B	P		E1
F001	4	Inboard main steam isolation valve (MSIV)(g1)	1	A	I, A	L, P S	R0 3 mo
F002	4	Outboard main steam isolation valve (MSIV) (g1)	1	A	I, A	L, P S	R0 3 mo
F006	10	Safety-relief valve (SRV) (g1) (g2)	1	A, C	A	R P,S	5YR R0
F003	8	Safety Valve (SV)	1	A, C	A	R P,S	5YR R0
F004	4	Depressurization valve (DPV) on the stub tube connected to the RPV	1	D	A	X	E2
F005	4	Depressurization valve (DPV) on the line branching from each main steamline	1	D	A	X	E2
F010	1	Main steamline (MSL) upstream drain line inboard isolation valve	1	A	I, A	L, P S	R0 3 mo

Table 3.9-8

In-Service Testing

No.	Qty	Description (g)	Code Class (a)	Code Cat. (c)	Valve Func. (d)	Test Para. (e)	Test Freq. (f)
F011	1	MSL upstream drain line outboard isolation valve	1	A	I, A	L, P S	R0 3 mo
F012	1	MSL warmup valve	2	B	P		E1
F016	4	MSL downstream drain line isolation valve	1	A	I, A	L, P S	R0 3 mo
F714	4	Manual isolation valve – MSL flow restrictor instrument line	2	B	P		E1
F715	4	Excess flow check valve – MSL flow restrictor instrument line (g3), (g4)	2	A, C	I, A	L, S	R0
F712	4	Manual valve – MSL flow restrictor instrument line	2	B	P		E1
F713	4	Excess flow check valve – MSL flow restrictor instrument line (g3), (g4)	2	A, C	I, A	L, S	R0
F025	1	RPV non-condensable gas removal line valve	1	B	P		E1
F026	1	RPV top head vent inboard shutoff valve (g1)	1	B	A	P,S	R0
F027	1	RPV top head vent outboard shutoff valve (g1)	1	B	A	P,S	R0
F007	12	SRV discharge line inboard vacuum breaker (g1)	3	C	A	R,S	10YR R0
F008	12	SRV discharge line outboard vacuum breaker (g1)	3	C	A	R,S	10YR R0
F035	10	SRV pneumatic supply line check valve (g1)	3	C	A	R,S	10YR R0

Table 3.9-8

In-Service Testing

No.	Qty	Description (g)	Code Class (a)	Code Cat. (c)	Valve Func. (d)	Test Para. (e)	Test Freq. (f)
F031	4	Inboard MSIV air supply line check valve (g1)	3	C	A	S	R0
F033	4	Outboard MSIV air supply line check valve (g1)	3	C	A	S	R0
F608	2	Inboard valve on the FW discharge line outboard check valve downstream test line	2	B	P		E1
F611	2	Inboard valve on the FW discharge line inboard check valve test line	2	B	P		E1
F605	2	Inboard valve on the FW discharge line upstream (first) check valve F101 test line	2	B	P		E1
F750	4	Inboard test line valve at the downstream of outboard MSIV	2	B	P		E1
F525	4	Inboard MSIV accumulator A001 drain line valve	3	B	P		E1
F526	4	Outboard MSIV accumulator A002 drain line valve	3	B	P		E1
F528	10	SRV accumulator A003 drain line valve	3	B	P		E1
F510	4	Inboard test line valve upstream of MSL downstream drain valve F016	2	B	P		E1
F512	1	Inboard test line valve upstream of MSL downstream drain line header valve F017	2	B	P		E1
F502	1	Inboard test line valve upstream of MSL upstream drain outboard isolation valve F011	2	B	P		E1

Table 3.9-8

In-Service Testing

No.	Qty	Description (g)	Code Class (a)	Code Cat. (c)	Valve Func. (d)	Test Para. (e)	Test Freq. (f)
F504	1	Inboard test line valve upstream of MSL upstream drain line header valve F013	2	B	P		E1
B32 Isolation Condenser System Valves							
F001	4	Steam supply line isolation valve	1	A	I, A	L, P S	R0 3 mo
F002	4	Steam supply line isolation valve	1	A	I, A	L, P S	R0 3 mo
F003	4	Condensate return line isolation valve	1	A	I, A	L, P S	R0 3 mo
F004	4	Condensate return line isolation valve	1	A	I, A	L, P S	R0 3 mo
F005	4	Condensate return valve	1	B	A	P S	2 yrs 3 mo
F006	4	Condensate return bypass valve	1	B	A	P S	2 yrs 3 mo
F007	4	Condenser upper header vent valve (g5)	1	A	I, A	L, P S	R0 3 mo
F008	4	Condenser upper header vent valve (g5)	1	A	I, A	L, P S	R0 3 mo
F009	4	Condenser lower header vent valve (g5)	1	A	I, A	L, P S	R0 3 mo
F010	4	Condenser lower header vent valve (g5)	1	A	I, A	L, P S	R0 3 mo
F011	4	Bypass lower header vent valve (g5)	1	A	I, A	L, P S	R0 3 mo
F012	4	Bypass lower header vent valve (g5)	1	A	I, A	L, P S	R0 3 mo

Table 3.9-8

In-Service Testing

No.	Qty	Description (g)	Code Class (a)	Code Cat. (c)	Valve Func. (d)	Test Para. (e)	Test Freq. (f)
F013	4	Manual isolation valve – isolation condenser purge line	1	A	P	P	R0
F014	4	Excess flow check valve – isolation condenser purge line (g3)	1	A, C	I, A	L, P S	R0 3 mo
F015	4	Manual valve – isolation condenser purge line (g3)	1	A	P	P	R0
F104	4	Dryer/Separator Storage Pool valve	3	B	A	S	R0
F500	4	Steam supply line valve test line valve	2	B	P		E1
F501	4	Steam supply line valve test line valve	2	B	P		E1
F502	4	Condensate return line valve test line valve	2	B	P		E1
F503	4	Condensate return line valve test line valve	2	B	P		E1
F504	4	Condensate return line test and drain line valve	2	B	P		E1
F505	4	Condensate return line test and drain line valve	2	B	P		E1
F506	4	Purge line test valve	2	B	P		E1
F507	4	Purge line test valve	2	B	P		E1
F015	4	High Pressure Nitrogen check valve	2	C	A	S	R0
F016	4	High Pressure Nitrogen check valve	2	C	A	S	R0

Table 3.9-8

In-Service Testing

No.	Qty	Description (g)	Code Class (a)	Code Cat. (c)	Valve Func. (d)	Test Para. (e)	Test Freq. (f)
F017	4	High Pressure Nitrogen check valve	2	C	A	S	R0
F700	4	Manual isolation valve – steam supply line differential pressure instrument sensing line	2	B	P		E1
F701	4	Excess flow check valve – steam supply line differential pressure instrument sensing line (g4) (g3)	2	A, C	I, A	L, S	R0
F702	4	Manual valve – steam supply line differential pressure instrument sensing line	2	B	P		E1
F703	4	Excess flow check valve – steam supply line differential pressure instrument sensing line (g4) (g3)	2	A, C	I, A	L, S	R0
F704	4	Manual valve – steam supply line differential pressure instrument sensing line	2	B	P		E1
F705	4	Excess flow check valve – steam supply line differential pressure instrument sensing line (g4) (g3)	2	A, C	I, A	L, S	R0
F706	4	Manual isolation valve – steam supply line differential pressure instrument sensing line	2	B	P		E1
F707	4	Excess flow check valve – steam supply line differential pressure instrument sensing line (g4) (g3)	2	A, C	I, A	L, S	R0

Table 3.9-8

In-Service Testing

No.	Qty	Description (g)	Code Class (a)	Code Cat. (c)	Valve Func. (d)	Test Para. (e)	Test Freq. (f)
F708	4	Manual valve – condensate return line differential pressure instrument sensing line	2	B	P		E1
F709	4	Excess flow check valve – condensate return line differential pressure instrument sensing line (g4) (g3)	2	A, C	I, A	L, S	R0
F710	4	Manual valve – condensate return line differential pressure instrument sensing line	2	B	P		E1
F711	4	Excess flow check valve – condensate return line differential pressure instrument sensing line (g4) (g3)	2	A, C	I, A	L, S	R0
F712	4	Manual valve – condensate return line differential pressure instrument sensing line	2	B	P		E1
F713	4	Excess flow check valve – condensate return line differential pressure instrument sensing line (g4) (g3)	2	A, C	I, A	L, S	R0
F714	4	Manual valve – condensate return line differential pressure instrument sensing line	2	B	P		E1
F715	4	Excess flow check valve – condensate return line differential pressure instrument sensing line (g4) (g3)	2	A, C	I, A	L, S	R0

Table 3.9-8

In-Service Testing

No.	Qty	Description (g)	Code Class (a)	Code Cat. (c)	Valve Func. (d)	Test Para. (e)	Test Freq. (f)
C12 Control Rod Drive System Valves							
F022	1	High pressure makeup line check valve (g3)	2	C	A	S	R0
F101	89	Manual shutoff valve – HCU drive insert line	2	B	P		E1
F140	88	Manual shutoff valve – HCU drive insert line	2	B	P		E1
D005	177	Ball check valve – CRD drive insert line (g3)	2	C	A	S	R0
C41 Standby Liquid Control (SLC) System Valves							
F001A/B	2	SLC accumulator tank outlet line maintenance valve	2	B	P		E1
F002A/B	2	SLC injection line shutoff valve	2	B	A	S P	3 mo 2 yrs
F003A/B C/D	4	SLC injection line squib valve	1	D	A	X	R0
F004A/B	2	SLC injection line outboard check valve (g5)	1	A, C	I, A	L, S	R0
F005A/B	2	SLC injection line inboard check valve (g5)	1	A, C	I, A	L, S	R0
F006A/B	2	SLC injection line manual shutoff valve	1	B	P		E1
F028A/B	2	SLC accumulator tank nitrogen charging line check valve	2	C	A	S	3 mo

Table 3.9-8

In-Service Testing

No.	Qty	Description (g)	Code Class (a)	Code Cat. (c)	Valve Func. (d)	Test Para. (e)	Test Freq. (f)
F029A/B	2	SLC accumulator tank motor operated nitrogen makeup valve	2	B	A	S P	3 mo 2 yrs
F030A/B	2	SLC accumulator tank relief valve	2	C	A	R	5 yrs R0
F501 A/B	2	Outboard test/vent header valve at downstream of SLC injection line squib valve F003A/B	1	B	P		E1
F502 A/B	2	Outboard test/vent header valve at downstream of SLC injection line squib valve F003A/B	1	B	P		E1
F507 A/B	2	SLC accumulator tank inboard solenoid operated vent valve (g3)	2	B	A	P, S	R0
F508 A/B	2	SLC accumulator tank outboard solenoid operated vent valve (g3)	2	B	A	P, S	R0
F505	1	SLC poison solution fill line manual shutoff valve	2	B	P		E1
F506	1	SLC poison solution fill line manual shutoff valve	2	B	P		E1
F700 A/B/C/D/ E/F/G/H	8	Manual isolation valve – SLC accumulator tank level instrument sensing leg line	2	B	P		E1
F701 A/B/C/D/ E/F/G/H	8	Manual isolation valve – SLC accumulator tank level instrument reference line	2	B	P		E1
F702 A/B	2	Manual isolation valve – SLC accumulator tank pressure instrument sensing line	2	B	P		E1

Table 3.9-8

In-Service Testing

No.	Qty	Description (g)	Code Class (a)	Code Cat. (c)	Valve Func. (d)	Test Para. (e)	Test Freq. (f)
D11 Process Radiation Monitoring System Valves (COL Phase)							
T62 Containment Monitoring System Valves (COL Phase)							
E50 Gravity-Driven Cooling System Valves							
F001	8	GDCS injection line manual shutoff valve	1	B	P		E1
F002	8	GDCS injection squib actuated valve	1	D	A	X	E2
F003	8	GDCS biased open check valve (g1)	1	C	A	L S,P	R0 3 mo
F004	4	GDCS manual shutoff valve	3	B	P		E1
F005	4	GDCS equalization line manual shutoff valve	1	B	P		E1
F006	4	GDCS equalization squib actuated valve	1	D	A	X	E2
F007	4	GDCS based open check valve (g1)	1	C	A	L, S, P	R0 3 mo
F008	4	GDCS manual shutoff valve	3	B	P		E1
F009	12	GDCS deluge squib valve	3	D	A	X	E2
F500	8	Test line off GDCS injection line –downstream of F002	2	B	P		E1
F501	8	Test line off GDCS injection line –downstream of F002	2	B	P		E1
F502	8	Test line off GDCS injection line – downstream of F003	2	B	P		E1
F503	8	Test line off GDCS injection line – downstream of F003	2	B	P		E1

Table 3.9-8

In-Service Testing

No.	Qty	Description (g)	Code Class (a)	Code Cat. (c)	Valve Func. (d)	Test Para. (e)	Test Freq. (f)
F504	4	Test line off GDCS equalization line – downstream of F007	2	B	P		E1
F505	4	Test line off GDCS equalization line – downstream of F007	2	B	P		E1
F506	4	Test line off GDCS equalization line – downstream of F006	2	B	P		E1
F507	4	Test line off GDCS equalization line – downstream of F006	2	B	P		E1
F508	4	Test line off GDCS deluge line – upstream of F009	3	B	P		E1
F509	4	Test line off GDCS deluge line – upstream of F009	3	B	P		E1
F700	3	Manual valve – GDCS pool level instrument line	2	B	P		E1
F702	3	Manual valve – GDCS pool level instrument line	2	B	P		E1
F704	1	Manual valve-GDCS pool level instrument line	2	B	P		E1
F705	1	Manual valve-GDCS pool level instrument line	2	B	P		E1
F706	1	Manual valve-GDCS pool level instrument line	2	B	P		E1
F707	1	Manual valve-GDCS pool level instrument line	2	B	P		E1

Table 3.9-8

In-Service Testing

No.	Qty	Description (g)	Code Class (a)	Code Cat. (c)	Valve Func. (d)	Test Para. (e)	Test Freq. (f)
G21 Fuel and Auxiliary Pools Cooling System (FAPCS) Valves							
F210	1	Emergency makeup spent fuel pool water line check valve (g3)	3	C	A	S	R0
F211	1	Emergency makeup spent fuel pool water line shutoff valve (g3)	3	B	A	S	R0
F212	1	Reactor well drain valve	2	B	P		E1
F213	1	Reactor well drain valve	2	B	P		E1
F303	1	GDCS pool return line outboard isolation valve	2	A	I, A	S L, P	3 mo R0
F304	1	GDCS pool return line inboard isolation check valve (g1)	2	A, C	I, A	S, L	R0
F306	1	Suppression pool return line outboard isolation valve	2	A	I, A	S L, P	3 mo R0
F307	1	Suppression pool return line inboard isolation check valve (g1)	2	A, C	I, A	S, L	R0
F309	1	Drywell spray line outboard isolation valve	2	A	I, A	S L, P	3 mo R0
F310	1	Drywell spray line inboard isolation check valve	2	A, C	I, A	S, L	R0
F323	1	GDCS pool suction line inboard isolation valve	2	A	I, A	S L, P	3 mo R0
F324	1	GDCS pool suction line outboard isolation valve	2	A	I, A	S L, P	3 mo R0

Table 3.9-8

In-Service Testing

No.	Qty	Description (g)	Code Class (a)	Code Cat. (c)	Valve Func. (d)	Test Para. (e)	Test Freq. (f)
F321	1	Suppression pool suction line outboard isolation valve	2	A	I, A	S L, P	3 mo R0
F420	1	Emergency makeup IC/PCC pool water line shutoff valve (g3)	3	B	A	S	R0
F421	1	Emergency makeup IC/PCC pool water line check valve (g3)	3	C	A	S	R0
F426A/B	2	FPS water makeup valve to IC/PCC pool (g3)	3	C	A	S	R0
F427A/B	2	FPS water makeup check valve to IC/PCC pool (g3)	3	C	A	S	R0
F428A/B	2	FPS water makeup valve to Spent Fuel Pool (g3)	3	C	A	S	R0
F429A/B	2	FPS water makeup valve to Spent Fuel Pool (g3)	3	C	A	S	R0
G31 Reactor Water Cleanup/Shutdown Cooling System Valves							
F001	2	RWCU/SDC mid-vessel suction line maintenance valve	1	B	P		E1
F002	2	RWCU/SDC mid-vessel suction line inboard isolation valve (g1)	1	A	I, A	L, P, S	R0
F003	2	RWCU/SDC mid-vessel suction line outboard isolation valve	1	A	I, A	L, P S	R0 3 mo
F005	2	RWCU/SDC bottom head suction line maintenance valve	1	B	P		E1
F006	2	RWCU/SDC bottom head suction line maintenance valve	1	B	P		E1

Table 3.9-8

In-Service Testing

No.	Qty	Description (g)	Code Class (a)	Code Cat. (c)	Valve Func. (d)	Test Para. (e)	Test Freq. (f)
F007	2	RWCU/SDC bottom head suction line inboard isolation valve (g1)	1	A	I, A	L, P, S	R0
F008	2	RWCU/SDC bottom head suction line outboard isolation valve	1	A	I, A	L, P S	R0 3 mo
F022	2	RWCU/SDC to FW injection line motor-operated valve	2	B	P	-	E1
F023	2	RWCU/SDC to FW injection line check valve (g1)	2	A, C	A	L, S	R0
F024	2	RWCU/SDC to FW injection line check valve (g1)	2	A, C	A	L, S	R0
F038	2	RWCU/SDC bottom head suction line sample line inboard isolation valve (g1)	1	A	I, A	L, P, S	R0
F039	2	RWCU/SDC bottom head suction line sample line outboard isolation valve	1	A	I, A	L, P S	R0 3 mo
F500	2	RWCU/SDC mid-vessel suction line inboard valve first test connection valve	1	B	P		E1
F501	2	RWCU/SDC mid-vessel suction line inboard valve second test connection valve	1	B	P		E1
F504	2	RWCU/SDC bottom head suction line drain valve	1	B	P		E1
F505	2	RWCU/SDC bottom head suction line drain valve	1	B	P		E1

Table 3.9-8

In-Service Testing

No.	Qty	Description (g)	Code Class (a)	Code Cat. (c)	Valve Func. (d)	Test Para. (e)	Test Freq. (f)
F506	2	RWCU/SDC bottom head suction line back flushing valve	1	B	P		E1
F507	2	RWCU/SDC bottom head suction line back flushing valve	1	B	P		E1
F508	2	RWCU/SDC bottom head suction line inboard valve first test connection valve	1	B	P		E1
F509	2	RWCU/SDC bottom head suction line inboard valve second test connection valve	1	B	P		E1
F700/ F704	4	RWCU/SDC mid-vessel suction line FE upstream first instrument root valve	1	B	P		E1
F701/ F705	4	RWCU/SDC mid-vessel suction line FE upstream second instrument root valve	1	B	P		E1
F702/ F706	4	RWCU/SDC mid-vessel suction line FE downstream first instrument root valve	1	B	P		E1
F703/ F707	4	RWCU/SDC mid-vessel suction line FE downstream second instrument root valve	1	B	P		E1
F708/ F712	4	RWCU/SDC bottom head suction line FE upstream first instrument root valve	1	B	P		E1
F709/ F713	4	RWCU/SDC bottom head suction line FE upstream second instrument root valve	1	B	P		E1
F710/ F714	4	RWCU/SDC bottom head suction line FE downstream first instrument root valve	1	B	P		E1

Table 3.9-8

In-Service Testing

No.	Qty	Description (g)	Code Class (a)	Code Cat. (c)	Valve Func. (d)	Test Para. (e)	Test Freq. (f)
F711/ F715	4	RWCU/SDC bottom head suction line FE downstream second instrument root valve	1	B	P		E1
U50 Equipment and Floor Drain System Valves							
F	1	Drywell equipment drain (LCW) sump discharge line inboard isolation valve	2	A	I, A	L, P S	R0 3 mo
F	1	Drywell equipment drain (LCW) sump discharge line outboard isolation valve	2	A	I, A	L, P S	R0 3 mo
F	1	Drywell floor drain (HCW) sump discharge line inboard isolation valve	2	A	I, A	L, P S	R0 3 mo
F	1	Drywell floor drain (HCW) sump discharge line outboard isolation valve	2	A	I, A	L, P S	R0 3 mo
P25 Chilled Water System Valves							
F	2	Chilled water supply line to drywell cooler outboard isolation valve (g3)	2	A	I, A	L, P S	R0 CS
F	2	Chilled water supply line to drywell cooler inboard isolation valve (g1)	2	A	I, A	L, P, S	R0
F	2	Chilled water return line from drywell cooler inboard isolation valve (g1)	2	A	I, A	L, P, S	R0

Table 3.9-8

In-Service Testing

No.	Qty	Description (g)	Code Class (a)	Code Cat. (c)	Valve Func. (d)	Test Para. (e)	Test Freq. (f)
F	2	Chilled water return line from drywell cooler outboard isolation valve (g3)	2	A	I, A	L, P S	R0 CS
P54 High Pressure Nitrogen Supply System Valves							
F	1	N2 supply line outboard isolation valve to MSIV and other uses		A	I, A	L, P S	R0 3 mo
F	1	N2 supply line inboard check valve (h) to MSIV and other uses		A, C	I, A	L, S	R0
F	1	N2 supply line outboard isolation valve to ADS, SRV and ICIV accumulator		A	I, A	L, P S	R0 3 mo
F020	1	N2 supply line inboard isolation check valve to ADS, SRV and ICIV accumulator (h)		A, C	I, A	L, P, S	R0
T10 Containment							
F001	3	Drywell wetwell solenoid valve	2	B	A	P S	R0 3 mo
F002	3	Drywell wetwell vacuum breaker valve	2	C	A	P R	R0 E3
T31 Containment Inerting System Valves							
F012	1	Suppression pool exhaust line outboard isolation valve	2	A	I, A	L, P S	R0
F007	1	Air/N2 supply line to suppression pool outboard isolation valve	2	A	I, A	L, P, S	R0

Table 3.9-8

In-Service Testing

No.	Qty	Description (g)	Code Class (a)	Code Cat. (c)	Valve Func. (d)	Test Para. (e)	Test Freq. (f)
F008	1	Air/N2 supply line to outboard isolation valve	2	A	I, A	L, P, S	R0
F009	1	Air/N2 supply line to upper drywell outboard isolation valve	2	A	I, A	L, P, S	R0
F023	1	N2 makeup line outboard isolation valve	2	A	I, A	L, P S	R0 3 mo
F024	1	N2 makeup line to suppression pool outboard isolation valve	2	A	I, A	L, P, S	R0
F025	1	N2 makeup line to upper drywell outboard isolation valve	2	A	I, A	L, P S	R0 3 mo
F010	1	Lower drywell exhaust line outboard isolation valve	2	A	I, A	L, P S	R0 3 mo
F011	1	Containment atmospheric exhaust line outboard isolation valve	2	A	I, A	L, P, S	R0 3 mo
F014	1	Containment atmospheric bleed line outboard isolation valve	2	A	I, A	L, P, S	R0
F015	1	Containment atmospheric bleed line outboard isolation valve	2	A	I, A	L, P S	R0 3 mo
U40 Reactor Building HVAC System Valves (COL Phase)							
U77 Control Building HVAC System Valves (COL Phase)							
U98 Fuel Building HVAC System Valves (COL Phase)							

Notes:

a) 1, 2 or 3 – ASME Section III Code classes per, Section 3.2.

c) A, B, C or D – Valve category per ASME OM Code –Subsection ISTC.

d) Valve Function:

I – Primary containment isolation per Subsection 6.2.4.

A or P – Active or passive per ASME OM Code – Paragraph ISTC-1300.

e) Valve test parameters per ASME OM Code – Subsection ISTC and Appendix I:

L - Seat leakage rate (Paragraph ISTC-3600 and DCD Tier 2 Subsection 6.2.6.3 for valves with function I in (d) above)

P - Valve position verification (Paragraph ISTC-3700)

R - Safety and relief test including visual examination, set pressure and seat tightness testing in accordance Paragraph ISTC-3000, -5230, -5240, Table ISTC-3500-1, Note (2), and Appendix I). Category A and B requirements for safety and relief valves of ISTC-3500 and ISTC-3700 are excluded per ISTC-1200.

S - Exercising tests for Category A and B valves (Paragraph ISTC-3521) and Category C valves (Paragraph ISTC-3522).

X - Explosively actuated valve tests (Paragraph ISTC-5260)

f) Valve test frequency for the specified test parameter including summary of exclusions and alternatives per ASME OM Code – Subsection ISTC and Appendix I:

CS -– Cold shutdown

R0 -– Refueling outages. For position verification: refueling outages, but in no case greater than two years.

E1 – Valves used only for operating convenience, i.e., passive vent, drain, instrument, test, maintenance and system control valves. These valves are not required for primary containment isolation. Tests are not required per Paragraph ISTC-1200 (i.e., the valves are exempt per the criteria given in ISTC-1200).

E2 – Fired and replaced per Paragraph ISTC-5260.

E3 – Test scheduled per Appendix I, Paragraph I-3000.

g) Summary justification for code defined testing exceptions or alternatives against Paragraphs ISTC-3510 for exercising tests and ISTC-3630 for seat leakage rate tests.

g1) Inaccessible inerted containment and/or steam tunnel radiation during power operations.

g2) Avoid valve damage during power operations.

g3) Avoid impacts on power operations.

g4) May not be Category C tested, but is subject to the periodic Category A test per DCD Tier 2 Subsection 6.2.6.3 for instrument lines that penetrate containment.

g5) These lines are subject to periodic Category A test for verifying their leaktight integrity and may not be Category C tested.

g6) These lines terminate below the drywell sumps water level and are sealed from the containment atmosphere. No Category C leakage rate test is required.

h) General Note on Check Valves: To satisfy the requirement for position verification of ISTC-3700 for check valves, where local observation is not possible, other indications shall be used for verification of valve operation.

Table 3.9-9

Load Combinations and Acceptance Criteria for Class 1 Piping Systems

Condition	Load Combination for all terms(1) (2)	Acceptance Criteria
Design	PD + WT	Eq 9 ≤ 1.5 S_m NB-3652
Service Level A & B	PP, TE, ΔT1, ΔT2 , TA-TB, RV_1, RV_2I, RV_2D, TSV, SSEI, SSED	Fatigue - NB-3653: Eq 12 & 13 ≤ 2.4 S_m U < 1.0
Service Level B	PP + WT + (TSV) PP + WT + (RV_1) PP + WT + (RV_2I)	Eq 9 ≤ 1.8 S_m, but not greater than 1.5 S_y Pressure not to exceed 1.1P_a (NB-3654)
Service Level C	PP + WT + $[(CHUGI)^2 + (RV_1)^2]^{1/2}$ PP + WT + $[(CHUGI)^2 + (RV_2I)^2]^{1/2}$	Eq 9 ≤2.25 S_m, but not greater than 1.8 S_y Pressure not to exceed 1.5 P_a (NB-3654)
Service Level D	PP + WT + $[(SSEI)^2 + (TSV)^2]^{1/2}$ PP + WT + $[(SSEI)^2 + (CHUGI)^2 + (RV_1)^2]^{1/2}$ PP + WT + $[(SSEI)^2 + (CHUGI)^2 + (RV_2I)^2]^{1/2}$ PP + WT + $[(SSEI)^2 + (CONDI)^2 + (RV_1)^2]^{1/2}$ PP + WT + $[(SSEI)^2 + (CONDI)^2 + (RV_2I)^2]^{1/2}$ PP + WT + $[(SSEI)^2 + (API)^2]^{1/2}$	Eq 9 ≤ 3.0 S_m but not greater than 2.0 S_y Pressure not to exceed 2.0 P_a (NB-3654)

(1) RV_1 and TSV loads are used for MS Lines only

(2) RV_2 represents RV_2 ALL (all valves), RV_2SV (single Valve) and RV_2 AD (Automatic Depressurization operation)

Where: API = Annulus Pressurization Loads (Inertia Effect)

CHUGI = Chugging Load (Inertia Effect)

ONDI = Condensation Oscillation (Inertia Effect)

PD = Design Pressure

PP = Peak Pressure or the Operating Pressure Associated with that transient

RV_1 = SRV Opening Loads (Acoustic Wave)

Table 3.9-10

Snubber Loads

Condition	Load Combination(1)(2)	Acceptance Criteria
Service Level B	(TSV) (RV_1) $[(RV_2I)^2 + (RV_2D)^2]^{1/2}$	Vendor Load Capacity Datasheet (LCD) or Vendor Design Report Summary (DRS)
Service Level C	$[(CHUGI)^2 + (CHUGD)^2 + (RV_1)^2]^{1/2}$ $[(CHUGI)^2 + (CHUGD)^2 + (RV_2I)^2 + (RV_2D)^2]^{1/2}$	Vendor Load Capacity Datasheet (LCD) or Vendor Design Report Summary (DRS)
Service Level D	$[(SSEI)^2 + (SSED)^2 + (TSV)^2]^{1/2}$ $[(SSEI)^2 + (SSED)^2 + (CHUGI)^2 + (CHUGD)^2 + (RV_1)^2]^{1/2}$ $[(SSEI)^2 + (SSED)^2 + (CHUGI)^2 + (CHUGD)^2 + (RV_2I)^2 + (RV_2D)^2]^{1/2}$ $[(SSEI)^2 + (SSED)^2 + (CONDI)^2 + (CONDD)^2 + (RV_1)^2]^{1/2}$ $[(SSEI)^2 + (SSED)^2 + (CONDI)^2 + (CONDD)^2 + (RV_2I)^2 + (RV_2D)^2]^{1/2}$ $[(SSEI)^2 + (SSED)^2 + (API)^2 + (APD)^2]^{1/2}$	Vendor Load Capacity Datasheet (LCD) or Vendor Design Report Summary (DRS)

(1) RV_1 and TSV loads are used for MS Lines

(2) RV_2 represents RV_2 ALL (all valves), RV_2SV (single valve) and RV_2 AD (Automatic Depressurization Operation).

Where: TSV = Turbine Stop Valve closure loads

RV_1 = SRV Opening Loads (Acoustic Wave)

RV_2I = SRV Basemat Acceleration Loads (Inertia Effect) (all valves)

RV_2D = SRV Basemat Acceleration Loads (Anchor Displacement Loads) (all valves)

CHUGI = Chugging Load (Inertia Effect)

CHUGD = Condensation Oscillation (Anchor Displacement Loads)

SSEI = Safe Shutdown Earthquake (Inertia Effect)

SSED = Safe Shutdown Earthquake (Anchor Displacement Loads)

CONDI = Condensation Oscillation (Inertia Load)

CONDD = Condensation Oscillation (Anchor Displacement Loads)

API = Annulus Pressurization Loads (Inertia Effect)

APD = Annulus Pressurization Loads (Anchor Displacement Loads)

Table 3.9-11

Strut Loads

Condition	Load Combination(1)(2)(3)	Acceptance Criteria
Service Level A	WT + TE	Vendor Load Capacity Datasheet (LCD) or Vendor Design Report Summary (DRS)
Service Level B	WT + TE + (TSV) WT + TE + (RV_1) WT + TE + $[(RV_2I)^2 + (RV_2D)^2]^{1/2}$	Vendor Load Capacity Datasheet (LCD) or Vendor Design Report Summary (DRS)
Service Level C	WT + TE + $[(CHUGI)^2 + (CHUGD)^2 + (RV_1)^2]^{1/2}$ WT + TE + $[(CHUGI)^2 + (CHUGD)^2 + (RV_2I)^2 + (RV_2D)^2]^{1/2}$	Vendor Load Capacity Datasheet (LCD) or Vendor Design Report Summary (DRS)
Service Level D	WT + TE + $[(SSEI)^2 + (SSED)^2 + (TSV)^2]^{1/2}$ WT + TE + $[(SSEI)^2 + (SSED)^2 + (CHUGI)^2 + (CHUGD)^2 + (RV_1)^2]^{1/2}$ WT + TE + $[(SSEI)^2 + (SSED)^2 + (CHUGI)^2 + (CHUGD)^2 + (RV_2I)^2 + (RV_2D)^2]^{1/2}$ WT + TE + $[(SSEI)^2 + (SSED)^2 + (CONDI)^2 + (CONDD)^2 + (RV_1)^2]^{1/2}$ WT + TE + $[(SSEI)^2 + (SSED)^2 + (CONDI)^2 + (CONDD)^2 + (RV_2I)^2 + (RV_2D)^2]^{1/2}$ WT + TE + $[(SSEI)^2 + (SSED)^2 + (API)^2 + (APD)^2]^{1/2}$	Vendor Load Capacity Datasheet (LCD) or Vendor Design Report Summary (DRS)

(1) RV_1 and TSV loads are used for MS Lines

(2) RV_2 represents RV_2 ALL (all valves), RV_2SV (single valve) and RV_2 AD (Automatic Depressurization Operation)

(3) TE = Thermal expansion case associated with the transient

Where: TSV = Turbine Stop Valve closure loads

WT = Dead Weight

TE = Thermal Expansion

RV_1 = SRV Opening Loads (Acoustic Wave)

RV_2I = SRV Basemat Acceleration Loads (Inertia Effect) (all valves)

RV_2D = SRV Basemat Acceleration Loads (Anchor Displacement Loads) (all valves)

CHUGI = Chugging Load (Inertia Effect)

CHUGD = Condensation Oscillation (Anchor Displacement Loads)

SSEI = Safe Shutdown Earthquake (Inertia Effect)

SSED = Safe Shutdown Earthquake (Anchor Displacement Loads)

CONDI = Condensation Oscillation (Inertia Load)

CONDD = Condensation Oscillation (Anchor Displacement Loads)

API = Annulus Pressurization Loads (Inertia Effect)

APD = Annulus Pressurization Loads (Anchor Displacement Loads)

Table 3.9-12

Linear Type (Anchor and Guide) Main Steam Piping Support

Condition	Load Combination(1)(2)(3)	Acceptance Criteria
Service Level A	WT + TE	Table NF-3623(b)-1
Service Level B	WT + TE + (TSV) WT + TE + (RV_1) WT + TE + $[(RV_2I)^2 + (RV_2D)^2]^{1/2}$	Table NF-3623(b)-1
Service Level C	WT + TE + $[(CHUGI)^2 + (CHUGD)^2 + (RV_1)^2]^{1/2}$ WT + TE + $[(CHUGI)^2 + (CHUGD)^2 + (RV_2I)^2 + (RV_2D)^2]^{1/2}$	Table NF-3623(b)-1
Service Level D	WT + TE + $[(SSEI)^2 + (SSED)^2 + (TSV)^2]^{1/2}$ WT + TE + $[(SSEI)^2 + (SSED)^2 + (CHUGI)^2 + (CHUGD)^2 + (RV_1)^2]^{1/2}$ WT + TE + $[(SSEI)^2 + (SSED)^2 + (CHUGI)^2 + (CHUGD)^2 + (RV_2I)^2 + (RV_2D)^2]^{1/2}$ WT + TE + $[(SSEI)^2 + (SSED)^2 + (CONDI)^2 + (CONDD)^2 + (RV_1)^2]^{1/2}$ WT + TE + $[(SSEI)^2 + (SSED)^2 + (CONDI)^2 + (CONDD)^2 + (RV_2I)^2 + (RV_2D)^2]^{1/2}$ WT + TE + $[(SSEI)^2 + (SSED)^2 + (API)^2 + (APD)^2]^{1/2}$	Appendix F Subarticle F-1334

(1) RV_1 and TSV loads are used for MS Lines

(2) RV_2 represents RV_2 ALL (all valves), RV_2SV (single valve) and RV_2 AD (Automatic Depressurization Operation)

(3) TE = Thermal expansion case associated with the transient

Where: TSV = Turbine Stop Valve closure loads

WT = Dead Weight

TE = Thermal Expansion

RV_1 = SRV Opening Loads (Acoustic Wave)

RV_2I = SRV Basemat Acceleration Loads (Inertia Effect) (all valves)

RV_2D = SRV Basemat Acceleration Loads (Anchor Displacement Loads) (all valves)

CHUGI = Chugging Load (Inertia Effect)

CHUGD = Condensation Oscillation (Anchor Displacement Loads)

SSEI = Safe Shutdown Earthquake (Inertia Effect)

SSED = Safe Shutdown Earthquake (Anchor Displacement Loads)

CONDI = Condensation Oscillation (Inertia Load)

CONDD = Condensation Oscillation (Anchor Displacement Loads)

API = Annulus Pressurization Loads (Inertia Effect)

APD = Annulus Pressurization Loads (Anchor Displacement Loads)

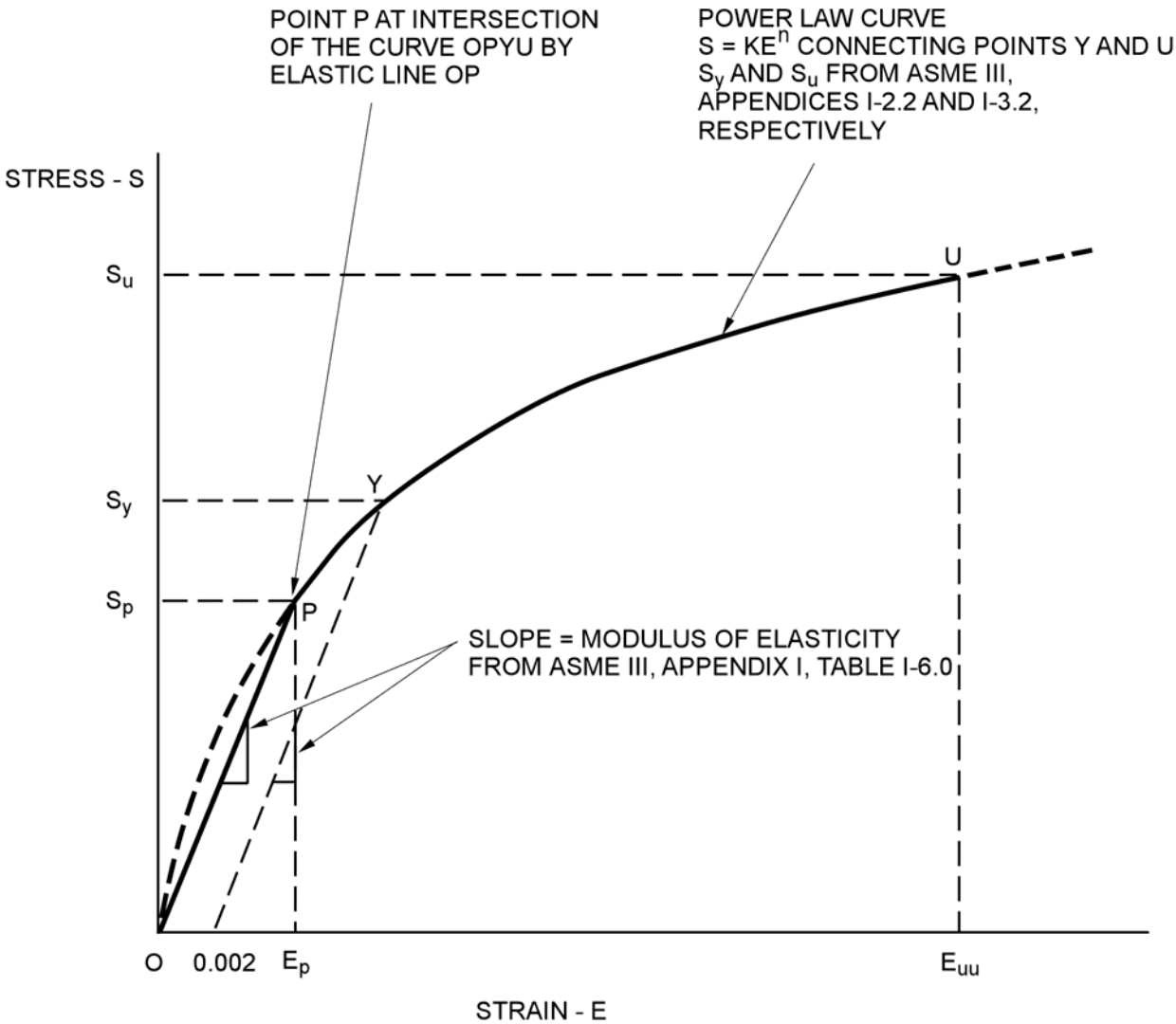

Figure 3.9-1. Stress-Strain Curve for Blowout Restraints

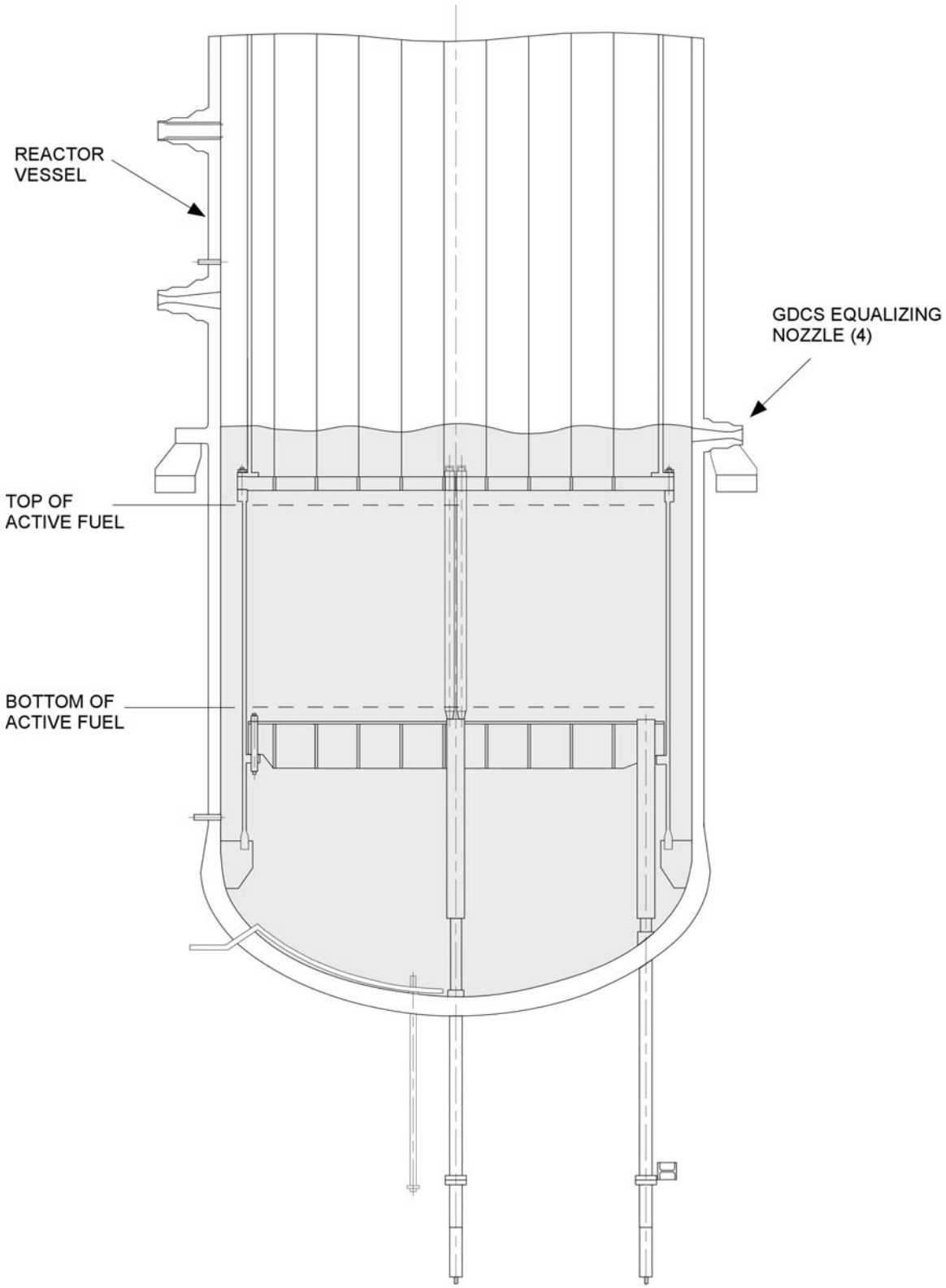

Figure 3.9-2. Minimum Floodable Volume

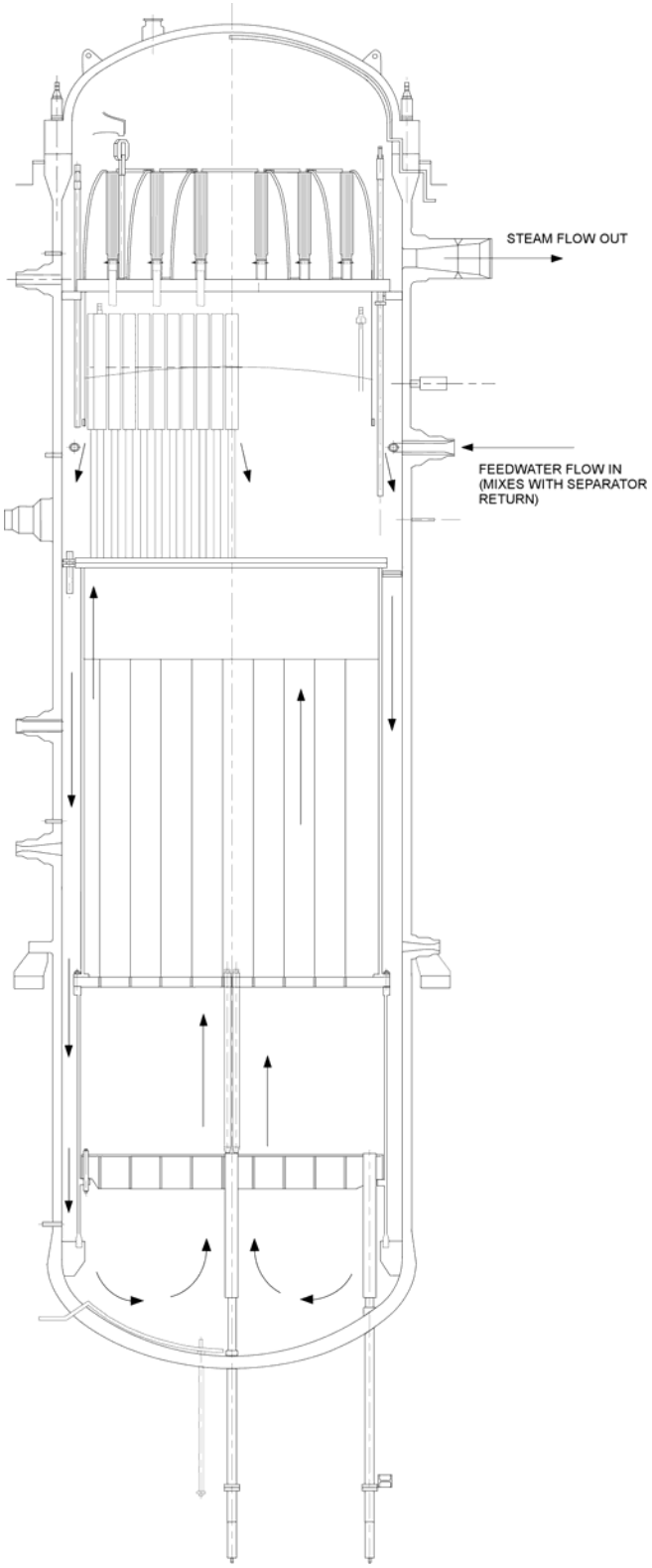

Figure 3.9-3. Recirculation Flow Path

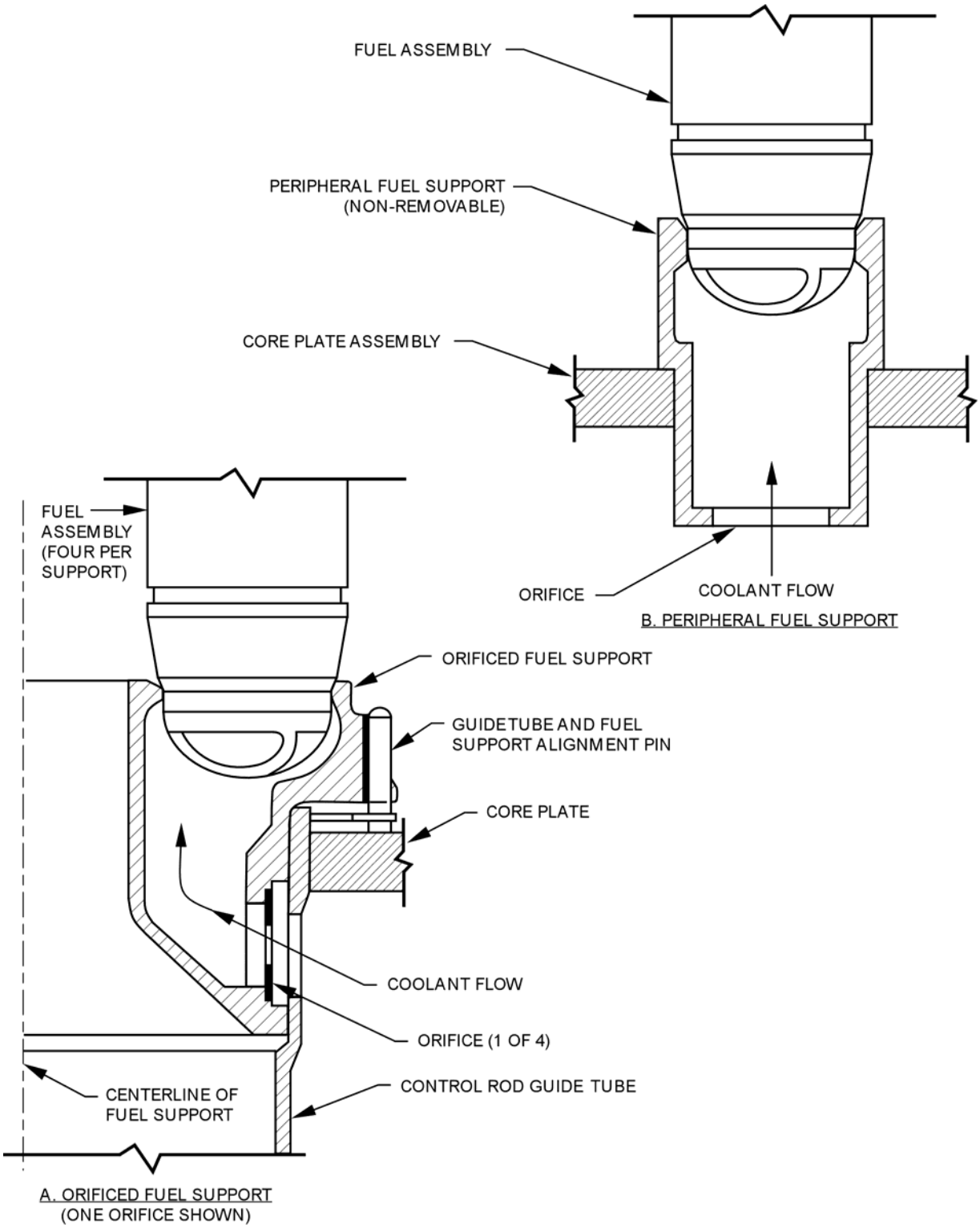

Figure 3.9-4. Fuel Support Pieces

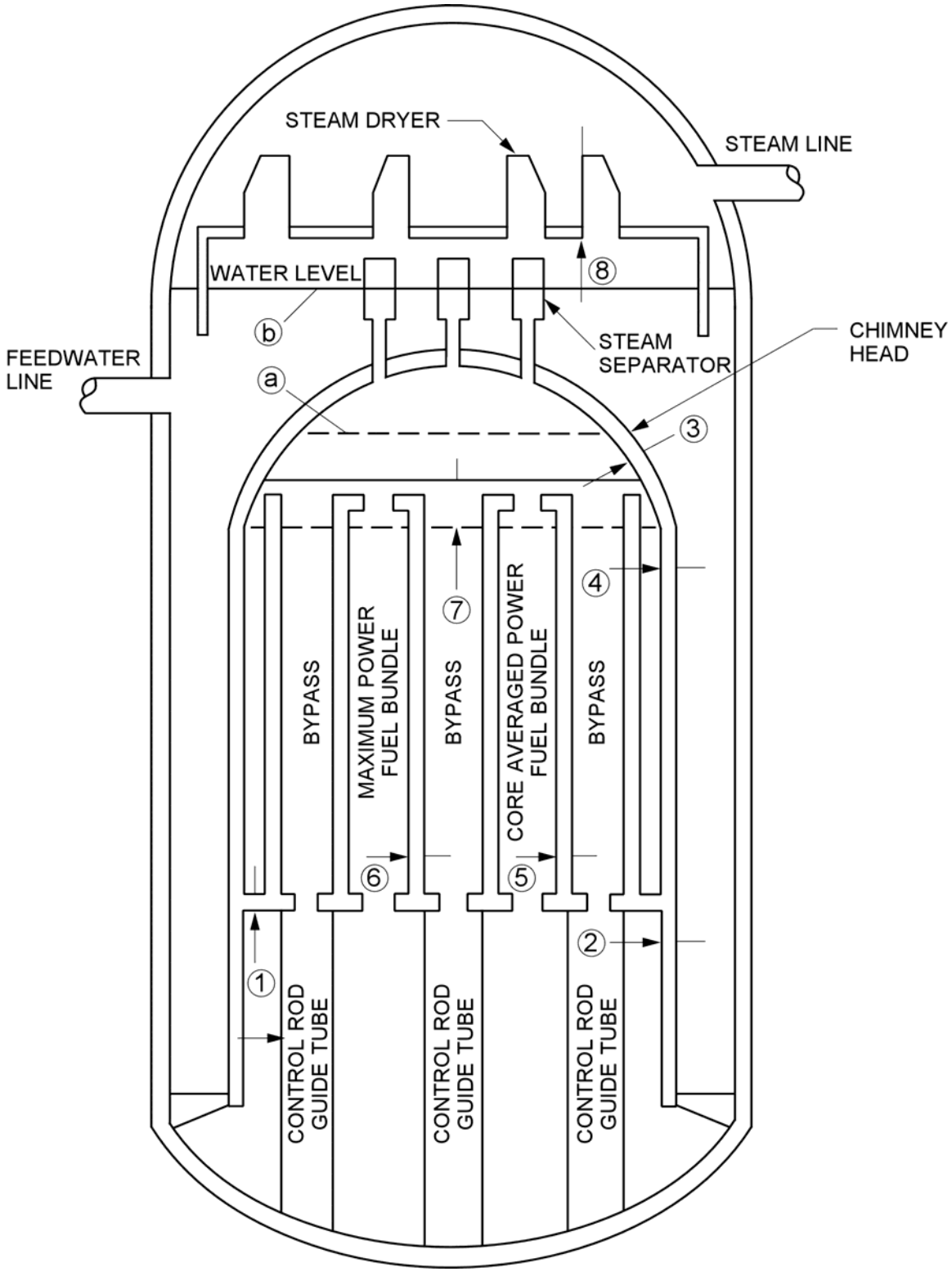

Figure 3.9-5. Pressure Nodes for Depressurization Analysis

3.10 SEISMIC AND DYNAMIC QUALIFICATION OF MECHANICAL AND ELECTRICAL EQUIPMENT

This section addresses methods of test and analysis employed to ensure the operability of mechanical and electrical equipment (includes instrumentation and control) under the full range of normal and accident loadings (including seismic), to ensure conformance with the requirements of General Design Criteria (GDC) 1, 2, 4, 14 and 30 of Appendix A to 10 CFR 50, as well as Appendix B to 10 CFR Part 50 and Appendix A to 10 CFR 100, as discussed in SRP 3.10 Draft Revision 3 (Reference 3.10-1). Mechanical and electrical equipment are designed to withstand the effects of earthquakes, i.e., seismic Category I requirements, and other accident-related loadings. Mechanical and electrical equipment covered by this section include equipment associated with systems that are essential to emergency reactor shutdown, containment isolation, reactor core cooling, and containment and reactor heat removal, or otherwise are essential in preventing significant release of radioactive material to the environment. Also covered by this section is equipment (1) that performs the above functions automatically, (2) that is used by the operators to perform these functions manually, and (3) whose failure can prevent the satisfactory accomplishment of one or more of the above safety functions. Instrumentation that is needed to assess plant and environ conditions during and after an accident, as described in Regulatory Guide 1.97, are also covered by this section. Examples of mechanical equipment included in these systems are pumps, valves, fans, valve operators, snubbers, battery and instrument racks, control consoles, cabinets, and panels. Examples of electrical equipment are valve operator motors, solenoid valves, pressure switches, level transmitters, electrical penetrations, and pump and fan motors.

The methods of test and analysis employed to ensure the operability of mechanical and electrical equipment meet the relevant requirements of the following regulations:

(1) Code Federal Regulations (CFR):

a. 10 CFR 50 Appendix A "General Design Criteria (GDC) for Nuclear Power Plants (Criteria 1, 2, 4, 14 and 30)."

b. 10 CFR 50 Appendix B "Quality Assurance Criteria for Nuclear Power Plants and Fuel Reprocessing Plants."

c. 10 CFR 100 Appendix A "Seismic and Geological Siting Criteria for Nuclear Power Plants."

(2) Institute of Electrical and Electronic Engineers (IEEE):

a. IEEE-323-2003 "Standard for Qualifying Class 1E Equipment for Nuclear Power Generating Stations."

b. IEEE-382-1996 (R2004) "Standard for Qualification of Actuators for Power Operated Valve Assemblies with Safety Related Functions for Nuclear Power Plants."

c. IEEE-344-1987 "Recommended Practice for Seismic Qualification of Class 1E Equipment for Nuclear Power Generating Stations."

(3) American Society of Mechanical Engineers (ASME):

a. ASME BPVC Section III-2001 "Rules for Construction of Nuclear Power Plant Components."

b. ASME NQA-1, Addenda NQA-1a-1999 "Quality Assurance Requirements for Nuclear Facility Applications."

c. ASME BPVC Section III, Division 1, Subsection NF-2001 "Rules for Construction of Nuclear Power Plant Components."

(4) U.S. Nuclear Regulatory Commission (NRC) Regulatory Guides:

a. Regulatory Guide 1.63-1987 "Electric Penetration Assemblies in Containment Structures for Nuclear Power Plants."

b. Regulatory Guide 1.122-1978 "Development of Floor Design Response Spectra for Seismic Design of Floor – Supported Equipment or Components".

c. Regulatory Guide 1.61-1973 "Damping Values for Seismic Design of Nuclear Power Plants."

d. Regulatory Guide 1.92 rev. 2 "Combining Modal Response and Spatial Components in Seismic Response Analysis."

e. Regulatory Guide 1.29-1978 "Seismic Design Classification."

f. Regulatory Guide 1.100-1988 "Seismic Qualification of Electrical Equipment and Mechanical Equipment for Nuclear Power Plants."

The dynamic loads may occur because of the Reactor Building Vibration (RBV) excited by the suppression pool dynamics when a Loss-Of-Coolant-Accident (LOCA), a safety/relief valve (SRV) discharge or a depressurization valve (DPV) discharge occurs. The non-seismic RBV dynamic loads are described in Tables 3.9-2 and 3.9-3 and can be categorized as Service Level B, C, or D depending upon the excitation source.

Principal Seismic Category I structures, systems and components are identified in Table 3.2-1. Most of these items are safety-related as explained in Subsection 3.2.1. The safety-related functions are defined in Section 3.2, and include the functions essential to emergency reactor shutdown, containment isolation, reactor core cooling, reactor protection, containment and reactor heat removal, and emergency power supply, or otherwise are essential in preventing significant release of radioactive material to the environment.

The mechanical components and equipment and the electrical components that are integral to the mechanical equipment are dynamically qualified as described in Section 3.9. Seismic and dynamic qualification methodology in Section 4.4 of GE's Environmental Qualification Program (Reference 3.10-2) applies to mechanical as well as electrical equipment.

3.10.1 Seismic and Dynamic Qualification Criteria

3.10.1.1 Selection of Qualification Method

The qualification of Seismic Category I electrical equipment is accomplished by test, analysis, a combination testing and analysis, or by experience data.

In general, analysis is used to supplement test data although simple components may lead themselves to dynamic analysis in lieu of full scale testing. The deciding factors for choosing between tests or analysis include:

- Magnitude and frequency of seismic and RBV dynamic loadings;
- Environmental conditions (Appendix 3H) associated with the dynamic loadings;
- Nature of the safety-related function(s);
- Size and complexity of the equipment;
- Dynamic characteristics of expected failure modes (structural or functional); and
- Partial test data upon which to base the analysis.

The selection of qualification method to be used is largely a matter of engineering judgment; however, tests, and/or analyses of assemblies are preferable to tests or analyses on separate components (e.g., a motor and a pump, including the coupling and other appurtenances should be tested or analyzed as an assembly).

Qualification by experience is drawn from previous dynamic qualification or from other documented experience such as exposure to natural seismic disturbances. Qualification by experience is based on dynamic similarity of the equipment.

3.10.1.2 Input Motion

The input motion for the qualification of equipment and supports is defined by response spectra. The Required Response Spectra (RRS) are generated from the building dynamic analysis, as described in Section 3.7. They are grouped by buildings and by elevations. This RRS definition incorporates the contribution of RBV dynamic loads as specified by the load combinations in Table 3.9-2 and 3.9-3. When one type of equipment is located at several elevations and/or in several buildings, the governing response spectra are specified.

3.10.1.3 Dynamic Qualification Program

The dynamic qualification program is described in Section 4.4 of GE's Environmental Qualification Program (Reference 3.10-2). The program conforms to the requirements of IEEE 323 as modified and endorsed by the Regulatory Guide 1.89, and meets the criteria contained in IEEE 344 as modified and endorsed by Regulatory Guide 1.100.

3.10.2 Methods and Procedures for Qualifying Electrical Equipment

The following subsections describe the methods and procedures incorporated in the above mentioned dynamic qualification program. Described here are the general methods and procedures for qualifying by testing, analysis, combined testing and analysis or experience data the Seismic Category I electrical equipment for operability during and after the SSE loads and Service Level D RBV dynamic loads and for continued structural and functional integrity of the equipment after low level earthquake loading of lesser magnitude (Section 3.7) and Service Level B RBV dynamic loads.

3.10.2.1 Qualification by Testing

The testing methodology includes the hardware interface requirements and the test methods.

Interface Requirements

Intervening structures or components (such as interconnecting cables, bus ducts, conduits, etc.) that serve as interfaces between the equipment to be qualified and that supplied by others are not qualified as part of this program. However, the effects of interfacing are taken into consideration. When applicable, accelerations and frequency content at locations of interfaces with interconnecting cables, bus ducts, conduits, etc., are determined and documented in the test report. This information is specified in the form of interface criteria.

To minimize the effects of interfaces on the equipment, standard configurations using bottom cable entry are utilized whenever possible. Where non-rigid interfaces are located at the equipment support top, equipment qualification is based on the top entry requirements. A report including equipment support outline drawings is furnished specifying the equipment maximum displacement due to the SSE loads including appropriate RBV dynamic loads. Embedment loads and mounting requirements for the equipment supports are also specified in this manner.

Test Methods

The test method is biaxial, random single- and/or multi-frequency excitation to envelop generic RRS levels in accordance with Section 7 of IEEE 344. Past testing demonstrate that Seismic Category I electrical equipment has critical damping ratios equal to or less than 5%. Hence, RRS at 5% or less critical damping ratio are developed as input to the equipment base.

Biaxial testing applies input motions to both the vertical and one horizontal axes simultaneously. Independent random inputs are preferred and, when used, the test is performed in two steps with equipment rotated 90 degrees in the horizontal plane in the second step.

When independent random tests are not available, four tests are performed:

(1) With the inputs in phase;

(2) With one input 180 degrees out of phase;

(3) With the equipment rotated 90 degrees horizontally and the inputs in phase; and

(4) With the same orientation as in the step (3) but with one input 180 degrees out of phase.

Selection of Test Specimen — Representative samples of equipment and supports are selected for use as test specimens. Variations in the configuration of the equipment are analyzed with supporting test data. For example, these variations may include mass distributions that differ from one cabinet to another. From test or analysis, it is determined which mass distribution results in the maximum acceleration and/or frequency content, and this worst-case configuration is used as the test specimen. The test report includes a justification that this configuration envelops all other equipment configurations.

Mounting of Test Specimen — The test specimen is mounted to the test table so that in service mounting, including interfaces, is simulated.

For interfaces that cannot be simulated on the test table, the accelerations and any resonances at such interface locations are recorded during the equipment test and documented in the test report.

Dynamic Testing Sequence

The test sequence includes vibration conditioning, exploratory resonance search, low level earthquake loading including Service Level B RBV dynamic loads, and the SSE loading including Service Level D RBV dynamic loads.

Vibration Conditioning — If required by the applicable qualification standard for the equipment, vibration conditioning is performed at this point in the sequence and the vibration conditioning details are given.

Exploratory Tests — Exploratory tests are sine-sweep tests to determine resonant frequency and transmission factors at locations of Seismic Category I devices in the instrument panel. The exploratory tests are run at an acceleration level of 0.2g, which is intended to excite all modes between 1 and 60 Hz and at a sweep rate of 2 octaves per minute or less. This acceleration level is chosen to provide a usable signal-to-noise ratio for the sensing equipment to allow accurate detection of natural test frequencies of the test specimens. These tests are run for one axis at a time in three mutually perpendicular major axes corresponding to the side-to-side, front-to-back, and vertical directions.

Testing for Low Level Earthquake Loading and RBV Dynamic Loads — This test is performed on all test specimens. This test is conducted to demonstrate that the low level earthquake (as defined in Section 3.7) loads combined with Service Level B RBV dynamic loads does not degrade the continued structural and functional integrity of the equipment. Strong motion test inputs are applied for a minimum of 15 seconds in each orientation. Operability of equipment is verified as described below.

Testing for SSE Loading and RBV Dynamic Loads — An SSE test including other appropriate Service Level D RBV dynamic loads is performed on all test specimens. This test is conducted to demonstrate that equipment would perform its safety-related function through a SSE (as defined in Section 3.7) combined with Service Level D RBV dynamic loads. The strong motion of the test lasts a minimum of 15 seconds in each orientation. Operability of equipment is verified as described in the next Subsection.

Qualification for Operability — In general, analyses are only used to supplement the operability test data. However, analyses, without testing, are used as a basis for demonstration of functional capability, if the necessary functional operability of the instrumentation or equipment is assured by its structural integrity alone.

Equipment is tested in an operational condition. Most Seismic Category I electrical equipment have safety-related function requirements before, during, and after seismic events. Other equipment (such as plant status display equipment) have requirements only before and after seismic events. All equipment is operated at appropriate times to demonstrate ability to perform its safety-related function.

If a malfunction is experienced during any test, the effects of the malfunction are determined and documented in the final test report.

Equipment that has been previously qualified by means of tests and analyses equivalent to those described in this section are acceptable provided proper documentation of such tests and analyses is available.

Final Test Report

The final test report contains a summary of test/analysis results, which is readily available for audit (see Subsection 3.10.4). The report normally includes but is not limited to the following:

- Locations of accelerometers;
- Resonant frequency if any and transmission ratios (if exploratory tests are applicable);
- Calculation of equipment damping coefficient if there is resonance in the 1-60 Hz range or over the range of the test response spectra (if exploratory tests are applicable);
- Test equipment used;
- Approval signature and dates;
- Description of test facility;
- Summary of results;
- Conclusion as to equipment seismic (including RBV dynamic loads) qualification; and
- Justification for using single axis or single frequency tests for all items that are tested in this manner.

3.10.2.2 Qualification by Analysis

The discussion presented in the following subsections apply to the qualification of equipment by analysis.

Analysis Methods

Dynamic analysis or an equivalent static analysis, described in Subsection 3.7.3, is employed to qualify the equipment. In general, the choice of the analysis is based on the expected design margin, because the static coefficient method (the easiest to perform) is far more conservative than the dynamic analysis method.

If the fundamental frequency of the equipment is above the input excitation frequency, (cutoff frequency of RRS) the equipment is considered rigid. In this case, the loads on each component can be determined statically by concentrating its mass at its center of gravity and multiplying the values of the mass with the appropriate maximum floor acceleration (i.e., floor spectra acceleration at the high frequency asymptote of the RRS) at the equipment support point.

A static coefficient analysis may be also used for certain equipment in lieu of the dynamic analysis. No determination of natural frequencies is made in this case. The seismic loads are determined statically by multiplying the actual distributed weight of the equipment by a static coefficient equal to 1.5 times the peak value of the RRS at the equipment mounting location, at a conservative and justifiable value of damping.

This method is only applicable to equipment with simple frame-type structures and can be represented by a simple model. For equipment having configuration other than simple frame-type structure, this method may be applied when justification can be provided for the static factor that is used on a case-by-case basis.

If the equipment is determined to be flexible (i.e., with the fundamental frequency of the equipment within frequency range of the input spectra) and not simple enough for equivalent static analysis, a dynamic analysis method is applied.

Analyses for Seismic and RBV Dynamic Loads

An analysis is performed assuming low level earthquake (see Subsection 3.7.3.2) loads are followed by the SSE loads (both including appropriate RBV dynamic loads). The analysis must show that the structural and functional integrity of the equipment is maintained under low level earthquake loads including appropriate RBV dynamic loads in combination with normal operating loads. The analysis must also show that subsequently the SSE loads including appropriate RBV dynamic loads do not result in failure of the equipment to perform its safety-related function(s).

Documentation of Analysis

The demonstration of qualification is documented (see Subsection 3.10.4) including the requirements of the equipment specification, the results of the qualification, and the justification that the methods used are capable of demonstrating that the equipment does not malfunction.

3.10.2.3 Qualification by Combined Testing and Analysis

In some instances, it is not practical to qualify the equipment solely by testing or analysis. This may be because of the size of the equipment, its complexity, or the large number of similar configurations. The following subsections address the cases in which combined analysis and testing may be warranted.

Low Impedance Excitation

Large equipment may be impractical to test due to limitations in vibration equipment loading capability. With the equipment mounted to simulate service mounting, a number of exciters are attached at points that best excite the various mode of vibration of the equipment. Data is obtained from sensors for subsequent analysis of the equipment performance under seismic plus appropriate RBV dynamic loads. The amplification of resonant motion is used to determine the appropriate modal frequency and damping for a dynamic analysis of the equipment.

This method can be used to qualify the equipment by exciting the equipment to levels at least equal to the expected response from the SSE loads including appropriate RBV dynamic loads, by using analysis to justify the excitation, and by utilizing the test data on modal frequencies to verify the mathematical model.

Extrapolation of Similar Equipment

As discussed in IEEE 344, the qualification of complex equipment by analysis is not recommended because of the great difficulty in developing an accurate analytical model.

In many instances, however, similar equipment has already been qualified but with changes in size or in specific qualified devices in a fixed assembly or structure. In such instances, a full test program (Subsection 3.10.2.1) is conducted on a typical piece of equipment. Assurance shall be obtained that changes from originally tested equipment do not result in the formation of previously non-existent resonances.

If the equipment is not rigid, the effects of the changes are analyzed. The test results combined with the analysis allow the model of the similar equipment to be adjusted to produce a revised stiffness matrix and to allow refinement of the analysis for the modal frequencies of the similar equipment. The result is a verified analytical model that is used to qualify the similar equipment.

Extrapolation of Dynamic Loading Conditions.

Test results can be extrapolated for dynamic loading conditions in excess of or different from previous tests on a piece of equipment when the test results are in sufficient detail to allow an adequate dynamic model of the equipment to be generated. The model provides the capability of predicting failure under the increased or different dynamic load excitation.

3.10.2.4 Qualification by Experience

The discussion presented in the following subsections apply to the qualification of equipment by experience. The methods outlined in IEEE 344 are followed.

Experience Data

When existing test data or experience data is available, the equipment database is reviewed to determine if the previous testing or experience meets or exceeds the new requirements of the equipment qualification. Depending on the source and level of documentation detail available, an appropriate approach is taken and documentation prepared to justify the qualification for the new requirements.

Qualification Determination

In order for the equipment to be qualified by reason of operating experience, documented data must be available confirming that the following criteria have been met as appropriate:

- The equipment providing the operating experience is identical or justifiably similar to the equipment to be qualified.
- The equipment providing the operating experience has operated under service conditions that equal or exceed, in severity, the service conditions and functional requirements for which the equipment is to be qualified.
- The installed equipment can, in general, be removed from service and subjected to partial type testing to include the dynamic environments for which the equipment is to be qualified.

3.10.3 Analysis or Testing of Electrical Equipment Supports

The following subsections describe the general methods and procedures, as incorporated in the dynamic qualification program (see Subsection 3.10.1.3), for analysis and testing of supports of Seismic Category I electrical equipment. When possible, the supports of most of the electrical equipment (other than motor and valve-mounted equipment supports, mostly control panels and racks) are tested with the equipment installed. Otherwise, a dummy is employed to simulate inertial mass effect and dynamic coupling to the support.

Combined stresses of the mechanically designed component supports are maintained within the limits of ASME Code Section III, Division 1, Subsection NF, up to the interface with building structure, and the combined stresses of the structurally designed component supports defined as

building structure in the project design specifications are maintained within the limits of the AISC Specification for the Design, Fabrication and Erection of Structural Steel for Buildings.

3.10.3.1 NSSS Electrical Equipment Supports (Other than Motors and Valve-Mounted Equipment)

The seismic and other RBV dynamic load qualification tests on equipment supports are performed over the frequency range of interest.

Some of the supports are qualified by analysis only. Analysis is used for passive mechanical devices and is sometimes used in combination with testing for larger assemblies containing Seismic Category I devices. For instance, a test is run to determine if there are natural frequencies in the support equipment within the critical frequency range. If the support is determined to be free of natural frequencies (in the critical frequency range), then it is assumed to be rigid and a static analysis is performed. If natural frequencies are present in the critical frequency range, then calculations of transmissibility and responses to varying input accelerations are determined to see if Seismic Category I devices mounted in the assembly would operate without malfunctioning. In general, the testing of Seismic Category I supports is accomplished using the following procedure:

Assemblies (e.g., control panels) containing devices which have dynamic load malfunction limits established are tested by mounting the assembly on the table of a vibration machine in the manner it is to be mounted when in use and vibration testing it by running a low-level resonance search. As with the devices, the assemblies are tested in the three major orthogonal axes.

The resonance search is run in the same manner as described for devices. If resonances are present, the transmissibility between the input and the location of each device is determined by measuring the accelerations at each device location and calculating the magnification between it and the input. Once known, the transmissibilities could be used analytically to determine the response at any Seismic Category I device location for any given input. (It is assumed that the transmissibilities are linear as a function of acceleration even though they actually decrease as acceleration increases; therefore, it is a conservative assumption.)

As long as the device input accelerations are determined to be below their malfunction limits, the assembly is considered a rigid body with a transmissibility equal to one so that a device mounted on it would be limited directly by the assembly input acceleration.

Control panels and racks constitute the majority of Seismic Category I electrical assemblies. These are four basic generic panel types: vertical board, instrument panel, relay rack, and NEMA Type 12 enclosure. One or more of each type are tested to full acceleration levels and qualified using the above procedures. From these tests, it is concluded that most of the panel types have more than adequate structural strength and that a given panel design acceptability is just a function of its amplification factor and the malfunction levels of the devices mounted in it.

Subsequent panels are, therefore, tested at lower acceleration levels and the transmissibilities measured to the various devices as described. By dividing the devices' malfunction levels by the panel transmissibility between the device and the panel input, the panel dynamic qualification level could be determined. Several high level tests are run on selected generic panel designs to assure the conservativeness in using the transmissibility analysis described.

3.10.3.2 Other Electrical Equipment Supports

Supports for Battery Racks, Instrument Racks, Control Consoles, Cabinets, and Panels

Response spectra for floors where Seismic Category I equipment is located are supplied to each vendor. The vendor submits test data, operating experience, and/or calculations to verify that the equipment did not suffer any loss of function before, during, or after the specified dynamic disturbance. Analysis and/or testing procedures are in accordance with Subsection 3.10.2.

In essence, these supports are inseparable from their supported items and are qualified with the items or with dummy loads. During testing, the supports are fastened to the test table with fastening devices or methods used in the actual installation, thereby qualifying the total installation.

Cable Trays and Conduit Supports

Seismic Category I cable trays and conduit supports are designed by the response spectrum method. Analysis and dynamic load restraint measures are based on combined limiting values for static load, span length, and response to excitation at the natural frequency. Restraint against excessive lateral and longitudinal movement uses the structural capacity of the tray to determine the spacing of the fixed support points. Provisions for differential motion between buildings are made by breaks in the trays and flexible connections in the conduit.

The following loadings are used in the design and analysis of Seismic Category I cable tray and conduit supports.

- Loads
- Dead loads and live loads 112 kg/m (75 lbm/linear-ft) load used for 0.46-m (18-inch) and wider trays 75 kg/m (50 lbm/linear-ft) load used for 0.31-m (12-inch) and narrower trays.
- Dynamic loads - SSE loads plus appropriate RBV dynamic loads.
- Dynamic Analysis
- Regardless of cable tray function, all supports are designed to meet Seismic Category I requirements. Seismic and appropriate RBV dynamic loads are determined by dynamic analysis using appropriate response spectra.
- Floor Response Spectra — Floor response spectra used are those generated for the supporting floor. In case supports are attached to the walls or to two different locations, the upper bound envelope spectra are used. In many cases, to facilitate the design, several floor response spectra are combined by an upper bound envelope.

Local Instrument Supports

For field-mounted Seismic Category I instruments, the following is applicable:

- The mounting structures for the instruments have a fundamental frequency above the excitation frequency of the RRS.
- The stress level in the mounting structure does not exceed the material allowable stress when the mounting structure is subjected to the maximum acceleration level for its location.

Instrument Tubing Support

The following bases are used in the seismic and appropriate RBV dynamic loads design and analysis of Seismic Category I instrument tubing supports:

- The supports are qualified by the response spectrum method;
- Dynamic load restraint measures and analysis for the supports are based on combined limiting values for static load, span length, and computed dynamic response; and
- The Seismic Category I instrument tubing systems are supported so that the allowable stresses permitted by Section III of ASME Boiler and Pressure Vessel Code are not exceeded when the tubing is subjected to the loads specified in Subsection 3.9.2 for Class 2 and 3 piping.

3.10.4 Combined Operating License Information

Equipment Qualification Records

COL holders shall maintain the equipment qualification records including the reports (see Subsections 3.10.2.1 and 3.10.2.2) in a permanent file readily available for audit.

Dynamic Qualification Report

COL holders shall prepare a Dynamic Qualification Report (DQR) identifying all Seismic Category I electrical equipment and their supports. The DQR shall contain the following:

- A table or file for each system that is identified in Table 3.2-1 to be safety-related or having Seismic Category I equipment, shall be included in the DQR containing the MPL item number and name, the qualification method, the input motion, the supporting structure of the equipment, and the corresponding qualification summary table or vendor's qualification report.
- The mode of safety-related operation (i.e., active, manual active or passive) of the equipment along with the manufacturer identification and model numbers shall also be tabulated in the DQR. The operational mode identifies the instrumentation, device, or equipment
  - That performs the safety-related functions automatically,
  - That is used by the operators to perform the safety-related functions manually, or
  - Whose failure can prevent the satisfactory accomplishment of one or more safety-related functions.

3.10.5 References

3.10-1 USNRC, SRP 3.10 Draft 3 (04/1996), “Seismic and Dynamic Qualification of Mechanical and Electrical Equipment.”

3.10-2 General Electric Co., “General Electric Environmental Qualification Program,” NEDE-24326-1-P, Proprietary Document, January 1983.

3.11 ENVIRONMENTAL QUALIFICATION OF MECHANICAL AND ELECTRICAL EQUIPMENT

This section describes the requirements for the Environmental Qualification (EQ) of electrical and mechanical equipment. EQ shall be based on limiting design conditions for electrical equipment (including instrumentation and control components) and safety-related mechanical equipment. EQ documentation must describe methods and procedures used to demonstrate the capabilities of equipment to perform their required safety-related functions when exposed to the environmental conditions in their respective locations as discussed in SRP 3.11 Draft 3 (Reference 3.11-1).

The environmental qualification of electrical and mechanical equipment meets the relevant requirements of the following regulations:

(1) Code Federal Regulations (CFR):

a. 10 CFR 50, Appendix A, General Design Criterion 1, "Quality Standards and Records."

b. 10 CFR 50, Appendix A, General Design Criterion 2, "Design Bases for Protection Against Natural Phenomena."

c. 10 CFR 50, Appendix A, General Design Criterion 4, "Environmental and Dynamic Effects Design Bases."

d. 10 CFR 50, Appendix A, General Design Criterion 23, "Protection System Failure Modes."

e. 10 CFR 50.49, "Environmental Qualification of Electric Equipment Important to Safety for Nuclear Power Plants."

f. 10 CFR 50, Appendix B, "Quality Assurance Criteria for Nuclear Power Plants and Fuel Reprocessing Plants," Section III, "Design Control," Section XI, "Test Control," and Section XVII, Quality Assurance Records."

(2) Institute of Electrical and Electronic Engineers (IEEE):

a. IEEE-323-2003 “Standard for Qualifying Class 1E Equipment for Nuclear Power Generating Stations.”

b. IEEE-317-1983 (R2003) “Standard for Electrical Penetration Assemblies in Containment Structures for Nuclear Power Generating Stations.”

c. IEEE-383-2003 “Standard for Qualifying Class 1E Electric Cable and Field Splices for Nuclear Power Generating Stations.”

d. IEEE-420-2001 “Standard for the Design and Qualification of Class 1E Control Boards, Panels and Racks Used in Nuclear Power Generating Stations”.

e. IEEE-535-1986 (R1994) “Standard for Qualification of Class 1E Lead Storage Batteries for Nuclear Power Generating Stations.”

f. IEEE-603-1998 “Standard Criteria for Safety Systems for Nuclear Power Generating Stations.”

g. IEEE-627-1980 (R1996) "Standard for Design Qualification of Safety Systems Equipment Used in Nuclear Power Generating Stations."

h. IEEE-638-1992 "Standard for Qualification of Class 1E Transformers for Nuclear Power Generating Stations."

i. IEEE-649-1991 (R2004) "Standard for Qualifying Class 1E Motor Control Centers for Nuclear Power Generating Stations."

j. IEEE-650-1990 (R1998) "Standard for Qualification of Class 1E Static Battery Chargers and Inverters for Nuclear Power Generating Stations."

k. IEEE-382-1996 (R2004) "Standard for Qualification of Actuators for Power Operated Valve Assemblies with Safety-Related Functions for Nuclear Power Plants."

l. IEEE-381-1977 (R1984) "Standard Criteria for Type Tests of Class 1E Modules used in Nuclear Power Generating Stations."

m. IEEE-572-1985 (R2004) "Standard Qualification of Class 1E Connection Assemblies for Nuclear Power Generating Stations".

n. IEEE-634-2004 "Standard Cable-Penetration Fire Stop Qualification Test".

(3) American Society of Mechanical Engineers (ASME):

a. ASME B&PVC Section III-2001 "Rules for Construction of Nuclear Power Plant Components."

b. ASME NQA-1, Addenda NQA-1a-1999 "Quality Assurance Requirements for Nuclear Facility Applications."

(4) U.S. Nuclear Regulatory Commission (NRC) Regulatory Guides:

a. Regulatory Guide 1.63-1987 "Electric Penetration Assemblies in Containment Structures for Nuclear Power Plants."

b. Regulatory Guide 1.73-1974 "Qualification Tests of Electric Valve Operators Installed Inside the Containment of Nuclear Power Plants."

c. Regulatory Guide 1.89-1984 "Environmental Qualification of Certain Electric Equipment Important to Safety for Nuclear Power Plants."

d. Regulatory Guide 1.131-1977 "Qualification Tests of Electric Cables, Field Splices and Connections for Light-Water-Cooled Nuclear Power Plants."

e. Regulatory Guide 1.153-1996 "Criteria for Safety Systems."

f. Regulatory Guide 1.183-2000 "Alternative Radiological Source Terms for Evaluating Design Basis Accidents at Nuclear Power Reactor."

The general requirements for environmental design and qualification used to implement the relevant requirements of 10 CFR 50.49; General Design Criteria 1, 2, 4 and 23; and Quality Assurance Criteria III, XI, and XVII are as follows:

(1) The equipment is designed to have the capability of performing its design safety functions under all anticipated operational occurrences and normal, accident, and post-accident environments and for the length of time for which its function is required.

(2) The equipment environmental capability is demonstrated by appropriate testing and analyses.

(3) A quality assurance program meeting the requirements of 10 CFR Part 50, Appendix B, is established and implemented to provide assurance that all requirements have been satisfactorily accomplished.

The electrical equipment within the scope of this section is defined in Subsection 3.11.1. Dynamic qualification is addressed in Sections 3.9 and 3.10 for Seismic Category I mechanical and electrical equipment, respectively.

Limiting design conditions include the following:

Normal Operating Conditions — planned, purposeful, unrestricted reactor operating modes including startup, power range, hot standby (condenser available), shutdown, and refueling modes.

Abnormal Operating Conditions — any deviation from normal conditions anticipated to occur often enough that the design should include a capability to withstand the conditions without operational impairment.

Test Conditions — planned testing including pre-operational tests.

Accident Conditions — a single event not reasonably expected during the course of plant operation that has been hypothesized for analysis purposes or postulated from unlikely but possible situations or that has the potential to cause a release of radioactive material (a reactor coolant pressure boundary rupture may qualify as an accident; a fuel cladding defect does not).

Post-Accident Conditions —the length of time the equipment must perform its safety-related function and must remain in a safe mode after the safety-related function is performed.

3.11.1 Equipment Identification

Electrical equipment within the scope of this section includes all three categories of 10 CFR 50.49(b) (Reference 3.11-2). Safety-related mechanical equipment (e.g., pumps, motor-operated valves, safety-relief valves, and check valves) is as defined and identified in Section 3.2. Electrical and mechanical equipment safety classifications are further defined on the system design drawings.

Safety-related mechanical equipment and 10 CFR 50.49(b) electrical equipment located in a harsh environment must perform its proper safety function in environments during normal, abnormal, test, design basis accident and post-accident conditions as applicable. A list of all 10 CFR 50.49(b) electrical and safety-related mechanical equipment that is located in a harsh environment area shall be included in the Environmental Qualification Document (EQD) to be prepared as mentioned in Subsection 3.11.5.

3.11.2 Environmental Conditions

3.11.2.1 General Requirements

Environmental conditions for the zones where safety-related equipment is located are calculated for normal, abnormal, test, accident and post-accident conditions and are documented in Appendix 3H, Equipment Qualification Environmental Design Criteria (EQEDC).

Environmental conditions are tabulated by zones contained in the referenced building arrangements. Typical equipment in the noted zones is shown in the referenced system design schematics.

Environmental parameters include thermodynamic parameters (temperature, pressure and relative humidity), radiation parameters (dose rates and integrated doses of neutron, gamma and beta exposure) and chemical spray parameters (chemical composition and the resulting pH). Subsection 3.11.4 describes further the chemical and radiation environments.

The magnitude and 60-year frequency of occurrence of significant deviations from normal plant environments in the zones have insignificant effects on equipment total thermal normal aging or accident aging. Abnormal and test condition environments are bounded by the normal or accident conditions according to the Appendix 3H tables.

Margin is defined as the difference between the most severe specified service conditions of the plant and the conditions used for qualification. Margins shall be included in the qualification parameters to account for normal variations in commercial production of equipment and reasonable errors in defining satisfactory performance. The environmental conditions shown in the Appendix 3H tables do not include margins.

Some mechanical and electrical equipment may be required to perform an intended function between minutes of the occurrence of the event but less than 10 hours into the event. Such equipment shall be shown to remain functional in the accident environment for period of at least 1-hour in excess of the time assumed in the accident analysis unless a time margin of less than one hour can be justified. Such justification shall include for each piece of equipment:

(1) consideration of a spectrum of breaks;

(2) the potential need for the equipment later in the event or during recovery operations;

(3) a determination that failure of the equipment after performance of its safety function is not detrimental to plant safety or does not mislead the operator; and

(4) determination that the margin applied to the minimum operability time, when combined with other test margins, accounts for the uncertainties associated with the use of analytical techniques in the derivation of environmental parameters, the number of units tested, production tolerances, and test equipment inaccuracies.

For equipment with required time of operation during accident of more than 10 hours, it shall be demonstrated that they remain functional under accident conditions for a period of time at least 10% longer than the required time of operation.

The environmental conditions shown in the Appendix 3H tables are upper-bound envelopes used to establish the environmental design and qualification bases for equipment. The upper bound envelopes indicate that the zone data reflects the worse case expected environment produced by a compendium of accident conditions. Estimated chemical environmental conditions are also reported in Appendix 3H.

Accident environmental profiles (i.e. Pressure, Temperature, Radiation) and operating service conditions shall be provided in Environmental Data Sheets per Appendix J, in Reference 3.11-3.

3.11.2.2 Qualification Program, Methods and Documentation

10 CFR 50.49(b) electrical equipment that is located in a harsh environment is qualified by test or other methods as described in IEEE 323 and permitted by 10 CFR 50.49(f) (Reference 3.11-2). Equipment type test is the preferred method of qualification.

Safety-related mechanical equipment that is located in a harsh environment is qualified by analysis of materials data, which are generally based on test and operating experience.

The mechanical and electrical equipment shall have a design life of 60 years. The design life shall be verified using methods and procedures of qualification and documentation as stated in IEEE-323 and as addressed herein.

The qualification program and methodology are described in detail in the NRC approved licensing Topical Report on GE's environmental qualification program (Reference 3.11-4). This report also addresses compliance with the applicable portions of the General Design Criteria of 10 CFR 50, Appendix A, and the Quality Assurance Criteria of 10 CFR 50, Appendix B. Additionally, the report describes conformance to Regulatory Guides and IEEE Standards referenced in SRP 3.11.

Equipment located in a mild environment, as defined by 10 CFR 50.49 paragraph (c), are subject to the loads specified, and margins as defined in IEEE Standard 323 are not applicable. A mild environment is one where a postulated event, such as a Loss-of-Coolant-Accident (LOCA) or High Energy Line Break (HELB) does not cause any significant change in the environment of the particular location. For example, the Control Room is in a mild environment. If there is any change in conditions resulting from a postulated event, the requirements of IEEE Standard 323 shall apply.

The vendors of equipment located in a mild environment are required to submit a certificate of compliance certifying that the equipment has been qualified to assure its required safety-related function in its applicable environment. This equipment is qualified for dynamic loads as addressed in Sections 3.9 and 3.10. Further, a surveillance and maintenance program shall be developed to ensure the operability during its design life.

The vendor shall specify qualified life, shelf life and activities of maintenance surveillance, periodic testing and any parts replacement required to maintain qualification of equipment provided in accordance with this document.

The procedures and results of qualification by tests, analyses or other methods for the safety-related equipment shall be documented, maintained, and reported as mentioned in Subsection 3.11.5. The requirements for this documentation are presented in GE's environmental qualification program (Reference 3.11-3).

3.11.3 Loss of Heating, Ventilating and Air Conditioning

The ESBWR needs no safety-related Heating, Ventilating and Air Conditioning (HVAC) system. Section 9.4 describes the HVAC systems including their design evaluations. The loss of ventilation conditions are considered in Appendix 3H and the calculations are based on maximum heat loads assuming operation of all operable equipment regardless of safety classification.

3.11.4 Estimated Chemical and Radiation Environment

Chemical Environment

Equipment in the lower portions of the containment is potentially subject to submergence. The chemical composition and resulting pH to which safety-related equipment is exposed during normal operation and design basis accident conditions is reported in Appendix 3H.

Sampling stations are provided for periodic analysis of reactor water, refueling and fuel storage pool water, and suppression pool water to assure compliance with operational limits of the plant technical specifications.

Radiation Environment

Safety-related systems and components are designed to perform their safety-related function when exposed to the normal operational radiation levels and accident radiation levels.

The normal operational exposure is based on the radiation sources provided in Chapter 12.

The radiation sources associated with the Design Basis Accident (DBA) and developed in accordance with NUREG-1465 are used. Dose rates and integrated doses of neutron, gamma and beta radiation that are associated with normal plant operation and the DBA condition for various plant compartments are presented in Appendix 3H; these parameters are presented in terms of time-based profiles where applicable.

The gamma and beta doses in Appendix 3H are bounding values based on generic design considerations, and are to be revised and/or verified by the COL holder based upon the site-specific equipment considerations (exact design, specific location, materials of construction and leakage characteristics).

3.11.5 Combined Operating License Information

Environmental Qualification Document (EQD)

COL holders shall prepare the EQD summarizing the qualification results for all equipment identified in Subsection 3.11.1. The EQD shall include the following:

- The test environmental parameters and the methodology used to qualify the equipment located in harsh environments shall be identified.
- A summary of environmental conditions and qualified conditions for the equipment located in a harsh environment zone shall be presented in the System Component Evaluation Work (SCEW) sheets as described in Table I-1 of GE's Environmental Qualification Program (Reference 3.11-3). The SCEW sheets shall be compiled in the EQD.

Environmental Qualification Records

COL holders shall record and maintain the results of the qualification tests in an auditable file in accordance with requirements of 10 CFR 50.49(j).

3.11.6 References

3.11-1 USNRC, SRP 3.11 Draft 3 (04/1996), "Environmental Qualification of Mechanical and Electrical Equipment," NUREG-0800.

3.11-2 USNRC, Code of Federal Regulations, Title 10, Chapter I, Part 50, Paragraph 50.49, "Environmental Qualification of Electric Equipment Important to Safety for Nuclear Power Plant."

3.11-3 General Electric Co., "General Electric Environmental Qualification Program," NEDE-24326-1-P, Proprietary Document, January 1983.