0267

DEPARTMENT OF THE ARMY
HEADQUARTERS US ARMY MATERIEL DEVELOPMENT AND READINESS COMMAND
5001 EISENHOWER AVE., ALEXANDRIA, VA. 22333

RECEIVED
1979 JAN 26 PM 12 22
U.S. NUCLEAR REG.
MAIL AND RECORDS SECTION

DRCSF-P/78-0037

23 January 1979

Director
Nuclear Material Safety and Safeguards
ATTN: Radioisotopes Licensing Branch
(Mr. Paul Guinn)
US Nuclear Regulatory Commission
Washington, DC 20555

Dear Mr. Guinn:

There is an error in the name of Army Command listed as Licensee in item 1 on License number 29-01022-08. Item 1 should be changed from "US Army Electronics Command" to "US Army Communications and Electronics Material Readiness Command".

Please acknowledge receipt of correspondence on inclosed NRC-46 Reply Card.

Sincerely yours,

DARWIN N. TARAS
Chief, Health Physics
Safety Office

2 Incl
1. NRC Reply card
2. NRC License 29-01022-08

CF:
Commander, US Army Communications and Electronics Readiness Command,
ATTN: DRSEL-SF, Fort Monmouth, NJ 07703 w/o incl

COPIES SENT TO OFF. OF
INSPECTION AND ENFORCEMENT

B/14

DEPARTMENT OF THE ARMY
HEADQUARTERS US ARMY MATERIEL DEVELOPMENT AND READINESS COMMAND
5001 EISENHOWER AVE., ALEXANDRIA, VA. 22333

DRCSF-P/78-0120

16 November 1978

Director
Nuclear Material Safety and Safeguards
ATTN: Radioisotopes Licensing Branch
US Nuclear Regulatory Commission
Washington, DC 20555

Reference: NRC Control Number 94314

Gentlemen:

Forwarded is US Army Communications and Electronics Materiel Readiness Command change to technical manual which replaces Change No. 2, Final Draft Equipment Publication, inclosure 5, Supplement E of application for renewal of Byproduct Material License Number 29-01022-08.

Please acknowledge receipt of correspondence on enclosed NRC-46 Reply Card.

Sincerely yours,

L. L. Mothersbaugh

L. L. MOTHERSBAUGH
Acting Chief
Safety Office

2 Incls
as

CF:
HQDA (DASG-HCH-E), WASH, DC 20310 w/incl (2 cys)
Dir, DARCOM FSA, Charlestown, IN 47111 w/incl

11 52
INSPECTION AND ENFORCEMENT

RECEIVED

1978 NOV 17 AM 11 23

U.S. NUCLEAR REG.
COMMISSION
NMSS MAIL SECTION

DEPARTMENT OF THE ARMY
HEADQUARTERS US ARMY COMMUNICATIONS AND ELECTRONICS
MATERIEL READINESS COMMAND AND FORT MONMOUTH
FORT MONMOUTH, NEW JERSEY 07703

DRSEL-SF-H 8 November 1978

SUBJECT: Renewal and Complete Revision of US Nuclear Regulatory Commission (NRC) Byproduct Material License No. 29-01022-08

Commander
US Army Materiel Development
and Readiness Command
ATTN: DRCSF-P
5001 Eisenhower Avenue
Alexandria, Virginia 22333

1. Reference is made to letter, DRSEL-SF-H, 20 April 1978, subject as above, with attached Application For Byproduct Materiel License dated 20 April 1978.

2. Inclosed is Change No. 2 dated 15 December 1977 to Technical Manual 11-6665-227-12. This replaces Change No. 2, Final Draft Equipment Publication, inclosure 5, Supplement E of referenced application.

3. Request amendment to subject license be issued to include this change into the license.

FOR THE COMMANDER:

Steven A Horne for
BERNARD M. SAVAIKO
Chief, Safety Office

1 Incl
as

CHANGE No. 2

HEADQUARTERS
DEPARTMENT OF THE ARMY
WASHINGTON, DC, *15 December 1977*

Operator's and Organizational Maintenance Manual **4106**

CALIBRATOR SET, RADIAC AN/UDM-2

NSN 6665-00-179-9037

TM 11-6665-227-12, 13 June 1975, is changed as follows:
1. New or changed material is indicated by a vertical bar in the margin.
2. Remove old pages and insert new pages as indicated below.

Remove	*Insert*
i	i/(ii blank)
1-1 through 1-8	1-1 through 1-8
2-1 and 2-2	2-1 and 2-2
3-1 and 3-2	3-1 and 3-2
3-5 through 3-14	3-5 through 3-14
4-1 through 4-3	4-1 through 4-3

3. File this change sheet in the front of the manual for reference purposes.

By Order of the Secretary of the Army:

BERNARD W. ROGERS
General, United States Army
Chief of Staff

Official:

J.C. PENNINGTON
Brigadier General, United States Army
The Adjutant General

4106

Distribution:

To be distributed in accordance with DA Form 12-50, Section I, Operator Maintenance requirements for AN/UDM-2.

☆ U.S. GOVERNMENT PRINTING OFFICE: 1978—703-128/ 522

TECHNICAL MANUAL
No. 11-6665-227-12

HEADQUARTERS
DEPARTMENT OF THE ARMY
WASHINGTON, DC, *13 June 1975*

Operator's and Organizational Maintenance Manual

CALIBRATOR SET, RADIAC AN/UDM-2

NSN 6665-00-179-9037

			Paragraph	Page
CHAPTER	1.	INTRODUCTION		
Section	I.	General		
		Scope	1-1	1-1
		Indexes of publications	1-2	1-1
		Forms and records	1-3	1-1
		Administrative storage	1-4	1-1
		Destruction of Army materiel prevent enemy use	1-5	1-1
	II.	Reporting of errors	1-6	1-1
		Reporting of equipment improvement recommendations (EIR)	1-6.1	1-1
		Nuclear Regulatory Commission (NRC) requirements	1-6.2	1-1
		Description and data		
		Purpose and use	1-7	1-3
		Technical characteristics	1-8	1-3
		Items comprising an operable Calibrator Set, Radiac AN/UDM-2	1-9	1-3
		Description of Calibrator Set, Radiac AN/UDM-2	1-10	1-3
		Precautions	1-11	1-8
CHAPTER	2.	INSTALLATION		
		Unpacking	2-1	2-1
		Checking unpacked equipment	2-2	2-1
		Preparation for use	2-3	2-1
CHAPTER	3.	OPERATING INSTRUCTIONS		
		General	3-1	3-1
		Controls and indicators	3-2	3-1
		Dosimeter checking	3-3	3-2
		Checking Radiacmeter IM-174(*)/PD	3-4	3-6
		Checking Radiac Set AN/PDR-27(*)	3-5	3-8
		Checking Radiac Set AN/PDR-60	3-6	3-14
		Checking Aerial Radiac System AN/ADR-6	3-7	3-14
CHAPTER	4.	MAINTENANCE INSTRUCTIONS		
		Scope of maintenance	4-1	4-1
		Tools and equipment required	4-2	4-1
		Preventive maintenance	4-3	4-1
		Preventive maintenance checks and services (PMCS)	4-4	4-1
		Cleaning and touchup painting instructions	4-5	4-2
		Troubleshooting	4-6	4-3
APPENDIX	A.	REFERENCES		A-1
	B.	BASIC ISSUE ITEMS LIST (BIIL) AND ITEMS TROOP INSTALLED OR AUTHORIZED LIST (ITAL) (Not applicable)		
	C.	MAINTENANCE ALLOCATION		
SECTION	I.	Introduction		C-1
	II.	Maintenance allocation chart		C-3
GLOSSARY				Glossary 1

CHAPTER 3
OPERATING INSTRUCTIONS

3-1. General

WARNING

Radioactive materials are used in this equipment. Read and understand all operational data and procedures in this chapter *before* using the equipment. Become thoroughly familiar with the contents of TB 11-6665-227-12. Never look directly into the access hole (fig. 1-2) when the swivel cover is swung open; do not poke sharp pointed objects into the access hole. This equipment will be used only under the direction of a Radiological Protection Officer.

Table 3-1 lists all controls and indicators used by the operator. In addition, this chapter contains the following:

a. Procedures for checking Radiacmeters IM-9E/PD, IM-93(*)/UD, and IM-147/PD (para 3-3).

b. The procedures for checking Radiacmeter IM-174(*)/PD (para 3-4).

c. The procedures for checking Radiac Set AN/PDR-27(*) (para 3-5).

d. The procedures for checking Radiac Set AN/PDR-60 (para 3-6).

e. The procedures for checking Aerial Radiac System AN/ADR-6 will be given in paragraph 3-7 when they become available.

3-2. Controls and Indicators

All operator controls and indicators are listed in table 3-1.

Table 3-1. List of Controls and Indicators

Control or indicator	Function
Calibrator, Radiac TS-3495/UDM-2 (fig. 1-2):	
Stem (stopwatch)	Stops, starts, and winds stopwatch. Positions seconds indicator to zero (60) and minutes indicator to zero (30) for reuse.
Second indicator (stopwatch)	Indicates elapsed time from 0 to 60 seconds.
Minute indicator (stopwatch)	Indicates elapsed time from 0 to 30 minutes.
Key	Unlocks swivel cover allowing it to be swung open.
Swivel cover (spring-loaded)	Allows dosimeter entry into access hole.
Calibrator, Radiac TS-3494/UDM-2 (fig. 1-3):	
Shutter	Rotated to select radiation fields of 10 rad/hr or 100 rad/hr.
Key	Unlocks shutter allowing it to be rotated.

3-3. Dosimeter Checking

To check an IM-9E/PD perform the procedures in *a* and *b* below. To check an IM-93(*)/UD or IM-147/PD perform the procedures in *a* and *c* below. Various dosimeters react differently when checked in the discharge well assembly. Table 3-2 lists the different types of dosimeters, their manufacturer, procurement number and year of manufacture, and the discharge well assembly position, total exposure or discharge time and the discharge readings. Refer to table 3-2 and discharge the dosimeter in the position shown for the period of time listed. Start the stopwatch immediately after the dosimeter is in its discharge position. For information pertaining to the operation of dosimeters, refer to TM 11-6665-214-10.

a. Precheck Procedures.

(1) Examine the dosimeter (and clean it if necessary) to insure that it will not carry mud or dirt into the access hole.

(2) Remove the DA Calibration Certification Label from the dosimeter.

(3) After examination, charge the dosimeter to a zero indication (TM 11-6665-214-10).

(4) Insert the key in the discharge well assembly lock and release the lock (fig. 1-2).

(5) Swing the swivel cover on the discharge well to one side enough to expose the access hole. Reset and wind the stopwatch, if necessary.

Table 3-2. Dosimeter Discharge Data

DOSIMETER	DISCHARGE POSITION	MANUFACTURER	PROCUREMENT ORDER RR	YEAR	TIME	DISCHARGE READING ±20%	DISCHARGE READING LIMITS ±20%
IM-93	LOWER	LANDSVERK	21505-P	56	5 MIN	300	240-360
0-600 RAD	LOWER	BENDIX	30884-PP	57	5 MIN	405	324-486
	LOWER	BENDIX	4371-PP	60	5 MIN	70	56-84
	LOWER	BENDIX	15916-PP	63	5 MIN	60	48-72
	LOWER	LANDSVERK	4596-PP	61	5 MIN	40	32-48
	LOWER	LANDSVERK	15631-PP	62	5 MIN	40	32-48
	LOWER	LANDSVERK	DAAB05-68-C-0911	68	5 MIN	300	240-360
IM-147	LOWER	BENDIX	39159-PP	58	2 MIN	25	20-30
IM-147	LOWER	BENDIX	3439-PP	59	2 MIN	25	20-30
IM-147	LOWER	BENDIX	15861-PP-	62	2 MIN	25	20-30
IM-147	LOWER	LANDSVERK	DAAB05-68-C-0911	68	40 SEC	40	32-48
IM-9E 0-200 M RAD	UPPER	LANDSVERK	4913-PP	61	3 MIN	100	80-120
IM-9E	UPPER	BENDIX	15895-PP	63	2 MIN	100	80-120
IM-9E	UPPER	LANDSVERK	15580-PP	62	3 MIN	100	80-120
IM-9E	UPPER	LANDSVERK	DAAB05-67-C-1678	67	2 MIN	80	64-96
IM-9E	UPPER	LANDSVERK	DAAB05-69-C-0716	69	2 MIN	100	80-120
IM-9F	UPPER	LANDSVERK	C2537MFR 00910	68	5 MIN	80	64-96
CDV-138 0-200 M RAD	UPPER	BENDIX	NO INDICATION		2 MIN	100	80-120
CDV-742	LOWER	BENDIX	NO INDICATION		2 MIN	120	96-144
0-200 RAD	LOWER	LANDSVERK	NO INDICATION		5 MIN	120	96-144

b. Checking IM-9E/PD.

NOTE

Do not press the dosimeter down to the lower level (where its top would be flush with the top surface of the well); the lower level will expose it to a stronger radiation field than is required and will discharge it *completely* in less than 2 seconds. If the dosimeter is accidently pressed down into the lower level, remove the dosimeter, recharge it, and re-expose the access hole.

(1) *Gently* insert the dosimeter, charging end down, until it rests on the spring-loaded dosimeter platform and approximately one third of it remains above the top surface of the well. Allow the spring-loaded swivel cover to rest *gently* against the protruding dosimeter.

(2) Start the stopwatch as soon as the dosimeter rests on the spring-loaded dosimeter platform.

(3) Allow the dosimeter to remain in the upper discharge level for exactly the time shown in table 3-2.

(4) Remove the dosimeter and check to see that the indication is within the allowable tolerances by referring to TABLE 3-2. If the indication is within the allowable tolerances, the dosimeter is usable.

c. Checking IM-93(*)/UD or IM-147/PD.

(1) *Gently* insert the dosimeter, charging end down, into the access hole and press it down into the lower level until the top of the dosimeter is flush with the top of the well. Allow the spring-loaded swivel cover to swing *gently* over the dosimeter.

(2) Start the stopwatch as soon as the dosimeter reaches the lower level.

(3) Allow the dosimeter to remain in the lower discharge level for exactly the time shown in table 3-2.

(4) At the end of the discharge time, swing the swivel cover aside; the dosimeter will rise up, automatically cutting off the discharge field in the lower level.

NOTE

The field in the upper level will have no effect on the IM-147/PD or the IM-93(*)/UD.

(5) Remove the dosimeter and check to see that its indication falls within the allowable tolerances by referring to TABLE 3-2. If the indication is within the allowable tolerances, the dosimeter is usable. If the indication is not within the allowable tolerances, turn the dosimeters in for higher category of maintenance.

(Next printed page is 3-6)

DELETED

3-4. Checking Radiacmeter IM-174(*)/PD

Check the radiacmeter (fig. 3-1) as follows:

a. On the radiacmeter (TM 11-6665-213-12 (IM-174/PD) or TM 11-6665-232-12 (IM-174A/PD)), remove the bottom cover plate by releasing the four screws and remove the ionization chamber.

b. On the RATEMETER assembly, pull out the sliding drawer on the drawer unit, remove the spacer block, and insert the ionization chamber.

NOTE

Make sure the ioniazation chamber is firmly seated in the sliding drawer.

On the IM-174/PD only, using clip leads, ground the outside of the ionization chamber to the radiacmeter case.

c. Energize, zero adjust, and calibrate the radiacmeter (TM 11-6665-213-12 or TM 11-6665-232-12). Allow a 2-minute warmup period; if time permits, allow 20 minutes.

d. On the RATEMETER assembly (fig. 3-1), close the sliding drawer, insert the key in the lock, and unlock the shutter.

e. Rotate the shutter to the 100 rad/hr position.

(1) *IM-174/PD.* If the IM-174PD meter indication is 147 ±30, proceed to *h* below; if not, proceed to *f* below.

(2) *IM-174/PD.* If the IM-174A/PD meter indication is 100 ±20, proceed to *h* below; if not, proceed to *g* below.

CAUTION

On the IM-174/PD, never remove the left-hand calibration control.

f. On the IM-174/PD remove the right-hand calibration control over cap, and adjust the calibration control for a 147 ±30 meter indication; replace the cover cap.

g. On the IM-174A/PD, remove the calibration control cover cap, and adjust the calibration control for a 100 ±20 meter indication, replace the cover cap.

h. On the RATEMETER assembly, rotate the shutter to the 10 rad/hr position.

(1) If the IM-174/PD meter indication is 14.5 ±3.5 proceed to *k* below; if not, proceed to *i* below.

(2) If the IM-174/PD meter indication is 10 ±2, proceed to *k* below; if not, proceed to *j* below.

i. On the IM-174/PD, remove the right-hand calibration control cover cap, and readjust the calibration control for a 14.5 ±3.5 meter indication, then recheck the reading in the 100 rad/hr shutter position (step *e,* above), if still within the limits, replace cover cap. If the meter reading in the 100 rad/hr position is out of limits (*e* above), readjust calibration control at the 10 rad/hr and the 100 rad/hr shutter positions, switching back and forth, until the readings are within the limits stated and replace the cover cap.

j. On the IM-174A/PD, remove the calibration control cover cap and readjust the calibration control for a 10 ±2 meter indication, then recheck the reading in the 100 rad/hr shutter position (step *e,* above), if still within limits, replace cover cap. If the meter reading is out of limits (*e* above), readjust calibration control at the 10 rad/hr and the 100 rad/hr shutter positions, switching back and forth, until the readings are within the limits stated and replace the cover cap.

NOTE

If any of the meter indications listed in *e* through *j* above could not be obtained, turn in the equipment under test for repair to the next higher category of maintenance.

k. On the RATEMETER assembly, rotate the shutter to the closed (off) position and lock the shutter.

l. Open the sliding drawer, remove the ionization chamber, and replace the space block.

m. Deenergize the radiacmeter and replace the ionization chamber in the radiacmeter.

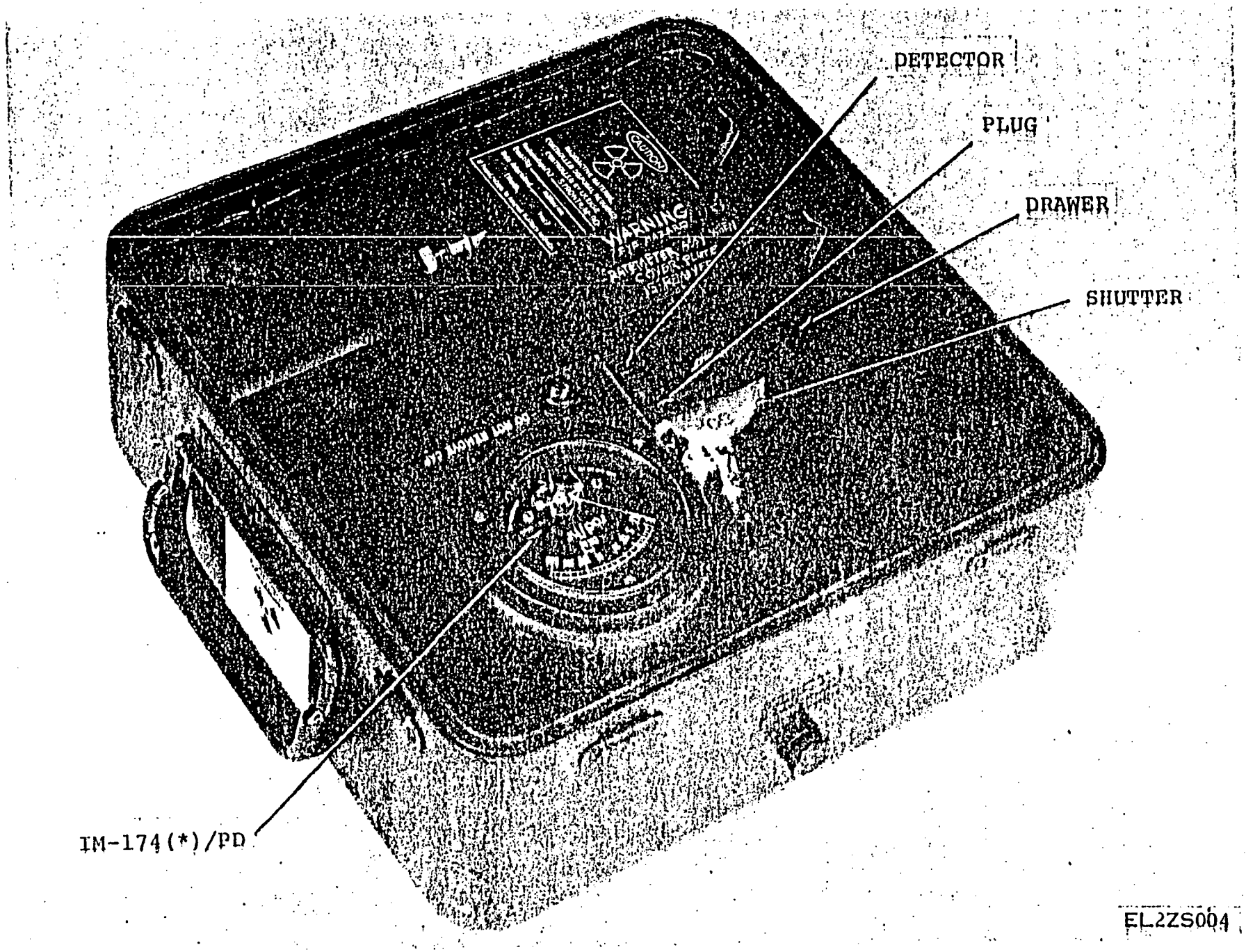

Figure 3-1. Checking radiacmeter IM-174(*)/PD.

3-5. Checking Radiac Set AN/PDR-27(*)

There is a phenomenon known to most users of equipment for detecting radioactive emanations called *statistics*. The word in this context refers to the erratic movement of the meter needle of an indicating radiacmeter or radiac set. This effect will be noticeable on all range indications of Radiac Set AN/PDR-27(*), being more pronounced on the lower ranges. This effect is the result of the beta particles emanating from the Sr-Y90 in a random fashion and thus the counting at the probe also varies in a random fashion. When the operator is observing meter indications under conditions where this *statistical* variation is present, watch the meter needle for a minimum period of 1 minute and note the highest and lowest values obtained during that period. The average of the highest and lowest values during that period will be the field strength measurement. The *normal* indications given in the following procedure are the average of the high and low values noted. Check the radiac set as follows:

CAUTION

Be careful not to damage the short piece of cable that joins the two probes.

a. On the AN/PDR-27(*), remove the two screws on the double-probe lips and separate the two probes. Set the range switch to the 500 mrad/hr position. Allow an appropriate amount of time for the model being tested to stabilize. (Refer to applicable manual listed in app A.)

b. On the RATEMETER assembly (fig. 1-3), release the shipping lock, pull out the drawer, and place the spacer block in the drawer.

c. Close the drawer; insert the smaller probe into the handle end of the drawer (fig. 3-2) and rotate the shutter to the 100 position.

d. Rotate the small AN/PDR-27(*) probe to achieve maximum and minimum meter indications; record the indications.

e. The average indication should be 200 ± 60 mr/hr. If the average indication is correct, proceed to *f* below; if not, proceed to *j* below.

f. Rotate the shutter to the off (or closed) position, remove the small probe, and open the drawer.

g. Remove the spacer block from the drawer. Install the spacer block on the handle and close the drawer. Install the small probe in the block (fig. 3-3).

h. On the RATEMETER assembly, rotate the shutter to the 100 position.

i. On the AN/PDR-27(*), set the range switch to the 50 mrad/hr position. The meter indication should be 30 ± 9 mrad/hr. If the meter indication is correct, proceed to *k* below; if not proceed to *j* below.

j. On the AN/PDR-27(*), remove the calibration cover and adjust the appropriate calibration control (refer to applicable manual, app A). Repeat the procedures given in *b* through *i* above until the correct meter indications are obtained for both range positions, and then proceed to *k* below.

k. On the RATEMETER assembly, rotate the shutter to the off or closed position. Remove the small probe and spacer block from the drawer. Position the large probe to lie across the semicircular cutouts on the edges of the drawer with the drawer opened to its fullest extremity (fig. 3-4).

l. Leave the source shutter closed. On the AN/PDR-27(*), set the range switch to the 5 mrad/hr position. The meter indication should be 3.2 ± 1.0 mrad/hr. If the indication is correct, proceed to *m* below; if not, proceed to *o* below.

m. Position the large probe on the upper edge of the handle side of the RATEMETER assembly case (fig. 3-5).

n. Leave the source shutter closed. On the AN/PDR-27(*), set the range switch to the 0.5 mrad/hr position. The meter indication should be 0.30 ± 0.09 mrad/hr. If the indication is correct, proceed to *p* below; if not, proceed to *o* below.

o. On the AN/PDR-27(*), remove the calibration cover and adjust the appropriate calibration control (refer to applicable manual, app A) to obtain the correct meter indication. Repeat the procedures given in *k* through *n* above until the correct meter indications are obtained for both range positions, and then proceed to *p* below.

p. Deenergize the AN/PDR-27(*) and fasten the two probes together.

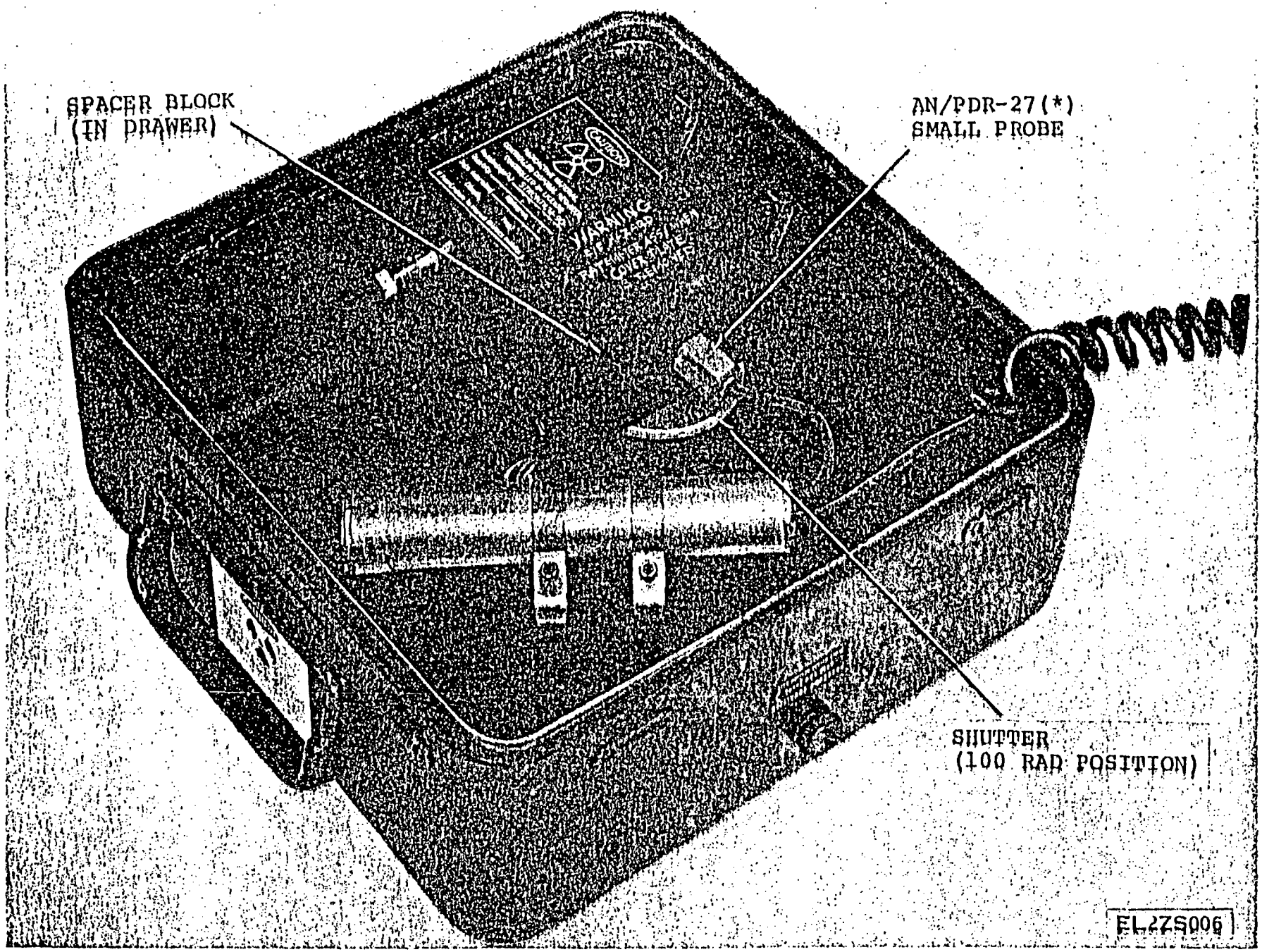

Figure 3-2. Checking AN/PDR-27(*) on 500 mrad/hr range.

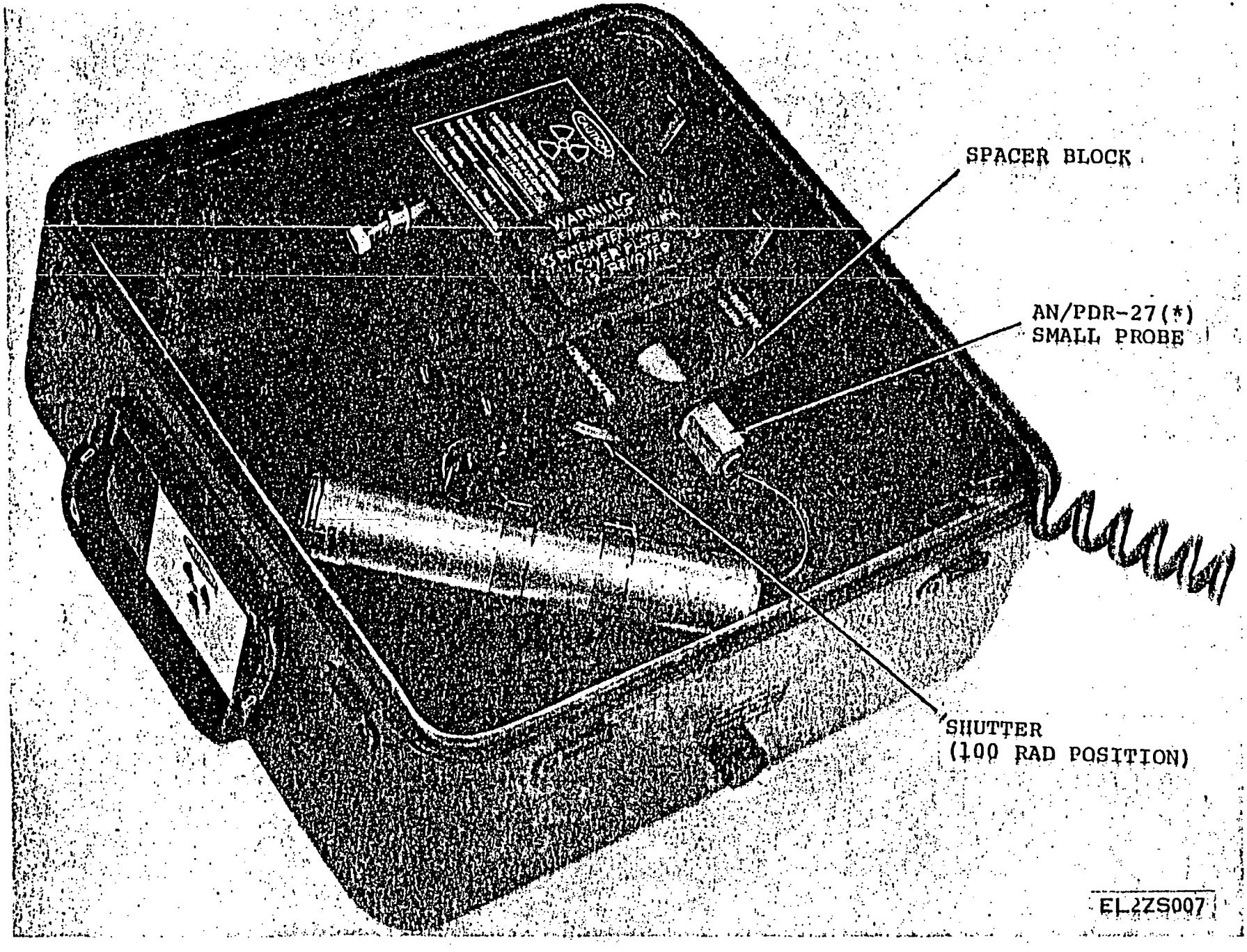

Figure 3-3. Checking AN/PDR-27(*) on 50 mrad/hr range.

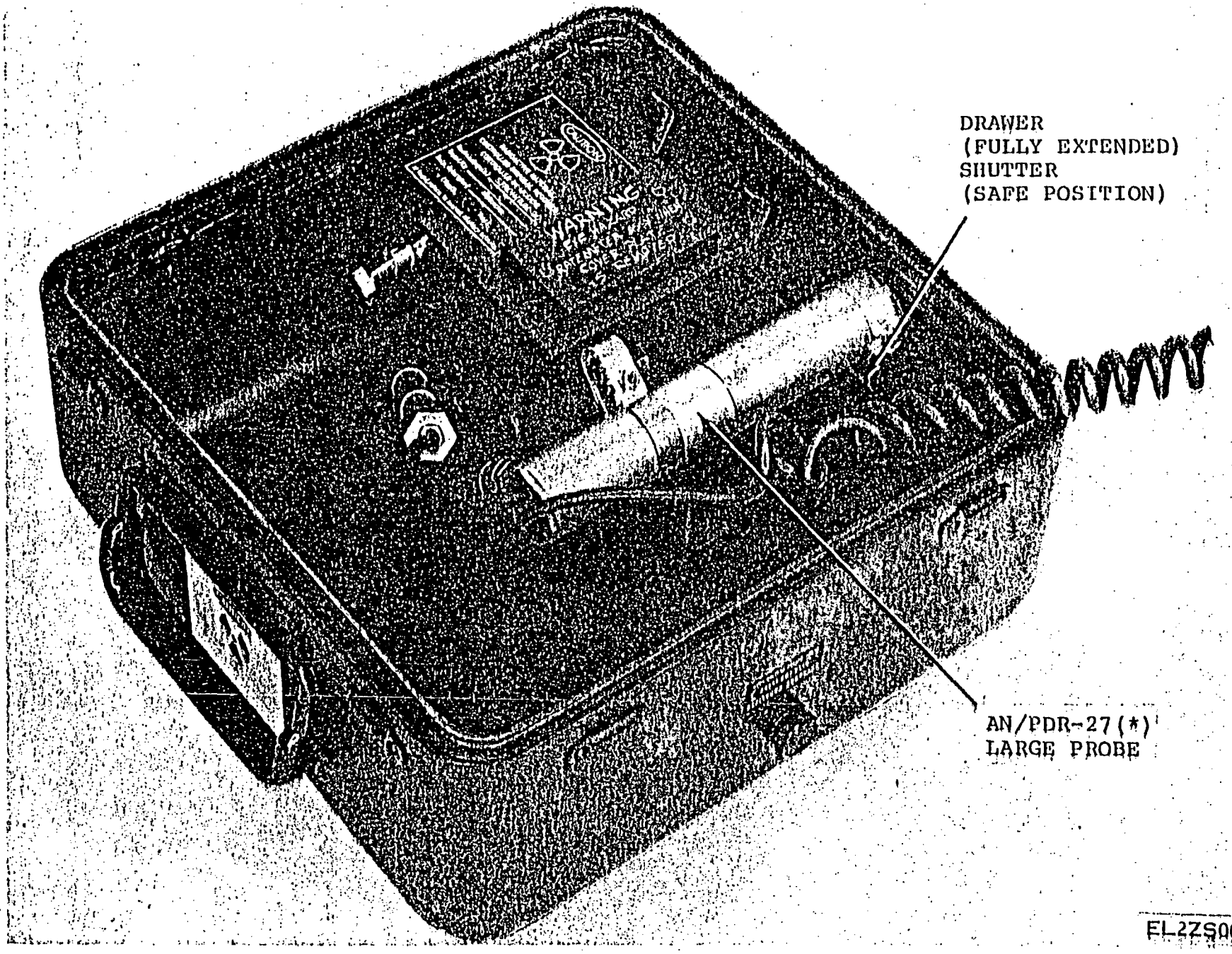

Figure 3-4. Checking AN/PDR-27(*) on 5 mrad/hr range.

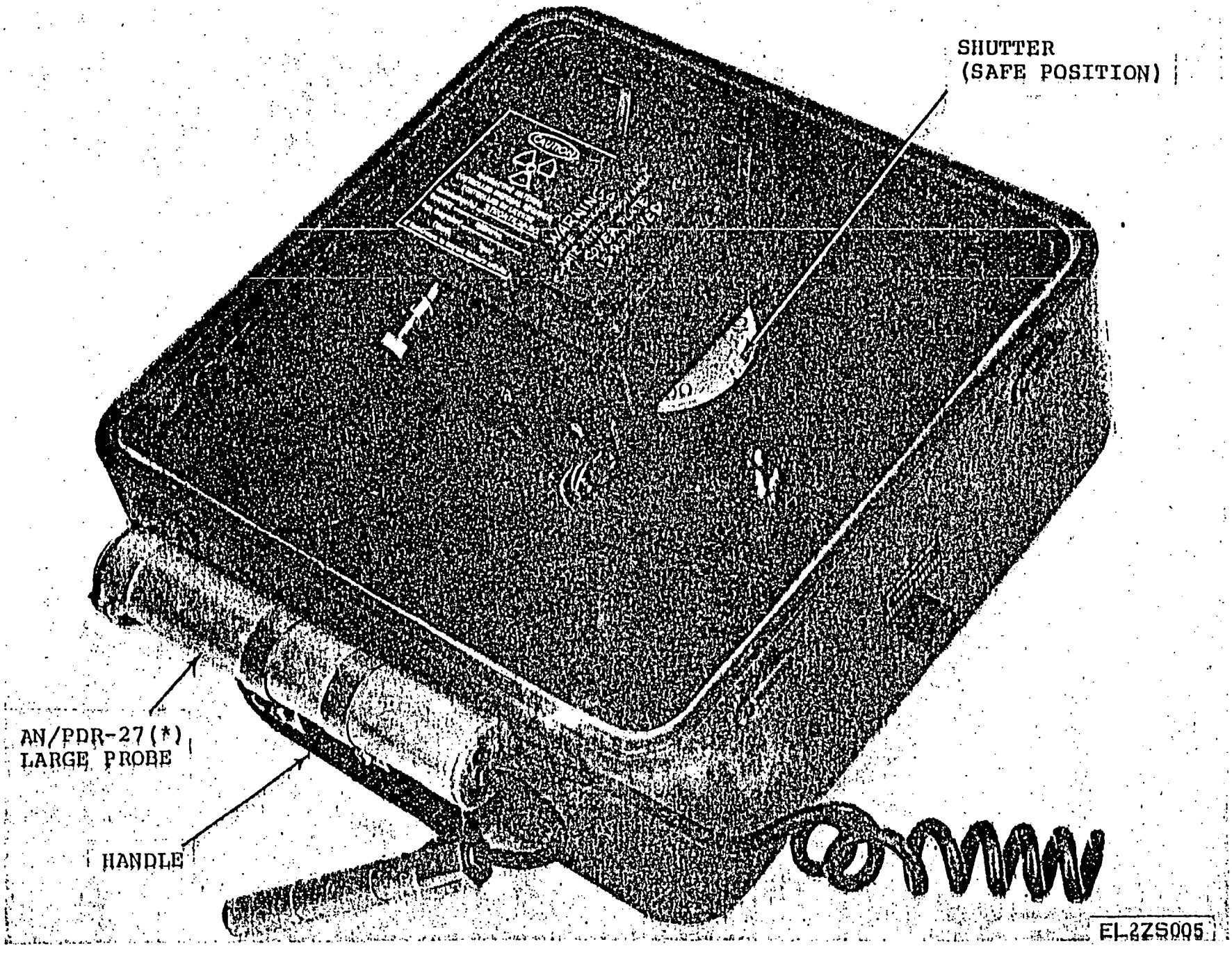

Figure 3-5. Checking AN/PDR-27(*) on 0.5 mrad/hr range.

3-6. Checking Radiac Set AN/PDR-60

NOTE

The explanation of the phenomenon known as *statistics* (para 3-5) applies to the AN/PDR-60 as well as to the AN/PDR-27(*).

WARNING

Be sure the AN/PDR-60 is turned off. Allow at least 15 seconds for the high-voltage power supply to discharge.

a. Remove the electronic chassis from the case assembly by releasing the latch at each end (TM 11-6665-221-15).

b. Remove the Geiger-Mueller tube (GM tube) from the AN/PDR-60 electronic chassis by carefully lifting it out of the clip; remove the GM tube cap.

c. Unscrew the aluminum sleeve (fig. 1-1) and place the GM tube in the clips (not shown) in the long end of the AN/PDR-60 adapter probe.

d. Position the GM tube so that the cap end is placed nearest the hexagonal retainer nut on the adapter probe; the other clip of the adapter probe should fit into the recessed area of the metal contact on the GM tube.

e. Slide the aluminum sleeve of the adapter probe over the GM tube and screw it into the hexagonal retainer nut until it is fingertight.

f. Place the dummy tube (at the other end of the adapter probe cable) into the AN/PDR-60 electronic chassis so that it duplicates the normal position of the GM tube; place the GM tube cap on the dummy tube.

g. On the RATEMETER assembly (fig. 1-3), release the shipping lock, pull out the drawer, and place the spacer block in the drawer; close the drawer.

h. Rotate the shutter of the RATEMETER assembly to the off position and insert the loaded adapter probe (*d* and *e* above) into the hole in the drawer until the hexagonal retainer nut is flush against the drawer face.

i. On the AN/PDR-60 electronic chassis, set the power and scale switch to 2*r* and the external detector switch to AC-3 (TM 11-6665-221-15).

NOTE

Allow at least 30 seconds for the AN/PDR-60 to warm up.

j. Rotate the adapter probe in the drawer; at some place in the rotation, the AN/PDR-60 meter pointer shall provide an upscale deflection (kick) of at least one scale division (0.1 rad/hr).

k. Rotate the shutter of the RATEMETER assembly to the 100 position and again rotate the adapter probe in the drawer; the AN/PDR-60 meter pointer shall provide indications between 0.5 rad/hr through 1/75 rad/hr (or, almost across the entire scale).

l. Rotate the shutter of the RATEMETER assembly to the off position, shut down the AN/PDR-60 electronic chassis (TM 11-6665-221-15), and reverse the procedures in *a* through *f* above.

3-7. Checking Aerial Radiac System AN/ADR-6

Data is currently not available; to be supplied at a later date.

CHAPTER 4

MAINTENANCE INSTRUCTIONS

4-1. Scope of Maintenance

The maintenance duties assigned to the operator and organizational repairman of the AN/UDM-2 are listed below together with a reference to the paragraphs covering the specific maintenance function. The AN/UDM-2, when the two halves are sealed, is waterproof. The swivel cover on the discharge well assembly restricts entry of foreign matter to the access hole, but is not waterproof. This cover may be removed to clean the pivot pin assembly when required.

WARNING

NEVER disassemble the cavities of the discharge well assembly or the ratemeter assembly. This procedure is dangerous and must be performed only by higher category maintenance personnel with adequate facilities meeting all requirements of TB 11-6665-227-12.

a. Operator preventive maintenance checks and services (table 4-1).

b. Organizational preventive maintenance checks and services (table 4-2).

c. Cleaning and touchup painting (para 4-5).

d. Troubleshooting (para 4-6).

e. Wipe test (TB 11-6665-227-12).

4-2. Tools and Equipment Required

No special tools or test equipment other than those listed in appendix C are required. The materials required for maintenance are listed below.

a. Trichlorethane (NSN 6810-00-664-0273).

b. Cleaning cloth (NSN 8305-00-245-4509).

c. Cotton swabs (NSN 6515-00-303-8250).

d. Sandpaper (No. 000).

e. Petroleum jelly or light machine oil.

4-3. Preventive Maintenance

To insure that the AN/UDM-2 is always ready for operation, it must be inspected systematically so that defects may be discovered and corrected before they result in serious damage or failure. The necessary preventive maintenance checks and services to be performed are listed and described in tables 4-1, 4-2, and 4-3. The item numbers in each table indicate the sequence of and the minimum inspection required. Defects discovered during operation of the unit will be noted (TB 11-6665-227-12) for future correction to be made as soon as operation has ceased. Stop operation immediately if a deficiency is noted during operation which would damage the equipment or harm personnel. Record all deficiencies together with the corrective action taken in accordance with the requirements of TB 11-6665-227-12 and TM 38-570.

4-4. Preventive Maintenance Checks and Services (PMCS)

a. General. Before performing PMCS, note the following:

(1) *Before you operate.* Always keep in mind the CAUTIONS and WARNINGS. Perform your before (B) PMCS.

(2) *While you operate.* Always keep in mind the CAUTIONS and WARNINGS. Perform your during (D) PMCS.

(3) *After you operate.* Be sure to perform your after (A) PMCS.

b. Item Number Column. Use the number in this column for this *TM number* column on DA Form 2404, Equipment Inspection and Maintenance Worksheet, when recording results of PMCS.

c. Interval Column. A dot (•) in the column indicates when the check is to be made.

d. For Readiness Reporting, Equipment Is Not Ready/Available If: Column. This column contains the standards which will cause the equipment to be reported not ready or not available because it cannot perform its primary mission.

Table 4-1. Operator/Crew PMCS

NOTE: Within the designated interval, the checks are to be performed in the order listed in the chart below.

B-Before
D-During
A-After
W-Weekly

Item No.	Interval B	Interval D	Interval A	Interval W	Item to be inspected	Procedures	For readiness Reporting Equipment is Not Ready/Available if:
1	•	•			Equipment	*a.* See that the units are clean and dry; free of grease, dirt, rust, corrosion, and fungus. *b.* See that painted surfaces are free of bare spots, rust, and corrosion. *c.* Inspect handles and fasteners for looseness. Tighten as necessary.	
2	•	•		•	Ratemeter Assembly	*a.* Check that the sliding drawer opens smoothly without binding. *b.* Check that the shutter does not bind when rotated.	Drawer does not open. Shutter will not rotate.
3	•	•	•		Discharge well assembly	*a.* Check to make sure swivel cover does not bind. *b.* Check stop watch operation.	Cover does not rotate to uncover discharge well. Stop watch does not operate properly.

Table 4-2. Organizational PMCS Monthly Schedule

Item No.	Item To Be Inspected	Procedures
1	Publications	See that publications are complete and current (App A and DA Pam 310-4).
2	Modifications	Check to determine if new applicable MWO's have been published (DA Pam 310-7 and TM 38-750). All URGENT MWO's must be applied immediately; NORMAL MWO's must be scheduled.
3	Gaskets	Inspect waterproof gaskets for signs of leakage, worn, or loose edges.
4	Hardware	Check for loose or missing hardware.
5	Leak Testing Procedure	Perform leak test (wipe test) at the discretion of the Radiological Protection Officer (RPO), but at least once every 6 months (TB 11-6665-227-12).

WARNING

Do not look directly into the access hole. Serious eye damage may result.

6	Discharge Well Assembly	Insert a cotton swab in to the access hole and remove any dirt, dust, or grease. Dispose of cotton swab in accordance with AR 755-15.

4-5. Cleaning and Touchup Painting Instructions

WARNING

During cleaning and painting be sure to observe all radioactive hazard precautions (para 1-11 and 3-1).

a. Cleaning.

(1) Remove dust, moisture, and loose dirt with a clean dry cloth.

WARNING

The fumes of trichloroethane are toxic.

CHAPTER 1
INTRODUCTION

Section I. GENERAL

1-1. Scope

a. This manual describes Calibrator Set, Radiac AN/UDM-2 (fig. 1-1) and covers its installation, operation, and organizational maintenance. It includes instructions for initial service, operation, cleaning, and inspection of the equipment.

b. Official nomenclature followed by (*) is used to indicate all models of an equipment referenced in this manual. Thus, Radiac Set AN/PDR-27(*) represents AN/PDR-27J, AN/PDR-27L, AN/PDR-27P, AN/PDR-27Q, and AN/PDR-27R: Radiacmeter IM-93(*)/UD represents IM-93/UD and IM-93A/UD; Radiacmeter IM-174(*)/PD represents IM-174/PD and IM-174A/PD.

1-2. Indexes of Publications

a. Refer to the latest issue of DA Pam 310-4 to determine whether there are new editions, changes, or additional publications pertaining to the equipment.

b. Refer to DA Pam 310-7 to determine whether there are modification work orders (MWO's) pertaining to the equipment.

1-3. Forms and Records

a. Reports of Maintenance and Unsatisfactory Equipment. Maintenance forms, records, and reports which are to be used by maintenance personnel at all maintenance levels are listed in and prescribed by TM 38-750.

b. Report of Packaging and Handling Deficiencies. Fill out and forward DD Form 6 (Packaging Improvement Report) as prescribed in AR 700-58/NAVSUPINST 4030.29/AFR 71-13/MCO P4030.29A, and DSAR 4145.8.

c. Discrepancy in Shipment Report (DISREP) (SF 361). Fill out and forward Discrepancy in Shipment Report (DISREP) (SF 361) as prescribed in AR 55-38/NAVSUPINST 4610.33A/AFR 75-18/MCO P4610.19B, and DSAR 4500.15.

1-4. Administrative Storage

Administrative storage information is contained in TM 740-91-1.

1-5. Destruction of Army Materiel to Prevent Enemy Use

Instructions for destruction of Army materiel to prevent enemy use are contained in TM 750-244-2.

1-6. Reporting of Errors

The reporting of errors, omissions, and recommendations for improving this publication by the individual user is encouraged. Reports should be submitted on DA Form 2028 (Recommended Changes to Publications and Blank Forms), forwarded direct to Commander, US Army Electronics Command, ATTN: DRSEL-MA-Q, Fort Monmouth, NJ 07703.

1-6.1. Reporting Equipment Improvement Recommendations (EIR)

EIR's will be prepared using DA Form 2407, Maintenance Request. Instructions for preparing EIR's are provided in TM 38-750, The Army Maintenance Management System. EIR's should be mailed directly to Commander, US Army Electronics Command, ATTN: DRSEL-MA-Q, Fort Monmouth, NJ 07703. A reply will be furnished directly to you.

1-6.2. Nuclear Regulatory Commission (NRC) Requirements

The US Nuclear Regulatory Commission sets standards/conditions and issues licenses for use of radioactive material in the United States. The AN/UDM-2 comes under the NRC regulations and a license for its use has been issued. Information required by the NRC license/regulations is contained below.

a. Radiation Protection. Users of the AN/UDM-2 should refer to instructions on control, safe handling, storage and transportation contained in TB 11-6665-227-12. Operation and maintenance instructions for the AN/UDM-2 are contained in this manual. These two publications, TB 11-6665-227-12 and TM 11-6665-277-12, satisfy the radiation protection requirements of the NRC regulations (Title 10, Chapter 1, Code of Federal Regulations, Parts 19 and 20).

b. Notice to Employees. Form NRC-3, Notice to Employees, contained in the back of this manual, may be removed for posting wherever the AN/UDM-2 is used and/or stored. The posting requirements are contained on the form.

c. NRC License. The NRC license for the AN/UDM-2 and documents relating to that license are held by the US Army Electronics Command Safety Office at Fort Monmouth, NJ. AN/UDM-2 users may request further information on these documents by letter addressed to:

Commander
US Army Electronics Command
ATTN: DRSEL-SF-H
Fort Monmouth, NJ 07703

Requests for further information may also be made by phone by calling on AUTOVON 992-3493.

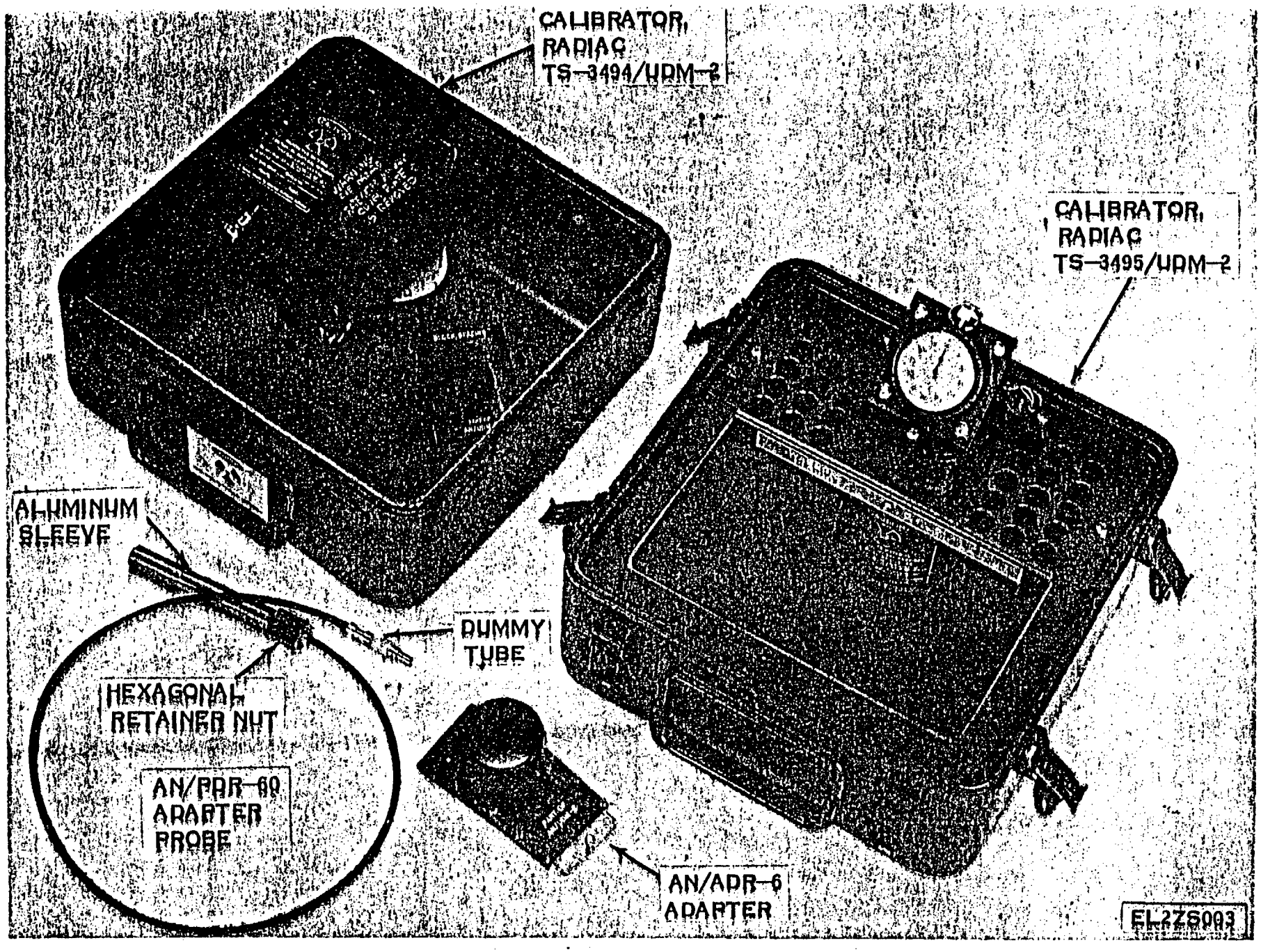

Figure 1-1. Calibrator Set, Radiac AN/UDM-2.

Section II. DESCRIPTION AND DATA

1-7. Purpose and Use
(fig. 1-1)

a. Purpose. Calibrator Set, Radiac AN/UDM-2 (consisting of two main sections (*b* below)) provides the facilities for checking the operational reliability and calibration accuracy of various radiacmeters and radiac sets.

b. Use. Calibrator, Radiac TS-3495/UDM-2 (discharge well assembly) is used to check Radiacmeters IM-93(*)/UD, IM-147/PD, and IM-9E/PD (dosimeters). Calibrator, Radiac TS-3494/UDM-2 (RATEMETER assembly) is used to check Radiacmeter IM-174(*)/PD (radiacmeter), Radiac Set AN/PDR-27(*) (radiac set), Radiac Set AN/PDR-60, and Aerial Radiac System AN/ADR-6.

1-8. Technical Characteristics

Type of radioactive isotope in each source capsule	Strontium-Yttrium 90 (Sr-Y90).
Decay of isotope	27.7 years half life.
Quantity of isotope:	
Discharge well assembly	Three encapsulated sources of 25 millicuries each. One encapsulated source of 20 microcuries.
RATEMETER assembly	One encapsulated source of 25 millicuries.
Type of radiation emitted	Beta particles.
Bremmstrahlung produced	Radiation doserate from sources (4) no greater than 2 millirads per hour at outer case surface.
Maximum range of beta particles in air	30 feet.
Stopwatch indication	Two indications: a minute hand for a maximum of 30 minutes and a second hand for a maximum of 60 seconds.

1-9. Items Comprising an Operable Calibrator Set, Radiac AN/UDM-2
(figs. 1-1, 1-2, and 1-3)

The components of the AN/UDM-2 that make up an operable equipment are listed in table 1-1.

Table 1-1. Items Comprising an Operable Calibrator Set, Radiac AN/UDM-2

NSN	Item	Qty	Dimensions (in.) Height	Depth	Width	Wt (lb)
6665-00-610-1487	Calibrator, Radiac TS-3494/UDM-2	1	5	12	12	10⅛
6665-00-610-1496	Calibrator, Radiac TS-3495/UDM-2	1	8¼	12	12	18¼
Not available	Adapter, AN/ADR-6	1	2⅜	3¼	2¼	⅜
Not available	Adapter probe, AN/PDR-60	1	⅝	5	....	¼
Not available	Stopwatch	1	....	....	....	....
Not available	Spacer block	1	3⅝	2½	1¼	½

1-10. Description of Calibrator Set, Radiac AN/UDM-2

Calibrator Set, Radiac AN/UDM-2 (fig. 1-1) consists of two major assemblies, Calibrator, Radiac TS-3495/UDM-2 and Calibrator, Radiac TS-3494/UDM-2, plus the AN/PDR-60 adapter probe, and the AN/ADR-6 adapter. Each major assembly is housed in one-half of a waterproof, aluminum case.

A handle is provided on each assembly to facilitate handling.

a. Calibrator, Radiac TS-3495/UDM-2 (fig. 1-2). The discharge well assembly consists of a discharge well, a dosimeter shelf, and a stopwatch. The dosimeter shelf contains 30 holes (to hold dosimeters to be tested) and the discharge well. The discharge well contains four Sr-Y90 sources (one 20 microcurie source and three 25 millicurie sources). The sources are arranged to radiate into a central cavity. Two fields of radiation are provided within the discharge well; one field is provided by the 20-microcurie source (upper field), the other field is provided by the three 25-millicurie sources (lower field). The upper field will cause Radiacmeter IM-9E/PD to discharge but will have no effect on Radiacmeter IM-93(*)/PD or IM-147/PD. The lower field will cause the IM-93(*)/PD or the IM-147/PD to discharge and will also cause the IM-9E/PD to discharge within two seconds. An access hole in the top of the discharge

well provides access to the radiation fields in the cavity. The cavity is vertically placed in the discharge well. The lower field of radiation is closed off from the access hole by a spring-loaded platform. This spring-loaded platform is opened when a dosimeter is inserted deep into the access hole. A spring-loaded swivel cover attached to the top of the discharge well covers the access hole. The key-operated lock is mounted on the swivel cover to prevent accidental exposure of the access hole. The swivel cover is moved sideways to expose the access hole and will move back over the access hole when the cover is released. A shipping lock is also mounted on the swivel cover to prevent accidental movement of the cover during transit. The stopwatch, mounted on the swivel cover, times the period of exposure for the dosimeter being checked.

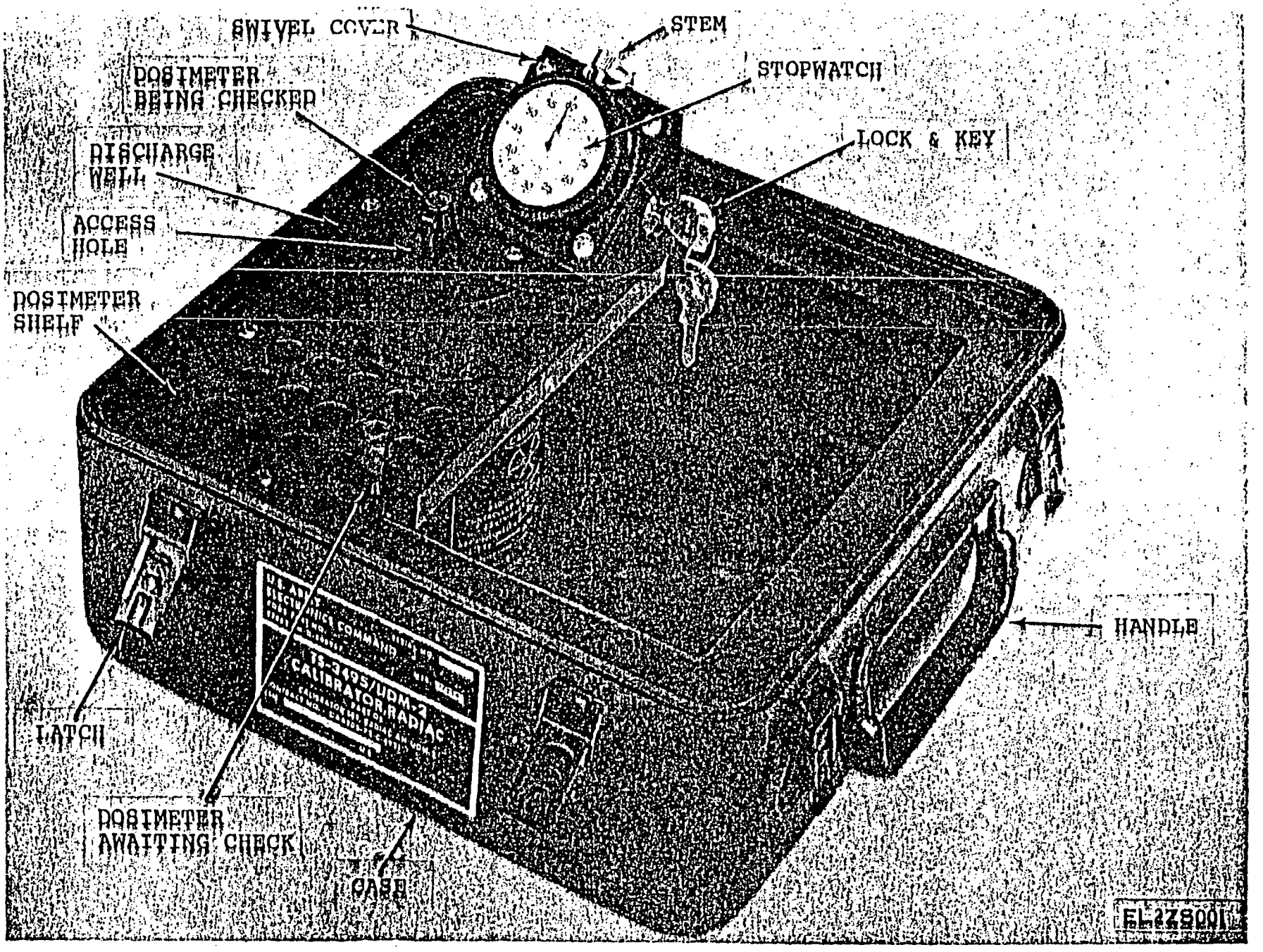

Figure 1-2. Calibrator, Radiac TS-3495/UDM-2.

b. Calibrator, Radiac TS-3494/UDM-2 (fig. 1-3). The RATEMETER assembly consists of a drawer and a spacer block. The drawer contains an encapsulated 25-millicurie Sr-Y90 source. Access to the radiation field created by the source is gained through a sliding drawer within the drawer. A shutter is located between the sliding drawer and the encapsulated source. The shutter has two holes which provide radiation fields in the detector equivalent to external gamma field of 100 rad/hr and 10 rad/hr. The shutter and sliding drawer are interconnected so that the shutter cannot expose the source unless the drawer is fully closed. A key-operated lock is provided to prevent accidental movement of the shutter. The shutter can only be operated when the key-operated lock is open (unlocked) and the sliding drawer is fully closed. A shipping lock mechanically locks the sliding drawer when the equipment is not in use. The spacing block provides varying field intensities that are used to calibrate radiacmeter probes.

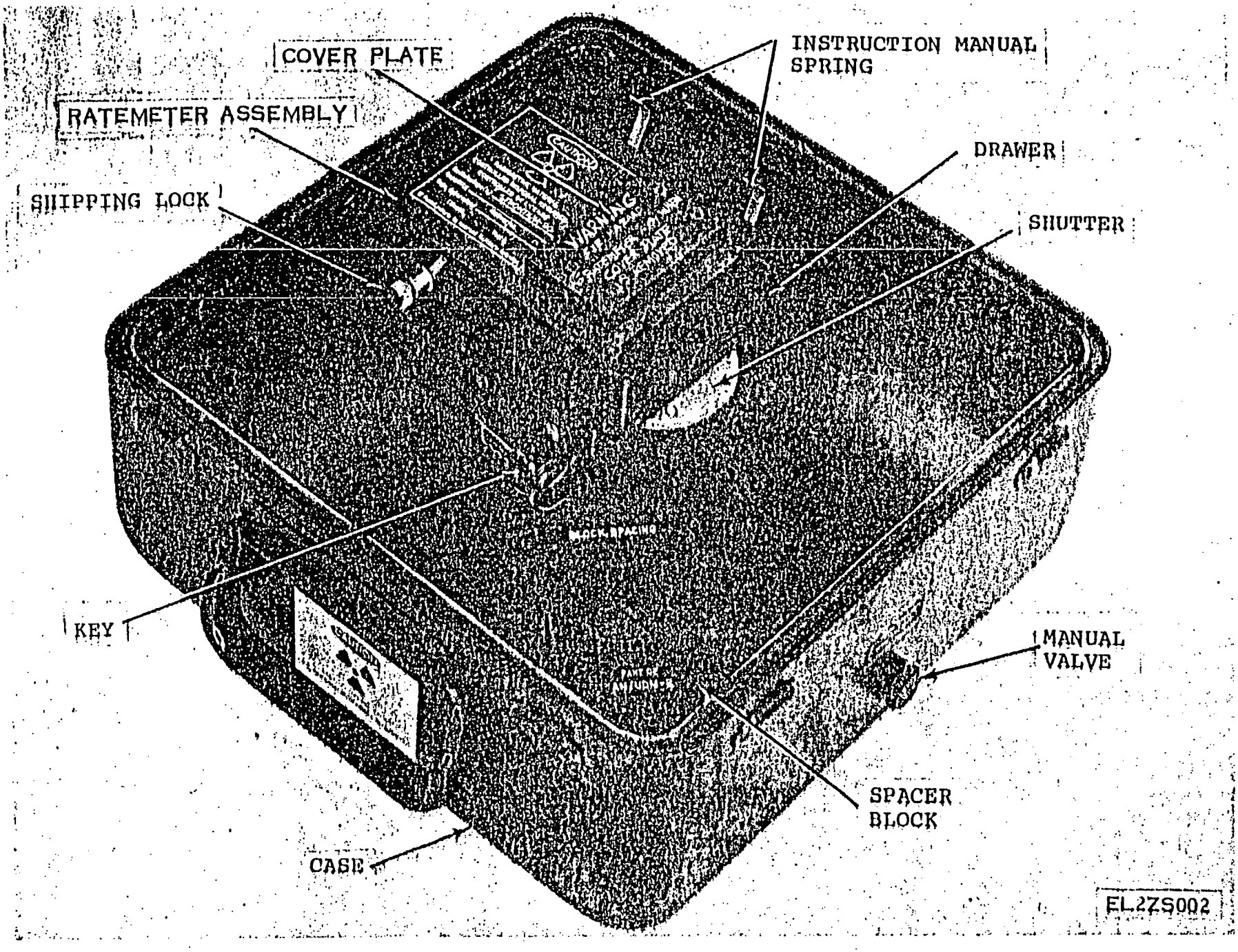

Figure 1-3. Calibrator, Radiac TS-3494/UDM-2.

c. *Miscellaneous.* The AN/PDR-60 adapter probe (fig. 1-1) is furnished to enable checking the operational capability of the gamma range of Radiac Set AN/PDR-60. The AN/ADR-6 adapter is furnished to enable checking Aerial Radiac System AN/ADR-6.

1-11. Precautions

The radiation hazard information must be understood by all personnel before operating the AN/UDM-2. Hazardous radioactive materials are permanently installed in the major assemblies (fig. 1-1). Refer to the inside of the front cover and to TB 11-6665-227-12 for information on handling, storage, transportation, operation, and disposal of the radioactive materials.

CHAPTER 2

INSTALLATION

2-1. Unpacking
(fig. 2-1)

a. Packaging Data. When packed for shipment, the AN/UDM-2 is packaged in an inner corrugated carton. The packaged AN/UDM-2 is further protected by being placed in an outer corrugated carton. All joints and seams on both cartons are sealed with waterproof, pressure-sensitive tape. Corrugated fillers are placed around the six sides of the package. The outside dimensions of the complete package are approximately 17 inches long, 16½ inches wide, and 15 inches high. The volume is 2.5 cubic feet and the total weight is approximately 35 pounds.

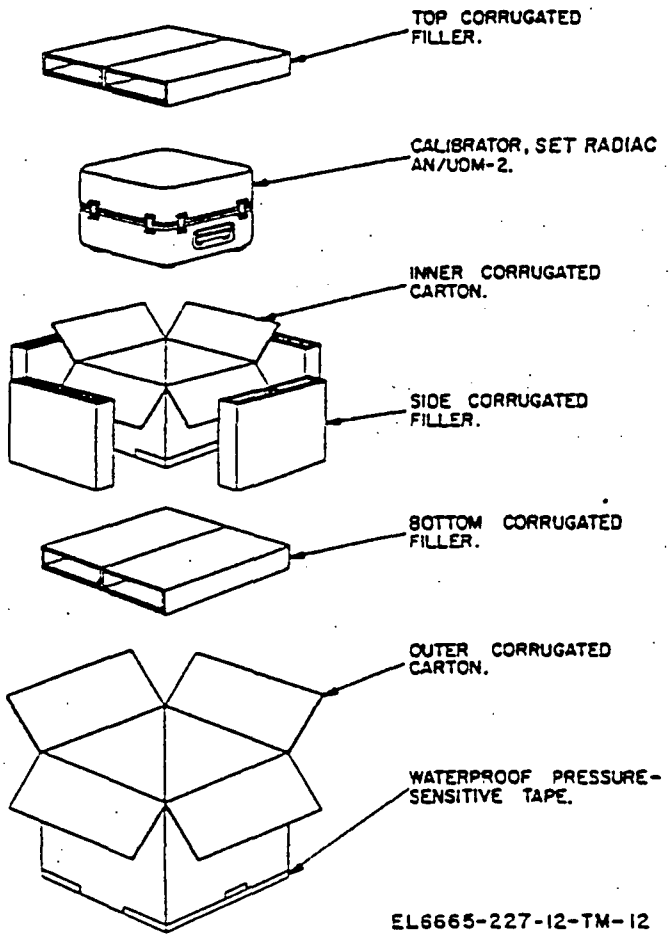

Figure 2-1. Calibrator Set, Radiac AN/UDM-2, typical packaging diagram.

b. Removing Contents. Unpack the equipment as follows:

(1) Remove the waterproof, pressure-sensitive tape from the top of the outer corrugated carton.

(2) Lift open the flaps and remove the top and side corrugated fillers.

(3) Remove the inner corrugated carton containing the AN/UDM-2.

(4) Remove the waterproof, pressure-sensitive tape from the top of the inner carton.

(5) Lift open the flaps and remove the AN/UDM-2.

(6) Turn the manual valve (fig. 1-3) counterclockwise to equalize the pressure.

2-2. Checking Unpacked Equipment

a. Inspect the equipment for damage incurred during shipment. If the equipment has been damaged, report the damage on DD Form 6 (para 1-3) and notify the Radiological Protection Officer (TB 11-6665-227-12).

b. Release the eight fasteners (fig. 1-1) and separate the two halves of the AN/UDM-2.

c. See that the equipment is complete as listed on the packing slip. If a packing slip is not available, check the equipment against the listing in table 1-1. Report all discrepancies in accordance with TM 38-750. Shortage of a minor assembly or part that does not affect proper functioning of the equipment should not prevent use of the equipment.

d. If the equipment has been used or reconditioned, see whether it has been changed by a modification work order (MWO). If the equipment has been modified, the MWO number will appear near the nomenclature plate. Check to see whether the MWO number (if any) and appropriate notations concerning the modification have been entered in this manual.

NOTE

Current MWO's applicable to this equipment (if any) are listed in DA Pam 310-7.

2-3. Preparation for Use

WARNING

Refer to paragraphs 1-11 and 3-1 for precautions pertaining to this equipment.

a. Release the shipping locks of both assemblies (figs. 1-2 and 1-3) by rotating the captive screws counterclockwise. The shipping locks are spring-loaded, will spring outward when fully unscrewed, and will release the latches.

b. On the discharge well assembly (fig. 1-2), check the functioning of the stopwatch (table 3-1).

c. Insert the key in the lock, release the lock, and rotate the swivel cover to expose the access hole. Release the cover; it shall move back into place and cover the access hole.

d. On the RATEMETER assembly (fig. 1-3), check to be sure that the spacer block is in place and that the drawer slides open.

e. Close the sliding drawer, insert the key in the lock, and release the lock. Check the operation of the shutter by rotating it.

NOTE

The sliding drawer must be closed *completely* before the shutter can be rotated.

Provide thorough ventilation whenever used. DO NOT use near an open flame. Trichloroethane is not flammable, but exposure of the fumes to an open flame converts the fumes to highly toxic, dangerous gases.

(2) Remove fungus and ground-in dirt with a cloth dampened (not wet) with cleaning compound; dry thoroughly.

CAUTION

Do not press on the face of the stopwatch; the stopwatch may become damaged.

(3) Clean the face of the stopwatch with a soft clean cloth. If the dirt is difficult to remove, dampen (do not wet) the cloth with water; if necessary, use a mild soap.

(4) If the pivot of the swivel cover becomes stiff or binds, clean the pivot and relubricate the pivot with a very small amount of light lubricating oil or petroleum jelly.

b. Touchup Painting.

(1) Remove rust and corrosion from metal surfaces by lightly sanding them with fine sandpaper.

(2) Brush two thin coats of paint on the bare metal to protect it from further corrosion.

(3) Refer to the applicable cleaning and refinishing practices specified in SB 11-573 and TB 746-10.

4-6. Troubleshooting

Troubleshooting of this equipment is based upon the checks contained in the preventive maintenance checks and services tables. To troubleshoot the equipment, perform all functions starting with sequence number 3 in the daily preventive maintenance checks and services (table 4-1) and proceed through the remaining sequence numbers (tables 4-1 and 4-2) until an abnormal condition or result is observed. Perform the checks and corrective measures indicated in the troubleshooting procedures (table 4-3). If the corrective measures do not result in correction of the trouble, higher category maintenance is required.

Table 4-3. Troubleshooting AN/UDM-2

Item No.	Trouble symptom	Probable trouble	Corrective measures
1	Swivel cover binds	Dirty or corroded pivot bearing.	Disassemble swivel cover only. Clean and relubricate pivot bearing (para 4-5a).
2	Stopwatch nonoperative	Run-down or defective	Rewind and recheck stopwatch.

DEPARTMENT OF THE ARMY
US ARMY AG PUBLICATIONS CENTER
1655 WOODSON ROAD
ST. LOUIS, MISSOURI 63114

OFFICIAL BUSINESS
PENALTY FOR PRIVATE USE $300

POSTAGE AND FEES PAID
DEPARTMENT OF THE ARMY
DOD 314

U.S. MAIL

DEPARTMENT OF THE ARMY
HEADQUARTERS US ARMY MATERIEL DEVELOPMENT AND READINESS COMMAND
5001 EISENHOWER AVE., ALEXANDRIA, VA. 22333

DRCSF-P/78-0037 26 April 1978

Director
Nuclear Material Safety and Safeguards
ATTN: Radioisotopes Licensing Branch
US Nuclear Regulatory Commission
Washington DC 20555

Gentlemen:

Forwarded is application from US Army Communications and Electronics Materiel Readiness Command (formerly US Army Electronics Command) for renewal and complete revision of Byproduct Material License Number 29-01022-08.

Amendment .01 to license lists Strontium-90 sealed internal check sources in AN/PDR-39 ( ) radiac instruments. These radiac instruments, AN/PDR-39 ( ), have not been included in current application as it is felt that management controls can be improved by licensing these items separately. Accordingly, an application for the AN/PDB-39 check sources is being submitted under separate cover to the Commission.

Please acknowledge receipt of correspondence on inclosed NRC-46 Reply Card.

Sincerely,

DARWIN N. TARAS
Chief, Health Physics
Safety Office

2 Incl
as

CF:
HQDA (DASG-HCH-E) WASH DC 20310 w/incl 1 (dupe)
Dir, DARCOM FSA, Charlestown IN 47111 w/incl 1

COPIES SENT TO OFF. OF INSPECTION AND ENFORCEMENT

94314

Fee Exempt
170.11(a)(5)

DEPARTMENT OF THE ARMY
HEADQUARTERS UNITED STATES ARMY COMMUNICATIONS
AND ELECTRONICS MATERIEL READINESS COMMAND
FORT MONMOUTH, NEW JERSEY 07703

DRSEL-SF-H 20 APR 1978

SUBJECT: Renewal and Complete Revision of US Nuclear Regulatory Commission (NRC) Byproduct Material License No. 29-01022-08

Commander
US Army Materiel Development
and Readiness Command
ATTN: DRCSF-P
5001 Eisenhower Avenue
Alexandria, Virginia 22333

1. The inclosed application for the renewal and complete revision of subject license for the AN/UDM-2 Radiac Calibrator Sets is submitted for review and forwarding to the NRC.

2. Reference is made to Items 6.C., 7.C., 8.C., and 9.C. of Amendment No. 1 to subject license dated 5 January 1973. The Strontium-90 sealed internal check sources contained in the AN/PDR-39( ) radiac instruments have not been included in subject application. It is felt that management control can be greatly improved by licensing these items separately. Accordingly, a separate application is being prepared and will be submitted for review and forwarding to the NRC.

FOR THE COMMANDER:

1 Incl
as

for: ROBERT H. MARCRUM
Colonel, GS
Chief of Staff

Form AEC-313
8-64
10 CFR 30

UNITED STATES ATOMIC ENERGY COMMISSION

APPLICATION FOR BYPRODUCT MATERIAL LICENSE

Form approved
Budget Bureau No. 38-R0027

INSTRUCTIONS.—Complete Items 1 through 16 if this is an initial application or an application for renewal of a license. Information contained in previous applications filed with the Commisson with respect to Items 8 through 15 may be incorporated by reference provided references are clear and specific. Use supplemental sheets where necessary. Item 16 must be completed on all applications. Mail two copies to: U.S. Atomic Energy Commission, Washington, D.C., 20545, Attention: Isotopes Branch, Division of Materials Licensing. Upon approval of this application, the applicant will receive an AEC Byproduct Material License. An AEC Byproduct Material License is issued in accordance with the general requirements contained in Title 10, Code of Federal Regulations, Part 30, and the Licensee is subject to Title 10, Code of Federal Regulations, Part 20.

1. (a) NAME AND STREET ADDRESS OF APPLICANT. (Institution, firm, hospital person, etc. Include ZIP Code.)

Department of the Army
US Army Communications and Electronics
Materiel Readiness Command
ATTN: DRSEL-SF
Fort Monmouth, New Jersey 07703

(b) STREET ADDRESS(ES) AT WHICH BYPRODUCT MATERIAL WILL BE USED (If different from 1 (a). Include ZIP Code.)

See Supplement A

2. DEPARTMENT TO USE BYPRODUCT MATERIAL

Department of Army activities and units having qualified personnel.

3. PREVIOUS LICENSE NUMBER(S). (If this is an application for renewal of a license, please indicate and give number.)

Renewal and complete revision of NRC License No. 29-01022-08

4. INDIVIDUAL USER(S). (Name and title of individual(s) who will use or directly supervise use of byproduct material. Give training and experience in Items 8 and 9.)

Individuals meeting the minimum requirements stated in Items 8 and 9.
(See Supplement B)

5. RADIATION PROTECTION OFFICER (Name of person designated as radiation protection officer if other than individual user. Attach resume of his training and experience as in Items 8 and 9.)

Steven A. Horne, RPO
Barry J. Silber, Alternate RPO
(See Supplement C)

6. (a) BYPRODUCT MATERIAL. (Elements and mass number of each.)

a. ^{90}Strontium

b. ^{90}Strontium

(b) CHEMICAL AND/OR PHYSICAL FORM AND MAXIMUM NUMBER OF MILLICURIES OF EACH CHEMICAL AND/OR PHYSICAL FORM THAT YOU WILL POSSESS AT ANY ONE TIME. (If sealed source(s), also state name of manufacturer, model number, number of sources and maximum activity per source.)

a. Sealed sources meeting special form material requirements as specified in US Army Electronics Command (ECOM) Dwg No. SM-B-509057-100 curies (no single source to exceed 25 millicuries).

b. Sealed sources meeting special form material requirements as specified in ECOM Dwg No. SM-B-509048-20 millicuries (no single source to exceed 20 microcuries).

(See Supplement D)

7. DESCRIBE PURPOSE FOR WHICH BYPRODUCT MATERIAL WILL BE USED. (If byproduct material is for "human use," supplement A (Form AEC-313a) must be completed in lieu of this item. If byproduct material is in the form of a sealed source, include the make and model number of the storage container and/or device in which the source will be stored and/or used.)

In the AN/UDM-2 Radiac Calibrator Set for the calibration of Army radiac instruments.
(See Supplement E)

In the event that it becomes necessary to replace sources because of leakage, spare sources will be procured for this purpose.

94314

(Continued on reverse side)

TRAINING AND EXPERIENCE OF EACH INDIVIDUAL NAMED IN ITEM 4 *(Use supplemental sheets if necessary)*

8. TYPE OF TRAINING	WHERE TRAINED	DURATION OF TRAINING	ON THE JOB (Circle answer)	FORMAL COU (Circle ans
a. Principles and practices of radiation protection.	See Supplement B		Yes No	Yes No
b. Radioactivity measurement standardization and monitoring techniques and instruments			Yes No	Yes No
c. Mathematics and calculations basic to the use and measurement of radioactivity			Yes No	Yes No
d. Biological effects of radiation			Yes No	Yes No

9. EXPERIENCE WITH RADIATION. *(Actual use of radioisotopes or equivalent experience.)*

ISOTOPE	MAXIMUM AMOUNT	WHERE EXPERIENCE WAS GAINED	DURATION OF EXPERIENCE	TYPE OF USE
		See Supplement B		

10. RADIATION DETECTION INSTRUMENTS. *(Use supplemental sheets if necessary.)*

TYPE OF INSTRUMENTS *(Include make and model number of each)*	NUMBER AVAILABLE	RADIATION DETECTED	SENSITIVITY RANGE *(mr/hr)*	WINDOW THICKNESS *(mg/cm²)*	USE *(Monitoring, surveying, measuring)*
See Supplement F					

11. METHOD, FREQUENCY, AND STANDARDS USED IN CALIBRATING INSTRUMENTS LISTED ABOVE.

See Supplement G

12. FILM BADGES, DOSIMETERS, AND BIO-ASSAY PROCEDURES USED. *(For film badges, specify method of calibrating and processing, or name of supplier.)*

See Supplement H

INFORMATION TO BE SUBMITTED ON ADDITIONAL SHEETS IN DUPLICATE

13. FACILITIES AND EQUIPMENT. Describe laboratory facilities and remote handling equipment, storage containers, shielding, fume hoods, etc. Explanatory sketch of facility is attached. *(Circle answer)* Yes (No) See Supplement I

14. RADIATION PROTECTION PROGRAM. *Describe the radiation protection program including control measures. If application covers sealed sources, submit leak testing procedures where applicable, name, training, and experience of person to perform leak tests, and arrangements for performing initial radiation survey, servicing, maintenance and repair of the source.*

See Supplement J

15. WASTE DISPOSAL. If a commercial waste disposal service is employed, specify name of company. Otherwise, submit detailed description of methods which will be used for disposing of radioactive wastes and estimates of the type and amount of activity involved. See Supplement K

CERTIFICATE (This item must be completed by applicant)

16. THE APPLICANT AND ANY OFFICIAL EXECUTING THIS CERTIFICATE ON BEHALF OF THE APPLICANT NAMED IN ITEM 1; CERTIFY THAT THIS APPLICATION IS PREPARED IN CONFORMITY WITH TITLE 10, CODE OF FEDERAL REGULATIONS, PART 30, AND THAT ALL INFORMATION CONTAINED HEREIN, INCLUDING ANY SUPPLEMENTS ATTACHED HERETO, IS TRUE AND CORRECT TO THE BEST OF OUR KNOWLEDGE AND BELIEF.

FOR THE COMMANDER

Date 20 APR 1978

Department of the Army, US Army Communications and Electronics Materie
Applicant named in Item 1 Readiness Command

By: [signature]
ROBERT H. MARCRUM
Colonel, GS
Chief of Staff
Title of certifying official

WARNING.—18 U. S. C., Section 1001; Act of June 25, 1948; 62 Stat. 749; makes it a criminal offense to make a willfully false statement or representation to any department or agency of the United States as to any matter within its jurisdiction.

NOTE

Inclosures 1, 2 and 3 are concurrences from the major field commands who are responsible for the use of the AN/UDM-2 Radiac Calibrator Sets. Inclosures 4, 5 and 6 are the concurrences from the Army Metrology and Calibration Center and CONUS Army Depots. Inclosure 7 is the concurrence from the Secretary, US Air Force Radioisotope Committee for use of the calibrators by Army civilian and/or military personnel located on Air Force property.

ATORI-OP-SW (25 Aug 77) 1st Ind
SUBJECT: Renewal and Complete Revision of US Nuclear Regulatory Commission License Number 29-01022-08

HQ TRADOC, Ft Monroe, VA 23651 08 SEP 1977

TO: Commander, US Army Electronics Command, ATTN: DRSEL-SF-H, Fort Monmouth, NJ 07703

This headquarters concurs in subject license application.

FOR THE COMMANDER:

1 Incl
nc

F. L. Gunn Jr

F. L. GUNN, JR
1LT, AGC
Asst AG

Corrected Copy

ROUTINE

PT 00047 337/0123Z PAGE 01

```
 XSEL    :GS:HI:MM:PP:PT:CP:SS:MA:PA:IO:LG:PL:MS:LE:IG:SA:IL:RD:SIEW:GS-AD:SF
ACTN/OPI: : : : : : : : : : : : : : : : : : : : : : : : : : : : : : : : : : X
CPY FURN: : : : : : : : : : : : : : : : : : : : : : : : : : : : : : : : : :
DRDCO   :HQS:TCS:COM:ATC:MSCS:GARS:ATSS:
ACTN/OPI: : : : : : : :
CPY FURN: : : : : : : :
OTHER   :DELSD:DELEW:DELET:DELCS:SO:FF:RBS:PH:TT:NC:AA:SCA:CSA:MAP:
ACTN/OPI: : : : : : : : : : : : : : : : :
CPY FURN: : : : : : : : : : : : : : : : :
RTTUZDSW RUEAUSA0075 3362249-UUUU--RUEDBIA.
ZNR UUUUU ZDS CTG RUEDBIA0020 3370100
R 022040Z DEC 77 ZEX ZDS
FM NGB WASHDC //NGB-ARL-P//
TO RUEDBIA/CDRUSAECOH FT MONMOUTH NJ//DRSEL-SF-H//
INFO RUKLDAR/CDRUSADARCOM ALEX VA//DRCSF-P/DRCSA-NG//
BT
UNCLAS
SUBJECT: RENEWAL AND COMPLETE REVISION OF US NUCLEAR REGULATORY
COMMISSION LICENSE NUMBER 29-01022-08
A. CDRUSAECON, LTR, DRSEL-SF-H, DATED 14 NOV 77 SAME SUBJECT.
CONCUR WITH YOUR APPLICATION FOR BYPRODUCT MATERIAL LICENSE
(AN/UDM-2 RADIAC CALIBRATOR SET).
BT
#0075

NNN
```

94314

ROUTINE

AFLG-RES (25 Aug 77) 1st Ind
SUBJECT: Renewal and Complete Revision of US Nuclear Regulatory Commission License Number 29-01022-08

HQ, FORSCOM, Ft McPherson, GA 30330 7 SEP 1977

TO: Commander, US Army Electronics Command, ATTN: DRSEL-SF-H, Fort Monmouth, New Jersey 30330

Concur in draft copy of subject license application for the fielding of the AN/UDM-2.

FOR THE COMMANDER:

wd incl

RICHARD L. GARDNER
CPT, AGC
Assistant Adjutant General

DEPARTMENT OF THE ARMY
UNITED STATES ARMY MISSILE MATERIEL READINESS COMMAND
REDSTONE ARSENAL, ALABAMA 35809

07 OCT 1977

DRSMI-MSM

SUBJECT: Renewal and Complete Revision of US Nuclear Regulatory Commission License Number 29-01022-08

Commander
US Army Electronics Command
ATTN: DRSEL-SF-H
Fort Monmouth, NJ 07703

1. Reference DRSEL-SF-H letter, dated 19 Sep 77, subject as above.

2. As requested in reference 1, this Center has reviewed and concurs in the draft copy of the subject license renewal application.

CHARLES R. COVELL
COL, OrdC
Director, US Army Metr and Calbr Cent

ROUTINE

PT 00261 277/2032Z PAGE 01

:CSA:PH:TT:SCA:MAP:CID:902:HI:MM:PP:PT:CP:SS:MA:RD:CE:LE:PA:SO:IO:LG:COR:
ACT :

INFO: :
:IL:PL:NC:ATC:ATSS:MSCS:GARS:TDS:RBS:FF:SIEW:WL:CT:NL:TL:AA:GS:GS-P:GS-AD:
ACT :

INFO: :
RTTUZYUW RUCLBNA3113 2772015-UUUU--RUEDBIA.
ZNR UUUUU
R 042000Z OCT 77
FM CDR LBADA LEX KY //SDSRR-LQP//
TO RUEDBIA/CDR USAECOM FT MON NJ //DRSEL-SF-H//
INFO RUWTBFC/CDR RRAD TEXARKANA TX //SDSRR-A-AF//
RUEPABE/CDR DESCOM CHAMBERSBURG PA //DRSDS-GSU//
BT
UNCLAS
SUBJ: US NUCLEAR REGULATORY COMMISSION (NRC) LICENSES AND DEPT OF THE ARMY (DA) AUTHORIZATIONS ISSUED TO US ARMY ELECTRONICS COMMAND
A. URMSG 211540Z SEP 77 SAME SUBJECT.
1. THE NRC LECENSES & DA AUTHORIZATIONS LISTED IN YOUR PARAGRAPH 2 HAVE BEEN RECEIVED AT THIS ACTIVITY.
2. WE CONCUR WITH NRC LICENSE NO 29-01022-09 AND APPLICATION FOR REVISION OF NRC LICENSE NO 29-01022-08. WRITTEN CONCURRENCE FOR THE REMAINING LICENSES/AUTHORIZATIONS WILL BE FORWARDED AFTER EACH IS REVIEWED.
BT
#3113

NNNN

ROUTINE

SDSSA-QMD-1 (25 Aug 77) 1st Ind Mr. Toyama/mka/839-3285
SUBJECT: Renewal and Complete Revision of US Nuclear Regulatory Commission License Number 29-01022-08

DA, HQ, Sacramento Army Depot, Sacramento, CA 95813 12 September 1977

TO: Commander, US Army Electronics Command, ATTN: DRSEL-SF-H, Ft Monmouth, New Jersey 07703

The draft copy of subject license application was reviewed and is concurred.

FOR THE COMMANDER:

wd incl 1

JOSEPH S. STARZEC
Director for Quality Assurance

DEPARTMENT OF THE AIR FORCE
HEADQUARTERS AEROSPACE MEDICAL DIVISION (AFSC)
BROOKS AIR FORCE BASE, TEXAS 78235

REPLY TO ATTN OF: SGZ

21 Sept 77

SUBJECT: Renewal and Complete Revision of US Nuclear Regulatory Commission Number 29-01022-08 (Your ltr, 6 Sept 1977)

TO: Department of the Army
US Army Electronics Command
Attn: DRSEL-SF-H
Fort Monmouth, N.J. 07703

The USAF Radioisotope Committee concurs with subject application with the following stipulation:

Written permission must be obtained from the USAF Radioisotope Committee, AMD/SGZ, Brooks AFB, TX 78235, prior to delivery of licensed materials to U.S. Air Force installations. Telephone requests with follow-up written communications would be acceptable when short suspense times are unavoidable. The Autovon number for the Committee is 240-3331.

FOR THE COMMANDER

William B. Moyer

WILLIAM B. MOYER, Lt Col, USAF, BSC
Secretary, USAF Radioisotope Committee

Cy to:
AFISC/SGM

SUPPLEMENT A

1. Reference: Item 1(b) of Form NRC-313.

2. Lexington-Blue Grass Army Depot Activity (LBAD), Metrology Division, Lexington, Kentucky 40507, and Department of Defense installations and activities worldwide possessed under the control of Department of the Army military and/or civilian personnel.

SUPPLEMENT B

1. Reference: Items 4, 8 and 9 of Form NRC-313.

2. Local Radiological Protection Officer (RPO). All calibration in which the AN/UDM-2 Radiac Calibrator Set is used will be supervised by a qualified local RPO. To be qualified as such, a person must have received a minimum of 40 hours of formal training in radiation protection including the following topics:

a. Principles and practices of radiation protection.

b. Biological effects of radiation.

c. Radioactivity measurement standardization and monitoring techniques and instruments.

d. Mathematics and calculations basic to the use and measurement of radioactivity.

e. The operation and use of the AN/UDM-2 or TS-784(*)/PD.

NOTES

A. Completion of the Radiological Safety Course at the US Army Chemical School or at the US Army Ordnance Center and School subsequent to 31 December 1959 meets these requirements.

B. Where circumstances warrant, alternate training may be substituted if this training is approved by Commander, US Army Electronics Command, ATTN: DRSEL-SF, Fort Monmouth, New Jersey 07703. Such training must be received under the guidance of a qualified local RPO, and must include at least 16 hours of actual experience in the use of the AN/UDM-2.

3. Operator or User. The operator or user of the AN/UDM-2 shall have a minimum of 8 hours training under the guidance of a qualified local RPO for the AN/UDM-2 in the basic fundamentals of radiological operations, radiac instrumentation theory and application and survey techniques and 16 hours on-the-job training in operation and care of the AN/UDM-2. Instructions shall include safe working practices and inherent hazards associated with the instrument.

4. Radiological Control Officer (RCO). To be qualified as an RCO for the AN/UDM-2, a person must have a scientific or engineering background and have successfully completed a minimum of 80 hours of formal training in radiation protection including the topics listed in item 2 above.

5. Maintenance Depot for the AN/UDM-2

a. Depot Radiological Protection Officer and Alternate(s) must have as a minimum:

(1) A Bachelor's degree, or specialty, in Science, Engineering, Health Physics or equivalent discipline.

(2) 160 hours of specialized training in radiation protection including:

(a) Principles and practices of radiation protection.

(b) Biological effects of radiation.

(c) Radioactivity measurement standardization and monitoring techniques and instruments.

(d) Mathematics and calculations basic to the use and measurement of radioactivity.

(3) At least one year of satisfactory experience in applied Health Physics.

b. Technicians. The following are the minimum requirements necessary for persons performing leak tests:

(a) Same as in 3 above, and

(b) Sufficient training by the depot RPO or his appointed representative(s) in the use of radiation detection instruments for leak test analysis, which shall include the method of performing the test, e.g., points on equipment to be smeared and method of taking smear; method of calibration of the instruments; and analysis of smears and reporting of smear results.

943.4

SUPPLEMENT C

1. Reference: Item 5 of Form NRC-313.

2. Inclosures 1, 2 and 3 are the qualifications of the Radiation Protection Officer, the Alternate Radiation Protection Officer and the License Manager.

STEVEN A. HORNE, Health Physicist, US Army Communications and Electronics Materiel Readiness Command (CERCOM), Fort Monmouth, New Jersey

1. Educational Background:

Old Dominion University Norfolk, Virginia	3 Years	1964 - Associate in Applied Science
The Catholic University of America Washington, DC	2 Years	1975 - BSE Nuclear Science and Engineering
The Catholic University of America Washington, DC	-	1975 - Graduate Work in Nuclear Science and Engineering

2. Formal Training and Experience in Radiation Protection Methods, Measurements and Effects:

	Duration of Training	On The Job	Formal Course
a. Fifty-six semester hours pertaining to radiation, including college physics, Environmental Aspects of Nuclear Power Plant Management, Environmental Radioactivity, Nucleonic Fundamentals, Nuclear Properties and Interactions, Nuclear Physics, Nuclear Radiation Detection, Nuclear Reactor Physics, Radiation Biology, Radioisotope Techniques and Radiological Physics - Old Dominion University and The Catholic University of America.	1961-1975	No	Yes
b. Radiation Detection Effects and Devices Utilizing various type of high energy accelerators - Virginia Associated Research Center Newport News, Virginia, and NASA Langley Research Center, Langley, Virginia.	1 Year	Yes	No
c. Radiation safety, detection instrumentation and isotopic handling equipment - Flow Corp, Fort Belvoir, Virginia.	2 Months	Yes	No

Incl 1

	Duration of Training	On The Job	Formal Course
d. Radiological Safety Course pertaining to Nuclear Moisture/ Density Instrumentation - Seaman Nuclear Corporation, Milwaukee, Wisconsin.	24 Hours	No	Yes
e. Occupational Radiation Protection Course 212 - Public Health Services, Las Vegas, Nevada	80 Hours	No	Yes
f. Fundamentals of Non-Ionizing Radiation Protection Course 264 - Public Health Service, Rockville, Maryland.	40 Hours	No	Yes
g. Laser Safety Course - University of Cincinnati, Ohio	40 Hours	No	Yes
h. Radionuclide Analysis by Gamma Spectrocopy Course 208 - Public Health Service, Winchester, Massachusetts.	80 Hours	No	Yes
i. Radiation Guides and Dose Assessment Course 272 - Environmental Protection Agency, Las Vegas, Nevada.	80 Hours	No	Yes

3. Experience with Radioisotopes:

Isotope	Maximum Activities in Curies	Duration of Experience	Type of Experience
^{241}Am	1	3 Years	For all radionuclides listed, experience consisted of laboratory analysis, wipe tests, experiments and evaluations utilizing these sources.
^{252}Cf	.27	3 Years	
^{57}Co	0.1	4 Years	
^{60}Co	1200	8 Years	
^{137}Cs	1	8 Years	
^{3}H	20	8 Years	
^{192}Ir	100	8 Years	
^{147}Pm	1	8 Years	
$^{226}RaBe$	1	5 Years	
$^{239}PuBe$	1	1 Year	
^{90}Sr	0.1	2 Years	

Incl'

4. Experience with other Radiation Producing Machines:

Radiation Machine	Duration of Experience	Type of Experience
a. NASA Langley Research Center, and Virginia Associated Research Center's, Space Radiation Effects Laboratory consisting of a 2 MeV Van de Graaff accelerator, 3 MeV Dynamitron accelerator, 10 MeV Linear Electron Accelerator, a 600 MeV Proton Synchrocyrlotron Accelerator and a 14 MeV Neutron Generator.	1.5 Year	Radiation damage Shielding Experiments and Related Health Physics Studies.
b. 250 KeV General Electric Corporation X-ray machine	8 Years	Health Physics and laboratory experiments.
c. Various energy dispersive and wave length X-ray fluorence spectrometry with X-ray generators up to 50 KeV.	8 Years	Health Physics and laboratory experiments.

5. Experience with radiation:

1964-1965 - Virginia Associated Research Center, NASA, Langley Research Center, Virginia as health physics technologist.

1965-1966 - E.R. Squibb, New Brunswick, New Jersey as radiochemist isotope technologist

1966-1968 - Flow Corporation, Nuclear Division, Fort Belvoir, Virginia as radiation engineer.

1968-1976 - US Army Mobility Equipment Research and Development Command, Fort Belvoir, Virginia as health physicist.

1976-1978 - US Army Electronics Command, Fort Monmouth, New Jersey as health physicist.

1978 to present- CERCOM, Fort Monmouth, New Jersey as health physicist.

Incl 1

BARRY J. SILBER, Health Physicist, US Army Communications and Electronics Materiel Readiness Command (CERCOM), Fort Monmouth, New Jersey.

a. Education:

(1) A.A. - Brooklyn College of the City University of New York, Brooklyn, New York - 1965.

(2) B.S. - Brooklyn College of the City University of New York, Brooklyn, New York - 1969. Major: Chemistry.

b. Professional Experience:

(1) October 1966 - May 1967:
Allen Pharmacal Corporation, 175 Pearl Street, Brooklyn, New York.
Laboratory Technician - Analytical Chemistry Laboratory.
Laboratory analyses of pharmaceuticals at various stages of manufacture to insure compliance with Food and Drug Administration Regulations as well as United States Pharmacopeia and National Formulary Monographs.

(2) June 1967 - March 1970:
EON Corporation, 175 Pearl Street, Brooklyn, New York.
Chemist - Responsible for all health physics activities, including radiation surveys, air sampling and wipe tests, leak testing of sealed sources, decontamination of facilities and equipment, disposal of radioactive wastes, calibration of radiation survey and measurement instrumentation, record-keeping, etc., to insure compliance with US Nuclear Regulatory Commission (NRC) and New York State Regulations; liaison between regulatory agencies and corporate management; authorized radiation worker (user) of multiple types of radioactive materials used in the manufacture of radiation sources for commercial, military and highly specialized (custom-made) use; responsible for all chemistry activities including metallurgical applications on products at various stages of manufacture to meet quality control specifications.

(3) March 1970 - June 1977:
State of New York Department of Labor, Division of Safety and Health, 2 World Trade Center, New York, New York.
Senior Radiophysicist - Radiological Health Unit.
Responsible for the review of applications, including the evaluation of facilities, equipment, personnel and products containing radioactive materials, and in the preparation of State licenses authorizing the possession and use of radioactive materials by persons in industry and related activities in this State; assist in the administration of the licensing program; consult with and assist industrial management personnel and others in establishing radiation protection programs; conduct inspections, special prelicensing investigations, radiation surveys and tests at the sites of licensees and registrants using radiation sources to enforce state regulations and to insure that radiation workers and the general public are fully protected; assemble environmental research data, analyze and interpret this data, assist in the publication of scientific reports, and training of new staff members.

(4) June 1977 - January 1978:
US Army Electronics Command (ECOM), Fort Monmouth, New Jersey.
Health Physicist - Responsible for health physics functions in the establishment and implementation of the ECOM Safety Program aimed at establishing life cycle controls of ECOM commodities utilizing radioactive material and ionizing radiation producing devices; responsible for the evaluation of radiological protection programs and radiation facilities to determine their adequacy and to insure compliance with DA Authorizations and NRC Licenses; perform studies and evaluations necessary to minimize the health risks to personnel; prepare and review applications for DA Authorizations and NRC Licenses; establish and maintain radiation protection records and files.

(5) January 1978 - Present:
CERCOM, Fort Monmouth, New Jersey.
Duties are the same as in Item b(4) above. Name change from ECOM to CERCOM.

c. Formal Training in Radiation Protection Methods, Measurements and Effects:

	Duration of Training	On-The-Job	Formal Course
(1) X-Ray Technology for Radiological Health Personnel-Memorial Hospital for Cancer and Allied Diseases, 444 East 68th Street, New York, New York - 11 January - 14 January 1971.	3 Days	No	Yes
(2) Orientation Course in Regulatory Practices and Procedures - NRC, Bethesda, Maryland - 1 March - 19 March 1971.	3 Weeks	No	Yes
(3) Health Physics and Radiation Protection - Special Training Division, Oak Ridge Associated Universities, Oak Ridge, Tennessee - 12 February 1973 to 20 April 1973. Sponsored by the NRC for Agreement State regulatory personnel.	10 Weeks	No	Yes
(4) Radiological Safety Course - US Army Ordnance and Chemical Center and School, Aberdeen Proving Ground, Maryland - 25 October - 15 November 1977.	3 Weeks	No	Yes

c. Experience with Radiation.

Isotope	Maximum Amount	Duration of Experience	Type of Use
(1) ^{14}C	60 mCi	3 years	For items 1 through 10- manufacture of sealed sources, health physics surveys and wipe tests.
(2) ^{32}P	10 mCi	3 years	
(3) ^{36}Cl	10 mCi	3 years	

Incl 2

Isotope	Maximum Amount	Duration of Experience	Type of Use
(4) ^{63}Ni	10 mCi	3 years	
(5) $^{90}Sr/^{90}Y$	50 mCi	3 years	For items 11 and 14- calibration of radiation instrumentation, health physics surveys and wipe tests.
(6) ^{99}Tc	100 mCi	3 years	
(7) $^{106}Ru/^{106}Rh$	50 mCi	3 years	
(8) $^{144}Ce/^{144}Pr$	500 mCi	3 years	
(9) ^{147}Pm	500 mCi	3 years	For items 12 and 13-health physics surveys and wipe tests.
(10) ^{204}Tl	50 mCi	3 years	
(11) ^{60}Co	10 mCi	3 years	
(12) ^{60}Co	200 Ci	3 years	
(13) ^{137}Cs	250 Ci	3 years	
(14) ^{226}Ra	20 mCi	3 years	

Incl 2

BERNARD M. SAVAIKO, Chief, Safety Office, US Army Communications and Electronics Materiel Readiness Command (CERCOM), Fort Monmouth, New Jersey.

a. Education: 1957 - B.S. Industrial Engineering, Columbia University, New York, New York.

b. Professional Experience:

(1) 5 years - Safety Officer - US Air Force.

(2) 4 years - Industrial Safety - U.S. Steel Corporation.

(3) 16 years- Industrial Safety and Chief, Safety Office - USACERCOM (formerly US Army Electronics Command) Fort Monmouth, New Jersey, including 3 years experience as a Radiation Protection Officer w ith responsibilities for the control of various commodities containing radioactive materials.

Mr. Savaiko is designated as the manager of this Nuclear Regulatory Commission License.

SUPPLEMENT D

1. Reference: Item 6(b) of Form NRC-313.

2. The sealed sources incorporated in the AN/UDM-2 Radiac Calibrator Set are manufactured in accordance with the requirements set forth in Military Specification MIL-R-55350(EL) and ECOM Drawing Numbers SM-B-509048 and SM-B-509057 (Inclosures 1, 2 and 3 of Supplement E). The sources used in the AN/UDM-2 Radiac Calibrator Set prototype units were manufactured by the Minnesota Mining and Manufacturing (3M) Company and were designated with the model number 3F1G. The ^{90}Strontium contained in these sources are chemically combined with a ceramic base which is then fired to produce "microspheres" of controlled shape and particle size of approximately 50 microns in diameter. This provides for an extra factor of safety in addition to the safety factors provided by the double encapsulation and special form testing requirements.

3. The sources used in the AN/UDM-2 Radiac Calibrator Set production units are manufactured by both Gamma Industries, Inc., Houston, Texas and Gulf Nuclear, Inc. (formerly Nuclear Environmental Engineering, Inc.), Houston, Texas. The manufacture of these sources are similar to the 3M Company sealed sources with the exception of the radiating microspheres. The following are descriptions of the manufacturing processes used by these companies which show microsphere equivalency:

a. Gamma Industries, Inc.: Corning Glass Company vycor porous disk of specific dimension is immersed into a ^{90}Strontium Oxide aqueous solution of specific concentration for a specified period of time in order to enable sufficient radioactive material to penetrate deep into the disk. The disk is then dried and fired at elevated temperatures, i.e., 1000 to 1300 degrees Celsius, in order to insure that the pores shrink or collapse around the radioactive material thus sealing the pores. This method is best described in US Patent Number 3,364,148, High Silica Matrix Radioactive Source And Method Of Preparation, dated 16 January 1968.

b. Gulf Nuclear, Inc.: Union Carbide Corporation, Linde Division, molecular sieves compressed into disk or pellet form are immersed into a ^{90}Strontium Nitrate aqueous solution of specific concentration for a specified period of time. Molecular sieves are sodium, calcium or potassium aluminum silicates. The chemical composition of the molecular sieve may vary depending upon the type used. The molecular sieve used in the manufacture of these sealed sources is the Type AW-500 and has a chemical composition of $Ca_4[(AlO_2)_8(SiO_2)_{16}] \cdot xH_2O$. The ^{90}Strontium exchanges with some of the calcium in this compound by the ion exchange method forming a strontium calcium aluminum silicate. To insure that the ^{90}Strontium remains, the molecular sieve is dried at approximately 300 degrees Celsius.

4. The following production testing are performed to establish the equivalency of the Gamma Industries, Inc. and Gulf Nuclear, Inc. sources with the 3M Company Model 3F1G sources. These tests were witnessed by Defense Contract Administration Services (DCAS) representatives. First

Article Testing of the sealed sources were witnessed by CERCOM Production Engineering and Health Physics staff representatives in addition to DCAS representatives.

a. All sources are manufactured as special form material in accordance with ECOM Drawing Numbers SM-B-509048 and SM-B-509057 and US Department of Transportation regulation, Title 49, Chapter 1, Code of Federal Regulations.

b. All sources meet all test requirements of Military Specification MIL-R-55350(EL). In addition, the AN/UDM-2 Radiac Calibrator Sets with these sources installed meet all test requirements of this military specification.

SUPPLEMENT E

1. Reference: Item 7 of Form NRC-313.

2. Inclosure 1 is Military Specification, MIL-R-55350(EL) used for the manufacture of the AN/UDM-2 Radiac Calibrator set.

3. Description Of The Sealed Sources. Strontium 90 is encapsulated as described in inclosure 2 (ECOM drawing SM-B-509048) and inclosure 3 (ECOM drawing SM-B-509057). Inclosure 4 (ECOM drawing SM-B-509054) shows the construction of the plug assembly, the rear portion of the source assembly, and how the threaded source can be screwed into, and out of, its shield with the use of an allen wrench.

4. Description Of The AN/UDM-2 Radiac Calibrator Set

a. Four 25 millicurie sources and one 20 microcurie source are contained in the calibrator. The calibrator consists of a Doserate Jig Assembly (TS-3494/UDM-2) containing one 25 millicurie source and a Discharge Well Assembly (TS-3495/UDM-2) containing the three 25 millicurie and one 20 microcurie sources. The Doserate Jig Assembly is used to calibrate standard Army beta-gamma radiac survey instruments and the Discharge Well Assembly is used to check the calibration of standard Army pocket dosimeters. Each assembly is housed in one-half of a waterproof, aluminum case. Inclosure 5 is Technical Manual 11-6665-227-12 which describes the operation, control, maintenance and calibration of the calibrator.

b. Discharge Well Assembly

(1) The construction of the Discharge Well Assembly is described in inclosure 6 (ECOM drawing SM-D-508975). A parts list is also provided with this inclosure. The threaded 20 microcurie source is screwed directly into the upper housing as described in inclosure 7 (ECOM drawing SM-D-508991), and is locked into position by the Shield Plug described in inclosure 8 (ECOM drawing SM-B-509029). Its window is about 1/4 inch from the access hole. The three threaded 25 millicurie sources are screwed into the "doughnut" shield as described in inclosures 9 (ECOM drawing SM-B-508981) and 10 (ECOM drawing SM-B-508983), and are backed by the Shield Plugs described in inclosure 11 (ECOM drawing SM-B-508984). Their windows are about 0.1 inch recessed from the central access hole.

(2) The Discharge Well Assembly, clamped to one half of the aluminum case, consists of a discharge well, a dosimeter shelf, and a stopwatch. The dosimeter shelf contains 30 holes to hold dosimeters to be tested, and the discharge well. The discharge well has an access hole to the central cavity centered in the top. The cover over the access hole is mounted on a spring-loaded pivot and is key-locked in the closed position when the well is not in use. The lock is a standard National Lock filing cabinet lock held in place by a set screw. The tongue drops down into a slot in the cover and blocks movement of a pin which projects from the upper housing.

The pin guides through the slot in the cover when the cover is swung aside. A shipping lock fastens the cover closed for shipment. The tungsten alloy "doughnut" containing the three 25 millicurie sources is mounted between the two anodized aluminum halves of the discharge well. Three long bolts pass through the doughnut and fasten the two halves together. A spring mounted dosimeter platform plugs the center of the cavity (about 0.01 inch clearance) and rests on a steel spring. The spring is mounted on a stop that is force fitted into the bottom cover. The bottom cover is screw-fastened to a cylinder that is force fitted into the lower housing.

c. Doserate Jig Assembly

(1) The construction of the Doserate Jig Assembly is described in inclosure 12 (ECOM drawing SM-D-508994). A parts list is also provided with this inclosure. A threaded 25 millicurie source screws into the tungsten alloy shield cylinder which is force fitted on an arbor press into the aluminum shield assembly. The source is locked in place by the threaded Shield Plug described in inclosure 11 (ECOM drawing SM-B-508984) and the window of the source is recessed about 1/4 inch from the edge of the shield assembly. Inclosure 13 (ECOM drawing SM-C-509011) describes the shutter absorber which shields the window end of the source.

(2) The Doserate Jig Assembly consists of a drawer unit fastened to the other half of the aluminum case and an aluminum spacer block which is stored in the drawer when not in use. The drawer unit is mainly anodized aluminum with tungsten alloy shielding around the 25 millicurie source and is assembled from a housing assembly, a drawer assembly, (clearance of about 0.01 inch above shield assembly) between the source and the drawer and controls the radiation reaching the drawer. The shutter has three positions as follows: closed (source is shielded), 10 "rad/hr" (small hole is over source window), and 100 "rad/hr" (large hole is over source window). A steel pin in the shutter fits in a slot in the underside of the drawer so that the shutter must be in the closed position before the drawer opens. The key-lock is force fitted into the shield assembly, and the tongue engages a slot in the underside of the shutter. A shipping lock fastens the drawer closed for shipment.

5. Environmental Testing During Manufacture - Quality Assurance

a. Sealed Source Manufacturer. The sources must be subjected to and pass the tests specified in paragraphs 4.20.1.1, 4.20.1.2, 4.20.1.3, 4.20.1.4, 4.20.1.5 and 3.11.1.3 in conjunction with 4.20.1.5 of MIL-R-55350(EL).

b. Calibrator Manufacturer - The assembled calibrators must be subjected to and pass the tests specified in paragraphs 3.11.2, 3.4.1, 4.6.1.1, 4.8, 4.9, 4.20.2.1, 4.20.2.2 and 4.20.2.3 of MIL-R-55350(EL). Calibrators that fail these tests will not be accepted.

c. Government Checking of Test Results

(1) Government inspectors will audit the records of the manufacturer's tests to insure all data indicate the tests were passed. He will also physically view the manufacturer's testing, test plans, etc. at random intervals.

(2) The Government inspector will do additional checks by performing tests himself at the manufacturer's plant on 50 unit lots as follows:

(a) All source manufacturer tests and the calibrator manufacturer contamination test on 20 of every 50 units and sources made.

(b) Visual and mechanical tests on 13 of every 50 units made.

(c) Surface dose rate test on 13 of every 50 units made.

(d) Accuracy and compatibility tests on 8 of every 50 units made.

(e) Immersion and bench handling tests on 3 of every 50 units made.

(f) Temperature tests on 5 of every 50 units made.

(g) Altitude (shipping), humidity, bounce, and vibration tests on 2 of every 100 units made.

(h) Salt fog and dust tests on 1 of every 100 units made.

(i) Altitude (operating) and shock tests - twice during the production contract. If any failures are found, the lot will be returned to the manufacturer for correction and retesting.

(3) The additional tests performed by the government inspector are listed below. To "operate properly" means the calibrator can still pass the contamination test and can still check the calibration of one unit of each of the three types of dosimeters and two types of radiacmeters listed in compatibility checks.

(a) Salt Fog - The open calibrator will operate properly after being subjected to a spray of 5% sodium chloride solution at 95°F for 48 hours.

(b) Dust - The open calibrator will be subjected to two six hour periods of blasting with a fine sand (0.3 ± 0.2 gms dust per cubic foot air, 750 ± 250 feet per minute air flow). It will operate properly after the test.

(c) Shock - The calibrator, as closed for shipment, will be dropped on each face, edge, and corner from a height of 48 inches. It will operate properly after the test.

(d) Temperature Tests

(1) The open calibrator will be heated at 155°F for 24 hours. Afterwards, operational checks will be made at 125°F and at ambient temperature. The calibrator will properly check the calibration of each type of dosimeter or radiacmeter as listed under compatibility tests. No visible damage will have been done to the calibrator.

(2) The open calibrator will be cooled to -65°F for 24 hours. Afterwards, operational checks will be made at -25°F and then ambient temperature. No visible damage will have been done to the calibrator.

(e) Immersion - The closed calibrator, locked as for storage, will not leak when submerged under 3 feet of room temperature fresh water for two hours.

(f) Bench Handling - The calibrator closed as for storage, will be lifted on each edge from both directions to an angle of 30° and allowed to drop back on a solid horizontal surface (total of 24 drops). The calibrator will still properly check the calibration of each type dosimeter or radiacmeter.

(g) Altitude Tests - The calibrator will operate properly at a test chamber pressure of 20.6 inches of mercury (equivalent to 10,000 feet above sea level) while open and also after being subjected to a pressure of 3.44 inches of mercury (equivalent to 50,000 feet above sea level) when closed as for shipping.

(h) Humidity - The calibrator will operate properly after sitting (while open) at 73°F and 50% relative humidity for 24 hours. The calibrator will then be capable of operating properly after being subjected to five 48-hour cycles of varying temperature (68°F to 150°F) at 94% relative humidity (Three cycles closed then two cycles open) and then drying 24 hours at 73°F and 50% relative humidity.

(i) Vibration - Each half of the calibrator will be bolted to a vibration table and will not resonate at more than twice the amplitude of applied vibration over the range 10 to 55 cycles per second. The calibrator will operate properly after vibration.

(j) Bounce - The calibrator closed as for storage, will operate properly after being bounced on a standard package tester for three hours (1/2 hour per side; tester operated at 284 rpm)

d. First Article Testing is performed in accordance with paragraph 4.3 of MIL-R-55350(EL).

6. Use Of The AN/UDM-2 Radiac Calibrator Set

a. Prior to use, the eight container latches are released, the two halves of the calibrator are placed on the work surface open side up, and shipping locks are unfastened.

b. Checking Calibration of Pocket Dosimeters - The Discharge Well Assembly is unlocked with a key and the cover (with set and wound stop watch) is swung aside. A clean, zeroed pocket dosimeter is inserted into the Discharge Well access hole. For low range dosimeters (usually less than 1 R maximum reading), the dosimeter rests on the undepressed, spring-loaded dosimeter platform, and the cover swings against the body of the dosimeter projecting from the well. This procedure exposes the dosimeter to the low intensity field of the 20 microcurie source (approximately 25% is due to "leakage radiation" from the three larger sources). For high range dosimeters (usually more than 1 R maximum reading), the dosimeter is pressed down so that the cover swings over the dosimeter. This procedure exposes the chamber of the dosimeter to the high intensity field of the three 25 millicurie sources. The dosimeter is removed after the fixed time determined for each specific type of dosimeter. The stop watch mounted on the swivel is used to time each exposure. The dosimeter reading is then checked against acceptable limits also listed in chart form. When a dosimeter is not in the discharge well, the spring-pivoted cover automatically swings back over the discharge well access hole. Upon completion of use of the Discharge Well Assembly, the cover is relocked in the closed position.

c. Calibration of Radiac Survey Instruments - The Doserate Jig Assembly is used to calibrate standard Army radiacmeters in a variety of configurations to produce varying gamma equivalent fields for the specific instruments. The detector probe is placed appropriately exterior to the Doserate Jig Assembly, on the open drawer, or through an access hole in the drawer. A special Spacer Block is provided for proper positioning of some probes. After positioning of the operating instrument, the instrument reading is read with the shutter in one of three positions, "closed", "10 rad/hr", and "100 rad/hr". The shutter can be rotated to the open positions only after unlocking with a key and only with the drawer tightly shut.

7. Radiation Protection Surveys Of The AN/UDM-2

a. A representative from the US Army Environmental Hygiene Agency (AEHA), surveyed and monitored operation of the calibrator. Below is a listing of his findings:

(1) Wipe tests, using Nu-Con Smears, were performed on six of the calibrator sets. The wipes were taken around the outer edges of the access hole of the discharge well assembly and the inside and outside surfaces of the drawer of the doserate jig assembly. The results reported by AEHA, indicated that none of the wipes had a measureable activity greater than 0.001 microcuries.

(2) Exposure rate measurements were made at the surface of all accessible portions of the calibrator set using a calibrated beta-gamma survey meter, Eberline Model E-510, with the sources in both the use and the storage position. The results of these measurements are tabulated in Table 1. The maximum exposure rate measured at one foot from any accessible surface of the calibrator set was 0.4 mR/hr.

(3) Exposure measurements were made in the room where 20 calibrator sets were stored. The maximum exposure rate measured at one foot from any accessible surface of the equipment, as stored, was 0.75mR/hr. The maximum contact exposure rate was 5 mR/hr measured at the center of the top of the storage stack.

(4) Thirty Pocket Dosimeters IM93/PD (high range), one Radiacmeter IM-174(*)/PD, and one Radiac Set AN/PDR-27(*) were calibrated and the exposure to the fingers of the operator was measured using a calibrated Operational Dosimeter IM9E/PD, 0-200 mR range. The total exposure to the fingers for the calibration of all of the above instruments was 7mR.

b. A completed AN/UDM-2 was surveyed by the developmental model manufacturer, Canadian Admiral, with an AN/PDR-27. Readings are tabulated in Table 2.

c. AEHA commented that there is little or no radiological hazard associated with the use of the AN/UDM-2, provided the proposed procedures are followed.

USAEHA-RH Radiation Protection Special Study 43-27-68

29-31 October 1967

TABLE 1

CONTACT EXPOSURE RATES IN mR/hr

	Top	Front	Back	Right Side	Left Side	Bottom
Storage Position Case Closed	2.0	1.0	1.5	1.6	1.6	1.5
Discharge Well Assembly	4.0	2.0	3.0	3.0	6.0	4.0
Doserate Jig Assembly	4.0	2.5	3.0	4.0	3.0	2.0
Doserate Jig Assembly 100 rad/hr Position	10	2.5	1.0	25	1.0	3.0
Doserate Jig Assembly 10 rad/hr Position	5.0	2.0	2.0	5.0	2.0	2.0
Discharge Well Assembly Access Hole Cover Open	5.0	2.0	3.0	4.0	3.0	4.0

TABLE 2

CONTACT EXPOSURE RATES IN mR/hr

(with AN/PDR-27J)

	Top	Front	Back	Right Side	Left Side	Bottom
Storage Position case closed	3.3	1.0	1.8	2.1	2.1	3.0
Discharge Well Assembly (dosimeter in lower position)			Top of Well - 5.0			

MIL-R-55350 (EL)
Amendment 2
11 Oct 1977
SUPERSEDING
Amendment 1
3 May 1977

MILITARY SPECIFICATION

RADIAC CALIBRATOR AN/UDM-2( )

This amendment forms a part of Military Specification MIL-R-55350(EL), 16 December 1971 and is approved for use by all departments and agencies of the Department of Defense.

Page 3

3.4.1.2: Delete "0.95mR ± 0.05mR" and substitute "95mR/min. ± 5mR/min."

Page 4

*3.4.3: Delete "2mr/hr" and substitute "5mr/hr."

3.6.1: Add "and shall have no corrosion deterioration, physical degradation, or change in tolerance limits which could effect operational service or maintenance requirements."

Page 5

3.6.3.3: Delete and substitute "Immersion. The equipment shall show no evidence of leakage after it is tested as specified in 4.12."

3.6.3.6: Delete and substitute "Vibration. The equipment shall withstand vibration such as encountered in a field service environment (See 4.16)."

Page 10

4.5: Delete.

Page 14

Table V: Delete "EVR".

FSC 6665

Page 14

4.6.3.2: Delete the first sentence.

Page 17

*4.10: Delete "(with beta shield removed)."

Page 18

4.12: Delete and substitute "Immersion. Immerse the equipment, closed as for storage or transportation, according to MIL-STD-810, Method 512, Procedure 1. The equipment shall be immersed for two hours and then removed and visually inspected for evidence of leakage into the case (See 3.6.3.3)."

Page 19

4.16: Delete and substitute "Vibration. The equipment shall be subjected to procedure X, curve AW (based on 6000 miles of land transportation) and curve AY of MIL-STD-810, Method 514.1. Upon completion of the test, the equipment shall meet the performance check of 4.7.1 and 4.7.2 (See 3.6.3.6)."

4.18: Delete: "Method 508" and substitute "Method 509".

NOTE: The margins of this amendment are marked with an asterisk to indicate where changes from the previous amendment were made. This was done as a convenience only and the Government assumes no liability whatsoever for any inaccuracies in these notations. Bidders and contractors are cautioned to evaluate the requirements of this document based on the entire content irrespective of the marginal notations and relationship to the last previous amendment.

Custodian:

Army - EL

Preparing activity:

Army - EL

Project No. 6665-A389

DEPARTMENT OF THE ARMY
HEADQUARTERS US ARMY MATERIEL DEVELOPMENT AND READINESS COMMAND
5001 EISENHOWER AVE., ALEXANDRIA, VA. 22333

RECEIVED
1979 SEP 17 AM 9 30
U.S. NUCLEAR REGULATORY COMMISSION
MAIL SECTION

DRCSF-P/79-0081 13 September 1979

Director
Nuclear Material Safety and Safeguards
ATTN: Radioisotopes Licensing Branch
US Nuclear Regulatory Commission
Washington, DC 20555

Ref: Byproduct Material License Number 29-01022-08

Gentlemen:

Forwarded is inquiry from US Army Communications and Electronics Materiel Readiness Command concerning Condition 13D of referenced Byproduct Material License.

Request that guidance be furnished as to interpretation of Condition 13D or that amendment be issued permitting use of leak test kits by local radiation protection personnel as originally requested by supplement J of referenced Byproduct Material License application.

Please acknowledge receipt of correspondence on inclosed DA Form 209 Reply Card.

Sincerely,

PETER J. RUTLEDGE
Acting Chief
Safety Office

2 Incl
as

FEE EXEMPT

COPIES SENT TO OFF. OF
INSPECTION AND ENFORCEMENT

01239

DEPARTMENT OF THE ARMY
HEADQUARTERS US ARMY COMMUNICATIONS AND ELECTRONICS
MATERIEL READINESS COMMAND AND FORT MONMOUTH
FORT MONMOUTH, NEW JERSEY 07703

DRSEL-SF-H 12 March 1979

SUBJECT: US Nuclear Regulatory Commission (NRC) Byproduct Material License Number 29-01022-08

Commander
US Army Materiel Development
and Readiness Command
ATTN: DRCSF-P
5001 Eisenhower Avenue
Alexandria, Virginia 22333

1. Reference is made to the following:

a. Amendment No. 10 dated 8 February 1979 of subject license dated 24 April 1972.

b. Application for Byproduct Material License dated 20 April 1978.

2. Condition 13.D. of reference 1a states that "tests for leakage and/or contamination shall be performed by the licenseeor by other persons specifically authorized by the Commission or an Agreement State to perform such services. Condition 1 of reference 1a states that the licenseee is the US Army Communications and Electronics Materiel Readiness Command (CERCOM). Condition 13.D. is in direct contradiction with Condition 16 of subject license. ?

3. Supplement J of reference 1b contains the CERCOM radiation protection program which specifies the leak test program presently being utilized under this license. The program requires that the local radiological protection officer (RPO) responsible for individual AN/UDM-2 Radiac Calibrator Sets perform leak tests with kits provided by Lexington-Blue Grass Depot Activity (LBDA). In turn, leak test samples are returned to LBDA for analysis. The procedure for performance of leak tests is incorporated into Technical Bulletin 11-6665-227-12, inclosure 7 of supplement J. Reference 1b, including all supplemental documentation, is incorporated into the license under Condition 16 of reference 1a.

4. Request this command be provided with guidance in this matter and/or an amendment be issued permitting the use of leak test kits by local

DRSEL-SF-H 12 March 1979

SUBJECT: US Nuclear Regulatory Commission (NRC) Byproduct Material License Number 29-01022-08

RPO personnel with depot analysis performance as originally requested by supplement J to reference 1b above.

FOR THE COMMANDER:

Bm Savaiko

BERNARD M. SAVAIKO
Chief, Safety Office

01239

MILITARY SPECIFICATION

RADIAC CALIBRATOR AN/UDM-2( )

This amendment forms a part of Military Specification MIL-R-55350(EL), 16 December 1971 and is approved for use by all departments and agencies of the Department of Defense.

Page 3

3.4.1.2: Delete "0.95mR ± 0.05mR" and substitute "95mR/min. ± 5mR/min."

Page 4

3.6.1: Add "and shall have no corrosion deterioration, physical degradation, or change in tolerance limits which could effect operational service or maintenance requirements."

Page 5

3.6.3.3: Delete and substitute "Immersion.- The equipment shall show no evidence of leakage after it is tested as specified in 4.12."

3.6.3.6: Delete and substitute "Vibration.- The equipment shall withstand vibration such as encountered in a field service environment (See 4.16)."

Page 10

4.5: Delete.

Page 14

Table V: Delete "EVR".

FSC 6665

94314

Page 14

4.6.3.2: Delete the first sentence.

Page 18

4.12: Delete and substitute "Immersion.- Immerse the equipment, closed as for storage or transportation, according to MIL-STD-810, Method 512, Procedure 1. The equipment shall be immersed for two hours and then removed and visually inspected for evidence of leakage into the case (See 3.6.3.3).

Page 19

4.16: Delete and substitute "Vibration.- The equipment shall be subjected to procedure X, curve AW (based on 6000 miles of land transportation) and curve AY of MIL-STD-810, Method 514.1. Upon completion of the test, the equipment shall meet the performance check of 4.7.1 and 4.7.2 (See 3.6.3.6).

4.18: Delete: "Method 508" and substitute "Method 509".

Custodian:

Army - EL

Preparing activity:

Army - EL

Project No. 6665-A313

☆U.S. GOVERNMENT PRINTING OFFICE: 1973-714-545/5237

MILITARY SPECIFICATION

RADIAC CALIBRATOR AN/UDM-2( )

1. SCOPE

1.1 Scope. - This specification covers the Radiac Calibrator AN/UDM-2( ) which provides the facilities for checking the operational reliability and calibration accuracy of various radiacmeters and radiac set. The calibrator consists of a dosimeter jig assembly and a doserate jig assembly; each assembly can be utilized independently of the other (see 6.1).

2. APPLICABLE DOCUMENTS

2.1 Documents. - The following documents of the issue in effect on date of invitation for bids or request for proposal form a part of the specification to the extent specified herein.

SPECIFICATIONS

FEDERAL

PPP-B-585	Box, Wood, Wirebound
PPP-B-601	Box, Wood, Cleated-Plywood
PPP-B-621	Box, Wood, Nailed and Lock-Corner
PPP-B-636	Box, Fiberboard
PPP-B-640	Box, Fiberboard, Corrugated, Triple-Wall
PPP-F-320	Fiberboard, Corrugated and Solid, Sheet Stock Container Grade and Cut Shapes
PPP-S-760	Strapping, Nonmetallic and Connectors
PPP-T-76	Tape, Pressure-Sensitive Adhesive Paper, Water Resistant, for Carton Sealing
PPP-T-97	Tape, Pressure-Sensitive Adhesive, Filament Reinforced
NN-P-71	Pallets, Material Handling
QQ-S-781	Steel Strapping, Flat

FSC 6665

Incl 1

MILITARY

MIL-P-116	Preservation, Methods of
MIL-P-11268	Parts, Materials and Processes Used in Electronic Communication Equipment
MIL-M-13231	Marking of Electronic Items
MIL-M-19590	Marking of Commodities and Containers to Indicate Radioactive Material

STANDARDS

MILITARY

MIL-STD-105	Sampling Procedures and Tables for Inspection by Attributes
MIL-STD-109	Quality Assurance Terms and Definitions
MIL-STD-129	Marking for Shipment and Storage
MIL-STD-147	Palletized Unit Loads
MIL-STD-252	Wired Equipment, Classification of Visual and Mechanical Defects
MIL-STD-810	Environmental Test Methods

DRAWINGS

ELECTRONICS COMMAND

DL-SM-B-508965	Radiac Calibrator AN/UDM-2( )

(Copies of specifications, standards, drawings and publications required by suppliers in connection with specific procurement functions should be obtained from the procuring activity or as directed by the contracting officer.)

3. REQUIREMENTS

3.1 Construction.- The equipment shall be constructed in accordance with the requirements of this specification, and of Drawing DL-SM-B-508965.

3.2 First Article Samples.- The contractor shall furnish first article samples of the calibrator in accordance with the requirements contained in the bid request and contract (see para. 4.3).

3.3 Parts, Materials and Processes.- In addition to any requirements of this specification covering parts, materials and processes, such items shall conform to MIL-P-11268, including the selection requirements therein.

3.4 Performance Characteristics.-

3.4.1 Calibration Accuracy.-

3.4.1.1 Dosimeter Jig Assembly (lower source).- The dose rate produced by the lower sources shall be within ±5R/min when related to a secondary calibration standard. When measured in accordance with paragraph 4.8.1, using a Government Furnished Victoreen Model 555 Radacon II, the dose rate produced by the lower sources shall be 205 R/min ±5R/min (see para. 4.8.1.2).

3.4.1.2 Dosimeter Jig Assembly (upper source).- The dose rate produced by the upper source shall be within ±0.05 mR/min when related to a secondary calibration standard. When measured in accordance with paragraph 4.8.2 using a Government Furnished Victoreen Model 555 Radacon II the dose rate produced by the upper source shall be 0.95 mR ± 0.05 mR (see paragraph 4.8.2.2).

3.4.1.3 Doserate Jig Assembly.- All measured test position dose rates shall be within ± .5R/min when related to a secondary calibration standard. When measured in accordance with paragraph 4.8.2, using a Government Furnished Victoreen Model 555 Radacon II, the dose rate produced with the shutter in the 100 R/hr position shall be 44.5 R/min ± 0.5 R/min (see paragraph 4.8.3).

3.4.2 Compatibility.-

3.4.2.1 Radiacmeters IM-9( )/PD, IM-93( )/UD and IM-147( )/PD, when exposed in the dosimeter jig assembly for the time specified on drawing SM-C-509026, shall respond in accordance with the appropriate reading and tolerance specified on drawing SM-C-509026. The discharge times should be adjusted for source decay in accordance with the instructions and data furnished on drawing SM-B-509027 and specified in paragraph 3.10 (see 4.9.1).

3.4.2.2 Radiacmeters IM-174/PD and IM-174A/PD and Radiac Set AN/PDR-27( ), when calibrated in the doserate jig assembly in accordance with the instructions contained on drawing SM-C-509024, shall respond in accordance with the appropriate reading and tolerance specified on drawing SM-C-509024. The readings obtained should be adjusted for source decay in accordance with the instructions and data furnished on drawing SM-B-509023 and specified in paragraph 3.10 (see 4.9.2).

3.4.3 Surface Dose Rate.- The maximum allowable dose rate at any point on the external surface of the calibrator set shall not exceed 2 mr/hr. This requirement applies under all conditions of storage (see 4.10).

3.5 Weight.- The weight of the equipment, less manual, shall be held to a practical minimum consistent with good engineering practice for the intended use, but shall not exceed 40 lbs. (See 4.6.1.3)

3.6 Service Conditions.-

3.6.1 General.- The equipment shall perform as required by this specification when exposed to any operating condition listed in 3.6.2, or after exposure to any storage or transportation condition listed in 3.6.3, or to any possible combination of these service conditions.

3.6.2 Operating Conditions.- The conditions to which the equipment may be exposed during operation are as follows:

3.6.2.1 Temperature.- The equipment shall be capable of continuous operation at any ambient temperature from -25°F to+125°F (see 4.11).

3.6.2.2 Altitude.- Altitudes up to and including 10,000 feet above sea level (see 4.14.1).

3.6.2.3 Humidity.- Up to 100% relative humidity at varying temperatures including conditions wherein condensation takes place on the equipment (see 4.15).

3.6.2.4 Salt Fog.- Salt fog such as is encountered in coastal regions or on board ship (see 4.18).

3.6.2.5 Sand and Dust.- Dust and sand exposure shall be per Method 510 of Specification MIL-STD-810 (see 4.19).

3.6.3 Storage and Transportation Conditions.-

3.6.3.1 Temperature.- The equipment shall be capable of withstanding, without deterioration damage or degradation of performance, long periods of storage at temperature of -65°F to +155°F (see 4.11).

3.6.3.2 Altitude.- Altitudes up to and including 50,000 feet above sea level (see 4.14.2).

3.6.3.3 Immersion.- Immersion in water for 2 hours at a covering depth of 3 feet. There shall be no evidence of water inside the equipment (see 4.12).

3.6.3.4 Bench Handling.- The equipment shall meet the test of 4.13 without degradation of performance.

3.6.3.5 Bounce.- The equipment shall meet the test of 4.17 without degradation of performance.

3.6.3.6 Vibration.- The amplitude of any part , subassembly or structural member of the equipment shall not exceed twice the amplitude of the vibration applied to the equipment at any frequency between 10 and 55 Hertz (see 4.16).

3.6.3.7 Rain.- After testing as specified in 4.23 the equipment shall meet paragraph 4.7 without degradation of performance (see 4.23).

3.6.3.8 Shock.- Shock such as is encountered in transportation via aircraft, or dropping by parachute (see 4.21).

3.7 Special Capability Requirements.-

3.7.1 Facilities.- The contractor shall be required to provide in his plant, or have direct access to a cobalt 60 source capable of providing a minimum field intensity of 125 rads/hr at a distance of 1 meter from its geometrical center.

3.7.2 Equipment.- The contractor shall be required to provide in his plant a Victoreen Condenser "R" meter, or equivalent, calibrated by the National Bureau of Standards or other agency approved by the Government for measuring radiation flux.

3.7.3 License. - The contractor shall be required to possess or obtain a byproduct material license for the AN/UDM-2( ) and its sources from the Atomic Energy Commission as per Title 10, Chapter I, Code of Federal Regulations, Part 30.3, or from an agreement-state in which located as per the Agreement-state Regulations.

3.8 Interchangeability.- Like units, assemblies, subassemblies and replaceable parts shall be physically and functionally interchangeable, without modification of such items or of the instrument. Individual items shall not be handpicked for fit or performance however, matched pairs or sets, when permitted, may be interchangeable as such. Reliance shall not be placed on any unspecified dimension, rating,

characteristic, etc. (see 4.6.1.2).

3.9 Marking.-

3.9.1 General.- Marking shall conform to Specification MIL-M-13231.

3.9.2 Radioactive Warnings.- In addition to the general markings required by 3.9.1, the contractor shall comply with the requirements of MIL-M-19590. Each source shall be etched or stamped with a unique serial number and some symbol identifying the manufacturer and model number of the source. The contractor shall provide the Government with a list specifying the serial number of each calibrator and the serial number, symbol and nomenclature of each source contained therein.

3.9.3 Serial Numbers.- Each equipment shall bear a serial number in accordance with the requirements of Specification MIL-M-13231 and drawings SM-B-509016 and SM-B-509028.

3.10 Charts.- The contractor shall update the correction charts, drawings SM-B-509023 and SM-B-509027, which are required to be installed in the doserate jig assembly and dosimeter jig assembly per drawings SM-D-508967 and SM-D-508993. The year of source assay shall be assigned a correction factor of 1.0 for each chart and the remaining correction factors shall be derived accordingly. The chart shall cover a period of 20 years.

3.11 Radiological Tests.- The equipment shall be subject to the tests of paragraph 4.20 in the order given. Sources or calibrators that do not meet the limits specified in the source and contamination tests of 3.11.1 and 3.11.2 shall not be accepted.

3.11.1 Source Tests.- Each sealed source shall be subjected to the tests of paragraphs 4.20.1.1, 4.20.1.2, 4.20.1.3, 4.20.1.4 and 4.20.1.5 in that order.

3.11.1.1 Source Leak Tests.- This test is to be performed after the first encapsulation and again after the second encapsulation. During tests outlined in paragraph 4.20.1.1 and paragraph 4.20.1.3 any indication of bubbles from the source or on the source indicates the source may be leaking and is not acceptable for use in a calibrator.

3.11.1.2 Source Bloat Tests.- Any indication of bloating (bulging) of the thin window from internal pressure at the end of tests 4.20.1.2 and 4.20.1.4 shall be considered failure of the test.

3.11.1.3 Source Contamination Test.- Each sealed source to be used in a radiac calibrator must be subjected to the tests of paragraph 4.20.1.5 before it

is installed in the calibrator. The net counting rate in counts/minute (c/min) of the smear paper, used to smear the source, must not exceed 100 times the counting efficiency (E) of the smear counting system for strontium -90. A higher counting rate indicates that the source is contaminated above acceptable limits and must be decontaminated and tested again until it meets the acceptable limits or is rejected for use in a radiac calibrator.

3.11.2 Calibrator Contamination Tests.- Each calibrator shall be subjected to the tests of paragraph 4.20.2. The net counting rate (c/min) of each of the cotton swabs used when following the procedures of paragraphs 4.20.2.2 and 4.20.2.3 must not exceed 25 times the counting efficiency (E) of the smear counting system for strontium -90. A higher counting rate indicates that the source is contaminated above acceptable limits.

3.12 Fungus.- The equipment (including accessories) shall show no evidence of viable fungus or corrosion when subjected to the test specified in 4.22. Corrosion is any visible degradation that can be attributed to flaky, pitted, blistered, or otherwise loosened finished or metal surface.

3.13 Workmanship.- The calibrator shall be manufactured and assembled in accordance with the applicable portions of MIL-P-11268.

4. QUALITY ASSURANCE PROVISIONS

4.1 Responsibility for Inspection.- Unless otherwise specified in the contract or purchase order, the contractor is responsible for the performance of all inspection requirements as specified herein. Except as otherwise specified in the contract or order, the contractor may utilize his own facilities, facilities of a subcontractor or any commercial laboratory acceptable to the Government. The Government reserves the right to perform any of the inspections set forth in the specification where such inspections are deemed necessary to assure that the supplies and services conform to prescribed requirements.

4.1.1 Contractor Quality Assurance.- The contractor shall provide and maintain a means of determining product conformance in accordance with the requirements specified herein or elsewhere in the contract. The Government, at its option, may perform any evaluation deemed necessary to assure the adequacy of the means employed and the effectiveness of the contractor's quality assurance methods and systems.

4.1.2 Government Verification.- All quality assurance operations required of the contractor shall be subject to Government verification at scheduled or unscheduled intervals. Verification will consist of the following:

(a) Surveillance of the contractor's operations to determine that practices, methods, and procedures of the contractor's quality assurance system are being applied and are, in fact, accomplishing the objectives of total compliance of the product with the requirements of this specification and the contract.

(b) Government product inspections to determine compliance of the product with the specification and contract requirements.

4.1.3 Accomodation and Assistance.- The Government quality assurance representative shall have the right to access to any area of the contractor's or his subcontractor's premises where any part of the work is being performed. The Government quality assurance representative shall be afforded unrestricted opportunity to verify conformance of the product with specification requirements. The contractor shall make his inspection equipment and records available for use by the Government quality assurance representative for verification purposes. The contractor's personnel shall be made available for operation of such inspection equipment as required.

4.1.4 Definitions.- Specification MIL-STD-109 applies for definitions of inspection terms used herein.

4.2 Classification of Inspections.- Inspections shall be classified as follows:

(a) First article inspection. (Does not include preparation for delivery.) (See 4.3.)

(b) Inspections covered by subsidiary documents. (See 4.4.)

(c) Quality conformance inspections.

(1) Quality conformance inspection of equipment before preparation for delivery. (See 4.6.)

(2) Quality conformance inspection of preparation for delivery. (See 4.24.)

4.3 First Article Inspection.- This inspection shall consist of the inspections specified in subsidiary documents covering the items listed in 4.4, and the inspections specified for group A, group B, and group C (see tables III, IV and V respectively). Environmental and stress inspections shall be performed in the order shown in table I according to the number of samples specified in the contract, ie, 5 or 10 each. The

numbers in each column indicate the particular tests to which a particular unit will be submitted and the sequence in which it will be conducted. After completing tests of Table I, each unit shall have their sources removed and the sources shall be tested in accordance with paragraph 4.20 (less paragraph 4.20.1.3 and 4.20.1.4).

Table I. - Order of Environmental and Stress Inspection

Inspection (Note 1)	Number of First Article Samples (Units)									
	10 Samples									
	5 Samples									
	Unit 1	Unit 2	Unit 3	Unit 4	Unit 5	Unit 6	Unit 7	Unit 8	Unit 9	Unit 10
Non-damaging(Note2)										
Temperature										
Low----------	1					1				
High----------	2					2				
Altitude(elevation)-		1					1			
Leakage(immersion)-			1					1		
Dust----------			2					2		
Vibration----------				1					1	
Rain----------			3					3		
Potentially damaging										
Humidity(moisture resistance)-------	3					3				
Fungus (Note 3)----					1					
Salt Fog(Note 3)---		2								1
Bounce----------				2					2	
Bench handling-----					2					2
Shock----------				3					3	

Note 1: Other inspections may precede, follow, or be interspersed between the non-damaging tests.

Note 2: The order on non-damaging tests and the choice of which units are subjected to the non-damaging tests may be varied if convenient, except that the vibration test shall be performed on the same unit used for the bounce and shock tests.

Note 3: The equipment shall be thoroughly washed, cleaned, dried, and refurbished, if necessary, before preceding with subsequent tests.

4.4 Inspection Covered by Subsidiary Documents.- The following shall be inspected under the applicable subsidiary documents as part of the inspection of equipment before preparation of delivery.

Item	Where Required
Finish	3.3
Marking	3.9

4.5 Equipment Verification Review.- The contractor shall perform an Equipment Verification Review (EVR), consisting of a complete technical audit of the equipment on order against the drawings cited for construction (see 3.1). The EVR shall consist of the following:

4.5.1 An audit to establish that "as built" equipment (unit, assembly, module, or part) is fabricated in accordance with the cited end product drawings.

4.5.2 An audit to establish that "as built" configuration of unit, assembly, module or part meets the test requirements (other than equipment specification performance) specified on the applicable drawings for each unit, assembly, module, or part. The audit shall record all test methods used together with resulting verification test data.

4.5.3 The contractor shall compile an EVR report(s) containing the following information:

(a) Identification of unit, assembly, module, or part and details proving compliance with 4.5.1 and 4.5.2 above.

(b) Discrepancies noted.

(c) Corrective action taken.

4.5.4 The contractor shall make available to the Government copies of his EVR report(s) no later than 15 days prior to the submission of the first production unit or lot. The results of the EVR shall be subjected to inspection by authorized Government personnel at the time the first production unit or production lot is offered for acceptance. Government inspection will be to the depth and extent necessary to demonstrate that the "as built" hardware is in accordance with the cited drawings. Copies of the EVR reports shall be made available to the Government personnel during the inspection. The contractor shall provide the following:

(a) Segregation of units, assemblies, modules and parts to permit reviewing personnel access for detailed inspection.

(b) As required, responsible personnel from each functional department available for discussions in their respective areas.

(c) Adequate administrative support for the EVR.

4.6 Quality Conformance Inspection of Equipment Before Preparation for Delivery.- The contractor shall perform the inspection specified in 4.4. and 4.6.1 through 4.6.3. This does not relieve the contractor of his responsibility for performing any additional inspection which is necessary to control the quality of the product and to assure compliance with all specification requirements. The Government will review and evaluate the contractor's inspection procedures and examine the contractor's inspection records as an element of Government verification (see 4.1.2).

4.6.1 Group A Inspection.- Equipment shall be assembled into discrete lots for quality conformance inspection, utilizing the criteria of MIL-STD-105 for determination of lot composition. Unless otherwise specified, the lot size shall be determined from table II, as related to production rates necessary to meet delivery schedules of the contract. The lot size shall be adjusted throughout the life of the contract as necessary to provide for changes in contract delivery schedules and production rates. Each unit of each lot of equipment shall be inspected for conformance to all the examinations and tests required in table III. The quality conformance of each lot shall then be subjected to an audit, utilizing the procedures of MIL-STD-105, under the general inspection level II and the Acceptable Quality Level (AQL) indicated in table III. Group A functional inspection shall be performed in the order specified in table III.

Table II. - Lot Formation

Production Rate	Size of Lot
500 or more per month	One week's production
51 to 499 per month	Two week's production
0 to 50 per month	One month's production

4.6.1.1 Visual and Mechanical Inspection.- These inspections shall be performed in any order which is satisfactory to the Government. The units shall be examined for the applicable defects listed in MIL-STD-252.

4.6.1.2 Inspection for Interchangeability.- The mechanical dimensions shall be measured to determine conformance to the physical and functional interchangeability requirements (see 3.8). This inspection shall be conducted on piece parts and subassemblies prior to final assembly.

4.6.1.3 Weight.- The equipment shall be weighed (less manuals) to determine conformance to paragraph 3.5.

Table III. - Group A Inspection

Inspection	Req Para	Insp Para	AQL% Major	AQL% Minor
Visual and Mechanical	3.1	4.6.1.1	1.0	4.0
Functional				*
Surface dose rate	3.4.3	4.10	1.0	
Accuracy	3.4.1	4.8	1.0	
Compatibility				
IM-9( )/PD	3.4.2.1	4.9.1	1.5	
IM-93A/UD, IM-147( )/PD	3.4.2.1	4.9.1	1.5	
IM-174/PD, IM-174A/PD, AN/PDR-27( )	3.4.2.2	4.9.2	1.5	
Radiological				
Source Tests (Note 1)	3.11.1	4.20.1	0.65	
Calibrator Contamination (Note 2)	3.11.2	4.20.2	0.65	

*No minor functional or radiological defects permitted.

Note 1: If the prime contractor does not manufacture the sources, this inspection shall be a requirement placed by the prime contractor on his subcontractor.

Note 2: This inspection shall be performed as a requirement under group A inspection (para. 4.6.1) and also prior to packaging and packing (para. 4.24).

4.6.2 Group B Inspection.- This inspection, including sampling, shall conform to table IV and to procedures for special inspection levels of MIL-STD-105. Group B inspection shall be performed on production lots of product that have passed group A inspection. (See 4.6.1 for lot formation)

4.6.2.1 Order of inspection within Group B.- Group B inspection shall be performed in the following order:

Table IV. - Group B Inspection

Inspection	Req Para	Test Para	AQL
Interchangeability	3.8	4.6.1.2	4.0% Level S-3
Temperature	3.6.2.1	4.11	2.5% Level S-4
Immersion	3.6.3.3	4.12	4.0% Level S-3
Bench Handling	3.6.3.4	4.13	4.0% Level S-3
Weight	3.5	4.6.1.3	4.0% Level S-3

4.6.3 Group C Inspection.- This inspection shall consist of the tests specified in table V and shall be performed on units of product that have been subjected to and passed group A and group B inspection requirements. Sample units shall be selected in accordance with 4.6.3.1.

4.6.3.1 Group C inspections shall be performed on the first production lot and at the 25%, 50%, 75% and 100% points in production. It is not the intention of the Government to require that all the group C tests be performed on the same radiac calibrators. Simultaneous testing, using several groups of radiac calibrators, may be performed. The order of tests and the choice of which units are subjected to each test may be varied to suit the availability of test facilities and decrease total testing time.

Table V.- Group C Inspection

Inspection	Req Para	Test Para	Number of instruments to be submitted to each test
Altitude (storage)	3.6.3.2	4.14.2	2
Humidity	3.6.2.3	4.15	2
Salt Fog	3.6.2.4	4.18	1
Sand and Dust	3.6.2.5	4.19	1
Bounce	3.6.3.5	4.17	2
Vibration	3.6.3.6	4.16	2
Fungus (Note 1)	3.12	4.22	1
Altitude(operating) Note 1	3.6.2.2	4.14.1	2
Rain	3.6.3.7	4.23	2
Shock (Note 1)	3.6.3.8	4.21	1
EVR	3.1	4.5	*

Note 1: These tests shall be performed only on the first production lot and on a sample selected from the lot representing approximately the 50% point in production.

* Shall be performed once on the initial production lot.

4.6.3.2 Noncompliance.- All quality conformance inspection shall be halted, including group A and group B inspections, upon the occurence of any group C failure. The contractor shall immediately report in writing each group C failure occurence, including details of the failure and characteristics affected. The contractor shall immediately investigate the cause of failure and further report the results of investigation and details of the proposed corrective action on the processes and materials, as applicable, and an all units of product which are manufactured under the same conditions and which the Government considers subject to the same failure. Reports shall be forwarded through the Government procurement quality assurance representative to the

responsible technical activity designated in the contract. After corrective action has been taken, additional sample units shall be subjected to group C inspection (all inspections, or the inspections which the sample failed, at the option of the technical activity) and group A and group B inspections may be reinstituted. However, final acceptance and shipment will be withheld until group C reinspection results have shown that the corrective action was effective and approved by the technical activity.

4.6.4 Reinspection of Conforming Group B and Group C Sample Units.- Unless otherwise specified, sample units which have been subject to and passed both group B and group C inspections may be accepted on the contract provided all damage is repaired and the sample units are resubjected to and pass group A inspection.

4.7 Performance Checks.-

4.7.1 Dosimeter Jig Assembly.- Insert a charged and calibrated Radiacmeter IM-93A/UD (see 4.9.1) into the central well of the assembly and discharge it in accordance with the instructions on drawing SM-C-509026. Repeat the above procedure for a total of 3 readings and calculate the average reading. The average reading shall be within the allowable tolerances specified on drawing SM-C-509026; readings shall be adjusted for source decay. Repeat the above using a Radiacmeter IM-147( )/PD and a Radiacmeter IM-9( )/PD.

4.7.2 Doserate Jig Assembly.- Insert the detector unit of a calibrated Radiacmeter IM-174A/PD into the assembly and expose it to fields of 100 Rads and 10 Rads from the source; readings shall be in accordance with the allowable tolerances specified on drawing SM-C-509024. Readings shall be adjusted for source decay. Repeat the above using a calibrated IM-174/PD; readings shall be in accordance with the allowable tolerances specified on drawing SM-C-509024. Readings shall be adjusted for source decay. Separate the probe unit of a calibrated AN/PDR-27( ) into the two tubular sections. Insert the small probe into the assembly and with the radiac set switched to the 500mR/hr range, rotate the calibrator shutter to the 100R position. The reading shall be within the allowable tolerances specified on drawing SM-C-509024; readings shall be adjusted for source decay.

4.8 Accuracy.- Each calibrator, when checked with the Government furnished Victoreen Model 555 Radacon II in accordance with the procedures specified herein, shall meet the requirements of paragraph 3.4.1.

4.8.1 Dosimeter Jig Assembly Measurements (lower source).-

4.8.1.1 Interconnect the Radacon II and its accompanying remote head in accordance with the manufacturer's Instruction Manual supplied with the instrument; attach the probe (Victoreen Part No. 555-100-MB) to the appropriate terminals on the remote head and allow a 30 minute warmup.

4.8.1.2 The lower source of the Dosimeter Jig Assembly tested in accordance with drawing SM-A-509093 paragraph 3.1 shall meet the requirements of paragraph 3.4.1.1.

4.8.2 Dosimeter Jig Assembly Measurements (upper source).-

4.8.2.1 Same as paragraph 4.8.1.1 except probe Victoreen Part No. 555-100-1C shall be used.

4.8.2.2 The upper source of the Dosimeter Jig Assembly shall be tested in accordance with drawing SM-A-509093 paragraph 3.2 and shall meet the requirements of paragraph 3.4.1.2.

4.8.3 Doserate Jig Assembly Measurements.-

4.8.3.1 Same as paragraph 4.8.1.1.

4.8.3.2 Doserate Jig Assembly shall be tested in accordance with drawing SM-A-509093 paragraph 4.0 and shall meet the requirements of para. 3.4.1.3.

4.9 Compatibility.-

4.9.1 Dosimeter Jig Assembly.- Calibrate all Radiacmeters IM-9, IM-93 and IM-147 supplied as Government-furnished equipment (GFE) at mid-scale using a cobalt 60 source, the calibration of which is traceable to the National Bureau of Standards. The radiacmeters shall read as follows:

IM-9( )/PD	100 mR	± 10%
IM-93A/UD	300 R	± 10%
IM-147( )/PD	25 R	± 10%

Any Government furnished radiacmeter, whose reading exceeds the specified tolerance, shall not be used. Select 10 units of each type of radiacmeter and charge to zero. Discharge each radiacmeter in its appropriate position in the dosimeter jig assembly for the period specified on drawing SM-C-509026 for the particular radiacmeter under test. Repeat the above procedure for a total of 3 readings for each radiacmeter and calculate the average reading. The average reading shall be within the allowable tolerances specified on drawing SM-C-509026; readings shall be adjusted for source decay (see 3.4.2.1).

4.9.2 Doserate Jig Assembly.- Calibrate all Radiacmeters IM-174 and IM-174A and Radiac Sets AN/PDR-27( ) supplied as GFE using a cobalt 60 source, the calibration of which is traceable to the National Bureau of Standards. The instruments shall be calibrated at the following points:

Instrument	Calibration Point	Tolerance
IM-174A/PD	100R/hr	±15%
IM-174/PD	100R/hr	±10%
AN/PDR-27( )	250 mR 25 mR 2.5 mR 0.25 mR	±20%

Any Government furnished equipment which can not be calibrated shall not be used. Select 2 units each of Radiacmeters IM-174 and IM-174A and 2 units of Radiac Set AN/PDR-27( ) and check the calibration of each unit in the calibrator in accordance with the procedures specified on drawing SM-C-509024. Repeat each check for a total of 3 readings per unit and the average reading per unit shall be within the allowable tolerances specified on drawing SM-C-509024; readings shall be adjusted for source decay (see 3.4.2.2).

4.10 Surface Dose Rate.- Using a Government furnished Radiac Set AN/PDR-27 (with beta shield removed), calibrated as specified in paragraph 4.9.2, the surfaces of the Radiac Calibrator AN/UDM-2 shall be monitored for conformance to the requirement of paragraph 3.4.3.

4.11 Temperature Tests.-

4.11.1 High Temperature.- The dosimeter jig assembly as defined by drawing SM-D-508967 and the doserate jig assembly as defined by drawing SM-D-508993 shall be subjected to Procedure I, Method 501 of MIL-STD-810 with the following exceptions:

(a) Temperature of step 2 shall be +155°F.

(b) Step 3 shall be for 24 hours.

(c) Step 4 shall be +125°F.

(d) At steps 5 and 7, equipment shall meet the performance checks of paragraphs 4.7.1 and 4.7.2.

4.11.2 Low Temperature.- The dosimeter jig assembly and doserate jig assembly, as defined in paragraph 4.11.1, shall be subjected to Procedure I, Method 502 of MIL-STD-810 with the following exceptions:

(a) Temperature of step 2 shall be -65°F and maintained for 24 hours.

(b) Temperature for step 4 shall be -25°F.

(c) At steps 5 and 7, equipment shall meet the performance checks of paragraphs 4.7.1 and 4.7.2.

4.12 Immersion.- Immerse the equipment, closed as for storage or transportation, in a tank of fresh water so that the surface of the water is not less than 3 feet above the uppermost point of the equipment when submerged; the water shall be at room temperature ±10°F. The equipment shall be immersed for 2 hours and then removed and visually inspected for evidence of leakage into the case (see 3.6.3.3).

4.13 Bench Handling.- The equipment, locked as for storage or transportation, shall be placed on a solid, 2 inch fir bench top. Tilt the equipment through an angle of 30° using one edge as an axis; allow to drop freely back to the horizontal. Repeat, using the remaining three edges of the same horizontal face as axes, for a total of 4 drops. Repeat the above with the equipment resting on the remaining five faces for an overall total of 24 drops. Upon completion of the test, the equipment shall meet the performance checks of paragraphs 4.7.1 and 4.7.2 (see 3.6.3.4).

4.14 Altitude.-

4.14.1 Operating.- Place the equipment in the test chamber in accordance with section 3, paragraph 3.2.2 of MIL-STD-810; maintain standard ambient temperature during the entire test. Reduce the chamber internal pressure to 20.6 inches of Hg (10,000 ft above sea level) and operate the equipment in accordance with paragraphs 4.7.1 and 4.7.2. Upon completion of the performance checks, return the chamber to standard ambient pressure and repeat the performance checks of paragraphs 4.7.1 and 4.7.2 (see 3.6.2.2).

4.14.2 Non-operating.- The equipment, closed for storage or transportation, shall be placed in the test chamber; maintain standard ambient temperature during the entire test. The equipment shall be subjected to steps 2 and 4 of Procedure I, Method 500 of MIL-STD-810. Upon completion of step 4, the equipment shall be tested per paragraph 4.7.1 and 4.7.2 (see 3.6.3.2).

4.15 Humidity.- The equipment shall be subjected to Procedure II, Method 507 of MIL-STD-810 except that:

(a) The equipment shall be opened into its 2 halves during step 1.

(b) Step 2 shall be deleted.

(c) Performance check, per paragraphs 4.7.1 and 4.7.2 shall be accomplished during step 4.

(d) Equipment shall be closed as for storage or transportation during the first 3 cycles of step 6. During cycles 4 and 5, the equipment shall be opened as in step 3.

(e) Performance check, per paragraphs 4.7.1 and 4.7.2 shall be accomplished during step 8 (see 3.6.2.3).

4.16 Vibration (Resonance Search).- The equipment shall be subjected to Procedure XI, paragraph 4.16.1, Method 514.1 of MIL-STD-810. Bolt each half of the equipment on to the table in turn so that the equipment may be observed during the testing. Upon completion of the test, the equipment shall meet the performance checks of 4.7.1 and 4.7.2 (see 3.6.3.6).

4.17 Bounce.- The equipment shall be subjected to Procedure XI, paragraph 4.16.2, Method 514.1 of MIL-STD-810. Upon completion of the test, the equipment shall meet the performance checks of 4.7.1 and 4.7.2 (see 3.6.3.5).

4.18 Salt Fog.- The equipment, opened as in operational use, shall be subjected to Method 508, procedure 1, of MIL-STD-810. Salt concentration shall be 20%. Upon completion of the test the equipment shall meet the requirements of 4.7.1 and 4.7.2 (see 3.6.2.4).

4.19 Sand and Dust.- The equipment, opened as in operational use, shall be subjected to Method 510 Procedure I of MIL-STD-810. Upon completion of the test the equipment shall meet the requirements of 4.7.1 and 4.7.2 (see 3.6.2.5).

4.20 Radiological Tests.- These tests shall be performed by or under the direct supervision of the Radiological Protection or Radiological Safety Officer employed by the contractor in accordance with current Atomic Energy Commission Regulations.

4.20.1 Source Tests.-

4.20.1.1 Source Leak Tests.- Fill a 200-500 ml beaker about 2/3 full

of water. Boil water for several minutes to drive off any dissolved air. (Note: the sensitivity of the test will be increased by addition of ethylene glycol to increase the boiling point). The temperature of the water should be kept above 95°C during the remainder of the tests. A transparent beta shield (preferably plastic), having a minimum area density of 1g/cm^2, should be placed between the individuals performing or observing the tests and the beaker, its heat sources and the shielding type source container, to protect them from the radiation. A light should be directed on the beaker at right angles to the line of view of the operator. Care should be taken to insure that the light does not shine in the operator's eyes. Using remote handling tool(s), remove a source (at or below 30°C) from the shielded container and drop it into the hot water. Closely observe the source and the water above it for one minute. (Note: A large hand lens mounted near the beaker or the use of binoculars or a telescope that will focus on objects as close as two or three feet will aid in this test). Bubbles from the source or on the source indicate a leak.

4.20.1.2 Source Bloat Test.- After a source has passed a leak test, place it in storage for at least ten days. Remove source from storage with remote handling equipment and examine the thin window for bloating or bulging.

4.20.1.3 Second Encapsulation Leak Test.- After the second encapsulation of the source repeat the test described in4.20.1.1.

4.20.1.4 Second Encapsulation Bloat Test.- After a source has passed the test outlined in 4.20.1.3, repeat the test of 4.20.1.2.

4.20.1.5 Source Contamination Test.-

1. Use for counting any standard beta counting system which includes a scaler and timer and has a detector window at least one inch in diameter and not exceeding 2.0 mg/cm^2. Use for wiping any commercially available cloth-type smear paper with adhesive backing or commercially available smooth surface filter paper whose diameter does not exceed the diameter of the detector window or counting planchet. Use for handling the smear paper any handle with a flat end slightly smaller than the smear paper. The end will be covered with about 1/8 inch sponge rubber or compressible foam plastic.

2. Calibrate the beta counting system by placing 0.1 ml standard Sr^{90} counting solution (0.005-0.015 microcuries per milliliter)onto a piece of smear paper and air dry. Center the standard solution smear paper on a planchet and count for a minimum of ten minutes. Calculate Sr^{90} disintegrations per minute (A) by multiplying standard solution concentration (uCi/ml) by 0.1 ml and by 2.22×10^6 disintegrations per minute (d/min.) per microcurie. Calculate overall counting

efficiency (E) in counts per disintegration of Sr^{90} by subtracting background number of counts (gotten by counting clean piece of smear paper for same time as standard solution smear paper) from the number of counts from the standard solution smear paper, dividing by the counting time, then dividing by A. Calculate the standard counting time (T) in minutes by using the following formula:

$$T = \frac{8 \times 10^{-4} (50E + B)}{E^2}$$

where B is background counting rate in counts per minute.

3. To test each source attach a clean piece of smear paper to the rubber or plastic-tipped handles (use rubber cement if necessary). Protect testing personnel by placing a transparent shield (at least 1 g/cm^2, preferably plastic) between the personnel and source handling area. Handling the source with one pair of tongs and the smear paper handle with another pair of tongs wipe all surfaces of the source applying moderate pressure. Count the test smear paper in the same manner as the background and standard solution smear paper were counted. The counting time will be the next largest whole number of minutes greater than T.

4.20.2 Calibrator Contamination Test.-

4.20.2.1 Equipment and Counting Procedure.- Use the identical procedure outlined in 4.20.1.5 with the following exceptions:

1. Use commercially available cotton swabs in place of smear paper and handle. To count the cotton swab, cut off all but a short stub of the handle and tape the stub to the planchet, centering the cotton in the planchet.

2. Use the following formula to calculate T:

$$T = \frac{6.4 \times 10^{-3} (12.5E + B)}{E^2}$$

4.20.2.2 Dosimeter Jig Assembly Wipe Test.-

WARNING

Do not under any circumstances expose the eyes to the radiation field by peering into the access hole while the swivel cover is swung aside.

Swing aside the swivel cover and using a cotton swab, wipe around the inner surface of the access hole. Using the procedure of 4.20.2.1, check the cotton swab for contamination. WARNING: Prior to checking the swab for contamination do not leave the swab unattended or allow it to touch any object.

4.20.2.3 Doserate Jig Assembly Wipe Test.- Open the drawer and using a cotton swab, wipe the inside and outside surfaces of the drawer. Using the procedure of 4.18.2.1, check the cotton swab for contamination. WARNING: Prior to checking the swab for contamination do not leave the swab unattended or allow it to touch any object.

4.21 Shock Test.- The equipment shall be subjected to Procedure II, Method 516 of MIL-STD-810 except that the height of drop shall be 2 feet. Upon completion of the test, the equipment shall meet the performance checks of paragraphs 4.7.1 and 4.7.2 (see 3.6.3.8).

4.22 Fungus Test.- The equipment in its opened position shall be subjected to Method 508 of MIL-STD-810 (see 3.12). Performance check, per paragraphs 4.7.1 and 4.7.2, shall be accomplished upon completion of the test.

4.23 Rain test.- The equipment, closed as for storage or transportation, shall be tested as follows:

4.23.1 Dry at 150°±5°F for 48 hours.

4.23.2 Condition for 4 hours at 77°±5°F and 50 to 60 percent relative humidity.

4.23.3 Take pretest data. The equipment shall meet the test of 4.7.

4.23.4 Test equipment in accordance with Method 506, Procedure I, of MIL-STD-810. There shall be no wind source and the rain fall throughout the test shall be 4±1 inch. Complete final measurements within 1 hour after the rain has been discontinued (see 3.6.3.7).

4.24 Quality Conformance Inspection of Preparation for Delivery.- Preparation for delivery shall be inspected in accordance with Specification MIL-P-116 to determine conformance to the requirements of section 5. The test of paragraph 4.20.2 shall be performanced on each unit prior to packaging and packing.

5. PREPARATION FOR DELIVERY

5.1 Preservation and Packaging.- Preservation and Packaging shall be level A or C as specified (see 6.1).

5.1.1 Level A.-

5.1.1.1 Cleaning.- Radiac Calibrator AN/UDM-2 shall be cleaned in accordance with process C-1 of MIL-P-116.

5.1.1.2 Drying.- Radiac Calibrator AN/UDM-2 shall be dried in accordance with the applicable procedures of MIL-P-116.

5.1.1.3 Preservation Application.- None required.

5.1.1.4 Unit Packaging.- Unit packaging shall be in accordance with the methods prescribed in MIL-P-116 as specified herein.

5.1.1.4.1 Technical Literature.- Each technical literature shall be packaged Method 1C-1.

5.1.1.4.2 Radiac Calibrator AN/UDM-2.- Each calibrator shall be individually packaged Method III as follows: Secure the shipping locks of both assemblies of the calibrator. Place the 2 halves of the calibrator together and secure the fastenings. Cushion the calibrator on all surfaces with cells or pads or both fabricated of fiberboard conforming to PPP-F-320, type CF, class weather-resistant, variety SW, grade W5c, designed to protect all projections and absorb the shock of impact in handling and transit. Place the cushioned calibrator within a close-fitting fiberboard box conforming to PPP-B-636, W5c. Place the technical literature, packaged as specified in 5.1.1.4.1, on top of the cushioned calibrator, directly under the lid of the box. Close the box as specified in the appendix of the box specification.

5.1.2 Level C.- Radiac Calibrator AN/UDM-2 shall be preserved and packaged in a manner that will afford adequate protection against physical and environmental damage during shipment, handling and limited intransit storage.

5.2 Packing.- Packing shall be level A, B or C as specified. Shipping containers for all levels shall be capable of stacking and supporting superimposed loads, during shipment and storage without damaging the container(s) or its contents (see 6.1(b)).

5.2.1 Level A.-

5.2.1.1 Palletized Loads.- A quantity of Calibrator Set, Radiac AN/UDM-2 not to exceed twenty (20) and packaged as specified in 5.1, shall be placed on a pallet, load type 1, conforming to MIL-STD-147 except that the pallet shall be softwood conforming to NN-P-71, type IV, size 2. A fiberboard cap shall be employed over the load having two sides extending down the stacked load at least 12 inches to accommodate marking requirements. The cap shall be fabricated of fiberboard conforming to PPP-F-320, class weather-resistant, W5s or V3c. The load shall be "bonded" to the pallet by strapping.

5.2.1.2 Less Than Palletized Load.- When quantities per destination are less than a pallet load, the item packaged as specified in 5.1, shall be waterproofed, with tape conforming to PPP-T-76, in accordance with the taping requirements of the appendix of the box specification. A quantity of the waterproofed containers not to exceed twenty (20) shall be packed within a close-fitting box conforming to PPP-B-601, overseas type; PPP-B-621, style 4, class 2; or PPP-B-585, style 2 or 3, class 3. When the gross weight exceeds 200 pounds, or the container length and width is 48 x 24 inches or more and the weight exceeds 100 pounds, 3 x 4 inche. skids, laid flat, shall be applied in accordance with the requirements of the container specification, or if not specified in the specification, in a manner which will adequately support the item and facilitate the use of material handling equipment. Closure and strapping shall be in accordance with the applicable container specification or appendix thereto except that metal strapping shall conform to QQ-S-781, type 1, class B.

5.2.2 Level B.-

5.2.2.1 Palletized Load.- A quantity of Radiac Calibrators, AN/UDM-2, packaged as specified in 5.1, shall be palletized as specified in 5.2.1.1.

5.2.2.2 Less Than Palletized Load.- When quantities per destination are less than a pallet load, a quantity of Calibrator Set, Radiac AN/UDM-2 not to exceed twenty (20) and packaged as specified in 5.1, shall be packed within a close-fitting fiberboard box conforming to PPP-B-640, class 2, style E, or PPP-B-636, type CF, class weather-resistant, variety DW. The gross weight of boxes conforming to PPP-B-640 shall not exceed 250 pounds. When the gross weight exceeds 200 pounds or the container length and width is 48 x 24 inches or more and the weight exceeds 100 pounds, containers will be pallet-mounted on pallets conforming to NN-P-71, type IV. Closure shall be in accordance with the appendix of the applicable box specification. Reinforcing shall be by pressure-sensitive filament tape bonding or non-metallic strapping conforming to PPP-T-97, type IV and PPP-S-760, type II, respectively; selection of the material and application shall be in accordance with

the appendix of the applicable box specification.

5.2.3 Level C.-

5.2.3.1 Palletized Load.- A quantity of Radiac Calibrators AN/UDM-2, packaged as specified in 5.1, shall be palletized as specified in 5.2.1.1 except that the fiberboard caps shall be class domestic.

5.2.3.2 Less Than Palletized Load.- When quantities per destination are less than a pallet load, a quantity of Radiac Calibrator AN/UDM-2, packaged as specified in 5.1, shall be packed as specified in 5.2.2.2 except that the fiberboard boxes shall conform to PPP-B-640 and PPP-B-636, class 1 and class domestic, respectively, and reinforcing shall not be required for boxes conforming to PPP-B-636.

5.3 Marking.- In addition to any special marking required by the contract or order, interior packages and exterior shipping containers shall be marked in accordance with MIL-STD-129.

6. NOTES

6.1 Intended use.-

6.1.1 The dosimeter jig assembly is used to check Radiacmeters IM-9( )/PD, IM-93( )/UD and IM-147( )/PD (dosimeters). The assembly containes four SR-90 sources (one 20 microcurie source and three 25 millicurie sources) arranged to radiate into a central cavity. The upper field is utilized in checking the operational reliability of Radiacmeter IM-9( )/PD while the lower field performs a similar function for Radiacmeters IM-93( ) and IM-147( )/PD.

6.1.2 The doserate jig assembly consists of a drawer unit and a spacer block. The drawer unit contains an encapsulated 25 millicurie SR-90 source. The spacing block provides varying field intensities used to calibrate radiacmeter probes. This assembly is utilized to calibrate Radiacmeters IM-174 and IM-174( ) and Radiac Set AN/PDR-27( ).

6.2 Ordering Data.- Procurement documents should specify the following:

(a) Title, number and date of this specification and any amendment thereto.

(b) Levels of preservation, packaging and packing (see Section 5).

Notification to the contractor that he must comply with Title 49 CFR.

(c) Number of First Article samples to be submitted for approval (see 4.2).

(d) Technical literature and running spares (see 3.9).

(e) When the rough handling and functional tests are required.

6.3 Nomenclature.- The contractor should apply for nomenclature in accordance with the applicable clause in the contract.

Notice: When Government drawings, specifications or other data are used for any purpose other than in connection with a definitely related Government procurement operation, the United States Government thereby incurs no responsibility or any obligation whatsoever; and the fact that the Government may have formulated, furnished or in any way supplied the said drawings, specifications or other data is not to be regarded by implication or otherwise as in any manner licensing the holder or any other person or corporation, or conveying any rights or permission to manufacture, use or sell patented invention that may in any way be related thereto.

6.4 Government Furnished Property (Loaned).- The following government property, in the quantities specified, shall be loaned to the successful bidder for the purpose of performing acceptance tests on the equipment being procured:

Radiacmeter IM-9( )/PD	25 each
Radiacmeter IM-93A/UD	25 each
Radiacmeter IM-147( )/PD	25 each
Radiacmeter IM-174( )/PD	4 each
Radiacmeter IM-174A/PD	6 each
Radiac Set AN/PDR-27( )	4 each
Radiac Charger PP-1578( )	6 each

Victoreen Model 555 Radacon II with instruction manual, Victoreen Model 555-100-MB probe, Victoreen Model 555-100-1C probe, and accessories 1-5 per drawing SM-A-509093, Timer 555-50	1 each

Custodian
Army-EL

Preparing Activity
Army-EL
Project Number 6665-A285

*U.S. GOVERNMENT PRINTING OFFICE: 1971-714-161/13307

SPECIFICATION ANALYSIS SHEET

Form Approved
Budget Bureau No. 22-R255

INSTRUCTIONS: This sheet is to be filled out by personnel, either Government or contractor, involved in the use of the specification in procurement of products for ultimate use by the Department of Defense. This sheet is provided for obtaining information on the use of this specification which will insure that suitable products can be procured with a minimum amount of delay and at the least cost. Comments and the return of this form will be appreciated. Fold on lines on reverse side, staple in corner, and send to preparing activity. Comments and suggestions submitted on this form do not constitute or imply authorization to waive any portion of the referenced document(s) or serve to amend contractual requirements.

SPECIFICATION MIL-R-55350(EL) RADIAC CALIBRATOR AN/UDM-2( )

ORGANIZATION

CITY AND STATE

CONTRACT NUMBER

MATERIAL PROCURED UNDER A

☐ DIRECT GOVERNMENT CONTRACT ☐ SUBCONTRACT

1. HAS ANY PART OF THE SPECIFICATION CREATED PROBLEMS OR REQUIRED INTERPRETATION IN PROCUREMENT USE?

A. GIVE PARAGRAPH NUMBER AND WORDING.

B. RECOMMENDATIONS FOR CORRECTING THE DEFICIENCIES

2. COMMENTS ON ANY SPECIFICATION REQUIREMENT CONSIDERED TOO RIGID

3. IS THE SPECIFICATION RESTRICTIVE?

☐ YES ☐ NO *(If "yes", in what way?)*

4. REMARKS *(Attach any pertinent data which may be of use in improving this specification. If there are additional papers, attach to form and place both in an envelope addressed to preparing activity)*

SUBMITTED BY *(Printed or typed name and activity - Optional)*

DATE

DD FORM 1 JAN 66 1426

REPLACES EDITION OF 1 OCT 64 WHICH MAY BE USED.

ESC-FM 1068-68

FOLD

Department of the Army
Headquarters
U.S.Army Electronics Command
Fort Monmouth, New Jersey 07703

POSTAGE AND FEES PAID

OFFICIAL BUSINESS

Commanding General
U.S.Army Electronics Command
ATTN: AMSEL- PP-ED
Fort Monmouth, New Jersey 07703

FOLD

C2, TM11-6625-227-12
AN/UDM-2

FDEP

(FINAL DRAFT

EQUIPMENT PUBLICATION)

(PROTECTIVE SHEET ONLY, NOT THE COVER OF THE MANUAL)

FILE COPY

Incl 5

TM 11-6665-227-12

C2

CHANGE)

)

NO. 2)

HEADQUARTERS

DEPARTMENT OF THE ARMY

Washington, D.C., _____ 1977

Operator's and Organizational Maintenance Manual

CALIBRATOR SET, RADIAC AN/UDM-2

NSN 6665-00-179-9037

TM 11-6665-227-12, 13 June 1975, is changed as follows:

1. New or changed material is indicated by a vertical bar in the margin.

2. Remove old pages and insert new pages as indicated below.

Remove	Insert
i	i/(ii blank)
1-1 through 1-8	1-1 through 1-8
2-1 and 2-2	2-1 and 2-2
3-1 and 3-2	3-1 and 3-2
3-5 through 3-14	3-5 through 3-14
4-1 through 4-3	4-1 through 4-3

3. File this change sheet in the front of the manual for reference purposes.

TECHNICAL MANUAL

No. 11-6665-227-12

HEADQUARTERS
DEPARTMENT OF THE ARMY
WASHINGTON, DC, *13 June 1975*

Operator's and Organizational Maintenance Manual
CALIBRATOR SET, RADIAC AN/UDM-2
NSN 6665-00-179-9037

			Paragraph	Page
CHAPTER	1.	INTRODUCTION		
Section	I.	General		
		Scope	1-1	1-1
		Indexes of publications	1-2	1-1
		Forms and records	1-3	1-1
		Administrative storage	1-4	1-1
		Destruction of Army materiel prevent enemy use	1-5	1-1
		Reporting of errors	1-6	1-1
		Reporting of equipment improvement recommendations (EIR)	1-6.1	1-1
		Nuclear Regulatory Commission (NRC) requirements	1-6.2	1-1
	II.	Description and data		
		Purpose and use	1-7	1-3
		Technical characteristics	1-8	1-3
		Items comprising an operable Calibrator Set, Radiac AN/UDM-2	1-9	1-3
		Description of Calibrator Set, Radiac AN/UDM-2	1-10	1-3
		Precautions	1-11	1-8
CHAPTER	2.	INSTALLATION		
		Unpacking	2-1	2-1
		Checking unpacked equipment	2-2	2-1
		Preparation for use	2-3	2-1
CHAPTER	3.	OPERATING INSTRUCTIONS		
		General	3-1	3-1
		Controls and indicators	3-2	3-1
		Dosimeter checking	3-3	3-2
		Checking Radiacmeter IM-174(*)/PD	3-4	3-6
		Checking Radiac Set AN/PDR-27(*)	3-5	3-8
		Checking Radiac Set AN/PDR-60	3-6	3-14
		Checking Aerial Radiac System AN/ADR-6	3-7	3-14

CHAPTER 4. MAINTENANCE INSTRUCTIONS
Scope of maintenance 4-1 4-1
Tools and equipment required 4-2 4-1
Preventive maintenance 4-3 4-1
Preventive maintenance checks and services (PMCS)..... 4-4 4-1
Cleaning and touchup painting instructions 4-5 4-2
Troubleshooting 4-6 4-3

APPENDIX A. REFERENCES A-1

B. BASIC ISSUE ITEMS LIST (BIIL) AND ITEMS TROOP INSTALLED OR AUTHORIZED LIST (ITIAL) (Not applicable)

C. MAINTENANCE ALLOCATION
Section I. Introduction C-1
II. Maintenance allocation chart C-3

GLOSSARY ..... Glossary 1

94314

CHAPTER 1
INTRODUCTION

Section I. GENERAL

1-1. Scope

a. This manual describes Calibrator Set, Radiac AN/UDM-2 (fig. 1-1) and covers its installation, operation, and organizational maintenance. It includes instructions for initial service, operation, cleaning, and inspection of the equipment.

b. Official nomenclature followed by (*) is used to indicate all models of an equipment referenced in this manual. Thus, Radiac Set AN/PDR-27(*) represents AN/PDR-27J, AN/PDR-27L, AN/PDR-27P, AN/PDR-27Q, and AN/PDR-27R; Radiacmeter IM-93(*)/UD represents IM-93/UD and IM-93A/UD; Radiacmeter IM-174(*)/PD represents IM-174/PD and IM-174A/PD.

1-2. Indexes of Publications

a. Refer to the latest issue of DA Pam 310-4 to determine whether there are new editions, changes, or additional publications pertaining to the equipment.

b. Refer to DA Pam 310-7 to determine whether there are modification work orders (MWO's) pertaining to the equipment.

1-3. Forms and Records

a. Reports of Maintenance and Unsatisfactory Equipment. Maintenance forms, records, and reports which are to be used by maintenance personnel at all maintenance levels are listed in and prescribed by TM 38-750.

b. Report of Packaging and Handling Deficiencies. Fill out and forward DD Form 6 (Packaging Improvement Report) as prescribed in AR 700-58/NAVSUPINST 4030.29/AFR 71-13/MCO P4030.29A, and DSAR 4145.8.

c. Discrepancy in Shipment Report (DISREP) (SF 361). Fill out and forward Discrepancy in Shipment Report (DISREP) (SF 361) as prescribed in AR 55-38/NAVSUPINST 4610.33A/AFR 75-18/MCO P4610.19B, and DSAR 4500.15.

1-4. Administrative Storage

Administrative storage information is contained in TM 740-90-1.

1-5. Destruction of Army Materiel to Prevent Enemy Use

Instructions for destruction of Army materiel to prevent enemy use are contained in TM 750-244-2.

1-6. Reporting of Errors

The reporting of errors, omissions, and recommendations for improving this publication by the individual user is encouraged. Reports should be submitted on DA Form 2028 (Recommended Changes to Publications and Blank Forms), forwarded direct to Commander, US Army Electronics Command, ATTN: DRSEL-MA-Q, Fort Monmouth, NJ 07703.

1-6.1. Reporting Equipment Improvement Recommendations (EIR)

EIR's will be prepared using DA Form 2407, Maintenance Request. Instructions for preparing EIR's are provided in TM 38-750, The Army Maintenance Management System. EIR's should be mailed directly to Commander, US Army Electronics Command, ATTN: DRSEL-MA-Q, Fort Monmouth, NJ 07703. A reply will be furnished directly to you.

1-6.2. Nuclear Regulatory Commission (NRC) Requirements

The US Nuclear Regulatory Commission sets standards/conditions and issues licenses for use of radioactive material in the United States. The AN/UDM-2 comes under the NRC regulations and a license for its use has been issued. Information required by the NRC license/regulations is contained below.

a. Radiation Protection. Users of the AN/UDM-2 should refer to instructions on control, safe handling, storage and transportation contained in TB 11-6665-227-12. Operation and maintenance instructions for the AN/UDM-2 are contained in this manual. These two publications, TB 11-6665-227-12 and TM 11-6665-227-12, satisfy the radiation protection requirements of the NRC regulations (Title 10, Chapter 1, Code of Federal Regulations, Parts 19 and 20).

b. Notice to Employees. Form NRC-3, Notice to Employees, contained in the back of this manual, may be removed for posting wherever the AN/UDM-2 is used and/or stored. The posting requirements are contained on the form.

c. NRC License. The NRC license for the AN/UDM-2 and documents relating to that license are held by the US Army Electronics Command Safety Office at Fort Monmouth, New Jersey. AN/UDM-2 users may request further information on these documents by letter addressed to:

Commander
US Army Electronics Command
ATTN: DRSEL-SF-H
Fort Monmouth, NJ 07703

Requests for further information may also be made by phone by calling on AUTOVON 992-3493.

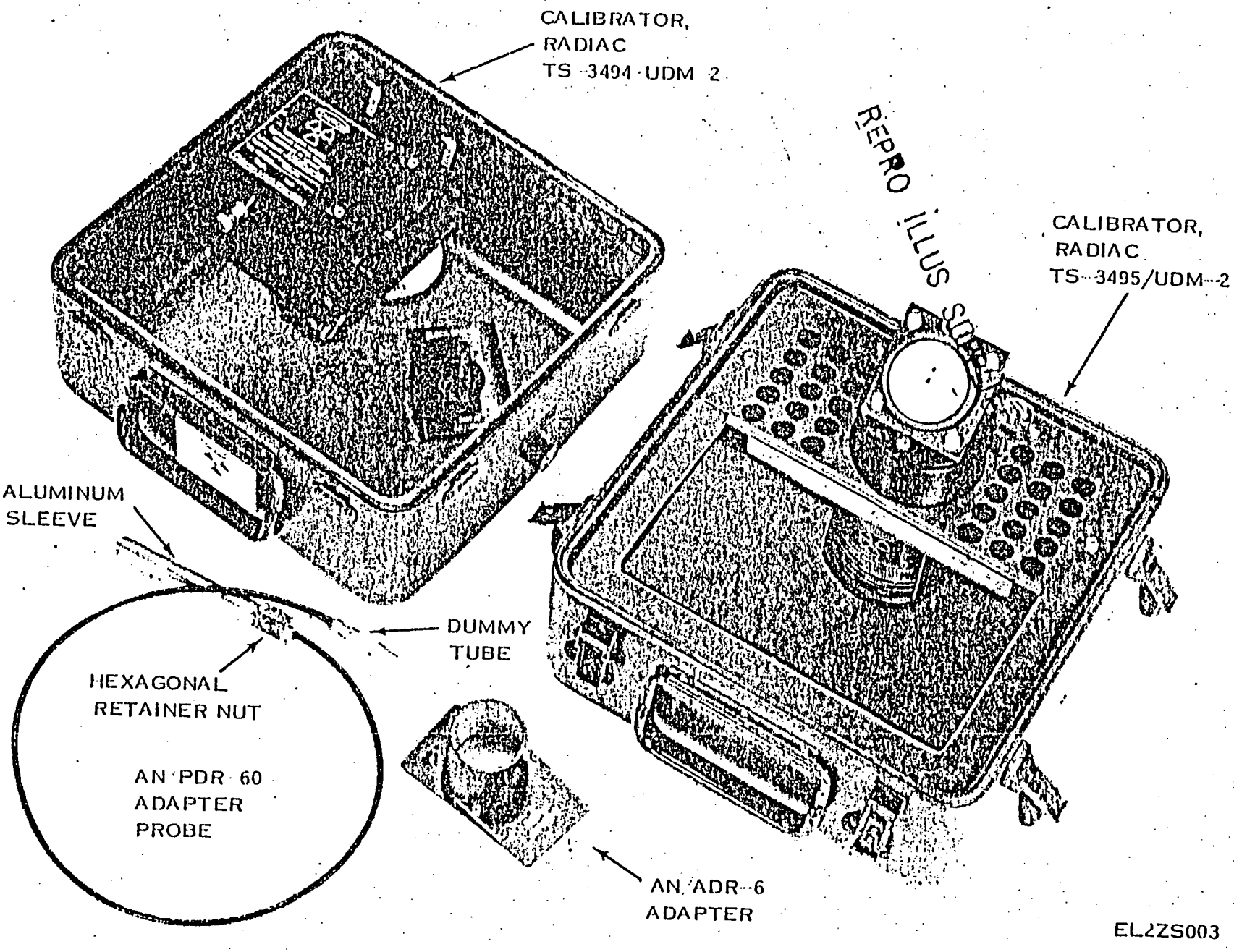

REPRO ILLUS SOON

Figure 1-1. Calibrator Set, Radiac AN/UDM-2.

Section II. DESCRIPTION AND DA

1-7. Purpose and Use
(fig. 1-1)

a. Purpose. Calibrator Set, Radiac AN/UDM-2 (consisting of two main sections (*b* below)) provides the facilities for checking the operational reliability and calibration accuracy of various radiacmeters and radiac sets.

b. Use. Calibrator, Radiac TS-3495/UDM-2 (discharge well assembly) is used to check Radiacmeters IM-93(*)/UD, IM-147/PD, and IM-9E/PD (dosimeters). Calibrator, Radiac TS-3494/UDM-2 (RATEMETER assembly) is used to check Radiacmeter IM-174(*)/PD (radiacmeter), Radiac Set AN/PDR-27(*) (radiac set), Radiac Set AN/PDR-60, and Aerial Radiac System AN/ADR-6.

1-8. Technical Characteristics

Type of radioactive isotope in each source capsule	Strontium-Yttrium 90 (Sr-Y90).
Decay of isotope	27.7 years half life.
Quantity of isotope:	
Discharge well assembly	Three encapsulated sources of 25 millicuries each. One encapsulated source of 20 microcuries.
RATEMETER assembly	One encapsulated source of 25 millicuries.
Type of radiation emitted	Beta particles.
Bremmstrahlung produced	Radiation doserate from sources (4) no greater than 2 millirads per hour at outer case surface.
Maximum range of beta particles in air	30 feet.
Stopwatch indication	Two indications: a minute hand for a maximum of 30 minutes and a second hand for a maximum of 60 seconds.

1-9. Items Comprising an Operable Calibrator Set, Radiac AN/UDM-2
(figs. 1-1, 1-2, and 1-3)

The components of the AN/UDM-2 that make up an operable equipment are listed in table 1-1.

Table 1-1. Items Comprising an Operable Calibrator Set, Radiac AN/UDM-2

NSN	Item	Qty	Dimensions (in.) Height	Depth	Width	Wt (lb)
6665-00-610-1487	Calibrator, Radiac TS-3494/UDM-2	1	5	12	12	10⅛
6665-00-610-1496	Calibrator, Radiac TS-3495/UDM-2	1	8¼	12	12	18¾
Not available	Adapter, AN/ADR-6	1	2⅜	3¼	2¼	⅜
Not available	Adapter probe, AN/PDR-60	1	⅝	5	....	¼
Not available	Stopwatch	1	....	....	....	....
Not available	Spacer block	1	3⅝	2½	1¼	½

1-10. Description of Calibrator Set, Radiac AN/UDM-2

Calibrator Set, Radiac AN/UDM-2 (fig. 1-1) consists of two major assemblies, Calibrator, Radiac TS-3495/UDM-2 and Calibrator, Radiac TS-3494/UDM-2, plus the AN/PDR-60 adapter probe, and the AN/ADR-6 adapter. Each major assembly is housed in one-half of a waterproof, aluminum case.

A handle is provided on each assembly to facilitate handling.

a. Calibrator, Radiac TS-3495/UDM-2 (fig. 1-2). The discharge well assembly consists of a discharge well, a dosimeter shelf, and a stopwatch. The dosimeter shelf contains 30 holes (to hold dosimeters to be tested) and the discharge well. The discharge well contains four Sr-Y90 sources (one 20 microcurie source and three 25 millicurie sources). The sources are arranged to radiate into a central cavity. Two fields of radiation are provided within the discharge well; one field is provided by the 20-microcurie source (upper field), the other field is provided by the three 25-millicurie sources (lower field). The upper field will cause Radiacmeter IM-9E/PD to discharge but will have no effect on Radiacmeter IM-93(*)/PD or IM-147/PD. The lower field will cause the IM-93(*)/PD or the IM-147/PD to discharge and will also cause the IM-9E/PD to discharge within two seconds. An access hole in the top of the discharge

well provides access to the radiation fields in the cavity. The cavity is vertically placed in the discharge well. The lower field of radiation is closed off from the access hole by a spring-loaded platform. This spring-loaded platform is opened when a dosimeter is inserted deep into the access hole. A spring-loaded swivel cover attached to the top of the discharge well covers the access hole. The key-operated lock is mounted on the swivel cover to prevent accidental exposure of the access hole. The swivel cover is moved sideways to expose the access hole and will move back over the access hole when the cover is released. A shipping lock is also mounted on the swivel cover to prevent accidental movement of the cover during transit. The stopwatch, mounted on the swivel cover, times the period of exposure for the dosimeter being checked.

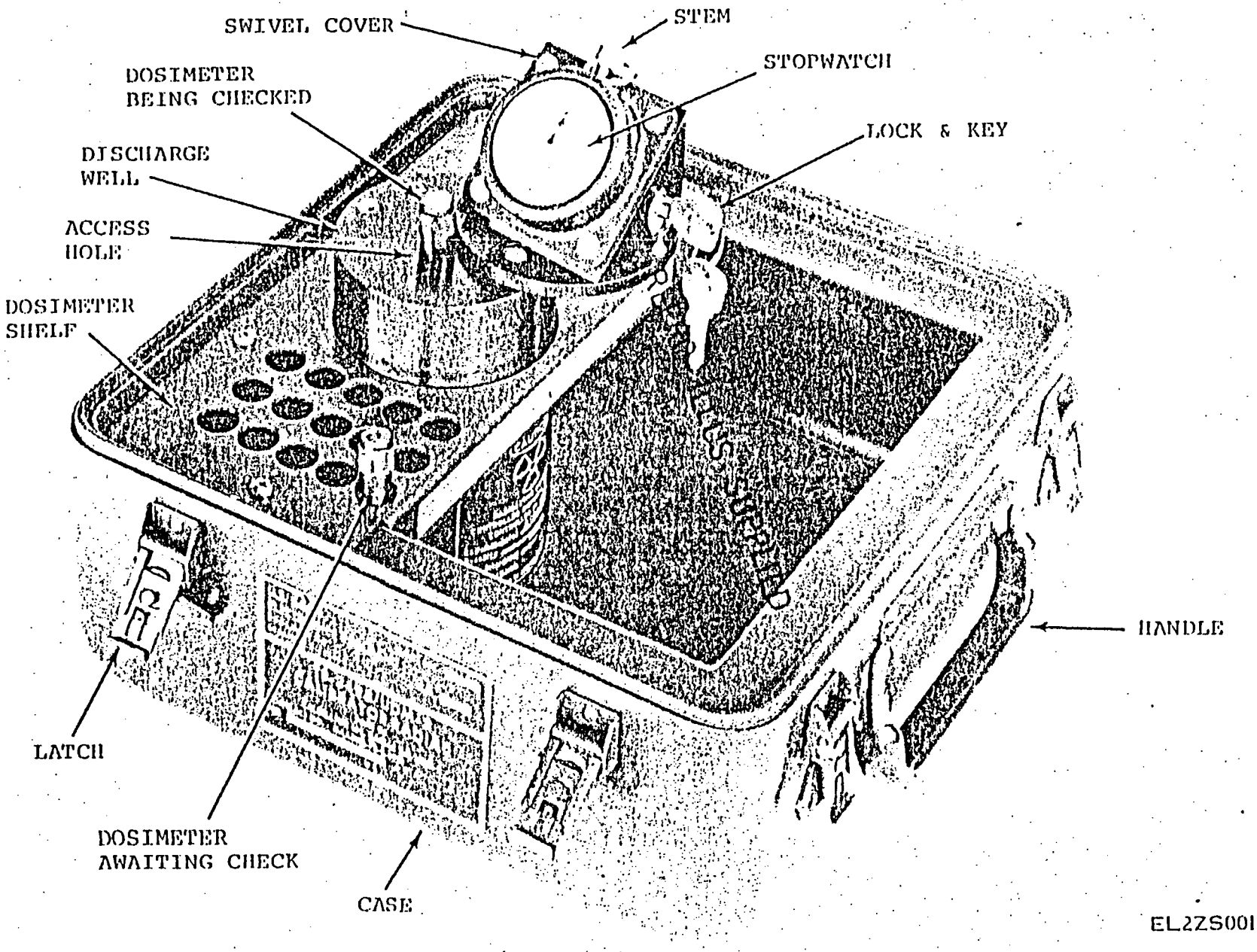

Figure 1-2. Calibrator, Radiac TS-3495/UDM-2.

b. Calibrator, Radiac TS-3494/UDM-2 (fig. 1-3). The RATEMETER assembly consists of a drawer and a spacer block. The drawer contains an encapsulated 25-millicurie Sr-Y90 source. Access to the radiation field created by the source is gained through a sliding drawer within the drawer. A shutter is located between the sliding drawer and the encapsulated source. The shutter has two holes which provide radiation fields in the detector equivalent to external gamma field of 100 rad/hr and 10 rad/hr. The shutter and sliding drawer are interconnected so that the shutter cannot expose the source unless the drawer is fully closed. A key-operated lock is provided to prevent accidental movement of the shutter. The shutter can only be operated when the key-operated lock is open (unlocked) and the sliding drawer is fully closed. A shipping lock mechanically locks the sliding drawer when the equipment is not in use. The spacing block provides varying field intensities that are used to calibrate radiacmeter probes.

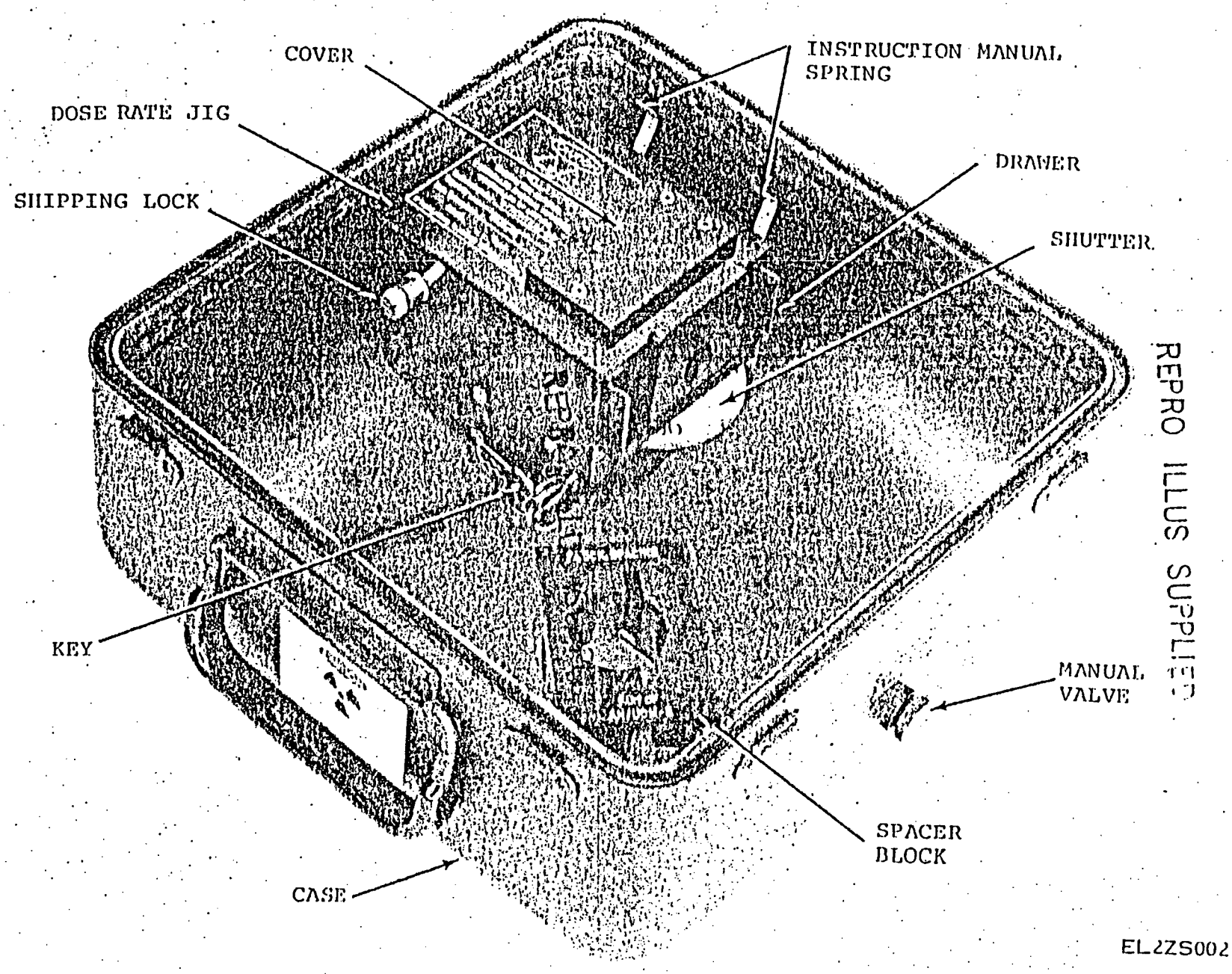

REPRO ILLUS SUPPLIED

Figure 1-3. Calibrator, Radiac TS-3494/UDM-2.

c. *Miscellaneous.* The AN/PDR-60 adapter probe (fig. 1-1) is furnished to enable checking the operational capability of the gamma range of Radiac Set AN/PDR-60. The AN/ADR-6 adapter is furnished to enable checking Aerial Radiac System AN/ADR-6.

1-11. Precautions

The radiation hazard information must be understood by all personnel before operating the AN/UDM-2. Hazardous radioactive materials are permanently installed in the major assemblies (fig. 1-1). Refer to the inside of the front cover and to TB 11-6665-227-12 for information on handling, storage, transportation, operation, and disposal of the radioactive materials.

CHAPTER 2

INSTALLATION

2-1. Unpacking
(fig. 2-1)

a. Packaging Data. When packed for shipment, the AN/UDM-2 is packaged in an inner corrugated carton. The packaged AN/UDM-2 is further protected by being placed in an outer corrugated carton. All joints and seams on both cartons are sealed with waterproof, pressure-sensitive tape. Corrugated fillers are placed around the six sides of the package. The outside dimensions of the complete package are approximately 17 inches long, 16½ inches wide, and 15 inches high. The volume is 2.5 cubic feet and the total weight is approximately 35 pounds.

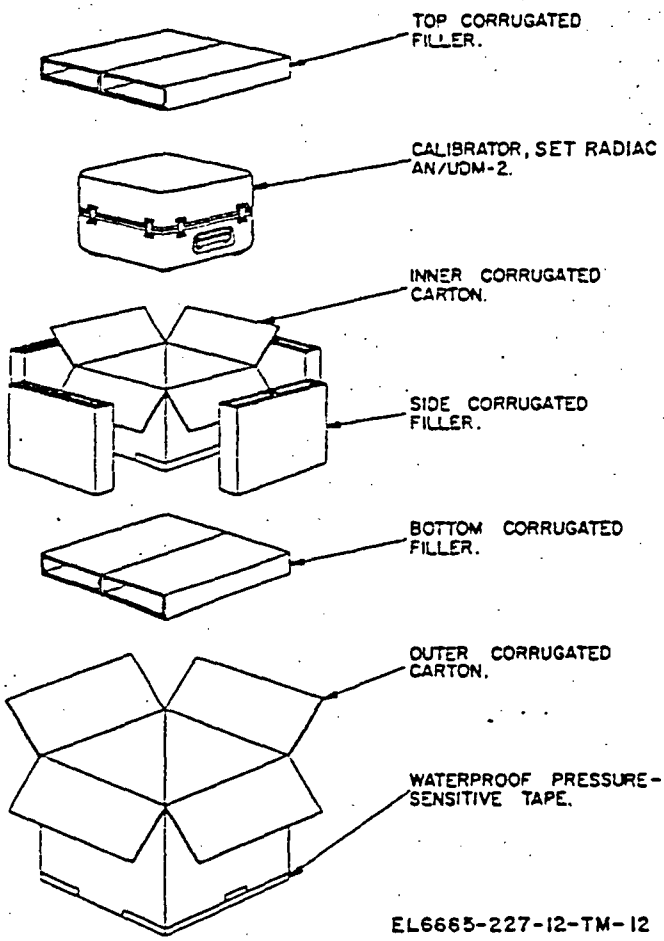

Figure 2-1. Calibrator Set, Radiac AN/UDM-2, typical packaging diagram.

b. Removing Contents. Unpack the equipment as follows:

(1) Remove the waterproof, pressure-sensitive tape from the top of the outer corrugated carton.

(2) Lift open the flaps and remove the top and side corrugated fillers.

(3) Remove the inner corrugated carton containing the AN/UDM-2.

(4) Remove the waterproof, pressure-sensitive tape from the top of the inner carton.

(5) Lift open the flaps and remove the AN/UDM-2.

(6) Turn the manual valve (fig. 1-3) counterclockwise to equalize the pressure.

2-2. Checking Unpacked Equipment

a. Inspect the equipment for damage incurred during shipment. If the equipment has been damaged, report the damage on DD Form 6 (para 1-3) and notify the Radiological Protection Officer (TB 11-6665-227-12).

b. Release the eight fasteners (fig. 1-1) and separate the two halves of the AN/UDM-2.

c. See that the equipment is complete as listed on the packing slip. If a packing slip is not available, check the equipment against the listing in table 1-1. Report all discrepancies in accordance with TM 38-750. Shortage of a minor assembly or part that does not affect proper functioning of the equipment should not prevent use of the equipment.

d. If the equipment has been used or reconditioned, see whether it has been changed by a modification work order (MWO). If the equipment has been modified, the MWO number will appear near the nomenclature plate. Check to see whether the MWO number (if any) and appropriate notations concerning the modification have been entered in this manual.

NOTE

Current MWO's applicable to this equipment (if any) are listed in DA Pam 310-7.

2-3. Preparation for Use

WARNING

Refer to paragraphs 1-11 and 3-1 for precautions pertaining to this equipment.

a. Release the shipping locks of both assemblies (figs. 1-2 and 1-3) by rotating the captive screws counterclockwise. The shipping locks are spring-loaded, will spring outward when fully unscrewed, and will release the latches.

b. On the discharge well assembly (fig. 1-2), check the functioning of the stopwatch (table 3-1).

c. Insert the key in the lock, release the lock, and rotate the swivel cover to expose the access hole. Release the cover; it shall move back into place and cover the access hole.

d. On the RATEMETER assembly (fig. 1-3), check to be sure that the spacer block is in place and that the drawer slides open.

e. Close the sliding drawer, insert the key in the lock, and release the lock. Check the operation of the shutter by rotating it.

NOTE

The sliding drawer must be closed *completely* before the shutter can be rotated.

CHAPTER 3
OPERATING INSTRUCTIONS

3-1. General

WARNING

Radioactive materials are used in this equipment. Read and understand all operational data and procedures in this chapter *before* using the equipment. Become thoroughly familiar with the contents of TB 11-6665-227-12. Never look directly into the access hole (fig. 1-2) when the swivel cover is swung open; do not poke sharp pointed objects into the access hole. This equipment will be used only under the direction of a Radiological Protection Officer.

Table 3-1 lists all controls and indicators used by the operator. In addition, this chapter contains the following:

a. Procedures for checking Radiacmeters IM-9E/PD, IM-93(*)/UD, and IM-147/PD (para 3-3).

b. The procedures for checking Radiacmeter IM-174(*)/PD (para 3-4).

c. The procedures for checking Radiac Set AN/PDR-27(*) (para 3-5).

d. The procedures for checking Radiac Set AN/PDR-60 (para 3-6).

e. The procedures for checking Aerial Radiac System AN/ADR-6 will be given in paragraph 3-7 when they become available.

3-2. Controls and Indicators

All operator controls and indicators are listed in table 3-1.

Table 3-1. List of Controls and Indicators

Control or indicator	Function
Calibrator, Radiac TS-3495/UDM-2 (fig. 1-2):	
Stem (stopwatch)	Stops, starts, and winds stopwatch. Positions seconds indicator to zero (60) and minutes indicator to zero (30) for reuse.
Second indicator (stopwatch)	Indicates elapsed time from 0 to 60 seconds.
Minute indicator (stopwatch)	Indicates elapsed time from 0 to 30 minutes.
Key	Unlocks swivel cover allowing it to be swung open.
Swivel cover (spring-loaded)	Allows dosimeter entry into access hole.
Calibrator, Radiac TS-3494/UDM-2 (fig. 1-3):	
Shutter	Rotated to select radiation fields of 10 rad/hr or 100 rad/hr.
Key	Unlocks shutter allowing it to be rotated.

3-3. Dosimeter Checking

To check an IM-9E/PD perform the procedures in *a* and *b* below. To check an IM-93(*)/UD or IM-147/PD perform the procedures in *a* and *c* below. Various dosimeters react differently when checked in the discharge well assembly. Table 3-2 lists the different types of dosimeters, their manufacturer, procurement number and year of manufacture, and the discharge well assembly position, total exposure or discharge time and the discharge readings. Refer to table 3-2 and discharge the dosimeter in the position shown for the period of time listed. Start the stopwatch immediately after the dosimeter is in its discharge position. For information pertaining to the operation of dosimeters, refer to TM 11-6665-214-10.

a. Precheck Procedures.

(1) Examine the dosimeter (and clean it if necessary) to insure that it will not carry mud or dirt into the access hole.

(2) Remove the DA Calibration Certification Label from the dosimeter.

(3) After examination, charge the dosimeter to a zero indication (TM 11-6665-214-10).

(4) Insert the key in the discharge well assembly lock and release the lock (fig. 1-2).

(5) Swing the swivel cover on the discharge well to one side enough to expose the access hole. Reset and wind the stopwatch, if necessary.

Table 3-2. Dosimeter Discharge Data

DOSIMETER	DISCHARGE POSITION	MANUFACTURER	PROCUREMENT ORDER RR	YEAR	TIME	DISCHARGE READING ±20%	DISCHARGE READING LIMITS ±20%
IM-93 0-600 RAD	LOWER	LANDSVERK	21505-P	56	5 MIN	300	240-360
	LOWER	BENDIX	30884-PP	57	5 MIN	405	324-486
	LOWER	BENDIX	4371-PP	60	5 MIN	70	56-84
	LOWER	BENDIX	15916-PP	63	5 MIN	60	48-72
	LOWER	LANDSVERK	4596-PP	61	5 MIN	40	32-48
	LOWER	LANDSVERK	15631-PP	62	5 MIN	40	32-48
	LOWER	LANDSVERK	DAAB05-68-C-0911	68	5 MIN	300	240-360
IM-147	LOWER	BENDIX	39159-PP	58	2 MIN	25	20-30
IM-147	LOWER	BENDIX	3439-PP	59	2 MIN	25	20-30
IM-147	LOWER	BENDIX	15861-PP-	62	2 MIN	25	20-30
IM-147	LOWER	LANDSVERK	DAAB05-68-C-0911	68	40 SEC	40	32-48
IM-9E 0-200 M RAD	UPPER	LANDSVERK	4913-PP	61	3 MIN	100	80-120
IM-9E	UPPER	BENDIX	15895-PP	63	2 MIN	100	80-120
IM-9E	UPPER	LANDSVERK	15580-PP	62	3 MIN	100	80-120
IM-9E	UPPER	LANDSVERK	DAAB05-67-C-1678	67	2 MIN	80	64-96
IM-9E	UPPER	LANDSVERK	DAAB05-69-C-0716	69	2 MIN	100	80-120
IM-9F	UPPER	LANDSVERK	C2537MFR 00910	68	5 MIN	80	64-96
CDV-138 0-200 M RAD	UPPER	BENDIX	NO INDICATION		2 MIN	100	80-120
CDV-742 0-200 RAD	LOWER	BENDIX	NO INDICATION		2 MIN	120	96-144
	LOWER	LANDSVERK	NO INDICATION		5 MIN	120	96-144

b. Checking IM-9E/PD.

NOTE

Do not press the dosimeter down to the lower level (where its top would be flush with the top surface of the well); the lower level will expose it to a stronger radiation field than is required and will discharge it *completely* in less than 2 seconds. If the dosimeter is accidently pressed down into the lower level, remove the dosimeter, recharge it, and re-expose the access hole.

(1) *Gently* insert the dosimeter, charging end down, until it rests on the spring-loaded dosimeter platform and approximately one third of it remains above the top surface of the well. Allow the spring-loaded swivel cover to rest *gently* against the protruding dosimeter.

(2) Start the stopwatch as soon as the dosimeter rests on the spring-loaded dosimeter platform.

(3) Allow the dosimeter to remain in the upper discharge level for exactly the time shown in table 3-2.

(4) Remove the dosimeter and check to see that the indication is within the allowable tolerances by referring to TABLE 3-2. If the indication is within the allowable tolerances, the dosimeter is usable.

c. Checking IM-93(*)/UD or IM-147/PD.

(1) *Gently* insert the dosimeter, charging end down, into the access hole and press it down into the lower level until the top of the dosimeter is flush with the top of the well. Allow the spring-loaded swivel cover to swing *gently* over the dosimeter.

(2) Start the stopwatch as soon as the dosimeter reaches the lower level.

(3) Allow the dosimeter to remain in the lower discharge level for exactly the time shown in table 3-2.

(4) At the end of the discharge time, swing the swivel cover aside; the dosimeter will rise up, automatically cutting off the discharge field in the lower level.

NOTE

The field in the upper level will have no effect on the IM-147/PD or the IM-93(*)/UD.

(5) Remove the dosimeter and check to see that its indication falls within the allowable tolerances by referring to TABLE 3-2. If the indication is within the allowable tolerances, the dosimeter is usable. If the indication is not within the allowable tolerances, turn the dosimeters in for higher category of maintenance.

(Next printed page is 3-6)

DELETED

3-4. Checking Radiacmeter IM-174(*)/PD

Check the radiacmeter (fig. 3-1) as follows:

a. On the radiacmeter (TM 11-6665-213-12 (IM-174/PD) or TM 11-6665-232-12 (IM-174A/PD)), remove the bottom cover plate by releasing the four screws and remove the ionization chamber.

b. On the RATEMETER assembly, pull out the sliding drawer of the drawer unit, remove the spacer block, and insert the ionization chamber.

NOTE

Make sure the ionization chamber is firmly seated in the sliding drawer.

On the IM-174/PD only, using clip leads, ground the outside of the ionization chamber to the radiacmeter case.

c. Energize, zero adjust, and calibrate the radiacmeter (TM 11-6665-213-12 or TM 11-6665-232-12). Allow a 2-minute warmup period; if time permits, allow 20 minutes.

d. On the RATEMETER assembly (fig. 3-1), close the sliding drawer, insert the key in the lock, and unlock the shutter.

e. Rotate the shutter to the 100 rad/hr position.

(1) *IM-174/PD.* If the IM-174/PD meter indication is 147 ±30, proceed to *h* below; if not, proceed to *f* below.

(2) *IM-174A/PD.* If the IM-174A/PD meter indication is 100 ±20, proceed to *h* below; if not, proceed to *g* below.

CAUTION

On the IM-174/PD, never remove the left-hand calibration control.

f. On the IM-174/PD, remove the right-hand calibration control over cap, and adjust the calibration control for a 147 ±30 meter indication; replace the cover cap.

g. On the IM-174A/PD, remove the calibration control cover cap, and adjust the calibration control for a 100 ±20 meter indication. replace the cover cap.

h. On the RATEMETER assembly, rotate the shutter to the 10 rad/hr position.

(1) If the IM-174/PD meter indication is 14.5 ±3.5 proceed to *k* below; if not, proceed to *i* below.

(2) If the IM-174/PD meter indication is 10 ±2, proceed to *k* below; if not, proceed to *j* below.

i. On the IM-174/PD, remove the right-hand calibration control cover cap, and readjust the calibration control for a 14.5 ± 3.5 meter indication,

then recheck the reading in the 100 rad/hr shutter position (step e , above), if still within the limits, replace cover cap. If the meter reading in the 100 rad/ hr position is out of limits (e above), readjust calibration control at the 10 rad/hr and the 100 rad/hr shutter positions, switching back and forth, until the readings are within the limits stated and replace the cover cap.

j. On the IM-174A/PD, remove the calibration control cover cap and readjust the calibration control for a 10 ± 2 meter indication,

then recheck the reading in the 100 rad/hr shutter position (step e, above), if still within limits, replace cover cap. If the meter reading is out of limits (e above), readjust calibration control at the 10 rad/hr and the 100 rad/hr shutter positions, switching back and forth, until the readings are within the limits stated and replace the cover cap.

NOTE

If any of the meter indications listed in *e* through *j* above could not be obtained, turn in the equipment under test for repair to the next higher category of maintenance.

k. On the RATEMETER assembly, rotate the shutter to the closed (off) position and lock the shutter.

l. Open the sliding drawer, remove the ionization chamber, and replace the space block.

m. Deenergize the radiacmeter and replace the ionization chamber in the radiacmeter.

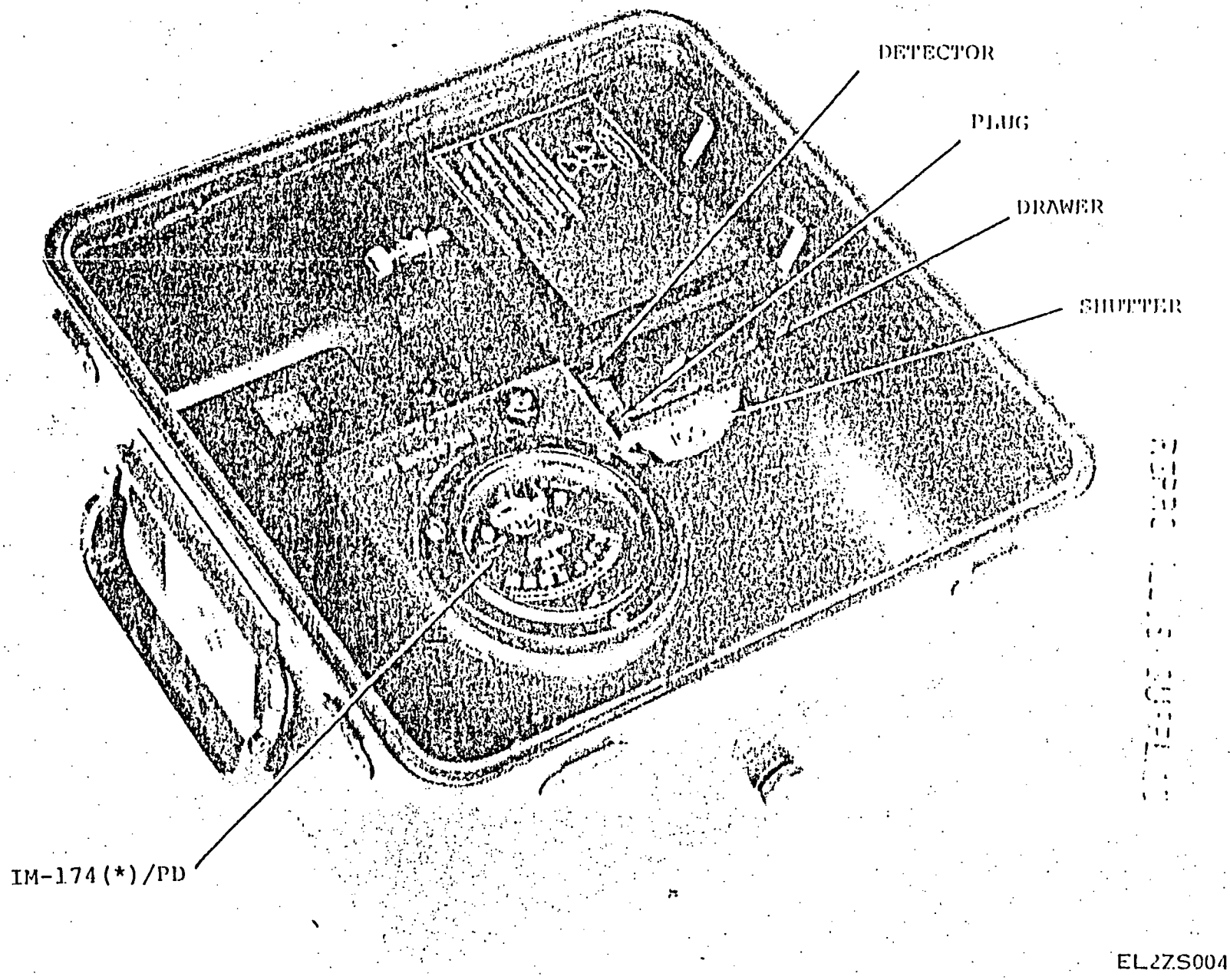

Figure 3-1. Checking radiacmeter IM-174(*)/PD.

3-5. Checking Radiac Set AN/PDR-27(*)

There is a phenomenon known to most users of equipment for detecting radioactive emanations called *statistics*. The word in this context refers to the erratic movement of the meter needle of an indicating radiacmeter or radiac set. This effect will be noticeable on all range indications of Radiac Set AN/PDR-27(*), being more pronounced on the lower ranges. This effect is the result of the beta particles emanating from the Sr-Y90 in a random fashion and thus the counting at the probe also varies in a random fashion. When the operator is observing meter indications under conditions where this *statistical* variation is present, watch the meter needle for a minimum period of 1 minute and note the highest and lowest values obtained during that period. The average of the highest and lowest values during that period will be the field strength measurement. The *normal* indications given in the following procedure are the average of the high and low values noted. Check the radiac set as follows:

CAUTION

Be careful not to damage the short piece of cable that joins the two probes.

a. On the AN/PDR-27(*), remove the two screws on the double-probe lips and separate the two probes. Set the range switch to the 500 mrad/hr position. Allow an appropriate amount of time for the model being tested to stabilize. (Refer to applicable manual listed in app A.)

b. On the RATEMETER assembly (fig. 1-3), release the shipping lock, pull out the drawer, and place the spacer block in the drawer.

c. Close the drawer; insert the smaller probe into the handle end of the drawer (fig. 3-2) and rotate the shutter to the 100 position.

d. Rotate the small AN/PDR-27(*) probe to achieve maximum and minimum meter indications; record the indications.

e. The average indication should be 200 ± 60 mr/hr. If the average indication is correct, proceed to *f* below; if not, proceed to *j* below.

f. Rotate the shutter to the off (or closed) position, remove the small probe, and open the drawer.

g. Remove the spacer block from the drawer. Install the spacer block on the handle and close the drawer. Install the small probe in the block (fig. 3-3).

h. On the RATEMETER assembly, rotate the shutter to the 100 position.

i. On the AN/PDR-27(*), set the range switch to the 50 mrad/hr position. The meter indication should be 30 ±9 mrad/hr. If the meter indication is correct, proceed to *k* below; if not proceed to *j* below.

j. On the AN/PDR-27(*), remove the calibration cover and adjust the appropriate calibration control (refer to applicable manual, app A). Repeat the procedures given in *b* through *i* above until the correct meter indications are obtained for both range positions, and then proceed to *k* below.

k. On the RATEMETER assembly, rotate the shutter to the off or closed position. Remove the small probe and spacer block from the drawer. Position the large probe to lie across the semicircular cutouts on the edges of the drawer with the drawer opened to its fullest extremity (fig. 3-4).

l. Leave the source shutter closed. On the AN/PDR-27(*), set the range switch to the 5 mrad/hr position. The meter indication should be 3.2 ±1.0 mrad/hr. If the indication is correct, proceed to *m* below; if not, proceed to *o* below.

m. Position the large probe on the upper edge of the handle side of the RATEMETER assembly case (fig. 3-5).

n. Leave the source shutter closed. On the AN/PDR-27(*), set the range switch to the 0.5 mrad/hr position. The meter indication should be 0.30 ±0.09 mrad/hr. If the indication is correct, proceed to *p* below; if not, proceed to *o* below.

o. On the AN/PDR-27(*), remove the calibration cover and adjust the appropriate calibration control (refer to applicable manual, app A) to obtain the correct meter indication. Repeat the procedures given in *k* through *n* above until the correct meter indications are obtained for both range positions, and then proceed to *p* below.

p. Deenergize the AN/PDR-27(*) and fasten the two probes together.

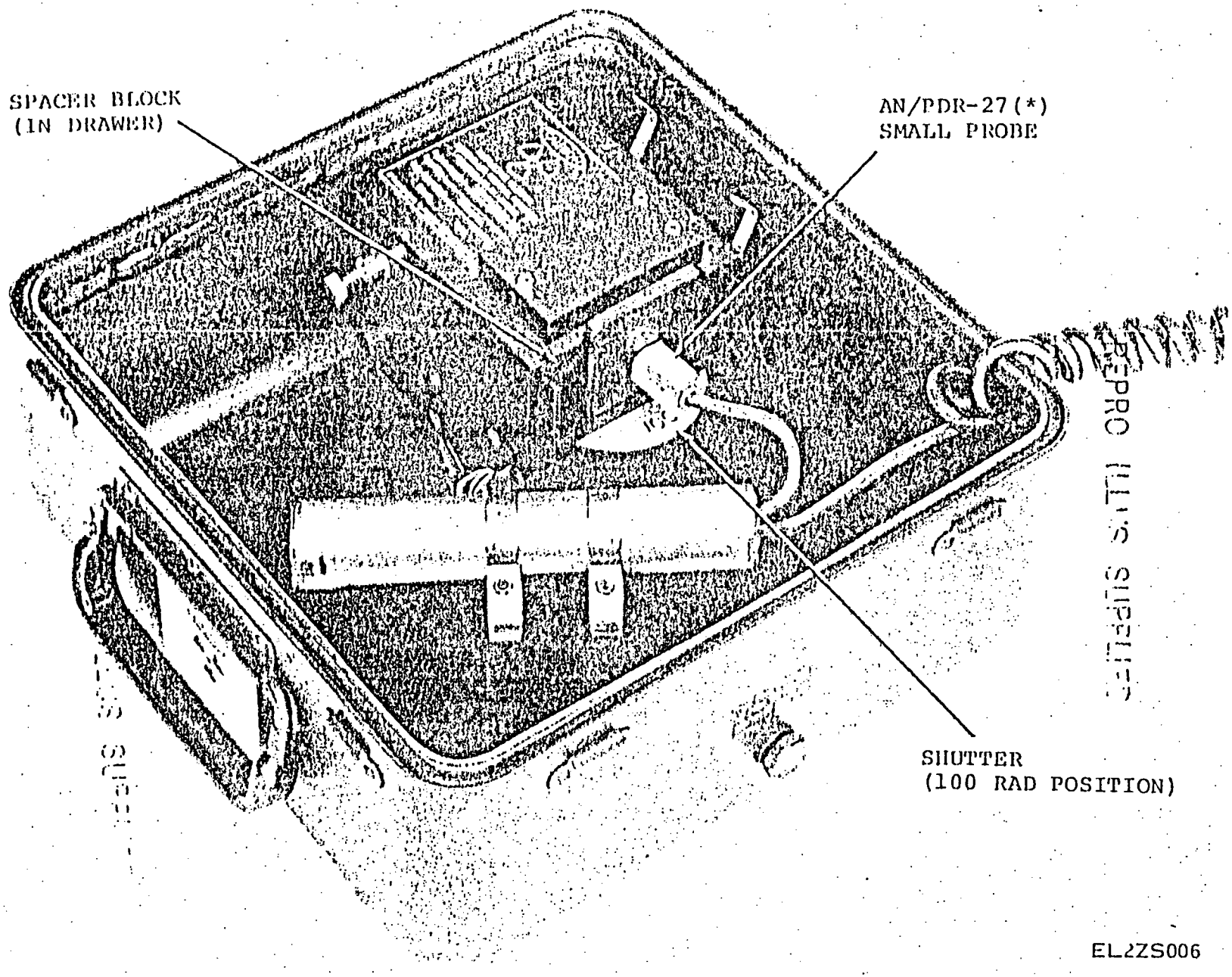

Figure 3-2. Checking AN/PDR-27(*) on 500 mrad/hr range.

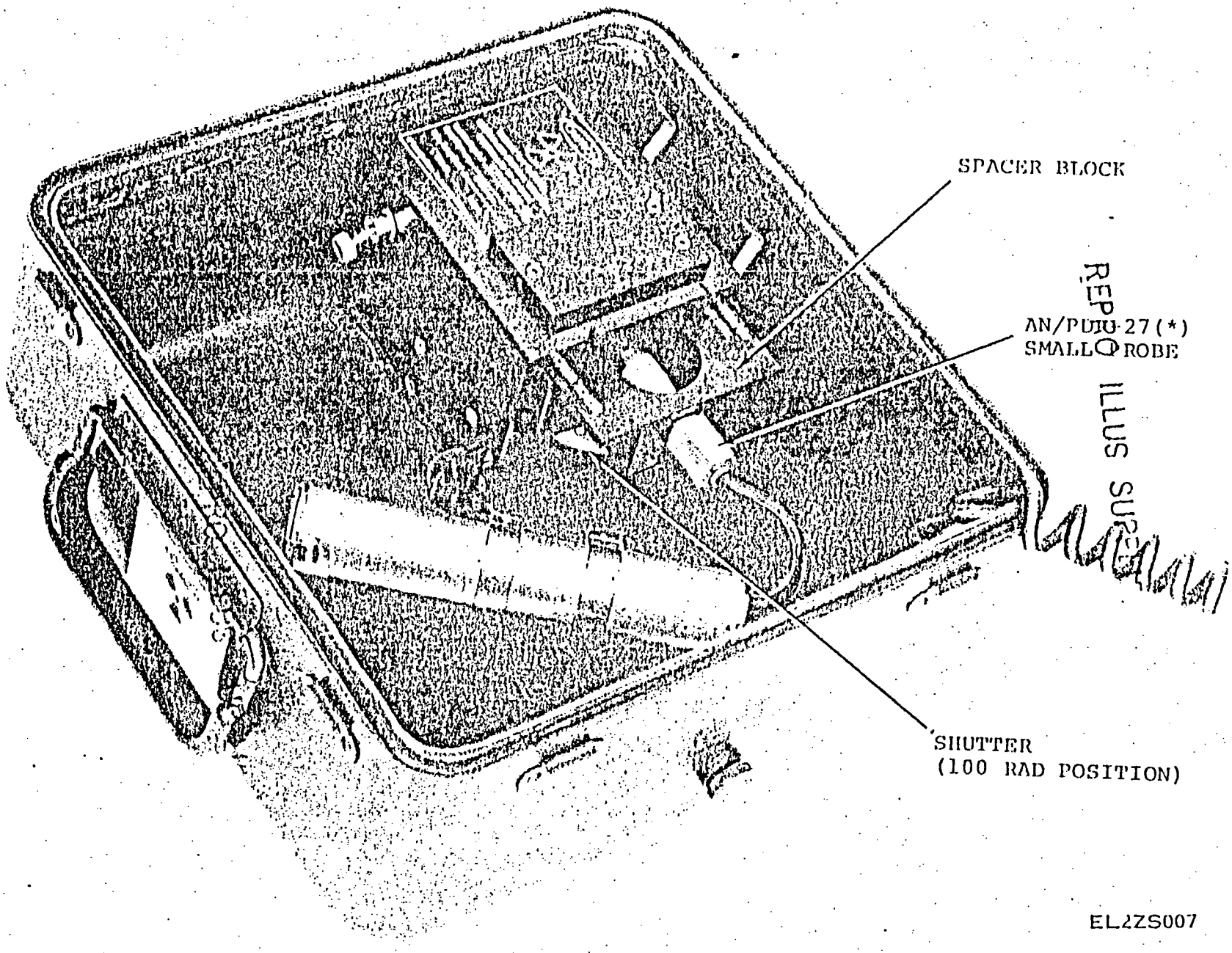

REP
ILLUS SUB

Figure 3-3. Checking AN/PDR-27(*) on 50 mrad/hr range.

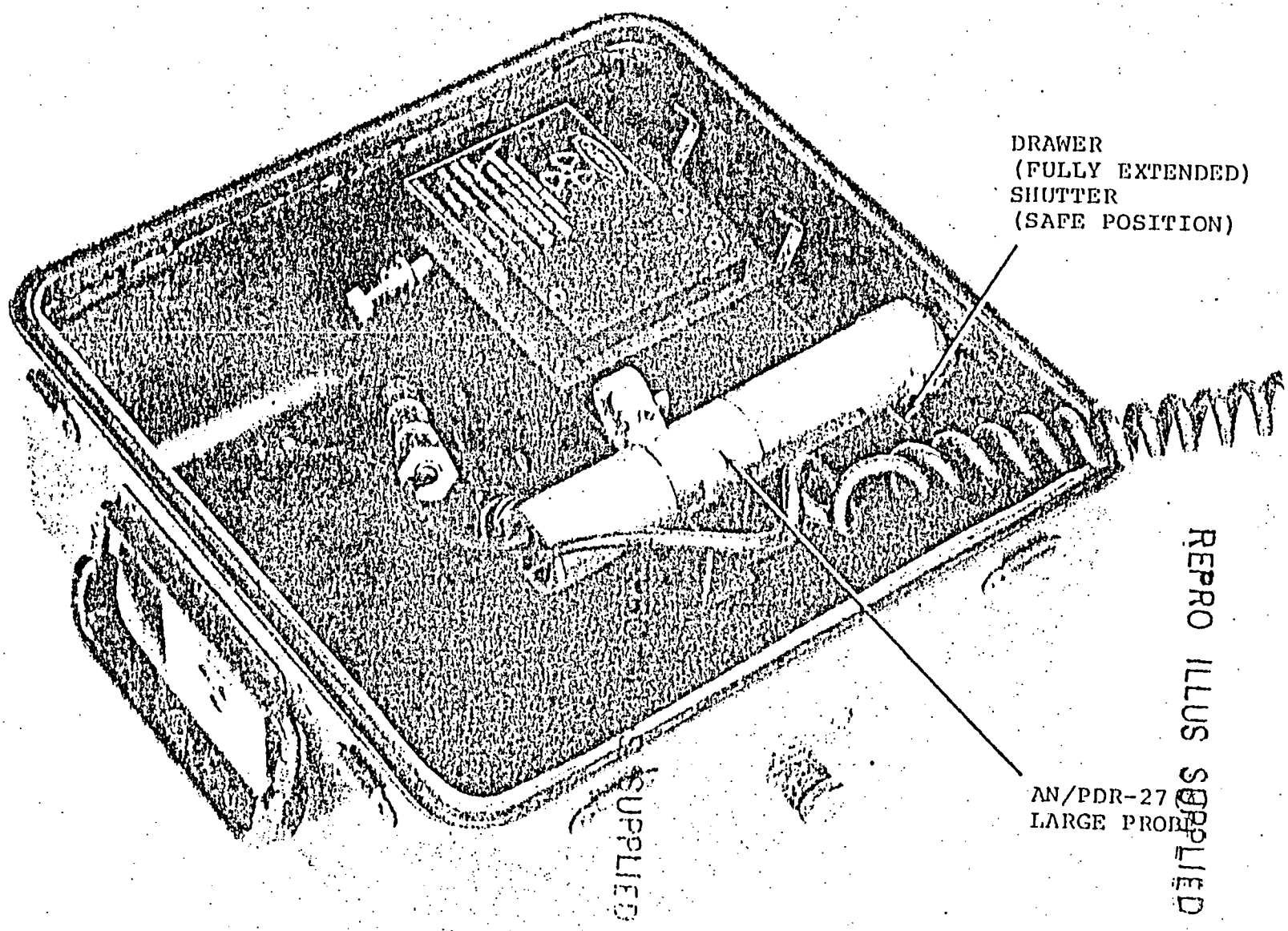

EL2ZS008

Figure 3-4. Checking AN/PDR-27(*) on 5 mrad/hr range.

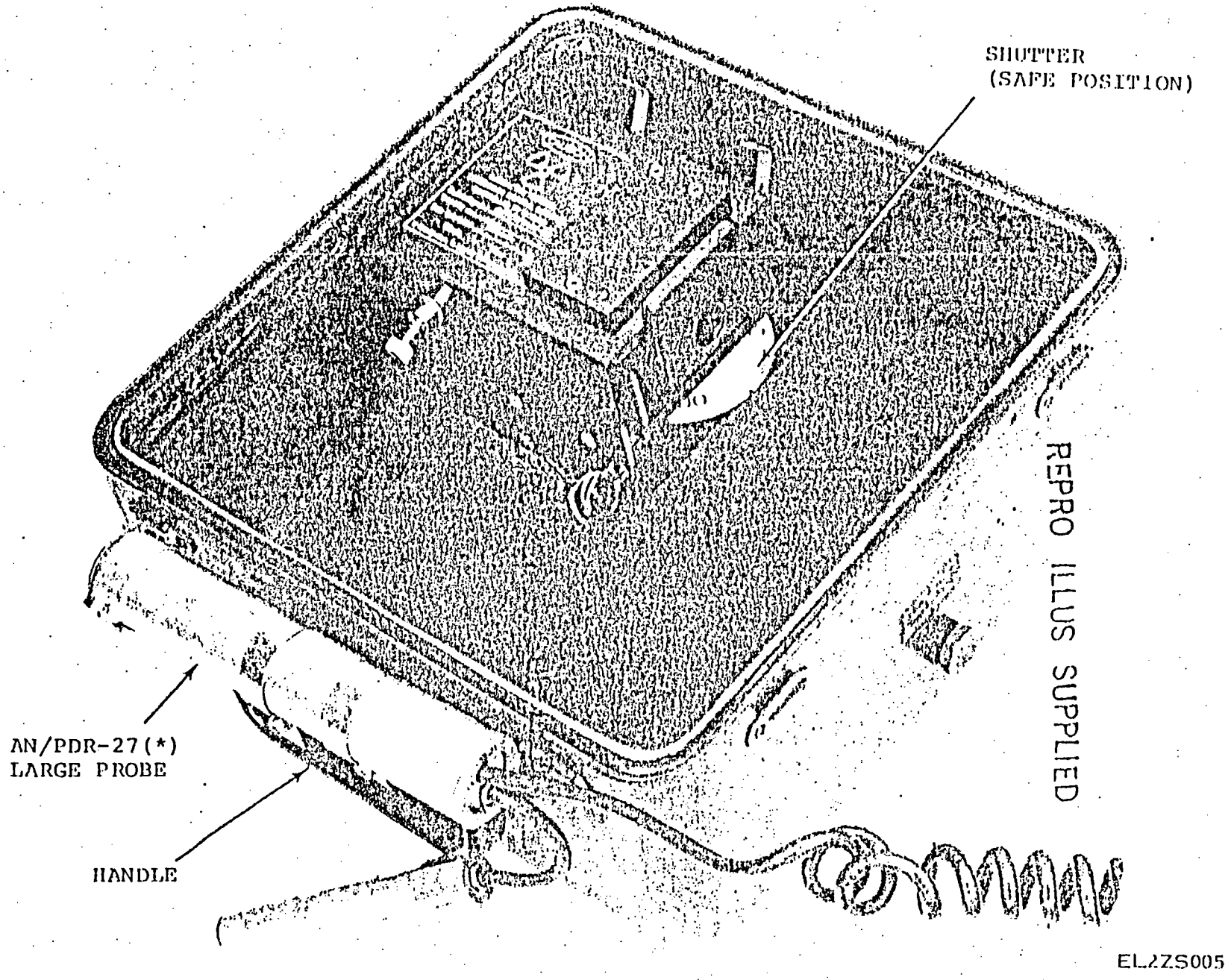

Figure 3-5. Checking AN/PDR-27(*) on 0.5 mrad/hr range.

3-6. Checking Radiac Set AN/PDR-60

NOTE

The explanation of the phenomenon known as *statistics* (para 3-5) applies to the AN/PDR-60 as well as to the AN/PDR-27(*).

WARNING

Be sure the AN/PDR-60 is turned off. Allow at least 15 seconds for the high-voltage power supply to discharge.

a. Remove the electronic chassis from the case assembly by releasing the latch at each end (TM 11-6665-221-15).

b. Remove the Geiger-Mueller tube (GM tube) from the AN/PDR-60 electronic chassis by carefully lifting it out of the clip; remove the GM tube cap.

c. Unscrew the aluminum sleeve (fig. 1-1) and place the GM tube in the clips (not shown) in the long end of the AN/PDR-60 adapter probe.

d. Position the GM tube so that the cap end is placed nearest the hexagonal retainer nut on the adapter probe; the other clip of the adapter probe should fit into the recessed area of the metal contact on the GM tube.

e. Slide the aluminum sleeve of the adapter probe over the GM tube and screw it into the hexagonal retainer nut until it is fingertight.

f. Place the dummy tube (at the other end of the adapter probe cable) into the AN/PDR-60 electronic chassis so that it duplicates the normal position of the GM tube; place the GM tube cap on the dummy tube.

g. On the RATEMETER assembly (fig. 1-3), release the shipping lock, pull out the drawer, and place the spacer block in the drawer; close the drawer.

h. Rotate the shutter of the RATEMETER assembly to the off position and insert the loaded adapter probe (*d* and *e* above) into the hole in the drawer until the hexagonal retainer nut is flush against the drawer face.

i. On the AN/PDR-60 electronic chassis, set the power and scale switch to 2*r* and the external detector switch to AC-3 (TM 11-6665-221-15).

NOTE

Allow at least 30 seconds for the AN/PDR-60 to warm up.

j. Rotate the adapter probe in the drawer; at some place in the rotation, the AN/PDR-60 meter pointer shall provide an upscale deflection (kick) of at least one scale division (0.1 rad/hr).

k. Rotate the shutter of the RATEMETER assembly to the 100 position and again rotate the adapter probe in the drawer; the AN/PDR-60 meter pointer shall provide indications between 0.5 rad/hr through 1/75 rad/hr (or, almost across the entire scale).

l. Rotate the shutter of the RATEMETER assembly to the off position, shut down the AN/PDR-60 electronic chassis (TM 11-6665-221-15), and reverse the procedures in *a* through *f* above.

3-7. Checking Aerial Radiac System AN/ADR-6

Data is currently not available; to be supplied at a later date.

☆ U.S. GOVERNMENT PRINTING OFFICE: 1976-765010/75

CHAPTER 4

MAINTENANCE INSTRUCTIONS

4-1. Scope of Maintenance

The maintenance duties assigned to the operator and organizational repairman of the AN/UDM-2 are listed below together with a reference to the paragraphs covering the specific maintenance function. The AN/UDM-2, when the two halves are sealed, is waterproof. The swivel cover on the discharge well assembly restricts entry of foreign matter to the access hole, but is not waterproof. This cover may be removed to clean the pivot pin assembly when required.

WARNING

NEVER disassemble the cavities of the discharge well assembly or the ratemeter assembly. This procedure is dangerous and must be performed only by higher category maintenance personnel with adequate facilities meeting all requirements of TB 11-6665-227-12.

a. Operator preventive maintenance checks and services (table 4-1).

b. Organizational preventive maintenance checks and services (table 4-2).

c. Cleaning and touchup painting (para 4-5).

d. Troubleshooting (para 4-6).

e. Wipe test (TB 11-6665-227-12).

4-2. Tools and Equipment Required

No special tools or test equipment other than those listed in appendix C are required. The materials required for maintenance are listed below.

a. Trichlorethane (NSN 6810-00-664-0273).

b. Cleaning cloth (NSN 8305-00-245-4509).

c. Cotton swabs (NSN 6515-00-303-8250).

d. Sandpaper (No. 000).

e. Petroleum jelly or light machine oil.

4-3. Preventive Maintenance

To insure that the AN/UDM-2 is always ready for operation, it must be inspected systematically so that defects may be discovered and corrected before they result in serious damage or failure. The necessary preventive maintenance checks and services to be performed are listed and described in tables 4-1, 4-2, and 4-3. The item numbers in each table indicate the sequence of and the minimum inspection required. Defects discovered during operation of the unit will be noted (TB 11-6665-227-12) for future correction to be made as soon as operation has ceased. Stop operation immediately if a deficiency is noted during operation which would damage the equipment or harm personnel. Record all deficiencies together with the corrective action taken in accordance with the requirements of TB 11-6665-227-12 and TM 38-750.

4-4. Preventive Maintenance Checks and Services (PMCS)

a. General. Before performing PMCS, note the following:

(1) Before you operate. Always keep in mind the CAUTIONS and WARNINGS. Perform your before (B) PMCS.

(2) While you operate. Always keep in mind the CAUTIONS and WARNINGS. Perform your during (D) PMCS.

(3) After you operate. Be sure to perform your after (A) PMCS.

b. Item Number Column. Use the number in this column for the TM number column on DA Form 2404, Equipment Inspection and Maintenance Worksheet, when recording results of PMCS.

c. Interval Column. A dot (•) in the column indicates when the check is to be made.

d. For Readiness Reporting, Equipment Is Not Ready/Available If: Column. This column contains the standards which will cause the equipment to be reported not ready or not available because it cannot perform its primary mission.

Table 4-1. Operator/Crew PMCS

NOTE: Within the designated interval, the checks are to be performed in the order listed in the chart below.

B-Before A-After

D-During W-Weekly

Item No.	Interval B	Interval D	Interval A	Interval W	Item to be inspected	Procedures	For readiness Reporting Equipmnet is Not Ready/Available if:
1	•	•			Equipment	a. See that the units are clean and dry; free of grease, dirt, rust, corrosion, and fungus. b. See that painted surfaces are free of bare spots, rust, and corrosion. c. Inspect handles and fastenersfor looseness. Tighten as necessary.	
2	•	•		•	Ratemeter Assembly	a. Check that the sliding drawer opens smoothly without binding. b. Check that the shutter does not bind when rotated.	Drawer does not open. Shutter willnot rotate.

Table 4-1. Operator/Crew PMCS (continued)

3.	•	•		•	Discharge well assembly	a. Check to make sure swivel cover does not bind. b. Check stop watch operation.	Cover does not rotate to uncover discharge well. Stop watch does not operate properly.

Table 4-2. Organizational PMCS Monthly Schedule

Item No.	Item To Be Inspected	Procedures
1	Publications	See that publications are complete and current (App A and DA Pam 310-4).
2	Modifications	Check to determine if new applicable MWO's have been published (DA Pam 310-7 and TM 38-750). All URGENT MWO's must be applied immediately; NORMAL MWO's must be scheduled.
3	Gaskets	Inspect waterproof gaskets for signs of leakage, worn, or loose edges.
4	Hardware	Check for loose or missing hardware.
5	Leak Testing Procedure	Perform leak test (wipe test) at the discretion of the Radiological Protection Officer (RPO), but at least once every 6 months (TB 11-6665-227-12).

Table 4-2. Organizational PMCS Monthly Schedule (continued)

WARNING

Do not look directly into the access hole.

Serious eye damage may result.

6	Discharge Well Assembly	Insert a cotton swab in to the access hole and remove any dirt, dust, or grease. Dispose of cotton swab in accordance with AR 755-15.

4-5. Cleaning and Touchup Painting Instructions

WARNING

During cleaning and painting be sure to observe all radioactive hazard precautions (para 1-11 and 3-1).

a. Cleaning.

(1) Remove dust, moisture, and loose dirt with a clean dry cloth.

WARNING

The fumes of trichloroethane are toxic. Provide thorough ventilation whenever used. DO NOT use near an open flame. Trichloroethane is not flammable, but exposure of the fumes to an open flames converts the fumes to highly toxic, dangerous gases.

(2) Remove fungus and ground-in dirt with a cloth dampened (not wet) with cleaning compound; dry thoroughly.

CAUTION

Do not press on the face of the stopwatch; the stopwatch may become damaged.

(3) Clean the face of the stopwatch with a soft clean cloth. If the dirt is difficult to remove, dampen (do not wet) the cloth with water; if necessary, use a mild soap.

(4) If the pivot of the swivel cover becomes stiff or binds, clean the pivot and relubricate the pivot with a very small amount of light lubricating oil or petroleum jelly.

b. Touchup Painting.

(1) Remove rust and corrosion from metal surfaces by lightly sanding them with fine sandpaper.

(2) Brush two thin coats of paint on the bare metal to protect it from further corrosion.

(3) Refer to the applicable cleaning and refinishing practices specified in SB 11-573 and TB 746-10.

4-6. Troubleshooting

Troubleshooting of this equipment is based upon the checks contained in the preventive maintenance checks and services tables. To troubleshoot the equipment, perform all functions starting with sequence number 3 in the daily preventive maintenance checks and services (table 4-1) and proceed through the remaining sequence numbers

(tables 4-1 and 4-2) until an abnormal condition or result is observed. Perform the checks and corrective measures indicated in the troubleshooting procedures (table 4-3). If the corrective measures do not result in correction of the trouble, higher category maintenance is required.

Table 4-3. Troubleshooting AN/UDM-2

Item No.	*Trouble symptom*	*Probable trouble*	*Corrective measures*
1	Swivel cover binds	Dirty or corroded pivot bearing.	Disassemble swivel cover only. Clean and relubricate pivot bearing (para 4-5a).
2	Stopwatch nonoperative	Run-down or defective	Rewind and recheck stopwatch.

NOTE TO USARPA

Inclosed is Form NRC-3 mounted and flapped for repro. Please have the printer include 3 copies of this form in the back of the change as a perforated tear out.

THIS DOCUMENT HAS BEEN PURCHASED BY THE GOVERNMENT AND MAY BE REPRODUCED AND USED IN CONNECTION WITH ANY GOVERNMENT PROCUREMENT OR MAINTENANCE OPERATION.

NOTE: DATA MARKED WITH AN ASTERISK (*) IS PECULIAR TO A PRIOR MANUFACTURER. IT DOES NOT TAKE PRECEDENCE OVER ANY OTHER DATA ON THIS DRAWING, AND IS NOT CONTRACTUALLY BINDING ON EITHER THE CONTRACTOR OR THE GOVERNMENT.

REVISIONS

LTR	DESCRIPTION	DATE	APPROVED
A	REVISED NOTES 1 TO 3. ADDED NOTES 4 TO 8, PT. NO. TAB BLOCK & SOURCE NOTE.	11 APR 73	IRR001 ER-1-SF
B	REVISED PER ECP IRR002 NOR #3	22MAR 78	ER-1 DL 14 MAR 78

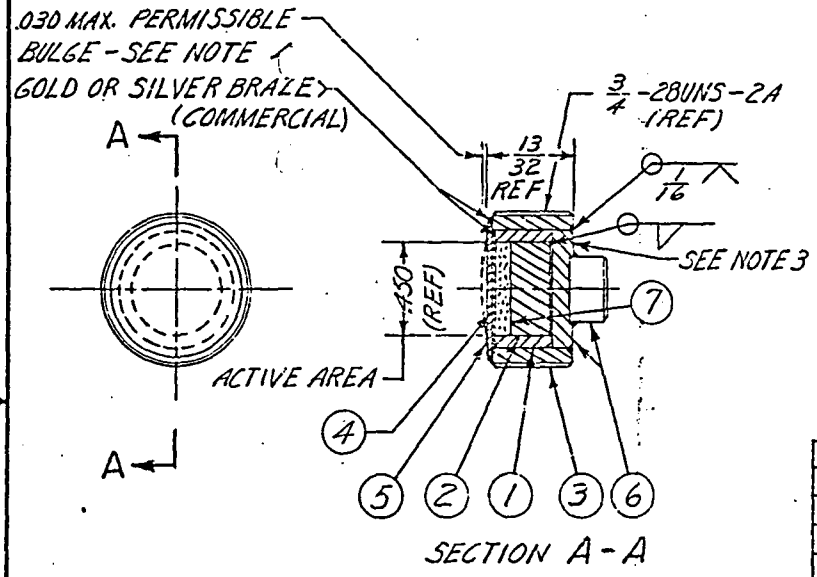

SECTION A-A

REQUIREMENTS

(A)

1. THIS ASSY SHALL MEET SPECIAL FORM MATERIAL TEST REQUIREMENTS OF CODE OF FEDERAL REGULATIONS TITLE #49.
2. WHEN INSTALLED IN AN/UDM-21( ) RADIAC CALIBRATOR THIS ASSY SHALL MEET ALL THE TEST REQUIRMENTS OF SPEC MIL-R-55350
3. BACK SURFACE TO BE PAINTED YELLOW (COMMERCIAL) FOR IDENTIFICATION
4. AIR PRESSURE BUILD UP DURING ASSY PROCEDURES MAY PRODUCE BULGING OF EITHER OR BOTH OF ITEMS 4 OR 5. ACCEPTABLE BULGING IS AS NOTED.
5. ONLY THE ITEM DESCRIBED ON THIS DRAWING WHEN PROCURED FROM THE VENDOR LISTED HEREON IS APPROVED BY HDQTRS CS & TA LABS (ERADCOM), FT. MONMOUTH, N.J. 07703 FOR USE IN THE APPLICATION SPECIFIED HEREON. A SUBSTITUTE ITEM SHALL NOT BE USED WITHOUT PRIOR TESTING & APPROVAL BY HDQTRS CS & TA LABS. PRIOR TO SUBMISSION FOR HDQTRS, CS & TA LABS APPROVAL, THE SUBSTITUTE ITEM SHALL MEET NOTES 1 TO 4 REQTS
6. THIS ASSY SHALL CONTAIN A NOMINAL ACTIVITY OF 20 MICROCURIES OF STRONTIUM-90.

(A) SOURCE CONTROL DRAWING

FIND NO.	QTY REQD	CODE IDENT.	PART NO. OR IDENTIFYING NO.	NOMENCLATURE OR DESCRIPTION	SPECIFICATION	NOTE
7	A/R	80063	SM-B-509048-1	MATERIAL, RADIOACTIVE		6
6	1	80063	SM-B-509054	PLUG ASSEMBLY		
5	1	80063	SM-B-509053	WINDOW, OUTER		
4	1	80063	SM-B-509052	WINDOW, INNER		
3	1	80063	SM-B-509051	CAPSULE, OUTER		
2	1	80063	SM-B-509050	PLUG		
1	1	80063	SM-B-509049	CAPSULE, INNER		

PARTS LIST

(A) APPROVED SOURCES

	MFG. PART NO.	SOURCE
1	3 F16	3M CO. ST. PAUL MINN. 55105
2	EBS-414	GAMMA INDUSTRIES, INC. HOUSTON, TEXAS, 77034
3	SM-B-509048	GULF NUCLEAR, INC. (FORMERLY NUCLEAR ENVIR. ENGRG, INC) HOUSTON, TEXAS, 77058

NEXT ASSY	USED ON
SM-D-508975	DL-508365

APPLICATION

UNLESS OTHERWISE SPECIFIED
DIMENSIONS ARE IN INCHES
TOLERANCES ON:
FRACTIONS ____ DECIMALS ____ ANGLES ____

MATERIAL: ____

DA-28-043-AMC-02402E

DRAWN C. HARRIS
CHECKED
ELECTRONICS COMMAND
REVIEWED ER-1 SMF
APPROVED ER-1 SMF
DATE 24 FEB 69

DEPARTMENT OF DEFENSE
U. S. ARMY ELECTRONICS COMMAND
FORT MONMOUTH NEW JERSEY 07703

SOURCE ASSEMBLY

SIZE B | CODE IDENT NO. 80063 | SM-B-509048

SCALE 2:1 | SHEET

AMSEL FORM 10498 1 APR 73 HISA-FM 558-73

WHEN REFERRING TO THIS DRAWING STATE DRAWING NO., APPLICABLE ISSUE LETTER IF ANY, AND DATE

THIS DOCUMENT HAS BEEN PURCHASED BY THE GOVERNMENT AND MAY BE REPRODUCED AND USED IN CONNECTION WITH ANY GOVERNMENT PROCUREMENT OR MAINTENANCE OPERATION.

NOTE: DATA MARKED WITH AN ASTERISK (*) IS PECULIAR TO A PRIOR MANUFACTURER. IT DOES NOT TAKE PRECEDENCE OVER ANY OTHER DATA ON THIS DRAWING, AND IS NOT CONTRACTUALLY BINDING ON EITHER THE CONTRACTOR OR THE GOVERNMENT.

REVISIONS			
LTR	DESCRIPTION	DATE	APPROVED
A	REVISED NOTES 1 TO 3. ADDED NOTES 4 TO 8. PT. NO. TAB. BLOCK & SOURCE NOTE.	11 APR 73	IRR001 ER-1-SF
B	REVISED PER ECP IRR002 NOR #3	22 MAR 78	ER-1 DL 14 APR 78

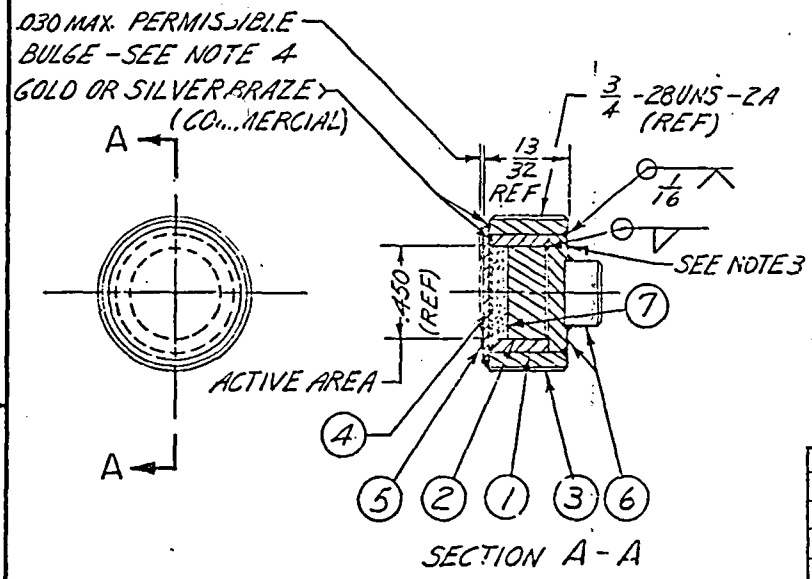

SECTION A-A

REQUIREMENTS (A)

1. THIS ASSY SHALL MEET SPECIAL FORM MATERIAL TEST REQUIREMENTS OF CODE OF FEDERAL REGULATIONS TITLE #49.
2. WHEN INSTALLED IN AN/UDM-21( ) RADIAC CALIBRATOR, THIS ASSY SHALL MEET ALL THE TEST REQUIREMENTS OF SPEC MIL-[illegible]-55350.
3. BACK SURFACE TO BE PAINTED RED (COMMERCIAL) FOR IDENTIFICATION.
4. AIR PRESSURE BUILD UP DURING ASSY PROCEDURES MAY PRODUCE BULGING OF EITHER OR BOTH OF ITEMS 4 OR 5. ACCEPTABLE BULGING IS AS NOTED.
5. ONLY THE ITEM DESCRIBED ON THIS DRAWING WHEN PROCURED FROM THE VENDOR LISTED HEREON IS APPROVED BY HQDTRS, CS&TA LABS (ERADCOM), FT. MONMOUTH, N.J. 07703 FOR USE IN THE APPLICATION SPECIFIED HEREON. A SUBSTITUTE ITEM SHALL NOT BE USED WITHOUT PRIOR TESTING & APPROVAL BY HQDTRS CS&TA LABS. PRIOR TO SUBMISSION FOR HQDTRS CS&TA LABS APPROVAL, THE SUBSTITUTE ITEM SHALL MEET NOTES 1 TO 4 REQTS.
6. THIS ASSY SHALL CONTAIN A NOMINAL ACTIVITY OF 25 MILLICURIES OF STRONTIUM-90.

(A) SOURCE CONTROL DRAWING

FIND NO.	QTY REQD	CODE IDENT.	PART NO. OR IDENTIFYING NO.	NOMENCLATURE OR DESCRIPTION	SPECIFICATION	NOTE
7	A/R	80063	SM-B-509057-1	MATERIAL, RADIOACTIVE		6
6	1	80063	SM-B-509054	PLUG ASSEMBLY		
5	1	80063	SM-B-509053	WINDOW, OUTER		
4	1	80063	SM-B-509052	WINDOW, INNER		
3	1	80063	SM-B-509051	CAPSULE, OUTER		
2	1	80063	SM-B-509050	PLUG		
1	1	80063	SM-B-509049	CAPSULE, INNER		

PARTS LIST

(A) APPROVED SOURCES

	MFG. PART NO.	SOURCE
1	3 F16	3M CO. ST. PAUL MINN. 55105
2	EBS-413	GAMMA INDUSTRIES, INC HOUSTON, TEXAS 77034
3	SM-B-509057	GULF NUCLEAR, INC. (FORMERLY NUCLEAR ENVIR. ENGRG, INC.) HOUSTON, TEXAS, 77056

NEXT ASSY	USED ON
SM-D-508994	
SM-B-508981	DL-508965

APPLICATION

UNLESS OTHERWISE SPECIFIED
DIMENSIONS ARE IN INCHES
TOLERANCES ON:
FRACTIONS — DECIMALS — ANGLES —

MATERIAL: —

DA-28-043-AMC-02402E

DRAWN C. HARRIS

CHECKED

ELECTRONICS COMMAND

REVIEWED ER-1 SMF

APPROVED ER-1 SMF

DATE 2 MAR 69

DEPARTMENT OF DEFENSE
U. S. ARMY ELECTRONICS COMMAND
FORT MONMOUTH NEW JERSEY 07703

SOURCE ASSEMBLY

SIZE	CODE IDENT NO.	
B	80063	SM-B-509057

SCALE 2/1 SHEET —

AMSEL FORM 10498 1 APR 73 HISA-FM 558-73

WHEN REFERRING TO THIS DRAWING STATE DRAWING NO., APPLICABLE ISSUE LETTER IF ANY, AND DATE

THIS DOCUMENT HAS BEEN PURCHASED BY THE GOVERNMENT AND MAY BE REPRODUCED AND USED IN CONNECTION WITH ANY GOVERNMENT PROCUREMENT OR MAINTENANCE OPERATION.

NOTE: DATA MARKED WITH AN ASTERISK (*) IS PECULIAR TO A PRIOR MANUFACTURER. IT DOES NOT TAKE PRECEDENCE OVER ANY OTHER DATA ON THIS DRAWING, AND IS NOT CONTRACTUALLY BINDING ON EITHER THE CONTRACTOR OR THE GOVERNMENT.

REVISIONS			
LTR	DESCRIPTION	DATE	APPROVED

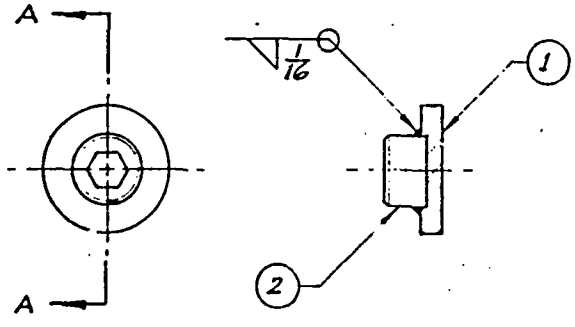

SECTION A-A

ITEM	REQD	PART NO.	DESCRIPTION	SPECIFICATION	NOTE
2	1	SM-B-509056	SHANK, PLUG.		
1	1	SM-B-509055	PLUG		

LIST OF PARTS

NEXT ASSY	USED ON
SM-B-509057	
SM-B-509048	DL-508965

APPLICATION

UNLESS OTHERWISE SPECIFIED
DIMENSIONS ARE IN INCHES
TOLERANCES ON:
FRACTIONS — DECIMALS — ANGLES —

MATERIAL: ——

~~Consolidation Systems~~ CORPORATION USA
DA-28-043-AMC-02402E

DRAWN AR
CHECKED
ELECTRONICS COMMAND
REVIEWED ER-1 SMF
APPROVED ER-1 SMF
DATE 25 FEB 69

U. S. ARMY ELECTRONICS COMMAND
PROCUREMENT AND PRODUCTION DIRECTORATE
FORT MONMOUTH NEW JERSEY 07703

PLUG ASSY

B | CODE IDENT NO. 80063 | SM-B-509054

SCALE 2/1 | SHEET ——

WHEN REFERRING TO THIS DRAWING STATE DRAWING NO., APPLICABLE ISSUE LETTER IF ANY, AND DATE

TM 11-6665-227-12

Chg 1 & 2

TECHNICAL MANUAL

OPERATOR'S AND ORGANIZATIONAL MAINTENANCE MANUAL

CALIBRATOR SET, RADIAC AN/UDM-2

NSN 6665-00-179-9037

HEADQUARTERS, DEPARTMENT OF THE ARMY

Incl 5

JUNE 1975

SR-Y90

RADIOACTIVE MATERIALS EXIST IN CALIBRATOR SET, RADIAC AN/UDM-2

Radiation Hazard Information: THE FOLLOWING RADIATION HAZARD INFORMATION MUST BE READ AND UNDERSTOOD BY ALL PERSONNEL BEFORE OPERATING THE AN/UDM-2. HAZARDOUS RADIOACTIVE MATERIALS ARE PERMANENTLY INSTALLED IN THE AN/UDM-2. REFER TO PARAGRAPHS 1-11, 3-1, AND 4-1 AND TO APPENDIX A FOR INFORMATION ON HANDLING, STORAGE, AND DISPOSAL OF RADIOACTIVE MATERIALS. THE FOLLOWING PRECAUTIONARY MEASURES *MUST* BE OBSERVED, IN addition TO THOSE IN TB 11-6665-227-12.

1. NEVER PEER DIRECTLY INTO THE ACCESS HOLE WHILE THE TOP COVER IS SWUNG AWAY.
2. NEVER POKE AROUND INTO THE ACCESS HOLD WITH ANY SHARP-POINTED OBJECTS.
3. THE AN/UDM-2 WILL BE USED ONLY UNDER THE DIRECTION OF A RADIOLOGICAL PROTECTION OFFICER.

CHANGE No. 1

HEADQUARTERS
DEPARTMENT OF THE ARMY
WASHINGTON, DC, *10 November 1976*

Operator's and Organizational Maintenance Manual
CALIBRATOR SET, RADIAC AN/UDM-2
NSN 6665-00-179-9037

TM 11-6665-227-12, 13 June 1975, is changed as follows:
1. New or changed material is indicated by a vertical bar in the margin.
2. Remove old pages and insert new pages as indicated below.

Remove	*Insert*
None	Warning page to existing warning inside front cover
i	i
1-1 through 1-8	1-1 through 1-8
3-1 through 3-4	3-1 through 3-4
3-5	3-5
3-6 through 3-14	3-6 through 3-14

3. File this change sheet in the front of the publication for reference purposes.

By Order of the Secretary of the Army:

BERNARD W. ROGERS
General, United States Army
Chief of Staff

Official:
PAUL T. SMITH
Major General, United States Army
The Adjutant General

Distribution:
To be distributed in accordance with DA Form 12-50, Operator maintenance requirements for AN/UDM-2.

94314

4. NEVER PEER INTO THE RATEMETER ASSEMBLY WHEN THE COVER PLATE IS REMOVED.

TECHNICAL MANUAL
No. 11-6665-227-12

HEADQUARTERS
DEPARTMENT OF THE ARMY
WASHINGTON, DC, *13 June 1975*

Operator's and Organizational Maintenance Manual
CALIBRATOR SET, RADIAC AN/UDM-2
NSN 6665-00-179-9037

			Paragraph	Page
CHAPTER	1.	INTRODUCTION		
Section	I.	General		
		Scope	1-1	1-1
		Indexes of publications	1-2	1-1
		Forms and records	1-3	1-1
		Administrative storage	1-4	1-1
		Destruction of Army materiel prevent enemy use	1-5	1-1
		Reporting of errors	1-6	1-1
		Reporting of equipment improvement recommendations (EIR)	1-6.1	1-1
	II.	Description and data		
		Purpose and use	1-7	1-3
		Technical characteristics	1-8	1-3
		Items comprising an operable Calibrator Set, Radiac AN/UDM-2	1-9	1-3
		Description of Calibrator Set, Radiac AN/UDM-2	1-10	1-3
		Precautions	1-11	1-8
CHAPTER	2.	INSTALLATION		
		Unpacking	2-1	2-1
		Checking unpacked equipment	2-2	2-1
		Preparation for use	2-3	2-1
CHAPTER	3.	OPERATING INSTRUCTIONS		
		General	3-1	3-1
		Controls and indicators	3-2	3-1
		Dosimeter checking	3-3	3-2
		Checking Radiacmeter IM-174(*)/PD	3-4	3-6
		Checking Radiac Set AN/PDR-27(*)	3-5	3-8
		Checking Radiac Set AN/PDR-60	3-6	3-14
		Checking Aerial Radiac System AN/ADR-6	3-7	3-14
CHAPTER	4.	MAINTENANCE INSTRUCTIONS		
		Scope of maintenance	4-1	4-1
		Tools and equipment required	4-2	4-1
		Preventive maintenance	4-3	4-1
		Preventive maintenance checks and services periods	4-4	4-1
		Cleaning and touchup painting instructions	4-5	4-2
		Troubleshooting	4-6	4-3
APPENDIX	A.	REFERENCES		A-1
	B.	BASIC ISSUE ITEMS LIST (BIIL) AND ITEMS TROOP INSTALLED OR AUTHORIZED LIST (ITIAL) (Not applicable)		
	C.	MAINTENANCE ALLOCATION		
Section	I.	Introduction		C-1
	II.	Maintenance allocation chart		C-3
GLOSSARY				Glossary 1

CHAPTER 1
INTRODUCTION

Section I. GENERAL

1-1. Scope

a. This manual describes Calibrator Set, Radiac AN/UDM-2 (fig. 1-1) and covers its installation, operation, and organizational maintenance. It includes instructions for initial service, operation, cleaning, and inspection of the equipment.

b. Official nomenclature followed by (*) is used to indicate all models of an equipment referenced in this manual. Thus, Radiac Set AN/PDR-27(*) represents AN/PDR-27J, AN/PDR-27L, AN/PDR-27P, AN/PDR-27Q, and AN/PDR-27R; Radiacmeter IM-93(*)/UD represents IM-93/UD and IM-93A/UD; Radiacmeter IM-174(*)/PD represents IM-174/PD and IM-174A/PD.

1-2. Indexes of Publications

a. Refer to the latest issue of DA Pam 310-4 to determine whether there are new editions, changes, or additional publications pertaining to the equipment.

b. Refer to DA Pam 310-7 to determine whether there are modification work orders (MWO's) pertaining to the equipment.

1-3. Forms and Records

a. Reports of Maintenance and Unsatisfactory Equipment. Maintenance forms, records, and reports which are to be used by maintenance personnel at all maintenance levels are listed in and prescribed by TM 38-750.

b. Report of Packaging and Handling Deficiencies. Fill out and forward DD Form 6 (Packaging Improvement Report) as prescribed in AR 700-58/NAVSUPINST 4030.29/AFR 71-13/MCO P4030.29A, and DSAR 4145.8.

c. Discrepancy in Shipment Report (DISREP) (SF 361). Fill out and forward Discrepancy in Shipment Report (DISREP) (SF 361) as prescribed in AR 55-38/NAVSUPINST 4610.33A/AFR 75-18/MCO P4610.19B, and DSAR 4500.15.

1-4. Administrative Storage

Administrative storage information is contained in TM 740-90-1.

1-5. Destruction of Army Materiel to Prevent Enemy Use

Instructions for destruction of Army materiel to prevent enemy use are contained in TM 750-244-2.

1-6. Reporting of Errors

The reporting of errors, omissions, and recommendations for improving this publication by the individual user is encouraged. Reports should be submitted on DA Form 2028 (Recommended Changes to Publications and Blank Forms), forwarded direct to Commander, US Army Electronics Command, ATTN: DRSEL-MA-Q, Fort Monmouth, NJ 07703.

1-6.1. Reporting Equipment Improvement Recommendations (EIR)

EIR's will be prepared using DA Form 2407, Maintenance Request. Instructions for preparing EIR's are provided in TM 38-750, The Army Maintenance Management System. EIR's should be mailed directly to Commander, US Army Electronics Command, ATTN: DRSEL-MA-Q, Fort Monmouth, NJ 07703. A reply will be furnished directly to you.

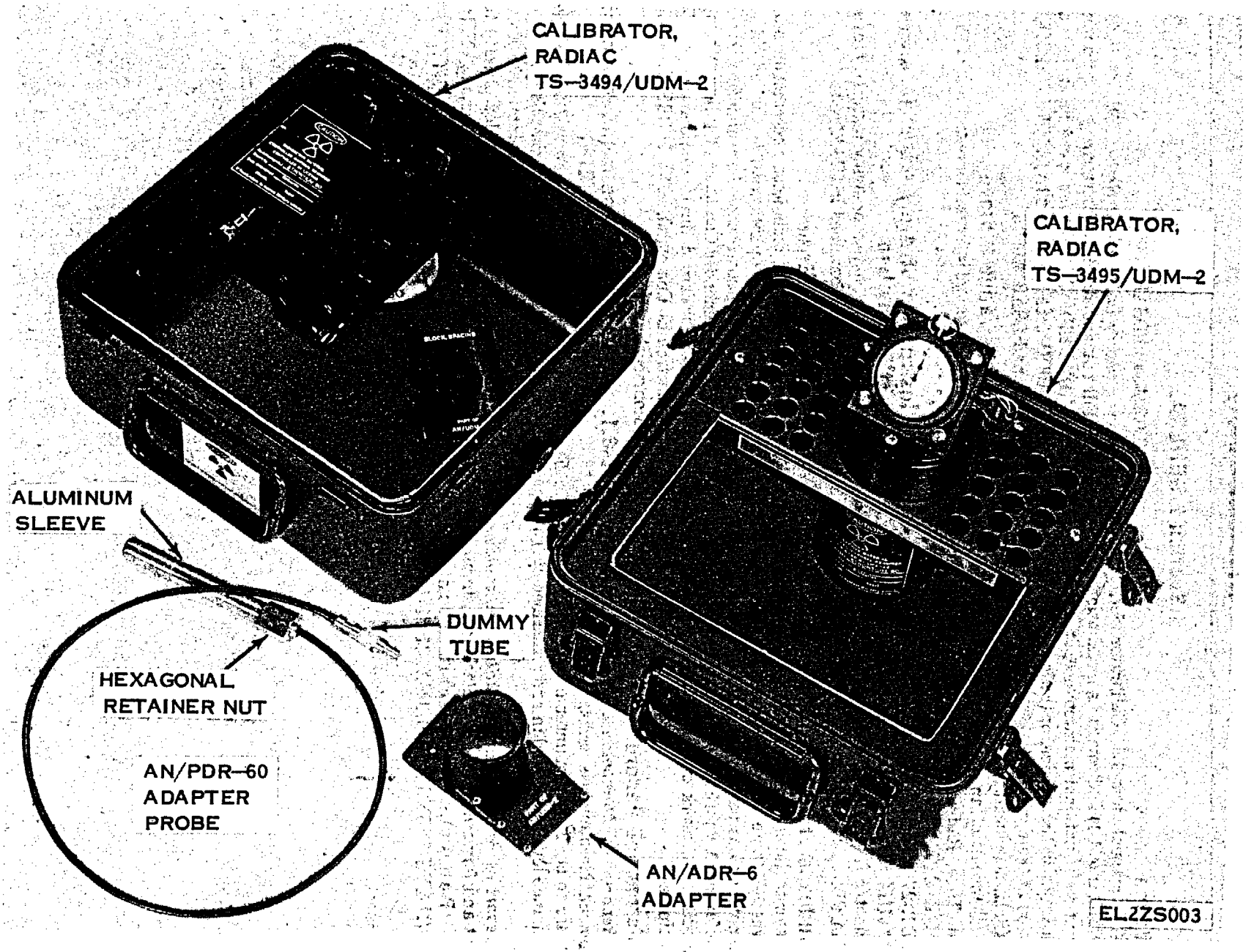

Figure 1-1. Calibrator Set, Radiac AN/UDM-2.

Section II. DESCRIPTION AND DATA

1-7. Purpose and Use
(fig. 1-1)

a. Purpose. Calibrator Set, Radiac AN/UDM-2 (consisting of two main sections (*b* below)) provides the facilities for checking the operational reliability and calibration accuracy of various radiacmeters and radiac sets.

b. Use. Calibrator, Radiac TS-3495/UDM-2 (discharge well assembly) is used to check Radiacmeters IM-93(*)/UD, IM-147/PD, and IM-9E/PD (dosimeters). Calibrator, Radiac TS-3494/UDM-2 (doserate jig assembly) is used to check Radiacmeter IM-174(*)/PD (radiacmeter), Radiac Set AN/PDR-27(*) (radiac set), Radiac Set AN/PDR-60, and Aerial Radiac System AN/ADR-6.

1-8. Technical Characteristics

Type of radioactive isotope in each source capsule	Strontium-Yttrium 90 (Sr-Y90).
Decay of isotope	27.7 years half life.
Quantity of isotope:	
Discharge well assembly	Three encapsulated sources of 25 millicuries each. One encapsulated source of 20 microcuries.
Doserate jig assembly	One encapsulated source of 25 millicuries.
Type of radiation emitted	Beta particles.
Bremmstrahlung produced	Radiation doserate from sources (4) no greater than 2 millirads per hour at outer case surface.
Maximum range of beta particles in air	30 feet.
Stopwatch indication	Two indications: a minute hand for a maximum of 30 minutes and a second hand for a maximum of 60 seconds.

1-9. Items Comprising an Operable Calibrator Set, Radiac AN/UDM-2
(figs. 1-1, 1-2, and 1-3)

The components of the AN/UDM-2 that make up an operable equipment are listed in table 1-1.

Table 1-1. Items Comprising an Operable Calibrator Set, Radiac AN/UDM-2

NSN	Item	Qty	Dimensions (in.) Height	Depth	Width	Wt (lb)
6665-00-610-1487	Calibrator, Radiac TS-3494/UDM-2	1	5	12	12	10⅛
6665-00-610-1496	Calibrator, Radiac TS-3495/UDM-2	1	8¼	12	12	18¼
Not available	Adapter, AN/ADR-6	1	2⅜	3¼	2¼	⅜
Not available	Adapter probe, AN/PDR-60	1	⅝	5	....	¼
Not available	Stopwatch	1	....	....	....	....
Not available	Spacer block	1	3⅝	2½	1¼	½

1-10. Description of Calibrator Set, Radiac AN/UDM-2

Calibrator Set, Radiac AN/UDM-2 (fig. 1-1) consists of two major assemblies, Calibrator, Radiac TS-3495/UDM-2 and Calibrator, Radiac TS-3494/UDM-2, plus the AN/PDR-60 adapter probe, and the AN/ADR-6 adapter. Each major assembly is housed in one-half of a waterproof, aluminum case. Instruction plates are mounted in each half of the aluminum case. These instruction plates give condensed operating instructions for both assemblies and a table of corrections to compensate for the decay of the radioactive sources. A handle is provided on each assembly to facilitate handling.

a. Calibrator, Radiac TS-3495/UDM-2 (fig. 1-2). The discharge well assembly consists of a discharge well, a dosimeter shelf, and a stopwatch. The dosimeter shelf contains 30 holes (to hold dosimeters to be tested) and the discharge well. The discharge well contains four Sr-Y90 sources (one 20 microcurie source and three 25 millicurie sources). The sources are arranged to radiate into a central cavity. Two fields of radiation are provided within the discharge well; one field is provided by the 20-microcurie source (upper field), the other field is provided by the three 25-millicurie sources (lower field). The upper field will cause Radiacmeter IM-9E/PD to discharge but will have no effect on Radiacmeter IM-93(*)/PD or IM-147/PD. The lower field will cause the IM-93(*)/PD or the IM-147/PD to discharge and will also cause the IM-9E/PD to discharge within two seconds. An access hole in the top of the discharge

well provides access to the radiation fields in the cavity. The cavity is vertically placed in the discharge well. The lower field of radiation is closed off from the access hole by a spring-loaded platform. This spring-loaded platform is opened when a dosimeter is inserted deep into the access hole. A spring-loaded swivel cover attached to the top of the discharge well covers the access hole. The key-operated lock is mounted on the swivel cover to prevent accidental exposure of the access hole. The swivel cover is moved sideways to expose the access hole and will move back over the access hole when the cover is released. A shipping lock is also mounted on the swivel cover to prevent accidental movement of the cover during transit. The stopwatch, mounted on the swivel cover, times the period of exposure for the dosimeter being checked.

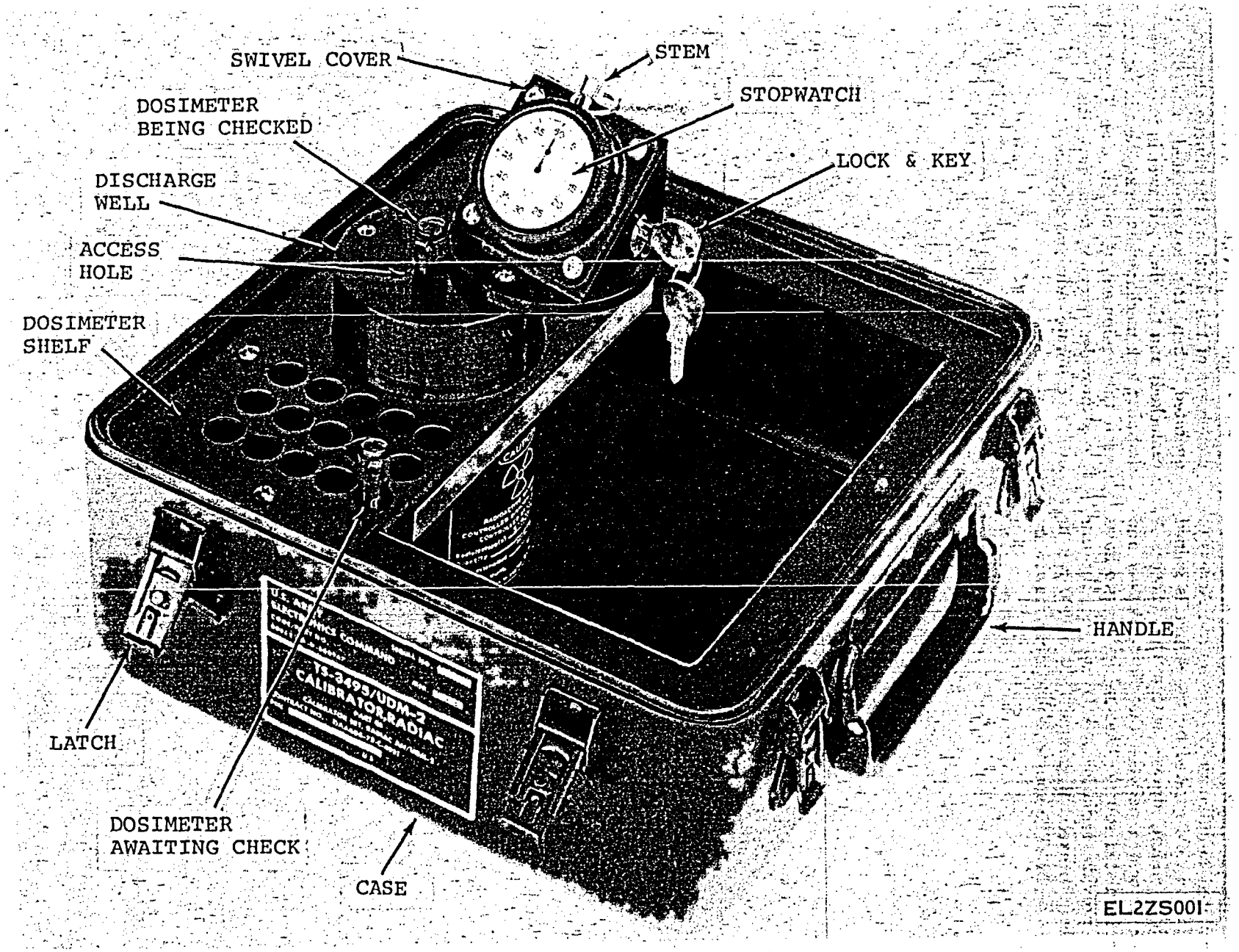

Figure 1-2. Calibrator, Radiac TS-3495/UDM-2.

b. Calibrator, Radiac TS-3494/UDM-2 (fig. 1-3). The dose rate jig assembly consists of a drawer and a spacer block. The drawer contains an encapsulated 25-millicurie Sr-Y90 source. Access to the radiation field created by the source is gained through a sliding drawer within the drawer. A shutter is located between the sliding drawer and the encapsulated source. The shutter has two holes which provide radiation fields in the detector equivalent to external gamma field of 100 rad/hr and 10 rad/hr. The shutter and sliding drawer are interconnected so that the shutter cannot expose the source unless the drawer is fully closed. A key-operated lock is provided to prevent accidental movement of the shutter. The shutter can only be operated when the key-operated lock is open (unlocked) and the sliding drawer is fully closed. A shipping lock mechanically locks the sliding drawer when the equipment is not in use. The spacing block provides varying field intensities that are used to calibrate radiacmeter probes.

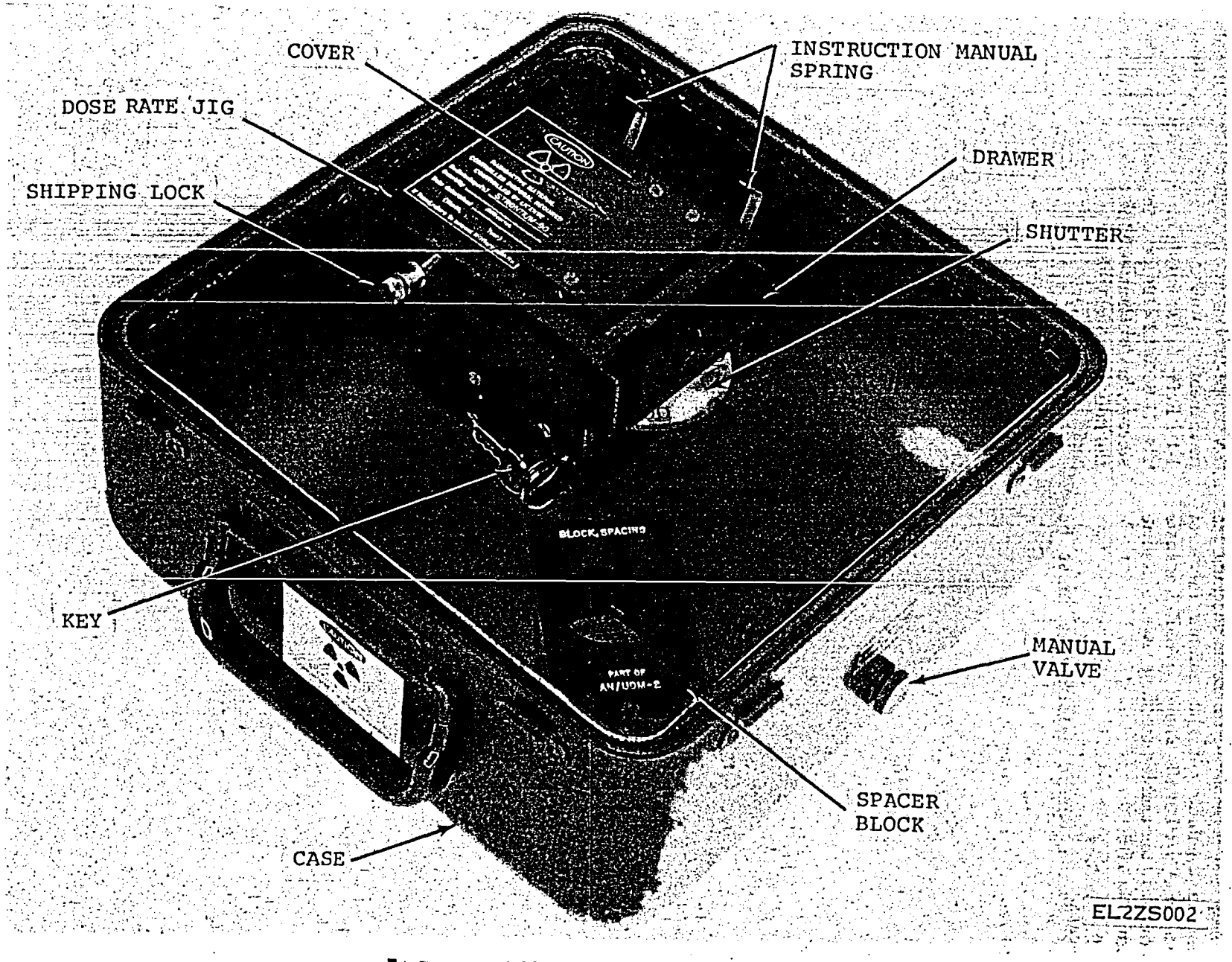

Figure 1-3. Calibrator, Radiac TS-3494/UDM-2.

c. Miscellaneous. The AN/PDR-60 adapter probe (fig. 1-1) is furnished to enable checking the operational capability of the gamma range of Radiac Set AN/PDR-60. The AN/ADR-6 adapter is furnished to enable checking Aerial Radiac System AN/ADR-6.

1-11. Precautions

The radiation hazard information must be understood by all personnel before operating the AN/UDM-2. Hazardous radioactive materials are permanently installed in the major assemblies (fig. 1-1). Refer to the inside of the front cover and to TB 11-6665-227-12 for information on handling, storage, transportation, operation, and disposal of the radioactive materials.

CHAPTER 2

INSTALLATION

2-1. Unpacking
(fig. 2-1)

a. Packaging Data. When packed for shipment, the AN/UDM-2 is packaged in an inner corrugated carton. The packaged AN/UDM-2 is further protected by being placed in an outer corrugated carton. All joints and seams on both cartons are sealed with waterproof, pressure-sensitive tape. Corrugated fillers are placed around the six sides of the package. The outside dimensions of the complete package are approximately 17 inches long, 16½ inches wide, and 15 inches high. The volume is 2.5 cubic feet and the total weight is approximately 35 pounds.

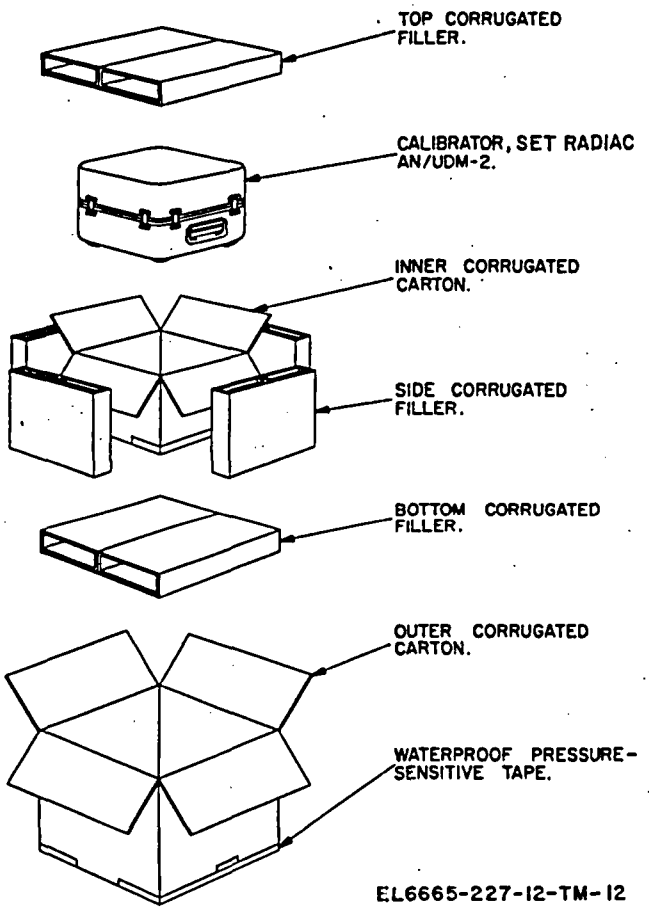

Figure 2-1. Calibrator Set, Radiac AN/UDM-2, typical packaging diagram.

b. Removing Contents. Unpack the equipment as follows:

(1) Remove the waterproof, pressure-sensitive tape from the top of the outer corrugated carton.

(2) Lift open the flaps and remove the top and side corrugated fillers.

(3) Remove the inner corrugated carton containing the AN/UDM-2.

(4) Remove the waterproof, pressure-sensitive tape from the top of the inner carton.

(5) Lift open the flaps and remove the AN/UDM-2.

(6) Turn the manual valve (fig. 1-3) counterclockwise to equalize the pressure.

2-2. Checking Unpacked Equipment

a. Inspect the equipment for damage incurred during shipment. If the equipment has been damaged, report the damage on DD Form 6 (para 1-3) and notify the Radiological Protection Officer (TB 11-6665-227-12).

b. Release the eight fasteners (fig. 1-1) and separate the two halves of the AN/UDM-2.

c. See that the equipment is complete as listed on the packing slip. If a packing slip is not available, check the equipment against the listing in table 1-1. Report all discrepancies in accordance with TM 38-750. Shortage of a minor assembly or part that does not affect proper functioning of the equipment should not prevent use of the equipment.

d. If the equipment has been used or reconditioned, see whether it has been changed by a modification work order (MWO). If the equipment has been modified, the MWO number will appear near the nomenclature plate. Check to see whether the MWO number (if any) and appropriate notations concerning the modification have been entered in this manual.

NOTE

Current MWO's applicable to this equipment (if any) are listed in DA Pam 310-7.

2-3. Preparation for Use

WARNING

Refer to paragraphs 1-11 and 3-1 for precautions pertaining to this equipment.

a. Release the shipping locks of both assemblies (figs. 1-2 and 1-3) by rotating the captive screws counterclockwise. The shipping locks are spring-loaded, will spring outward when fully unscrewed, and will release the latches.

b. On the discharge well assembly (fig. 1-2), check the functioning of the stopwatch (table 3-1).

c. Insert the key in the lock, release the lock, and rotate the swivel cover to expose the access hole. Release the cover; it shall move back into place and cover the access hole.

d. On the dose rate jig assembly (fig. 1-3), check to be sure that the spacer block is in place and that the drawer slides open.

e. Close the sliding drawer, insert the key in the lock, and release the lock. Check the operation of the shutter by rotating it.

NOTE

The sliding drawer must be closed *completely* before the shutter can be rotated.

CHAPTER 3
OPERATING INSTRUCTIONS

3-1. General

WARNING

Radioactive materials are used in this equipment. Read and understand all operational data and procedures in this chapter *before* using the equipment. Become thoroughly familiar with the contents of TB 11-6665-227-12. Never look directly into the access hole (fig. 1-2) when the swivel cover is swung open; do not poke sharp pointed objects into the access hole. This equipment will be used only under the direction of a Radiological Protection Officer.

Table 3-1 lists all controls and indicators used by the operator. In addition, this chapter contains the following:

a. Procedures for checking Radiacmeters IM-9E/PD, IM-93(*)/UD, and IM-147/PD (para 3-3).

b. The procedures for checking Radiacmeter IM-174(*)/PD (para 3-4).

c. The procedures for checking Radiac Set AN/PDR-27(*) (para 3-5).

d. The procedures for checking Radiac Set AN/PDR-60 (para 3-6).

e. The procedures for checking Aerial Radiac System AN/ADR-6 will be given in paragraph 3-7 when they become available.

3-2. Controls and Indicators

All operator controls and indicators are listed in table 3-1.

Table 3-1. List of Controls and Indicators

Control or indicator	*Function*
Calibrator, Radiac TS-3495/UDM-2 (fig. 1-2):	
Stem (stopwatch)	Stops, starts, and winds stopwatch. Positions seconds indicator to zero (60) and minutes indicator to zero (30) for reuse.
Second indicator (stopwatch)	Indicates elapsed time from 0 to 60 seconds.
Minute indicator (stopwatch)	Indicates elapsed time from 0 to 30 minutes.
Key	Unlocks swivel cover allowing it to be swung open.
Swivel cover (spring-loaded)	Allows dosimeter entry into access hole.
Calibrator, Radiac TS-3494/UDM-2 (fig. 1-3):	
Shutter	Rotated to select radiation fields of 10 rad/hr or 100 rad/hr.
Key	Unlocks shutter allowing it to be rotated.

3-3. Dosimeter Checking

To check an IM-9E/PD perform the procedures in *a* and *b* below. To check an IM-93(*)/UD or IM-147/PD perform the procedures in *a* and *c* below. Various dosimeters react differently when checked in the discharge well assembly. Table 3-2 lists the different types of dosimeters, their manufacturer, procurement number and year of manufacture, and the discharge well assembly position, total exposure or discharge time and the discharge readings. Refer to table 3-2 and discharge the dosimeter in the position shown for the period of time listed. Start the stopwatch immediately after the dosimeter is in its discharge position. For information pertaining to the operation of dosimeters, refer to TM 11-6665-214-10.

a. Precheck Procedures.

(1) Examine the dosimeter (and clean it if necessary) to insure that it will not carry mud or dirt into the access hole.

(2) Remove the DA Calibration Certification Label from the dosimeter.

(3) After examination, charge the dosimeter to a zero indication (TM 11-6665-214-10).

(4) Insert the key in the discharge well assembly lock and release the lock (fig. 1-2).

(5) Swing the swivel cover on the discharge well to one side enough to expose the access hole. Reset and wind the stopwatch, if necessary.

Table 3-2. Dosimeter Discharge Data

DOSIMETER	DISCHARGE POSITION	MANUFACTURER	PROCUREMENT ORDER RR	YEAR	TIME	DISCHARGE READING ±20%	DISCHARGE READING LIMITS ±20%
IM-93 0-600 RAD	LOWER	LANDSVERK	21505-P	56	5 MIN	300	240-360
	LOWER	BENDIX	30884-PP	57	5 MIN	405	324-486
	LOWER	BENDIX	4371-PP	60	5 MIN	70	56-84
	LOWER	BENDIX	15916-PP	63	5 MIN	60	48-72
	LOWER	LANDSVERK	4596-PP	61	5 MIN	40	32-48
	LOWER	LANDSVERK	15631-PP	62	5 MIN	40	32-48
	LOWER	LANDSVERK	DAAB05-68-C-0911	68	5 MIN	300	240-360
IM-147	LOWER	BENDIX	39159-PP	58	2 MIN	25	20-30
IM-147	LOWER	BENDIX	3439-PP	59	2 MIN	25	20-30
IM-147	LOWER	BENDIX	15861-PP-	62	2 MIN	25	20-30
IM-147	LOWER	LANDSVERK	DAAB05-68-C-0911	68	40 SEC	40	32-48
IM-9E 0-200 M RAD	UPPER	LANDSVERK	4913-PP	61	3 MIN	100	80-120
IM-9E	UPPER	BENDIX	15895-PP	63	2 MIN	100	80-120
IM-9E	UPPER	LANDSVERK	15580-PP	62	3 MIN	100	80-120
IM-9E	UPPER	LANDSVERK	DAAB05-67-C-1678	67	2 MIN	80	64-96
IM-9E	UPPER	LANDSVERK	DAAB05-69-C-0716	69	2 MIN	100	80-120
IM-9F	UPPER	LANDSVERK	C2537MFR 00910	68	5 MIN	80	64-96
CDV-138 0-200 M RAD	UPPER	BENDIX	NO INDICATION		2 MIN	100	80-120
CDV-742	LOWER	BENDIX	NO INDICATION		2 MIN	120	96-144
0-200 RAD	LOWER	LANDSVERK	NO INDICATION		5 MIN	120	96-144

b. Checking IM-9E/PD.

NOTE

Do not press the dosimeter down to the lower level (where its top would be flush with the top surface of the well); the lower level will expose it to a stronger radiation field than is required and will discharge it *completely* in less than 2 seconds. If the dosimeter is accidently pressed down into the lower level, remove the dosimeter, recharge it, and re-expose the access hole.

(1) *Gently* insert the dosimeter, charging end down, until it rests on the spring-loaded dosimeter platform and approximately one third of it remains above the top surface of the well. Allow the spring-loaded swivel cover to rest *gently* against the protruding dosimeter.

(2) Start the stopwatch as soon as the dosimeter rests on the spring-loaded dosimeter platform.

(3) Allow the dosimeter to remain in the upper discharge level for exactly the corrected time shown in table 3-2.

(4) Remove the dosimeter and check to see that the indication is within the allowable tolerances by referring to the instruction plates. If the indication is within the allowable tolerances, the dosimeter is usable.

c. Checking IM-93(*)/UD or IM-147/PD.

(1) *Gently* insert the dosimeter, charging end down, into the access hole and press it down into the lower level until the top of the dosimeter is flush with the top of the well. Allow the spring-loaded swivel cover to swing *gently* over the dosimeter.

(2) Start the stopwatch as soon as the dosimeter reaches the lower level.

(3) Allow the dosimeter to remain in the lower discharge level for exactly the corrected time shown in table 3-2.

(4) At the end of the discharge time, swing the swivel cover aside; the dosimeter will rise up, automatically cutting off the discharge field in the lower level.

NOTE

The field in the upper level will have no effect on the IM-147/PD or the IM-93(*)/UD.

(5) Remove the dosimeter and check to see that its indication falls within the allowable tolerances by referring to the instruction plates. If the indication is within the allowable tolerances, the dosimeter is usable. If the indication is not within the allowable tolerances, turn the dosimeters in for higher category of maintenance.

(Next printed page is 3-6)

DELETED

3-4. Checking Radiacmeter IM-174(*)/PD

Check the radiacmeter (fig. 3-1) as follows:

a. On the radiacmeter (TM 11-6665-213-12 (IM-174/PD) or TM 11-6665-232-12 (IM-174A/PD)), remove the bottom cover plate by releasing the four screws and remove the ionization chamber.

b. On the dose rate jig assembly, pull out the sliding drawer of the drawer unit, remove the spacer block, and insert the ionization chamber.

NOTE

Make sure the ionization chamber is firmly seated in the sliding drawer.

On the IM-174/PD only, using clip leads, ground the outside of the ionization chamber to the radiacmeter case.

c. Energize, zero adjust, and calibrate the radiacmeter (TM 11-6665-213-12 or TM 11-6665-232-12). Allow a 2-minute warmup period; if time permits, allow 20 minutes.

d. On the dose rate jig assembly (fig. 3-1), close the sliding drawer, insert the key in the lock, and unlock the shutter.

e. Rotate the shutter to the 100 rad/hr position.

(1) *IM-174/PD.* If the IM-174/PD meter indication is 147 ±30, proceed to *h* below; if not, proceed to *f* below.

(2) *IM-174A/PD.* If the IM-174A/PD meter indication is 100 ±20, proceed to *h* below; if not, proceed to *g* below.

CAUTION

On the IM-174/PD, never remove the left-hand calibration control.

f. On the IM-174/PD, remove the right-hand calibration control over cap, and adjust the calibration control for a 147 ±30 meter indication; replace the cover cap.

g. On the IM-174/PD, remove the calibration control cover cap, and adjust the calibration control for a 100 ±20 meter indication, replace the cover cap.

h. On the dose rate jig assembly, rotate the shutter to the 10 rad/hr position.

(1) If the IM-174/PD meter indication is 14.5 ±3.5 proceed to *k* below; if not, proceed to *i* below.

(2) If the IM-174/PD meter indication is 10 ±2, proceed to *k* below; if not, proceed to *j* below.

i. On the IM-174/PD, remove the right-hand calibration control cover cap, and readjust the calibration control for a 14.5 ±3.5 meter indication. Replace the cover cap.

j. On the IM-174A/PD, remove the calibration control cover cap and readjust the calibration control for a 10 ±2 meter indication. Replace the cover cap.

NOTE

If any of the meter indications listed in *e* through *j* above could not be obtained, turn in the equipment under test for repair to the next higher category of maintenance.

k. On the dose rate jig assembly, rotate the shutter to the closed (off) position and lock the shutter.

l. Open the sliding drawer, remove the ionization chamber, and replace the space block.

m. Deenergize the radiacmeter and replace the ionization chamber in the radiacmeter.

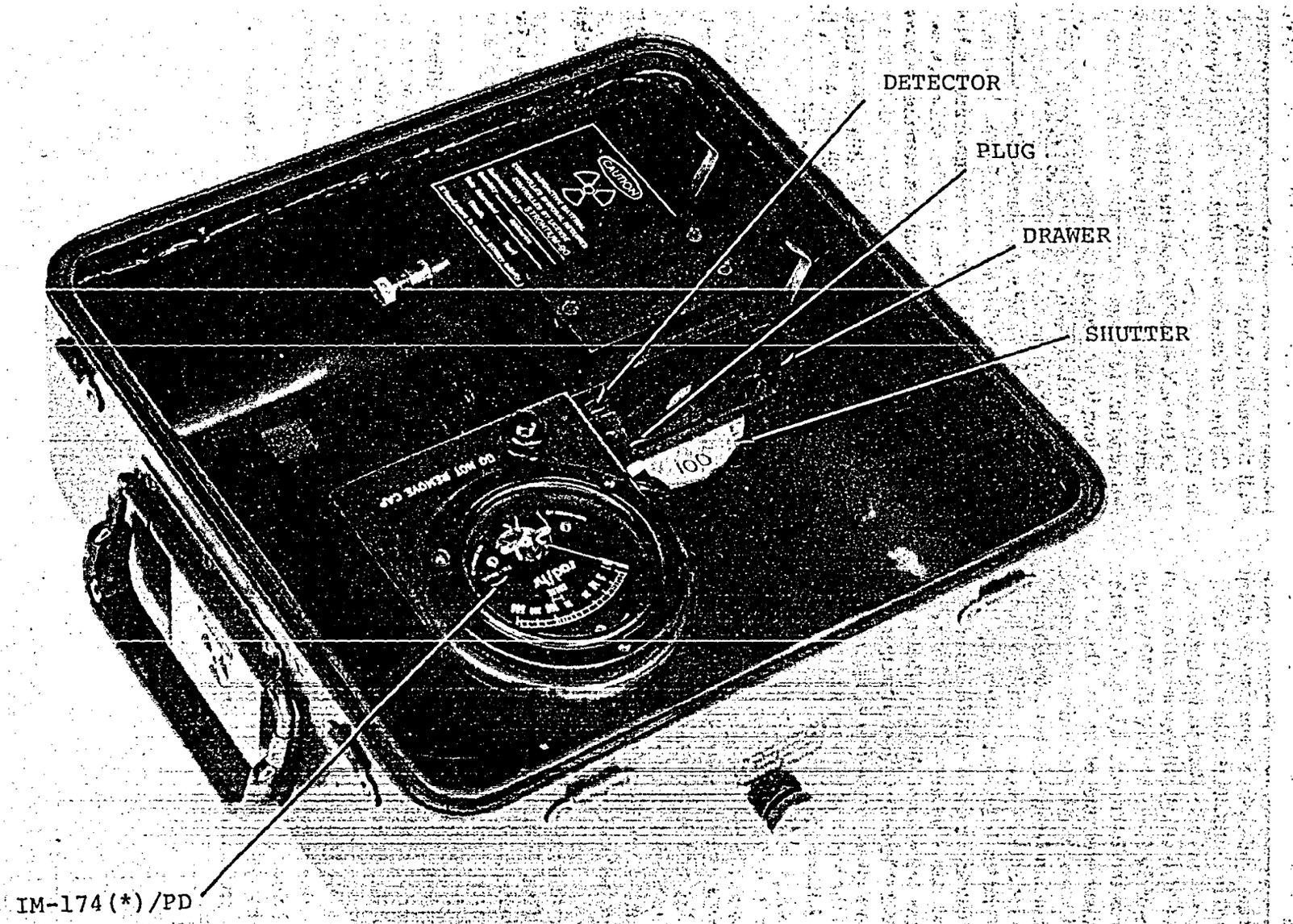

Figure 3-1. Checking radiacmeter IM-174(*)/PD.

3-5. Checking Radiac Set AN/PDR-27(*)

There is a phenomenon known to most users of equipment for detecting radioactive emanations called *statistics*. The word in this context refers to the erratic movement of the meter needle of an indicating radiacmeter or radiac set. This effect will be noticeable on all range indications of Radiac Set AN/PDR-27(*), being more pronounced on the lower ranges. This effect is the result of the beta particles emanating from the Sr-Y90 in a random fashion and thus the counting at the probe also varies in a random fashion. When the operator is observing meter indications under conditions where this *statistical* variation is present, watch the meter needle for a minimum period of 1 minute and note the highest and lowest values obtained during that period. The average of the highest and lowest values during that period will be the field strength measurement. The *normal* indications given in the following procedure are the average of the high and low values noted. Check the radiac set as follows:

CAUTION

Be careful not to damage the short piece of cable that joins the two probes.

a. On the AN/PDR-27(*), remove the two screws on the double-probe lips and separate the two probes. Set the range switch to the 500 mrad/hr position. Allow an appropriate amount of time for the model being tested to stabilize. (Refer to applicable manual listed in app A.)

b. On the doserate jig assembly (fig. 1-3), release the shipping lock, pull out the drawer, and place the spacer block in the drawer.

c. Close the drawer; insert the smaller probe into the handle end of the drawer (fig. 3-2) and rotate the shutter to the 100 position.

d. Rotate the small AN/PDR-27(*) probe to achieve maximum and minimum meter indications; record the indications.

e. The average indication should be 200 ± 60 mr/hr. If the average indication is correct, proceed to *f* below; if not, proceed to *j* below.

f. Rotate the shutter to the off (or closed) position, remove the small probe, and open the drawer.

g. Remove the spacer block from the drawer. Install the spacer block on the handle and close the drawer. Install the small probe in the block (fig. 3-3).

h. On the dose rate jig assembly, rotate the shutter to the 100 position.

i. On the AN/PDR-27(*), set the range switch to the 50 mrad/hr position. The meter indication should be 30 ±9 mrad/hr. If the meter indication is correct, proceed to *k* below; if not proceed to *j* below.

j. On the AN/PDR-27(*), remove the calibration cover and adjust the appropriate calibration control (refer to applicable manual, app A). Repeat the procedures given in *b* through *i* above until the correct meter indications are obtained for both range positions, and then proceed to *k* below.

k. On the dose rate jig assembly, rotate the shutter to the off or closed position. Remove the small probe and spacer block from the drawer. Position the large probe to lie across the semicircular cutouts on the edges of the drawer with the drawer opened to its fullest extremity (fig. 3-4).

l. Leave the source shutter closed. On the AN/PDR-27(*), set the range switch to the 5 mrad/hr position. The meter indication should be 3.2 ±1.0 mrad/hr. If the indication is correct, proceed to *m* below; if not, proceed to *o* below.

m. Position the large probe on the upper edge of the handle side of the dose rate jig assembly case (fig. 3-5).

n. Leave the source shutter closed. On the AN/PDR-27(*), set the range switch to the 0.5 mrad/hr position. The meter indication should be 0.30 ±0.09 mrad/hr. If the indication is correct, proceed to *p* below; if not, proceed to *o* below.

o. On the AN/PDR-27(*), remove the calibration cover and adjust the appropriate calibration control (refer to applicable manual, app A) to obtain the correct meter indication. Repeat the procedures given in *k* through *n* above until the correct meter indications are obtained for both range positions, and then proceed to *p* below.

p. Deenergize the AN/PDR-27(*) and fasten the two probes together.

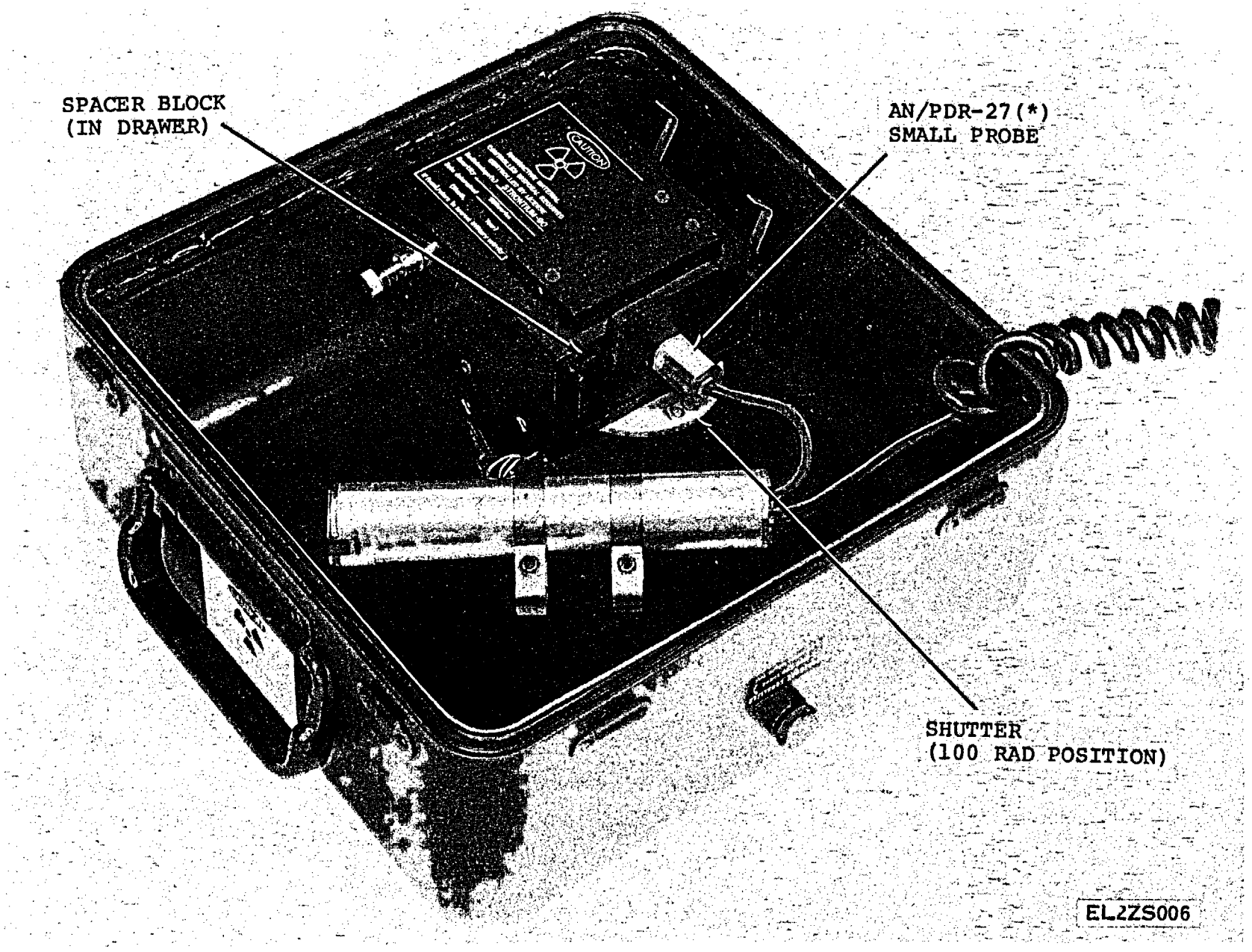

Figure 3-2. Checking AN/PDR-27(*) on 500 mrad/hr range.

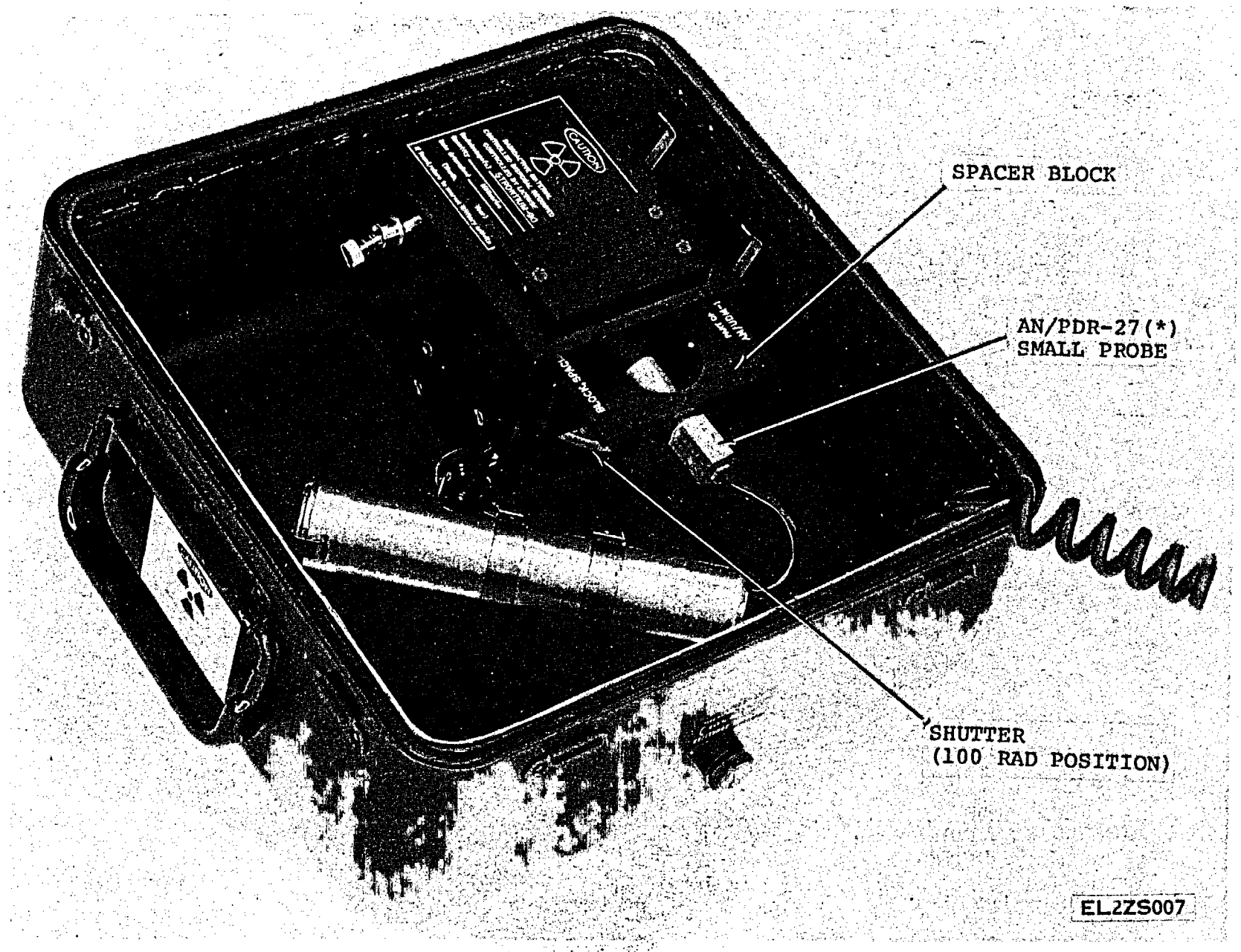

Figure 3-3. Checking AN/PDR-27(*) on 50 mrad/hr range.

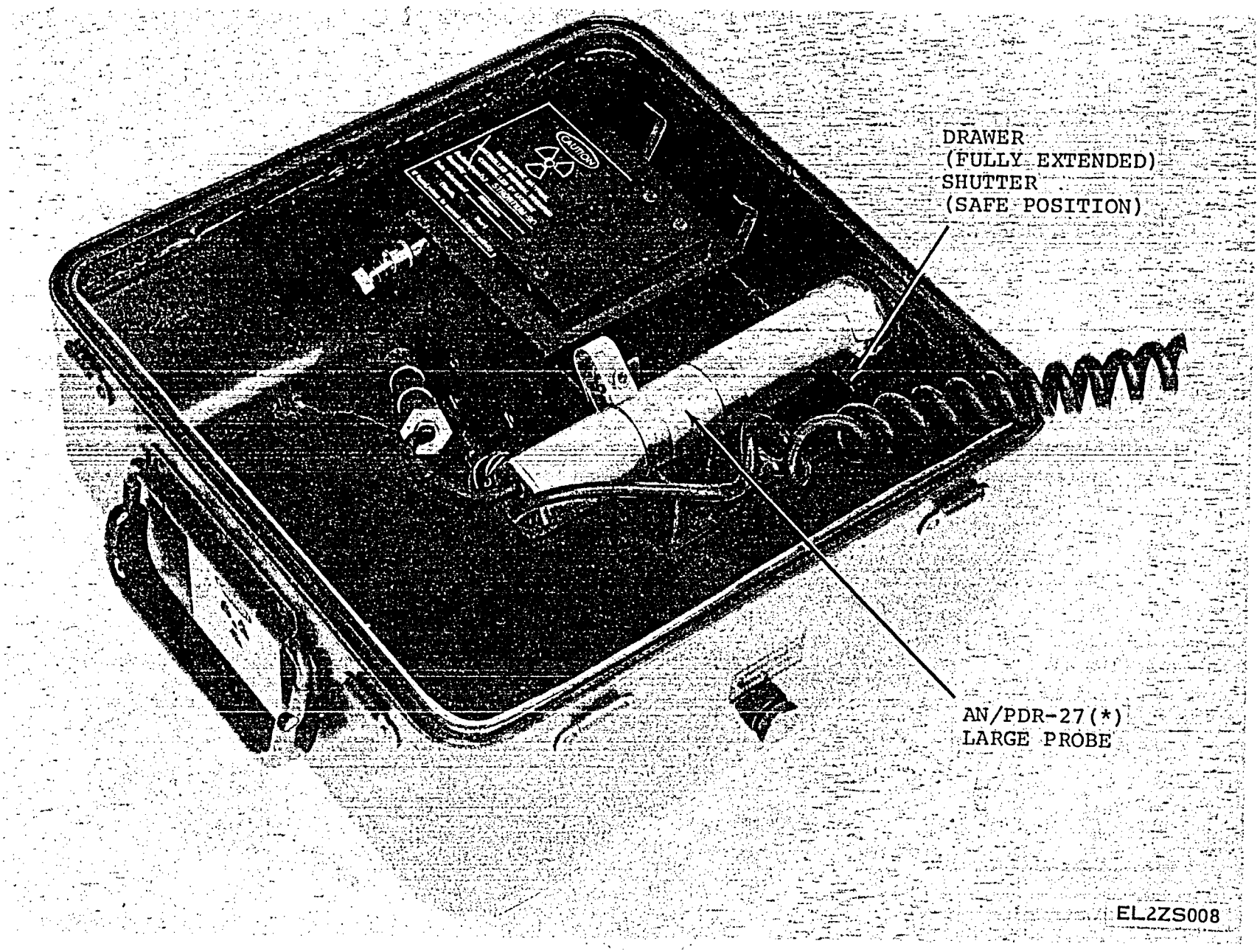

Figure 3-4. Checking AN/PDR-27(*) on 5 mrad/hr range.

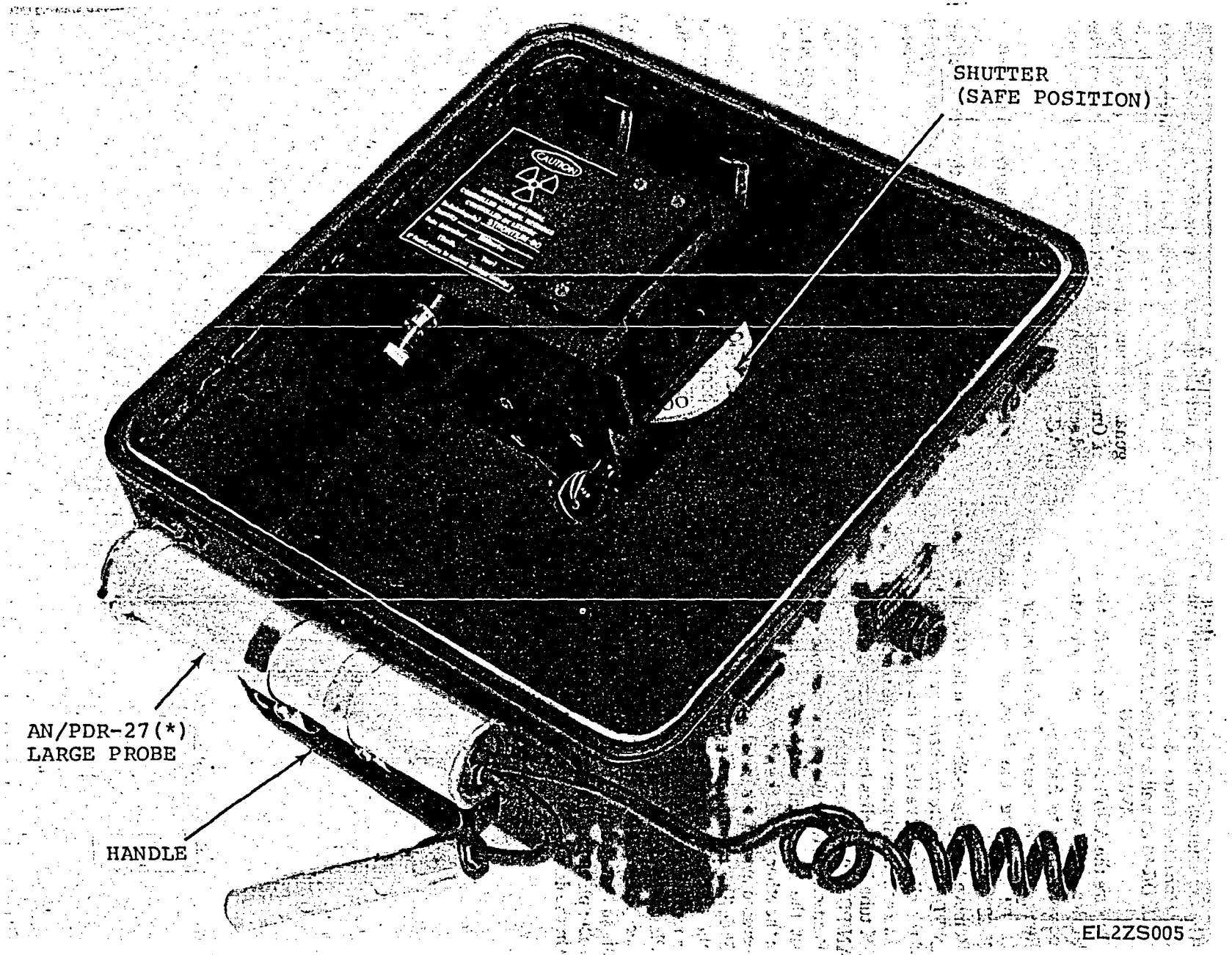

Figure 3-5. Checking AN/PDR-27(*) on 0.5 mrad/hr range.

3-6. Checking Radiac Set AN/PDR-60

NOTE

The explanation of the phenomenon known as *statistics* (para 3-5) applies to the AN/PDR-60 as well as to the AN/PDR-27(*).

WARNING

Be sure the AN/PDR-60 is turned off. Allow at least 15 seconds for the high-voltage power supply to discharge.

a. Remove the electronic chassis from the case assembly by releasing the latch at each end (TM 11-6665-221-15).

b. Remove the Geiger-Mueller tube (GM tube) from the AN/PDR-60 electronic chassis by carefully lifting it out of the clip; remove the GM tube cap.

c. Unscrew the aluminum sleeve (fig. 1-1) and place the GM tube in the clips (not shown) in the long end of the AN/PDR-60 adapter probe.

d. Position the GM tube so that the cap end is placed nearest the hexagonal retainer nut on the adapter probe; the other clip of the adapter probe should fit into the recessed area of the metal contact on the GM tube.

e. Slide the aluminum sleeve of the adapter probe over the GM tube and screw it into the hexagonal retainer nut until it is fingertight.

f. Place the dummy tube (at the other end of the adapter probe cable) into the AN/PDR-60 electronic chassis so that it duplicates the normal position of the GM tube; place the GM tube cap on the dummy tube.

g. On the dose rate jig assembly (fig. 1-3), release the shipping lock, pull out the drawer, and place the spacer block in the drawer; close the drawer.

h. Rotate the shutter of the dose rate jig assembly to the off position and insert the loaded adapter probe (*d* and *e* above) into the hole in the drawer until the hexagonal retainer nut is flush against the drawer face.

i. On the AN/PDR-60 electronic chassis, set the power and scale switch to 2*r* and the external detector switch to AC-3 (TM 11-6665-221-15).

NOTE

Allow at least 30 seconds for the AN/PDR-60 to warm up.

j. Rotate the adapter probe in the drawer; at some place in the rotation, the AN/PDR-60 meter pointer shall provide an upscale deflection (kick) of at least one scale division (0.1 rad/hr).

k. Rotate the shutter of the dose rate jig assembly to the 100 position and again rotate the adapter probe in the drawer; the AN/PDR-60 meter pointer shall provide indications between 0.5 rad/hr through 1/75 rad/hr (or, almost across the entire scale).

l. Rotate the shutter of the dose rate jig assembly to the off position, shut down the AN/PDR-60 electronic chassis (TM 11-6665-221-15), and reverse the procedures in *a* through *f* above.

3-7. Checking Aerial Radiac System AN/ADR-6

Data is currently not available; to be supplied at a later date.

☆ U.S. GOVERNMENT PRINTING OFFICE: 1976-765010/75

CHAPTER 4

MAINTENANCE INSTRUCTIONS

4-1. Scope of Maintenance

The maintenance duties assigned to the operator and organizational repairman of the AN/UDM-2 are listed below together with a reference to the paragraphs covering the specific maintenance function. The AN/UDM-2, when the two halves are sealed, is waterproof. The swivel cover on the discharge well assembly restricts entry of foreign matter to the access hole, but is not waterproof. This cover may be removed to clean the pivot pin assembly when required.

WARNING

NEVER disassemble the cavities of the discharge well or the drawer unit. This procedure is dangerous and must be performed only by higher category maintenance personnel with adequate facilities meeting all requirements of TB 11-6665-227-12.

a. Operator preventive maintenance checks and services (table 4-1).

b. Organizational preventive maintenance checks and services (table 4-2).

c. Cleaning and touchup painting (para 4-5).

d. Troubleshooting (para 4-6).

e. Wipe test (TB 11-6665-227-12).

4-2. Tools and Equipment Required

No special tools or test equipment other than those listed in appendix C are required. The materials required for maintenance are listed below.

a. Trichlorethane (NSN 6810-00-664-0273).

b. Cleaning cloth (NSN 8305-00-245-4509).

c. Cotton swabs (NSN 6515-00-303-8250).

d. Sandpaper (No. 000).

e. Petroleum jelly or light machine oil.

4-3. Preventive Maintenance

To insure that the AN/UDM-2 is always ready for operation, it must be inspected systematically so that defects may be discovered and corrected before they result in serious damage or failure. The necessary preventive maintenance checks and services to be performed are listed and described in tables 4-1, 4-2, and 4-3. The item numbers in each table indicate the sequence of and the minimum inspection required. Defects discovered during operation of the unit will be noted (TB 11-6665-227-12) for future correction to be made as soon as operation has ceased. Stop operation immediately if a deficiency is noted during operation which would damage the equipment or harm personnel. Record all deficiencies together with the corrective action taken in accordance with the requirements of TB 11-6665-227-12 and TM 38-750.

4-4. Preventive Maintenance Checks and Services Periods

Preventive maintenance checks and services of the AN/UDM-2 are required on a daily, weekly, and monthly basis.

a. Table 4-1 specifies the checks and services that must be accomplished daily, weekly, and under the following conditions:

(1) When the equipment is initially installed.

(2) When the equipment is reinstalled after removal for any reason.

(3) At least once each week if the equipment is maintained in a standby (ready for immediate use) condition.

b. Table 4-2 specifies *additional* (organizational level) checks and services that must be performed on a monthly basis.

Table 4-1. Operator Preventive Maintenance Checks and Services

D—Daily Time required: 0.13 | W—Weekly Time required: 0.09

Interval and Sequence No. D	W	ITEM TO BE INSPECTED: PROCEDURE	Work Time M/H
1		AN/UDM-2:	
		Check to see that the equipment is complete (table 1-1).	.01
2		EXTERIOR SURFACES:	
		Clean the exterior surfaces; remove dust, dirt, grease, and fungus (para 4-5).	.04
	1	HANDLES AND FASTENERS:	
		Inspect handles and fasteners for looseness. Tighten as necessary or refer to higher category of maintenance for repair.	.01

Table 4-1. Operator Preventive Maintenance Checks and Services—Continued

D—Daily
Time required: 0.13

W—Weekly
Time required: 0.09

Interval and Sequence No. D	Interval and Sequence No. W	ITEM TO BE INSPECTED: PROCEDURE	Work Time M/H
	2	METAL SURFACES: Inspect exposed metal surfaces for rust and corrosion. Clean and touchup as required (para 4-5).	.02
3		DOSE RATE JIG ASSEMBLY: During operation (para 3-6 through 3-9) be alert for any malfunction; if necessary, check with a known good radiacmeter or radiac set.	.05
	3	SWIVEL COVER: Check to make sure that cover does not bind.	.01
	4	SLIDING DRAWER: Check that drawer opens smoothly without binding.	.01
	5	SHUTTER: Check that shutter does not bind when rotated.	.01
4		DISCHARGE WELL ASSEMBLY: During operation (para 3-4) be alert for any malfunction; if necessary check with a known goo dosimeter.	.03
	6	SWIVEL COVER: Check to make sure that cover does not bind.	.01
	7	STOPWATCH: Check stopwatch operation.	.02

Table 4-2. Organizational Preventive Maintenance Checks and Services

M—Monthly
Total man-hours required: 0.25

Sequence Number	ITEM TO BE INSPECTED: PROCEDURE	Work Time M/H
1	PUBLICATIONS: See that publications are complete and current (app A and DA Pam 310-4).	.05
2	MODIFICATIONS: Check to determine if new applicable MWO's have been published (DA Pam 310-7 and TM 38-750). All URGENT MWO's must be applied immediately; NORMAL MWO's must be scheduled.	.01
3	GASKETS: Inspect waterproof gaskets for signs of leakage, worn, or loose edges.	.02
4	HARDWARE: Check for loose or missing hardware.	.02
5	LEAK TESTING PROCEDURE: Perform leak test (wipe test) at the discretion of Radiological Protection Officer (RPO), but at least once every 6 months (TB 11-6665-227-12).	0.1
6	DISCHARGE WELL ASSEMBLY: WARNING Do not peer directly into the access hole. Insert a cotton swab into the access hole and remove any dirt, dust, or grease. Dispose of cotton swab in accordance with AR 755-15.	.05

4-5. Cleaning and Touchup Painting Instructions

WARNING

During cleaning and painting be sure to observe all radioactive hazard precautions (para 1-11 and 3-1).

a. Cleaning.

(1) Remove dust, moisture, and loose dirt with a clean dry cloth.

WARNING

The fumes of trichloroethane are toxic. Provide thorough ventilation whenever used. DO NOT use near an open flame. Trichloroethane is not flammable, but exposure of the fumes to an open flames converts the fumes to highly toxic, dangerous gases.

(2) Remove fungus and ground-in dirt with a cloth dampened (not wet) with cleaning compound; dry thoroughly.

CAUTION

Do not press on the face of the stopwatch; the stopwatch may become damaged.

(3) Clean the face of the stopwatch with a soft clean cloth. If the dirt is difficult to remove, dampen (do not wet) the cloth with water; if necessary, use a mild soap.

(4) If the pivot of the swivel cover becomes stiff or binds, clean the pivot and relubricate the pivot with a very small amount of light lubricating oil or petroleum jelly.

b. Touchup Painting.

(1) Remove rust and corrosion from metal surfaces by lightly sanding them with fine sandpaper.

(2) Brush two thin coats of paint on the bare metal to protect it from further corrosion.

(3) Refer to the applicable cleaning and refinishing practices specified in SB 11-573 and TB 746-10.

4-6. Troubleshooting

Troubleshooting of this equipment is based upon the checks contained in the preventive maintenance checks and services tables. To troubleshoot the equipment, perform all functions starting with sequence number 3 in the daily preventive maintenance checks and services (table 4-1) and proceed through the remaining sequence numbers (tables 4-1 and 4-2) until an abnormal condition or result is observed. Perform the checks and corrective measures indicated in the troubleshooting procedures (table 4-3). If the corrective measures do not result in correction of the trouble, higher category maintenance is required.

Table 4-3. Troubleshooting AN/UDM-2

Item No.	*Trouble symptom*	*Probable trouble*	*Corrective measures*
1	Swivel cover binds	Dirty or corroded pivot bearing.	Disassemble swivel cover only. Clean and relubricate pivot bearing (para 4-5*a*).
2	Stopwatch nonoperative	Run-down or defective	Rewind and recheck stopwatch.

APPENDIX A

REFERENCES

AR 40-14	Control and Recording Procedures: Occupational Exposure to Ionizing Radiation.
AR 40-27	Personnel Radiation Exposures.
AR 55-55	Transportation of Radioactive and Fissile Materials Other Than Weapons.
AR 700-52	Licensing and Control of Sources of Ionizing Radiation.
AR 700-64	Radioactive Commodities in the DOD Suppy Systems.
AR 755-15	Disposal of Unwanted Radioactive Material.
DA Pam 310-4	Index of Technical Manuals, Technical Bulletins, Supply Manuals (Types 7, 8, and 9), Supply Bulletins, and Lubrication Orders.
DA Pam 310-7	Index of Modification Work Orders.
SB 11-573	Painting and Preservation Supplies Available for Field Use for Electronics Command Equipment.
SB 38-100	Preservation, Packaging, Packing and Marking Materials, Supplies, and Equipment Used by the Army.
TB 11-6665-227-12	Safe Handling, Storage, and Transportation of Calibrator Set, Radiac AN/UDM-2.
TB 43-0122	Instructions for Safe Handling and Identification of US Army Electronics Command Managed Radioactive Items in the Army Supply System.
TB 746-10	Field Instructions for Painting and Preserving Electronics Command Equipment.
TM 11-6665-209-15	Operator, Organizational, DS, GS, and Depot Maintenance Manual Including Repair Parts and Special Tool List: Radiac Sets AN/PDR-27J, AN/PDR-27L, and AN/PDR-27Q.
TM 11-6665-213-12	Operator and Organizational Maintenance Manual Including Repair Parts and Special Tool Lists: Radiacmeter IM-174/PD.
TM 11-6665-214-10	Operator's Manual: Radiacmeters IM-9E/PD, IM-93/UD, IM-93A/UD, and IM-147/PD.
TM 11-6665-221-15	Operator, Organizational, Direct Support, General Support and Depot Maintenance Manual Including Repair Parts Lists: Radiac Set AN/PDR-60 (Eberline Instrument Corporation Portable Alpha Counter Model PAC-1SAGA).
TM 11-6665-224-15	Organizational, Direct Support and General Support, and Depot Maintenance Manual (Including Repair Parts and Special Tools List): Radiac Set AN/PDR-27P.
TM 11-6665-230-15	Operator's, Organizational, Direct Support, General Support, and Depot Maintenance Manual Including Repair Parts and Special Tool Lists: Radiac Set AN/PDR-27R.
TM 11-6665-232-12	Operator's, Organizational Maintenance Manual Including Repair Parts and Special Tools List: Radiacmeter IM-174A/PD.
TM 38-750	The Army Maintenance Management System (TAMMS).

APPENDIX C

MAINTENANCE ALLOCATION

Section I. INTRODUCTION

C-1. General

This appendix provides a summary of the maintenance operations for the AN/UDM-2. It authorizes categories of maintenance for specific maintenance functions on repairable items and components and the tools and equipment required to perform each function. This appendix may be used as an aid in planning maintenance operations.

C-2. Maintenance Function

Maintenance functions will be limited to and defined as follows:

a. Inspect. To determine the serviceability of an item by comparing its physical, mechanical, and/or electrical characteristics with established standards through examination.

b. Test. To verify serviceability and to detect incipient failure by measuring the mechanical or electrical characteristics of an item and comparing those characteristics with prescribed standards.

c. Service. Operations required periodically to keep an item in proper operating condition, i. e., to clean, preserve, drain, paint, or to replenish fuel/lubricants/hydraulic fluids or compressed air supplies.

d. Adjust. Maintain within prescribed limits by bringing into proper or exact position, or by setting the operating characteristics to the specified parameters.

e. Align. To adjust specified variable elements of an item to about optimum or desired performance.

f. Calibrate. To determine and cause corrections to be made or to be adjusted on instruments or test measuring and diagnostic equipment used in precision measurement. Consists of the comparison of two instruments, one of which is a certified standard of known accuracy, to detect and adjust any discrepancy in the accuracy of the instrument being compared.

g. Install. The act of emplacing, seating, or fixing into position an item, part, module (component or assembly) in a manner to allow the proper functioning of the equipment/system.

h. Replace. The act of substituting a serviceable like-type part, subassembly, model (component or assembly) for an unserviceable counterpart.

i. Repair. The application of maintenance services (inspect, test, service, adjust, align, calibrate, replace) or other maintenance actions (welding, grinding, riveting, straightening, facing, remachining, or resurfacing) to restore serviceability to an item by correcting specific damage, fault, malfunction, or failure in a part, subassembly, module/component/assembly, end item or system.

j. Overhaul. That periodic maintenance effort (service/action) necessary to restore an item to a completely serviceable/operational condition as prescribed by maintenance standards (e.g., DMWR) in appropriate technical publications. Overhaul is normally the highest degree of maintenance performed by the Army. Overhaul does not normally return an item to like-new condition.

k. Rebuild. Consists of those services/actions necessary for the restoration of unserviceable equipment to a like-new condition in accordance with original manufacturing standards. Rebuild is the highest degree of materiel maintenance applied to Army equipment. The rebuild operation includes the act of returning to zero those age measurements (hours, miles, etc.) considered in classifying Army equipment/components.

C-3. Column Entries

a. Column 1, Group Number. Column 1 lists group numbers, the purpose of which is to identify components, assemblies, subassemblies and modules with the next higher assembly.

b. Column 2, Component/Assembly. Column 2 contains the noun names of components, assemblies, subassemblies, and modules for which maintenance is authorized.

c. Column 3, Maintenance Functions. Column 3 lists the functions to be performed on the item listed in column 2.

d. Column 4, Maintenance Category. Column 4 specifies, by the listing of a "worktime" figure in the appropriate subcolumn(s), the lowest level of maintenance authorized to perform the function listed in column 3. This figure represents the active time required to perform that maintenance

function at the indicated category of maintenance. If the number of complexity of the tasks within the listed maintenance function vary at different maintenance categories, appropriate "worktime" figures will be shown for each category. The number of man-hours specified by the "worktime" figure represents the average time required to restore an item (assembly, subassembly, component, module, end item or system) to a serviceable condition under typical field operating conditions. This time includes preparation time, troubleshooting time and quality assurance/quality control time in additional to the time required to perform the specific tasks identified for the maintenance functions authorized in the maintenance allocation chart. Subcolumns of column 4 are as follows:

C....Operator/crew
O....Organizational
F....Direct support
H....General support
D....Depot

e. Column 5, Tools and Equipment. Column 5 specifies by code, those common tool sets (not individual tools) and special tools, test, and support equipment required to perform the designated function.

C-4. Tool and Test Equipment Requirements (Table 1)

a. Tool or Test Equipment Reference Code. The numbers in this column coincide with the numbers used in the tools and equipment column of the MAC. The numbers indicate the applicable tool or test equipment for the maintenance functions.

b. Maintenance Category. The codes in this column indicate the maintenance category allocated the tool or test equipment.

c. Nomenclature. This column lists the noun name and nomenclature of the tools and test equipment required to perform the maintenance functions.

d. National/NATO Stock Number. This column lists the National/NATO stock number of the specific tool or test equipment.

e. Tool Number. This column lists the manufacturer's part number of the tool followed by the Federal Suppy Code for manufacturers (5-digit) in parentheses.

SECTION II MAINTENANCE ALLOCATION CHART
FOR
CALIBRATOR SET, RADIAC AN/UDM-2

(1) GROUP NUMBER	(2) COMPONENT/ASSEMBLY	(3) MAINTENANCE FUNCTION	(4) MAINTENANCE CATEGORY					(5) TOOLS AND EQUIPMENT
			C	O	F	H	D	
00	CALIBRATOR SET, RADIAC AN/UDM-2	Inspect	0.08					
		Service[1]	0.14	0.25				1
		Calibrate					3.0	2 thru 7
		Replace		0.4				
		Repair					3.0	2 thru 7
		Overhaul					6.0	2 thru 7
01	CALIBRATOR, RADIAC TS-3494/UDM-2	Inspect	0.02	0.06				
		Service	0.06	0.08				1
		Calibrate					1.5	2,5,6,7
		Replace		0.2				
		Repair					1.5	2,5,6,7
		Overhaul					3.0	2,5,6,7
02	CALIBRATOR, RADIAC TS-3495/UDM-2	Inspect	0.01	0.04				
		Service	0.05	0.07				1
		Calibrate					1.5	2,3,4,6
		Replace		0.2				
		Repair					1.5	2,3,4,6
		Overhaul					3.0	2,3,4,6

(1) Perform wipe test (TB 11-6665-227-12) at organizational level.

TABLE C-1 TOOL AND TEST EQUIPMENT REQUIREMENTS
FOR

CALIBRATOR SET, RADIAC AN/UDM-2

TOOL OR TEST EQUIPMENT REF CODE	MAINTENANCE CATEGORY	NOMENCLATURE	NATIONAL/NATO STOCK NUMBER	TOOL NUMBER
1	O,C	TOOLS AND EQUIPMENT NORMALLY AVAILABLE TO THE USER FOR HIS ASSIGNED MISSION		
2	D	GAMMA SOURCE, EQUIVALENT OF: RADIAC CALIBRATOR SET AN/UDM-1 OR RADIAC CALIBRATOR SET AN/UDM-1A	6665-00-537-8825	
3	D	CHARGER, RADIAC DETECTOR PP-1578A/PD	6665-00-572-1177	
4	D	RADIACMETER IM-93/UD (3 each)	6665-00-752-7759	
5	D	RADIACMETER IM-174A/PD (3 each)	6625-00-999-5145	
6	D	TOOL KIT, ELECTRONIC EQUIPMENT TK-105/U	5180-00-610-8177	
7	D	RADIACMETER AN/PDR-27 (3 each) MODEL J	6665-00-543-1435	
		or (3 each) MODEL L	6665-00-856-3456	
		or (3 each) MODEL P	6665-00-075-7222	
		or (3 each) MODEL Q	6665-00-017-8903	
		or (3 each) MODEL R	6665-00-961-0846	

GLOSSARY

Beta particle—A charged particle emitted from the nucleus of an atom and having a mass and charge equal in magnitude to those of an electron.

Bremsstrahlung—Secondary electromagnetic radiation similar to (X-ray) produced by deceleration of charged particles passing through matter.

Curie—That quantity of a radioactive nucleus disintegrating at the rate of 3.700×10^{10} atoms per second.

Dose rate—The radiation dose delivered per unit time. The common unit of measure for X- or gamma radiation is roentgens per hour (r/hr) or milliroentgens per hour (mr/hr).

Dosimeter—An instrument used to detect and measure an accumulated dose of radiation; normally it is in a pencil size self-reading ionization chamber used for personnel monitoring.

Ionization chamber—An instrument consisting essentially of a closed chamber or tube of air or gas with two electrodes used for detecting and measuring nuclear radiation.

Isotope—A form of the same element having identical chemical properties but differing in its atomic mass and nuclear properties.

Millicure—One one-thousandth (1/1,000) part of a curie. See *curie*.

Milliroentgen (*mr*)—One one-thousandth part of a roentgen. Common usage measurement terms are sometimes combined with atomic measurement units. Thus: 40K mr=40,000 mr=40 r. See *roentgen*.

Nuclear radiation—The particulate and electromagnetic radiation emitted from atomic nuclei in various nuclear processes. The important nuclear radiations, from weapons standpoint, are alpha and beta particles, gamma radiation, and neutrons.

Roentgen (*r*)—An exposure dose of X- or gamma radiation such that the associated corpuscular emission per 0.001293 gram of air produces, in air, an ion carrying 1 electrostatic unit of electricity of either sign (negative or positive).

Strontium-90 (*Sr 90*)—The radioactive isotope of Strontium with 90 atomic mass units.

Yttrium-90 (*Y 90*)—The decay product of Strontium-90 with 90 atomic mass units.

By Order of the Secretary of the Army:

FRED C. WEYAND
General, United States Army,
Chief of Staff.

Official:
VERNE L. BOWERS
Major General, United States Army,
The Adjutant General.

DISTRIBUTION:
To be distributed in accordance with DA Form 12-50 (qty rqr block no. 65), Operator requirements for AN/UDM-2.

☆U.S. GOVERNMENT PRINTING OFFICE: 1975—603-178/310

THIS DOCUMENT HAS BEEN PURCHASED BY THE GOVERNMENT AND MAY BE REPRODUCED AND USED IN CONNECTION WITH ANY GOVERNMENT PROCUREMENT OR MAINTENANCE OPERATION

NOTE
DATA MARKED WITH AN ASTERISK (*) IS PECULIAR TO A PRIOR MANUFACTURER. IT DOES NOT TAKE PRECEDENCE OVER ANY OTHER DATA ON THIS DRAWING, AND IS NOT CONTRACTUALLY BINDING ON EITHER THE CONTRACTOR OR THE GOVERNMENT

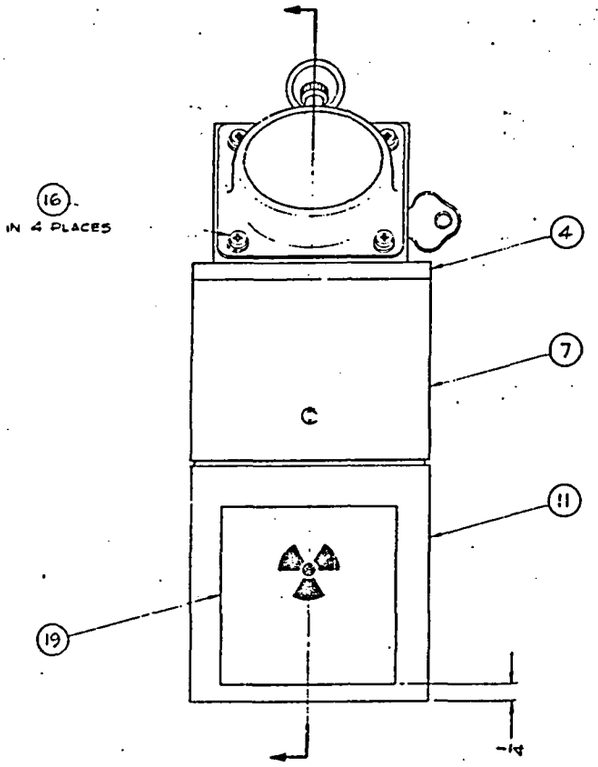

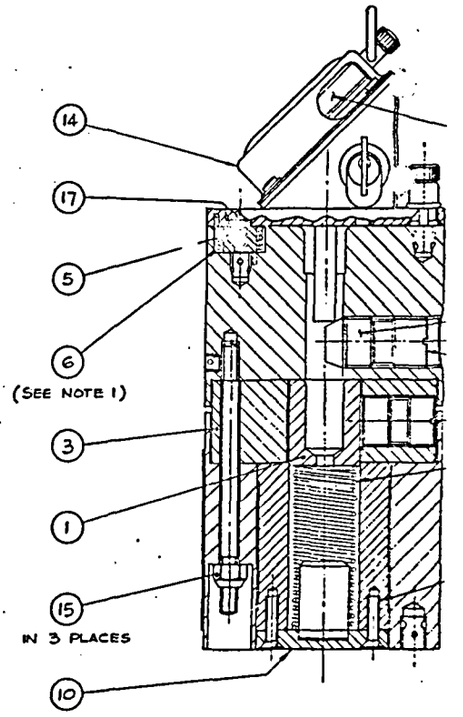

PART SECTION A-A

NOTES

1. ITEM 6 TO BE ASSEMBLED SO THAT IT IS WOUND 1/8 TURN (45°) IN CLOCKWISE DIRECTION WHEN ITEM 4 IS IN CLOSED POSITION.

5 4 3 2 1

REVISIONS				
LTR	ZONE	DESCRIPTION	DATE	APPROVED

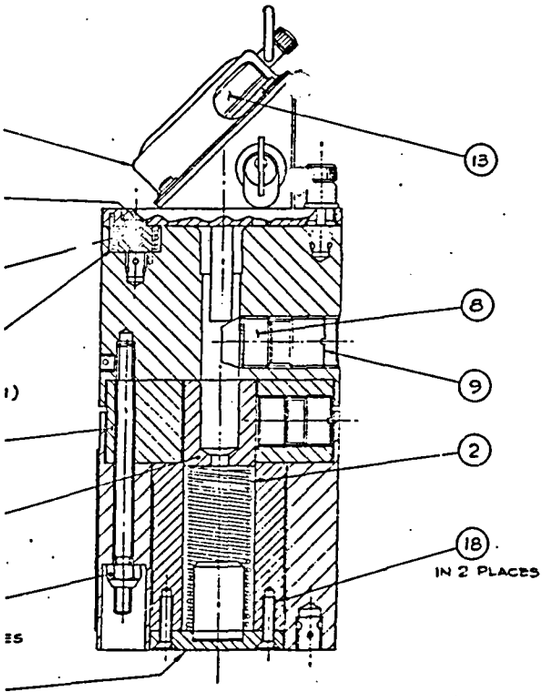

PART SECTION A-A

	REQD	PART NO.	DESCRIPTION	SPECIFICATION	NOTE
19	1	SM-C-509025-2	LABEL, RADIATION		
18	2	MS 35239-54	SCREW, MACHINE	FF-S-92	
17	1	MS 3520 -266	SCREW, MACHINE	FF-S-92	
16	4	MS 35206-227	SCREW, MACHINE	FF-S-92	
15	3	SM-B-509045-2	NUT, SELF-LOCKING		
14	1	SM-B-509044	HOLDER, STOPWATCH		
13	1	SM-B-509043	STOPWATCH		
12					
11	1	SM-B-509035	HOUSING ASSY, LOWER		
10	1	SM-B-509034	COVER ASS'Y, BOTTOM		
9	1	SM-B-509029	PLUG, SHIELD		
8	1	SM-B-509048	SOURCE ASSY		
7	1	SM-D-508990	HOUSING ASSY, UPPER		
6	1	SM-B-508989	SPRING, PIVOT		
5	1	SM-B-508988	PIVOT		
4	1	SM-D-508986	COVER ASSY, TOP		
3	1	SM-B-508981	SHIELD ASSY		
2	1	SM-B-508980	SPRING, PLATFORM		
1	1	SM-B-508979	PLATFORM, DOSIMETER		

LIST OF PARTS

NEXT ASSY	USED ON
SM-D-508967	DL-508965

APPLICATION

UNLESS OTHERWISE SPECIFIED:
DIMENSIONS ARE IN INCHES
TOLERANCES ON:
FRACTIONS ± 1/64 DECIMALS — ANGLES —

MATERIAL: —

DA-28-043-AMC-02402E

DRAWN F.J.O.
CHECKED
ELECTRONICS COMMAND
REVIEWED E.R.-1 SM'F
APPROVED E.R.-1 SM'F
DATE 15 MAY 70

U. S. ARMY ELECTRONICS COMMAND
PROCUREMENT AND PRODUCTION DIRECTORATE
FORT MONMOUTH NEW JERSEY 07703

WELL ASS'Y.

SIZE D | CODE IDENT NO. 80063 | SM-D-508975

SCALE 1/1 SHEET —

WHEN REFERRING TO THIS DRAWING STATE DRAWING NO., APPLICABLE ISSUE LETTER IF ANY, AND DATE

Incl 6

THIS DOCUMENT HAS BEEN PURCHASED BY THE GOVERNMENT AND MAY BE REPRODUCED AND USED IN CONNECTION WITH ANY GOVERNMENT PROCUREMENT OR MAINTENANCE OPERATION

NOTE
DATA MARKED WITH AN ASTERISK (*) IS PECULIAR TO A PRIOR MANUFACTURER. IT DOES NOT TAKE PRECEDENCE OVER ANY OTHER DATA ON THIS DRAWING, AND IS NOT CONTRACTUALLY BINDING ON EITHER THE CONTRACTOR OR THE GOVERNMENT

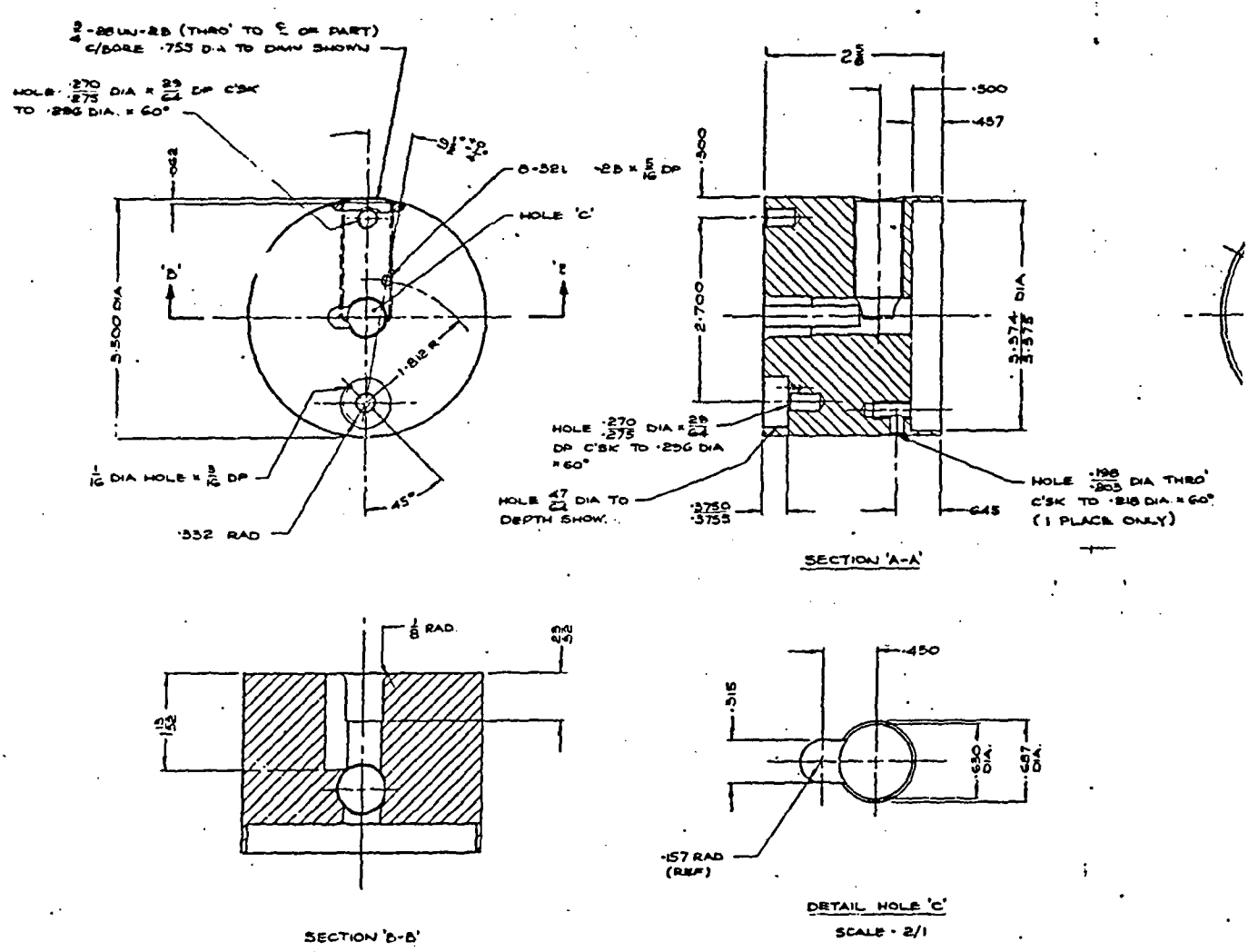

NOTES :-

1. REMOVE ALL BURRS & SHARP EDGES.
2. ALL SURFACE FINISHES TO BE 125√ UNLESS OTHERWISE STATED.
3. FINAL PROTECTIVE FINISH :- E 511 PER SPEC. MIL-F-14072 (BLACK)

REVISIONS				
LTR	ZONE	DESCRIPTION	DATE	APPROVED

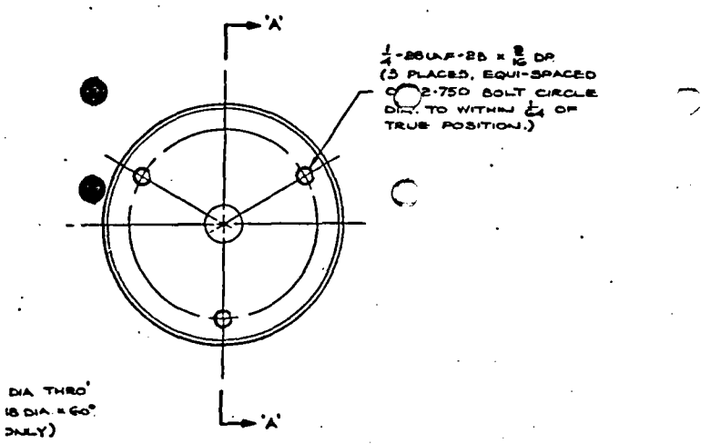

REQD	PART NO.	DESCRIPTION	SPECIFICATION	NOTE

LIST OF PARTS

SM-D-503990	DL-508965		
NEXT ASSY	USED ON		
APPLICATION			

UNLESS OTHERWISE SPECIFIED:
DIMENSIONS ARE IN INCHES
TOLERANCES ON:

FRACTIONS	DECIMALS	ANGLES
± 1/64	±.005	±2°

MATERIAL:
AL / ALLOY
BAR 6061-T6
PER. SPEC-QQ-A-225/8

DA-28-043-AMC-02402E

U.S. ARMY ELECTRONICS COMMAND
PROCUREMENT AND PRODUCTION DIRECTORATE
FORT MONMOUTH NEW JERSEY 07703

DRAWN F.J.O.
CHECKED
ELECTRONICS COMMAND
REVIEWED E.R.-1 SMF
APPROVED E.R.-1 SMF
DATE 19 JUN 70

HOUSING, UPPER.

SIZE	CODE IDENT NO.	
D	80063	SM-D-508991
SCALE 1/1		SHEET -

WHEN REFERRING TO THIS DRAWING STATE DRAWING NO., APPLICABLE ISSUE LETTER IF ANY, AND DATE

Incl 7

PARTS LIST FOR ECOM DRAWING SM-D-508975

PART NO.	MATERIALS OF CONSTRUCTION	FINISH
1	Brass	Nickel
2	Steel	Cadmium
3	PLUG - MALLORY M1000 (97% Tungsten, 3% Copper) Source - Stainless steel	Cadmium
4	Housing - Aluminum Lock - Brass	Anodized
5	Bronze	Nickel
6	Steel	Cadmium
7	Aluminum	Anodized
8	Stainless Steel	
9	Brass	Cadmium
10	Cover - Brass Stop - Mallory M1000	Nickel Cadmium
11	Housing - Aluminum Cylinder - Brass	Anodized Nickel
15	Steel	Cadmium
16	Carbon Steel	Cadmium
17	Carbon Steel	Cadmium
18	Carbon Steel	Cadmium
19	See SM-C-509025-2	

THIS DOCUMENT HAS BEEN PURCHASED BY THE GOVERNMENT AND MAY BE REPRODUCED AND USED IN CONNECTION WITH ANY GOVERNMENT PROCUREMENT OR MAINTENANCE OPERATION.

NOTE: DATA MARKED WITH AN ASTERISK (*) IS PECULIAR TO A PRIOR MANUFACTURER. IT DOES NOT TAKE PRECEDENCE OVER ANY OTHER DATA ON THIS DRAWING, AND IS NOT CONTRACTUALLY BINDING ON EITHER THE CONTRACTOR OR THE GOVERNMENT.

REVISIONS			
LTR	DESCRIPTION	DATE	APPROVED

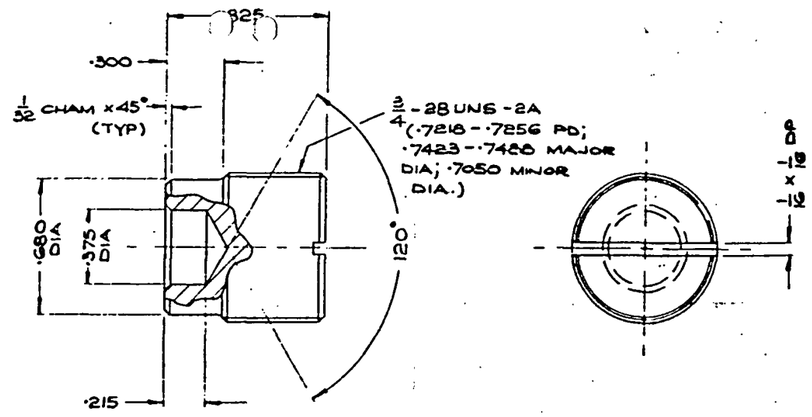

NOTES:-

1. REMOVE ALL BURRS & SHARP EDGES
2. FINAL PROTECTIVE FINISH:- M262 PER SPEC. MIL-F-14072.

ITEM	REQD	PART NO.	DESCRIPTION	SPECIFICATION	NOTE

LIST OF PARTS

SM-D-508975	DL-508965
NEXT ASSY	USED ON
APPLICATION	

UNLESS OTHERWISE SPECIFIED
DIMENSIONS ARE IN INCHES
TOLERANCES ON:

FRACTIONS	DECIMALS	ANGLES
± 1/64	± .005	± 2°

MATERIAL:
BRASS, COMP 22, 1/2 H
PER SPEC QQ-B-626

~~Connecticut Aircraft~~ CORPORATION
DA-28-043-AMC-02402E

DRAWN F.J.O
CHECKED
ELECTRONICS COMMAND
REVIEWED ER-1 SMF
APPROVED ER-1 SMF
DATE 21 FEB 69

U. S. ARMY ELECTRONICS COMMAND
PROCUREMENT AND PRODUCTION DIRECTORATE
FORT MONMOUTH NEW JERSEY 07703

PLUG, SHIELD

B | CODE IDENT NO. 80063 | SM-B-509029

SCALE 2/1 | SHEET –

WHEN REFERRING TO THIS DRAWING STATE DRAWING NO., APPLICABLE ISSUE LETTER IF ANY, AND DATE

THIS DOCUMENT HAS BEEN PURCHASED BY THE GOVERNMENT AND MAY BE REPRODUCED AND USED IN CONNECTION WITH ANY GOVERNMENT PROCUREMENT OR MAINTENANCE OPERATION.

NOTE: DATA MARKED WITH AN ASTERISK (*) IS PECULIAR TO A PRIOR MANUFACTURER. IT DOES NOT TAKE PRECEDENCE OVER ANY OTHER DATA ON THIS DRAWING, AND IS NOT CONTRACTUALLY BINDING ON EITHER THE CONTRACTOR OR THE GOVERNMENT.

REVISIONS			
LTR	DESCRIPTION	DATE	APPROVED

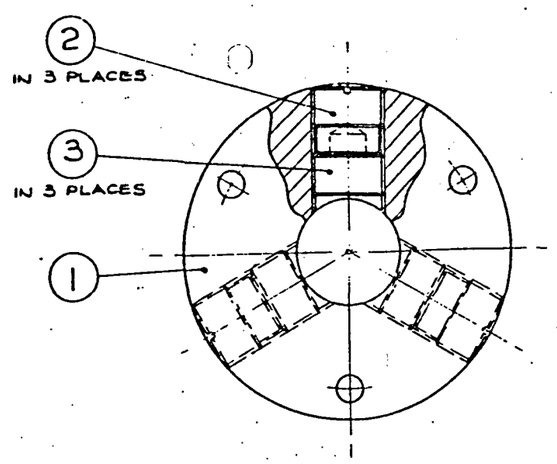

CAUTION:
CONTAINS RADIOACTIVE SOURCE

ITEM	REQD	PART NO.	DESCRIPTION	SPECIFICATION	NOTE
3	3	SM-B-509057	SOURCE ASSY.		
2	3	SM-B-508984	PLUG, SHIELD		
1	1	SM-B-508983	SHIELD		

LIST OF PARTS

NEXT ASSY	USED ON
SM-D-508875	DL-508965

APPLICATION

UNLESS OTHERWISE SPECIFIED
DIMENSIONS ARE IN INCHES
TOLERANCES ON:
FRACTIONS — DECIMALS — ANGLES —

MATERIAL:

DA-28-043-AMC-02402E

DRAWN F.J.C.
CHECKED
ELECTRONICS COMMAND
REVIEWED ER-1 SMF
APPROVED ER-1 SMF
DATE 19 JAN 69

U. S. ARMY ELECTRONICS COMMAND
PROCUREMENT AND PRODUCTION DIRECTORATE
FORT MONMOUTH NEW JERSEY 07703

SHIELD ASS'Y.

B | CODE IDENT NO. 80063 | SM-B-508981

SCALE 1/1 | SHEET —

WHEN REFERRING TO THIS DRAWING STATE DRAWING NO., APPLICABLE ISSUE LETTER IF ANY, AND DATE

THIS DOCUMENT HAS BEEN PURCHASED BY THE GOVERNMENT AND MAY BE REPRODUCED AND USED IN CONNECTION WITH ANY GOVERNMENT PROCUREMENT OR MAINTENANCE OPERATION.

NOTE: DATA MARKED WITH AN ASTERISK (*) IS PECULIAR TO A PRIOR MANUFACTURER. IT DOES NOT TAKE PRECEDENCE OVER ANY OTHER DATA ON THIS DRAWING, AND IS NOT CONTRACTUALLY BINDING ON EITHER THE CONTRACTOR OR THE GOVERNMENT.

REVISIONS			
LTR	DESCRIPTION	DATE	APPROVED

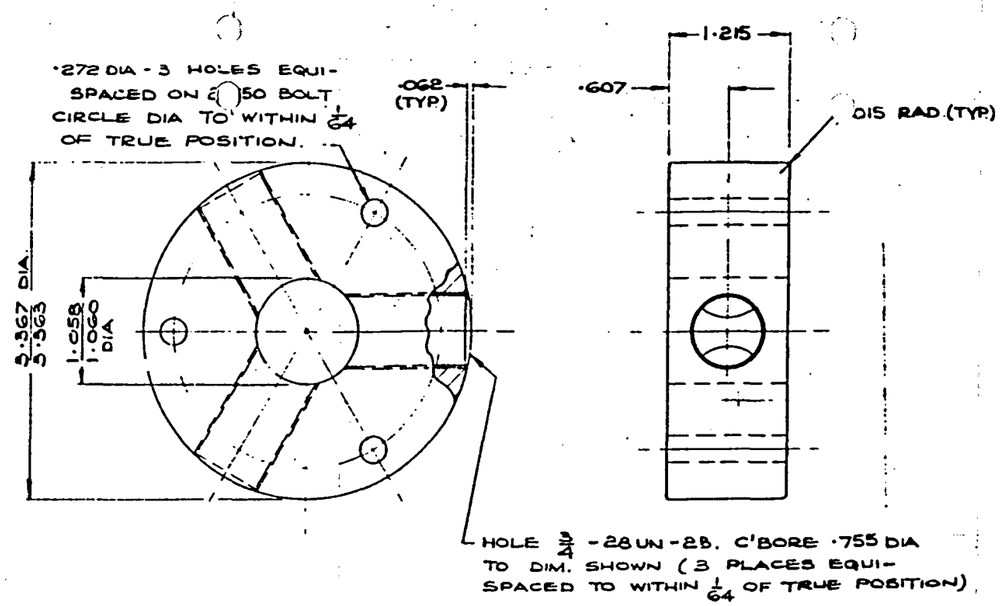

NOTES:-

1. ALL SURFACE FINISHES TO BE 63 ✓ UNLESS OTHERWISE STATED.
2. REMOVE ALL BURRS & SHARP EDGES.
3. FINAL PROTECTIVE FINISH:- M262 PER SPEC MIL-F-14072.

ITEM	REQD	PART NO.	DESCRIPTION	SPECIFICATION	NOTE

LIST OF PARTS

SM-B-508581	DL-508565
NEXT ASSY	USED ON
APPLICATION	

UNLESS OTHERWISE SPECIFIED
DIMENSIONS ARE IN INCHES
TOLERANCES ON:
FRACTIONS DECIMALS ANGLES
– ±·005 –

MATERIAL:
M 1000 METAL
P.R. MALLORY
INDIANAPOLIS, IND.
–OR EQUAL.

~~Clemmons Schwinn~~ CONTRACT NO. DA-28-043-AMC-02402E

DRAWN F.J.O.
CHECKED
ELECTRONICS COMMAND
REVIEWED ER-1 SMF
APPROVED ER-1 SMF
DATE 19 JAN 69

U. S. ARMY ELECTRONICS COMMAND
PROCUREMENT AND PRODUCTION DIRECTORATE
FORT MONMOUTH NEW JERSEY 07703

SHIELD

B | CODE IDENT NO. 80063 | SM-B-508983

SCALE 1/1 | SHEET –

WHEN REFERRING TO THIS DRAWING STATE DRAWING NO., APPLICABLE ISSUE LETTER IF ANY, AND DATE

THIS DOCUMENT HAS BEEN PURCHASED BY THE GOVERNMENT AND MAY BE REPRODUCED AND USED IN CONNECTION WITH ANY GOVERNMENT PROCUREMENT OR MAINTENANCE OPERATION.

NOTE: DATA MARKED WITH AN ASTERISK (*) IS PECULIAR TO A PRIOR MANUFACTURER. IT DOES NOT TAKE PRECEDENCE OVER ANY OTHER DATA ON THIS DRAWING, AND IS NOT CONTRACTUALLY BINDING ON EITHER THE CONTRACTOR OR THE GOVERNMENT.

REVISIONS			
LTR	DESCRIPTION	DATE	APPROVED

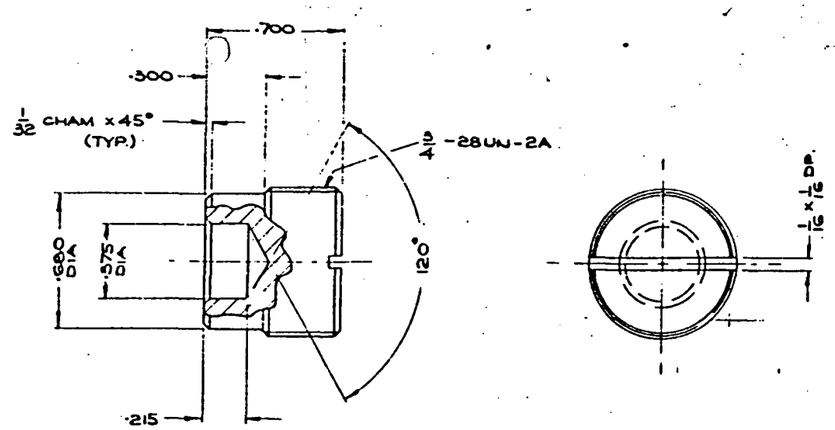

NOTES:-

1. REMOVE ALL BURRS & SHARP EDGES.
2. FINAL PROTECTIVE FINISH:- M262 PER SPEC. MIL-F-14072

ITEM	REQD	PART NO.	DESCRIPTION	SPECIFICATION	NOTE

LIST OF PARTS

* SM-D-508994	
* SM-B-508981	DL-508965
NEXT ASSY	USED ON
APPLICATION	

UNLESS OTHERWISE SPECIFIED
DIMENSIONS ARE IN INCHES
TOLERANCES ON:
FRACTIONS ±1/64 DECIMALS ±.005 ANGLES ±2°

MATERIAL:
M1000 METAL
P.R. MALLORY
INDIANAPOLIS, IND.
-OR EQUAL.

~~Cameron Station~~ CORPORATION
DA-28-043-AMC-02402E

DRAWN F.J.O.
CHECKED
ELECTRONICS COMMAND
REVIEWED EE-1 GMF
APPROVED EE-1 GMF
DATE 20 FEB 69

U. S. ARMY ELECTRONICS COMMAND
PROCUREMENT AND PRODUCTION DIRECTORATE
FORT MONMOUTH NEW JERSEY 07703

PLUG, SHIELD

B | CODE IDENT NO. 80063 | SM-B-508984

SCALE 2/1 | SHEET —

WHEN REFERRING TO THIS DRAWING STATE DRAWING NO., APPLICABLE ISSUE LETTER IF ANY, AND DATE

PARTS LIST FOR ECOM DRAWING SM-D-508994

PART NO.	MATERIALS OF CONSTRUCTION	FINISH
1	Aluminum	Anodized
2	Aluminum	Anodized
3	Shutter - Mallory M1000 Pin - Stainless Steel	Cadmium
4	Aluminum	Anodized
5	Carbon Steel	Cadmium
6	Stainless Steel	
7	Mallory M1000	Cadmium
8	Carbon Steel	Cadmium
9	Aluminum	Anodized
10	Brass	
11	Carbon Steel	Cadmium
12	Shield - Aluminum Cylinder - Mallory M1000	Anodized Cadmium
14	See SM-C-509025-1	

THIS DOCUMENT HAS BEEN PURCHASED BY THE GOVERNMENT AND MAY BE REPRODUCED AND USED IN CONNECTION WITH ANY GOVERNMENT PROCUREMENT OR MAINTENANCE OPERATION

NOTE
DATA MARKED WITH AN ASTERISK (*) IS PECULIAR TO A PRIOR MANUFACTURER. IT DOES NOT TAKE PRECEDENCE OVER ANY OTHER DATA ON THIS DRAWING, AND IS NOT CONTRACTUALLY BINDING OR EITHER THE CONTRACTOR OR THE GOVERNMENT

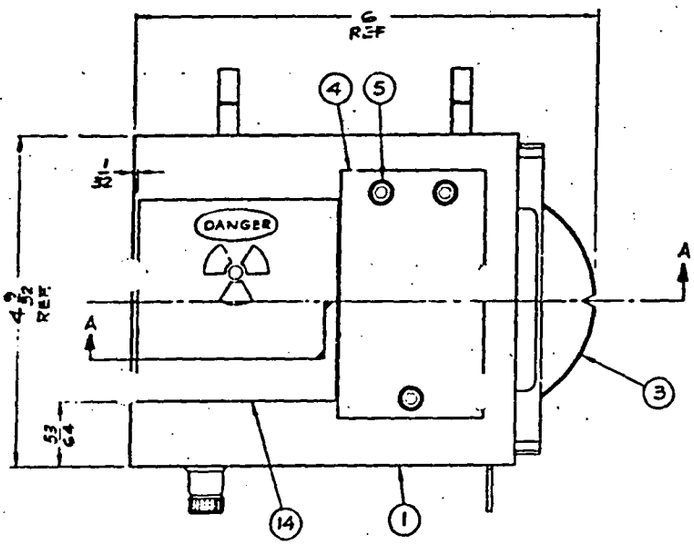

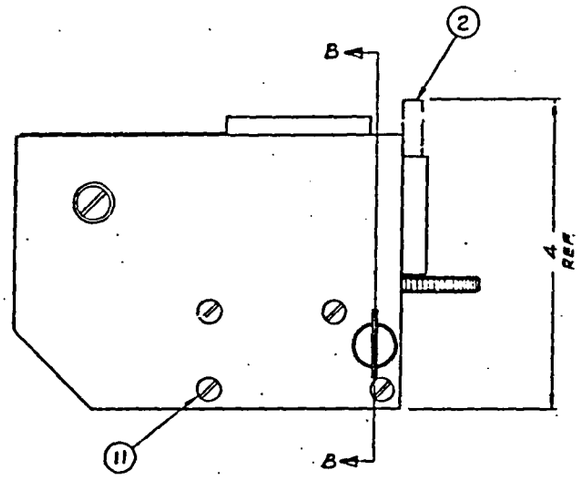

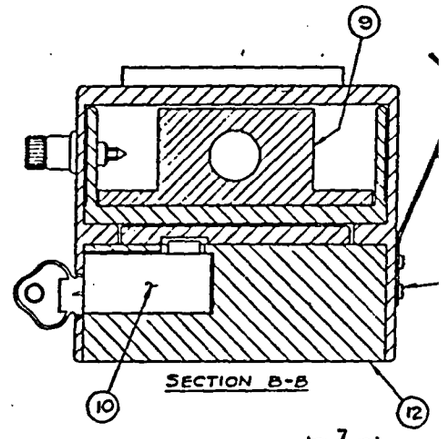

SECTION B-B

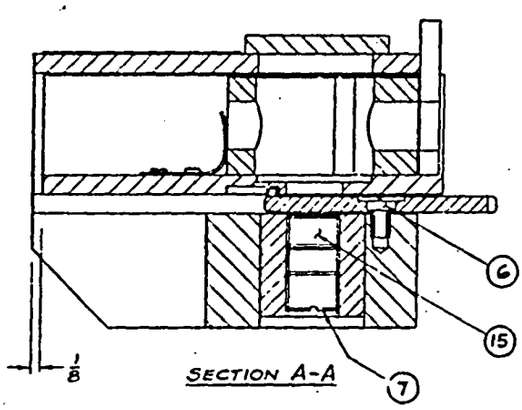

SECTION A-A

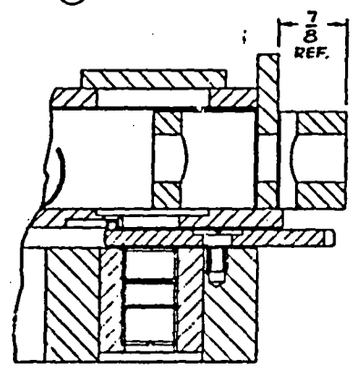

PART SECTION A-A SHOWING ITEM 9 IN EXTENDED POSITION.

REVISIONS				
LTR	ZONE	DESCRIPTION	DATE	APPRO

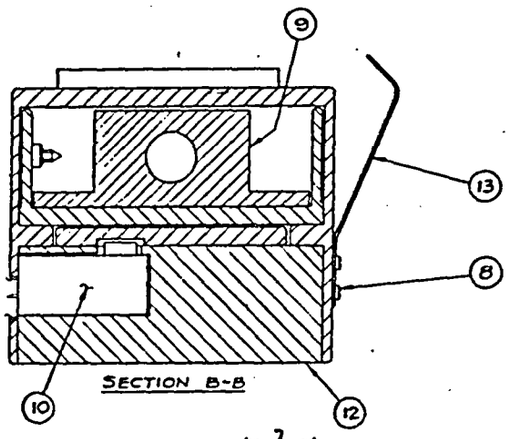

SECTION B-B

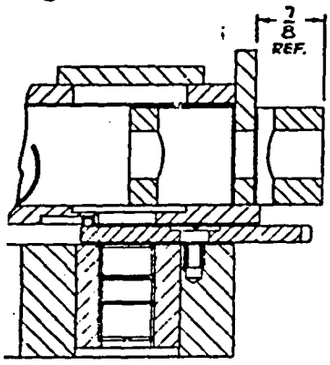

PART SECTION A-A
SHOWING ITEM 9 IN
EXTENDED POSITION.

ITEM	REQD	PART NO.	DESCRIPTION	SPECIFICATION	NO
15	1	SM-B-509057	SOURCE ASSY		
14	1	SM-C-5 9025-1	LABEL, RADIATION		
13	2	SM-B-509020	SPRING, INSTRUC. MANUAL		
12	1	SM-C-508997	SHIELD ASSY.		
11	8	MS-35239-36	SCREW; FLAT HD, 6-32 UNC × 7/16	FF-S-92	
10	1	SM-B-509007	LOCK		
9	1	SM-B-509012	BLOCK, SPACING		
8	4	MS 35206-213	SCREW, PAN HD, 4-40 UNC × 1/4	FF-S-92	
7	1	SM-B-508984	PLUG, SHIELD		
6	1	SM-B-509010	SCREW, SHOULDER		
5	3	SM-B-509022-1	SCREW, CAP		
4	1	SM-B-508999	COVER		
3	1	SM-B-509008	ABSORBER ASSY		
2	1	SM-B-508996	DRAWER ASSY		
1	1	SM-C-508995	HOUSING ASSY		

LIST OF PARTS

NEXT ASSY	USED ON
SM-D-508993	DL 508965

APPLICATION

UNLESS OTHERWISE SPECIFIED:
DIMENSIONS ARE IN INCHES
TOLERANCES ON:

FRACTIONS	DECIMALS	ANGLES
± 1/64	—	—

MATERIAL: —

~~CANADIAN ADMIRAL CORP. LTD.~~
DA-28-043-AMC-02402E

DRAWN A.P.S
CHECKED
ELECTRONICS COMMAND
REVIEWED ER-1 SMF
APPROVED ER-1 SMF
DATE 6 JUN 70

U. S. ARMY ELECTRONICS COMMAND
PROCUREMENT AND PRODUCTION DIRECTORATE
FORT MONMOUTH NEW JERSEY 07703

UNIT ASSY DOSERATE

SIZE D | CODE IDENT NO. 80063 | SM-D-508994

SCALE 1/1 | SHEET —

WHEN REFERRING TO THIS DRAWING STATE DRAWING NO., APPLICABLE ISSUE LETTER IF ANY, AND T

Incl 12

THIS DOCUMENT HAS BEEN PURCHASED BY THE GOVERNMENT AND MAY BE REPRODUCED AND USED IN CONNECTION WITH ANY GOVERNMENT PROCUREMENT OR MAINTENANCE OPERATION

NOTE
DATA MARKED WITH AN ASTERISK (*) IS PECULIAR TO A PRIOR MANUFACTURER. IT DOES NOT TAKE PRECEDENCE OVER ANY OTHER DATA ON THIS DRAWING, AND IS NOT CONTRACTUALLY BINDING ON EITHER THE CONTRACTOR OR THE GOVERNMENT

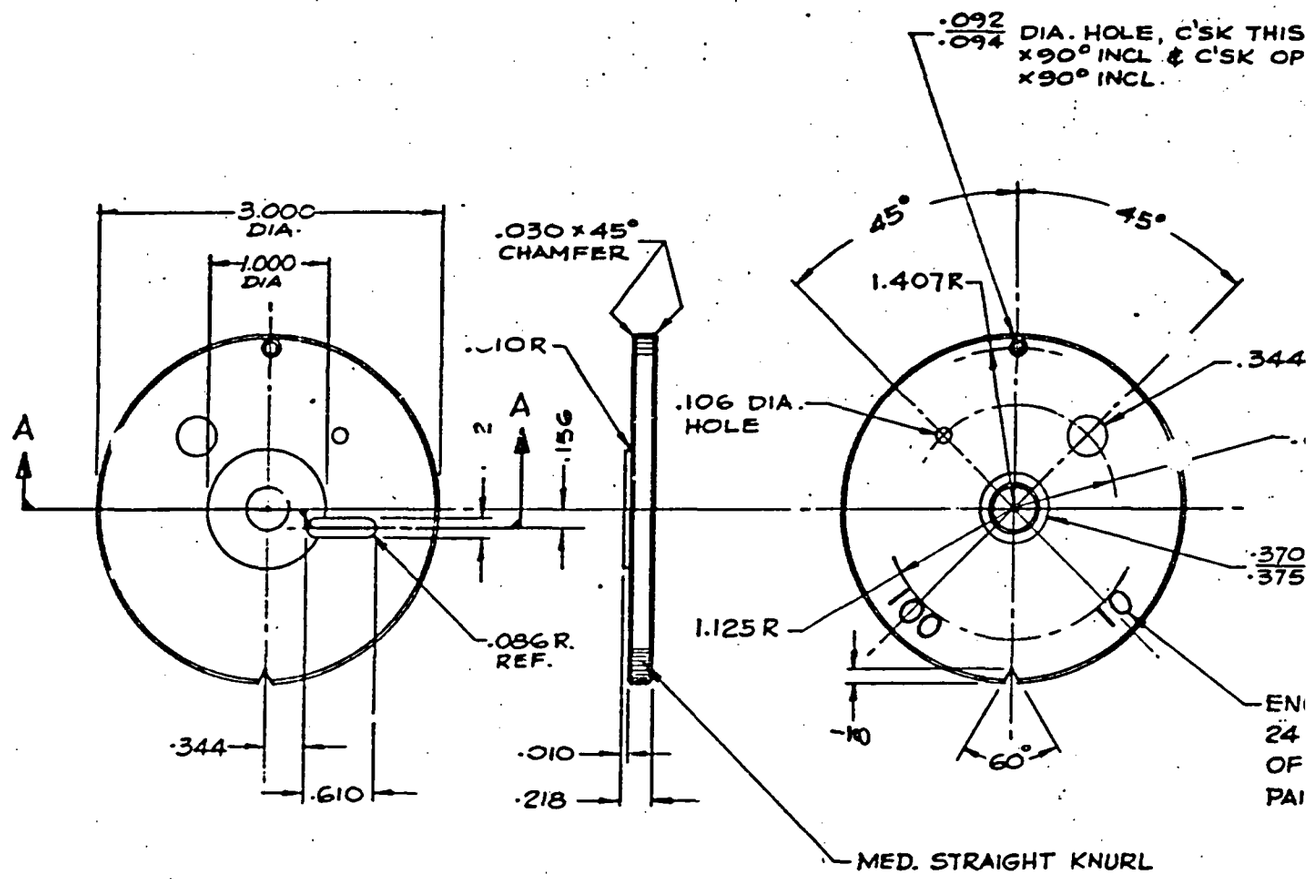

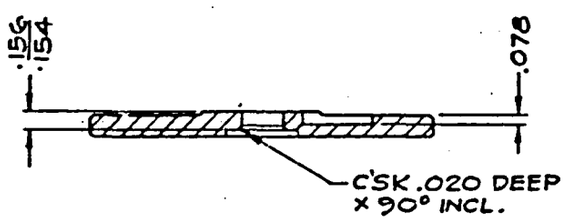

SECTION A-A.

NOTES
1. FINISH – M262 PER MIL-F-14072

		UNLESS OTHERWISE SPECIFI
		DIMENSIONS ARE IN INCHES
		TOLERANCES ON:
		FRACTIONS DECIMALS ANG
		±1/64 ±.005 ±:
		MATERIAL:
SM-B-509008	DL508965	M1000 METAL
NEXT ASSY	USED ON	P.R. MALLORY
APPLICATION		INDIANAPOLIS, IND.
		OR EQUAL.

WHEN

LTR	ZONE	DESCRIPTION	DATE	APPROVED

C'SK THIS SIDE TO .103 DIA.
℄ C'SK OPP. SIDE TO .140 DIA.

.344 DIA. HOLE

.875 R.

$^{.370}_{.375}$ DIA. HOLE, C'BORE .625 DIA TO DEPTH SHOWN IN SECT. A-A.

ENGRAVING TO BE OF THE STYLE "FUTURA BOLD" OR EQUAL 24 PT, .015 DEEP ℄ BLACK PAINT (COMMERCIAL) FILLED - SURFACES OF RECESS TO BE COATED WITH PRIMER (COMMERCIAL) BEFORE PAINT FILLING

REQD	PART NO.	DESCRIPTION	SPECIFICATION	NOTE
		LIST OF PARTS		

OTHERWISE SPECIFIED:
ONS ARE IN INCHES
RCES ON:
NS DECIMALS ANGLES
±.005 ±2°

IL:
METAL
ILLORY
IAFOLIS, IND.
QUAL.

~~CANADIAN ADMIRAL CORP LTD~~
DA-28-043-AMC-02402E

U. S. ARMY ELECTRONICS COMMAND
PROCUREMENT AND PRODUCTION DIRECTORATE
FORT MONMOUTH NEW JERSEY 07703

DRAWN MB
CHECKED
ELECTRONICS COMMAND
REVIEWED ER-1 SMCF
APPROVED ER-1 SMCF
DATE 5 JUN 69

ABSORBER

SIZE	CODE IDENT NO.	
C	80063	SM-C-509011
SCALE 1/1		SHEET —

WHEN REFERRING TO THIS DRAWING STATE DRAWING NO., APPLICABLE ISSUE LETTER IF ANY, AND DATE

Incl 13

THIS DOCUMENT HAS BEEN PURCHASED BY THE GOVERNMENT AND MAY BE REPRODUCED AND USED IN CONNECTION WITH ANY GOVERNMENT PROCUREMENT OR MAINTENANCE OPERATION

NOTE
DATA MARKED WITH AN ASTERISK (*) IS PECULIAR TO A PRIOR MANUFACTURER. IT DOES NOT TAKE PRECEDENCE OVER ANY OTHER DATA ON THIS DRAWING, AND IS NOT CONTRACTUALLY BINDING ON EITHER THE CONTRACTOR OR THE GOVERNMENT

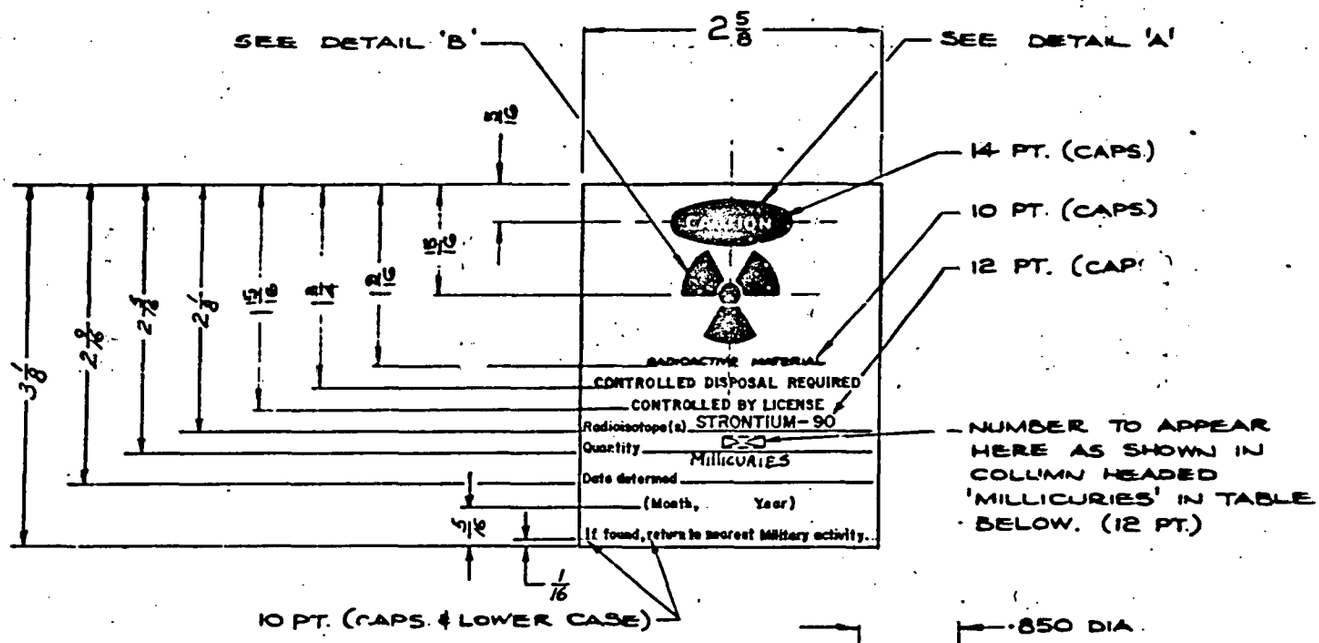

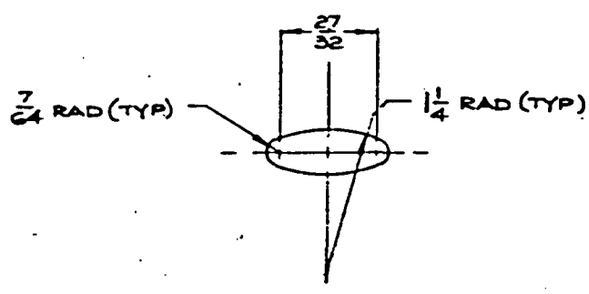

DETAIL 'A'

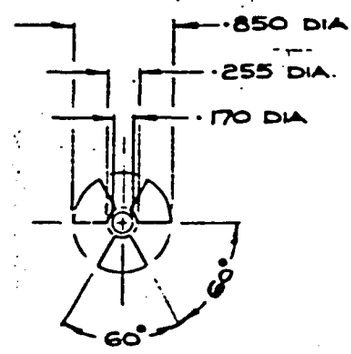

DETAIL 'B'

NOTES:-

1. ALL NUMBERS & LETTERS TO BE OF THE STYLE 'FUTURA MEDIUM' - OR EQUAL - & OF THE SIZES SHOWN. i.e 10 PT ; 12 PT ETC.

2. COLORS TO BE IN ACCORDANCE WITH FED-STD-595:- ALL LETTERING & AREAS SHOWN DARK TO MATCH COLOR CHIP Nº 17142 OR 27142 (MAGENTA) ALL LETTERING & AREAS SHOWN LIGHT TO MATCH COLOR CHIP Nº 23655 (YELLOW).

3. MATERIAL TO BE 'SUB-SURFACE PRINTED MYLAR' ·003 THICK WITH PRESSURE SENSITIVE ADHESIVE BACKING. (AS SUPPLIED BY W.H. BRADY Cº OF CANADA LTD, REXDALE, ONT. THEIR PART Nº - B188) - OR EQUAL.

4. MARKINGS SHALL MEET THE REQUIREMENTS OF SPEC. MIL-M-15231

SM-D-508954	
SM-D-508953	
SM-D-508975	
SM-D-508967	DL-508965
NEXT ASSY	USED ON
APPLICATION	

UNLESS OTHERWISE SPECIFIE
DIMENSIONS ARE IN INCHES
TOLERANCES ON:

FRACTIONS	DECIMALS	ANGL
± 1/64	± ·005	–

MATERIAL:

SEE NOTE 3

WHEN

REVISIONS				
LTR	ZONE	DESCRIPTION	DATE	APPROVED

NOTES (CONT)

5. NOTES 2 + 3 ARE APPLICABLE TO SM-C-509025-3 ONLY.

6. THE LABEL SHALL BE ENGRAVED ON THE LOWER HOUSING (SM-C-509030) + HOUSING (SM-C-508998) AS FOLLOWS: a. THE OUTLINE OF DETAILS "A" + "B", THE TERM CAUTION SHALL BE ENGRAVED + THE COLOR OF THE PIGMENT FILL SHALL BE WHITE.
b. THE REMAINING DATA SHALL BE ENGRAVED AS SHOWN + THE PIGMENT FILL SHALL BE WHITE.
c. ENGRAVE THROUGH FINISH "A" - CHARACTERS TO BE GOTHIC CONDENSED. LINE WIDTH + DEPTH SHALL BE .007 $^{+.003}_{-.000}$. COAT WITH VARNISH PER MIL-M-13231, GROUP 1.

PART Nº	MILLICURIES
SM-C-509025-1	25
-2	75
-3	100

REQD	PART NO.	DESCRIPTION	SPECIFICATION	NOTE

LIST OF PARTS

SE SPECIFIED:
N INCHES
ALS ANGLES
05 —

3

[redacted]
DA-28-043-AMC-02402E

U. S. ARMY ELECTRONICS COMMAND
PROCUREMENT AND PRODUCTION DIRECTORATE
FORT MONMOUTH NEW JERSEY 07703

DRAWN F.J.O.
CHECKED
ELECTRONICS COMMAND
REVIEWED ER-1 SMCF
APPROVED ER-1 SMCF
DATE 6 JUN 70

LABEL, RADIATION.

SIZE C | CODE IDENT NO. 80063 | SM-C-509025

SCALE 1/1 | SHEET —

WHEN REFERRING TO THIS DRAWING STATE DRAWING NO., APPLICABLE ISSUE LETTER IF ANY, AND DATE

Incl 14

SUPPLEMENT F

1. Reference: Item 10 of Form NRC-313.

2. Calibration activities authorized to receive the AN/UDM-2 Radiac Calibrator Set are required to possess measuring/surveying instruments (radiac set), i.e., the AN/PDR-27( ) standard Army beta-gamma detection instrument or commercial equivalent instruments. The sensitivity range of the AN/PDR-27 is zero to 500 mR/hr in 4 decade scales.

3. Inclosed in Annex F-1 is the list of radiation detection instruments used by LBAD personnel where bulk storage and maintenance will be performed for the AN/UDM-2 Radiac Calibrator Set.

JANUARY 1977 LEXINGTON-BLUE GRASS ARMY DEPOT

RADIATION DETECTING INSTRUMENTS

Annex F-1

TYPE OF INSTRUMENTS (INCLUDES MAKE & MODEL)	NUMBER AVAILABLE	RADIATION DETECTED	SENSITIVITY RANGE(mR/hr)	WINDOW THICKNESS (mg/cm^2)	USE
1. Radiacmeter IM-141/PDR-27J Portable Survey Meter	2	Beta & Gamma	0-500	3.5	Survey
2. Radiacmeter IM-174( )/PD Portable Survey Meter	4	Gamma	0-500K	Windowless	Survey
3. Radiacmeter IM-113A/PD Portable Survey Meter	1	Beta & Gamma	0-20		Survey
4. Victoreen Mod 645 Scintillac Counter	2	Gamma	0-1		Survey
5. Eberline Mod PAC-1SAG Portable Scintillation Counter	2	Alpha Gamma	0-2000K cpm 0-2 R/hr	1.5	Survey
6. Victoreen Mod 740 Cutie Pie Survey Meter	1	Alpha Beta Gamma	0-10K		Survey
7. Victoreen Mod 440RF/A Survey Meter	1	Gamma	0-300		Survey
8. Nuclear Chicago Mod 2671 Neutron Survey Meter	1	Neutron	0-25K $N/CM^2/SEC$		Survey
9. Victoreen Mod 541/A Pocket Dosimeter	15	Gamma	0-200 MR		Monitor
10. Eberline Mod HFM-2 Hand & Foot Monitor	1	Beta Gamma	0-20K cpm		Monitor
11. Baird Atomic Mod 441A Lab Monitor	1	Beta Gamma	0-100KCPM		Monitor
12. Nuclear Measurement Corp Mod AM-3D Air Monitor	2	Beta Gamma	$10-10^6$ CPM	5.6	Monitor
13. Victoreen Mod 808 VAMP Area Monitor	2	Beta Gamma	0-10		Monitor
14. Victoreen Mod 808A VAMP Area Monitor	2	Geta Gamma	0-50		Monitor

LEXINGTON-BLUE GRASS ARMY DEPOT

RADIATION DETECTION INSTRUMENTS, Cont'd.

Annex F-1

TYPE OF INSTRUMENTS (INCLUDES MAKE & MODEL)	NUMBER AVAILABLE	RADIATION DETECTED	SENSITIVITY RANGE(mR/hr)	WINDOW THICKNESS (mg/cm^2)	USE
15. RCL 4Pi Gas Flow Proportional Counter	1	Alpha Beta Gamma	See note		Measure
16. Nuclear Chicago Gas Flow Proportional Counter	1	Alpha Beta Gamma	See note		Measure
17. Packard Tri-Carb Liquid Scintillation Spectrometer	1	Alpha Beta Gamma	Maximum Printout 999,999.9 CPM		Measure
18. Nuclear Chicago Mod DS-5-3 Scintillation Detector	2	Gamma	See note		Measure
19. Nuclear Chicago Mod DS-5-4 Scintillation Well Detector	1	Gamma	See note		Measure
20. Nuclear Chicago Mod DS-5-6 Scintillation Detector	1	Alpha	See note		Measure
21. Nuclear Chicago Mod DS-303(V) Scintillation Well Detector	1	Beta Gamma	See Note		Measure
22. Nuclear Measurements Corp. PC-55 Proportional Chamber	1	Alpha Beta Gamma	Six Decade 7 "		Measure
23. Picker Mod 610502 Magnawell Scintillation Detector	1	Gamma	See note		Measure
24. Victoreen Mod 570 Condenser R-Meter	2	Gamma	0-250R		Measure
25. Landsverk Mod L-64 Condenser R-Meter	2	Gamma	0-1000R		Measure

NOTE: Readout on various Scalers typically preset count to 10^6 Max or Preset time to 999.99 minutes.

SUPPLEMENT G

1. Reference: Item 11 of Form NRC-313.

2. The AN/PDR-27( ) standard Army beta-gamma detection instruments for field use are calibrated with the AN/UDM-2 Radiac Calibrator Set in accordance with the frequency specified in Technical Bulletin (TB) 43-180, Calibration Requirements for the Maintenance of Army Materiel, and procedures prescribed in the technical manual issued with the instruments. Presently the calibration frequency specified is once every 240 days.

3. The AN/PDR-27 ( ) standard Army beta-gamma detection instruments used for health and safety purposes are calibrated in accordance with the frequency specified in TB 43-180. Presently the calibration frequency specified is once every 90 days. Calibration standards used are the AN/UDM-1 (^{60} Cobalt), AN/UDM-1a (^{137} Cesium) or equivalent and are certified by, or traceable to, the National Bureau of Standards (NBS).

4. Inclosed in Annex G-1 is the list of radiation detection instruments, method of calibration, frequency and standard used at LBAD. Instruments are calibrated according to the procedures prescribed in the various technical manuals issued with the instruments. Calibration standards are either certified by, or traceable to, the NBS.

LEXINGTON-BLUE GRASS ARMY DEPOT

JANUARY 1977

CALIBRATION Annex G-1

TYPE OF INSTRUMENTS (INCLUDES MAKE & MODEL)	METHOD	FREQUENCY	STANDARD USED
1. Radiacmeter IM-141/PDR-27J Portable Survey Meter	Direct Comparison	3 months	AN/UDM-1
2. Radiacmeter IM-174( )/PD Portable Survey Meter	Direct Comparison	3 months	1200 Ci ^{60} Source
3. Radiacmeter IM-113A/PD Portable Survey Meter	Direct Comparison	3 months	AN/UDM-1
4. Victoreen Mod 645 Scintillac Counter	Direct Comparison	3 months	AN/UDM-1
5. Eberline Mod PAC-1SAG Portable Scintillation Counter	Direct Comparison	3 months	AN/UDM-6 (Alpha) AN/UDM-1 (Gamma)
6. Victoreen Mod 740 Cutie Pie Survey Meter	Direct Comparison	3 months	AN/UDM-1
7. Victoreen Mod 440RF/A Survey Meter	Direct Comparison	3 months	AN/UDM-1
8. Nuclear Chicago Mod 2671 Neutron Survey Meter	Direct Comparison	3 months	10 Ci Pu Be Source
9. Victoreen Mod 541/A Pocket Dosimeter	Direct Comparison	3 months	AN/UDM-1
10. Eberline Mod HFM-2 Hand & Foot Monitor	Direct Comparison	3 months	Radium Std.
11. Baird Atomic Mod 441A Lab Monitor	Direct Comparison	3 months	Radium Std.
12. Nuclear Measurement Corp Mod AM-3D Air Monitor	Direct Comparison	3 months	Internal 3600 CPM Test Signal
13. Victoreen Mod 808 VAMP Area Monitor	Direct Comparison	3 months	Radium Std.
14. Victoreen Mod 808A VAMP Area Monitor	Direct Comparison	3 months	Radium Std.
15. RCL 4Pi Gas Flow Proportional Counter	Direct Comparison	Calibrated as required using appropriate calibrated Std.	
16. Nuclear Chicago Gas Flow Proportional Counter	Direct Comparison	Same as Item 14.	
17. Packard Tri-Carb Liquid Scintillation Spectrometer	Direct Comparison	360 days	Set of variously quenched toluene based ^{3}H & ^{14}C Stds.

LEXINGTON-BLUE GRASS ARMY DEPOT

CALIBRATION Annex G-1

TYPE OF INSTRUMENTS (INCLUDES MAKE & MODEL)	METHOD	FREQUENCY	STANDARD USED
18. Nuclear Chicago Mod DS-5-3 Scintillation Detector	Direct Comparison	As required	As appropriate
19. Nuclear Chicago Mod DS-5-4 Scintillation Well Detector	Direct Comparison	As required	As appropriate
20. Nuclear Chicago Mod DS-5-6 Scintillation Detector	Direct Comparison	As required	As appropriate
21. Nuclear Chicago Mod DS-303(V) Scintillation Well Detector	Direct Comparison	As required	As appropriate
22. Nuclear Measurements Corp. PC-55	Direct Comparison	As required	As appropriate
23. Picker Mod 610502 Magnawell Scintillation Detector	Direct Comparison	As required	As appropriate
24. Victoreen Mod 570 Condenser R-Meter	Timed Direct Comparison	360 days	NBS Cal R-Meter
25. Landsverk Mod 1-64 Condenser R-Meter	Timed Direct Comparison	360 days	NBS Cal R-Meter

SUPPLEMENT H

1. Reference: Item 12 of Form NRC-313.

2. For personnel dosimetry, beta-gamma film badge service will be furnished by LBAD in accordance with AR 40-14, Control and Recording Procedures for Occupational Exposure to Ionizing Radiation. Film badges are normally processed monthly.

3. Self-reading gamma dosimeters (0-200mR) are also available upon request.

4. Bioassay services, if required, are available from the Surgeon General.

SUPPLEMENT I

1. Reference: Item 13 of Form NRC-313.

2. Facilities for use and storage of the AN/UDM-2 Calibrator Set will be designated radiation controlled areas for those purposes as approved by the local RPO.

3. Sets used by the mobile calibration teams (AN/GSM-256 Calibration Set/ Secondary Transfer Standards) will be used and stored in specially designed vans access to which is limited to team members. The sets will be stored in locked lead lined cabinets within the vans. At other locations the sets will be used and stored in fire resistant buildings, in controlled areas and secured against unauthorized removal. Areas/buildings will be posted with Caution - Radioactive Materials signs.

4. LBAD Storage, maintenance and serviceability installation

a. Construction: The installation is concrete block and steel with steel and concrete roof. The calibration and storage rooms are constructed of 36 inches of poured concrete with door containing 1/4 inch of lead shielding.

b. Fire Protection: The installation is protected by fire sprinkler system which is tied into LBAD's self supporting fire department. The fire department has a maximum response time of 2 to 3 minutes to its furthest building.

c. Security: The security of the installation is such that all buildings are locked when not inhabited and the perimeters of LBAD are secured by chain-linked fence with roving patrols and sentries at the gate.

d. Instrumentation: Adequate health physics instrumentation is immediately available for operations involving ionizing radiation.

e. Hoods: Should it become necessary to remove leaking sealed sources from the AN/UDM-2 during serviceability, the required disassembly of the AN/UDM-2 will be performed in a standard chemical hood, the leaking sources will be disposed of as radioactive waste and the good sources will be stored in approved type storage containers.

f. Shielding: Temporary or permanent shielding such as lead bricks and sheets, lucite and glass will be employed to prevent excessive exposure when time and distance factors alone would not be adequate. Shielding will also be used whenever feasible to minimize exposure.

g. Remote handling and viewing equipment: Remote handling equipment such as tongs, forceps, and remote viewing equipment such as mirrors will be used as necessary to reduce both whole body exposure and exposure to the hands.

SUPPLEMENT J

1. Reference: Item 14 of Form NRC-313.

2. The Army program for control of radioactive items of supply is prescribed specifically in three regulations. Inclosure 1, AR 700-64, Radioactive Commodities in the DOD Supply System, is an interservice regulation which prescribes responsibilities for control of radioactive items and components which are introduced in the supply system. Inclosure 2, AR 725-1, Special Authorization and Procedures for Issues, Sales and Loans, Chapter 3 establishes special inventory and radiological control procedures for radioactive calibration sources and test items. Inclosure 3, AR 700-52, Licensing and Control of Sources of Ionizing Radiation, establishes requirements for obtaining NRC Licenses for radioactive materials and authorizations to possess radioactive material not controlled by NRC. Major Army commands are implementing these Department of the Army regulations.

3. The authority contained in NRC licenses and Department of the Army (DA) authorizations issued to CERCOM permits Army installations and activities to acquire and use certain radioactive calibration and test items without obtaining their own license or authorization for these items (a DA authorization is required for radioactive material not controlled under an NRC specific license). This is based upon commitments made by CERCOM that all Army elements will comply with conditions contained in those licenses and authorizations and with pertinent Army regulations. Both NRC and DA require control of all operations involving radioactive items to insure the safety of personnel and property. Army activities possessing licensed radioactive sources and the agencies controlling them are subject to inspection by the NRC in addition to inspection by Army elements.

4. The mission of CERCOM includes the management and performance of all materiel life cycle functions and services and acts as DA licensee for Army-wide distribution of these items. The following is a description of functions of the various CERCOM elements providing a coordinated effort:

a. The functions for the manager of the NRC License are assigned to the Chief, Safety Office of the Command Staff of this headquarters. The responsibilities of the manager are to:

(1) Coordinate, obtain, administer, review, amend and maintain necessary licenses for radioactive commodities managed by this command.

(2) Provide information and guidance to all commanders, with respect to limitations, constraints, conditions or procedures which affect the responsibilities of those commanders for the radioactive commodity.

(3) Monitor the various elements of the life cycle program of the radioactive commodities to assure compliance with conditions of the applicable license.

(4) Assure that licensed material is not transferred to unauthorized persons or organizations.

b. The health physicists serve as the CERCOM staff contact for radiological control and licensing matters to the Army Materiel Development and Readiness Command, other major commands and Department of the Army elements, other services and federal agencies; provide advice and assistance to other CERCOM elements involved in the development and fielding of radioactive items, the National Inventory Control Point (NICP) (an element of CERCOM), depots and other Army elements; prepare applications for NRC Licenses for Army-wide distribution of assigned items; prepare radiological safety instructions for incorporation in technical literature and other published guidance pertaining to the items; coordinate with the NICP to assure that requisitioning elements are authorized to and technically capable of receiving the item and that procurements do not exceed the quantity or use limitations imposed by the various licenses; perform pre-award and post award health physics surveys of contractors; provide health physics advice to be included in instructions for disposal of radioactive waste, and serve as staff officers for notification, investigation, and preparation of reports required in the event of an accident or incident in which this command's radioactive items may be involved. In addition to the above, the health physicists maintain a computerized data retrievel system that contains information such as the radioactive commodity type number, set serial number, location, responsible RPO, alternate RPO, where applicable, their qualifications, and all leak test results.

c. The CERCOM NICP located at Fort Monmouth, New Jersey has adopted special procedures for individually controlled radioactive items that are in addition to standard Army Supply practices used for all type classified items. The control point maintains records of procurements, receipts, storage locations, shipments, using locations, authorizes, issues, and assures adequate supply. It reviews requisitions submitted and when approved, issues material release orders to the designated depot for shipment of the material to the requisitioner. Requisitions are submitted through various command control channels. The control point bases its approval on previously established authorization of the requisitioner to receive the item from the supply standpoint such as an approved Table of Allowances. Upon approval of the requisition, the control point issues a material release order to the depot storing the item. The depot ships the item directly to the requisitioner, notifies the control point and furnishes other shipping data which is forwarded also through supply property office channels.

d. Reports of excess items are submitted through various command channels to the NICP for review for serviceability, turn-in or disposal as radioactive waste. Requests for disposition instructions of radioactive waste are submitted through radiological command channels to the NICP.

e. The major Army commands have established regulatory requirements for control of the radioactive items. Each major command has established at the headquarters level a radioactive material control point and appointed a command radiological control officer to administer control of radioactive

items within the command. That officer reviews and concurs in the qualifications of local radiation protection officers within the command, maintains records of radioactive items by location and assures periodic inventory and leak tests by using activities, performs periodic inspections/audits of accountable installations/activities to assure that items are properly handled in accordance with Army and NRC regulations, and to assure the submission of inventory and leak test reports and accident/incident reports. The local radiation protection officer is responsible for administering the local radiation protection program. Local programs provide for designated controlled areas, dosimetry, instrumentation, operating procedures to supplement published manuals for the items, receipts, transfers, storage and records. Requisitions originated by using elements are processed through the local radiation protection officer to the major command radiation control officer. The requisition is reviewed from the radiation protection standpoint and logistics authority for possession. If approved, the requisition is forwarded to the NICP. Upon receipt of notification from the NICP of the transaction the information is forwarded to the local radiation protection officer who assumes radiation protection responsibility for the item. Requests for transfers of items between installations/activities are reviewed by the command radiological control officer and if approved reported to the NICP. Transfers outside the major commands are reviewed and approved by the NICP. Reports of excess items are submitted through radiological control channels for review for serviceability, turn-in or disposal as radioactive waste. Requests for disposition instructions of radioactive waste are submitted through radiological command channels to Commander, USACERCOM, ATTN: DRSEL-SF-H, Fort Monmouth, New Jersey 07703.

f. LBAD will provide bulk storage, maintenance, where required, leak test analyses, recalibration, quality surveillance and issue of the AN/UDM-2 Radiac Calibrator Set when approved by the NICP. Any maintenance that will be performed is the necessary removal and exchange of leaking sealed sources from the Discharge Well Assembly and/or Doserate Jig Assembly. This will be performed in the facility described in Supplement I. Where radioactive materials are involved, LBAD has established special warehousing facilities, handling procedures and has established a formal radiation protection program administered by a qualified physicist (RPO). Mr. Joseph M. King has been designated to serve in this capacity. As with nonradioactive items, items are inspected when received, at intervals during storage and immediately before shipment. The inspections are conducted according to established surveillance procedures as determined by CERCOM for each item. The quality surveillance program for the AN/UDM-2 Radiac Calibrator Set will be performed by either the LBAD RPO, his alternates or the CERCOM health physicists and will involve the annual leak testing of a random sampling of at least one percent of depot assets and/or a minimum of five each of the AN/UDM-2 Radiac Calibrator Sets, whichever is greater. LBAD will provide the results to Commander, USACERCOM, ATTN: DRSEL-SF-H, Fort Monmouth, New Jersey 07703. Appropriate action will be taken if results indicate a trend toward leakage. LBAD will provide the NICP with notification of individually controlled item receipts, inspections and shipments. Inclosure 4 describes the qualifications of the LBAD RPO and his alternates. Inclosure 5 (DQA SOP-41) and inclosure 6 (LBADR 725-2) describes the LBAD Radiation Protection Program.

g. The program for control of the AN/UDM-2 Radiac Calibrator Set, as with other radioactive items is, to the extent practical, the same logistics procedures applied to other Army supplies. Regulatory guidance has been established by DA and implemented by the various commands, governing the management process, life-cycle management of material, logistics management and support, procurement, maintenance, storage, transportation, including packaging and disposal. For radioactive items the procedures are augmented by specific regulatory controls pertaining to the possession and use of radioactive materials, control of personnel radiation exposure, safe storage, handling, maintenance, transportation and disposal of the items. For the AN/UDM-2 Radiac Calibrator Set, more stringent controls have been established as distribution of these devices are limited to authorized calibration activities. These controls include identifying and insuring that the AN/UDM-2 Radiac Calibrator Set is coded in the Commodity Command Standard System Automated Data Processing Program as radioactive in accordance with Appendix A of AR 708-1, Cataloging and Supply Management Data. This calibrator set is coded with a Special Control Item Code of B meaning Regulated-Principal and Radioactive. Requisitions are processed initially by computers and then are manually processed by the NICP item manager to verify that the requisitioners are authorized to receive the calibrator set. To insure that the above requirements are being implemented, the CERCOM Health Physicists maintain close coordination with the item manager. Recalibration and re-certification of the AN/UDM-2 Radiac Calibrator Set will be performed at LBAD, Pirmasens Army Depot, Germany and Sacramento Army Depot (SAAD), Sacramento, California. In addition to LBAD, health physics laboratory counting equipment capable of measuring 0.001 microcuries are also available from SAAD and Pirmasens Army Depot for the evaluation of the six month leak test smears of the calibrator set. Leak test results are forwarded through Army channels to Commander, USACERCOM, ATTN: DRSEL-SF-H, Fort Monmouth, New Jersey 07703.

h. Users of the AN/UDM-2 Radiac Calibrator Set are provided with specific instructions on safe handling, storage and transportation as described in inclosure 7 (Technical Bulletin 11-6665-227-12). Inclosure 5 of Supplement E (Technical Manual 11-6665-227-12) also provides the users with specific instructions on the operation, control and maintenance of the calibrator. This information satisfies the radiation protection instructions to users as required by Title 10, Chapter 1, Code of Federal Regulations, Parts 19 and 20. In addition, Form NRC-3, Notice to Employees, is provided with the aforementioned technical literature. Commander, USACERCOM, ATTN: DRSEL-SF-H, Fort Monmouth, New Jersey 07703 will make available to the users the appropriate NRC regulations, the NRC license, license conditions, documents incorporated into the license by reference, and amendments thereto, and any notice of violation involving radiological working conditions for examination. Personnel monitoring reports are made available to the users in their individual medical records for examination.

S.A. Hon

DSAM 4145.8
AR 700-64
NAVSUPINST 4000.34A
AFR-67-8
MCO P4400.105B

RADIOACTIVE COMMODITIES IN THE DoD SUPPLY SYSTEMS

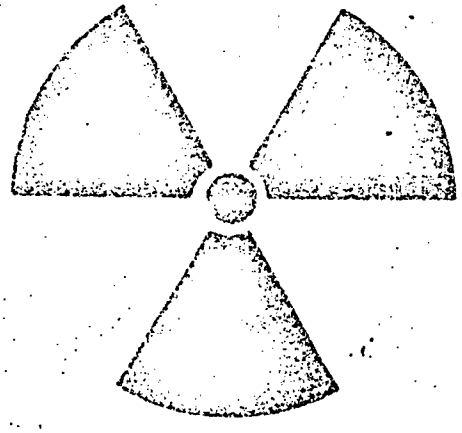

November 1976

Incl 1

DSAM 4145.8
AR 700-64
NAVSUPINST 4000.34A
AFR 67-8
MCO P4400.105B

DEFENSE SUPPLY AGENCY,
DEPARTMENTS OF THE ARMY, THE NAVY,
AND THE AIR FORCE
WASHINGTON, D. C., 18 November 1976

(DSA supplementation is permitted at all levels.)
(Army supplementation is permitted.)
(Navy and Marine Corps supplementation is prohibited.)

FOREWORD

This publication contains interservice policy, mandatory procedures and responsibility guidance for all activities and installations of the Military Services and the Defense Supply Agency that are engaged in the development, training, procurement, storage, maintenance, control, shipment, and disposal of radioactive commodities. Nuclear reactors and nuclear weapons are excluded from this publication, except for components and ancillary equipment which are common to other end items of supply. This publication does not apply to users of radioactive commodities.

This publication will be revised periodically to reflect policy and procedural improvements and augmentations. The Chief, Depot Operations Division, Executive Directorate, Supply Operations, HQ DSA (DSAH-OW) is responsible for interservice coordination and revision of this publication and will review and update as required.

BY ORDER OF THE DIRECTOR, DEFENSE SUPPLY AGENCY, AND THE SECRETARIES OF THE ARMY, THE NAVY, AND THE AIR FORCE.

J. J. McALEER, JR.
Colonel, USA
Staff Director, Administration

BERNARD W. ROGERS
General, United States Army
Chief of Staff

OFFICIAL

PAUL T. SMITH
Major General, United States Army
The Adjutant General

This manual supersedes DSAM 4145.8/AR 700-64/NAVSUPINST 4000.34/AFM 67-8/MCO P4400.105A, 25 Apr 75.
*Denotes Changes

For sale by the Superintendent of Documents, U.S. Government Printing Office, Washington, D.C. 20402 - Price 80 cents
There is a minimum charge of $1.00 for each mail order.

DSAM 4145.8
AR 700-64
NAVSUPINST 4000.34A
AFR 67-8
MCO P4400.105B

W. R. DOWD, JR.
Rear Admiral, SC, United States Navy
Commander, Naval Supply Systems Command

W. R. JOHNSON
Brigadier General, U.S. Marine Corps
Acting Deputy Chief of Staff for
Installations and Logistics

DAVID C. JONES
General, USAF
Chief of Staff

OFFICIAL

JAMES J. SHEPARD
Colonel, USAF
Director of Administration

DISTRIBUTION

Defense Supply Agency: 3; 52

Army: To be distributed in accordance with DA Form 12-9A requirements for AR, Logistics and Logistics Plans.

Active Army: B (Qty rqr block No. 506)

ARNG: D (Qty rqr block No. 508)

USAR: D (Qty rqr block No. 508)

Navy:

SNDL A1; A2A (Chief, Naval Research only) (6 copies); A3; A4; A5 (BUMED only); 21; 22; 23; 24; 28; 29; 32; 40; 41; E3; FF5; FG; FH25; FH26; FKA; FKM9; FKM13; FKM15; FKM17; FKM18; FKM20; FKM24; FKP; FKQ; FKR

Copy to:

SNDL FKM27/CL; FKA1C (Code 04N) (2 copies); FKN7 (8 copies) NAVSUP (SUP 09A; 09H; 09I; 91; 081B3 (7 copies); 0822 (10 copies))

Stocked: NAVPUBFORMCEN, 5801 Tabor Avenue, Philadelphia, Pa. 19120

Air Force: F

MARCORPS CODES: L5/L10
Copy to: 8145001

CONTENTS

CHAPTER I. GENERAL — Page

1-1. Purpose and Scope 1
1-2. Policy 1
1-3. Definitions 1
1-4. Responsibilities 3
1-5. References 5

CHAPTER II. RESEARCH, DEVELOPMENT, TEST, AND EVALUATION

2-1. Research and Development Phase 7
2-2. Test and Evaluation 7
2-3. Specifications, Purchase Descriptions, and Drawings 7

CHAPTER III. LOGISTICS PHASE OF THE LIFE CYCLE CONTROLS

3-1. Control of Radioactive Material 9
3-2. Licenses and Service Authorizations 9
3-3. Procurement of Radioactive Materials 10
3-4. Quality Assurance 11

CHAPTER IV. OPERATIONAL CONSIDERATIONS FOR PERSONNEL HANDLING RADIOACTIVE COMMODITIES

4-1. General 13
4-2. Medical Aspects 13
4-3. Types of Hazards 13
4-4. External Exposure Policy and Standards 13
4-5. Radiation Instruments for External Radiation 14
4-6. Standards and Limits for Internal Radiation Hazards 14
4-7. Personnel Training 15
4-8. Standing Operating Procedures 16
4-9. Emergencies 16
4-10. Emergency Assistance 17
4-11. Release of Information 18

CHAPTER V. CONTROLS AND SPECIFIC HANDLING OPERATIONS

5-1. General 21
5-2. Transportation of Radioactive Materials 21
5-3. Shipping Activity 21
5-4. Packaging 22
5-5. Other Shipments 22
5-6. Receiving Activity Responsibilities 22
5-7. Storage Areas 22

5-8. Inventory of Commodities at Supply Facilities and Stocking Activities..... 23
5-9. Control and Surveys of Storage/Warehouse Areas..... 23
5-10. Control and Survey of Radiation and High Radiation Areas..... 24
5-11. Maintenance..... 24
5-12. Surveillance..... 24
5-13. Markings and Warnings..... 25
5-14. Calibration of Radiac Survey Instruments..... 25
5-15. Disposal..... 25

TABLE

4-1. Maximum Levels of Radioactive Contamination..... 19

CHAPTER I
GENERAL

1.1. PURPOSE AND SCOPE. This publication contains interservice policy, outlines mandatory procedures, and identifies the responsibilities of organizational elements and key personnel worldwide which are necessary to effect radiation protection standards for the control of radioactive commodities under DoD cognizance. This publication does not apply to users of radioactive commodities. Nuclear reactors and nuclear weapons are excluded from the provisions of this publication, except for components and ancillary equipment which are common to other end items of supply.

1-2. POLICY

a. Personnel exposure to ionizing radiation shall be kept as low as practicable consistent with operational necessity and within Federal and applicable Military Service or Agency (hereinafter referred to as Service or Agency) radiation protection standards.

b. Personnel who work with radioactive commodities shall be instructed on potential hazards, on precautions to minimize exposure, and on operating procedures.

c. Life cycle controls shall be established for each commodity containing radioactive material as early as possible in the development/design stage. Licenses and service authorizations, as applicable, shall be obtained by the responsible Service or Agency prior to awarding procurement contracts.

d. The use of radioactive materials in items of supply shall be kept to the minimum consistent with DoD needs. Practical, nonhazardous substitutes shall be procured and used when possible. Radium shall not be procured or used until it has been established that a nonradioactive substitute or a less hazardous radioactive substance cannot be used feasibly.

e. At the earliest practicable stage in the planning process, including the development stage of a radioactive commodity and in all instances prior to the decision to procure the commodity, the environmental consequences during each element of the life-cycle shall be assessed in accordance with Federal and Service or Agency environmental assessment directives.

f. This document does not waive or supersede the standards promulgated under the Statutory Act and administrative regulations listed on page 5.

g. This document does not waive any consumer protection or product safety requirements published or to be published by other Federal regulatory agencies.

h. Guidance contained in this document should be included in technical publications applicable to the operation, maintenance, storage, handling, transportation and disposal of radioactive material.

1-3. DEFINITIONS

a. Airborne Radioactive Material. Any radioactive material dispersed in the air, in the form of dusts, fumes, mists, vapors, or gases.

b. Anticontamination Clothing. Protective clothing worn by an individual to prevent contamination of the individual or personal clothing with radioactive material. Anticontamination clothing is furnished by the Government, and its use and laundering are restricted to controlled areas.

c. Authorized Material. Radioactive material not requiring a specific license issued by the U.S. Nuclear Regulatory Commission (NRC). Receipt, possession, use or transfer requires specific authorization or permit by specified Agency or Service organization.

d. Controlled Area. A clearly defined area in which the exposure of personnel to radiation is under the supervision of an individual in charge of radiation protection. A controlled area can require, among other warning devices, monitoring devices and measures, control of access, occupancy, and working conditions for radiation protection purposes.

e. High Radiation Area. Any area that is accessible to personnel in which radiation exists at such levels that a major portion of the body could receive a dose in excess of 100 millirem in any one hour.

f. Ionizing Radiation. Electromagnetic or particulate radiation capable of causing ionization in its passage through matter. Alpha, beta, and neutron particles, gamma and X-rays, are examples of ionizing radiation.

g. License Exempt Material Items. Radioactive material items not subject to NRC regulations or radioactive material exempt from licensing by the NRC as specified in Title 10, Code of Federal Regulations (CFR).

h. Licensed Material. Radioactive material that is received, possessed, used, or transferred under a general or specific license issued by the NRC.

i. Life Cycle Controls. The composite of all management actions to assure that the credible hazards associated with possession and use of radioactive commodities are minimized. Such controls are established during each phase of the life-cycle to assure that the effects of radiation on personnel and the environment are maintained within acceptable limits. Controls are established during the Research and Development phase to assure that introduction of radioactive commodities into the supply system are held to an absolute minimum consistent with mission requirement; and special capabilities, facilities, and procedures for supply, transportation, maintenance, use, training, and disposal (including demilitarization) are or will be provided.

j. Occasionally Exposed Individual. An individual whose work is not normally performed in a controlled area and whose duties do not normally involve exposure to ionizing radiation; however, an individual may have reason to enter a controlled area in the performance of duties (messengers, deliverymen, maintenance workers, etc.). The exposure to ionizing radiation shall not be in excess of that allowed to any individual in the population at large.

k. Occupationally Exposed Individual. Synonym-Radiation Worker. An individual whose work is performed in a controlled area and whose duties may involve exposure to ionizing radiation.

l. Radiation Area. An area in which an individual could receive a radiation dose of 5 millirem or more in any one hour or a radiation dose of 100 millirem or more in any 5 consecutive days. For practical purposes, a radiation area shall be considered to be any area in which the radiation intensity is greater than 2 milliroentgen per hour (mR/hr) but less than 100 mR/hr. Specific Service/Agency guidance shall determine which standard will prevail.

m. Radiation Incident. The unplanned loss of control of radioactive material. Incidents may be caused by such events as fire, water, earthquake, transportation or other accidents, riot, insurrection, explosions, loss, theft, or enemy action.

n. Radioactive Commodity. An item of Government property composed in whole or in part of radioactive materials and to which a National Stock Number (NSN), formerly called a Federal Stock Number or part number will be or has been assigned. For the purpose of this publication, a radioactive commodity is any commodity containing
* radioactive material in excess of the following microcurie amounts:

Americium-241	0.01
Plutonium-239	0.01

Radium-226	0.01
Uranium-233	0.01
Uranium-234, Uranium-235	0.01
Radioactive materials not listed above	0.1
Mixtures of alpha emitters of unknown composition	0.01

o. Radioactive Material. Any material or combination of materials which spontaneously emits ionizing radiation.

NOTE: Radioactive materials, as referenced above, include natural elements such as radium and accelerator-produced radionuclides and NRC licensed material. *

p. Radioactive Waste. Includes the following:

(1) Property which has become contaminated to the extent that decontamination is economically unsound.

(2) Surplus radioactive material whose sales, transfer, or donation is prohibited.

(3) Surplus radioactive material which is determined to be unwanted after having been advertised as being surplus.

(4) Waste, which is radioactive, resulting from production, possession, or use of radioactive material.

q. Radiological (RADIATION) Protection Officer. An individual who is designated by the Commanders/Commanding Officers/Directors of the Authorized Activity to provide consultation and advice on the degree of hazards associated with ionizing radiation and on the effectiveness of measures to control these hazards. This individual shall be qualified technically by virtue of education, training, and experience commensurate with the type and hazard of the radiation source(s) for which he will be responsible. The term "Radiological Protection Officer" is not intended to denote commissioned status. *

r. Services/Agency. Includes Army, Air Force, Navy, Marine Corps, and the Defense Supply Agency.

s. Use of "Shall", "Will", "Should", and "May". "Shall" or "Will" are mandatory. "Should" and "May" are advisory. It may be necessary to use "Will" in cases where simple futurity is required, i.e., "Power for the motor will be supplied by the ship."

t. Supply and Maintenance Facilities. Will include the following:

Army:	Class II Supply and Maintenance Facilities within CONUS and Overseas, and supply, procurement, maintenance and transportation activities at Class I installations.
Navy:	Any naval activity or fleet unit assigned responsibility to store, maintain or process subject material, such as Naval Supply Centers, or Depots, Naval Shipyards, etc.
Air Force:	Air Force Logistics Command, Air Logistics Centers *
Marine Corps:	Marine Corps Logistic Support Bases
Defense Supply Agency:	Defense Supply Centers and Defense Supply Depots

u. User. An individual or an organizational element that uses or operates a radioactive commodity item because of mission requirement.

1-4. RESPONSIBLITIES

a. Commanders of Research and Material Developing Agencies shall:

(1) Assure nonradioactive substitutes are used whenever practical. Proposals to incorporate radioactive material into a commodity must consider the cost effectiveness

and safety against the use of alternative methods to achieve project goals. When radioactive materials are used all relevant documents describing the commodity shall indicate that the commodity is radioactive, the amount(s) of activity, the radioisotope(s) involved, and the chemical and physical form.

(2) Assure sufficient testing has been performed to establish that the radioactive commodity is militarily useful and that proposed life cycle instructions are adequate.

(3) Develop safety criteria in design; and establish, in publications such as technical manuals and bulletins, specific safe procedures and physical standards pertaining to equipment and systems which they develop. Publications prepared shall be submitted to the NRC License and/or Service Authorization Manager for approval.

(4) Prepare maintenance allocation charts which designate allowable repair operations at each maintenance echelon, and indicating which repair echelons require a license or authorization.

b. Commanders of Training Agencies shall: put to the use

(1) Incorporate the specific safe procedures and safe physical standards established by materiel developing agencies into applicable training curriculums and training documents.

(2) Submit those training materials which are specific to the safe procedures and safe physical standards with respect to the radiation hazard to the NRC license or Authorization Manager for review and comment.

c. Commanders of Materiel and Supply Agencies shall obtain and administer required licenses or service authorizations permitting the use of radioactive commodities for which they have logistical responsibility and shall designate the manager for each license or service authorization except for Marine Corps where licenses are maintained by the Deputy Chief of Staff for Installations and Logistics, HQ U.S. Marine Corps.

d. Commanders of Procuring Activities shall:

(1) Assure that appropriate NRC licenses or service authorizations have been obtained by the requiring Service or Agency prior to contract award.

(2) Obtain approval from the applicable NRC license or Service Authorization Manager through the Materiel Inventory Control Point before each procurement or reprocurement action to prevent violation of the limits and conditions of the applicable license or authorization.

(3) Assure that special procurement clauses and procurement documentation for radioactive materials are included in contracts for such commodities.

(4) Assure that procurement contracts require marking and labeling of radioactive commodities in accordance with MIL-STD-1458.

e. Commanders of Material Inventory Control Points shall:

(1) Maintain records of quantities of radioactive commodities procured, bulk storage, and disposal as well as such other records which they are required to keep by the managers of the NRC license or service authorization.

(2) Assure radioactive material procurements do not exceed use, quantity or activity limitations imposed by licenses or service authorizations and that receiving agencies are properly authorized to receive the material under the conditions of the applicable license or service authorizations.

(3) Coordinate matters pertaining to radioactive commodities with the appropriate NRC License or Service Authorization Manager.

(4) Establish and maintain appropriate data to identify applicable items as radioactive. Radioactive identification data will be incorporated with item management data and disseminated through the supply cataloging system.

f. Commander, Defense Logistics Services Center shall:

(1) Assure that the same NSN or part number will not apply to both radioactive and nonradioactive items in the Federal Supply System.

(2) Assure that the same NSN or part number cannot apply to functionally identical or like radioactive items having different radioisotopes.

g. Commanders of Material Maintenance Control Points are responsible for assuring maintenance performed on radioactive commodities are consistent with conditions of applicable licenses or service authorizations.

h. Commanders of Supply and Maintenance Facilities shall:

(1) Assure safe handling, storage, and shipment of radioactive commodities.

(2) Assure safe operation of repair and maintenance facilities handling radioactive components, where applicable.

(3) Report to Material Inventory Control Points discrepancies between data published concerning radioactive commodities, and data determined by examination at the facility.

(4) Commodity and/or end item received for repair/maintenance be marked in accordance with MIL-STD-1458 prior to return to stock or use.

i. Managers of NRC Licenses or of Service or Agency Authorizations shall:

(1) Coordinate, obtain, administer, review, amend, and maintain necessary licenses and authorizations for radioactive commodities managed by the command to which they are assigned.

(2) Provide information and guidance to all commanders specified in subparagraphs a through h above, with respect to limitations, constraints, and special data, conditions or procedures which affect the responsibilities of those commanders for each radioactive commodity.

(3) Monitor the various elements of the life cycle program of the radioactive commodities to assure compliance with conditions of the license or authorization.

(4) Assure that licensed or authorized material is not transferred to unauthorized persons or organizations. Nicp who it can be

1-5. REFERENCES

a. Title 10, Code of Federal Regulations, Energy. *
b. Title 29, Code of Federal Regulations, Labor.
c. Title 49, Code of Federal Regulations, Transportation.
d. DoD 5100.52, Radiological Assistance Responsibilities in Event of an Accident Involving Radioactive Material. *
e. DoD 5230.16, Nuclear Accident and Incident Public Affairs Guidance (PA). *
f. DoD 7730.12, Notification Procedures for Accidents and Significant Incidents Involving Nuclear Weapons, Reactors and Radioactive Materials. *
g. DoD 4140.34-M, Defense Utilization Manual. *
h. DoD 4160.21-M, Defense Disposal Manual (Restructured). *
i. MIL-STD-1458 Radioactive Materials: Marking and Labeling of Items, Packages and Shipping Containers for Identification in Use, Storage and Transportation. *
j. DSAR 4145.24/AR 40-14, Control and Recording Procedures Occupational Exposure to Ionizing Radiation. *
k. AFR 161-8, Control and Recording Procedures for Occupational Exposure to Ionizing Radiation. *
l. NAVMED P-5055, Radiation Health Protection Manual. *
m. DSAR 4500.15/AR 55-38/NAVSUPINST 4610.33/AFR 75-18/MCO P4610.19A, Reporting of Transportation Discrepancies in Shipments. *
n. AFM 71-4/DSAM 4145.3/TM 38-250/NAVSUP PUB 505/MCO P4030.19, Packaging and Handling of Dangerous Materials for Transportation by Military Aircraft. *

DSAM 4145.8
AR 700-64
NAVSUPINST 4000.34A
AFR 67-8
MCO P4400.105B

* o. AR 700-52, Licensing and Control of Sources of Ionizing Radiation.
* p. MIL-STD-105, Sampling Procedures and Tables for Inspection by Attributes.
* q. AFR 161-28, Aerospace Medicine, Personnel Dosimetry Program and the USAF Master Radiation Exposure Registry.

CHAPTER II
RESEARCH, DEVELOPMENT, TEST AND EVALUATION

2-1. RESEARCH AND DEVELOPMENT PHASE

a. The decision to use radioactive material in a commodity shall be based upon the benefits derived in terms of cost effectiveness and safety against that derived from the use of alternate material. Some of the major factors which shall be weighed are the extra costs involved in procurement, quality assurance, record-keeping, training, transportation, disposal and auxiliary protective equipment encountered during bulk storage, maintenance, and use of radioactive material.

b. Use of radioactive materials shall be kept to the absolute minimum consistent with operational requirements. Nonradioactive substitutes shall be used whenever possible from a cost effectiveness and operational point of view. Where substitution is not possible, the least hazardous suitable type and form of radioisotope shall be specified.

c. Use and environmental factors shall be considered in designing tests to establish and prove the military usefulness and safety of the item. Drop, shock, vibration, temperature extreme tests, altitude, and accelerated weathering tests such as those established in Title 10, CFR, section 32.101, as appropriate, should be used in the design tests. While the referenced tests are intended for luminous safety devices used in aircraft, most military equipment is subjected to similar extremes during normal use, storage, or transportation. *

d. Technical letters, orders, manuals, specifications and other life cycle instructions shall be developed to assure all personnel engaged in the procurement, inspection, transportation, storage, use, maintenance, calibration, control, and disposal are aware of potential hazards, precautions to minimize exposure, operating procedures and their responsibility in the overall life cycle of the radioactive commodity.

e. Proposals, draft instructions, and specifications shall be coordinated with affected DoD elements to assure compliance will be feasible. Auxiliary equipment and authorized DoD elements requiring such equipment shall be identified.

2-2. TEST AND EVALUATION

a. The adequacy of design and instructions shall be evaluated by an agency independent of the developer or of potential manufacturers.

b. The results of development tests, operational tests and other tests shall be summarized and forwarded to the appropriate commander of the material and supply command for incorporation into the application for the required license or service authorization.

2-3. SPECIFICATIONS, PURCHASE DESCRIPTIONS, AND DRAWINGS. Specifications, purchase descriptions, and drawings for radioactive commodities or components shall include:

a. Provisions of MIL-STD-1458.

b. Notice to make a potential contractor aware of the possible need for an NRC or State license.

CHAPTER III
LOGISTICS PHASE OF THE LIFE CYCLE CONTROLS

3-1. CONTROL OF RADIOACTIVE MATERIAL. Control of radioactive material is necessary to minimize exposure of personnel. Since man cannot sense ionizing radiation, but must use instruments to detect and measure it, control requires procedures to ensure that those who receive, transport, and use radioactive commodities recognize them as containing radioactive material and are knowledgeable to the hazards of ionizing radiation and methods of radiation protection. Control is in addition to accountability and may apply to expendable or other nonaccountable property. The degree of control to be exercised during any lifecycle phase shall be appropriate for the types and quantities of commodities involved and for the kinds of operations to be conducted.

3-2. LICENSES AND SERVICE AUTHORIZATIONS

a. Pursuant to law, the NRC controls certain specified radioisotopes that are, or may be, incorporated in radioactive commodities. This control is exercised, only within the United States and its possessions, by issuance of licenses, inspections and publication of regulations. Each license contains specific restrictions and limitations. The provisions of each license shall be followed precisely, since violation risks revocation of the right of possession and use.

b. Federal activities and installations are not subject to the registration or licensing requirements of individual states.

c. A Service or Agency authorization shall be obtained for those radioactive materials that are not under the control of a specific NRC license. Control is exercised in much the same manner as for an NRC license. The authorization serves the same purpose as the license, with various single, bi- or tri-Service/Agency directives being used as regulations.

d. The Agency having logistical responsibility for the radioactive commodity shall obtain the required license(s) or service authorization(s) to permit the use of that commodity. Applications for licenses or service authorization shall be processed in accordance with appropriate Service or Agency directives. When a major end item contains a radioactive component, the agency having logistical responsibility for the end item shall ensure that such use is safe and that a license or service authorization exists to permit the use within the end item.

e. Documents that are required in making application for licenses or authorizations or amendments thereto shall be coordinated among all affected organizations prior to their submission for license or authorization. Such documents shall include the application, specifications, and control literature.

f. The Service or Agency shall ensure that NRC licensed material and Service or Agency authorized material under its control are not transferred to unauthorized persons or organizations.

g. Applications for licenses or authorizations for use of radioactive materials in commodities are in addition to other prescribed procurement actions and procedures. Applications must be factual and complete to allow comprehensive review. They should not, however, include extraneous information which is not directly applicable to the item for which the application is made. Each initial application shall include:

(1) A complete description of the commodity, e.g., narrative description plus drawings, purchase description, or specifications.

(2) Procedures by which the DoD agencies shall assure that quality audits are performed by an independent testing laboratory (Governmental or Industrial) on random samples from production lots.

(3) Detailed procedures for radiation protection of DoD employees and the general public are to be followed during the complete life of the commodity from adoption through ultimate disposal. The procedures shall include an abbreviated organizational chart in which key agencies and offices are identified and their responsibilities with reference to life cycle controls are enumerated. Pertinent sections of implementing Service or Agency regulations, orders, instructions, manuals, and bulletins shall also be included or referenced (if available at reviewing Agency).

(4) Internal procedures for use within other DoD components authorized to use radioactive commodity. The receiving service shall accept complete responsibility for providing the licensee with information concerning control, investigation, reports to the NRC, and enforcement. The NRC conducts all of its regulatory activities (licensing, compliance inspection, and enforcement) with the organization to which the license is issued.

(5) The total activity of each radioisotope, maximum radioisotopic content of each individual item, and the chemical and physical form of the radioisotope and its containment.

(6) Summary of significant research, development, test, and evaluation effort and results.

(7) Quality assurance procedures for surveillance and verification of quality and integrity of material throughout the item's life cycle.

(8) Control procedures applicable during the commodity life cycle. Special qualifications required of users shall be stated in the procedures. Consideration should be given to adoption of directives as bi- or tri-Service or Agency documents. Specific information should be provided for each handling activity, i.e., acceptance inspectors, surveillance inspectors, supply (storage) and maintenance personnel, users, transportation and disposal personnel. The instructional material should be prepared so as to separate that required by each of the foregoing groups from each of the others. Life cycle control directives for nonlicensed (authorized) radioactive commodities shall be as thorough as those that are required for commodities which have a specific license.

* (9) Procedures for the distribution and control of the commodity among the Services or Agencies when the commodity is governed by a single license for more than one DoD element.

* (10) Summary of controls for maintenance and repair.

* h. Procedures for admendment or renewal of licenses are the same as those prescribed for the original license or authorization. Amendment or renewal applications shall include any provisions which are required for initial license applications but which were not submitted previously.

3-3 PROCUREMENT OF RADIOACTIVE MATERIALS

a. Insert the ASPR clause, number 7-104.80, Notice of Radioactive Materials, in applicable contracts.

b. Current issue of DoD Item DI-H-1332( ), Radioactive Material Data, shall be included in all developmental contracts and in major end item procurements in which a contractor might incorporate radioactive materials.

c. Procurements or reprocurements shall be coordinated with the NRC License or Service Authorization Manager prior to initiation.

d. Potential Contractors shall be advised of the possible need for an NRC or state license to manufacture the radioactive supply item being procured or reprocured.

3-4. QUALITY ASSURANCE

a. Quality audits by an independent testing laboratory (Governmental or Industrial) shall be conducted by random sampling of production lots. Sampling and testing shall conform to the requirements established in Title 10, CFR, Part 32, MIL-STD-105 and applicable Service or Agency directives.

b. Commodities containing radioactive material can lose their effectiveness and can become hazardous during storage or use. Surveillance and verification of a small random sample shall be conducted on radioactive commodities in storage and use to foresee the need for replacement. Because such items may be hazardous, Service or Agency inspectors shall be adequately trained in the radiological aspects as well as other requirements of such commodities prior to this type work assignment.

CHAPTER IV
OPERATIONAL CONSIDERATIONS FOR PERSONNEL HANDLING RADIOACTIVE COMMODITIES

4-1. GENERAL. The guidelines contained in this chapter shall be incorporated into control procedures for DoD personnel handling radioactive commodities during shipment, inspection, storage, maintenance, and disposal operations. In cooperation with designated medical service and radiation protection personnel, the proponent of control documents and of local standing operating procedures shall select those guidelines which are appropriate for the types and quantities of commodities involved and for the kinds of operations to be conducted.

4-2. MEDICAL ASPECTS. Preplacement, periodic and termination medical examinations should be required of personnel in those cases where work environment radiation levels are sufficiently high to warrant routine use of personnel monitoring devices as established by Service/Agency directives. Such examinations should be capable of disclosing conditions that may be aggravated by, or confused with, exposure to ionizing radiation. History of past exposure to radiation (occupational and significant medical), shall be ascertained. Frequency of periodic medical examinations should be commensurate with potential radiation hazards and the frequency of such examinations will be at the discretion of the medical authorities of the Service or Agency.

4-3. TYPES OF HAZARDS. Radiation hazards can be grouped into two types - external and internal.

a. External radiation is that ionizing radiation reaching the body from a source external to the body. While some external radiation occurs naturally as background radiation, the external radiation being considered here may occur where packaged or unpackaged radioactive commodities are stored, handled, or transported. The term is used to differentiate control procedures from those required when internal radiation hazards exist or are possible.

b. Internal radiation is ionizing radiation that is emitted from sources within the body. Some internal radiation exists in all individuals from naturally occuring radioisotopes. Most sources of internal radiation hazards are radioactive commodities that have become damaged or that have deteriorated to such an extent that the seal utilized to fix or bind the radioactive material has ruptured allowing the material to escape into the immediate surroundings with possible introduction into the body.

c. Most radioisotopes represent potential hazards from both external and internal radiation. A few radioisotopes such as the low energy beta emitters of Tritium and Carbon-14, and those radioisotopes which emit only alpha particles are normally considered hazardous only for the internal radiation hazard they present. Under certain conditions, both external and internal radiation hazards may exist.

4-4. EXTERNAL EXPOSURE POLICY AND STANDARDS

a. Personnel exposure to ionizing radiation shall be kept to a minimum. Responsibility for minimizing radiation exposure and controlling radioactive materials rests with commanders and supervisors. This responsibility includes orientation and indoctrination of personnel who are subject to exposure to hazards; implementation of applicable directives and standing procedures, and provision for personnel dosimetry, medical examinations, and anticontamination clothing and equipment when required.

b. No individual under 18 years of age or women known to be pregnant shall be occupationally exposed to radiation in excess of that allowed to any individual in the population at large (0.5 rem per year).

* c. The Radiation Protection Standards as established by Service/Agency Directives shall be observed.

* d. To measure individual exposures to external radiation personnel dosimetric devices as prescribed in current Service/Agency Directives shall be employed. Defense Supply Agency personnel shall utilize Department of the Army film badge service, except in those cases where they have tenant status at a military installation, activity or base with a film badge program, where they shall be included in that program.

e. Personnel dosimetric devices that are intended to estimate whole body exposure shall be worn on the front of the body below the shoulders and above the hips. This requirement in no way precludes the use of other, additional personnel monitoring devices when the particular operation makes such use desirable.

4-5. RADIATION INSTRUMENTS FOR EXTERNAL RADIATION. While the film badge is the primary dosimetric device for personnel monitoring, supplementary devices include pocket chambers, pocket dosimeters, and thermoluminescent dosimeters. There are also many other instruments designed to measure external radiation. In the DoD agencies, these are collectively called Radiac (radiation, detection, indication, and computation) instruments. Most of these are designed as survey instruments and are small, battery operated, and portable. Others are fixed area monitors that indicate and/or record radiation levels at specified locations. Since there is no single instrument that can be used for detecting or measuring all types of ionizing radiation, the appropriate type(s) of instruments shall be selected with great care.

4-6. STANDARDS AND LIMITS FOR INTERNAL RADIATION HAZARDS

a. Control of internal radiation hazards is accomplished by measures that are designed to keep radioactive materials from gaining entrance into the body through the nose, mouth, or cuts or by absorption through the skin. In exercising such control, all possible procedures shall be utilized to keep radioactive material from the skin and personal clothing, where it not only may become a source of external radiation, but also where it becomes readily available for introduction into the body.

b. When necessary, anticontamination clothing shall be provided all radiation workers, to protect against contamination of their skin, hair, or personal clothing. Such items as coveralls, gloves, caps, booties, or overshoes shall be issued. Anticontamination clothing shall be marked or colored appropriately, for purposes of control (monitoring, decontamination, laundering).

* c. Airborne radioactive concentrations shall not exceed the appropriate limits listed in the Title 10, CFR, Part 20, appendix B. Respirators are not a substitute for proper ventilation, containment, and process controls, and shall not be substituted for feasible engineering controls.

d. Depending upon the characteristics of the particular commodities, and the events that lead to escape of the radioactive material to the environment, contamination may exist as a gas, as suspended particles in the air, as a solid deposited on surfaces, or as a liquid. If or when such contamination is discovered, every reasonable effort shall be made to prevent exposure of individuals to these hazards.

* (1) Gaseous radioactive materials should be entrapped so as to form a solid or liquid radioactive waste. When this is not possible the gases may be exhausted to the atmosphere in accordance with Title 10, CFR, Part 20.

(2) Particles of airborne radioactive materials should be removed from suspension by filtration or absorption. Over a period of time, such materials will form a deposit on all available surfaces. Such surface contamination should be removed by suitable decontamination methods that will prevent resuspension with consequent redeposition. Dry sweeping is prohibited. Vacuum cleaning is permissible only if the cleaner is equipped with an absolute filter capable of filtering 99.97 percent of all particulate at 0.3 micron size.

(3) In handling leaks and spills, radioactive liquids should not be diluted to greater volume but should be converted to solid waste by use of absorbent materials. Prompt action is required to prevent seepage or absorption of radioactive liquids into building or packaging materials.

(4) Other methods of preventing spread of contamination may be applicable. These include sealing of leaking radioactive commodities in sturdy containers with tightly fitting covers, or by covering with paper or plastic wrapping materials and sealing with masking tape.

(5) Personnel shall be monitored for contamination. Decontamination, as necessary, shall be conducted as soon as possible. Such monitoring for contamination shall be performed at all times prior to eating, drinking, or smoking.

(6) Decontamination will result in production of radioactive waste that must be disposed of in turn. Cleaning implements may also become contaminated and become radioactive waste.

e. Survey instruments are suitable for detection of contaminated surfaces, clothing, and equipment only if the instruments are capable of detecting the type and level of radiation that is emitted by the contaminant. Liquid, gaseous, and airborne particulate radioactive contaminants require special instrumentation for detection and measurement.

f. Reasonable efforts shall be made to eliminate contamination. Table 4-1 is a guide for maximum permissible contamination of clothing, vehicles, and surfaces. * Standing operating procedures should be designed to meet the limits of Table 4-1.

g. Smoking, eating, drinking, applying cosmetics, and storing food, drink, smoking, and cosmetic materials shall be prohibited in controlled areas.

4-7. PERSONNEL TRAINING

a. All personnel who work with radioactive commodities shall be made aware of the hazards, or potential hazards, that are introduced into their working environment by inclusion of radioactive materials. (Title 10, CFR, section 19.12) Personnel shall be * made aware of the contents of applicable directives and procedures by which they may work safely. Commanders or supervisors shall obtain and distribute copies of applicable directives and safety procedures (e.g., control documentation and standing operating procedures) for each radioactive commodity or group of related commodities and for each particular operation such as receiving, handling, warehousing, maintenance, and inspection.

b. Each individual shall receive instructions in his specific operation and all safety procedures before being exposed to the potential radiation hazards. Where necessary, additional instructions will be added by the commander or supervisor. When required, additional sources of training in radiation protection can be obtained from the following sources:

(1) Department of the Army. Courses are announced in DA Pamphlet 350-10, U.S. Army Formal School Catalog. A separate circular announces training courses conducted by the Surgeon General.

(2) Department of the Air Force. Radiological safety is included in courses taught at Brooks AFB and Sheppard AFB. Additional information is contained in AFM 50-5.

* (3) Department of the Navy. U. S. Naval Nuclear Power Unit, ATTN: Radiological Affairs Support Office, Port Hueneme, California 93043.

c. Emergency and security personnel shall be trained and equipped to cope with the radiological hazards that may be encountered in the performance of their duties.

4-8. STANDING OPERATING PROCEDURES. General. Standing operating procedures shall be written by all organizations that are involved in handling radioactive commodities. Each standing operating procedure shall include local procedures for each applicable aspect of control of radiation hazards mentioned in this publication as it applies from the time of arrival on the post, installation, or base, to the time that each radioactive commodity leaves the post, installation, or base, or is issued to the using organization.

4-9. EMERGENCIES

a. A radiological incident is any unplanned event which causes the loss of control of radioactive material. An incident could result from a collision, fire, explosion, earthquake, water, transportation accident, riot, insurrection, loss, or enemy action. Over-exposure and contamination of personnel and property could be the end result. In the case of an incident involving radioactive materials, the senior person present shall take immediate steps to control the emergency and request assistance from the Radiological Protection Officer and other personnel as required.

b. The prime objectives of emergency action are the preservation of life and limb and the protection of personnel from the radiation hazards. The secondary consideration should be the confinement of the contamination to the local area of the incident. Although no set rules are available to handle every conceivable incident the proper use of the guidance furnished below will minimize the danger to personnel and property. If there is reason to believe that personnel may have been contaminated or overexposed, such persons shall be moved to an area where any necessary decontamination and medical assistance can be furnished.

c. Prior plans shall be made in anticipation of radiological emergencies, in order to minimize exposure of personnel and spread of contamination. Such plans shall be written, coordinated, and rehearsed with all support organizations (fire, police, medical, maintenance, repair, damage control, and public information personnel) and transport carriers or ships to which the material is being tendered for transport. Particular procedures in the plan for any supply and maintenance activity shall depend upon the quantity and types of radioactive commodities that are stocked. Such applicable procedures that are adopted shall be written and distributed to support organizations listed above, supervisors, and foremen.

d. During the radiological emergency, hazards might not be evaluated correctly or completely. Prudence dictates that the initial assumption shall be that the maximum radiological hazard exists.

e. Fire among or near radioactive commodities might produce airborne radioactive hazards. The smoke cloud and areas beneath it should be avoided by personnel, unless they wear complete anticontamination clothing and protective respiratory equipment. This may require evacuation of a sector of the activity, adjacent organizations, and even contiguous civil populations.

(1) Firefighting operations might disperse radioactive materials, and areas which initially are not part of the incident site might become contaminated if radioactive materials are available for solution or suspension. The draining of liquids from firefighting operations should be noted and avoided by personnel, unless they wear impermeable clothing. Additional measures must be taken as necessary to cope with any resultant hazards.

(2) A perimeter cordon shall be formed as soon as possible to prevent access of unauthorized personnel. Size of perimeter cordon shall be dependent upon the radiological or other health hazard associated with the radiological emergency. All personnel leaving the area shall be monitored and decontaminated if necessary. No smoking, eating, or drinking shall be permitted within the perimeter.

f. When personnel are seriously injured all other considerations (except fire) shall become secondary until urgent and appropriate first aid is given and help for rescue (if necessary) and evacuation are summoned. Unless there is a high risk to health, no injured or unconscious individual shall be moved until bleeding has been controlled; airway has been cleared; the possibility of fractures has been assessed; and necessary splints applied.

g. As soon as practicable, preliminary surveys shall be initiated for the purpose of determining whether an external or internal radiological hazard exists. After any fire or explosion, an environmental survey of the downwind areas shall be made to determine whether a lobe or an isolated contaminated area (hot spot) exists. Water shall be checked for possible contamination. Appropriate local, county, or State authorities, e.g., police, health, Civil Defense, shall be notified of the existence of any incident which might have impact outside the installation.

h. As soon as the immediate emergency is under control, a detailed radiological survey shall be conducted of the affected area(s). Provided that the spread of contamination has been halted, priorities can be assigned to decontamination parties working in contaminated areas. Those areas requiring control of exposure time, shall be controlled by a trained radiological monitor. Assistance from outside source(s) may be required.

i. If NRC licensed material is involved, reports shall be required in accordance with Title 10, CFR, section 20.403 and individual Service/Agency requirements. Non NRC* licensed materials incident shall be reported in accordance with Title 29, CFR, section 1910.96.

4-10. EMERGENCY ASSISTANCE

a. The Federal Interagency Radiological Assistance Plan DoD 5100.52 outlines the procedures and resources for expeditious provision of radiological assistance. This plan is administered for DoD through the Joint Nuclear Accident Coordinating Center (JNACC), Kirkland Air Force Base, Albuquerque, N. Mex. 87115 (AUTOVON: 829-8279) which, on request, will provide advice and assistance in case of radiological incident. Contact with JNACC should be made through appropriate Service and Agency Emergency Operation Centers in accordance with DoD 7730.12 and applicable Service/Agency Directives.

b. Assistance beyond local capability may be requested in the preparation of emergency plans and standing operating procedures through command channels from:

(1) For Defense Supply Agency: HQ DA (DASG-HCH), Washington, D. C. 20310. *

(2) For Department of the Army: HQ DARCOM, ATTN: DRCSF-P, Alexandria, Va. 22333. *

(3) For Department of the Navy: Officer In Charge, Naval Nuclear Power Unit, * ATTN: Radiological Affairs Support Office, Port Hueneme, Calif. 93043.

(4) For Department of the Air Force: HQ USAF AIR FORCE OPERATIONS CENTER.

4-11. RELEASE OF INFORMATION. Any release of information to the public concerning a radiation incident will be in accordance with DoD 5230.16 and applicable Service or Agency directives.

TABLE 4-1
RADIOACTIVE CONTAMINATION GUIDES

Contaminated Items and Indications for Actions	Fixed or Removable	Contamination Level: Alpha dpm per 100 cm2	Alpha dpm per 100 cm2	Beta-gamma 1/ mrad/hr @ 1 In.	Beta-gamma 1/ dpm per 100 cm2*	Method of Measurement
1. Clothing, including shoes:						
a. Personal. Should be replaced, decontaminated or stored for decay if above:	F	200		.05*		Probe
	R		None		None	Smear 3/* *
b. Anticontamination. 2/						
(1) General. Should be replaced and/or decontaminated if above:	F	1000		0.2 *		Probe
	R		200		1000	Smear 3/*
(2) Respirators. Should be decontaminated after use if above, or replaced:	F	200		1.0 4/*		Probe *
	R		None		None	Smear 3/*
2. Containers. Prior to nonradioactive use, should be decontaminated if above:	F	200		0.2 *		Probe
	R		None		100	Smear 3/*
3. Work Areas and Equipment. 5/ 6/						*
a. Uncontrolled. Requires decontamination if above:	F	1000*		0.2 *		Probe
	R		100*		100*	Smear 3/*
b. Controlled:						
(1) Areas:	F	1000*		.05*		Probe
	R		200*		400*	Smear 3/*
(2) Hoods:	F	1000		2.0		Probe
	R		200		2000	Smear 3/*
(3) Glove Boxes:	F	5000		2.5		Probe
	R		1000		5000	Smear 3/*
(4) Workbench Surface:	F	1000		0.5		Probe
	R		200		400	Smear 3/*
(5) Other Equipment Items:	F	1000*		2.00*		Probe
	R		200*		2000*	Smear 3/*
4. Skin:						
a. Body. Continue decontamination if above:	F	200		0.06		Probe
	R		None		None	Smear 3/*
b. Hands. Continue decontamination if above:	F	400		0.06*		Probe
	R		None		None	Smear 3/*

1/ Measured through not more than 7 milligrams per square centimeter of total absorber and averaged not more than 1 square meter. *
F Fixed
R Removable
2/ Contaminated clothing should be released to a licensed laundry only.
3/ Smears analyzed with a calibrated counting system. *
4/ In contact with any surface of the mask. *
5/ For ^{0}natural, ^{0}depleted, and ^{0}238; levels for alpha contamination should be increased by factor of 5. (In accordance with NRC guidelines.) *
6/ If Radium 226 is a contaminant, levels for alpha contamination should be reduced by a factor of 2.

CHAPTER V
CONTROL FOR SPECIFIC HANDLING OPERATIONS

5-1. GENERAL. This chapter provides preparers of control documents and of standing operating procedures with DoD guidelines specific to transportation, storage, maintenance, and disposal of radioactive commodities.

5-2. TRANSPORTATION OF RADIOACTIVE MATERIALS

a. Transportation of radioactive materials shall be in accordance with applicable portion of:

(1) Code of Federal Regulations;

(a) Title 10, CFR, Part 71	US Nuclear Regulatory Commission Rules and Regulations.	*
(b) Title 39, CFR, Part 123	US Postal Service Regulations for shipment by mail. (Postal regulations for transport of radioactive matters are published in US Postal Service Publication #8, April 1975.)	*
(c) Title 49, CFR, Parts 171-179 and Parts 390-397	Department of Transportation Regulations for shipment by rail, highway, air or water.	*

(2) AFM 71-4/DSAM 4145.3/TM 38-250/NAVSUP PUB 505/MCO P4030.19.

(3) Other DoD applicable regulations or instructions.

b. Radioactive commodities may be loaded with other compatible cargo to economize on available equipment space. However, no radioactive materials will be loaded in the same vehicle, compartment or aircraft with shipments of contaminable foodstuffs, nor with class A explosives or pyrotechnic materials. Radioactive material shipped by vessel shall be stowed and handled in accordance with Title 46 CFR, sections 146.19-35,* 146.19-40, and 146.19-100. Particular care shall be exercised to separate radioactive materials from photographic film and supplies to prevent radiation damage to films and photosensitive supplies.

c. When an escort is required, those selected to accompany a shipment of radioactive material must be technically qualified and equipped to assure a high degree of safety and security for the shipment.

5-3. SHIPPING ACTIVITY

a. Radioactive commodities shall be consigned only to installations, agencies or individuals that are authorized by an NRC license or Service or Agency authorization to receive them and are known to have a capability for safe handling of the specific commodity. Inventory Control Point instructions for shipment shall be consistent with this requirement.

b. Shipping documents for radioactive commodities shall describe the article being shipped by the proper shipping name in accordance with MIL-STD-1458. Depending upon the individual commodity and the degree of control required, preparation and submission of additional documentation for intransit control purposes might be necessary.

c. Shipping packages containing radioactive material shall be inspected for damage, leakage, and radiation levels before offering to carrier.

d. The consignor is responsible for assuring that all shipments of radioactive commodities do not present personnel hazards greater than or different from those designated by container markings.

5-4. PACKAGING

a. When it is necessary to repackage radioactive commodities because of loose issue or damage to the original container, the commodity shall be repackaged in accordance with instructions in the directives or regulations cited in paragraph 5-2 or to conform with the original package. The original container shall be opened and repacked carefully, and shall be monitored. Packaging and repacking operations, including monitoring, shall be carried out in a controlled area in the presence of qualified radiation protection personnel.

b. Containers shall be marked and labelled in accordance with MIL-STD-1458 and DSAM 4145.3/AFM 71-4/TM 38-250/NAVSUP PUB 505/MCO P4030.19.

5-5. OTHER SHIPMENTS. References cited in paragraph 5-2 above, regulates shipment of radioactive commodities by the U.S. Postal Service, and Commercial Carrier originating in the United States. The International Atomic Energy Agency and International Air Transport Association regulations are used often by foreign governments and for overseas air transport.

5-6. RECEIVING ACTIVITY RESPONSIBILITIES

a. Receiving activities shall establish procedures for the pickup, receipt, monitoring, opening, recording, and reporting radioactive commodity shipments in accordance
*with Title 10, CFR, sections 20.205 and 20.401.

b. As soon as a radioactive commodity is located in an incoming shipment, it shall be monitored with appropriate instruments to determine existence and magnitude of radiation hazards. When the exterior container of radioactive material shows signs of damage or leakage upon removal from the transport vehicle, the vehicle shall be moni-
*tored for contamination. A contaminated vehicle should be contaminated below applicable
*levels in Table 4-1 and shall be decontaminated below levels in Title 49 CFR, section
*173.397. Where contamination is noted, and when more than one carrier is involved in a particular shipment, the receiving activity shall initiate action to have radiation surveys made on the other carriers' equipment used to transport the material.

c. Should a container be leaking, it shall be resealed in the presence of qualified radiation protection personnel (chapter IV, paragraph 4-6d(4)) to prevent spread of contamination. When the cause of leakage has been determined, e.g., packaging deficiency or damage in transit, one of the following forms shall be prepared:

(1) DD Form 6, Packaging Improvement Report (AR 700-58/NAVSUP PUB 378/AFM 71-4/MCO P4030.29/DSAR 4145.8).

(2) SF 361, Discrepancy in Shipment Report (AR 55-38/NAVSUPINST 4610.33/AFM 75-18/MCO P4610.19A/DSAR 4500.15). Radiological safety assistance may be required in preparing the aforementioned forms in order to prevent needless exposure of personnel who investigate the deficiency.

5-7. STORAGE AREAS

a. Open storage should only be employed when:

(1) The radioactive commodity is a component of an item that is authorized such type storage under Service or Agency directives or as required by the license or authorization.

(2) The radioactive commodity is a component part of an end item that is designed for use under conditions that involve exposure to elements. Example of such items are

trucks, tanks, and other vehicles. This may necessitate measures to prevent unauthorized entry.

b. Areas used for storage of radioactive commodities shall be kept to the minimum practicable number to minimize efforts for adequate control.

c. Open storage as used in this publication may also include a shed or covered storage structure with one or more sides fully-open so as to prevent accumulation of airborne radioactivity. Such storage may necessitate measures to prevent unauthorized entry to the area or structure.

d. Radioactive commodities shall not be stored in the same warehouse section with explosives, flammable materials, photographic film, food products or other incompatible commodities unless waived by the appropriate Service or Agency.

5-8. INVENTORY OF COMMODITIES AT SUPPLY FACILITIES AND STOCKING ACTIVITIES

a. In support of the license/authorization application, the Material Inventory Control Point in cooperation with designated radiation protection personnel shall draft the scope of inventory records to be maintained locally at each supply and stocking facility. The following information will be considered for inclusion in the
*record: date of transaction, NSN, radioisotope(s), chemical and physical form, (activity
*in curies (Ci), Millicuries (mCi), or microcuries (uCi) per item, uncorrected for decay), storage location, number of items received or transferred, document number of shipment or receipt, and balance of items at the conclusion of the transaction, and license/authorization number. A copy of local inventory record will be furnished to key personnel who would be expected to respond to an emergency, e.g., security, safety, fire personnel.

b. Physical inventory count shall be made at least annually to ensure accuracy of inventory records. Containers shall not be opened for this purpose.

c. The supply and, where appropriate, the stocking activity shall establish a computer inventory program for radioactive commodities. The program should have the following minimum capabilities:

(1) Printout of all radioactive commodities in storage by NSNs with the name, if available, quantity, location, and status included. The Radiological Protection Officer shall be able to obtain this printout upon request, and distribute to emergency support elements as required.

(2) Wherever computerized stock records permit, retention of all radioactive commodities by NSN should be maintained in the computer for the life cycle of the item in the DoD. Although stock levels are zero, access to specific data is required to process the return and/or ultimate disposal of the item.

(3) Coding to identify unauthorized or obsolete radioactive commodities.

(4) Mechanisms to update or correct any piece of information in the radioactive commodity computer inventory program.

d. Losses of radioactive materials shall be reported in accordance with instructions in control literature for that commodity, and as required by the regulations of Services or Agency.

5-9. CONTROL AND SURVEYS OF STORAGE/WAREHOUSE AREAS

a. The radioactive commodity storage building(s), warehouses and/or bays, sections and areas thereof and outside areas shall be designated and identified as Controlled Areas, Radiation Areas, or High Radiation Areas as determined by surveys and recommendations of radiation protection personnel.

b. Standing operating procedures (paragraph 4-8) shall provide for:

(1) Control of personnel access.
(2) Minimization of personnel radiation exposure.
(3) Control of radioactive contamination.
(4) Operational radiation monitoring, as necessary.
(5) Notification of radiation protection personnel of changes in operating conditions and unusual situations.
(6) Emergency procedures.

c. Radiation protection surveys shall be made at least quarterly of storage/warehouse radioactive areas or more frequently as directed by Service or Agency to determine:

(1) Location and extent of radioactive contamination and radiation levels, appropriateness of boundaries, signs, marking, and protective equipment and procedures.
(2) Corrective action required to protect personnel and property and to conform with regulations.

d. More frequent surveys could be necessary based on the quantity, type, radiation characteristics, stock activity, warehouse operation, and guidance in the technical literature pertaining to the commodity.

e. Results of surveys shall be reported to operating supervisors with recommendations for corrective actions as necessary. Records of surveys shall be maintained by Radiological Protection Officer and shall include results, instruments used, name of surveyor, corrective actions taken, and dates.

5-10. CONTROL AND SURVEY OF RADIATION AND HIGH RADIATION AREAS

a. Work procedures within these areas shall be regulated to minimize radiation exposures.

b. Frequency of surveys shall be based on radioactive commodity inventory, stock activity, radioactive characteristics of the commodity, and guidance in technical literature that pertains to that commodity. The Radiological Protection Officer shall maintain records of each survey. Records shall show radiation levels that existed at the time of survey in each accessible location, instrument used, and name of surveyor and any corrective actions taken.

5-11. MAINTENANCE

a. Only authorized maintenance shall be performed, and maintenance allocation charts shall be available for review.

b. During maintenance, actual contact with the exposed radioactive material may occur. Consequently, maintenance shall be performed only by installations having the necessary authority (NRC license or service authorization), facilities, trained personnel, radiac and protective equipment, and operating procedures.

c. Prior to completion of the maintenance, radiation markings and safety configurations shall be restored, if applicable.

d. The frequency of radiological surveys shall be determined by the type of utilization of the work area. Assembly and repair areas shall be surveyed by radiological protection personnel at least weekly during periods of use. Where operations involve handling of loose radioactive materials, surveys shall be conducted continuously. Maintenance storage areas shall be surveyed at least monthly or as required.

5-12. SURVEILLANCE. Surveillance procedures and testing shall be conducted as specified in life cycle control literature and appropriate Service or Agency requirements. The Inventory Control Point will assure accomplishment of required surveillance and will report results to the cognizant NRC license or Service/Agency Authorization Manager.

5-13. MARKINGS AND WARNINGS

a. Warning signs designating radioactive material areas, radiation areas and high radiation areas shall be placed at each entrance and other locations surrounding such areas so there can be no doubt in the mind of any individual as to the hazard that exists within the area. Signs, either permanent or temporary, should be securely fixed to the barriers, walls, fences, or ropes. Installations or activities located where non-English languages are prevalent should post signs that include a translation in those languages.

b. Storage locations of radioactive materials and commodities shall be marked in accordance with references noted in subparagraph e below.

c. Markings shall be in accordance with the provisions of MIL-STD-1458, marking of commodities and containers to indicate radioactive material, throughout the DoD supply system, although some label modification may be necessary to conform with conditions that are not covered specifically in that publication.

d. In the case where a high radiation area exists for more than 30 days, the area must be equipped with a control device to energize a conspicuous visible or audible alarm in such a manner that the person entering and the area supervisor are made aware of the entry, as required by Title 10, CFR, section 20.203.

e. Additional guidance may be obtained from:

(1) DSAH-OW for Defense Supply Agency.

(2) AR 385-30 for Department of the Army.

(3) Naval Nuclear Power Unit for the Department of the Navy (ATTN: Radiological Affairs Support Office), Port Hueneme, California 93043. *

(4) HQ AFLC/SGP for the Department of the Air Force.

5-14. CALIBRATION OF RADIAC SURVEY INSTRUMENTS. Survey instruments used directly for health and safety monitoring of radiation sources should be calibrated in accordance with Service or Agency directives.

5-15. DISPOSAL

a. General. Services and Agencies will determine which commodities and spare parts are radioactive. They will not report radioactive commodities to Defense Property Disposal Officers (DPDOs) unless the commodity has been determined to be safe for military and public use. If the commodity is controlled by an NRC license and/or Agreement, the Disposal Release Order will state that transfer, sale, or donation is limited to licensed recipients. The Services and Agencies will assure that radioactive commodities to be sold, donated, or transferred are marked in accordance with MIL-STD-1458 and free of contamination in excess of limits in Table 4-1. Radioactive commodities will not be physically transferred to the DPDO but will be retained until shipping instructions are received from the DPDO (DoD 4160.21-M, chapter IV, paragraph D, and chapter VI, paragraph B 31 and B 68). *

b. Radioactive Waste Products, Radioactive Commodities and Items, and Other Materials Which Shall Be Disposed Of As Radioactive Waste. Items which cannot be decontaminated or repaired and leaking items shall be disposed of as radioactive waste. Excess or surplus items containing radioactive material shall be disposed of as radioactive waste when licenses or service authorizations require, or when the Inventory Control Point or owning activity determines that any other method of disposal is not in the best interests of the Government. All radioactive waste shall be disposed of in accordance with Service or Agency directives and Title 10, CFR, Part 20, where applicable. Anticontamination clothing and other protective equipment marked with radiation warning symbols shall be disposed of as radioactive waste.

c. Usable License-Exempt Items Containing Radioactive Materials

(1) Electron tubes and major end items of equipment containing installed license-exempt items shall be disposed of in accordance with normal transfer, donation, or sales procedures.

(2) When not incorporated into major end items or equipment, license-exempt items except electron tubes shall be subjected to normal utilization screening procedures in accordance with DoD 4140.34-M, and DoD 4160.21-M, chapter VI, paragraph B 31. These items shall not be physically moved to a property disposal activity nor will they be made available for donation or reported for sale. Items not utilized by other DoD components or Federal civil agencies will be disposed of as radioactive wastes in accordance with applicable Service or Agency instructions.

(3) Microwave receiver protector tubes, marine naviagation devices containing tritium gas, and radium sources other than those used for production of light may only be transferred within DoD or disposed of as radioactive wastes in accordance with applicable Service or Agency instructions. Screening for transfer within DoD will be accomplished by the owning Service or Agency. These items shall neither be physically moved to a property disposal activity nor will they be accepted on the accountable records of a property disposal activity. These items are not authorized for donation or sale.

d. Usable Licensed Items Containing Radioactive Materials. These items shall be transferred, donated, or sold only to persons having a proper license to possess them. Only the item manager or owning activity will screen these items for utilization and donation. Sales assistance shall be provided by property disposal activities and Sales Offices, as required. If the items cannot be transferred, donated, or sold, they will be disposed of as radioactive waste in accordance with Title 10, CFR, Part 20. These items will neither by physically moved to a property disposal activity nor will they be accepted on the accountable records of a property disposal activity.

☆ U. S. GOVERNMENT PRINTING OFFICE : 1976 241-338/27

NOTE

Inclosed is an abbreviated organizational chart as required by paragraph 3-2.g.(3) of AR 700-64, Radioactive Commodities in the DOD Supply Systems.

RADIOLOGICAL SAFETY CONTROLS-FUNCTIONAL CHART

ARMY MATERIEL DEVELOPMENT
AND READINESS COMMAND
QUALITY ASSURANCE PROGRAM MANAGEMENT
RADIATION PROTECTION PROGRAM MANAGEMENT

ARMY METROLOGY & CALIBRATION CENTER
TECHNICAL GUIDANCE, ARMY METROLOGY SYSTEM
STANDARDIZATION OF CALIBRATION STANDARDS & PROCEDURES

ARMY COMMUNICATIONS AND ELECTRONICS
MATERIEL READINESS COMMAND
COMMODITY MANAGEMENT, CALIBRATION SOURCES

OTHER INSPECTION AGENCIES

DEPARTMENT OF THE ARMY, OFFICE OF
THE INSPECTOR GENERAL AND
SUBORDINATE COMMAND COUNTERPARTS

US ARMY AUDIT AGENCY

US ARMY HEALTH SERVICES COMMAND,
ENVIRONMENTAL HYGIENE AGENCY

DIRECTORATE OF MAINTENANCE
MAINTENANCE PROCEDURES
LOGISTICS SUPPORT
TECHNICAL MANUALS

SAFETY OFFICE
HEALTH PHYSICS
RAD SAFETY PROCEDURES
LICENSING
CONTRACTOR SAFETY
PRE-AWARD, POST AWARD
SURVEYS

DIRECTORATE OF PROCUREMENT
INVITATION FOR BIDS
REQUEST FOR QUOTATION
PROCUREMENT
PROCUREMENT AUTHORIZATION

DIRECTORATE OF PRODUCT ASSURANCE
QUALITY ASSURANCE PROCEDURES
PRE-PRODUCTION TESTS
INITIAL PRODUCTION TESTS
PRODUCTION ACCEPTANCE TESTS
DEPOT QA SURVEILLANCE
PROCEDURES

DIRECTORATE OF MATERIEL MANAGEMENT
NATIONAL INVENTORY CONTROL POINT
CATALOGING
INVENTORY CONTROL
REQUISITION REVIEW
MATERIAL RELEASE ORDERS

LEXINGTON-BLUEGRASS ARMY DEPOT

INITIAL RECEIPT AND INSPECTION
BULK STORAGE
CALIBRATION
ISSUE
REPAIR
RECALIBRATION
QA SURVEILLANCE
LEAK TEST EVALUATION

SACRAMENTO ARMY DEPOT

RECALIBRATION
LEAK TEST EVALUATION

PIRMASENS ARMY DEPOT

RECALIBRATION
LEAK TEST EVALUATION

MAJOR COMMAND RADIOACTIVE MATERIAL CONTROL POINTS

COMMAND RADIOLOGICAL CONTROL PROGRAM MANAGEMENT
INVENTORY AND LEAK TEST PROCEDURES, RECORD, REPORTS
SURVEYS/INSPECTIONS OF USER ACTIVITIES

SUBORDINATE COMMAND RADIOLOGICAL CONTROL PERSONNEL

IMPLEMENTATION OF COMMAND RADIOLOGICAL CONTROL PROGRAM
SURVEYS/INSPECTIONS OF USER LOCATIONS

USERS - AUTHORIZED CALIBRATION ACTIVITIES

MOBILE TEAMS	DEPOTS	INSTALLATIONS	TRAINING CENTER/SCHOOL
CALIBRATE INSTRUMENTS AT USER LOCATIONS	CALIBRATE INSTRUMENTS RECEIVED FROM USERS NOT VISITED BY MOBILE TEAMS AND INSTRUMENTS FOR OWN USE EVALUATION OF USER LEAK TESTS AS REQUESTED	CALIBRATE INSTRUMENTS FOR OWN USE	RAD SAFETY TRAINING OF ARMY PERSONNEL

NOTE

Inclosed is a copy of DRSEL-SF-H message, 141745Z Oct 77, subject: Army Regulation (AR) 385-XX, Ionizing Radiation Protection, which was transmitted worldwide with the widest possible dissemination. As indicated therein, AR 725-1 was revised and reissued effective 1 August 1977 and the contents of Chapter 3, Control of Radioactive Calibration and Test Items of Supply, deleted. Users of the AN/UDM-2 Radiac Calibrator Sets are required to comply with the controls specified in AR 725-1, Chapter 3, by complying with the controls set forth in Technical Bulletin 11-6665-227-12 and Technical Manual 11-6665-227-12, as specified in the message. In addition, the Table of Radioactive Sources incorporated into AR 725-1, Chapter 3, will also be included into AR 385-XX and will include information pertaining to the AN/UDM-2 Radiac Calibrator Set. This item will replace the TS-784( )/PD Radiac Calibrator Set on a one-to-one basis.

CDSN = USA227 MCN = 77288/04272 TOR = 772880627
RTTUZOVW RUEDBIA5862 2871931-UUUU--RUEAUSA.
ZNR UUUUU ZOV RUKGNGR REROUTE RUEDBIA5862 2871931
R 141745Z OCT 77
FM CDRECOM FT MONMOUTH NJ //DRSEL-SF-H//
TO AIG 866
INFO RUEADWD/DA WASH DC //DAIG-SD/DASG-HCH-E//
RUKLDAR/CDRDARCOM ALEX VA //DRCSF-P//
RUCLHTB/CDRFORSCOM FT MCPHERSON GA //AFLG-RES//
RUCLAIA/CDRTRADOC FT MONROE VA //ATORI-DR-SW//
RUCIGMA/DIR DARCOM FSA CHARLESTOWN IN
RUEAUSA/CHIEF NATIONAL GUARD BUREAU WASHDC //NGB-ARL-M//
RUFDAAA/CDRUSAEUR MMC HEIDELBERG GER //AEAGD-MMC-MW-N//
BT

UNCLAS
SUBJ: ARMY REGULATION (AR) 385-XX, IONIZING RADIATION PROTECTION
1. REFERENCE IS MADE TO SUBJECT AR 385-XX WHICH WILL REVISE AND CONSOLIDATE AR 700-52, LOCENSING AND CONTROL OF SOURCES OF IONIZING RADIATION; AR 725-1, SPECIAL AUTHORIZATION AND PROCEDURES FOR ISSUES, SALES, AND LOANS, CHAPTER 3, CONTROL OF RADIOACTIVE CALIBRATION AND TEST ITEMS OF SUPPLY; AND AR 755-15, DISPOSAL OF UNWANTED RADIOACTIVE MATERIAL.
2. SUBJECT AR 385-XX HAS NOT YET BEEN ISSUED, BUT THIS NEW REGULATION IS EXPECTED BY 26 FEBRUARY 1978. AR 725-1 HAS BEEN REVISED AND REISSUED EFFECTIVE 1 AUGUST 1977, AND THE CONTENTS IN CHAPTER 3 REFERRED TO IN PARAGRAPH 1 HAS BEEN DELETED, THUS DELETING THE DUTIES OF THE MAJOR COMMANDS WITH RESPECT TO RADIOACTIVE MATERIALS; DUTIES OF THE RADIOLOGICAL CONTROL OFFICER (RCO) AND LOCAL RADIOLOGICAL PROTECTION OFFICER (RPO); REQUISITIONING, TRANSFER AND DISPOSAL OF RADIOACTIVE MATERIAL; AND RADIOISOTOPE INVENTORY AND LEAK TEST REPORT REQUIREMENTS.
3. AR 725-1, CHAPTER 3, IS PRESENTLY PART OF VARIOUS US NUCLEAR REGULATOXRY COMMISSION LICENSE AND DEPARTMENT OF THE ARMY AUTHORIZATION FILES. DELETION OF THIS REGULATION JEOPARDIZES THIS COMMAND'S LICENSE CONTROLS OVER RADIOACTIVE CALIBRATION AND TEST ITEMS. IN THE INTERIM UNTIL AR 385-XX IS ISSUED, IT IS REQUESTED THAT THE AFOREMENTIONED CONTROLS BE FOLLOWED IN ACCORDANCE WITH TECHNICAL MANUAL (TM) 11-6665-204-12 FOR THE TS-784()/PD RADIAC CLAIBRATOR SETS AND TM-11-6665-227-12 AND TECHNICAL BULLETIN 11-6665-227-12 FOR THE AN/UDM-2 RADIAC CLAIBRATOR SETS. DA FORM 3252-R MUST BE

COMPLETED AS REQUIRED FOR RADIOISOTOPE INVENTORY AND FOR LEAK TEST REPORTS. DISPOSAL OF RADIOACTIVE MATERIAL MUST BE IN ACCORDANCE WITH AR 755-15.
4. REQUEST WIDEST POSSIBLE DISSEMINATION OF THESE INSTRUCTIONS BE MADE WITHIN YOUR COMMANDS.
BT
#5862

#5862

NNNN

CHAPTER 3

CONTROL OF RADIOACTIVE CALIBRATION AND TEST ITEMS OF SUPPLY

Section I. GENERAL

3-1. General. *a.* This chapter provides for—

(1) The requisitioning, receipt, storage, issue, use, transfer, import, export, and disposal of items listed in table 3-1.

(2) Controlling radioactive calibration and test items in the Army supply system.

b. The Army agency with primary responsibility for this chapter is USAMC. Users of this regulation should send requests for clarification of the material in this chapter to the Commanding General, U.S. Army Materiel Command, ATTN: AMCSF-P, Department of the Army, Washington, DC 20315.

3-2. Licenses, authorization, and inspections. *a.* Army installations and activities are permitted to acquire items listed in table 3-1 from the primary supply agency without obtaining an Atomic Energy Commission (AEC) specific license or Department of the Army (DA) authorization (para 5 and 6, AR 700-52). Both DA and AEC require that the use, storage, and disposal of radioactive items be controlled to insure the safety of personnel and property.

(1) To avoid the necessity of licensing each activity that possesses or uses items which require licenses, AEC has authorized DA to control these sources of radioactivity. Authority for control of items listed in table 3-1 is contained in AEC Byproduct Material License No. 19-1826-2, Special Nuclear Material License No. SNM 954, and Source Material License No. SUB 865—all of which are issued to DA, U.S. Army Edgewood Arsenal, Maryland.

(2) Unlicensed items listed in table 3-1 are authorized by DA Radioactive Material Authorization No. A-19-18-3.

b. Both the Army activities possessing unlicensed radioactive sources and the agencies controlling them are subject to inspection by AEC, in addition to inspections established by AR 20-1 and AR 1-200.

c. Radiac Calibrator TS-784()/PD (2) is under Lexington-Blue Grass Army Depot License No. 16-5033-1. Procedures for its control are in TM 11-6665-204-12 and TB 11-6665-204-12.

Section II. CONTROL PROCEDURES

3-3. Commanding Officer, Edgewood Arsenal. U.S. Army Edgewood Arsenal is the licensee for those items listed in table 3-1 which require licenses and is the designee for the authorizations required by AR 700-52 for the other items listed in the table 3-1. The Commanding Officer, Edgewood Arsenal will—

a. Prepare applications to amend and/or renew AEC licenses, numbered 19-1826-2, SNM 954, SUB 865; and DA Radioactive Material Authorization No. A-19-18-3.

b. Prepare procedures for Army implementation of conditions required by AEC licenses and DA authorization in *a* above.

c. Prepare technical guidance publications for the source sets, test samples, and calibrators listed in table 3-1. This guidance will cover procurement, acquisition, receipt, inspection, use, transfer, issue, storage, import, export, disposal, leak tests, notification, records, and regulations pertaining to these items.

d. Insure that the primary supply agency and all radioactive material control points comply with this regulation.

Incl 2

e. Monitor requirements for new radioactive test samples and calibration sources.

f. Obtain DA approval of new radioactive test samples and calibration sources prior to type classification.

g. Notify higher commands and AEC on all Federal and Army regulation requirements.

h. Maintain records of reports and/or notifications listed in paragraph 3–7*d*.

i. Maintain a list of the names and qualifications of all radiological control officers.

j. Maintain the records listed in paragraph 3–9.

3–4. Commanding General, U.S. Army Ammunition Procurement and Supply Agency (USAAPSA) The Commanding General, USAAPSA will—

a. Maintain the records listed in paragraph 3–8.

b. Assign serial numbers to all controlled items.

c. Coordinate all transfers of responsibility for individually controlled items between—

(1) Depot and a radioactive material control point.

(2) Radioactive material control points.

(3) A radioactive material control point and an authorized radioactive waste disposal facility.

d. Consult with the CO, Edgewood Arsenal, on all technical matters and any administrative matter that could require an amendment to the AEC licenses or to the DA authorization required by AR 700–52.

e. Maintain records for individually controlled items which have been transferred to another AEC license or have otherwise passed from the immediate control responsibility of DA.

f. Coordinate all source procurements with the CO, Edgewood Arsenal.

g. Coordinate required control with agencies that desire to place a controlled item into an end item (e.g., MX–1083D/PDR–27 test sample into the AN/PDR–27).

h. Immediately inform the CO, Edgewood Army Arsenal, ATTN: SMUEA–SA, Edgewood Arsenal, Maryland 21010 of any events for which Federal and/or Army regulations require notifications or reports (Title 10, Code of Federal Regulations (CFR), para 20.402, 20.403, 20.405, and 70.52; and AR 385–40).

3–5. Major oversea commanders and CG CONARC. Each of these major commanders will—

a. Establish at least one radioactive material control point.

b. By official orders, appoint a radiological control officer for each control point and forward two copies of the orders, with the appointee's qualifications, through channels to the CO, Edgewood Arsenal, using the address in paragraph 3–4*h*.

c. Develop supplements to this regulation for the evaluation of leak tests and send one copy each to the CO, Edgewood Arsenal (using address in para 3–4*h*), and to the CG, USAAPSA, ATTN: SMUAP–QWD–B, Joliet, Ill. 60431.

d. In those instances where laboratory equipment is not available within the command (instruments capable of detecting 0.001 microcurie of activity are necessary for evaluating leak test smears), forward leak test smears to the CO, Edgewood Arsenal, ATTN: SMUEA–ISCP, Edgewood Arsenal, Maryland 21010.

e. Conduct leak tests of the Radiac Calibrator TS–784()/PD in accordance with instructions in TB 11–6665–204–12.

f. Insure that each installation or activity requiring individually controlled items has an effective radiation protection program.

3–6. Radiological control officer. This officer, who is directly responsible for operation of the radioactive material control point to which he is assigned, will—

a. Review and concur in the qualifications of each local radiological protection officer within the geographical area of the command.

b. In the event a qualified local radiological protection officer is not available to control a source, take one of the actions as follows:

(1) Suspend requisition for the material.

(2) Suspend use of the material (if the radioactive material is already on hand) until someone can be qualified by training.

(*a*) This training can be obtained by attendance at a formal, regularly scheduled

course or by on-the-job training presented by the radiological control officer.

(*b*) In the interim the radiological control officer will be responsible for radiological safety and the performance of leak tests.

(3) Transfer radioactive items to an installation or activity which possesses necessary radiac equipment and qualified persons.

c. Maintain records listed in paragraph 3-8.

d. To insure that controlled items are properly handled in accordance with Army and AEC regulations, inspect and audit records of accountable installations and activities in the command periodically.

e. Notify the CG, USAAPSA, ATTN: SMUAP-QWD-B, within 60 days of the permanent transfer of an individually controlled item between major commands.

f. Submit a Radiation Incident Report, RCS AMC-191(MIN) by electrical means (preferably by telephone) to the CO, Edgewood Arsenal, ATTN: SMUEA-SA, area code 301, 676-1000, extension 25111; or AUTOVON 231-1000 extension 25111 (during nonduty hours call extension 22203) immediately after its occurrence becomes known, any personnel overexposure to radiation, or any loss or theft of an individually controlled radioactive item. Following the telephone report—

(1) A written Radiation Incident Report, RCS AMC-191(MIN) stating the circumstances of the occurrence and corrective actions taken will be forwarded to arrive at Edgewood Arsenal within 25 days after discovery of the incident.

(2) Damaged or leaking items will be reported in the same manner as the radiation incident report in (1) above.

g. Consolidate and forward DA Form 3252-R, Radioisotope Inventory and Leak Test Report, RCS AMC-192 (fig. 3-1) to the CG, USAAPSA, using the address in paragraph 3-5*c*, at least semiannually (31 Jan and 31 Jul). DA Form 3252-R will be reproduced locally, on 8- by 10½- inch paper.

3-7. Local radiological protection officer. This officer, who is appointed by the local installation or activity commander, will—

a. Insure that controlled items under his jurisdiction are properly used and stored.

b. Insure that records (para 3-8) are maintained for each individually controlled item.

c. Advise the appropriate radioactive material control point of any forthcoming change in accountability, local radiological protection officer, or installation relocation of an individually controlled item. An individually controlled item will not be relocated or released from accountability until the receiving radioactive material control point approves the—

(1) Qualifications of the local radiological protection officer at the receiving installation.

(2) Radiation protection program of the receiving installation.

d. Submit a Radiation Incident Report, RCS AMC-191(MIN) to the radioactive material control point by the fastest means available to report—

(1) A theft, loss of control, destruction, leakage, or damage of individually controlled items and radiological overexposures (Title 10, (CFR), paragraphs 20.402, 20.403, 20.405, and 70.52, and AR 385-40 and AR 700-52)

(2) Items suspected of being damaged which will be removed from use until the integrity of the source has been determined and its reuse has been approved by the radiological control officer at the radioactive material control point.

e. Following the report cited in *d* above, forward a written Radiation Incident Report, RCS AMC-191(MIN) stating the circumstances of the occurrence and corrective action taken to arrive at the radioactive control point within 15 days after the discovery of the incident.

f. Establish radiological controlled areas where the use and/or storage of radioactive materials might—

(1) Create dose rates in excess of 2 millirads per hour.

(2) Cause personnel to receive 100 or more millirads in 7 consecutive days or 300 or more millirads in a calendar quarter.

g. Post radiation warning signs as required (AR 385-30 and Title 10, CFR, 20).

h. Insure that procedures require that controlled items are stored in a fire-resistant build-

ing and that there are no explosives of any kind stored in the same structure.

i. Immediately refer an actual or suspected overexposure to a medical officer (AR 40-14).

j. Insure that film badges and pocket dosimeters are worn when required and that film badge exposures are recorded (AR 40-14).

k. Insure that periods of time between leak tests do not exceed intervals shown in table 3-1.

l. Secure items against unauthorized use or removal.

m. Insure that all Army and Federal regulations are being followed and that personnel are exposed to a minimum of radiation consistent with practical considerations (Title 10, CFR, 20.101 and AR 40-14).

n. Conduct a physical inventory of controlled items at least semi-annually (AR 700-52).

Section III. RECORDS

3-8. Record of individually controlled items. For each individually controlled item, the primary supply agency, principally USAAPSA, and each radioactive material control point will record information as follows:

a. Federal stock number (FSN).

b. Description.

c. Serial number.

d. Isotope, source activity, and date activity was determined.

e. Dates and results of leak tests.

f. Shipment number.

g. Shipped from.

h. Shipped to.

i. Date shipped.

j. Date of manufacture (if available).

k. Name of manufacturer (if available).

l. Name and qualifications of each local radiological protection officer (maintained by radioactive material control point only).

m. Records of reports and/or notifications listed in paragraph 3-7*e*.

n. Names and qualifications of each radiological control officer (maintained by USAAPSA and Edgewood Arsenal).

3-9. Supplementary records. In addition to records listed in paragraph 3-8*h* and *i*, the CO, Edgewood Arsenal, will maintain the following records:

a. Correspondence pertinent to AEC License 19-1826-2, SNM-954, SUB 865, and DA authorization No. A-19-18-3.

b. AEC inspections of radioactive material control points.

c. Inventory and leak test summaries.

Section IV. REQUISITIONING, TRANSFER, AND DISPOSAL

3-10. Requisitioning controlled items.

a. Individually controlled items.

(1) All requisitions for individually controlled items listed in table 3-1, with the exception of the Radiac Calibrator TS-784/PD, will be submitted through channels to the Commanding General, U.S. Army Ammunition Procurement and Supply Agency, Joliet, IL 60431, in accordance with AR 725-50.

(2) Requisition for the Radiac Calibrator TS-784/PD will be submitted through channels to the Commanding General, U.S. Army Electronics Command, ATTN: AMSEL-DD-FR, 225 South 18th Street, Philadelphia, PA 19103.

(3) Commanders will insure that all requests are channeled through the appropriate radioactive material control point. Each request will include the following certification: "As required by chapter 3, AR 725-1, sufficient safety equipment, facilities, and trained personnel are available at this installation for the safe handling, use, and storage of radioactive material ordered on this requisition." The certification must have the signature and typed name and grade of the local radiological control officer.

b. Other controlled items. Controlled items, other than individually controlled items, need no certification from the local radiological control officer (table 3-1).

3-11. Transfer. *a.* Individually controlled items will not be transferred until approval has been obtained from the radioactive ma-

terial control point. Approval for transfer will be given when the radioactive material control point determines that the receiving installation has an effective radiation protection program.

b. Controlled items, other than individually controlled items, can be transferred without any approval from the radioactive material control point.

c. A radioactive material control point desiring to transfer an individually controlled item outside the major command will request shipping permission from the receiving control point. When approval has been obtained, the shipping radiological control officer will forward a copy of the records of the item to the receiving radiological control officer and notify USAAPSA of the shipment. When the item has been received, the receiving local radiological protection officer will notify his radioactive material control point within 5 days after receipt of the item.

d. Transfer of radioactive material beyond the control of the Army must receive prior approval from Headquarters, Department of the Army (AR 700-52).

3-12. Disposal. Request for disposition of unwanted radioactive supply items (table 3-1) will be channeled through the radioactive material control point.

a. Serviceable unwanted radioactive items will be screened by the radioactive material control point and/or primary supply agency for further use.

b. Unserviceable radioactive items will be disposed of in accordance with AR 755-15. Radioactive waste in oversea commands will be returned to CONUS for disposal at an AEC approved burial site. Radioactive material control points will notify USAAPSA of the disposition.

Section V. RADIOISOTOPE INVENTORY AND LEAK TEST REPORT, RCS AMC-192

3-13. Instructions for preparation. DA Form 3252-R (fig. 3-1) will be prepared as follows:

a. Item 1. Enter intermediate addresses.

b. Item 2. Enter address of Radiological Control Office or CG, U.S. Army Ammunition Procurement and Supply Agency, as may be appropriate.

c. Item 3. Enter originating installation.

d. Item 4. Radiological Information:

(1) *Column a.* Self-explanatory.

(2) *Column b.* Enter the Model Number of the item. One line will be completed for each radioactive individually controlled item as defined in paragraph 1-4*o*.

(3) *Column c.* Enter the serial number of the item.

(4) *Column d.* Enter the radioactivity (millicuries) of the individually controlled item. A correction for natural decay does not need to be calculated.

(5) *Column e.* Enter the date in which the activity was determined.

(6) *Column f.* Enter the date in which the individually controlled item was received in the command. This date could be the same as shown on DA Form 2791, Radioactive Materials Movement.

(7) *Column g.* When an individually controlled item was disposed of or transferred during the reporting period, enter the date and in the remarks column identify the receiving agency and whether or not ultimate disposal occurred in accordance with AR 755-15.

(8) *Column h.* Self-explanatory.

(9) *Column i.* Results of leak tests should be recorded in units of microcuries.

(10) *Column j.* Any additional information which will aid in the review of this form should be included in this column.

e. Items 5 and 6. Self-explanatory.

f. Processing. The above leak test and inventory report may be machine processed by commands equipped with automatic data processing equipment.

3-14. Leak tests. Commanders will insure that leak tests are conducted on controlled items at frequencies shown in table 3-1. Smears will

be counted with equipment capable of detecting 0.001 microcurie of activity.

a. Routing of results. If the smears are evaluated locally, results of tests will be forwarded to the radioactive material control point.

(1) If the detected activity exceeds 0.005 microcurie, the local radiological protection officer will immediately notify the radioactive material control point and the CO, Edgewood Arsenal, ATTN: SMUEA-SA, by electrical means. (For commercial, AUTOVON, and extension numbers, see para 3-6*f*.) In a case of emergency, consult technical publications pertinent to the radioactive source for actions to be taken.

(2) At least semiannually (31 Jan and 31 June), the radioactive material control point will consolidate and forward leak test results (DA Form 3252-R) through command channels to CG, USAAPSA, ATTN: SMUAP-QWD-B, Joliet, IL 60431.

(3) The source will be secured against further use until disposition instructions can be obtained. Repair of leaking sources is not authorized.

b. Routing of smears for evaluation.

(1) If equipment is not available locally or at the radioactive material control point to count the smears, the smear samples will be forwarded to the Commanding Officer, U.S. Army Edgewood Arsenal, ATTN: SMUEA-ISCP, Edgewood Arsenal, MD 21010.

(2) Edgewood Arsenal personnel will evaluate the smears and forward duplicate copies of the results to the subordinate commander and the radioactive material control point.

(3) To conform to U.S. postal regulations, the envelope containing the smears should be sealed and placed in a second envelope. Do not moisten envelope with tongue.

(*a*) After monitoring to insure compliance, mark the outer envelope in accordance with U.S. postal regulations as follows—

> "RADIOACTIVE MATERIAL
> Gamma radiation at surface of envelope less than 10 millirads for 24 hours-no significant alpha, beta, or neutron radiation."

Note. Surface dose rate may not exceed 0.4 millirads per hour.

(*b*) One side of the smear paper should be marked to identify the particular source which will be wiped. If more than one smear is being forwarded, the smears must be separated by using sheets of paper or separate inner envelopes to prevent possible spread of contamination from one smear to another.

RADIOISOTOPE INVENTORY AND LEAK TEST REPORT (AR 725-1)	Report Period	Date	REPORTS CONTROL SYMBOL AMC-192	
			Page Number	Number of Pages

1. THRU (Intermediate addressee)	2. TO (Addressee, including Zip Code)	3. FROM (Originating installation)

4. RADIOLOGICAL INFORMATION

ITEM NO. a	MODEL NUMBER b	SERIAL NUMBER c	ACTIVITY d	DATE ACTIVITY DETERMINED e	DATE RECEIVED f	DATE TRANSFERRED OR DISPOSED g	DATE OF LEAK TEST h	RESULTS OF LEAK TEST (Microcuries) i	REMARKS (If more space is needed use reverse.) j

5. TYPED NAME (Radiological Control/Protection Officer)	6. SIGNATURE

DA FORM 3252-R, 1 JUN 67.

Figure 3-1.

Table 3-1

RADIOACTIVE SOURCES

Description and stock No.	Use	Isotope and activity	Sealed source	Half life	Individually controlled items	Smear or leak test frequency (months)	References
Radioactive Source Set, M3A1 6665 865 8325.	Gamma source for calibrating instruments.	Co 60, 100 millicurie	Yes	5.3 yrs	Yes	6	TM 3-6665-214-15
Radioactive Source Set, M3 6665 300 5588.	Gamma source for calibrating instruments.	Co 60, 100 millicurie	Yes	5.3 yrs	Yes	6	TM 3-6665-214-15
Radioactive Test Sample, M7 6665 715 5141.	Alpha check source for Juno meters.	U_3O_8 100,000 cpm	No	4.5x 10⁹ yrs	No(1)	None	TB Cml 63 TM 11-6665-207-12
Radioactive Test Sample, M8 6665 618 1348.	Alpha check source for AN/PDR 54.	U_3O_8 5,000 cpm	No	4.5x 10⁹ yrs	No(1)	None	AMCTC 1639
Radiac Calibrator AN/UDM-6 6665 767 7497.	Alpha check source for AN/PDR 60 and AN/PDR 54.	1.4x10⁶ cpm Pu-239	No	24,360 yrs	Yes	3	TB 3-6665-203-12 AMCTC 6367
Radioactive Test Sample, MX 1083/PDR-27 6665-330-9519.	Gamma check source for AN/PDR-27.	Co 60, 5 microcurie	Yes	5.3 yrs	Yes	6	TB 3-6665-200-12 TM 11-5543
Radioactive Test Sample, MX 1083B/PDR-27 6665-171-4317.	Gamma check source for AN/PDR-27.	Ra 226, 7 microcurie	Yes	1,620 yrs	Yes	6	TB 3-6665-201-12 TM 11-5543
Radioactive Test Sample, MX 1083C/PDR-27 6665-684-1199.	Gamma check source for AN/PDR-27.	Ra 226, 7 microcurie	Yes	1,620 yrs	Yes	6	TB 3-6665-201-12 TM 11-5543
Radioactive Test Sample, MX 1083D/PDR-27 6665-078-5250.	Gamma check source for AN/PDR-27.	Ra 226, 7 microcurie	Yes	1,620 yrs	Yes	6	TB 3-6665-204-12 TM 11-5543
Radiac Calibrator, TS1230A 6665-973-1123.	Calibrate 3 ranges of Juno meter IM-156/PD.	Pu 239 4x10⁶ cpm	No	24,360 yrs	Yes	3	TB 3-6665-202-12
Radiac Calibrator, TS-784/PD (2) 6665-692-6601.	Calibrate AN/PDR-39 and IM-174/PD radiac set.	Sr 90 −Y 90 40 millicurie.	Yes	27.7 yrs	Yes	6	TM 11-6665-204-12

Warning: The above items are all sources of radioactivity and can be extremely dangerous. Consult references for safety precautions, warning signs and storage limitations.

Note. 1. All of the above sources are nonexpendable. Final disposition of unserviceable or obsolete sources is by shipment to an Army Radioactive Material Disposal Facility. Reference AR 755-15.

2. The Radiac Calibrator TS-784 PD is licensed under AEC. By-Product Materiel License No. 16-5033-1 which is issued to Department of the Army, Lexington Army Depot, Lexington, Ky. Applicable procedures for controlling the item are outlined in TM 11-6665-204-12. All reports of leak tests, incidents of radiation overexposures, loss or theft of the item, etc., will be to the attention of Lexington Army Depot.

ARMY REGULATION

No. 700-52

HEADQUARTERS
DEPARTMENT OF THE ARMY
WASHINGTON, D.C., *22 May* 1968

LOGISTICS

LICENSING AND CONTROL OF SOURCES OF IONIZING RADIATION

	Paragraph
Purpose	1
Scope	2
Explanation of terms	3
Responsibilities	4
U.S. Atomic Energy Commission specific license	5
Department of Army radioactive materials authorizations	6
Department of Army written permits	7
Controls	8
Application for Atomic Energy Commission specific license	9
Direct communication with Atomic Energy Commission	10
Application for Department of Army radioactive materials authorization	11
Items of issue	12
Transfer of radioactive material and export	13
Disposal	14
Technical advice	15
Surveys	16
Inventory of radiation sources	17
Radiation protection	18

1. Purpose. This regulation—

a. Prescribes procedures for obtaining U.S. Atomic Energy Commission license and license amendments for radioactive materials as hereafter defined.

b. Prescribes procedures for obtaining Department of Army authorization for radioactive materials not licensed by the U.S. Atomic Energy Commission.

c. Provides guidance for Department of Army agencies in controlling the use of radiation sources.

d. Prescribes procedures for obtaining Department of Army approvals for transfer of radioactive materials from Army to non-Army agencies.

e. Prescribes procedures for obtaining Department of Army permit for the use or storage of radioactive material by Federal and non-Federal agencies (including civilian contractors) on an Army military installation.

2. Scope. This regulation—

a. Applies to all Department of the Army agencies (except Civil Defense elements and Corps of Engineer Civil Works Programs) procuring, storing, possessing, producing, shipping, transferring, exporting, distributing, using, and disposing of radiation sources.

b. Applies to any activity performing work with radiation sources on land subject to Department of Army military jurisdiction.

c. Does not apply to the procurement or use of radioactive material in nuclear weapons, fuel for nuclear reactors, or installed equipment and material made radioactive in nuclear reactors established in accordance with provisions of section 91, Atomic Energy Act of 1954, as amended, including byproduct material arising from the normal operation and testing of such nuclear reactors.

d. Does not negate or supersede any Atomic Energy Commission requirement pertaining to control and safeguarding of radioactive materials.

3. Explanation of terms. For the purpose of this regulation, the following terms apply:

a. Accelerator. A device for imparting kinetic energy to charged particles, such as electrons, protons, deuterons and helium ions. Common types of accelerators are the cyclotron, synchrotron, syn-

*This regulation supersedes AR 700-52, 4 February 1966 and DA Letter AGAM-P(M) (24 Jan 68) LOG/PE-ISB, 30 Jan 68, subject: Use of Radium in the Department of the Army.

Incl 3

chrocyclotron, betatron, linear accelerator and Van-de-Graff electrostatic generators.

b. Accelerator produced radionuclides. Material made radioactive incident to accelerator operation.

c. Agreement State. Any State in the United States with which the Atomic Energy Commission has entered into an effective agreement under subsection 274(b) of the Atomic Energy Act of 1954, as amended.

d. Byproduct materials. Any radioactive material (except special nuclear material) yielded in or made radioactive by exposure to the radiation incident to the process of producing or utilizing special nuclear material.

e. Human use. The intentional internal or external administration of radioactive material (byproduct material or otherwise), or the radiation therefrom, to human beings.

f. Ionizing radiation. Electromagnetic or particulate radiation capable of producing ions, directly or indirectly in its passage through matter. For purposes of this regulation alpha and beta particles, gamma rays, X-rays, and neutrons are examples of ionizing radiation. This type of radiation does not include sound or radio waves, visible, infrared, or ultraviolet light or lasers.

g. Ionizing radiation control committee. A group of qualified personnel, officially appointed by a commander to establish local policy and provide guidance to the radiation protection program.

h. Ionizing radiation producing devices. Electronic devices which are capable of generating ionizing radiation such as X-ray machines, linear accelerators, cyclotrons, radio frequency generators which use klystrons, magnetrons, or other tubes which produce X-rays, and electron microscopes.

i. Licensed material. Source, special nuclear or byproduct material received, stored, possessed, used or transferred under a general or specific license issued by the U.S. Atomic Energy Commission or by an agreement state.

j. Lifetime control. Covers the entire period that a licensed or authorized radioactive material is in the possession of a Department of the Army installation or activity regardless of location. This is terminated only upon authorized disposal or transfer outside of Department of Army jurisdiction. Control means that those individuals responsible for the use of radioactive materials know how much of the material is on hand (in terms of activity at some definite time, e.g., 5 millicuries cobalt 60, 1955), know where it is located, and are following prescribed safety, health, storage, and disposal standards. Lifetime control covers those items which have individual accountability as well as those items which are expendable.

k. Naturally occurring radioactive materials. Radioactive isotopes such as radium and radon which are found in nature but are not classified as source materials.

l. Rad. For the purposes of this regulation rad, rem, roentgen, and rep are equivalent units of measurement of radiation effect.

m. Radioactive items of issue. Refers to any item which is intended for use at more than one installation or activity and which contains radioactive material. The majority of items of issue are assigned Federal stock numbers.

n. Radioactive materials. Naturally occurring radioactive isotopes such as radium and radon as well as byproduct, source, and special nuclear material or contaminated materials capable of emitting corpuscular or electromagnetic radiations. Included are radioisotopes permanently incorporated into adopted or experimental items of equipment.

o. Radiation sources. Materials or devices which generate or are capable of generating ionizing radiation, including (1) naturally occurring radioactive material, (2) byproduct materials, (3) source materials, (4) special nuclear materials, (5) fission products, (6) materials containing induced or deposited radioactivity, (7) radiographic and fluoroscopic equipment, (8) particle generators and accelerators, and (9) electronic equipment which utilizes klystrons, magnetrons, or other electron tubes which produce X-rays.

p. Radiological protection officer. An individual designated by the commander or activity to provide consultation and advice on the degree of hazards associated with ionizing radiation and the effectiveness of measures to control these hazards. The individual must be technically qualified by virtue of education, training and/or professional experience to assure a capability commensurate with the assignment. The scope and variety of operations may require that the radiological protection officer be a health physicist with training and experience in the identification, evaluation,

and prevention of radiological hazards associated with the various sources of ionizing radiation.

q. Sealed source. Any radioactive material that is inclosed in, and is to be used in, a container in a manner intended to prevent leakage or escape of the radioactive material or any of its daughter products.

r. Source material. Uranium or thorium or any combination thereof, in any physical form, or ores which contain by weight one-twentieth of one percent (0.05 percent) or more of uranium, thorium or any combination thereof. Source material does not include special nuclear material.

s. Special nuclear material. Plutonium, uranium enriched in isotope 233 or in the isotope 235, and any other material which the U.S. Atomic Energy Commission determines to be special nuclear material, or any material artificially enriched by any of the foregoing; however, such material does not include source material.

4. Responsibilities. *a.* The Deputy Chief of Staff for Logistics is responsible for:

(1) Staff supervision for the licensing and control of sources of ionizing radiation, excluding that for human use.

(2) Army approval of all applications for Atomic Energy Commission specific licenses for radioactive material.

(3) Approval, as described in this regulation, for the possession and use of radioactive materials not under specific license control of the Atomic Energy Commission, which are accelerator produced radioactive materials, naturally occurring radioisotopes, weapon irradiated materials and radioactive sources licensed by an agreement state.

(4) Approval for the possession and use of radioactive materials by Army activities outside the United States, its territories and possessions.

(5) Staff coordination over logistical and supply implications which pertain to storage, accountability, classification, and transfer of items of issue incorporating radioactive materials and having Army-wide distribution.

(6) Approval of the storage and use of radioactive material by Federal and non-Federal agencies including civilian contractors on land subject to Department of the Army military jurisdiction.

(7) Army approval of all requests for transfer of radioactive materials except radioactive waste disposal shipments.

(8) Review of new items of issue or modifications of existing items of issue to determine whether radioactive materials are being used properly.

(9) Providing technical advice and guidance for the safe movement of radioactive material. See AR 55-55.

b. The Surgeon General is responsible for—

(1) Staff supervision of the radioisotope license program for human use. See AR 40-37.

(2) Periodic radiological hygiene surveys at least once every three years at each Army military installation or activity which has a U.S. Atomic Energy Commission license or Department of Army authorization. Investigations of radiation incidents and excessive exposures may also be conducted upon the request of the major Army commanders and/or any time there is evidence that a health hazard related to radioactive materials may be prevalent.

(3) Providing comments and recommendations to the Deputy Chief of Staff for Logistics, from a health and safety viewpoint, on applications for U.S. Atomic Energy Commission licenses, Department of Army authorizations for use of radioactive materials and Department of Army permits.

(4) Technical review of non-medical materiel to determine possible existence of health hazards.

c. Major field commanders are responsible for—

(1) Preparation of administrative procedures consistent with this regulation.

(2) Insuring that all commanders under their jurisdiction who handle radioactive materials and other sources of ionizing radiation utilize adequate means to do so safely.

(3) Insuring that an annual inspection is conducted to determine compliance with conditions of the Atomic Energy Commission licenses and Department of Army authorizations and Department of Army permits.

(4) Use of radioactive material in items of issue is kept to absolute minimum. Radium shall not be procured and used in items of issue in an unsealed form i.e., any device which permits the escape of radium detectable as radon or daughter products, or in any devices as self-luminous marking material. Specifications now permitting the

use of radium for other than sealed sources will be revised to reflect this requirement.

d. Commanding General U.S. Army Materiel Command, in addition to requirements in *c* above, will insure that—

(1) Items of issue containing radioactive material which are under his commodity management are licensed or otherwise controlled as described in this regulation.

(2) Maximum safety requirements are designed into the materiel and equipment.

(3) Adequate controls over hazards are established to protect personnel, equipment, and property.

e. Commanders of an installation or activity are responsible for—

(1) Conducting a technical and administrative review of each application and planned use of the radioactive material to assure the completeness and adequacy of the application in accordance with current requirements of the Atomic Energy Commission, Title 10, Code of Federal Regulations, Part 2, Rules of Practice; Part 20, Standards for Protection Against Radiation; Part 30, Rules of General Applicability to Licensing of Byproduct Material; Part 31, General Licenses for Certain Quantities, etc.; Part 32, Specific Licenses to Manufacture, Distribute, etc.; Part 33, Specific Licenses of Broad Scope; Part 34, Licenses for Radiography and Radiation Safety, etc.; Part 35, Human Uses of Byproduct Material; Part 36, Export and Import of Radioactive Material; Part 40, Licensing of Source Material; Part 70, Special Nuclear Material; Part 71, Packaging of Radioactive Material for Transport, and pertinent Army Regulations.

(2) Enforcing measures prescribed by the Atomic Energy Commission and the Department of Army for the safe use, handling, storage, marking and disposal of radioactive materials. The provisions of each license or authorization must be scrupulously followed since violations constitute unreasonable risk to the health and safety of the public and personnel of the installation or activity and could lead to possible revocation of the license issued by the Atomic Energy Commission.

(3) Advising all civilian contractors and government agencies contemplating work with ionizing radiation sources within areas under their command of the requirements of this regulation, and requiring them to have a Department of Army permit (para 7); and also, if necessary, an Atomic Energy Commission or agreement-state license. A reference to this regulation will be included in the contract, lease or other appropriate document prepared for work with ionizing radiation.

(4) Maintaining a registry of ionizing radiation producing devices operated at installations or activities under their command. The following information for each such device will be maintained:

a. Location (installation, building, etc.)

b. Manufacturer and model number of device.

c. Type of device (accelerator, X-ray, etc.)

d. Portable or stationary.

e. Authorized use (R & D, medical, etc.)

f. If isotopes are being produced list the isotopes, annual production and disposition.

(5) Designating a principal and alternate radiological protection officer (*g* below).

(6) Appointing an Ionizing Radiation Control Committee in accordance with AR 40-14 (unless specifically exempt).

f. Ionizing Radiation Control Committee. The Ionizing Radiation Control Committee will consist of the commander or his designated representative, the radiological protection officer, a medical officer if the facility has a medical facility, safety director/officer and other personnel as deemed necessary, who are knowledgeable in the safe use of radiation being used or procured. The committee will act as an advisory body to the commander in fulfilling his responsibilities listed in *e*(1), *e*(2), *e*(3) and *e*(4) above. This includes establishing a formal set of rules and procedures (radiation protection program) for procurement and safe use of radiation sources commensurate with those being proposed for use reviewing proposals to use radiation sources and radiation producing devices; and making recommendations concerning protective measures to be taken.

g. Radiological protection officer or his alternate. The specific duties of the radiological protection officer or his alternate will include but not be limited to the following:

(1) Providing guidance on establishing working conditions and operating procedures that comply with current standards and with pertinent regulations and directives.

(2) Instructing new personnel in safe working practices, emergency procedures and harmful

effects of radiation overexposure. In addition, personnel will be instructed in the provisions of Title 10, Part 20.206 (Instruction of Personnel).

(3) Reviewing operational procedures and advising the commander of any unsafe practices.

(4) Assuring that personnel monitoring devices are used when required and that required records are kept of the results of such monitoring.

(5) Maintaining a current inventory of radioactive materials and devices emitting ionizing radiation in accordance with paragraph 17.

(6) Conducting a physical inventory of radioactive materials at least every six months.

(7) Performing radiation surveys at least monthly and investigations to insure compliance with pertinent Federal Regulations. State and local regulations which are more restrictive than the federal regulation will be applied except when the commander finds that the state or local regulations are excessively restrictive and interfering with mission accomplishment. Excessively restrictive state or local regulations having potential impact on operations will be promptly reported through channels to the Deputy Chief of Staff for Logistics, Attn: PEMA Execution Division, Department of Army, Washington, D.C. 20310.

h. Licensees. Licensees are responsible for—

(1) Full compliance with the applicable provisions of Title 10, Code of Federal Regulations and applicable Army regulations.

(2) Insuring that licensed or authorized material under their control is not transferred to unauthorized persons or organizations.

5. U.S. Atomic Energy Commission specific license. *a.* U.S. Atomic Energy Commission specific licenses are required to produce, transfer, receive, own, possess, use, or dispose of byproduct, source and special nuclear material within the United States, its territories and possessions, in excess of the quantities authorized under the general license provisions of Title 10, Code of Federal Regulations, Parts 30, 31, 40 and 70.

b. Applications from Army or non-Army agencies for U.S. Atomic Energy Commission license to use or store byproduct, source or special nuclear material on an Army military installation require Department of Army approval prior to granting of a license by the Atomic Energy Commission. To obtain the required permit, five signed and dated copies of the non-Army application together with copies of any referenced document therein must be forwarded by the Army military installation commander through channels to the Deputy Chief of Staff for Logistics, Attn: PEMA Execution Division, Washington, D.C. 20310 for review and transmittal to the Atomic Energy Commission. The Deputy Chief of Staff for Logistics will advise the Atomic Energy Commission, the installation commander and the non-Army applicant of the Department of Army decision.

c. Byproduct and special nuclear materials activated in an Army reactor are subject to licensing by the Atomic Energy Commission upon transfer beyond the immediate control of the reactor staff.

d. Application procedures for U.S. Atomic Energy Commission license are discussed in paragraphs 9 and 10.

6. Department of Army radioactive materials authorizations. *a.* Department of Army radioactive material authorizations* are required by Army elements to produce, transfer, receive, own, possess or use—

(1) Radioactive materials having radioactivity of one microcurie or greater and not subject to U.S. Atomic Energy Commission specific license control.

(2) Byproduct, source and special nuclear material possessed, used, stored or disposed of outside the United States, its territories and possessions. Oversea commanders except those in Hawaii, Alaska, Virgin Islands, Puerto Rico and Canal Zone will obtain a Department of Army radioactive material authorization by submitting through channels to the Deputy Chief of Staff for Logistics the same information required for an Atomic Energy Commission license.

(3) Items irradiated during weapons test with a dose rate in excess of 0.4 millirads per hour at any distance from the item.

b. Commodity managers must obtain Department of Army authorization for items of issue containing radioactive material. The Department of Army authorization issued to the commodity man-

*A Department of Army element already possessing an appropriate Atomic Energy Commission license does not need to obtain a Department of Army authorization for those radionuclides and uses authorized in that Atomic Energy Commission license. An Atomic Energy Commission license obtained in accordance with this regulation is considered equivalent to a Department of Army authorization.

ager will cover the users and storage facilities. Department of Army authorization is required whenever any amount of any type of radioactive material is intentionaly added to an item of issue, except electron tubes containing less than one microcurie per tube.

c. The procurement and use of radium will only be authorized when there is no practical substitute.

7. Department of Army written permits. Department of the Army permits are required for—

a. Use, storage, possession and disposal of radiation sources by Federal and non-Federal agencies (including civilian contractors) on an Army military installation. Concurrence of the installation commander is required as a pre-requisite for Department of Army permit.

(1) Where an Atomic Energy Commission license already permits use or storage of sources at various locations including unspecified Army installations, the non-Army agency will obtain a Headquarters, Department of Army permit by furnishing the installation commander with completed copies of DA Form 3337 (Application for Department of the Army Radioactive Material Authorization or Permit). The Army installation commander will forward sufficient copies of the completed DA Form 3337 through channels to provide three copies to the Deputy Chief of Staff for Logistics, Attn: PEMA Execution Division, Washington, D.C. 20310. A Department of Army permit will be furnished directly to the non-Army applicant. This does not apply to material covered by an Atomic Energy Commission license that is being transferred to a contractor or other individual who also possess an Atomic Energy Commission license for that material but is not under Army control.

(2) Local commanders have authority to approve temporary (less than 15 calendar days) use or storage of sealed radioactive sources by users possessing an appropriate Atomic Energy Commission or agreement-state license. A copy of the user's request and local approval will be sent through command channels to the Deputy Chief of Staff for Logistics, Attn: PEMA Execution Division, Washington, D.C. 20310.

b. Transfer or export of radioactive materials beyond control of Army, except where recipient has an appropriate Atomic Energy Commission license.

8. Controls. *a.* Radioactive material will be secured against unauthorized use.

b. Where radioactive materials are received, procured, stored, possessed, shipped, transferred, exported, distributed and used or disposed of outside the United States, its territories and possession, procedural controls established by the Atomic Energy Commission and Department of Army for items incorporating radioactive materials will be observed subject to the requirement of the host country. Where a conflict of regulations exist the most restrictive regulation shall be followed. The foregoing shall not preclude tactical deployment of units with mission essential equipment in times of emergency even though this equipment may contain controlled byproduct or naturally occurring radioactive materials.

c. Any items containing a radioactive material will be controlled to the extent that lifetime control of the radioactive material will be maintained.

9. Application for Atomic Energy Commission specific license. *a. General.*

(1) Requirements for specific licenses are set forth in paragraph 5.

(2) Specific licenses are issued to an installation or activity commander who has met the requirements of Title 10, Code of Federal Regulations, Part 2, Rules of Practice; Part 20, Standards for Protection Against Radiation; Part 30, Rules of General Applicability to Licensing of Byproduct Material; Part 31, General Licenses for Certain Quantities, etc.; Part 32, Specific Licenses to Manufacture, Distribute, etc.; Part 33, Specific Licenses of Broad Scope; Part 34, Licenses for Radiography and Radiation Safety, etc.; Part 35, Human Uses of Byproduct Material; Part 36, Export and Import of Radioactive Materials; Part 40, Licensing of Source Material; Part 70, Special Nuclear Material; Part 71, Packaging of Radioactive Materials for Transport; and pertinent Army regulations.

(3) Where actions before the Atomic Energy Commission concerning licenses require adjudicatory proceedings for settlement, the matter should be referred to The Judge Advocate General, Attn: Chief, Regulatory Law Division, Department of Army, Washington, D.C. 20310 in the manner set out in AR 27-40.

(4) Emergency processing of applications is not deemed desirable or necessary and normally

will be limited to unexpected operational requirement.

b. Byproduct material license. Application for a specific license for byproduct material will be made on appropriate Atomic Energy Commission Form 313 (Application for Byproduct Material). Application for license for use of sealed sources in radiography will be submitted on Atomic Energy Commission Form 313R. Five signed and dated copies of the application are required by the Deputy Chief of Staff for Logistics.

c. Source material license. Application for a specific license for source material will be submitted on Atomic Energy Commission Form 2 (Application for Source Material) to the Deputy Chief of Staff for Logistics in six signed and dated copies.

d. Special nuclear material license. Applications for a special nuclear material license will be submitted by letter in accordance with the requirements of the Atomic Energy Commission contained in Title 10, Code of Federal Regulations, Part 70. Nine signed and dated copies of the application are required by the Deputy Chief of Staff for Logistics.

e. Application forms. Application forms may be obtained upon direct request to the Director, Division of Materials Licensing, U.S. Atomic Energy Commission, Washington, D.C. 20545. Atomic Energy Commission regulations may be procured from the Superintendent of Documents, Government Printing Office, Washington, D.C. 20402.

f. Routing of applications. Applications for byproduct material (except for human use), source material, and special nuclear material will be submitted through command channels to the Deputy Chief of Staff for Logistics, Attn: PEMA Execution Division, Department of Army, Washington, D.C. 20310. Application should arrive at the Deputy Chief of Staff for Logistics at least 60 days prior to the time of expected use. The item cannot be procured until the license is issued. Emergency processing is not deemed desirable or necessary and normally will be limited to unexpected operational requirements. Commanders should consolidate licenses whenever practical. Application for byproduct material (human use) will be submitted through command channels to The Surgeon General in accordance with AR 40-37. Applications from medical units, for other than human use, will be forwarded through command channels to The Surgeon General for review and transmittal to the Deputy Chief of Staff for Logistics, Attn: PEMA Execution Division, Department of Army, Washington, D.C. 20310. Approved licenses will be forwarded to the applicant through command channels.

g. License amendments. Applications for amendment to an existing license will be submitted in the same manner as the original application. If this requirement is not met, it is possible that a valid license covering the amendment will not be issued until after the desired date.

h. License renewals. Application for renewal of an existing license will be processed in the same manner as the original application. If the renewal application is made in accordance with this paragraph, then the program or activity is considered covered by the prior license even though the renewal is not acted upon prior to the expiration date. The applicant will be advised when application for renewal has been forwarded to the Atomic Energy Commission. If no application for renewal is made 60 days prior to the expiration date, then all operations involving the radioactive isotope must be suspended at the expiration date as no valid license exists. Should it appear that a request for renewal cannot be submitted in time for processing, the Deputy Chief of Staff for Logistics, Attn: PEMA Execution Division, Department of the Army, Washington, D.C. 20310 shall be contacted by telephone or telegraph with a request that a storage license be requested from the Atomic Energy Commission.

i. Placing purchase orders. For a licensee to obtain byproduct materials or service irradiations from a facility of the Atomic Energy Commission, it is necessary to submit Atomic Energy Commission Form 375 (U.S. Atomic Energy Commission Isotope Order Blank) to the facility from which the material or service is requested. This form is not used when purchasing from a commercial supplier.

10. Direct communication with Atomic Energy Commission. Direct communication with the Atomic Energy Commission may be authorized by major commanders in cases of inquiry initiated by the Atomic Energy Commission which concern license matters. Three information copies of all correspondence or other communications, includ-

ing records of significant telephone conversations, between the applicant and the U.S. Atomic Energy Commission will be forwarded to the Deputy Chief of Staff for Logistics, Attn: PEMA Execution Division, Department of Army, Washington, D.C. 20310.

11. Application for Department of Army radioactive materials authorization. *a.* Application for Department of Army radioactive material authorization will be forwarded on DA Form 3337 in triplicate through command channels to the Deputy Chief of Staff for Logistics, Attn: PEMA Execution Division, Department of Army, Washington, D.C. 20310, prior to procurement and use. Requests for authorization for this class of isotopes for human use will be forwarded through channels to The Surgeon General, Attn: MEDPS-P, Department of Army, Washington, D.C. 20315. Applications for medical units, for other than human use, will be forwarded through command channels to The Surgeon General for review and transmittal to the Deputy Chief of Staff for Logistics, Attn: PEMA Execution Division, Department of Army, Washington, D.C. 20310.

b. Oversea commanders will forward applications for a Department of Army authorization to use radioactive material outside the United States, its territories and possessions in triplicate to the Deputy Chief of Staff for Logistics, Attn: PEMA Execution Division, Department of Army, Washington, D.C. 20310. Request will be prepared on DA Form 3337. Department of Army radioactive material authorizations are not required for items of issue for which the responsible commodity command has already been issued a license or authorization for use and possession overseas.

c. Department of Army authorizations are granted for a three year period. Renewals or amendments of an authorization will be requested in the same manner as the original application. Request for renewal should be submitted through command channels in triplicate to reach the Deputy Chief of Staff for Logistics, Attn: PEMA Execution Division, Department of Army, Washington, D.C. 20310 no later than 30 days prior to expiration date. A request for amendment can be submitted at any time up to 30 days prior to the expiration date of the authorization. Request for amendment or renewal will be submitted on DA Form 3337.

12. Items of issue. (Also see AR 700-64.) *a.* Plans and specifications for incorporating radioactive material into items of issue will be submitted to the Deputy Chief of Staff for Logistics, Attn: PEMA Execution Division, Department of Army, Washington, D.C. 20310, for review of possible health hazards and logistical implications before the item is type classified. Plans and specification for modification of existing items of issue to include radioactive material or to modify the physical or chemical form will also be submitted for review of possible logistical implications before modification is effected. The Deputy Chief of Staff for Logistics will forward these plans and specifications to The Surgeon General for comments and recommendations related to potential health hazards. Electron tubes containing less than one microcurie of radioactivity are excluded from this requirement. Plans and specifications will be accompanied by the following data:

(1) Analysis and/or tests conducted to insure that the item meets military requirements and is safe (research, development, engineer, and service test information should be included). Use factors and environment will be considered in the analysis.

(2) A copy of the contractors' or government's general and/or specific Atomic Energy Commission license where appropriate. The contractor or government agency will also include all test data submitted to the Atomic Energy Commission to obtain the license.

(3) Chemical or physical form of radiation contained in finished item.

(4) Procedural controls for receipt, transportation, storage, use, transfer, maintenance, surveillance and disposal to be published in literature available to the user if the activity is greater than one microcurie. This includes items in Schedule A, Parts 30.70 and 31.100, Code of Federal Regulations, if the activity is one microcurie or greater.

(5) Marking and packaging data as required by MIL-M-19590, MIL-STD-129, MIL-E-IE, DOT Regulations and AR 755-15.

(6) Procedures to assure items will meet quality requirements established in specifications.

(7) Responsibility of radiological protection officer for overall program and local radiological protection officer and user.

(8) Training and experience requirements of users.

b. The Technical Data Package in both content and intent is consistent with applicable Atomic Energy Commission license or agreement-state license or Department of Army authorization.

c. Procurement package will require that Government inspectors are adequately trained radiologically and are qualified to perform the inspection functions in a competent manner.

d. The Technical Data Package and the executed contract will contain provisions that the contractor will furnish inspectors adequately trained to enable them to exercise their inspection functions in a competent manner.

e. Minimum risk is involved in the acceptance and use of the item.

f. Hazards associated with each system, assembly, sub-assembly are identified and corrected in an expeditious manner thereby reducing costly retrofit actions.

13. Transfer of radioactive material and export. *a.* Transfer of byproduct, source or special nuclear material will not be made except in accordance with Title 10, Code of Federal Regulations, Section 30.3, Activities Requiring License; Section 30.34, Terms and Conditions of License; Section 40.51, Transfer of Source Material; Section 40.61, Records; Section 70.42, Transfer of Special Nuclear Material; Section 70.54, Material Transfer Reports.

b. Applications for transfer to agencies not authorized by *a* above or export to non-Army agencies of an activity of one microcurie or greater, except items of issue and radioactive waste disposal shipments, will be made through channels previously described to the Deputy Chief of Staff for Logistics, Attn: PEMA Execution Division, Department of Army, Washington, D.C. 20310.

c. Byproduct materials from a Department of Army reactor, for use within the United States, its territories and possessions, shall not be transferred until proof of the recipient's license is received in writing. The byproduct materials include—

(1) Liquid and gases with activity concentrations in excess of levels listed in Atomic Energy Commission Title 10, Code of Federal Regulations, Part 30, Section 30.70 Schedule A.

(2) Solids in which the maximum specific activity exceeds 0.002 microcuries per gram and which contain a total activity of one microcurie or greater per item. Whenever the irradiation of an item results in a mixture of gamma emitting isotopes, a dose rate of less than 0.4 millirads per hour at any distance from the item will be considered as below the 0.002 microcurie/gram level for purposes of this regulation.

14. Disposal. Commanders are responsible for disposition of radioactive material in accordance with provisions of AR 755-15.

15. Technical advice. *a.* Technical advice concerning the health hazards relative to safe handling and storage of equipment containing radioactive materials can be obtained from The Surgeon General, Attn: MEDPS-P, and will be furnished upon request through command channels, or direct in cases of emergency requiring expeditious action by The Surgeon General. Technical advice to aid individual users or commanders regarding the elimination of possible health hazards and/or the incorporation of health protective measures within the design and construction of facilities, in which radioactive materials are to be used will also be furnished upon request.

b. Technical advice and guidance for the safe movement and transportation of nuclear and radioactive materials is a staff responsibility of the Deputy Chief of Staff for Logistics, Attn: Director of Transportation, Department of Army, Washington, D.C. 20310. Radioactive materials will be transported in accordance with AR 55-55 and regulations of Federal, State, and local governments where applicable.

16. Surveys. Upon request of the commander of the installation or activity concerned, The Surgeon General will provide personnel to perform on-site surveys and provide recommendations necessary to meet the requirements of this regulation as well as those of the Atomic Energy Commission. While the Environmental Hygiene Agency performs periodic surveys, it is incumbent upon the local commander to conduct sufficient on-site radiological surveys at least monthly, except for static storage areas, to assure safety and compliance with applicable procedures and directives. Request for assistance will be forwarded through command channels.

17. Inventory of radiation sources. *a.* The commanders of each installation or activity (except in combat areas) possessing radioactive materials with total level of radioactivity in excess of 10 microcuries, will designate an individual, preferably the radiation protection officer to physically inventory the radioactive sources on hand at least every six months, and to record the results of such inventory. Inventory records will document the specific item of equipment or radioisotope, applicable serial number, the location of the item, level of radioactivity, applicable Atomic Energy Commission license or Department of Army authorization numbers, receipts, transfers, local disposals, date of inventory and name of person making the inventory. Radioactive components already installed in vehicles or similar large items of equipment and individual radioactive components while being stored as spare parts are exempt from this inventory.

b. In addition the commanders of the Army National Inventory Control Points, commodity and spare parts storage locations, and maintenance and repair locations will maintain inventory records in accordance with AR 700-64.

c. The inventory will be the subject of periodic command inspections.

18. Radiation protection. *a.* AR 40-14 and the AR 385-series prescribe standards, responsibilities, and procedures for recording and minimizing ionizing radiation exposure.

b. Unless specifically exempted by a Department of Army authorization or an Atomic Energy Commission license all sealed sources will be leak tested at least once every 6 months. A source wipe test label will be used on the source assembly or on the source container to readily indicate wipe test dates. A tag or other appropriate means may be affixed according to local conditions. The following information will be incorporated on the label:

Source-Wipe Test Data

Type _____	Activity _____
Date _____	Serial No. _____
Model _____	Due date _____
By _____ (Orgn)	By _____ (Signature)

The proponent agency of this regulation is the Office of the Deputy Chief of Staff for Logistics. Users are invited to send comments and suggested improvements to Deputy Chief of Staff for Logistics, ATTN: LOG/PE-ISB, Department of the Army, Washington, D.C. 20310.

By Order of the Secretary of the Army:

HAROLD K. JOHNSON,
General, United States Army,
Chief of Staff.

Official:
KENNETH G. WICKHAM,
Major General, United States Army,
The Adjutant General.

Distribution:
To be distributed in accordance with DA Form 12-9 requirements for Logistics General:
Active Army: D. *NG:* None. *USAR:* D.

U.S. GOVERNMENT PRINTING OFFICE: 1968

JMC JOSEPH M. KING

Security Clearance - Top Secret

Summary of Education and Experience

June 1977

BACKGROUND:

Bachelor of Arts degree with Major in Mathematics - Minor in Physics from Transylvania College, Lexington, Kentucky.

SPECIALIZED TRAINING:

Basic Radiological Health, two week course and Occupational Radiological Health, two week course - both offered by U.S. Public Health Service (USPHS) Robert A. Taft Sanitary Engineering Center, Cincinnati, Ohio; 256 Channel Pulse Height Analyzer School - RCL Laboratories, Skokie, Illinois; Management of Radiation Accidents, USPHS; Laser Safety course, University Cincinnati.

EMPLOYMENT:

Lexington-Blue Grass Army Depot - Radio Repairer, Two Years.
Lexington-Blue Grass Army Depot - Electronic Test Equipment Repairer - Four and one-half years.
Lexington-Blue Grass Army Depot - Physicist - Twenty years.

EXPERIENCE WITH RADIOACTIVE MATERIALS SPECIAL FORM

All experience gained at Lexington-Blue Grass Army Depot and all materials used for calibration of instruments and/or films. All materials below were in the form of sealed sources. Co-responsible for use of isotopes listed on various USAEC Licenses held by LBAD since 1958. LBAD Radiological Protection Officer since October 1972.

ISOTOPE	AMOUNT	EXPERIENCE	USE
^{226}Ra	100 mg	20 years	Calibration of Instruments & Film
^{226}Ra	500 mg	20 years	Calibration of Instruments & Film
^{226}Ra Be U	1 gram	13 years	Calibration of Instruments & Film
^{239}Pu Be	10 curie	13 years	Calibration of Instruments & Film
^{60}Co	500 curie	8 years	Calibration of Instruments & Film
^{60}Co	10 curie	20 years	Calibration of Instruments & Film
^{137}Cs	120 curie	10 years	Calibration of Instruments & Film
^{90}Sr	30 mc	20 years	Calibration of Instruments
^{238}U	Discs	20 years	Beta Calibration of Film
^{55}Fe	25 mc	12 years	Calibration of Instruments & Film
^{60}Co	1200 curie	9 years	Calibration of Instruments & Film
^{85}Kr	5 mc	8 years	Instrument Check Sources
Various	Small Sources		For calibration of Laboratory Instruments

Incl 4

EXPERIENCE WITH UNSEALED RADIOACTIVE MATERIALS:

Experience gained at Lexington-Blue Grass Army Depot with exempt quantities of materials used in preparation of calibration samples used in liquid scintillation counting and in preparation of standard samples used in leak test evaluations.

ISOTOPE	AMOUNT	EXPERIENCE	USE
^{3}H	39 Microcuries	5 years	NBS Standard solution used for preparation of standards used in liquid scintillation counting.
^{90}Sr	.030 Microcuries	3 years	NBS Standard solution for use in ^{90}Sr leak test evaluations.

Experience includes approximately 18 years experience in handling and processing leaking ^{90}Sr sources for disposal and in the preparation of other radioactive waste for disposal.

A. EDWARD ABNEY

Security Clearance - Top Secret

Summary of Education and Experience

June 1977

BACKGROUND:

Bachelor of Arts degree with Major in Physics - Berea College, Berea, Kentucky.

SPECIALIZED TRAINING:

Basic Radiological Health, two weeks, USPHS - Robert A. Taft Sanitary Engineering Center, Cincinnati, Ohio.
Occupational Radiation Protection, USPHS, Rockville, Maryland, two weeks.

EMPLOYMENT:

Lexington-Blue Grass Army Depot - twelve years

EXPERIENCE WITH RADIOACTIVE MATERIALS SPECIAL FORM:

All experience gained at Lexington-Blue Grass Army Depot and all materials used for calibration of instruments and/or film. All materials were in the form of sealed sources.

Isotope	Amount	Experience	Use
^{226}Ra	100 mgs	12 years	Calibration of Instruments & Film
^{226}Ra	500 mgs	12 years	Calibration of Instruments & Film
^{239}Pu Be	10 curie	12 years	Calibration of Instruments & Film
^{60}Co	500 curie	5.5 years	Calibration of Instruments & Film
^{60}Co	10 curie	12 years	Calibration of Instruments & Film
^{137}Cs	120 curie	12 years	Calibration of Instruments & Film
^{90}Sr	30 mc	12 years	Calibration of Instruments
^{238}U	Discs	11 years	Beta Calibration of Film
^{55}Fe	25 mc	12 years	Calibration of Instruments & Films
^{60}Co	1200 curie	9 years	Calibration of Instruments & Films

EXPERIENCE WITH UNSEALED RADIOACTIVE MATERIALS:

Experience gained at Lexington-Blue Grass Army Depot with exempt quantities of materials used in preparation of calibration samples used in liquid scintillation counting and in preparation of standard samples used in leak test evaluations.

Isotope	Amount	Experience	Use
^{3}H	39 microcuries	5 years	NBS Standard solution used for preparation of standards used in liquid scintillation counting.

Incl 4

Isotope	Amount	Experience	Use
^{90}Sr	.030 uc	3 years	NBS Standard Solution for use in ^{90}Sr leak test evaluations.

Experience includes approximately 12 years experience in handling and processing leaking ^{90}Sr sources for disposal and in the preparation of other radioactive waste for disposal.

ARCH L. HOWARD

Security Clearance - Top Secret

Summary of Education and Experience

June 1977

BACKGROUND:

Bachelor of Science Degree with Major in Physics - University of Kentucky, Charter Member, Health Physics Society and Member, American Physical Society.

SPECIALIZED TRAINING:

256 Channel Pulse Height Analyzer School, RCL Laboratories, Skokie, Illinois. Radionuclide Analysis by Gamma Spectroscopy, Southeastern Radiological Health Lab., Montgomery, Alabama. Chemical Analysis of Environmental Radionuclides, Northeastern Radiological Health Lab., Winchester, Massachusetts.

EMPLOYMENT:

Lexington-Blue Grass Army Depot - Electronic Test Equipment Repairer, two and one-half years.
Kentucky Research Foundation - Electronic Specialist - nine months - maintain Van de Graaff Machine and Pulse Height Analyzer.
Lexington-Blue Grass Army Depot - Physicist - Three and one-half years.
U. S. Army General Depot, Saumur - Physicist - Two years.
Lexington-Blue Grass Army Depot - Physicist - sixteen years.

EXPERIENCE WITH RADIOACTIVE MATERIALS SPECIAL FORM

All experience with radioactive materials was gained at Lexington-Blue Grass Army Depot except (*) also gained at USAGD, Saumur. All materials below were in the form of sealed sources.

Isotope	Amount	Experience	Use
^{226}Ra	100 mg	19 years	Calibration of Instruments & Film
^{226}Ra	500 mg	19 years	Calibration of Instruments & Film
^{226}Ra Be U	1 gram	11 years	Calibration of Instruments & Film
^{239}Pu Be	10 curie	13 years	Calibration of Instruments & Film
^{60}Co	500 curie	9 years	Calibration of Instruments & Film
^{60}Co	10 curie	19 years	Calibration of Instruments & Film
^{137}Cs	120 curie	14 years	Calibration of Instruments & Film
^{90}Sr	30 mc	19 years	Calibration of Instruments & Film
^{238}U	Discs	14 years	Beta Calibration of Film
^{60}Co	10 curie	12 years	Calibration of Instruments
^{90}Sr	30 mc	12 years	Calibration of Instruments
^{55}Fe	25 mc	7 years	Calibration of Instruments & Films
^{60}Co	1200 curie	9 years	Calibration of Instruments & Films

Incl 4

EXPERIENCE WITH UNSEALED RADIOACTIVE MATERIALS:

Experience gained at Lexington-Blue Grass Army Depot with exempt quantities of materials used in preparation of calibration samples used in liquid scintillation counting and in preparation of standard samples used in leak test evaluations.

Isotope	Amount	Experience	Use
^{3}H	39 microcuries	5 yrs	NBS Standard solution used for preparation of standards used in liquid scintillation counting.
^{90}Sr	.030 micricuries	3 yrs	NBS Standard solution for use in ^{90}Sr leak test evaluations.

Experience includes approximately 18 years experience in handling and processing leaking ^{90}Sr sources for disposal and in the preparation of other radioactive waste for disposal.

WILLIAM S. BOSLEY

Security Clearance - Secret

Summary of Education and Experience

June 1977

BACKGROUND:

Bachelor of Science Degree with Major in Biology, Minor in Chemistry from Hampton Institute, Hampton, Virginia.

SPECIALIZED TRAINING:

Basic Radiological Health, two weeks, and Occupational Radiation Protection, two weeks - USPHS - Robert A. Taft Sanitary Engineering Center, Cincinnati, Ohio. Radiological Monitoring for Instructors, one week and Radiological Defense Officer, one week, University of Kentucky, Chemical, Biological and Radiological Defense Officer's Course, 85 hours, Fort Knox, Kentucky. Management of Radiation Accidents, one week, Department of Health, Education, and Welfare, Frankford, Kentucky. Fundamentals of Non-ionizing Radiation Protection, one week. Department of Health, Education & Welfare, Rockville, Maryland. Microwave Oven Techniques Workshop, one week, U. S. Army Environmental Hygiene Agency, Aberdeen Proving Ground, Maryland.

EMPLOYMENT:

Lexington-Blue Grass Army Depot - Warehouseman and Stock-keeper - 6 years.
Lexington-Blue Grass Army Depot - Physical Science Aid and technician - 20 years.

EXPERIENCE WITH RADIOACTIVE MATERIALS:

All leak testing experience received at Lexington-Blue Grass Army Depot.

Isotope	Amount	Experience
^{90}Sr	30 mc	14 years
Radium	100 mc - 500 mc	12 years
Ra Be U	1 gram	10 years
Pu Be	10 curies	12 years
^{60}Co	500 curies	12 years
^{137}Cs	120 curies	12 years
^{55}Fe	25 mc	11 years

ADDITIONAL EXPERIENCE:

Ten weeks - collection of air samples in Operation "Roller Coaster" (contamination of large land areas with ^{239}Pu). Use of various sources for calibration - Lexington-Blue Grass Army Depot.

Incl 4

EXPERIENCE WITH UNSEALED RADIOACTIVE MATERIALS:

Experience gained at Lexington-Blue Grass Army Depot with exempt quantities of materials used in preparation of calibration samples used in liquid scintillation counting and in preparation of standard samples used in leak test evaluations.

Isotope	Amount	Experience	Use
^{3}H	39 uc	3 years	NBS Standard solution used for preparation of sta ndards used in liquid scintillation counting.
^{90}Sr	.030 uc	1 year	NBS Standard solution for use in ^{90}Sr leak test evaluations.

Experience includes approximately 14 years experience in handling and processing leaking ^{90}Sr sources for disposal and in the preparations of other radioactive waste for disposal.

HEADQUARTERS
LEXINGTON-BLUE GRASS ARMY DEPOT
LEXINGTON, KENTUCKY 40511

STANDING OPERATING PROCEDURE 41
DIRECTORATE FOR QUALITY ASSURANCE
CHANGE 1

4 October 1976

RADIOLOGICAL PROTECTION PROGRAM
FOR
NUCLEONICS BRANCH

SOP 41, 17 September 1973, is changed as follows:

Remove pages and insert new pages as follows:

Remove Pages	Insert Pages
1-8	1-8

JOHN E. SEYFRIED
Director for Quality Assurance

DISTRIBUTION:
RPO (100); DQA (1); C, QSMD (1): C, EAB (1); C, SMQCD (7); C, CD (5); Calib Coord (1); File (14).

Incl 5

94314

HEADQUARTERS
LEXINGTON-BLUE GRASS ARMY DEPOT
LEXINGTON, KENTUCKY 40511

STANDING OPERATING PROCEDURE 41 — 17 September 1973
DIRECTORATE FOR QUALITY ASSURANCE

RADIOLOGICAL PROTECTION PROGRAM FOR NUCLEONICS BRANCH

		Paragraph	Page
Section I.	GENERAL		
	Purpose	1	2
	Scope	2	2
II.	RESPONSIBILITIES		
	Chiefs, Calibration Division and Nucleonics Branch	3	2
	Personnel authorized to use radioactive sources	4	2
III.	PERSONNEL PROTECTION		
	Maximum permissible exposures	5	2-3
	Protective devices	6	3
	Area surveying and monitoring instruments	7	3-4
	Records of radiation exposure	8	4-5
IV.	FACILITIES		
	Calibration rooms	9	5
	Laboratory	10	5
	Decontamination room	11	5
	Isotope storage room	12	5
V.	CONTROL OF RADIATION SOURCES		
	Responsible personnel	13	6
	Interlock and warning system	14	6-8
	Operating instructions	15	8
	Wipe test of radioactive sources	16	8
	Radiation surveys	17	8
	Disposal of radioactive items	18	8
VI.	MISCELLANEOUS		
	Preparation	19	
Appendix A.	Instructions for Operation of AECL 1200-Curie 60-Cobalt Source		9
B.	Instructions for Operation of AN/UDM-1 (3-Curie, 60-Cobalt)		10
C.	Instructions for Operation of AN/UDM-1A (120-Curie, 137-Cesium)		11

*This SOP supersedes DQA SOP-41, dated 25 April 1972.

Section I

GENERAL

1. Purpose. To outline procedures and assign responsibilities to assure that adequate safeguards are maintained to protect personnel who operate or come into contact with x-ray machines or equipment containing radioactive sources.

2. Scope. This procedure applies to personnel in the Nucleonics Branch, Calibration Division, Directorate for Quality Assurance.

Section II

RESPONSIBILITIES

3. Chiefs, Calibration Division and Nucleonics Branch will:

a. Establish adequate safeguards for personnel protection.

b. Assure that safeguards are maintained by personnel in the branch.

c. Assure that exposure of personnel is kept to a minimum consistent with performance of branch functions.

d. Designate personnel authorized to operate the various equipments.

4. Personnel authorized to use radioactive sources will comply with all safeguards outlined in this procedure.

Section III

PERSONNEL PROTECTION

5. Maximum permissible exposures. a. Exposure of personnel to radiation shall be kept to an absolute minimum and shall not exceed the permissible exposures listed in paragraph C, AR 40-14.

b. Permissible exposure listed in AR 40-14 is as follows:

(1) The accumulated quarterly equivalent of radiation will not exceed for:

(a) Whole body; head and trunk; active blood-forming organs; lens of eyes: gonads----------1-1/4 rems

(b) Hands and wrists; feet and ankles----------18-3/4 rems

(c) Forearms---------- 10 rems

(d) Skin of whole body---------- 7-1/2 rems

(e) Thyroid, other organs, tissues and organ system-----5 rems

(2) Individual(s) under 18 years of age, females known to be pregnant, and occasionally exposed individual(s) will not be exposed to a whole-body dose equivalent of more than--

(a) 2 millirems in any 1 hour, nor

(b) 100 millirems in any 7 consecutive days, nor

(c) 500 millirems in any 1 calendar year,

(d) nor more than 10 percent of the values in (1) and (2) above, for other areas of the body.

(3) Individuals over 18 years of age, but who have not yet reached their 19th birthday, may be occupationally exposed to ionizing radiation provided that they do not exceed 1.25 rems dose equivalent to the whole-body in any calendar quarter, nor 3 rems in the 12 consecutive months prior to their 19th birthday.

(4) It is the responsibility of the female employee to advise her employer of the fact that she is pregnant.

6. Protective devices. a. All certified radiation workers will wear film badges at all times when performing duties involving the direct use of radioactive sources or x-ray machines.

b. Radiation workers may use dosimeters, in addition to film badges, when performing duties involving the direct use of radioactive sources or x-ray machines. The readings obtained from the dosimeters are for information only and need not be recorded. Dosimeters may be required for certain operations at the discretion of the physicist in charge.

7. Area surveying and monitoring instruments. All radiac instruments normally used in Nucleonics Branch for area surveying and monitoring are to be kept in operating condition. Instruments are to be check and calibrated at least once every 3 months. A list of available instruments are:

a. Portable instruments.

(1) Two each AN/PDR-27 - Geiger Counter-Beta Gamma .5, 5 mr/hr: gamma 50, 500 mr/hr.

(2) One each Eberline, PIC-6A - Ion Chamber - Gamma 10, 100, 1000 mr/hr; 10, 100, 1000 r/hr.

(3) Two each IM-174 - Ion Chamber - Gamma 500 r/hr.

(4) One each Victoreen Scintillac Model 645 - Scintillation Counter - Gamma-500: 100; 5000; 10,000; 100,000 CPM.

(5) One each Nuclear-Chicago Model 2671, Portable Neutron Survey Meter, 0-25K neutron/Cm^2/second in seven ranges.

(6) One each Victoreen Model 740 Cutie Pie Survey Meter, .01; 1.0; 10.0 r/hr.

(7) One each Eberline PRM-5, Portable Pulse Rate Meter Counter, 0-500K CPM.

(8) One each Victoreen Model 440 RF/A Survey Meter, 3-300 mr/hr in 5 ranges.

(9) One each Radiacmeter, IM-113A/PDR, 0.2-20 mr/hr in 3 ranges.

(10) One each Victoreen Model 490 Survey Meter 0.2-200 mr/hr in 4 ranges.

b. Stationary monitoring devices.

(1) Two each Nuclear Measurements Corp. Model AM-3D Air Monitors. Units are operated continuously with one unit sampling air inside Nucleonics building, room 7; and the other unit sampling air inside building 139. Readings are automatically charted and buzzer is set to go off if readings exceed certain level.

(2) One each Baird Atomic 441A Laboratory Monitor. The unit is located in the laboratory in Nucleonics Branch. Unit gives visible and audible indication of a rise in radiation intensity.

(3) Four each Victoreen Model 808 Area Monitors. One unit is located in each of the two calibration rooms, 5 and 6. One unit is located in laboratory room 3. The remaining unit can be located as required or used as a replacement for one of the above three units. These units give a visible and audible indication of a rise in radiation intensity.

(4) One each Eberline HFM-2 Hand and Foot Monitor. Unit has two hand channels, two foot channels and one probe channel. Hand and foot channels give visible and audible alarm upon detection of any predetermined amount of beta or gamma radiation. Alarm levels are adjustable by means of meter relays.

8. Records of radiation exposure. a. Records of radiation exposure will be maintained in accordance with AR 40-14 and Federal Register.

b. Film badge readings for certified radiation workers will be forwarded to the dispensary immediately after the wearing period. These readings will be recorded on individual DD 1141 forms as required by AR 40-14.

c. Certified radiation workers will be notified of their accumulated dosage at the end of each calendar year upon request as required by 10 CFR 19.13.

Section IV

FACILITIES

9. Calibration rooms. a. Room numbers 5 and 6 in building 139 are used for calibration of instruments and film badges using cobalt-60, radium, and cesium 137 sources, 250-K^V x-ray machines, and Grentz-ray machines.

b. The outside walls of rooms 5 and 6 are of poured concrete 36 inches thick. The wall between the two rooms is of poured concrete 18 inches thick.

c. Controls for operating the x-ray machines and 1200-curie cobalt-60 irradiator are located in isolated rooms directly behind source of radiation. Each control room has an observation window of 2-inch lead glass connecting it with the calibration room. The doors are lead lined.

10. Laboratory. a. Room number 3 is designated as the laboratory and is used for calibration and repair of instruments containing alpha or beta sources, fabrication of prototype instruments, repair of operating equipment, and low-level counting.

b. All work benches in the laboratory have stainless steel tops. Stainless steel sinks and a stainless steel isotope fume hood are located in the room.

c. Various types of counting setups are available in the room. These include scalers, count-rate meters, 4-pi flow counters, and well-type scintillation detectors.

11. Decontamination room. The decontamination room contains a fume hood, two deep stainless steel sinks, and an automatic washer for cleaning contaminated items.

12. Isotope storage room. a. The isotope storage room has poured concrete walls 18 inches thick and a lead-lined door.

b. Radium storage is in a separate concrete block building equipped with forced air ventilation.

Section V

CONTROL OF RADIATION COURCES

13. Responsible personnel. Personnel responsible for use of radioactive sources and radiation producing machines are:

Joseph M. King - Physicist, Chief, Nucleonics Branch: and Radiological Protection Officer

A. Edward Abney - Physicist, Alternate Radiological Protection Officer

Arch L. Howard - Physicist, in charge of Lab.

Personnel listed above are authorized to use any radiation sources possessed by Nucleonics Branch. A list of addition personnel authorized to use the x-ray machines, 1200-curie CO-60 source, and AN/UDM-1( ) will be posted in a conspicuous place. The list will be approved by the Chief of Nucleonics Branch or his authorized representative.

14. Interlock and warning system. a. Calibration room number 5.

(1) Room number 5 houses the 1200-curie cobalt-60 irradiator, an AN/UDM-1, and an AN/UDM-1A.

(2) Maximum surface radiation with units in "safe" position are as follows:

(a) 1200-curie cobalt-60 irradiator - 6 mr/hr.

(b) AN/UDM-1 Calibrator - 50 mr/hr.

(3) The 1200-curie cobalt-60 irradiator controls are located in the observation room (number 1) directly in the rear of room number 5. Operating instructions are posted near the control panel.

(4) The door to room 5 and the gate inclosing the only ladder to the roof of the building are interlocked with the controls of the irradiator in the following manner:

(a) In order for the source mechanism to be operated, the door to room 5 must be closed; the gate to the ladder which leads to the roof must be closed and locked. If either is open, the source will not rise to the open position.

(b) An electric warning sign is located beside the door to room 5. This sign lights up when the source is raised to the opened position. A buzzer is located in the control panel and a bell located inside room 5 are in parallel with the electric sign and both are actuated when the source is raised.

(c) As an added safety feature, the door to room 5 and the gate to the roof ladder are so interlocked that should either be opened in any manner, the source will automatically drop to the safe position.

(5) The AN/UDM-1 has the following safety devices:

(a) The source is operated mechanically from a position directly behind the source container.

(b) When the source is raised to the open position, a warning light and buzzer located directly in front of the operator are actuated.

(c) A warning light located immediately outside the room is also actuated.

(d) Warning lines mark the area immediately in front of the source, and outline the area where the intensity of radiation exceeds 3 mr/hr.

(6) The AN/UDM-1A is equipped with a buzzer and a warning light that energizes automatically when the source is rotated to the open position or when the filter is removed from the port. The source mechanism is padlocked when not in use.

(7) Room 5 is equipped with an alarm device as required by paragraph 20.203(c)(2), Code of Federal Regulations.

b. Calibration room number 6.

(1) Room 6 houses a 250-KVP industrial type x-ray machine, a 250-KVCP industrial x-ray machine, and a Grentz-ray machine. These equipments are used for exposure of film badges and radiacmeters for purposes of calibration.

(2) The door to room 6 is interlocked with the x-ray controls so that the door must be closed before the high voltage on either machine can be actuated. An electric warning sign is located beside the door to room 6 and is lighted when x-rays are present. If the door is accidentally opened, the high voltage is interrupted, thus cutting off the source of x-rays.

(3) Room 6 is used for exposures utilizing various portable sources of radiation. When these sources are used in this room, the user activates a system which turns on an outside warning light and causes an audible and visible alarm to be actuated upon accidental entry into the room.

(4) Room 6 is equippped with an independent alarm device that activates a visible and audible alarm upon an increase in radiation intensity within the room. This device is in accordance with paragraph 20.203(c)(2), Code of Federal Regulations.

15. Operating instructions. Operating instructions for the 1200-curie cobalt-60 irradiator, the AN/UDM-1, and AN/UDM-1A are at appendixes A, B, and C respectively.

16. Wipe test of radioactive sources. All radioactive sources used by Nucleonics Branch will be wiped at least once each 6 months in accordance with DQA SOP-56.

17. Radiation surveys. a. Air monitoring.

(1) The air in the Nucleonics building room 7 will be monitored continuously with the Nuclear Measurements Corporation Model AM-3D Air Monitor.

(2) Air samples will be taken periodically from various areas in the building and checked for radioactive contamination. Results will be recorded in log books.

b. Area surveys.

(1) Specified areas will be surveyed at least once each week using portable detection instruments. Readings will be recorded and maintained in log books.

(2) At least once each month all work benches, fume hoods, dry boxes, and work areas in the laboratory and decontamination room will be thoroughly checked to ascertain that there is no buildup of contamination.

18. Disposal of radioactive items. a. Radioactive items will be disposed of in accordance with instructions outlined in AR 755-15.

b. Volume will be reduced to minimum by separation of non-radioactive waste.

c. Ater receipt of shipping instructions, material will be packed and shipped in accordance with instructions and ICC regulations.

Section VI

MISCELLANEOUS

19. Preparation. This SOP was prepared by Faye Easterling, Management Analyst, Programs and Planning Branch, Quality Systems and Management Division.

Appendix A

INSTRUCTIONS FOR OPERATION OF AECL 1200-CURIE 60-COBALT SOURCE

ONLY AUTHORIZED PERSONNEL MAY OPERATE THIS SOURCE

1. A list of personnel authorized to operate this source is posted on the control console.
2. Obtain keys from supervisor.
3. Close and lock door to exposure room.
4. Insert key into master switch on control console and turn on. (Make certain key to outside ladder is on the same key ring.)
5. Set timer to desired exposure time.
6. Push reset button.
7. Push Off-On switch to On position.
8. Check:
   a. "Beam On" light on control console.
   b. "Source On - Do Not Enter" light next to door.
   c. Victoreen "Vamp" monitor at rear of exposure room.
9. When source is turned off (either manually or by timer):
   a. Check "Beam Off" light on control console.
   b. Check "Source On - Do Not Enter" light next to door.
   c. Check Victoreen "Vamp" monitor at rear of exposure room.
10. Turn off control panel with key when through using source.

Appendix B

INSTRUCTIONS FOR OPERATION OF
AN/UDM-1 (3-CURIE 60-COBALT)

ONLY AUTHORIZED PERSONNEL MAY OPERATE THIS SOURCE

1. A list of personnel authorized to operate this source is posted on the table holding the source.

2. Obtain keys from supervisor.

3. Unlock padlock around control lever.

4. Warn personnel that source is to be exposed. Make certain that no one is inside yellow line.

5. Select proper filter.

6. Expose source with control lever.

7. Check for operation:

   a. Audible buzzer.

   b. Red light on source table.

   c. Victoreen "Vamp" monitor (if no filter is used).

   d. Periodically check red warning light on wall next to door leading to observation rooms.

8. Upon completion of exposure turn source off with control lever.

9. Reinsert filter "A" into port on source container.

10. Lock control lever with padlock when through using source.

Appendix C

INSTRUCTIONS FOR OPERATION OF
AN/UDM-1A (120-CURIE 137-CESIUM)

ONLY AUTHORIZED PERSONNEL MAY OPERATE THIS SOURCE

1. A list of personnel authorized to operate this source is posted on the source container.

2. Obtain keys from supervisor.

3. Unlock padlock on filter removal lever.

4. Warn personnel that source is to be exposed. (No personnel other than those using source are to be in calibration room.)

5. Remove filter from port in source holder with removal lever.

6. Expose source with control levers on top of source container.

7. Check:

   a. Audible buzzer.

   b. Victoreen "Vamp" monitor.

   c. Red light on source table.

8. If exposure is made to dose measuring instruments and is longer than one minute, leave the calibration room.

9. If exposure is made to dose rate measuring instruments, or is shorter than one minute, stay directly behind the source holder.

10. Turn source off and replace filter with lever.

11. Lock filter removal lever with padlock when through using source.

Archie H. Dedman
ARCHIE H. DEDMAN
Director for Quality Assurance

APPROVED: John R. Dorton
JOHN DORTON
Depot Safety Officer

DISTRIBUTION:
RPO (100); C, QSMD (1); C, EAB (1); C, MOCD (4); C, SQCD (3); C, Calib Div (5); Calib Coord (1); File (14)

HEADQUARTERS
LEXINGTON-BLUE GRASS ARMY DEPOT
LEXINGTON, KENTUCKY 40511

LBAD REGULATION
NO. 725-2
CHANGE 1

17 September 1976

Requisition and Issue of Supplies and Equipment

HANDLING RADIOACTIVE MATERIAL

LBADR 725-2, dated 2 January 1974, is changed as follows:

a. Remove old pages and substitute new pages as follows:

Remove Pages	Insert Pages
3-4	3-4
5-6	5-6
9-10	9-10
13-14	13-14

b. Make the following changes:

(1) Page 8, paragraph 14c. Change to read: "Supply and Maintenance Quality Control Division...."

(2) Page 8, paragraph 14d(7). Change "ICC" to read "DOT."

(3) Page 11, Note**. Change "ICC" to read "DOT."

(4) Page 12, Note**. Change "ICC" to read "DOT."

(5) Page 15, paragraphs 4c(1) and (2). Change "DA Label 118" to read "SF-414."

(6) Page 15, paragraph 4d(1). Change "DA Label 119" to read "SF-415."

(7) Page 16, paragraphs 4e(1) and (2). Change "DA Label 118" to read "SF-414."

(DRXLX-QA-1)

FOR THE COMMANDER:

J. E. GIBSON
CPT, SigC
Adjutant

DISTRIBUTION:
S

Incl 6

9431

*LBADR 725-2

HEADQUARTERS
LEXINGTON-BLUE GRASS ARMY DEPOT
LEXINGTON, KENTUCKY 40507

LBAD REGULATION
NUMBER 725-2

2 January 1974

Requisition and Issue of Supplies and Equipment

HANDLING RADIOACTIVE MATERIAL

			Paragraph	Page
Section	I.	GENERAL		
		Purpose	1	2
		Scope	2	2
		Definitions	3	2
		General	4	2
		References	5	2
	II.	RESPONSIBILITIES		
		Civilian Personnel Officer	6	4
		Post Surgeon, US Army Health Clinic	7	4
		Director for Supply	8	4
		Director for Quality Assurance	9	4
		Radiological Protection Officer	10	4
		The immediate supervisor	11	5
		Director for Maintenance	12	5
	III.	PROCEDURE		
		Receipt of Radioactive Material	13	5
		Shipment of Radioactive Material	14	7
		Disposal of Radioactive Material	15	9
		Storage and Repair Areas for Radioactive Materials	16	10
		Special Rules for Handling Radioactive Materials	17	10
		Marking of Radioactive Components	18	10
Appendix	A.	Radioactive Items		11
	B.	Labeling Instructions for Radioactive Materials		13
	C.	Processing MRO's for Radiac Calibrator, TS-784()/PD		17
	D.	End Item ECOM Equipments Containing Radioactive Components		19

*This regulation supersedes LBAD Regulation No. 725-2, 21 November 1972

Section I

GENERAL

1. Purpose. This regulation prescribes methods of handling items which contain radioactive materials, including protective measures to be taken during receipt, storage, issue, maintenance, and disposal.

2. Scope. This regulation is applicable to Directorates for Quality Assurance, Supply, Maintenance, Services, and Administration and US Army Health Clinic.

3. Definitions. a. Dosimeter. A device worn by an individual for determining the amount of radiation received from exposure to sources of ionizing radiation.

b. Film Badge. A holder containing photographic film worn by personnel exposed to radiation to measure the dosage received.

c. Radioactive Material. Any material or combination of materials that spontaneously emit ionizing radiation.

d. Commodity Marking Label. Labels furnished by commodity commands for specifically identifying the radioactive materials contained in each of their radioactive commodities.

4. Policy. Procurement action will not be initiated on any item containing radioactive luminous compounds unless approved by the depot Radiation Control Committee.

5. References. a. AR 40-14, "Occupational Exposure to Ionizing Radiation."

b. AR 700-52, "Licensing and Control of Sources of Ionizing Radiation."

c. AR 700-64, "Radioactive Commodities in the DOD Supply System."

d. AR 725-50, "Requisitioning, Receipt and Issue System."

e. AR 755-15, "Disposal of Unwanted Radioactive Material."

f. SB 11-206, "Film Badge (Photodosimetry) Supply and Service for Technical Radiation Exposure Control."

g. TB MED 232, "Radioactive Material Used in Self-luminous Light Sources, Protective Measures."

h. TB 43-0116, "Identification of Radioactive Items in the Army Supply Systems."

i. MIL-STD-1458, "Radioactive Materials: Marking and Labeling of Items, Packages and Shipping Containers for Identification in Use, Storage and Transportation."

j. National Bureau of Standards Handbook 59, "Permissible Dose From External Sources of Ionizing Radiation."

k. National Bureau of Standards Handbook 69, "Maximum Permissible Amounts of Radioisotopes in Human Body and Maximum Concentration in Air and Water."

l. Title 10, Code of Federal Regulations, Part 20.

m. Title 49, Code of Federal Regulations, Parts 100-199.

n. TM 11-6665-204-12, "Operator and Organizational Maintenance Manual: Calibrators, Radiac, TS-784/PD and TS-784A/PD."

o. TB 43-0141, "Instructions for Safe Handling, Maintenance, Storage and Disposal of Radioactive Commodities Managed by US Army Troop Support Command."

p. TB 750-249, "Instructions for Safe Handling and Identification of US Army Electronics Command Managed Radioactive Items in the Army Supply System."

q. LBADR 385-1, "Lexington-Blue Grass Army Depot Safety Program."

r. TM-55-315, "Transportability Guidance for Safe Transport of Radioactive Materials."

s. LBADR 702-9, "Depot Calibrate and Return Program."

t. Ltr, AMSEL-MA-SS, dated 25 April 1973.

Section II

RESPONSIBILITIES

6. Civilian Personnel Officer will identify those persons who will be assigned as radiation workers on Standard Form 78, "Certificate of Medical Examination," in order that baseline blood chemistry can be obtained.

7. Post Surgeon, US Army Health Clinic will:

a. Maintain personnel radiation exposure records on DD Form 1141, "Record of Exposure."

b. Provide physical examinations as required for personnel engaged in work involving potentially hazardous sources of ionizing radiation.

8. Director for Supply will:

a. Receive, store, package, mark and ship radioactive material in accordance with existing regulations and instructions issued by Nucleonics Branch, Calibration Division, Directorate for Quality Assurance.

b. Notify the Radiological Protection Officer (RPO) when radioactive material is being shipped or received if dose rate exceed 0.5 mr/hr. on the surface of the package.

c. Assure that designated storage areas for radioactive materials are marked.

9. Director for Quality Assurance will inspect radioactive materials to assure compliance with existing regulations.

10. Radiological Protection Officer (RPO) will:

a. Monitor the depot radiological safety program.

b. Coordinate safety measures with the Depot Safety Director.

c. Issue special instructions as required.

d. Determine film badge requirements.

e. Direct the disposal of radioactive materials.

f. Assure that all radioactive material storage areas are checked once each month.

g. Review shipping documents on radioactive material.

h. Assure that all incoming and outgoing shipments of radioactive material are monitored for excessive radiation.

i. Assure the availability of commodity marking labels and instruction sheets to all affected areas.

11. The immediate supervisor will assure that a film badge is worn by any employee entering a designated radiation area.

12. Director for Maintenance will replace commodity marking labels removed during overhaul.

Section III

PROCEDURE

NOTE: The following paragraphs outline special actions required in addition to normal processes for receipt, handling, storage, packing, packaging, marking, shipment, and disposal of radioactive materials.

13. Receipt of radioactive material: a. Receiving Section, Storage Branch, General Supply Division, Directorate for Supply, will monitor all incoming shipments of material. If the dose rate exceeds 0.5 mr/hr on the surface of a package or the outside package is damaged:

(1) Notify Nucleonics Branch, Calibration Division, (extension 3249), prior to unloading from vehicle or aircraft.

(2) Complete blocks 1-6 of DA Form 2791-R, "Radioactive Materials Movement," and hold for pick up by representative of the RPO.

b. Nucleonics Branch, Calibration Division, will:

(1) Monitor shipment in accordance with 10CFR20.205 for excessive external radiation or contamination when requested by Receiving Section.

NOTE: If excessive radiation is present, isolate the vehicle and take appropriate measures to insure minimum exposure of personnel engaged in unloading operations.

(2) Complete blocks 7, 13, and 14 of DA Form 2791-R and return form to receiving personnel.

(3) Monitor vehicle for radioactive contamination immediately after unloading operations.

(4) Direct the decontamination of any vehicle or area emitting excessive radiation.

(5) Furnish additional handling instructions as necessary.

c. Receiving Section, Storage Branch, General Supply Division, will:

(1) Receive special instructions for handling radioactive material where dose rate exceeds 0.5 mr/hr on surface of the package.

(2) Segregate radioactive material from other material.

(3) When material is not properly labeled, attach proper labels to two opposite sides of the package in accordance with appendix B.

(4) Show the type and activity of radioactive material on all labels.

(5) Assure that the material is packaged, packed, and marked in accordance with existing regulations.

(6) Advise Packing and Processing section of any material requiring repacking.

(7) Complete tally-in operations and forward material to designated storage area. Radioactive material requiring SF 414 or SF 415 labeling will not remain in an operations area overnight. (NOTE: DA Labels 117, 118, and 119 have been superseded by SF 413, 414, and 415 respectively. DA Labels may be used if SF are unavailable.)

(8) Complete blocks 15 and 16 of DA Form 2791-R and attach to shipping documents. The DA Form 2791-R becomes a part of the permanent record of the shipment.

(9) Notify Transportation Division of receipt of radioactive material.

d. Transportation Division will send report of arrival to the shipping installation by electrical means.

e. Packing and Processing Section or Assembly and Disassembly Section, Operations Branch, General Supply Division, will:

(1) Authorize movement of material to the section responsible for packing/packaging functions.

(2) Obtain required packing and packaging supplies.

(3) Package material immediately and attach radiation and commodity marking labels. Annotate the type and activity of material on each label.

(4) Forward material to appropriate location. Radioactive material requiring SF 414 or SF 415 labeling will not remain in operations area overnight.

f. Warehousing Section, Storage Branch, General Supply Division, will:

(1) Obtain instructions from Nucleonics Branch for proper handling and storage as necessary.

(2) Store radioactive materials in designated area.

(3) Receive and store material on an overnight basis in cases where Receiving Section, Packing and Processing Section, Assembly and Disassembly Section, or Container Assembly and Loading Unit, Support Section, Operations Branch are unable to process the material on the same day as received.

14. Shipment of radioactive material. a. Warehousing Section, Storage Branch, General Supply Division, will:

(1) Receive shipping document for radioactive material.

(2) Forward shipping document on all radioactive material to Nucleonics Branch, Calibration Division.

(3) Receive the annotated shipping document from Nucleonics Branch.

(4) If document is annoated "Forward Material to Care and Preservation Section," select and forward the item in a routine manner.

(5) If document is annoated "Hold Material in Warehouse," select material and make it available for packing and marking operations and advise Container Assembly and Loading Unit, Support Section, Operations Branch that material is available.

b. Nucleonics Branch, Calibration Division, will:

(1) Receive shipping document from warehousemen in charge of the radioactive storage areas.

(2) Overstamp the shipping document and envelope "Hold Material in Warehouse" or "Forward Material to Packing and Processing Section."

(3) For items requiring labels, type in remarks block of DD Form 1348-1:

(a) Name of radioactive material.

(b) Activity in curies.

(c) Type of label applied to package

(4) For items not requiring labels, type in remarks block, name of radioactive material followed by words "NO LABEL REQUIRED."

(5) For items requiring labels:

(a) Initiate DA Form 2791-R in quadruplicate, completing blocks 7, 8, 9, and 10.

(b) Pull copy of shipping document and attach to copy of DA Form 2791-R for Nucleonics Branch file.

(c) Attach original and two copies of DA Form 2791-R to shipping document.

(6) Indicate that the proper examination has been made by dating and signing the document and return it to the warehouseman in charge of the storage area.

(7) Monitor items received for "calibrate and return" and apply commodity marking labels as necessary.

c. Supply Quality Control Division will inspect material for conformance to stock number, nomenclature, labels, documentation, etc., in accordance with existing regulations, assuring that radioactive labels and instruction sheets are included in shipping envelope of all outgoing units.

d. Packing and Processing Section, Operations Branch, General Supply Division, will:

(1) Examine material and shipping document and determine packaging and packing requirements.

(2) Obtain required packaging, packing, and marking supplies.

(3) Dispatch a packing crew with necessary supplies to the radioactive storage area.

(4) Pack, package and mark material in accordance with existing regulations.

(5) Affix appropriate radiation labels to the package and indicate the type and activity of contents.

(6) Complete blocks 1-6, DA Form 2791-R.

(7) Have the packaging inspector affix his acceptance stamp to certify the material is packed in accordance with ICC regulations.

(8) Indicate kind of packages (fiberboard, wood, lead, etc.) and number of items contained in each package in remarks block of the shipping document and make normal distribution of shipping documents.

e. Transportation Division will:

(1) Send a report of shipment to the receiving installation by electrical means.

(2) Have highway vehicles inspected and DD Form 626 prepared except where shipment is exempted by section 173.391 of R. M. Graziano's Tariff.

(3) Give truck drivers instructions (DD Form 836) on actions required in case of accident.

(4) Complete blocks 11 and 12 of DA Form 2791-R. One copy of DA Form 2791-R will be filed with record of shipment and two copies will be given to the carrier.

(5) Assure that the following certificate is placed on the bill of lading:

"This is to certify that the above named articles are properly classified, described, packaged, marked, and labeled, and are in proper condition for transportation, according to the applicable regulations of the Department of Transportation."

f. Container Assembly and Loading Unit, Support Section, Storage Branch, General Supply Division, will:

(1) Receive necessary documentation from Transportation Division.

(2) Check and load material according to current regulations.

15. Disposal of radioactive material. a. Any breakage of radioactive electron tubes or radioactive material will be reported immediately to Nucleonics Branch, Calibration Division, who will supervise the decontamination process.

NOTE: Radioactive substances will not be handled with the bare hands.

b. All unserviceable surplus material will be placed in containers in accordance with paragraph 11, AR 755-15.

c. Under no circumstances will any fragment or part of radioactive device be put into a trash receptacle, wastebasket, or Dempster Dumpster.

d. Disposal will be completed as directed by the Radiological Protection Officer or Chief, Nucleonics Branch.

16. Storage and repair areas for radioactive materials. a. Buildings 103, 128, and 139 are designated as storage areas for radioactive materials.

b. Building 139 is designated as the repair area for radioactive materials.

c. Changes or additions to storage areas will be accomplished only upon the approval of the Radiological Protection Officer.

d. Marking of buildings and areas for repair and storage of radioactive materials must be approved by the Radiological Protection Officer.

e. All areas determined to be dangerous to personnel will be marked with signs, "DO NOT ENTER THIS AREA WITHOUT A FILM BADGE."

f. No person will enter areas marked "DANGER RADIATION" except on official business, and then only upon his supervisor's orders.

17. Special rules for handling radioactive materials. a. Personnel will not be allowed to eat, drink, smoke, or apply cosmetics in the presence of radioactive material. Foodstuffs, cosmetics, and tobacco will not be stored in radioactive material storage areas or in workshops where radioactive materials are being handled.

b. Personnel receiving cuts, scratches, or punctures by radioactive objects will report to the Health Clinic immediately for treatment. Questions regarding contamination and hazard will be forwarded to the Radiological Protection Officer.

18. Marking of radioactive components. Electronic end items with radioactive components, other than test and measurement equipment (TMDE) that are destined for the Maintenance Electronic Production areas for test and/or repair, will be accorded the same procedural processing as outlined in sections II and III of this document.

a. Maintenance Directorate operations personnel will:

(1) Observe safety measures in accordance with LBADR 385-1.

(2) Notify Nucleonics Branch, Calibration Division, of any irregularities encountered.

(3) Dispose of broken or unusable radioactive material in accordance with paragraph 15 of this document.

b. Maintenance Quality Control Branch will inspect material for conformance to specification, stock number, nomenclature, labels, documentation, etc., in accordance with existing regulations.

Appendix A

RADIOACTIVE ITEMS

The following list of radioactive items* will be handled in accordance with the provisions of this regulation and/or in coordination with Nucleonics Branch, Calibration Division, Directorate for Quality Assurance.

5805-161-6617	MT-313/GT	Mounting
5805-161-6649	U-4/GT	Adapter
5805-162-8191	SB-18/GT	Switchboard
5895-503-2612	GR-3	
5895-503-2613	GR-6	
6665-K53-3202	AN/FDR-2	Remote Area Monitor
6665-017-8903	AN/PDR-27Q	Radiac Set
6665-030-0326	R-1 Sample	Test Sample
6665-303-0327	R-7 Sample	Test Sample M1
6665-078-5250	MX-1083D/PDR-27	Test Sample
**6665-188-5555	AN/PDR-T1A	Radiac Set
6665-300-5588	M3	Source Set
6665-330-9517	M-3	Test Sample
6665-330-9518	M-4	Test Sample
6665-330-9519	MX1083C/PDR-27	Test Sample
6665-356-2098	MXQ1173/PD	Gamma Standard
6665-392-7482	R-3 Sample	Test Sample M2
6665-392-7483	Alpha Standard	
6665-395-9380	Alpha Standard	Radioactive Marker
6665-395-9381	Alpha Standard	Test Sample M5
6665-508-0594	M-6	Test Sample
6665-526-5334	AN/PDR-27A,B,C,D,E,K	Radiac Set
**6665-526-8648	AN/PDR-39A	Radiac Set
6665-536-8825	AN/UDM-1A	Radiac Calibrator
**6665-542-1587	AN/PDR-54	Radiac Set
6665-543-1435	AN/PDR-27J	Radiac Set
6665-543-1443	AN/PDR-27G	Radiac Set
6665-618-1348	M8	Test Sample
6665-663-8098	AN/MDQ-1	Radiological Field Lab
6665-669-0077	AN/UDM-1 (Box #5)	Radiac Calibrator
6665-692-6601	TS-784/PD	Radiac Calibrator
6665-694-2021	MX-1083B/PDR-27	Test Sample
6665-714-5141	M7	Test Sample
6665-752-7790	TS-784A/PD	Radiac Calibrator
**6665-767-7497	AN/UDM-6	Radiac Calibrator
6665-832-6159	MX-7338/PDR-27R	Test Sample
6665-856-3456	AN/PDR-27L	Radiac Set
6665-856-8233	M1A1	Radioactive Source
6665-856-8235	M3A1	Source Set

* For items suspected of being radioactive contact Nucleonics Branch
** Item is radioactive but does not require ICC Labels for shipment

Appendix A--Continued

6665-953-1867	AN/FJW-1	Rad Def Warning System
6665-961-0846	AN/PDR-27R	Radiac Set
**6665-965-1516	AN/PDR-60	Radiac Set
6665-973-1123	TS-1230A/PD	Radiac Calibrator
6665-975-7222	AN/PDR-27P	Radiac Set
8010-577-4875	P/O TK-S/MSM-2	Coating Compound
9905-252-3748		Switch Tip
9905-404-9968	MC-693	Marker

*For items suspected of being radioactive, contact Nucleonics Branch.
**Item is radioactive but does not require ICC Label, for shipment.

Appendix B

LABELING INSTRUCTIONS FOR RADIOACTIVE MATERIALS

NOTE: The following list provides condensed labeling instructions for the more commonly shipped radioactive items. For radioactive items not listed, labeling instructions should be obtained from AR 55-55, TM 55-315, MIL-STD-1458. Nucleonics Branch, Calibration Division may be contacted for assistance in interpretation of these publications.

1. A container which requires SF 414 labels for a single set in a shipping container will require either SF 414 or SF 415 labels if packed with more than one set in a single shipping container. If the maximum surface radiation is less than 10 mr/hr a SF 414 label is required. SF 415 is required if the radiation exceeds 10 mr/hr on the surface or .5 mr/hr at one yard.

2. For the purpose of this appendix, the following terms are defined:

   SF-413 - Bureau of Explosives label 414B, SF-413 or DOT I Label.
   SF-414 - Bureau of Explosives label 414C, SF-414 or DOT II Label.
   SF-415 - Bureau of Explosives label 414D, SF-415 or DOT III Label.
   Use and Storage Labels - Required by MIL-STD-1458 (DA Label 15 may be used until Use and Storage Labels are available).

3. Symbols used in this Appendix:

   Ci - Curie
   mCi - Millicurie - one thousandth of a curie
   uCi - Microcurie - one millionth of a curie

4. On containers requiring DOT labels, two labels are required, and should be placed on opposite sides of the container.

   a. TS-784/PD and TS-784(A)/PD

   (1) One set per container:

   SF-415 Label: Contents: 90 Sr + Y
   No. of curies: 25 mCi
   Transport Index: .5

   Use and Storage Label: AEC License: 29-01022-09
   Service Authorization: Cross out
   Radioisotopes: 90 Sr + Y
   Activity: 25 (cross out microcuries and curies)
   Date Determined: Leave blank
   Lot No: Leave blank

Appendix B--Continued

(2) More than one set per container:

SF-415: Contents: 90 Sr + Y
No. of curies: Number of sets times 25 mCi
Transport Index: Number of sets times .5 (contact Nucleonics Branch if the Transport Index exceeds 10.0)

Use and Storage Label: AEC License: 29-01022-09
Service Authorization: Cross out
Radioisotopes: 90 Sr + Y
Activity: 25 times the number of sets (cross out microcuries and curies)

b. AN/PDR-27( ) (all models)

(1) One set per container:

SF 414: Contents: 85 Kr
No. of curies: 5 mCi
Transport Index: .05

Use and Storage Label: AEC License No.: 19-01826-02
Service Authorization: Cross out
Radioisotope: 85 Kr
Activity: 5 (cross out microcuries and curies)
Date Determined: Leave blank
Lot No: Leave blank

(2) More than one set per container:

SF-414: Contents: 85 Kr
No. of curies: 5 mCi times the number of sets
Transport Index: Number of sets times .05 (contact Nucleonics Br. if total exceeds .5)

Use and Storage Label: AEC License No: 19-01826-02
Service Authorization: Cross out
Radioisotope: 85 Kr
Activity: 5 times the number of sets (cross out microcuries and curies)
Date Determined: Leave blank
Lot No. Leave blank

Appendix B--Continued

c. MX-7336/PDR-27R

(1) One set per container:

DA Label 118: Contents: ^{85}Kr
No. of curies: 5 mCi
Transport Index: .06

Use and Storage Label: AEC License No: 19-01826-02
Service Authorization: Cross out
Radioisotope: ^{85}Kr
Activity: 5 (cross out microcuries and curies)
Date Determined: Leave blank
Lot No: Leave blank

(2) More than one set per container

DA Label 118: Contents: ^{85}Kr
No. of curies: 5 mCi times the number of sets
Transport Index: Number of sets times .06 (contact Nucleonics Br. if total exceeds .5)

Use and Storage Label: AEC License No: 19-01826-02
Service Authorization: Cross out
Radioisotope: ^{85}Kr
Activity: 5 times the number of sets (cross out microcuries and curies)
Date Determined: Leave blank
Lot No: Leave blank

d. M3A1 and M1A1

(1) One set per container:

DA Label 119: Contents: ^{60}Co
No. of curies: 100 mCi
Transport Index: 5

Use and Storage Label: AEC License No: 19-01826-02
Service Authorization: Cross out
Radioisotope: ^{60}Co
Activity: 100 mCi
Date Determined: Leave blank
Lot No: Leave blank

Appendix B--Continued

(2) More than one set per container:

Contact Nucleonics Branch.

e. AN/UDM-2

(1) One set per conatiner:

DA Label 118: Contents: $^{90}Sr + Y$
No. of curies: 100 mCi
Transport Index: .5

Use and Storage Label: AEC License No: 29-01022-08
Service Authorization: Cross out
Radioisotope: $^{90}Sr + Y$
Activity: 100 (cross out microcuries and curies)
Date Determined: Leave blank
Lot No: Leave blank

(2) More than one set per container:

DA Label 118: Contents: $^{90}Sr + Y$
No. of curies: 100 mCi times the number of sets
Transport Index: .5 times the number of sets Contact Nucleonics Br. if total exceeds 10.0

Use and Storage Label: AEC License No: 29-01022-08
Service Authorization: Cross out
Radioisotope: $^{90}Sr + Y$
Activity: 100 times the number of sets (cross out microcuries and curies)
Date Determined: Leave blank
Lot No: Leave blank

Appendix C

PROCESSING MATERIEL RELEASE ORDER FOR
RADIAC CALIBRATOR, TS-784()/PD

1. General. The radioactive strontium-yttrium 90 source contained in Calibrator, Radiac, TS-784()/PD, emits beta radiation and will not be handled or removed except by qualified nucleonics personnel.

2. Procedure. a. Receipt/Locator Documentation Section, Supply Management Branch, General Supply Division, will:

(1) Receive Materiel Release Order (MRO), DD Form 1348, and DOD Single Line Item Release/Receipt Document, DD Form 1348-1, for Radiac Calibrator, TS-784()/PD.

(2) Forward DD Form 1348-1 and other pertinent documents to Supply Documentation Section.

b. Supply Documentation Section, Supply Management Branch, General Supply Division, will:

(1) Receive shipping packet.

(2) Edit DD Form 1348-1 in accordance with AR 725-50.

(3) Forward shipping packet to Warehousing Section.

c. Warehousing Section, Storage Branch, General Supply Division, will:

(1) Receive shipping packet.

(2) Handcarry packet to Nucleonics Branch, Calibration Division, and obtain serial number of the item to be shipped.

(3) Forward shipping packet to Packing and Processing Section.

d. Nucleonics Branch, Calibration Division, Directorate for Quality Assurance, will:

(1) Select the item to be shipped and post serial number of the item and information required by paragraph 14b, this regulation, on DD Form 1348-1.

(2) Obtain inspector's stamp on DD Form 1348-1.

Appendix C--Continued

(3) Initiate DA Form 2791-R in quadruplicate, completing blocks 7 thru 10.

e. Maintenance Quality Control Division, Directorate for Quality Assurance, will transfer inspector's stamp from processing tag to the DD Form 1348-1.

f. Packing and Processing Section, Operations Branch, General Supply Division, will:

(1) Receive shipping packet.

(2) Dispatch packer and materials to Nucleonics Branch to package the selected item.

(3) Forward shipping packet to Container Assembly and Loading Unit, Support Section, Operation Branch for completion of shipment.

Appendix D

END ITEM ECOM EQUIPMENTS CONTAINING RADIOACTIVE COMPONENTS

Equip. Type No.	Nomenclature	End Item FSN	Radioactive Component	Component FSN	Recommended Label Position
AN/ARM-69	Converter, Freq, Electronic	6625-082-4281	Milliameter	6625-555-4385	On Panel Immediately Below Meter
AN/ARM-59(V)	Direction Finder Set	5826-519-6967	Milliameter	6625-555-4385	" "
AN/FPN-40	Radar Set	5840-752-0603	Voltmeter	6625-068-3473 or	Lower Half of Meter Face
			Voltmeter	6625-752-7530	" "
			Ammeter	6625-068-9731 or	" "
			Ammeter	6625-752-7537	" "
AN/GLQ-2	Radio Set	5820-309-3221	Multimeter	6625-223-5244	" "
AN/GLQ-2A	Radio Set		Multimeter	6625-223-5244	" "
AN/GRC-3	Radio Set (12 Volt)	5820-230-0459	Multimeter	6625-223-5244	" "
AN/GRC-3	Radio Set (24 Volt)	5820-543-1784	Multimeter	6625-223-5244	" "
AN/GRC-4	Radio Set (12 Volt)	5820-243-6417	Multimeter	6625-223-5244	" "
AN/GRC-4	Radio Set (24 Volt)	5820-243-6418	Multimeter	6625-223-5244	" "
AN/GRC-5	Radio Set (12 Volt)	5820-230-0460	Multimeter	6625-223-5244	" "
AN/GRC-5	Radio Set (24 Volt)	5820-230-0449	Multimeter	6625-223-5244	" "
AN/GRC-6	Radio Set (12 Volt)	5820-230-0443	Multimeter	6625-223-5244	" "
AN/GRC-6	Radio Set (24 Volt)	5820-222-6417	Multimeter	6625-223-5244	" "

Appendix D--Continued

Equip. Type No.	Nomenclature	End Item FSN	Radioactive Component	Component FSN	Recommended Label Position
AN/GRC-7	Radio Set (12 Volt)	5820-222-6416	Multimeter	6625-223-5244	Lower Half of Meter Face
AN/GRC-7	Radio Set (24 Volt)	5820-230-0446	Multimeter	6625-223-5244	" "
AN/GRC-8	Radio Set (12 Volt)	5820-230-0445	Multimeter	6625-223-5244	" "
AN/GRC-8	Radio Set (24 Volt)	5820-230-0454	Multimeter	6625-223-5244	" "
AN/GRC-19	Radio Set	5820-030-0155	Ammeter	6625-569-0243	On Meter Flange
AN/GRC-46()	Radio Teletypewriter Set	5815-543-1760	Ammeter	6625-580-1901 or 6625-510-1788	Lower Half of Meter Face " "
				6625-580-9579	" "
				6625-569-0243	On Meter Flange
AN/GRC-106	Radio Set	5820-167-8003	Meter, Arbitrary Scale	6625-226-5680	" "
AN/GRC-106A	Radio Set	5820-167-8005	Meter, Arbitrary Scale	6625-226-5680	" "
AN/GRC-122()	Radio Teletypewriter Set	5815-167-7998	Meter, Arbitrary Scale	6625-226-5680	" "
AN/GRC-143()	Radio Teletypewriter Set	5815-168-1556	Meter, Arbitrary Scale	6625-226-5680	" "
AN/MRC-54(V)	Repeater, Set, Radio	5820-999-1796	Ammeter	6625-538-9007	Lower Half of Meter Face
			Ammeter	6625-668-5134	" "

Appendix D--Continued

Equip. Type No.	Nomenclature	End Item FSN	Radioactive Component	Component FSN	Recommended Label Position
			Voltmeter	6625-573-3786	Lower Half of Meter Face
			Voltmeter	6625-668-9315	" "
			Multimeter	6625-669-0261	" "
AN/MRC-69(V)	Radio Terminal Set	5820-889-3884	Ammeter	6625-538-9000	" "
			Ammeter	6625-668-5134	" "
			Voltmeter	6625-573-3786	" "
			Voltmeter	6625-668-9315	" "
			Multimeter	6625-669-0261	" "
AN/MRC-73(V)	Radio Terminal Set	5820-069-8912	Ammeter	6625-538-9000	" "
			Ammeter	6625-668-5134	" "
			Voltmeter	6625-573-3786	" "
			Voltmeter	6625-668-9315	" "
			Multimeter	6625-669-0261	" "
AN/MRR-8	Receiving Set, Radio	5820-999-6093	Multimeter	6625-223-5244	" "
AN/SPN-11	Radar Set	5840-069-9811	Multimeter	6625-223-5244	" "
AN/SPN-11X	Radar Set	5840-503-3532	Multimeter	6625-223-5244	" "
AN/SPN-11Y	Radar Set	5840-503-3531	Multimeter	6625-223-5244	" "

Appendix D--Continued

Equip. Type No.	Nomenclature	End Item FSN	Radioactive Component	Component FSN	Recommended Label Position
AN/SPN-11Z	Radar Set	5840-503-3529	Multimeter	6625-223-5244	Lower Half of Meter Face
AN/TRA-24	Radio Set	5820-532-3989	Ammeter	6625-538-9000	" "
			Ammeter	6625-668-5134	" "
			Voltmeter	6625-573-3786	" "
			Voltmeter	6625-668-9315	" "
			Multimeter	6625-669-0261	" "
AN/TRA-25	Radio Set Group	5820-776-5406	Ammeter	6625-538-9000	" "
			Ammeter	6625-668-5134	" "
			Voltmeter	6625-573-3786	" "
			Voltmeter	6625-668-9315	" "
			Multimeter	6625-669-0261	" "
AN/TRA-25A	Radio Set Group	5820-856-9911	Ammeter	6625-538-9000	" "
			Ammeter	6625-668-5134	" "
			Voltmeter	6625-573-3786	" "
			Voltmeter	6625-668-9315	" "
			Multimeter	6625-669-0261	" "
AN/TRC-35	Radio Terminal Set	5820-543-0057	Ammeter	6625-538-9000	" "
			Ammeter	6625-668-5134	" "

Appendix D--Continued

Equip. Type No.	Nomenclature	End Item FSN	Radioactive Component	Component FSN	Recommended Label Position
			Voltmeter	6625-573-3786	Lower Half of Meter Face
			Voltmeter	6625-668-9315	" "
			Multimeter	6625-669-0261	" "
AN/TRC-36	Radio Relay Set	5820-532-3988	Ammeter	6625-538-9000	" "
			Ammeter	6625-668-5134	" "
			Voltmeter	6625-573-3786	" "
			Voltmeter	6625-668-9315	" "
			Multimeter	6625-669-0261	" "
AN/TRC-112	Radio Terminal Set	5820-168-1561	Meter, Arbitrary, Scale	6625-226-5680	On Meter Flange
AN/TRC-121	Radio Terminal Set	5820-168-1562	Meter, Arbitrary, Scale	6625-226-5680	" "
AN/TRC-133	Radio Terminal Set	5820-930-3598	Voltmeter	6625-555-3095	" "
AN/TRD-17	Direction Finder Set	5820-708-2221	Multimeter	6625-223-5244	Lower Half of Meter Face
AN/VRC-8	Radio Set	5820-196-171[illegible]	Multimeter	6625-223-5244	" "
AN/VRC-9	Radio Set	5820-193-8809	Multimeter	6625-223-5244	" "
AN/VRC-10	Radio Set	5820-196-1721	Multimeter	6625-223-5244	" "
AN/VRC-13	Radio Set	5820-192-7133	Multimeter	6625-223-5244	" "

Appendix D--Continued

Equip. Type No.	Nomenclature	End Item FSN	Radioactive Component	Component FSN	Recommended Label Position
AN/VRC-14	Radio Set	5820-192-7110	Multimeter	6625-223-5244	Lower Half of Meter Face
AN/VRC-15	Radio Set	5820-192-7111	Multimeter	6625-223-5244	" "
AN/VRC-16	Radio Set (12 Volt)	5820-234-6398	Multimeter	6625-223-5244	" "
AN/VRC-16	Radio Set (24 Volt)	5820-253-6131	Multimeter	6625-223-5244	" "
AN/VRC-17	Radio Set	5820-351-3384	Multimeter	6625-223-5244	" "
AN/VRC-18	Radio Set	5820-234-6399	Multimeter	6625-223-5244	" "
AN/VRC-20	Radio Set	5820-519-4104	Multimeter	6625-223-5244	" "
AN/VRC-21	Radio Set	5820-519-4102	Multimeter	6625-223-5244	" "
AN/VRC-22	Radio Set	5820-519-4101	Multimeter	6625-223-5244	" "
AN/VRC-29	Radio Teletype-writer Set	5815-543-1758	Ammeter	6625-580-1901 or	" "
			Ammeter	6625-510-1788	" "
			Ammeter	6625-580-9579	" "
			Ammeter	6625-569-0243	" "
AN/VRC-55	Repeater, Telephone	5820-973-0120	Ammeter	6625-569-0243	" "
AN/VRQ-1	Radio Set	5820-222-6404	Multimeter	6625-223-5244	" "
AN/VRQ-2	Radio Set	5820-193-8838	Multimeter	6625-223-5244	" "
AN/VRQ-3	Radio Set	5820-193-8811	Multimeter	6625-223-5244	" "

Appendix D--Continued

Equip. Type No.	Nomenclature	End Item FSN	Radioactive Component	Component FSN	Recommended Label Position
AN/VSC-2	Radio Teletypewriter Set	5815-069-8914	Meter, Arbitrary Scale	6625-226-5680	On Meter Flange
AN/VSC-3	Radio Teletypewriter Set	5815-788-8540	Voltmeter	6625-555-3095	" "
			Meter, Arbitrary Scale	6625-226-5680	" "
OA-1451/PRR	Receiver Group	5825-543-1513	Meter, Arbitrary Scale	6625-618-2068	" "
OA-1451A/PRR	Receiver Group	5825-014-0184	Meter, Arbitrary Scale	6625-618-2068	" "

LBADR 725-2

(AMXLX-QA-1)

FOR THE COMMANDER:

P E Riedel

P. E. RIEDEL
CPT, AGC
Adjutant

DISTRIBUTION
S

Form NRC-3
(6-77)
10 CFR 19
10 CFR 20

UNITED STATES OF AMERICA NUCLEAR REGULATORY COMMISSION
Washington, D.C. 20555

NOTICE TO EMPLOYEES

STANDARDS FOR PROTECTION AGAINST RADIATION (PART 20); NOTICES, INSTRUCTIONS AND REPORTS TO WORKERS; INSPECTIONS (PART 19)

In Part 20 of its Rules and Regulations, the Nuclear Regulatory Commission has established standards for your protection against radiation hazards from radioactive material under license issued by the Nuclear Regulatory Commission. In Part 19 of its Rules and Regulations, the Nuclear Regulatory Commission has established certain provisions for the options of workers engaged in NRC-licensed activities.

YOUR EMPLOYER'S RESPONSIBILITY

Your employer is required to—

1. Apply these NRC regulations and the conditions of his NRC license to all work under the license.
2. Post or otherwise make available to you a copy of the NRC regulations, licenses, and operating procedures which apply to work you are engaged in, and explain their provisions to you.
3. Post Notices of Violation involving radiological working conditions, proposed imposition of civil penalties and orders.

YOUR RESPONSIBILITY AS A WORKER

You should familiarize yourself with those provisions of the NRC regulations, and the operating procedures which apply to the work you are engaged in. You should observe their provisions for your own protection and protection of your co-workers.

WHAT IS COVERED BY THESE NRC REGULATIONS

1. Limits on exposure to radiation and radioactive material in restricted and unrestricted areas;
2. Measures to be taken after accidental exposure;
3. Personnel monitoring, surveys and equipment;
4. Caution signs, labels, and safety interlock equipment;
5. Exposure records and reports;
6. Options for workers regarding NRC inspections; and
7. Related matters.

REPORTS ON YOUR RADIATION EXPOSURE HISTORY

1. The NRC regulations require that your employer give you a written report if you receive an exposure in excess of any applicable limit as set forth in the regulations or in the license. The basic limits for exposure to employees are set forth in Sections 20.101, 20.103, and 20.104 of the Part 20 regulations. These Sections specify limits on exposure to radiation and exposure to concentrations of radioactive material in air.
2. If you work where personnel monitoring is required pursuant to Section 20.202;
   (a) your employer must give you a written report of your radiation exposures upon the termination of your employment, if you request it, and
   (b) your employer must advise you annually of your exposure to radiation, if you request it.

INSPECTIONS

All activities under the license are subject to inspection by representatives of the NRC. In addition, any worker or representative of workers who believes that there is a violation of the Atomic Energy Act of 1954, the regulations issued thereunder, or the terms of the employer's license with regard to radiological working conditions in which the worker is engaged, may request an inspection by sending a notice of the alleged violation to the appropriate United States Nuclear Regulatory Commission Inspection and Enforcement Regional Office (shown on map at right). The request must set forth the specific grounds for the notice, and must be signed by the worker or the representative of the workers. During inspections, NRC inspectors may confer privately with workers, and any worker may bring to the attention of the inspectors any past or present condition which he believes contributed to or caused any violation as described above.

POSTING REQUIREMENTS

Copies of this notice must be posted in a sufficient number of places in every establishment where activities licensed by the NRC are conducted, to permit employees working in or frequenting any portion of a restricted area to observe a copy on the way to or from their place of employment.

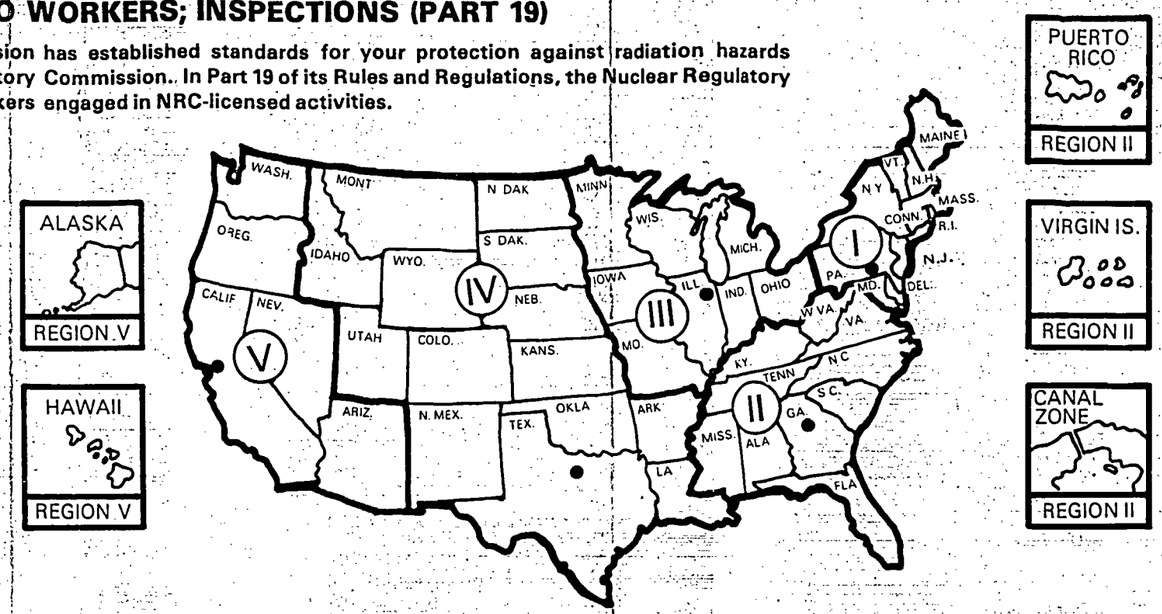

UNITED STATES NUCLEAR REGULATORY COMMISSION

A representative of the Nuclear Regulatory Commission can be contacted at the following addresses and telephone numbers. The Regional Office will accept collect telephone calls from employees who wish to register complaints or concerns about radiological working conditions or other matters regarding compliance with Commission rules and regulations.

Regional Offices

REGION	ADDRESS	TELEPHONE	
		DAYTIME	NIGHTS AND HOLIDAYS
I	Region I, Office of Inspection and Enforcement, USNRC 631 Park Avenue King of Prussia, Pennsylvania 19406	215 337-1150	215 337-1150
II	Region II, Office of Inspection and Enforcement, USNRC 230 Peachtree Street, N.W., Suite 1217 Atlanta, Georgia 30303	404 221-4503	404 221-4503
III	Region III, Office of Inspection and Enforcement, USNRC 799 Roosevelt Road Glen Ellyn, Illinois 60137	312 858-2660	312 858-2660
IV	Region IV, Office of Inspection and Enforcement, USNRC 611 Ryan Plaza Drive, Suite 1000 Arlington, Texas 76012	817 334-2841	817 334-2841
V	Region V, Office of Inspection and Enforcement, USNRC 1990 N. California Boulevard, Suite 202, Walnut Creek Plaza Walnut Creek, California 94596	415 486-3141	415 486-3141

TB 11-6665-227-12

Change 1

DEPARTMENT OF THE ARMY TECHNICAL BULLETIN

SAFE HANDLING, STORAGE, AND TRANSPORTATION OF CALIBRATOR SET, RADIAC AN/UDM-2 NSN 6665-00-179-9037

Headquarters, Department of the Army, Washington, DC
9 January 1978

TB 11-6665-227-12, 2 July 1975, is changed as follows:

AMSEL is changed to DRSEL in the following places:

Page 3. Paragraph 3.
Paragraph 5d.
Paragraph 8*a*(2) and (3).
Paragraph 8*b*(1).
Page 4. Paragraph 8*b*(4), (6), and (7).
Paragraph 9*a*. in NOTES 2.
Page 5. Paragraph 11*q*.
Paragraph 12.
Page 6. Paragraph 14*b*(3).

Page 2. Safety Precautions. Change the last two sentences to read: Calibrator Set, Radiac AN/UDM-2 is issued throughout the Army under Nuclear Regulatory Commission (NRC) license held by the US Army Electronics Command Safety Office at Fort Monmouth, New Jersey. Information about the NRC license may be requested by letter to: Commander, US Army Electronics Command, ATTN: DRSEL-SF-H Fort Monmouth, New Jersey 07703. The Safety Office may also be contacted by telephone on AUTOVON 992-3493.

Page 5. Paragraph 10*d*, line 2: Change "daily," to "monthly."

Line 3: Delete "when in use, for possible contamination."

Paragraph a10*f* is added after paragraph 10*e*:

f. Form NRC-3, Notice to Employees, contained in this bulletin, may be removed for posting wherever the AN/UDM-2 is used and/or stored. The posting requirements are contained on the form.

By Order of the Secretary of the Army:

BERNARD W. ROGERS
General, United States Army
Chief of Staff

Official:

J. C. PENNINGTON
Brigadier General, United States Army
The Adjutant General

To be distributed in accordance with DA Form 12-50, Operator maintenance requirements for AN/UDM-2

☆ U.S. GOVERNMENT PRINTING OFFICE: 1977-765-096/496

DEPARTMENT OF THE ARMY TECHNICAL BULLETIN

SAFE HANDLING, STORAGE, AND TRANSPORTATION OF CALIBRATOR SET, RADIAC AN/UDM-2 NSN 6665-00-179-9037

Headquarters, Department of the Army, Washington, DC
2 July 1975

	Paragraph	Page
Purpose	1	3
Indexes of publications	2	3
Reporting of errors	3	3
Description	4	3
Calibrator Set, Radiac AN/UDM-2, General	5	3
Inherent danger	6	3
Applicability	7	3
Responsibility	8	3
Supervision	9	4
Storage or work areas	10	4
Duties of radiological protection officer for AN/UDM-2	11	5
Requisitioning procedure	12	5
Leak testing procedure	13	5
Emergency situations	14	6
APPENDIX. REFERENCES		

Incl 7

SAFETY PRECAUTIONS

Calibrator Set, Radiac AN/UDM-2 will be used only under the direction of a Radiological Protection Officer. Do not eat, drink, or smoke while using or handling the AN/UDM-2. After handling the AN/UDM-2 wash the hands thoroughly with warm water and mild soap. Dry the hands thoroughly and monitor them for radioactive contamination with a low-level beta-gamma radiac set. Do not place hands or body in front of the open port of the calibrator. Calibrator Set, Radiac AN/UDM-2 is issued throughout the Army without a specific license being required by the user. This is made possible by statements and conditions set forth in the Atomic Energy Commission Byproduct Material License #29-01022-08 issued to Department of the Army, US Army Electronics Command, Fort Monmouth, New Jersey.

1. **Purpose.** This bulletin prescribes the minimum safety precautions that are essential during the handling, storage, issue, transportation, accountability, and use of Calibrator Set, Radiac AN/UDM-2.

NOTE

Official nomenclature followed by (*) is used to indicate all models of the equipment covered in this bulletin. Thus, Radiac Set AN/PDR-27(*) represents Radiac Sets AN/PDR-27J, AN/PDR-27L, AN/PDR-27P, AN/PDR-27Q, and AN/PDR-27R and later models.

2. **Indexes of Publications.** *a. DA Pam 310-4.* Refer to the latest issue of DA Pam 310-4 to determine whether there are new editions, changes, or additional publications pertaining to the equipment.

b. DA Pam 310-7. Refer to DA Pam 310-7 to determine whether there are modification work orders (MWO's) pertaining to the equipment.

3. **Reporting of Errors.** Reporting of errors, omissions, and recommendations for improving this bulletin by the individual user is encouraged. Reports should be submitted on DA Form 2028 (Recommended Change to Publications and Blank Forms) and forwarded direct to Commander, US Army Electronics Command. ATTN: AMSEL-MA-Q, Fort Monmouth, New Jersey 07703.

4. **Description.** Calibrator Set, Radiac AN/UDM-2 contains a total of 100.020 millicuries of Strontium 90 (Sr^{90}) and consists of Calibrator, Radiac TS-3494/UDM-2 and Calibrator, Radiac TS-3495/UDM-2. Calibrator, Radiac TS-3494/UDM-2 contains 25 millicuries of Sr^{90} and is used to calibrate Radiacmeters IM-174/PD and IM-174A/PD, Radiac Set AN/PDR-27(*), Radiac Set AN/PDR-60, and Aerial Radiac System AN/ADR-6. Calibrator, Radiac TS-3495/UDM-2 contains three 25 millicurie Sr^{90} and one 20 microcurie SR^{90} sources. It is used for serviceability testing of Radiacmeters IM-9E/PD, IM-147/PD and IM-93(*)/UD.

5. **Calibrator Set, Radiac AN/UDM-2, General.** *a.* Calibrator Set, Radiac AN/UDM-2 is marked in accordance with Code of Federal Regulations Title 10, Part 20 and MIL-STD-1458.

b. Calibrator Set, Radiac AN/UDM-2 is nonexpendable.

c. Calibrator Set, Radiac AN/UDM-2 may be transferred only to another qualified radiological protection officer (RPO) (paragraph 9).

d. Calibrator Set, Radiac AN/UDM-2 will be disposed of only on instructions of Commander, US Army Electronics Command, ATTN: AMSEL-MM-S-CS-TA-1, Fort Monmouth, New Jersey 07703.

e. Wipe tests must be performed at intervals not to exceed 6 months on all Calibrator Sets, Radiac AN/UDM-2, except those sets in combat areas.

f. All correspondence relating to certification of radiological protection officers or control of Calibrator Set, Radiac AN/UDM-2 should be addressed Commander, US Army Electronics Command, ATTN: AMSEL-SF, Fort Monmouth, New Jersey 07703 through the radioactive material control point.

6. **Inherent Danger.** *a.* The radioactive Strontium-Yttrium 90 sources in Calibrator Set, Radiac AN/UDM-2 emit beta radiation. Interaction of this beta radiation with the radiac calibrator set housing results in the emission of secondary X-rays (Bremsstrahlung). Excessive absorption of ionizing radiation by the human body may be injurious (AR 40-14). The radioactive sources *will not* be removed from the radiac calibrator set, except by qualified personnel of nucleonics facilities established at the Lexington-Blue Grass and Sacramento Army Depots, CONUS, or other installations having an Atomic Energy Commission (AEC) License authorizing maintenance of Calibrator Set, Radiac AN/UDM-2.

b. Familiarity with these criteria and strict observance of the health protection procedures contained in the following paragraphs are essential.

7. **Applicability.** The provisions of this technical bulletin apply to all persons and activities who have the responsibility for the handling, transportation, storage, and use of any issued Calibrator Set, Radiac AN/UDM-2. This technical bulletin does not apply to the Army stocks of radiac calibrator sets stored in depots.

8. **Responsibility.** *a. Responsibilities of Major Commands.*

(1) Establishing at least one Radioactive Material Control Point (RMCP) (AR 725-1).

(2) Appointing a Radiological Control Officer (RCO) for each RMCP and forwarding two copies of appointee's orders and qualifications to Commander, US Army Electronics Command, ATTN: AMSEL-SF, Fort Monmouth, New Jersey 07703.

(3) Developing implementation procedures to insure periodic leak testing and forwarding two copies of procedures to Commander, US Army Electronics Command, ATTN: AMSEL-SF, Fort Monmouth, New Jersey 07703.

(4) Forwarding leak test smears to nearest approved smear counting station for evaluation.

(5) Insuring that each installation or activity using the AN/UDM-2 has an effective radiation protection program.

b. Responsibilities of Radiological Control Officer (RCO).

(1) Review and approve the qualifications of each local Radiological Protection Officer (RPO) for the AN/UDM-2 and forward to Commander, US Army Electronics Command, ATTN: AMSEL-SF,

Fort Monmouth, New Jersey 07703 a list of these local RPO's and their qualifications for approval and certification.

(2) If a qualified local RPO is not available, take one or more of the following actions:

(a) Suspend requisition for the AN/UDM-2.

(b) Suspend use of AN/UDM-2 until someone can be qualified by training.

(c) Transfer AN/UDM-2 to an installation or activity with qualified personnel.

(3) Maintain the following records for each AN/UDM-2 under his control:

(a) National stock number.

(b) Description.

(c) Serial number.

(d) Isotope, source activity, and date activity was determined.

(e) Dates and results of leak tests.

(f) Shipment number.

(g) Shipped from.

(h) Shipped to.

(i) Date shipped.

(j) Date of manufacture.

(k) Name of manufacturer.

(l) Name and qualifications of local RPO's.

(m) Radiation Incident Reports.

(4) Notify Commander, US Army Electronics Command, ATTN: AMSEL-MM-S-CS-TA-1, Fort Monmouth, New Jersey 07703, within 60 days of permanent transfer of AN/UDM-2 between major commands.

(5) Insure that AN/UDM-2 is properly handled in accordance with Army and AEC regulations. Periodically inspect and audit records of installations and activities possessing the AN/UDM-2.

(6) Assure that a Radiation Incident Report is submitted by electrical means to Commander, US Army Electronics Command, ATTN: AMSEL-SF, Fort Monmouth, New Jersey 07703, within 24 hours, when an incident occurs.

(7) Forward DA Form 3252-R (Radioisotope Inventory and Leak Test Report) (RCS AMC-192) listing all Calibrator Sets, Radiac AN/UDM-2 in area of responsibility to Commander, US Army Electronics Command, ATTN: AMSEL-MM-S-CS-TA-1, Fort Monmouth, New Jersey 07703 at least semiannually (31 January and 31 July). Reports may include information on other ECOM managed calibration and test items of supply listed in AR 725-1. The National Inventory Control Point will furnish extracts of reports on the AN/UDM-2 to the US Army Electronics Command Safety Office, ATTN: AMSEL-SF, who is the AEC licensee for the AN/UDM-2.

9. Supervision. *a.* All calibration in which Calibrator Set, Radiac AN/UDM-2 is used will be supervised by a qualified radiological protection officer. Supervision in this sense is used to indicate performance of all duties listed in paragraph 10. To be a qualified RPO, a person must have received a minimum of 40 hours formal training on radiation including the following topics:

(1) Principles and practices of radiation protection.

(2) Biological effects of radiation.

(3) Radioactivity measurement standardization and monitoring techniques and instruments.

(4) Mathematics and calculations basic to the use and measurement of radioactivity.

(5) The operation and use of the AN/UDM-2 or TS-784(*)/PD.

NOTES

1. Completion of the Radiological Safety Course at the US Army Chemical School or at the US Army Ordnance Center and School subsequent to 31 December 1959 meets these requirements.

2. Where circumstances warrant, alternate training may be substituted if this training is approved by Commander, US Army Electronics Command, ATTN: AMSEL-SF, Fort Monmouth, New Jersey 07703. Such training must be received under the guidance of a qualified RPO, and must include at least 16 hours of actual experience in the use of the AN/UDM-2.

b. The person appointed as radiological protection officer may be a commissioned officer, a warrant officer, enlisted man, or civilian, if he meets the minimum qualifications prescribed above. A radiological protection officer designated custodian for the AN/UDM-2 is a specified person designated to control the use of the AN/UDM-2.

c. The operator or user of the AN/UDM-2 shall have a minimum of 8 hours training under the guidance of a qualified RPO for the AN/UDM-2 in the basic fundaments of radiological operations, radiac instrumentation theory and application and survey techniques and 16 hours on-the-job training in operation and care of the AN/UDM-2. Instructions shall include safe working practices and inherent hazards associated with the instrument.

10. Storage or Work Areas. *a.* Storage areas and work areas where the AN/UDM-2 is used will be considered radiation areas and will be marked in accordance with AR 385-30. If the radiation area is in the same vicinity of areas which are occupied by the individuals who are not designated as radiation workers, the radiation level in the unmarked area must be such that personnel will not be exposed to ionizing radiation in excess of 2 millirems in any one hour; or 100 millirems in any 7 consecutive days; or

0.5 rem in one calendar year. U[illegible]cessary exposure of personnel in this area will not be permitted. (For the purpose of this document, 1 millirem is equal to 1 milliroentgen or millirad).

b. Store Calibrator Set, Radiac AN/UDM-2 in a locked container or area that permits external gamma radiation levels in potentially occupied areas no greater than 0.5 millirems per hour (mr/hr). Access to the container stored in a locked area shall be controlled by the radiological protection officer. Storage instructions are as follows:

(1) One or more AN/UDM-2's may be stored in a locked container constructed of wood or metal. The size of the container may be varied; however, the gamma radiation level on the outside of the container shall not exceed 0.5 mr/hr. The inside of the container may be lined with sheet lead to reduce the radiation intensity to an acceptable level. The container must be marked in accordance with MIL-STD-1458.

(2) One or more AN/UDM-2's may be stored in a locked room of such dimensions and construction that the gamma radiation level at any point *outside* the room does not exceed 0.5 mr/hr.

c. Only authorized, qualified personnel will be permitted to enter the storage or calibration areas alone. These areas will be physically secured and safeguarded when in use. Visitors must be escorted by the RPO or a qualified user and must be briefed on radiation hazards and precautions to minimize these hazards.

d. Storage areas and areas where equipment is being calibrated will be monitored at least daily, when in use, for possible contamination. Table of Allowance (TA) 50-914 (Individual Safety and Protective Clothing and Equipment) authorizes one each Radiac Set AN/PDR-27(*) per work group requiring radiation monitoring protection.

e. Personnel monitoring devices will be used when entering the storage or calibration areas or when operating Calibrator Set, Radiac AN/UDM-2 (AR 40-14). Operators will use wrist-type film badges in addition to regular body-type badges.

11. Duties of Radiological Protection Officer for AN/UDM-2. The specific duties of the appointed radiological protection officer will be to:

a. Insure that AN/UDM-2's under his jurisdiction are properly used and stored.

b. Train local users and operators and maintain list and record of training of users and operators.

c. Insure records are maintained on each item.

d. Advise RMCP of any forthcoming change in accountability, local RPO, or installation relocation for the AN/UDM-2.

e. Submit Radiation Incident Report according to published directives.

f. Establish ra[illegible]tion controlled areas for AN/UDM-2 storage and use.

g. Post Radiation Area warning signs.

h. Insure items are stored in a fire-resistant structure and no explosives of any kind are stored in the same structure.

i. Immediately refer actual or suspected overexposure to medical officer.

j. Insure film badges and pocket dosimeters are worn when required and that film badge exposures are recorded.

k. Insure that periods of time between leak tests do not exceed 6 months and supervise performance of leak tests.

l. Secure items against unauthorized use and removal.

m. Insure that all Army and Federal regulations are being followed and that personnel are exposed to a minumum of radiation consistent with practical considerations.

n. Conduct a physical inventory according to published frequencies.

o. Submit inventory, leak test, and other reports to RMCP as required.

p. Prior to relief from duties, place all AN/UDM-2's under this jurisdiction in locked storage.

q. Investigate each case of excessive or abnormal exposure to determine the cause, recommend remedial action to prevent recurrence, and submit a complete written report to the Commander, US Army Electronics Command, ATTN: AMSEL-SF, Fort Monmouth, NJ 07703 within 24 hours (para 8*b*(6)).

12. Requisitioning Procedure. Stations in CONUS and Oversea supply agencies will submit requisitions through *radioactive material supply* channels to Commander, US Army Electronics Command, ATTN: AMSEL-MM-S-CS-TA-1, Fort Monmouth, New Jersey 07703, for issue to certified Radiological Protection Officers. All requisitions will be accompanied by the name of the Radiological Protection/Control Officer who is to be responsible for the equipment. In addition, each request will include the following certification: "As required by chapter 3, AR 725-1, sufficient safety equipment, facilities, and trained personnel are available at this installation for the safe handling, use and storage of radioactive material ordered on this requisition." The certification must have the signature and the typed name and grade of the appropriate radiological control officer.

13. Leak Testing Procedure. *a. Safety Precautions.* The RPO is required to perform the leak test. Each person performing the leak test will wear a film badge.

b. Performing Calibrator, Radiac TS-3495/UDM-2

Leak Test.

WARNING

NEVER expose the eyes to the radiation field by peering into the access hole while the swivel cover is swung aside. NEVER place the hands above the open part of the AN/UDM-2.

(1) Swing aside the swivel cover.

WARNING

After checking, do not leave the swab unattended or allow it to touch any object.

(2) Using a moistened cotton swab and long-nosed pliers, wipe the swab around the available area of the sides of the access hole.

(3) Using the procedure in *d* below, check the cotton swab for contamination.

c. Performing Calibrator, Radiac TS-3494/UDM-2 Leak Test.

(1) Open the drawer in the drawer unit.

WARNING

After checking, do not leave the swab unattended or allow it to touch any object.

(2) Using a moistened cotton swab, wipe the inside and outside surfaces of the drawer.

(3) Using the procedures in *d* below, check the cotton swabs for contamination.

d. Checking and Mailing Cotton Swabs. Perform the following procedures in an area that is free from all radiation, except for normal background radiation. Background reading must average 0.04 mr/hr or less.

(1) Adjust Radiac Set AN/PDR-27(*) to measure 0 to 0.5 mr/hr.

(2) Open cover on end of probe.

(3) Place each cotton swab, in turn, approximately 1/4 inch in front of the probe and note the indication; do not touch the probe with the cotton swab.

WARNING

If a sustained reading of 0.06 mr/hr above background or greater is obtained, the AN/UDM-2 is contaminated. Discontinue use of the AN/UDM-2 immediately, and refer to paragraph 14 for actions to be taken.

NOTE

Write the date of the leak test and the radiation source serial number on paper tabs and attach to the swabs.

(4) Place each cotton swab in a plastic bag and proceed as follows:

(a) If a reading of less than 0.4 mr/hr is observed on the AN/PDR-27, the plastic bag and swab should be placed in an envelope or small box. CONUS users will mail the items to Commander, Lexington-Blue Grass Army Depot, ATTN: AMXLX-QCP, Lexington, Kentucky 40507. Oversea users will follow procedures established by the responsible commander.

(b) If a reading is in excess of 0.4 mr/hr, wrap a thin sheet of lead, aluminum, or other metal foil around the plastic bag, place it in a cardboard box and check the surface radiation. If the radiation level at the surface of the box is less than 0.4 mr/hr, CONUS users will mail the item to Commander, Lexington-Blue Grass Army Depot, ATTN: AMXLX-QCP, Lexington, Kentucky 40507; oversea users will follow procedures established by the responsible area commander.

NOTE

If the surface radiation level exceeds 0.4 mr/hr, consult the RCO for shipping procedures.

14. Emergence Situations. The procedures outlined below will be followed in an emergency situation.

a. Loss of Calibrator.

(1) Attempt to recover the radiac calibrator set.

(a) Review records to determine the responsible individual.

(b) Make a physical survey.

(2) If the radiac calibrator set is recovered, revise procedures as necessary to prevent a recurrence.

(3) If the radiac calibrator set is not recovered, report the loss through command channels to the Area Radioactive Material Control Point (AR 725-1) and to the US Army Electronics Command stating the serial number of the radiac calibrator set, the circumstances involved, and the action taken to prevent recurrence.

b. Excessive Personnel Exposure (AR 40-14). If an individual receives a dose of ionizing radiation from an AN/UDM-2 in an amount exceeding 3 rem per calendar quarter, or an accumulated dose in excess of (N-18) X5 rems, where N is the age in years, the following actions will be taken:

(1) Obtain immediate medical advice from the Medical Officer.

(2) Remove the individual from duties involving occupational exposure to ionizing radiation until subsequent exposure limitations are established by proper medical authority (AR 40-14).

(3) Prepare written report of circumstances leading to overexposure; include serial number(s) of the AN/UDM-2 involved, actions taken to prevent recurrence, and other applicable information. Forward the report through proper channels to Commander, US Army Electronics Command, ATTN: AMSEL-SF, Fort Monmouth, NJ 07703.

c. Damage or Leaking AN/UDM-2. An AN/UDM-2 could begin to leak as a result of being dropped, damage to the source, or even as a result of age. Action required in the event of a known or suspected

leaking calibrator is:

(1) Discontinue use of the calibrator. Cover it with plastic, seal it with tape, and label it as contaminated.

(2) Monitor personnel, equipment, and areas for possible contamination and decontaminate as required.

(3) Report the item to the Radioactive Material Control Point and to the US Army Electronics Command.

(4) Dispose of the AN/UDM-2 as directed by Lexington-Blue Grass Army Depot or the Radioactive Material Control Point.

(5) Report the completed disposal action to the US Army Electronics Command and the Radioactive Material Control Point.

APPENDIX
REFERENCES

AR 40-14	Control and Recording Procedures for Occupational Exposure to Ionizing Radiation. (DSAR 4145-24).
AR 55-55	Transportation of Radioactive and Fissile Materials other than Weapons.
AR 385-30	Safety Color Code Markings and Signs.
AR 700-52	Licensing and Control of Sources of Ionizing Radiation.
AR 725-1	Special Authorization and Procedures for Issues, Sales and Loans.
AR 755-15	Disposal of Unwanted Radioactive Material.
DA Pam 310-4	Index of Technical Manuals, Technical Bulletins, Supply Manuals (Types 7, 8, and 9) Supply Bulletins, Lubrication Orders, and Modification Work Orders.
DA Pam 310-7	Index of Modification Work Orders.
MIL-STD-1458	Radioactive Materials: Marking and Labeling of Items, Packages and Shipping Containers for Identification In Use, Storage and Transportation.
TM 11-6665-209-15	Operator, Organization, DS, GS, and Depot Maintenance Manual Including Repair Parts and Special Tools Lists: Radiac Sets AN/PDR-27J, AN/PDR-27L, and AN/PDR-27Q.
TM 11-6665-213-12	Operator and Organizational Maintenance Manual Including Repair Parts and Special Tools Lists: Radiacmeter IM-174/PD.
TM 11-6665-213-40	Field and Depot Maintenance Manual: Radiacmeter IM-174/PD.
TM 11-6665-224-15	Organizational, Direct Support, General Support, and Depot Maintenance Manual (Including Repair Parts and Special Tools Lists): Radiac Set AN/PDR-27P.
TM 11-6665-228-15	Operator's, Organizational, Direct Support, General Support, and Depot Maintenance Manuals Including Repair Parts and Special Tools List: Radiac Set AN/PDR-27G.
TM 11-6665-230-15	Operator's, Organizational, Direct Support, General Support, and Depot Maintenance Manual Including Repair Parts and Special Tools Lists: Radiac Set AN/PDR-27R.
TM 11-6665-232-12	Operator's and Organizational Maintenance Manual Including Repair Parts and Special Tools List: Radiacmeter IM-174A/PD.
TM 11-6665-232-45	GS and Depot Maintenance Manual, Including Repair Parts and Special Tools List: Radiacmeter IM-174A/PD.
TM 38-750	The Army Maintenance Management System (TAMMS). Standards for Protection Against Radiation.
Code of Federal Regulations Title 10, Part 20	

By Order of the Secretary of the Army:

FRED C. WEYAND
General, United States Army
Chief of Staff

Official:

VERNE L. BOWERS
Major General, United States Army
The Adjutant General

DISTRIBUTION:

To be distributed in accordance with DA Form 12-50 (qty rqr block no. 65), Operator requirements for AN/UDM-2.

U.S. GOVERNMENT PRINTING OFFICE: 1975-665143/1137
811-282

DEPARTMENT OF THE ARMY
US ARMY AG PUBLICATIONS CENTER
1655 WOODSON ROAD
ST. LOUIS, MISSOURI 63114

OFFICIAL BUSINESS
PENALTY FOR PRIVATE USE $300

POSTAGE AND FEES PAID
DEPARTMENT OF THE ARMY
DOD 314

U.S.MAIL

SUPPLEMENT K

1. Reference: Item 15 of Form NRC-313.

2. Inclosure 1, Disposal of Unwanted Radioactive Material, AR 755-15, is followed for disposal of radioactive waste.

04311

ARMY REGULATION
No. 755-15

HEADQUARTERS
DEPARTMENT OF THE ARMY
WASHINGTON, D.C., *4 November 1966*

DISPOSAL OF SUPPLIES AND EQUIPMENT

DISPOSAL OF UNWANTED RADIOACTIVE MATERIAL

	Paragraph	Page
SECTION I. GENERAL		
Purpose	1	1
Scope	2	1
Definitions	3	1
Responsibilities	4	3
Implementation	5	4
Security	6	4
Budgeting and funding	7	4
Support of equipment	8	4
Special problems	9	4
II. ACTION BY ORGANIZATIONS HAVING UNWANTED RADIOACTIVE MATERIAL		
Holding action	10	5
Local storage	11	5
Serviceable or economically repairable items	12	5
Waste from special weapons	13	5
Returnable amounts of source and special nuclear material	14	6
Disposition instructions for radioactive materials intended for ultimate disposal	15	6
Replies to disposal requests	16	6
Shipment of unwanted radioactive material	17	6
Special shipping instructions for CONUS, Alaska, and Hawaii	18	7
Special shipping instructions for oversea areas other than Alaska and Hawaii	19	7
Escort of shipments of unwanted radioactive material	20	7
III. ULTIMATE DISPOSAL		
Disposal by radioactive material disposal facilities	21	7
Disposal authorized locally	22	8
Transfer, sale, or donation	23	8

Section I. GENERAL

1. Purpose. This regulation establishes responsibility and provides policy and instructions for the storage shipment, and disposal of unwanted radioactive material.

2. Scope. This regulation has Army-wide application, but does not apply to combat areas.

3. Definitions. For the purpose of this regulation, the following definitions apply:

a. Accumulating organization. Any Army activity, other than radioactive material disposal facility, which generates, accumulates, and/or stores unwanted radioactive material.

b. Local storage. Storage of unwanted radioactive material, on temporary basis only, at places other than the Army radioactive material disposal facility.

c. Army radioactive material disposal facility. A facility which receives unwanted radioactive material from accumulating organizations and which also stores, concentrates, packages, marks, labels, ships, and effects the ultimate disposal of this material.

d. Radioactive material. Any material or combination of materials that spontaneously emit ionizing radiation.

(1) *Radioisotope.* Any isotope which is radioactive.

(2) *Byproduct material.* Any material, except special nuclear material, which has become radioactive by exposure to the radiation incident to or which is yielded during the process of producing or utilizing special nuclear material. Cobalt-60 and strontium-90 are examples of byproduct material.

*This regulation supersedes AR 755-380, 10 April 1962.

(3) *Special nuclear material.* Plutonium, uranium-233, uranium enriched with the isotopes 233 or 235, and any other material which the U.S. Atomic Energy Commission determines to be special nuclear material, or any material artificially enriched with any of the aforementioned.

(4) *Source material.* Any material, except special nuclear material, which contains by weight one twentieth of one percent (0.05%) or more of uranium, or thorium, or any combination thereof.

(5) *SS material.* Collective term for both source and special nuclear material. Source and special material includes plutonium, thorium, uranium-233, uranium-235, and uranium-238. In addition, whenever deuterium, tritium, enriched lithium or compounds of these materials are employed in special weapons applications, they are considered to be source and special material and must be controlled and accounted for as such.

(*a*) *Collectible amounts of source and special material.* Tuballoy oxide oralloy, plutonium oxides or mixtures of oralloy and tuballoy oxides that can be separated from those materials with which they were picked up or collected.

(*b*) *Returnable amounts of source and special material.* Those amounts of source and special nuclear materials that are to be returned automatically to the nearest national stockpile site or operational storage site without specific authority of Commander, Field Command, Defense Atomic Support Agency (FC/DASA). The following amounts are considered minimum returnable quantities:

1. Any part made of tuballoy, oralloy, or plutonium which has not lost its identity even though it may be severely damaged.

2. Any piece of tuballoy, even though its identity as a part is no longer recognizable, which weighs 100 grams or more. This amount corresponds to a square of metal 1 inch on a side, approximately 5/16 of an inch thick.

3. Any collectible amounts of tuballoy oxide in quantities of 1000 grams (a volume of approximately 42 cubic inches or 2.75 cupfuls) or more.

4. Any piece of oralloy or plutonium metal which weighs 1.0 gram or more, even though its identity as a part is no longer recognizable. This amount corresponds to a bit of metal 1/4 inch by 1/4 inch by 1/16 inch (0.64 cm X 0.64 cm X 0.16 cm).

5. Any collectible amounts of oralloy or plutonium oxides or mixture of oralloy and tuballoy oxides, in quantities of 1 gram or more.

e. Disposal of radioactive material. The act of getting rid of unwanted radioactive material under proper authority. Disposal may be accomplished by removal from man's immediate habitat or by transfer, donation, or sale to persons authorized to receive it under AR 700-52.

f. Ultimate disposal. Ultimate disposal includes burial in the sea or land which removes the radioactive material from man's immediate habitat. It also includes incineration, release into sanitary sewerage systems, and dispersal into air or water under carefully controlled conditions. It does not include action taken to return source and special nuclear material to FC/DASA or the U.S. Atomic Energy Commission (AEC) for reprocessing.

g. Radioactive waste. Excess and surplus unwanted radioactive material and material contaminated with radioisotopes, including source and special waste as defined in *h* below, special weapons radioactive waste and radioactive waste associated with the production, possession, and use of radioactive material. Radioactive waste will include property which, while originally nonradioactive, has become contaminated to such an extent that it is economically unsound to decontaminate or the contamination cannot be reduced to an acceptable level for its intended use.

h. Source and special nuclear waste. Source and special nuclear residues which cannot be economically separated from those materials which have been contaminated.

i. Radiation controlled area. Any area, access into which is controlled for the purposes of protection of personnel from exposure to radiation or to radioactive materials.

4. **Responsibilities.** *a. Commanding General, U.S. Army Materiel Command.* The Commanding General, U.S. Army Materiel Command, is responsible for—

(1) Formulating policies, procedures, and methods for disposal of unwanted radioactive materials.

(2) Establishing Army radioactive material disposal facilities in CONUS.

(3) Conducting research and development programs to provide improved methods, techniques, and hardware for the disposal of unwanted radioactive material.

(4) Designing and developing specifications for special containers for radioactive waste, and producing such containers when a requirement is established.

(5) Providing technical assistance with regard to special radiological disposal problems.

(6) Providing technical advice for the establishment and operation of Army radioactive material disposal facilities overseas.

(7) Providing qualified technical escort personnel to accompany shipments of unwanted radioactive material when requested.

(8) Conducting an annual command inspection of the Army radioactive material disposal facilities located within CONUS.

b. The Surgeon General. The Surgeon General is responsible for providing advice, guidance, and medical assistance on the health hazards associated with and resulting from the disposal of unwanted radioactive materials. Requests for medical advice and assistance will be forwarded through command channels to The Surgeon General, ATTN: MEDPS-PE, Department of the Army, Washington, D.C. 20315.

c. Director of Transportation, ODCSLOG.

(1) The Director of Transportation, ODCSLOG, is responsible for—

(*a*) Providing staff supervision and policy guidance for transportation, movement, and related safety during transport of radioactive and fissile materials other than weapons.

(*b*) Reviewing designs, specifications, and test reports of shipping containers for unwanted radioactive and fissile materials.

(*c*) Providing the means for securing special permits from applicable Federal regulatory agencies.

(2) The above applies to the safe movement of radioactive and fissile materials other than weapons by the Army, within CONUS, and between CONUS, Alaska, Hawaii, and U.S. territories.

d. Oversea commanders. Major oversea commanders are responsible for the following:

(1) The establishment of oversea radioactive material disposal facilities as required. (*Exception:* Commander, U.S. Army Forces, Southern Command.)

(2) Operation of the radioactive material disposal facility in strict accordance with policies, procedures, and methods established by the Commanding General, U.S. Army Materiel Command, and published in pertinent DA directives, including technical manuals. (*Exception:* Commander, U.S. Army Forces, Southern Command.)

(3) The establishment of qualified escort of unwanted radioactive material shipments within the oversea theater as may be required.

(4) Safe transportation of unwanted radioactive materials. In oversea areas, Army commanders will be guided by this regulation and AR 55-55, except where sovereign states have requirements which differ from those contained in this regulation. In such cases, Army commanders will observe the more restrictive requirements of either regulation.

(5) Preparation of administrative procedures consistent with this regulation.

(6) Conducting an annual command inspection of the Army radioactive material disposal facilities located within their respective commands.

e. Local commanders. Commanders of organizations, units, and activities which generate and/or accumulate disposable radioactive waste and materials will—

(1) Insure that, in the case of property which is contaminated with radioactive

material, all possible efforts are made to decontaminate the items before taking disposal action. In the event it is economically unsound to decontaminate the property or if the contamination cannot be reduced to a safe level, the contaminated property will be treated as radioactive waste. Decontamination procedures and techniques are contained in TM 3-220.

(2) Provide for the local storage, the preparation for shipment, and subsequent shipment of radioactive material to the appropriate radioactive material disposal facility.

(3) Maintain an SOP to cover these activities at all times. Additional guidance is furnished in TM 3-261.

f. The Inspector General. The Inspector General, Headquarters, Department of the Army will be responsible for conducting inspections of all radioactive material disposal facilities. The Inspector General will assume this responsibility on 1 July 1967.

5. Implementation. Commanding Generals of U.S. Army Materiel Command; U.S. Continental Army Command; U.S. Army Combat Developments Command; U.S. Army Air Defense Command; U.S. Army Security Agency; U.S. Army Strategic Communications Command; U.S. Army Intelligence Command; U.S. Army Forces, Strike Command, the major oversea commands, the heads of Department of the Army staff agencies, the Commander, Military Traffic Management and Terminal Service, and Superintendent, U.S. Army Military Academy will issue instructions implementing this regulation. As a minimum, the implementing instructions will designate channels for requests for radioactive materials disposal assistance.

6. Security. *a.* The security plan for disposal of unwanted radioactive material will be prepared by the command, activity, or project manager responsible for the material. The security plan for disposal will be incorporated into the technical literature for the item. The plan will provide the continuity of security protection for the radioactive material which is commensurate with the level of security classification involved, and will provide procedures for declassification.

b. Activities preparing to ship classified radioactive material will alert the consignee, in advance of shipment, of the security classification involved and the procedures for declassification after receipt.

c. Areas in CONUS in which unwanted radioactive material is stored, either temporarily pending shipment, in a consolidation storage area, or in an ultimate land disposal area, will be designated, posted, and protected as Restricted Areas, in accordance with AR 380-20. Physical safeguards which are appropriate to the degree of hazard or security classification involved will be employed, as described in AR 380-20. Commanders outside CONUS will use the provisions of AR 380-20 as guidance in the establishment of area protection and physical safeguards for radioactive material in storage.

7. Budgeting and funding. *a.* The disposal of unwanted radioactive material will be budgeted and reported under account 2290.2, in accordance with AR 37-1. Functions include handling, processing, packaging, escort service, transportation of unwanted radioactive material for shipment to radioactive disposal facilities. All costs for the above functions will be financed by the shipping installation or activity. Costs for ultimate disposal will be borne by the command operating the radioactive material disposal facility.

b. Oversea commanders are responsible for budgeting and funding for all costs incurred in processing, shipment, and ultimate disposal overseas or return to CONUS Army radioactive material disposal facilities, including technical escort but excluding ocean transportation costs which are initially financed by the Military Sea Transportation Service and which will be budgeted and funded by the ODCSLOG, Director of Transportation.

8. Support of equipment. Each commander responsible for the procurement and issue of items of equipment which contain radioactive materials will insure that the specifications and technical literature for the item contain information as to the quantity and type of radioactive material contained and procedures for safe handling, storing, and disposal of these items.

9. Special problems. Special radioactive material disposal problems requiring logistical assistance will be directed to the Commanding General, U.S. Army Materiel Command, ATTN: AMCMA-DA, Washington, D.C. 20315. Radioactive material disposal problems involving licensing regulations, decontamination, and/or radiological safety will be routed to Commanding General, U.S. Army Materiel Command, ATTN: AMCAD-S.

Section II. ACTION BY ORGANIZATIONS HAVING UNWANTED RADIOACTIVE MATERIAL

10. Holding action. Activities generating or accumulating radioactive material, including waste, will place such material in a secure local storage area pending shipment to a radioactive material disposal facility. It is more economical to process large quantities of radioactive material for ultimate disposal than to process small quantities. Therefore, installations which have radiological protection officers (AR 40-14) and which are able to store and safely consolidate radioactive material intended for ultimate disposal are encouraged to consolidate their waste before requesting shipping instructions. Additional guidance is furnished in TM 3-261.

11. Local storage. *a.* A radiation controlled area will be established to store accumulated radioactive material on a temporary basis. This area will be posted according to AR 385-30 to restrict entry and adequate security must be provided to prevent unauthorized access into and/or removal of the radioactive material. Until such time as the material is received by the radioactive material disposal facility, radiation safety associated with the material will be the responsibility of the Army element which was authorized to use the material under an AEC license or Department of the Army radioactive material authorization issued in accordance with AR 700-52.

b. Where practicable, material will be segregated as follows:

(1) Combustible.
  (*a*) Liquid.
  (*b*) Solid.
  (*c*) Gases.
(2) Noncombustible.
  (*a*) Liquid.
  (*b*) Solid.
  (*c*) Gases.

c. Materials will be stored in covered containers. Each container having radioactive materials stored therein will display a DA Label 15 (Caution: Radioactive Materials) and, if applicable, a radioactive waste container log. The following information, if unclassified, will be shown on DA Label 15 or on the log:

(1) Radiation symbol and words "Caution—Radioactive Material."
(2) Nomenclature, Federal stock number, and, where applicable, serial number.
(3) Physical description.
  (*a*) Solid, liquid, or gas.
  (*b*) Quantity (number, weight, volume, and, if gaseous, pressure at standard conditions).
(4) Chemical description.
  (*a*) Hazardous chemicals present.
  (*b*) For liquids, solvent present.
(5) Radiological description.
  (*a*) Radioisotopes.
  (*b*) Millicuries of activity per radioisotope and date measured or determined.
  (*c*) Maximum dose rates (mrad/hr) at the surface and at 1 meter from the surface of the storage container.

~~*d.* The local fire department will be kept currently advised as to location and types of stored radioactive material and procedures for fighting fires adjacent to or involving radioactive material.~~

12. Serviceable or economically repairable items. Accountable radioactive property (source sets, etc.) which is serviceable or economically repairable will be reported to the appropriate national inventory control point (NICP) for disposition instructions unless otherwise instructed in the technical literature pertaining to the item. The national inventory control point should take one of the following actions:

a. Direct that the property be transferred for further utilization to another Army installation or agency which is authorized to receive such material.

b. Request authority through command channels from the Deputy Chief of Staff for Logistics, PEMA Execution Division, to transfer this property to authorized agency outside the control of the Army. (After a policy has been established for a particular type of equipment, further coordination is unnecessary for transfers of items covered by such policy.) Upon receipt of Department of the Army approval, the transfer of the material can be accomplished.

c. Direct the possessor of the property to decontaminate it or to process it for ultimate disposal as radioactive waste in accordance with paragraph 15. Guidance on decontamination is contained in TM 3-220.

13. Waste from special weapons. Radioactive waste such as paper, clothing, and dust contaminated with source and special material will be

packaged and labeled in accordance with TM 39-20-6.

14. Returnable amounts of source and special nuclear material. Returnable amounts of source and special nuclear material from special weapons will be packaged, labeled and shipped in accordance with instructions in TM 39-N-11.

15. Disposition instructions for radioactive materials intended for ultimate disposal. *a.* Requests for disposition instructions should be submitted as follows:

(1) *CONUS, U.S. Army Forces, Southern Command and Greenland.* Installations and activities located in CONUS, U.S. Army Forces, Southern Command, and Greenland will forward disposal requests to Commanding Officer, U.S. Army Edgewood Arsenal, ATTN: SMUEA-ISDO, Edgewood Arsenal, Md., 21010.

(2) *Oversea commands.* Army installations and activities located outside CONUS, other than Greenland and the U.S. Army Forces, Southern Command, will forward disposal requests in accordance with instructions of the theater commander.

b. Requests for disposal will contain the following information:

(1) Nomenclature and Federal stock number and, where applicable, serial numbers.

(2) Physical description of items to include—

(*a*) Solid, liquid, or gases.

(*b*) Quantity (number, weight, and volume and, if gaseous, the standard pressure).

(*c*) Number of individual items per package and type of package.

(*d*) Number of shipping containers.

(*e*) Exterior dimensions and weight of packaged shipping container.

(*f*) Shielding material and thickness, if applicable.

(*g*) ICC, USCG, or CAB permit or waiver number, if applicable.

(3) Chemical and radioisotopic description, to include—

(*a*) Hazardous chemicals present.

(*b*) For liquids, the solvent present.

(*c*) Radioisotopes present.

(4) Radioactivity and radiation measurements, to include—

(*a*) Millicuries of activity of each radioisotope.

(*b*) Maximum radiation dose rates (mrad/hr) at the surface and at 1 meter from the surface of the radioactive items, if practical. If dose rate at 1 meter is undetectable, report dose rate at 1 foot from surface. For alpha sources, report counts per minute at surface.

(*c*) Maximum radiation dose rates (mrad/hr) at the surface and (mrad/hr) at 1 meter from the surface of the package.

(*d*) Security consideration.

1. Classification.

2. Procedures for declassification.

c. Emergency requests will be made by the most expeditious means available.

16. Replies to disposal requests. Replies to ultimate disposal requests will furnish the following minimum information:

a. Any packaging, labeling, shipping, and special transportation information beyond that established by AR 55-55 and AR 55-355.

b. Adequate radiation safety requirements to be observed.

c. Preferred date and time for receiving shipment.

d. Special instructions to be observed during transit and at transfer points.

17. Shipment of unwanted radioactive material. *a.* Containers for radioactive material will be substantial enough to endure the shocks of transportation without allowing escape of radioactive material. Containers should comply with ICC container specifications.

b. Unwanted radioactive materials for disposal, when moved locally within an installation, may be moved by unit transportation under the supervision of a technically qualified officer, enlisted person, or Department of the Army civilian of the installation.

c. The post transportation officer will arrange for shipments of all unwanted radioactive material to be transported beyond the limits of an installation. Certification of the contents as to hazards, special requirements, safety precautions, will be made to the post transportation officer in accordance with AR 55-55. The post transportation officer will insure compliance with AR 55-55, AR 55-162, and AR 55-355 and will take such other actions as are necessary under existing regulations to insure safe and secure transport from origin to destination.

d. Use of U.S. mails including parcel post is prohibited for forwarding unwanted radioactive material.

18. Special shipping instructions for CONUS, Alaska, and Hawaii. *a.* Transportation of radioactive material and waste materials can be accomplished by either military or common carrier, whichever is more advantageous to the Government, and in strict accordance with applicable regulations. If, in the best interests of the Government, a waiver or permit is required for a given shipment, application for waiver or permit will be made to the Deputy Chief of Staff for Logistics, ATTN: Director of Transportation, for approval prior to submission in accordance with paragraph 203019 or 216035, AR 55-355.

b. When radioactive material is shipped by common carrier, marking and labeling will conform to AR 380-20, 55-55, and 55-355. In addition, the following supplementary information, if unclassified, will also be marked on each package:

(1) Radiation symbol and "CAUTION RADIOACTIVE MATERIAL."
(2) Consignee.
(3) Maximum dose rate in mrad/hr at surface of package.
(4) Maximum dose rate in mrad/hr at 1 meter from package.
(5) Radioisotopes present.
(6) Amount of radioactivity, i.e., number of curies, millicuries, or microcuries contained in the package.
(7) Words "No removable surface contamination".

c. Shipments to or passing through Canada will also conform to Canadian requirements.

19. Special shipping instructions for oversea areas other than Alaska and Hawaii. *a.* In oversea theaters, local national or international regulations in force within the country of origin and countries through which the unwanted radioactive materials are moved will apply.

b. Shipments of radioactive material destined for CONUS, Alaska, and Hawaii will be labeled and marked as required in paragraph 18.

c. Shipments not destined for CONUS, Alaska, and Hawaii will be marked in accordance with the requirements of the regulations of those areas to which and through which the shipments are to be made. In addition, information indicated in paragraph 18*b* if unclassified, will be marked on each package containing radioactive material.

20. Escort of shipments of unwanted radioactive material. *a.* In special situations, material will be escorted from the point of shipment into the radioactive material disposal facility. This is done in the following cases when—

(1) The material cannot be packaged and shipped without waiver of an ICC, CAB, or USCG requirement. Requests for waivers for such shipments, will list Deputy Chief of Staff for Logistics, ATTN: Director of Transportation, Department of the Army, as an intermediate address.
(2) Security considerations require an escort.
(3) The commanding officer of the shipping agency considers an escort is in the best interests of the Government based on an evaluation of inherent factors of public relations, economics, and degree of hazard involved.

b. Where escort of shipment of unwanted radioactive material is required, escort will be arranged for in accordance with section VI, AR 55-16 and AR 55-55. If qualified personnel are not available, escort assistance can be obtained from Commanding Officer, U.S. Army Technical Escort Unit, Edgewood Arsenal, Md., 21010.

Section III. ULTIMATE DISPOSAL

21. Disposal by radioactive material disposal facilities. *a.* Local disposal of AEC licensed radioactive materials will be in accordance with Sections 20.106, 20.301a and b and 20.303 of 10 CFR, Part 20; with regulations of local civil regulatory bodies; and where applicable, with international agreement. In oversea areas, the more restrictive regulations, domestic or foreign, will be followed.

Note. Copies of 10 CFR 20 are available from the U.S. Atomic Energy Commission, Director of Materials Licensing, Washington, D.C. 20545.

b. The type of ultimate disposal operations conducted by each of the radioactive material disposal facilities located in CONUS or overseas will be coordinated with the Commanding General, U.S. Army Materiel Command. The operations of the radioactive material disposal facilities will be in accordance with TM 3-260. The Commanding General, U.S. Army Materiel Command, will conduct such liaison visits as are necessary to Army radioactive material disposal facilities to enable him to carry out his responsibilities, as outlined in

04314-7

paragraph 4. In addition, he will provide for necessary technical assistance visits at the request of oversea commands.

22. **Disposal authorized locally.** *a.* Normally, ultimate disposal is limited to radioactive material disposal facilities (TM 3-260). However, units other than authorized radioactive material disposal facilities may dispose of radioactive materials as follows:

(1) Dispose of specific types and quantities of radioactive material in accordance with disposition instructions obtained in accordance with paragraphs 15 and 16.

(2) Dispose of effluents (liquids and gases) into unrestricted areas in accordance with Title 10, Code of Federal Regulations, Section 20.106, provided local governments do not prohibit such disposal. Compliance with concentrations established in Appendix B of Title 10, Code of Federal Regulations, Part 20 will be determined by averaging concentrations on a monthly basis instead of on a yearly basis.

(3) Dispose of liquids into the sanitary sewage system in accordance with Title 10, Code of Federal Regulations, Section 20.303, provided local governments do not prohibit such disposal.

b. Incineration of Atomic Energy Commission (AEC) licensed radioactive material is not authorized except by units possessing a valid AEC license which authorizes incineration of such materials.

c. Incineration of radioactive materials other than AEC licensed material and land burial of radioactive materials on Army installations is not authorized without approval of Commanding General, U.S. Army Materiel Command. Request for such approval will be forwarded through channels to Commanding General, U.S. Army Materiel Command, ATTN: AMCAD-S, Washington, D.C. 20315 and will contain all the information required by paragraph 7*n*, AR 40-37.

d. Conventional disposal of solid material is authorized for waste material which has been controlled through the period of radioactive decay to a normal background level of activity, i.e., less than 0.002 microcuries per gram. This procedure is recommended for facilities with adequate local storage and for materials containing short, half-life radioisotopes to decay to background level within less than 12 months. This procedure is used by some hospitals and laboratories where short, half-life radioisotopes are used in tracer techniques and the resulting waste contains low level activity in such items as excreta, laboratory animals, infectious waste, absorbent tissue, and sputum.

e. Disposal operations outside the United States, its territories and possessions, will also be subject to the radiological safety requirements of the host nation. In the event of a conflict in regulations, the more severe regulation will govern.

f. Waivers to the above requirements will be granted only for unusual circumstances. Requests for such waivers will be addressed to the Commanding General, U.S. Army Materiel Command, ATTN: AMCAD-S, Washington, D.C. 20315.

23. **Transfer, sale, or donation.** Transfer, sale, or donation of radioactive materiel to other than authorized Army recipients requires prior approval of the Deputy Chief of Staff for Logistics (see AR 700-52).

[AMCAD]

By Order of the Secretary of the Army:

HAROLD K. JOHNSON,
General, United States Army,
Chief of Staff.

Official:
KENNETH G. WICKHAM,
Major General, United States Army,
The Adjutant General.

Distribution:
To be distributed in accordance with DA Form 12-9 requirements for Logistics Responsibilities, Functions & Procedures, General:
Active Army: A. *NG:* B. *USAR:* A.

TAGO 708A

U.S. GOVERNMENT PRINTING OFFICE: 1966 250-468