# U.S. EPR Pre-Application Review Meeting: Unique Design Features, Containment Building Tendons and Containment Analysis

## AREVA NP Inc. and the NRC
## October 25, 2006

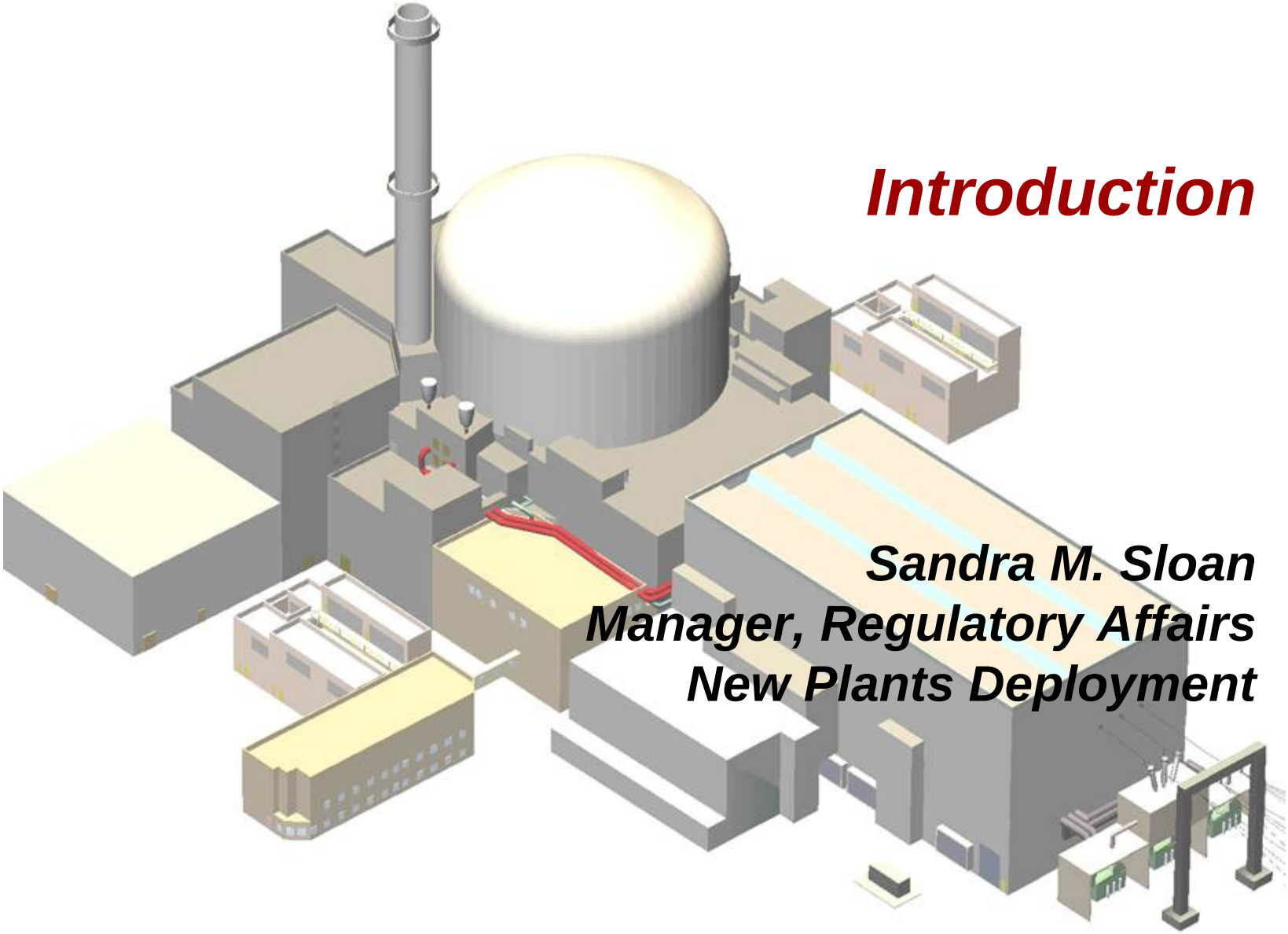

# Introduction


***Sandra M. Sloan***
***Manager, Regulatory Affairs***
***New Plants Deployment***

# Meeting Objectives

- Provide an overview of U.S. EPR unique design features (preview of report to be submitted in December 2006)
- Provide an overview of the design of U.S. EPR containment tendons
- As a follow-up from the July, 2005 meeting on containment analysis, provide additional details on containment analysis post-accident temperature and pressure response
- Obtain early NRC feedback associated with U.S. EPR unique design features, containment tendons and containment analysis

# Outline

> Technical Discussions (9 a.m. – Noon)

- Unique Design Features (Marty Parece, Sherri Fleck, Mark Royal)
  - Four Trains of Safety Systems
  - Incore Neutron Measuring System
  - Heavy Neutron Reflector
  - CRDM Housing
  - Pressurizer Pressure Control
  - Main Steam Relief Train
  - Medium Head Safety Injection

> Technical Discussions (1 p.m. – 3 p.m.)

- Containment Building Tendons (Todd Oswald)
  - Basis
  - Design Experience
- Containment Analysis (Marty Parece)
  - Containment Features
  - Cooling Mechanisms
  - Analyses

> Summary and Next Steps (Sandra Sloan)

# U.S. EPR Unique Design Features

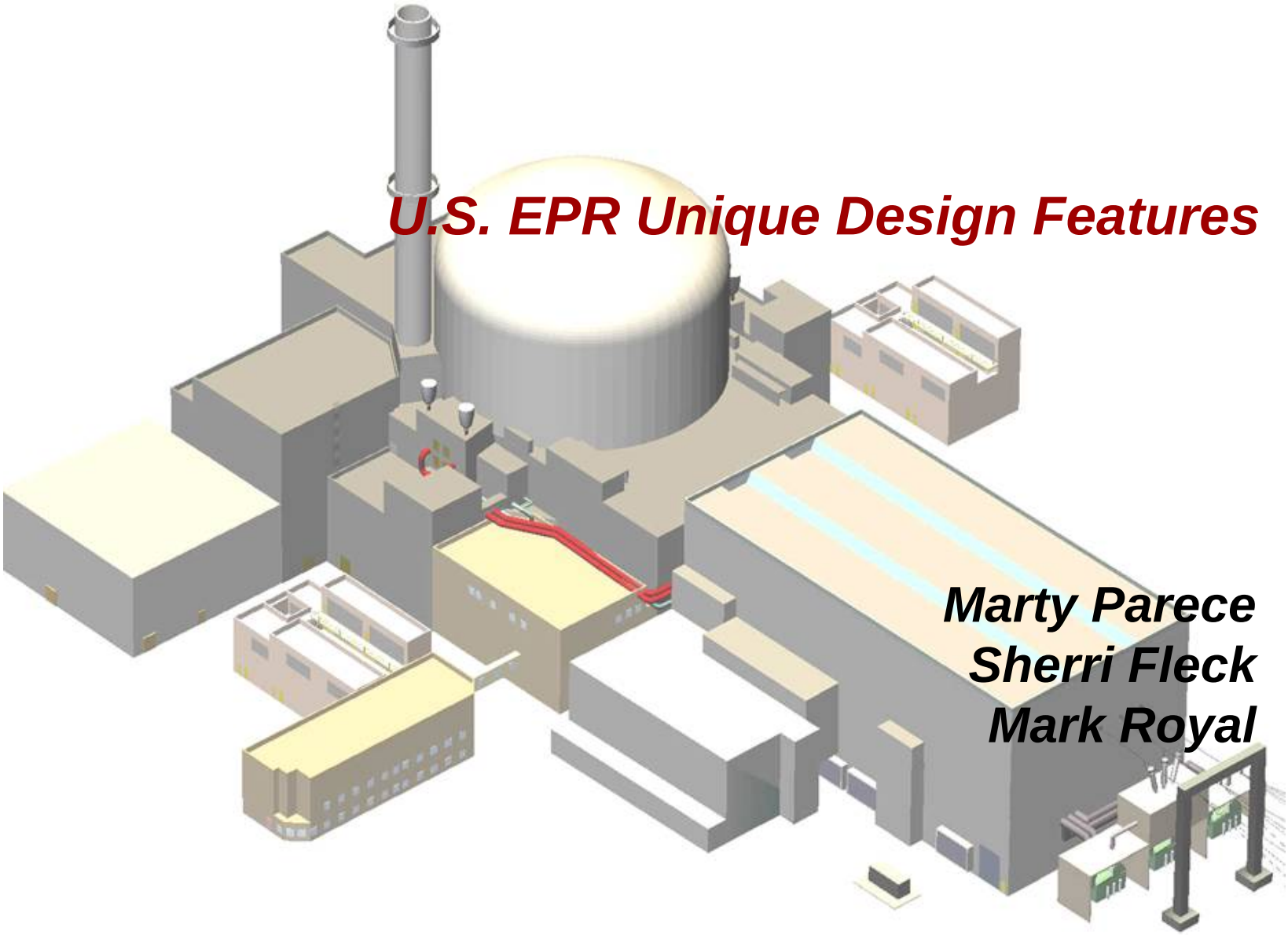


***Marty Parece***
***Sherri Fleck***
***Mark Royal***

# *List of Features*

- > Four Trains of Safety Systems
- > Incore Neutron Measuring System
- > Control Rod Drive Mechanism (CRDM) Housing
- > Heavy Neutron Reflector
- > Pressurizer Pressure Control
- > Main Steam Relief Train
- > SGTR & SBLOCA Mitigation

# *Four Trains of Safety Systems*

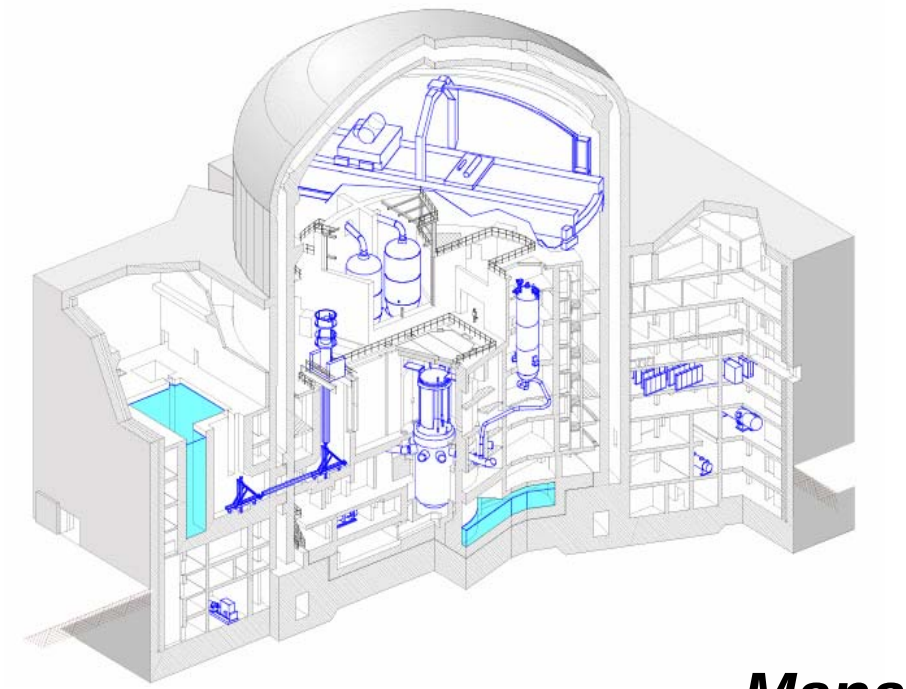

***Marty Parece***
***Manager, Technical Integration***
***New Plants Deployment***

# *Four Trains Safety Concept*

> **The four trains of safety systems are consistent with an "N+2" safety concept:**
  - **1 train may be out of service for maintenance**
  - **1 train may fail to operate**
  - **1 train may be out of service as a result of the accident**

***Leaves one 100% capacity system available to mitigate the accident***

# *Spatial Separation of Trains*

- Each safety train is housed in a separate Safeguard Building
- Safeguard Buildings 1&4 are geographically separated on both sides of the Reactor Building
- Safeguard Buildings 2&3 are housed together within a hardened enclosure
- The physical separation of the Safeguard Buildings allows the U.S. EPR to withstand an aircraft hazard and Explosive Pressure Wave (EPW)
- Housing each safety train within separate buildings protects the other safety trains from internal hazards such as
  - Fire
  - High-energy line break
  - Flooding

# General U.S. EPR Layout

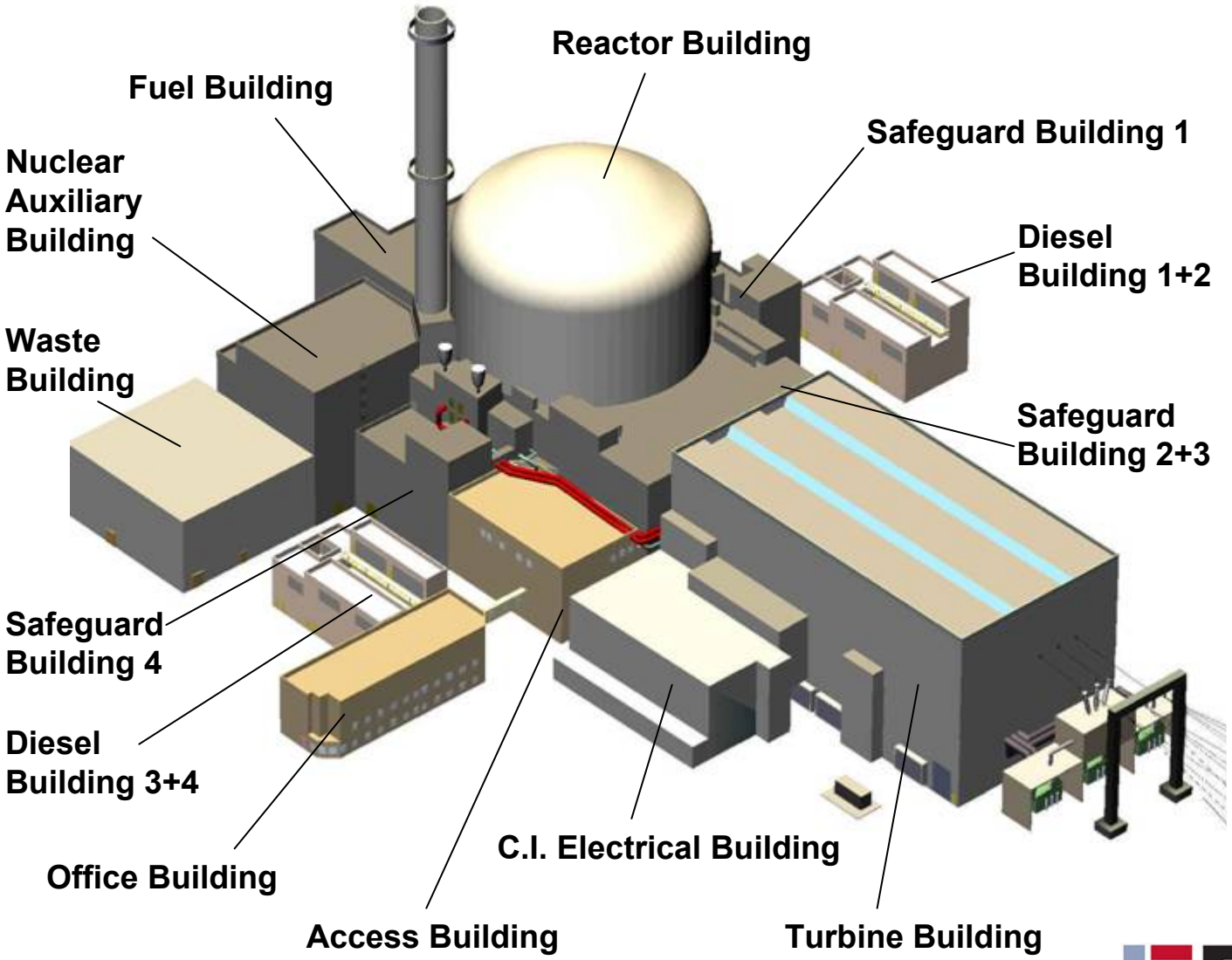

# Safeguard Building Contents

> Each Safeguard Building houses one train of each of the following:

- Safety Injection System (SIS) which includes
  - Medium Head Safety Injection (MHSI)
  - Low Pressure Safety Injection/Residual Heat Removal System (LHSI/RHR)
- Component Cooling Water System (CCWS)
- Essential Service Water System (ESWS)
- Emergency Feedwater System (EFWS)
- All electrical and I&C equipment for the safety train is located within the Safeguard Building
- Dedicated HVAC equipment

# Installation in the Safeguard Buildings

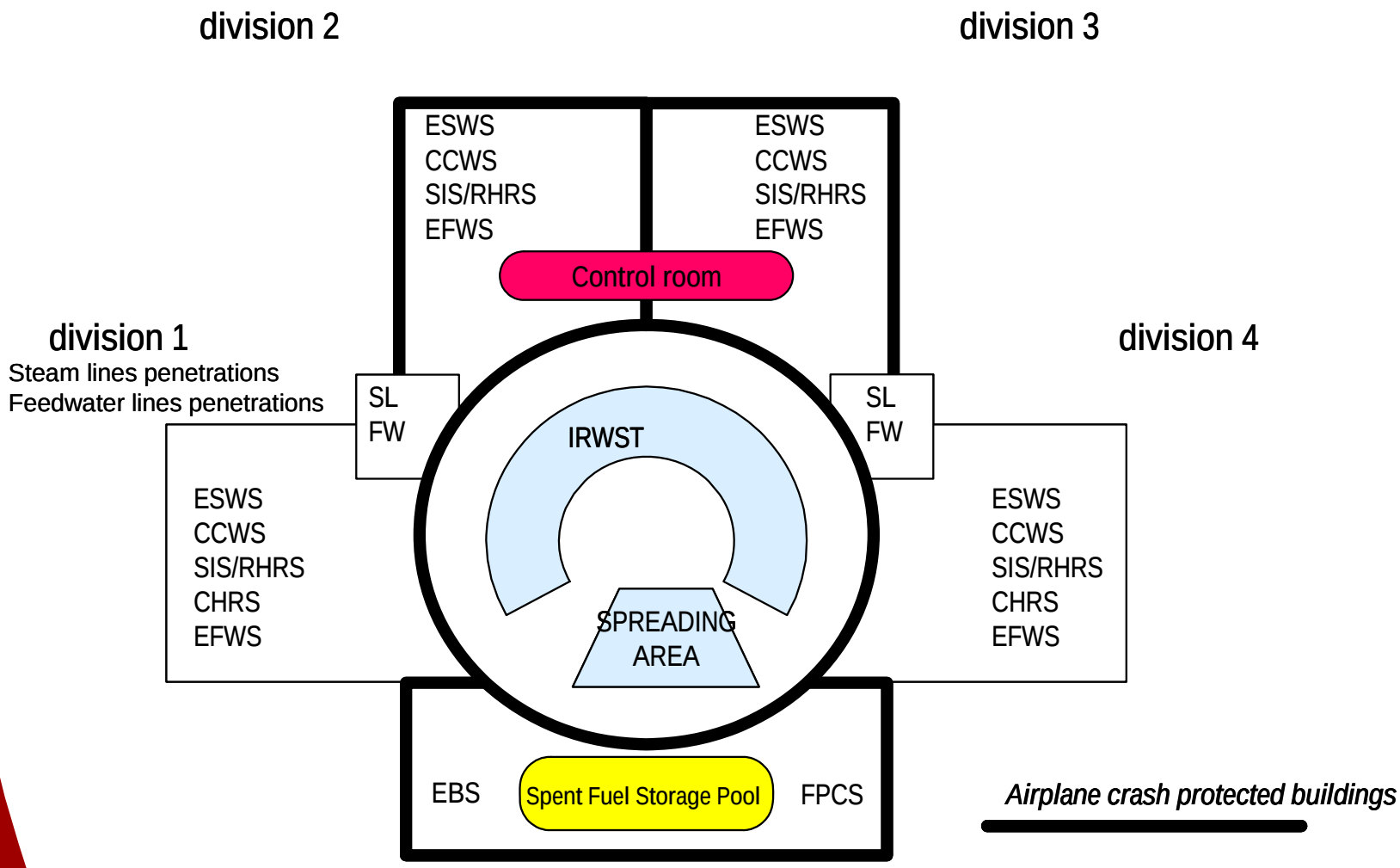

# Emergency Feedwater System Design

- Four identical and independent trains:
  - Water storage pool
  - Pump
  - Control and isolation valves
  - Piping
  - Instrumentation
- Capable of performing its safety functions assuming:
  - Single failure of one EFW train
  - Second train out for preventive maintenance
- One EFWS train is located in each Safeguard Building, providing separation and/or physical protection from external and internal hazards.
- A supply header allows the operator to align any storage pool to any EFW pump. A discharge header allows alignment of any EFW pump to any SG.
- Each EFWS train powered from separate emergency bus, backed by an emergency diesel generator. Two trains also backed-up by SBO diesels.

# Four Safety Trains Electrical Power

- Each train is supplied with electrical power from a dedicated bus of the Emergency Power Supply System (EPSS).
- The EPSS is fed by off-site power during normal operation or during transient and accident conditions <u>without</u> a loss of offsite power (LOOP).
- Upon LOOP, each bus is supplied by a dedicated Emergency Diesel Generator (EDG).
- Each EDG can power all loads for safe shutdown following a design basis accident (DBA) with LOOP or a severe accident.
- In the case of Station Blackout (SBO), the U.S. EPR has four Uninterruptible Power Supply (UPS) channels
- Fully charged, each channel can power all loads to mitigate DBAs (LOCA) and beyond DBAs (SBO) for two hours
- Two SBO diesel generators, each sized to power all loads in safety train 1 or 4, necessary to reach hot standby in the event of a SBO or a severe accident. These trains are also supplied by supplemental batteries rated up to 12 hours.

# Summary of Four-Train Safety Systems

- Four 100% capacity trains (N+2) allows
  - Accommodation of single-failure
  - On-line preventative maintenance
- Each division in a separate Safeguards Building providing physical & functional separation between divisions
  - Mechanical
  - Electrical, I&C
  - HVAC
- Robust electrical design
  - Each division powered from its own safety-related bus
  - Each safety-related bus backed up by an EDG
  - In case of total loss of 4 EDGs, 2 station blackout (SBO) diesel generators power two divisions
  - Two-hour batteries on each division power necessary loads to mitigate design basis events
  - Twelve-hour batteries available to power loads during severe accident mitigation

# *Incore Monitoring and POWERTRAX/S Basic Overview*

***Mark Royal***
***I&C Systems Engineer***

# Outline

## Incore Monitoring

- Overview of Core Monitoring Concept
- Self Powered Neutron Detectors
  - Functional characteristics
  - Advantages
  - Calibration
- Aeroball System
  - Functional characteristics
  - Measurement process
  - Operating history

## Powertrax/S

- Overview
- Benefits
- User Interface and Menus

# *Incore Instrumentation Concept*

> **The core instrumentation concept applied to the U.S. EPR combines two complementary systems**

- **Fixed incore detectors**
  - **Power Density Detector System (PDDS)**
  - **Self Powered Neutron Detectors (SPND's)**
- **Aeroball Measuring System (AMS): fast flux mapping system**

> **The two systems (mounted from the top) are functionally linked by calibration**

> **Operating experience in all Siemens plants since 1974**

# Nuclear Instrumentation

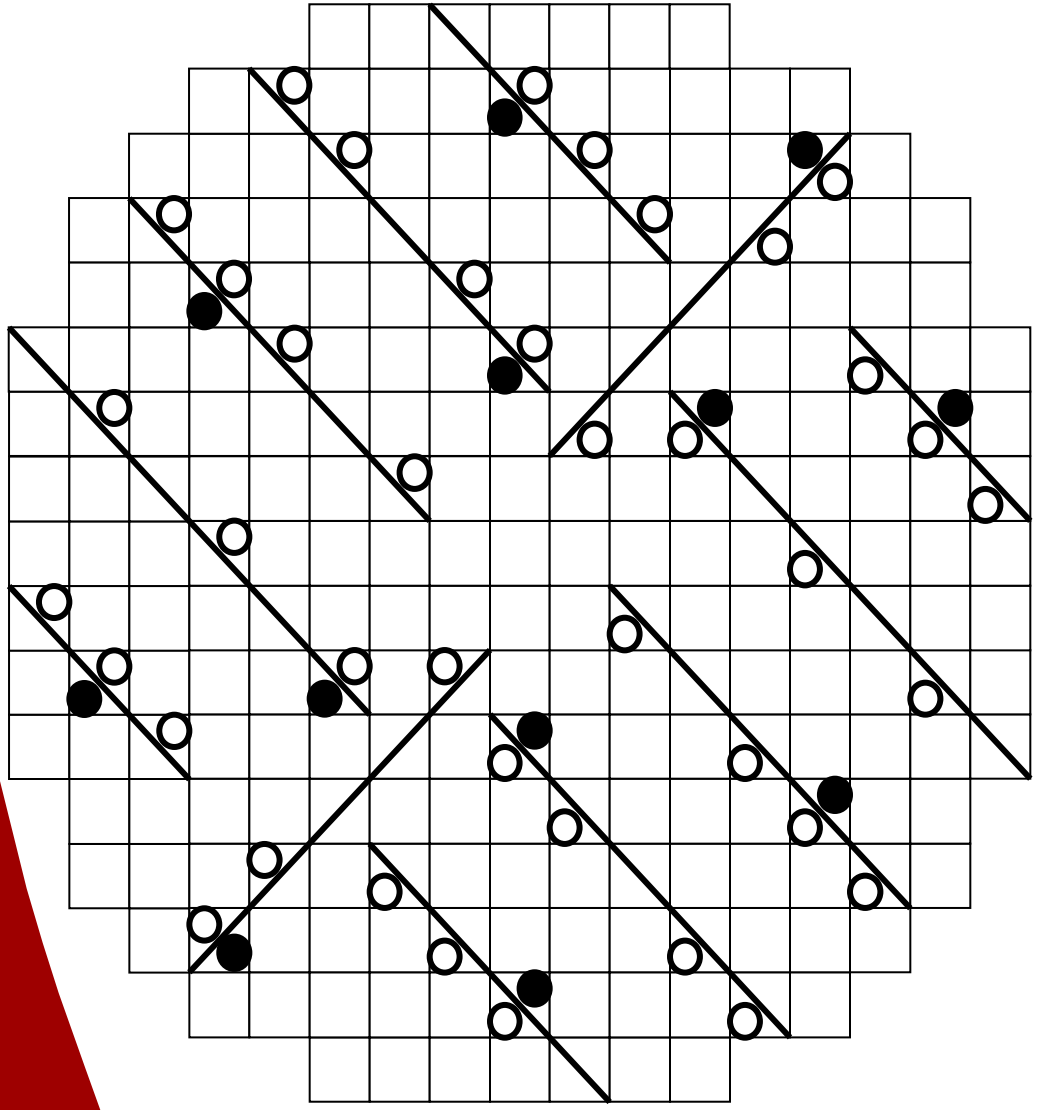

241 ASSEMBLIES

12 SPND FINGERS

40 AEROBALL PROBES

RCCA

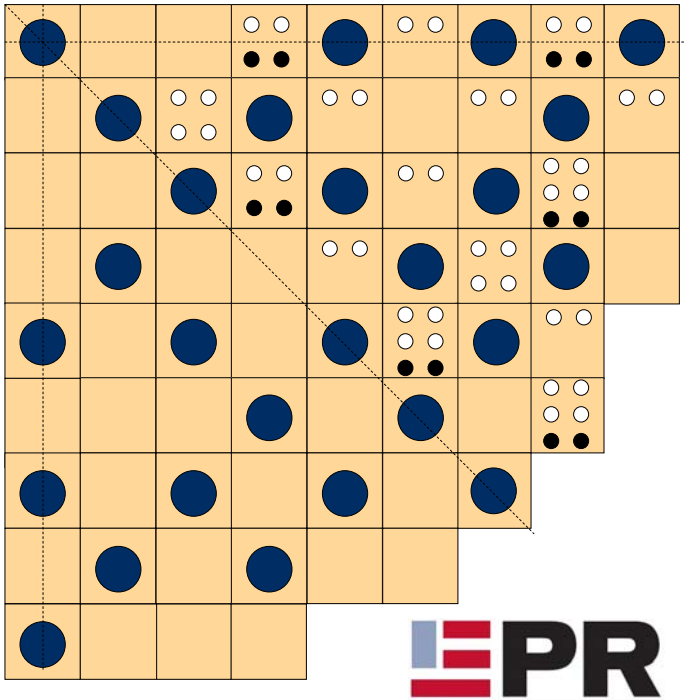

# Instrumentation Nozzle

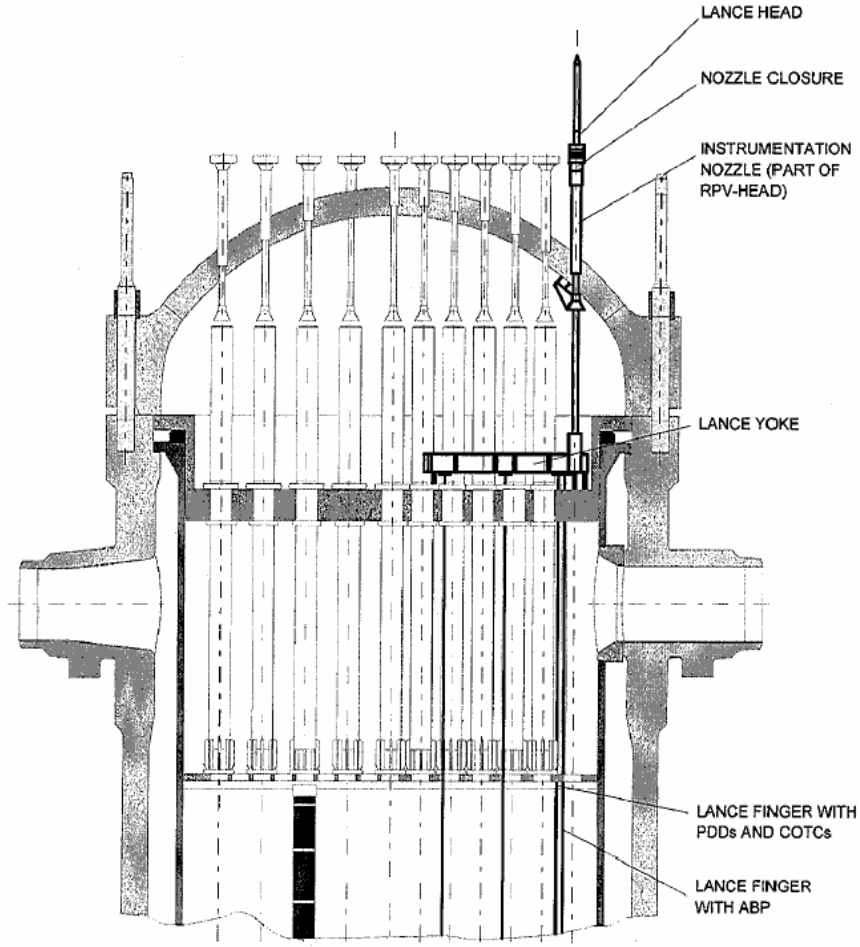


LANCE, INSTRUMENTATION NOZZLE AND COOLANT NOZZLE ARRANGEMENT DRAWN ROTATED
SOME CONTROL ROD GUIDE ASSEMBLIES AND NOZZLES NOT DRAWN

ABP AEROBALL PROBE
PDD POWER DENSITY DETECTOR
COTC CORE OUTLET THERMOCOUPLE

# *Incore Self-Powered Neutron Detectors*

> **SPNDs are located within the core to provide:**
  - **Direct measurement of changes in power density**
  - **Increased accuracy of localized power measurements under normal operation and non-steady-state conditions**
  - **Increased core surveillance/limitation and protection information**
  - **Superior measurement of core conditions for peak power density, DNBR and Axial Offset**

***High reliability and accuracy of variable monitoring proven by many years of reactor operation***

# Function of SPNDs

- Continuous monitoring of power density distribution
- Assessment of deviations from reference conditions
- Signals provided for:
  - Core surveillance
  - Axial power shape control
  - Generation of monitoring signals representative of core conditions, e.g. peak power density, DNBR and Axial Offset
- Ensuring compliance with the LCOs by means of the surveillance/limitation system (alarms + countermeasures)
- Local core protection, termination of fast transient perturbations
- Detection of spurious RCCA dropping

# *Functional Characteristics of SPNDs*

- Emitter material is Co-59
- Essential prompt response; delayed signal is comparatively small
- Low gamma sensitivity (compared with the neutron sensitivity)
- Spatial resolution: 12 instrumentation fingers, each includes 6 detectors:
  - 4 in the central region
  - 8 at the periphery
- SPND strings can be exchanged during refueling outage

# Axial Locations Of SPNDs

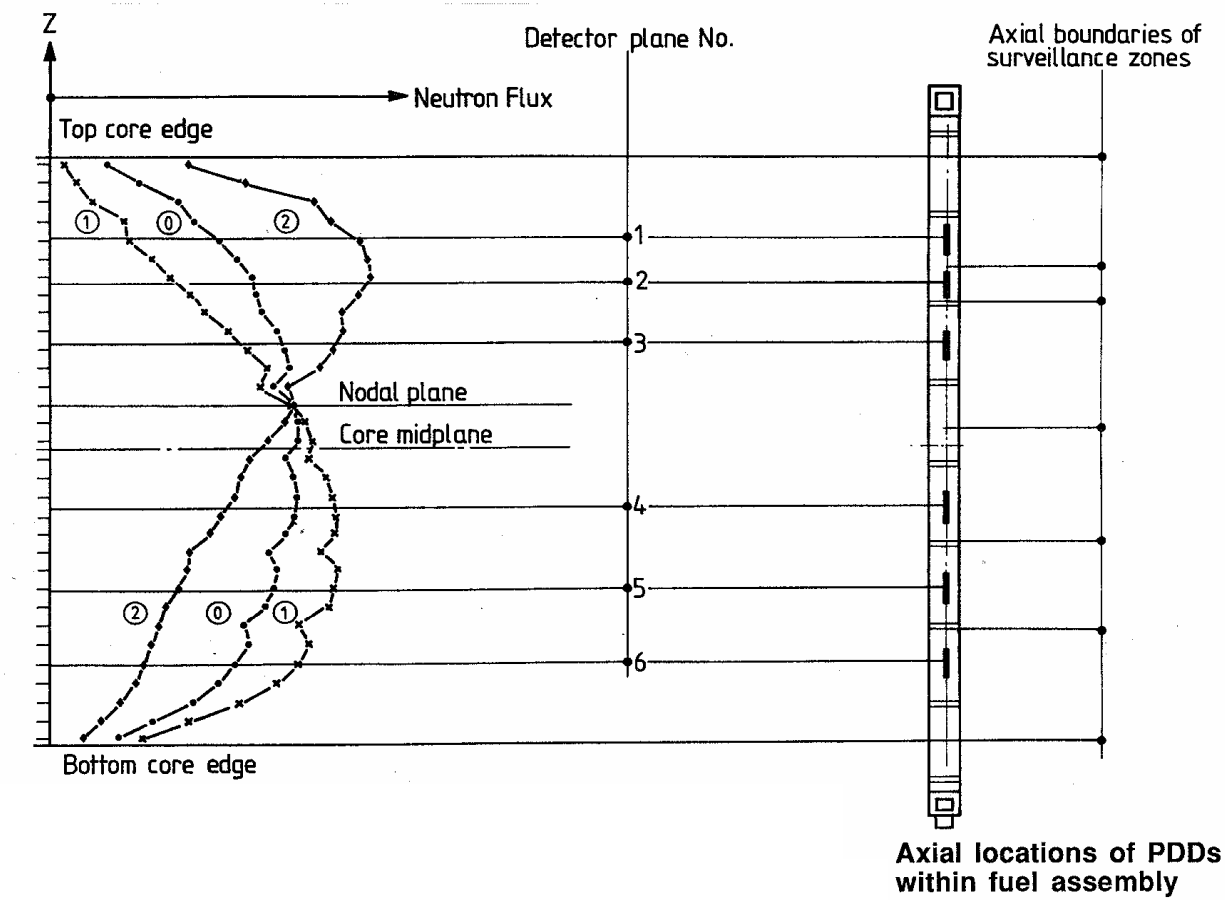

# *Advantages of Surveillance with SPNDs*

- Changes in power density are directly measured, a synthesis between axial and radial information is not necessary
- RCCA drops or movements are identified rapidly
- Extrapolation length to potential hot spots and hot channels is small
- Monitoring signals can be generated without the use of parameters calculated at each reload
- Monitoring signals are directly compared with the corresponding limits
- The margins are displayed to operator
- On violation of the limits alarms are actuated and automatic countermeasures initiated to restore operating conditions
- Power density perturbations are assessed with the SPNDs and are kept within permissible limits by the surveillance/limitation system

# Calibration Principle

- ***The power-to signal ratio of any neutron detector <u>and</u> the reference power distribution changes with core burnup***
- ***SPND signals are matched to reference conditions at regular intervals (~ every 15 EFPD)***
- ***Calibration of SPNDs to the Aeroball Measurement System transfers the accuracy of the AMS to the SPNDs***
  - ***Detectors are assigned to core volumes called surveillance zones***
  - ***Setpoints for the calibration are reference values provided by the AMS***
  - ***Calibration factors are determined in conjunction with each Aeroball measurement***

# SPND Signal Amplification v.s. Burnup

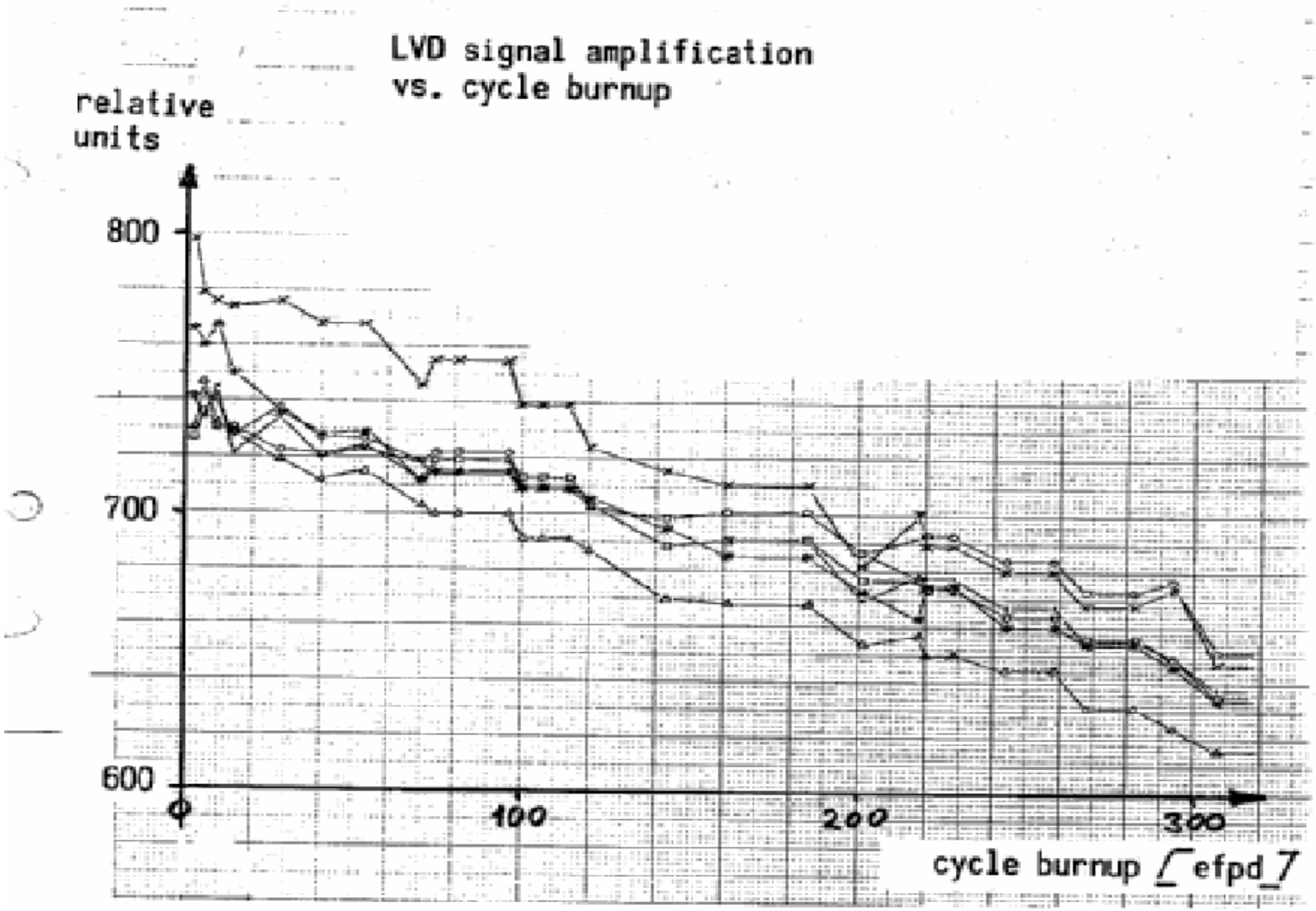

# SPND's, AMS and POWERTRAX/S Interface

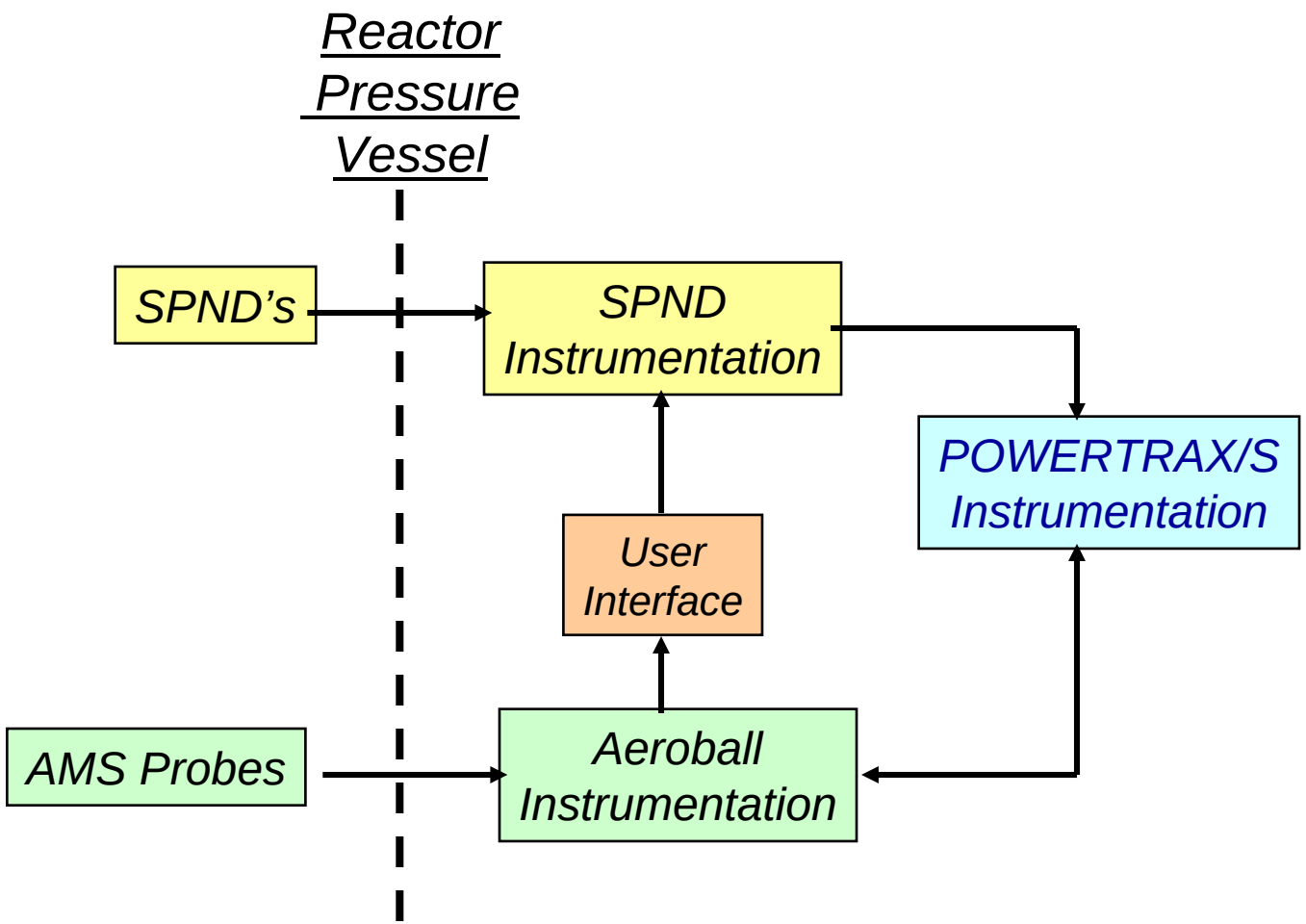

# *Functional Characteristics of Aeroball System*

- Flux mapping system based on movable activation probes, operates on demand
- Provide calibration signals for SPNDs
- Probes consist of stacks of steel balls (1.7 mm diameter)
- Balls are made of steel alloy with 1.5 % Vanadium
- Ball transport by carrier gas pressure
- Fast flux mapping, 3 min irradiation, simultaneously for all instrumented positions
  - Snapshot of the neutron field
  - High accuracy, even in semi-transient conditions (Xe-redistribution)
  - $\gamma$ radiation emitted by the balls read by detector arrays outside of the biological shield
- Vanadium activation is measured for calibration
- Spatial resolution: 1440 nodes, 40 radial probes, 36 axial nodes each

# *Functional Characteristics of Aeroball System (continued)*

- Shortest time interval between two measurements: 10 minutes
- Negligible depletion of detector nuclide
- Measuring range: 10 – 100% of rated power
- Representative measurements for verification of core conformity are performed at ≥ 30% of rated power
- Accuracy and reproducibility of measured activations: >1%
- Fully automatic, controlled by computer
- Calibration of AMS is limited to the detectors in the measuring table once per cycle before or during refueling outages

# Aeroball System Schematic

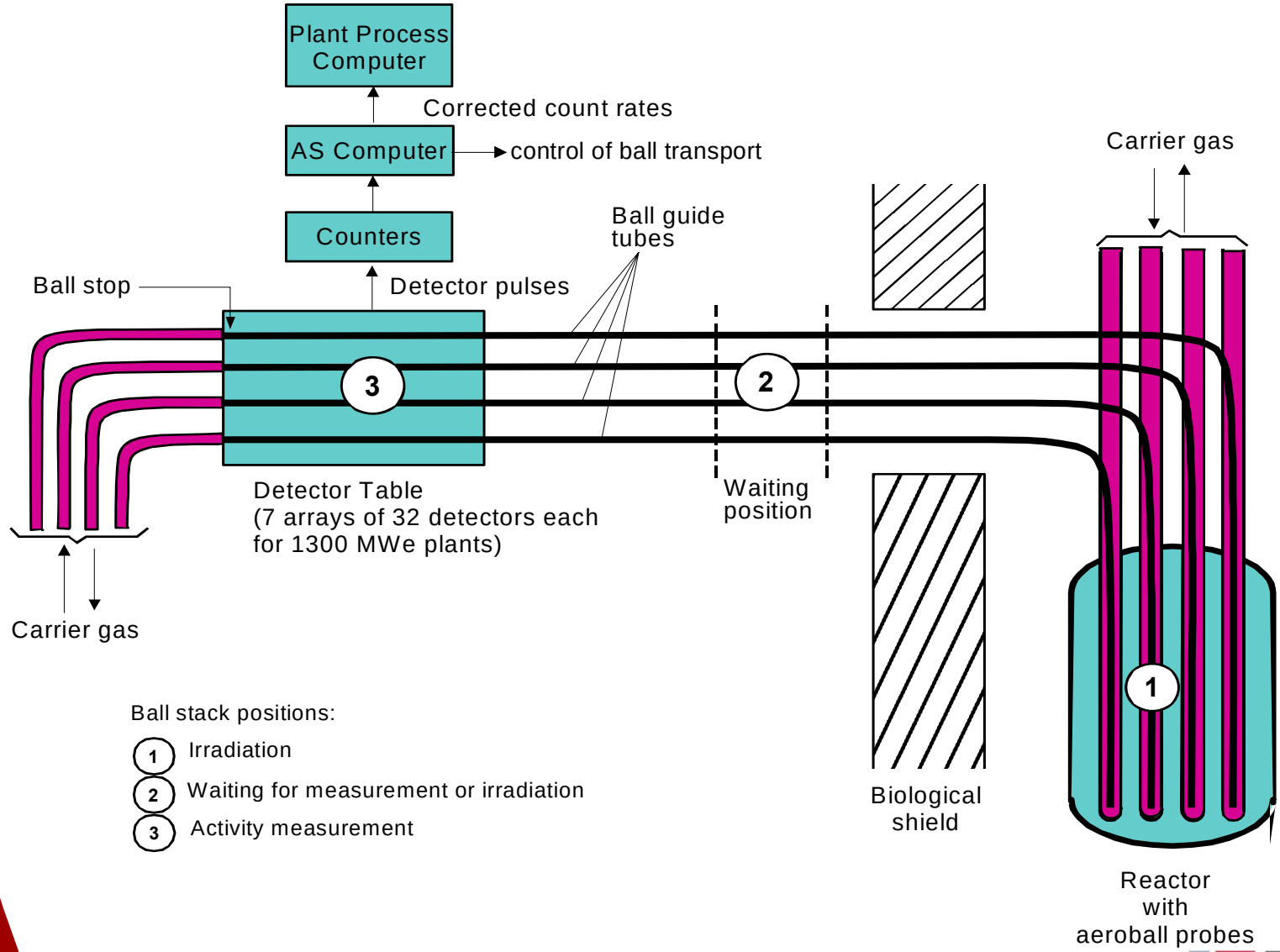

# Timeline of Aeroball Measurement Process

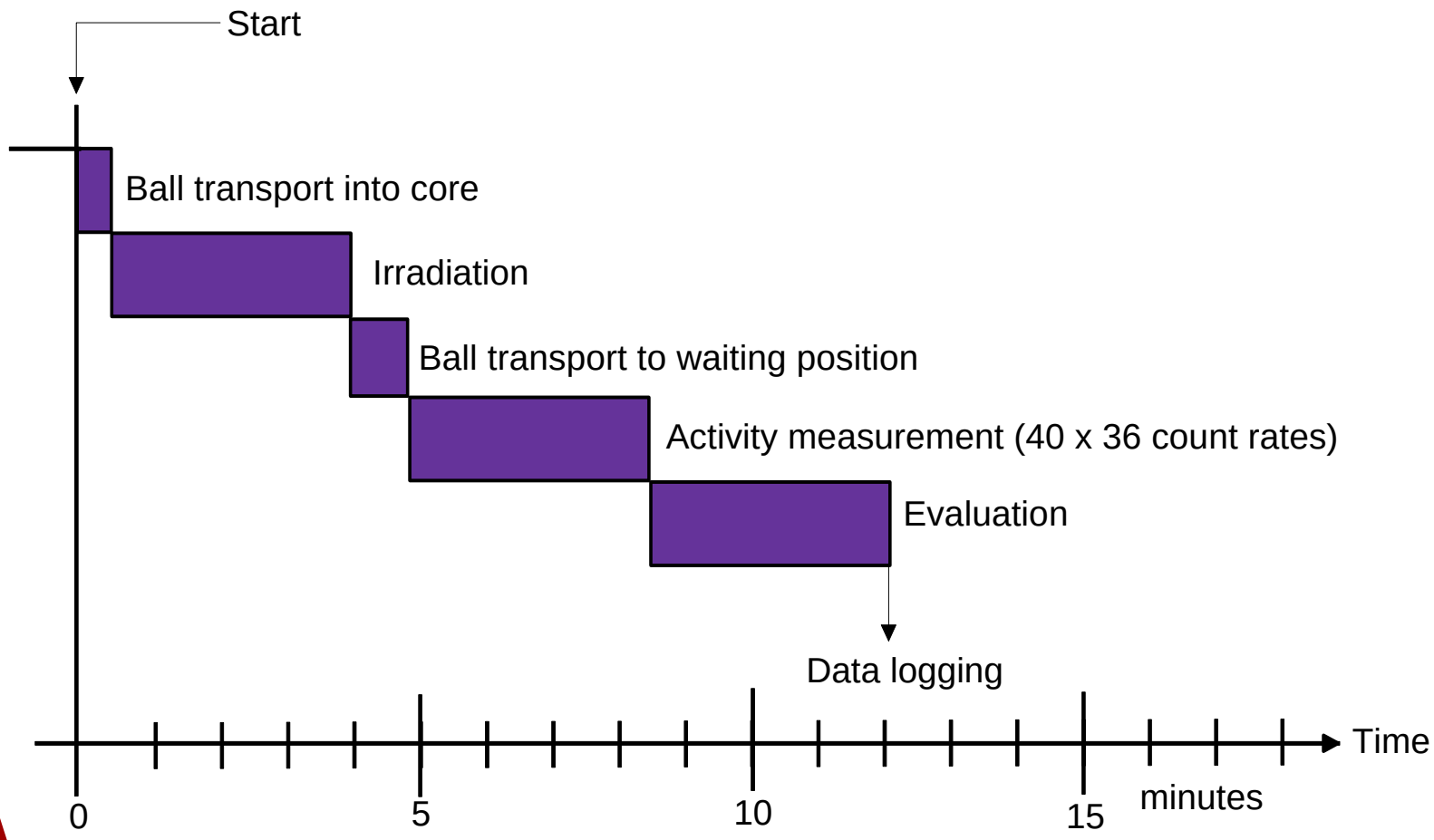

# Aeroball Pneumatic Transport System

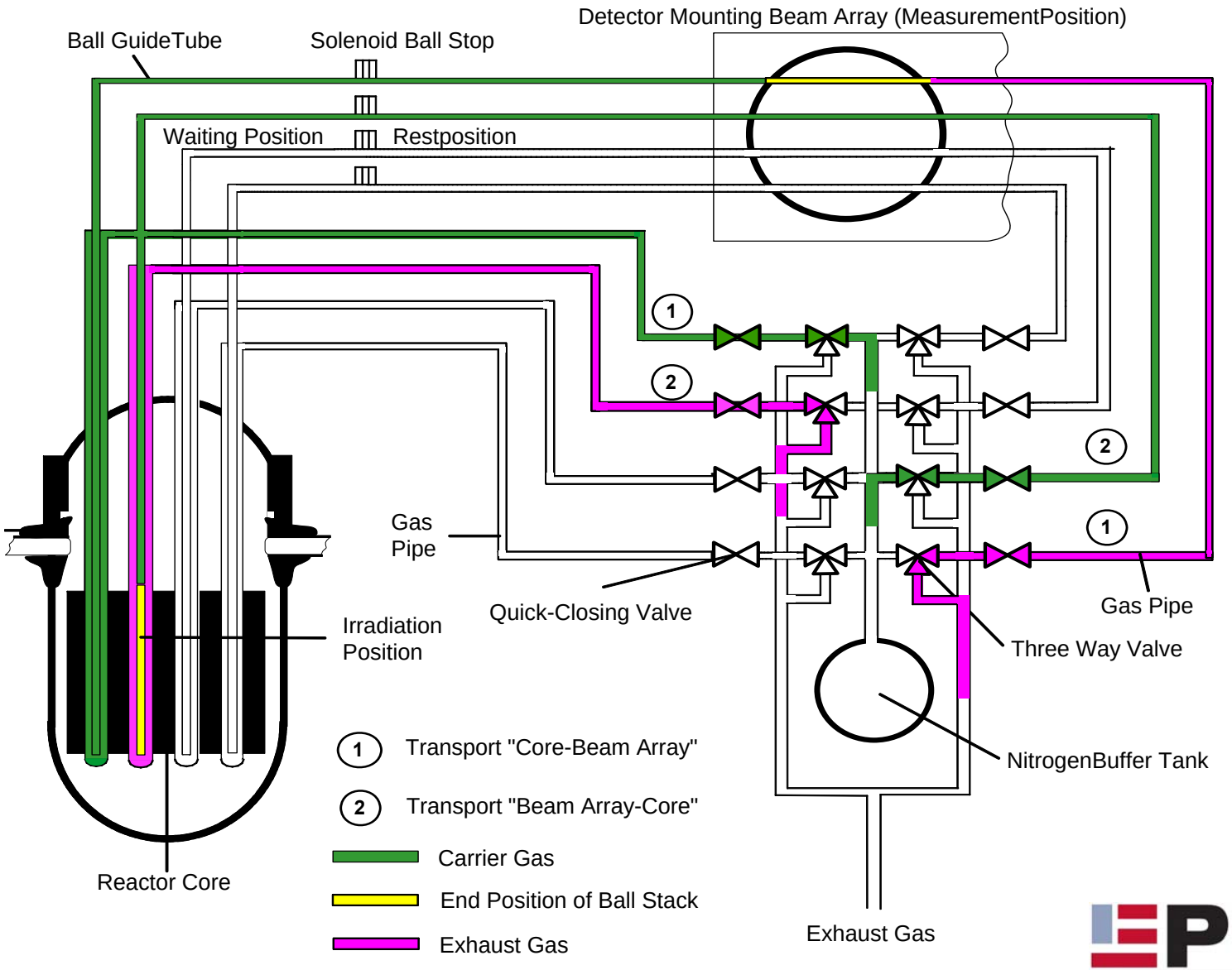

# Aeroball Probe Schematic

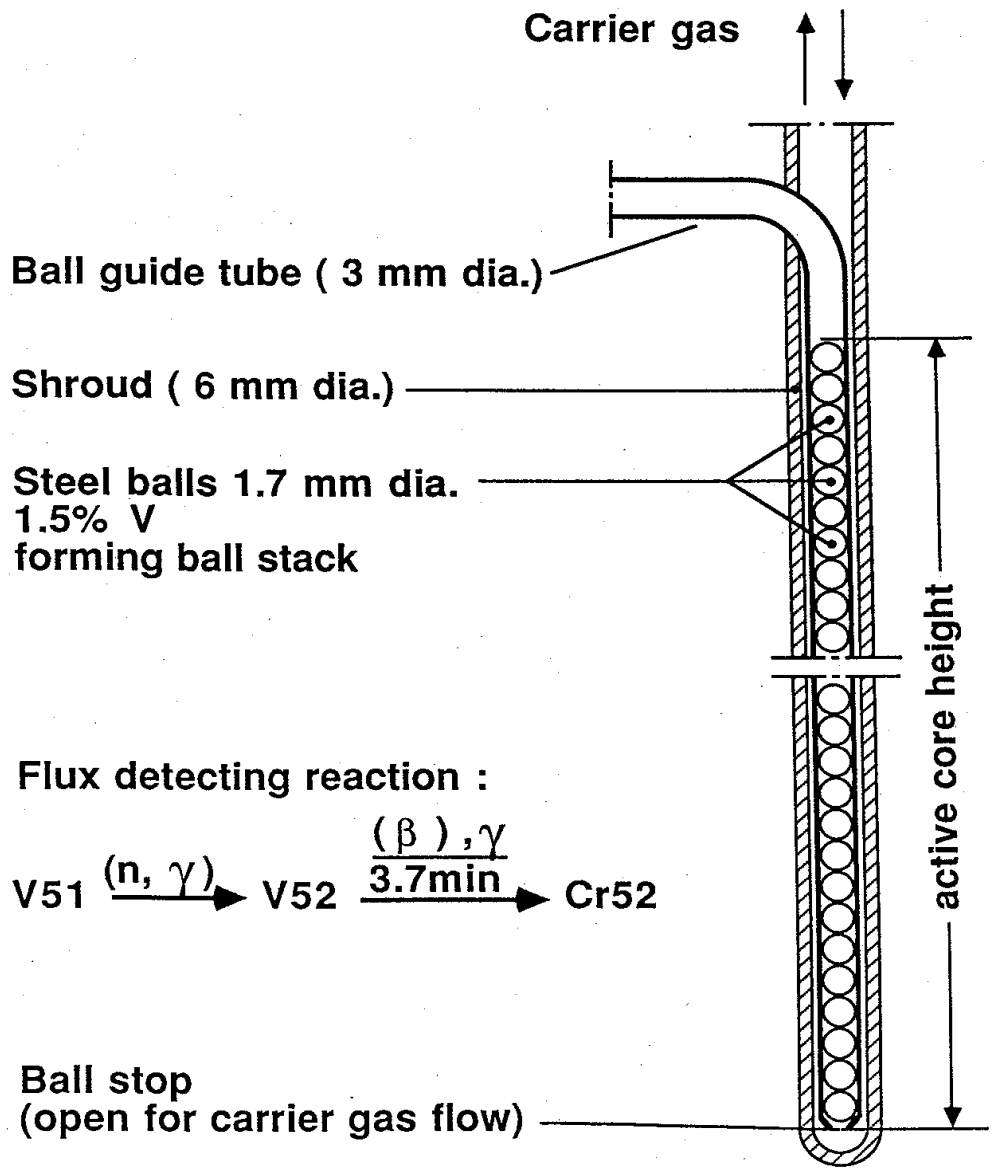

# Aeroball System Measuring Table

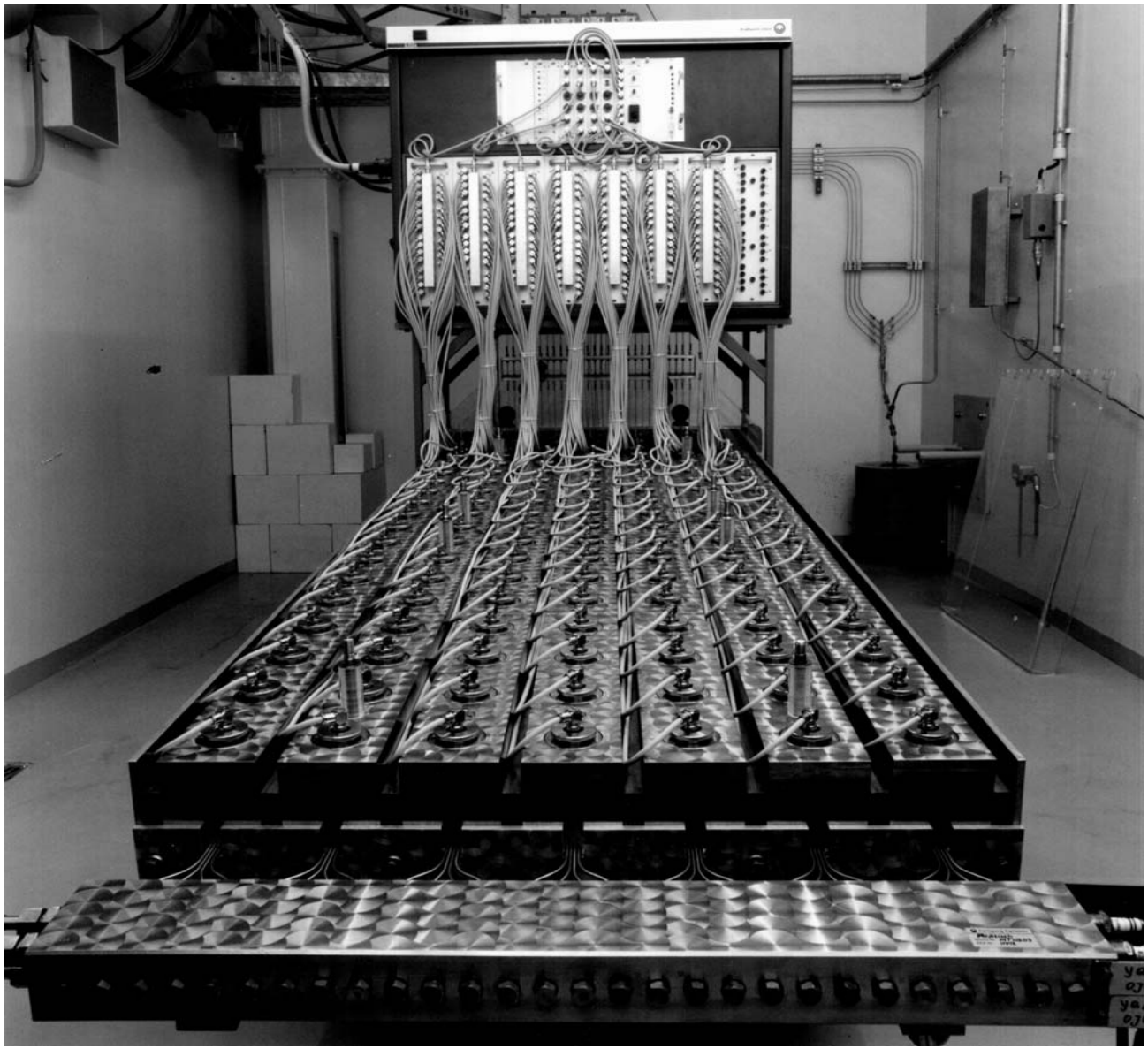

# *Tasks of Aeroball Measurement System*

> **Discontinuous assessment of power density distribution for:**
  - **Verification of core design predictions**
  - **Verification of core behavior over burnup**
  - **Determination of 3D flux and power density distribution**
  - **Calibration of the 3D online core monitoring software system (POWERTRAX)**

# AMS Operating History

- 16 plants with 260 operating years of experience
- Mechanical failures of the AMS have not occurred
- Problems with the AMS are rare
- Occurrences of balls being unable to move into or out of the probes:
  - 13 cycles with one failed probe
  - 4 cycles with two failed probes
  - 1 cycle with three failed probes
  - Three significant failures have occurred due to poor maintenance
    - Inability to get the balls into and out of the probes due to moisture in the carrier gas
    - Last occurrence was 16 years ago

***The AMS currently in service are very reliable.***

***The only consequence of probe failures is reduced margins with no operational restrictions.***

# POWERTRAX/S Software System

- A comprehensive system for on-line 3-D power distribution monitoring and for reactor operations support calculations
- Uses plant process computer data typically collected every minute and measured activation values obtained with the AMS to update a 3-D nodal neutronic model
- Includes PRISM, the standard 3-D core simulator code of the CASCADE-3D integrated code system for reactor core design and safety analysis
- Reactor simulator updates are automatically generated evaluating changes in power level, bank position, inlet temperature and pressure
- Quality assurance checks of the measured activation values with possibility of manual/ automatic correction

# POWERTRAX/S Software System Benefits

- Eliminates the need to generate off-line defined sets of theoretical factors for power density reconstruction
- Provides consistency between the reactor core calculations performed in POWERTRAX/S and those using the standard core design code system
- Provides continuous computation of explicit core power distribution and of SPND signals
  - Supplements the local information given by the SPNDs between Aeroball measurements
  - Allows plant engineer to perform comparisons and trend analyses to identify drifts in the calibration or failing detectors

# POWERTRAX/S

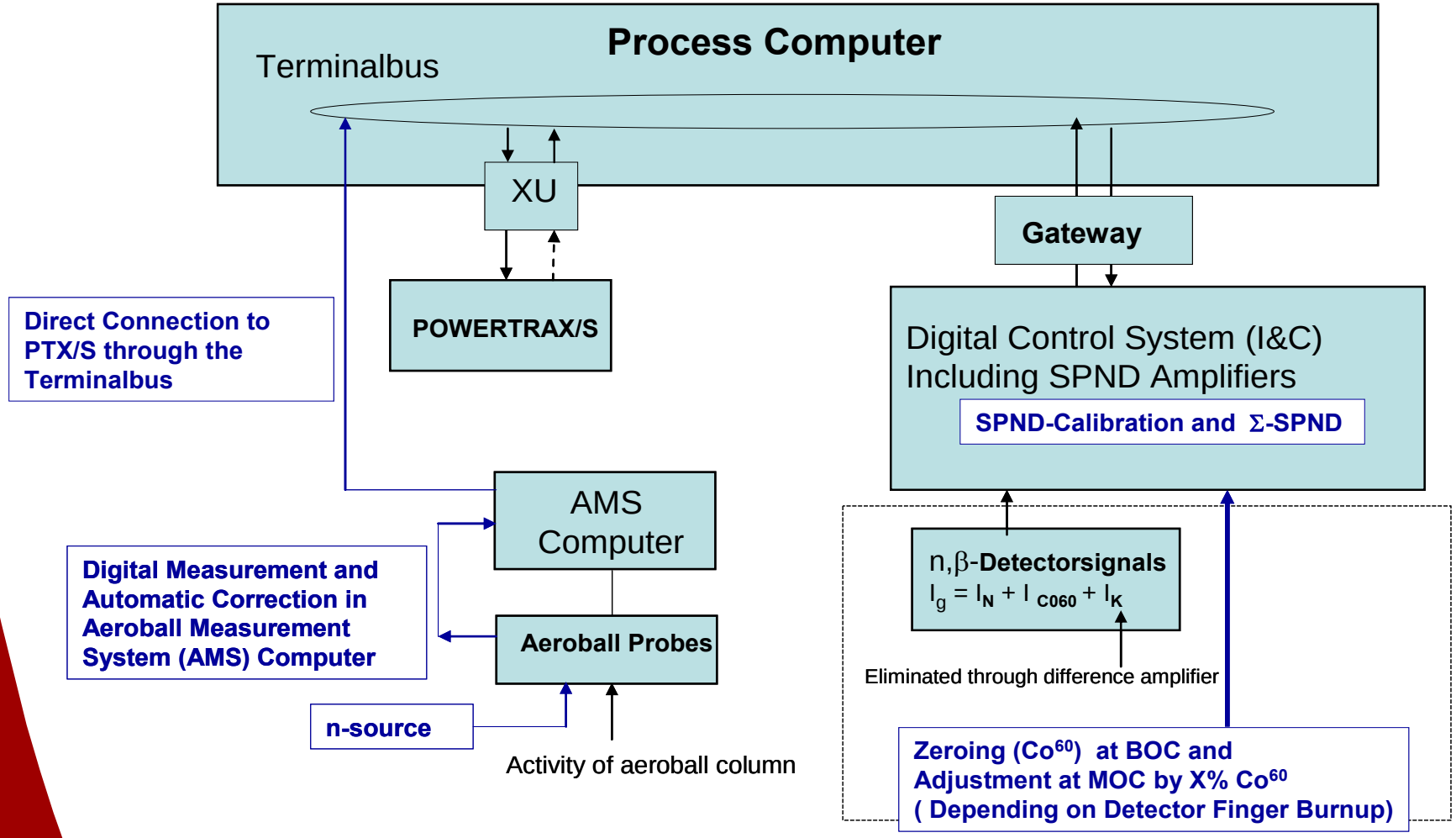
Process Computer
Terminalbus
XU
Gateway
POWERTRAX/S
Direct Connection to PTX/S through the Terminalbus
Digital Control System (I&C) Including SPND Amplifiers
SPND-Calibration and Σ-SPND
AMS Computer
Digital Measurement and Automatic Correction in Aeroball Measurement System (AMS) Computer
Aeroball Probes
n-source
Activity of aeroball column
n,β-Detectorsignals
$I_g = I_N + I_{C060} + I_K$
Eliminated through difference amplifier
Zeroing ($Co^{60}$) at BOC and Adjustment at MOC by X% $Co^{60}$ ( Depending on Detector Finger Burnup)

# Demonstration of User Interface

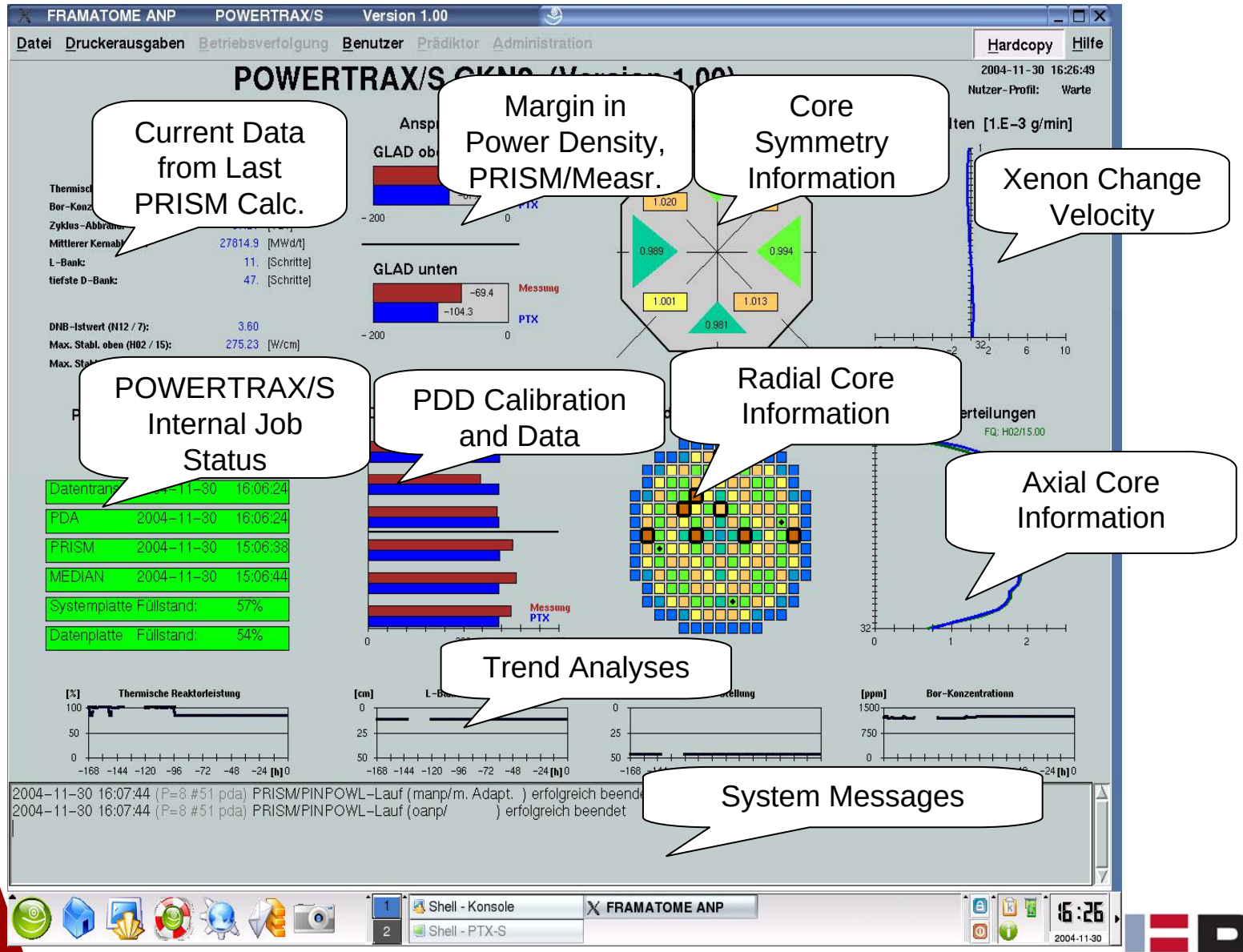

# POWERTRAX/S
## Example of a Radial Power Density Display

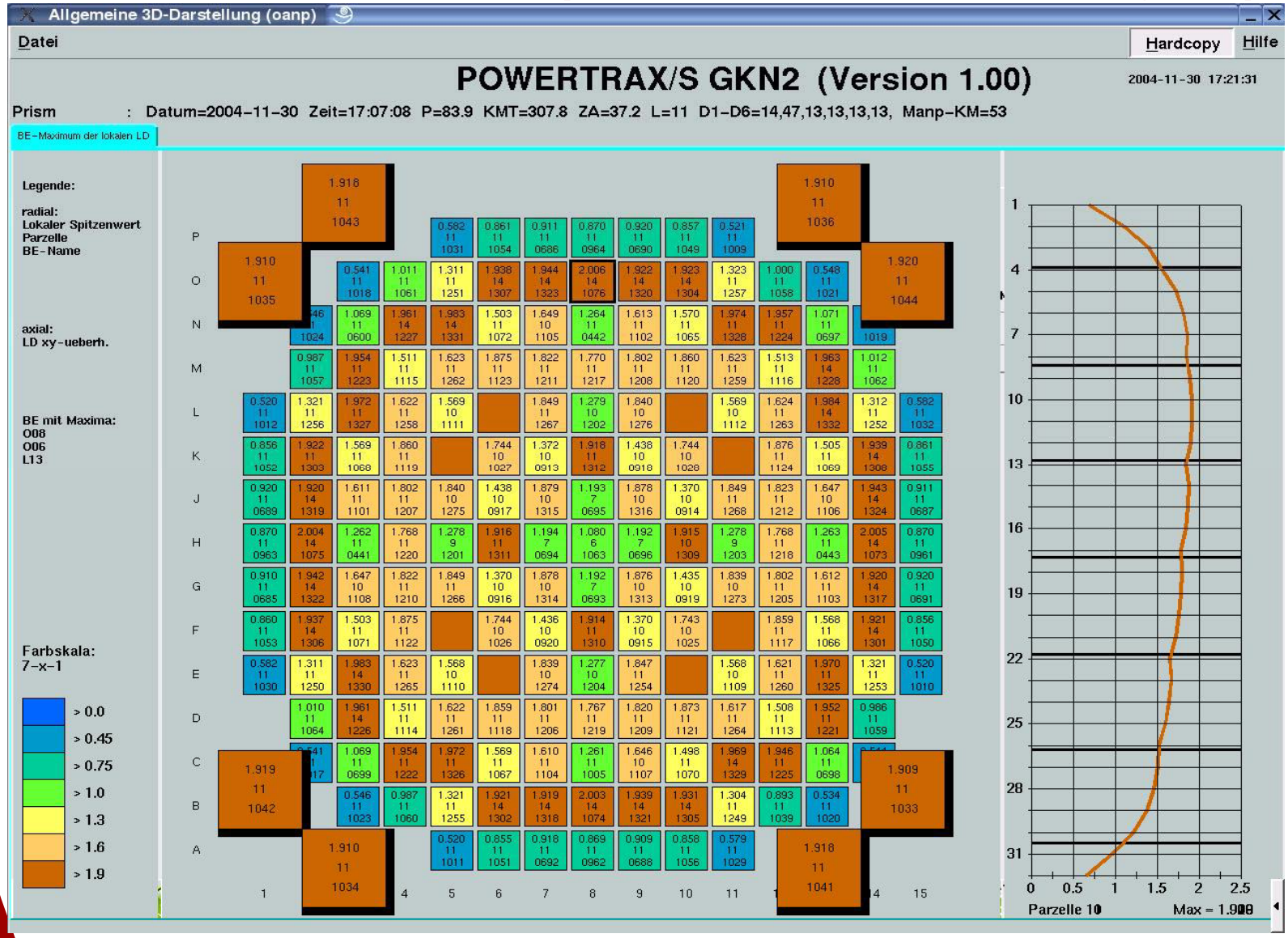

# Summary

- The SPNDs continuously monitor core power
  - Provide input signals to POWERTRAX software
  - Margins displayed to operator
  - Safety and non-safety related functions are generated by SPNDs
  - SPNDs signal will drift with increasing core burnup
- The AMS is used to calibrate the SPNDs
  - About every 15 EFPD, the SPNDs are calibrated to the AMS reference signal
  - The AMS provides no signals to any protection or monitoring functions
- POWERTRAX/S provides a comprehensive system for on-line 3-D power distribution monitoring and for reactor operation support calculations

# Control Rod Drive Mechanism (CRDM):

## Natural Convection Cooling

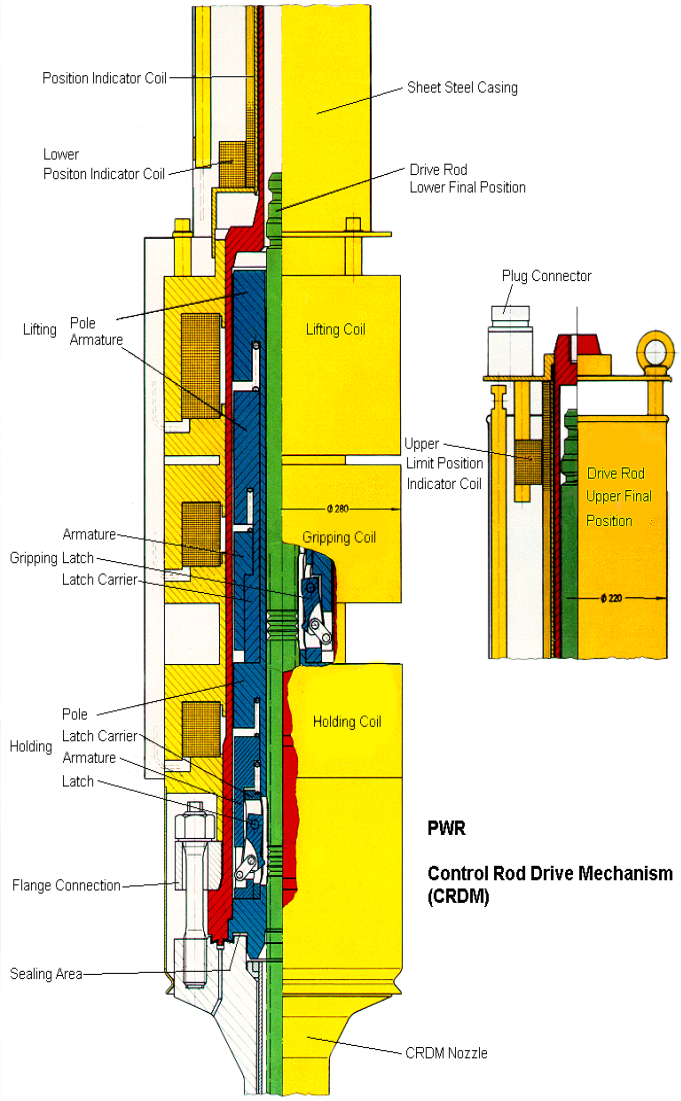


**Sherri Fleck**
**Component Engineering**

# *Natural Convection Cooling*

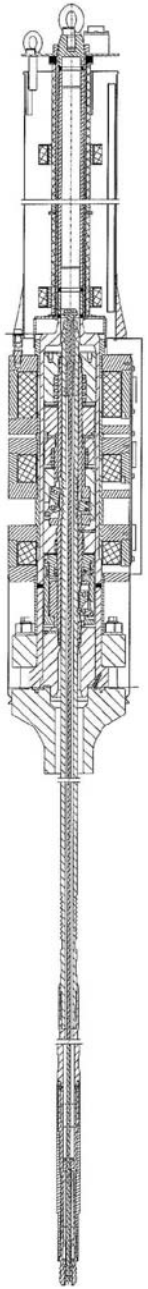

- **The CRDMs for the U.S. EPR employ natural convection cooling**
- **Natural convection cooling is possible due to the design of the CRDM pressure housing**

# Martensitic Material

- Martensitic material is used in the area of the latch unit
- The field produced outside the pressure housing in working coils moves the armatures of the latch unit inside the pressure housing
- Martensitic stainless steels are ferromagnetic
- Due to the stresses induced by the hardening transformation, martensitic stainless steels exhibit permanent magnetic properties
- Martensitic material reduces the magnetic resistance in the magnetic circuit
- Reduction of magnetic resistance allows significant reduction in necessary coil current without significant loss of magnetic forces between the armature and its adjacent pole

***The temperature of the CRDM pressure housing is reduced and natural convection cooling is possible***

# *Temperature of Pressure Housing*

- **Forced cooling would be required if the coil temperature reaches**
  - **662 °F (long-term)**
  - **842 °F (short-term)**
- **Temperature of CRDM depends on the operating status of the plant and the CRDM itself**
  - **Number of steps**
  - **Reactor trip**
  - **Steady state**
- **During normal operation and after rod drop, the wall temperature of the pressure housing remains well below the coil temperature limit**

# Flow Path of Natural Convection Cooling Air

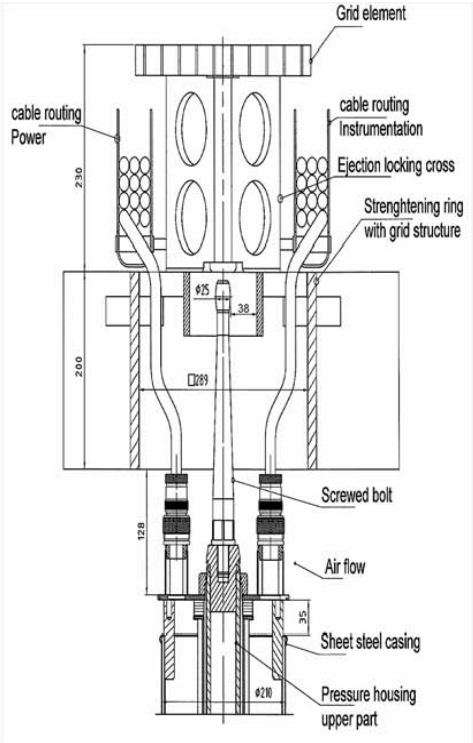


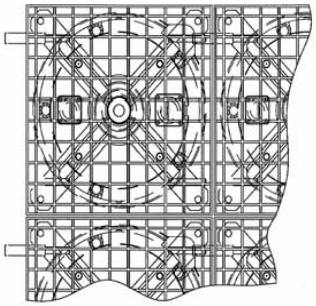

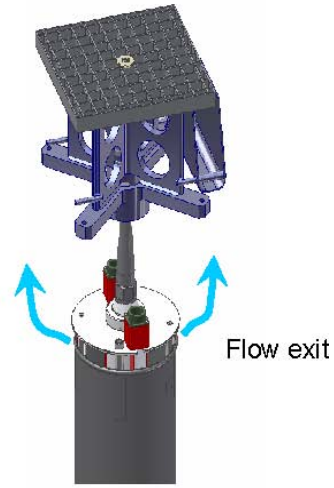


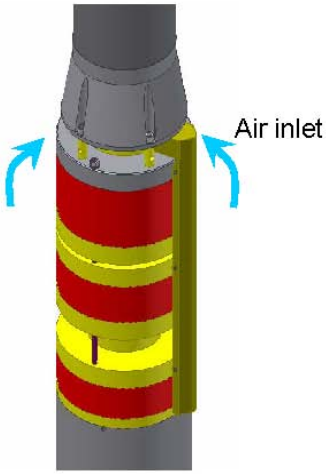

# *Natural Convection Cooling Air Flow Path*

- Ejection locking crosses, placed above the CRDMs top, form missile protection after pressure housing break
- The open structure of the grating at the ejection locking crosses provides large openings allowing the up streaming cooling air to pass without interference
- The cooling function for the reactor cavity is monitored
- Thermocouples check exhaust air temperature with a limit temperature of 140 °F to 158 °F

# History of Natural Convection Cooling

- Three German KONVOI plants employ a similar CRDM design to the U.S. EPR with natural convection cooling
  - KONVOI plants are each equipped with 61 CRDMs
  - 17 years operating experience with KONVOI Design
  - Difference between KONVOI and other German plant CRDMs is the length dimension of the CRDM due to different fuel assembly lengths
- Other German designed PWRs are also equipped with convection cooling
  - 1200 CRDMs have been in operation for 35 years employing natural convection cooling
  - 40% of these plants in operation more than 20 years
  - No shut down caused by a failure of a CRDM

# Inspections Performed on Similar CRDM Designs

- Upper dissimilar weld
  - Eddy Current inspections by remote controlled manipulator from below the RPV closure head
- Lower dissimilar weld
  - Tested by visual, ultrasonic testing or radiographic examination as well as liquid penetration testing
- Corrosion attack, cracks or leaks have not been detected on the CRDM pressure housings

# U.S. EPR Heavy Reflector Overview

**Marty Parece**
**Manager, Technical Integration**
**New Plants Deployment**

# RPV internals

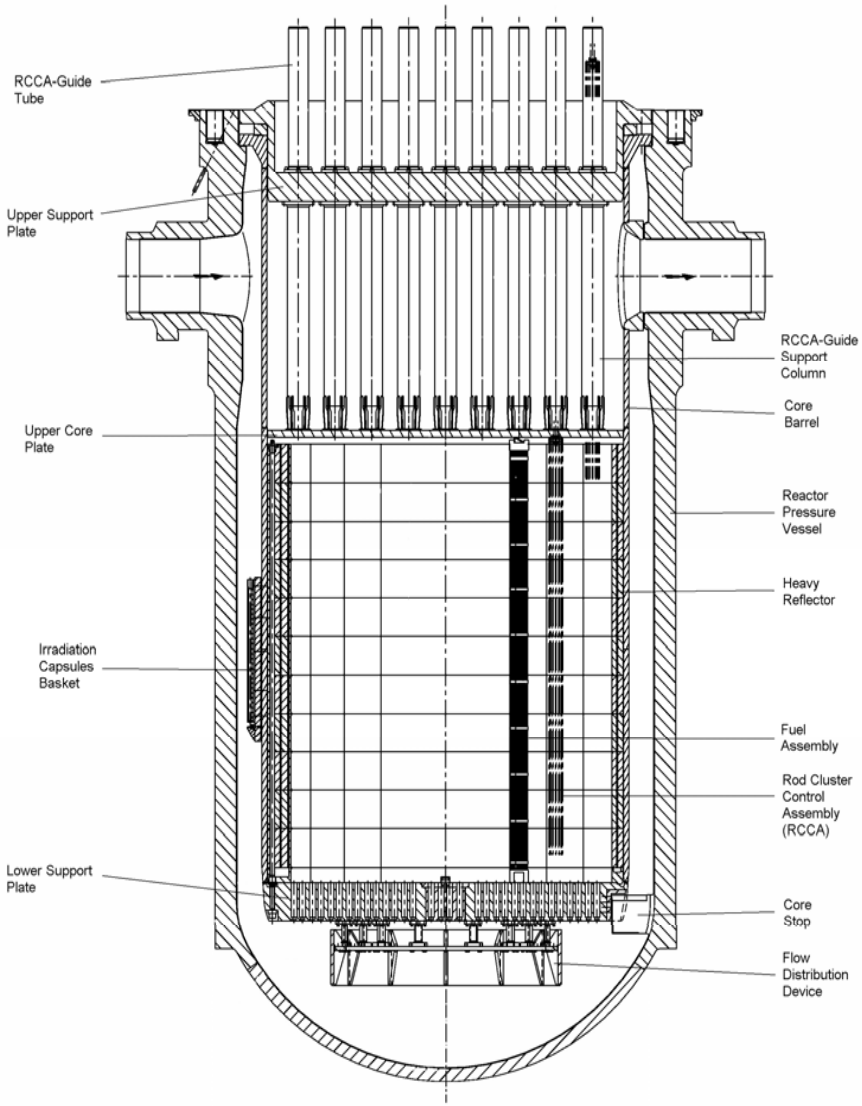


> **Requirements and functions**

- **Direct the coolant flow in the RPV**
- **Shield the RPV against excessive neutron irradiation**
- **Maintain the position and the alignment of the fuel assemblies**
- **Align the RCCAs. Absorb the impact energy of the RCCAs following shutdown**
- **Support and guide the instrumentation lances and the RPV level measurement probes**
- **Accommodate the irradiation specimens for brittle fracture surveillance of the RPV**

# U.S. EPR RPV Lower Internals

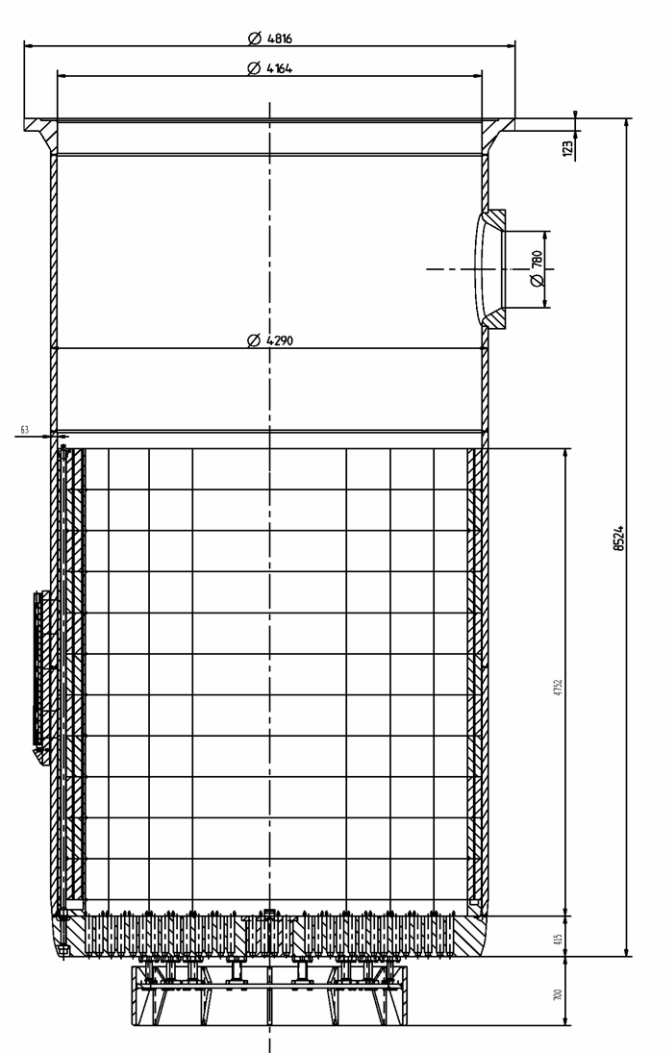


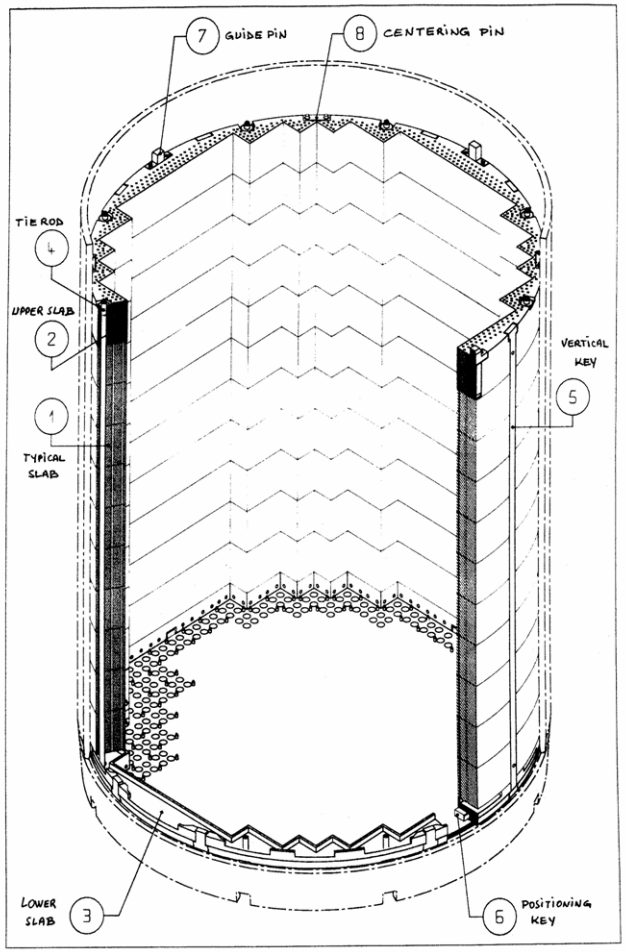

# U.S. EPR Heavy Reflector

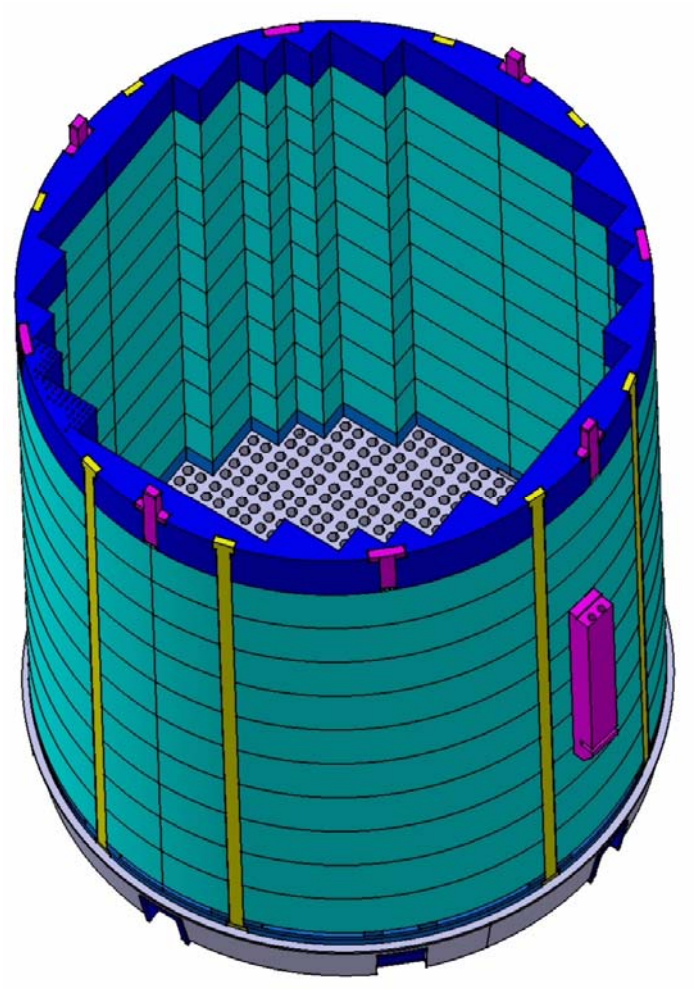

- **Replaces conventional core baffle assembly**
  - **Fuel cycle cost reduction**
  - **Improvement of long term mechanical behavior of lower internals**
    - No bolts in the most irradiated areas
    - Eliminates baffle jetting
    - Low depressurization effects in case of LOCA
  - **Protection of reactor vessel from radiation-induced embrittlement**

# Heavy Reflector Cooling

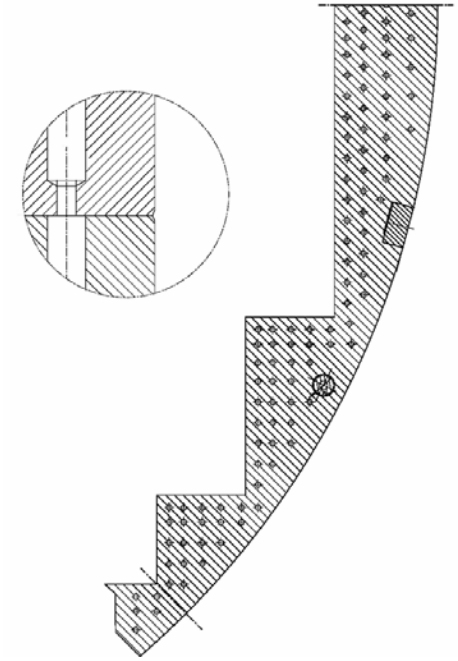

- Flow holes to remove heat from gamma heating
- Openings in the first slab allow flow to enter the Heavy Reflector
- Distribution chamber provides even flow

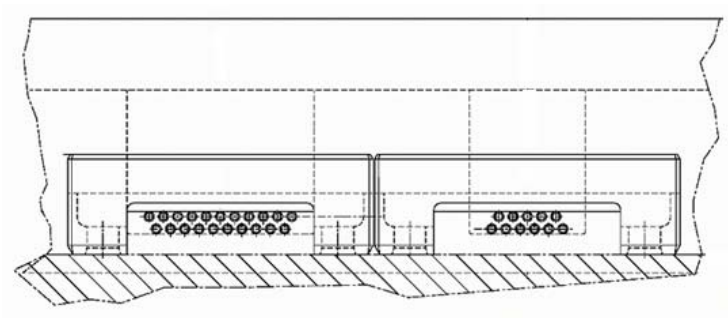

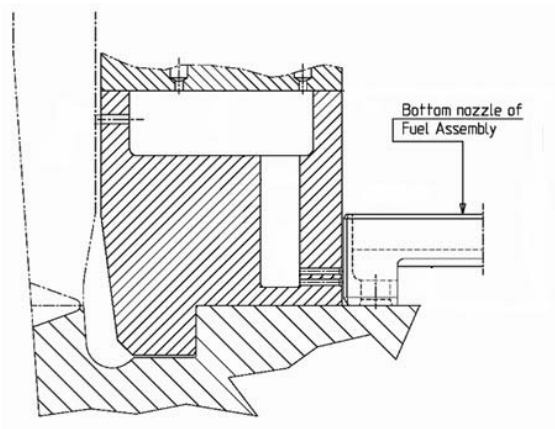

# Heavy Reflector Tie Rods

- Provide the vertical restraint for the individual slabs
- Restrained at the top and bottom of the heavy reflector
- No threaded connections within the active core region

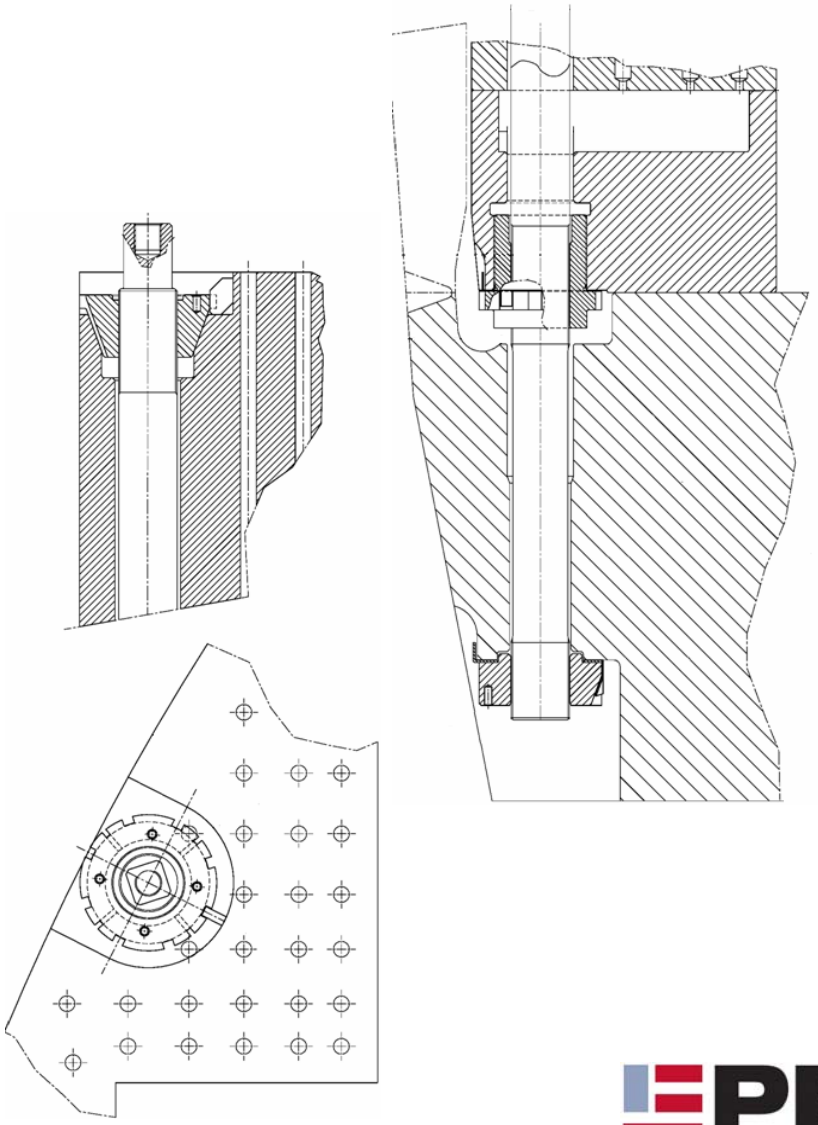

# *Pressurizer Pressure Control*

# Pressurizer Pressure Control Topics

- Sprays
- Safety Relief Valves
- Severe Accident Depressurization Valves

# Pressurizer Spray Lines

- U.S. EPR contains a total of 3 spray lines
- 2 normal sprays & 1 auxiliary spray
- Normal sprays are connected to cold legs 2&3
- Each normal spray line maintains a small continuous flow to the pressurizer via a manual bypass valve to:
  - Balance the boron concentration of the pressurizer fluid with that of the RCS
  - Thermally stabilize the spray lines
- The auxiliary spray line is connected to the CVCS
  - May also be used for RCS pressure control
  - Primary function is to cool and depressurize the pressurizer when RCPs have been stopped

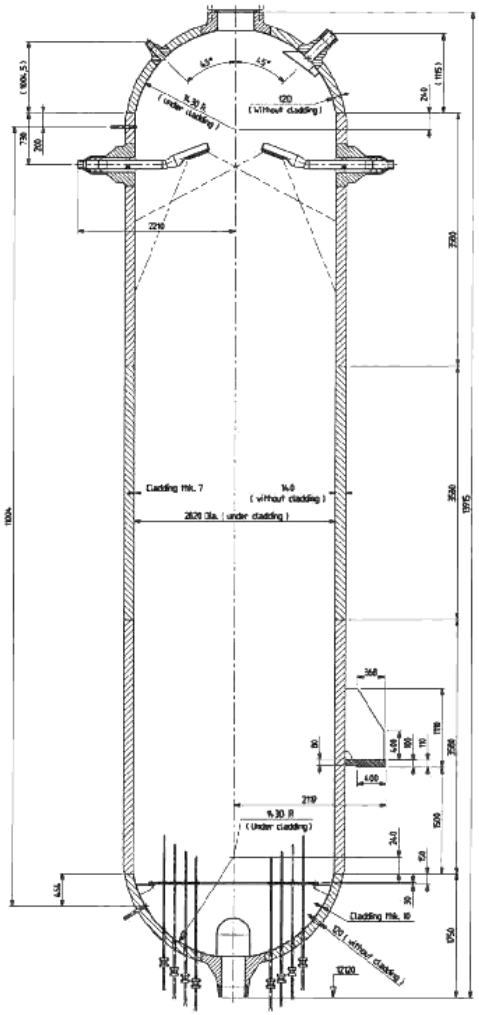

# Pressurizer Safety Relief Valves

**U.S. EPR is equipped with three pressurizer safety valves**

**Each contains**

- **One main safety relief valve**
- **Linear position indicator on top of the valve**
- **Two spring-loaded pilots mounted in parallel**
- **One double solenoid valve equal to two solenoid valves in series**
- **One connection block with isolation valves**

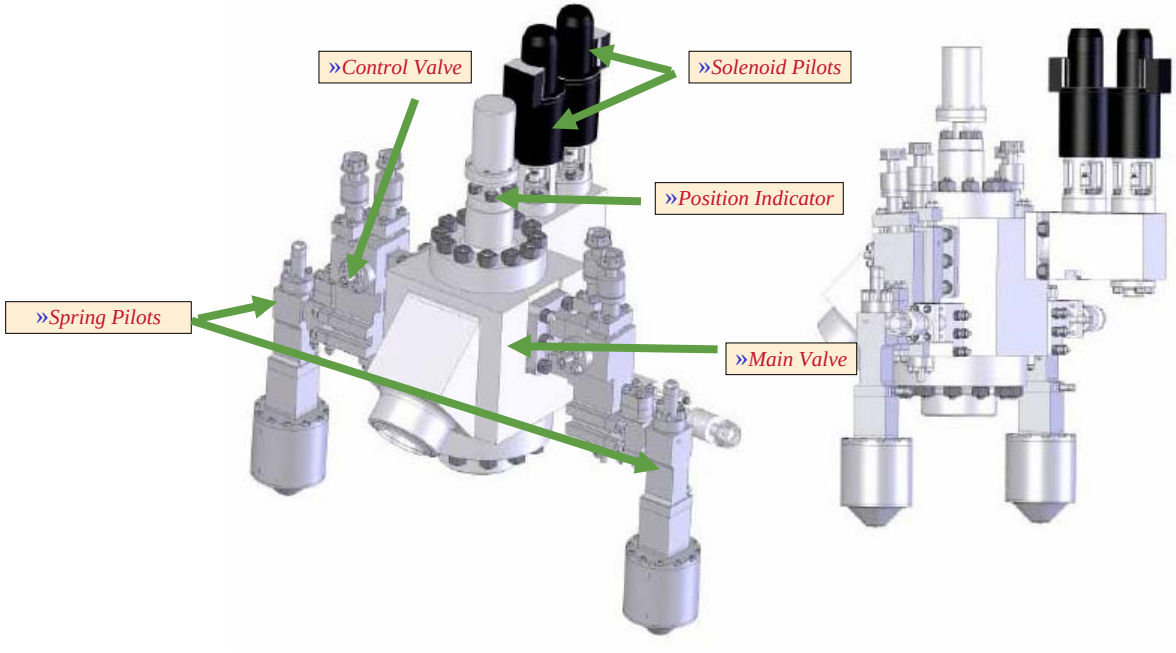

# *Main Steam Relief Train (MSRT)*

# *Main Steam Relief Train (MSRT) Functions*

- > **Overpressure Protection**
- > **Residual Heat Removal**
- > **Isolation/Containment (SGTR)**

***MRST has multiple functions***

# MSRT P&ID

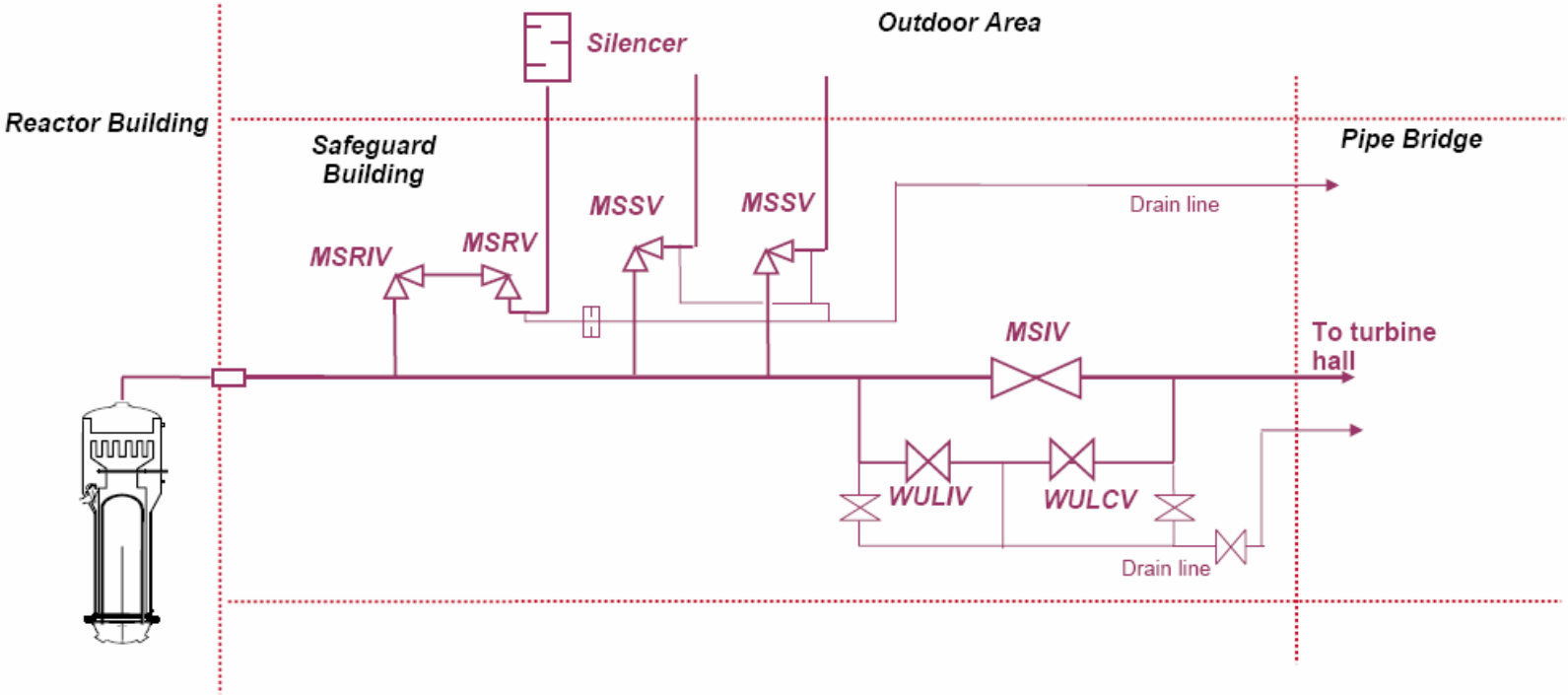
Silencer
Outdoor Area
Reactor Building
Safeguard Building
Pipe Bridge
MSSV
MSSV
Drain line
MSRIV
MSRV
MSIV
To turbine hall
WULIV
WULCV
Drain line

# MSRT Functions

> **Overpressure Protection**

- **Provided for each main steam line by MSRT operating in conjunction with 2 Main Steam Safety Valves (MSSV)**
  - **MSRT capacity of 50% normal operating full load steam flow**
  - **MSSV capacity of 25% (each) normal operating full load steam flow**
- **MSRT setpoint established at 1370 psig to minimize challenges to MSSVs**

# MSRT Functions

## Residual Heat Removal

- If Main Steam Bypass (Condenser) unavailable, MSRTs remove residual heat (controlled release to atmosphere) from hot shutdown until RHRS becomes available
- During small / intermediate break LOCAs or SGTR w/LOOP, MSRT removes residual heat to cool primary side down to MHSI pressure (partial cooldown)
- MSRTs meet the intent of Standard Review Plan Section 10.3 and Branch Technical Position RSB 5-1 to credit only safety grade components to achieve cold shutdown following a SSE coincident with LOOP

*Easy to maintain cooldown rate to cold shutdown (large capacity)*

# MSRT General Design

- MSRT components (up to and including MSRV) designed to Quality Group B (ASME Class 2) requirements
- Each MSRT Division is physically separated and completely independent of the remaining three divisions
- All MSRT components powered from the Class 1E Emergency Power Supply System
- MSRT components for Divisions 1 & 4 also powered from Station batteries and Station Blackout Diesel Generator
- MSRT components required to support safety functions located inside Seismic Category I structure (Main Steam Valve Room) for protection against external hazards

# MSRT Components

> **Main Steam Relief Train Components**

- **Main Steam Relief Isolation Valve (MSRIV)**
- **Main Steam Relief Control Valve (MSRV)**

# MSRT Components
# Main Steam Relief Isolation Valve

## > Main Steam Relief Isolation Valve

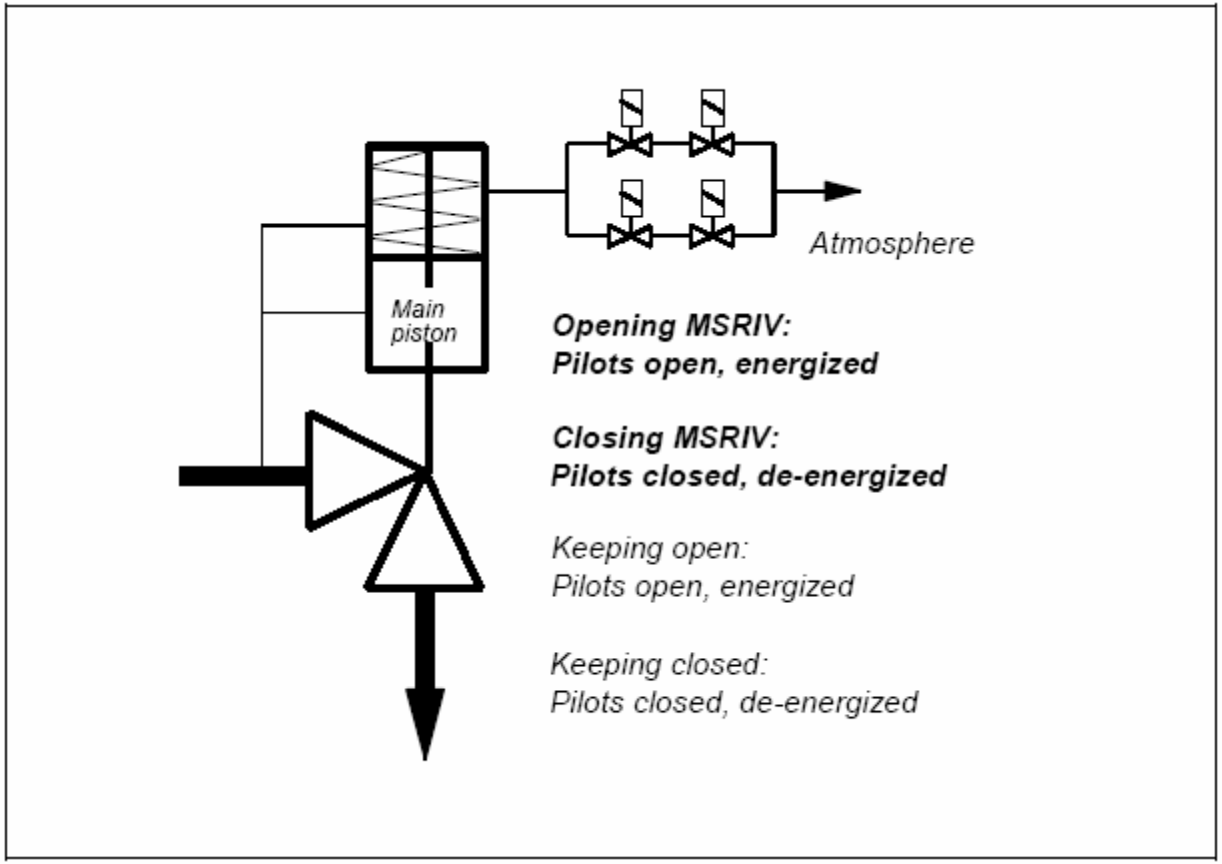

# MSRT Components
# Main Steam Relief Isolation Valve

- Self-medium operated angle globe valve
  - Opening controlled by depressurization of control volume above main piston
  - Closure is achieved with spring located above main piston with pressure equilibrium above/below piston.
- Solenoid actuated, pilot operated valve for fast opening
  - Two pilots in series in two redundant control lines
    - Prevent failure of any one pilot valve causing spurious opening of the valve (two pilots in series)
    - Prevent failure of any one pilot valve causing a failure of the valve to open (two redundant control lines)
  - Solenoids / pilots are energized to open

# MSRT Components
# Main Steam Relief Isolation Valve

- Provides minimum certified relief capacity of 50% normal operating full load steam flow
- Designed to limit maximum flow to 110% of minimum certified flow to minimize potential for overcooling of primary in the event of spurious valve opening.
- Closed during normal operation
- Fails closed (loss of electrical power / loss of steam pressure)

# MSRT Components
# Main Steam Relief Isolation Valve

> **Main Steam Relief Isolation Valve (cont)**

- **Opens at setpressure of 1370 psig (utilizes input from 4 redundant pressure transmitters)**
- **Opening time specified as 1.8s max (includes 1.5s deadtime)**
- **Closure specified as 5s max**

# *MSRT Components*
# *Main Steam Relief Control Valve (MSRV)*

- Motor-operated angle globe type control valve
- During normal operation, valve is maintained open (partially or full depending on power level)
- Valve capable of automatic or manual operation (control mode) for controlled cooldown
- Valve stroke time specified as 40s to provide isolation in the event of MSRIV spurious opening or stuck open

# SGTR & SBLOCA Mitigation

# SGTR & SBLOCA Mitigation
# Key Elements of Strategy

- Depressurize one or more SGs below MHSI shut-off head to ensure full MHSI flow for small LOCAs
- No operator action required for 30 minutes (design goal)
- Timely action following SGTR to cool and depressurize the primary system to isolate the affected SG
  - Terminate potential release of radioactivity
  - Terminate tube leakage and prevent SG overfill

# SGTR & SBLOCA Mitigation Related U.S. EPR Safety Goals

- Radiological consequences*
  - Condition 3 and Condition 4 ($10^{-5}$/yr < Frequency < $10^{-2}$/yr) {Infrequent & Limiting}
    - < 5 mSv (500 mrem)
- Operator action for DBAs
  - No required actions prior to 30 minutes
- LOCA acceptance criteria
  - PCT < 2200 F
  - Clad Oxidation < 17% (local) / 1% (avg)

*Note: All radiological consequences for U.S. EPR subject to analysis using NRC-approved methods and acceptance criteria.

# SGTR & SBLOCA Mitigation
# Safety Injection System

> **Medium Head Injection selected for SGTR mitigation:**

- **Shutoff head below MSSV setpoint**
- **Ensures no challenge to MSSVs during SGTR (no operator action required to throttle safety injection)**
- **SGTR dose consequences meet safety goal by minimizing containment bypass (eliminate possibility of discharging reactor coolant)**

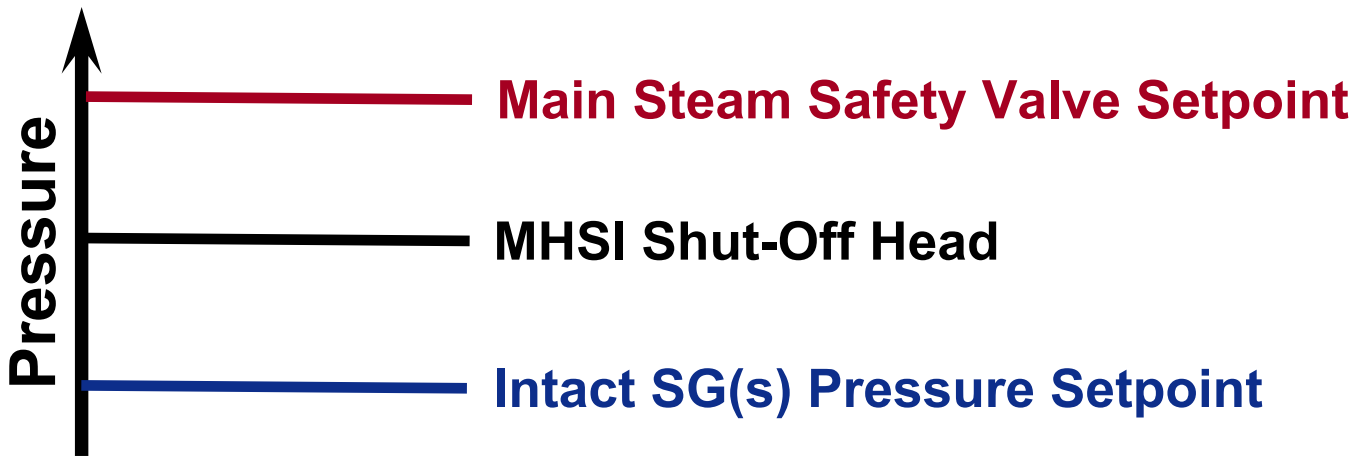

# SGTR & SBLOCA Mitigation
# SBLOCA Spectrum Studies

- For very small LOCAs, RCS pressure "couples" to SG pressure because SG heat removal is maintained
- SI flow begins when RCS/SG pressure falls below the MHSI shut-off head

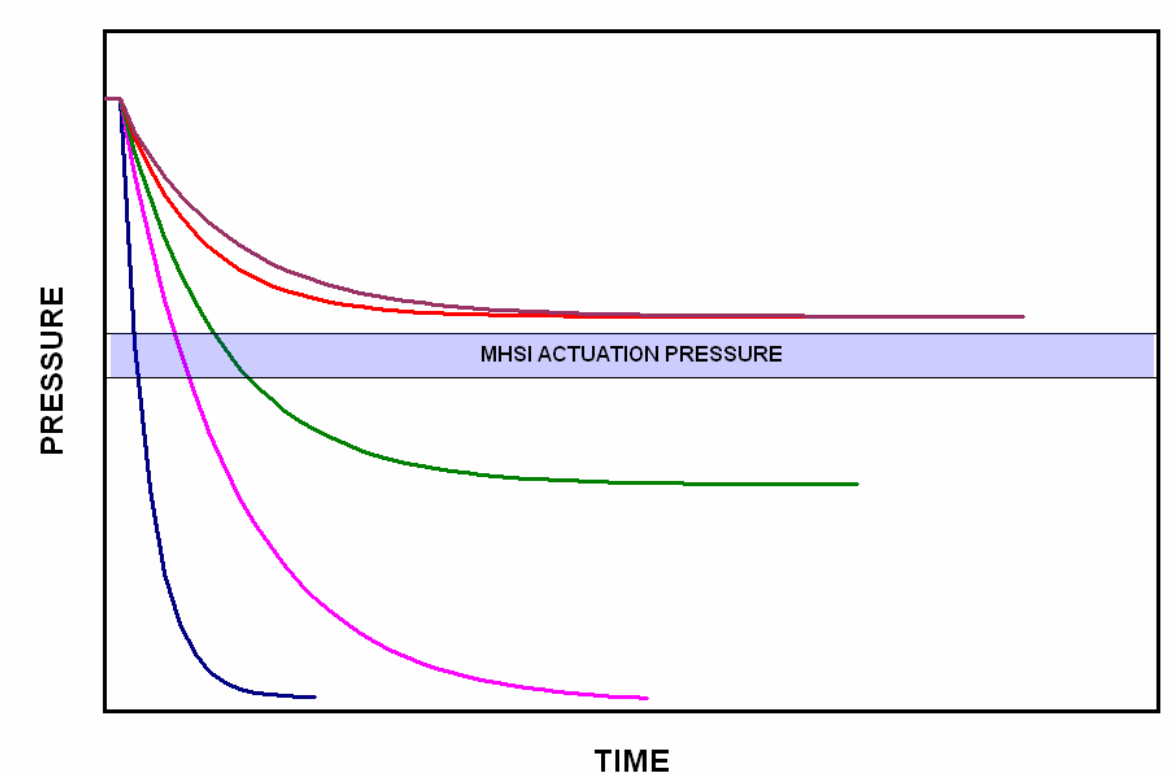

# SGTR & SBLOCA Mitigation
# Partial Cooldown

- Safety-related function
- Depressurizes SGs to reduce $T_{sat}$ at 180 F/hr
- Ensures adequate MHSI flow for SBLOCA & SGTR

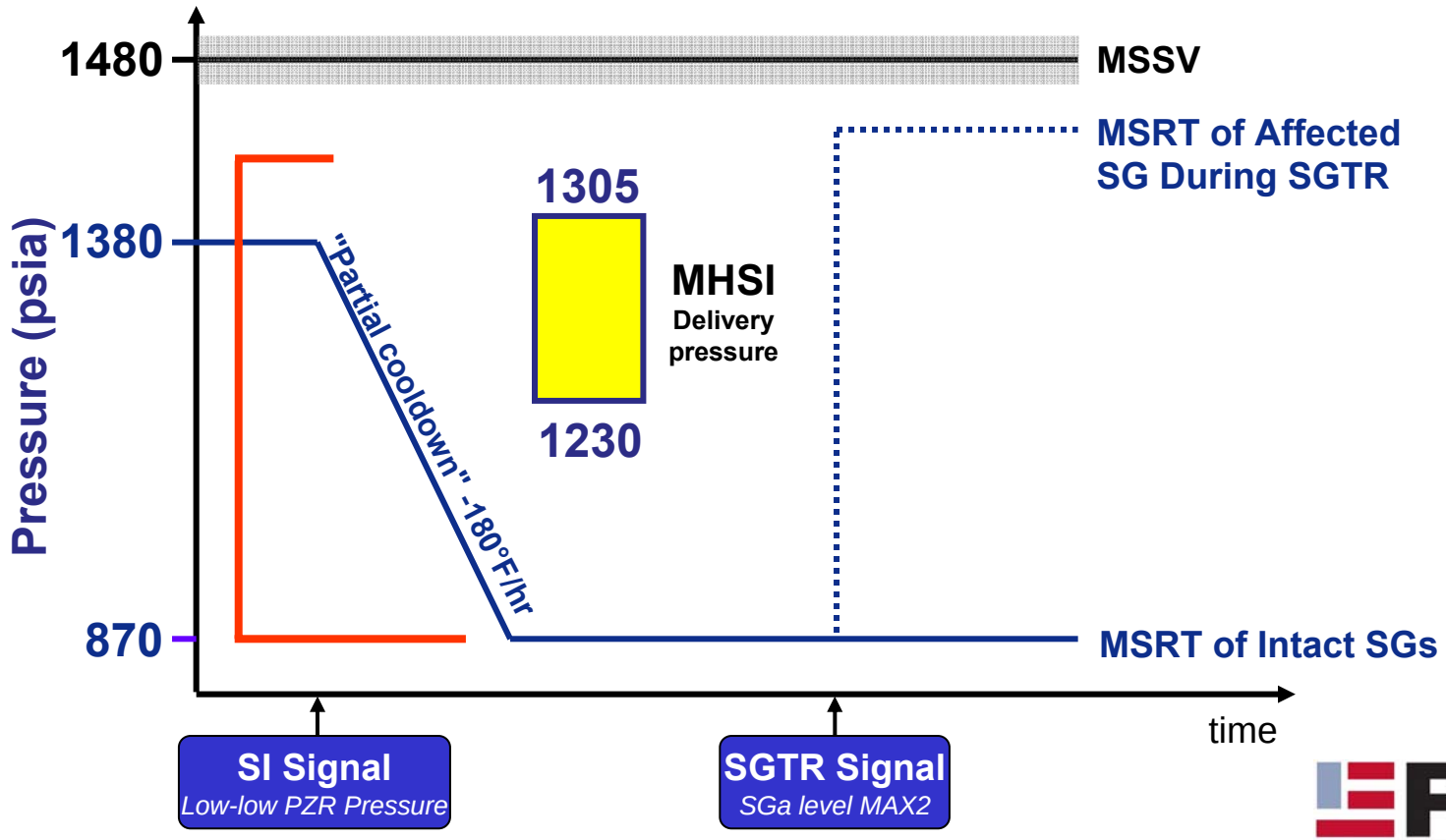

# SGTR & SBLOCA Mitigation
# SBLOCA Response With PC

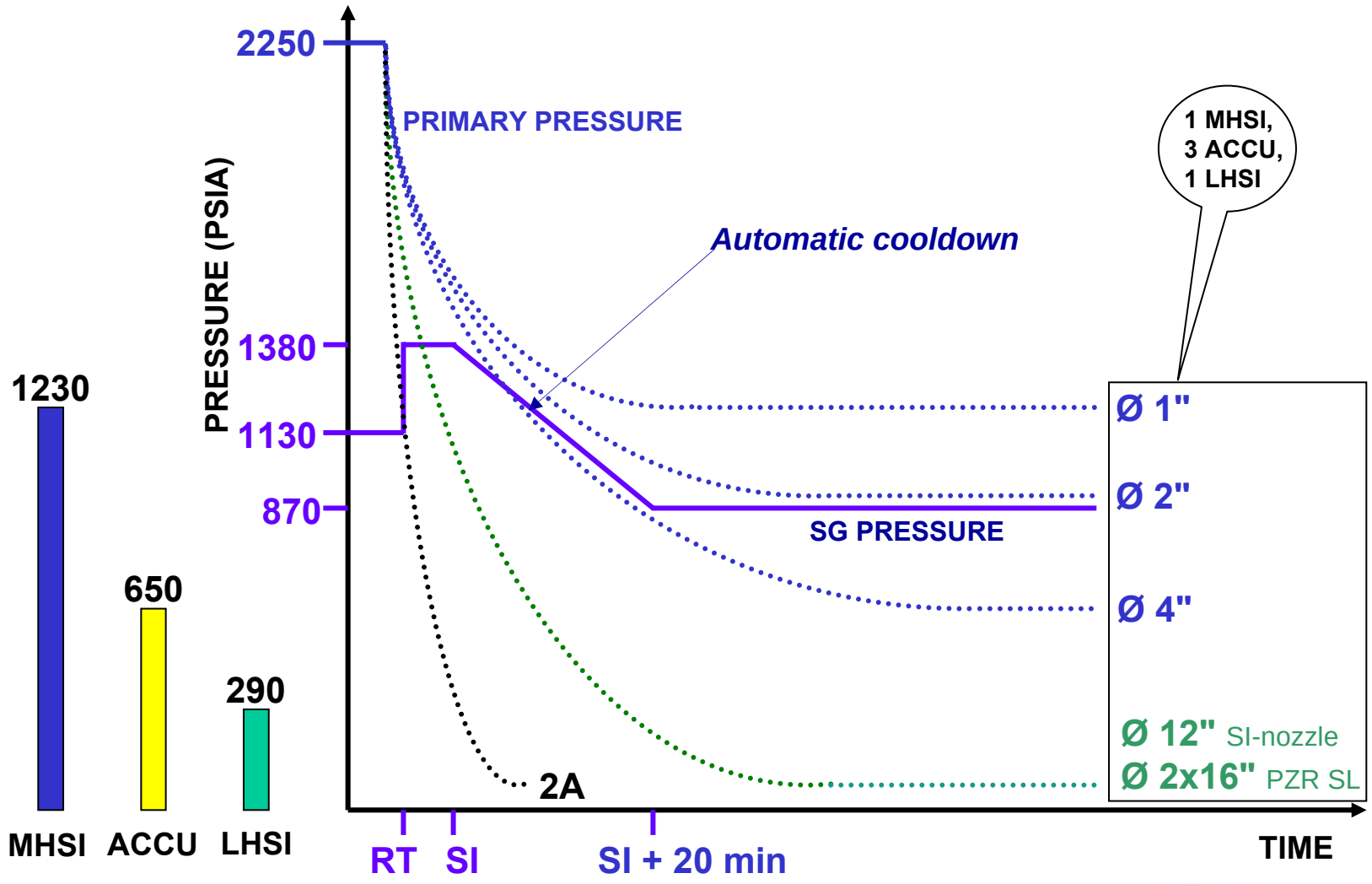

# SBLOCA Mitigation
# Example Two-Inch SBLOCA

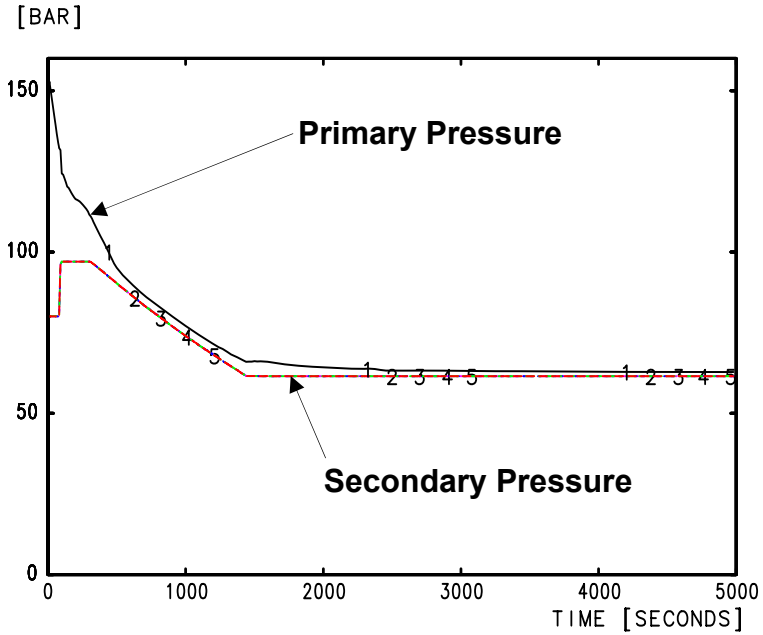


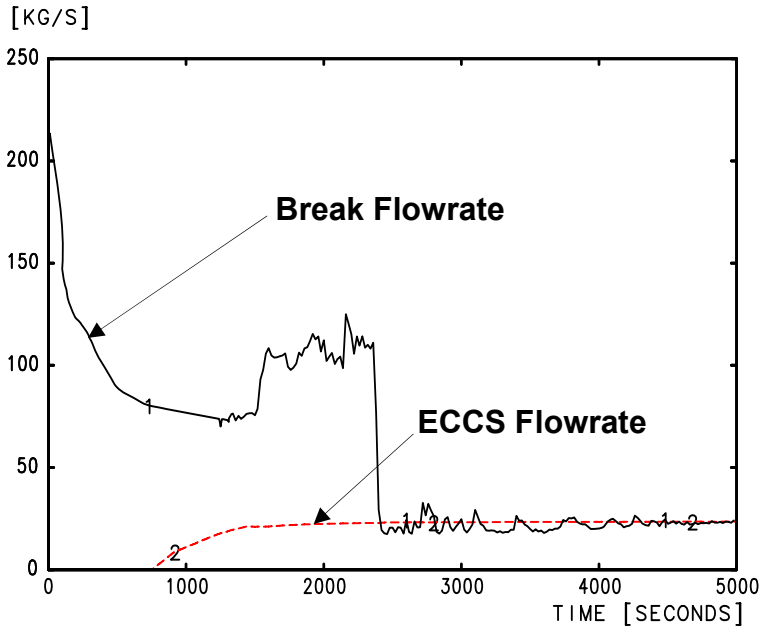

# Summary

# Summary

> Discussed the following unique design features

- Four Trains of Safety Systems
- Incore Neutron Measuring System
- Heavy Neutron Reflector
- CRDM Housing
- Pressurizer Pressure Control
- Main Steam Relief Train
- SGTR & SBLOCA Mitigation

> U.S. EPR design features capture insights gained from the design of OL3 and incorporate world wide operating experience

> Design features are evolutionary

# Containment Building Tendons

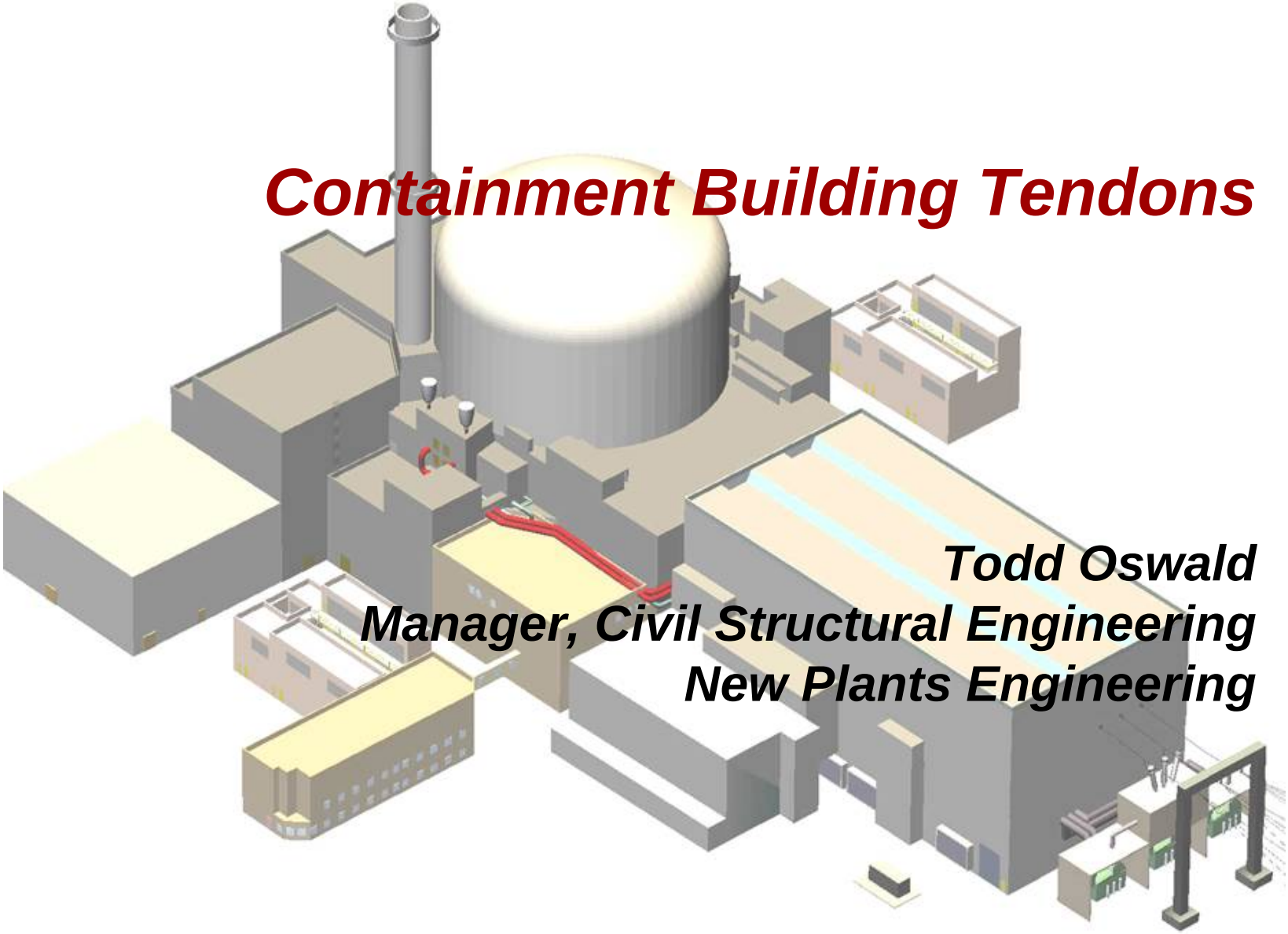


***Todd Oswald***
***Manager, Civil Structural Engineering***
***New Plants Engineering***

# Topics

- Tendon Geometry
- Tendon Components
- Tendon Material Properties
- Governing Documents
  - ASME BPVC Section III Division 2 (Design Code)
    - 2004 (no addenda)
  - Reg Guide 1.107 (Tendon Grout)
    - Revision 1 (February 1977)
  - Reg Guide 1.90 (ISI)
    - Revision 1 (August 1977)

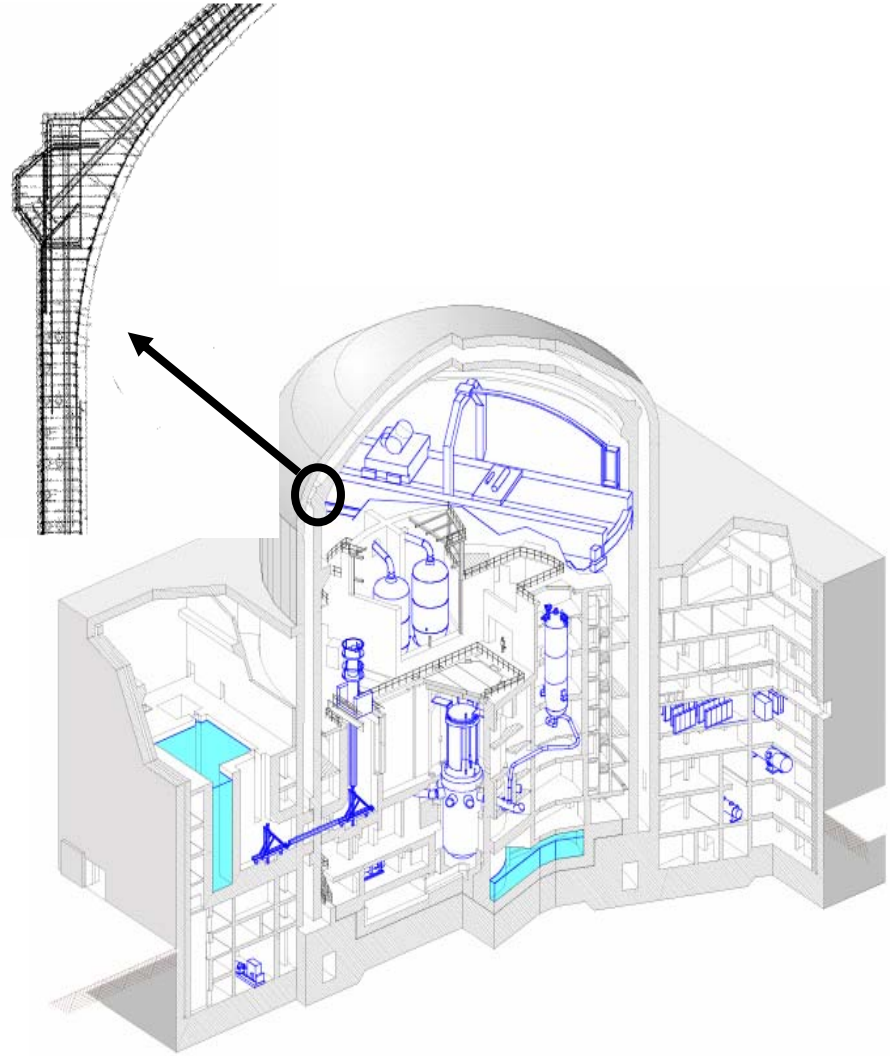

# Geometry

> The U.S. EPR has three geometrical types of tendons

- Hoop tendons
  - 360 degree turn
  - 119 total
    - Two-thirds located at outer face
    - One-third located at inner face
  - Three buttresses
- Gamma tendons ("Vertical + Dome")
  - 104 total
    - Two sets oriented 90º apart
- Vertical tendons
  - 47 total

> Total number of tendons = 270

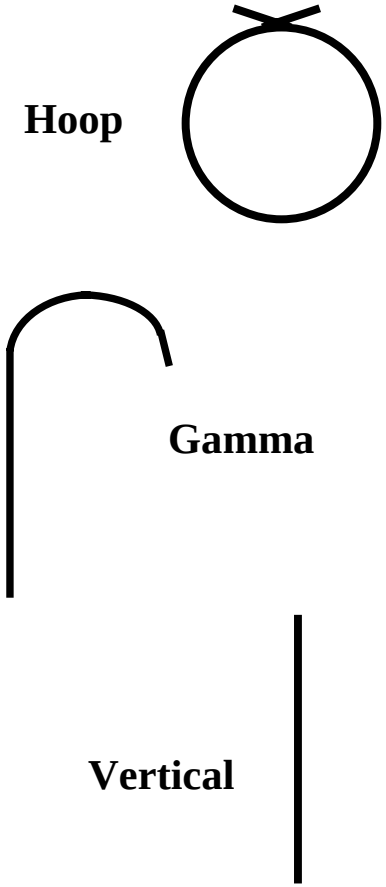

# Components

- C-Range post-tensioning system by Freyssinet LLC
- Tendon size = 55C15
  - 55 strands per tendon
  - 7 wires per strand
- Corrosion protection of tendon achieved by grouting

# Material Properties

| Property | ASTM A416 (Option 1) | EN10138 (Option 2) |
|---|---|---|
| Nominal Tensile Strength | **270 ksi** | **270 ksi** |
| Nominal Strand Diameter | **0.60 in** | **0.63 in**<br><br>**(5% > than A416)** |
| Nominal Tendon Area | **0.217 in$^2$** | **0.233 in$^2$** |
| Nominal Break Strength | **1612 tons / tendon** | **1725 tons / tendon**<br><br>**(7% > than A416)** |
| Currently listed as an "approved tendon material" by ASME BPVC Section III Division 2 | **Yes** | **No**<br><br>**(would require code case)** |

# Governing Documents

> U.S. NRC NUREG-0800, *Standard Review Plan for the Review of Safety Analysis Reports for Nuclear Power Plants*, Section 3.8.1, *Concrete Containment*, April 1996

- **NUREG-0800 indicates that the following are acceptable standards:**
  - **ASME Boiler and Pressure Vessel Code, Section III**
    - ***Rules for Construction of Nuclear Facility Components*, Division 2, *Code for Concrete Reactor Vessels and Containments***
  - **U.S. NRC Regulatory Guide 1.107**
    - ***Qualifications for Cement Grouting for Prestressing Tendons in Containment Structures***
  - **U.S. NRC Regulatory Guide 1.90**
    - ***Inservice Inspection of Prestressed Concrete Containment Structures with Grouted Tendons***

# *Regulatory Evaluation*

- U.S. EPR tendons will meet the requirements of ASME BPVC Section III Division 2, 2004 (no addenda)
- U.S. EPR tendon grout will be in accordance with RG 1.107, Revision 1 (February 1977)
- U.S. EPR tendon ISI will be in accordance with RG 1.90, Revision 1 (February 1977) except as outlined in this presentation

# RG 1.90

- RG 1.90 recommendations are directly applicable for containments having grouted tendons up to an ultimate strength of 1300 tons/tendon

- The U.S. EPR tendons will have an ultimate strength of:
  - 1612 tons/tendon (if ASTM A416 material is used)
  - 1725 tons/tendon (if EN10138 material is used)

# RG 1.90

> **RG 1.90 recommendations are directly applicable for "reference containments"**

| Reference Containment | U.S. EPR Containment |
|---|---|
| sphere-torus dome | sphere-torus dome |
| cylindrical walls up to 43.0 m in diameter | cylindrical walls with average diameter of 48.1 m |
| overall height up to 64.0 m | overall height of 60.8 m |
| contains three groups of tendons (i.e., hoop, vertical, & dome) | contains three groups of tendons (i.e., hoop, vertical, & gamma) |

# RG 1.90

> For containments that differ from the RG 1.90 "reference containment", the ISI program may be developed using the concepts presented in RG 1.90, including the guidelines in Appendix A

***The EPR ISI program outlined in this presentation is based on the concepts presented in RG 1.90, including the guidelines in Appendix A.***

# RG 1.90

## An ISI program should consist of the following items:

1. **Force monitoring of ungrouted tendons (min. 3 of each type)**
   - **Alternative 1A: load cell readings**
   - **Alternative 1B: lift-off readings**
2. **Performance monitoring of grouted tendons**
   - **Alternative 2A: monitoring of pre-stress level by instrumentation**
   - **Alternative 2B: monitoring of containment deformation under pressure**
3. **Visual examination of containment building**

***The U.S. EPR ISI program will meet RG 1.90 recommendations for Item 2 (Alternative 2B) and Item 3. An alternative approach will be used for Item 1.***

# *Justification for Different Approach to Item 1*

- The response of the U.S. EPR containment will be monitored via periodic pressure testing to the containment design pressure
- Quality and Quality Control of materials has increased since RG 1.90 was issued in 1977
  - Grout will be in accordance with the recommendations of RG 1.107
  - Grout / tendon compatibility will be verified by testing prior to selection / installation of materials
  - Tendon and grout material properties will be verified during material receipt
- The U.S. EPR containment will not be exposed to environmental conditions following completion of construction

# RG 1.90

| ISI Schedule for the U.S. EPR | | |
|---|---|---|
| | Test Pressure | |
| Year | U.S. EPR ISI | RG 1.90 |
| **0** | **1.15*$P_D$** | **1.15*$P_D$** |
| **1** | **$P_D$** | **$P_N$** |
| **3** | **$P_D$** | **1.15*$P_D$** |
| **7** | **$P_D$** | **1.15*$P_D$** |
| **Thereafter** | **$P_D$** | **$P_A$** |

*Tendon ISI will be performed during the same periods as Appendix J ILRTs.

Note:

At Year 0, the baseline measurements will be taken following the ISIT, at a test pressure of $P_D$.

$P_N$ = normal operating pressure or zero

$P_D$ = containment design pressure

$P_A$ = maximum calculated DBA pressure

***The U.S. EPR ISI program will meet RG 1.90 recommendations for ISI intervals, with alternative pressures***

# *Justification for Alternative ISI Pressures*

- **An overpressure test (1.15*$P_D$) will be performed at Year 0 as required by ASME Section III Division 2 (i.e., the ISIT). Additional overpressure testing at Year 3 and Year 7 subjects the building to unnecessary strains**

- **Performance of the ISI at the same test pressure during each test interval simplifies comparison of test results.**
  - **Note that during the Year 0 ISI, the baseline measurements will be obtained at a pressure of $P_D$. This allows a direct comparison to subsequent tests performed at $P_D$**

# RG 1.90

> **Number of instrumentation locations to measure containment displacement during pressure testing**

| | |
|---|---|
| Radial displacement | total of 36 locations |
| Vertical displacement | total of 6 locations |
| Dome displacement | total of 13 locations |

***The number of U.S. EPR instrumentation locations will meet RG 1.90 (Appendix A) recommendations***

# Summary / Conclusions

- The design of the U.S. EPR containment tendons will meet the requirements of ASME BPVC Section III Division 2
- The U.S. EPR tendon grout will meet the recommendations of RG 1.107
- The U.S. EPR ISI program will meet the recommendations of RG 1.90, with two alternative approaches justified:
  - The U.S. EPR will not include ungrouted test tendons
  - Following the initial structural integrity test, tendon ISI will be conducted at a test pressure of $P_D$
- The U.S. EPR ISI program will ensure that the tendons are free of widespread degradation, and are functioning as designed

# Containment Analysis

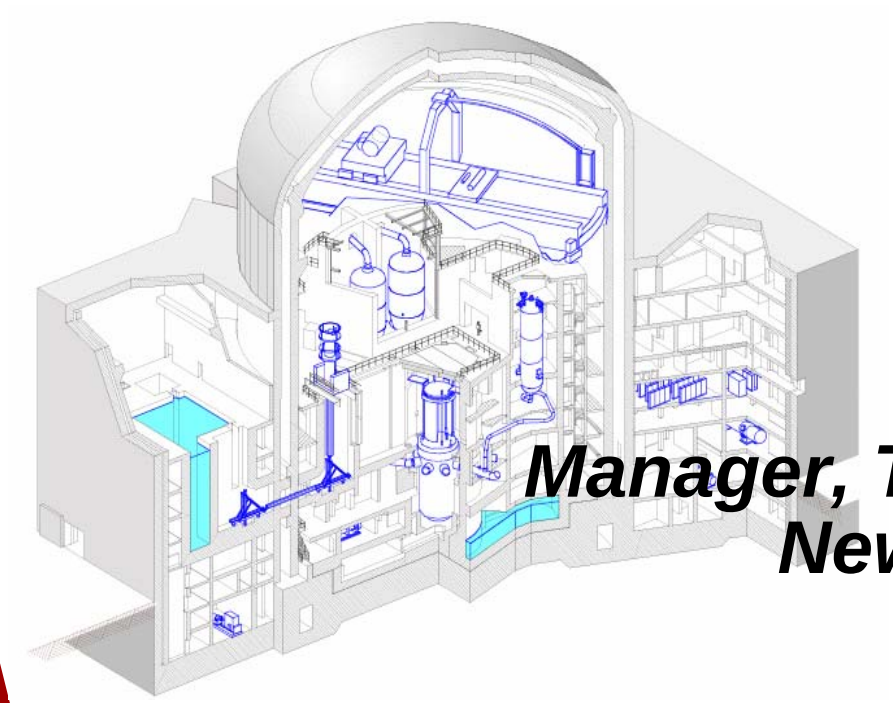


***Marty Parece***
***Manager, Technical Integration***
***New Plants Deployment***

# U.S. EPR Containment Description

- Pre-stressed concrete with steel liner
- Free volume = $2.8 \times 10^6$ $ft^3$
- Design pressure = 62 psig
- Design temperature = 338 °F
- In-Containment Refueling Water Storage Tank (IRWST) contains ~500,000 gallons

*Safety related fan coolers and sprays are not required for U.S. EPR*

AREVA

## 3D View

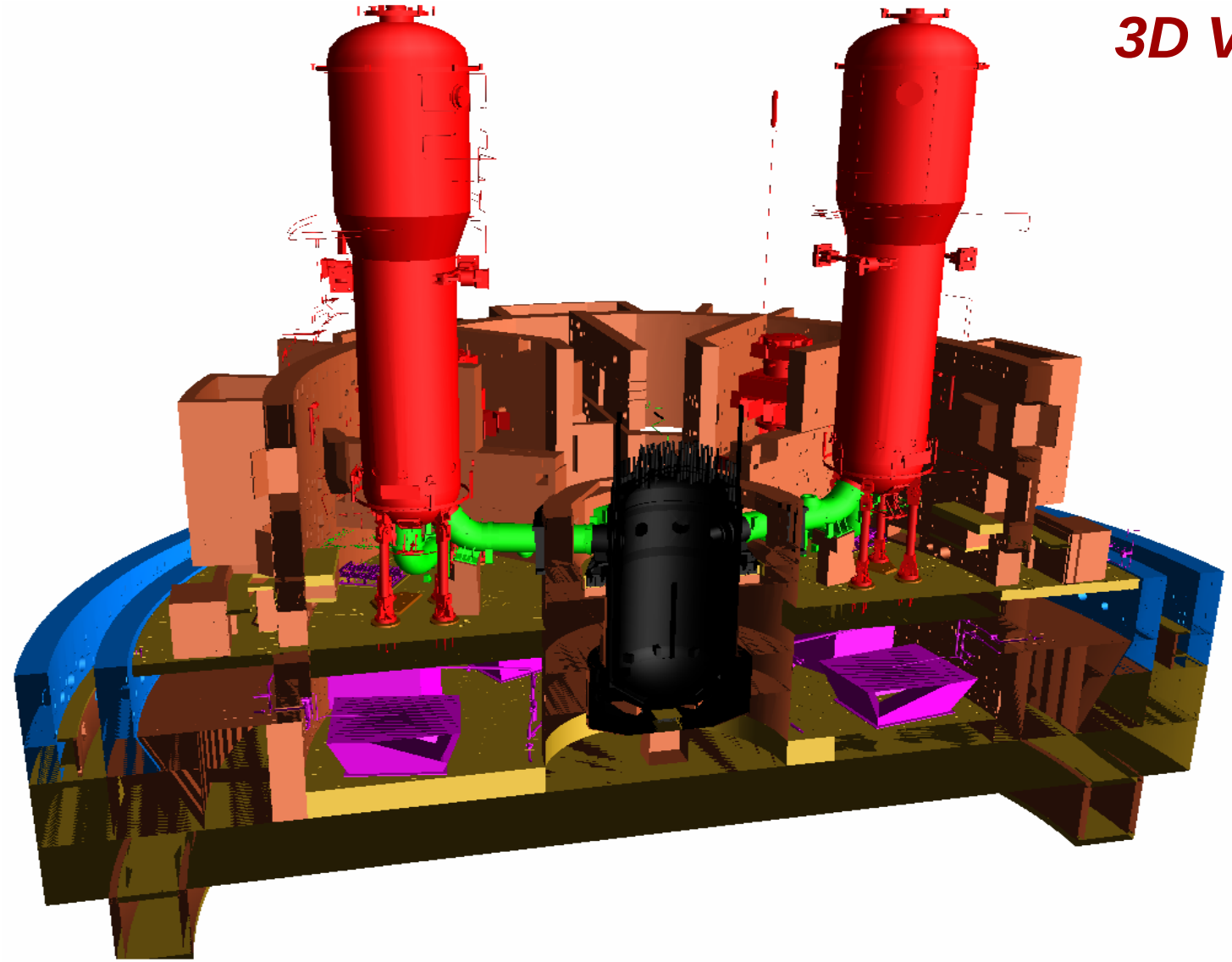

# U.S. EPR Arrangement

EPR

# Analysis Approach

- Mass and Energy (M&E) release rates will be calculated using the approved RELAP5/MOD2-B&W computer code for LOCA and MSLB events
  - BAW-10164(P)(A)
- Containment pressure and temperature will be calculated using the approved GOTHIC computer code for analysis of containment response to postulated pipe ruptures
  - BAW-10252(P)(A)

*Approved methods will be used for calculating containment pressure and temperature*

# Applicable Standards

> **ANS/ANSI 56.4 – Pressure and Temperature Transient Analysis for LWR Containments**

- **This standard provides criteria and guidance for the analysis of postulated pressure and temperature transients for light water reactor (LWR) containments**
- **Specifically, Section 3.2 addresses LOCA M&E analyses and Section 3.3 covers MSLB M&E analyses**

# Applicable Standards

- NUREG-0800 – Standard Review Plan
  - Section 6.2.1.1.A – PWR Dry Containments – discusses acceptance criteria based on GDC's for containment analyses
  - Section 6.2.1.3 – guidance on mass and energy release calculations for LOCA M&E
  - Section 6.2.1.4 – guidance on mass and energy release calculations for MSLB M&E
- NUREG-0588 - Equipment Qualification Of Safety-related Electrical Equipment

***U.S. EPR design is a traditional dry containment analyzed with a standard approach and approved methods***

# LOCA Analysis

> **Phases of a LOCA**

- **Blowdown**
- **Refill / Reflood**
- **Post-Reflood**
- **Long-Term Decay Heat Removal**

# LOCA Analysis

> **Blowdown Phase**

- **Massive release of liquid and steam from the break**
- **Dramatic increase in the partial steam pressure**
- **Water from the break begins to pool on the heavy floor**
- **Condensation on heat structures begins**

# LOCA Analysis

## > Refill/Reflood Phase

- Reduction in the Mass and Energy Release rates
- Accumulator injection and safety injection ensure core recovery
- Energy is removed from the fuel assemblies and transported to containment
- Containment heat structures saturate
- Containment pressure peaks

# LOCA Analysis

> **Refill/Reflood Phase (Continued)**

- **Safety Injection from the broken loop spills on the heavy floor which provides an additional cooling mechanism**
- **Condensation on the pool of water on the heavy floor begins to play a significant role in the event**

# LOCA Analysis

## > Post-Reflood Phase

- Safety injection to hot leg terminates steaming from the vessel
- A fully developed recirculation path exists from the IRWST to the RV (through the RHR Heat Exchangers) out the break and to the heavy floor
- Excess safety injection spills on the heavy floor
- Water leaving the RV will be cooler than the saturation temperature of containment

*Steam condensation on the water on the heavy floor results in containment depressurization*

# IRWST Circulation

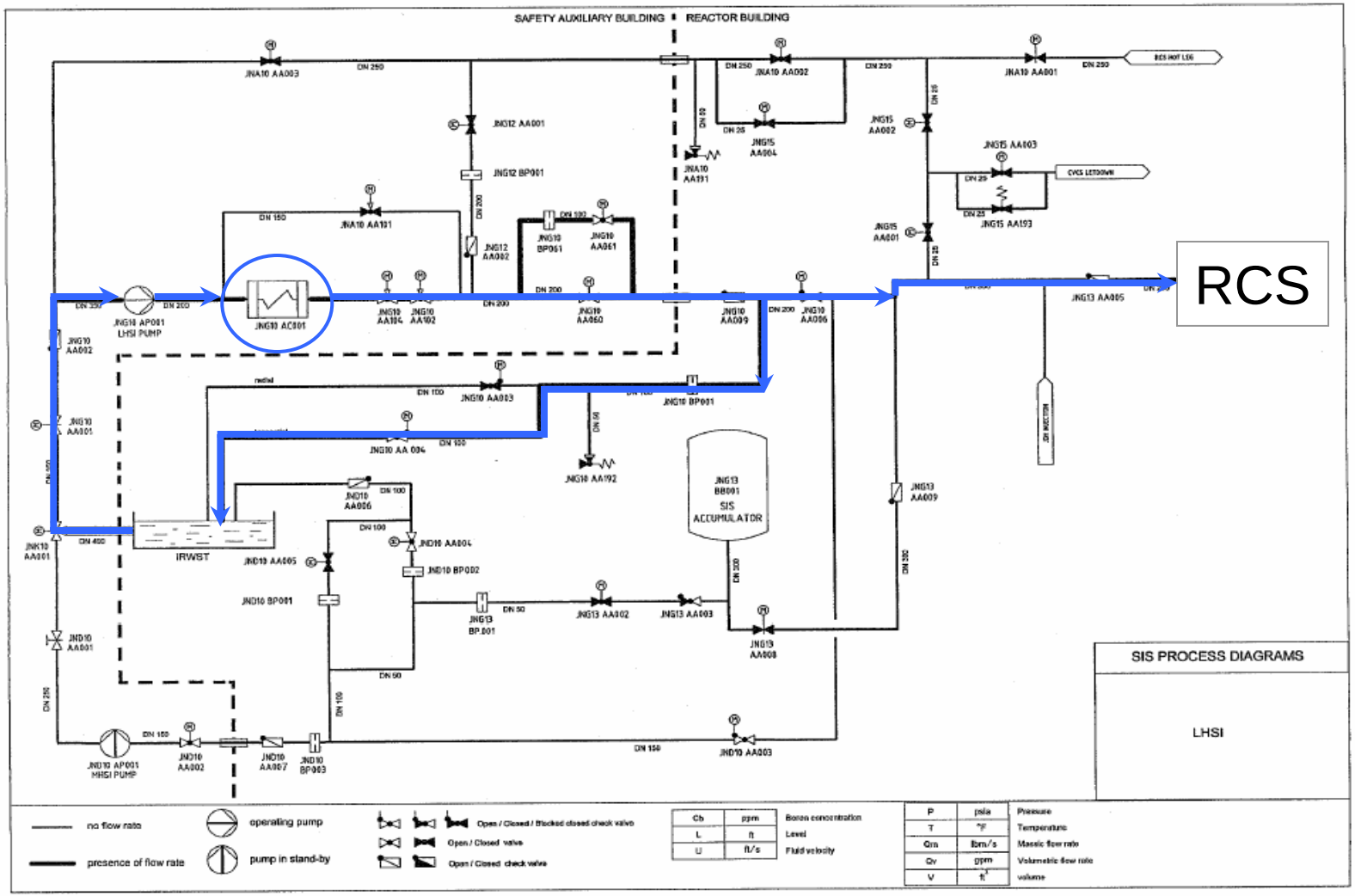

# Principle of Circulation

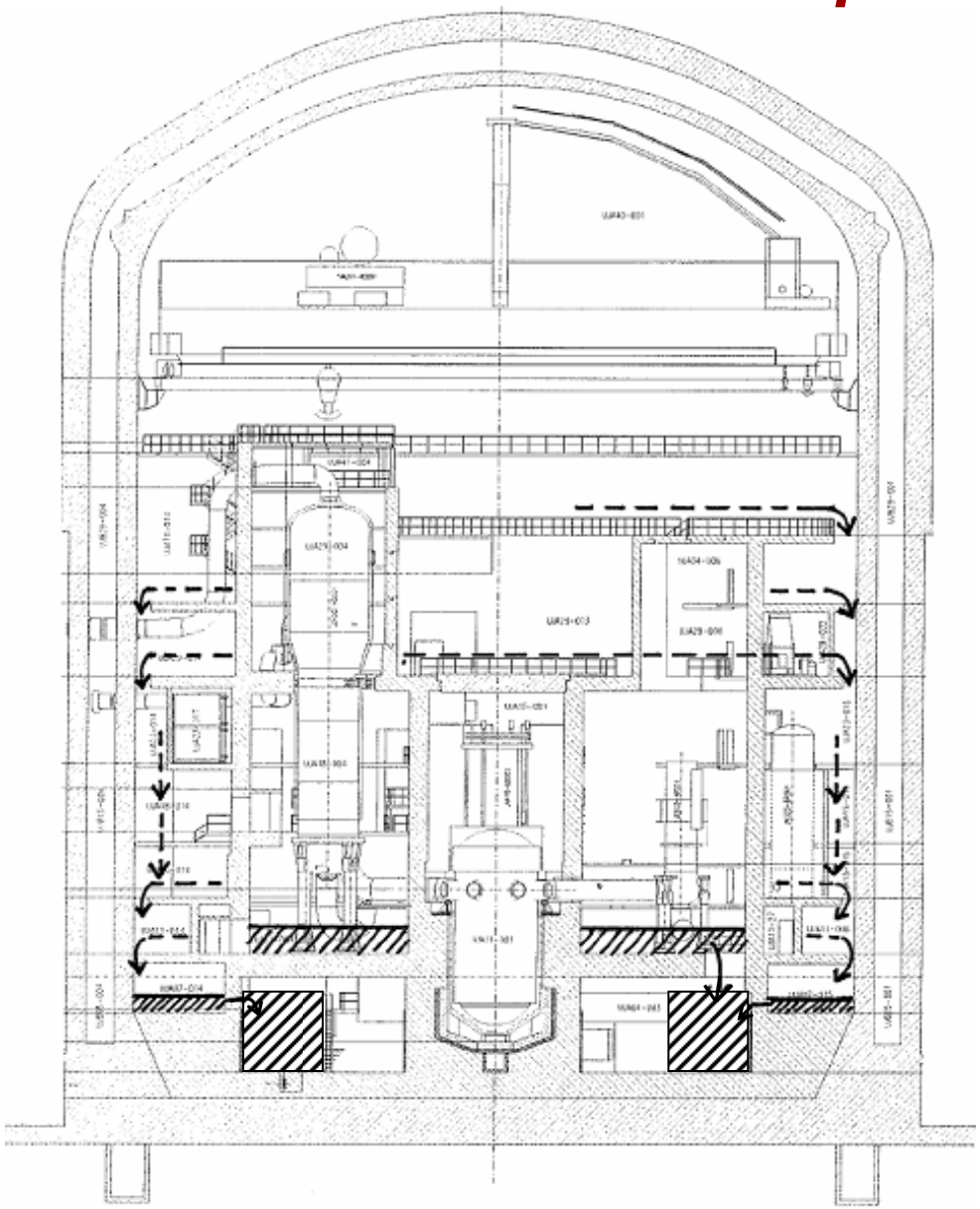

# 3D View

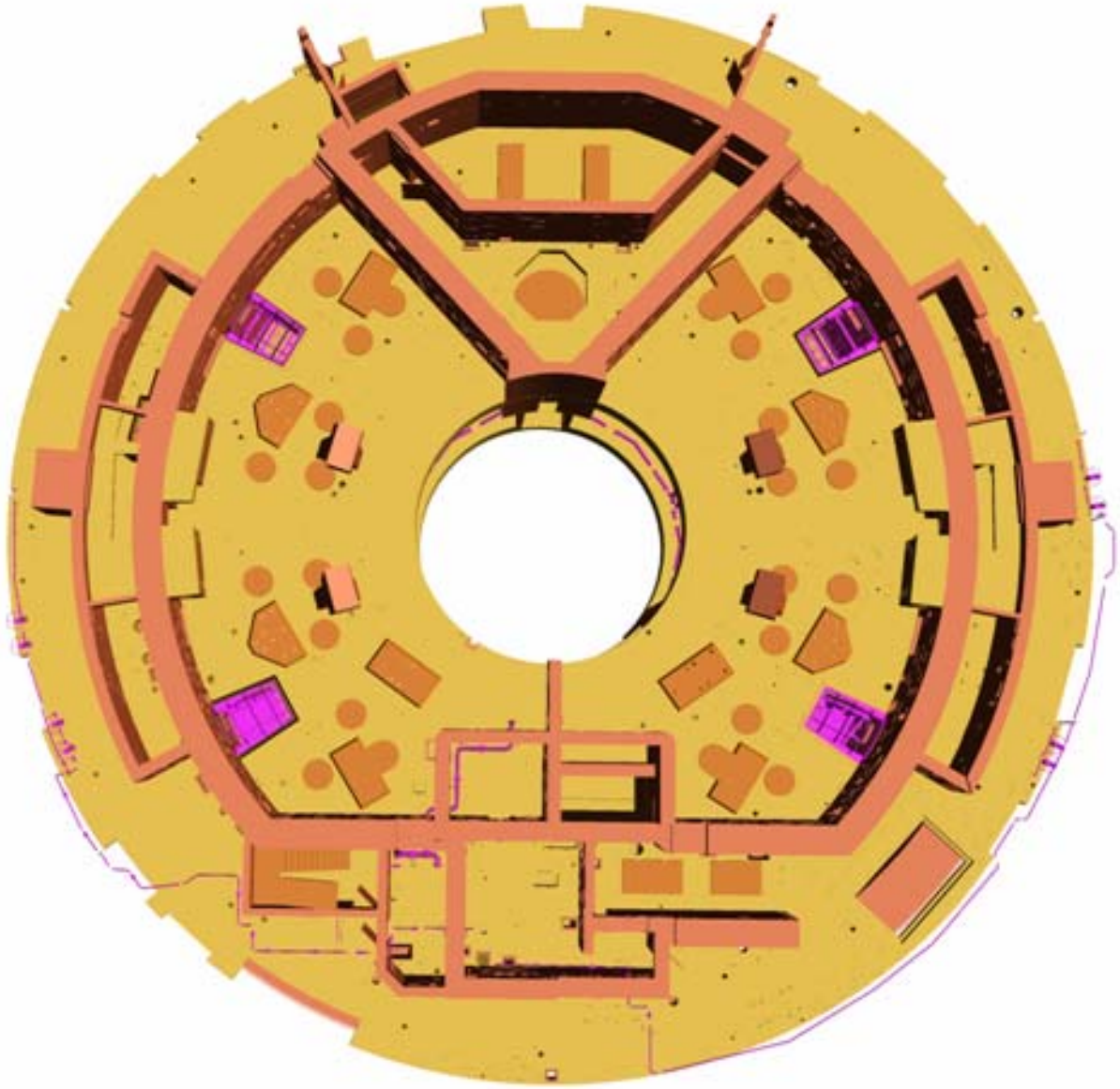

**Top view of the heavy floor**

# *Containment Response to DBA*

> **Preliminary results from a double ended rupture of the hot leg using GOTHIC**

> **RHR system sufficient to reduce pressure to ½ the LOCA peak in < 8 hours**

# Short Term Pressure Response

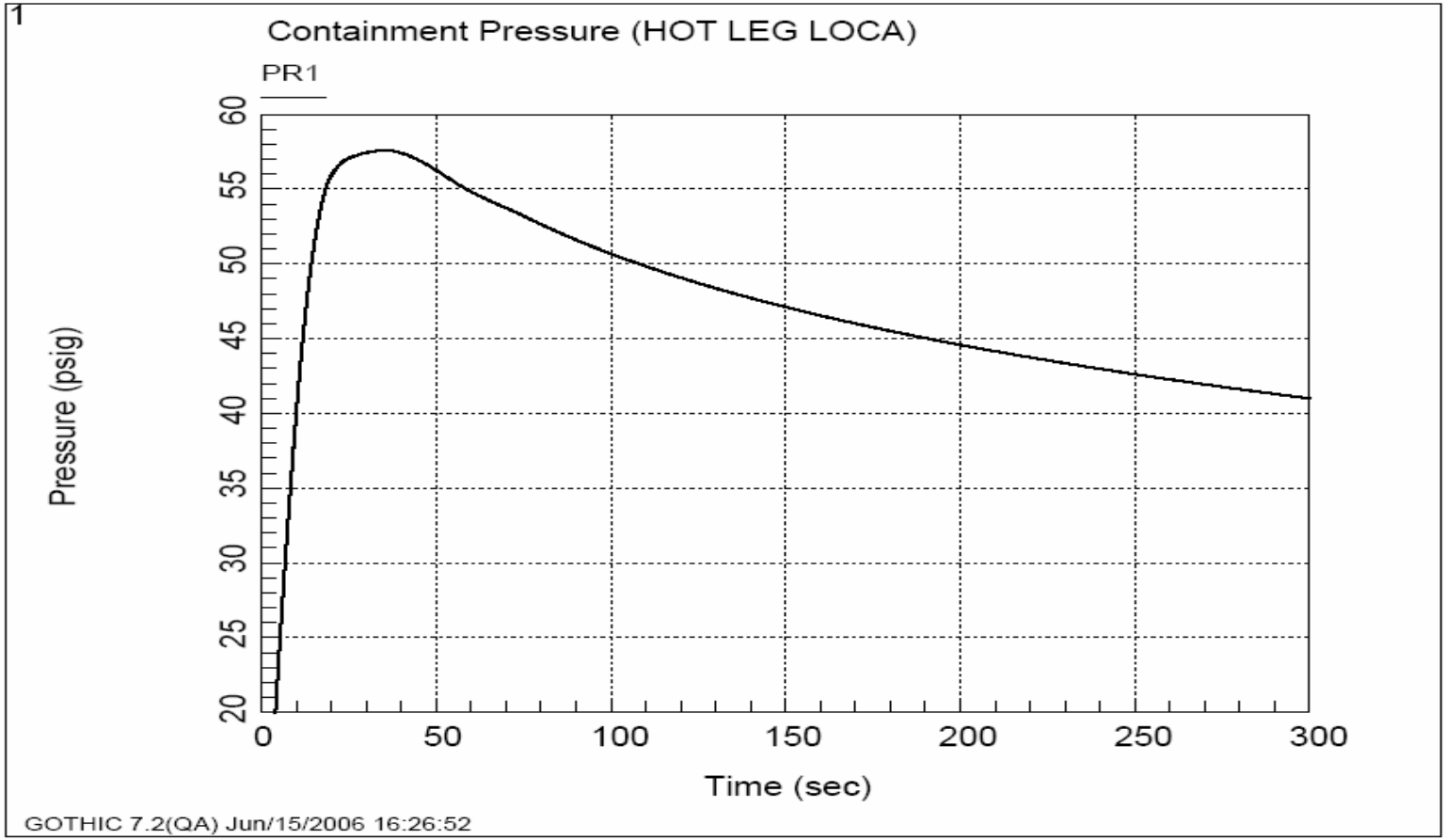

# Long Term Pressure Response

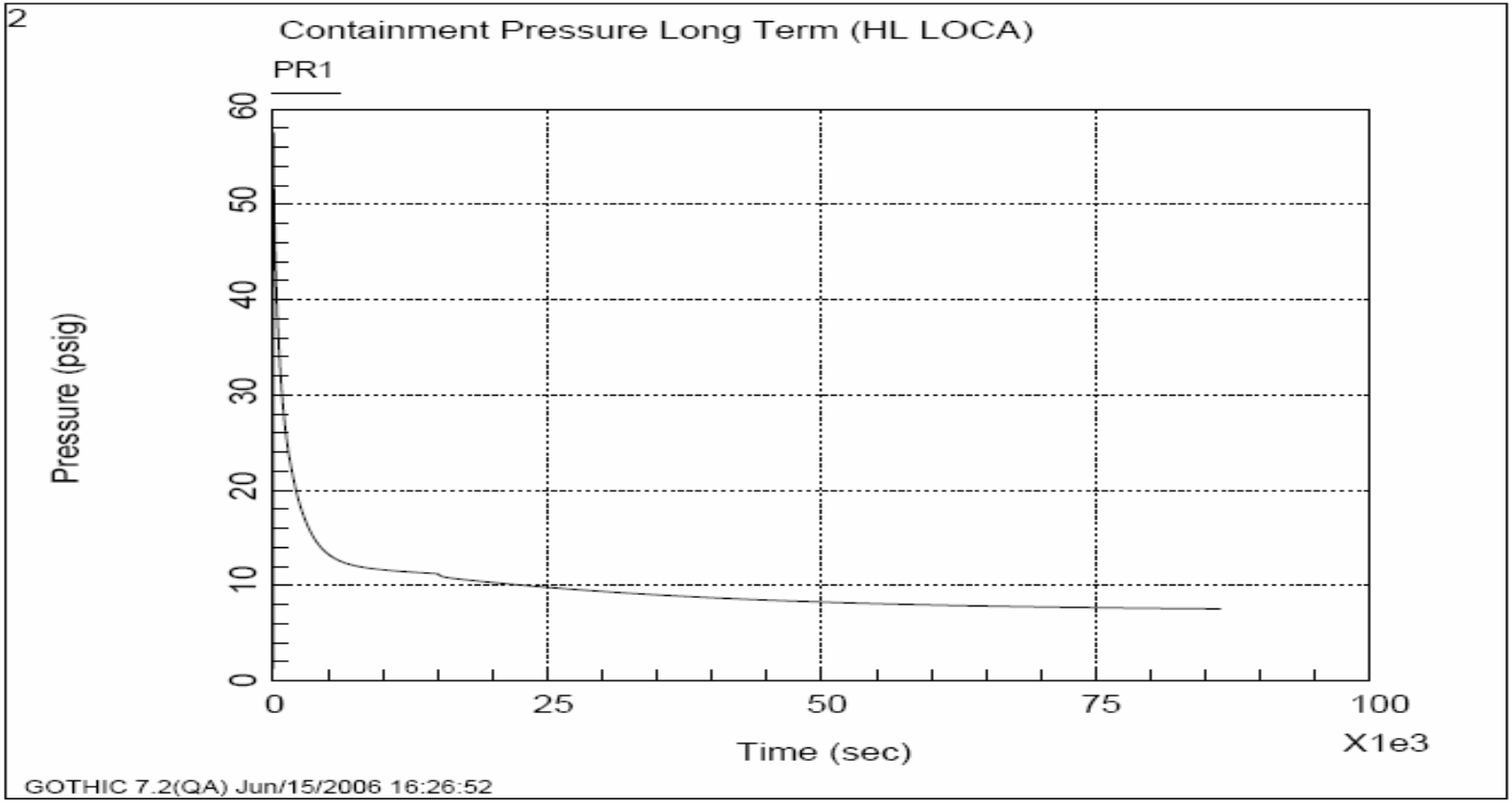

# Summary

- Peak pressure for the U.S. EPR:
  - Meets design limits
  - Mitigated solely through passive heat sinks
- Long-term containment pressure can be reduced to less than half the peak pressure in much less than 24 hours
- Approved methods for evaluating the pressure and temperature response are being used

# Summary and Next Steps

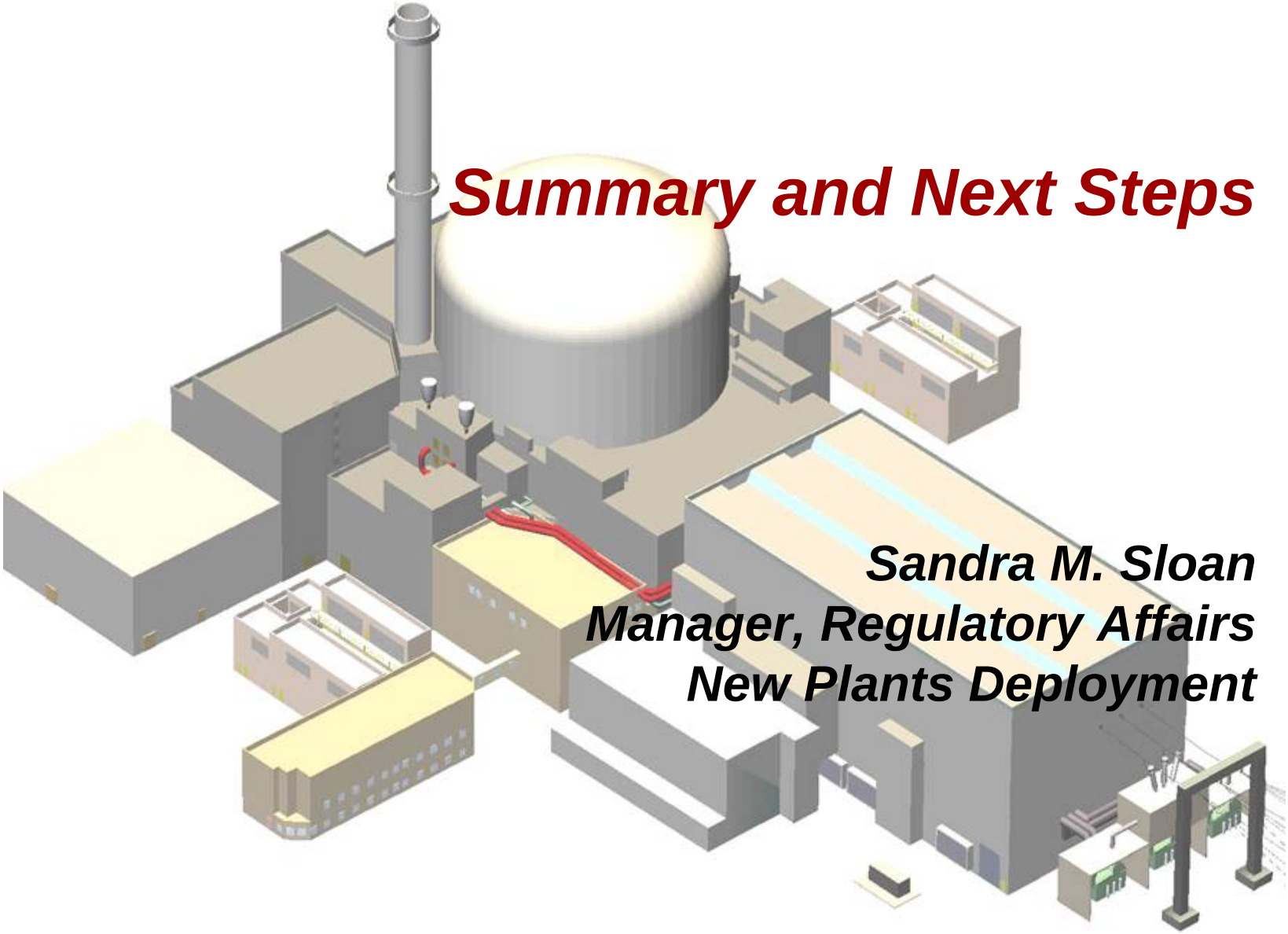

**Sandra M. Sloan**
**Manager, Regulatory Affairs**
**New Plants Deployment**

# Summary

- U.S. EPR design features capture insights gained from the design of OL3 and incorporates world wide operating experience
- Design features are evolutionary
- Containment analysis is robust (100% safety margin)
- Design of containment tendons and tendon grout will meet regulatory recommendations. ISI program will ensure tendons are functioning as designed

# Next Steps

> **Related submittals**

- **Unique Design Features Report in December 2006**
- **Incore and Nuclear Instrumentation Design Report in December 2006**

> **Meetings forthcoming in 2006**

- **Critical Heat Flux Topical Report Pre-Submittal, November 14**
- **Equipment Qualification Program Report Pre-Submittal, November 29**
- **Human Factors Report Pre-Submittal, December 7**

# Abbreviations and Acronyms

| | |
|---|---|
| > ACCU | Accumulator |
| > AMS | Aeroball Measuring System |
| > ASME | American Society of Mechanical Engineers |
| > ASTM | American Society of Testing and Materials |
| > BPVC | Boiler and Pressure Vessel Code |
| > CCWS | Component Cooling Water System |
| > CRDM | Control Rod Drive Mechanism |
| > CVCS | Chemical and Volume Control System |
| > DBA | Design Basis Accident |
| > DNBR | Departure from Nucleate Boiling Ratio |
| > ECCS | Emergency Core Cooling System |
| > EDG | Emergency Diesel Generator |
| > EFPD | Effective Full Power Day |
| > EFW | Emergency Feed Water System |
| > EPR | Evolutionary Power Reactor |
| > EPSS | Emergency Power Supply System |
| > EPW | Explosive Pressure Wave |
| > ESWS | Essential Service Water System |
| > GDC | General Design Criteria |
| > I&C | Instrumentation and Controls |
| > IRWST | In-containment Refueling Water Storage Tank |
| > ISI | In-Service Inspection |

# Abbreviations and Acronyms (Continued)

| | |
|---|---|
| > ISIT | Initial Structural Integrity Test |
| > ksi | kips per square inch |
| > LCO | Limiting Condition for Operation |
| > LHSI | Low Head Safety Injection |
| > LLC | Limited Liability Company |
| > LOCA | Loss of Coolant Accident |
| > LOOP | Loss of Offsite Power |
| > LWR | Light Water Reactor |
| > M&E | Mass & Energy |
| > MHSI | Medium Head Safety Injection |
| > MSIV | Main Steam Isolation Valve |
| > MSLB | Main Steam Line Break |
| > MSRIV | Main Steam Relief Isolation Valve |
| > MSRT | Main Steam Relief Train |
| > MSRV | Main Steam Relief Valve |
| > MSSV | Main Steam Safety Valve |
| > PCT | Peak Cladding Temperature |
| > PDDS | Power Density Detector System |
| > PWR | Pressurized Water Reactor |
| > PZR | Pressurizer |
| > RCCA | Rod Control Cluster Assembly |

# Abbreviations and Acronyms (Continued)

| | |
|---|---|
| > RCP | Reactor Coolant Pump |
| > RCS | Reactor Coolant System |
| > RHR | Residual Heat Removal |
| > RHRS | Residual Heat Removal System |
| > RPV | Reactor Pressure Vessel |
| > RV | Reactor Vessel |
| > SBLOCA | Small Break Loss of Coolant Accident |
| > SBO | Station Blackout |
| > SG | Steam Generator |
| > SGTR | Steam Generator Tube Rupture |
| > SI | Safety Injection |
| > SIS | Safety Injection System |
| > SPND | Self Powered Neutron Detectors |
| > SSE | Safe Shutdown Earthquake |
| > UPS | Uninterruptible Power Supply |
| > UT | Ultrasonic Testing |
| > WULCV | Warm Up Line Control Valve |
| > WULIV | Warm Up Line Isolation Valve |