ENCLOSURE 4

LICENSING REPORT ON THE WET FUEL STORAGE CAPACITY EXPANSION AT COOPER NUCLEAR STATION

COOPER NUCLEAR STATION
DOCKET NO. 50-298, DPR-46

NON-PROPRIETARY VERSION

HOLTEC INTERNATIONAL

Holtec Center, 555 Lincoln Drive West, Marlton, NJ 08053
Telephone (856) 797-0900
Fax (856) 797-0909

Licensing Report
on the
Wet Fuel Storage Capacity Expansion
at
Cooper Nuclear Station

Docket No. 50-298

(Nebraska Public Power District)
by

Holtec International
555 Lincoln Drive West
Marlton, New Jersey 08053

Holtec Project No. 1406
Holtec Report No. 2043224

Report Category: Safety Related

This document version has all proprietary information removed and has replaced those sections, figures, and tables with highlighting and/or notes to designate the removal of such information. This document is to be used only in connection with the performance of work by Holtec International or its designated subcontractors. Reproduction, publication or presentation, in whole or in part, for any other purpose by any party other than the Client is expressly forbidden.

HOLTEC INTERNATIONAL

DOCUMENT NUMBER: ___HI-2043224____ PROJECT NUMBER: ___1406____

DOCUMENT ISSUANCE AND REVISION STATUS

DOCUMENT NAME: __Spent Fuel Storage Expansion_____ __at Cooper Nuclear Station_____

DOCUMENT CATEGORY: ☐ GENERIC ☒ PROJECT SPECIFIC

No.	Document Portion††	REVISION No. ___1____			REVISION No. ___2____			REVISION No. _____		
		Author's Initials	Date Approved	VIR #	Author's Initials	Date Approved	VIR #	Author's Initials	Date Approved	VIR #
1.	CHAP01	AK	4/7/06	13425						
2.	CHAP02	AK	4/7/06	782182						
3.	CHAP03	AK	4/7/06	463538						
4.	CHAP04	SPA	4/7/06	133355						
5.	CHAP05	ER	4/7/06	389535						
6.	CHAP06	AK	4/7/06	174160						
7.	CHAP07	JZ	4/7/06	51519						
8.	CHAP08	RW	4/7/06	762661						
9.	CHAP09	ERD	4/7/06	470721						
10.	CHAP10	AK	4/7/06	901556						
11.	CHAP11	AK	4/7/06	853876						
12.										

†† Chapter or section number.

HOLTEC INTERNATIONAL

DOCUMENT NUMBER: ___HI-2043224____ PROJECT NUMBER: ___1406____

DOCUMENT CATEGORIZATION

In accordance with the Holtec Quality Assurance Manual and associated Holtec Quality Procedures (HQPs), this document is categorized as a:

- ☐ Calculation Package[3] (Per HQP 3.2)
- ☒ Technical Report (Per HQP 3.2)(Such as a Licensing Report)
- ☐ Design Criterion Document (Per HQP 3.4)
- ☐ Design Specification (Per HQP 3.4)
- ☐ Other (Specify):

DOCUMENT FORMATTING

The formatting of the contents of this document is in accordance with the instructions of HQP 3.2 or 3.4 except as noted below:

DECLARATION OF PROPRIETARY STATUS

☐ Nonproprietary ☒ Holtec Proprietary ☐ Privileged Intellectual Property (PIP)

Documents labeled Privileged Intellectual Property contain extremely valuable intellectual/commercial property of Holtec International. They cannot be released to external organizations or entities without explicit approval of a company corporate officer. The recipient of Holtec's proprietary or Top Secret document bears full and undivided responsibility to safeguard it against loss or duplication.

Notes:

1. This document has been subjected to review, verification and approval process set forth in the Holtec Quality Assurance Procedures Manual. Password controlled signatures of Holtec personnel who participated in the preparation, review, and QA validation of this document are saved in the N-drive of the company's network. The Validation Identifier Record (VIR) number is a random number that is generated by the computer after the specific revision of this document has undergone the required review and approval process, and the appropriate Holtec personnel have recorded their password-controlled electronic concurrence to the document.

2. A revision to this document will be ordered by the Project Manager and carried out if any of its contents is materially affected during evolution of this project. The determination as to the need for revision will be made by the Project Manager with input from others, as deemed necessary by him.

3. Revisions to this document may be made by adding supplements to the document and replacing the "Table of Contents", this page and the "Revision Log".

SUMMARY OF REVISIONS
Revision 0 contains the following pages:
Revision 1 Revised all chapters to incorporate NPPD review comments.

TABLE OF CONTENTS

1.0	Overview of the Project	1-1
1.1	Introduction	1-1
1.2	The Imperative for Reracking	1-1
1.3	Report Content Summary	1-4
1.4	References	1-7
2.0	Priincipal Design Criteria and Applicable Codes	2-1
2.1	Principal Design Criteria	2-1
2.2	Reference Codes and Standards	2-4
2.3	References	2-12
3.0	Mechanical Design and Material Considerations	3-1
3.1	Mechanical Design Considerations	3-1
3.1.1	Overview of Rack's Mechanical Design	3-1
3.1.2	Mechanical Design Objectives	3-2
3.1.3	Design Characteristics of CNS Rack Modules	3-2
3.2	Material Considerations	3-9
3.2.1	Structural Materials	3-9
3.2.2	Neutron Absorber Material	3-10
3.2.3	Characteristics of Metamic	3-11
3.3	References	3-13
4.0	Criticality Safety Analyses	4-1
4.1	Introduction	4-1
4.2	Summary and Conclusions	4-1
4.3	Acceptance Criteria	4-2
4.4	Methodology	4-2
4.5	Analysis Calculations	4-3
4.5.1	Tolerances and Uncertainties	4-3
4.5.2	Maximum Reactivity Determination	4-4
4.5.3	Minimum Gadolinia Requirements	4-4
4.5.4	Rack Interfaces	4-4
4.5.5	Part-Length Fuel Rods	4-5
4.6	Abnormal and Accident Conditions	4-5
4.6.1	Eccentric Assembly Positioning	4-5
4.6.2	Removal of Flow Channel	4-5
4.6.3	Reactivity Effects of Temperature	4-6
4.6.4	Mis-loaded Fuel Assembly	4-6
4.6.5	Seismic Displacement of Rack Module	4-7
4.7	References	4-8
5.0	Thermal-Hydraulic Considerations	5-1
5.1	Introduction	5-1
5.2	Calculation Methodologies	5-2
5.2.1	Bulk Temperature Evaluations	5-2

5.2.2 Local Temperature Evaluations 5-5
5.3 Allowable Temperatures 5-9
5.4 Input Data and Assumptions 5-9
5.5 Evaluation Results 5-14
5.5.1 Bulk Temperature Evaluations 5-17
5.5.2 Local Temperature Evaluations 5-19
5.6 References 5-20

6.0 Rack Structural Integrity Considerations 6-1
6.1 Introduction 6-1
6.2 Structural Characteristics of the New Spent Fuel Racks 6-1
6.3 Applicable Load Combinations 6-2
6.4 Synthetic Time-Histories 6-3
6.5 Analysis Methodology 6-4
6.5.1 Overview 6-4
6.5.2 Rack Dynamic Model 6-8
6.5.3 Governing Equations of Motion 6-11
6.6 Acceptance Criteria 6-12
6.6.1 Kinematic and Stress Acceptance Criteria 6-12
6.6.2 Dimensionless Stress factors 6-15
6.6.3 Allowable g-Load on the Stored Fuel 6-15
6.7 Key Input Data, Dynamic Simulations, and Results 6-16
6.7.1 Key Input Data 6-16
6.7.2 Material Properties 6-17
6.7.3 Dynamic Simulations Description 6-18
6.8 Margins Against Kinematic and Stress Limits 6-19
6.8.1 Satisfaction of Fuel/Cell Wall Impact Acceptance Criteria 6-19
6.9 Conclusion 6-22
6.10 References 6-22

7.0 Mechanical Accidents 7-1
7.1 Introduction 7-1
7.2 Description of Mechanical Accidents 7-1
7.3 Modeling Assumptions 7-3
7.4 Incident Impact Velocity 7-3
7.5 Mathematical Model 7-5
7.6 Results 7-6
7.6.1 Shallow Drop Event 7-6
7.6.2 Deep Drop Event 7-6
7.6.3 Stuck Fuel Event 7-7
7.7 Conclusion 7-7
7.8 References 7-7

8.0 Fuel Pool Structural Integrity Evaluation 8-1
8.1 Introduction 8-1
8.2 Finite Element model Description 8-1
8.3 Material Properties 8-2
8.4 Analysis Procedures 8-3

8.5 Loads and Load Combinations 8-4
8.5.1 Static Loading (D = Dead Loads) 8-4
8.5.2 Live Loading (L) 8-4
8.5.3 Seismic (E = OBE; E' = SSE) 8-5
8.5.4 Thermal Loading 8-5
8.6 Results of SFP Floor Evaluation 8-7
8.7 Conclusions 8-7
8.8 References 8-8

9.0 Radiological Evaluation 9-1
9.1 Fuel Handling Accident 9-1
9.2 Solid Radwaste 9-1
9.3 Gaseous Release 9-1
9.4 Personnel Exposures 9-1
9.5 Anticipated Exposures During Storage Expansion 9-3

10.0 Implementation Considerations 10-1
10.1 Heavy Loads Consideration for the Proposed Pool Capacity Expansions 10-1
10.2 Implementation 10-8
10.2.1 Implementation Procedures 10-8
10.2.2 Installation of New Racks 10-10
10.3 Supporting Process 10-11
10.3.1 Spent Fuel Pool Cooling 10-11
10.3.2 Purification 10-12
10.3.3 Fuel Shuffling 10-12
10.3.4 Removal of Equipment 10-12
10.4 Safety, Health Physics, and ALARA Methods 10-12
10.5 Radwaste Material Control 10-14
10.6 References 10-14

11.0 Environmental Economic Considerations 11-1
11.1 Environmental Considerations 11-1
11.2 Economic Considerations 11-3
11.3 References 11-5

Appendices	**Title**	**No of Pages**
11.A	Summary of Required Work Effort for Dry Storage Implementation at CNS	12

Figures

1.2.1 Phase I – Fuel Cask Area Rack A Layout
1.2.2 Phase II - Fuel Cask Area Rack B Layout

3.1.1 Pictorial View of a Cooper BWR Rack Module
3.1.2 Shear Pad for BWR Racks

4.1 Storage Cell Calculational Model (MCNP)
4.2 Correlation of k-inf (SCCG) and k-infinite in the Storage Rack
4.3 Variation in k-inf (SCCG) with Burnup without Gd_2O_3 for 4.90% Fuel
4.4 Variation in Rack Reactivity with Burnup for 4.90% Fuel with Gd_2O_3

5.2.1 CFD Model Isometric View
5.8.1 Time Varying Decay Heat Portion Profile – Entire Core
5.8.2 Not Used
5.8.3 CFD Model with Converged Temperature Contours

6.5.1 Schematic of the Dynamic Model of a Single Rack Module Used in DYNARACK
6.5.2 Fuel-to-Rack Gap/Impact Elements at Level of Rattling Mass

7.2.1 Finite Element Model of the "Shallow" Drop Event
7.2.2 Schematics of the "Deep" Drop Scenario 1
7.2.3 Schematics of the "Deep" Drop Scenario 2
7.6.1 "Shallow" Drop: Maximum Plastic Strain
7.6.2 "Deep" Drop Scenario 1: Maximum Vertical Displacement
7.6.3 Rack Drop Scenario 2: Maximum Plastic Strain-Liner
7.6.4 Rack Drop Scenario 2: Local Damage in the Slab-Concrete Cracks

8.1.1 Plan View of CNS Spent Fuel Pool

Chapter 1: Overview of the Project

1.1 Introduction

Nebraska Public Power District (NPPD) is the owner and operator of the Cooper Nuclear Station (CNS), a single unit BWR located approximately 2½ miles south of the town of Brownville, on the west bank of the Missouri River in Nemaha County, Nebraska. CNS features a BWR/4 boiling water reactor nuclear steam supply system with a conventional fuel pool situated in the Reactor Building. The reactor has a licensed rated power level of 2381 MWt (approximately 800 MWe). Relevant introductory data on Cooper Nuclear Station is provided in Table 1.1.1.

Table 1.1.1
Cooper Nuclear Station Data
Docket No. 50-298

Reactor Supplier	General Electric
Turbine-Generator Manufacturer	Westinghouse
Architect/Engineer	Burns and Roe
Constructor	Burns and Roe
Applied to NRC	July 27, 1967
Construction Permit	June 5, 1968
Commercial Operation	July 1, 1974
No. of Fuel Assemblies in the Reactor Core	548

CNS uses a Spent Fuel Pool (SFP) for storage of irradiated nuclear fuel in order to maintain a subcritical array, remove decay heat and provide radiation shielding. The SFP is currently licensed for a maximum of 2,366 fuel assemblies. The storage locations are arranged in thirteen nearly identical rack modules, each module containing a 13 by 14 storage cell array.

1.2 The Imperative for Reracking

Table 1.2.1 shows the historical and projected discharge data per offload and remaining storage capacity in the spent fuel pool. It is evident from Table 1.2.1 that CNS currently does not have full-core reserve (i.e., the SFP storage capacity required to offload the entire 548 assemblies in the reactor core). Full core offload capacity was lost following Cycle 22 in January 2005.

Table 1.2.1 Historic and Projected Fuel Offload Schedule				
End-of-Cycle Number	**Offload Date**	**Discharged Assemblies**	**Cumulative Discharge Total †**	**Remaining Empty Storage Cells**
Previously Discharged Assemblies				
10	10-1986	60	60	2306
11	03-1988	124	184	2182
12	04-1989	104	288	2078
13	03-1990	168	456	1910
14	10-1991	164	620	1746
15	03-1993	184	804	1562
16	10-1995	152	956	1410
17	03-1997	164	1120	1246
18	10-1998	160	1280	1086
19	03-2000	136	1416	950
20	11-2001	120	1536	830
21	03-2003	128	1664	702
22	01-2005	164	1828	538
Anticipated Discharges ††				
23	10-2006	132	1960	
24	04-2008	132	2092	
25	10-2009	132	2224	
26	04-2011	160	2384	
27	10-2012	160	2544	

In order to increase the wet storage capacity in the pool to maintain a prudent reserve, NPPD plans to utilize the open space adjacent to the shipping cask area (CSA) (henceforth referred to as the CSA region) for installation of a new storage rack, with the shipping cask area itself reserved for installation of a contingency storage rack. This approach will realize an incremental increase in the SFP storage capacity, which has ample precedents in the nuclear power industry. FPL's Turkey Point, St. Lucie, and PG&E's Diablo Canyon are among the recent examples of sites that have adopted this capacity

† Note: All assemblies prior to Cycle 10, and some assemblies from Cycle 10, have been shipped offsite to the General Electric Morris facility.
†† Based on 18 month operating cycles.

of a contingency storage rack. This approach will realize an incremental increase in the SFP storage capacity, which has ample precedents in the nuclear power industry. FPL's Turkey Point, St. Lucie, and PG&E's Diablo Canyon are among the recent examples of sites that have adopted this capacity enhancement strategy. For CNS, the technical problem is, relatively speaking, less challenging than the above-mentioned plants because the CSA and adjacent open space is integral to the pool and the pool liner is continuous through the pool (no change in elevation). The CSA and adjacent open space, however, contains portions of the seismic restraint system for the existing rack modules and cask restraint systems. A minor modification of one beam* in the CSA region is all that is needed to create the space for two new rack modules, one in the CSA named Rack B and the other north of rack B named as Rack A.

To maintain as much open space in the CSA region for as long as possible, NPPD intends to expand spent fuel storage capacity in two phases. Phase 1 consists of adding a new rack "A" (9x13 cell array) north of CSA of the SFP in 2007. The SFP configuration subsequent to the completion of Phase 1 is shown in Figure 1.2.1. This proposed modification would increase the licensed storage capacity from the current 2,366 storage cells to 2,483 storage cells. If necessary, in Phase 2 a second rack "B" (14x13 cell non-rectangular array) will be installed in the CSA of the SFP. This second rack will be placed in the SFP only as a contingency action in the event that a full core offload is actually needed. This second contingency rack will increase the SFP licensed capacity by 168 storage cells, which will bring the total SFP storage capacity to 2,651 assemblies. The SFP configuration subsequent to the completion of Phase 2 is shown in Figure 1.2.2.

Racks "A" and "B", installed in the two phases mentioned above, will increase the available wet storage capacity by 285 cells, thus enabling NPPD to maintain a prudent reserve until 2011. Table 1.2.2 indicates the adjusted remaining empty storage cells based on the new licensed storage cell capacity. In this available period, as discussed in Chapter 11 herein, NPPD intends to establish an on-site dry storage facility.

* The beam to be modified is identified in CNS Dwg No: 4288, "Structural Reactor Building I.F.300 Cask Support Plan, Sect & Details", Rev 1.

Table 1.2.2 Projected Fuel Offload Schedule				
End-of-Cycle Number	**Offload Date**	**Discharged Assemblies**	**Cumulative Discharge Total †**	**Remaining Empty Storage Cells**
Anticipated Discharges*				
23	10-2006	132	1960	406[I]
24	04-2008	132	2092	559
25	10-2009	132	2224	427
26	04-2011	160	2384	267
27	10-2012	160	2544	107

1.3 Report Contents Summary

This report provides the design basis, analysis methodology, and evaluation results for the proposed storage racks at CNS to support the safety evaluation pursuant to 10CFR50.92. The rack design and analysis methodologies employed are a direct evolution of previous license applications. This report documents the design and analyses performed for the new racks to show that they are consistent with governing requirements of the applicable codes and standards, in particular, "OT Position for Review and Acceptance of Spent Fuel Storage and Handling Applications", USNRC (1978) and 1979 Addendum thereto [1].

The new storage racks are freestanding and self-supporting. The principal construction materials for the SFP racks are SA240-Type 304 stainless steel sheet and plate stock, and the Metamic. neutron absorber for reactivity control. The only non-stainless material utilized in the rack is the neutron absorber material, Metamic, whose characteristics are discussed in Section 3. The new racks are designed using the guidance of the OT position paper and NUREG-0800 [2] applicable to the spent fuel racks. The material procurement, analysis, fabrication, and installation of the rack modules conform to 10CFR50 Appendix B requirements.

† Note: All assemblies prior to Cycle 10, and some assemblies from Cycle 10, have been shipped offsite to the General Electric Morris facility

* Based on 18 month operating cycles

I The new racks are not expected to be installed before End-of-Cycle Number 23

The new racks will be emplaced on custom engineered platforms such that the top of the new rack modules is coplanar with the existing rack array. Like the racks, the platforms are made of austenitic stainless steel (SA240-304). The platform elevates the bottom of the baseplate of the rack modules by approximately 12.5 inches and features appropriate cut-outs to prevent interference with the permanent hardware connected to the liner such as the swing bolts.

Additional design attributes of the platform are:

(i) The existing swing bolts are used to fasten the platform to the pool floor rendering them into a fixed appurtenance to the pool slab.

(ii) The contact surface between the platform and the underlying pool liner is located at the four corners of each platform. These contact patches are engineered to be sufficiently large to limit the bearing stress on the pool slab concrete to well below the applicable ACI limits.

(iii) Each rack-to-platform contact surface is vertically aligned with the platform-to-liner contact patch below, such that the dead weight of the rack is directly transmitted to the pool slab.

(iv) The platform-to-liner contact patch is sufficiently large to envelop the shadow (vertical projection) of the corresponding rack-to-platform contact region.

The above design features insures that any gross flexural moment on the platform structure is essentially eliminated. The platforms thus serve in this manner as a spacer element to elevate the racks. By virtue of their geometry, the platforms do not support the hydrostatic pressure of the pool water, or experience any thermal stresses because of their complete immersion in the pool water.

Chapters 2 and 3 of this report provide an abstract of the design and material information on the racks, respectively. Chapter 4 provides a summary of the methods and results of the criticality evaluations performed for the shipping cask storage area racks. The criticality limit is that the effective neutron multiplication factor (k_{eff}) be less than or equal to 0.95 with the storage racks fully loaded with fuel of the highest permissible reactivity and the pool flooded with water at a temperature corresponding to the highest reactivity. The maximum calculated reactivities include a margin for uncertainty in reactivity calculations, including manufacturing tolerances, and are calculated with a 95% probability at a 95% confidence level. The criticality safety analysis sets the requirements on the neutron absorber panel length and the amount of B^{10} per unit area (i.e., loading density) for the new racks.

Thermal-hydraulic considerations require that fuel cladding will remain below the current licensing basis limit of 350°F, that Departure from Nucleate Boiling will not occur, and that the steady state pool bulk temperature will remain within the limits prescribed for the Spent Fuel Pool to satisfy the pool structural requirements. The thermal-hydraulic analyses carried out in support of this storage expansion effort are described in Chapter 5.

Rack module structural analysis requires that the primary stresses in the rack module structure remain below the ASME B&PV Code (Subsection NF) allowables as specified in [2]. Demonstrations of seismic and structural adequacy of the racks under seismic and other applicable loads are presented in Chapter 6.0. The structural qualification also requires that the subcriticality of the stored fuel will be maintained under all postulated accident scenarios. The structural consequences of these postulated accidents are evaluated and presented in Chapter 7 of this report.

Chapter 8 discusses the evaluation of the Spent Fuel Pool structure to withstand the new rack loads. The radiological considerations are documented in Chapter 9.0. Chapter 10 discusses the safety and ALARA considerations applicable to the installation of the new racks. Chapter 11 discusses a cost/benefit and environmental assessment to establish the prudence of the proposed O.L. amendment to expand CNS's wet storage capacity.

All computer programs utilized to perform the analyses documented in this report are benchmarked and verified. Holtec International has utilized these programs in numerous license applications over the past two decades.

The analyses presented herein demonstrate that the new racks possess sufficient margins under the guidelines mentioned in the OT Position Paper [1], namely, nuclear subcriticality, thermal-hydraulic safety, seismic and structural adequacy, radiological compliance, and mechanical integrity.

1.4 References

[1] USNRC, "OT Position for Review and Acceptance of Spent Fuel Storage and Handling Applications, April 14, 1978, and Addendum dated January 18, 1979.

[2] NUREG-0800, Appendix D to SRP 3.8.4, USNRC July 1981.

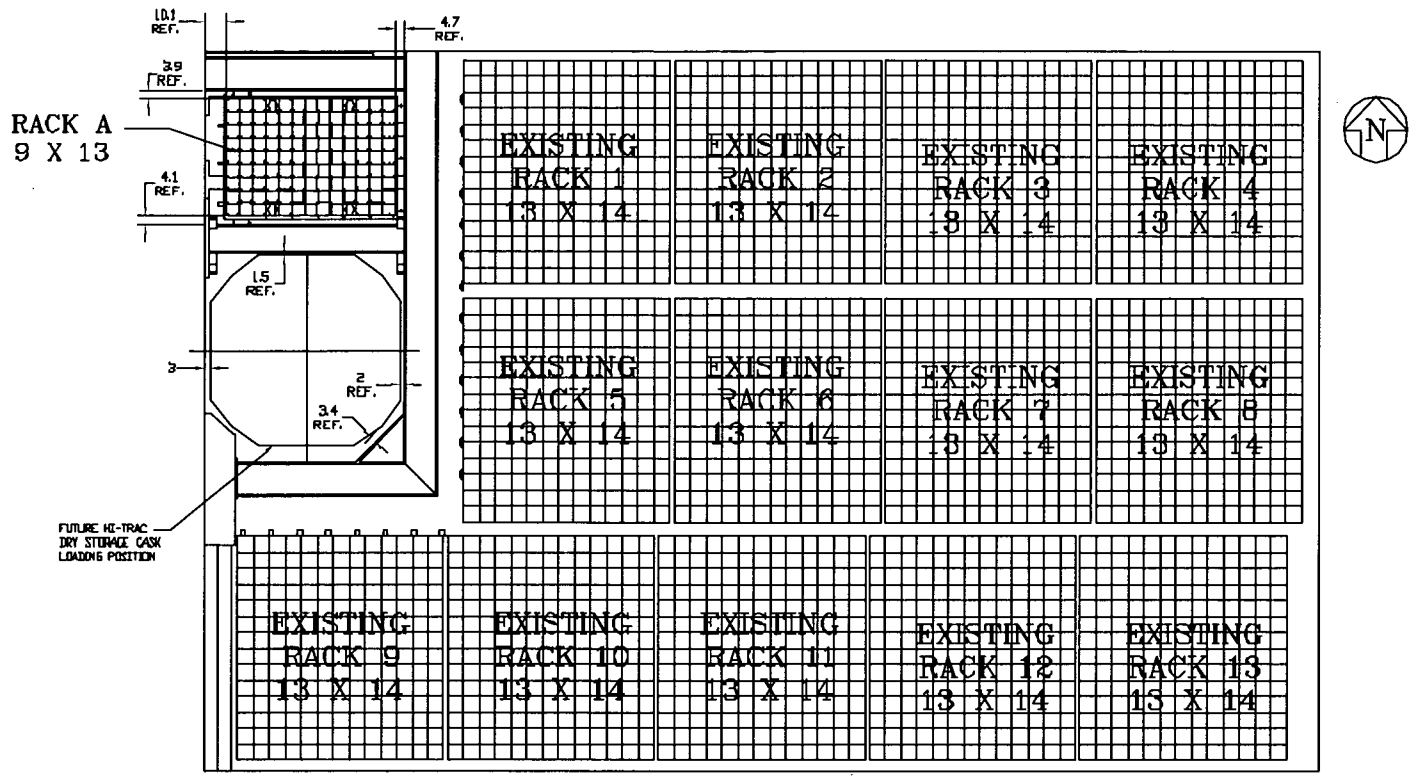

FIGURE 1.2.1; PHASE I - FUEL CASK AREA RACK A LAYOUT

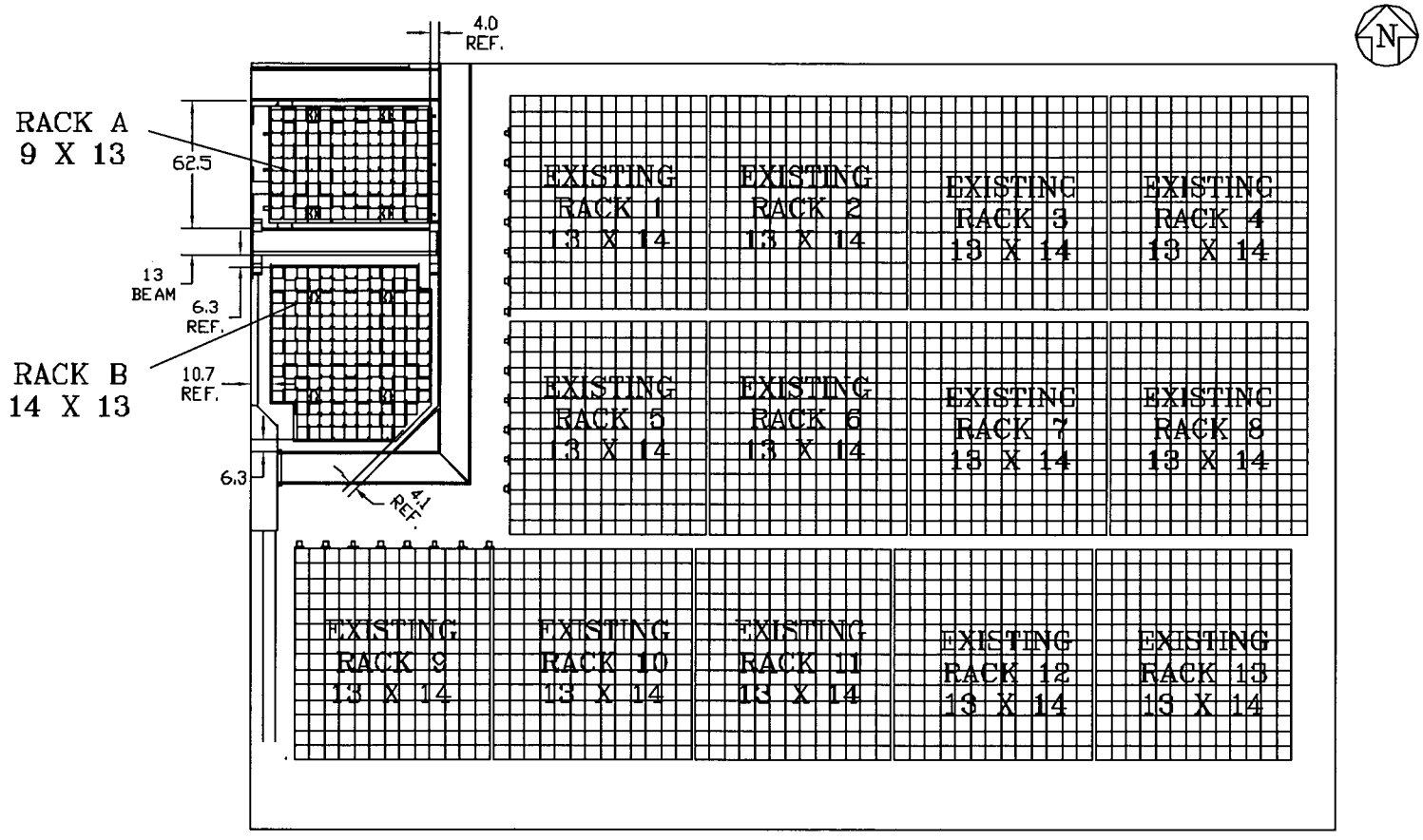

FIGURE 1.2.2; PHASE II - FUEL CASK AREA RACK B LAYOUT

Chapter 2: Principal Design Criteria and Applicable Codes

2.1 Principal Design Criteria

The principal key design criteria applicable to spent fuel racks in wet storage are set forth in the USNRC memorandum entitled "OT Position for Review and Acceptance of Spent Fuel Storage and Handling Applications", dated April 14, 1978 as modified by amendment dated January 18, 1979. The individual chapters of this report address the specific design bases derived from the above-mentioned "OT Position Paper". The new CNS fuel storage racks are designed using the guidance of the OT Position Paper, with the plant's FSAR, with NUREG-0800, and with the physical infrastructure of the plant, and are summarized below.

i. Disposition: The new rack modules are required to be freestanding.

ii. Kinematic Stability: Each freestanding module must be kinematically stable (will not tip to the extent that overturning is likely to occur) under the design basis plant seismic events.

iii. Material Selection: The materials used in the construction of the fuel racks must have a service life of 40 years in the CNS fuel pool environment under normal and abnormal conditions of storage.

iv. Criticality Compliance: The Holtec high-density spent fuel storage racks are designed to assure that the neutron multiplication factor (k_{eff}) is equal to or less than 0.95 with the racks fully loaded with fuel of the highest anticipated reactivity and the pool flooded with unborated water at a temperature corresponding to the highest reactivity. The maximum calculated reactivity includes a margin for uncertainty in reactivity calculations and in manufacturing tolerances, statistically combined, giving assurance that the true k_{eff} will be equal to or less than 0.95 with a 95% probability at a 95% confidence level. Reactivity effects of the abnormal and accident conditions must be evaluated to assure that under credible abnormal and accident conditions, the reactivity will be maintained less than 0.95.

v. Thermal-Hydraulic Compliance: With forced cooling available, the maximum SFP bulk temperature must not exceed the current licensing basis limit of 150°F. The bounding fuel cladding temperature in the SFP should also remain below the local saturation temperature for any condition where the FPC system is operating, or else it must be shown that DNB will not occur, and must also remain below the current licensing basis limit of 350°F. For a loss of forced cooling condition (i.e., bulk boiling), it must be shown that the fuel cladding will remain below the current licensing basis limit of 350°F and that DNB will not occur. With respect to time-to-boil, the minimum time-to-boil value must provide sufficient time for plant personnel to perform remedial actions and the makeup water requirement must be less than the minimum available makeup capacity of 120 gpm from Reactor Building Service Water.

vi. Primary Stress Compliance and Limiting Rack Geometry: All primary stresses in the rack modules must satisfy the limits postulated in Section III subsection NF and Appendix F of the ASME B & PV Code for Class 3 linear structures under load combinations set forth with the guidance of the OT Position paper.

The spent fuel racks provided by Holtec International to scores of nuclear plants around the world are all of integrally conjoined cell construction (referred to as "honeycomb"). The racks are typically elevated from the pool liner through a number of support pedestals. As a result, the inertial weight of the racks bears upon the support pedestal, and the reaction to seismic loadings on the racks is also at its maximum in the pedestals. Because of their load bearing function, the pedestals are categorized as "primary components" under Paragraph NF-1215 of the ASME Code. The cellular region, which does not carry any primary loads, is classified as a secondary member under NF-1215.The pedestals in the fuel rack serve to create the bottom plenum necessary for proper cooling of the stored spent fuel. However, the pedestals are also locations of the highest stresses in the rack structure under seismic events. To eliminate this location of high stress, and to straddle the existing hardware on the liner, both new rack modules dispense with pedestals altogether by installing a stainless steel platform on the liner over the planform

areas of the rack. That is, each rack sits on a platform and does not directly bear on the liner. The baseplates of both racks are equipped with thick "shear pads" at their four corners that rest on the platform. Thus, the geometry that produces high primary stresses in the rack modules is avoided.

To be sure, there is a certain anatomical difference between the Rack A and B platforms due to the type of obstructions they are required to bridge over. The Rack A platform is an open lattice structure with facilities to anchor it to the pool slab using the existing swing bolts. The Rack B platform provides an essentially solid plate surface on which the "shear pads" located at the rack's corners rest. As a result, the effective height of the bottom plenum [2.1.1] is essentially equal to the thickness of the "shear pad". In contrast, the open lattice construction of the Rack A platform permits the water mass surrounding the body of the platform to participate in the thermosiphon action to cool the fuel in the storage cells above. Therefore, Rack B presents a more challenging geometry for thermal cooling considerations.

Rack B, as described in Chapter 3, is a larger rack with a larger fuel storage capacity. As a result, the inertia forces resulting from a seismic event will be larger in Rack B than Rack A. Therefore, Rack B is the limiting rack geometry from both seismic and thermal-hydraulic standpoints.

vii. Liner Integrity: Although both rack modules are freestanding, and thus may slide during a seismic event, any significant membrane strains in the pool liner are prevented by the presence of the platforms. As a result, the maximum strain sustained by the liner during a seismic event is assumed to be less than the ultimate strain for the liner material (austenitic stainless steel, ultimate strain ≥ 0.38).

viii. Mechanical Integrity: In the event of postulated drop events (uncontrolled lowering of a fuel assembly, for instance), it is necessary to demonstrate that the subcritical geometry of the rack structure is not compromised and liner's integrity is maintained such that there is no possibility of uncontrolled drain-down of the pool.

ix. Integrity of the Reinforced Concrete Structure: The CNS pool is elevated with rooms beneath it. However the new racks are not physically attached to the walls of the SFP, ands therefore, will not exert any new mechanical loads on the walls. Therefore, the walls will not experience any increase in loadings and, therefore, need not be reanalyzed and the required re-evaluation of the pool structure should be limited to the floor. Accordingly, the pool's reinforced concrete slab is reanalyzed to demonstrate compliance with the plant's governing Code (ACI 318). Chapter 8 of this report provides details on the applicable load combinations and associated limits.

x. Heavy Loads: A rack lift rig is designed to meet the requirements of NUREG-0612 and ANSI 14.6 (93). Detailed requirements applicable to this special lifting device is provided in Chapter 10 of this report.

2.2 Reference Codes and Standards

Inasmuch as the spent fuel rack is a fuel storage device with the overriding mission to guarantee a sub-critical storage state for the stored spent fuel, the role of the mechanical design codes and standards is focused on ensuring the physical integrity of the rack structure during all conditions of service. For this reason, the governing NRC document – the so-called "OT Position Paper" referenced in the foregoing, does not prescribe a specific code. However, Holtec International has used the ASME Section III sub-section NF as the guiding Code for stress analysis purposes, treating the rack as a linear class 3 NF structure.

Subsection NF of the ASME Code requires the "jurisdictional boundary" of the structure to be defined. For the CNS racks, the jurisdictional boundary is the interface between the "shear pads" and the underlying platform. The platform, in the terminology of the Code, therefore, is an "intervening part" which should be engineered to enable the subject NF structure to render its intended function. "NF" does not mandate any specific stress limits for the "intervening parts". However, for purposes of platform design, the "NF" stress limits for linear structures are also invoked. Because the platforms are not an integral part of the rack, their stress analysis and structural qualification are not addressed in this licensing report. The platform design and analysis package, however, is required to be a *safety-related* document subject to configuration control under Holtec's and CNS's quality assurance programs.

The array of codes, standards, and NRC publications used as guidance documents in the design and manufacture of the fuel storage racks are listed in this section. Additional specific references related to specific safety analyses are provided at the end of each chapter, as applicable.

a. Design Codes

(1) American Institute of Steel Construction (AISC) Manual of Steel Construction, ninth Edition.

(2) American National Standards Institute/ American Nuclear Society ANSI/ANS-57.2-1983, "Design Requirements for Light Water Reactor Spent Fuel Storage Facilities at Nuclear Power Plants" (contains guidelines for fuel rack design).

(3) American Society of Mechanical Engineers (ASME), Boiler and Pressure Vessel (BP&V) Code, Section III, 1998 Edition.

(4) American Society for Nondestructive Testing SNT-TC-1A, 2001, Personnel Qualifications and Certification in Non-destructive Testing.

(5) American Concrete Institute Building Code Requirements for Reinforced Concrete (ACI 318-71).

(6) Code Requirements for Nuclear Safety Related Concrete Structures, ACI 349-91.

(7) ASME Y14.5M, Dimensioning and Tolerancing for Engineering Drawings and Related Documentation Practices

(8) ASME B&PV Code, Section II, Parts A and C, 1998 Edition.

(9) ASME B&PV Code NCA3800 - Metallic Material Organization's Quality System Program.

b. Standards of American Society for Testing and Materials (ASTM)

(1) ASTM E165 - Standard Test Method for Liquid Penetrant Examination.

(2) ASTM A240 - Standard Specification for Heat-Resisting Chromium and Chromium-Nickel Stainless Steel Plate, Sheet and Strip for Pressure Vessels.

(3) ASTM A262 - Standard Practices for Detecting Susceptibility to Intergranular Attack in Austenitic Stainless Steel.

(4) ASTM A276 - Standard Specification for Stainless Steel Bars and Shapes.

(5) ASTM A479 - Standard Specification for Stainless Steel Bars and Shapes for use in Boilers and other Pressure Vessels.

(6) ASTM A564 - Standard Specification for Hot-Rolled and Cold-Finished Age-Hardening Stainless Steel Bars and Shapes.

(7) ASTM C750 - Standard Specification for Nuclear-Grade Boron Carbide Powder.

(8) ASTM A380 - Standard Practice for Cleaning, Descaling, and Passivation of Stainless Steel Parts, Equipment and Systems.

(9) ASTM C992 - Standard Specification for Boron-Based Neutron Absorbing Material Systems for Use in Nuclear Spent Fuel Storage Racks.

(10) ASTM E3 - Standard Practice for Preparation of Metallographic Specimens.

(11) ASTM E190 - Standard Test Method for Guided Bend Test for Ductility of Welds.

c. Welding Code:

ASME B&PV Code, Section IX - Welding and Brazing Qualifications, latest edition.

d. Quality Assurance, Cleanliness, Packaging, Shipping, Receiving, Storage, and Handling

(1) ANSI N45.2.1 - Cleaning of Fluid Systems and Associated Components during Construction Phase of Nuclear Power Plants - 1973 (R.G. 1.37).

(2) ANSI N45.2.2 - Packaging, Shipping, Receiving, Storage and Handling of Items for Nuclear Power Plants - 1972 (R.G. 1.38).

(3) ANSI N45.2.6 - Qualifications of Inspection, Examination, and Testing Personnel for the Construction Phase of Nuclear Power Plants - 1978. (R.G. 1.58).

(4) ANSI N45.2.8 - Supplementary Quality Assurance Requirements for Installation, Inspection and Testing of Mechanical Equipment and Systems for the Construction Phase of Nuclear Plants - 1975 (R.G. 1.116).

(5) ANSI N45.2.11 - Quality Assurance Requirements for the Design of Nuclear Power Plants - 1974 (R.G. 1.64).

(6) ANSI N45.2.12 - Requirements for Auditing of Quality Assurance Programs for Nuclear Power Plants - 1977 (R.G. 1.144).

(7) ANSI N45.2.13 - Quality Assurance Requirements for Control of Procurement of Items and Services for Nuclear Power Plants - 1976 (R. G. 1.123).

(8) ANSI N45.2.23 - Qualification of Quality Assurance Program Audit Personnel for Nuclear Power Plants - 1978 (R.G. 1.146).

(9) ASME B&PV Code, Section V, Nondestructive Examination, 2001 Edition.

(10) ANSI N16.9-75 - Validation of Calculation Methods for Nuclear Criticality Safety.

(11) ASME NQA-1 – Quality Assurance Program Requirements for Nuclear Facilities.

(12) ASME NQA-2 – Quality Assurance Requirements for Nuclear Power Plants.

e. USNRC NUREGs and Technical Positions

(1) "OT Position for Review and Acceptance of Spent Fuel Storage and Handling Applications," dated April 14, 1978 and the modifications to this document by USNRC letter dated January 18, 1979.

(2) NUREG 0612, "Control of Heavy Loads at Nuclear Power Plants", USNRC, Washington, D.C., July 1980.

(3) NUREG-0800, USNRC, Washington, DC.

f. Other ANSI Standards (not listed in the preceding)

(1) ANSI/ANS 8.1 - Nuclear Criticality Safety in Operations with Fissionable Materials Outside Reactors.

(2) ANSI/ANS 8.17 - Criticality Safety Criteria for the Handling, Storage, and Transportation of LWR Fuel Outside Reactors.

(3) ANSI N45.2 - Quality Assurance Program Requirements for Nuclear Power Facilities - 1971.

(4) ANSI N45.2.9 - Requirements for Collection, Storage and Maintenance of Quality Assurance Records for Nuclear Power Plants - 1974.

(5) ANSI N45.2.10 - Quality Assurance Terms and Definitions - 1973.

(6) ANSI N14.6 - American National Standard for Special Lifting Devices for Shipping Containers Weighing 10,000 pounds (4500 kg) or more for Nuclear Materials - 1993.

(7) ANSI/ASME N626-3 - Qualification and Duties of Personnel Engaged in ASME Boiler and Pressure Vessel Code Section III, Div. 1, Certifying Activities.

(8) ANSI/ANS- 57.3 – Design Requirements for New Fuel Storage Facilities at Light Water Reactor Plants.

g. Code-of-Federal Regulations (CFR)

(1) 10CFR20 - Standards for Protection Against Radiation.

(2) 10CFR21 - Reporting of Defects and Non-compliance.

(3) 10CFR50 Appendix A - General Design Criteria for Nuclear Power Plants.

(4) 10CFR50 Appendix B - Quality Assurance Criteria for Nuclear Power Plants and Fuel Reprocessing Plants.

(5) 10CFR71 - Packaging and Transportation of Radioactive Material

(6) 10CFR50.68 - Criticality Accident Requirements.

h. Regulatory Guides (RG)

(1) RG 1.13 - Spent Fuel Storage Facility Design Basis (Proposed Revision 2, dated 12/81).

(2) RG 1.25 - Assumptions Used for Evaluating the Potential Radiological Consequences of a Fuel Handling Accident in the Fuel Handling and Storage Facility for Boiling and Pressurized Water Reactors, Rev. 0 - March 1972.

(3) RG 1.28 - Quality Assurance Program Requirements - Design and Construction, Rev. 2 - February, 1979 (endorses ANSI N45.2).

(4) RG 1.33 - Quality Assurance Program Requirements.

(5) RG 1.29 - Seismic Design Classification, Rev. 3 - September 1978.

(6) RG 1.31 - Control of Ferrite Content in Stainless Steel Weld Metal, Rev. 3 - April 1978.

(7) RG 1.38 - Quality Assurance Requirements for Packaging, Shipping, Receiving, Storage and Handling of Items for Water-Cooled Nuclear Power Plants, Rev. 2 - May 1977 (endorses ANSI N45.2.2).

(8) RG 1.44 - Control of the Use of Sensitized Stainless Steel, Rev. 1 - 1973.

(9) RG 1.58 - Qualification of Nuclear Power Plant Inspection, Examination, and Testing Personnel, Rev. 1 - September 1980 (endorses ANSI N45.2.6).

(10) RG 1.60 – Design Response Spectra for Seismic Design of Nuclear Power Plants.

(11) RG 1.61 - Damping Values for Seismic Design of Nuclear Power Plants, Rev. 0 - 1973.

(12) RG 1.64 - Quality Assurance Requirements for the Design of Nuclear Power Plants, Rev. 2 - June 1976 (endorses ANSI N45.2.11).

(13) RG 1.71 - Welder Qualifications for Areas of Limited Accessibility.

(14) RG 1.74 - Quality Assurance Terms and Definitions, Rev. 2 - February 1974 (endorses ANSI N45.2.10).

(15) RG 1.85 - Materials Code Case Acceptability - ASME Section III, Division 1.

(16) RG 1.88 - Collection, Storage and Maintenance of Nuclear Power Plant Quality Assurance Records, Rev. 2 - October 1976 (endorses ANSI N45.2.9).

(17) RG 1.92 - Combining Modal Responses and Spatial Components in Seismic Response Analysis, Rev. 1 - February 1976.

(18) RG 1.116 - Quality Assurance Requirements for Installation, Inspection and Testing of Mechanical Equipment and Systems, Rev. 0-R - May 1977 (endorses ANSI N45.2.8-1975)

(19) RG 1.123 - Quality Assurance Requirements for Control of Procurement of Items and Services for Nuclear Power Plants, Rev. 1 - July 1977 (endorses ANSI N45.2.13).

(20) RG 1.124 - Service Limits and Loading Combinations for Class 1 Linear-Type Component Supports, Rev. 1 - January 1978.

(21) RG 1.144 - Auditing of Quality Assurance Programs for Nuclear Power Plants, January 1979 revision (endorses ANSI N45.2.12-1977)

(22) RG 3.4 - Nuclear Criticality Safety in Operations with Fissionable Materials at Fuels and Materials Facilities.

(23) RG 8.8 - Information Relative to Ensuring that Occupational Radiation Exposures at Nuclear Power Stations will be as Low as Reasonably Achievable (ALARA).

(24) RG 8.38 - Control of Access to High and Very High Radiation Areas in Nuclear Power Plants, June, 1993.

i. American Welding Society (AWS) Standards

(1) AWS D1.1 - Structural Welding Code - Steel.

(2) AWS D1.3 - Structure Welding Code - Sheet Steel.

(3) AWS D9.1 - Sheet Metal Welding Code.

(4) AWS A2.4 - Standard Symbols for Welding, Brazing and Nondestructive Examination.

(5) AWS A3.0 - Standard Welding Terms and Definitions.

(6) AWS A5.12 - Specification for Tungsten and Tungsten Alloy Electrodes for Arc-Welding and Cutting

(7) AWS QC1 - Standard and Guides for Qualification and Certification of Welding Inspectors.

(8) AWS 5.4 – Specification for Stainless Steel Electrodes for Shielded Metal Arc Welding.

(9) AWS 5.9 – Specification for Bare Stainless Steel Welding Electrodes and Rods.

j. Information Notices, Part 21 Notifications, etc.

(1) IE Information Notice 83-29 - Fuel Binding Caused by Fuel Rack Deformation.

(2) Part 21 Report for Seabrook, "Apparent Abnormality of Boral Coupon…," dated September 15, 2003.

2.3 References

[2.1.1] "A Method for Computing the Maximum Water Temperature in a Fuel Pool Containing Spent Nuclear Fuel", K.P. Singh, A.I. Soler, and Jai P. Gupta, Heat Transfer Engineering, Vol. 7, Nos. 1-2, 1986.

Chapter 3: Mechanical Design and Materials Considerations

3.1 Mechanical Design Considerations

3.1.1 Overview of Rack's Mechanical Design

The two new CNS rack modules are designed as cellular structures such that each fuel assembly has a square opening with a baseplate providing a vertical and lateral support surface conforming to the configuration of the bottom nozzle of the BWR style assembly.

Each rack module is a freestanding structure, made primarily from austenitic stainless steel containing honeycomb storage cells interconnected through longitudinal welds. Suitably engineered neutron absorber panels interposed between facing fuel storage assemblies provide the requisite neutron attenuation between adjacent storage cells.

The rack module layouts for both planned implementation phases in the SFP are shown in Figures 1.2.1 and 1.2.2. The two new modules (labeled Rack A and Rack B in Figure 1.2.2) are typical BWR style storage rack design configurations. Table 3.1.1 provides geometric and physical data on the new CNS rack modules.

Table 3.1.1
Geometric and Physical Data for the Two New Cooper Racks

RACK I.D.	RACK TYPE	CELL-TO-CELL PITCH		NO. OF CELLS		MODULE ENVELOPE SIZE (approx.)		DRY WEIGHT (approx.) (lb)	NO. OF CELLS PER RACK
		N-S (in)	E-W (in)	N-S Direction	E-W Direction	N-S (in)	E-W (in)		
A	Non-flux Trap	6.108	6.108	9	13	55.41	79.91	12,970	117
B*	Non-flux Trap	6.108	6.108	14	13	85.98	79.91	18,445	168

* Rack B, as shown in Figure 1.2.2, is of a non-rectangular section. Tabular values are the maximum values for the longest cell rows in each direction.

3.1.2 Mechanical Design Objectives

A central objective in the design of the new rack modules is to maximize structural strength while minimizing inertial mass and dynamic response. Accordingly, the rack modules have been designed to simulate a stiff linear structure that has excellent de-tuning characteristics with respect to the applicable seismic events. In addition, the rack modules are designed to meet the functional performance objectives cited as Design Criteria presented in Chapter 2. The mechanical design attributes of the modules that enable the required performance objectives to be fulfilled are summarized below.

i. The rack modules must be constructed in such a manner that the storage cell surfaces, which would come in contact with the fuel assembly, will be free of harmful chemicals and projections (e.g., weld splatter).

ii. The component connection sequence and welding processes must be selected to reduce fabrication distortions.

iii. The fabrication process should involve operational sequences that permit immediate accessibility for verification by the inspection staff.

iv. The corners of storage cells should be connected to each other using austenitic stainless steel connector elements such that a honeycomb lattice construction is realized. The extent of welding is selected to detune the racks from the seismic input motion of the plant.

3.1.3 Design Characteristics of CNS Rack Modules

The high-density fuel racks for the CNS consist of three main subcomponents, namely:

i. the cellular structure,
ii. the baseplate, and,
iii. the shear pads.

The cellular structure of the fuel rack (item (i) above) defines the storage space for the fuel. It has six principal design attributes:

i. Each fuel assembly is confined in a square space that presents no protrusions or barriers to the insertion and withdrawal of the fuel assembly.

ii. Each storage cell is connected to adjacent storage spaces through axial welds at the cell corners.

iii. The height of the storage cells is set to provide full lateral support to the fuel assembly and to enable unfettered access by the fuel handling tool from the fuel handling bridge.

iv. A neutron absorber panel (Metamic®) is attached to cell walls as required by the criticality analyses. The storage cells are created by a checkerboard arrangement of boxes.

v. The neutron absorber panels are firmly held in place in an all-stainless steel pocket around each box. The neutron absorber length is sized to provide complete coverage to the active fuel length.

vi. The bottom edge of the boxes that constitute the cellular region is welded to the baseplate to create an integral welded construction.

The cell-to cell connectivity in the cellular region renders it into an extremely stiff multi-flange, multi-web structure that simulates the load bearing characteristics of an elastic half space at the shear pad-to-baseplate locations.

The extensive in-body welds in the cellular region and the baseplate-to-cellular region render the fuel rack module into a stainless steel weldment that is structurally detuned from the earthquake harmonics, resulting in a sharply mitigated module response to the site's earthquake (as can be seen from the results in Chapter 6).

The baseplate (item (ii)) is an austenitic stainless steel plate equipped with equally spaced thru-holes and a flat platform that provides the structural connection between the group of shear pads underneath it and the cellular regions above. The baseplate provides the bearing surface for the bottom fitting of the fuel assembly.

The third constituent item in the CNS rack modules are the "shear pads" (item iii) (refer to Figure 3.1.2) used to elevate the module baseplate above the support platform. Like the recently licensed racks for the twin unit Diablo Canyon Nuclear Plant (DCNPP), the new CNS racks will

be positioned on newly designed platforms that serve to provide a flat and level bearing surface for the rack modules. As a result, it is not necessary to equip the modules with adjustable support spindles. The platforms also yield complete freedom to select the support locations for the module (there being no pre-existing obstructions on the platform surface). Thus, the support locations can be spaced to provide maximum kinematic stability to the modules under seismic conditions. Further, since the BWR fuel is relatively low heat-emitting (compared to the PWR fuel) the required height of the bottom plenum [2.1.1] to support adequate thermosiphon-driven cooling action is quite small. As a result, relatively short supports, referred to as "shear pads" made of stainless plate stock and fillet welded to the underside of the modules' baseplates at the four corners, serve to support the modules. Because the pads are short (side dimension is over three times the thickness), they will resist any lateral load at the module/platform interface during seismic events essentially by shear action. For this reason, they are termed as "shear pads" and the chief criterion in their design is to ensure that the shear stress in the fillet welds that connect them to the rack baseplate is below the "NF" limit.

The short height of the shear pads and their maximized spacing help to minimize rocking of the rack modules under seismic conditions, even under the upper bound assumed friction coefficient at the interface (see Chapter 6).

The thermal-hydraulic imperatives of the fuel rack's design are satisfied by ensuring that every storage cell has a flow path to promote a gravity-driven thermosiphon cooling of the stored fuel without allowing any local hot spots on the fuel cladding that may be injurious to the long-term integrity of the fuel cladding. Analyses and results, presented in Chapter 5, confirm the efficient thermal performance of the new fuel racks.

In the event of a drop of a fuel assembly in a storage cell, the modules baseplate provides the barrier against a direct impact on the pool liner. Thus, the enhanced storage system design for the Cooper racks also provides the collateral benefit of an added protection to the pool's water confinement system (the stainless steel lining of the pool cavity).

Principal design data on the new rack modules are provided in Table 3.1.2.

Table 3.1.2 MODULE DATA FOR SFP RACKS †	
Storage cell inside nominal dimension	5.915 in.
Cell pitch	6.108 in.
Storage cell height (above the base plate)	169.25 in.
Baseplate hole size (except for lift locations)	3.75 in.
Baseplate thickness	5/8 in.
Shear pad thickness (module A)	2 in
Shear pad thickness (module B)	3.5 in
Remote lifting and handling provisions	Yes
Neutron absorber material	Metamic
Neutron absorber length	152 in.
Neutron absorber width	4.75 in.

In closure, the new rack modules proposed for CNS are the non-flux trap genre utilized by Holtec International in scores of wet capacity expansion projects in the U.S. and overseas (see Table 3.1.3 for a nearly complete listing). To facilitate their ALARA installation, and to maximize their structural margin, the CNS racks utilize the design approach of a support platform used by high seismic sites in the past, such as Diablo Canyon. The platform not only helps minimize the kinematic response of the racks but it also protects the liner against high strains and eliminates the source of high seismic stresses at the support locations (from the cantilever action of the support locations under friction shear). Indeed, the principal causative factors relevant to rack structural failure discussed in ref. [3.1.1] are largely eliminated, resulting in a "high margin" rack design for CNS.

† All dimensions indicate nominal values

TABLE 3.1.3 LISTING OF HOLTEC PROJECTS THAT UTILIZE A SIMILAR RACK DESIGN				
Plant Name	**Reactor Type**	**Utility**	**Start Date**	**Completion Date**
Nine Mile Unit 2	BWR	Constellation Energy	March 2006	August 2007
KORI 4/ YGN1	PWR	Korea Hydro and Nuclear Power	February 2005	September 2005
Shin Kori 1&2	PWR	Korea Hydro and Nuclear Power	December 2003	August 2008
Diablo Canyon Units 1 & 2	PWR	Pacific Gas and Electric	November 2003	March 2007
Clinton Station	BWR	Amergen	October 2003	February 2007
Nine Mile Point Unit 1	BWR	Constellation Energy Group	September 2003	November 2004
Turkey Point Units 3 & 4	PWR	Florida Power & Light	April 2003	TBD
McGuire Nuclear Station Units 3 & 4	PWR	Duke Energy Company	February 2003	June 2003
McGuire Nuclear Station Units 1 & 2	PWR	Duke Energy Company	May 2002	October 2003
Turkey Point Units 3 & 4	PWR	Florida Power & Light	May 2002	December 2004
Arkansas Nuclear One Units 1 & 2	PWR	Entergy Nuclear	September 2001	September 2004
Port St. Lucie Units 1 & 2	PWR	Florida Power & Light	October 2001	December 2004
Limerick Generating Station Unit 1	BWR	Exelon Corporation	May 2001	August 2002
Comanche Peak	PWR	Texas Utilities	January 2001	December 2001
Nine Mile Point Unit 2	BWR	Niagara Mohawk Power Corporation	September 2000	September 2001
V.C. Summer	PWR	South Carolina Electric & Gas Company	August 2000	March 2003
Comanche Peak	PWR	Texas Utilities	December 1999	December 2001
Pilgrim Station	BWR	Boston Edison Company	December 1998	September 2000
Kewaunee	PWR	Wisconsin Public Service Corporation	September 1998	April 2001
Fermi 2	BWR	Detroit Edison Company	September 1998	May 2001
Byron	PWR	Commonwealth Edison Company	February 1998	ca. 2000
Braidwood	PWR	Commonwealth Edison Company	February 1998	June 2001
Davis-Besse	PWR	Toledo Edison Company	February 1998	ca.2001
Susquehanna	BWR	Pennsylvania Power &	May 1998	ca. 2001

TABLE 3.1.3 LISTING OF HOLTEC PROJECTS THAT UTILIZE A SIMILAR RACK DESIGN				
Plant Name	**Reactor Type**	**Utility**	**Start Date**	**Completion Date**
		Light Company		
Oyster Creek	BWR	GPU Nuclear Corporation	March 1998	May 2000
Vermont Yankee	BWR	Vermont Yankee Nuclear Power Corporation	March 1998	September 2000
Plant Hatch	BWR	Southern Nuclear Operating Company	January 1998	June 2000
Browns Ferry Nuclear Power Plant	BWR	Tennessee Valley Authority	December 1997	July 1999
Millstone Unit 3	PWR	Northeast Utilities Service Company	October 1997	October 2000
Yonggwang 5&6	PWR	Hanjung-KEPCO	September 1997	July 2000
Chinshan Station Units 1&2	BWR	Taiwan Power Company	August 1997	January 2000
Callaway Station	PWR	Union Electric Company	April 1997	February 1999
Wolf Creek	PWR	Wolf Creek Nuclear Operating Corporation	April 1997	August 1999
Harris Station	PWR	Carolina Power & Light Company	March 1997	ca.2005
Vogtle 1	PWR	Southern Nuclear Operating company	February 1997	November 1998
Waterford 3	PWR	Entergy Operations Inc.	August 1996	October 1998
FitzPatrick Nuclear Power Station	BWR	New York Power Authority	June 1996	April 1999
Shearon Harris	PWR	Carolina Power & Light Company	October 1996	July 1997
Sizewell B	PWR	Nuclear Electric, plc	December 1995	March 1997
Watts Bar	PWR	Tennessee Valley Authority	January 1996	July 1997
Angra Unit 1	PWR	FURNAS Centrais Electricas, S.A.	October 1995	October 1997
Shearon Harris	PWR	Carolina Power & Light Company	April 1995	February 1996
KORI-4, Yonggwang 1&2	PWR	Korea Electric Power Corporation	June 1995	December 1997
Connecticut Yankee	PWR	Northeast Utilities Service Company	March 1994	September 1996
Ulchin Unit 2	PWR	Korea Electric Power Corporation	March 1995	June 1996
Ulchin Unit 1	PWR	Korea Electric Power Corporation	January 1994	August 1996

TABLE 3.1.3 LISTING OF HOLTEC PROJECTS THAT UTILIZE A SIMILAR RACK DESIGN				
Plant Name	**Reactor Type**	**Utility**	**Start Date**	**Completion Date**
Idaho Chemical Processing Plant	US NAVY FUEL	Westinghouse Idaho Nuclear Company, Inc. for the U.S. DOE	February 1994	December 1996
Limerick Generating Station	BWR	PECO Energy Company	April 1993	November 1995
Salem Nuclear Generating Station Units 1&2	PWR	Public Service Electric and Gas Company	December 1992	July 1995
Duane Arnold Energy Center	BWR	Iowa Electric Light & Power Company	January 1992	July 1994
Pilgrim Station	BWR	Boston Edison Company	September 1992	December 1994
Fort Calhoun Nuclear Station	PWR	Omaha Public Power District	March 1992	August 1994
Nine Mile Point Unit 1	BWR	Niagara Mohawk Power Corporation	November 1991	June 1999
Beaver Valley Unit 1	PWR	Duquesne Light Company	March 1992	July 1994
LaSalle County Station Unit 1	BWR	Commonwealth Edison Company	December 1991	May 1993
Sequoyah Nuclear Station	PWR	Tennessee Valley Authority	March 1991	July 1995
Zion Station	PWR	Commonwealth Edison Company	February 1991	October 1993
Shearon Harris Plant	PWR	Carolina Power & Light Company	July 1991	April 1992
Yonggwang Units 3&4	PWR	Korea Electric Power Corporation	March 1991	January 1992
Laguna Verde Nuclear Station Units 1&2	BWR	Comision Federal de Electricidad	November 1991	June 1993
Donald C. Cook Nuclear Plant	PWR	American Electric Power Service Corporation	April 1990	June 1993
Hope Creek Nuclear Generating Station	BWR	Public Service Electric & Gas Company	December 1989	April 1991
Oyster Creek Nuclear Generating Station	BWR	GPU Nuclear	October 1989	June 1990
Ulchin Unit 2	PWR	Korea Electric Power Corporation	March 1989	August 1990
Three Mile Island Unit 1	PWR	GPU Nuclear	March 1989	August 1992
Kuosheng Units 1&2	BWR	Taiwan Power Company	August 1988	July 1991

TABLE 3.1.3 LISTING OF HOLTEC PROJECTS THAT UTILIZE A SIMILAR RACK DESIGN				
Plant Name	**Reactor Type**	**Utility**	**Start Date**	**Completion Date**
Chinshan Nuclear Power Station Units 1&2	BWR	Taiwan Power Company	November 1988	October 1989
FitzPatrick Nuclear Power Plant	BWR	New York Power Authority	August 1988	March 1990
Indian Point Unit 2	PWR	Consolidated Edison Company	October 1988	September 1990
Vogtle Unit 1	PWR	Georgia Power Company	August 1987	November 1988
Millstone Unit 1	BWR	Northeast Utilities Services Company	June 1987	February 1989
Diablo Canyon Units I and II	PWR	Pacific Gas and Electric Company	January 1984	July 1986

3.2 Material Considerations

Safe storage of nuclear fuel in the SFP requires that the materials utilized in the rack fabrication be of proven durability and compatible with the pool water environment. This section provides a synopsis of the considerations that assure a satisfactory service life of at least 40 years for all materials used in the new fuel racks.

3.2.1 Structural Materials

Table 3.3.1 below provides a listing of the structural materials that are permitted in the new spent fuel rack modules.

Table 3.3.1 PERMISSIBLE STRUCTURAL MATERIALS	
Part	**Material**
Baseplate	ASME SA240-304
Sheet metal stock	ASME SA240-304
Shear pad	ASME SA240-304
Weld material	Type 308 or 309

All austenitic stainless steel materials proposed for use in the new racks have been used in numerous Light Water Reactor (LWR) pools racked by Holtec International. Many racks have been in the pool water for decades: None has exhibited any evidence of material degradation.

3.3 References

[3.1.1] A Case for Wet Storage, by K.P. Singh, INNM Spent Fuel Management Seminar X, Washington, D.C. January 1993.

[3.2.7] "Safety Evaluation by the Office of Nuclear Reactor Regulation Related to Holtec International Report HI-2022871 Regarding Use of Metamic in Fuel Pool Applications," Facility Operating License Nos. DPR-51 and NPF-6, Entergy Operations, Inc., Docket No. 50-313 and 50-368, USNRC, June 2003.

[3.2.8] USNRC Docket No. 72-1004, NRC's Safety Evaluation Report on NUHOMS 61BT (2002).

[3.2.9] "METAMIC 6061 + 40% boron Carbide Metal Matrix Composite Test Program for NAC International, Inc.", California Consolidated Technology, Inc. (2001).

[3.2.10] "METAMIC" Qualification Program for Nuclear Fuel Storage Applications, Final Test Results", Report NET 152-03, Prepared for Reynolds Metal Company, Inc. by Northeast Technology Corporation.

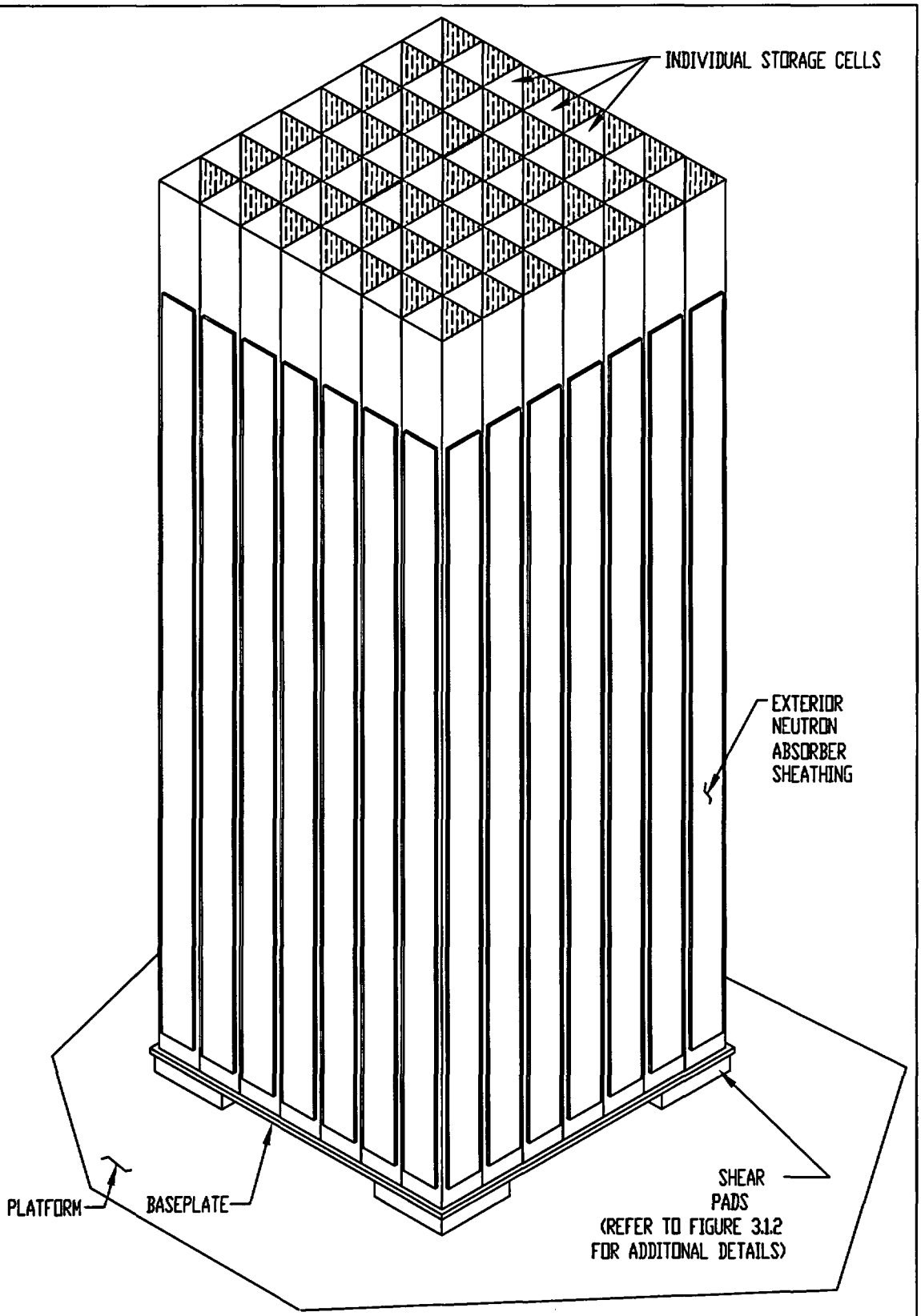

FIGURE 3.1.1; PICTORIAL VIEW OF A TYPICAL RACK MODULE

NOTE: THE NUMBER OF CELLS SHOWN IS NOT INTENDED TO DEPICT ACTUAL RACK SIZE

HI-2043224 H1406

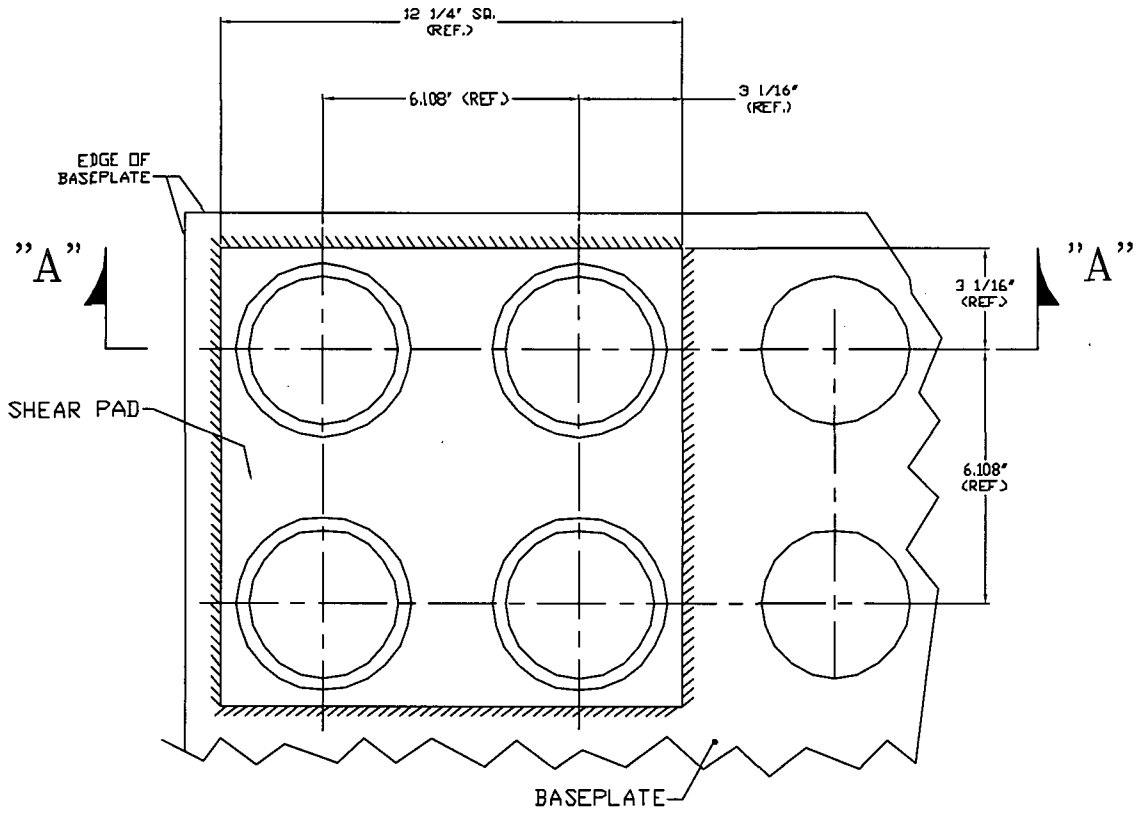

BOTTOM VIEW

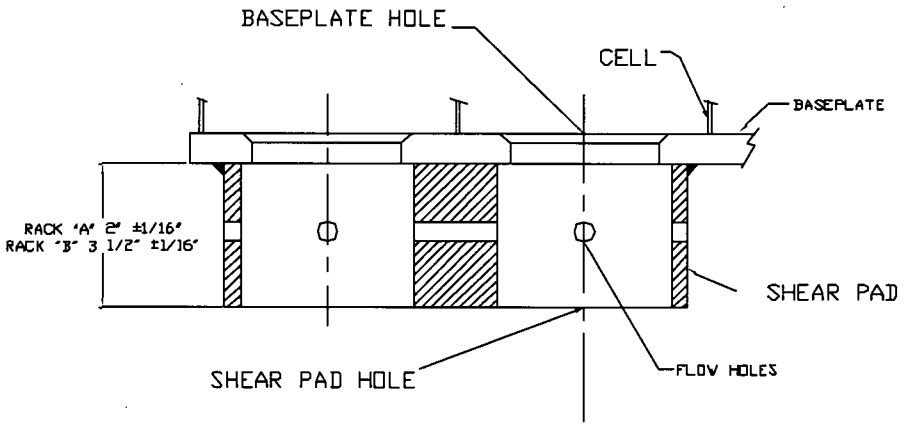

SECTION VIEW "A" – "A"

FIGURE 3.1.2; SHEAR PADS FOR RACKS

Chapter 4: Criticality Safety Analyses

4.1 INTRODUCTION

The purpose of this section is to document the criticality safety analysis of the new spent fuel storage racks for CNS. The analysis used the calculational methodology and benchmarking described in the Topical Report [4.7.1] on Criticality Safety Analysis of BWR storage racks. The principal design parameters for the new racks are the following:

- An average uniform enrichment of 4.9 wt% U-235 was used for the GE14C fuel. Table 4-1 lists the specifications for the different types of fuel in use or storage at CNS. The GE14C assembly exhibits a reactivity that bounds all other fuel assembly types in Table 4-1 because of higher enrichment, higher fuel (UO_2) density or both. Consequently, only the GE14C fuel needs to be evaluated.

- The fuel rack design, illustrated in Figure 4-1, has a storage cell lattice spacing, sufficient to permit installing and removing fuel assemblies. The rack utilizes Metamic neutron absorber plates to assure a k_{eff} of less than 0.95 at the 95% probability, 95% confidence level. The Metamic plates are described in Table 4-2.

4.2 SUMMARY AND CONCLUSIONS

Calculations were made for the GE14C fuel assembly in the Holtec storage racks. Based on these calculations, it is concluded that the storage racks conform to the applicable USNRC guidelines subject to the restrictions defined in this report. Therefore, the racks can safely accommodate the GE14C fuel assembly and all other fuel assemblies of lower reactivity currently in use or in storage at the CNS.

4.3 ACCEPTANCE CRITERIA

Regulatory Guidelines and Assumptions are documented in the Topical Report [4.7.1].
Three different criteria are specified for the safe and acceptable storage of spent fuel, as follows:

- Fuel assemblies with a maximum enrichment specified in Table 4-3 may be safely stored in the racks without consideration of gadolinia content or discharge fuel burnup.

- The fundamental criteria for the storage rack design is a reactivity for an infinite fuel lattice (k_∞) of 1.33 in the standard cold core geometry (k_∞, SCCG) at an average (uniform) enrichment of 4.9% U-235. Figure 4-2 shows the k_∞, (CASMO4 calculations as a function of the k_∞, SCCG), and Figure 4-3 shows the variation of k_∞, SCCG with discharge fuel burnup. For the design criteria of a k_∞, SCCG of 1.33, the limiting burnup is shown in Figure 4-3 and Table 4-3. Fuel assemblies with a discharge fuel burnup equal to or greater than the minimum shown in Table 4-3 may be safely stored in the storage rack without consideration of the gadolinia content.

- Fuel assemblies with average uniform enrichments greater than the maximum enrichment with burnup less than the minimum burnup shown in Table 4-3 require credit for gadolinia burnable poison. Calculations confirm that a minimum Gd_2O_3 in a minimum number of fuel rods, as shown in Table 4-3, is required for acceptable storage in the racks.

4.4 METHODOLOGY

Methods of analysis, computer codes used and benchmarking results are described in Reference [4.7.1]. Generic guidelines are established that are applicable to future fuel assembly designs. Summary Tables of the maximum reactivity and contributory factors are provided as Tables 4-4 and 4-5.

4.5 ANALYSIS CALCULATIONS

4.5.1 Tolerances and Uncertainties

The incremental reactivity values (Δk) of the various tolerances are listed in Table 4-6 and include the following tolerances: (see also Reference 4.7.1)

- Cell Box I.D.
- Box Wall Thickness
- Fuel Density Tolerance
- Fuel Enrichment Tolerance, and
- Tolerance in Metamic Areal Density.

Other uncertainties are included in the final analysis including the following:

- Uncertainty in determination of the calculational bias as determined in the benchmark calculations, at the 95% probability, 95% confidence level.

- Statistical uncertainty in the Monte Carlo calculation. This is listed in the MCNP4a output and is multiplied by the one-sided K- factor for 95% probability at the 95% confidence level as described in Reference [4.7.1].

- The uncertainty in the depletion calculations is assumed to be 5% of the reactivity decrement as identified in the Kopp memorandum. [4.7.2]

4.5.2 Maximum Reactivity Determination

The maximum reactivities for the two reference design cases are summarized in Tables 4-4 and 4-5. In addition to the reference MCNP4a calculated k_{eff}, the summary includes the tolerances (section 4.5.1 above) and the following additive parameter:

- The calculational bias as determined in the benchmark calculations (Appendix A to Reference [4.7.1]) and a temperature correction to 4°C (the temperature of maximum reactivity). The maximum reactivity for both cases is well below the 0.95 regulatory limit.

4.5.3 Minimum Gadolinia Requirements

For fuel with enrichments greater than the maximum or burnups less than the minimum (Table 4-3), gadolinia credit is required to assure a maximum k_{eff} less than 0.95. Calculations have been made for fuel with 4.9 wt% uniform enrichment containing 6 or 8 gadolinia-bearing fuel rods with 3, 3.5, 4, 5 or 6 wt % Gd_2O_3. Assemblies with 6 poisoned rods with 3 or 4 wt % Gd_2O_3 were found to be unacceptable, and assemblies with 5 wt% Gd_2O_3 were only marginally acceptable but not recommended. Results of the acceptable combinations are shown in Figure 4.4. In all cases, the highest reactivity is less than the design basis reactivity, confirming that 6 wt% Gd_2O_3 in 6 fuel rods or 3.5 wt % Gd_2O_3 in 8 rods are sufficient to assure criticality safety. For either higher Gd_2O_3 loadings or a greater number of Gd_2O_3-bearing rods, the subcriticality margin is even greater as indicated in Figure 4.4.

4.5.4 Rack Interfaces

The cask area racks face the pool wall on two sides, and face existing racks on the other two sides. The distance between the two cask area racks, and from the cask area racks to the existing racks, is more than 13 inches, due to an existing structure in the pool which precludes the racks from being closer. The mean free path of neutrons in steel or water is on the order of 1 inch. The

separation of more than 13 inches is therefore sufficient to preclude any neutronic interaction. Consequently, no specific calculations of any interface configuration are required, and poison panels on the periphery of the cask area racks are not necessary.

4.5.5 Part-Length Fuel Rods

The GE14C fuel assembly contains 14 part-length fuel rods intended to partially compensate for boiling (void) in the upper region of the core. Generally, the upper region has a lower average enrichment and operates to a lower average burnup (i.e., greater amount of residual gadolinia.) However, at the present time, a fuel assembly has not been designed for an average enrichment of 4.9% (the design basis for the present analysis). Although it is anticipated that the lower (fully rodded) fuel will dominate the reactivity, a conservative estimate has been made by assuming that the partially rodded array (78 fuel rods) extends over the entire core. This is intended to bound any practical fuel assembly design that might be developed in the future for fuel with 4.9% U-235 average enrichment. With all assemblies assumed to contain 78 fuel rods with 4.9% enrichment, a k_∞ SCCG of 1.33 would occur at 13.18 MWD/KgU burnup and the reactivity could possibly increase to a maximum k_{eff} of 0.9463, remaining less than the limiting k_{eff} of 0.95 (see also Figure 4.4 for additional margin available with Gd_2O_3 present).

4.6 Abnormal and Accident Conditions

The reactivity consequences of abnormal and accident conditions are summarized in Table 4-7 and discussed in Reference 4.7.1 and in the following paragraphs.

4.6.1 Eccentric Assembly Positioning

Normally, eccentric fuel positioning results in a small reduction in reactivity in poisoned fuel storage racks. To confirm this expectation, MCNP4a calculations were made with fuel assemblies in the corner (4 assemblies at closest approach). Results are summarized in Table 4-8a, confirming that eccentric positioning of fuel assembles reduces reactivity.

4.6.2 Removal of Flow Channel

Removal of the flow channel also reduces reactivity as confirmed by the CASMO4 calculations of k_∞ shown in Table 4-8b.

4.6.3 Reactivity Effects of Temperature

The temperature and void coefficients of reactivity are normally negative in poisoned storage racks. Calculations were made of the reactivity variation with temperature for both the uniform maximum enrichment case and for the minimum burnup case. Results of the calculations, shown in Table 4-9, confirm that the coefficients of reactivity are negative. Therefore, the highest (most conservative) reactivity occurs for the assumed design basis temperature of 4°C.

4.6.4 Mis-loaded Fuel Assembly

In the unlikely event a fuel assembly of the highest permissible reactivity is accidentally mis-loaded outside and immediately adjacent to a rack module, the reactivity could potentially be increased. However, the area outside a rack module is an area of high neutron leakage which would mitigate or nullify any adverse reactivity consequence of such an accident.

Calculations were made for the condition where the peripheral cells do not contain Metamic panels on the outer surface, and where only one side of the mis-loaded assembly faces the periphery. Under this condition, the offending fuel assembly is separated from the fuel in the rack only by the stainless steel on the outer cell periphery. Calculations under this condition are listed in Table 4-10. These calculations confirm that the reactivity of a fuel mis-loading accident of this kind is negligible (or negative) due to neutron leakage on the rack periphery, and that generally no poison panels are required on the periphery of the racks.

However, there are also corner locations on the periphery of the cask area racks where a mis-loaded assembly can face two peripheral assemblies. This condition is not bounded by the

calculation presented in Table 4-10. All locations where such a condition is possible therefore require poison panels on the two peripheral cells that could face the mis-loaded assembly. With these poison panels, the situation between the mis-loaded assembly and the peripheral assemblies is identical to the situation between any two assemblies within the racks. The mis-loading condition in these corners is therefore bounded by the infinite array calculations performed for the racks, and no further analysis is required.

4.6.5 Seismic Displacement of a Rack Module

The distance between the two cask area racks, and from the cask area racks to the existing racks, is more than 13 inches, due to an existing structure in the pool which precludes the racks from being closer. Consequently, any seismically-induced displacement of rack modules that might close the water gap between modules would have no adverse reactivity consequence.

4.7 REFERENCES

[4.7.1] S. E. Turner, Generic Topical Report, "Topical Report on the Criticality Analysis Methodology for Spent Fuel Racks in BWR Storage Pools", Holtec Report HI-2043244 Rev. 0.

[4.7.2] L.I. Kopp, "Guidance on the Regulatory Requirements for Criticality Analysis of Fuel Storage at Light Water Reactor Plants", USNRC memorandum, Kopp to Collins, August 1998.

Table 4-1 FUEL ASSEMBLY DESIGN SPECIFICATIONS*

	GE6 (8X8R)	GE7B	GE7B	GE9B	GE14B	GE14C
Pellet OD (in)	0.410	0.410	0.411	0.411		
Active Fuel Length (in)	150	150	150	150		
Pellet Stack Density (g/cc)	10.400	10.400	10.466	10.450		
Clad I.D. (in.)	0.419	0.419	0.419	0.419		
Clad O.D. (in.)	0.483	0.483	0.483	0.483		
Rod Array	8x8	8x8	8x8	8x8	10x10	10x10
Rod Pitch (in.)	0.640	0.640	0.640	0.640		
Max Average Enrichment (wt% U-235)	3.8	3.8	3.8	4.9		
Number of Water Rods	2	2	2	1		
Number of Fuel Rods Replaced	2	2	2	4		
Water Rod O.D. (in)	0.591	0.591	0.591	1.34		
Water Rod I.D. (in)	0.531	0.531	0.531	1.26		
Channel Thickness (in)	0.08	0.08	0.08	0.08		
Channel I.D. (in)	5.278	5.278	5.278	5.278		
Channel Material	Zircaloy	Zircaloy	Zircaloy	Zircaloy	Zircaloy	Zircaloy
95% Conf. Mean Pellet Density Tolerance (g/cc)	——	——	0.05475	0.05475		
Pellet Enrichment Tolerance (wt% U-235) ≥ 2.0 wt% U-235	±0.088%	±0.088%	±0.088%	±0.088%		

* Data in this table is proprietary to NPPD and the General Electric Company.

SHADED AREAS DENOTE PROPRIETARY INFORMATION

Table 4-2

ABSORBER PANEL SPECIFICATIONS

Material	Metamic
B_4C Content*	25.00
B^{10} Areal Density (g/cm^2)	0.0186
Thickness, inches	0.077
Width, inches	4.75
Length, inches	152

* Calculations assume 18.3% B^{10} in the boron.

Table 4-3

LIMITING CRITERIA FOR ACCEPTABLE STORAGE

- Uniform average enrichment of 3.3% U-235 or less.

- k_∞, SCCG of 1.33 or less corresponding to a discharge fuel burnup of 12.6 MWD/KgU or greater. For conservatism, it is recommended that the minimum acceptable burnup be at 13.18 MWD/KgU.

- Minimum of 6 wt% Gd_2O_3 in at least 6 fuel rods or minimum of 3.5% Gd_2O_3 in 8 fuel rods. Applicable to fuel assemblies with burnup less than 13.18 MWD/KgU and a uniform average enrichment greater than 3.3% U-235.

Table 4-4

SUMMARY OF CRITICALITY SAFETY ANALYSES

For Fuel of 3.3% Enrichment

Temperature Assumed for Analysis	4°C
Fuel Enrichment (Uniform Average)	3.3%
Gd_2O_3 Loading %	N/A
Reference MCNP4a k_{eff}	0.9311
Temperature Corr. To 4°C	0.0027
MCNP Bias	0.0009
Calculated k_{eff}	0.9347
<u>Uncertainties</u>	
Removal of Flow Channel	negative
Eccentric Assembly Location	negative
Uncertainty in MCNP Bias	±0.0011
MCNP4a Statistics	±0.0003
Manufacturing Tolerances	±0.0087
Uncertainty in Depletion calculations	N/A
Total Uncertainty*	±0.0088
<u>Maximum Reactivity</u>**	0.9435

* Square root of sum of squares of all independent tolerance effects.

** Maximum reactivity is sum of calculated k_{eff} (including bias and temperature correction) and the total tolerance uncertainty

SHADED AREAS DENOTE PROPRIETARY INFORMATION

Table 4-5

SUMMARY OF CRITICALITY SAFETY ANALYSES

For 4.9% Enriched Fuel at 12.6 MWD/KgU

Temperature Assumed for Analysis	4°C
Fuel Enrichment (Uniform Average)	4.9%
Maximum k_{inf} in SCCG	1.33
Reference MCNP4a k_{eff}	0.9307
Temperature Corr. To 4°C	0.0020
MCNP Bias	0.0009
Calculated k_{eff}	0.9336
Uncertainties	
Removal of Flow Channel	negative
Eccentric Assembly Location	negative
Uncertainty in MCNP4a Bias	±0.0011
MCNP4a Statistics	±0.0003
Manufacturing Tolerances	±0.0075
Uncertainty in Depletion calculations	±0.0045
Total Uncertainty*	±0.0088
Maximum Reactivity**	0.9424

* Square root of sum of squares of all independent tolerance effects.

** Maximum reactivity is sum of calculated k_{eff} (including bias and temperature correction) and the total tolerance uncertainty.

SHADED AREAS DENOTE PROPRIETARY INFORMATION

Table 4-6

REACTIVITY UNCERTAINTY DUE TO
MANUFACTURING TOLERANCES

			Reactivity Effects of Manufacturing Tolerances	
Quantity	Nominal Value	Tolerance	@ 3.3 % E @ 0 MWD/KgU	4.9 % E @ 12.6 MWD/KgU
B-10 Loading (g/cm^2)	0.0186		±0.0052	±0.0050
Metamic Width (in.)	4.75		Minimum used	Minimum used
Lattice spacing (Box I.D.) (in.)	6.108		±0.0028	±0.0033
SS thickness (in.)	0.075 / 0.035		±0.0009	±0.0009
Fuel Enrichment (% U-235)	3.3 or 4.9		±0.0063	±0.0043
Fuel Density (g/cm^2)	10.514		±0.0007	±0.0005
Statistical Combination of Tolerance Uncertainties			±0.0087	±0.0075

Table 4-7

REACTIVITY EFFECTS OF ABNORMAL AND ACCIDENT CONDITIONS

Accident/Abnormal Condition	Reactivity Effect
Temperature Increase	Negative (Table 4-9)
Void (Boiling)	Negative (Table 4-9)
Assembly Dropped on Top of Rack	Negligible
Misplacement of a Fuel Assembly	Negligible
Seismic Movement	Negligible
Eccentric Assembly Positioning	Negative
Removal of Flow Channel	Negative

Table 4-8a

REACTIVITY EFFECTS OF ECCENTRIC FUEL POSITIONING

Case Description	Reference	Eccentric Position
1) Fuel of 3.3% Enrichment	0.9311±0.0002	0.9207±0.0002
2) 4.9% E @ 12.6 MWD/KgU	0.9307±0.0002	0.9213±0.0002

Table 4-8b

REACTIVITY EFFECT OF REMOVING FLOW CHANNEL (CASMO4 Calculation)

Case Description	Reference	With Channel Removed
1) Fuel of 3.3% Enrichment	0.9359	0.9335
2) 4.9% E @ 12.6 MWD/KgU	0.9352	0.9314

Table 4-9

EFFECT OF TEMPERATURE AND VOID ON CALCULATED REACTIVITY OF THE STORAGE RACK

Case	**Incremental Reactivity Change, ?k**	
	GE14C @ 3.3 % E, 0 Burnup	GE14C 4.9 %E @ 12.6 MWD/KgU
4°C (39°F)	Reference	Reference
20° (68°F)	-0.0027	-0.0020
40°C (122°F)	-0.0066	-0.0050
70°C (158°F)	-0.0133	-0.0105
100°C (212°F)	-0.0211	-0.0169
120°C (248°F)	-0.0266	-0.0215
120°C + 10% void	-0.0475	-0.0427

Table 4-10

REACTIVITY EFFECTS OF MIS-LOADED FUEL ACCIDENT

Case Description	**Reference Reactivity (infinite array)**	**k_{eff} with Extra Assembly Outside**
1) All Fuel of 3.3% Uniform Average Enrichment	0.9311±0.0002	0.9245±0.0002
2) With Fuel of 4.9% Enrichment Burned to 12.6 MWD/KgU	0.9307±0.0002	0.9235±0.0002

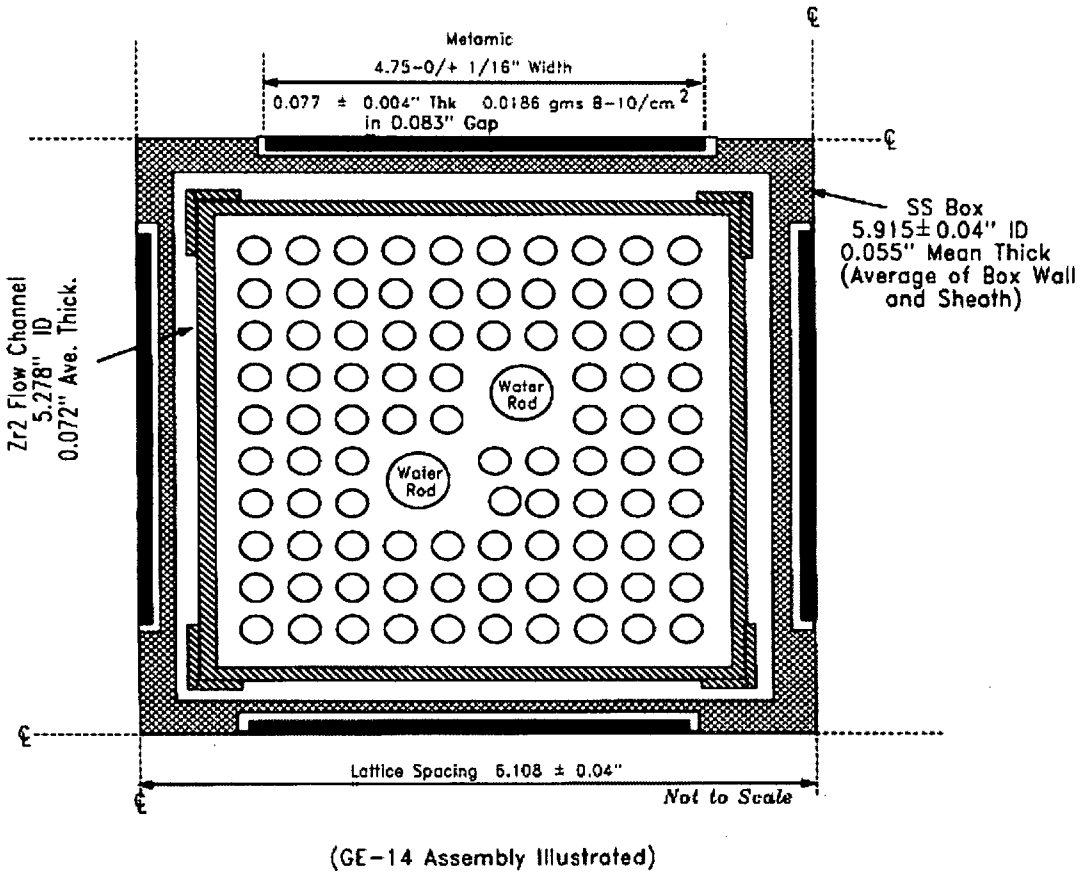

(GE-14 Assembly Illustrated)

Fig. 4.1 Storage Cell Calculational Model (MCNP)

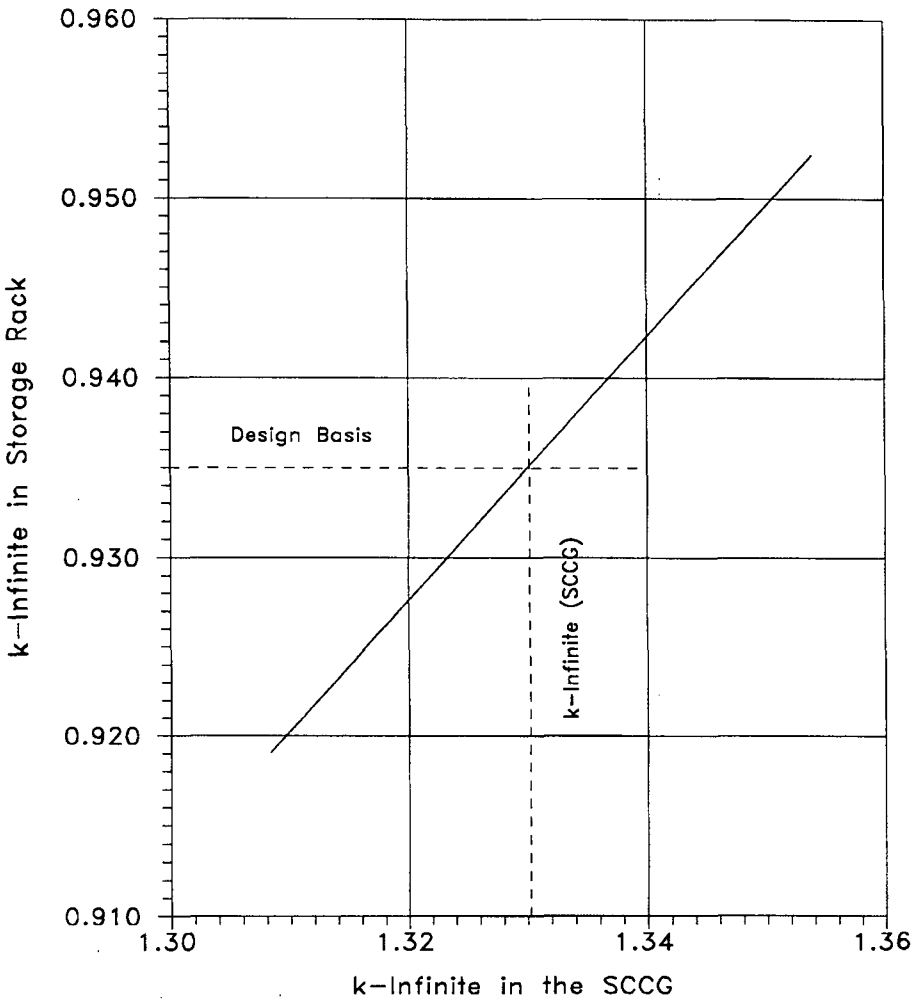

Fig. 4.2 Correlation of k-Infinite (SCCG) and k-Infinite in the Storage Rack

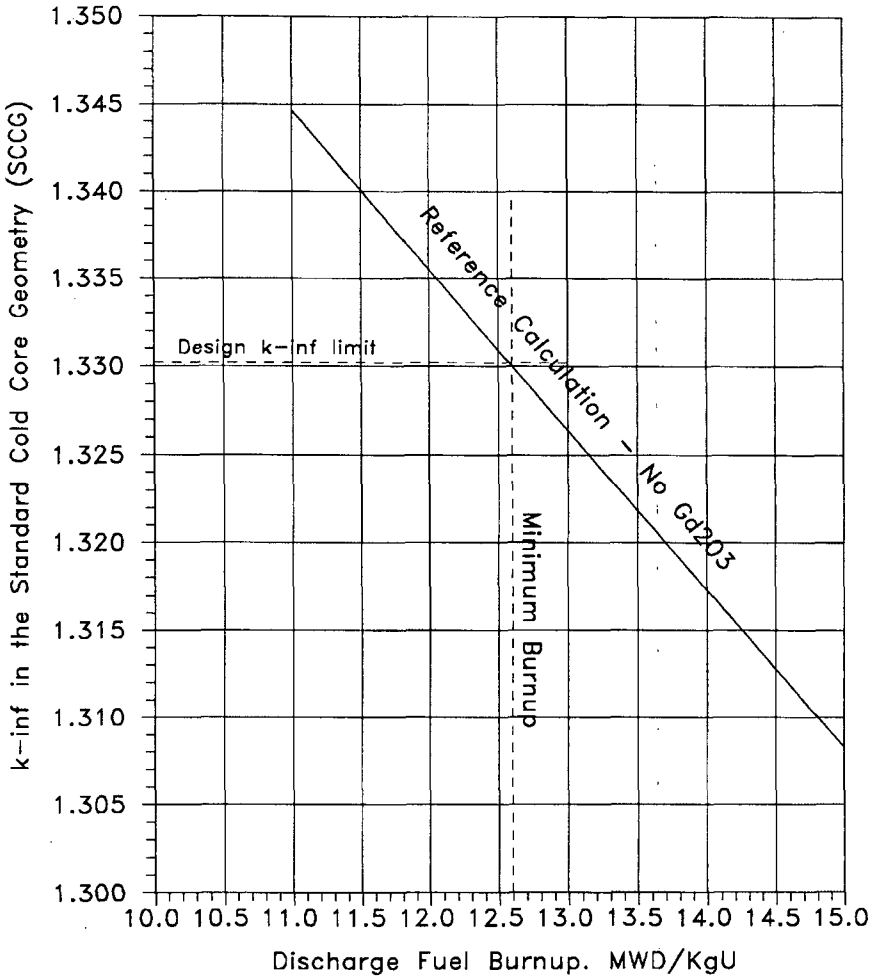

Fig. 4-3 Variation in k-Inf(SCCG) with Burnup without Gd_2O_3 for 4.90% Fuel

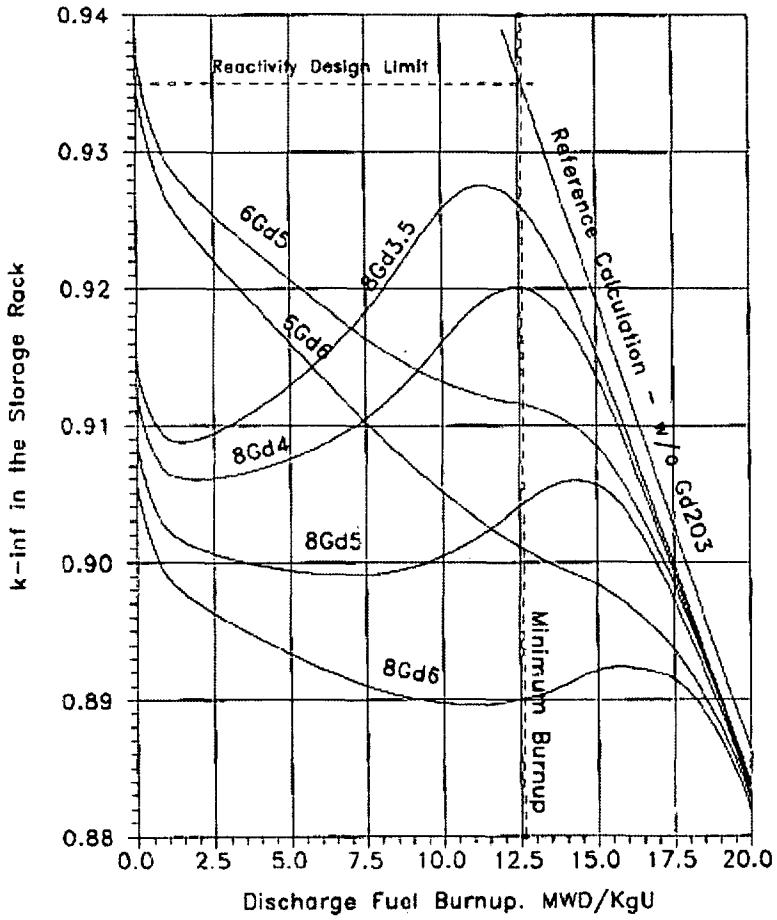

Fig. 4.4 Variaiion in Rack Reactivity with Burnup for 4.9% Fuel with Gd_2O_3

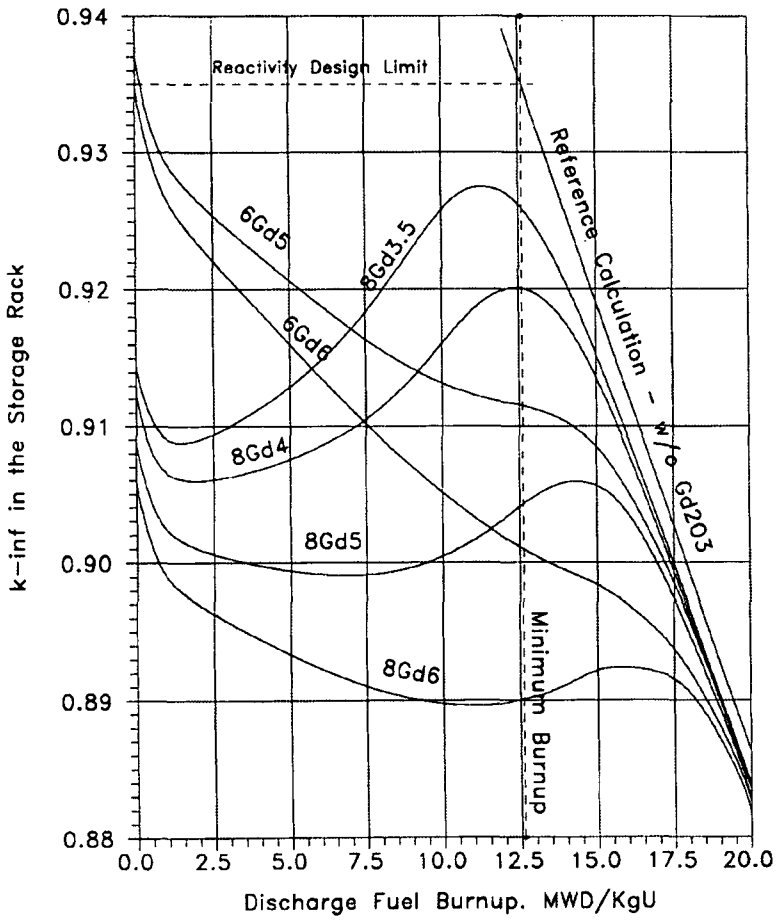

Fig. 4.4 Variation in Rack Reactivity with Burnup for 4.9% Fuel with Gd_2O_3

Chapter 5: Thermal-Hydraulic Considerations

5.1 Introduction

This section provides a summary of the analyses performed to evaluate the effects of the SFP capacity expansion on the thermal-hydraulic performance of the SFP and its associated cooling system. All analyses are performed for a rack array that bounds the proposed final rack array that has the greatest spent fuel storage capacity, which has been previously described in Chapter 1 of this report.

Using the guidance of applicable portions[1] of the USNRC Standard Review Plan 9.1.3 [5.1.1] and Section III of the USNRC OT Position Paper [5.1.2], the discrete thermal-hydraulic qualification analyses for the expanded rack array are as follows:

- Determination of required in-core hold times prior to the initiation of fuel transfer from the reactor to the SFP, as functions of cooling water temperature, to ensure that the maximum bulk temperature limits are not exceeded.
- Evaluation of loss-of-forced cooling scenarios to establish minimum times to boil and corresponding minimum makeup water requirements. These evaluations are performed for the points in time where the bulk temperatures reach their maximum values.
- Demonstration that local water temperatures within the loaded spent fuel storage racks will not result in two-phase flow conditions while forced cooling is operating. This demonstration is performed for the point in time where the bulk temperature reaches its maximum value.
- Demonstration that Departure from Nucleate Boiling (DNB) will not occur within the loaded spent fuel storage racks under a loss of forced cooling (i.e., bulk boiling).
- Calculation of bounding fuel rod cladding temperatures, at the point in time where the bulk temperature reaches its maximum value, to ensure that departure from nucleate boiling on the fuel cladding surfaces is not possible while forced cooling is operating.

[1] Both the SRP and the OT Position Paper stipulate the use of Auxiliary Systems Branch Technical Position 9-2 for decay heat calculations and the SRP describes particular discharge scenarios and bulk temperature limits. A more accurate decay heat calculation method that has been previously accepted by the NRC (ORIGEN2) is employed herein, and discharge scenarios and bulk temperature limits are in accordance with the current licensing basis.

The following sections present analysis methodology descriptions, a synopsis of the input data employed and key assumptions, and summaries of the calculated results.

5.2 Calculation Methodologies

The following subsections present descriptions of the calculation methods employed in performing the thermal-hydraulic licensing-basis evaluations for the proposed expanded rack array. Similar methods of thermal-hydraulic analysis have been used in the licensing evaluations for other SFP capacity expansion projects.

5.2.1 Bulk Temperature Evaluations

Heat generated in the SFP and the reactor vessel cavity (RXW) is removed and rejected to the ultimate heat sink by two active cooling systems referred to as the fuel pool cooling (FPC) system and the residual heat removal (RHR) system. The relationship between the decay heat in the SFP and the RXW and the corresponding bulk temperatures can be defined using a lumped-parameter model. The governing equations are as follows:

$$C_{SFP}\frac{dT_{SFP}}{d\tau} = Q_P(\tau) + Q_R(\tau)\times F(\tau) - Q_{FPC}(T_{SFP}) - Q_{ENV}(T_{SFP}) - m_{INT}\times c_P\times(T_{SFP} - T_{RHR})$$

$$C_{RXW}\frac{dT_{RXW}}{d\tau} = Q_R(\tau)\times(1 - F(\tau)) - Q_{RHR}(T_{RXW}) - m_{INT}\times c_P\times(T_{RHR} - T_{SFP}) \qquad (5\text{-}1)$$

$$Q_{RHR}(T_{RXW}) = m_{RHR}\times c_P\times(T_{RXW} - T_{RHR})$$

where:

C_{SFP} = SFP thermal capacity, Btu/°F
T_{SFP} = SFP bulk temperature, °F
τ = Time after reactor shutdown, hr
$Q_P(\tau)$ = Previously discharged fuel decay heat generation rate, Btu/hr
$Q_R(\tau)$ = Full core fuel decay heat generation rate, Btu/hr
$F(\tau)$ = Fraction of full core transferred to SFP
$Q_{FPC}(T_{SFP})$ = Temperature dependent FPC system heat rejection rate, Btu/hr
$Q_{ENV}(T_{SFP})$ = Temperature dependent passive heat loss to the environment, Btu/hr
m_{INT} = Mass flow through the RHR-to-FPC Intertie, lb/hr

c_P = Specific heat capacity of water, Btu/(lb×°F)
T_{RHR} = Temperature of the RHR-to-FPC Intertie Water, °F
C_{RXW} = RXW thermal capacity, Btu/°F
T_{RXW} = RXW bulk temperature, °F
$Q_{RHR}(T_{RXW})$ = Temperature dependent RHR system heat rejection rate, Btu/hr
m_{RHR} = Mass flow through the RHR heat exchanger, lb/hr

The first sets of terms on the right hand sides of the first two equations of Equation 5-1, containing the time varying decay heat generation rate parameters $Q_P(\tau)$, $Q_R(\tau)$ and $F(\tau)$, are completely independent of the bulk temperatures and are a function of the fuel assemblies design and operating histories and the post-reactor decay period alone. The decay heat load from previously offloaded fuel assemblies in the SFP is conservatively assumed to be constant. The decay heat load from recently offloaded fuel assemblies varies with time. Both the previously offloaded and recently offloaded fuel decay heats are calculated using Holtec's QA validated DECOR computer program [5.2.1], which incorporates the ORIGEN2 computer code [5.2.2] to perform the decay heat calculations. The overall solution to the coupled equations of Equation 5-1 is performed using Holtec's QA validated MULPOOLD computer program [5.2.3]. An iterative (i.e., guess and correct) solution of Equation 5-1 is performed to determine an in-core hold time that will maintain the SFP bulk temperature below applicable limits.

The second set of terms on the right hand side of the first two equations of Equation 5-1, the cooling system heat rejection rates, are a function of the bulk temperatures and the cooling water flow rates and temperatures alone. The formulations for these terms are:

$$\begin{aligned} Q_{FPC}(T_{SFP}) &= W_{FPC} \times c_P \times p_{FPC} \times (T_{SFP} - ti_{FPC}) \\ Q_{RHR}(T_{RXW}) &= W_{RHR} \times c_P \times p_{RHR} \times (T_{RXW} - ti_{RHR}) \end{aligned} \tag{5-2}$$

where:

W_{FPC} = FPC heat exchanger(s) coolant water flow rate, lb/hr
c_P = Coolant water specific heat capacity, Btu/(lb-°F)
p_{FPC} = FPC heat exchanger(s) temperature effectiveness
T_{SFP} = SFP bulk water temperature, °F
ti_{FPC} = FPC heat exchanger(s) coolant water inlet temperature, °F
W_{RHR} = RHR heat exchanger(s) coolant water flow rate, lb/hr

p_{RHR} = RHR heat exchanger(s) temperature effectiveness
T_{RXW} = RXW bulk water temperature, °F
ti_{RHR} = RHR heat exchanger(s) coolant water inlet temperature, °F

All of the terms in Equation 5-2 are self-explanatory except for the temperature effectiveness, which is a non-dimensional factor akin to a heat exchanger efficiency. As used in the analyses herein, this term can be defined as:

$$p = \frac{t_o - t_i}{T - t_i} \tag{5-3}$$

where t_o is the coolant outlet temperature (°F), T is the SFP or RXW temperature (as appropriate for the FPC HX or RHR HX) and t_i is as defined above.

The third term on the right hand side of Equation 5-1 for the SFP is the passive heat loss term. This term includes the heat evaporation losses from the SFP surface, natural convection and thermal radiation from the SFP surface, and heat conduction through the SFP walls and slab. A proprietary formulation for this term [5.2.5] is:

$$Q_{ENV}(T_{SFP}) = h\,A\,(T_{SFP} - t_a) + \varepsilon\,\sigma\,A\,[(T_{SFP} + 460)^4 - (t_a + 460)^4] + \alpha\,A\,(P_w - P_a) \tag{5-4}$$

where:

h = Natural convection heat transfer coefficient, Btu/(hr-ft^2-°F)
A = SFP surface area, ft^2
t_a = Air temperature above SFP, °F
ε = Emissivity of pool water
σ = Stephan-Boltzmann constant, Btu/(hr-ft^2-°R^4)
α = Evaporation rate constant, Btu/(hr-ft^2-psi)
P_w = Vapor pressure of water at SFP temperature, psi
P_a = Vapor pressure of water at ambient temperature, psi

It will be noted that Equation 5-4 does not include any conduction heat transfer terms. Experiments show that the heat conduction only accounts for about 4% of the total passive heat loss [5.2.6], so it is not included in the formulation for this term.

The final terms on the right hand sides of Equation 5-1 is the enthalpy of water exchanged between the SFP and the RXW during RHR-FPC Intertie. The enthalpy added to one of these two bodies must be removed from the other. The direction of enthalpy flow will depend on the SFP and RHR temperatures.

For a postulated loss of all forced cooling to the SFP (i.e., FPC and/or RHR system failures), the SFP bulk temperature would rise. Eventually, the SFP bulk temperature would reach the boiling point and water would begin to boil off from the surface of the SFP. Starting with Equation 5-1 for the SFP, the governing equation for this condition is obtained as:

$$C_{SFP}(\tau)\frac{dT_{SFP}}{d\tau} = Q_{SFP}(\tau+\tau_0) - Q_{ENV}(T_{SFP}) \tag{5-5}$$

where:

$C_{SFP}(\tau)$ = Time varying SFP thermal capacity, Btu/°F
$Q_{SFP}(\tau+\tau_0)$ = Time varying SFP decay heat generation rate, Btu/hr
τ = Time after forced cooling failure, hr
τ_0 = Loss of cooling time after reactor shutdown, hr

All other terms in this equation are the same as defined for Equation 5-1. The SFP thermal capacity is time varying because the water boil off rate may exceed makeup capacity until operator action is taken. It should be noted that τ plus τ_0 as defined for Equation 5-5 equals τ as defined for Equation 5-1. The SFP bulk temperature versus time after loss of cooling and the corresponding water boil off rates are determined using the Holtec QA validated computer program TBOIL [5.2.7].

5.2.2 Local Temperature Evaluations

The bulk temperature analyses described in the preceding subsection do not address temperature variation within the SFP. To demonstrate that boiling cannot occur anywhere within the SFP when the FPC System is operating and that DNB cannot occur when the FPC System is not operating (i.e., under bulk boiling conditions), it is necessary to specifically evaluate the SFP

local temperatures. Due to the coupling of these local temperatures with the flow field in the SFP, it is necessary to resort to a Computational Fluid Dynamics (CFD) analysis to perform these evaluations accurately.

The CFD model for the SFP must include both large and small scale features, spatially distributed heat sources in the racks, and connections to the FPC system. Figure 5.2.1 presents an isometric view of the CFD model.

Above the SFP racks, water is free to circulate within the confines of the SFP. The flow field in this region is governed by buoyancy forces and, to a lesser extent, the injection and removal of water at the FPC system connections. These flow gradients are governed by the Navier-Stokes equations [5.2.8], with additional terms for the effects of turbulence using a two-equation empirical model.

From the region above the racks, water can flow down through gaps around the periphery of the rack array (downcomers) and enter the region between the SFP floor and the rack baseplates (the bottom plenum). From the bottom plenum, water flows upward through the loaded spent fuel storage rack cells and then mixes with the water in the region above the racks. As the water flows through the rack cells, it removes decay heat for subsequent rejection to the FPC system. The water flow up through the narrow channels between rods in the stored spent fuel assemblies, modeled as a porous medium, is governed by Darcy's Law as:

$$\frac{\partial P}{\partial X_i} = -\frac{\mu}{K(i)} \times V_i - C \times \rho \times |V_i| \times \frac{V_i}{2} \tag{5-6}$$

where $\partial P/\partial X_i$ is the pressure gradient, K(i), V_i and C are the corresponding permeability, velocity and inertial resistance parameters, μ is the fluid viscosity and ρ is the fluid density. This momentum sink is added as an additional term to the Navier-Stokes momentum equation. The permeability and inertial resistance parameters for the rack cells loaded with fuel assemblies are

determined based on friction factor correlations for the laminar flow conditions that would exist due to the low buoyancy induced velocities and the small size of the flow channels.

Fuel assembly decay heat is applied to the model as volumetric heat generations, with different regions defined based on the fuel operating and cooling history. One of these regions is for fuel assemblies discharged in previous refueling outages. A second region is for the hottest reload batch of fuel assemblies being discharged from the reactor. A third region, used only for a full-core offload, is for the balance of the fuel assemblies being discharged from the reactor. By grouping the recently discharged fuel assemblies together, in the second and third zones, the volumetric heat generations are maximized. Within each zone, the volumetric decay heat generation rate is uniform.

The solutions of the SFP temperature and flow fields is performed using the CFD program FLUENT [5.2.9], which has been QA validated by Holtec International.

Once the local water temperatures are calculated, the temperature of the fuel cladding is determined by calculating the difference between the local water temperature and the local fuel cladding temperature using basic convection heat transfer methods. The sum of the local water temperature and the local water-to-clad temperature difference is the local fuel cladding temperature.

Within the reactor, different fuel rods are exposed to different power levels and accumulate burnup at different rates depending on their position in the core. The decay heat calculations reported in Subsection 5.5 assume both maximum burnup and maximum specific power and, therefore, yield the maximum rod heat rate (Q_{rod}). The heat emission rate from a fuel rod varies over its length. In an infinitesimal length, the local heat flux can be defined as the average heat flux multiplied by an axial peaking factor (F_z). The maximum axial peaking factor times the maximum rod heat rate and divided by the area of the rod active length yields the maximum rod heat flux (q_{max}).

As described earlier in this subsection, water flow upward through the fuel assemblies removes decay heat. The governing equation for this convection heat transfer mechanism is:

$$q_{\max} = h_f \times \Delta T_f \tag{5-7}$$

where:

h_f = convection film coefficient, Btu/(hr×ft^2×°F)

ΔT_f = temperature rise across convection film layer, °F

The convection film coefficient is calculated using the following definition of Nusselt number:

$$Nu = \frac{h_f \times D_h}{k_f} \tag{5-8}$$

where:

D_h = hydraulic diameter for flow between the fuel rods, ft

k_f = thermal conductivity of the fluid, Btu/(hr×ft×°F)

A common reference source [5.2.10] gives a Nusselt number of 4.364 for laminar flow at a constant heat flux (over short length of fuel rod the heat flux is approximately constant). Using this value, Equation 5-8 is solved to obtain h_f, which is then used to solve for ΔT_f.

In addition to the film layer temperature rise, the local water-to-clad temperature difference includes a temperature rise across an assumed crud layer with an assumed thermal resistance of 0.005 (hr×ft^2×°F)/Btu. Multiplying this resistance by the maximum heat flux yields the temperature rise across the crud layer. Adding this value to the temperature rise across the convection film layer yields the local water-to-clad temperature rise.

5.3 Allowable Temperatures

With respect to bulk temperature, the SFP temperature is limited to the current licensing basis value of 150°F for any partial core or full core offload. The minimum in-core hold times required to ensure that these limits are not exceeded are determined. Adherence to the in-core hold time requirements ensures temperature limit compliance.

With respect to time-to-boil, the minimum time-to-boil value must provide sufficient time for plant personnel to perform remedial actions and the makeup water requirement must be less than the minimum available makeup capacity of 120 gpm from Reactor Building Service Water. This quantity of makeup or more is also available from multiple seismic IIS sources (i.e., condensate storage tank, RHR intertie and suppression pool).

With respect to local temperature, the maximum local water temperature in the SFP must remain below the local saturation temperature for any condition where the FPC system is operating. The bounding fuel cladding temperature in the SFP should also remain below the local saturation temperature for any condition where the FPC system is operating, or else it must be shown that DNB will not occur, and must also remain below the current licensing basis limit of 350°F. For a loss of forced cooling condition (i.e., bulk boiling), it must be shown that the fuel cladding will remain below the current licensing basis limit of 350°F and that DNB will not occur.

5.4 Input Data and Assumptions

As described in Subsection 5.2.1, the fuel assembly decay heats are a function of the fuel assemblies' design, operating histories and post-reactor decay period. A historic and projected fuel discharge schedule is presented in Table 5.4.1. The remaining input data used in these calculations is presented in the following table.

Parameter	Value
Reactor Thermal Power	2,381 MW(t)
Reactor Core Size	548 assemblies
Number of Storage Cells in SFP	2,651

In addition to the inputs listed in the preceding table and in Table 5.4.1, the following assumptions are also used in these calculations:

- The decay heat contribution from previously discharged fuel assemblies is taken as constant. While the decay heat from these assemblies does change quite slowly with time, it is always reducing. This conservatively maximizes the decay heat load, thereby maximizing the resultant calculated bulk temperatures.

- The total fuel inventory stored in the SFP, based on the discharge schedule in Table 5.4.1, exceeds the 2,651 maximum storage locations following a full core offload. This ensures that the computed previously discharged fuel decay heat is a bounding maximum value.

As described in Subsection 5.2.1, the required in-core hold times are a function of the decay heat and the allowable bulk temperature. Along with the results of the decay heat calculations, the key input data used in these calculations are presented in the following table.

Parameter	Value
FPC HX SFP Water Flow Rate 1 HX per Pump 2 HXs per Pump	 237,500 lb/hr 118,750 lb/hr
FPC HX Coolant Flow Rate	237,500 lb/hr
RHR HX Reactor Vessel Cavity Water Flow Rate	6500 gpm
RHR HX Coolant Flow Rate	4000 gpm
RHR-FPC Intertie Flow Rate	1000 gpm
SFP Surface Area	1120 ft^2
SFP Water Net Thermal Capacity	2.0×10^6 Btu/°F
Reactor Vessel Cavity Water Net Thermal Capacity	2.1×10^6 Btu/°F
Maximum Fuel Assembly Transfer Rate	12 per hour

In addition to the inputs listed in the preceding table, the following assumptions are also used in these calculations:

- The thermal performance of the FPC and RHR heat exchangers is determined incorporating a tube plugging allowance of 5% for the FPC heat exchangers and 16.4% for the RHR heat exchangers. This conservatively minimizes the exchanger heat rejection rates, thereby minimizing the resultant temperature effectiveness.

- The calculation of the thermal inertia (thermal capacity) of the SFP credits only the net water volume. This conservatively neglects the considerable thermal inertia of the fuel racks, fuel assemblies, support grid and the concrete SFP structure.

- The calculation of the thermal inertia of the SFP assumes that the fuel assemblies are composed entirely of zircaloy. This conservatively maximizes the displaced water volume, thereby minimizing the calculated thermal inertia.

- The passive heat losses from the SFP surface to the building air are evaluated assuming the relative humidity of the building air is 100%. This minimizes the evaporation driving force and reduces the resulting heat losses.

As described in Subsection 5.2.1, the time-to-boil and water boil off rate are functions of the decay heat and the bulk temperature at the time of the FPC and/or RHR failure. Along with the results of the decay heat and required in-core hold time calculations, the key input data used in these calculations are presented in the following table.

Parameter	**Value**
Gross SFP Water Volume	39,570 ft^3
Fuel Racks Volume	1,335 ft^3
Fuel Assemblies Volume	4,766 ft^3
Net SFP Water Volume	33,470 ft^3
SFP Water Depth	36 ft
Racks Height	15.2 ft

In addition to the input data listed in the preceding table, the following assumptions are also used in these calculations:

- No credit is taken for any makeup water. As water is lost via evaporation or boiling, the thermal capacity of the SFP will reduce.
- The loss of forced cooling is assumed to occur coincident with the peak SFP bulk temperature
- No credit is taken for the reduction in decay heat that would occur in the time after the forced cooling failure occurs. Neglecting this decay heat reduction will yield conservative results.
- The thermal inertia (thermal capacity) of the SFP is based on the net water volume only. This conservatively neglects the considerable thermal inertia of the fuel assemblies and of the massive SFP structure.
- The times-to-boil are calculated assuming that the SFP is isolated from the reactor vessel cavity. This minimizes the thermal capacity, thereby minimizing the times-to-boil.
- The passive heat losses from the SFP surface to the building air are evaluated assuming the relative humidity of the building air is 100%. This minimizes the evaporation driving force and reduces the resulting heat losses, thereby minimizing the times-to-boil.

As described in Subsection 5.2.2, the local water temperature calculations depend on the geometry of the SFP, the fuel assembly and fuel rack dimensions, and the distribution of decay heat within the SFP. Along with the results of the decay heat and required in-core hold time calculations, the key input data used in these calculations are presented in the following table.

Parameter	**Value**
Hydraulically Limiting Assembly Design	GE-14 10×10
Fuel Rod Outer Diameter	0.404 inches
Active Fuel Length	148-150 inches[1]
Number of Rods per Assembly	92 rods

[1] The maximum length is used in the CFD modeling. The difference between the maximum and minimum values will be negligible on the whole-pool solution. The minimum length was used in the fuel clad temperature superheat calculations, conservatively maximizing the local heat flux.

Parameter	Value
Fuel Channel Inner Dimension	5.278 in
Rack Cell Length	169 7/8 in
Modeled Bottom Plenum Height Existing Racks New Racks	 4 in 3 in
Water Flow Rate through FPC System (cooled via RHR-FPC Intertie)	1000 gpm

In addition to the input data listed in the preceding table, the following assumptions are also used in these calculations:

- The walls and floor of the SFP are all modeled as adiabatic surfaces, thereby neglecting conduction heat loss through these surfaces.
- Passive heat losses from the SFP to the environment are neglected.
- No downcomer flow is assumed to exist between the rack modules.
- The hydraulic resistance parameters for the rack cells, permeability and inertial resistance, are conservatively adjusted by 5%.
- Conservative bottom plenum heights are used in the model. The water in and below the existing rack support structure gridwork is completely neglected. The bottom plenum below the new rack placed atop the cask ring is modeled as less than actual. Only partial credit is taken for the water below the new rack placed over the drum plate sub-base in the northwest corner of the SFP. As the new support platform for this rack has multiple holes to permit water flow and circulation beneath it, the as-modeled configuration is conservative.
- The hydraulic resistance of the new fuel storage rack cells is determined based on the most restrictive water inlet geometry of the cells over rack shear pads. Compared to non-shear pad cells, these cells have a reduced flow area and hydraulic diameter , caused by the shear pad blocking the baseplate hole and the water having to enter through the smaller shear pad holes (two holes per blocked cell). These factors result in shear pad cells having the maximum hydraulic resistance.
- The hydraulic resistance of every fuel storage rack cell includes the effects of blockage due to an assumed dropped fuel assembly lying horizontally on top of the racks.

- The hydraulic resistance of every fuel storage rack cell assumes a channel installed on the fuel assembly and that all flow must be through the channel. This conservatively maximizes the hydraulic resistance of the fuel assemblies.
- The fuel assemblies with the highest decay heat generation rates are grouped together in the approximate center of the model. This conservatively maximizes the distance between these highest heat fuel assemblies and the rack-to-wall downcomers, so the cooled water from the FPC System must travel farther along the SFP floor to cool them.

As described in Subsection 5.2.2, the difference between the local water and local fuel cladding temperatures is primarily a function of the fuel assembly dimensions, the fuel rod decay heat and an axial peaking factor. The fuel assembly dimensions are presented in the previous table. The fuel rod decay heat is determined from the results of the required in-core hold time calculations. The axial peaking factor is presented in the following table.

Parameter	Value
Axial Peaking Factor	1.7

In addition to the axial peaking factor, the following assumptions are also used in this calculation:

- These calculations utilize the geometry of the GE-14 10×10 fuel assembly to provide consistency with the local water temperature (CFD) calculations.
- The maximum temperature difference between the local water and fuel cladding temperatures is added to the calculated maximum local water temperature, even though they do not occur at the same axial position. This conservatively maximized the calculated fuel cladding temperatures.

5.5 Evaluation Results

The following subsections present the results of the thermal-hydraulic evaluations performed for the expanded spent fuel storage rack array. First, however, the FPC system is described and the specific scenarios evaluated are defined.

The FPC system consists of two parallel cooling pumps that circulate SFP water through two parallel heat exchangers. Crosstie piping allows the output of either pump to be directed to either or both of the FPC heat exchangers. SFP water is circulated through the tubes and heat is transferred to component cooling water circulating through the shell side. During a worst-case single active failure condition, a single FPC pump would supply water to both FPC heat exchangers.

There are two postulated refueling offloads defined: partial core offload and full core offload. In a partial core offload, between 160 and 250 fuel assemblies are discharged from the reactor into the SFP at the end of a normal operating cycle (a reload batch is 160 assemblies or less, but additional assemblies may be offloaded to support in-core fuel movements). A single FPC pump supplying both FPC heat exchangers operates to provide cooling during the partial core offload. In a full core offload, the entire core of 548 fuel assemblies is discharged from the reactor into the SFP at the end of a normal operating cycle. For the full core offload, both FPC pumps supplying both FPC heat exchangers operate to provide cooling prior to the start of transfer. Once fuel transfer starts, however, cooling is provided by one train of the RHR system operating in FPC Assist mode.

Each of these two scenarios is evaluated for a range of cooling water temperatures that encompass the entire range of expected operating conditions. The results of in-core hold time required versus offload batch size and cooling water temperature can be used for plant refueling operations.

Considering the two offload definitions and considering five cooling water temperature conditions for each scenario, a total of twenty-five bulk temperature scenarios are defined.

Scenario	Offload Type	Number of Assemblies Offloaded	Cooling Water Temperature (°F) (FPC HX)
1aa	Partial Core	160	40

Scenario	Offload Type	Number of Assemblies Offloaded	Cooling Water Temperature (°F) (FPC HX)
1ab	Partial Core	160	60
1ac	Partial Core	160	80
1ad	Partial Core	160	100
1ae	Partial Core	160	75
1ba	Partial Core	190	40
1bb	Partial Core	190	60
1bc	Partial Core	190	80
1bd	Partial Core	190	100
1be	Partial Core	190	64
1ca	Partial Core	220	40
1cb	Partial Core	220	60
1cc	Partial Core	220	80
1cd	Partial Core	220	100
1ce	Partial Core	220	54
1da	Partial Core	250	40
1db	Partial Core	250	60
1dc	Partial Core	250	80
1dd	Partial Core	250	100
1de	Partial Core	250	44
Scenario	**Offload Type**	**Number of Assemblies Offloaded**	**Cooling Water Temperature (°F) (FPC HX/RHR HX)**
2a	Full Core	548	40/32
2b	Full Core	548	60/53
2c	Full Core	548	80/74
2d	Full Core	548	100/95
2e	Full Core	548	45/37

Each of these bulk temperature scenarios is evaluated to determine the required in-core hold time prior to the start of fuel transfer from the reactor to the SFP.

The time-to-boil and the water boil off rate are computed for bulk temperature Scenarios 1de and 2e. These scenarios have the highest SFP bulk temperatures and the highest coincident SFP decay heat loads, which will yield the shortest times-to-boil and largest boil off rates.

Two bounding local temperature scenarios are evaluated. In these bounding scenarios, the hottest reload batch region (see Subsection 5.2.2) is assigned the maximum decay heat of the recently discharged fuel assemblies from the partial core offload scenario (Scenario 1ae) with the maximum fuel assembly heat rate. The balance of full core region is assigned sufficient heat to give a total full core heat rate equal to that from Scenario 2e, which has the largest total decay heat load. For the condition where the FPC system is operating, the bulk temperature is set to the allowable limit of 150°F. For the condition where the FPC system is not operating, the surface of the SFP is permitted to boil (212°F). In this manner, two scenarios are evaluated that bound all design-basis scenarios.

5.5.1 Bulk Temperature Evaluations

First, the results of the decay heat calculations are presented. The calculated background (steady state portion) decay heat is 3.223×10^6 Btu/hr.

Figure 5.8.1 presents a time-varying decay heat rate versus time profile for the fuel assemblies in the full core. The amount of this heat present in the SFP at any given point in time is obtained by multiplying the full core value by the fraction of the full core that has been transferred to the SFP at that time. The values in the preceding paragraph and in this figure are added to obtain total SFP heat loads. Given the conservatisms incorporated into the calculations, actual decay heats will be lower than these calculated values.

For the bulk temperature scenarios described above, the required in-core hold times and the corresponding SFP total heat loads are presented in the following table.

Scenario	Maximum Bulk Temperature (°F)	Required In-Core Hold Time (hrs)	Coincident Net SFP Heat Load (Btu/hr)
1aa	119.6	67[1]	11.58×10^6
1ab	137.2	67	11.22×10^6
1ac	150.0	92	10.15×10^6
1ad	150.0	380	7.21×10^6
1ae	150.0	67	10.87×10^6
1ba	128.9	67	12.92×10^6
1bb	146.0	67	12.50×10^6
1bc	150.0	157	10.15×10^6
1bd	150.0	605	7.21×10^6
1be	150.0	67	12.42×10^6
1ca	137.8	67	14.27×10^6
1cb	150.0	89	13.06×10^6
1cc	150.0	242	10.16×10^6
1cd	150.0	873	7.22×10^6
1ce	150.0	67	13.92×10^6
1da	146.3	67	15.53×10^6
1db	150.0	134	13.10×10^6
1dc	150.0	348	10.16×10^6
1dd	150.0	1191	7.22×10^6
1de	150.0	67	15.41×10^6
2a	145.5	67	30.88×10^6
2b	150.0	129	26.12×10^6
2c	150.0	313	20.15×10^6
2d	150.0	936	14.20×10^6
2e	150.0	67	30.72×10^6

In accordance with the allowable temperatures presented in Section 5.3, adherence to these calculated in-core hold time requirements will ensure that bulk temperature limits are not

[1] The CNS USAR (X-4.5.2.1) specifies "a minimum of 67 hours is allowed to elapse after reactor shutdown prior to offloading any fuel." This value is, therefore, taken as the minimum in-core hold time.

exceeded. These results satisfy the bulk temperature requirements from Section 5.3. Given the conservatisms incorporated into the calculations, actual in-core hold time requirements will be lower than these calculated values.

Linear interpolation between the discrete offload batch sizes and cooling water temperatures evaluated above is acceptable.

Finally, results of time-to-boil and water boil off rate calculations for limiting bulk temperature Scenarios 1de and 2e are presented in the following table.

Scenario	Minimum Time-to-Boil (hr)	Maximum Boil Off Rate (gpm)
1de	8.58	35
2e	4.19	68

The minimum time for the SFP to heat up to 212°F is only slightly (0.81 hours or 49 minutes) less than the currently licensed value of 5 hours, which should continue to provide sufficient time for remedial actions. As sufficient time for remedial operator action continues to exist, these results satisfy the time-to-boil and makeup water requirements from Section 5.3. Given the conservatisms incorporated into the calculations, actual time-to-boil results will be longer than these calculated values and actual boil off rates will be lower.

5.5.2 Local Temperature Evaluations

The maximum local water and fuel cladding temperature calculation results are presented in the following table. Figures 5.8.2 and 5.8.3 present converged temperature contours in a vertical slice through the hot fuel region of the SFP with and without the FPC System operating, respectively.

Parameter	Value with FPC System Operating	Value with FPC System Not Operating
Maximum Local Water Temperature	186°F	249°F
Bounding Water to Clad Temperature Difference	21°F	21°F
Bounding Fuel Cladding Temperature	207°F	270°F

The depth of water above the top of the racks is greater than 21 feet. The saturation temperature at a water depth of 21 feet is approximately 236°F. Both the maximum local water temperature and the bounding fuel cladding temperature are lower than the 236°F local saturation temperature at the top of the racks when the FPC System is operating. When the FPC System is not operating, the maximum local water temperature and the bounding fuel cladding temperature both exceed the 236°F local saturation temperature at the top of the racks, so a DNB evaluation is required. The critical heat flux for DNB for water in contact with a vertical cylinder (i.e., a fuel rod) is approximately 10^6 W/m^2. The maximum heat flux from the surface of the hottest fuel rod location is less than 2400 W/m^2, so DNB will not occur. In both scenarios, the bounding fuel cladding temperature is lower than the current licensing basis limit of 350°F. These results satisfy the local water temperature and the local fuel cladding temperature requirements from Section 5.3.

5.6 References

[5.1.1] USNRC Standard Review Plan Section 9.1.3, "Spent Fuel Pool Cooling and Cleanup System," Revision 1, July 1981.

[5.1.2] USNRC "OT Position Paper for Review and Acceptance of Spent Fuel Storage and Handling Applications," Section III, 14 April 1978.

[5.2.1] "QA Documentation for DECOR," Holtec Report HI-971764, Revision 0.

[5.2.2] A.G. Croff, "ORIGEN2 - A Revised and Updated Version of the Oak Ridge Isotope Generation and Depletion Code," ORNL-5621, Oak Ridge National Laboratory, 1980.

[5.2.3] "QA Documentation for MULPOOLD," Holtec Report HI-92834, Revision 3.

[5.2.4] Not Used.

[5.2.5] "An Improved Correlation for Evaporation from Spent Fuel Pools", Holtec Report HI-971664, Revision 0.

[5.2.6] "Heat Loss to the Ambient from Spent Fuel Pools: Correlation of Theory with Experiment", Holtec Report HI-90477, 3 April 1990.

[5.2.7] "QA Documentation for TBOIL," Holtec Report HI-92832, Revision 5.

[5.2.8] Batchelor, G.K., "An Introduction to Fluid Dynamics", Cambridge University Press, 1967.

[5.2.9] "QA Validation of FLUENT Version 6.2.16," Holtec Report HI-2053412, Revision 0.

[5.2.10] Rohsenow, N.M., and Hartnett, J.P., "Handbook of Heat Transfer", McGraw Hill Book Company, New York, 1973.

Table 5.4.1 Historic and Projected Fuel Offload Schedule					
End-of-Cycle Number	**Offload Date**	**Number of Assemblies**	**Burnup (MWd/MTU)**	**Enrichment (^{235}U wt.%)**	**Assembly ^{n}U Weight (kgU)**
Previously Discharged Assemblies					
10	10-1986	60	40,000	3.48	178
11	03-1988	124	40,000	3.48	178
12	04-1989	104	40,000	3.48	178
13	03-1990	168	40,000	3.48	178
14	10-1991	164	40,000	3.48	178
15	03-1993	184	40,000	3.48	178
16	10-1995	152	40,000	3.48	178
17	03-1997	164	40,000	3.48	178
18	10-1998	160	40,000	3.48	178
19	03-2000	136	52,000	4.20	178
20	11-2001	120	52,000	4.20	178
21	03-2003	128	52,000	4.20	178
22	01-2005	164	52,000	4.20	178
23	10-2006	160	52,000	4.20	178
24	04-2008	160	52,000	4.20	178
25	10-2009	160	52,000	4.20	178
26	04-2011	160	52,000	4.20	178
Recently Discharged Assemblies					
partial core	10-2012	160 - 250	52,000	4.20	178
full core	10-2012	548	52,000	4.20	178

Note: All assemblies prior to Cycle 10 and some assemblies from Cycle 10 have been shipped offsite to the General Electric Morris facility.

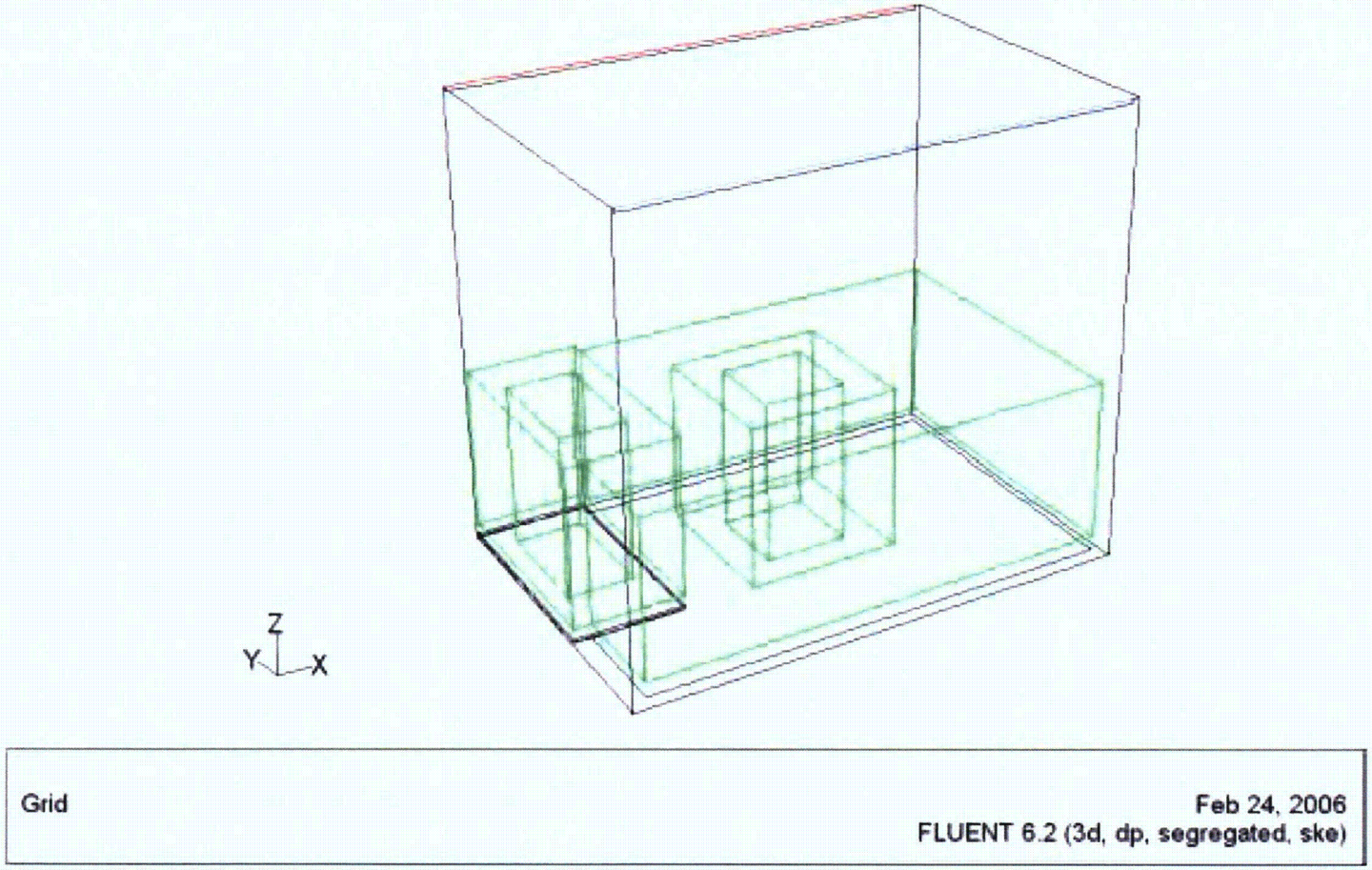

Figure 5.2.1 – CFD Model Isometric View

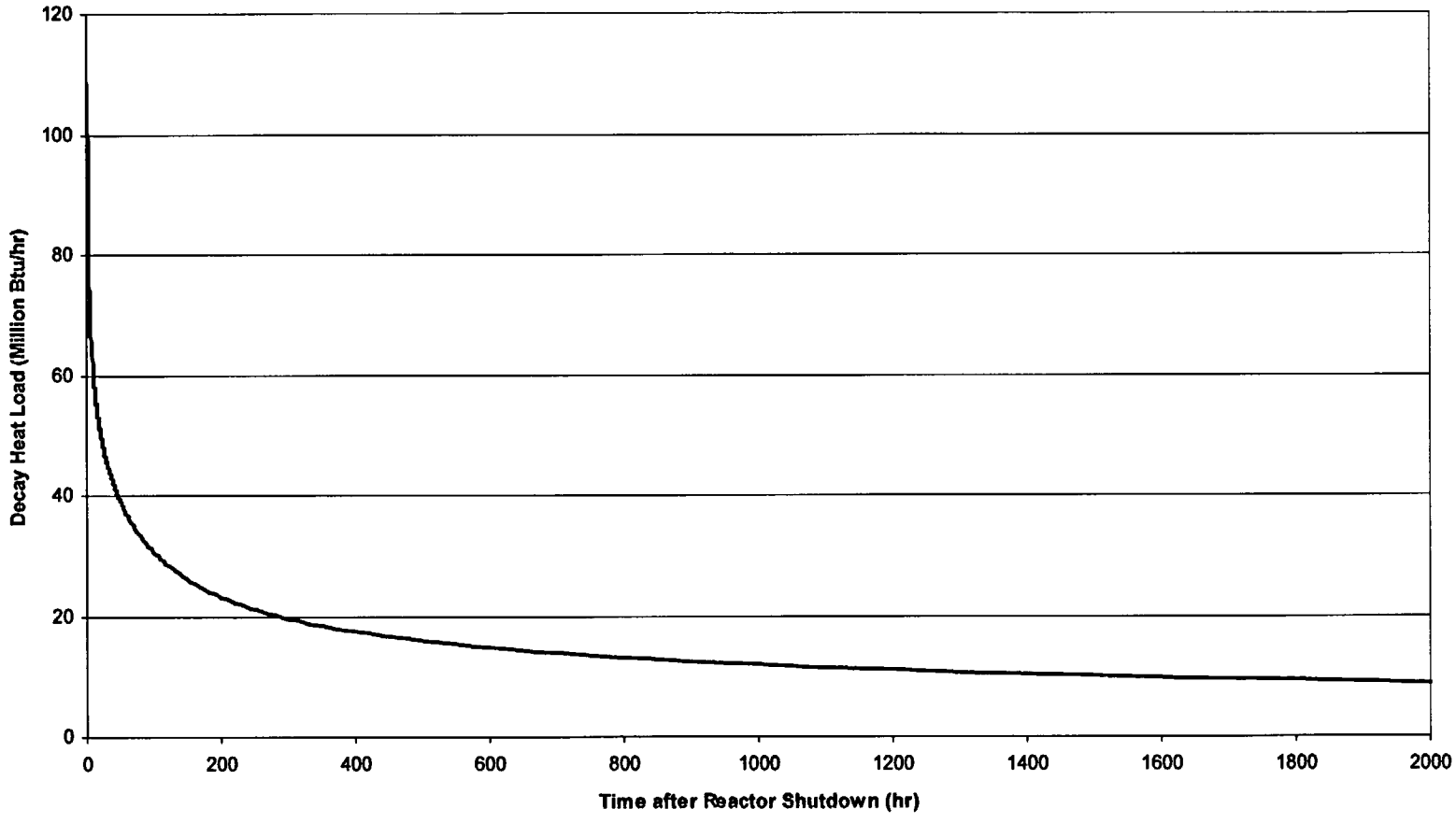

Figure 5.8.1 – Time Varying Decay Heat Portion Profile – Entire Core

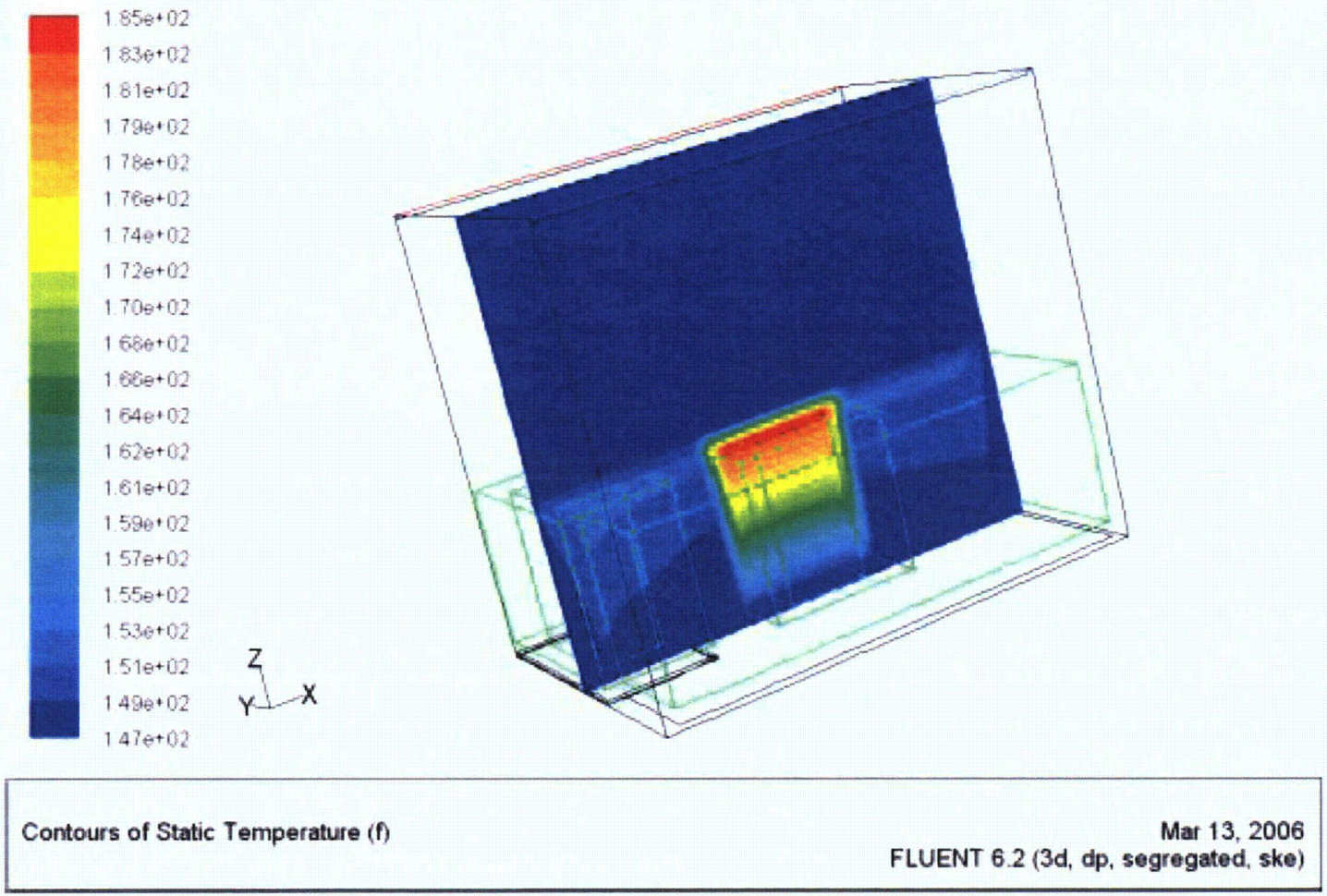

Figure 5.8.2 – CFD Model with Converged Temperature Contours – FPC System Operating

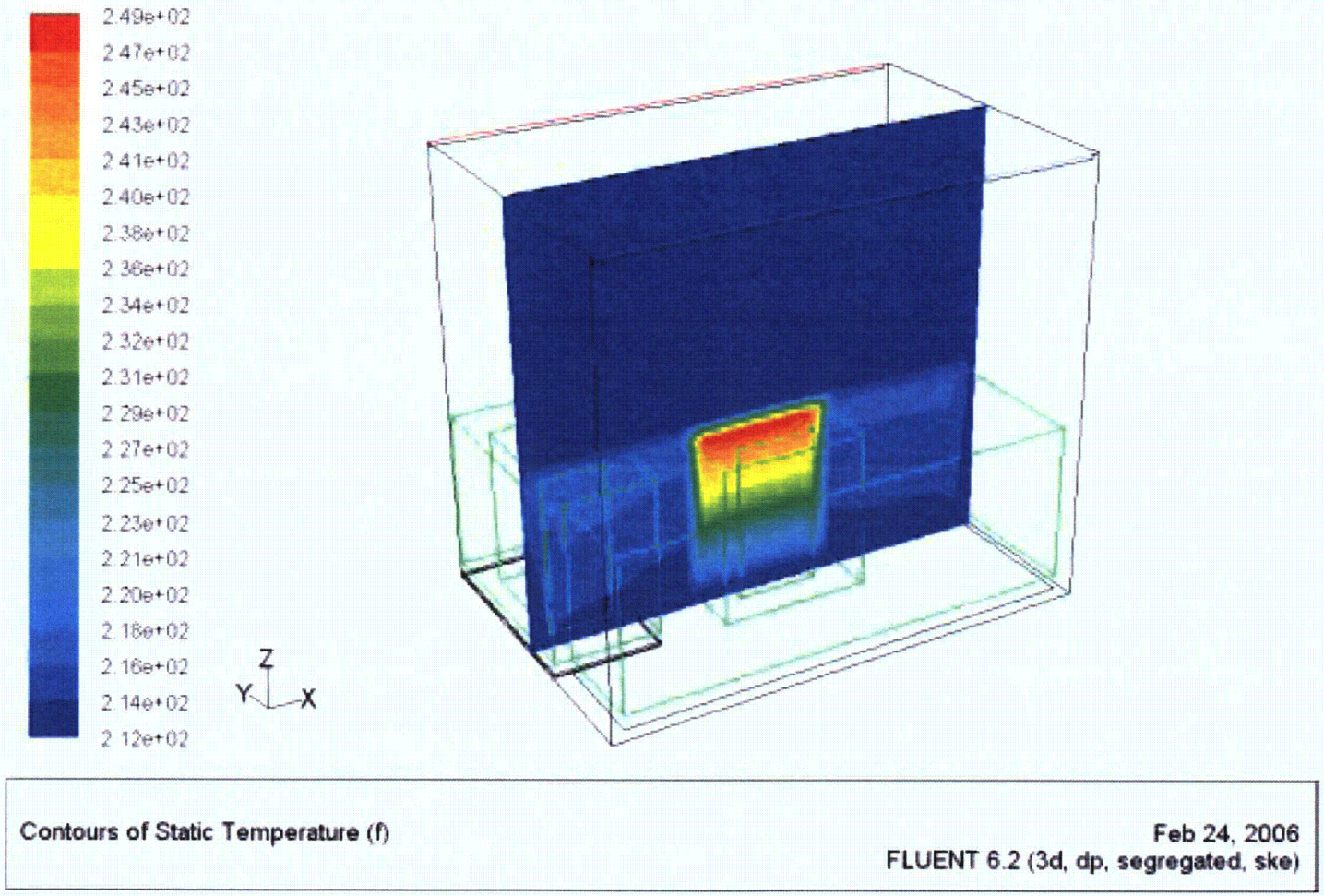

Figure 5.8.3 – CFD Model with Converged Temperature Contours – FPC System Not Operating

Chapter 6: Rack Structural Integrity Considerations

6.1 Introduction

The structural integrity evaluation performed on the new Cooper Nuclear Station (CNS) spent fuel racks under the applicable loads under all service conditions (normal, upset, and faulted) are presented in this chapter. The analyzed storage rack configurations are depicted in Figures 1.2.1 and 1.2.2.

The analyses undertaken to confirm the structural integrity of the new racks are performed in compliance with the USNRC Standard Review Plan (Section 3.7.1 of [6.1.1]) and the OT Position Paper [6.1.2]. A summary of the key input data, an abstract of the methodology, modeling assumptions, key results, and quantification of the minimum kinematic and stress margins for each of the applicable load combinations is provided below.

6.2 Structural Characteristics of the New Spent Fuel Racks

As the synopsis of their mechanical design features of the new racks presented in Chapter 3 states, each of the new racks is a freestanding module consisting of an array of shear pads integrally welded to a common baseplate, which in turn, is integrally jointed to the honeycomb cellular region. Each spent fuel assembly is supported on the baseplate and is laterally confined in a square cell. The new racks are sufficiently spaced from the existing racks to avoid contact under seismic conditions. The baseplates of both new and existing rack modules are coplanar as are the top surfaces of the cellular regions. The existing racks in the pool date back to the period before free-standing rack designs came into vogue. The existing racks are laterally restrained from movement near their base by a pool slab mounted lateral restraint system. At their top elevation, another lateral restraint system prevents their sidesway movement under seismic conditions. Thus, the lateral restraint system prevents any lateral translation of the existing rack modules and eliminates the development of inter-rack fluid coupling forces during seismic events. Further, the new rack modules are sufficiently separated from the existing rack modules and from each other to attenuate any hydrodynamic effects among them.

Therefore, it is technically appropriate to analyze the new rack modules by the so-called "single rack seismic analysis" procedure.

6.3 Applicable Load Combinations

The following table reflects the applicable loads and their combinations that must be considered in the structural qualification of the SFP rack modules (excerpted from References [6.1.1] and [6.1.2])

Load Combination	Service Level Per the ASME Code [6.3.1]
$D + L$ $D + L + T_o$ $D + L + T_o + E$	Level A (Normal Operating Condition)
$D + L + T_a + E$ $D + L + T_o + P_f$	Level B † (Upset Condition)
$D + L + T_a + E'$ $D + L + T_o + F_d$	Level D (Faulted Condition)

where:

D = Dead weight-induced loads (including stored spent nuclear fuel and control elements)

L = Live Load

P_f = Upward force on the racks caused by postulated stuck fuel assembly

F_d = Impact force from accidental drop of the heaviest load from the maximum possible height.

E = Operating Basis Earthquake (OBE)

E' = Safe Shutdown Earthquake (SSE)

T_o = Differential thermal expansion induced loads

T_a = Differential thermal expansion induced loads under postulated abnormal conditions

† The level B (OBE) condition was considered by evaluating the Level D (SSE) condition against Level A (normal) condition allowables.

Of the above loads, T_o and T_a produce thermal stresses that are self-limiting. Moreover, because the rack is free to expand or contract, there are no global thermal stresses produced under the normal or abnormal operating condition in the fuel pool. Therefore, T_o and T_a are not germane to the stress analysis of the new SFP racks. Likewise, no live load (i.e., a load that is movable) is identified for the SFP racks.

Because of the honeycomb construction of the rack, the effect of mechanical loads such as P_f and F_d result in local stresses and possibly plastic strains that are not within the purview of the stress limits for Class 3 "NF" linear structures. Therefore, mechanical loads are treated separately in Chapter 7 of this report, mainly with the goal to quantify the extent of local damage sustained by the rack under localized loads.

6.4 Synthetic Time-Histories

Because the fuel rack is a non-linear structure due to its free-standing configuration and the presence of unsecured contents(free-to-rattle fuel bundles), the applicable earthquakes must be cast in terms of acceleration time-histories for dynamic analysis purposes.

The SSE synthetic time-histories in three orthogonal directions (N-S, E-W, and vertical) were generated in accordance with the provisions of SRP 3.7.1 [6.1.1], and the maximum reactions at the base of new racks from the time-history solution are combined using the SRSS method for subsequent weld evaluations. The structural damping value used in the generation of the synthetic time-histories utilizes the values prescribed in the CNS USAR. No credit for material damping (hysterisis) or fluid damping is incorporated in the time-history generation algorithm for conservatism.

As suggested in SRP 3.7.1 [6.1.1], both the response spectrum and the power spectral density corresponding to the generated acceleration time-history should envelope their target (design basis) counterparts with only finite enveloping infractions. The time-histories for the pool slab for both earthquakes have been generated to satisfy the above enveloping criteria. Finally, the three

orthogonal time-histories for each earthquake are required to meet the criterion of statistical independence (i.e., cross correlation factor between any two components, c<<0.15).

For reference purposes, the zero period accelerations (ZPAs), as taken from the plant design basis response spectra, are summarized in Table 6.4.1 below.

Table 6.4.1
ZPA VALUES (in g's) FOR THE APPLICABLE EARTHQUAKES

Earthquake	Horizontal (N-S)	Horizontal (E-W)	Vertical
SSE	0.520	0.520	0.137
OBE	0.330	0.330	0.0683

6.5 Analysis Methodology

6.5.1 Overview

The response of a free-standing rack module to seismic inputs may involve a complex combination of motions (sliding, rocking, tilting, twisting, and turning), resulting from an interplay of inertia, friction, impact, and damping effects. Some of the unique attributes of the rack dynamic behavior include a large fraction of the total structural mass in a confined rattling motion, frictional effect at the bottom surface of the pedestal, and fluid coupling effects due to deep submergence. Evidently, linear methods, such as modal analysis and response spectrum techniques, cannot accurately simulate the structural response of such a highly nonlinear structure to seismic excitation. An accurate simulation is obtained only by direct integration of the nonlinear equations of motion with the three acceleration time-histories acting simultaneously, applied as the forcing functions.

The DYNARACK solver [6.5.1], the vehicle previously utilized in virtually all rerack license amendment requests over the past two decades (see Table 6.5.1) to simulate the dynamic behavior of the complex storage rack structures, is also used to analyze the new CNS racks. The analytical premise of DYNARACK is published in the permanent literature [6.5.2].

Table 6.5.1 PARTIAL LISTING OF FUEL RACK APPLICATIONS USING DYNARACK		
PLANT	**DOCKET NUMBER(s)**	**YEAR**
Enrico Fermi Unit 2	USNRC 50-341	1980
Quad Cities 1 & 2	USNRC 50-254, 50-265	1981
Rancho Seco	USNRC 50-312	1982
Grand Gulf Unit 1	USNRC 50-416	1984
Oyster Creek	USNRC 50-219	1984
Pilgrim	USNRC 50-293	1985
V.C. Summer	USNRC 50-395	1984
Diablo Canyon Units 1 & 2	USNRC 50-275, 50-323	1986
Byron Units 1 & 2	USNRC 50-454, 50-455	1987
Braidwood Units 1 & 2	USNRC 50-456, 50-457	1987
Vogtle Unit 2	USNRC 50-425	1988
St. Lucie Unit 1	USNRC 50-335	1987
Millstone Point Unit 1	USNRC 50-245	1989
Chinshan	Taiwan Power Company	1988
D.C. Cook Units 1 & 2	USNRC 50-315, 50-316	1992
Indian Point Unit 2	USNRC 50-247	1990
Three Mile Island Unit 1	USNRC 50-289	1991
James A. FitzPatrick	USNRC 50-333	1990
Shearon Harris Unit 2	USNRC 50-401	1991
Hope Creek	USNRC 50-354	1990
Kuosheng Units 1 & 2	Taiwan Power Company	1990
Ulchin Unit 2	Korea Electric Power Co.	1990
Laguna Verde Units 1 & 2	Comision Federal de Electricidad	1991
Zion Station Units 1 & 2	USNRC 50-295, 50-304	1992

Table 6.5.1 PARTIAL LISTING OF FUEL RACK APPLICATIONS USING DYNARACK		
PLANT	**DOCKET NUMBER(s)**	**YEAR**
Sequoyah	USNRC 50-327, 50-328	1992
LaSalle Unit 1	USNRC 50-373	1992
Duane Arnold Energy Center	USNRC 50-331	1992
Fort Calhoun	USNRC 50-285	1992
Nine Mile Point Unit 1	USNRC 50-220	1993
Beaver Valley Unit 1	USNRC 50-334	1992
Salem Units 1 & 2	USNRC 50-272, 50-311	1993
Limerick	USNRC 50-352, 50-353	1994
Ulchin Unit 1	KINS	1995
Yonggwang Units 1 & 2	KINS	1996
Kori-4	KINS	1996
Connecticut Yankee	USNRC 50-213	1996
Angra Unit 1	Brazil	1996
Sizewell B	United Kingdom	1996
Waterford 3	USNRC 50-382	1996
Vogtle	USNRC 50-424	1997
J. A. Fitzpatrick	USNRC 50-333	1997
Vermont Yankee	USNRC 50-271	1998
Callaway	USNRC 50-483	1998
Nine Mile	USNRC 50-220	1998
Chin Shan	Taiwan Power Company	1998
Millstone 3	USNRC 50-423	1998
Byron/Braidwood	USNRC 50-454, 50-455, 50-567, 50-457	1999

Table 6.5.1 PARTIAL LISTING OF FUEL RACK APPLICATIONS USING DYNARACK		
PLANT	**DOCKET NUMBER(s)**	**YEAR**
Wolf Creek	USNRC 50-482	1999
Plant Hatch Units 1 & 2	USNRC 50-321, 50-366	1999
Harris Pools C and D	USNRC 50-401	1999
Davis-Besse	USNRC 50-346	1999
Enrico Fermi Unit 2	USNRC 50-341	2000
Kewaunee	USNRC 50-305	2001
V.C. Summer	USNRC 50-395	2001
St. Lucie	USNRC 50-335, 50-389	2002
Turkey Point	USNRC 50-250, 50-251	2002
McGuire Nuclear Station Units 1 & 2	USNRC 50-369, 50- 370	2003
Diablo Canyon Units 1 & 2	USNRC 50-275, 50-323	2003
Turkey Point Units 3 & 4	USNRC 50-250, 50-251	2004
Clinton Nuclear Station Unit 1	USNRC 50-461	2004
Arkansas Nuclear One Units 1	USNRC 50-313	2004

Recognizing that the analysis work effort must deal with stress and displacement criteria, the sequence of model development and analysis steps that are undertaken are summarized in the following:

a. Prepare 3-D dynamic rack models suitable for a time-history analysis. Include all fluid coupling interactions and mechanical coupling appropriate to performing an accurate non-linear simulation.

b. Perform 3-D dynamic analyses on various physical conditions (different extent of fuel loading). Archive appropriate displacement and load outputs from the dynamic model for post-processing.

c. Perform stress analysis of high stress areas for the limiting case of all the rack dynamic analyses. Demonstrate compliance with ASME Code Section III, Subsection NF limits.

d. Demonstrate that the sliding of the rack modules on their support platforms will be sufficiently small to preclude the potential of skidding past the edge of the platform.

6.5.2 Rack Dynamic Model

6.5.2.1 New Racks

The dynamic modeling of the new rack structure is prepared with special consideration of all nonlinearities and fluid effects inherent to the physical problem. Particulars of modeling details and assumptions for the analysis of racks are summarized below.

a. The motion of a fuel rack module is captured by modeling the rack as a 12 degree-of-freedom structure. Movement of the rack cross-section at any height is described by six degrees-of-freedom of the rack base and six degrees-of-freedom at the rack top with appropriate bending and shear springs [6.5.3] providing the structural connectivity between the lumped masses.

b. Fuel assemblies are free to rattle inside the storage cells like slender rods pinned at the base and free at the top (within a specified clearance gap) and are modeled by five lumped masses located at H, 0.75H, 0.5H, 0.25H, and at the rack base (H is the rack height measured above the baseplate). The bending stiffness of the channeled fuel assemblies is approximately modeled by including simplified beam spring between adjacent fuel nodes. A total of 6 channeled fuel springs (3 in the x-z and y-z bending planes) are included in each 22 DOF rack model. Each lumped fuel mass has two horizontal displacement degrees-of-freedom. Vertical motion of the fuel assembly mass is assumed equal to rack vertical motion at the baseplate level. The centroid of each fuel assembly mass can be located off-center, relative to the rack structure centroid at that level, to simulate a partially loaded rack (see Figure 6.5.1).

c. Seismic motion of a fuel rack is characterized by random rattling of fuel assemblies in their individual storage locations. All fuel assemblies are assumed to move in-phase within a rack. This assumption, utilized only in dockets to ensure utmost conservatism, maximizes computed dynamic loading on the rack structure and, therefore, yields conservative results.

d. Fluid coupling between the fuel assemblies and their host rack, and between the rack and the neighboring wall, is simulated by appropriate inertial coupling in the system kinetic energy. Inclusion of these effects uses the methods of references [6.5.4-6.5.8].

e. Fluid damping and form drag are conservatively neglected.

f. Because the top of the rack is over 25' below the pool's free water surface, the sloshing effect is negligible in the water mass surrounding the rack and, therefore, neglected in the rack dynamic model.

g. Potential impacts between the cell walls of the new rack and the contained fuel assemblies are accounted for by appropriate compression-only gap elements between masses involved (see Figure 6.5.2).

h. Each pad support is linked to its support structure by two piecewise linear orthogonally-disposed friction springs together with a normal compression-only contact spring. In Figure 6.5.1, the notation "pedestal" refers to the shear pads used for the Cooper racks.

i. Rattling of fuel assemblies inside the storage locations causes the gap between fuel assemblies and cell wall to change from a maximum of twice the nominal gap to a theoretical zero gap. Fluid coupling coefficients are based on the nominal gap in order to provide a conservative measure of fluid resistance to gap closure.

Table 6.5.2 provides a complete listing of each of the 22 degrees-of-freedom for one rack module. Six translational and six rotational degrees-of-freedom (three of each type at each end) describe the motion of one rack structure. Rattling fuel mass motions (shown at nodes 1^*, 2^*, 3^*, 4^*, and 5^* in Figure 6.5.1) are described by ten horizontal translational degrees-of-freedom (two at each of the five fuel masses). The vertical fuel mass motion is assumed (and modeled) to be the same as that of the rack baseplate. The five masses are connected to each other by an axially rigid member, which enables the fuel masses to vibrate in unison with the rack in the vertical direction. Therefore, the masses represented by the fuel assemblies vibrate independently in the horizontal direction and are driven by the inertia loads and local impact loads.

The five fuel masses are connected to the rack model via impact gap elements. Impact loads between the fuel masses and the rack cell wall are obtained upon closure of this gap element. The gap dimensions are determined at each time step by establishing the independent displacements of the fuel masses and the rack geometric centerline displacement corresponding to the same elevation. Figure 6.5.2 depicts the fuel to cell gap element model.

Parametric runs are made with upper bound and lower bound values of the coefficient of friction. The limiting values are based on experimental data which have been found to be bounded by the values 0.2 and 0.8 based on [6.5.9]. In the fuel rack simulations, the Coulomb friction interface between rack shear pad and the support platform is simulated by piecewise linear (friction) elements

Table 6.5.2
Degrees-of-Freedom

LOCATION (Node)	DISPLACEMENT			ROTATION		
	U_x	U_y	U_z	$\cdot_x$	$\cdot_y$	$\cdot_z$
1	p_1	p_2	p_3	q_4	q_5	q_6
2	p_7	p_8	p_9	q_{10}	q_{11}	q_{12}
Node 1 is assumed to be attached to the rack at the bottom most point. Node 2 is assumed to be attached to the rack at the top most point. Refer to Figure 6.5.1 for node identification.						
2*	p_{13}	p_{14}				
3*	p_{15}	p_{16}				
4*	p_{17}	p_{18}				
5*	p_{19}	p_{20}				
1*	p_{21}	p_{22}				

where the relative displacement variables q_i are defined as:

$p_i = q_i(t) + U_x(t)$ $\quad i = 1,7,13,15,17,19,21$

$= q_i(t) + U_y(t)$ $\quad i = 2,8,14,16,18,20,22$

$= q_i(t) + U_z(t)$ $\quad i = 3,9$

$= q_i(t)$ $\quad i = 4,5,6,10,11,12$

p_i denotes absolute displacement (or rotation) with respect to inertial space

q_i denotes relative displacement (or rotation) with respect to the floor slab

* denotes fuel mass nodes

U(t) are the three known earthquake displacements

The derivation of the fluid coupling matrix [6.5.5, 6.5.6] relies on the classical inviscid fluid mechanics principles, namely the principle of continuity and Kelvin's recirculation theorem. The derivation of the fluid coupling matrix has been verified by an extensive set of shake table experiments conducted by Holtec International in the late 1980s [6.5.6].

6.5.3 Governing Equations of Motion

Using the structural model discussed in the foregoing, equations of motion corresponding to each degree-of-freedom are obtained using Lagrange's Formulation [6.5.2, 6.5.3]. The system kinetic energy includes contributions from solid structures and from trapped and surrounding fluid. The final system of equations obtained have the matrix form:

$$[M]\left[\frac{d^2 q}{d t^2}\right] = [Q] + [G]$$

Where:

[M]	-	total mass matrix (including structural and fluid mass contributions). The size of this matrix will be 22 x 22
q	-	the nodal displacement vector relative to the pool slab displacement (the term with q indicates the second derivative with respect to time, i.e., acceleration)
[G]	-	a vector dependent on the given ground acceleration
[Q]	-	a vector dependent on the spring forces (linear and nonlinear) and the coupling between degrees-of-freedom

The above column vectors have a length of 22. The equations can be rewritten as follows:

$$\left[\frac{d^2 q}{d t^2}\right] = [M]^{-1}[Q] + [M]^{-1}[G]$$

This equation set is mass uncoupled, displacement coupled at each instant in time. The numerical solution uses a central difference scheme built into the proprietary computer program DYNARACK [6.5.1].

6.6 Acceptance Criteria

6.6.1 Kinematic and Stress Acceptance Criteria

There are two sets of criteria to be satisfied by each of the rack modules:

a. Kinematic Criteria

The NRC regulations require that the free-standing racks not overturn under amplified seismic conditions (1.1 times the SSE or 1.5 times the OBE).

In the interest of conservatism, the following additional kinematic criteria are imposed on the new rack modules:

i. No impact of the rack with proximate structures in the pool. This includes the existing rack modules in the pool and the structural gridwork that restrains them.

ii. The lateral movement of the rack modules under the most severe seismic event (SSE) must be sufficiently small to preclude slipping of any shear pad past the edge of its supporting platform.

b. Stress Criteria

As discussed in Chapter 3, use of the "shear pads" reduces the source of the maximum bending stresses in classical rack modules (which is bending action of support pedestals).

Nevertheless, the stress limits applicable to the rack structure derived from the ASME Code, Section III, Subsection NF [6.3.1] must be enumerated and demonstrated to be met. The terminology used hereunder is in accordance with the ASME Code.

(i) Normal and Upset Conditions (Level A or Level B)

a. Allowable stress in tension on a net section is:

$F_t = 0.6\ S_y$

Where, S_y = yield stress at temperature, and F_t is equivalent to primary membrane stress.

b. Allowable stress in shear on a net section is:

$F_v = 0.4\ S_y$

c. Allowable stress in compression on a net section is given by:

$$F_a = S_y\left(.47 - \frac{k\,.}{444\,\mathrm{r}}\right)$$

where kl/r for the main rack body is based on the full height and cross section of the honeycomb region and does not exceed 120 for all sections.

l = unsupported length of component

k = length coefficient which gives influence of boundary conditions. The following values are appropriate for the described end conditions:

= 1 (simple support both ends)

= 2 (cantilever beam)

= 0.5 (clamped at both ends)

r = radius of gyration of component

d. Maximum allowable bending stress at the outermost fiber of a net section, due to flexure about one plane of symmetry is:

$F_b = 0.60\ S_y$ (equivalent to primary bending)

e. Combined bending and compression on a net section satisfies:

$$\frac{f_a}{F_a} + \frac{C_{mx}\,f_{bx}}{D_x\,F_{bx}} + \frac{C_{my}\,f_{by}}{D_y\,F_{by}} < 1$$

where:

f_a = Direct compressive stress in the section

f_{bx} = Maximum bending stress along x-axis

f_{by} = Maximum bending stress along y-axis

C_{mx} = 0.85

C_{my} = 0.85

D_x = $1 - (f_a/F'_{ex})$

D_y = $1 - (f_a/F'_{ey})$

$F'_{ex,ey}$ = $(\pi^2 E)/(2.15\ (kl/r)^2_{x,y})$

E = Young's Modulus

and subscripts x,y reflect the particular bending plane.

f. Combined flexure and compression (or tension) on a net section:

$$\frac{f_a}{0.6\,S_y} + \frac{f_{bx}}{F_{bx}} + \frac{f_{by}}{F_{by}} < 1.0$$

The above requirements are to be met for both direct tension or compression.

g. Welds

Allowable maximum shear stress on the net section of a weld is given by:

$F_w = 0.3\ S_u$

where S_u is the weld material ultimate strength at temperature. For fillet weld legs in contact with base metal, the shear stress on the gross section is limited to $0.4S_y$, where S_y is the base material yield strength at the service temperature.

(ii) Level D Service Limits

Based on Section F-1334 (ASME Section III, Appendix F) [6.6.1], the limits for the Level D condition are the smaller of 1.2 (S_y/F_t) or $(0.7S_u/F_t)$ times the corresponding limits for the Level A condition. S_u is ultimate tensile stress at the specified rack design temperature.

Exceptions to the above general multiplier are the following:

a) Stresses in shear shall not exceed the lesser of $0.72S_y$ or $0.42S_u$. In the case of the material used here, $0.72S_y$ governs.

b) Axial Compression Loads shall be limited to 2/3 of the calculated buckling load.

c) Combined Axial Compression and Bending - The equations for Level A conditions shall apply except that:

F_a = 0.667 x Buckling Load/ Gross Section Area,

and the terms F'_{ex} and F'_{ey} may be increased by the factor 1.65.

d) The weld throat shear limit of 0.42 S_u, and the base metal shear limit of 0.72 S_u are used in this submittal.

6.6.2 Dimensionless Stress Factors

As is customary in fuel rack stress analysis, the stress results are presented in dimensionless form. Dimensionless stress factors are defined as the ratio of the actual developed stress to the specified limiting value. The limiting value of each stress factor is 1.0.

The applicable stress factors are:

R_1 = Ratio of direct tensile or compressive stress on a net section to its allowable value (note pedestals only resist compression)

R_2 = Ratio of gross shear on a net section in the x-direction to its allowable value

R_3 = Ratio of maximum x-axis bending stress to its allowable value for the section

R_4 = Ratio of maximum y-axis bending stress to its allowable value for the section

R_5 = Combined flexure and compressive factor (as defined in the foregoing)

R_6 = Combined flexure and tension (or compression) factor (as defined in the foregoing)

R_7 = Ratio of gross shear on a net section in the y-direction to its allowable value

6.6.3 Allowable g-Load on the Stored Fuel

The Lawrence Livermore National Laboratory has studied the permissible lateral load on an irradiated fuel assembly. The LLNL report [6.6.2] states that "...for the most vulnerable fuel assembly, the axial buckling load varies from 82g's at initial storage to 95g's after 20 years storage. In a side drop, no yielding is expected below 63g's at initial storage to 74g's after 20 years {dry}

storage." The most significant load on the fuel assembly arises from rattling during the seismic event and the acceptance criteria for the load will be based on the lower bound acceleration of 63g's.

6.7 Key Input Data and Dynamic Simulation Description

6.7.1 Key Input Data

The principal input data used in the seismic analysis of the CNS racks are summarized in Table 6.7.1 below. The input quantities presented in Table 6.7.1, wherever applicable, are bounding values rather than nominal data to maximize response. Thus, for example, an upper bound weight of the spent nuclear fuel is used, because increased mass translates into increased inertial response to seismic excitations.

Table 6.7.1
PRINCIPAL INPUT DATA

Item	Value
Racks involved in the analysis	Rack A, (117 cells) Rack B, (168 cells)
Height of rack above baseplate, H	Per Table 3.1.2
Shear pad thickness	Per Table 3.1.2
Storage cell prismatic (square) opening	Per Table 3.1.2
Dry weight of fuel assembly, lb	682
Structural damping for OBE (percent of critical)	4% SSE
Structural damping for SSE (percent of critical)	5% SSE

6.7.2 Material Properties

Although the racks are to be fabricated from SA240-304 material per Section 3.2.1, the allowable stress limits for design analysis are evaluated based on the lesser properties of SA240-304L material for conservatism (except for the cell-to-baseplate weld). The strength properties of SA240-304L are provided below in Table 6.7.2.

NEW RACK MATERIAL DATA (200°F) (ASME - Section II, Part D)			
Component (Material)	**Young's Modulus (E), psi**	**Yield Strength (S_y), psi**	**Ultimate Strength (S_u), psi**
Cell Structure (304L St. Stl. ASME SA-240)	27.6×10^6	21,300	66,200
Shear Pads (304L St. Stl. ASME SA-240)	27.6×10^6	21,300	66,200

6.7.3 Dynamic Simulation Description

A total of 26 rack scenarios were simulated. Each simulation is explained in the Table 6.7.3.

Table 6.7.3
Single Rack Runs Summary

Rack	Fuel Loading Pattern	COF	Seismic Input	Run Number
A	Fully Loaded rack	0.2 COF	SSE	1
		0.8 COF	SSE	2
A	East Half Loaded rack	0.2 COF	SSE	3
		0.8 COF	SSE	4
A	North Half Loaded rack	0.2 COF	SSE	5
		0.8 COF	SSE	6
A	South Half Loaded rack	0.2 COF	SSE	7
		0.8 COF	SSE	8
A	West Half Loaded rack	0.2 COF	SSE	9
		0.8 COF	SSE	10
B	Fully Loaded rack	0.2 COF	SSE	11
		0.8 COF	SSE	12
B	East Half Loaded rack	0.2 COF	SSE	13
		0.8 COF	SSE	14
B	North Half Loaded rack	0.2 COF	SSE	15
		0.8 COF	SSE	16
B	South Half Loaded rack	0.2 COF	SSE	17
		0.8 COF	SSE	18
B	West Half Loaded rack	0.2 COF	SSE	19
		0.8 COF	SSE	20
A	Fully Loaded rack	0.2 COF	OBE	21
		0.8 COF	OBE	22
B	Fully Loaded rack	0.2 COF	OBE	23
		0.8 COF	OBE	24
A	West Half Loaded rack	0.2 COF	OBE	25
B	North Half Loaded rack	0.8 COF	OBE	26

6.8 Margins Against Kinematic and Stress Limits

The results from the large number of seismic simulations performed to investigate the compliance of the new rack modules under seismic conditions are compiled in Table 6.8.1. To summarize:

i. The free-standing rack modules possess a large margin of safety against impacting any proximate structures, and an even larger margin of safety against overturning.

ii. Thanks to the "shear pad" type supports, the maximum stress factor under faulted conditions (SSE event) meets the upset condition limits with large margins of safety.

iii. There is no risk of either Module A or B sliding past its undergirding platform structure.

6.8.1 Satisfaction of Fuel/Cell Wall Impact Acceptance Criteria

For the stored fuel, the maximum deceleration "g" load sustained by the fuel occurs as a result of its rattling in the storage cell during the seismic event. From the summary table 6.8.1, the maximum fuel mass-to-cell wall impact load is determined to be 1009 lbs for new racks. For the associated fuel mass, this impact load represents a deceleration of approximately 6g's, which is below the approximately 63g's that a fuel assembly is able to withstand, as discussed in Subsection 6.6.3. Therefore, the fuel-to-rack cell wall impact loads that occur during the postulated earthquake events are acceptable.

Table 6.8.1 Results Summary							
Run No.	**Rack**	**Max. Disp. (in.) / Direction**	**Max. Stress Factor**	**R5/R6**	**Max. Vertical Load (lbf)**	**Max. Shear Load (lbf) (X or Y)**	**Max Fuel to cell wall impact (lbf)**
1	A	3.765 / EW	0.282	R6	154,000	28,300	778
2		2.433 / EW	0.342/ 0.333	R5/ R6	174,000	93,700	1009
3	A	3.854 / EW	0.176	R6	94,800	17,100	454
4		3.286 / NS	0.222	R6	122,000	82,700	589
5	A	3.479 / NS	0.191	R6	103,000	17,900	437
6		2.916 / EW	0.251	R6	136,000	82,400	650
7	A	3.770 / EW	0.200	R6	108,000	20,600	419
8		3.394 / NS	0.258	R6	138,000	86,100	544
9	A	4.166 / EW	0.183	R6	98,700	17,900	443
10		2.237 / EW	0.235	R5	123,000	85,900	499
11	B	2.600 / NS	0.203	R6	166,000	33,100	780
12		2.240 / EW	0.269	R6	226,000	119,000	857
13	B	2.025 / EW	0.139	R6	112,000	22,100	425
14		1.587 / EW	0.146	R6	120,000	78,800	501
15	B	2.666 / EW	0.133	R6	115,000	22,700	370
16		3.057 / EW	0.151	R6	139,000	72,200	571
17	B	1.677 / NS	0.119	R6	99,900	19,500	337
18		2.709 / EW	0.148	R6	125,000	76,200	369
19	B	1.845 / EW	0.141	R6	113,000	21,500	421
20		2.841 / EW	0.160	R6	140,000	81,800	486
21	A	2.105 / NS	0.374	R6	102,000	18,500	702
22		1.519 / NS	0.476	R6	130,000	78,800	749
23	B	1.214 / NS	0.357	R6	154,000	28,300	659
24		1.607 / EW	0.453	R6	183,000	98,700	764
25	A	2.375 / NS	0.207	R6	55,400	10,900	392
26	B	1.614 / EW	0.257	R6	105,000	58,000	380

To ensure that there are no rack-to-wall or rack-to--seismic restraint impacts the minimum clearance available are compared with the maximum rack displacements

Rack	Direction	Maximum Displacement (in) /Run No	Minimum Rack-to-Wall and Rack-to-Seismic Restraint Clearance (in)
A	EW	4.166 / 9	4.719
	NS	3.479 / 5	3.906
B	EW	3.057 / 16	4.0
	NS	2.60 / 11	6.344

From the table above it can be concluded that the minimum available clearance are greater than the rack displacement in the corresponding direction and hence there are no impacts between rack to adjacent walls and rack to adjacent seismic restraints.

6.9 Conclusion

The evaluations performed for the new free standing storage rack modules indicate that these structures are designed with sufficient strength to withstand all postulated loading conditions. The fuel assemblies are also provided with a safe storage configuration and will remain undamaged under any postulated normal and accident events.

6.10 References

[6.1.1] USNRC NUREG-0800, Standard Review Plan, Section 3.7.1, June 1987.

[6.1.2] (USNRC Office of Technology) "OT Position for Review and Acceptance of Spent Fuel Storage and Handling Applications", dated April 14, 1978, and January 18, 1979 amendment thereto.

[6.3.1] ASME Boiler & Pressure Vessel Code, Section III, Subsection NF, 1998 Edition.

[6.5.1] A.I. Soler, "DYNARACK Validation Manual", Holtec Report No. HI-91700 (1991).

[6.5.2] Soler, A.I. and Singh, K.P., "Seismic Responses of Free Standing Fuel Rack Constructions to 3-D Motions", Nuclear Engineering and Design, Vol. 80, pp. 315-329 (1984).

[6.5.3] Levy, S. and Wilkinson, J.P.D., "The Component Element Method in Dynamics with Application to Earthquake and Vehicle Engineering," McGraw Hill, 1976.

[6.5.4] Singh, K.P. and Soler, A.I., "Dynamic Coupling in a Closely Spaced Two-Body System Vibrating in Liquid Medium: The Case of Fuel Racks," 3rd International Conference on Nuclear Power Safety, Keswick, England, May 1982.

[6.5.5] Soler, A.I. and Singh, K.P., "Some Results from Simultaneous Seismic Simulations of All Racks in a Fuel Pool", INNM Spent Fuel Management Seminar X, January 1993.

[6.5.6] Paul, B., "Fluid Coupling in Fuel Racks: Correlation of Theory and Experiment", (Proprietary), Holtec Report HI-88243.

[6.5.7] Fritz, R.J., "The Effects of Liquids on the Dynamic Motions of Immersed Solids," Journal of Engineering for Industry, Trans. of the ASME, February 1972, pp 167-172.

[6.5.8] Singh, K.P. and Soler, A.I., "Seismic Qualification of Free Standing Nuclear Fuel Storage Racks - the Chin Shan Experience, Nuclear Engineering International, UK (March 1991).

[6.5.9] Rabinowicz, E., "Friction Coefficients of Water Lubricated Stainless Steels for a Spent Fuel Rack Facility," MIT, a report for Boston Edison Company, 1976.

[6.6.1] ASME Boiler & Pressure Vessel Code, Section III, Appendices, 1998 Edition.

[6.6.2] UCID-21246, "Dynamic Impact Effects on Spent Fuel Assemblies, Lawrence Livermore National Laboratory, dated October 20, 1987.

[6.7.1] Automation Industries (NES) Drawing 80E1143r0, 80E1144r0, 80E1145r0 and Leckenby 6015-3, Drawings #12, Rev 0 and #14, Rev 3.

[6.7.2] Nuclear Energy Services, Inc. Report NES 81A0473, Rev. 2, "Structural Design Analysis Report for the Cooper Nuclear Station Fuel Pool Expansion Program."

[6.7.3] Holtec Report HI-992303, "Feasibility Study to Expand SFP Capabilities at Cooper", Rev 0, 10/15/99.

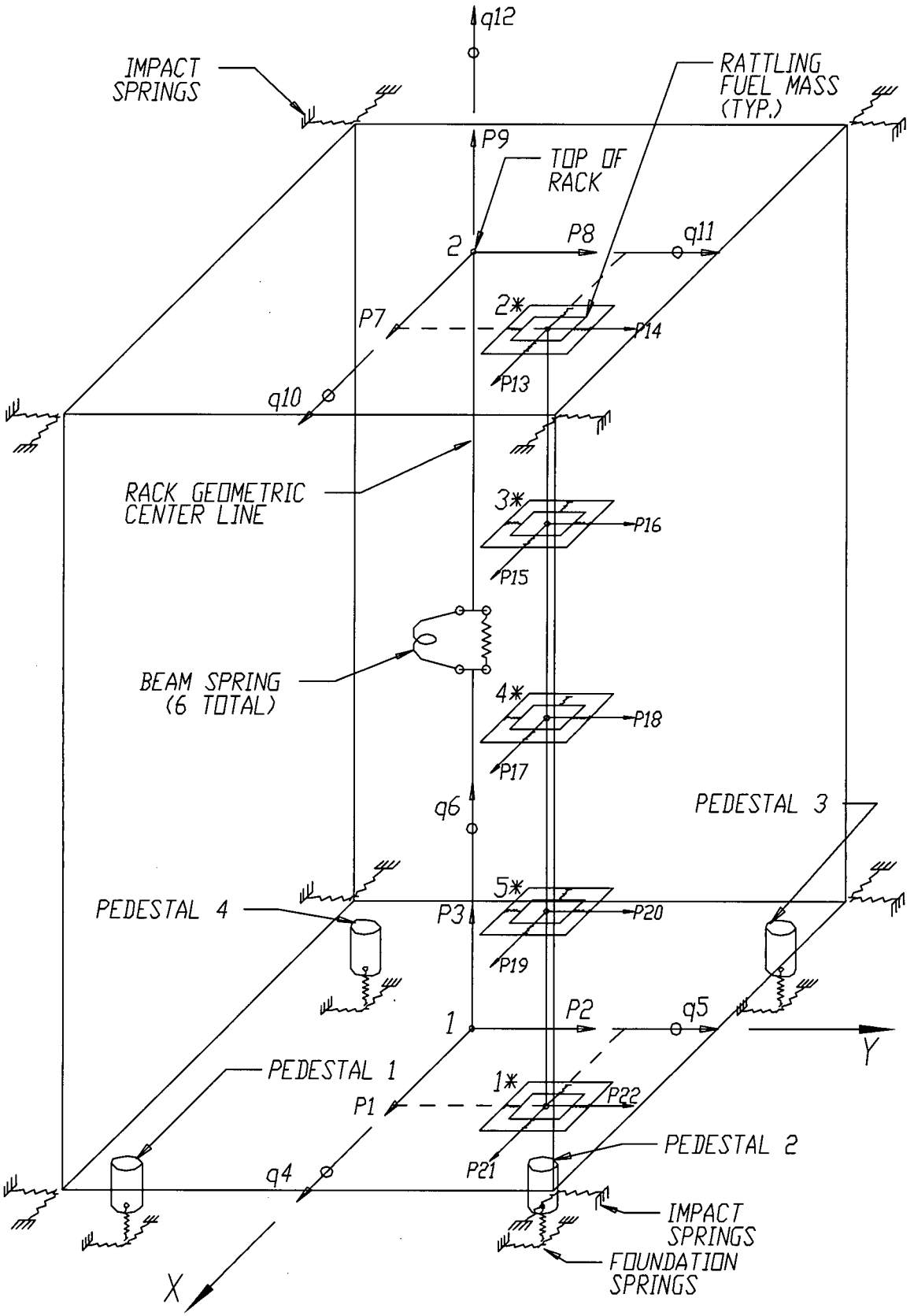

FIGURE 6.5.1; SCHEMATIC OF THE DYNAMIC MODEL FOR DYNARACK

HI-2043224

Prj No:1406

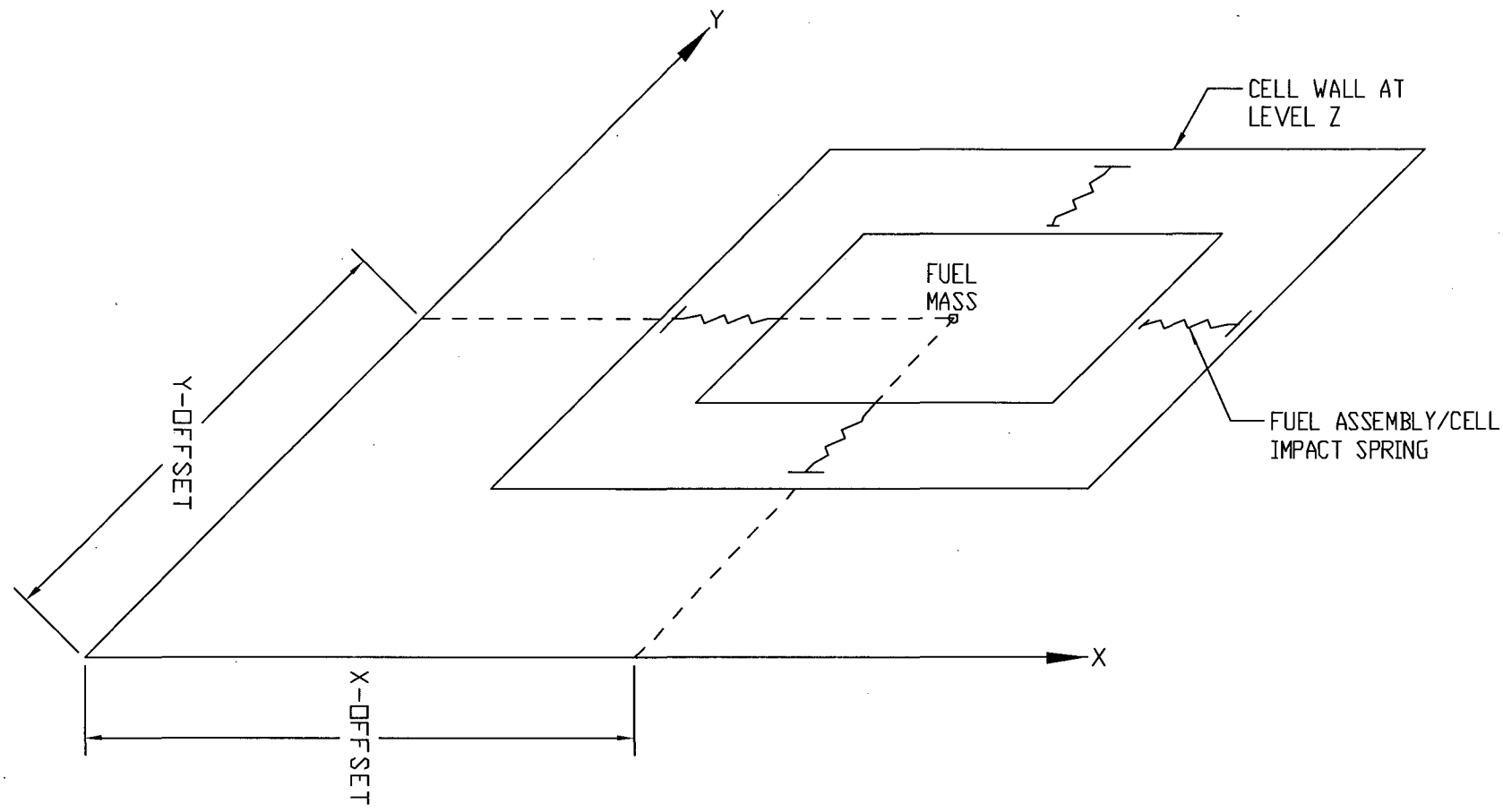

FIGURE 6.5.2; FUEL-TO-RACK IMPACT SPRINGS AT LEVEL OF RATTLING MASS

Chapter 7: Mechanical Accidents

7.1 Introduction

The USNRC OT position paper [7.1.1] specifies that the rack design must ensure the functional integrity of the spent fuel racks and the pool under all credible mechanical drop events. This chapter contains synopses of the analyses performed to demonstrate the acceptability of the proposed racks under postulated accidental drop events germane to the Cooper Nuclear Station Spent Fuel Pool. The mechanical accident analysis is also similar to that described in USAR X-3.5.1 for the existing racks.

The proposed change to SFP racks does not alter assumptions or results under the current licensing basis on the potential fuel damage due to mechanical accidents.

7.2 Description of Mechanical Accidents

Analyses are performed to evaluate the damage to the new spent fuel racks, the rack platform, the pool floor liner, and the concrete slab subsequent to the impact of a fuel assembly under various drop scenarios. In order to utilize an upper bound of kinetic energy at impact, the free-fall height is conservatively chosen to bound the maximum elevation of a fuel assembly in transit. Two categories of fuel assembly accidental drop events are considered.

In the so-called "shallow" drop event, a fuel assembly, along with a portion of the fuel handling tool (which is severable in the case of a single element failure), is assumed to drop vertically and hit the top of a rack cell and subsequently the fuel assembly stored in the cell. The deformation of the rack produced by the impact is expected to be confined to the region of collision due to the honeycomb configuration. However, the "depth" of damage to the affected cell walls must be demonstrated to be limited to the portion of the cell above the top of the "active fuel region" (essentially the elevation of the top of the neutron absorber). Stated in quantitative terms, this criterion implies that the plastic deformation of the cell walls should not extend more than $13^{1}/_{16}$ inches (downwards) from the top.

Based on the description of the rack modules in Section 3, the impact resistance of a rack at its periphery is considerably less than its interior. Accordingly, the limiting shallow drop scenario (i.e. producing maximum cell wall deformation) is the case in which the fuel assembly drops vertically and impacts the peripheral wall of a cell on the periphery of the rack. The inclined drop event is not considered, since it would transfer less kinetic energy during the initial impact. Furthermore, the dropped fuel assembly can only achieve first contact with the top of the rack at this location because of the orientation of the fuel assembly handle that sticks out of the top of rack. Other impact sites would require the falling fuel assembly to impact the stored fuel assembly handle first. These other impact scenarios would result in less damage to the rack and are, thus, not considered here, since the goal is to maximize penetration depth to compare against the acceptance criteria. Figure 7.2.1 depicts the finite element model used to evaluate this scenario.

The second class of fuel drop event postulates that the fuel assembly falls through an empty storage cell and impacts the fuel assembly support surface (i.e., rack baseplate). This so-called "deep" drop event threatens the structural integrity of the baseplate. If the baseplate is pierced or sufficiently deformed to allow the fuel assembly to impact the liner, then the liner integrity is at risk and water could leak from the pool. The deformed baseplate may also lead to an abnormal condition of the enriched zone of fuel assembly outside the "poisoned" space of the fuel rack. To preclude damage to the pool liner and to avoid the potential of an abnormal fuel storage configuration in the aftermath of a deep drop event, it is required that the baseplate remain unpierced and the fuel assembly does not impact the liner.

The deep drop event can be classified into two scenarios, namely, a drop in an interior cell away from the support shear pad, as shown in Figure 7.2.2, and a drop through a cell located above a support shear pad, as shown in Figure 7.2.3. In deep drop scenario 1, the fuel assembly impacts the baseplate away from the support shear pad, where it is more flexible. A gross severing or large deflection of the baseplate leading to a secondary impact with the pool liner is unacceptable. In deep drop scenario 2, the baseplate is buttressed by the support shear pad and presents a hardened impact surface, resulting in a high load; the shear pad load is transferred to the SFP floor through the rack platform that supports the rack at shear pads. The principal design objective is to ensure that the structural integrity of SFP floor is not compromised leading to uncontrollable water leakage (i.e., the drop must not punch through the liner

plate and develop though-thickness cracks in the concrete slab). Additionally, failure of the rack platform is not acceptable for deep drop scenario 2.

In addition to the previously described drop events, the structural integrity of rack cell walls under the uplift load caused by a postulated stuck fuel assembly is also evaluated.

7.3 Modeling Assumptions

The consequences of the accidental drop accidents are evaluated under a set of conservative assumptions that exaggerate the damage to the rack. Among the principal conservative assumptions are:

i. The fuel assembly is assumed to be rigid. This is a conservative assumption, since flexibility of the falling object will reduce the impact load and resulting damage.

ii. The fuel assembly is assumed to strike the target in a perfectly symmetrical manner and maintain its verticality throughout the impact event. Thus, there is no loss of energy from rotation or collateral impacts.

iii. The minimum ASME Code material property values are used.

7.5 Mathematical Model

In the first step of the solution process, the velocity of the dropped fuel assembly is computed for the condition of underwater free fall in the manner of the formulation presented in the above section. Table 7.5.1 contains the computed velocities for the various drop events. Note that fluid drag was conservatively neglected when calculating the impact velocities used in the finite element model.

7.6 Results

The following subsections provide a qualitative discussion of the results. The specific numerical results from the analyses are reported in Table 7.5.3.

7.6.1 Shallow Drop Event

For the shallow drop event, the dynamic analysis shows that the top of the impacted region undergoes localized plastic deformation. Figure 7.6.1 shows an isometric view of the post-impact geometry of the rack. The maximum depth of plastic deformation is found to be less than the design limit. Therefore, the damage does not extend into the active fuel region of any stored fuel.

7.6.2 Deep Drop Event

The deep drop through an interior cell does produce some deformation of the baseplate with local severing of the baseplate/cell wall welds. Figure 7.6.2 shows the deformed baseplate configuration. The fuel assembly support surface is lowered by a distance which is less than the distance between the bottom of the baseplate and the SFP liner. The deformation of the baseplate has been determined to be acceptable with respect to lowering the fuel seating position and the resulting criticality consequences.

The deep drop event above the support shear pad for rack A is found to produce a maximum stress (shown in Figure 7.6.3) in the liner which is well below the material yielding strength underneath the rack platform. The rack platform experiences an acceptable bounding plastic strain as demonstrated in Figure 7.6.4. The concrete slab experiences a negligible local deflection as shown in Figure 7.6.5. Since the pool floor can maintain its overall integrity and the liner is not breached in the drop event, there will be no loss of water from the pool. For deep drop event above support shear pad for Rack B, the maximum liner stress underneath the rack platform and concrete slab deflection are bounded by rack A due to the presence of much greater contact area between the platform and the SFP liner.

7.6.3 Stuck Fuel Event

The structural evaluation for the postulated stuck fuel event demonstrates that, under a bounding uplift load (refer to table 7.5.3) caused by a stuck fuel assembly, all structural components of the proposed new racks maintain positive safety margins.

7.7 Conclusion

The drop events postulated for the Cooper Nuclear Station SFP were analyzed and found to produce localized damage within the design limits for the racks. The shallow drop event is found to produce some localized plastic deformation in the top of the storage cell, but the region of permanent strain is limited to the portion of the rack structure situated above the top of the active fuel region. The analysis of the deep drop event at cell locations selected to maximize baseplate deformation indicates that the downward displacement of the baseplate ensures that fuel will remain in a subcritical condition and there is no baseplate to liner impact. The analyzed deep-drop scenario where a fuel assembly enters a cell directly above a rack support shear pad indicates that the shear pad load precludes rack platform failure, liner damage, and a breach in the integrity of the concrete floor slab. Therefore, there will be no uncontrollable loss of pool water inventory. Additionally, the rack walls are demonstrated to be structurally sound under the uplift load caused by a postulated stuck fuel assembly. In conclusion, the new Holtec spent fuel racks for the Cooper Nuclear Station SFP meet all of the acceptance criteria by possessing positive margins of safety under the postulated mechanical accidents.

7.8 References

[7.1.1] "OT Position for Review and Acceptance of Spent Fuel Storage and Handling Applications," dated April 14, 1978 as amended by the USNRC letter dated 1/18/1979.

Table 7.5.1 IMPACT EVENT DATA				
Case	Impactor Weight (lb)	Impactor Type	Drop Height (in)	Impact Velocity(1) (in/sec)
1. Shallow drop	666 (fuel assembly) 450 (lifting tool)	Fuel assembly & handling tool	24	123.87 (125)
2. Deep drop event scenario 1 (away from shear pad)	666 (fuel assembly) 450 (lifting tool)	Fuel assembly & handling tool	193.25	323.34 (354)
3. Deep drop event scenario 2 (above shear pad)	666 (fuel assembly) 450 (lifting tool)	Fuel assembly & handling tool	193.25	295.98 (354)

Note:

(1) The initial impact velocities used in the finite element analyses are shown in the parentheses of the table, which are conservatively greater than the calculated velocities that consider the fluid drag.

Table 7.5.2 MATERIAL DEFINITION					
Material Name	Material Type	Elastic Modulus (psi)	First Yield (psi)	Failure (psi)	Failure Strain
Stainless Steel	SA240-304L[1]	2.787e+07	2.27e+04	6.805e+04	3.800e-01
Carbon Steel	A-36	2.907e+07	3.380e+04	5.800e+04	2.000e-01
Concrete	f'_c=5,000 psi	4.031e+06	--	--	--

TABLE 7.5.3 RESULTS SUMMARY			
Event	Evaluating Parameter	Calculated Value	Allowable Value
Shallow Drop	Depth of Deformation (in)	7.71	$13^1/_{16}$
Deep Drop	SFP Liner Stress (psi)	$1.081 \cdot 10^4$	$2.27 \cdot 10^4$
	Deflection of Fuel Assembly Support Surface (in)	2.93	3
	Plastic Strain in Platform	0.07	0.38
	Slab Deflection (in)	0.007	N/A*
Stuck Fuel Event	Bounding Uplift Load	1230 lbs	> 4000 lbs[2]

* Not Applicable

[1] Analysis conservatively uses this material type. The material type used in rack fabrication is SA240-304 which is stronger than 304L grade.
[2] An upload of 4000 lb. did not cause any stress in the spent fuel rack to exceed allowable values

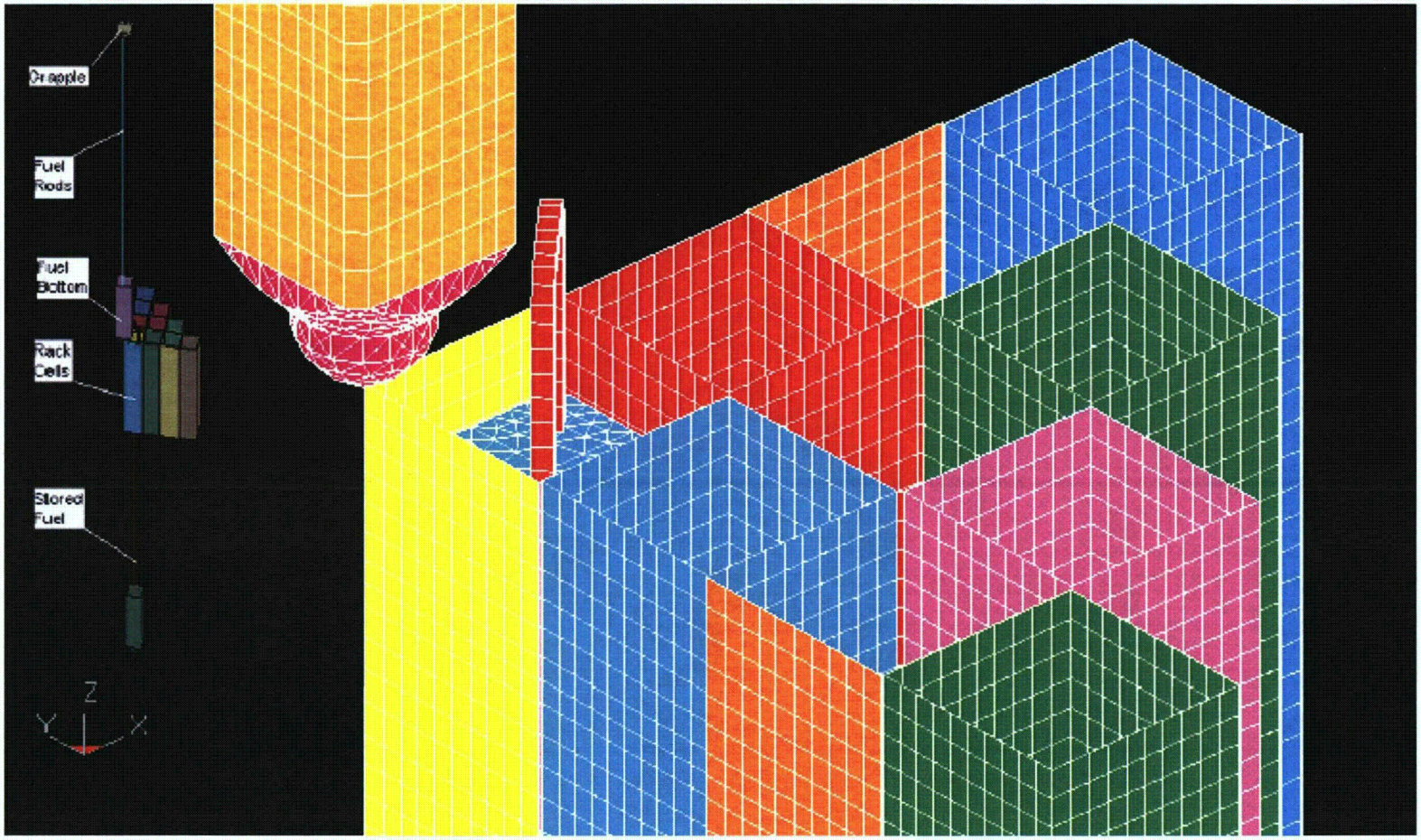

Fig. 7.2.1 Finite Element Model of the "shallow" drop event

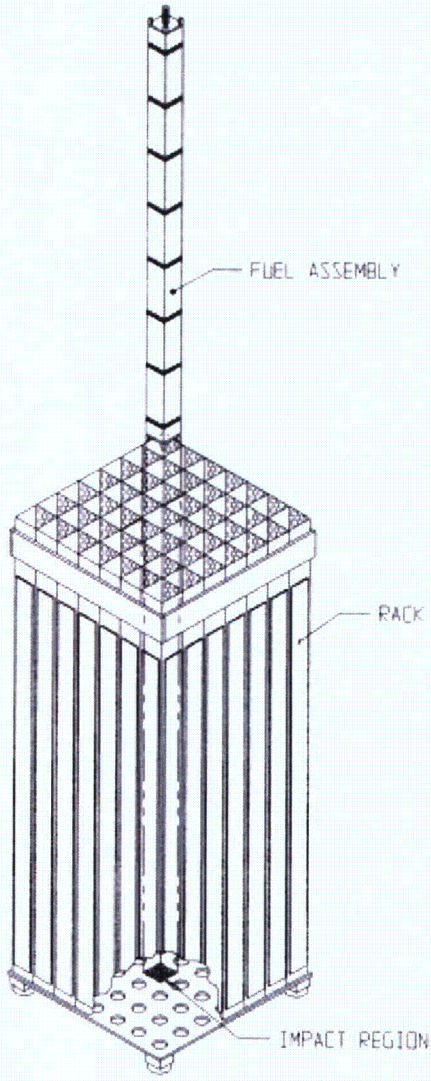

Fig. 7.2.2 Schematics of the "deep" drop scenario 1

Note: This figure is primarily provided to indicate the impact zone for this scenario. The configuration of the rack is not intended to be accurate.

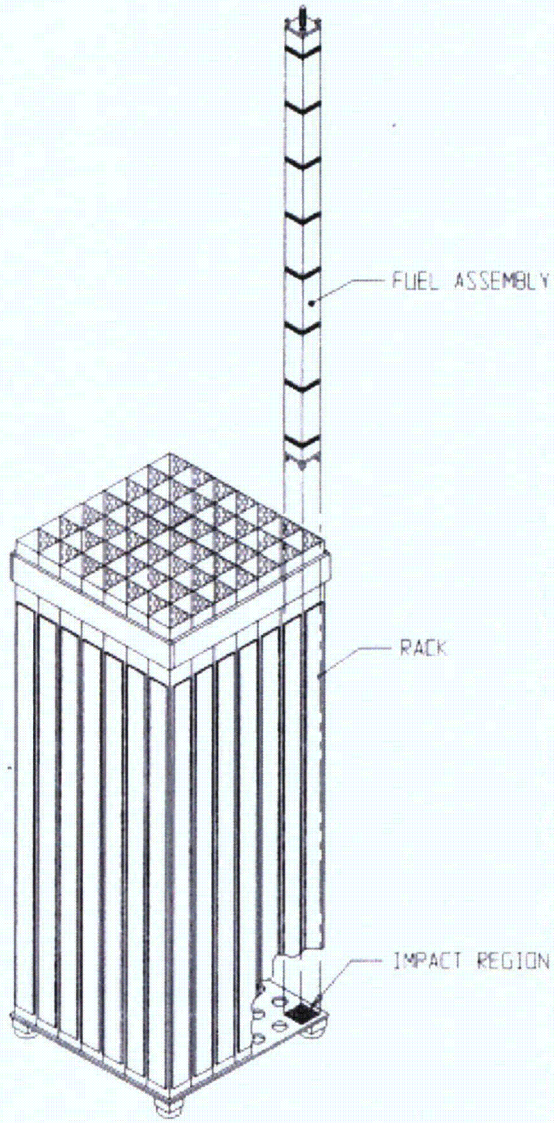

Fig. 7.2.3 Schematics of the "deep" drop scenario 2

Note: This figure is primarily provided to indicate the impact zone for this scenario. The configuration of the rack is not intended to be accurate.

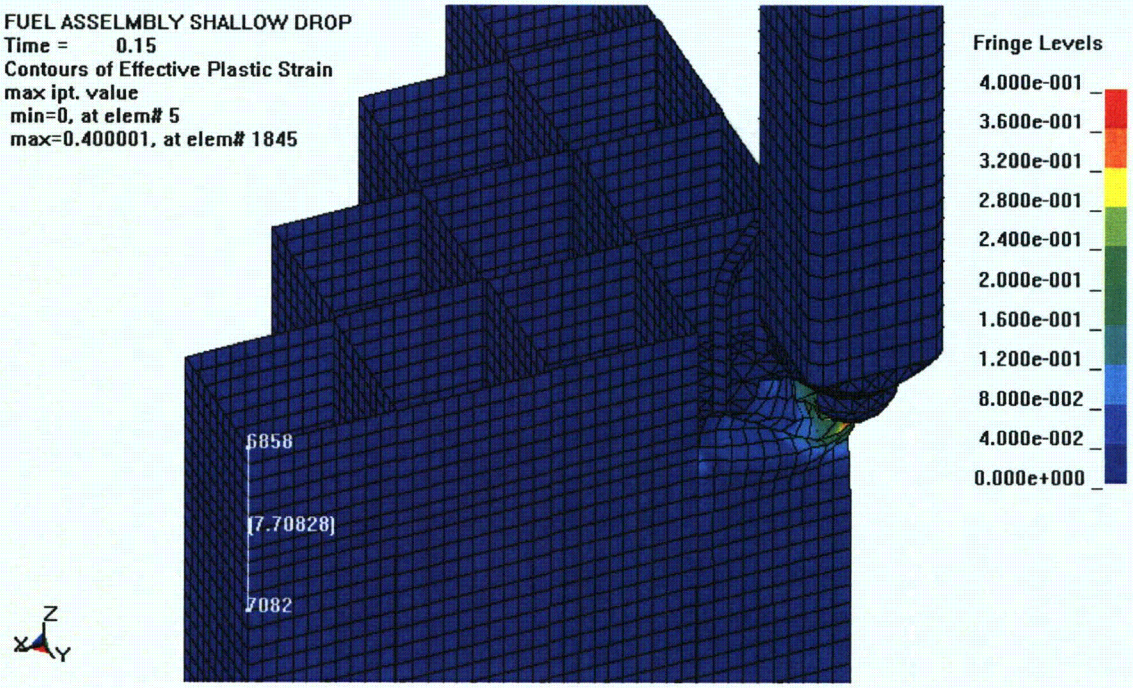

Fig. 7.6.1 "Shallow" Drop: Maximum Plastic Strain

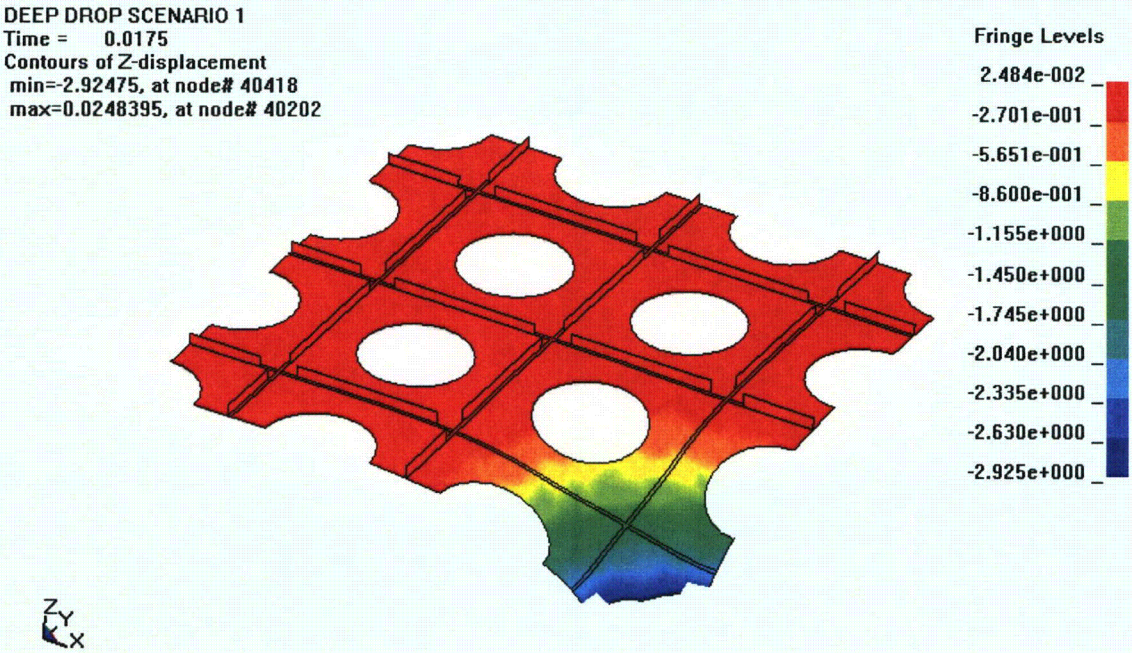

Fig. 7.6.2 "Deep" Drop Scenario 1: Baseplate Maximum Vertical Displacement

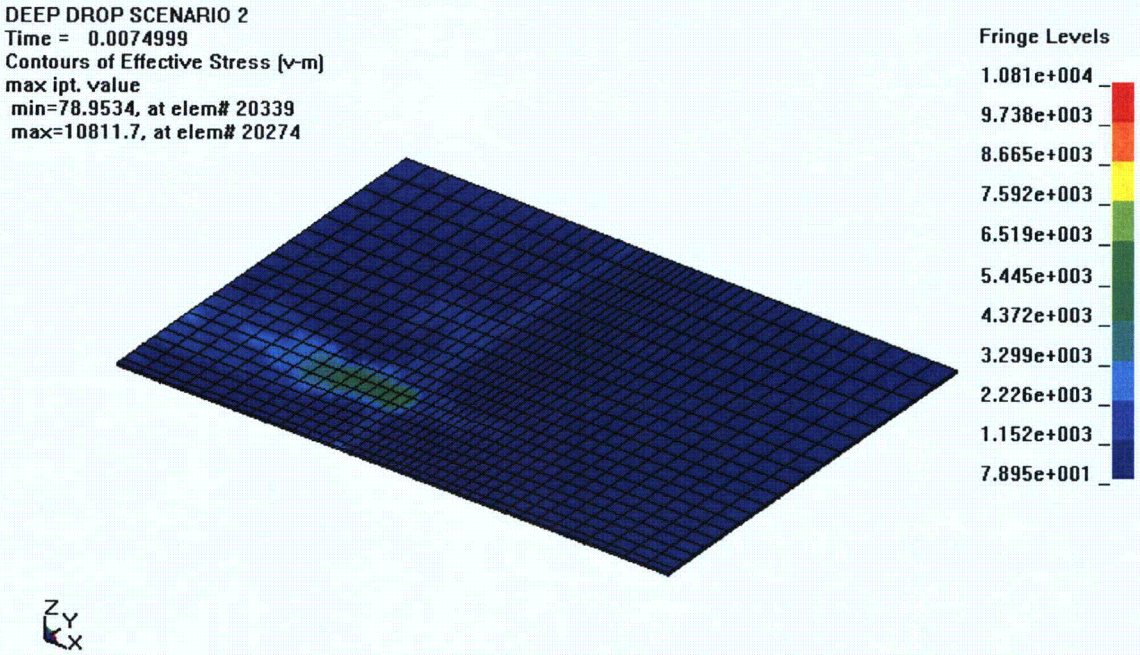

Fig. 7.6.3 "Deep" Drop Scenario 2: Maximum Liner Stress

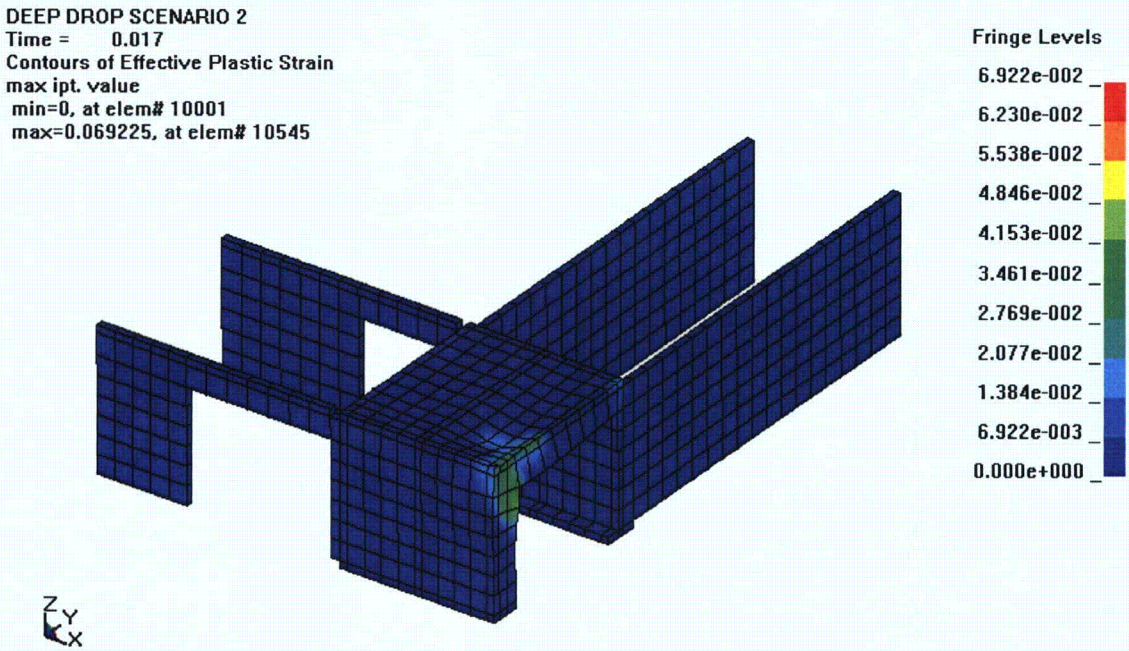

Fig. 7.6.4 "Deep" Drop Scenario 2: Maximum Plastic Strain – Rack Platform

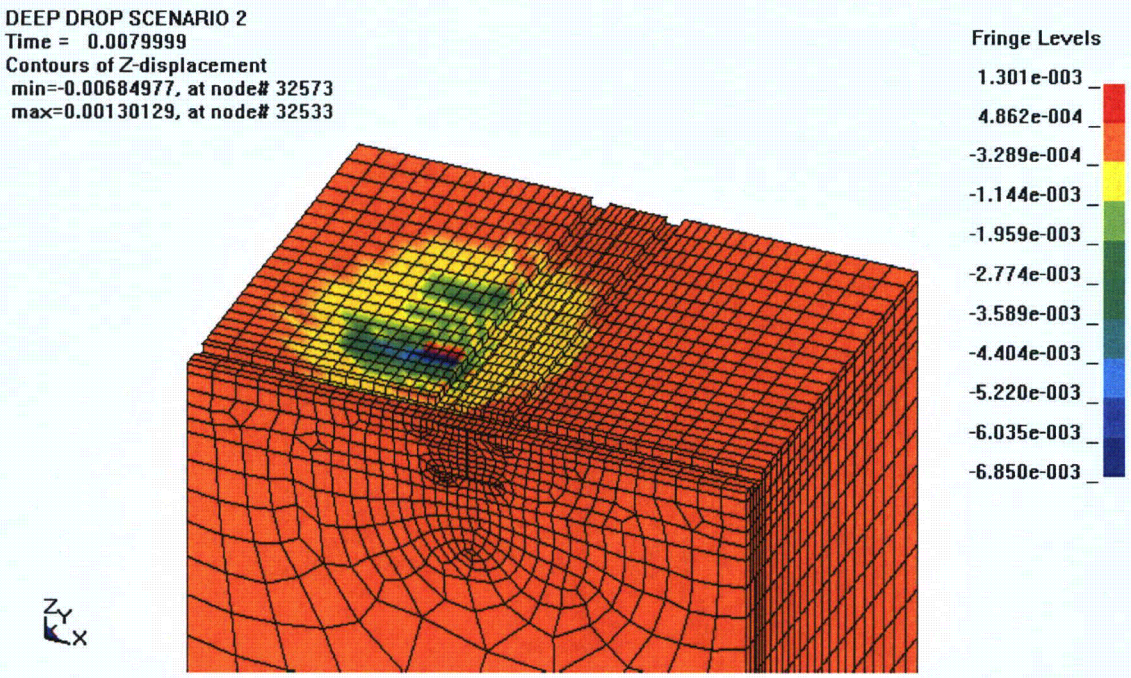

Fig. 7.6.5 Deep Drop Scenario 2: SFP Floor Slab Maximum Vertical Deflection

Chapter 8: Fuel Pool Structural Integrity Evaluation

Structural integrity evaluations of the regions of the reinforced concrete structure affected by the proposed capacity expansion of the Spent Fuel Pool (SFP) are summarized in this section.

8.1 Introduction

The spent fuel pool, which is elevated above ground, is located in the Reactor Building between elevation 962'-3" and the refueling floor at elevation 1001'-0". Figure 8.1.1 shows a plan view of the portion of the reactor building where the spent fuel pool is located. As can be seen from this figure, the pool floor lies mostly between building column lines 7-1 and 8-2 and lines L and N. The inside (plan) nominal dimensions of the pool are 28'-0" (North-South) by 40'-0" (East-West).

A two-way, reinforced concrete slab supports the contents of the pool. The thickness of the slab is 5'-4", which does not include an additional 8" top layer of grout. The SFP walls to the east and west are 5'-0" thick, whereas the south wall is 4'-9" thick. The north wall of the pool is an integral part of the biological shield wall, which separates the pool from the reactor cavity. The walls are braced, from the outside, by several intermediate slabs.

There will be no significant additional loads against the walls due to the newly installed racks. Therefore, only the floor slab structure needs to be examined to assess the effect of the new loads from the added storage racks. It is not expected that the addition of two racks will alter the current licensing basis conclusion since the total weight of the two loaded racks is not too much larger than the weight of a cask. As is noted later, for conservative results the total average slab load, before factoring, is computed including the weight of both new racks plus a cask.

8.2 Finite Element Model Description

The SFP slab is analyzed using the finite element method. Using the commercial computer code ANSYS [8.2.1], a finite element model is constructed with simply supported boundary conditions defined along the edges of the slab. This condition maximizes the bending moments in the slab at the center. Various applicable load components are considered, including dead loads, live loads, thermal loads, and seismic

loads. Results for individual load components are combined using factored load combinations mandated by SRP 3.8.4 [8.2.2] which incorporates the OT Position Paper [8.2.3]. After solution, the conservatively calculated slab moments at the slab center are averaged across a characteristic width of the slab, and then the averaged center moment is redistributed between the center section and the edge section. The redistribution is based on the results from the original SFP evaluation where a full 3-D model was employed that included the SFP walls and the wall loading [8.2.4]. Both moment and shear capacities are checked for concrete structural integrity against the concrete structural capacities at different sections. All structural capacity calculations are made using applicable design formulas following the guidance of the American Concrete Institute Building Code Requirements for Reinforced Concrete (ACI 318-71).

8.3 Material Properties

The material properties for the reinforced concrete components are provided in Table 8.3.1.

Table 8.3.1; Concrete and Rebar Properties

Parameter	Value
Concrete Compressive Strength (psi)	3.0E+03
Un-Cracked Concrete Elastic Modulus (psi)	3.122E+06
Concrete Poisson's Ratio	0.17
Concrete Weight Density (lb/ft^3)	150.0
Concrete Thermal Expansion Coefficient (in./(in.-degree F))	5.5E-06
Reinforcement Yield Strength (psi)	4.0E+04
Reinforcement Poisson's Ratio	0.3
Reinforcement Elastic Modulus (psi)	2.900E+07

8.4 Analysis Procedures

The evaluation is performed considering statically applied loads. The DYNARACK time-history pedestal loads, discussed in Chapter 6, were reviewed to determine the seismic adder. The seismic load adders for the rack and fuel in the OBE case and the SSE case are 18.5% and 24%, respectively. Moreover, a modal analysis was performed with conservative simply supported boundary conditions and it was determined that the first mode frequency in the vertical direction is 35.4 Hz, which is larger than 33 Hz and, thus, in the rigid range. Therefore, seismic amplification due to slab flexibility is not an issue. These results justify development of equivalent static loads using the zero period accelerations as multipliers.

Moments and shears computed for each load combination are compared with their respective capacities. For each load case, the allowable moment of the pool slab should be greater than the total factored moments due to mechanical loadings and thermal gradient as computed using the applicable load combinations, listed below. Likewise, the available shear capacity of the pool slab should be greater than the actual applied shear force. The capacities of the slab are computed per ACI 318-71 [8.4.1].

The ratios of the moment and shear capacities to their respective "section" values are referred to as the safety factor (SF). In computing the SF for section moments and shears in the presence of in-plane loads, the appropriate interaction relationships are employed using ACI guidance or specific formulas found in the Code.

The reinforced concrete is considered elastic and isotropic. The concrete properties are independent of the reinforcement contained in each structural element for the mechanical load cases when un-cracked cross-sections are assumed. This assumption is valid for all load cases with the exception of the thermal loads, where for a more realistic description of the reinforced concrete cross-section behavior the concrete is assumed cracked. The use of cracked section modulus provides a realistic assessment of the effects of the thermal loading in accordance with the ACI Code Commentary discussion.

8.5 Loads and Load Combinations

The following discrete load components are considered:

8.5.1 Static Loading (D = Dead Loads)

1) Dead weight of the slab.
2) Equipment dead loads (i.e., weight of the fuel racks and rack platforms). Note that the equipment dead load does not include the weight of the stored fuel assemblies.

8.5.2 Live Loading (L)

1) Weight of the stored fuel assemblies.
2) Weight of a shipping cask.

Table 8.5.1 provides a listing of the dead and live loads.

Table 8.5.1; APPLICABLE LOADINGS ON THE CNS POOL SLAB

Item	Existing Value (Ref. [6])	New Value (Ref. [3] [15])
1.Rack Weight (Total of Existing & New)	362 kips	394 kips
No. of Existing Racks	13	13
No. of Cells/Rack	182	182
Weight of Each Rack	27,846 lbf	27,846 lbf
No. of New Racks	-	2
No. of Cells/Rack "A" ("B")	-	117 (168)
Weight of Each Rack "A" ("B")	-	13,264 lbf[3] (18,445 lbf)
2.Fuel Weight	1616 kips	1811 kips
Total No. of Fuel Elem.	2366	2651
Weight of Each Fuel Elem.	683 lbf	683 lbf
3.Weight of Platform for Rack A	---	1 kip (bounding weight)
4.Weight of Platform for Rack B	---	15 kips (estimated)
5.Weight of Cask	176 kips	176 kips

For added conservatism, the total downward average dead load pressure on the slab was computed by taking all of the weight in the table and dividing by the area. Since Rack B and the cask cannot coexist, the pressure used in the computations is a bounding value.

[3] Bounding weight of Rack A

8.5.3 Seismic (E = OBE; E' = SSE)

These are the loads generated by the Operating Basis Earthquake (E) and the Safe Shutdown Earthquake (E').

1) Vertical hydrodynamic inertia loads due to the contained water mass and sloshing loads (considered in accordance with [8.5.1]) that arise during a seismic event.
2) Seismic inertia force of the racks. These inertia forces are computed using the zero period acceleration. Table 8.5.2 provides the appropriate seismic amplifiers.

Table 8.5.2; Seismic Zero Period Acceleration Values

DIRECTION	OBE (g)	SSE (g)
Vertical	0.0683[1]	0.137

8.5.4 Thermal Loading

The pool floor is subject to a thermal gradient, which is a function of the difference between the bulk temperature of the water in the SFP and the air temperature below the floor. The gradient considered for the floor evaluation was based on the following temperatures:

Interior surface: 160°F bulk pool temperature
Exterior surface: 85°F ambient temperature

These temperatures result in a conservative temperature gradient, since the 160°F bulk pool temperature considerably exceeds the values determined by the thermal-hydraulic evaluations, as discussed in Chapter 5.

1 Conservative ZPA of 0.0685 is used in the analysis

The applicable load combinations germane to the CNS slab analysis, as taken from the existing design basis, are as follows:

Service Load Conditions

a. $1.4D + 1.7L$
b. $1.4D + 1.7L + 1.9E$
c. $0.75\ (1.4D + 1.7L + 1.7T_o)$
d. $0.75\ (1.4D + 1.7L + 1.9E + 1.7T_o)$

Factored Load Conditions

e. $D + L + T_o + E'$

where:

D = Dead Loads
L = Live Loads
T_o = Thermal Loads
E = OBE Seismic Loads
E' = SSE Seismic Loads

Based on direct comparison, load combinations (b), (d) and (e) control the analysis.

8.6 Results of SFP Slab Evaluation

The minimum calculated safety factors for bending and shear are summarized in Table 8.6.1. All calculated safety factors are greater than 1.0 for the postulated load combinations.

Table 8.6.1; SUMMARY OF MINIMUM SAFETY FACTORS

Slab Direction	Critical Section	Critical Load Combination†	Result	Safety Factor
East-West	Support	b	M	3.80
		d	V	3.71
	Center	b	M	1.94
North-South	Support	b	M	2.04
		b	V	1.93
	Center	b	M	3.09

M = Moment
V = Shear

8.7 Conclusions

The analysis shows that the safety factors in the pool slab exceed 1.0 for all postulated load combinations. It is demonstrated that, for the bounding factored load combinations, the structural integrity of the pool is maintained when its slab is assumed to be loaded with all storage locations in the existing, as well as the new racks, fully loaded with channeled fuel.

† Load combinations are defined in Section 8.5.4.

8.8 References

[8.1.1] General Arrangement – Reactor Building Plan at Elev. 1001'-0", Burns and Roe Drawing for CNS, Drawing Number 2064, Rev. N08.

[8.2.1] ANSYS 7.0, Ansys Inc.

[8.2.2] NUREG-0800, SRP-3.8.4, Rev. 1., July 1981.

[8.2.3] USNRC, "OT Position for Review and Acceptance of Spent Fuel Storage and Handling Applications, April 14, 1978, and Addendum dated January 18, 1979.

[8.2.4] "Structural Evaluation Report for the Cooper Nuclear Station Spent Fuel Pool Expansion Program," Burns and Roe, Inc., June 1977.

[8.4.1] ACI 318-71, Building Code Requirements for Reinforced Concrete, American Concrete Institute, Detroit, Michigan.

[8.5.1] "Nuclear Reactors and Earthquakes, U.S. Department of Commerce, National Bureau of Standards, National Technical Information Service, Springfield, Virginia (TID 7024).

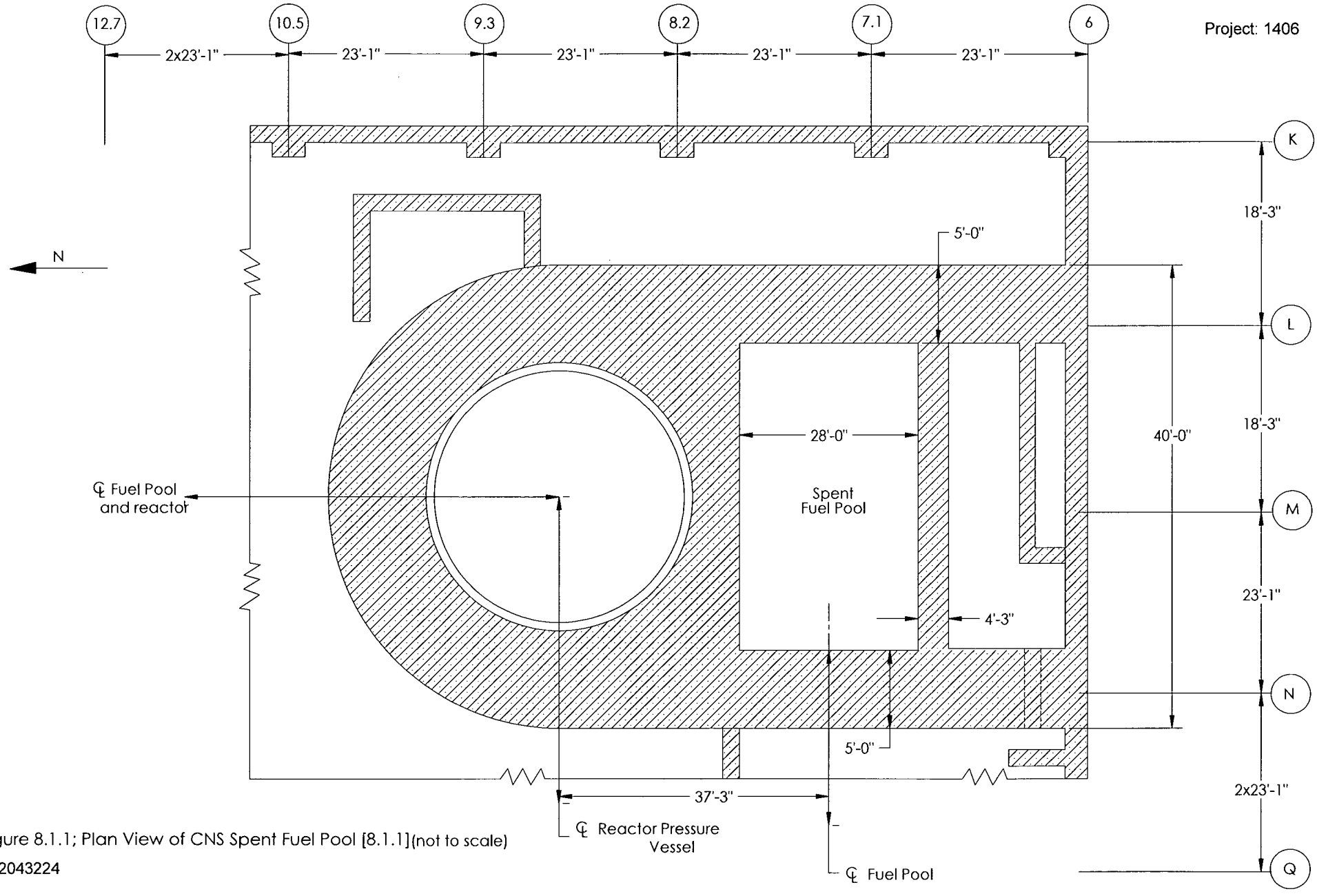

Figure 8.1.1; Plan View of CNS Spent Fuel Pool [8.1.1](not to scale)

HI-2043224

Chapter 9: Radiological Evaluation

9.1 Fuel Handling Accident

The installation of new fuel storage racks in the spent fuel pool (SFP) will not result in a change to the previously analyzed fuel handling accident or its consequences. The new racks will simply provide increased fuel storage capacity. The factors affecting the doses, such as the depth of the pool, the drop height, and the number of fuel assemblies that could be impacted in a fuel drop accident, etc. have not changed.

9.2 Solid Radwaste

The necessity for resin replacement is determined primarily by the requirement for water clarity, and the resin is normally changed about once a year. No significant increase in the volume of solid radioactive wastes is expected with the expanded storage capacity. During fuel-storage expansion operations, small amounts of additional resins may be generated by the pool cleanup system on a one-time basis.

9.3 Gaseous Releases

Gaseous releases from the Reactor Building are combined with other plant exhausts. Normally, the contribution from the Reactor Building is negligible compared to the other releases, and no significant increases are expected as a result of the expanded storage capacity.

9.4 Personnel Exposures

During normal operations, personnel on the working level of the fuel storage area are exposed to radiation from the spent fuel pool. Since the new racks are closer to the west wall, the dose rates experienced by personnel are expected to remain within acceptable

levels with the increased storage capacity of the pools with the following stipulation. The minimum spent fuel pool wall thickness adjacent to the new racks is 4'9" thick. The dose rate from a rack completely filled with freshly discharged fuel was calculated to be unacceptably high. In order to ensure a lower and acceptable dose rate, CNS will institute administrative controls to ensure that the appropriate number of rows of new rack storage cells along the walls are loaded with at least 5-year cooled barrier fuel as required by the shielding calculation.

The increase in fuel capacity in the spent fuel pool will obviously affect the dose rates in the areas of the spent fuel pool above the new racks but will not affect the dose rates in the areas above the existing racks. The maximum dose rate above the new racks will be essentially identical to the maximum dose rate above the existing racks since the difference in cell pitch between the existing racks and the new racks is minimal. Therefore, there is essentially no change in the maximum dose rate above the spent fuel pool due to the increased storage capacity.

The radionuclide concentrations and radiological conditions within the building are typically dominated by the most recent batch of spent fuel from a full core discharge. The radioactive inventory of the older fuel that will increase with the expanded storage capacity will be insignificant compared to that of freshly discharged fuel. Therefore, the radionuclide concentrations in the spent fuel pool water will be unaffected by the increased storage capacity.

There will be no change in the dose rate from a fuel assembly in transit, since the fuel parameters have not changed and the depth of water above the active portion of the assembly has not changed.

No increases in airborne radioactivity are expected as a result of the expanded storage capacities. Area monitors for airborne activities are available in the immediate vicinities of the pools.

In summary, no increases in radiation exposure to operating personnel are expected. Consequently, neither the current health-physics program nor the area monitoring system needs to be modified.

9.5 Anticipated Exposures During Storage Expansion

Operations involved in increasing the storage capacity will be performed using detailed procedures prepared with full consideration of ALARA principles. Similar operations have been performed in numerous facilities in the past, and it is expected that the expansion of storage capacity can be safely and efficiently accomplished at CNS with minimum radiation exposure to personnel.

As shown in Table 9.1, the total occupational exposure for the operations required to increase storage capacity in each phase is estimated to be between 0.7 and 1.4 person-rem during Phase 1, and 0.4 to 0.8 person-rem during Phase 2. While individual task efforts and exposures may differ from those in Table 9.1, the total is believed to be a reasonable estimate for planning purposes.

The existing radiation protection programs at the plant are adequate for the storage-expansion operations. While there is a potential for airborne activity, continuous air samplers will be in operation. Personnel will wear protective clothing and, if necessary, respiratory protective equipment. Activities will be governed by Radiation Work Permits, and personnel monitoring equipment will be issued to each individual. At a minimum, this will include personal dosimeters. Additional personnel monitoring equipment (i.e. extremity badges or alarming dosimeters) may be utilized as required. Work, personnel traffic, and the movement of equipment will be monitored and controlled to minimize contamination and to assure that exposures are maintained ALARA.

As discussed in Chapter 1, minor modification of beam segments should be performed in the Fuel Cask area prior to any rack installation. Divers will be used for this purpose and

will be restricted to their work area. Fuel bundles will be moved away from the safe dive area to minimize dose to the diver. The divers will be monitored via remote teledosimetry to ensure constant oversight and control by CNS Health Physics personnel.

Table 9.1†

PRELIMINARY ESTIMATE OF THE PERSON-REM EXPOSURES DURING THE EXPANSION OF FUEL STORAGE CAPACITY

	PHASE 1			PHASE 2		
Operation	Number of Personnel	Hours	Estimated Person-Rem Exposure††	Number of Personnel	Hours	Estimated Person-Rem Exposure††
Clean and Vacuum Cask Pit	4	20	0.3 to 0.6	4	10	0.2 to 0.4
Remove Underwater Appurtenances	6	30	0.2 to 0.4	----------	------	----------
Install New Racks	8	10	0.2 to 0.4	8	10	0.2 to 0.4
TOTAL PERSON-REM EXPOSURE			0.7 to 1.4			0.4 to 0.8

†This tabulation presents the estimated exposures associated with the operations necessary to remove the existing frame restraints around the cask pit and install the new racks. The exposures are based on the experience obtained in increasing the capacities of many storage pools.

†† Assumes a dose rate of 2.5mr/hr (minimum) to 5 mr/hr (maximum), except for pool cleaning and vacuuming operations, which assume 4 to 8 mr/hr, and diving operations, which assume 20 to 40 mr/hr.

Chapter 10: Implementation Considerations

10.1 Heavy Load Considerations for the Proposed Pool Capacity Expansions

The Reactor Building (RB) crane is an electric motor driven overhead crane with a 100 ton rated capacity and is controlled from a traversing cab. The crane is controlled either in the 'normal' or 'restricted' modes. In the 'restricted' mode, interlocks limit crane speed to 18.5 feet per minute and limit switches restrict the path of travel. The crane spans the east/west walls of the Reactor Building and has two hoisting systems, the main hoist and the auxiliary hoist. The main hoist (rated for 100 tons capacity) will be principally used for the installation of the racks. The auxiliary hoist (rated for 5 tons capacity) will be used for moving smaller items.

The RB crane is designed to meet or exceed the criteria established by CMAA Specification #70 [10.1.3]. It is also compatible with the requirements of the OSHA Act of 1970, as amended in 1971, as well as with ANSI B30.2,[10.1.1]. The bridge girders are designed to withstand the combined vertical and horizontal loads of the RB crane loaded to 100 tons coincident with an SSE.

The RB crane has been designed to prevent dropping or losing control of the heaviest load to be handled. The main hoist consists of a gear train and the hoist load block along with restraints at critical points to provide load retention and minimization of uncontrolled motions of the load in the event of failure of any single hoist component. The hoist includes two complete gear trains connecting the hoist motor to the single hoist drum. Redundancy has also been designed into the hoist and trolley brakes, the load lifting device, and the crane control components.

While hoist system design is predicated upon a dual load path, some items within the path cannot be made redundant. Where full redundant features are not feasible or are impractical or impossible, increased design safety factors are used. Single element components have been designed to a minimum factor of safety of 8.2 based on the ultimate strength of the material and a design load of 100 tons (weight of an empty new rack is less than 15 tons). 'Two blocking' (which could be caused by a fused contactor in the main hoist control circuit) is prevented by a

mechanically operated power limit switch in the main hoist motor power circuit. The power limits switch interrupts power to the main hoist motor and causes the holding brakes to set prior to 'two blocking.'

As the above discussion indicates, the Reactor Building crane is single-failure-proof, and a rack drop event in the CNS pool is not credible. To further ensure heavy load handling safety, the following defense-in-depth approach, as derived from guidelines of NUREG 0612 [10.1.6] will be followed:

Safe handling of heavy loads by the Reactor Building crane will be ensured by following the

- Defined safe load paths in accordance with approved procedures
- Supervision of heavy load lifts by designated individuals
- Crane operator training and qualification that satisfies the requirements of ANSI/ASME B30.2 - 1976 [10.1.1]
- Use of lifting devices (slings) that are selected, inspected and maintained in accordance with ANSI B30.9 - 1971 [10.1.2]
- Inspection, testing and maintenance of cranes in accordance with ANSI/ASME B30.2-1976
- Reliability of special lifting devices in accordance with ANSI N14.6 [10.1.4] by application of substantial design safety margins, and periodic inspection and examinations using approved procedures

The salient features of the lifting devices and associated procedures used in the in-plant rack movements that will ensure a safe rack installation with radiological considerations to ensure dose is ALARA are as follows:

a. Safe Load Paths and Procedures

Safe load paths will be defined for moving the new racks into the Reactor Building. The racks will be lifted by the main hook of the Reactor Building crane and enter the laydown/staging area through the equipment hatch. The rack will enter the building at a location close to the laydown/staging area adjacent to the Cask Pit. The staging area location also will not require any heavy load to be lifted over the pools or any safety-related equipment.

All phases of rack installation activities will be conducted in accordance with written procedures, which will be reviewed and approved by NPPD.

b. Supervision of Lifts

Procedures used during the installation of the racks require supervision of heavy load lifts by a designated individual who is responsible for ensuring procedural compliance and safe lifting practices. Holtec personnel experienced in similar rack installations will supervise the initial installation of the racks.

c. Crane Operator Training

CNS crew members involved in the use of the lifting and upending equipment will be given training by Holtec International using a videotape-aided instruction course that has been utilized by Holtec in previous rack installation operations.

d. Lifting Devices Design and Reliability

The RB crane can access the equipment hatch, the adjacent laydown area, and the Cask Pit. The RB crane has sufficient capacity to handle the heavy load lifts during the new rack installing process.

The following table determines the maximum lift weight during the installation of the new racks.

Item	Weight (lb)
Heaviest Rack	<22,000
Lift Rig	< 2,500
Rigging	< 500
Total Lift	<25,000

It is clear that the heaviest load to be lifted is well below the 100-ton rating of the Reactor Building crane main hook.

A remotely engaging lift rig, meeting applicable guidelines of NUREG-0612, will be used to lift the rack modules. The rack lift rig consists of four independently loaded traction rods in a lift configuration. The individual lift rods have a safety factor of greater than 10. If one of the rods breaks, the load will still be supported by at least two rods, and this will have a safety factor of more than 5 against ultimate strength. Therefore, the lift rigs comply with the duality feature called for in Section 5.1.6 (3) of NUREG 0612.

The lift rigs have the following attributes:

- The traction rod is designed to prevent loss of its engagement with the rig in the locked position. Moreover, the locked configuration can be directly verified from above the pool water without the aid of an underwater camera.

- The stress analysis of the rig is carried out and the primary stress limits postulated in ANSI N14.6 [10.1.4] are met.

- The rigs are load tested with 300% of the maximum weight to be lifted. The test weight is maintained in the air for a min. of 10 minutes. Critical weld joints are liquid penetrant examined to verify soundness after load test.

e. Crane Maintenance

The RB crane is maintained functional per NPPD's preventive maintenance procedures.

The proposed heavy load lifts will comply with applicable guidelines of NUREG-0612, to "provide an adequate defense-in-depth for handling of heavy loads near spent fuel..." The NUREG-0612 guidelines cite four major causes of load handling accidents, namely

1. operator errors
2. rigging failure
3. lack of adequate inspection
4. inadequate procedures

The rack installation ensures maximum emphasis on mitigating the potential load drop accidents by implementing measures to eliminate shortcomings in all aspects of the operation including the four aforementioned areas. A summary of the measures specifically planned to deal with the major causes is provided below.

1. Operator errors: Comprehensive training in compliance with ANSI B30.2 will be provided to the installation crew.

2. Rigging failure: The lifting device designed for handling and installing the new racks has redundancies in the lift legs and lift eyes such that there are four independent load members in the new rack lift rig. Failure of any one load bearing member would not result in dropping the load. The rig complies with all provisions of ANSI N14.6-1993, including compliance with the primary stress criteria, load testing at 300% of maximum lift load, and dye penetrant examination of critical welds.

   The design of the lift rig is similar to that used in the initial rack installation or rack replacement at plants including Hope Creek, Millstone Unit 1, Indian Point Unit 2, FitzPatrick, Three Mile Island Unit 1, Callaway and Wolf Creek.

3. Lack of adequate inspection: The designer of the racks has developed a set of inspection points that have been proven to eliminate any incidence of rework or erroneous

installation in numerous prior rerack projects. Surveys and measurements are performed on the storage racks prior to and subsequent to placement into the pool to ensure that the as-built dimensions and installed locations are acceptable. Measurements of the platform level are performed to ensure that the racks will be level after installation with minimum manipulation during placement into the pool. Preoperational crane testing will verify proper function of crane interlocks prior to rack movement.

4. Inadequate procedures: Procedures will be developed to address rack installation, including, but not limited to, mobilization, upending, lifting, installation, verticality, alignment, dummy gage testing, site safety, and ALARA compliance. The procedures will reflect the procedures successfully implemented in previous projects.

Table 10.1.2 provides a synopsis of the requirements delineated in NUREG-0612, and their intended compliance.

Table 10.1.2 HEAVY LOAD HANDLING COMPLIANCE MATRIX (NUREG-0612)	
Criterion	Compliance
1. Are safe load paths defined for the movement of heavy loads to minimize the potential of impact, if dropped, on irradiated fuel?	Yes
2. Will procedures be developed to cover: identification of required equipment, inspection and acceptance criteria required before movement of load, steps and proper sequence for handling the load, defining the safe load paths, and special precautions?	Yes
3. Will crane operators be trained and qualified?	Yes
4. Will special lifting devices meet the guidelines of ANSI 14.6-1993?	Yes
5. Will non-custom lifting devices be installed and used in accordance with ANSI B30.20 [10.1.5], latest edition?	Yes
6. Will the crane be inspected and tested prior to use in rack installation?	Yes
7. Does the crane meet the requirements of ANSI B30.2-1976 and CMMA-70?	Yes

10.2 Implementation

The placement of the new rack modules in the CNS pool will be considerably simplified by the fact that the support platforms will have been previously installed and leveled in the CSA region. The support platforms will provide a rigid level support for the new rack modules. Thus, there will be no need to level the racks upon their placement, as is the case when the racks must be supported on the (often) uneven surface of the pool liner. The narrative in the following describes the proven procedures and methods that Holtec International has used to install over 1,000 racks in LWR pools around the world without a single mishap.

10.2.1 Implementation Procedures

The installation phase of the CNS fuel storage rack project will be executed by Holtec International's Field Services Division. Holtec, serving as the installer, is responsible for performance of specialized services, such as underwater diving and welding operations, as necessary. As discussed earlier, all installation work at CNS will be performed in compliance with NUREG-0612, Holtec Quality Assurance Procedures, CNS rack installation project specific procedures, and applicable CNS procedures and CNS USAR [10.2.1].

Procedures developed by Holtec International will be used in conjunction with CNS procedures to cover the scope of activities for the rack installation effort. Similar procedures have been used and successfully implemented by Holtec on scores of previous rerack projects. These procedures are written to include ALARA practices and provide requirements to assure equipment, personnel, and plant safety. These procedures are reviewed and approved in accordance with CNS administrative procedures prior to use on site. The following is a list of the Holtec procedures, used in addition to the CNS procedures to implement the installation phase of the project.

i. Installation and Handling Procedure

This procedure provides direction for the installation, and handling of the new storage rack modules in the Spent Fuel Pool, as applicable. This procedure delineates the steps necessary to receive the new racks on site, the proper method for unloading and uprighting the racks, staging the racks prior to installation, installation of the racks. The procedure provides for the installation of the new racks and verification of the as-built field configuration to ensure compliance with design documents.

ii. Receipt Inspection Procedure

This procedure delineates the steps necessary to perform a thorough receipt inspection of a new rack module after its arrival on site. The receipt inspection includes dimensional measurements, cleanliness inspection, visual weld examination, and verticality measurements.

iii. Cleaning Procedure

This procedure provides for the cleaning of a new rack module, if required. The modules are to meet the requirements of ANSI N45.2.1, Level B, prior to placement in the Spent Fuel Pool. Methods and limitations on cleaning materials to be utilized are provided.

iv. Pre- and Post-Installation Drag Test Procedure

These two procedures stipulate the requirements for performing a functional test on a new rack module prior to and following installation. The procedures provide direction for inserting and withdrawing an insertion gage into designated cell locations, and establish an acceptance criterion in terms of maximum drag force.

v. ALARA Procedure

Consistent with Holtec International's ALARA Program, this procedure provides guidance to minimize the total man-rem received during the rack installation project, by accounting for time, distance, and shielding. This procedure will be used in conjunction with the CNS ALARA program.

vi. Liner Inspection Procedure

In the event that a visual inspection of any submerged portion of the pool liner is deemed necessary, this procedure describes the method to perform such an inspection using an underwater camera and describes the requirements for documenting any observations.

vii. Leak Detection Procedure

This procedure describes the method to test the pool liner for potential leakage using a vacuum box. This procedure may be applied to any suspect area of the liner.

viii. Liner Repair and Underwater Welding Procedure

In the event of a positive leak test result, underwater welding procedures may be implemented which provide for a weld repair, or placement of a stainless steel repair patch, over the area in question. The procedures contain appropriate qualification records documenting relevant variables, parameters, and limiting conditions. The weld procedure is qualified in accordance with ASME Section XI, or may be qualified to an alternate code accepted by OPPD and Holtec International.

10.2.2 Installation of New Racks

The new racks supplied by Holtec International will be shipped by truck and delivered to the site in the horizontal position. A new rack module will be removed from the shipping trailer using a suitably rated crane, while maintaining the horizontal configuration. The rack is placed on an

up-ender and secured. Using two independent overhead hooks, or a single overhead hook and a spreader beam, the module is up-righted into the vertical position.

The new rack lifting device will be engaged in the lift points at the bottom of the rack. The rack is then transported by the Reactor Building (RB) crane to a pre-leveled surface where the appropriate quality control receipt inspection will be performed.

The fuel pool floor will be inspected and cleared of any debris which may inhibit the installation of the racks. The new rack module is lifted with the RB crane and transported along the pre-established safe load path. The rack module is carefully lowered onto the Cask Pit.

The rack is lifted using the RB crane emplaced on the pre-installed platform. Elevation readings are taken to confirm that the module is level and the shims are added in the unlikely event that they are needed to achieve level. In addition, rack-to-wall and rack-to-adjacent seismic restraints off-set distances (gaps) are also measured and adjustments made as necessary to ensure compliance with design documents. The lifting device is then disengaged and removed from the pool under Health Physics direction. As directed by procedure, post-installation free path verification of individual cells is performed using an inspection gage.

10.3 Supporting Processes

10.3.1 Spent Fuel Pool Cooling

The pool cooling system is operated in order to maintain the pool water at an acceptable temperature level. A temporary shutdown of the Spent Fuel Pool cooling system is not envisaged, but can be implemented, as in other plants, to ensure ALARA. Specifically, prior to any shutdown of the Spent Fuel Pool cooling system, the duration to raise the pool bulk coolant temperature to a selected value of ≤120 °F will be determined. A temperature of ≤ 120 °F is chosen such that cooling may be restored to ensure the pool bulk temperature will not exceed 150 °F.

10.3.2 Purification

A portable vacuum system will be available and will be used as needed to remove extraneous debris, reduce general contamination levels prior to diving operations, and to assist in the restoration of SFP clarity following any installation processes.

10.3.3 Fuel Shuffling

Fuel shuffling shall be completed prior to rack installation in order to maximize the distance between the stored fuel and the suspended rack being installed into the CSA region.

10.3.4 Removal of Equipment

Prior to installation of the new racks, some existing equipment in the area of the shipping cask storage area will need to be removed or modified. This includes the removal of storage rack for control rod blades and a drum platform and minor modification of one beam in the CSA region (explained in chapter 1). Any equipment or object that is defined as heavy load by the plant USAR will be removed using the established procedure for moving heavy loads. The equipment or objects will not be lifted over the racks in the pool or any other safety-related equipment.

10.4 Safety, Health Physics, and ALARA Methods

i. Safety

During the installation phase of the fuel storage rack project, personnel safety is of paramount importance. All work shall be carried out in compliance with applicable approved procedures.

ii. Health Physics

Health Physics is carried out per the requirements of the CNS Radiation Protection Program.

iii. ALARA

The key factors in maintaining project dose As Low As Reasonably Achievable (ALARA) are time, distance, and shielding. These factors are addressed by utilizing many mechanisms with respect to project planning and execution.

Time

Each member of the project team is provided appropriate training and education to ensure an understanding of critical evolutions. Additionally, daily pre-job briefings are conducted to acquaint each team member with the scope of work to be performed and the proper means of executing required tasks. Such pre-planning devices reduce worker time within the radiological controlled area and, therefore, project dose.

Distance

Remote tooling such as lift fixtures, pneumatic grippers and a lift rod disengagement device have been developed to execute numerous activities from the SFP surface, where dose rates are relatively low.

Shielding

During the course of the fuel storage rack project, primary shielding is provided by the water in the pool. The amount of water between an individual at the surface and an irradiated fuel assembly is an essential shield that reduces dose. Additionally, other shielding may be employed to mitigate dose when work is performed around high dose rate sources. If necessary, additional shielding may be utilized to meet ALARA principles.

10.5 Radwaste Material Control

Radioactive waste generated from the rack installation will be controlled in accordance with established CNS procedures.

10.6 References

[10.1.1] ANSI/ASME B30.2, "Overhead and Gantry Cranes, (Top Running Bridge, Single or Multiple Girder, Top Running Trolley Hoist)," American Society of Mechanical Engineers, 1976.

[10.1.2] ANSI B30.9, "Safety Standards for Slings," 1971.

[10.1.3] CMMA Specification 70, "Electrical Overhead Traveling Cranes," Crane Manufacturers Association of America, Inc., 2000.

[10.1.4] ANSI N14.6-1993, Standard for Special Lifting Devices for Shipping Containers Weighing 10000 Pounds or more for Nuclear Materials," American National Standard Institute, Inc., 1978.

[10.1.5] ANSI/ASME B30.20, "Below-the-Hook Lifting Devices," American Society of Mechanical Engineers, 1993.

[10.1.6] NUREG 0612, "Control of Heavy Loads at Nuclear Power Plants", USNRC, Washington, DC, July 1980

[10.2.1] CNS Updated Final Safety Analysis Report (USAR).

Chapter 11: Environmental and Economic Considerations

Article V of the USNRC OT Position Paper [11.1.1] specifies environmental and economic considerations as essential elements of a fuel storage capacity expansion. This section provides justification for selecting installation of additional racks in the CNS SFP as the appropriate means to fulfill the directive of the OT Position Paper.

11.1 Environmental Considerations

The Owner (NPPD) has determined that the proposed operating license amendment, described in this report, will not:

i. result in any impact on the plant's environment, including the water, land, or air; and

ii. consume more than a minute portion of the world's supply of raw materials of stainless steel, boron carbide aluminum, weld wire, and argon gas; and

iii. produce any new radioactive waste; and

iv. produce any harmful gaseous or particulate emissions; and

v. require any new and hazardous activities by the manufacturing or plant personnel; and

vi. involve transport of any hazardous materials.

Each of the above conclusions is explained below.

i. Environmental Impact

Specifically, the proposed rack installation results in a very small increase in the heat load burden to the Spent Fuel Pool Cooling and Cleanup System due to an overall small increase in spent fuel pool inventory during the plant's outage. The increased heat load is within the capability of the SFP cooling system. Consequently, the short duration of increased heat loading during an outage is not expected to have any significant impact on the environment. It is also noted that any increase in heat load above the previously licensed level will only occur when the pool is nearly full of fuel, since the heat load from recently discharged fuel represents far more heat than all of the remainder of the fuel in the pool (commonly referred to as background heat). The increase in storage capacity in

the SFP, therefore, translates into a small increase in the background heat, since it is the oldest, coolest fuel that is being increased in number.

It, therefore, follows that the environmental impact of the new racks will be insignificant. In particular, there will be little additional heat or humidity input to the local environment, and no new environmental burden on the surrounding landscape. The proposed pool capacity expansion at CNS, in summary, has no adverse impact on the environment.

ii. Consumption of raw materials: It is estimated conservatively that the manufacturing of the new racks will require the following raw material resources:

Stainless Steel:	<50,000 lbs
Aluminum:	<5,000 lbs
Boron Carbide:	<2,000 lbs
Stainless Steel Weld Wire and Flux:	<1,000 lbs
Argon Gas (for welding):	< 10,000 SCF

The annual worldwide consumption of each of the above materials is at least 500,000 times as much as the quantities needed for the proposed capacity expansion project. Therefore, it is concluded that this project will have a negligible effect on the worldwide availability of the above-mentioned raw materials.

iii. Generation of Radioactive Waste

The racks are merely storage devices; they produce no radioactive waste. After decades of storage, a slight activation of the metals adjacent to the spent fuel is expected to occur. However, the extent of activation is expected to be small enough to classify the racks as Low Specific Activity (LSA) at their retirement (at the end of the plant's operating life).

iv. Gaseous Emission

There is no known mechanism for the new racks to generate radioactive gases.

v. Hazardous Human Activity

Manufacture of fuel racks and installation in fuel pools is a routine and commonplace human activity. Thousands of racks have been manufactured, installed, and are in use in over 400 of the world's reactors. There is no scientific evidence (or assertion by any group) that the manufacture or use of fuel racks entails any human risk factors.

vi. Transport of Hazardous Materials

Use of the racks does not involve off-site movement of spent nuclear fuel or any other radiological cargo.

It is therefore concluded that the proposed amendment request is environmentally benign in all respects.

11.2 Economic Considerations

The only viable alternative to the in-pool capacity enhancement at CNS is on-site dry storage. NPPD has evaluated the relative merits of wet capacity expansion and dry storage and determined that wet expansion is the only feasible option at this time. The following considerations were factored in making this determination:

- Schedule: Minimize time to implement a plan which will maintain prudent reserve capability for the future.
- Safety: Minimize the risk to the public.
- Economy: Minimize capital and O&M expenditures.
- Security: Protection from potential saboteurs, natural phenomena.
- Non-intrusiveness: Minimize required modifications to existing plant systems.
- Maturity: Extent of industry experience with the technology.
- ALARA: Minimize cumulative dose.
- Risk Management: Maximize probability of completing the expansion to support fuel storage needs.

<u>On-Site Dry Cask Storage Option</u>

Dry cask storage is the only theoretical alternative to wet capacity expansion available to NPPD at this time. Dry storage has been successfully implemented at numerous sites and the technology is considered to be mature and relatively risk free. Most plants have opted for the so-

called multi-purpose canister (MPC) technology under general certification (10CFR72, Subpart L). The MPCs are certified for on-site storage as well as for off-site transport. Thus, fuel, once loaded into MPCs, does not have to be handled again.

For CNS fuel, the currently available MPCs hold up to 68 fuel assemblies in each canister. Dry storage implementation, however, requires a large up front capital outlay, and a large multi-disciplinary program. A summary of the required work effort and the estimated cost to implement dry storage at a typical nuclear plant is provided in Appendix 11.A herein, which helps explain the magnitude of effort needed to establish an on-site dry storage installation at Cooper and the extent of associated estimated expenditures. The cost estimate, in particular, helps explain the need to defer the dry storage program to the extent possible

For CNS, the challenge in implementing on-site dry storage is further exacerbated by the location of the site, which is in the flood plain.

Floods, by definition, are unpredictable in their occurrence and severity. A storage system that relies on ventilation of air to cool the storage canister (MPC) must be engineered such that a flood at any elevation does not cause uncontrolled temperature rise of the stored fuel by blocking off the inlet air duct (which, for obvious reasons, is located near the bottom of the storage modules). This restriction must be carefully factored in NPPD's on-site dry storage program. Another concern is the perceived risk to public health and safety due to a 9/11 type of strike at the dry storage facility. Ruggedness of the dry storage system, which is an autonomous facility in open air at the plant site, will also factor heavily in NPPD's dry storage program.

These considerations make the task of on-site dry storage implementation more expensive and require an ever-longer schedule. NPPD, faced with loss of normal offload capacity after its 2009 outage, simply does not have the calendar time available to establish on-site dry storage. The company has, however, initiated a dry storage acquisition project that is expected to provide the needed storage after ca. 2011 to enable continued plant operation.

In summary, because of the magnitude and cost of its undertaking, nuclear power plants seldom resort to dry storage until the maximized in-pool capacity is insufficient to maintain full core offload. Dry storage projects require between three and four years to implement. Cost evaluations indicate that dry storage is considerably more expensive than the wet storage expansion.

In conclusion, NPPD has determined that adding racks to the CNS SFP represents the only feasible and economical means to extend the on-site storage capacity at this time. This assertion is consistent with industry publications [11.2.1, 11.2.2]. Further, fuel storage capacity expansion is acceptable with respect to occupational safety, public safety, security, schedule reliability, ALARA and maturity of the technology. Therefore, the proposed rack installation initiative is an essential pre-cursor to on-site dry storage as it fulfills economic, safety and cost/benefit criteria.

11.3 References

[11.1.1] OT Position Paper for Review and Acceptance of Spent Fuel Storage and Handling Applications, USNRC (April 1978).

[11.2.1] Electric Power Research Institute, Report No. NF-3580, May 1984.

[11.2.2] "Spent Fuel Storage Options: A Critical Appraisal", by K.P. Singh, Power Generation Technology, Sterling Publishers, pp. 137-140, U.K. (November 1990).

Appendix 11.A

Summary of the Required Work Effort for Dry Storage Implementation at CNS

11.A.1 Five Phases of a Dry Storage Program

This appendix outlines the extent of work needed to establish an on-site storage strategy at Cooper. The overall objective of establishing an on-site storage site is to economically and safely move spent fuel from the spent fuel pool to the Independent Spent Fuel Storage Installation (ISFSI) for temporary storage awaiting ultimate shipment to a federal repository or a Monitored Retrievable Storage (MRS) facility. Although Cooper has not yet chosen the vendor of dry storage technology to be used at the site, the HI-STORM system is used here as an example of the type of system that will be used to store spent fuel at the plant. The HI-STORM dry storage system can be deployed at any Part 50 facility under the provisions of 10CFR72, Subpart K.

For purposes of this presentation, the scope of work for on-site storage is divided into the five discrete phases in the approximate order of progress of the ISFSI project. These phases are not intended to be completely autonomous in their execution periods, as significant time overlap may occur from one phase to the other. The parts are only meant to logically compartmentalize the work for ease of description.

Phase 1 – Engineering Services for ISFSI Implementation

This Phase includes engineering and licensing activities to support all aspects of the ISFSI design, construction and implementation at the Cooper site.

Phase 2 – Supply of Dry Storage System Components

The spent fuel dry storage system components and all ancillary and heavy-haul equipment required to fully utilize the storage system at the Cooper site are delivered under this phase. Phase 2 continues until all dry storage systems are delivered to the site.

Phase 3 - ISFSI Construction

Phase 3 includes construction of the ISFSI, including access roadways, over-pack fabrication staging area, etc.

Phase 4 – Pre-operational Startup Program

A pre-operational startup program developed during Phase 4 will enable the demonstration and qualification of all workers associated with the ISFSI loading and storage activities. This program includes the startup and testing of all ancillary equipment.

Phase 5 – ISFSI Startup and Cask Loading Operations

Phase 5 includes all on-site work required to safely load and store spent nuclear fuel in the HI-STORM system. This work scope includes field supervision and labor during ISFSI startup activities, training, canister loading, and ISFSI operation. This work scope is also referred to as "pool-to-pad" operations.

The work effort in each phase is elaborated on in the following.

i. Phase 1 - Engineering and Licensing

Engineering services required for ISFSI implementation cover the entire spectrum of activities ranging from design, qualifying analyses, and procedure preparation to personnel training.

- **ISFSI /Transport Path Underground Survey**

A survey of underground utilities within the proposed ISFSI site and along the proposed overpack transport path is required. The purpose of the survey is to field-verify the location and depth of underground features such as buried piping, cable conduit banks, communication cables, and drainage structures. The survey must be of sufficient accuracy to serve as basis for subsequent design work, as well as for use in locating sites for necessary soil boring and excavation. No site drilling and/or excavation can take place before adequate measures are taken to verify location of existing underground utilities such as potable water lines, sanitary waste lines, electrical service, communication cables, etc.

- **ISFSI Site/Transport Path Soil Testing and Analysis**

The necessary subgrade geotechnical information required for ISFSI pad and overpack transport path design must be obtained through soil testing. This includes performance of any required subsurface exploration of the site soil and groundwater conditions. An analysis and interpretation of the soil sampling results, as they relate to design of the ISFSI facility and the overpack transport path, must be performed.

- **ISFSI Site Evaluation**

An ISFSI site suitability determination must be performed to establish the viability of the selected ISFSI location.

- **ISFSI Design**

a. ISFSI Design Criteria

The ISFSI design involves development of all necessary design criteria, construction drawings, specifications, and other information, including static loads, thermal loads, seismic requirements, dynamic loads, and foot print specifications. The design scope includes the ISFSI site suitability determination, including the soil-structure interaction analyses. The design criteria for the Storage Pad must be consistent and compatible with conditions, equipment, materials, structures, and operations of Cooper.

Specifically, the structural design of the ISFSI pad must satisfy the following five criteria.

- On-the-pad acceleration, magnified by the effect of soil-structure interaction, must meet the Certificate of Compliance (CoC) limit.

- Long-term settlement due to creep effects must be less than the limit specified in the system CoC or imposed by the Cask System supplier.

- Maximum lateral sliding or sway of the free-standing overpack predicted by the time-history simulation must be within the permissible limit supplied in the CoC or imposed by the Cask System supplier. For this purpose, a dynamic structural model of the casks on the ISFSI pad must be prepared or available to comply with the CoC requirements.

- The NUREG-1536 factored load combination must be satisfied by the pad's structural design.

- The maximum deceleration under the non-mechanistic tip-over scenario must be less than the CoC limit for the dry storage system.

b. ISFSI Layout

The optimum ISFSI layout arrangement on the ISFSI pad will be developed for Cooper so that the dose at the site boundary will be within regulatory limits and as low as reasonably achievable (ALARA). The design and construction drawings that will need to be prepared include the ISFSI base pad/foundation, grading, drainage, temperature monitoring and grounding systems, landscaping, driveway and apron, personnel fencing, and rerouting of underground services, etc.

c. ISFSI Security System Design

The design for security systems to be developed must include intrusion detection systems and camera systems, security fencing, lighting, perimeter roadway, an isolation zone, landscaping, monitoring systems, and electrical and grounding systems to meet the requirements of 10CFR72, 10CFR73, and Cooper's Physical Security Plan.

The design will have to be integrated with the existing security system and its components. Specifications for the security cameras and intrusion detection systems will need to be developed.

d. ISFSI Transport Path Design

An essential part of the ISFSI design is the design of the ISFSI access roadways, air pallet surfaces, elevator devices, transfer facilities, or other construction which may be necessary to move a storage cask from the Cask Staging and Preparation Area to its designated ISFSI Storage Pad, and to upgrade and harden existing access roadways and shoulders, as necessary. Special transport vehicle roadway width and curvature requirements and potential cask drop considerations shall be considered in this design, including removal or relocation of existing structures. The soil testing data will need to be utilized to assure new or existing roadways are adequate to support the transport vehicle under load and to protect all underground utilities. This transport path design work will also include analysis of the route for storage cask drop hazards.

e. Cask Fabrication Staging Area

The design for a Cask Fabrication Staging Area as an adjunct to the ISFSI pad is a necessary item for on-site storage.

f. Parameters For An On-Site Building

Design of an on-site building for mockups, training, maintenance, and storage of ancillary equipment and security personnel is a required part of the ISFSI infrastructure.

g. 10CFR72.212 and 10CFR72.48 Evaluations

The on-site ISFSI scope of work includes all 10CFR72.48 evaluations that are necessary to reconcile the as-built Part 72 components with the dry storage system FSAR. The work effort also includes preparation of written documents that satisfy the requirements of 10CFR72.212.

h. Transport Path and ISFSI Hazards

A walk-down of the proposed transport path is required to determine all potential structural, mechanical, and fire hazards. The structural hazards may be from the collapse of proximate tall structures (such as a transmission tower or a stack) or from an airborne missile during an extreme environmental phenomenon. Cooper's FSAR provides information on some, but not all, environmental phenomena applicable to the plant site. Mechanical hazards are typically from proximate pressure vessel explosions such as those containing hydrogen gas. Independent of the information available in the FSAR, all sources of potential fire hazards must be considered, such as motive fuel, transmission fluid in the transporter, and other combustibles located close to the transfer path or the ISFSI pad.

All sources of hazards must be identified by surveying the relevant Cooper areas and by a careful review of Cooper's design basis and licensing basis documentations. The characteristic and strength of each hazard must be established and demonstrated to be acceptable by suitable analyses to support Cooper's §72.212 evaluations.

i. Site-Specific Thermal Analyses

The thermal analysis of the storage system must be performed using an appropriate 3-D finite element code such as ANSYS and/or a finite volume computational fluid dynamics code such as FLUENT for all site-specific off-normal and accident scenarios applicable to Cooper. As required in the HI-STORM FSAR, the mathematical model will conservatively account for all gaps and discontinuities within the MPC with due consideration of manufacturing tolerances.

Among the candidate thermal scenarios that would require evaluation are:

a. Accident condition wherein a certain number of inlet or outlet ducts are blocked.
b. Potential fire events.
c. Burial under debris, flood water, etc.

In addition to the above, thermal analyses to quantify the effect of cask-to-cask thermal interactions and wind will need to be performed. The cask-to-cask thermal interaction analysis will be required to demonstrate that the elevation of the peak fuel cladding temperature due to the close proximity of the casks will not exceed the permissible peak cladding temperature limit in the system's CoC.

The condition of flood wherein the bottom ducts of the overpack are blocked causing a cut-off of ventilation air is specifically important to Cooper whose ISFSI would lie in the flood plain.

j. In-pool Accident Evaluation

For all probable accidents applicable to Cooper, in-pool accident evaluations will be required to demonstrate that the MPC can withstand credible fuel handling and associated accidents. The extent of deformation of the fuel basket due to locally applied loads or local impact must be calculated using a three-dimensional elastic-plastic large deformation model such that the characteristics of damage are accurately established. In the so-called "straight shallow drop" accident, where the dropping mass hits a top edge of the fuel basket, it must be demonstrated that the subcriticality of the storage cell array is not violated.

k. Qualification for Design Basis Threat

It is increasingly likely that evaluation of the integrity of the storage system under a Design Basis Threat (DBT) will become a regulatory requirement in the near future. Whether the DBT requirement is resolved generically in the CoC or on a plant-specific basis, it will have an impact on the equipment and infrastructure costs.

l. Cask Tipover Analysis

An evaluation of the non-mechanistic tipover of the loaded storage overpack on the Cooper ISFSI pad will need to be performed. Specifically, an analysis to determine the maximum deflection of the fuel basket cell walls under the overpack tip-over scenario with the MPC fully

loaded with Cooper's fuel will need to be performed. The change in reactivity will be calculated if the deflection of the cell walls is in excess of the manufacturing tolerance of the cell considered in the fuel basket's criticality analysis.

In addition to confirming the structural capacity of the fuel basket, the non-mechanistic tipover analysis qualification helps ensure that all fasteners and joints in the biological shield have appropriate structural strengths.

m. Transfer Cask Analysis

The HI-TRAC transfer cask must be analyzed to demonstrate that the loaded transfer cask will not experience g-loads in excess of the FSAR limit if it is accidentally dropped during its transport to the ISFSI pad.

Further, an appropriate time-history analysis must be performed to demonstrate that the transfer cask, suspended from the crane hook during its placement in and removal from the fuel pool, will not impact the wall of the pool structure if a plant's postulated DBE seismic events were to occur. Design of mitigation measures may be required if cask-to-wall impact is indicated.

Similarly, it is necessary to demonstrate, by an appropriate time-history analysis, that the transfer cask will not tip-over if the postulated seismic event were to strike while the MPC "prepping" (lid welding, dewatering, drying, backfilling, etc.) operations are occurring. Devising and qualifying appropriate countermeasures, if the stability of the free-standing cask cannot be demonstrated, is a potential escalation of the work effort.

The seismic stability of the storage overpack/transfer cask stack during MPC transfer operations, if an SSE event were to strike is another HI-TRAC-related technical requirement. Developing and qualifying appropriate countermeasures if the stability of the freestanding stack cannot be demonstrated is a potential escalation of the required work effort.

Finally, the seismic stability of the freestanding transfer cask during spent fuel loading in the cask loading area of the spent fuel pool under the DBE event must be established. It is necessary to prove that the transfer cask will not impact the wall of the pool structure or tip over. Developing and qualifying appropriate countermeasures if the stability of the freestanding transfer cask cannot be demonstrated is a potential escalation of the required work effort.

- **Iced ISFSI Pad**

Icing of the Cooper ISFSI pads in the winter is a scenario that would need to be addressed in the context of reduced friction coefficient to restrain sliding of the cask under seismic conditions.

- **NRC Bulletin 96-04 and ISG-15 Compliance**

ISG 15 and Bulletin 96-4 require that the materials used in a SNF storage system or storage/transportation system be evaluated for compatibility with the environment to which it

will be exposed. This evaluation, according to the NRC, shall be supported with technical/research data and verification testing, as applicable.

- **Radiological Assessment**

A radiation shielding analysis that establishes the bounding dose rates and dose versus distance curves during major spent fuel loading activities is typically required for ALARA planning purposes. This report provides expected dose rates around the storage system during the specified loading configurations as summarized below:

- Doses on top of the fully loaded MPC (with water) and the MPC in the transfer cask. These doses represent the MPC lid-welding configuration of the transfer cask and MPC.
- Doses on top of the fully loaded MPC (without water) and the MPC in a transfer cask. These doses represent the closure ring welding and moisture removal configuration.
- Doses around a transfer cask with a fully loaded MPC (without water). These doses represent the transfer cask condition after the MPC is sealed and before transfer to the storage overpack.
- Doses around a fully loaded storage overpack.

Dose rates are typically determined at representative fuel burnups and 5 and 10 year cooling times.

A radiological assessment of the ISFSI, which demonstrates that the requirements of 10CFR72.104 and 72.106 will be met, is also required. This includes the plant's site-specific radiation dose versus distance curves for the fully loaded ISFSI. This assessment must demonstrate that the annual dose equivalents from direct radiation and effluent releases for all ISFSI and plant operations will not exceed the specified regulatory limits for any individual located at the nearest boundary of Cooper's Controlled Area. The report must also identify the dose at the ISFSI restricted area boundary (security fence).

The Site Boundary Dose analysis provides the dose rate at the controlled area boundary from neutron and gamma radiation emanating from the side and top of the storage overpacks. The position of the overpacks within the ISFSI must be included in this analysis to properly account for cask-to-cask self-shielding.

- Dry Storage System Operations Procedures

The Cooper on-site storage project will require procedures and instructions for the operation, maintenance, repair, testing, and operation of the ISFSI including, the inspection, maintenance, operation, loading, unloading, lifting, and transfer of casks and canisters, material handling equipment and other components. Procedures will also address loading canisters into the storage casks and must address the following:

- Initial receipt inspection and acceptance criteria.
- Loading and unloading Canisters and Casks onto and from a transport vehicle.

- Crane procedures required to move spent fuel from "pool-to-pad", including rigging, maximum lift heights, safe load paths, etc.
- Canister load and unload processes, sealing, welding, grinding, decontamination, moisture purging system operations, inerting, chemical cleaning and preparation for transportation to the ISFSI Storage Pad and offsite.
- Transport of Casks and Canisters to the ISFSI Storage Pad

- **Operational Lift Weights and Load Handling Safety**

Heavy load handling and protection is an overriding dry storage imperative. Specific weights, lift heights, and geometry data are required for each operational lift in the dry spent fuel handling process. Specifically, the indoor lifts must include the Transfer Cask/Canister lift for loading fuel, decontamination, and seal welding. The indoor and outdoor operations must comply with NUREG-0612 requirements for the movement of the loaded Transfer Cask for Canister transfer to the storage overpack.

The mechanical device that will serve to connect the crane hook to the trunnions of the transfer cask is termed the "lift yoke". The lift yoke must be custom designed to conform with the cask crane's hook design. The lift yoke is a critical device and as such, it is subject to an extensive set of design criteria that bear upon its specific design attributes for the site, viz.,

i. The lift yoke must be rated for an apparent dead load D* = 1.15D, where D is the maximum load to be lifted. The maximum elastic stress (flexural plus direct) at six times the rated load cannot exceed the yield strength of the yoke material at room temperature. Additionally, the maximum elastic stress at ten times the rated load cannot exceed the ultimate strength of the yoke material at room temperatures. These stress limits are intended to be consistent with the requirements of NUREG-0612 and ANSI-N14.6.

ii. An appropriate crack propagation analysis of the most highly stressed region of the lift yoke must be performed using the methodology of classical fracture mechanics to demonstrate that a minimum factor of safety of three exists under the lift load equal to D* against the propagation of a most adversely oriented flaw of the largest size permitted by the material manufacturing specification and processes.

iii. All load-bearing materials possess sufficient fracture resistance to ensure safe load handling at low-service temperatures. The minimum charpy test value of the load bearing materials is 12 lb-ft at –40°F (standard charpy test specimen per ASTM A6). The minimum elongation is 10%.

Finally, compliance with NRC Bulletin 96-02 has been required for the handling of the heavy loads in and around the SNF pools for every on-site storage effort. An assessment to identify the most safe and cost-effective solution to achieve compliance with NRC Bulletin 96-02 while handling the loaded transfer cask within the 10CFR Part 50 structure will accordingly be required for the Cooper project.

- **Training Program for ISFSI Use and Maintenance**

This work effort includes comprehensive training programs for Cooper's supervisory technical personnel and craft labor for competency regarding the use, maintenance, repair, testing, and management of the dry cask spent fuel storage system. This includes an overview of the design of the canister, transfer cask and ancillaries, etc., the detailed operational steps required to safely load the canister, drain and vacuum dry the canisters, weld the closure lids, perform leak testing, and transfer the canisters to the storage casks.

The training programs must comply with all NRC regulations and guidance documents, such as 10CFR72 and NUREG-1567. The training programs will enable Cooper to operate, maintain, repair, and manage the SFSS in a safe manner and in accordance with all applicable laws, rules, regulations, orders, ordinances, licenses, and permits and NRC guidance and industry standards. The training program would also address engineering and licensing considerations associated with the evaluation of changes, NRC notification guidelines, reportability, etc.

The training programs, training modules, exams, qualification cards, certification program, and other materials must be in accordance with Cooper's Systematic Approach to Training (SAT) program and objectives and with Cooper's site-specific format.

- **Evaluation of Crane Bay Floor and Refueling Floor**

The Cooper crane bay floor and refueling floor are elevated reinforced concrete structures. The project will need to determine the structural loading exerted on the crane bay floor resulting from the transfer cask and overpack combination including any transport equipment that will simultaneously be in the crane bay.

The structural capacity of the crane bay floor will need to be compared with the stress resultants. In the event of a structural strength deficit, plant modifications may be required.
A similar floor loading evaluation shall be performed for any required equipment set down area(s) on the refueling floor. The project team will need to compare the load with the structural capacity of the floor. If modifications are required, specifications and design drawings for construction modifications will be developed, and modifications will be made.

- **Support Stands, and Work Platforms and Restraints**

The project team will need to evaluate the 10CFR Part 50 structure and pathways (e.g., spent fuel pool, refueling floor, and crane bay) for interface work platforms, supports, and restraints required to utilize the supplied equipment and components.

Design drawings and specifications for associated fabrications as well as construction modifications will be provided as necessary, including any changes necessary to utilize the transfer cask in the cask loading area of the spent fuel pool.

- **Evaluation of the Cask Decontamination Area**

The project team will need to evaluate the structural and other capabilities of the cask decontamination area for MPC assembly and Transfer Cask decontamination activities. If the decontamination area cannot meet requirements, then design drawings for construction modifications shall have to be prepared and modifications made.

- **Heavy Load Handling Path and Plan**

A Heavy Load Handling Path and Plan must be prepared by the project team prior to performance of any site-specific evaluation work. The report shall describe the entire spent fuel handling process from canister loading through placement of a loaded overpack on the ISFSI storage pad. A visual operational sequence for pool-to-pad operations would be included. Details addressed in the report include:

- Drawing of entire load path and associated component loads.
- Heavy haul transport vehicle recommendation.
- Potential load drop locations.
- Required floor slab qualifications.
- Recommendations for specific handling equipment to be used (e.g., air pallets, hydraulic jacks, Hillman rollers, dollies, single-failure-proof crane, etc.).
- Identification of each qualification analysis required.
- Potential interferences (e.g., cask loading lateral clearances in pool, doorway overhead clearances, etc.).
- Identification of fire and explosive hazards along the route (e.g., explosive hazards such as fuel storage tanks, hydrogen ports, transmission insulators, etc.).
- Identification of any additional hazards along the route (e.g., transmission tower tip-over).
- Recommendation of "defense-in-depth" evaluations to uphold personnel safety and ALARA.

ii. Phase 2 - Supply of Dry Storage System Components

- **Canisters**

Multi-purpose canisters will be required with all internals and required hardware that meet the requirements of 10CFR71 and 10CFR72 and are consistent with the licensing basis requirements of each certificate. Each multi-purpose canister (MPC-68) will hold 68 fuel bundles.

- **Overpacks**

One HI-STORM overpack will be required to store each multi-purpose canister. Storage overpacks (completely fabricated and/or constructed) will be furnished with all required hardware.

- **Transfer Cask**

One shielded transfer cask (HI-TRAC 100) will be required.

- **Material Handling Equipment**

Material Handling Equipment, other than the crane and crane hooks, must include all special rigging, down loader, lifting yokes, tie downs, hydraulic lifting or aligning equipment, and other components required to receive and inspect equipment or place a Canister into a Storage Cask or Transfer Cask.

- **Ancillary Equipment**

All ancillary equipment necessary to place HI-STORM cask and canisters in a condition required for storage of spent fuel will have to be procured for the Cooper on-site storage project.

- **Storage System Startup Test Equipment**

Dry storage system startup and test equipment includes weld mockups (short stacks) for training. A minimum of three weld mockups (short stacks) with welding feasible on both tops and bottoms of each mockup is typically required.

- **Heavy Haul Equipment for On-site Cask Movement**

Required on-site heavy-haul equipment includes the vehicle(s) used to transport and move the loaded cask on site. The vehicle may be self-propelled or use a separate prime mover. The physical size and characteristics of the Heavy Haul Equipment must allow travel on site from the Part 50 Structure to the ISFSI Storage Pad. The Heavy Haul Equipment bearing load on the transport path must be within limits of the design bearing capacity of the transport path.

Heavy Haul Equipment must be load tested at the manufacturing facility pursuant to applicable industry standards, NRC regulations, NRC guidance documents, and HI-STORM's Certificate of Compliance.

iii. Phase 3 - ISFSI Construction

- **ISFSI Pad and Transport Path Construction**

In this phase, the ISFSI site and transport path, including the grading, drainage, utilities, the overpack fabrication/staging area, berms (if required) shall be constructed. Access roadway paving and modifications, and concrete storage pads, etc., must be constructed as specified by their design.

- **Security System Equipment**

All equipment must be included for the security system augmentation, including intrusion detection equipment, fencing, lighting, and monitoring equipment to accord with the discussion presented in Chapter 6. The components provided must be compatible for integration into Cooper's existing security system.

- **ISFSI Security System Construction**

All of the ISFSI security systems mentioned in the foregoing must be installed at the site to meet the requirements of 10CFR72 and 10CFR73.

iv. Phase 4 – Pre-operational Startup Program

- **Dry Storage System Operations Procedures**

The Cooper on-site storage project will require procedures and instructions for the operation, maintenance, repair, testing, and operation of the ISFSI including, the inspection, maintenance, operation, loading, unloading, lifting, and transfer of casks and canisters, material handling equipment and other components. Procedures will also address loading canisters into the storage casks and must address the following:

- Initial receipt inspection and acceptance criteria.
- Loading and unloading Canisters and Casks onto and from a transport vehicle.
- Crane procedures required to move spent fuel from "pool-to-pad", including rigging, maximum lift heights, safe load paths, etc.
- Canister load and unload processes, sealing, welding, grinding, decontamination, moisture purging system operations, inerting, chemical cleaning and preparation for transportation to the ISFSI Storage Pad and offsite.
- Transport of Casks and Canisters to the ISFSI Storage Pad

As required by the Plant's internal processes, these procedures must be in the Cooper site-specific format and in full compliance with all site-specific governing documents.

Further, in Phase 4 of the Cooper on-site dry storage program, a pre-operational startup program must be developed that will enable the demonstration and qualification of all workers associated with the ISFSI fuel loading and storage activities. The general elements to be included in this program are as follows:

- Movements of the transfer cask in the Part 50 structure. This includes the movements of the transfer cask in and out of the cask loading area of the spent fuel pool and the decontamination area utilizing the safe load path
- Installation of the shield lid on the canister while both are in the cask load pit in the flooded condition (includes installation of the shield lid drain pipe).
- Operation of the spent fuel pool water transfer system for raising and lowering the water level in the cask load pit.

- Installation and welding of the canister shield/structural lids.
- Canister dehydration, canister testing and closure activities.
- Decontamination of the transfer cask and canister.
- Movements of the transfer cask/canister along the safe load path to the Reactor Building Crane Bay.
- Canister transfer from the transfer cask to the concrete storage overpack in the Reactor Building Crane Bay.
- Installation of dummy fuel assembly for clearance check (requires use of the actual canister that includes internal fuel basket assembly).
- Demonstrate the movements of the concrete overpack/canister utilizing the on-site transport vehicle. This would be performed between the Reactor Building Crane Bay and along the ISFSI roadway to the ISFSI storage pad and back.
- The demonstration of a canister transfer from a concrete storage overpack to the transfer cask and from the transfer cask to a concrete storage overpack.

Detailed plans and procedures for the pre-operational startup program (including equipment check out, dry runs and full load tests), operational readiness review, and operational startup need to be developed. Such plans and procedures must comply with all applicable NRC regulations and guidance (including NUREG-1567) and industry codes and standards.

v. Phase 5 – ISFSI Startup and Cask Loading Operations

- **Equipment Delivery**

The cask vendor would typically provide supervision and labor at Cooper for any required field assembly of spent fuel dry storage system components and ancillary equipment, including on-site assembly of storage overpacks. All ventilated storage systems require a certain amount of on-site assembly.

- **Classroom Training**

Training includes administration of exams, completion of qualification cards, and implementation of a certification program.

- **Startup of Ancillary Equipment**

Significant effort is required for the start-up, testing, and initial usage of all spent fuel dry storage system components and ancillary equipment, including dry runs. Such an effort is also necessary, to a lesser degree, for each subsequent cask loading campaign,

- **Internal Dry Runs**

Internal dry runs are carried out to verify the adequacy of procedures, training, equipment readiness, and system design for fuel loading, transfer cask handling, canister/storage module closure, and canister/storage module placement. The internal dry runs would be designed to

demonstrate the complete dry storage implementation process. This includes demonstrating the ability to both load and unload the storage system.

- **Readiness Assessment**

The readiness assessment involves a complete review of the quality documentation, procedures, design documents and drawings, training records, 10CFR72.212 review, calibration, certifications of personnel and equipment and a comparison of all applicable regulatory requirements with Cooper's cask loading program. The readiness assessment will include not only the physical readiness to perform cask loading, but also the readiness of the entire program.

- **NRC Dry Runs**

The NRC Dry Runs are designed to demonstrate to the regulators the engineered safety and robustness of the complete dry storage implementation process. This includes both the loading and unloading of the storage system. The purpose will be to demonstrate to the regulators that Cooper's ISFSI project team is proficient at its assigned tasks and prepared to perform actual fuel loading of the dry storage system.

- **Cask Loading and Closure Operations**

On-site supervision and labor is necessary for all cask-loading operations during all fuel transfer campaigns. This shall include placing the cask/canister in the spent fuel pool, loading the spent fuel into the canister, lid installation, cask removal from pool, lid welding, cask draining, drying, inerting, leak testing, decontamination, inspection services, moving the canister into the storage overpack in the rail bay and bolting the lid in place, and finally moving the loaded storage overpack to the ISFSI pad.

11.A.2 Compilation of Estimated Cost

The costs associated with each of the five phases are compiled below. For purposes of this cost estimate, it is assumed that Cooper will ultimately require eighty (80) HI-STORMs to meet its life cycle needs for forty (40) years of storage.

- **ENGINEERING AND LICENSING EFFORT**

Engineering and licensing services encompass the entire spectrum of activities necessary for design, analysis, licensing, procedure and training preparation and support of loading operations. Included in this section are costs associated with the efforts of Holtec and other potential contractors to complete these activities. Allowances for modifications that may be necessary by Cooper to the existing Part 50 Facility to allow use of a Part 72 storage system are conservatively not included. The conservative cost estimate for this phase is $2,000,000.

- **SUPPLY OF THE SYSTEM COMPONENTS**

The dry fuel storage system components include all of the ancillary equipment, a heavy-haul vehicle and dry fuel storage components that are necessary to support all aspects of system storage at Cooper. The casks, canisters and transfer cask are all supplied with certificates stating compliance with applicable portions of the HI-STORM Certificate of Compliance.

The estimated cost for all the system components for storing fuel from 40 years of operation is $70,000,000 and includes costs associated with the following items:

- **ISFSI CONSTRUCTION**

The ISFSI construction includes costs for the construction activities for the ISFSI pad and subgrade, the heavy load path, the access road to the ISFSI, the storage building for ISFSI components, the HI-STORM construction pad, the Cask Transfer Facility, the security system and all site grading / drainage / utility work necessary for completion of the ISFSI site. Additional geotechnical investigations and subsequent soil remediation in preparation for the ISFSI placement is also included in the estimated $6,000,000.

- **PRE-OPERATIONAL PROGRAM**

The Pre-operational Program phase activities coordinate closely with the ISFSI Startup and Cask Loading phase. The costs associated with the Pre-operational Program consist of initial checkout of the ancillary equipment and cask loading processes to uncover any deficiencies in the existing Part 50 Facility or the Part 72 equipment. This phase is a precursor to beginning the loading dry runs and official training program that is included in the next phase.

Estimated cost associated with this phase is $300,000 and includes on-site support for equipment delivery and set-up.

- **ISFSI STARTUP AND CASK LOADING OPERATIONS:**

The ISFSI Startup and Cask Loading Operation phase includes activities for the site dry runs, official classroom training, OJT evaluations and all the operations for dry fuel loading / storage. The internal dry runs and readiness assessment will provide training and practice for the crews in preparation for the NRC dry runs. It is anticipated that to complete the loading operations, several mobilizations of the loading crew would be required during the subsequent loading campaigns.

The estimated cost associated with this phase is $20,000,000.

- **SUMMARY OF COSTS**

The total cost in 2006 dollars for the development and operation of a 80-cask ISFSI attributed to engineering and licensing, supply of system components, ISFSI construction and start-up and loading are summarized in the table 8.1 below:

Table 8.1
Summary of Dry Storage Implementation Costs for Cooper

1. Engineering & Licensing Services	$2,000,000
2. Supply of the System Components	$70,000,000
3. ISFSI Construction	$6,000,000
4. Pre-operational Program	$300,000
5. ISFSI Start Up and Cask Loading Operations	$20,000,000
Total:	$98,300,000

The above costs do not include the cost of the plant's in-house resources, overheads, permits, taxes and the like. It is evident from the foregoing that establishing an on-site ISFSI at Cooper requires a massive technical and financial commitment.

ENCLOSURE 2

AFFIDAVIT OF WITHHOLDING PURSUANT TO 10 CFR 2.390(B)(1)

HOLTEC INTERNATIONAL

COOPER NUCLEAR STATION
DOCKET NO. 50-298, DPR-46

AFFIDAVIT PURSUANT TO 10CFR2.790

I, Pankaj Chaudhary, being duly sworn, depose and state as follows:

(1) I am the Project Manager for Holtec International and have been delegated the function of reviewing the information described in paragraph (2) which is sought to be withheld, and have been authorized to apply for its withholding.

(2) The information sought to be withheld is contained in the document entitled "Licensing Report on the Wet Fuel Storage Capacity Expansion at Cooper Nuclear Station...," Holtec Report HI-2043224, Revision 1. The proprietary material in this document is delineated by proprietary designation (i.e., shaded text) on pages 3-10 through 3-14, 4-8, 4-9, 4-13, 7-3, 7-4, and 7-5.

(3) In making this application for withholding of proprietary information of which it is the owner, Holtec International relies upon the exemption from disclosure set forth in the Freedom of Information Act ("FOIA"), 5 USC Sec. 552(b)(4) and the Trade Secrets Act, 18 USC Sec. 1905, and NRC regulations 10CFR Part 9.17(a)(4), 2.790(a)(4), and 2.790(b)(1) for "trade secrets and commercial or financial information obtained from a person and privileged or confidential" (Exemption 4). The material for which exemption from disclosure is here sought is all "confidential commercial information", and some portions also qualify under the narrower definition of "trade secret", within the meanings assigned to those terms for purposes of FOIA Exemption 4 in, respectively, Critical Mass Energy Project v. Nuclear Regulatory Commission, 975F2d871 (DC Cir. 1992), and Public Citizen Health Research Group v. FDA, 704F2d1280 (DC Cir. 1983).

(4) Some examples of categories of information which fit into the definition of proprietary information are:

a. Information that discloses a process, method, or apparatus, including supporting data and analyses, where prevention of its use by Holtec's competitors without license from Holtec International constitutes a competitive economic advantage over other companies;

b. Information which, if used by a competitor, would reduce his expenditure of resources or improve his competitive position in the design, manufacture, shipment, installation, assurance of quality, or licensing of a similar product.

c. Information which reveals cost or price information, production, capacities, budget levels, or commercial strategies of Holtec International, its customers, or its suppliers;

d. Information which reveals aspects of past, present, or future Holtec International customer-funded development plans and programs of potential commercial value to Holtec International;

e. Information which discloses patentable subject matter for which it may be desirable to obtain patent protection.

The information sought to be withheld is considered to be proprietary for the reasons set forth in paragraphs 4.a, 4.b, 4.d, and 4.e, above.

(5) The information sought to be withheld is being submitted to the NRC in confidence. The information (including that compiled from many sources) is of a sort customarily held in confidence by Holtec International, and is in fact so held. The information sought to be withheld has, to the best of my knowledge and belief, consistently been held in confidence by Holtec International. No public disclosure has been made, and it is not available in public sources. All disclosures to third parties, including any required transmittals to the NRC, have been made, or must be made, pursuant to regulatory provisions or proprietary agreements which provide for maintenance of the information in confidence. Its initial designation as proprietary information, and the subsequent steps taken to prevent its unauthorized disclosure, are as set forth in paragraphs (6) and (7) following.

(6) Initial approval of proprietary treatment of a document is made by the manager of the originating component, the person most likely to be acquainted with the value and sensitivity of the information in relation to industry knowledge. Access to such documents within Holtec International is limited on a "need to know" basis.

(7) The procedure for approval of external release of such a document typically requires review by the staff manager, project manager, principal scientist or other equivalent authority, by the manager of the cognizant marketing function (or his designee), and by the Legal Operation, for technical content, competitive effect, and determination of the accuracy of the proprietary designation. Disclosures

outside Holtec International are limited to regulatory bodies, customers, and potential customers, and their agents, suppliers, and licensees, and others with a legitimate need for the information, and then only in accordance with appropriate regulatory provisions or proprietary agreements.

(8) The information classified as proprietary was developed and compiled by Holtec International at a significant cost to Holtec International. This information is classified as proprietary because it contains detailed historical data and analytical results not available elsewhere. This information would provide other parties, including competitors, with information from Holtec International's technical database and the results of evaluations performed using codes developed by Holtec International. Release of this information would improve a competitor's position without the competitor having to expend similar resources for the development of the database. A substantial effort has been expended by Holtec International to develop this information.

(9) Public disclosure of the information sought to be withheld is likely to cause substantial harm to Holtec International's competitive position and foreclose or reduce the availability of profit-making opportunities. The information is part of Holtec International's comprehensive spent fuel storage technology base, and its commercial value extends beyond the original development cost. The value of the technology base goes beyond the extensive physical database and analytical methodology, and includes development of the expertise to determine and apply the appropriate evaluation process.

The research, development, engineering, and analytical costs comprise a substantial investment of time and money by Holtec International.

The precise value of the expertise to devise an evaluation process and apply the correct analytical methodology is difficult to quantify, but it clearly is substantial.

Holtec International's competitive advantage will be lost if its competitors are able to use the results of the Holtec International experience to normalize or verify their own process or if they are able to claim an equivalent understanding by demonstrating that they can arrive at the same or similar conclusions.

The value of this information to Holtec International would be lost if the

information were disclosed to the public. Making such information available to competitors without their having been required to undertake a similar expenditure of resources would unfairly provide competitors with a windfall, and deprive Holtec International of the opportunity to exercise its competitive advantage to seek an adequate return on its large investment in developing these very valuable analytical tools.

STATE OF NEW JERSEY)

) ss:

COUNTY OF BURLINGTON)

Pankaj Chaudhary, being duly sworn, deposes and says:

That he has read the foregoing affidavit and the matters stated therein are true and correct to the best of his knowledge, information, and belief.

Executed at Marlton, New Jersey, this 20th day of April 2006.

Pankaj Chaudhary

Mr. Pankaj Chaudhary
Holtec International

Subscribed and sworn before me this 20th day of April 2006.

Maria C. Massi

MARIA C. MASSI
NOTARY PUBLIC OF NEW JERSEY
My Commission Expires April 25, 2010

ENCLOSURE 3

AFFIDAVIT OF WITHHOLDING PURSUANT TO 10 CFR 2.390(B)(1)

GLOBAL NUCLEAR FUELS

COOPER NUCLEAR STATION
DOCKET NO. 50-298, DPR-46

Affidavit

I, Andrew A. Lingenfelter, state as follows:

(1) I am Manager, Fuel Engineering Services, Global Nuclear Fuel – Americas, L.L.C. ("GNF-A") and have been delegated the function of reviewing the information described in paragraph (2) which is sought to be withheld, and have been authorized to apply for its withholding.

(2) The information sought to be withheld is contained in Table 4-1 of "HI-2043224". GNF-A proprietary information is indicated by the dark colored shading in Table 4-1. The shaded values in each table refer to Paragraph (3) of this affidavit, which provides the basis for the proprietary determination.

(3) In making this application for withholding of proprietary information of which it is the owner or licensee, GNF-A relies upon the exemption from disclosure set forth in the Freedom of Information Act ("FOIA"), 5 USC Sec. 552(b)(4), and the Trade Secrets Act, 18 USC Sec. 1905, and NRC regulations 10 CFR 9.17(a)(4) and 2.390(a)(4) for "trade secrets and commercial or financial information obtained from a person and privileged or confidential" (Exemption 4). The material for which exemption from disclosure is here sought is all "confidential commercial information," and some portions also qualify under the narrower definition of "trade secret," within the meanings assigned to those terms for purposes of FOIA Exemption 4 in, respectively, Critical Mass Energy Project v. Nuclear Regulatory Commission, 975F2d871 (DC Cir. 1992), and Public Citizen Health Research Group v. FDA, 704F2d1280 (DC Cir. 1983).

(4) Some examples of categories of information which fit into the definition of proprietary information are:

a. Information that discloses a process, method, or apparatus, including supporting data and analyses, where prevention of its use by GNF-A's competitors without license from GNF-A constitutes a competitive economic advantage over other companies;

b. Information which, if used by a competitor, would reduce his expenditure of resources or improve his competitive position in the design, manufacture, shipment, installation, assurance of quality, or licensing of a similar product;

c. Information which reveals cost or price information, production capacities, budget levels, or commercial strategies of GNF-A, its customers, or its suppliers;

d. Information which reveals aspects of past, present, or future GNF-A customer–funded development plans and programs, of potential commercial value to GNF-A;

e. Information which discloses patentable subject matter for which it may be desirable to obtain patent protection.

The information sought to be withheld is considered to be proprietary for the reasons set forth in paragraphs (4)a. and (4)b., above.

(5) To address the 10 CFR 2.390 (b) (4), the information sought to be withheld is being submitted to NRC in confidence. The information is of a sort customarily held in confidence by GNF-A, and is in fact so held. Its initial designation as proprietary information, and the subsequent steps taken to prevent its unauthorized disclosure, are as set forth in (6) and (7) following. The information sought to be withheld has, to the best of my knowledge and belief, consistently been held in confidence by GNF-A, no public disclosure has been made, and it is not available in public sources. All disclosures to third parties including any required transmittals to NRC, have been made, or must be made, pursuant to regulatory provisions or proprietary agreements which provide for maintenance of the information in confidence.

(6) Initial approval of proprietary treatment of a document is made by the manager of the originating component, the person most likely to be acquainted with the value and sensitivity of the information in relation to industry knowledge, or subject to the terms under which it was licensed to GNF-A. Access to such documents within GNF-A is limited on a "need to know" basis.

(7) The procedure for approval of external release of such a document typically requires review by the staff manager, project manager, principal scientist or other equivalent authority, by the manager of the cognizant marketing function (or his delegate), and by the Legal Operation, for technical content, competitive effect, and determination of the accuracy of the proprietary designation. Disclosures outside GNF-A are limited to regulatory bodies, customers, and potential customers, and their agents, suppliers, and licensees, and others with a legitimate need for the information, and then only in accordance with appropriate regulatory provisions or proprietary agreements.

(8) The information identified in paragraph (2) is classified as proprietary because it contains details of GNF-A's fuel designs.

(9) Public disclosure of the information sought to be withheld is likely to cause substantial harm to GNF-A's competitive position and foreclose or reduce the availability of profit–making opportunities. The fuel design and licensing methodology is part of GNF-A's comprehensive BWR safety and technology base, and its commercial value extends beyond the original development cost. The value of the technology base goes beyond the extensive physical database and analytical methodology and includes development of the expertise to determine and apply the appropriate evaluation process. In addition, the technology base includes the value derived from providing analyses done with NRC–approved methods.

The research, development, engineering, analytical, and NRC review costs comprise a substantial investment of time and money by GNF-A or its licensor.

The precise value of the expertise to devise an evaluation process and apply the correct analytical methodology is difficult to quantify, but it clearly is substantial.

GNF-A's competitive advantage will be lost if its competitors are able to use the results of the GNF-A experience to normalize or verify their own process or if

they are able to claim an equivalent understanding by demonstrating that they can arrive at the same or similar conclusions.

The value of this information to GNF-A would be lost if the information were disclosed to the public. Making such information available to competitors without their having been required to undertake a similar expenditure of resources would unfairly provide competitors with a windfall, and deprive GNF-A of the opportunity to exercise its competitive advantage to seek an adequate return on its large investment in developing and obtaining these very valuable analytical tools.

I declare under penalty of perjury that the foregoing affidavit and the matters stated therein are true and correct to the best of my knowledge, information, and belief.

Executed at Wilmington, North Carolina, this 31st day of May, 2006.

A. A. Lingenfelter

Andrew A. Lingenfelter
Global Nuclear Fuel – Americas, LLC