Spent Fuel Storage Licensing Experience in the United States

Second International Seminar on Interim Storage of Spent Fuel

November 2006

William H. Ruland, Deputy Director
Robert E. Einzinger, Ph. D., Sr. Materials Engineer
Bernard H. White, Technical Assistant
Division of Spent Fuel Storage and Transport
Office of Nuclear Material Safety and Safeguards
U.S. Nuclear Regulatory Commission

Agenda

- Overview
- Licensing and inspections
  - Site-specific licenses
  - General licenses
  - Technical specifications
  - Cask modifications
  - Inspection
  - License renewal
- Technical issues
- Conclusion

Overview - Responsibilities

- Licensing and inspection of spent fuel storage casks and facilities
- Certification and inspection of spent fuel and radioactive material transportation packages
- Coordination with state and federal agencies, international regulatory agencies, and Native American tribes
- Public outreach

Overview - Spent Fuel Storage Facilities

- 43 Licensed ISFSIs in 28 states
- 14 announced plans for new ISFSIs
- Over 800 loaded dry casks
- 15 approved storage cask designs
- 8 approved dual-purpose cask designs
- ISFSIs currently use or plan to use dual purpose casks for the future

Current and Potential Independent Spent Fuel Storage Installations

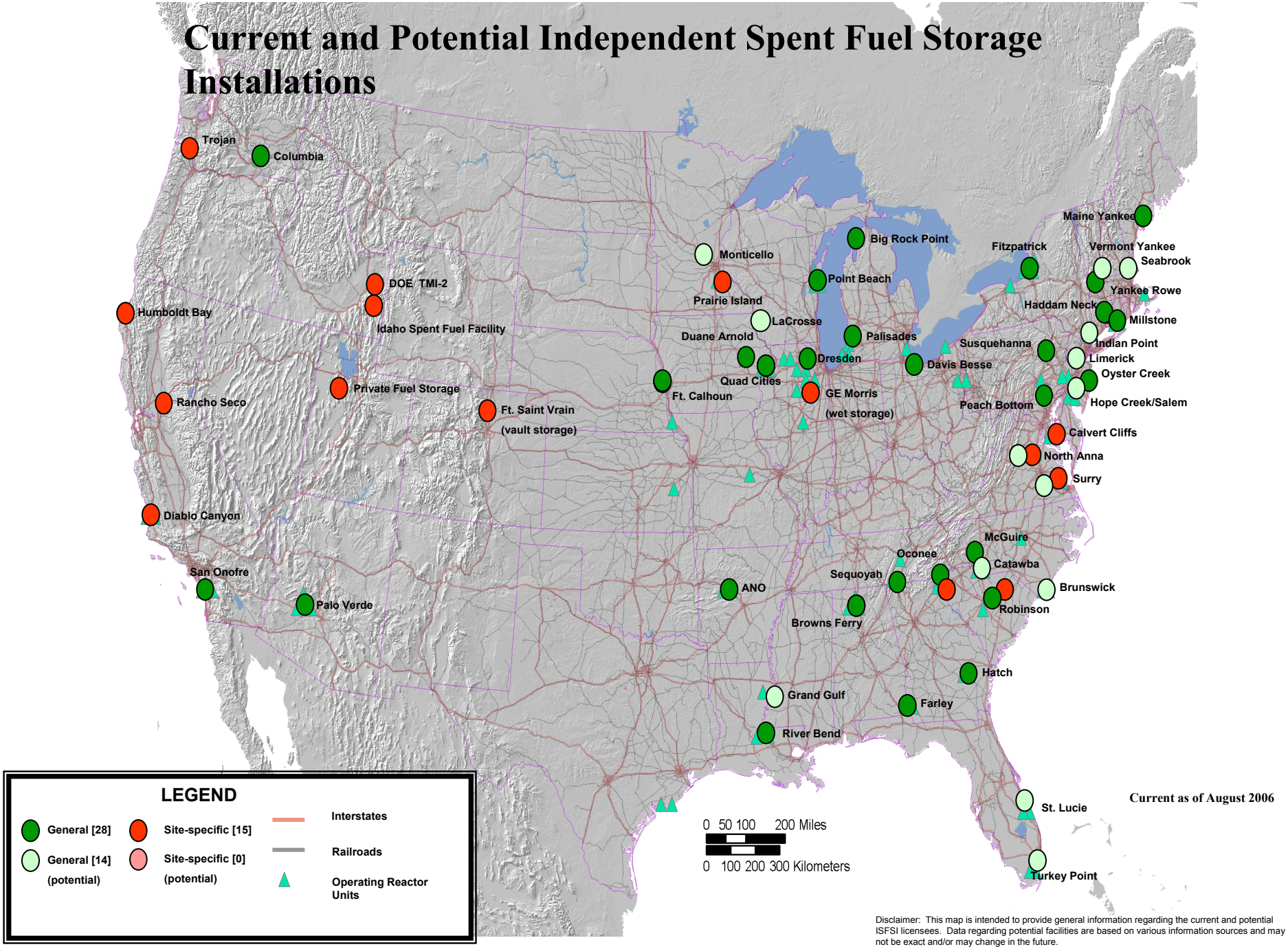

Disclaimer: This map is intended to provide general information regarding the current and potential ISFSI licensees. Data regarding potential facilities are based on various information sources and may not be exact and/or may change in the future.

Storage Cask Designs

Bolted-Closure Design

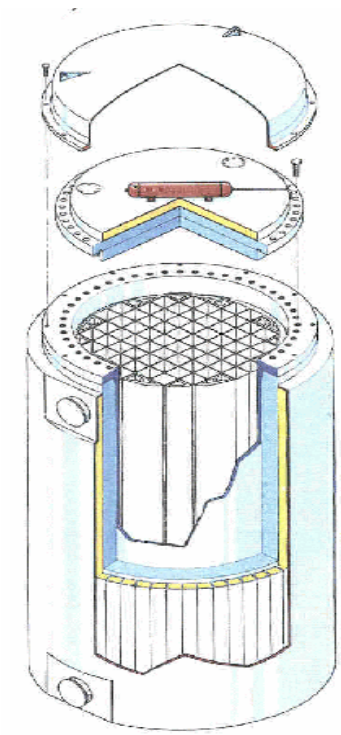

Transnuclear TN-68

Welded Closure Design

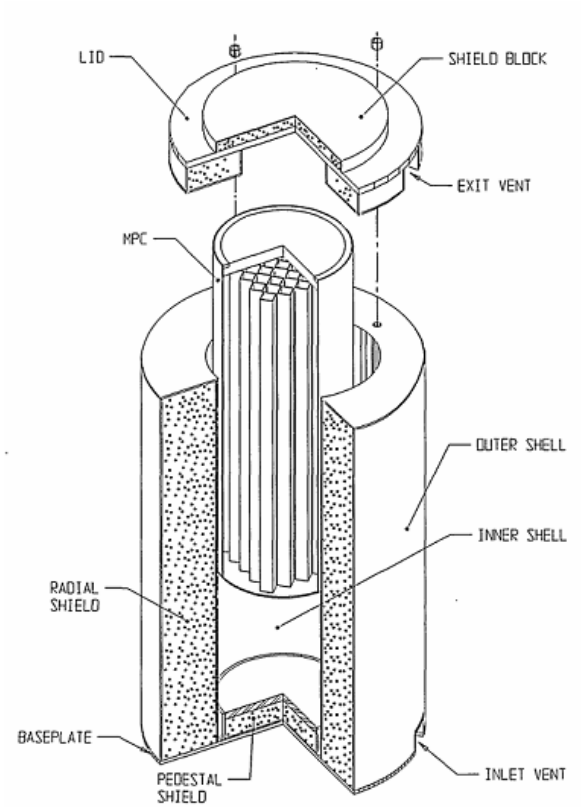

(Holtec International HI-STORM 100

Storage Cask Designs

Horizontal Storage with Bolted-Closure Design

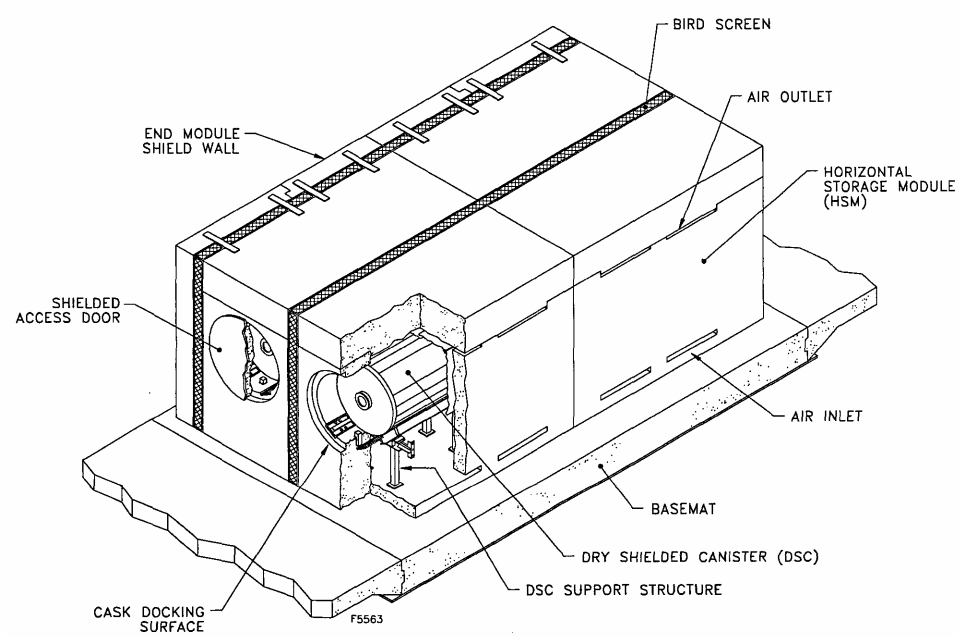

Transnuclear Standardized NUHOMS

Vertical Storage with Reinforced concrete

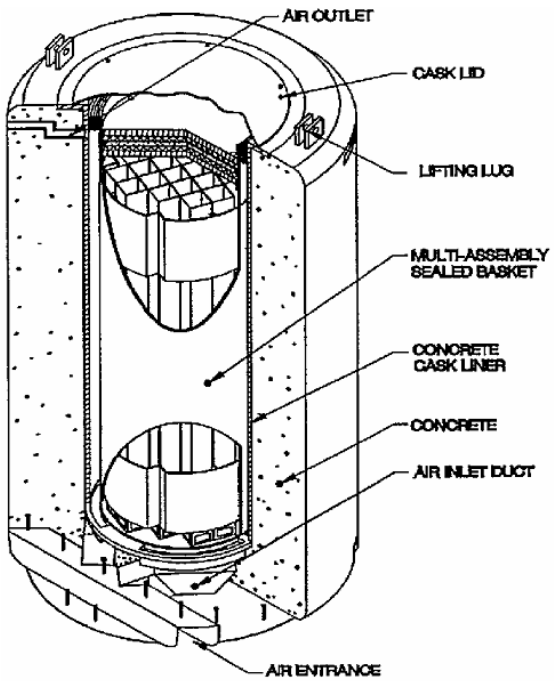

BNFL Fuel Solutions VSC-24

Overview - Dresden

Overview - Susquehanna

Licensing

Types of Licenses

- Site-specific license
  - Available to all applicants
  - Required for away-from-reactor sites
  - Application submitted to NRC for approval
  - Opportunity for hearing
- General license
  - Available only to reactor licensees
  - Require use of cask design with certificate of compliance
  - Requires licensee evaluation for cask design compatibility with site licensing basis

Licensing
Technical Specifications

- Technical specifications
  - Operating controls and limits
  - Monitoring instrumentation
  - Limiting conditions for operation
  - Surveillance requirements
  - Design features
  - Administrative controls

Licensing

Cask Modifications

- Prior NRC approval is required for changes to:
  - Technical Specifications
  - Certificate of Compliance
- Certificate Holder/Licensee can make other changes without NRC approval under certain conditions

Inspection

- NRC role: Ensure that current and future licensed operations do not result in undue risk to the public and environment
- Periodic inspections help ensure licensees meet NRC's regulatory requirements
- Inspection oversight
  - Same for both types of licenses
  - Site construction
  - Cask fabrication
  - Dry runs
  - Cask loading

License Renewal Experience

- GE Morris
  - First ISFSI granted license renewal
  - license renewal criteria:
    - Used appropriate sections of reactor license renewal standard review plans
    - Component Aging
    - Aging management plan
- Surry
  - First dry storage ISFSI granted license renewal
  - Prior to receipt of application staff developed preliminary guidance on license renewal:
    - Materials aging review
      - Fatigue Analysis for Cask Wall
      - Neutron Irradiation Influence on the material properties of cask body
      - Thermal Fatigue Analyses
      - Effect on Criticality due to potential depletion of Boron-10 in the Boral Plates due to Spontaneous Fission
    - Surveillance and maintenance to minimize aging

Summary

- Safe and secure storage and transport of spent fuel provided by:
  - Comprehensive regulations
  - Regulatory oversight and enhancements
  - Significant experience base & safety record
  - Robust cask and package designs
  - Continued vigilance & oversight

Technical Issues

- Burnup credit
- High burnup fuel
- cladding mechanical properties
- Dry cask storage PRA
- Security assessments
- Definition of damaged fuel

Background Slides

Burnup Credit

- Until recently, NRC/SFST permitted burnup credit for criticality analyses using actinides only
- Expand scope with additional data/analysis
  - Burnup Measurements
  - Quality/accuracy of records – basis
  - Misload analysis

Storage of High Burnup Fuel

- Major impediments
  - Little data on high burnup cladding mechanical properties
  - Burnup credit beyond actinides
- Potential solutions
  - Argonne tests of cladding properties
  - Redefine acceptable geometry
  - Moderator exclusion
  - Work with industry to obtain burnup data

Cladding Mechanical Properties

- Concern
  - Potential change in fuel cladding material properties due to hydride reorientation during drying may result in rod breakage and fuel reconfiguration
- Program Goals
  - Determine if stress in rods is sufficient to reorient hydrides.
  - Determine volume of hydride reorientation needed to significantly lower ductility.
  - Evaluate whether rods undergoing drying sequence breach under drop.
  - Estimate stiffness added to cladding due to fuel pellets.
- Testing
  - Limited displacement ring crush test after pressurized capsule cooling
  - Axial tensile tests
  - 3-point bend with fueled samples
- Completion date – Jan 2009

Pilot Probabilistic Research Assessment

- Objective
  - Provide an initial look at risk-informing the NRC regulatory approach for dry cask storage
- Focus
  - Development of PRA methodology with a limited scope application – one site, one cask design
  - identifies dominant risk contributors
- Results
  - Risk is dominated by handling sequences
  - PRA results are very low overall due to robust cask designs licensed in accordance with NRC requirements.

Security Assessments

- NRC completed dry storage security assessments
  - Land-based threats
  - large airplane crashes
- Provided significant insights into the robustness of storage casks
- Staff is not recommending additional measures at this time

Definition of Damaged Fuel

- Current definition based on fixed set of characteristics
  - "more than a pin hole leak"
  - "Missing fuel pin not replaced by a dummy rod"
- New Definition will be based on function, that is, are the regulations met?
- Regulations vary with phases of the fuel cycle
  - Storage
  - Transportation
- Thus, damage definition will vary