ENCLOSURE 1

MFN 06-360

CD – Revision 2 to DCD Tier 2 –

ESBWR Electrical Power –

Chapter 8 (26A6642AX, Rev. 2)
& Change List

GE Nuclear Energy

26A6642AX
Revision 2
September 2006

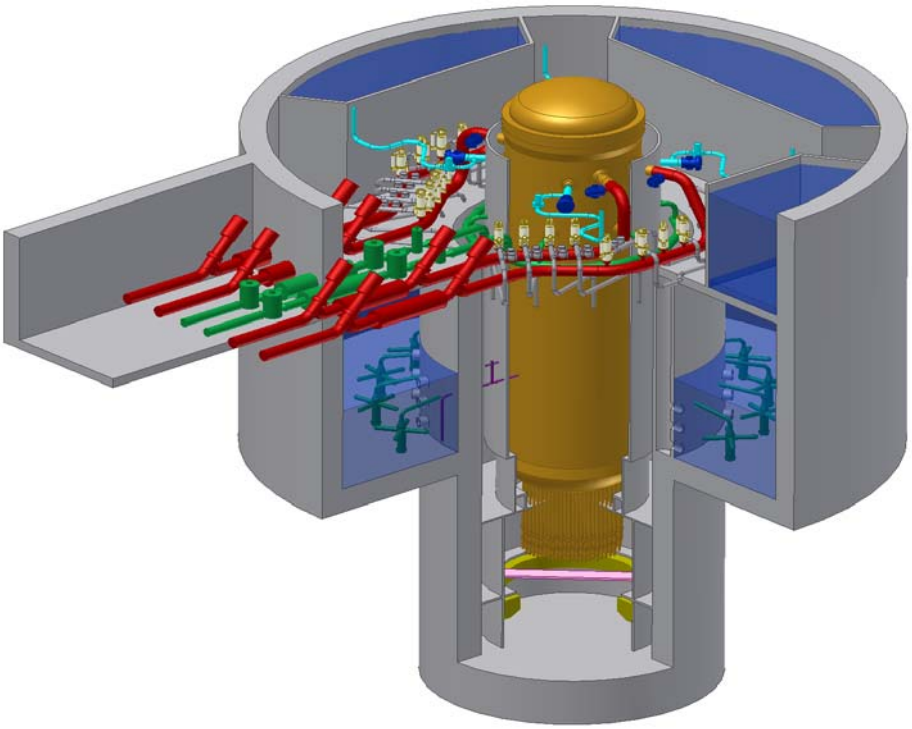

ESBWR Design Control Document

Tier 2

Chapter 8

Electric Power

Contents

8. Electric Power 8.1-1
8.1 Introduction 8.1-1
8.1.1 General 8.1-1
8.1.2 Utility Power Grid and Offsite Systems Description 8.1-1
8.1.2.1 Utility Power Grid Description 8.1-1
8.1.2.2 Offsite Power System Description 8.1-1
8.1.3 Onsite Electric Power System 8.1-2
8.1.3.1 On-site AC Power System 8.1-2
8.1.3.2 Onsite DC Power System 8.1-3
8.1.4 Safety-Related Loads 8.1-3
8.1.5 Design Basis 8.1-3
8.1.5.1 Offsite Power 8.1-3
8.1.5.2 Onsite Power 8.1-4
8.1.6 Compliance to Regulatory Requirements and Guidelines 8.1-9
8.1.7 COL Unit-Specific Information 8.1-9
8.1.7.1 Utility Power Grid Description 8.1-9
8.1.8 References 8.1-9
8.2 Offsite Power Systems 8.2-1
8.2.1 Description 8.2-1
8.2.1.1 Transmission System 8.2-1
8.2.1.2 Offsite Power System 8.2-1
8.2.2 Analysis 8.2-3
8.2.3 Design Bases Requirements 8.2-4
8.2.4 COL Unit Specific Information 8.2-5
8.2.4.1 Transmission System Description 8.2-5
8.2.4.2 Switchyard Description 8.2-5
8.2.4.3 Normal Preferred Power 8.2-5
8.2.4.4 Alternate Preferred Power 8.2-5
8.2.4.5 Unit Synchronization 8.2-5
8.2.4.6 Protective Relaying 8.2-5
8.2.4.7 Switchyard DC Power 8.2-5
8.2.4.8 Switchyard AC Power 8.2-5
8.2.4.9 Transformer Protection 8.2-5
8.2.4.10 Stability and Reliability of the Offsite Transmission Power Systems 8.2-5
8.2.4.11 Generator Circuit Breaker 8.2-6
8.2.4.12 Degraded Voltage 8.2-6
8.2.4.13 Interface Requirements 8.2-6
8.2.5 References 8.2-6
8.3 Onsite Power Systems 8.3-1
8.3.1 AC Power Systems 8.3-1
8.3.1.1 Description 8.3-1
8.3.1.2 Analysis 8.3-12
8.3.1.3 Physical Identification of Safety-Related Equipment 8.3-13

8.3.1.4 Independence of Redundant Systems 8.3-15
8.3.2 DC Power Systems 8.3-21
8.3.2.1 Description 8.3-21
8.3.2.2 Analysis 8.3-25
8.3.3 Fire Protection of Cable Systems 8.3-27
8.3.3.1 Resistance of Cables to Combustion 8.3-27
8.3.3.2 Cables and Raceways 8.3-27
8.3.3.3 Localization of Fires 8.3-28
8.3.4 COL Unit-Specific Information 8.3-28
8.3.4.1 Interrupting Capacity of Electrical Distribution Equipment 8.3-28
8.3.4.2 Defective Refurbished Circuit Breakers 8.3-28
8.3.4.3 Non-Safety Standby Diesel-Generator Load Table Changes 8.3-28
8.3.4.4 Minimum Starting Voltages for Class 1E Motors 8.3-29
8.3.4.5 Certified Proof Tests on Cable Samples 8.3-29
8.3.4.6 Associated Circuits 8.3-29
8.3.4.7 Electrical Penetration Assemblies 8.3-29
8.3.4.8 DC Voltage Analysis 8.3-30
8.3.4.9 Administrative Controls for Bus Grounding Circuit Breakers 8.3-30
8.3.4.10 Testing of Thermal Overload Bypass Contacts for Motor Operated Valves 8.3-30
8.3.4.11 Emergency Operating Procedures for Station Blackout 8.3-30
8.3.4.12 Periodic Testing of Power and Protection Systems 8.3-30
8.3.4.13 Common Industrial Standards Referenced in Purchase Specifications 8.3-30
8.3.4.14 Periodic Testing of Batteries 8.3-30
8.3.4.15 Regulatory Guide 1.160 ..... 8.3-31
8.3.5 References 8.3-31
Appendix 8A Miscellaneous Electrical Systems 8A-1
8A.1 Station Grounding and Surge Protection 8A-1
8A.1.1 Description 8A-1
8A.1.2 Analysis 8A-2
8A.1.3 COL Unit Specific Information 8A-2
8A.2 Cathodic Protection 8A-3
8A.2.1 Description 8A-3
8A.2.2 Analysis 8A-3
8A.2.3 COL Unit Specific Information 8A-3
8A.3 Electric Heat Tracing 8A-3
8A.3.1 Description 8A-3
8A.3.2 Analysis 8A-4
8A.3.3 COL Information 8A-4
8A.4 References 8A-4
Appendix 8B Station Blackout Evaluation 8B-1

List of Tables

Global Abbreviations And Acronyms List
Table 8.1-1 On-Site Power System SRP Criteria Applicability Matrix
Table 8.1-2 Grid Design Parameters
Table 8.3-1 Diesel Generator Alarms
Table 8.3-2 Acceptable Industry Standards
Table 8.3-3 Battery Duty Cycles
Table 8.3-4 Diesel Generator Loads and Sequencing of Loads
Table 8.3-5 Associated Circuits Table
Table 8.3-6 Class 1E Battery Loading Profile

List of Illustrations

Figure 8.1-1. Electrical Power Distribution System - One Line Diagram
Figure 8.1-2. Direct Current Power Supply (Non-Class 1E) - One Line Diagram
Figure 8.1-3. Direct Current Power Supply (Class 1E) - One Line Diagram
Figure 8.1-4. Uninterruptible AC Power Supply (Class 1E) - One Line Diagram
Figure 8.1-5. Uninterruptible AC Power Supply (Non-Class 1E) - One Line Diagram
Figure 8.1-6. Instrumentation and Control Power Supply System - One Line Diagram
Figure 8.3-1. 480 Volt Power Centers - One Line Diagram
Figure 8.3-2. Fault Current Clearing Time Curves – Electric Penetrations
Figure 8.3-3. Protective Devices for Electric Penetrations – One-Line (Simplified)

Global Abbreviations And Acronyms List

Term	Definition
10 CFR	Title 10, Code of Federal Regulations
A/D	Analog-to-Digital
AASHTO	American Association of Highway and Transportation Officials
AB	Auxiliary Boiler
ABS	Auxiliary Boiler System
ABWR	Advanced Boiling Water Reactor
ac / AC	Alternating Current
AC	Air Conditioning
ACF	Automatic Control Function
ACI	American Concrete Institute
ACS	Atmospheric Control System
AD	Administration Building
ADS	Automatic Depressurization System
AEC	Atomic Energy Commission
AFIP	Automated Fixed In-Core Probe
AGMA	American Gear Manufacturer's Association
AHS	Auxiliary Heat Sink
AISC	American Institute of Steel Construction
AISI	American Iron and Steel Institute
AL	Analytical Limit
ALARA	As Low As Reasonably Achievable
ALWR	Advanced Light Water Reactor
ANS	American Nuclear Society
ANSI	American National Standards Institute
AOO	Anticipated Operational Occurrence
AOV	Air Operated Valve
API	American Petroleum Institute
APRM	Average Power Range Monitor
APR	Automatic Power Regulator
APRS	Automatic Power Regulator System
ARI	Alternate Rod Insertion
ARMS	Area Radiation Monitoring System
ASA	American Standards Association
ASD	Adjustable Speed Drive
ASHRAE	American Society of Heating, Refrigerating, and Air Conditioning Engineers
ASME	American Society of Mechanical Engineers
AST	Alternate Source Term
ASTM	American Society of Testing Methods

Global Abbreviations And Acronyms List

Term	Definition
AT	Unit Auxiliary Transformer
ATLM	Automated Thermal Limit Monitor
ATWS	Anticipated Transients Without Scram
AV	Allowable Value
AWS	American Welding Society
AWWA	American Water Works Association
B&PV	Boiler and Pressure Vessel
BAF	Bottom of Active Fuel
BHP	Brake Horse Power
BOP	Balance of Plant
BPU	Bypass Unit
BPWS	Banked Position Withdrawal Sequence
BRE	Battery Room Exhaust
BRL	Background Radiation Level
BTP	NRC Branch Technical Position
BTU	British Thermal Unit
BWR	Boiling Water Reactor
BWROG	Boiling Water Reactor Owners Group
CAV	Cumulative absolute velocity
C&FS	Condensate and Feedwater System
C&I	Control and Instrumentation
C/C	Cooling and Cleanup
CB	Control Building
CBGAHVS	Control Building General Area
CBHVAC	Control Building HVAC
CBHVS	Control Building Heating, Ventilation and Air Conditioning System
CCI	Core-Concrete Interaction
CDF	Core Damage Frequency
CFR	Code of Federal Regulations
CIRC	Circulating Water System
CIS	Containment Inerting System
CIV	Combined Intermediate Valve
CLAVS	Clean Area Ventilation Subsystem of Reactor Building HVAC
CM	Cold Machine Shop
CMS	Containment Monitoring System
CMU	Control Room Multiplexing Unit
COL	Combined Operating License
COLR	Core Operating Limits Report
CONAVS	Controlled Area Ventilation Subsystem of Reactor Building HVAC

Global Abbreviations And Acronyms List

Term	Definition
CPR	Critical Power Ratio
CPS	Condensate Purification System
CPU	Central Processing Unit
CR	Control Rod
CRD	Control Rod Drive
CRDA	Control Rod Drop Accident
CRDH	Control Rod Drive Housing
CRDHS	Control Rod Drive Hydraulic System
CRGT	Control Rod Guide Tube
CRHA	Control Room Habitability Area
CRHAHVS	Control Room Habitability Area HVAC Sub-system
CRT	Cathode Ray Tube
CS&TS	Condensate Storage and Transfer System
CSDM	Cold Shutdown Margin
CS / CST	Condensate Storage Tank
CT	Main Cooling Tower
CTVCF	Constant Voltage Constant Frequency
CUF	Cumulative usage factor
CWS	Chilled Water System
D-RAP	Design Reliability Assurance Program
DAC	Design Acceptance Criteria
DAW	Dry Active Waste
DBA	Design Basis Accident
dc / DC	Direct Current
DCS	Drywell Cooling System
DCIS	Distributed Control and Information System
DEPSS	Drywell Equipment and Pipe Support Structure
DF	Decontamination Factor
D/F	Diaphragm Floor
DG	Diesel-Generator
DHR	Decay Heat Removal
DM&C	Digital Measurement and Control
DOF	Degree of freedom
DOI	Dedicated Operators Interface
DOT	Department of Transportation
dPT	Differential Pressure Transmitter
DPS	Diverse Protection System
DPV	Depressurization Valve
DR&T	Design Review and Testing

Global Abbreviations And Acronyms List

Term	Definition
DS	Independent Spent Fuel Storage Installation
DTM	Digital Trip Module
DW	Drywell
EB	Electrical Building
EBAS	Emergency Breathing Air System
EBHV	Electrical Building HVAC
ECCS	Emergency Core Cooling System
E-DCIS	Essential DCIS (Distributed Control and Information System)
EDO	Environmental Qualification Document
EFDS	Equipment and Floor Drainage System
EFPY	Effective full power years
EFU	Emergency Filter Unit
EHC	Electro hydraulic Control (Pressure Regulator)
ENS	Emergency Notification System
EOC	Emergency Operations Center
EOC	End of Cycle
EOF	Emergency Operations Facility
EOP	Emergency Operating Procedures
EPDS	Electric Power Distribution System
EPG	Emergency Procedure Guidelines
EPRI	Electric Power Research Institute
EQ	Environmental Qualification
ERICP	Emergency Rod Insertion Control Panel
ERIP	Emergency Rod Insertion Panel
ESF	Engineered Safety Feature
ETS	Emergency Trip System
FAC	Flow-Accelerated Corrosion
FAPCS	Fuel and Auxiliary Pools Cooling System
FATT	Fracture Appearance Transition Temperature
FB	Fuel Building
FBHV	Fuel Building HVAC
FCI	Fuel Coolant Interaction
FCM	File Control Module
FCS	Flammability Control System
FCU	Fan Cooling Unit
FDDI	Fiber Distributed Data Interface
FFT	Fast Fourier Transform
FFWTR	Final Feedwater Temperature Reduction
FHA	Fire Hazards Analysis

Global Abbreviations And Acronyms List

Term	Definition
FIV	Flow-Induced Vibration
FMCRD	Fine Motion Control Rod Drive
FMEA	Failure Modes and Effects Analysis
FPS	Fire Protection System
FO	Diesel Fuel Oil Storage Tank
FOAKE	First-of-a-Kind Engineering
FPE	Fire Pump Enclosure
FTDC	Fault-Tolerant Digital Controller
FTS	Fuel Transfer System
FW	Feedwater
FWCS	Feedwater Control System
FWS	Fire Water Storage Tank
GCS	Generator Cooling System
GDC	General Design Criteria
GDCS	Gravity-Driven Cooling System
GE	General Electric Company
GE-NE	GE Nuclear Energy
GEN	Main Generator System
GETAB	General Electric Thermal Analysis Basis
G/F	NOT DEFINED
GL	Generic Letter
GM	Geiger-Mueller Counter
GM-B	Beta-Sensitive GM Detector
GSIC	Gamma-Sensitive Ion Chamber
GSOS	Generator Sealing Oil System
GWSR	Ganged Withdrawal Sequence Restriction
HAZ	Heat-Affected Zone
HCU	Hydraulic Control Unit
HCW	High Conductivity Waste
HDVS	Heater Drain and Vent System
HEI	Heat Exchange Institute
HELB	High Energy Line Break
HEP	Human error probability
HEPA	High Efficiency Particulate Air/Absolute
HFE	Human Factors Engineering
HFF	Hollow Fiber Filter
HGCS	Hydrogen Gas Cooling System
HIC	High Integrity Container
HID	High Intensity Discharge

Global Abbreviations And Acronyms List

Term	Definition
HIS	Hydraulic Institute Standards
HM	Hot Machine Shop & Storage
HP	High Pressure
HPNSS	High Pressure Nitrogen Supply System
HPT	High-pressure turbine
HRA	Human Reliability Assessment
HSI	Human-System Interface
HSSS	Hardware/Software System Specification
HVAC	Heating, Ventilation and Air Conditioning
HVS	High Velocity Separator
HWC	Hydrogen Water Chemistry
HWCS	Hydrogen Water Chemistry System
HWS	Hot Water System
HX	Heat Exchanger
I&C	Instrumentation and Control
I/O	Input/Output
IAS	Instrument Air System
IASCC	Irradiation Assisted Stress Corrosion Cracking
IBC	International Building Code
IC	Ion Chamber
IC	Isolation Condenser
ICD	Interface Control Diagram
ICS	Isolation Condenser System
IE	Inspection and Enforcement
IEB	Inspection and Enforcement Bulletin
IED	Instrument and Electrical Diagram
IEEE	Institute of Electrical and Electronic Engineers
IFTS	Inclined Fuel Transfer System
IGSCC	Intergranular Stress Corrosion Cracking
IIS	Iron Injection System
ILRT	Integrated Leak Rate Test
IOP	Integrated Operating Procedure
IMC	Induction Motor Controller
IMCC	Induction Motor Controller Cabinet
IRM	Intermediate Range Monitor
ISA	Instrument Society of America
ISI	In-Service Inspection
ISLT	In-Service Leak Test
ISM	Independent Support Motion

Global Abbreviations And Acronyms List

Term	Definition
ISMA	Independent Support Motion Response Spectrum Analysis
ISO	International Standards Organization
ITA	Inspections, Tests or Analyses
ITAAC	Inspections, Tests, Analyses and Acceptance Criteria
ITA	Initial Test Program
LAPP	Loss of Alternate Preferred Power
LCO	Limiting Conditions for Operation
LCW	Low Conductivity Waste
LD	Logic Diagram
LDA	Lay down Area
LD&IS	Leak Detection and Isolation System
LERF	Large early release frequency
LFCV	Low Flow Control Valve
LHGR	Linear Heat Generation Rate
LLRT	Local Leak Rate Test
LMU	Local Multiplexer Unit
LO	Dirty/Clean Lube Oil Storage Tank
LOCA	Loss-of-Coolant-Accident
LOFW	Loss-of-Feedwater
LOOP	Loss of Offsite Power
LOPP	Loss of Preferred Power
LP	Low Pressure
LPCI	Low Pressure Coolant Injection
LPCRD	Locking Piston Control Rod Drive
LPMS	Loose Parts Monitoring System
LPRM	Local Power Range Monitor
LPSP	Low Power Set point
LWMS	Liquid Waste Management System
MAAP	Modular Accident Analysis Program
MAPLHGR	Maximum Average Planar Linear Head Generation Rate
MAPRAT	Maximum Average Planar Ratio
MBB	Motor Built-In Brake
MCC	Motor Control Center
MCES	Main Condenser Evacuation System
MCPR	Minimum Critical Power Ratio
MCR	Main Control Room
MCRP	Main Control Room Panel
MELB	Moderate Energy Line Break
MSS	NOT DEFINED

Global Abbreviations And Acronyms List

Term	Definition
MLHGR	Maximum Linear Heat Generation Rate
MMI	Man-Machine Interface
MMIS	Man-Machine Interface Systems
MOD	Motor Operated Disconnect
MOV	Motor-Operated Valve
MPC	Maximum Permissible Concentration
MPL	Master Parts List
MS	Main Steam
MSIV	Main Steam Isolation Valve
MSL	Main Steamline
MSLB	Main Steamline Break
MSLBA	Main Steamline Break Accident
MSR	Moisture Separator Reheater
MST	NOT DEFINED
MSV	Mean Square Voltage
MT	Main Transformer
MTTR	Mean Time To Repair
MWS	Makeup Water System
NBR	Nuclear Boiler Rated
NBS	Nuclear Boiler System
NCIG	Nuclear Construction Issues Group
NDE	Non Destructive Examination
NE-DCIS	Non-Essential Distributed Control and Information System
NDRC	National Defense Research Committee
NDT	Nil Ductility Temperature
NFPA	National Fire Protection Association
NIST	National Institute of Standard Technology
NICWS	Nuclear Island Chilled Water Subsystem
NMS	Neutron Monitoring System
NOV	Nitrogen Operated Valve
NPHS	Normal Power Heat Sink
NPSH	Net Positive Suction Head
NRC	Nuclear Regulatory Commission
NRHX	Non-Regenerative Heat Exchanger
NS	Non-seismic (non-seismic Category I)
NSSS	Nuclear Steam Supply System
NT	Nitrogen Storage Tank
NTSP	Nominal Trip Setpoint
O&M	Operation and Maintenance

Global Abbreviations And Acronyms List

Term	Definition
O-RAP	Operational Reliability Assurance Program
OBCV	Overboard Control Valve
OBE	Operating Basis Earthquake
OGS	Offgas System
OHLHS	Overhead Heavy Load Handling System
OIS	Oxygen Injection System
OLMCPR	Operating Limit Minimum Critical Power Ratio
OLU	Output Logic Unit
OOS	Out-of-service
ORNL	Oak Ridge National Laboratory
OSC	Operational Support Center
OSHA	Occupational Safety and Health Administration
OSI	Open Systems Interconnect
P&ID	Piping and Instrumentation Diagram
PA/PL	Page/Party-Line
PABX	Private Automatic Branch (Telephone) Exchange
PAM	Post Accident Monitoring
PAR	Passive Autocatalytic Recombiner
PAS	Plant Automation System
PASS	Post Accident Sampling Subsystem of Containment Monitoring System
PCC	Passive Containment Cooling
PCCS	Passive Containment Cooling System
PCT	Peak cladding temperature
PCV	Primary Containment Vessel
PFD	Process Flow Diagram
PGA	Peak Ground Acceleration
PGCS	Power Generation and Control Subsystem of Plant Automation System
PH	Pump House
PL	Parking Lot
PM	Preventive Maintenance
PMCS	Performance Monitoring and Control Subsystem of NE-DCIS
PMF	Probable Maximum Flood
PMP	Probable Maximum Precipitation
PQCL	Product Quality Check List
PRA	Probabilistic Risk Assessment
PRMS	Process Radiation Monitoring System
PRNM	Power Range Neutron Monitoring
PS	Plant Stack
PSD	Power Spectra Density

Global Abbreviations And Acronyms List

Term	Definition
PSS	Process Sampling System
PSWS	Plant Service Water System
PT	Pressure Transmitter
PWR	Pressurized Water Reactor
QA	Quality Assurance
RACS	Rod Action Control Subsystem
RAM	Reliability, Availability and Maintainability
RAPI	Rod Action and Position Information
RAT	Reserve Auxiliary Transformer
RB	Reactor Building
RBC	Rod Brake Controller
RBCC	Rod Brake Controller Cabinet
RBCWS	Reactor Building Chilled Water Subsystem
RBHV	Reactor Building HVAC
RBS	Rod Block Setpoint
RBV	Reactor Building Vibration
RC&IS	Rod Control and Information System
RCC	Remote Communication Cabinet
RCCV	Reinforced Concrete Containment Vessel
RCCWS	Reactor Component Cooling Water System
RCPB	Reactor Coolant Pressure Boundary
RCS	Reactor Coolant System
RDA	Rod Drop Accident
RDC	Resolver-to-Digital Converter
REPAVS	Refueling and Pool Area Ventilation Subsystem of Fuel Building HVAC
RFP	Reactor Feed Pump
RG	Regulatory Guide
RHR	Residual heat removal (function)
RHX	Regenerative Heat Exchanger
RMS	Root Mean Square
RMS	Radiation Monitoring Subsystem
RMU	Remote Multiplexer Unit
RO	Reverse Osmosis
ROM	Read-only Memory
RPS	Reactor Protection System
RPV	Reactor Pressure Vessel
RRPS	Reference Rod Pull Sequence
RSM	Rod Server Module
RSPC	Rod Server Processing Channel

Global Abbreviations And Acronyms List

Term	Definition
RSS	Remote Shutdown System
RSSM	Reed Switch Sensor Module
RSW	Reactor Shield Wall
RTIF	Reactor Trip and Isolation Function(s)
RT_{NDT}	Reference Temperature of Nil-Ductility Transition
RTP	Reactor Thermal Power
RV	NOT DEFINED
RVC	NOT DEFINED
RW	Radwaste Building
RWBCR	Radwaste Building Control Room
RWBGA	Radwaste Building General Area
RWBHVAC	Radwaste Building HVAC
RWCU/SDC	Reactor Water Cleanup/Shutdown Cooling
RWE	Rod Withdrawal Error
RWM	Rod Worth Minimizer
SA	Severe Accident
SAR	Safety Analysis Report
SB	Service Building
S/C	Digital Gamma-Sensitive GM Detector
SC	Suppression Chamber
S/D	Scintillation Detector
S/DRSRO	Single/Dual Rod Sequence Restriction Override
S/N	Signal-to-Noise
S/P	Suppression Pool
SAS	Service Air System
SB&PC	Steam Bypass and Pressure Control System
SBO	Station Blackout
SBWR	Simplified Boiling Water Reactor
SCEW	System Component Evaluation Work
SCRRI	Selected Control Rod Run-in
SDC	Shutdown Cooling
SDM	Shutdown Margin
SDS	System Design Specification
SEOA	Sealed Emergency Operating Area
SER	Safety Evaluation Report
SF	Service Water Building
SFP	Spent fuel pool
SIL	Service Information Letter
SIT	Structural Integrity Test

Global Abbreviations And Acronyms List

Term	Definition
SIU	Signal Interface Unit
SJAE	Steam Jet Air Ejector
SLC	Standby Liquid Control
SLCS	Standby Liquid Control System
SLMCPR	Safety Limit Minimum Critical Power Ratio
SMU	SSLC Multiplexing Unit
SOV	Solenoid Operated Valve
SP	Set Point
SPC	Suppression Pool Cooling
SPDS	Safety Parameter Display System
SPTMS	Suppression Pool Temperature Monitoring Subsystem of Containment Monitoring System
SR	Surveillance Requirement
SRM	Source Range Monitor
SRNM	Startup Range Neutron Monitor
SRO	Senior Reactor Operator
SRP	Standard Review Plan
SRS	Software Requirements Specification
SRSRO	Single Rod Sequence Restriction Override
SRSS	Sum of the squares
SRV	Safety Relief Valve
SRVDL	Safety relief valve discharge line
SSAR	Standard Safety Analysis Report
SSC(s)	Structure, System and Component(s)
SSE	Safe Shutdown Earthquake
SSLC	Safety System Logic and Control
SSPC	Steel Structures Painting Council
ST	Spare Transformer
STP	Sewage Treatment Plant
STRAP	Scram Time Recording and Analysis Panel
STRP	Scram Time Recording Panel
SV	Safety Valve
SWH	Static water head
SWMS	Solid Waste Management System
SY	Switch Yard
TAF	Top of Active Fuel
TASS	Turbine Auxiliary Steam System
TB	Turbine Building
TBCE	Turbine Building Compartment Exhaust
TEAS	Turbine Building Air Supply

Global Abbreviations And Acronyms List

Term	Definition
TBE	Turbine Building Exhaust
TBLOE	Turbine Building Lube Oil Area Exhaust
TBS	Turbine Bypass System
TBHV	Turbine Building HVAC
TBV	Turbine Bypass Valve
TC	Training Center
TCCWS	Turbine Component Cooling Water System
TCS	Turbine Control System
TCV	Turbine Control Valve
TDH	Total Developed Head
TEMA	Tubular Exchanger Manufacturers' Association
TFSP	Turbine first stage pressure
TG	Turbine Generator
TGSS	Turbine Gland Seal System
THA	Time-history accelerograph
TLOS	Turbine Lubricating Oil System
TLU	Trip Logic Unit
TMI	Three Mile Island
TMSS	Turbine Main Steam System
TRM	Technical Requirements Manual
TS	Technical Specification(s)
TSC	Technical Support Center
TSI	Turbine Supervisory Instrument
TSV	Turbine Stop Valve
UBC	Uniform Building Code
UDS	NOT DEFINED
UHS	Ultimate heat sink
UL	Underwriter's Laboratories Inc.
UPS	Uninterruptible Power Supply
USE	Upper Shelf Energy
USM	Uniform Support Motion
USMA	Uniform support motion response spectrum analysis
USNRC	United States Nuclear Regulatory Commission
USS	United States Standard
UV	Ultraviolet
V&V	Verification and Validation
Vac / VAC	Volts Alternating Current
Vdc / VDC	Volts Direct Current
VDU	Video Display Unit

Global Abbreviations And Acronyms List

Term	Definition
VW	Vent Wall
VWO	Valves Wide Open
WD	Wash Down Bays
WH	Warehouse
WS	Water Storage
WT	Water Treatment
WW	Wetwell
XMFR	Transformer
ZPA	Zero period acceleration

8. ELECTRIC POWER

8.1 INTRODUCTION

8.1.1 General

Description of the ESBWR Electric Power Distribution System provided herein applies to the "reference design".

Power is supplied to the plant from two independent offsite power sources. These power source connections are designed to provide reliable power sources for the plant auxiliary loads, such that any single active failure can affect only one power source and cannot propagate to the alternate power source.

The on-site AC power system consists of Class 1E and non-Class 1E power systems. The two offsite power systems provide the normal preferred and alternate preferred AC power to safety-related and nonsafety-related loads. In the event of total loss of offsite power sources, two or more onsite independent nonsafety-related standby diesel generators are provided to power the plant's investment protection (PIP) nonsafety-related loads and safety-related loads through battery chargers. There are four independent Class 1E DC divisions to provide power for the safety-related loads.

Onsite Class 1E and non-Class 1E DC systems supply all the DC power requirements of the plant.

8.1.2 Utility Power Grid and Offsite Systems Description

8.1.2.1 Utility Power Grid Description

The utility power grid description is provided within Subsection 8.1.7.

8.1.2.2 Offsite Power System Description

The offsite power system consists of the set of electrical circuits and associated equipment that are used to interconnect the offsite transmission system with the plant main generator and the onsite electrical power distribution system, as indicated on the one-line diagram, Figure 8.1-1.

The system includes the plant switchyard, the high voltage tie lines to the main transformers, and the reserve auxiliary transformers (RATs).

The offsite power system begins at the terminals on the transmission system side of the circuit breakers that connect the switching stations to the offsite transmission systems. It ends at the connection to the input terminals of the motor operated disconnects (MODs) of the RATs, and at the terminals of the switchyard side of the main transformer.

Power is supplied to the plant from the switchyard connected to the transmission grid offsite power sources as follows:

- "Normal Preferred" source through the unit auxiliary transformers (UATs); and
- "Alternate Preferred" source through the RATs.

During plant startup, emergency shutdown, or during plant outages, the offsite power system serves to supply power from the offsite transmission system to the plant auxiliary and service loads.

During normal operation, the main generator transmits generated power to the offsite transmission system through the main transformers and to the plant auxiliary and service loads through the UATs.

The onsite power distribution system is powered continuously by the offsite power source during shutdown and throughout plant startup. When the onsite main generator breaker is tripped, power to the plant continues to be fed from the offsite power source through the main transformers to the UATs or directly to the RATs on the alternate preferred power source line.

A detailed description of the offsite power system is provided in Subsection 8.2.1.

8.1.3 Onsite Electric Power System

8.1.3.1 On-site AC Power System

The onsite AC power system includes the main generator, the generator breaker, the main transformers, to the high side switchyard terminals, the UAT input breakers, the RAT input motor operated disconnects and the unit and reserve auxiliary transformers, as indicated on Figure 8.1-1.

The onsite power system is divided into two power load groups at the 13.8 kV and 6.9 kV level for operational flexibility of the plant nonsafety-related systems. Each unit auxiliary transformer feeds half of the 13.8 kV and 6.9 kV power load groups and a RAT backs up each UAT.

The first power load group (13.8 kV) supplies power to nonsafety-related power generation loads required primarily for unit operation.

The second power load group (6.9 kV) supplies power to PIP A and PIP B (nonsafety-related loads), which, on account of their specific functions, are generally required to remain operational at all times or when the unit is shut down. The second power load group also supplies power to the safety-related loads through isolation buses.

Both load groups of the PIP A and PIP B have a standby power supply from separate onsite standby diesel generators, in addition to their normal preferred power supply through the unit auxiliary transformers, and their alternate preferred power supply from an independent offsite source through the reserve auxiliary transformers.

Each division of the safety-related power distribution system is provided with physically separated and electrically independent batteries sized to supply emergency power to the safety-related systems for 72 hours in the event of loss of all AC power sources.

The first load group distributes power at 60 Hz and voltage levels of 13.8 kV, 480V, 240/120V and 208/120V.

The second load group distributes power at 60 Hz and voltage levels of 6.9 kV, 480V, 240/120V and 208/120V.

A detailed description of the onsite AC power system is provided in Subsection 8.3.1.

8.1.3.2 Onsite DC Power System

The onsite DC power system includes the plant batteries and battery chargers and their DC loads, except for the DC/AC inverters and the inverter loads.

The non-Class 1E 125 VDC power system, Figure 8.1-2, provides power for nonsafety-related loads, communications, lighting and other DC loads. The 250V batteries are provided to supply DC power to the plant Non-Essential Distributed Control and Information System (NE-DCIS) and non-Class 1E DC motors. The 125 VDC power and 250 VDC power are normally supplied through non-Class 1E battery chargers from the non-Class 1E PIP buses. In the event that this power supply is lost, power is supplied from the non-Class 1E batteries.

The Class 1E 250 VDC power distribution system, Figure 8.1-3, provides four independent and redundant on-site sources of power for operation of safety-related DC loads including the Essential Distributed Control and Information System (E-DCIS). The Class 1E 250 VDC power is normally supplied through the Class 1E battery chargers from the Isolation Power Centers, which are powered from the PIP buses. In the event that this power supply is lost, DC power is supplied from the Class 1E batteries for 72 hours. The system is physically and electrically separated into four Divisions.

A detailed description of the onsite DC power system is provided in Subsection 8.3.2.

8.1.4 Safety-Related Loads

The safety-related loads utilize the four divisions of DC power sources for instrumentation or control power, for systems required for safety. Multiple divisions of DC power are involved in performing a single safety function and ensure that only two divisions of DC power are required for safe shutdown during a DBE. The control and instrumentation systems required for safety are identified in Subsection 7.1.1 and Subsection 7.1.1.2.1, which indicate the four separate divisions of power to each system required for safety, as shown in Figure 8.1-4.

8.1.5 Design Basis

8.1.5.1 Offsite Power

Unit-specific portions of the offsite power system are described within Subsection 8.2.1.

Electric power from the utility grid to the offsite power system is provided by transmission lines designed and located to minimize the likelihood of failure while ensuring grid reliability. The transmission system serves the main offsite power circuit (Normal Preferred Power), and the reserve offsite power circuit (Alternate Preferred Power) through the site switchyard.

The switchyard is designed to minimize the likelihood of simultaneous failure to both the normal and alternate preferred power sources from the switchyard to the main transformers and RATs.

Three single-phase main step-up transformers are provided as part of the on-site power with an additional installed single phase spare. The installation of the spare transformer permits its connection and energization within 24 hours.

A single tie line connecting the plants main transformer and the switchyard constitutes the plant's normal offsite power circuit.

A second offsite (reserve) power circuit is provided to the motor operated disconnects (MODs) at the high side of the RATs. This power circuit is electrically independent and physically separated from the main power circuit to minimize the likelihood of simultaneous failure.

The two onsite unit auxiliary transformers are provided to supply power to the plant's auxiliary distribution system. The transformers are equal in size, and each has the capacity required to supply power to their load group of safety-related and nonsafety-related systems under conditions of maximum expected concurrent loads, including all required design margins. Unit auxiliary transformers supply power to their load group from the main offsite power circuit through the main transformers or the Main Generator during island mode operation.

Two onsite RATs serve as backup to the unit auxiliary transformers. RATs are provided to supply power to the plant’s auxiliary distribution system. The transformers are equal in size, and each has the capacity required to supply power to its load group of safety-related and nonsafety-related systems under conditions of maximum expected concurrent loads, including all required design margins. The reserve auxiliary transformers supply power to their load groups from the second offsite power circuit.

The offsite power system is designed to provide a continuous source of power to the onsite power system throughout plant startup, normal operation (including shutdown), and abnormal operations with the exception of station blackout.

8.1.5.2 Onsite Power

8.1.5.2.1 General

A main generator circuit breaker is provided, which is designed to withstand the maximum RMS and crest currents, and to interrupt the maximum asymmetrical and symmetrical currents determined to be produced by a three phase bolted fault at its location. UAT circuit breakers are provided to isolate each UAT during its maximum fault without causing a trip of the Main Generator Circuit Breaker or the isolation of the second UAT. The parallel RAT is designed to accept the UAT loads through the fast-transfer incoming circuit breakers at the 13.8 kV and 6.9 kV switchgear.

The onsite nonsafety-related power distribution system is divided into two power load groups; each is fed from separate unit and reserve auxiliary transformers. Redundant loads associated with unit operation are powered from buses of separate power load groups.

Two dedicated buses are provided to feed PIP loads. The dedicated buses have three power supplies:

(1) The normal preferred power supply is provided by a unit auxiliary transformer connected to the main generator and to the main offsite power circuit through the main transformer.

(2) The alternate preferred power supply is provided by a reserve auxiliary transformer connected to an independent offsite source.

(3) The standby power supply is provided by two independent nonsafety-related standby diesel generators of sufficient capacity such that, in the event of a loss of preferred power, each can supply enough power to achieve cold shutdown.

The safety-related loads are powered by four physically separate and electrically independent divisions. Any two out of four divisions can safely shut down the unit and maintain it in a safe shutdown condition.

Each division is fed by a separate Isolation 480V Power Center, which is powered from a PIP nonsafety-related power supply. The non-Class 1E system ends and the Class 1E system begins at the input terminals of the main circuit breaker of the Isolation Power Centers. The input power voltage and frequency is monitored and the input breaker tripped if either voltage or frequency is out of the specified limits for a predetermined time. The Class 1E AC distribution system ends at the terminals of the Class 1E loads. The powering of the Isolation Power Centers with a nonsafety-related power supply does not jeopardize plant safety, since safety-related batteries will supply the required power during an emergency. The Isolation Power Centers are also provided with electrical protection and isolation devices. The battery chargers and Uninterruptible AC Power Supply rectifiers prevent degradation of the Class 1E power system by the non-Class 1E power system.

The redundant Class 1E electrical divisions (Divisions 1, 2, 3 and 4) are provided with separate onsite DC power supplies, electric buses, distribution cables, controls, relays and other redundant electrical devices. Redundant divisions are physically separate and electrically independent so that in a design basis event with loss of any two divisions , safe plant shutdown for all operating modes can be accomplished with the two remaining divisions of DC power.

Separation criteria are established for preserving the independence of redundant Class 1E systems and providing isolation between Class 1E and non-Class 1E equipment.

Raceways are not shared by Class 1E and non-Class 1E cables, or Class 1E cables of a different division. Separate raceways are provided exclusively for each channel group of the Reactor Protection System solenoid wiring.

Special identification criteria, as discussed in Subsection 8.3.1.3, are applied to Class 1E equipment, cabling and raceways.

The Class 1E 480V and 120 VAC, and 250 VDC power and control systems conform to Seismic Category I requirements and are housed in Seismic Category I structures. Seismic Qualification is in accordance with IEEE Standard 344 (Section 3.10).

Class 1E equipment and systems have been designed with the capability for periodic testing.

8.1.5.2.2 Uninterruptible AC Power Supply

The Uninterruptible AC Power Supply (UPS) is divided into two subsystems, the Class 1E UPS and the Non-Class 1E UPS.

8.1.5.2.2.1 Class 1E Uninterruptible AC Power Supply

There is no direct Class 1E AC power source required for safety-related loads. The Class 1E UPS that support the safety-related logic and control functions during normal, upset, and accident conditions are provided from four divisions of DC power through DC/AC inverters.

Each Class 1E battery charger provides the Class 1E AC uninterruptible power through separate and independent Class 1E inverters connected to the Class 1E DC bus of the same division and backed up by its own 480 VAC Isolation Power Center (Figure 8.1-4).

Upon loss of AC power to the Isolation Power Centers, the Class 1E UPS is powered by its respective division's Class 1E battery, switching from the AC to DC source is transparent to UPS loads. Provision is made for automatic switching to the alternate bypass supply from its division in case of a failure of the inverter power supply. The inverter normal AC power supply is synchronized in both frequency and phase with the alternate AC bypass supply, so that unacceptable voltage spikes are avoided in case of an automatic transfer from normal to alternate supply. The Class 1E uninterruptible AC power supply system complies with IEEE Standard 944 (Figure 8.1-4).

8.1.5.2.2.2 Non–Class 1E Uninterruptible AC Power Supply

Each load group of the non-Class 1E Uninterruptible AC Power Supply is powered through separate and independent non-Class 1E inverters connected to the non-Class 1E DC bus and from their 480VAC Power Center (Figure 8.1-5). Separate non-Class 1E batteries also power each DC bus.

Upon loss of AC power supply, the non-Class 1E UPS is powered by its respective non-Class 1E battery, but switching from the AC to the DC source is transparent to UPS loads. Provision is made for automatic switching to the alternate bypass supply from a 480VAC Power Center of the same load group, in case of a failure of the inverter power supply. The inverter normal AC power supply is synchronized in both frequency and phase with the alternate AC bypass supply, so that unacceptable voltage spikes are avoided in case of an automatic transfer from normal to alternate supply. The onsite standby diesel-generators provide backup for the normal and alternate 6.9 kV AC power sources that supply the 480VAC power centers from the PIP busses.

The non-Class 1E uninterruptible power supply complies with IEEE Standard 944 (Reference 8.1-1).

8.1.5.2.3 Non–Class 1E I&C Power Supply System

The I&C Power Supply System consists of regulating step-down transformers providing 208/120 VAC power to those loads not requiring uninterruptible power, and to those loads requiring an alternate, clean power source. The I & C Power Supply System buses are shown in Figure 8.1-6.

The non-Class 1E equipment requiring I&C power is supplied by the non-Class 1E swing bus power center through regulating transformers.

8.1.5.2.4 Regulatory Requirements

The following list of criteria is addressed in accordance with Table 8.1-1, which is based on Table 8-1 of the Standard Review Plan. In general, the ESBWR is designed in accordance with the following criteria. Any exceptions or clarifications are noted below.

General Design Criteria:

- GDC 2, “Design Bases for Protection against Natural Phenomena.”
- GDC 4, “Environmental and Dynamic Effects Design Bases”
- GDC 5, “Sharing of Structures, Systems and Components” – The ESBWR does not share any safety-related structure, system or component with any other unit. Therefore, this GDC is not applicable.

- GDC 17, "Electric Power Systems" - Safety-related DC power sources are provided to support passive core cooling and passive containment integrity safety-related functions. No offsite or diesel-generator-derived AC power is required for 72 hours after an abnormal event.
- GDC 18, "Inspection and Testing of Electrical Power Systems". - Safety-related DC power sources are provided to support passive core cooling and passive containment integrity safety-related functions. No offsite or diesel-generator-derived AC power is required for 72 hours after an abnormal event.
- GDC 50, "Containment Design Bases."

NRC Regulatory Guides:

- Regulatory Guide 1.6, "Independence Between Redundant Standby (Onsite) Power Sources and Between Their Distribution Systems" – The ESBWR Standard Plant does not need or have safety-related standby AC power sources; however, portions pertaining to the safety-related DC system are addressed within Subsection 8.3.2.
- Regulatory Guide 1.9, "Selection, Design, Qualification and Testing of Emergency Diesel-Generator Units Used as Class 1E Onsite Electric Power Systems at Nuclear Power Plants"– The ESBWR diesel-generator units are not safety-related, nor is AC power needed for the ESBWR to achieve safe shutdown, therefore this regulatory guide is not applicable to the ESBWR design.
- Regulatory Guide 1.32, "Criteria for Safety-Related Electric Power Systems for Nuclear Power Plants." Safety-related DC power sources are provided to support passive core cooling and containment integrity safety functions. No offsite or diesel-generator-derived AC power is required for 72 hours after an abnormal event.
- Regulatory Guide 1.47, "Bypassed and Inoperable Status Indication for Nuclear Power Plant Safety Systems."
- Regulatory Guide 1.53, "Application of Single-Failure Criterion to Nuclear Power Plant Protection Systems."
- Regulatory Guide 1.63, "Electric Penetration Assemblies in Containment Structures for Nuclear Power Plants."
- Regulatory Guide 1.75, "Physical Independence of Electric Systems." Class 1E safety-related equipment relies only upon DC-derived power and meets the design requirements for physical independence.
- Regulatory Guide 1.81, "Shared Emergency and Shutdown Electric Systems for Multi-Unit Nuclear Power Plants" – The ESBWR Standard Plant is designed as a single-unit plant. Therefore, Regulatory Guide 1.81 is not applicable.
- Regulatory Guide 1.106, "Thermal Overload Protection for Electric Motors on Motor-Operated Valves." The ESBWR does not require 480 VAC electric motors or motor operated valves to perform any safety-related function, therefore, this regulatory guide is not applicable.

- Regulatory Guide 1.118, "Periodic Testing of Electric Power and Protection Systems" (see Subsection 8.3.4.12).
- Regulatory Guide 1.128, "Installation Design and Installation of Large Lead Storage Batteries for Nuclear Power Plants."
- Regulatory Guide 1.129, "Maintenance, Testing, and Replacement of Large Lead Storage Batteries for Nuclear Power Plants" – the ESBWR design allows for periodic testing, maintenance and replacement of batteries. Refer to Subsection 8.3.4.14.
- Regulatory Guide 1.153, "Criteria for Power Instrumentation, and Control Portions of Safety Systems."
- Regulatory Guide 1.155, "Station Blackout" – The ESBWR does not require AC power to achieve safe shutdown. Thus, the ESBWR meets the intent of Regulatory Guide 1.155. The Station Blackout evaluation is provided in Section 15.5.
- Regulatory Guide 1.160, "Monitoring of Effectiveness of Maintenance at Nuclear Power Plants" - Maintenance Rule development is addressed in Subsection 8.3.4.15.

Branch Technical Positions:

- BTP ICSB 4 (PSB), "Requirements on Motor-Operated Valves in the ECCS Accumulator Lines" – This BTP is written for pressurized water reactor (PWR) plants only and is therefore not applicable to the ESBWR.
- BTP ICSB 8 (PSB), "Use of Diesel-Generator Sets for Peaking" – The ESBWR can achieve safe shutdown without AC power, and the diesel-generator sets are not safety-related. Therefore, this BTP is not applicable.
- BTP ICSB 11 (PSB), "Stability of Offsite Power Systems" - 72 hour (see Subsection 8.2.1.2 for COL information).
- BTP ICSB 18 (PSB), "Application of the Single Failure Criterion to Manually-Controlled Electrically-Operated Valves" - There are no safety-related, manually-controlled, electrically operated valves in the ESBWR design. All safety-related valves are automatic and require no manual action for 72 hours. This BTP is not applicable to the ESBWR design.
- BTP ICSB 21, "Supplemental Guidance for Bypass and Inoperable Status Indication for Engineered Safety Features Systems."
- BTP PSB 1, "Adequacy of Station Electric Distribution System Voltages" - Degraded Voltage in the offsite power system does not affect the Class 1E systems as all Class 1E loads are powered from batteries which are isolated by the battery chargers and rectifiers and diodes from the 480VAC Isolation Power Centers.
- BTP PSB 2, "Criteria for Alarms and Indications Associated with Diesel-Generator Unit Bypassed and Inoperable Status" - The ESBWR has no safety-related diesel-generator. The ESBWR diesel generator units are nonsafety-related. Therefore this criterion does not apply.

Other SRP Criteria:

- NUREG/CR 0660, "Enhancement of Onsite Diesel Generator Reliability" – The ESBWR diesel-generator units are not safety-related, nor is AC power needed to achieve safe shutdown; therefore, the NUREG is not directly applicable. However, defense-in-depth principles such as redundancy and diversity are incorporated in the design and integration of ESBWR systems.
- NUREG/CR 0737, "TMI Lessons Learned"
- NUREG-0718, Revision 1, "Licensing Requirements for Pending Applications for Construction Permits and Manufacturing License," relating to TMI Item I.D.3, "Safety System Status Monitoring," regarding the application of Regulatory Guide 1.47.
- TMI Action Item II.E.3.1, "Emergency Power Supply for Pressurizer Heater" – This criteria is applicable only to PWRs and does not apply to the ESBWR.
- TMI Action Item II.G.1, "Emergency Power for Pressurizer Equipment" – This criteria is applicable only to PWRs and does not apply to the ESBWR.

8.1.6 Compliance to Regulatory Requirements and Guidelines

Table 8.1-1 presents a matrix of regulatory requirements and guidelines, in accordance with Table 8-1 of the Standard Review Plan. Note that several criteria pertaining to safety-related diesel-generators and/or (direct) AC power systems are not applicable for the ESBWR, because the ESBWR does not require AC power to achieve safe shutdown or to perform any safety-related function. Therefore, the two diesel-generators are nonsafety-related. However, defense-in-depth principles such as redundancy and diversity are incorporated in the design and integration of ESBWR systems.

8.1.7 COL Unit-Specific Information

8.1.7.1 Utility Power Grid Description

The Main Generator output is delivered to the offsite switchyard through the onsite main step-up transformers and site specific Normal Preferred Power Supply lines, as described within Section 8.2. Items served by the switchyard, unit to switchyard connections through the site specific Alternate Preferred Power Supply lines at the RATs, are provided in Table 8.1-2. Transmission system and intra-system ties are further described within Section 8.2.

8.1.8 References

8.1-1 IEEE Standard 944, "IEEE Application and Testing of Uninterruptible Power Supplies for Power Generating Stations."

Table 8.1-1

Onsite Power System SRP Criteria Applicability Matrix

Applicable Criteria		IEEE Standard	Notes	Offsite Power System	AC (Onsite) Power System	DC (Onsite) Power System
GDC	2		7			X
GDC	4		7			X
GDC	5		1			
GDC	17		7			X
GDC	18		7			X
GDC	50				X	X
10 CFR	50.34(f)(2)(v)		6			
10 CFR	50.34(f)(2)(xiii)		2			
10 CFR	50.34(f)(2)(xx)		2			
10 CFR	50.63		7			X
RG	1.6		3			
RG	1.9	387	3			
RG	1.32	308	3&7			X
RG	1.47		7			X
RG	1.53	379	7			X
RG	1.63	242,317,741			X	X
RG	1.75	384	7			X
RG	1.81		1			
RG	1.106					
RG	1.118	338	4&7			X
RG	1.128	484				X
RG	1.129	450	4			X
RG	1.153	603	7			X
RG	1.155 (NUMARK 8700)		7			X
RG	1.160 (NUMARK 93-01)		4	X	X	X
BTP	ICSB 4	279	2			
BTP	ICSB 8	308	3		-	
BTP	ICSB 11		4	X		
BTP	ICSB 18					
BTP	ICSB 21		7			X
BTP	PSB 1					
BTP	PSB 2		3			
NUREG-0718			6			
NUREG 0737			5			
NUREG/CR-0660			3			

Applicable Criteria	IEEE Standard	Notes	Offsite Power System	AC (Onsite) Power System	DC (Onsite) Power System
TMI Action Item II.E.3.1		2			
TMI Action Item II.G.1		2			

Notes:

(1) Noted criteria are applicable to multiple unit plants only, and are not applicable to the single-unit ESBWR.

(2) The criterion is only applicable to PWRs, and thus, is not applicable to the ESBWR.

(3) The ESBWR Standard Plant does not have safety-related diesel-generators, and thus, this criterion is not applicable to the ESBWR.

(4) To be addressed in a COL application.

(5) Covered by 10 CFR 50.34(f)(2)(xiii) and 50.34(f)(2)(xx).

(6) Not applicable to the ESBWR: 10 CFR 50.34 (f) and NUREG 0718 apply only to the pending applications at February 16, 1982.

(7) Class 1E UPS system is included in the DC onsite applicability column.

Table 8.1-2

Grid Design Parameters

(COLA Scope)

Parameter	Value(s)
Lines served by switchyard	
Unit Main Transformer to site switchyard lines	
Lines to reserve auxiliary transformers	
Others	

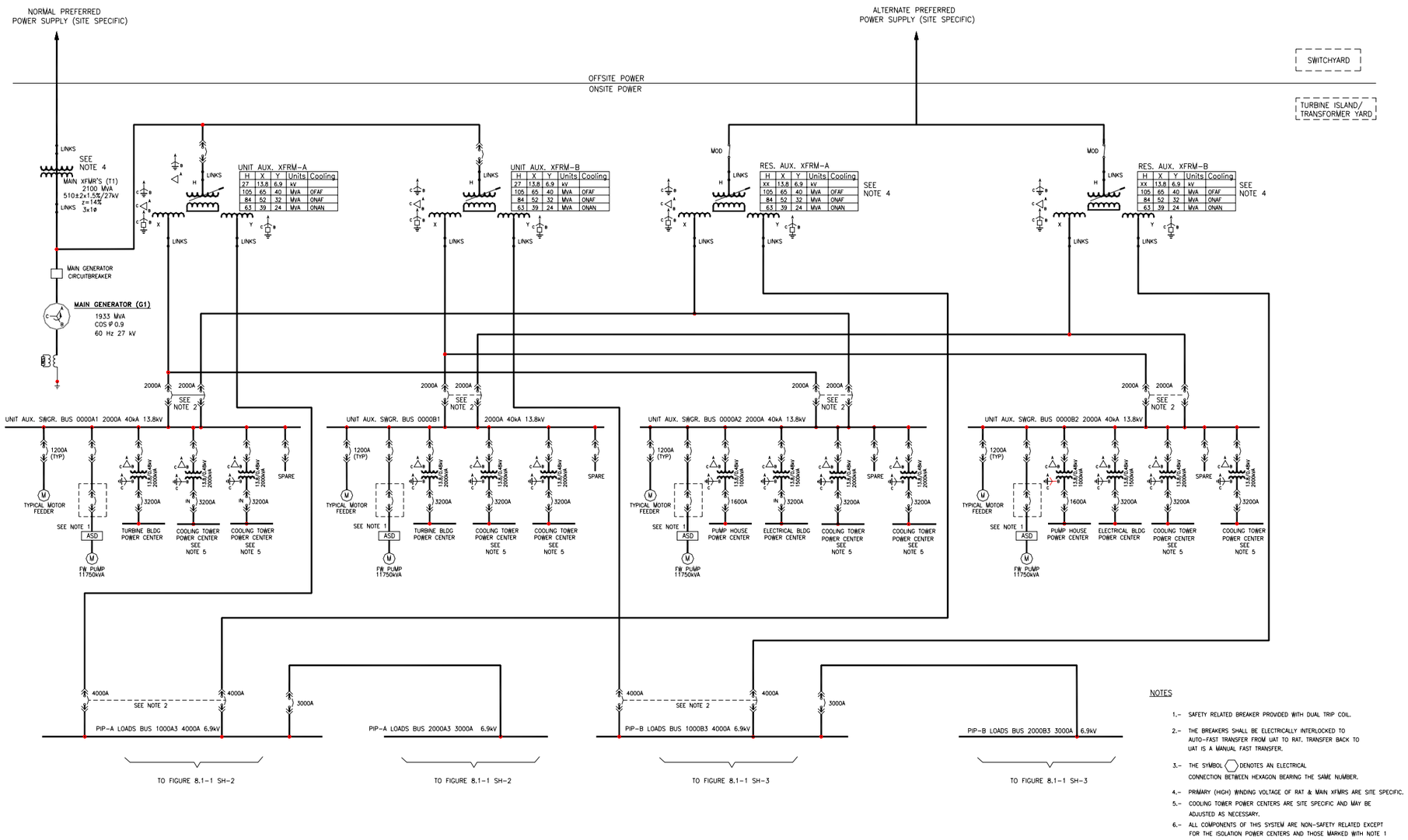

NOTES

1.- SAFETY RELATED BREAKER PROVIDED WITH DUAL TRIP COIL.

2.- THE BREAKERS SHALL BE ELECTRICALLY INTERLOCKED TO AUTO-FAST TRANSFER FROM UAT TO RAT, TRANSFER BACK TO UAT IS A MANUAL FAST TRANSFER.

3.- THE SYMBOL ⬡ DENOTES AN ELECTRICAL CONNECTION BETWEEN HEXAGON BEARING THE SAME NUMBER.

4.- PRIMARY (HIGH) WINDING VOLTAGE OF RAT & MAIN XFMRS ARE SITE SPECIFIC.

5.- COOLING TOWER POWER CENTERS ARE SITE SPECIFIC AND MAY BE ADJUSTED AS NECESSARY.

6.- ALL COMPONENTS OF THIS SYSTEM ARE NON-SAFETY RELATED EXCEPT FOR THE ISOLATION POWER CENTERS AND THOSE MARKED WITH NOTE 1

Figure 8.1-1. Electrical Power Distribution System - One Line Diagram

Sh 1 of 3

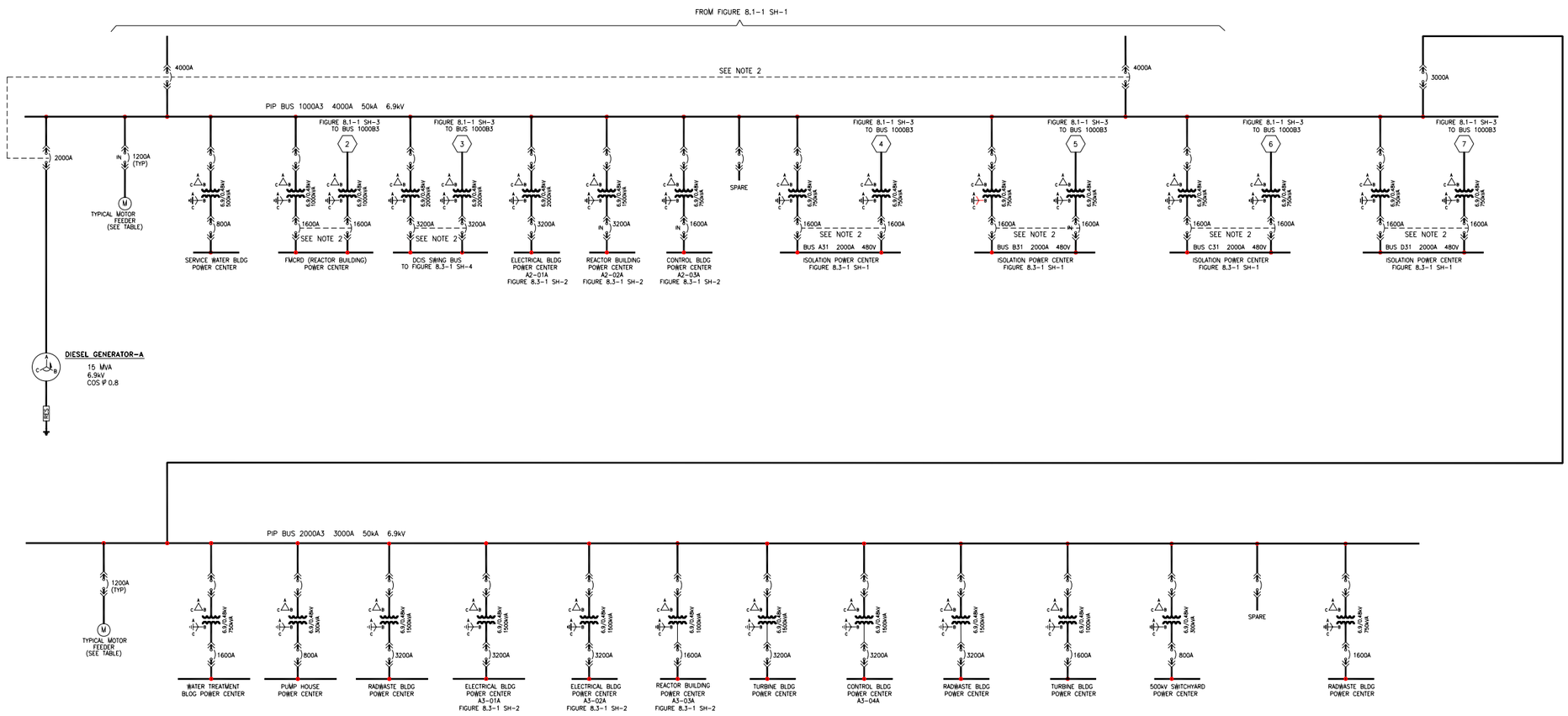

Figure 8.1-1. Electrical Power Distribution System - One Line Diagram
Sh 2 of 3

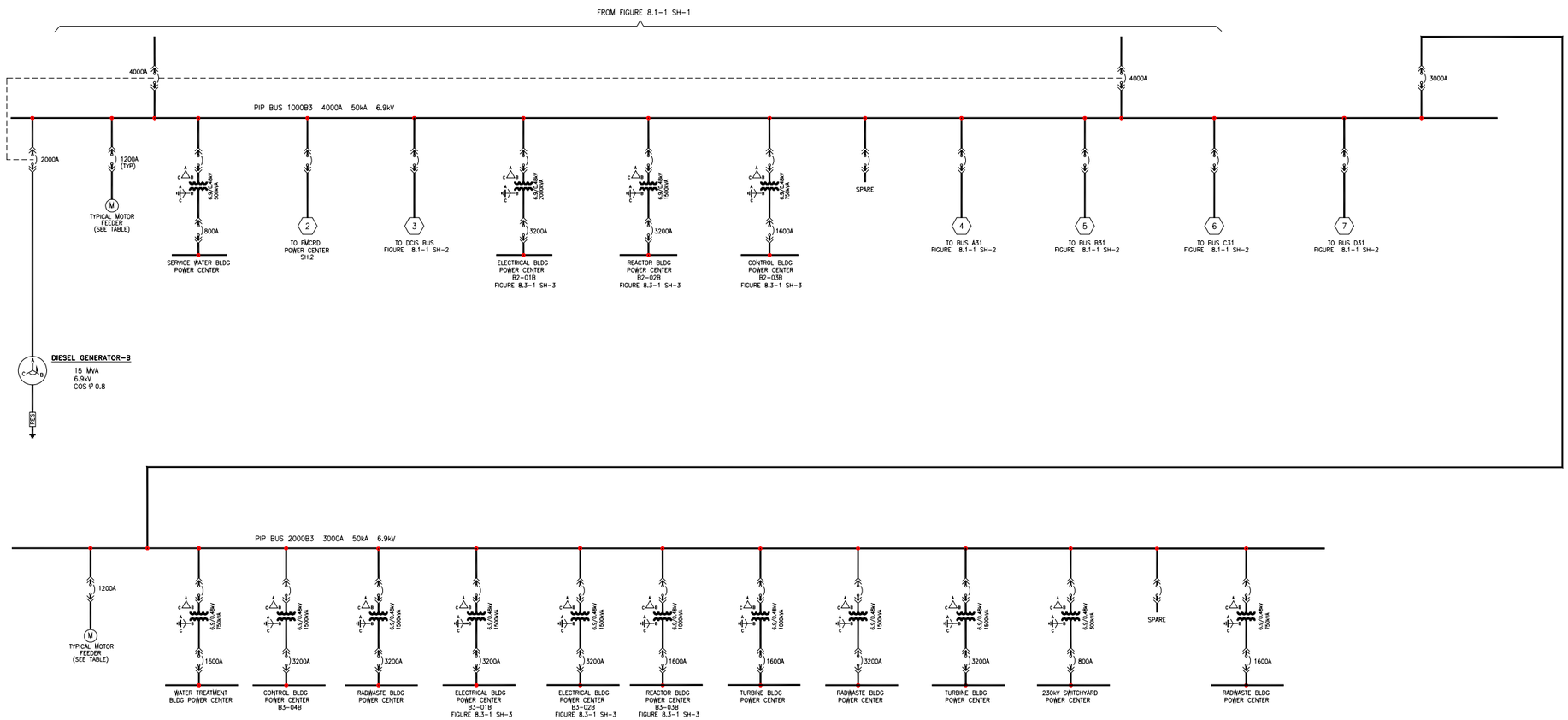

Figure 8.1-1. Electrical Power Distribution System - One Line Diagram
Sh 3 of 3

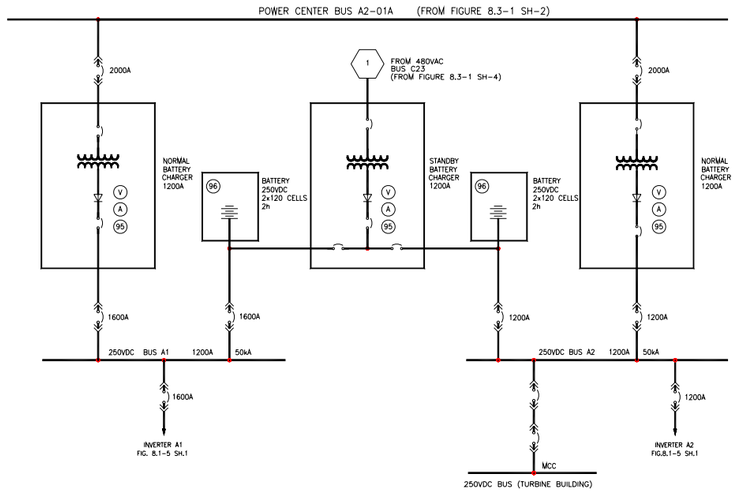

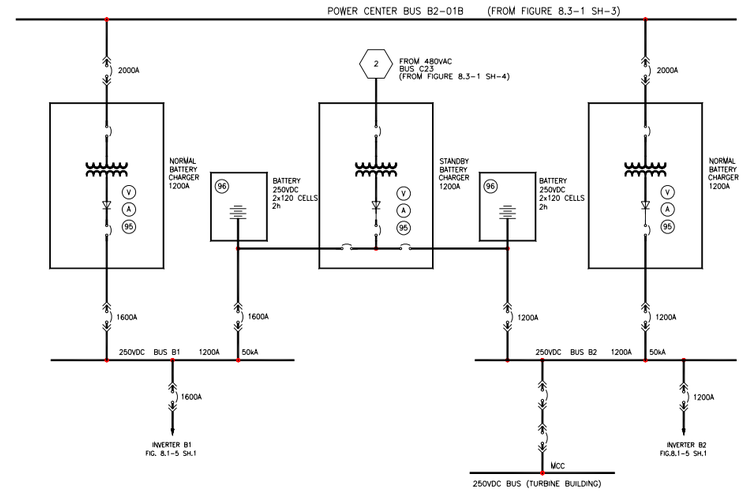

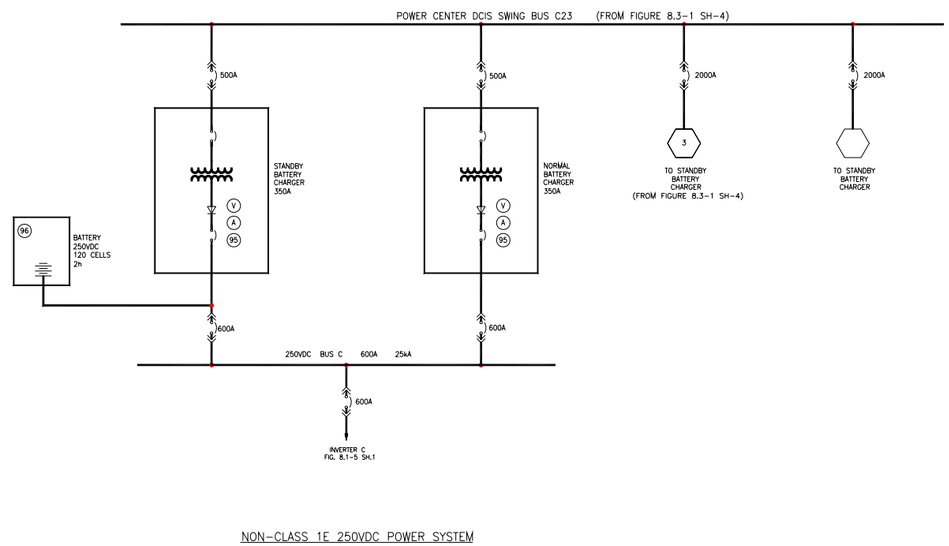

Figure 8.1-2. Direct Current Power Supply (Non-Class 1E) - One Line Diagram
Sh 1 of 2

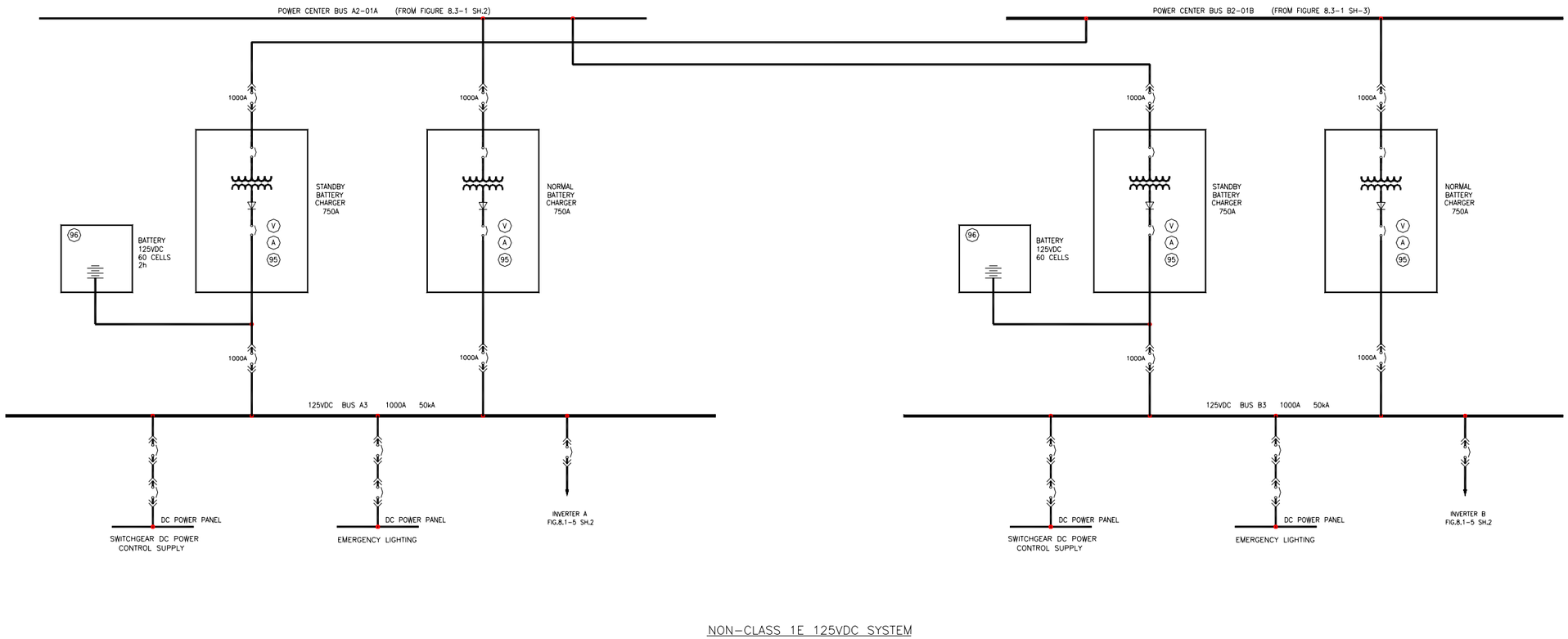

Figure 8.1-2. Direct Current Power Supply (Non-Class 1E) - One Line Diagram

Sh 2 of 2

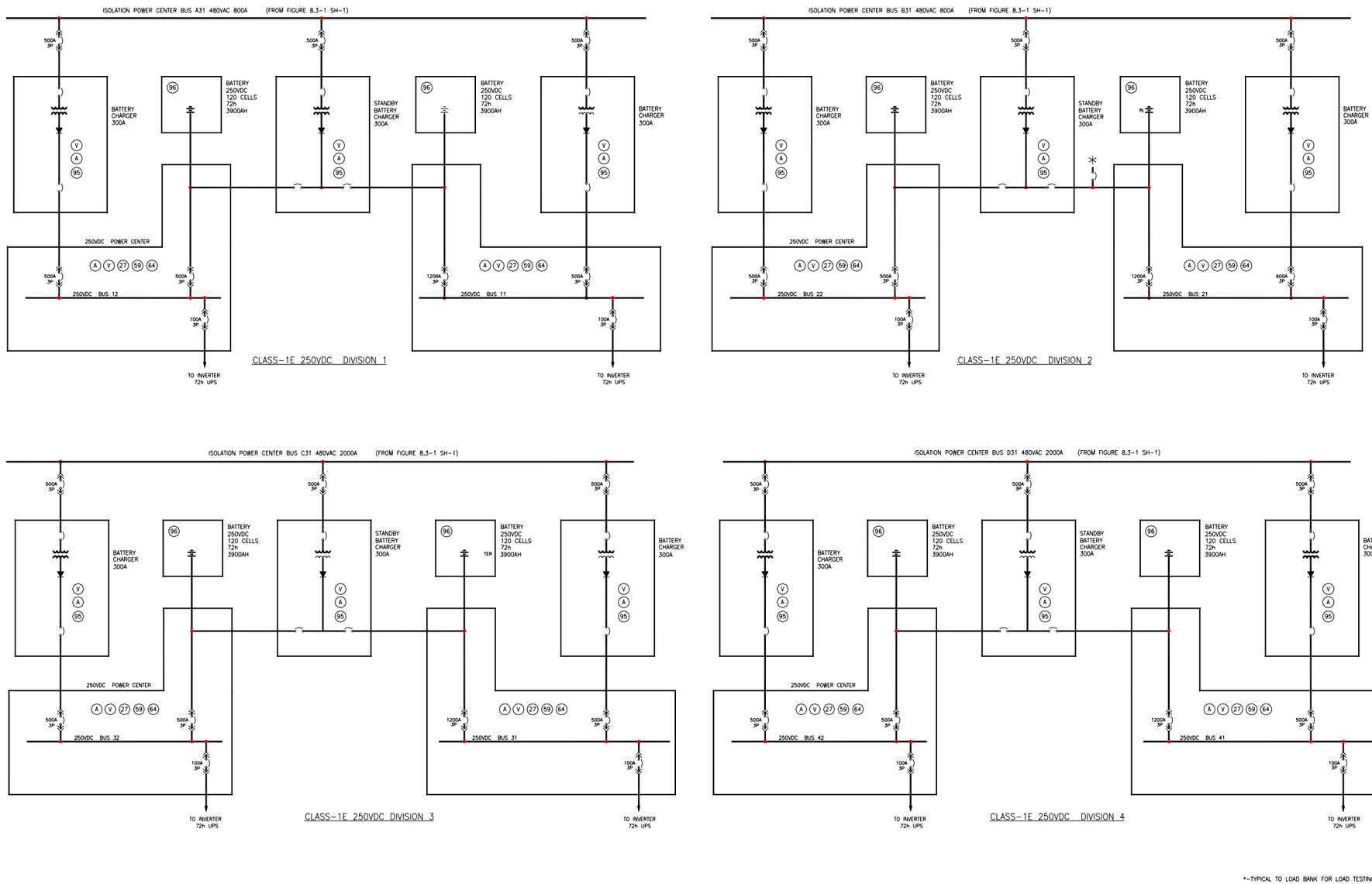

Figure 8.1-3. Direct Current Power Supply (Class 1E) - One Line Diagram

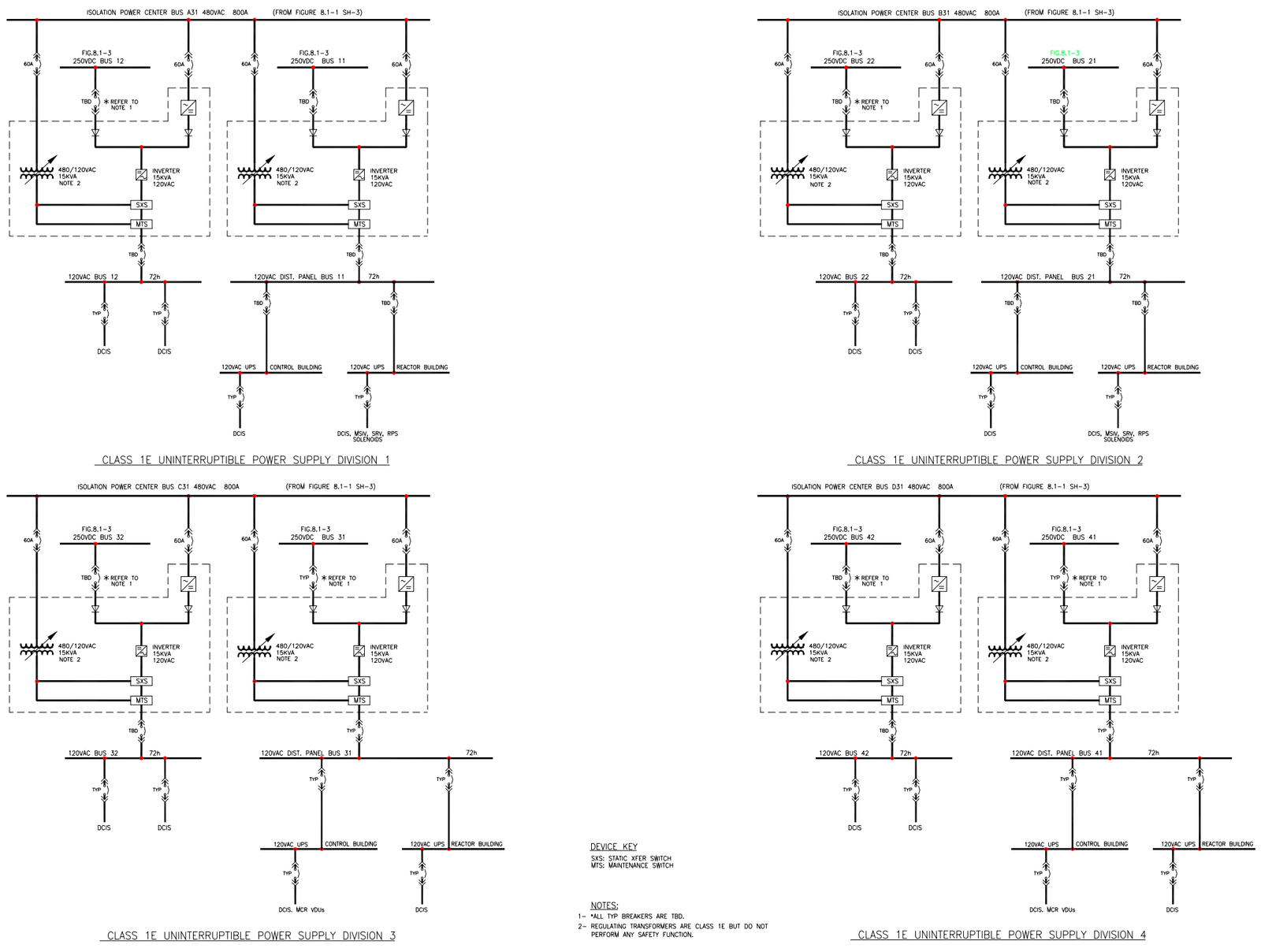

Figure 8.1-4. Uninterruptible AC Power Supply (Class 1E) - One Line Diagram

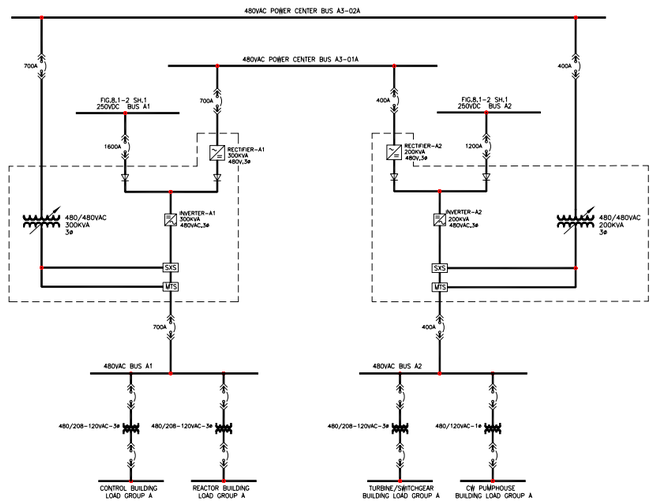

NON CLASS 1E UNINTERRUPTIBLE POWER SUPPLY

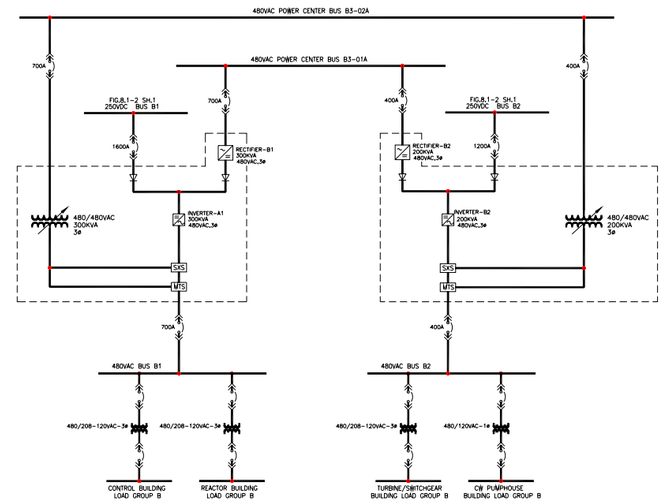

NON CLASS 1E UNINTERRUPTIBLE POWER SUPPLY

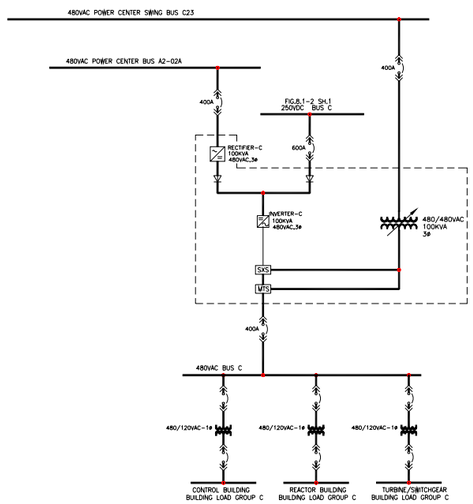

NON CLASS 1E UNINTERRUPTIBLE POWER SUPPLY

Figure 8.1-5. Uninterruptible AC Power Supply (Non-Class 1E) - One Line Diagram
Sh 1 of 2

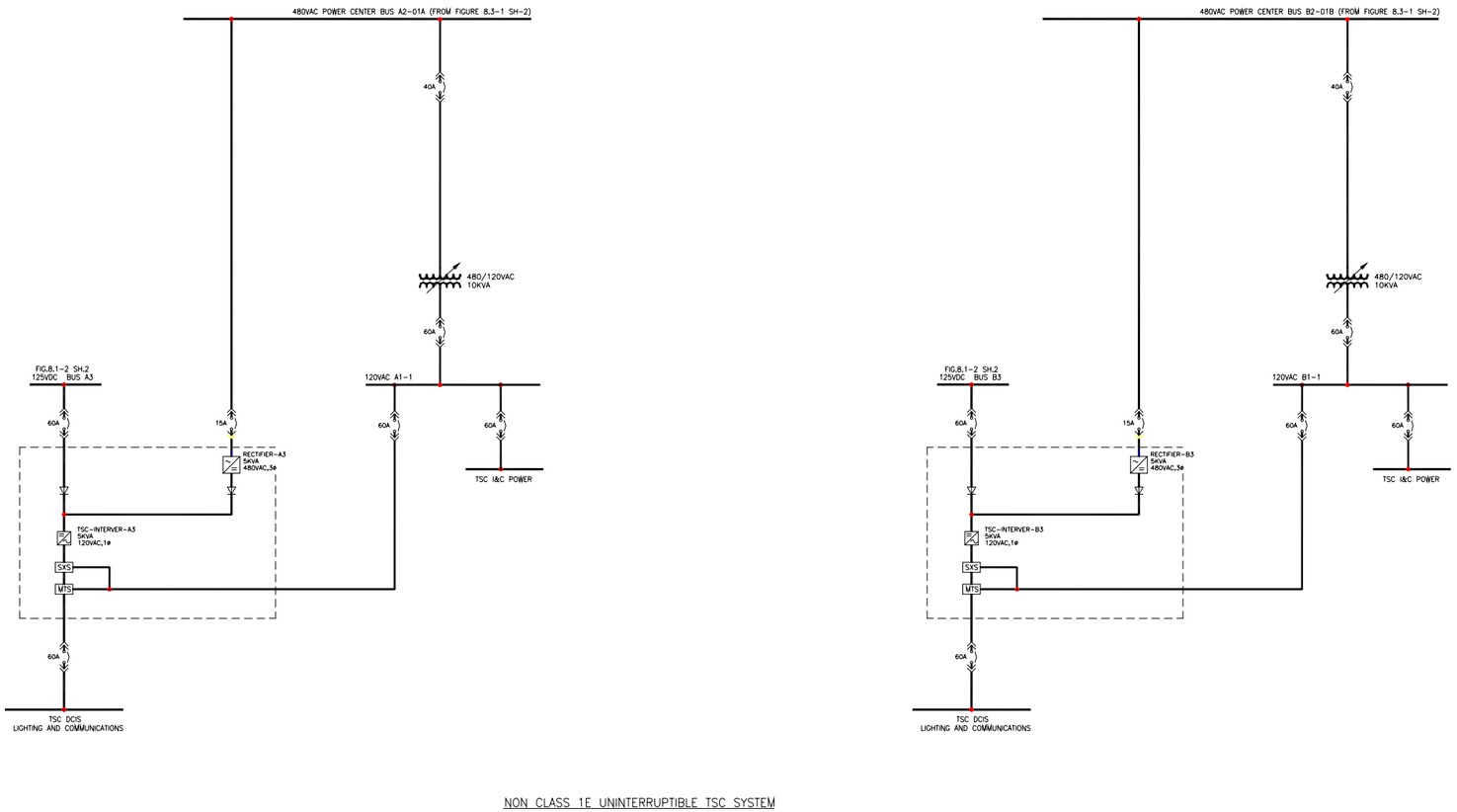

Figure 8.1-5. Uninterruptible AC Power Supply (Non-Class 1E) - One Line Diagram
Sh 2 of 2

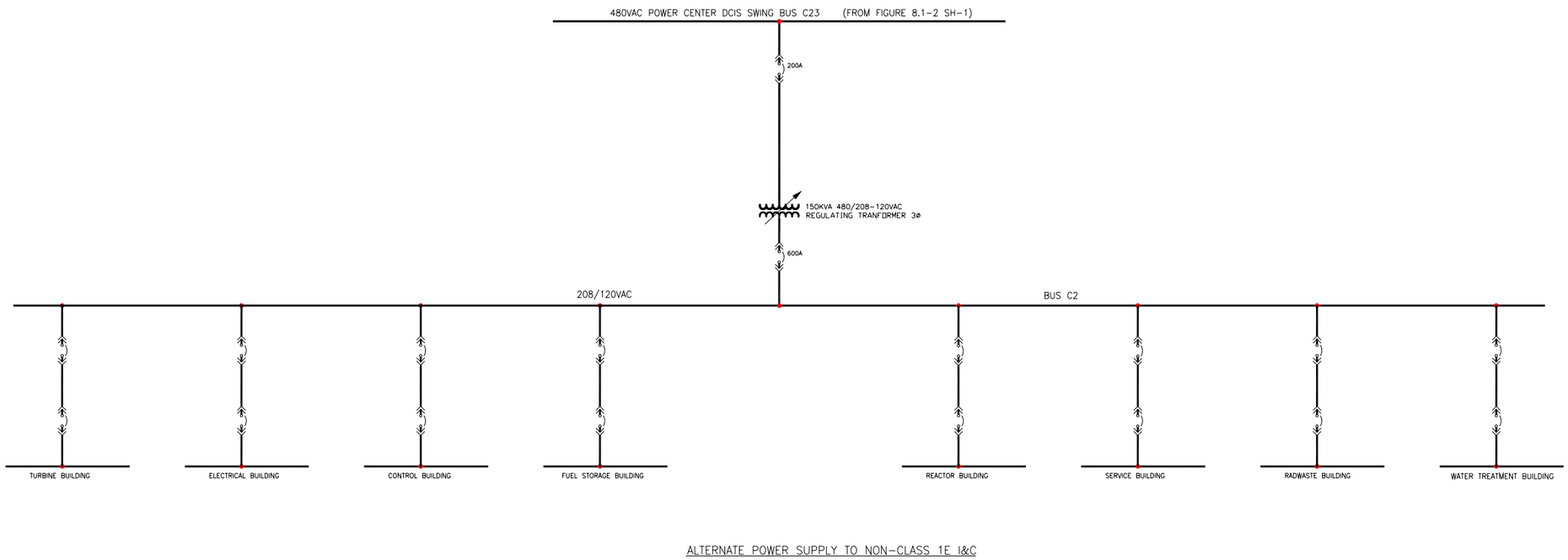

Figure 8.1-6. Instrumentation and Control Power Supply System - One Line Diagram
Sh 1 of 1

8.2 OFFSITE POWER SYSTEMS

8.2.1 Description

8.2.1.1 Transmission System

The transmission system design bases requirements are contained in Subsection 8.2.3.

8.2.1.2 Offsite Power System

The offsite power system is a nonsafety-related system. Power is supplied to the plant from the switchyard connected to the transmission grid offsite power sources:

The "Normal Preferred" power source is supplied through the main transformers to the unit auxiliary transformers. The Main Transformers supply power to the unit auxiliary transformer (UAT) circuit breakers and receive power from the Main Generator through the Main Generator Circuit Breaker, as shown in Figure 8.1-1 The normal preferred power source serves the total plant load consisting of nonsafety-related loads, plant investment protection (PIP) nonsafety-related loads and safety-related loads. The Normal Preferred Power interface with the Offsite Power System occurs at high voltage terminals of the Main Transformers.

The "Alternate Preferred" power source is supplied through the reserve auxiliary transformers. The alternate preferred power source, as an alternate power source to the plant load, may be utilized in the event of unavailability of the normal preferred power source. The Alternate Preferred Power interface between offsite and onsite power occurs at the MODs prior to the high voltage terminals of the reserve auxiliary transformers (RATs). The voltage and frequency at the high side of the RATs are site specific with the actual values to be determined in the COL application. The reserve offsite power circuit is site specific and is separated from offsite power through no-load disconnect switches. The motor operated disconnect (MOD) feeding a RAT will auto-open after the switchyard alternate power supply breaker opens. Fully OPEN indication of the MOD for the faulted RAT will allow the switchyard breaker to be re-closed to the unaffected RAT.

The main power transformers are within the onsite power system and consist of three single-phase transformers and an installed spare.

The UATs consist of two, three-phase transformers. The UATs provide normal preferred power to each of the plant's two power generation load groups (refer to Subsection 8.3.1.1).

The RATs consist of two three-phase transformers fed from the second offsite source. The RATs provide alternate preferred power to the plant's two power generation load groups (the UATs provide normal preferred power to each of the plant's two power generation load groups (refer to Subsection 8.3.1.1).

The RATs are of the same size as the UATs, and each function as a backup power source in the event of a UAT failure.

The main power transformers, UATs and RATs, are designed and constructed to withstand the mechanical and thermal stresses produced by external short circuits, and meet the corresponding requirements of IEEE Standard C57.12.00 (Reference 8.2-1).

An onsite generator circuit breaker is provided with capability of interrupting the maximum available fault current. The generator circuit breaker is sized and designed in accordance with IEEE Standard C37.06 (Reference 8.2-2). The generator circuit breaker allows the generator to be taken off line and the main grid to be utilized as an immediate access power source for the onsite AC power system (i.e., power is fed from the offsite source through the main transformers to the UATs). Start-up power is normally provided through the UATs from the offsite power system.

Unit synchronization is normally through the main generator circuit breaker with a second offsite switchyard breaker supplying the Normal Preferred Power Source that is also designed for unit synchronization during island mode operation. Synchrocheck relays are used to ensure proper synchronization of the unit to the offsite system. Dual trip coils and redundant protective relaying schemes are provided for the main generator circuit breaker, and control power is supplied from redundant load groups of nonsafety-related 125 VDC power.

The onsite isolated phase bus duct provides the electrical interconnection between the main generator output terminals, the main generator breaker, the UAT input isolation breakers, the low voltage terminals of the main transformers and the high voltage terminals of the UATs.

Onsite non-segregated phase bus duct provide for the electrical interconnection between the RATs and the 13.8 kV and 6.9 kV unit auxiliary switchgear buses and are physically separated from the bus ducts provided for the interconnection of the UATs and the unit auxiliary switchgear buses to minimize the likelihood of simultaneous failure.

Disconnect links are provided for the main transformers so that a failed transformer may be taken out of service and the installed spare connected.

Input isolation breakers and disconnect links are provided for the UATs so that a failed transformer may be taken out of service. The installed RATs, connected to the alternative preferred sources, automatically transfers loads at the 13.8 kV and 6.9 kV switchgears on loss of power from the UATs. Thus, a RAT can replace the failed UAT.

Disconnect links in addition to MODs are provided for the RATs so that a failed transformer may be taken out of service. Each of the connected RATs has the capability to replace one UAT.

There will always be a normal or an alternate preferred power path to the safety-related electrical system, even if the plant is operating with a RAT or UAT out of service.

8.2.1.2.1 Switchyard

The switchyard design bases requirements are contained in Subsection 8.1.5.1 and Subsection 8.2.3.

All relay schemes used for the protection of the offsite power circuits and transformers are redundant and include backup protection features.

All breakers are equipped with dual trip coils. Each redundant protection circuit, which supplies a trip signal, is powered from its redundant load group of DC power and connected to a separate trip coil. All equipment and cabling associated with each redundant system is physically separated from its redundant counterpart.

The DC power needed to operate redundant protection and control equipment of the offsite power system is supplied from two separate, dedicated switchyard batteries, each with a battery charger fed from separate AC bus. Each battery is capable of supplying the DC power required for normal operation of the switching station's equipment.

Two redundant low voltage AC power supply systems supply AC power to the switching station's auxiliary loads. Each system is supplied from separate, independent AC buses. The capacity of each system is adequate to meet the AC power requirements for normal operation of the switching station's equipment.

The site switchyard will be described in the COL application.

8.2.2 Analysis

In accordance with the NRC Standard Review Plan (NUREG-0800), Table 8-1 and Section 8.2, the preferred offsite power distribution system is designed consistent with the following criteria, so far as it applies to non-Class 1E equipment. Any exceptions or clarifications are so noted.

Applicable Criteria:

- GDC 5, "Sharing of Structures, Systems and Components," and Regulatory Guide 1.81, "Shared Emergency and Shutdown Electric Systems for Multi-Unit Nuclear Power Plants" – The ESBWR Reference Plant is designed as a single-unit plant. Therefore, GDC 5 and Regulatory Guide 1.81 are not applicable.
- GDC 17, "Electric Power Systems" – The ESBWR Reference Plant design does not require an offsite or diesel-generated AC source of power for 72 hours after an abnormal event. Safety-related DC power sources are provided to support passive core cooling and containment safety-related functions.
- GDC 18, "Inspection and Testing of Electric Power Systems" – Safety-related DC power sources are provided to support passive core cooling and containment safety-related functions. No offsite or diesel-generator-derived AC power is required for 72 hours after an abnormal event.
- 10 CFR 50.63, "Loss of All Alternating Current Power" – The ESBWR 10 CFR 50.2 *Design Bases* do not rely upon any offsite power system to achieve and maintain safe shutdown. See the Station Blackout evaluation in Subsection 15.5.5.
- Regulatory Guide 1.32, "Criteria for Safety-Related Electric Power Systems for Nuclear Power Plants" – The offsite power system is non-Class 1E. Therefore, Regulatory Guide 1.32 is not applicable to the ESBWR offsite power system.
- Regulatory Guide 1.47, "Bypassed and Inoperable Status Indication for Nuclear Power Plant Safety Systems," and BTP ICSB 21, "Supplemental Guidance for Bypass and Inoperable Status Indication for Engineered Safety Features Systems" – The offsite power system is non-Class 1E. Therefore, Regulatory Guide 1.47 and BTP ICSB 21 are not applicable to the ESBWR offsite power system.
- BTP ICSB 11, "Stability of Offsite Power Systems" – This topic is site specific, see Subsection 8.2.4.10 for COL information.

8.2.3 Design Bases Requirements

The offsite power system of the ESBWR Reference Plant is based on certain design bases 10 CFR 50.2 requirements. These design requirements follow:

- In case of failure of the normal preferred power supply circuit, the alternate preferred power supply circuit remains available.
- The normal preferred circuit and the alternate preferred circuit are electrically independent and are physically separated from each other. The normal preferred and the alternate preferred circuits are fed from separate transmission systems, each capable of supplying the shutdown loads. Both circuits share a common switchyard but adequate separation exists.
- The switching station to which the main offsite circuit is connected has two full capacity main buses arranged such that:
  - Any incoming or outgoing transmission line can be switched without affecting another line.
  - Any circuit breaker can be isolated for maintenance without interrupting service to any circuit.
  - Faults of a single main bus are isolated without interrupting service to any circuit.
- The main, unit auxiliary and RATs meet the requirements of IEEE Standard C57.12.00 (Reference 8.2-1).
- Circuit breakers are sized and designed in accordance with IEEE Standard C37.06 (Reference 8.2-2). Disconnecting switches are sized and designed in accordance with IEEE Standard C37.32 (Reference 8.2-3).
- Three hour fire rated concrete barriers are used between the RATs, the UATs and the main transformers and spare main transformer as described in Subsection 9A.4.7 Yard, and includes containment/collection of transformer oil.
- Cables associated with the normal preferred and alternate preferred circuits are routed separately and in separate raceways apart from each other and onsite power system cables. However, they may share a common underground duct bank as indicated below.
- Associated control, instrumentation and miscellaneous power cables of the reserve circuit, if located underground in the same duct bank as cables associated with the normal preferred circuit between the switchyard and the power block, are routed in separate raceways.
- Cables associated with the alternate preferred circuit are routed in trenches within the switchyard separate from cables associated with the normal preferred circuit.
- A transmission system reliability and stability review of the site specific configuration to which the plant is connected will be performed to determine the reliability of the offsite power system and verify that it is consistent with the probability risk analysis of Chapter 19 (see Subsection 8.2.4.10).

- Provisions are made to auto-disconnect the high side of a failed UAT through protective relaying to UAT input circuit breakers and RAT MODs.
- A station ground grid is provided consisting of a ground mat below grade at the switchyard that is connected to the foundation embedded loop grounding system provided for the entire power block and associated buildings (see Subsection 8A.1.1 for the description of the electrical grounding and surge protection system).

8.2.4 COL Unit Specific Information

8.2.4.1 Transmission System Description

The transmission system is addressed in Table 8.1-2 in the COL application.

8.2.4.2 Switchyard Description

The switchyard is site-specific and will be addressed in Subsection 8.2.1.2.1 in the COL application.

8.2.4.3 Normal Preferred Power

This COL item is addressed in Subsection 8.2.1.2.

8.2.4.4 Alternate Preferred Power

This COL item is addressed in Subsection 8.2.1.2.

8.2.4.5 Unit Synchronization

This COL item is addressed in Subsection 8.2.1.2.

8.2.4.6 Protective Relaying

This COL item is addressed in Subsection 8.2.1.2.1.

8.2.4.7 Switchyard DC Power

This COL item is addressed in Subsection 8.2.1.2.1.

8.2.4.8 Switchyard AC Power

This COL item is addressed in Subsection 8.2.1.2.1.

8.2.4.9 Transformer Protection

This COL item is addressed in Subsection 8.2.1.2.

8.2.4.10 Stability and Reliability of the Offsite Transmission Power Systems

The Reliability and Stability Study, will be provided in the COL application as a supporting document to the COLA.

8.2.4.11 Generator Circuit Breaker

The generator circuit breaker meets the requirements of Appendix A to Standard Review Plan (SRP) Section 8.2, and is site-specific equipment.

8.2.4.12 Degraded Voltage

The degraded voltage protection criteria is described in Subsection 8.3.4.4.

8.2.4.13 Interface Requirements

Interface requirements are addressed in Subsection 8.2.3 (Design Basis Requirements).

8.2.5 References

8.2-1 IEEE Standard C57.12.00, "General Requirements for Liquid-Immersed Distribution, Power, and Regulating Transformers."

8.2-2 IEEE Standard C37.06, "AC High-Voltage Circuit Breakers Rated on a Symmetrical Current Basis."

8.2-3 IEEE Standard C37.32, "High-Voltage Air Disconnect Switches Interrupter Switches, Fault Initiating Switches, Grounding Switches, Bus Supports and Accessories Control Voltage Ranges-Schedules of Preferred Ratings, Construction Guidelines and Specifications."

8.3 ONSITE POWER SYSTEMS

8.3.1 AC Power Systems

8.3.1.1 Description

The onsite AC power system consists of a 60 Hz standby onsite AC power supply system and various pieces of electrical distribution equipment. Figure 8.1-1 shows the plant main one line diagram. The onsite power distribution system has nominal bus voltage ratings of 13.8 kV, 6.9 kV, 480V, 208/120V and 240/120V. Throughout the discussion and on all the design drawings the equipment utilization voltages are designated as 13.8 kV, 6.9 kV, 480V, 208/120V and 240/120V.

The onsite AC power system is configured into two separate power load groups. Each power load group is fed by a separate UAT, each with a redundant RAT for backup, and consists of two types of buses:

- **Power Generation (PG) nonsafety-related buses** - are those buses that are not directly backed by standby onsite AC power sources and have connections to the main or second offsite source through the unit auxiliary transformers (UATs) or reserve auxiliary transformers (RATs), respectively. The PG nonsafety-related buses are the 13.8 kV unit auxiliary switchgear and associated lower voltage load buses.
- **Plant Investment Protection (PIP) nonsafety-related buses** - are those buses that are backed by the Standby Onsite AC Power Supply System and have connections to the normal preferred and alternate preferred offsite sources through the unit and auxiliary reserve transformers, respectively. Backfeed to the Standby On-site AC power source is prevented by reverse power relaying. The PIP nonsafety-related buses are the 6.9 kV PIP buses and associated lower voltage load buses exclusive of the safety-related buses.

The PG nonsafety-related buses feed nonsafety-related loads that are required exclusively for unit operation and are normally powered from the normal preferred power source through the UATs. These buses are also capable of being powered from the alternate preferred power source (RATs), through a fast bus transfer, in the event that the normal preferred power source is unavailable. On restoration of UAT power, a manually selected fast bus transfer may be performed.

The PIP nonsafety-related buses feed nonsafety-related loads that, because of specific functions, are generally required to remain operational at all times or when the unit is shut down. In addition, the PIP nonsafety-related buses supply AC power to the safety-related buses. The PIP nonsafety-related buses are backed up by a separate standby on-site AC power supply system in each power load group. These buses are also capable of being powered from the alternate preferred power source (RATs), through a fast bus transfer, in the event that the normal preferred power source is unavailable. On restoration of UAT power, a manually selected fast bus transfer may be performed..

8.3.1.1.1 Medium Voltage AC Power Distribution System

The medium voltage AC power distribution system consists of the onsite electric power distribution circuits that operate at 13.8 kV and 6.9 kV. The system begins at the connection of

the input terminals of the 13.8 kV and 6.9 kV feeder circuit breakers that are supplied power from the UATs and RATs, and at the output terminals of the plant onsite standby AC power sources. The system ends at the input terminals of medium voltage loads and at the high voltage terminals of the low voltage power center transformers. The system includes switchgear buses and circuit breakers as well as their associated local instrumentation, controls, and protective relays. It also includes cables interconnecting the switchgear buses to their sources and loads.

Power is supplied from the UATs and RATs at 13.8 kV and 6.9 kV to the PG and PIP buses. There are four PG buses, each being powered from one of the two UATs, or if the UATs are unavailable, from one of the two RATs. The source breakers for each PG bus are electrically interlocked to prevent simultaneous connection of UATs and RATs to the PG buses.

Four 6.9 kV PIP buses (two for PIP-A and two for PIP-B) provide power for the non-Class 1E PIP loads. PIP-A and PIP-B buses are each backed by a separate standby onsite AC power supply source. Each PIP bus is normally powered from the normal preferred power source through the UAT of the same load group. Additionally, in the event of unavailability of the normal preferred power source, each PIP bus has connections to and can be powered from the alternate preferred power source through the RAT of the same load group. The source breakers of the normal and alternate preferred power sources are electrically interlocked to prevent paralleling of the two power supplies.

Standby AC power for the PIP non-Class 1E buses is supplied by standby diesel-generators at 6.9 kV and distributed by the non-Class 1E power distribution system. The 6.9 kV PIP buses are automatically transferred to the standby diesel-generators when the normal and alternate preferred power supplies to these buses are lost.

Each 13.8 kV and 6.9 kV bus has a safety grounding circuit breaker, not shown on the one line diagram, designed to protect personnel during maintenance operations. See Subsection 8.3.4.9.

8.3.1.1.2 Low Voltage AC Power Distribution System

The low voltage AC power distribution system consists of the onsite electric power distribution circuits that operate at 480V through 120V, exclusive of plant lighting. For a discussion of the plant 120V systems refer to Subsections 8.3.1.1.3 and 8.3.1.1.4. The low voltage system begins at the low voltage terminals of the power center transformers . The system ends at the input terminals of loads (motors, heaters, etc.), at the input terminals of the battery chargers, and at the primary terminals of lighting transformers.

The low voltage AC power distribution system includes power centers, motor control centers (MCCs), distribution transformers, and distribution panels as well as the associated over current protective devices, protective relaying, and local instrumentation and controls. It also includes all cables interconnecting the buses to their sources and loads.

Power is supplied from the power center transformers to the 480V power centers. The power centers supply power to motor loads of approximately 100 kW through 249 kW, and to the 480V MCCs. The power centers are of the single-fed or double-ended type depending on the redundancy requirements of the loads powered by a given power center. The power supplies to the double-ended power center transformers of the PIP nonsafety-related buses are supplied from different buses. Each double-ended power center is normally powered by its normal power source through its normal source main breaker, with the alternate source main breaker open. The

power center normal and alternate source main breakers are electrically interlocked to prevent simultaneous powering of the power center by normal and alternate sources.

Isolation Power Centers

The isolation power centers are powered from the PIP nonsafety-related buses, which are backed up by the standby diesel-generators. There are four isolation power centers, one each for Divisions 1, 2, 3 and 4. Each isolation power center is double-ended and can be powered from either of the PIP load group buses. The normal and alternate source main breakers of each isolation power center are electrically interlocked to prevent powering the isolation power center from the normal and alternate sources simultaneously. The isolation power centers are shown in Figure 8.3-1.

The isolation power centers supply power to safety-related loads of their respective division. These loads consist of the Class 1E battery chargers, Class 1E inverters and Class 1E regulating transformers as discussed in Subsection 8.3.2, 8.3.1.1.3, and 8.3.1.1.4 respectively. In addition, there is no Class 1E lighting that operates directly from the 480 VAC in the ESBWR design. The lighting system is discussed in Chapter 9.

Isolation power centers are protected against degraded voltage and frequency conditions by way of voltage and frequency relays installed in each isolation power center and also in the 6.9 kV PIP buses as a defense in depth feature. Refer to Subsection 8.3.4.4.

In addition, each isolation power center has provisions for connecting a transportable AC generator via plug-in connections, capable of supplying Class 1E loads while recharging the Class 1E batteries. The emergency power main circuit breaker provided in connection with these provisions is normally locked open. An interlock is provided so that only one main breaker may be closed at any time. The plug-in connections are located in a locked box. The position of the emergency main breaker and the doors to the plug-in connections are alarmed in the control room when not in the normal position. All keys are under administrative control.

Motor Control Centers

MCCs supply 99 kW and smaller motors, control power transformers, process heaters, motor-operated valves and other small electrically operated auxiliaries, including 480 to 208/120V and 480 to 240/120V transformers. MCCs are assigned to the same load group as the power center that supplies their power.

8.3.1.1.3 Uninterruptible AC Power Supply System

Figure 8.1-4 shows the overall Class 1E Uninterruptible AC Power Supply (UPS) system. The Class 1E UPS for each of the four divisions is supplied from a 480V isolation power center in the same division. The isolation power centers are connected to PIP nonsafety-related buses, which are backed by standby diesel-generators. Divisions I, II, III and IV each have two rectifiers, two batteries and two inverters. Each rectifier receives 480 VAC normal power from the isolation power center of that division and converts it to 250VDC. The 480VAC/250VDC rectifier and a Class 1E 72-hour battery of that division supply 250 VDC emergency power through diodes to a common inverter with an output of 120 VAC single phase.

Power is distributed to the individual loads from associated 120VAC distribution panels, which supply power to the Reactor Building and the Control Building.

The plant design and circuit layout of the UPS provide physical separation of the equipment, cabling, and instrumentation essential to plant safety. Equipment of each division of the Class 1E UPS distribution system is located in an area separated physically from the other divisions. No provisions exist for the interconnection of the Class 1E UPS buses of one division with those of another division or non-division. All components of Class 1E AC systems are housed in either Seismic Category I (or Seismic Category II Turbine Building for RPS monitoring and reactor feedpump trip circuit breakers) structures.

Refer to Subsection 8.3.1.1.5 for a discussion of physical separation and independence.

Class 1E Uninterruptible AC Power Supply System

Four divisions of Class 1E UPS provide 120VAC power for the Safety System Logic and Control (SSLC), the Reactor Protection System (RPS), and other safety-related loads requiring uninterruptible power.

The four divisions of Class 1E UPS are shown in Figure 8.1-4. The Class 1E UPS buses are each supplied independently from their divisional Class 1E inverters, which, in turn, are powered from one of the independent and redundant DC buses of the same division and from their isolation power center. The divisional DC bus is powered through a battery charger connected to its divisional isolation power center, and backed by the division's Class 1E batteries. A static bypass switch is provided for transferring Class 1E UPS AC load from the Class 1E inverter output to a direct AC feed from the divisional isolation power center through a regulating transformer should an inverter failure occur. A manual bypass switch is provided for transferring Class 1E UPS AC loads from the Class 1E inverter output to a direct AC feed from the divisional isolation power center through a regulating transformer in order to perform inverter maintenance without removing Class 1E UPS AC loads from service.

Routine maintenance can be conducted on equipment associated with the Class 1E UPS power supply. Inverters and solid state switches can be inspected, serviced and tested channel by channel without tripping the RPS logic.

UPS Components - Each of the four Class 1E divisions includes the following Class 1E UPS components:

- Two solid-state UPS inverters, to convert 250 VDC and 480 VAC power to 120 VAC power;
- Two solid-state transfer switches to sense inverter failure and automatically switch to alternate isolated non-safety 120VAC power;
- Two manual bypass switches for inverter maintenance;
- Power distribution panel boards to provide power to all Class 1E loads requiring uninterruptible 120VAC power; and
- Circuits between Class 1E UPS components and from Class 1E UPS components to Class 1E UPS loads.

Operating Configuration - The four divisions of Class 1E UPS operate independently, providing power to all Class 1E loads within their division requiring uninterruptible AC power. The normal power source for each division’s inverter is the same division’s isolation power

center, which provides AC power to the inverter. Transfer from the 480VAC power supply to the 250VDC bus is done automatically and passively in case of loss of the normal power source. Transfer from the inverter to the alternate AC source (provided via the division's isolation power center through a regulating transformer) is done automatically in case of inverter failure. An alarm is provided in the control room for any of the alternate operating lineups.

Non-Class 1E Uninterruptible Power Supply System

The non-Class 1E UPS provides reliable, uninterruptible AC power for onsafety-related equipment needed for continuity of power plant operation. UPS loads are divided into three load groups. Each UPS load group includes a solid-state inverter, solid-state transfer switch, manual transfer switch, and distribution transformers with associated distribution panels (Figure 8.1-5 Sh 1 of 2).

The normal power supply for each of the two load groups of the non-Class 1E UPS is through a non-Class 1E 480 VAC power center, with backup power provided by the standby on-site AC power supply system PIP bus of the same load group. In case of failure of the 480 VAC power supply, transfer from the 480 VAC power center to the non-Class 1E 250 VDC bus is automatic and passive. Transfer from the normal AC power source through the inverter to the alternate AC power source occurs by automatic static transfer should an inverter failure occur. An alarm in the main control room sets off when an alternate lineup of the non-Class 1E UPS occurs.

The 480VAC power centers, which provide power to the non-Class 1E battery chargers, are connected to PIP nonsafety-related buses that are backed up by standby diesel-generators.

A third non-Class 1E UPS is provided to supply the non-Class 1E DCIS loads. This load group's non-Class 1E UPS is normally powered from a 480 VAC double-ended power center, which can receive power from either of the two power load groups. The power center normal and alternate source main breakers are electrically interlocked to prevent the normal and alternate sources from simultaneously providing power to the power center. Additionally, standby onsite AC power from either of the two load groups provides backup power should a failure of the normal and alternate supplies occur. Emergency power of the same load group from 250 VDC batteries is provided should loss of normal, alternate, and standby onsite AC power sources occur.

Two dedicated non-Class 1E UPS (Figure 8.1-5 Sh 2 of 2) are provided for the Technical Support Center (TSC), also in a two-load group configuration. Power for each TSC non-Class 1E UPS is normally supplied from a 480 VAC power center in the same load group, with standby on-site AC power of the same load group providing backup power should a failure of the normal supply occur. Emergency power of the same load group from 125 VDC batteries is provided should loss of normal and standby onsite AC power sources occur.

8.3.1.1.4 Instrumentation and Control Power Supply System

Figure 8.1-6 shows the overall Instrumentation and Control Power Supply System.

Regulating step-down transformers provide 208/120VAC power to those loads not requiring uninterruptible power. The non-vital AC control power buses are shown in Figure 8.1-6. The Instrumentation and Control buses are each supplied independently from separate 480VAC power centers.

Instrumentation and control buses are supplied from the DCIS SWING BUS power center to supply non-Class 1E I&C loads. This system supplies AC loads of the Non-Essential Distributed Control and Information System (NE-DCIS), solenoid valves and other I&C loads.

The Instrumentation and Control Power Supply System does not perform any safety-related function

8.3.1.1.5 Class 1E Electric Equipment Considerations

The following guidelines are utilized for Class 1E equipment.

Physical Separation and Independence:

- Electrical equipment is separated in accordance with IEEE Standard 384, Regulatory Guide 1.75 and General Design Criterion 17.
- To meet the provisions of Policy Issue SECY-89-013, which relates to fire tolerance, 3 hour rated fire barriers are provided between areas of different safety-related divisions throughout the plant except in the primary containment and the control room complex. Refer to Subsection 9.5.1 for a description of how the provisions of the policy issue are met.
- The overall design objective is to locate the divisional equipment and its associated control, instrumentation, electrical supporting systems, and interconnecting cabling such that separation is maintained between all divisions. Redundant divisions of electric equipment and cabling are located in separate rooms or fire areas wherever possible.
- Electric equipment and wiring for the Class 1E systems which are segregated into separate divisions are separated so that no design basis event is capable of disabling more than one division of any engineered safety feature (ESF) total function.
- The safety-related electrical equipment (MCCs, batteries, distribution panels, etc.) are located in separate seismic Category I rooms in the reactor building to ensure electrical and physical separation among the divisions. Separation is provided between divisional cables being routed between various equipment rooms, the main control room, containment, and other processing areas. Separation of safety-related equipment in these areas is achieved by separate safety-related structures, barriers, or a combination thereof. The equipment is located to facilitate divisional separation of cable trays and to provide access to electrical penetration assemblies. Exceptions to this separation objective are identified and analyzed as to equivalency and acceptability in the fire hazard analysis (see Section 9A.6 Special Cases). For separation requirements relating to the main control room and relay panels, refer to “Main Control Room and Relay Panels” in Subsection 8.3.1.4.
- For separation requirements relating to the wiring and components within control, relay, and instrument panels/racks, refer to “Control, Relay, and Instrument Panels/Racks” in Subsection 8.3.1.4
- For additional separation requirements relating to RPS and ESF systems refer to “System Separation Requirements” in Subsection 8.3.1.4. Containment electrical penetrations are dispersed around the periphery of the containment and are physically separated in accordance with the requirements of Section 6.5 of IEEE 384. Each penetration carries

circuits of a single voltage class and division. Penetrations serving safety-related loads are not used for nonsafety-related circuits and are only used for circuits belonging to the same safety-related division.

- Wiring for all Class 1E equipment indicating lights is an integral part of the Class 1E cables used for control of the same equipment and are considered to be Class 1E circuits.
- Associated cables are treated as Class 1E circuits and routed in their corresponding divisional raceways. Separation requirements are the same as for Class 1E circuits. Associated cables are identified and justified per Subsection 8.3.4.6.

Class 1E Electric Equipment Design Bases and Criteria:

- Plant design specifications for electrical equipment require such equipment be capable of continuous operation with equipment terminal voltage fluctuations of plus or minus 10% of rated voltage.
- Power sources, distribution systems, and branch circuits are designed to maintain voltage and frequency within acceptable limits.
- Interrupting capacity of motor control centers and distribution panels is at least equal to the maximum available fault current to which it is exposed under all modes of operation. Circuit breaker and applications are in accordance with ANSI Standards. Refer to Subsection 8.3.4.1 for circuit breaker interruption capacity and to Subsection 8.3.4.2 for circuit breaker procurement.

Testing:

The design provides for periodically testing the chain of system elements from sensing devices through actuated equipment to ensure that Class 1E equipment is functioning in accordance with design requirements, and to ensure that the requirements of Regulatory Guide 1.118 and IEEE 338 are met.

8.3.1.1.6 Circuit Protection

Philosophy of Protection

Simplicity of load grouping facilitates the use of conventional, protective relaying practices for isolation of faults. Emphasis has been placed on preserving function and limiting loss of Class 1E equipment function in situations of power loss or equipment failure.

Protective relay schemes and direct acting trip devices are provided throughout the on-site power system to:

- Isolate faulted equipment and/or circuits from the power system;
- Prevent damage to equipment;
- Protect personnel;
- Minimize system disturbances; and
- Maintain continuity of the power supply.

Grounding

The medium voltage (13.8 kV and 6.9 kV) system is low resistance grounded except that each standby on-site AC power source is high resistance grounded to maximize availability.

The low voltage (480V and lower) AC system is solidly grounded.

Bus Protection

Bus protection for non-Class 1E and Class 1E are as follows:

- The 13.8 kV and 6.9 kV bus incoming circuits have inverse-time overload, ground fault, bus differential and under voltage protection;
- The 13.8 kV and 6.9 kV feeders for power centers have instantaneous, inverse-time overload and ground fault protection;
- The 13.8 kV and 6.9 kV motor feeders have instantaneous, inverse-time overload and ground fault protection;
- The 480V feeders for MCC buses have long-time and short-time overload and ground fault protection;
- The 480V Isolation Power Center buses have inverse-time overload and ground fault protection. In addition, loss of voltage, degraded voltage and under-frequency relay protective functions are provided which isolate these buses from the non-Class 1E system upon degraded source conditions; and
- The 480V MCC loads (non-safety only, there are no safety-related 480VAC MCC loads) have instantaneous and inverse time overload protection.

Protection Requirements

When the standby onsite AC power sources are called upon to operate, all the protective relay functions identified in “Protection Systems” (Subsection 8.3.1.1.8) are available.

8.3.1.1.7 Load Shedding and Sequencing on PIP Buses

Load shedding, bus transfer and sequencing on the 6.9 kV PIP buses is initiated on loss of bus voltage. Only loss of preferred power (LOPP) signals are used to trip the loads.

PIP bus ready-to-load signals are generated by the protective relaying logic and control system for the electric power distribution system.

Diesel Generators are sized conservatively to accommodate expected loads to be served by them with an acceptable starting sequence. Details of loads and starting sequences are addressed in Subsection 8.3.4.3.

LOPP

The 6.9 kV PIP buses are normally energized from the normal preferred power supply. When the normal preferred power supply is lost, a fast transfer from the normal preferred power supply to the alternative preferred power supply is made.

Should the Normal and Alternate Preferred Power Supplies protective relaying sense loss of power the incoming PIP Buses feeder breakers will trip. Large pump motor breakers are tripped

and low voltage motor starters are opened due to under voltage. A standard dead bus transfer is automatically initiated to the standby on-site AC power source. The signal starts the standby on-site AC power source, and closes the standby power supply breaker after the standby on-site AC power source has returned a ready to load signal (i.e., voltage and frequency are within normal limits and no lockout exists, and the normal and alternate preferred supply breakers are open). After bus voltage has been reestablished, large motor loads are sequence started as required. Transfer back to the preferred power source is a synchronized closure of the feeder breaker by manual action to the selected source.

Loss-of-Coolant Accident (LOCA)

When a LOCA occurs without a LOPP there is no effect on the electrical distribution system. The plant remains on either source of preferred power and the onsite diesel-generator is started and runs unloaded in standby. The load shed and sequence timers are not activated.

LOPP Following LOCA

If the bus voltage (normal and alternate preferred power) is lost during post-accident operation, transfer to the standby onsite AC power source occurs as described in LOPP, above, except the standby diesel-generator will have started and be in standby, as described in LOCA, above.

LOCA Following LOPP

If a LOCA occurs following loss of both the normal and alternate preferred power supplies, the standby onsite AC power source should have already started from low bus voltage. Automatic load sequencing shall already have started as described in LOPP, above.

LOCA When the Standby Onsite AC Power Source is parallel to the Power Source During Testing

If a LOCA occurs when the standby diesel-generator is paralleled with either the normal preferred power or the alternate preferred power source, the standby diesel-generator automatically disconnects from the 6.9 kV PIP bus regardless of whether the test is being conducted from the local control panel or the main control room.

LOPP During Standby Onsite Power Source Paralleling Test

If the normal preferred power supply is used for load testing the standby onsite AC power source and is lost during the standby onsite AC power source paralleling test, the normal preferred power supply breaker and diesel generator breaker are automatically tripped and the standby onsite AC power source accepts loads per LOPP (above) to re-energize the selected bus loads. Transfer back to the normal or alternate preferred power supply may then be accomplished manually as described above in LOPP.

If the alternate preferred supply is used for load testing the standby onsite AC power source, and the alternate preferred source is lost, the alternate preferred power supply breaker and diesel-generator breaker are automatically tripped and the standby onsite AC power source accepts loads per LOPP (above) to re-energize the selected bus loads. Transfer back to the normal or alternate preferred power supply may then be accomplished manually as described above in LOPP.

Restoration of OffSite Power

Upon restoration of offsite power, the 6.9 kV PIP buses can be transferred back to the offsite source by manual operation only, as described above in LOPP.

8.3.1.1.8 Standby Onsite AC Power Supply System

The standby AC power supply system is not within the ESBWR 10 CFR 50.2 Design Bases, is not relied upon to perform any safety-related function, and thus, is classified as nonsafety-related. It includes the standby onsite AC power sources and associated power supply circuits up to the source breakers of the onsite PIP buses to which they are connected.

The standby onsite AC power sources consist of the prime movers and AC generators, the auxiliary systems (starting, lubrication, cooling, fuel supply, excitation, etc.), the fuel storage and transfer systems and the associated local instrumentation and control systems.

The onsite standby AC power supply system is designed to supply AC power to the PIP nonsafety-related buses. The PIP buses provide power for various auxiliary and investment protection load groups, and isolation power centers when the normal and alternate preferred power supplies are not available. Operation of the system is not required to ensure nuclear safety.

Figure 8.1-1 shows the interconnections between the normal preferred power sources; alternate preferred power sources, and the standby onsite AC power sources.

Redundant (non-safety) Standby AC Power Supplies

Each standby power system load group, including the standby diesel-generator, its auxiliary systems, and the distribution of power through the 6.9 kV and lower voltage PIP buses to various auxiliary and investment protection load groups, is segregated and separated from the redundant load group. No interconnection is provided between the redundant standby power system load groups. Each standby on-site AC power source is operated independently of the other standby onsite AC power source and is connected to the utility power system by manual control only during testing or for bus transfer.

Ratings and Capability

Each of the standby onsite AC power sources is sized to serve its load and conforms to the following criteria:

- Each standby onsite AC power source is capable of starting, accelerating, and supplying its loads in the sequence necessary for plant investment protection.
- Each standby onsite AC power source is capable of starting, accelerating, and supplying its loads in their proper sequence without exceeding a 20% voltage drop at its output terminals.
- Each standby onsite AC power source is capable of starting, accelerating and running its largest motor at any time after the automatic loading sequence is completed, assuming that the motor had failed to start initially.

- Each standby onsite AC power source is capable of reaching full speed and voltage within 1 minute after receiving a signal to start, and is capable of being fully loaded within the time shown in Table 8.3-4.
- Each standby onsite AC power source has a short-term power rating greater than the sum of the loads of its load group of PIP loads and safety-related battery chargers that could be powered concurrently during hot standby, normal plant cool down, or plant outages.
- The diesel-generator design is compatible with the loading of the step load requirements in Table 8.3-4. The generator exciter and voltage regulator systems are capable of providing full voltage control during operating conditions including postulated fault conditions.
- Each standby onsite AC power source is provided with a backup mechanical-hydraulic portion of the governor designed to provide full speed control for startup and normal operation in case of failure of the electronic portion.

Refer to Subsection 8.3.4.3 for diesel-generator loads and sequencing.

Starting Circuits and Systems

The standby onsite AC power sources start automatically on loss of bus voltage or LOCA. Under-voltage relays will initiate the sequence used to start each standby onsite AC power source.

Upon loss of preferred AC power to the PIP buses, the transfer of these buses to the standby onsite AC power sources is automatic. After the breakers connecting the buses to the preferred power supply (or alternate preferred power supply, depending upon system configuration) are opened and when the required standby onsite AC power source generator voltage and frequency are established, the standby onsite AC power source breaker is closed.

Automatic Shedding, Loading and Isolation

The standby onsite AC power source is connected to its PIP bus only when the incoming preferred or alternate preferred source breakers have been tripped, except during parallel load testing using the Normal or Alternate preferred Power Sources (see Subsection 8.3.1.1.7). Under this condition, major loads are tripped from the 6.9 kV PIP bus, except for the diesel auxiliary 480V power center feeders, before closing the standby onsite AC power source breaker.

The large motor loads are then re-applied sequentially and automatically to the bus after closing of the standby onsite AC power source breaker.

Protection Systems

The onsite standby generator is shut down and the generator breaker tripped under the following conditions during all modes of operation and testing:

- Generator over speed trip; and
- Generator differential relay trip.

These and other protective functions (alarms and trips) of the standby onsite AC power source or the generator breaker and other off-normal conditions are alarmed in the main control room (see Table 8.3-1).

Local and Remote Control

Each standby onsite AC power source is capable of being started or stopped manually from the main control room. Start/stop control and bus transfer control may be transferred to a local control station in the standby onsite AC power source room by operating key switches in the Main Control Room.

Engine Mechanical Systems and Accessories

Descriptions of these systems and accessories are given in Section 9.5.

Interlocks and Testability

Each standby onsite AC power source, when operating other than in test mode, is totally independent of the preferred power supply. Additional interlocks to the LOPP and LOCA sensing circuits terminate parallel operation test as described in Subsection 8.3.1.1.7. A lockout or maintenance mode removes the standby onsite AC power source from service. The inoperable status is indicated in the control room.

8.3.1.2 Analysis

8.3.1.2.1 General Design Criteria and Regulatory Guidance Compliance

The following paragraphs analyze compliance with Nuclear Regulatory Commission (NRC) General Design Criteria (GDC), NRC Regulatory Guides and other criteria consistent with the Standard Review Plan (SRP).

Table 8.1-1 identifies the onsite power system and applicability of the associated codes and standards applied in accordance with Table 8-1 of the SRP. All regulatory guides, BTPs and NUREGs are discussed in Subsection 8.1.5.2.4, where GDC compliance is evaluated.

GDC 2, Design Basis for Protection Against Natural Phenomena

GDC 4, Environmental and Dynamic Effects Design Bases

The requirements of the GDC 2 and 4 are met, in that all components of the Class 1E power system are housed in seismic Category I structures designed to protect them from natural phenomena. These components have been qualified to the appropriate seismic, hydrodynamic, and environmental conditions as described in Chapter 3.

GDC 17, Electric Power Systems

Safety-related DC power sources are provided to support passive core cooling and containment safety-related functions. No offsite or diesel-generator-derived AC power is required for 72 hours after an abnormal event.

GDC 18, Inspection and Testing of Electric Power Systems

Safety-related DC power sources are provided to support passive core cooling and containment safety-related functions. No offsite or diesel-generator-derived AC power is required for 72 hours after an abnormal event.

The Class 1E system is designed to permit the following:

- During equipment shutdown, periodic inspection and testing of wiring, insulation, connections, and the condition of components;
- During normal plant operation, periodic testing of the operability and functional performance of onsite power supplies, circuit breakers, and their associated control circuits, relays, and buses; and
- During plant shutdown, testing of the operability of the Class 1E system as a whole. Under conditions, as close to design as practicable, the full operational sequence that brings the system into operation, including operation of signals of the safety-related systems and the transfer of power between offsite and onsite power system, is tested.

GDC 50, Containment Design Basis

GDC 50, as it relates to the design of circuits using containment electrical penetration assemblies, is met as indicated in Subsection 8.1.5.2.4.

8.3.1.2.2 Quality Assurance Requirements

The Quality Assurance program is provided in Chapter 17. This program includes a comprehensive system to ensure that the purchased material, manufacture, fabrication, testing, and quality control of the equipment conforms to the GE Quality Assurance program. The administrative responsibility and control provided are also described in Chapter 17.

These Quality Assurance requirements include an appropriate vendor quality assurance program and organization, purchaser surveillance as required, vendor preparation and maintenance of appropriate test and inspection records, certificates and other quality assurance documentation, and vendor submittal of quality control records considered necessary for purchaser retention to verify quality of completed work.

A necessary condition for receipt, installation and placing of equipment in service has been the citing and auditing of Quality Assurance/Quality Control (QA/QC) verification data and the placing of this data in permanent onsite storage files.

8.3.1.2.3 Environmental Considerations

In addition to the effects of operation in a normal service environment, all Class 1E equipment is designed to operate during and after any design basis event, in the area in which it is located. All Class 1E electric equipment is qualified to IEEE 323. Detailed information on all Class 1E equipment that must operate in a harsh environment during and/or subsequent to an accident is provided in Section 3.11.

8.3.1.3 Physical Identification of Safety-Related Equipment

8.3.1.3.1 Power, Instrumentation and Control Systems

Electrical and control equipment, panels and racks, and cables and raceways grouped into separate divisions are identified so that their electrical divisional assignment is apparent, and so that an observer can visually differentiate between Class 1E equipment and wiring of different divisions, and between Class 1E and non-Class 1E equipment and wiring. The identification method is color-coding. All markers within a division have the same color. For associated

cables (if any) treated as Class 1E,[1] there will be an identification criterion to identify them as associated cables and to which division they are associated. The identification criterion will allow associated circuits to be differentiated from Class 1E circuits. Divisional separation requirements of individual pieces of hardware are shown in the system elementary diagrams. Identification of raceways, cables, etc., is compatible with the identification of the Class 1E equipment with which it interfaces. Location of the identification is such that points of change of circuit classification (at isolation devices, etc.) are readily apparent (Refer to Subsection 8.3.4.6).

Equipment Identification

Equipment (panels, racks, junction or pull boxes) of each division of the Class 1E electric system are identified as follows:

- The background nameplate for the equipment of a division has the same color as the cable jacket markers and raceway markers associated with that division.
- Power system distribution equipment (e.g., motor control centers, switchgear, transformers, distribution panels, batteries, chargers) is tagged with an equipment number the same as indicated on the single-line diagrams.

Cable Identification

All cables are tagged at their terminations with a unique identifying number (cable number), in addition to the marking characteristics shown below.

All Class 1E cables are marked with sufficient durability to be legible to facilitate initial verification that the installation is in conformance with the separation criteria.

Such markings are colored to uniquely identify the division (or non-division) of the cable. Within cabinets or panels with circuits of more than one division, individual conductors are color-coded or color-tagged so that the division they belong to is clearly discernible. Any non-divisional cable within such cabinets is appropriately marked to distinguish it from the divisional cables.

To distinguish the neutron monitoring and scram solenoid cables from other cable types, unique voltage class designations are used in the cable routing program.

Raceway Identification

All conduit is similarly tagged with a unique conduit number, at discontinuities, at pull boxes, at points of entrance and exit to rooms, and at origin and destination of equipment. Conduits containing cables operating at voltages above 600V (i.e., 6.9 kV) are also tagged to indicate the operating voltage. These markings are applied prior to the installation of the cables.

[1] Associated circuits added beyond the certified design must be specifically identified and justified per Subsection 8.3.4.6. Associated circuits are defined in Subsection 5.5.1 of IEEE 384, with the clarification for items (3) and (4) that non-Class 1E circuits being in an enclosed raceway without the required physical separation or barriers between the enclosed raceway and the Class 1E or associated cable(s) makes the circuits (related to the non-Class 1E cable in the enclosed raceway) associated circuits.

All Class 1E cable trays are marked with the division color, and with their raceway identification on straight sections, at turning points and at points of entry and exit of enclosed areas. Cable trays are marked prior to the installation of cables.

Neutron monitoring cables, local power range monitor cables and startup range neutron monitor cables are run in their own divisional conduits and cable trays, separate from all other power, instrumentation and control cables. Scram solenoid cables are run in a separate conduit for each rod scram group.

Redundant Class 1E equipment and circuits, assigned to redundant Class 1E divisions, are readily distinguishable from each other and non-Class 1E system equipment and circuits without consulting reference materials. This is accomplished by color-coding of equipment, nameplates, cables, and raceways, as described above.

8.3.1.4 Independence of Redundant Systems

8.3.1.4.1 Power Systems

The Class 1E onsite electric power systems and major components of the separate power divisions are shown in Figures 8.1-3 and 8.1-4.

Independence of the electric equipment and raceway systems, between the different divisions, is maintained primarily by firewall-type separation, where feasible, and by spatial separation, in accordance with criteria given within this subsection, Class 1E Electric Equipment Arrangement. Exceptions are analyzed in Appendix 9A.6.4 (Fire Separation for Divisional Electrical Systems).

Where spatial separation cannot be maintained in hazardous areas (e.g., potential missile areas), physical isolation between electrical equipment of different divisions is achieved by use of a protective barrier designed to withstand the effects of postulated hazards.

The physical independence of electric power systems complies with the requirements of IEEE Standard 384, GDC 17 and 18, and NRC Regulatory Guide 1.75.

Class 1E Electric Equipment Arrangement

Class 1E electric equipment and wiring are segregated into separate divisions so that no single credible event is capable of disabling enough equipment to hinder reactor shutdown, removal of decay heat from the core, or isolation of the containment in the event of an accident. Separation requirements are applied to control power and motive power for all systems involved.

Equipment arrangement and/or protective barriers are provided such that no locally generated force or missile can destroy any redundant RPS, Nuclear Steam Supply Systems (NSSS), ESF, or ECCS functions.

Routing of wiring/cabling is arranged such as to eliminate, to the extent practical, all potential for fire damage to cables and to separate the redundant divisions so that fire in one division does not propagate to another division.

An independent raceway system is provided for each division of the Class 1E electric system. The raceways are arranged, physically, top to bottom based on the function and the voltage class of the cables.

Electric Cable Installation

Cable derating and cable tray fill — Base ampacity rating of cables is established as described in Subsection 8.3.3.2. Electric cables of a discrete Class 1E electric system division are installed in a cable tray system provided for the same division. Cables are installed in trays in accordance with their voltage ratings and as described in Subsection 8.3.1.4.1. Tray fill is as established in Subsection 8.3.3.2.

Cable routing in potentially harsh environmental areas — Circuits of different safety-related divisions that are routed through the same potentially harsh environmental area are protected through separation and other protective means described within this section (conduit and armored cable).

Sharing of cable trays — All divisions of Class 1E AC and DC systems are provided with independent raceway systems.

Cable fire protection and detection — For details of cable fire protection and detection, refer to Section 9A.5, Subsections 8.3.3 and 9.5.1.

Cable and raceway markings — All cables (except lighting and non-vital communications) are tagged at their terminations with a unique identifying number. The marking of cables and raceways for divisional identification is discussed in Subsection 8.3.1.3.

Spacing of wiring and components in control boards, panels and relay racks — Separation is accomplished by mounting the redundant devices or other components on physically separated control boards if, from a plant operational point of view, this is feasible. When operational design dictates that redundant equipment be in close proximity, separation is achieved by a barrier or enclosure to retard internal fire or by a maintained air space in accordance with criteria given in this subsection, Class 1E Electric Equipment Arrangement.

In this case, redundant circuits, which serve the same safety-related function, enter the control panel through separated apertures and terminate on separate and separated terminal blocks. Where redundant circuits unavoidably terminate on the same device, barriers are provided between the device terminations to ensure circuit separation by approved isolators (generally optical).

Electric penetration assembly — Electric penetration assemblies of different Class 1E divisions are separated by 3-hour rated fire barriers, separate rooms and/or locations on separate floor levels. Separation by distance without barriers is allowed only in the inerted containment. Separation between divisional and non-divisional penetrations is in accordance with IEEE 384. Grouping of circuits in penetration assemblies follows the same raceway voltage groupings as described in this subsection.

Redundant over-current interrupting devices are provided for all electrical circuits routed through containment penetrations, if the maximum available fault current (including failure of upstream devices) is greater than the continuous rating of the penetration. This avoids penetration damage in the event of failure of any single over-current device to clear a fault within the penetration or beyond it. Refer to Subsection 8.3.4.7 for fault current devices and curves.

Control of Compliance with Separation Criteria During Design and Installation

Compliance with the criteria that ensure independence of redundant systems is a supervisory responsibility during both the design and installation phases. The responsibility is discharged by:

- Identifying applicable criteria;
- Issuing working procedure to implement these criteria;
- Modifying procedures to keep them current and workable;
- Checking the manufacturer's drawings and specifications to ensure compliance with procedures; and
- Controlling installation and procurement to assure compliance with approved and issued drawings and specifications.

The equipment nomenclature used on the ESBWR standard design is one of the primary mechanisms for ensuring proper separation. Each equipment and/or assembly of equipment carries a single number (e.g., the item numbers for motor drivers are the same as the machinery driven). Based on these identification numbers, each item can be identified as safety-related or nonsafety-related, and each safety-related item can further be identified to its division. This is carried through and dictates appropriate treatment at the design level during preparation of the manufacturer's drawings. Non-Class 1E equipment is separated where desired to enhance power generation reliability, although such separation is not a safety consideration.

Once the safety-related equipment has been identified with a Class 1E safety-related division, the divisional assignment dictates a characteristic color (Subsection 8.3.1.3) for positive visual identification. Likewise, the divisional identification of all ancillary equipment, cable and raceways matches the divisional assignment of the system it supports.

Independence of Redundant Safety-Related Instrumentation and Control Systems

This subsection defines independence criteria applied to safety-related electrical systems and instrumentation and control equipment. Safety-related systems to which the criteria apply are those necessary to mitigate the effects of anticipated and abnormal operational transients or design basis accidents. This includes safety-related systems and functions enumerated in Chapter 7. The term “systems” includes the overall complex of actuated equipment, actuation devices (actuators), logic, instrument channels, controls, and interconnecting cables that are required to perform system safety-related functions. The criteria outline the separation requirements necessary to achieve independence of safety-related functions compatible with the redundant and/or diverse equipment provided and postulated events.

General

Separation of the equipment for the safety-related systems referred to in Chapter 7 is accomplished so that they are in compliance with IEEE 603, 10 CFR 50 Appendix A, GDC 3 and 17, and NRC Regulatory Guides 1.75 (IEEE 384) and 1.53 (IEEE 379).

Independence of mutually redundant and/or diverse Class 1E equipment, devices, and cables is achieved by 3-hour rated fire barriers and electrical isolation. This protection is provided to maintain the independence of nuclear safety-related circuits and equipment so that the protective function required during and following a design basis event including a single fire anywhere in

the plant or a single active failure in any circuit or equipment can be accomplished. The exceptions to this are the cases analyzed in Appendix 9A.6.

Separation Techniques

The methods used to protect redundant safety-related systems from results of single active failures or events are utilization of safety-related structures, spatial separation, 3-hour rated fire barriers, and isolation devices.

Safety Class Structure — The basic design consideration in plant layout is that redundant circuits and equipment are located in separate safety-related areas and fire areas to the extent possible. The separation of Class 1E circuits and equipment is such that the required independence is not compromised by the failure of mechanical systems served by the Class 1E electrical system. For example, Class 1E circuits are routed or protected so that failure of related mechanical equipment of one system cannot disable Class 1E circuits or equipment essential to the operation of a redundant system.

Spatial Separation and/or Protective Barriers — Spatial (distance) separation and/or protective barriers are such that no locally generated force or missile resulting from a design basis event (DBE) or from random failure of equipment can disable a redundant safety-related function. Separation in all safety-related equipment and cable areas shall equal or exceed the requirements of IEEE 384.

Main Control Room and Relay Panels — The protection system and ESF control, logic, and instrument panels/racks are located in a safety-related structure in which there are no potential sources of missiles or pipe breaks that could jeopardize redundant cabinets and raceways.

Control, Relay, and Instrument Panels/Racks — Control, relay, and instrument panels/racks are designed in accordance with the following general criteria to preclude failure of nonsafety-related circuits causing failure of any safety-related circuit, and to preclude failure of any safety-related circuit causing failure of its redundant safety-related circuit. Single panels or instrument racks do not contain circuits or devices of the redundant protection system or ESF systems except:

(1) Certain operator interface control panels may have operational considerations that dictate that redundant protection system or ESF system circuits or devices be located in a single panel. These circuits and devices are separated horizontally and vertically by the minimum distance required in IEEE 384 Subsection 6.6.2, or by steel barriers or enclosures.

(2) Class 1E circuits and devices are also separated from the non-Class 1E circuits and devices that are present inside a panel. These circuits and devices are separated from each other horizontally and vertically by the minimum distance required in IEEE 384 Subsection 6.6.2, or by steel barriers or enclosures.

(3) Where electrical interfaces between Class 1E and non-Class 1E circuits or between Class 1E circuits of different divisions cannot be avoided, Class 1E isolation devices are used (see Subsection 8.3.1.4.).

(4) If two panels containing circuits of different separation divisions are less than 91.5 cm (3 ft) apart, there is a steel barrier between the two panels. Panel ends closed by steel end plates are considered to be acceptable barriers provided that terminal boards and wire ways are spaced a minimum of 2.5 cm (1 inch) from the end plate.

(5) Penetration of separation barriers within a subdivided panel is permitted, provided such penetrations are sealed or otherwise treated so that fire generated by an electrical fault could not reasonably propagate from one section to the other and disable a protective function.

(6) If two or more divisions of fiber optic cable are brought to a fiber bypass switch, separation is not necessary in the immediate vicinity of the switch

Isolation Devices — Where electrical interfaces between Class 1E and non-Class 1E circuits or between Class 1E circuits of different divisions cannot be avoided, Class 1E isolation devices are used. Isolation is provided by the isolation devices defined in IEEE 384 Section 7.

Wiring from Class 1E equipment or circuits which interface with non-Class 1E equipment circuits (i.e., annunciators or data loggers) is treated as Class 1E and retains its divisional identification up to and including its isolation device (usually fiber optic). The output circuits from this isolation device are classified as non-Class 1E and are physically separated from the Class-1E wiring.

System Separation Requirements

The separation requirements pertaining to the RPS and ESF systems are given in the following subsections.

Reactor Protection (Trip) System (RPS) — The following separation requirements apply to the RPS wiring:

(1) RPS sensors, sensor input circuit wiring, trip channels, and trip logic equipment are arranged in four functionally independent and divisionally separate groups designated Divisions 1, 2, 3 and 4. The trip channel wiring associated with the sensor input signals for each of the four divisions provides inputs to divisional logic cabinets which are in the same divisional group as the sensors and trip channels and which are functionally independent and physically separated from the logic cabinets of the redundant divisions.

(2) Where trip channel data originating from sensors of one division are required for coincident trip logic circuits in other divisions, Class 1E isolation devices are used as interface elements for signals sent from one division to another such as to maintain electrical isolation between divisions.

(3) Sensor wiring for several trip variables associated with the trip channels of one division may be run together in the same conduits or in the same raceways of that same and only division. Sensor wiring associated with one division is not routed with, or in close proximity to, any wiring or cabling associated with a redundant division.

(4) The scram solenoid circuits, from the actuation devices to the solenoids of the scram pilot valves of the CRD hydraulic control units, are run in grounded steel conduits, with no other wiring contained within the conduits, so that each scram group is protected against a hot short to any other wiring by a grounded enclosure. Short sections of flexible metallic conduit are permitted for making connections within panels and the connections to the solenoids.

(5) Separate grounded steel conduits are provided for the scram solenoid wiring for each of four scram groups. Separate grounded steel conduits are also provided for both the A solenoid wiring circuits and for the B solenoid wiring circuits of the same scram group.

(6) Scram solenoid conduits have a unique identification and are separately routed as Division 1 and 2 conduits for the A and B solenoids of the scram pilot valves, respectively. This corresponds to the divisional assignment of their power sources. The conduits containing the scram solenoid group wiring of any one scram group are also physically separated by a minimum separation distance of 2.5 cm (1 in.) from the conduits of any other scram group, and from raceways which contain either divisional or non-divisional circuits. The scram group conduits are not routed within the confines of any other raceway. The RPS conduits containing the scram group wiring for the A and B solenoids of the scram pilot valves (associated with Divisions 1 and 2, respectively) are separated from non-enclosed raceways associated with any of the four electrical divisions or non-divisional cables in accordance with IEEE 384 and Regulatory Guide 1.75.

(7) Any scram group conduit may be routed alongside any cable or raceway containing either safety-related circuits (of any division), or any cable or raceway containing nonsafety-related circuits, as long as the conduit itself is not within the boundary of any raceway which contains either the divisional or the nonsafety-related circuits and is physically separated from said cables and raceway boundaries as stated in item (6) above. Any one scram group conduit may also be routed along with scram group conduits of any of the three other scram groups as long as the minimum separation distance of 2.5 cm (1 in.) is maintained.

(8) The startup range neutron monitoring (SRNM) subsystem cabling of the Neutron Monitoring System (NMS) cabling under the vessel is treated as divisional. The SRNM cables are assigned to Divisions 1, 2, 3 and 4. Under the vessel, cables are enclosed as described in Subsection 9A.6.4.

Other Safety-Related Systems

(1) Separation of redundant systems or portions of a system is such that no single active failure can prevent initiation and completion of a safety-related function.

(2) The Standby Liquid Control system redundant Class 1E controls are run so that no failure of standby liquid control function results from any single electrical failure.

(3) Inboard and outboard isolation valves are redundant to each other so they are made independent of and protected from each other to the extent that no single active failure can prevent the operation of at least one of an inboard/outboard pair.

(4) Isolation valve circuits require special attention because of their function in limiting the consequences of a pipe break outside the primary containment. Isolation valve control and power circuits are required to be protected from the pipe lines that they are responsible for isolating.

Safety-related isolation valve wiring in the vicinity of the outboard (downstream) valve is installed in conduits and routed to take advantage of the mechanical protection afforded by the valve operator or other available structural barriers not susceptible to disabling damage from the pipe line break. Additional mechanical protection (barriers) is placed as necessary

between wiring and potential sources of disabling mechanical damage consequential to a break downstream of the outboard valve.

(5) Automatic Depressurization System (ADS) and Gravity Driven Cooling System (GDCS) comprising the ECCS have their various sensors, logics, actuating devices and power supplies assigned to divisions, so that no single active failure can disable a redundant ECCS function.

a. The wiring to the ADS solenoid valves within the drywell is run in rigid conduits. The conduits for ADS solenoid A are divisionally separated from ADS solenoid B conduits and contain no other cable. Short lengths of flexible conduit are used to make the final raceway connection to the ADS valve solenoids.

b. The wiring for ADS depressurization squib valves are run in rigid conduits. The conduits are divisionally separated and contain only cable(s) associated with one division of power. Short lengths of flexible conduit are used to make the final raceway connection to the depressurization valve squibs.

c. The wiring to the GDCS squib valve initiators is run in rigid conduits. The conduits are divisionally separated and contain only cable(s) associated with the squib valve initiators. Short lengths of flexible conduit are used to make the final raceway connection to the GDCS squib valve initiators.

(6) Electrical equipment and raceways for safety-related systems are either not located in close proximity to primary steam piping (steam leakage zone), or designed for short-term exposure to the high temperature and humidity associated with a steam leak.

(7) Class 1E electrical equipment located in the suppression pool level swell zone is limited to the suppression pool temperature monitors, which have their terminations sealed such that operation would not be impaired by submersion caused by pool swell or LOCA. These devices are qualified to the requirements of IEEE 323 for the environment in which they are located.

(8) Containment penetrations are arranged so that no design basis event can disable cabling in more than one division. Penetrations do not contain cables of more than one divisional assignment.

(9) Annunciator and computer inputs from Class 1E equipment or circuits are treated as Class 1E and retain their divisional identification up through their Class 1E isolation device. The output circuit from this isolation device is classified as non-Class 1E.

(10) Annunciator and computer inputs from non-Class 1E equipment or circuits do not require isolation devices.

8.3.2 DC Power Systems

8.3.2.1 Description

Completely independent Class 1E (i.e., safety-related) and non-Class 1E (i.e., nonsafety-related) DC power systems are provided. The Class 1E DC system is shown in Figure 8.1-3. The non-Class 1E DC system is shown in Figure 8.1-2.

Eight independent Class 1E 250 VDC systems are provided, two each for Divisions 1, 2, 3 and 4. They provide four divisions of independent and redundant on site sources of power for operation of safety-related loads, monitoring and MCR emergency lighting.

Five independent non-Class 1E DC systems are provided consisting of three 250VDC systems and two 125 VDC systems. The non-Class 1E DC systems supply power for control and switching, switchgear control, TSC, instrumentation, and station auxiliaries.

Refer to Subsection 8.3.4.8 for battery DC cell voltage analysis and ampere hour rating/time.

8.3.2.1.1 Class 1E Station Batteries and Battery Chargers

250V Class 1E DC Systems Configuration

Figure 8.1-3 shows the overall 250 VDC system provided for Class 1E Divisions 1, 2, 3 and 4. Divisions 1, 2, 3 and 4 consist of two separate battery sets for each division. Each set supplies power to selected safety loads for at least 72 hours following a licensing basis event without load shedding. The DC systems are operated ungrounded for increased reliability. Each of the Class 1E battery systems has a 250 VDC battery, a battery charger a main distribution panel, and a ground detection panel. One divisional battery charger is used to supply each group DC distribution panel bus and its associated battery. The divisional battery charger is normally fed from its divisional 480V Isolation Power Center. The main DC distribution bus feeds the local DC distribution panels, UPS inverter, and DC power center. Each division has a standby charger to equalize the battery charging of that division.

The four safety-related divisions are supplied power from four independent Isolation Power Centers. The 250 VDC systems supply DC power to Divisions 1, 2, 3 and 4, respectively, and are designed as Class 1E equipment in accordance with IEEE Std 308 and IEEE 946 (Reference 8.3-1). The Class 1E DC system is designed so that no single active failure in any division of the 250 VDC system results in conditions that prevent safe shutdown of the plant while a division has been taken out of service for maintenance.

The plant design and circuit layout of the DC systems provide physical separation of the equipment, cabling, and instrumentation essential to plant safety. Each 250VDC battery is separately housed in a ventilated room apart from its charger, distribution, and ground detection panels. Equipment of each division of the DC distribution system is located in an area separated physically from the other divisions. All the components of Class 1E 250 VDC systems are housed in Seismic Category I structures.

Class 1E Batteries

In divisions 1, 2, 3 and 4 the two 250 volt Class 1E batteries per division are each rated for 72-hour station blackout conditions. The DC system minimum battery terminal voltage at the end of the discharge period is 210 volts. The maximum equalizing charge voltage for Class 1E batteries is 280VDC.

The Class 1E batteries have sufficient stored capacity without their chargers to independently supply the safety-related loads continuously for the time periods stated above. Each distribution circuit is capable of transmitting sufficient energy to start and operate all required loads in that circuit. The batteries are sized so that the sum of the required loads does not exceed 80% of the battery ampere-hour rating, or warranted capacity at end-of-installed-life with 100% design

demand. Batteries are sized for the DC load in accordance with IEEE Standard 485 (Reference 8.3-2). The battery banks are designed to permit the replacement of individual cells.

The Class 1E batteries meet the qualification requirements of IEEE 535 (Reference 8.3-3), and are installed in accordance with IEEE 484 (Reference 8.3-9).

Class 1E Battery Chargers

The Class 1E battery chargers are full wave, silicon-controlled rectifiers. The housings are freestanding, NEMA Type 1, and are ventilated. The chargers are suitable for float charging the batteries. The chargers operate from a 480 volt, 3 phase, 60 Hz supply. The power for each divisional battery charger is supplied by that division's dedicated Isolation Power Center. The standby battery charger is used to equalize either of its associated divisional batteries off-line, or as a replacement to the normal charger associated with that battery.

Standby chargers are supplied from the same Isolation Power Center as the normal charger.

Each battery charger is capable of recharging its battery from the design minimum charge to 95% of fully charged condition within 24 hours while supplying the full load associated with the individual battery.

The battery chargers are the constant voltage type, adjustable between 240 and 290 volts, with the capability of operating as battery eliminators. The battery eliminator feature is incorporated as a precautionary measure to protect against the effects of inadvertent disconnection of the battery. The battery chargers are designed to function properly and remain stable on the disconnection of the battery. Variation of the charger output voltage is less than ± 1 percent with or without the battery connected. The maximum output ripple for the charger is 30 millivolts RMS with the battery, and less than 2% RMS without the battery.

The battery charger's output is of a current limiting design. The battery chargers are designed to prevent their AC source from becoming a load on the batteries because of power feedback from loss of AC power. The battery charger's output voltage is protected against over voltage by a high voltage shutdown circuit. The over voltage protection feature is incorporated to protect equipment from damage caused by high voltage. When high voltage occurs, the unit disconnects the auxiliary voltage transformer, which results in charger shutdown. Loss of charger input voltage and charger shutdown is alarmed in the control room.

Ventilation

A safety-related ventilation system is not required for the batteries to perform their safety-related functions. However, battery rooms are ventilated by a system designed to remove the minor amounts of gas produced during the charging of batteries. The system is designed to preclude the possibility of hydrogen accumulation (see Subsection 9.4.6).

Inspection, Maintenance, and Testing

An initial composite test of the onsite DC power systems is a prerequisite to initial fuel loading. This test verifies that each battery capacity is sufficient to satisfy a safety load demand profile under the conditions of a LOCA and loss of preferred power. Battery capacity tests are conducted in accordance with IEEE Std. 450. These tests ensure that the battery has the capacity to meet safety load demands.

In-service tests, inspections, and resulting maintenance of the DC power systems including the batteries, chargers, and auxiliaries are specified in the plant-specific Technical Specifications.

Station Blackout

The station blackout scenario (defined in 10 CFR 50.63, Regulatory Guide 1.155 and Appendix B to SRP 8.2) includes the complete loss of all offsite and onsite AC power, but not the loss of available AC power buses fed by station batteries through inverters, as with the ESBWR. The ESBWR 10 CFR 50.2 Design Bases rely upon battery power to achieve and maintain safe shutdown for 72 hours. The batteries are adequately sized for the station blackout loads. The station blackout safety analysis is provided in Subsection 15.5.5.

8.3.2.1.2 Non-Class 1E Station Batteries and Battery Chargers

125V and 250V Non-Class 1E DC Systems Configuration

Figure 8.1-2 shows the overall 125V and 250V non-Class 1E DC systems. The DC systems are operated ungrounded for increased reliability. Each of the DC systems has battery, a battery charger, a standby battery charger, main DC distribution panel, and ground detection panel. The main DC distribution buses feed the local DC distribution panels, UPS inverter and/or DC motor control center.

The plant design and circuit layout of the non-Class 1E DC systems provide physical separation of the equipment, cabling and instrumentation associated with the load groups of non-Class 1E equipment. Each 125V and 250 VDC battery is separately housed in a ventilated room apart from its charger, distribution, and ground detection panels. Equipment of each load group of the DC distribution system is located in an area separated physically from the other load groups.

The non-Class 1E DC power is required for standby lighting, control and switching functions such as the control of 6.9 kV and 480V switchgear, DC motors, control relays, meters and indicators.

Non-Class 1E Batteries

The 125 volt non-Class 1E batteries are sized for 2-hour duty cycles at a discharge rate of 2 hours, based on a terminal voltage of 1.75 volts per cell at 25°C (77°F). The DC system minimum battery terminal voltage at the end of the discharge period is 105 volts. The maximum equalizing charge voltage for 125V batteries is 140 VDC.

The 250 volt non-Class 1E batteries are sized for 2-hour duty cycles at a discharge rate of 2 hours, based on a terminal voltage of 1.75 volts per cell at 25°C (77°F). The DC system minimum battery terminal voltage at the end of the discharge period is 210 volts. The maximum equalizing charge voltage for 250V batteries is 280 VDC.

The non-Class 1E batteries have sufficient stored capacity without their chargers to independently supply their loads continuously for at least 2 hours. Each distribution circuit is capable of transmitting sufficient energy to start and operate all required loads in that circuit.

The batteries are sized so that the sum of the required loads does not exceed 80% of the battery ampere-hour rating, or warranted capacity at end-of-installed-life with 100% design demand. The battery banks are designed to permit replacement of individual cells .

Non-Class 1E Battery Chargers

The non-Class 1E battery chargers are full wave, silicon-controlled rectifiers or an acceptable alternate design. The housings are freestanding, NEMA Type 1, and are ventilated. The chargers are suitable for float charging the batteries. The chargers operate from a 480 volt, 3 phase, 60 Hz supply. Each train charger is supplied from a separate power center, which is backed by the standby diesel-generator.

Standby chargers are used to equalize battery charging. Standby chargers are supplied from a different power center than the main charger.

The battery chargers are the constant voltage type, with the 125 VDC system chargers having a voltage adjustable between 120 and 145 volts and the 250 VDC system chargers having a voltage adjustable between 240 and 290 VDC, with the capability of operating as battery eliminators. The battery eliminator feature is incorporated as a precautionary measure to protect against the effects of inadvertent disconnection of the battery. The battery chargers are designed to function properly and remain stable on the disconnection of the battery. Variation of the charger output voltage is less than ± 1 percent with or without the battery connected. The maximum output ripple for the charger is 30 millivolts rms with the battery, and less than 2% rms without the battery.

The battery charger's output is of a current limiting design. The battery chargers are designed to prevent their AC source from becoming a load on the batteries caused by power feedback from a loss of AC power. The battery charger's output voltage is protected against over voltage by a high voltage shutdown circuit. The over voltage protection feature is incorporated to protect equipment from damage caused by high voltage. When high voltage occurs, the unit disconnects the auxiliary voltage transformer, which results in charger shutdown. Loss of charger input voltage and charger shutdown is alarmed in the control room.

Ventilation

Battery rooms are ventilated by a system designed to remove the minor amounts of gas produced during the charging of batteries. The system is designed to preclude the possibility of hydrogen accumulation.

8.3.2.2 Analysis

8.3.2.2.1 Class 1E DC Power Systems

The 480 VAC power supplies for the divisional battery chargers are from the individual Isolation Power Centers to which the particular 250VDC system belongs (Figure 8.1-3). These Isolation Power Centers are fed directly from the PIP nonsafety-related buses, which are backed up by the standby diesel generators. In addition, these Isolation Power Centers have a hard-wired connection to a terminal box where a portable emergency generator may be connected in the event that power is not available from the PIP buses. In this way, separation between the independent systems is maintained and the AC power provided to the chargers can be from either preferred or standby AC power sources.

The DC system is arranged so that the probability of an internal system failure resulting in loss of that DC power system is extremely low. A ground detection system is employed for prompt detection of grounds. Important system components are either self-alarming on failure, or

capable of clearing faults, or being tested during service to detect faults. Each battery set is located in its own ventilated battery room. All abnormal conditions of important system parameters such as system grounds, charger failure and low bus voltage are alarmed in the main control room and/or locally.

8.3.2.2.2 Regulatory Requirements and Guides

The following analyses demonstrate compliance of the Class 1E Divisions 1, 2, 3 and 4 DC power systems to NRC GDC, NRC Regulatory Guides, and other criteria consistent with the SRP. The analyses establish the ability of the system to sustain credible single active failure with one division already out of service and the remaining two divisions retain their capacity to function for 72 hours before requiring recharge.

The following list of criteria is addressed in accordance with Table 8.1-1, which is based on Table 8-1 of the SRP. In general, the ESBWR is designed in accordance with all criteria. Any exceptions or clarifications are so noted.

GDC:

GDC 2, 4, 17 (DC only), 18 (DC only) and 50 - The DC power system complies with these GDC, which are generically addressed in Subsection 3.1.2.

Regulatory Guides:

Regulatory Guide 1.6 — "Independence Between Redundant Standby (Onsite) Power Sources and Between Their Distribution Systems." The ESBWR Standard Plant does not need or have any safety-related standby AC power sources, therefore this Regulatory guide is not applicable to the ESBWR design (see Table 8.1-1).

Regulatory Guide 1.32 — "Criteria for Power Systems for Nuclear Power Plants." Safety-related DC power sources are provided to support passive core cooling and containment integrity safety functions. No offsite or diesel-generator-derived AC power is required for 72 hours.

Regulatory Guide 1.47 — "Bypassed and Inoperable Status Indication for Nuclear Power Plant Safety Systems."

Regulatory Guide 1.53 – "Application of the single failure criteria in nuclear power plants."

Regulatory Guide 1.63 — "Electric Penetration Assemblies in Containment Structures for Nuclear Power Plants."

Regulatory Guide 1.75 — "Physical Independence of Electric Systems." Safe shutdown relies only upon DC-derived power and will meet the design requirements for physical independence.

Regulatory Guide 1.106 – "Thermal Overload Protection for Electrical Motors and Motor Operated Valves." The ESBWR does not require electric motors or motor operated valves to perform any safety-related function, therefore this regulatory guide is not applicable.

Regulatory Guide 1.118 — "Periodic Testing of Electric Power and Protection Systems." (See Subsection 8.3.4.12 for COLA requirements.)

Regulatory Guide 1.128 — "Installation Designs and Installation of Large Lead Storage Batteries for Nuclear Power Plants."

Regulatory Guide 1.129 — "Maintenance, Testing, and Replacement of Large Lead Storage Batteries for Nuclear Power Plants."

Regulatory Guide 1.153 — "Criteria for Safety Systems."

Regulatory Guide 1.155 — "Station Blackout," The ESBWR uses battery power to achieve and maintain safe shutdown. Thus, the ESBWR meets the intent of Regulatory Guide 1.155. The Station Blackout evaluation is provided in Subsection 15.5.5.

Branch Technical Positions (BTPs):

BTP ICSB 21 — Supplemental Guidance for Bypass and Inoperable Status Indication for Engineered Safety Features Systems.

The DC power system is designed consistent with this criterion.

Other SRP Criteria:

Consistent with Table 8-1 of the SRP, there are no other criteria applicable to DC power systems.

8.3.3 Fire Protection of Cable Systems

The basic concept of fire protection for the cable system in the ESBWR design is that it is incorporated into the design and installation rather than added onto the systems. Fire protection is built into the system by cable separation; by limiting cable tray fill; by limiting cable ampacity to levels that prevent overheating and insulation failures (and resultant possibility of fire); and by use of fire resistant and non-propagating cable insulation. Fire suppression systems (e.g., automatic sprinkler systems) are provided as defined in Subsection 9.5.1.2.

8.3.3.1 Resistance of Cables to Combustion

The electrical cable insulation is designed to resist the onset of combustion by choice of insulation and jacket materials, which have flame-resistive and self-extinguishing characteristics. Polyvinyl chloride and neoprene cable insulation are not used in the ESBWR. Each power, control, and instrumentation cable is specified to pass the vertical tray flame test in accordance with IEEE 1202 (Reference 8.3-11). All cable trays are fabricated from noncombustible material.

8.3.3.2 Cables and Raceways

Power and control cables are specified for continuous operation at conductor temperature not exceeding 90°C (194°F) and to withstand an emergency overload temperature of up to 130°C (266°F) in accordance with ICEA S-66-524/NEMA WC-7 (Reference 8.3-5) Appendix D (conductors qualified to a higher temperature, such as 125°C may be used if local conditions require). The base ampacity rating of the cables is established as published in IEEE 835 (Reference 8.3-6) and ICEA-54-440/NEMA WC-51 (Reference 8.3-7).

Cables are specified to continue to operate at 100% relative humidity with a service life expectancy of 60 years. Class 1E cables are designed to survive the LOCA ambient condition at the end of the 60-year life span. Refer to Subsection 8.3.4.5 for certified cable proof tests.

Cable tray fill is limited to 40% of the cross-sectional area for trays containing power cables; and 50% cross-sectional area for trays containing control and instrumentation cables. If tray fill exceeds the above maximum fills, the tray fill is justified and documented.

Cable splices in raceways are prohibited. Cable splices are only made in manholes, boxes or suitable fittings. Splices in cables passing through the containment penetration assemblies are made in terminal boxes located adjacent to the penetration assembly. (See Regulatory Guide 1.75 for splice exception.)

The cable installation is such that direct impingement of fire suppressant does not prevent safe reactor shutdown.

8.3.3.3 Localization of Fires

In the event of a fire, the installation design localizes the physical effects of the fire by preventing its spread to adjacent areas or to adjacent raceways of different divisions. Floors and walls are effectively used to provide vertical and horizontal fire-resistive separations between redundant cable divisions. Localization of the effect of fires on the electric system is accomplished by independence and separation of redundant cable/raceway systems and equipment as described in Subsection 8.3.1.4.

In any given fire area, equipment is typically from only one safety-related division. This design objective is not always met due to other overriding design requirements. IEEE Standard 384 and Regulatory Guide 1.75 are always complied with, however. In addition, an analysis is made and documented in Appendix 9A to ascertain that the requirement of being able to safely shut down the plant with complete burnout of the fire area without recovery of the equipment is met. The fire detection, fire suppression, and fire containment systems provided, as described in Appendix 9A, assure that a fire of this magnitude does not occur.

8.3.4 COL Unit-Specific Information

8.3.4.1 Interrupting Capacity of Electrical Distribution Equipment

The interrupting capacity of circuit interrupting devices are compatible with the magnitude of the available fault current based on the final selection of the batteries, battery chargers, and associated protective devices, therefore no further COL action is required. (See Subsection 8.3.1.1.5).

8.3.4.2 Defective Refurbished Circuit Breakers

NRC Bulletin No. 88-10 and NRC Information Notice No. 88-46 identify problems with defective refurbished circuit breakers. Refurbished circuit breakers shall not be used in safety-related circuitry of the ESBWR design. New safety-related circuit breakers are specified in the ESBWR purchase specifications (Subsection 8.3.1.1.5), therefore no further COL action is required.

8.3.4.3 Non-Safety Standby Diesel-Generator Load Table Changes

The diesel-generator loads and the load sequencing for the standby onsite AC power sources are shown in Table 8.3-4 (see Subsection 8.3.1.1.8).

8.3.4.4 Minimum Starting Voltages for Class 1E Motors

"BTP PSB1" (Subsection 8.1.5.2.4), BTP PSB1 requires protection against degraded voltage for Class 1E systems. BTP PSB1 is not applicable to the ESBWR design, because no safety-related motors are required for the safe shutdown of the ESBWR design for 72 hours. Degraded voltage in the offsite power system does not affect the Class 1E systems as all Class 1E systems are powered from batteries.

8.3.4.5 Certified Proof Tests on Cable Samples

Certified proof tests are performed on cables to demonstrate 60-year life, and resistance to radiation, flame, and the environment (refer to Subsection 8.3.3.2 and References 8.3-4 and 8.3-5). The testing methodology ensures such attributes are acceptable for the 60-year life.

All cables specified for Class 1E systems and circuits are moisture and radiation resistant, are highly flame resistant and evidence little corrosive effect when subjected to heat or flame, or both. Certified proof tests are performed on cable samples to:

- certify 60-year life by thermal aging;
- prove the radiation resistance by exposure of aged specimens to integrated dosage;
- prove mechanical/electrical tests of cable for environmental conditions specified;
- prove flame resistance by the vertical tray, 70,000 Btu/hr flame test for 20 minutes (minimum); and
- show acceptable levels of gas evolution by an acid gas generation test.

8.3.4.6 Associated Circuits

Subsections 8.3.1.1.5 and 8.3.1.3.1 commit to the identification and justification for all associated circuits added beyond the certified design.

Prior to the final design there were no "associated circuits," as defined by IEEE 384, known to exist in the ESBWR Standard Plant design. In the final unit-specific design, provide: (1) assurance that no "associated circuit" exists, or (2) specifically identify and justify in Table 8.3-5 each such circuit that does not meet the requirements of Regulatory Guide 1.75.

8.3.4.7 Electrical Penetration Assemblies

Subsections 8.3.1.1.5 and 8.3.1.4.1 specify design requirements for electrical penetration assemblies. Fault current clearing-time curves of the electrical penetrations' primary and secondary current interrupting devices plotted against the thermal capability (I^2t) curve of the penetration (to maintain mechanical integrity) are in Figure 8.3-2. An analysis showing coordination of these curves is performed for each curve. Figure 8.3-3 provides a simplified one-line diagram showing the location of the protective devices in the penetration circuit, and indicate the maximum available fault current of each circuit.

Provide specific identification and location of power supplies used to provide external control power for tripping primary and backup electrical penetration breakers (if utilized).

The thermal capability of all electrical conductors within penetrations is preserved and protected by one of the following:

(1) The maximum available fault current (including failure of upstream devices) is less than the maximum continuous current capacity of the conductor within the penetration; or

(2) Redundant circuit protection devices are provided, and are adequately designed and set to interrupt current, in spite of a single active failure, at a value below the maximum continuous current capacity of the conductor within the penetration. Such devices are located in separate panels or separated by barriers; and are independent such that failure of one does not adversely affect the other.

8.3.4.8 DC Voltage Analysis

A DC voltage analysis showing battery terminal voltage and worst case DC load terminal voltage at each step of the Class 1E battery loading profile is provided in Table 8.3-6 (see Subsection 8.3.2.1).

The manufacturer's ampere-hour rating of the batteries at the 2-hour rate, and at the 72-hour rate are found in Table 8.3-7 (see Subsections 8.3.2.1.1 and 8.3.2.1.2).

8.3.4.9 Administrative Controls for Bus Grounding Circuit Breakers

Bus grounding circuit breakers provide safety grounds during maintenance operations. Administrative controls are provided by the COL holder (see Subsection 8.3.1.1.1).

8.3.4.10 Testing of Thermal Overload Bypass Contacts for Motor Operated Valves

The ESBWR design does not have Class 1E motor operated valves, therefore this subsection is not applicable.

8.3.4.11 Emergency Operating Procedures for Station Blackout

The COL holder shall provide site-specific instructions in their Emergency Operating Procedures for operator actions during a postulated station blackout event.

8.3.4.12 Periodic Testing of Power and Protection Systems

The program for periodic testing of electric power and protection systems is in accordance with Regulatory Guide 1.118 and IEEE 338.

8.3.4.13 Common Industrial Standards Referenced in Purchase Specifications

In addition to the regulatory codes and standards required for licensing, purchase specifications contain a list of common industrial standards, as appropriate, for the assurance of quality manufacturing of both safety-related and nonsafety-related equipment. Such standards include ANSI, ASTM, IEEE, NEMA, UL, etc., examples of which are identified in Table 8.3-2.

8.3.4.14 Periodic Testing of Batteries

The periodic testing of batteries in accordance with Regulatory Guide 1.129 and IEEE 450, is addressed within the Surveillance Requirements of Sections 3.8 of unit-specific Technical Specifications.

8.3.4.15 Regulatory Guide 1.160

The Maintenance Rule Program is addressed within the programs section of the COL application.

8.3.5 References

8.3-1 IEEE 946, “Recommended Practice for the Design of Safety-Related DC Auxiliary Power Systems for Nuclear Power Generating Stations.”

8.3-2 IEEE 485, “Recommended Practice for Sizing Large Lead Storage Batteries for Nuclear Power Generating Stations.”

8.3-3 IEEE 535, “Standard for Qualification of Class 1E Lead Storage Batteries for Nuclear Power Generating Stations.”

8.3-4 IEEE 383, “Type Test of Class 1E Cables, Field Splices, and Connections for Nuclear Power Generating Stations.”

8.3-5 ICEA S-66-524/NEMA WC-7, “Cross-Linked Thermosetting Polyethylene Insulated Wire and Cable for the Transmission and Distribution of Electrical Energy.”

8.3-6 IEEE 835, "Standard Power Cable Ampacity Tables."

8.3-7 ICEA-54-440/NEMA WC-51, “Ampacities of Cables in Open-top Cable Trays.”

8.3-8 IEEE 450, “Recommended Practice for Maintenance, Testing, and Replacement of Vented Lead-Acid Batteries for Stationary Applications.”

8.3-9 IEEE 484, “Recommended Practice for Installation Design and Installation of Vented Lead-Acid Batteries for Stationary Applications.”

8.3-10 IEEE 384, “Standard Criteria for Independence of Class 1E Equipment and Circuits.”

8.3-11 IEEE 1202, “Standard for Flame Testing of Cables for Use in Cable Tray in Industrial and Commercial Occupancies.”

Table 8.3-1

Diesel-Generator Alarms

Alarm points

DESCRIPTION	ALARM	
	LOCAL	REMOTE
Diesel engine running	X	X
D/G trouble		X
D/G controls not in Auto	X	X
G main breaker trip	X	X
D/G in maintenance mode	X	X
D/G in parallel mode	X	X
D/G over speed	X	X
Engine failed to start	X	X
Generator Differential relay	X	X
Reverse power relay	X	X
Field relay	X	X
Over current relay	X	X
Lock-out relay operated	X	X
Over voltage relay	X	X
Ground relay	X	X
Over temperature relay	X	X
Under voltage relay	X	X
Frequency relay	X	X

Indication

DESCRIPTION	INDICATION	
	LOCAL	REMOTE
Engine speed	X	X
Engine hour meter	X	X
Generator output voltage	X	X
Current	X	X
Active power output	X	X
Reactive power output	X	X

Table 8.3-2

Acceptable Industry Standards

(Note: There are many more standards referenced in the standards listed below.)

Motor Control Centers

- NEMA ICS-2 — Standards for Industrial Control Devices, Controllers and Assemblies
- Underwriter's Laboratories Standard No. 845

Low Voltage Circuit Breakers

- IEEE C37.13 — Low Voltage Power Circuit Breakers
- IEEE C37.16 — Preferred Ratings and Related Requirements for Low Voltage AC Power Circuit Breakers and AC Power Service Protectors
- IEEE C37.17 — Trip Devices for AC and General-Purpose DC Low Voltage Power Circuit Breakers
- ANSI C37.50 — Test Procedures for Low Voltage AC Power Circuit Breakers Used in Enclosures

Molded Case Circuit Breakers

- UL 489 — Branch Circuit and Service Circuit Breakers
- NEMA AB-1 — Molded Case Circuit Breakers

Metal Clad Switchgear

- IEEE C37.04 — AC Power Circuit Breaker Rating Structure
- IEEE C37.06 — Preferred Ratings of Power Circuit Breakers
- IEEE C37.09 — Test Procedure for Power Circuit Breakers on a Symmetrical Current Basis
- IEEE C37.010 — Application Guide for AC High-Voltage Circuit Breakers on a Symmetrical Current Basis
- IEEE C37.11 — Power Circuit Breaker Control Requirements
- IEEE C37.20 — Switchgear Assemblies and Metal-Enclosed Bus
- IEEE C37.100 — Definitions for Power Switchgear

Transformers

- IEEE C57.12 — General Requirements for Distribution, Power, and Regulating Transformers
- IEEE C57.12.11 — Guide for Installation of Oil-Immersed Transformers (10MVA and Larger, 69-287 kV rating)
- IEEE C57.12.80 — Terminology for Power and Distribution Transformers
- IEEE C57.12.90 — Test Code for Distribution, Power, and Regulating Transformers

Batteries

- IEEE 450 — Recommended Practice for Maintenance, Testing, and Replacement of Vented Lead-Acid Batteries for Stationary Applications.
- IEEE 484 — Recommended Practice for Installation Design and Installation of Vented Lead-Acid Batteries for Stationary Applications.
- IEEE 485 — Recommended Practice for Sizing Large Lead Storage Batteries for Nuclear Power Generating Stations.

Table 8.3-3

Battery Duty Cycles

Safety-related	Division/train	Rated voltage (V)	Duty cycles (h)
Y	1	250	72
Y	1	250	72
Y	2	250	72
Y	2	250	72
Y	3	250	72
Y	3	250	72
Y	4	250	72
Y	4	250	72
N	A	250	2
N	A	250	2
N	B	250	2
N	B	250	2
N	C	250	2
N	A	125	2
N	B	125	2

Table 8.3-4

Diesel-Generator Loads and Sequencing of Loads

(Data supplied on a unit-specific basis in the COL application.)

Table 8.3-5

Associated Circuits Table

(Data supplied on a unit-specific basis in the COL application.)

Table 8.3-6

Class 1E Battery Loading Profile

(Data supplied on a unit-specific basis in the COL application.)

Table 8.3-7

Amp. Hour Load Table For 72 Hour Battery Rate

(Data supplied on a unit-specific basis in the COL application.)

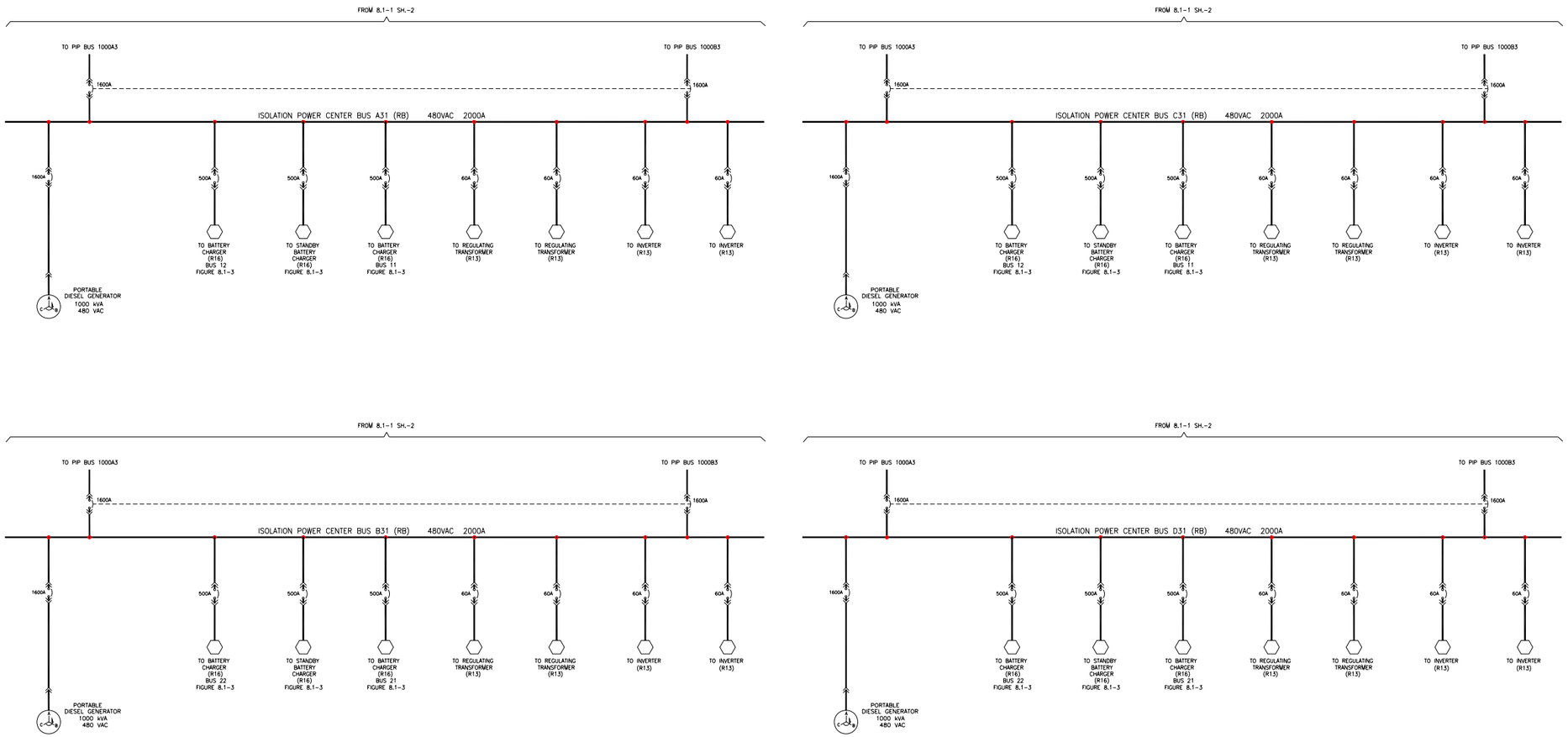

Figure 8.3-1. 480 Volt Power Centers - One Line Diagram

Sh 1 of 4

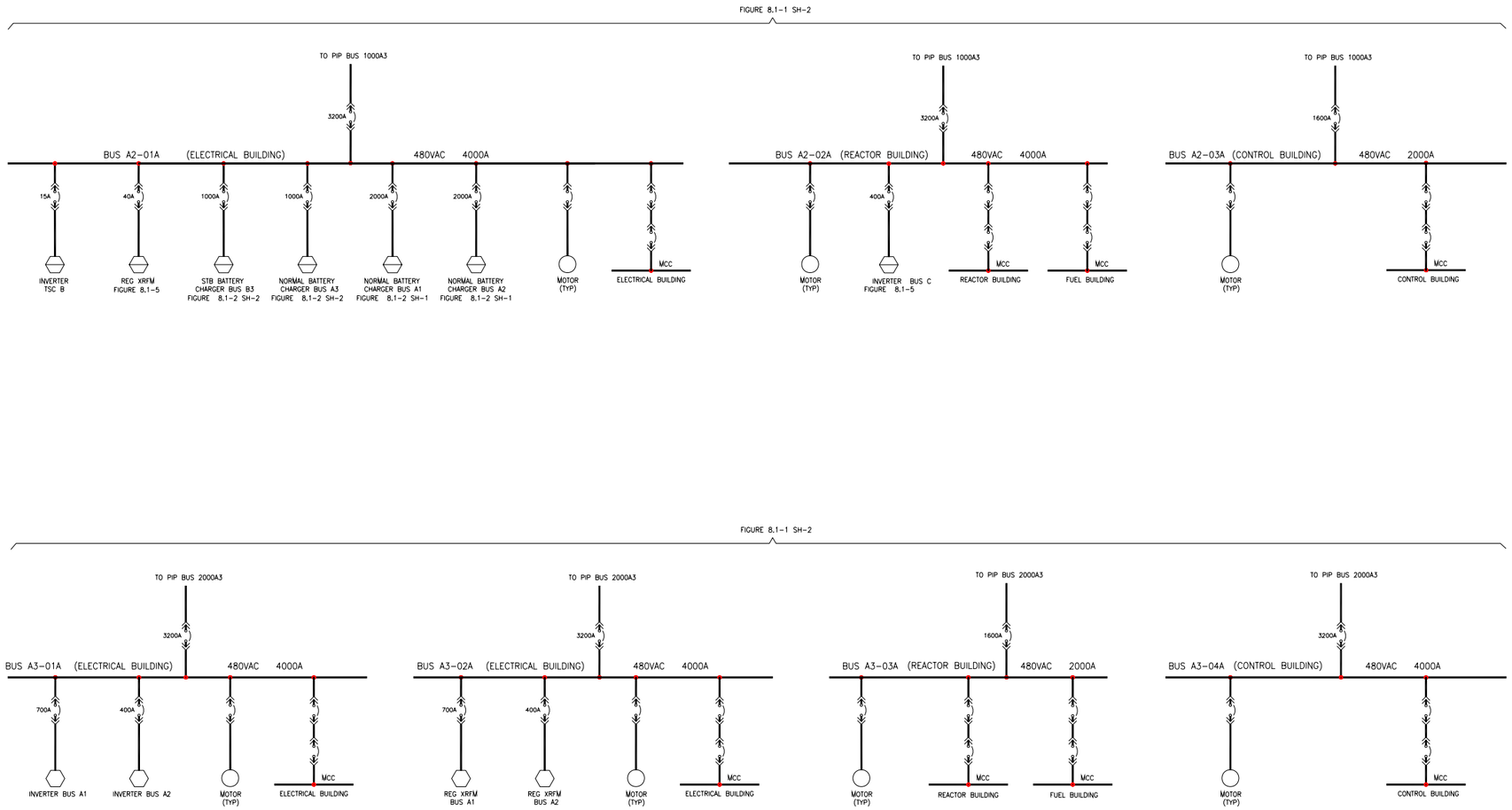

Figure 8.3-1. 480 Volt Power Centers - One Line Diagram

Sh 2 of 4

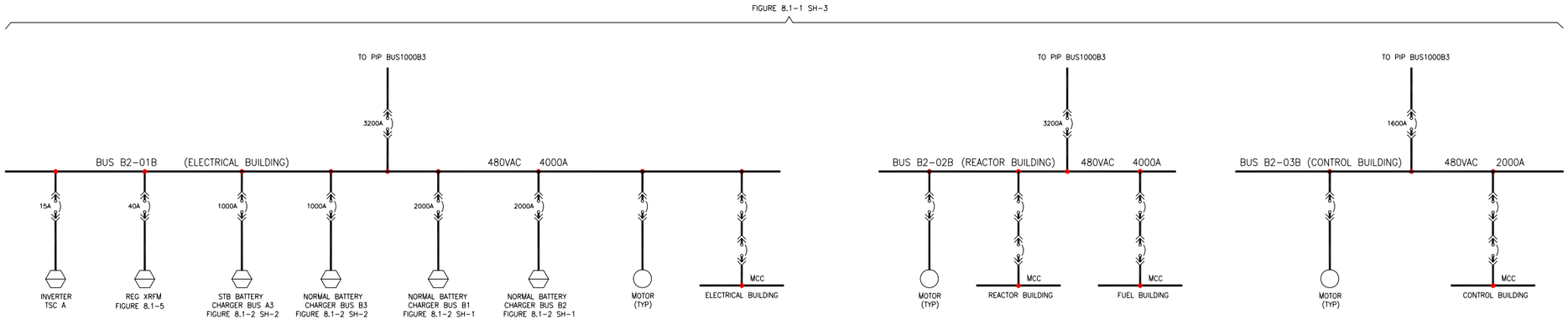

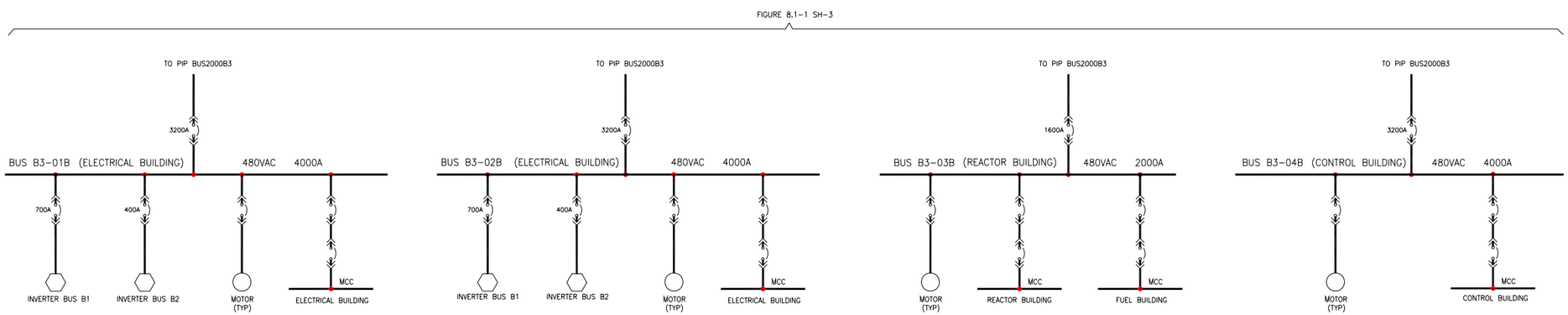

Figure 8.3-1. 480 Volt Power Centers - One Line Diagram
Sh 3 of 4

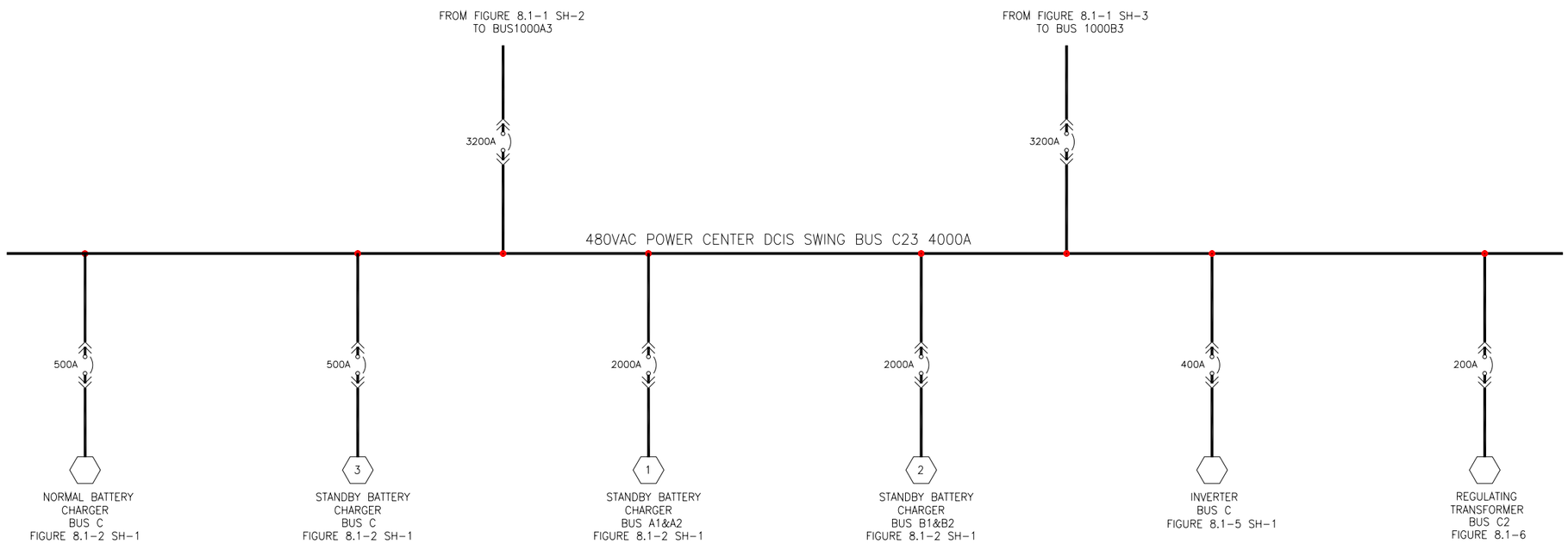

Figure 8.3-1. 480 Volt Power Centers - One Line Diagram
Sh 4 of 4

(Figure supplied on a unit-specific basis in the COL application.)

Figure 8.3-2. Fault Current Clearing Time Curves – Electric Penetrations
Sh 1 of X

(Figure supplied on a unit-specific basis in the COL application.)

Figure 8.3-3. Protective Devices for Electric Penetrations – One-Line (Simplified)
Sh 1 of X

APPENDIX 8A MISCELLANEOUS ELECTRICAL SYSTEMS

8A.1 STATION GROUNDING AND SURGE PROTECTION

8A.1.1 Description

The electrical grounding system is comprised of:

- An instrument and computer grounding network;
- An equipment-grounding network for grounding electrical equipment (e.g., transformer, switchgear, motors, distribution panels, cables, etc.) and selected mechanical components (e.g., fuel tanks, chemical tanks, etc.);
- A plant grounding grid; and
- A lightning protection network for protection of structures, transformers and equipment located outside buildings.

The plant instrumentation is grounded through a separate insulated radial grounding system comprised of buses and insulated cables. The instrumentation grounding systems are connected to the station-grounding grid at discrete points and are insulated from all other grounding circuits. Separate instrumentation grounding systems are provided for plant analog (i.e., relays, solenoids, etc.) and digital instrumentation systems. It should be recognized that there are numerous accepted grounding techniques and that the actual installation of a ground system should be made with reference to the recommendations of the I&C equipment manufacturers since the techniques used to solve one problem may result in the creation of a different problem (8A.4, References, 8A-8, IEEE-1050-2004 "IEEE Guide for Instrumentation and Control Equipment Grounding in Generating Stations.").

The equipment-grounding network is such that all major equipment, structures and tanks are grounded with two diagonally opposite ground connections. The ground bus of all switchgear assemblies, motor control centers and control cabinets are connected to the station ground grid through at least two parallel paths. Bare copper risers are furnished for all underground electrical ducts and equipment, and for connections to the grounding systems within buildings. One bare copper cable is installed with each underground electrical duct run, and all metallic hardware in each manhole is connected to the cable.

A plant-grounding grid consisting of bare copper cables is provided to limit step and touch potentials to safe values under all fault conditions. The buried grid is located at the switchyard and connected to systems within the buildings by a 500 kcmil bare copper loop, which encircles each building.

Each building is equipped with grounding systems connected to the station-grounding grid. As a minimum, every other steel column of the building perimeter is connect directly to the grounding grid.

The plant's main generator is grounded with a neutral grounding device to limit the magnitude of fault current due to a phase-to-phase fault. Although the impedance of the neutral grounding device limits the maximum phase current under short-circuit conditions, it does not limit the current to a value less than that for a three-phase fault at its terminals.

The onsite, medium-voltage AC distribution system is resistance grounded at the neutral point of the low-voltage windings of the UATs and RATs. The neutral point of the generator windings of the Standby Onsite AC Power Supply is through neutral resistors, sized for continuous operation in the event of a ground fault.

The neutral point of the low-voltage AC distribution systems is either solidly or impedance grounded, as necessary, to ensure proper coordination of ground fault protection. The DC systems are ungrounded.

The target value of ground resistance is one ohm or less for the Reactor, Turbine, Control, Service and Radwaste buildings. This is consistent with Section 12.1 of IEEE-80. If the target grounding resistance is not achieved by the ground grid, auxiliary ground grids, shallow buried ground rods or deep buried ground rods will be used in combination as necessary to meet the target ground resistance value.

The lightning protection system covers all major plant structures and is designed to prevent direct lightning strikes to the buildings, electric power equipment and instruments. It consists of air terminals, bare down comers and buried grounding electrodes, which are separate from the normal grounding system. Lightning arresters are provided for each phase of all tie lines connecting the plant electrical systems to the switchyard and offsite line. These arresters are connected to the high-voltage terminals of the main step-up and reserve transformers. Plant instrumentation located outdoors or connected to cabling running outdoors is provided with surge suppression devices to protect the equipment from lightning induced surges.

8A.1.2 Analysis

No SRP or regulatory guidance is provided for the grounding and lightning protection system. Lightning protection is provided in accordance with Regulatory Guide (RG) 1.204, "Guidelines for Lightning Protection of Nuclear Power Plants." Both systems are designed and required to be installed to the applicable sections of the following codes and standards.

(1) IEEE-80, Guide for Safety in AC Substation Grounding (Reference 8A-1);

(2) IEEE-81, Guide for Measuring Earth Resistivity, Ground Impedance, and Earth Surface Potentials of a Ground System (Reference 8A-2);

(3) IEEE-665, Guide for Generation Station Grounding (Reference 8A-3);

(4) IEEE-1050-2004, IEEE Guide for Instrumentation and Control Equipment Grounding in Generating Stations (Reference 8A-8); and

(5) NFPA-78, National Fire Protection Association's Lightning Protection Code (Reference 8A-4).

This code is utilized as recommended practices only. It does not apply to electrical generating plants.

8A.1.3 COL Unit Specific Information

Ground resistance measurements are performed to determine that the required value of one ohm or less has been met, and/or to make additions to the system as necessary to meet the target resistance.

8A.2 CATHODIC PROTECTION

8A.2.1 Description

A cathodic protection system is provided. Its design is plant unique and is tailored to the site conditions and meet the requirements listed in Subsection 8A.2.3.

8A.2.2 Analysis

There are no SRP or regulatory requirements nor any national standards for cathodic protection systems. The system is designed to the requirements listed in Subsection 8A.2.3.

8A.2.3 COL Unit Specific Information

The following provides the minimum requirements for the design of the cathodic protection systems. These requirements are the same as those called for in National Association of Corrosion Engineers (NACE) Standards (Reference 8A-5).

The need for cathodic protection on the entire site, portions of the site, or not at all shall be determined by analyses. The analyses shall be based on soil resistivity readings, water chemistry data, and historical data from the site gathered from before commencement of site preparation to the completion of construction and startup.

(1) Where large protective currents are required, a shallow interconnected impressed current system consisting of packaged high silicon alloy anodes and transformer-rectifiers, shall normally be used. The rectifiers shall be approximately 50% oversized in anticipation of system growth and possible higher current consumption.

(2) The protected structures of the impressed current cathodic protection system shall be connected to the station-grounding grid.

(3) Localized sacrificial anode cathodic protection systems shall be used where required to supplement the impressed current cathodic protection system and protect surfaces which are not connected to the station-grounding grid or are located in outlying areas.

(4) Prepackaged zinc type Reference electrodes shall be permanently installed near poorly accessible protected surfaces to provide a means of monitoring protection level by measuring potentials.

(5) Test stations above grade shall be installed throughout the station adjacent to the areas being protected for termination of test leads from protected structures and permanent Reference electrodes.

8A.3 ELECTRIC HEAT TRACING

8A.3.1 Description

The electric heat tracing system provides freeze protection where required for outdoor service components and fluid warming of process fluids if required, either in or out doors. If the operation of the heat tracing is required for proper operation of a safety-related system, the heat tracing for the safety-related system is required to be Class 1E. Power for heat tracing is supplied from the on-site distribution system buses. Non-Class 1E heat tracing is supplied from

the same Power Center or Motor Control Center as the components protected. Class 1E heat tracing is assigned to the appropriate division of Class 1E power.

8A.3.2 Analysis

There are no SRP or regulatory guidance provided for electric heat tracing systems. These types of systems are designed and installed in accordance with NACE standards. The requirements for cathodic protection systems are listed above in Subsection 8A.2.1.

- IEEE-622, Recommended Practice for the Design and Installation of Electric Heat Tracing Systems for Nuclear Power Generating Stations (Reference 8A-6).
- IEEE-622A, Recommended Practice for the Design and Installation of Electric Pipe Heating Control and Alarm Systems for Power Generating Stations (Reference 8A-7).

8A.3.3 COL Information

No COL applicant information is required.

8A.4 REFERENCES

8A-1 IEEE-80, “Guide for Safety in AC Substation Grounding.”

8A-2 IEEE-81, “Guide for Measuring Earth Resistivity, Ground Impedance, and Earth Surface Potentials of a Ground System.”

8A-3 IEEE-665, “Guide for Generating Station Grounding.”

8A-4 NFPA-78, “National Fire Protection Association’s Lightning Protection Code.”

8A-5 National Association of Corrosion Engineers (NACE) Standards.

8A-6 IEEE-622, “Recommended Practice for the Design and Installation of Electric Heat Tracing Systems for Nuclear Power Generating Stations.”

8A-7 IEEE-622A, “Recommended Practice for the Design and Installation of Electric Pipe Heating Control and Alarm Systems for Power Generating Stations.”

8A-8 IEEE-1050-2004, “IEEE Guide for Instrumentation and Control Equipment Grounding in Generating Stations.”

APPENDIX 8B STATION BLACKOUT EVALUATION

The station blackout safety analysis is provided in Subsection 15.5.5.

Changes From Revision 1 to Revision 2

DCD Tier 2 Chapter 8

Item	**Location** (e.g., subsection with paragraph/sentence/item, table with column/row, or figure)	**Description of Change**
1	S8.1.1	Deleted: "(or other reliable sources such as Combustion Turbine Generators) and "()" later in sentence. ESBWR design now uses diesel generators as standard design. Editorial clarification.
2	S8.1.2.1	Remove reference to COL and refer to Subsection 8.1.7. Editorial Clarification.
3	S8.1.2.2 Off-Site Power System Description, second, third, forth, fifth, sixth and seventh paragraph.	Second paragraph: Clarified text editorial to reflect off-site power as shown on Figure 8.1-1. Third paragraph editorial corrections same reason as second paragraph. Fourth paragraph deleted and replaced: 'two electrically independent and physically separate' with "the switchyard connected to the transmission grid". This change reflects the ESBWR exceptions for GDC 17 and RG 1.32 that commit to DC power to support passive core cooling and containment integrity safety functions with no AC power required for 72 hours and supports grid reliability and stability. Fifth, sixth and seventh paragraphs have editorial clarifications to reflect the Figure 8.1-1.
4	S8.1.3.1	Revise description of the on-site AC power to reflect a medium voltage Main Generator Circuit Breaker instead of a high voltage breaker, two UAT high side medium voltage isolation breakers, and two motor operated disconnects on the high side of the RATs. Revised to reflect unit availability and grid reliability/stability detail design. These editorial changes reflect the detail design requirements of the protective relay scheme as it reflects the Generation System Design, Option 1 for generator breaker configuration that provides for total power source protection (Grid, Main Generator and Standby Diesel Generators), ensures reliability and plant availability and reduces unwanted plant trips. Editorial revised description of power load groups to not reference to "tiers" of power, only "power load groups". Changes are COLA inputs.
5	S8.1.3.2	Editorial grammar corrections and to reflect 72 hours of DC of DC availability after plant shutdown.

6	S8.1.4	Revised first and second sentence and last sentence to reflect N-2 divisions of power. Add the following clarification to the last sentence, “and Subsection 7.1.1.2.1, which indicate the four separate divisions of safety-related power to each system required for safety, as shown in Figure 8.1-4.”
7	S8.1.5.1, First Sentence	Add, “Unit-specific” to the beginning of the sentence. Delete, “the responsibility of the COL applicant as defined” and replace with, “described within” before ‘Subsection 8.2.1’. Editorial Clarification.
8	S8.1.5.1, second paragraph	Revise to delete: ‘two physically separated’, ‘simultaneous’, ‘One of t’, ‘lines’, ‘as’, and ‘the other transmission line serves as’ and rewrite the paragraph to read; “Electric power from the utility grid to the off-site power system is provided by transmission lines designed and located to minimize the likelihood of failure while ensuring grid reliability. The transmission system serves as the main off-site power circuit (Normal Preferred Power), and the reserve off-site power circuit (Alternate Preferred Power) through the site switchyard.” Same change basis as 3 above and 9 below.
9	S8.1.5.1, third paragraph	Revise to delete; ‘such that the equipment associated with the two transmission lines is physically separated to’ and rewrite the paragraph to read, “The switchyard is designed to minimize the likelihood of simultaneous failure to both the Normal and Alternate Preferred Power sources from the switchyard to the Unit and Reserve Auxiliary Transformers.” Same change basis as 3 and 8 above.
10	S8.1.5.1, forth paragraph	Change ‘12’ hours to “24” hours for the time required to switch to a spare Main Transformer. Change made due to industry-established standards for this design concept based on COLA comment input.
11	S8.1.5.1	Revised fifth, sixth and seventh paragraphs to reflect detail design and editorial corrections as shown in Figure 8.1-1.
12	S8.1.5.2.1, first and third paragraphs	Added further editorial clarification to reflect description of detail on site power in S8.1.3.
13	S8.1.5.2.1, forth, fifth and sixth paragraphs.	Editorial revisions to text to describe/clarify details of the N-2 design.
14	S8.1.5.2.2.1, total section.	Editorial clarifications to text to describe in further detail the N-2 design, in that NO AC source is required to support the Class 1E AC loads, which are totally powered by DC batteries through inverters to uninterruptible AC

		distribution should the normal preferred power (AC sources) be lost.
15	S8.1.5.2.2.2, last sentence.	Editorial, ‘6.9KV’ to “6.9 kV”.
16	S8.1.5.2.3, second paragraph.	Deleted second paragraph. The N-2 design has deleted all power loads other then I&C loads from the four divisions of safety-related power. The alternative AC backup source is replaced by the existing AC source that used to go to 480AC to 480 VAC isolation transformers before stepping down to 120VAC. The N-2 design has three sources of power to the Safety-related AC power distribution, as described in S8.1.5.2.2.1, second and third paragraphs.
17	S8.1.5.2.4, GDC 4	Revise GDC 4 title to delete ‘Missile’ and replace with, “Dynamic Effects”. Editorial correction.
18	S8.1.5.2.4, GDC 5	Delete, ‘is a single unit plant design’ and replace with, “does not share any safety-related structure, system or component with any other unit”. Editorial clarification.
19	S8.1.5.2.4, GDC 17	Add clarification of exception, “Safety-related DC power sources are provided to support passive core cooling and containment integrity safety functions. No offsite or diesel-generator-derived AC power is required for 72 hours after an abnormal event.”
20	S8.1.5.2.4, GDC 18	Add clarification of exception, “Safety-related DC power sources are provided to support passive core cooling and containment integrity safety functions. No offsite or diesel-generator-derived AC power is required for 72 hours after an abnormal event.”
21	S8.1.5.2.4, RG 1.6	Deleted last sentence. Not applicable to the ESBWR design.
22	S8.1.5.2.4, RG 1.9	Added clarification at end of non-applicable statement: “therefore this regulatory guide is not applicable to the ESBWR design.
23	S8.1.5.2.4, RG 1.63	Delete, “Light Water Cooled”. Editorial correction.
24	S8.1.5.2.4, RG 1.75	Change, ‘will meet’ to “meets”. Editorial clarification.
25	S8.1.5.2.4, RG 1.106	This RG not applicable to the ESBWR passive design. Added non-applicable statement.
26	S8.1.5.2.4, RG 1.108	Delete per NRC notification. Editorial.
27	S8.1.5.2.4, RG 1.118	Delete: “for COL information”. Editorial clarification.
28	S8.1.5.2.4, RG 1.129	Delete: “for COL information”. Editorial clarification.

29	S8.1.5.2.4, RG 1.160	Delete: “by the COL applicant (see” and “for COL information)”. Editorial clarification.
30	S8.1.5.2.4, BTP ICSB 11 (PSB)	Delete: “for COL information”. Editorial clarification. Add non-applicable statement for ESBWR.
31	S8.1.5.2.4, BTP ICSB 18 (PSB)	Deleted. No S-R, manually controlled electrically operated valves are in the ESBWR design.
32	S8.1.5.2.4, BTP ICSB 21	Delete, “Guidance for Application of Regulatory Guide 1.47” and replace with new title “Supplemental Guidance for Bypass and Inoperable Status Indication for Engineered Safety Features Systems”. NRC title change, editorial.
33	S8.1.5.2.4, BTP PSB 1	Delete: “for COL information”. Add non-applicability statement for ESBWR design.
34	S8.1.5.2.4, BTP PSB 2	Added non-applicability statement since diesels are non-safety.
35	S8.1.5.2.4, NUREG/CR 0660	Editorial, replace ‘for’ with “to”.
36	S8.1.5.2.4, NUREG-0718, Revision 1	Delete: ‘TMI Item regarding application of RG 1.47’ and replace with new title, “Licensing Requirements for Pending Applications for Construction Permits and Manufacturing License,” relating to TMI Item I.D.3, “Safety System Status Monitoring,” regarding the application of Regulatory Guide 1.47.” Editorial.
37	S8.1.6.3 Compliance to Regulatory Requirements and Guidelines	Revise to “8.1.6” and make minor editorial clarifications to the text.
38	S8.1.6 COL Information	Revise number and title to: “8.1.7 COL Unit-Specific Information”. Editorial change.
39	S8.1.6.1 Utility Power Grid Description	Change ‘8.1.6.1’ to”8.1.7.1”. Delete the first sentence and revise description to: “The Main Generator output is delivered to the off-site switchyard through the on-site main step-up transformers and site specific Normal Preferred Power Supply lines, as described within Section 8.2. Items served by the switchyard, unit to switchyard connections, through the site-specific Alternate Preferred Power lines at the RATs, are provided in Table 8.1-2. Transmission system and intra-system ties are further described within Section 8.2.”
40	S8.1.6.2 Offsite Power System Description	Deleted and replaced function with Table 8.1-2 as described in new S8.1.7.1. Editorial.

41	S8.1.7 References	Change numbering from '8.1.7' to "8.1.8". Editorial.
42	Table 8.1-1 On-Site Power System SRP Criteria Applicability Matrix	Revise table applicability reflect changes that are described in Subsection 8.1.5.2.4. Editorial clarifications to reflect ESBWR design basis.
43	(New) Table 8.1.2 Grid Design Parameters	New table added in accordance with 8.1.7.1 for use by the utility to show lines and items served by site specific design in the future COLA/FSAR. Editorial to standardize the DCD for FSAR approval.
44	Figure 8.1-1, Sheet 1	Delete the primary voltage indicated at the UAT and RAT tables and replace with a "*" and another "*" at the 'SEE NOTE 4' by each table. Show detail design for UAT breakers, RAT MODs and main generator circuit breaker location. Delete 13.8 kV supply to the Aux Boilers since detail design for P62 is now oil fired and not electric fired. Editorial clarification.
45	Figure 8.1-1, Sheet 1	Revise the dotted line to go through the drawing above the main transformers, UAT and RAT's and show "OFF SITE POWER" above the line and "ON SITE POWER" below the line. Clarification to show ESBWR standard design as "ON SITE" and OFF SITE to be site specific in design.
46	Figure 8.1-1, Sheets 2 and 3.	Editorial for PIP Bus label and show interlocks at Diesel generator feeder breaker to Normal and Alternate feeder breakers.
47	Figure 8.1-2, Sheets 1 and 2.	Redrawn for clarity.
48	Figure 8.1-3	Added second batteries, chargers and 250VDC power centers to divisions 3 and 4 to provide 72 hours of 120 VAC power with deletion of all 480 VAC safety-related loads.
49	Figure 8.1-4	Added second UPS (rectifiers, diodes, inverters, transformers, static and maintenance transfer switches and 120VAC load buses to divisions 3 and 4 to equalize load capacity and ensure 72 hour ampacity for all four divisions of safety-related power.
50	Figure 8.1-5, sheet 2.	Editorial correction to show correct power center supplying UPS rectifiers A3 and B3.
51	Figure 8.1-6, sheet 1 of 2.	Deleted this figure and the 32 breakers, four transformers, and associated buses that supplied diesel derived 120VAC power to the Class 1E safety-related I & C E-DCIS loads to be used as a second source of power for self-check. Power

		replaced with second battery of each division to ensure 72 hours of DC power without AC source required.
52	Figure 8.1-6, sheet 2 of 2.	Revised sheet number to sheet 1 of 1.

1	S8.2.1.1S#.##.#, 2nd para.	Revised to reflect COLA comments.Replaced "_____" with "_____"
2	S8.2.1.2, complete subsection.S##.#.##, 4th para., 5th sent.	Revised the text of this complete subsection to reflect the Figure 8.1-1 sheets 1, 2 and 3 to show detail of separation between off site and on site power. Also describes with clarity the details required to protect the grid as a source from faults within the on site power systems. Also enhances the description of protection for the main on site generatorRewritten for clarity. and stand-by diesel generators. Changes are editorial enhancements, based on actual Main generator revised size. Changes standardize the COLA.
3	S8.2.1.2.1, Switchyard.	Revised the subsection to reflect COLA comments to standardize the DCD for COLA application.
4	S8.2.2, Analysis, GDC 17, GDC 18 and BTP ICSB 11.	GDC 17 exception described to not require AC power sources to support containment isolation or core cooling safety-related functions for 72 hours. GDC 18 has be clarified to reflect that the ESBWR DC systems comply with this GDC and AC power sources are not applicable, as they are not required for 72 hours after an abnormal event. BTP ICSB 11 has deleted 'for COL information' as a COLA change to the DCD for standardization..
5	S8.2.3, Design Bases Interface Requirements (Title).S##.##.#.#, new 3rd para.	Revised subsection title to, "Design Bases Requirements" per COLA comment to remove word 'interface'.Additional details provide.
6	S8.2.3, bullets one and two.	Editorially revised to reflect both plant description in S8.1, Figure 8.1-1 and ESBWR position to GDC 17 and 18.
7	S8.2.3, bullet 5.	Revised to show both reference to circuit breaker standard and disconnect switch standard per COLA comment.
8	S8.2.3, bullet 6.	Revised fire barrier description to reflect S9A.4.7.
9	S8.2.3, bullet 7.	Editorial correction per COLA standardization.
10	S8.2.3, bullets 8 and 9.	Rewrote bullets 8 and 9 to reflect comment 8, above, and COLA standardization editorial changes. Deleted 'with separate manholes." From end of bullet 8 since the cables are separated by the raceways, not the duct bank, therefore

		there will be by a common manhole to the duct bank.
11	S8.2.3, bullet 10.	Rewrote to reflect COLA standard requirement for Reliability and Stability studies and PRA analysis in Chapter 19.
12	S8.2.3, bullet 11.	Rewritten to reflect Figure 8.1-1 and detail design on interface between RAT failure and the off site switchyard.
13	S8.2.3, bullet 12.	Editorial clarification to reflect standard ESBWR ground grid design and reference S8A.1.1.
14	S8.2.4 Title.	Changed section title to “COL Unit Specific Information” as a COLA comment incorporation.
15	S8.2.4.1	Revised to add Table 8.1-2 as a COL application requirement.
16	S8.2.4.2	Revised to show COL application to address in S8.2.1.2.1.
17	S8.2.4.3, S8.2.4.4 and S8.2.4.5.	Revised to, “This item is addressed in Subsection 8.2.1.2” as a COLA comment incorporation.
18	S8.2.4.6, S8.2.4.7, and S8.2.4.8.	Revised to, “This item is addressed in Subsection 8.2.1.2.1” as a COLA comment incorporation.
19	S8.2.4.9.	Revised to, “This item is addressed in Subsection 8.2.1.2” as a COLA comment incorporation.
20	S8.2.4.10 Title and subsection text.	Revise Title to, “Stability and Reliability of the Off-Site Transmission power Systems” per COLA comment incorporation. Revise subsection text to read, “The Reliability and Stability Study will be provided in the COL application as a supporting document to the COLA.” Cola standardization comment incorporation.
21	S8.2.4.11, Transmission System Reliability.	Deleted this subsection and incorporated into S8.2.4.10
22	S8.2.4.11, New title and text from old S8.2.4.12.	New title’ “Generator Circuit Breaker”, and new text, “The generator circuit breaker meets Appendix A to Standard Review Plan (SRP) Section 8.2 and is site-specfic equipment.”
23	S8.2.4.13	Renumbered to S8.2.4.12 and revised text to, “The degraded voltage protection criteria is described in Subsection 8.3.4.4.” COLA standardization ion DCD.
24	S8.2.4.14	Renumbered to 8.2.4.13 and revised text to, “Interface requirements are addressed in Subsection 8.2.3 (Design Basis Requirements). This is a COLA comment incorporation.

25	Reference 8.2-3 (new)	Revised to add new comment as referenced in change 7, above for "IEEE Standard C37.32" with complete title in new text.

1	S8.3.1.1, first bullet and second bullet.	Delete the second from last sentence in first bullet and place the following sentence in the second bullet to correctly clarify where a reverse power relay prevents Backfeed, "Backfeed to the Standby On-site AC power source is prevented by reverse power relaying."
2	S8.3.1.1, third and forth paragraph.	Detail design editorial clarification describes fast transfer between UATs and RATs and deletes the reference to S8.3.4 as a COLA comment incorporation.
2a	S8.3.1.1, fourth paragraph.	Completed the UAT to RAT description of fast transfer and manual fast transfer back to RAT for the PIP Buses, as done for the PG buses in above comment 2 for S8.3.1.1.
3	S8.3.1.1.1, first, second, third, fifth and sixth paragraphs.	Editorial clarifications to the first, second and third paragraphs to reflect Figure 8.1-1 and descriptions within S8.1 and 8.2. Delete last sentence of second and third paragraphs since this will be within the detail design and loading of individual non-safety buses. Fifth and sixth paragraph have had the last sentence of the fifth paragraph and the complete sixth paragraph deleted since the control of breakers will be a plant administrative function as related to the design and control of the "ground truck circuit breaker". The detail design of the switchgear will be in detail level of design that will not be discussed at the level of detail within the DCD.
4	S8.3.1.1.2, first and third paragraphs.	Minor editorial corrections to reflect descriptions of system boundaries and grammar corrections.
5	S8.3.1.1.2, Isolation Power Centers, Second paragraph, last sentence	Delete the sentence. No clarity is obtained from this statement since there are no "interruptible" Class 1E 480VAC power centers and the ESBWR has no 480VAC Class 1E pumps or valves.
6	S8.3.1.1.2, Isolation Power Centers, forth paragraph.	Clarified that voltage and frequency relays are installed at both the PIP and Isolation Power Centers and deleted, "for COL applicant/holder items" per COLA standardization of DCD.
7	S8.3.1.1.2, Motor Control Centers, second paragraph.	Delete paragraph since no Class-1E 480VAC motors or MOVs are used in the ESBWR passive design.
8	S8.3.1.1.3,	Revise the first paragraph to reflect four divisions of

	Uninterruptible AC Power Supply, first, second, third, forth and fifth paragraph.	120VAC Class-1E power supplied by two inverters per division. Delete the last sentence of the first paragraph and delete the complete second paragraph. Revise the third paragraph to reflect 120VAC distribution panels that feed the Reactor Building and the Control Building. These changes delete all 480VAC loads from the four divisions of Class-1E power that now only supply 120VAC for safety-related I&C loads. Revise last sentence of fifth paragraph to clarify the Turbine Building as being Seismic Category II.
9	S8.3.1.1.3, Uninterruptible AC Power Supply, last sentence.	Revised to reflect COLA standardization and corrected reference to 8.3.1.1.5.
10	S8.3.1.1.3, Class 1E Uninterruptible AC Power Supply, second and third paragraphs.	Loads and load function described in the deleted paragraphs will be described within Chapter 7 and not as a part of the power supply system. The detail functions of systems other then electrical power distribution will not be covered in Chapter 8.
11	S8.3.1.1.3, UPS Components.	Revised to include editorial clarifications of each division of power. Equipment added to support two batteries per division instead of only one battery in divisions 3 and 4. Also shows 120VAC as output of each division instead of 480VAC.
12	S8.3.1.1.3, Operating Configuration, under Non-class 1E Uninterruptible Power Supply System.	Moved last three paragraphs to first three paragraphs for clarity and sequence of thought. Deleted the first sentence of the new third paragraph as it is now covered by the last sentence of the new first paragraph. Deleted, “load group” from the first sentence of the fifth paragraph and added, “(Figure 8.1-5 Sh 2 of 2)” to the first sentence of the new sixth paragraph. These changes are all non-technical editorial clarifications.
13	S8.3.1.1.4, third paragraph and first sentence of forth paragraph.	Delete the complete paragraph. This description refers to the deleted Figure 8.1-6 Sheet 1 of 2, which was deleted since AC power is not needed as a supply to the E-DCIC platforms with two batteries now incorporated in divisions 3 and 4. Revise first sentence of forth paragraph to delete, “other” and capitalize “Instrument”. This Paragraph reflects the only drawing left in Figure 8.1-6.
14	S8.3.1.1.5, Class 1E Electric Equipment Design Bases and Criteria:	Delete the first, third, and fifth bullets and revise the second and sixth bullet (new first and third bullets) to reflect change which eliminates all safety-related 480VAC motor loads and revises the new third bullet to reflect COLA standardization for circuit breaker interruption capacity and

		circuit breaker procurement
15	S8.3.1.1.5, Testing:	Replaced the word, 'driven' with "actuated" since the ESBWR passive design has deleted motors on MOVs and never had motor actuated devices (pumps). Now all the safety-related devices are actuated as by squibs or solenoids and not driven, as with a motor.
16	S8.3.1.1.6, Circuit Protection, Philosophy of Protection, second and third paragraphs.	Deleted second paragraph since non-safety circuit protection cannot interface with relays or protection of safety-related circuits. Revised third paragraph to delete the words, "on primary and backup circuit breakers" since relaying is on more then just breakers. Editorial clarification.
17	S8.3.1.1.6, Circuit Protection, Bus Protection, first sentence, fifth and sixth bullets and last sentence.	Revise the first sentence to read, "Bus protection for non-Class 1E and Class 1E are as follows:" since the subsection discusses both Class and non-class. Revise the forth bullet, second sentence to read, "In addition, loss of voltage, degraded voltage and under-frequency relay…." For clarification of design. Add the following clarification statement to the sixth bullet after the word 'loads', "(non-safety only, there are no safety-related 480VAC MCC loads)". Delete the last sentence as a COLA comment since no 480VAC ESBWR safety-related loads.
18	S8.3.1.1.7, Load Shedding and Sequencing on PIP Buses.	Add new second paragraph, "PIP bus ready-to-load signals are generated by the protective relaying logic and control system for the electric power distribution system." Revise old second paragraph, new third paragraph, second sentence, per COLA comment to, "Details of loads and starting sequences are addressed in Subsection 8.3.4.3." Delete the old third paragraph since the protective relaying PLC circuits will control the non-safety PIP load shedding and sequencing and will be shown in a COLA Table.
19	S8.3.1.1.7, LOPP, second paragraph, first and last sentences and old third sentence.	Revise first sentence to delete reference to specific voltage and note that the PIP incoming breakers trip on loss of power and start a new second sentence at, "Large pump motors…". Delete, 'done manually' and add, "a synchronized closure of the feeder breaker by manual action to the selected source." At the end of the last sentence to clarify actions when normal or alternate power has returned. Delete the third through sixth words, 'trips the supply breaker,' since this statement does not correctly describe the LOPP logic.
20	S8.3.1.1.7, Loss of Coolant Accident	Revised to reflect that diesels start with a LOCA and run unloaded in standby and the load shed and sequence is not

	(LOCA).	started. This is a conservative change to the logic.
21	S8.3.1.1.7, LOPP Following LOCA.	Add the following phrase to the end of the sentence, “, except the standby diesels will have started and be in standby, as described in LOCA, above.” This change compliments the conservative action change to LOCA and provides for smoother action during abnormal events.
22	S8.3.1.1.7, LOPP During Standby On-site Power Source Parallel Test.	Revised logic to reflect ESBWR PIP load requirements and required action of breakers to trip and restart diesels and reload to prevent diesel overload.
23	S8.3.1.1.7, Restoration of Off-Site Power.	Added clarity by adding the following to the end of the sentence, “, as described above in LOPP.”
24	S8.3.1.1.7, Protection Against Degraded Voltage.	Delete references to, ‘90%’ and “5minute” as referring to the voltage degradation and a time delay that the degraded voltage can be withstood. The set point for the voltage will be based on later detail design load calculations and the individual large electrical loads and are below the level of detail for non-safety loads in the DCD. The time delay will be based on ensuring that the degraded voltage will not cause damage during the time it is withstood prior to tripping or recovery of voltage to an acceptable level. Since the PIP loads are not safety related except for the Isolation Phase Centers, and those loads have safety related protection, this subsection pertains to degraded voltage that is not applicable to ESBWR per BTP PSB1 as described in S8.3.4.4 and may be applied to all the plant loads powered by both 13.8 and 6.9 kV.
24a	S8.3.1.1.7, Last Paragraph.	Deleted “Protection Against Degraded Voltage” paragraph. This paragraph is only applicable to non-passive nuclear power plants that an AC source for safety-related loads. The ESBWR DCD discusses protective relaying in S8.3.1.1.6, Bus Protection.
25	S8.3.1.1.8, Standby On-site AC Power Supply System, Ratings and Capability, forth, sixth, seventh, eight and ninth bullet and final COLA sentence.	Forth bullet, delete, ‘next 600 seconds’, and replace with, “time as shown in Table 8.3-4.” Rewrite sixth bullet to describe diesel-loading table in COLA requirements. Delete the seventh, eighth and ninth bullets that relate to safety-related diesel, which is not the passive design of ESBWR.
26	S8.3.1.1.8, “Starting Circuits and Systems”	Provide editorial enhancement for first paragraph. In the first sentence of the second paragraph, delete reference to S8.3.1.1.7. Delete the third paragraph since this would

		pertain to a safety-related diesel and ESBWR does not require safety-related diesels or AC power to provide for safe shutdown for the first 72 hours of shutdown.
27	S8.3.1.1.8, "Automatic Shedding, Loading and Isolation." First paragraph.	Add clarification, ", except during parallel load testing using the Normal or Alternate preferred power sources (see." to the end of the first sentence and add "see" in front of the reference.
28	S8.3.1.1.8, "Protection Systems" second paragraph.	Add, "(see Table 8.3-1)." After the words 'main control room' in the first sentence and delete the rest of the paragraph. Deleted since RG 1.47 and BTP PSB-2 are not applicable to the non-safety PIP diesels.
29	S8.3.1.1.8, "Local and Remote Control".	Clarified that transfer of control for the standby onsite AC diesel power source is a key switch in the Main Control Room.
30	S8.3.1.1.8, "Interlocks and Testability".	Deleted the Last sentence. This statement has nothing to do with interlocks and testing and only repeats an obvious fact.
31	S8.3.1.2, "GDC 17, Electric Power Systems".	The ESBWR takes exception to the applicability of AC power sources for the first 72 hours following loss of all AC power. The functions of the offsite and onsite power sources are discussed in previous subsections and not applicable to the clarification of GDC 17.
32	S8.3.1.1.8, "GDC 18, Inspection and Testing of Electric Power Systems."	Added clarification to applicability of GDC 18 for the DC safety-related Class 1E systems for Inspection and testing. There is no Class 1E AC source to be tested. The 120VAC Class 1E power is derived through isolated rectifiers, diodes and inverters and does not depend upon AC to perform the safety-related functions.
33	S8.3.1.2.2, "Quality Assurance Requirements"	Editorial revision to indicate that the QA program is a GE program and not a vendor-derived program as provided for in Chapter 17.
34	S8.3.1.2.3, "Environmental Considerations"	Replaced the word, 'hostile' with "harsh" to describe the environment during and after an accident, editorial clarification.
35	S8.3.1.3.1, "Power, Instrumentation and Control Systems"	Deleted "for COL information". This is a COLA change to delete unnecessary COL references within the DCD.
35a	S8.3.1.3.1, Cable Identification.	Editorial, changed from: "in a manner of" to "with".
36	S8.3.1.3.1, "Cable Identification", "Raceway	Details for cable marking and conductor marking will be described within the detail designs. Clarified raceway and conduit marking and removed exact length requirements for

	Identification" and "Sensory Equipment Grouping and Designation Letters"	identification on conduits and raceways as it conflicted with marking individual sections and components. Cable voltage class and special cables are described in the Project Design Manual for detail design and deleted from DCD. Deleted "Sensory Equipment Grouping and Designation Letters" since it is redundant and not needed.
37	S8.3.1.4.1, "Power Systems", second and forth paragraphs.	Editorial corrections to refer to applicably "Appendix" for "(Fire Separation for Divisional Electrical Systems)" and revise reference to the correct IEEE Standard 384 and RG 1.75.
38	S8.3.1.4.1, "Class 1E Electric Equipment Arrangement"	Replaced, 'insofar as' with "to the extent" as an editorial correction. Deleted showing an example of raceway arrangement in paragraph 4 since this is detail design within the Project Design Manual for drafting.
39	S8.3.1.4.1, (1)"Cable routing in potential harsh environmental areas", (2)"Cable fire protection and detection" (3)"Spacing of wiring and components in control boards, panels and relay racks" and (4)"Electric penetration assembly".	(1) Reworded for editorial clarification and deleted incorrect reference to Section 9A.5. (2) Correctly added reference to "Section 9A.5" (3) Minor editorial grammar corrections. (4) Minor editorial reference corrections and deleted reference to "COL applicant/holder items" in the text by referencing the correct subsection for, "fault current devices and curves".
40	S8.3.1.4.1, "General"	Replaced 'Section' with "Appendix", minor editorial.
41	S8.3.1.4.1, "Safety Class Structure"	Same editorial correction as change #38, above.
42	S8.3.1.4.1, "Spatial Separation and/or Protective Barriers"	Add word "redundant" in front of 'safety-related' and delete the last sentence, as it is not in context with the subsection intent.
43	S8.3.1.4.1, (1)"Reactor Protection (Trip) System (RPS)" and (2)"Other Safety-Related Systems"	(1) & (2) Same as change #36, above and (2) delete "The two systems" from the beginning of the sentence preceded by "(5)". Minor editorial corrections. Length of the flexible metal conduit will be a detail design item and called out in the Project Design Manual to reflect NEC Standards.
44	S8.3.2.1, (DC Power Systems) "Description"	Revised second paragraph to reflect 72 hours of DC power from two batteries of each safety-related division of power. Revised last paragraph per COLA request to delete reference, 'COL applicant/ license items' and replace with'

		"battery DC cell voltage analysis and ampere hour rating/time"
45	S8.3.2.1.1, "Class 1E Station Batteries and Battery Chargers", first and second paragraphs.	Revised to reflect 72 hour batteries, deleted 'motor control' added new ending to the last sentence of the second paragraph that clarifies that with a division out of service for maintenance a second division may be lost by a single failure and not prevent the plant from performing safe shutdown with only two divisions of Class 1E power.
46	S8.3.2.1.1, "Class 1E Batteries"	Revised first paragraph to correctly describe the four divisions of 72 hour safety-related batteries
46a	S8.3.2.1.1, Station Blackout.	Added the words "for 72 hours" after the word "shutdown" at the end of the second sentence. Deleted the reference to Appendix 8B.
47	S8.3.2.1.1, "Class 1E Battery Chargers", first and third paragraphs.	Editorial correction to describe the full design capabilities of the standby battery chargers as either battery equalization or replacement of a normal battery charger in the first paragraph. Revise the third paragraph to reflect that each charger can fully charge a safety-related battery to 95% capacity in "24" hours instead of '12' hours "while supplying the full load associated with the individual battery".
48	S8.3.2.1.1, "Ventilation"	Added reference, "(see Subsection 9.4.6).
49	S8.3.2.1.1, "Inspection, Maintenance, and Testing" and "Station Blackout"	Delete, 'called for as' in first sentence. Editorial correction. Corrected typo in last sentence of Station Blackout to reference Subsection 15.5.5 instead of 15.5.
50	S8.3.2.1.2, "Non-Class 1E Station Batteries and Battery Chargers", 125V and 250V Non-Class 1E DC Systems Configurations"	Added, "a standby battery charger," to reflect all components common to each DC system shown in Figure 8.1-2 as editorial correction.
51	S8.3.2.1.2, "Non-Class 1E Batteries".	Deleted last phrase of last sentence in forth paragraph, 'without loss of availability or capability' to reflect the fact that during the time the battery is taken out of service for cell replacement it will not be availably for use. This is an editorial correction of text.
52	S8.3.2.1.2, "Non-Class 1E Battery Chargers"	Revised first paragraph to reflect that an acceptable alternate design rectifier may be used and that the chargers operate from "480", not '460' volts AC. Deleted third paragraph that required that the non-safety batteries be fully

		recharged within 12 hours, as this is not necessary or regulatory prompted.
53	S8.3.2.2.1, (Analysis) "Class 1E DC Power Systems"	Deleted the last paragraph and its' two bullets since the Class 1E DC divisions no longer supply power to be converted to 480VAC for safety-related components The ESBWR passive design no longer requires AC powered MOV's for safe shutdown.
54	S8.3.2.2.2, "Regulatory Requirements"	Revised title to, "Regulatory Requirements and Guides" as an editorial clarification of the subsection contents.
55	S8.3.2.2.2, "Regulatory Requirements and Guides"	Revise first paragraph with clarification added to the second sentence to reflect a single failure with a division out of service and still be able to function for 72 hours with the remaining two divisions before requiring recharge. Revise GDCs' to reflect "(DC only)" as shown in Table 8.1-1. Revise the regulatory guides to reflect the description and applicability of SRP Table 8.1-1 and minor reference correction at RG 1.155.
56	S8.3.3.1, "Resistance of Cables to Combustion"	Delete the second sentence since UL-44 is not applicable to the flame test for cables. Revise last sentence to reflect IEEE "1202" instead of '383' as applicable standard for the flame test and show as new reference "8-3-11" instead of '8.3-4'.
57	S8.3.3.2, "Cables and raceways"	Revise reference 'IPCEA' to "ICEA". Add, "(higher temperature qualified conductor such as 125 C may be used instead of 90 C if local conditions require). Replace 'Col applicant/holder items' with "certified proof tests" as reference to S8.3.4.5. This is a COLA request.
58	S8.3.3.3 "Localization of Fires"	Delete, 'however' in the last sentence of the first paragraph and replace with "described in Appendix 9A" and delete the entire last paragraph as this is a repeat of the text referenced in Appendix 9A.
59	S8.3.3.4 "Fire Detection and Protection Systems"	Deleted this subsection since it is a repeat of Appendix 9A, as referenced above.
60	S8.3.4, "COL Information", Title	Revise title to, "COL Unit-Specific Information".
61	S8.3.4.1, "Interrupting Capacity of Electrical Distribution Equipment"	Revised to require no further COL action due to detail design ensuring load calcs and interrupting devices are specified as part of the detail design.
62	S8.3.4.2 "Defective Refurbished Circuit	Revised to clarify the use and procurement of circuit

	Breakers”	breakers as detail design and delete Col Action.
63	S8.3.4.3, Title and new Table	Minor typo to title and added new Table 8.3-4 as COLA correction.
64	S8.3.4.4, “Minimum Starting Voltages for Class 1E Motors”	Deleted this subsection applicability as a COL item as no Class 1E motors are required for the ESBWR design.
65	S8.3.4.5, “Certified Proof Tests on Cable Samples”	Revised the first paragraph to become a positive statement and refer to correct subsection 8.3.3.2 and references 8.3-4 and 8.3-5.
66	S8.3.4.6, “Associated Circuits”	Revised to add Table 8.3-5 to record and justify each such circuit that is applicable and editorially correct to delete COL reference and Position 4 of RG 1.75. COLA requested change.
67	S8.3.4.7, “Electrical Penetration Assemblies”	Added new Figure 8.3-2 and Figure 8.3-3 for plotting the fault current clearing times and to provide a simplified one-line that shows location of the protective devices in the penetration circuits. These changes are per COLA request.
68	S8.3.4.8, “DC Voltage Analysis”	Added new tables 8.3-6 and 8.3-7 for the Class 1E loading profile and the second table for the manufacturers ampere-hour rating for both the safety and non-safety batteries.
69	S8.3.4.9, “Administrative Controls for Bus Grounding Circuit Breakers”	Revised the subsection to state that bus grounding circuit breakers are provided and that administrative controls will be provided by the COL holder. Also referenced Subsection 8.3.1.1.1. Deleted any suggestion as to what the administrative controls should say or how to control the breakers.
70	S8.3.4.10, “Testing of Thermal Overload Bypass Contacts for Motor Operated Valves”	The ESBWR design no longer uses Class 1E MOVs, therefore this subsection is no longer applicable.
71	S8.3.4.11, “Emergency Operating Procedures for Station Blackout”	Revised to reflect that the COL holder will provide site-specific instructions in their EOPs for operator action during a postulated SBO event.
72	S8.3.4.12, “Periodic testing of Power and Protection Devices”	Revised to a positive statement that the testing is in accordance with the RG 1.118 and IEEE 338 and deleted the reference to the COL applicant
73	S8.3.4.13, “Common Industrial Standards Referenced in Purchase Specifications”	Removed the incorrectly used words, ‘shall’ and ‘would’, grammar corrections.

74	S8.3.4.14, “Periodic testing of batteries	Revised per COLA request to reference the Surveillance Requirements of Section 3.8 of unit-specific Technical Specifications and delete reference to, ‘by the COLA applicant’.
75	S8.3.4.15, “Regulatory Guide 1.160”	Revised to, “The Maintenance Rule Program is addressed within the programs section of the COL application.” Per request of the COL applicant.
76	S8.3.5, “References” (NEW Title) replaced old 8.3.5 (title) Additional Industry Standards.	Corrected typo in Reference 8.3-5. Added new References 8.3-10 and 8.3-11 (IEEE 384 and IEEE 1202) as referenced in text in previous described changes. Added references to be used in current 8.3.5, deleted old section title and replaced with “References”.
76A	S8.3.5, Additional Industry Standards.	Deleted the subsection Title. The Table 8.3-5 is a stand-alone table and does require a subsection to act as a reference
77	T8.3-3, “Battery Duty Cycles”	Revised table to reflect eight safety-related 72 hour batteries in the four divisions of safety-related DC power.
78	T8.3-4, “Diesel Generator Loads and Sequencing of Loads”	Added new table as described earlier for COL application, per COLA request.
79	T8.3-5, “Associated Circuits Table”	Added new table to list circuits per COL request.
80	T8.3-6, “Class 1E Battery Loading Profile”	New Table added as COL applicant responsibility.
81	T8.3-7, “Amp. Hour Load Table For 72 Hour Battery Rate”	New table added as COL applicant responsibility.
82	Figure 8.3-1, Sheets 1 through 4.	Redrawn for clarity.
83	Figure 8.3-2, Sheet 1 of X.	Added new figure for penetration fault clearing curves to be provided during the COLA phase.
84	Figure 8.3-3, “Protective Devices for Electric Penetrations One-Line (Simplified)	Added new figure for future new one-lines during the COLA phase.

1	S8A.1.1, “Description”, second paragraph, forth	Revise ‘only one’ to “discrete”. Corrected ‘MCM’ to “kcmil”. Rewrite the description of the generator neutral grounding device per COLA request. Correct reference

	paragraph sixth paragraph and seventh paragraph.	from ‘units’ to “UATs and RATs”.
2	S8A.1.2, “Analysis”.	Add new second sentence to the first paragraph, “Lightning protection is provided in accordance with Regulatory Guide (RG) 1.204, “Guidelines for Lighting Protection of Nuclear Power Plants.”
3	S8A.1.3, Title and contents of subsection.	Revised to “COL Unit Specific InformationReplaced “244” with “260”” and made sentence a positive statement that ground measurements “are performed”, deleted reference to COL applicant and made minor grammatical changes.
4	S8A.2.3, Title and first paragraph.	Revised to “COL Unit Specific Information”Replaced figure to reflect updated piping design. Deleted reference to COL applicant and rewrote to be a positive statement. Added corrected reference to “National Association of Corrosion Engineers (NACE) Standards” as reference 8A-5.
5	S8A-5, new reference.	Added: “National Association of Corrosion Engineers (NACE) Standards.”
	Others	
1	Global Editorial and Typo.	Added or removed hyphens, plurals, and corrected verb phrases to simple present verbs.
2	Appendix 8B.	Replaced Appendix 8B with a reference to Subsection 15.5.5. This appendix was mostly a duplicate of S15.5.5, which is referenced in S8.3.2.1.1. DG1145 guidance followed for Passive SBO for Chapter 8.