NUREG/IA-0079
AEEW-R2645

International Agreement Report

Post-Test Analysis of LOBI Test BT-12 Using RELAP5/MOD2

Prepared by
A. J. Smethurst

Winfrith
United Kingdom Atomic Energy Authority
Dorchester, Dorset
DT2 8DH, United Kingdom

Office of Nuclear Regulatory Research
U.S. Nuclear Regulatory Commission
Washington, DC 20555

April 1992

Prepared as part of
The Agreement on Research Participation and Technical Exchange
under the International Thermal-Hydraulic Code Assessment
and Application Program (ICAP)

Published by
U.S. Nuclear Regulatory Commission

Available from

Superintendent of Documents
U.S. Government Printing Office
P.O. Box 37082
Washington, D.C. 20013-7082

and

National Technical Information Service
Springfield, VA 22161

NUREG/IA-0079
AEEW-R2645

International Agreement Report

Post-Test Analysis of LOBI Test BT-12 Using RELAP5/MOD2

Prepared by
A. J. Smethurst

Winfrith
United Kingdom Atomic Energy Authority
Dorchester, Dorset
DT2 8DH, United Kingdom

Office of Nuclear Regulatory Research
U.S. Nuclear Regulatory Commission
Washington, DC 20555

April 1992

Prepared as part of
The Agreement on Research Participation and Technical Exchange
under the International Thermal-Hydraulic Code Assessment
and Application Program (ICAP)

Published by
U.S. Nuclear Regulatory Commission

NOTICE

POST-TEST ANALYSIS OF LOBI TEST BT12 USING RELAP5/MOD2.

A.J.Smethurst

SUMMARY

This report describes calculations carried out with RELAP5/MOD2 on LOBI experiment BT-12, a large steam line break. The following sensitivity studies were performed: heat losses on the intact steam generator; discharge coefficient at break; water in the steam lines; nearly implicit numerics. The following conclusions were made.

1. Qualitatively the general trends of BT12 were predicted well, in particular the timing of events was fairly accurate.
2. RELAP5 always overpredicted the cooldown on the primary side, by up to 13 K in the broken loop cold leg, although at the end of the transient RELAP5 was within 7 K of the experiment.
3. Problems with the instrumentation at the break limit the conclusions that can be drawn. Instrumentation in the steam lines shows RELAP5 overpredicts the liquid flow but the initial cooldown is still too large. This may be due to liquid being calculated to return to the boiler rather than being evaporated by metalwork heat in the upper regions of the steam generator.
4. There was a delay in the initial pulse of steam from the break. The LOBI instrumentation shows the possibility of water in the steam lines prior to the break opening. The RELAP5 results show water in the steam lines could be responsible for the delay and does not affect the rest of the transient.
5. The effective loss coefficient for the break is between 0.8 and 1.0. A value of 0.89 would yield a match of the volumetric flow.
6. In the period 50.0 to 200.0 seconds reverse heat transfer in the intact steam generator and primary system metalwork heat are responsible for ameliorating the effects of the cooldown and for the recovery of the primary temperature after the heat transfer degrades in the broken loop. The cooldown is overpredicted but the recovery phase is also overpredicted, thus correcting some of the error. With the cooldown too large it is not possible to assess the codes calculation of the magnitude of the effects of reverse heat transfer in this phase of the test.
7. In the period 200 to 600 seconds the experimental secondary side temperature is lower than the primary side temperature and heat transfer takes place from primary to secondary. The effects of this are seen on the intact loop secondary pressure. RELAP5 however calculates a hotter secondary side than primary and a continuing small reverse heat transfer. In the current calculations this difference in behaviour is not due to secondary heat losses but could be affected by metalwork heat and the magnitude of the cooldown.
8. The use of nearly implicit numerics was successful provided steady state calculations were performed using this scheme. However, the gradient of the rise in steam line liquid density and the timing of the peak liquid flow were different from calculations using the standard numerics.
9. Given the differences in cooldown and the resulting primary temperatures RELAP5 predicts the pressure and level response in the pressuriser reasonably accurately.

Systems Development Division.
Reactor Projects Department.
Winfrith
April 30, 1990

Contents

Tables

Figures

1. Introduction

The thermal-hydraulic computer code RELAP5[1] is to be used for the independent assessment of the Sizewell 'B' PWR with respect to design basis intact primary circuit faults and small break loss-of-coolant accidents. In order to validate the RELAP5 code, a series of analyses of integral experiments is being performed using RELAP5/MOD2. This paper presents an analysis of LOBI experiment BT-12 which represents a large steam line break transient. The break was scaled to represent a 100% Sizewell B steam line break downstream of the steam line orifice. The test was performed on June 17 1987

This report describes the RELAP5/MOD2 analysis of BT-12 and is aimed at assessing the capability of the code to represent: steam generator heat transfer during blowdown via the steamline, reverse heat transfer at full primary coolant system flow and the pressuriser response to insurge and outsurge. Additionally the study provides information on the accuracy of the calculated cooldown and its sensitivity to modelling and numerical variations. The LOBI facility is described in Section 2, and the conduct and course of experiment BT-12 are described in Section 3. Sections 4 and 5 present the description of the RELAP5/MOD2 input model for the experiment and the calculations performed to obtain the initial conditions. The results for the base case are discussed in section 6 and the sensitivity studies are presented in section 7. the discussion and conclusions are presented in sections 6 and 7.

2. LOBI facility

2.1. Facility Description

The LOBI-MOD2 rig is a two (single plus triple) loop test facility heated by an non-nuclear core. It was designed to simulate a 1300MWe PWR. The core power at nominal full power is 5.28MW. The two steam generators and primary loops are split in the ratio 3:1. Both the loops and the steam generators are active and contain coolant pumps. The secondary sides contain condensors representing the reactor turbines, feedwater and auxiliary feedwater systems. The LOBI core contains an annular downcomer and the fuel is simulated by an 8x8 heater rod bundle. The steam generators contain inverted "U" tubes, coarse and fine separators, and annular downcomers. A diagram of LOBI is shown in Figure 1.

2.2. Scaling and related Considerations

The scaling factor relative to the reference plant is 712 for the core power, system volume and primary system mass flow. Elevations and reference heights remain unaltered thus preserving gravitational heads. The operating temperature and pressure are the same as the full size plant.

[1] RELAP5/MOD2 code manual EG&G Idaho NUREG/CR-4312.

3. Description of Experiment BT-12

3.1. Hardware Configuration

The hardware configuration of LOBI is described in reference 1. Some important points from this are:

1. Break Size

   Single ended $2.01 cm^2$ break orifice with a diameter of 16.0 mm.

2. Pressuriser.

   The pressuriser surge line was connected to the broken loop hot leg.

3. Auxiliary feedwater(AFW).

   Auxiliary feedwater was used for both loops but the feedwater lines were swapped so that the required flow rate for the broken loop steam generator could be achieved.

3.2. Objective of test BT-12

LOBI test BT-12 was designed to represent a large steam line break (SLB). The main phenomena of interest to RELAP5 validation in the experiment were.

1. The primary cooldown.
2. The degradation of heat transfer in the faulted steam generator.
3. The surge line and pressuriser behaviour.
4. Reverse heat transfer in the intact steam generator.

These phenomena are greatly influenced by the distribution of water and its carryover through the break.

3.3. Summary of Transient

The transient is summarised in Table 1.

Table 1: Sequence of events for test BT-12.

Time (s)	Event
<= -240.0	Start closure of shut-off valve in pipe to top of upper head (closure time c. 8 s).
-40.7 to 0.0	Loop at nominal operating conditions.
-8.0	Lower plenum seal water draining valve starts to open (valve fully open within c. 5 s).
-5.0	Start closure of drain valve in upper plenum. (closure time c. 5.7 s).
0.0	Break starts to open, (fully open within 1 s). Normal pressuriser heating is switched off. Heating power off. Intact and Broken loop AFW valves start to open.
4.0	MSIV's start to close.
120.0	Broken loop AFW valve starts to close on low inventory in BLSG ($\leq 1.0m$).
600.0	End of Transient.

4. The RELAP5/MOD2 model of the LOBI Facility

The RELAP5 model used for this calculation was based on the CEGB's RELAP5 LOBI deck. The deck was controlled using the unix utility SCCS ensuring that all modifications were recorded and any erroneous changes could be removed by recall of older versions. The nodalization diagram is shown in Figure 40.

The version of RELAP5 used was RELAP5/MOD2 cycle 36.05 version E03. This version contains U.K. corrections and modifications[2], although none of these modifications were used in this analysis. The RELAP5 code was run on the AEA Technology Cray-2 computer.

5. RELAP5/MOD2 calculations of LOBI experiment BT-12

The steady state calculation was carried out with RELAP5 in transient mode. This was done to avoid RELAP5 halting when it determined that a steady state had been found perhaps when conditions were far from those required. The calculation was carried out for 590.1 seconds and took 1188.8 cpu

[2] Differences between US release version and UK RELAP5/MOD2 (Internal Report)

seconds. A RELAP5 run was carried out for 0.02 s in steady state mode to shorten the restart plot file and reset the clock to zero. All calculations were carried out as restarts from this dump file.

The initial conditions calculated by RELAP5 are shown in tables 2 and 3 below. The LOBI values are taken from the Experimental data report[3] .

Table 2: Primary side initial conditions

Primary system Initial conditions for BT-12			
Parameter	LOBI	RELAP5	Units
Intact loop mass flow	21.0	21.003	Kg/s
Broken loop mass flow	7.00	6.9984	Kg/s
Upper plenum pressure	15.5	15.56	MPa
Vessel outlet temperatures	557.15	556.92	K
Vessel inlet temperatures	556.15	556.51	K
Pressuriser temperature	618.15	617.92	K
core power	115.0	115.0	kW
Water level in Pressuriser	4.91	5.12	m

Table 3: Secondary side initial conditions

Secondary system Initial conditions for BT-12			
Parameter	LOBI	RELAP5	Units
Intact loop feedwater mass flow	0.0	0.0	Kg/s
broken loop feedwater mass flow	0.0	0.0	Kg/s
Steam dome pressure	6.6	6.68	MPa
Steam generator outlet temperature	555.15	556.5	K
Auxiliary feedwater temperature IL	418.15	418.15	K
Auxiliary feedwater temperature BL	401.15	401.15	K
Intact loop downcomer water level	7.88	7.82	m
broken loop downcomer water level	8.23	8.68	m†

The LOBI values in the above tables were obtained from table 1 in reference 3. When the transient calculations were compared with the data tape differences were uncovered between these table values and the data tape values. It must be assumed that the reference 3 table 1 values have been obtained from different instrumentation than the data tape values. These differences are small and should not effect the results presented in this report.

[3] Experimental data report for LOBI test BT-12, JRC Ispra No. 4217

† Although the downcomer level is higher for RELAP5 the level is chosen to match the broken loop inventory (133.0 kg).

6. The base case calculation.

The base case calculation ran to 620.15 seconds using 2074.78 cpu seconds. The results of the calculation are shown plotted in figures 1 to 7 and are described below. At the start of the RELAP5 calculation a short 20 second null transient was used so that events such as closure of the upper plenum drain valve prior to the break opening. The steam line break was modeled with a motor valve with an opening time of 1.0 seconds. The break was located in the steam line upstream of the broken loop MSIV. The break massflow measuring system was not modeled in the base case calculation.

Figure 2 shows the secondary system pressure in comparison with the experimental data. Both the intact and broken loop pressures are shown, the experimental data drawn as a dashed line. In the period 0.0 to 100.0 seconds the pressure drop in the broken loop is matched reasonably well with the gradient being slightly less for RELAP5. From around 100.0 seconds RELAP5 begins to deviate from the experiment until at 160.0 seconds the pressure falls rapidly to atmospheric. This "cliff edge" is very different from the behaviour in the experiment. The "cliff edge" is attributed to sudden dry out in the SG. The effect of this is also apparent in the broken loop primary fluid temperatures, which recover sharply after the dryout at 160.0 s.

On the intact side RELAP5 matches the experiment reasonably well until around 200.0 seconds after which the calculation depressurises faster than the experiment. This was thought to be due to different heat losses in the calculation than the experiment and is the subject of a sensitivity study described later. Overall, the timings of events are reasonable.

Figure 3 plots the primary temperature in the broken loop. As can be seen in this plot RELAP5 calculates more cooldown than the experiment. The temperatures at 600.0 seconds are lower by 5 K. Figure 4 shows the same plots for the intact loop, these show the same trend since the intact loop primary fluid temperatures eventually mirror the broken loop hot leg temperature. Perfect mixing is assumed in the core and the RELAP5 hot legs show identical behaviour. The gradient of the curves after 200.0 seconds is slightly steeper for the RELAP5 calculation. This is reflected in Figure 5 which plots the delta-p in the pressuriser. A difference can be seen during the steady state, this is due to a slight temperature gradient in the pressuriser in the RELAP5 calculation. The RELAP5 Steady state calculation could have been continued further in attempt to eliminate this but it was not believed that anything new would have been learned by the exercise. Indeed, there may have been a temperature gradient in the pressuriser in the experiment. The difference in the cooldown rates is emphasized in the gradients after 200.0 seconds. Figure 6 shows the RELAP5 pressuriser level and it can be seen that it was steady prior to the start of the transient. The effects of the changes in the pressuriser level are reflected in the primary pressure which is plotted in Figure 7.

Due to problems with instrumentation on the LOBI rig details of the break flow are hard to obtain. The data tape contains only the following data:

1. QV66H Volumetric flow in steam line.
2. TF66 Fluid temperature in steam line.
3. DS66 Fluid density in steam line.
4. DD08 Fluid density after break orifice.
5. PA08 Pressure after break orifice.
6. TF08 Temperature after break orifice.
7. QF08 Fluid velocity after break orifice.

Measurements DD08 are unreliable due to electrical noise and for a lot of the time show negative densities. This effectively discounts the use of location 08 measurements (Figure 8 shows the break discharge line configuration). The best that can be achieved is to calculate equivalent quantities in RELAP5 and compare them with the LOBI results. This was carried out and is shown in Figures 9 and 10. Figure 9 shows the volumetric flow with Figure 10 showing the average density. From the density plot it can be seen that RELAP5 discharges slightly more liquid than LOBI. During the steady state the LOBI results show that the steam lines contained liquid, this was not modeled in the RELAP5 base case but was considered in a sensitivity study. The performance of the instrumentation in this test is a little disappointing as the few failures expected in an experiment of this nature have affected the most useful instruments.

7. Sensitivity studies

The following sensitivity studies were carried out.

1. Change of heat losses on intact steam generator.
2. Change of discharge coefficient on break
3. Water in steam lines prior to break opening.
4. Nearly implicit numerics.

These sensitivity studies are described in the following sub-sections in the order of the above list. Only the differences between the base case and the sensitivity study will be described, as the course of the transient is similer in all the calculations.

7.1. Change of ILSG Heat losses

As can be seen in Figure 2 the intact loop steam generator has a different depressurisation rate than the base case calculation. The LOBI results show a marked difference after around 200.0 seconds which is not seen in the RELAP5 results. In order to obtain a feel for phenomena a sensitivity study was carried out with the heat losses on the intact steam generator decreased from 20.0 kW to 10.0 kW. The results of this change are shown in Figures 11 to 15. The main difference can be seen in Figure 11 where RELAP now matches the depressurisation at 600.0 seconds. The RELAP5 calculation still does not match the overall behaviour on the intact loop side. The reason for this is shown in Figure 15 which plot the temperature in the intact loop secondary side and the inlet and outlet of the steam generator U tubes. The LOBI results show the temperature in the secondary side to fall below that of the primary at around 200.0 seconds which does not occur in the RELAP5 calculation.

The extra heat loss shows up as a very slight change in the overall primary pressure (Figure 12). Figure 13 shows the volumetric flow through the break the only difference appears to be the timing of the eventual dry out. The RELAP5 calculation does not exhibit as sudden a dry out as that in the LOBI rig. We infer, then, that the change in slope of the intact SG pressure at 200.0 seconds is due to re-reversal of the heat transfer following degradation of heat transfer in the broken loop SG and recovery of primary temperatures. Reducing the heat losses did not affect this. Possibly the transfer of metalwork heat to the primary fluid was the cause.

7.2. Change of discharge coefficient

The second sensitivity study shows the effect of changing the discharge coefficient at the break. In the base case calculation the discharge coefficient is set to 0.8 in this sensitivity study it is set to 1.0. The results of this calculation are shown in figures 16 to 23. Figure 16 shows the secondary pressures which for the broken loop follow the experimental curve closely until around 140.0 seconds. At this point RELAP5 exhibits a sudden dry out which is not observed in the experiment. The intact loop side follows closely the original base case calculation. Primary temperatures are shown in Figure 17, this sensitivity study has closer temperatures at 600.0 seconds than the base case. The initial cooldown is very much larger than the experiment although slightly smaller than the base case calculation. The gradient of the temperatures after 200.0 seconds is not calculated well in either of the RELAP5 calculations. The same trends can be seen on the intact loop side shown in Figure 18. Arguably, the increased discharge coefficient causes more liquid to be carried out early in the transient, thus reducing the capacity of the steam generator to carry heat from the primary fluid.

With the cooldown being closer to the experiment it would be expected that the pressuriser delta-p would be closer to the experiment, this though is not the case. The sensitivity calculation shows a larger value than either the base case or the experiment. This is shown in Figure 19. The pressuriser level is shown in the next figure. The effect on the primary pressure is shown in Figure 20. Both calculations are still far from the experiment. The gradient of the sensitivity study beyond 250.0 seconds is perhaps worse than the base case calculation.

The volumetric flow through the break and the average density are shown in Figures 22 and 23. From Figure 22 it can be concluded that the actual discharge coefficient is between 0.8 and 1.0. The duration of the flow is too short due to the excess discharge of liquid shown in figure 22. From these Figures it can be seen that the distribution of gas and liquid through the break is wrong. The better calculation of depressurisation shown in Figure 16 must be due to coincidence.

7.3. Steam Lines full of Water

In this sensitivity study the steam lines were filled with water prior to the break opening. This was suggested by the densitometers in the LOBI steam lines showing water present prior to the test. To carry out this sensitivity study a restart calculation was performed with the initial conditions for the steam lines set to contain water. During the 20.0 second null transient this water begins to evaporate but some is still be present when the break occurs. Figure 24 shows the effect on the transient. On the broken loop there seems to be minimal effect but the intact loop appears to be following the experimental trend more accurately. Analysis of the RELAP results, however shows that the crossover of the secondary temperature with the primary temperature at 200.0 seconds still does not occur, so it must be coincidence that the results are in better agreement. Figures 25 and 26 show the break volumetric flow and average density.

7.4. Nearly implicit Numerics

RELAP5 contains the option to use nearly implicit numerics. These allow the timestep to exceed the Courant limit. This sensitivity study is a test to see whether the normal semi-implicit numerics, which in RELAP5 can locally violate the Courant limit, are affecting the course of the blowdown. Due to a problem with RELAP5 unable to restart from one numerics scheme to another, the steady state

calculations had to be rerun with the new numerics. The steady state results were the same as the base case and will not be described. The results of the transient calculations are shown in figures 27 to 29.

Figure 27 shows the secondary pressures there is little difference between the base case and this sensitivity. What difference there is appears to be on the intact loop with the pressure being consistently higher by a small amount. The broken loop primary side temperatures shown in figure 28 show that the temperature at 600.0 seconds is around 1.0 K higher than the base case calculation. Figure 29 shows a similar effect for the intact loop. The largest effect is on the pressuriser delta-P shown in figure 30. The sensitivity study has a lower gradient than the base case and the experiment but is marginally closer to the experimental values. This is reflected in the collapsed level shown in the next figure. The pressuriser level effects the primary pressure. Although RELAP5 does not get the absolute value correct the gradient for this sensitivity study is closer to the the experiment than the base case. This is shown in figure 32. Figures 33 and 34 show some differences in the early and late portions of the transient. Firstly in the early portion of the transient, 20.0 to 100.0 seconds, The volumetric flow for the nearly implicit numerics peaks at the same time but does not dip to the same amount as the base case calculation. This is reflected in Figure 34 showing the peak density in the steam line occurring about 10 seconds later than the base case calculation. This peak is also lower than the base case and closer to the experiment. Toward the end of the transient the volumetric flow decreases to zero faster for the nearly implicit numerics. The reason for this is that the collapsed level in the downcomer of the broken loop steam generator falls slightly faster for the sensitivity study than the base case. This switches off the auxiliary feedwater slightly earlier in the sensitivity study. Thus, the lower inventory boils off in a shorter time. The largest difference between the calculations is in the timing of the liquid flow through the break and the rate of increase in the break density.

8. Discussion

In all the sensitivity studies RELAP5 is overpredicting the cooldown on the primary side. This is in sharp contrast to previous studies [4] which show an under prediction of the primary cooldown. The reason for this is not clear and further work would be needed to discover the cause. One possibility is the fact that the auxiliary feedwater temperature in the RELAP5 calculations is assumed to be constant with the values shown in table 1. In the test the hotter liquid was purged out of the feed lines when the auxiliary feed water was on. In the period 20.0 seconds to 70.0 seconds the difference in the feedwater temperature would have resulted in a cooldown of around 2.3 MJ. This could change the primary temperature for an inventory of around 495.0 kg by 1.3 K. This is not enough to result in the differences observed but any further work should examine the possibility of its importance.

RELAP5 does predict the cooldown to within 7K of the experiment and this can be seen as a reasonable performance. The mechanisms for the result are , however, not correct. This is best seen by examining the volumetric flow through the break shown in figure 22. This figure compares the base case and a sensitivity study with the experiment. Two peaks are seen on the graph the first represents the initial gas flow through the break. The dip that follows is caused by the discharge of liquid. These effects can be seen more clearly in figures 35 to 39. These show an expanded view of figures 22,23,26 and 27. Figure 35 shows the dip with 36 showing the density. Both of these plots indicate that too much liquid is discharged in the RELAP5 calculations. Figures 37 and 38 show the same plots for the sensitivity study with water in the steam lines. this matches the experiment for the initial discharge of

[4] AEEW 2467 An analysis of Semiscale MOD-2C S-FS-1 Steam line break test using RELAP5/MOD2. (J.M.Rogers)

steam, but still to much water is expelled between 5.0 and 20.0 seconds into the transient. The timing of the liquid discharge is governed by the closure of the MSIV. The break orifice is no longer shared by the two steam generators and massflow out of the broken steam generator increases rapidly. From the time of 40.0 seconds into the transient the volumetric flow levels off this flow is essentially limited by the break. Figure 35 shows that a change in discharge coefficient from 0.8 to 1.0 moves the RELAP5 results from being to small to too large a volumetric flow. As the pressures in this region of the blowdown are similar the true contraction coefficient must lie between these values (around 0.89). However, Figure 22 shows that a large contraction coefficient reduces the duration of the high volumetric flow due to the early liquid discharge. RELAP5 discharges liquid both sooner and for a longer period of time than the experiment. This discharge would be expected to reduce the cooldown. It does not and the cooldown is overpredicted. RELAP5 must therefor, have a distribution of the remaining liquid more favourable to the transfer of heat from the primary side than the experiment.

The distribution of liquid for RELAP5 is seen by examining the IsoVu mimic diagram plots of the base case shown in figures 40 to 51. These show the void distribution and mass flow at 0.0, 1.0, 5.0, 7.0, 17.0 ,19.0, 30.0, 40.0, 60.0, 110.0, 130.0 and 180.0 seconds after the break opens. The times on the figures include the 20.0 second null transient used in the RELAP5 calculation. The first three show the onset of the liquid pulse out of the break. It is interesting to note that some of the flow is via the bypass region of the seperator. The form loss coefficients for this flow path are zero in the calculation. The true value is unknown and should be examined in any future calculations. Figure 43 to 48 show the decay of the liquid pulse and the start of the emptying of the seperator. Figures 49 to 51 show the dry out of the steam generator. In all these figures RELAP5 has the flows in the steam generator following the normal direction i.e. down the downcomer and up the boiler. Any remaining liquid is therefor swept into the boiler region and can remove heat from the primary side. To reduce the cooldown in the RELAP5 calculation the liquid must be kept away from the boiler region. The liquid cannot be ejected as liquid as RELAP5 already overpredicts the liquid flow. The remaining liquid must be evaporated in other regions of the steam generator. A possible mechanism for this is the more efficient transfer of metalwork heat to the liquid in the upper region of the steam generator. It is known that the metalwork mass in the RELAP5 model is lower than on the rig. The exact amount and the positioning of the extra metal mass is uncertain. Although the LOBI project have promised more detailed information the best advice is an increase of 15% in the steam generator metalwork. In the broken loop steam generator most of the mass is in the upper steam dome, a very favourable position to evaporate liquid without cooling the primary side. Then excluding the U tubes there will be around $21.66 * 10^{-3}\ m^3$ extra. Assuming a heat capacity of $3.7 * 10^6\ Jm^{-3}K^{-1}$ and for a change in temperature from 550.0 K to 380.0 K then 13.63 MJ is available. This could evaporate 6.0 Kg of liquid or raise the primary temperature by 7 K. Metalwork is very important on this rig and for this transient.

9. Conclusions

The conclusions for the RELAP5 analysis of LOBI test BT12 are shown in the list below.

1. Qualitatively the general trends of BT12 were predicted well, in particular the timing of events was fairly accurate.
2. RELAP5 always overpredicted the cooldown on the primary side, by up to 13 K in the broken loop cold leg, although at the end of the transient RELAP5 was within 7 K of the experiment.
3. Problems with the instrumentation at the break limit the conclusions that can be drawn. Instrumentation in the steam lines shows RELAP5 overpredicts the liquid flow but the initial cooldown is still too large. This may be due to liquid being calculated to return to the boiler rather than being evaporated by metalwork heat in the upper regions of the steam generator.
4. There was a delay in the initial pulse of steam from the break. The LOBI instrumentation shows the possibility of water in the steam lines prior to the break opening. The RELAP5 results show water in the steam lines could be responsible for the delay and does not affect the rest of the transient.
5. The effective loss coefficient for the break is between 0.8 and 1.0. A value of 0.89 would yield a match of the volumetric flow.
6. In the period 50.0 to 200.0 seconds reverse heat transfer in the intact steam generator and primary system metalwork heat are responsible for ameliorating the effects of the cooldown and for the recovery of the primary temperature after the heat transfer degrades in the broken loop. The cooldown is overpredicted but the recovery phase is also overpredicted, thus correcting some of the error. With the cooldown too large it is not possible to assess the codes calculation of the magnitude of the effects of reverse heat transfer in this phase of the test.
7. In the period 200 to 600 seconds the experimental secondary side temperature is lower than the primary side temperature and heat transfer takes place from primary to secondary. The effects of this are seen on the intact loop secondary pressure. RELAP5 however calculates a hotter secondary side than primary and a continuing small reverse heat transfer. In the current calculations this difference in behaviour is not due to secondary heat losses but could be affected by metalwork heat and the magnitude of the cooldown.
8. The use of nearly implicit numerics was successful provided steady state calculations were performed using this scheme. However, the gradient of the rise in steam line liquid density and the timing of the peak liquid flow were different from calculations using the standard numerics.
9. Given the differences in cooldown and the resulting primary temperatures RELAP5 predicts the pressure and level response in the pressuriser reasonably accurately.

10. References

1. RELAP5/MOD2 code manual EG&G Idaho NUREG/CR-4312.
2. (Internal report) Differences between the US release version of RELAP5/MOD2 and UK CRAY-2 versions C03 and E04 without options. (W.M.Bryce)
3. Experimental data report for LOBI test BT-12, JRC Ispra No. 4217
4. AEEW 2467 An analysis of Semiscale MOD-2C S-FS-1 Steam line break test using RELAP5/MOD2. (J.M.Rogers)

A.J.Smethurst
Systems Development Division.
Reactor Projects Department.
Winfrith
May 8, 1990

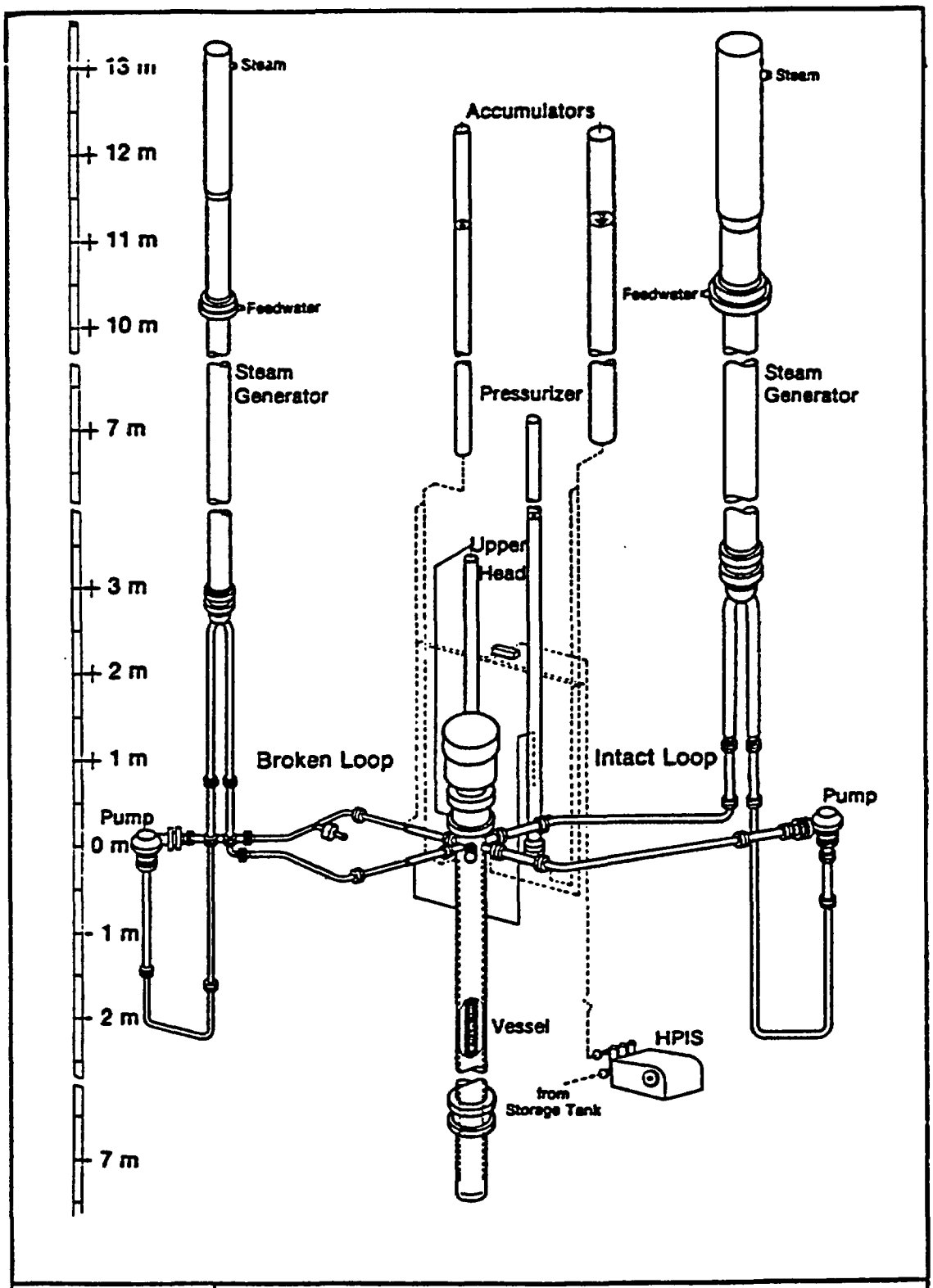

Fig.1 LOBI-MOD2 Test Facility -Primary Circuit-

THE FOLLOWING ARE PLOTTED AGAINST Time

Control Component No,PA87S ,PA97S

Winfrith

KEY		
SYM BOL	NAME	UNITS
——	Control Component No,PA BASE CASE BROKEN LOOP LOC= 10/ 0/ 0 MNEM=CCNO INF=2	
— —	PA87S ,PA EXPERIMENT BROKEN LOOP LOC= 26/ 0/ 0 MNEM=PA INF=3	
——	Control Component No,PA BASE CASE INTACT LOOP LOC= 11/ 0/ 0 MNEM=CCNO INF=2	
— —	PA97S ,PA EXPERIMENT INTACT LOOP LOC= 27/ 0/ 0 MNEM=PA INF=3	

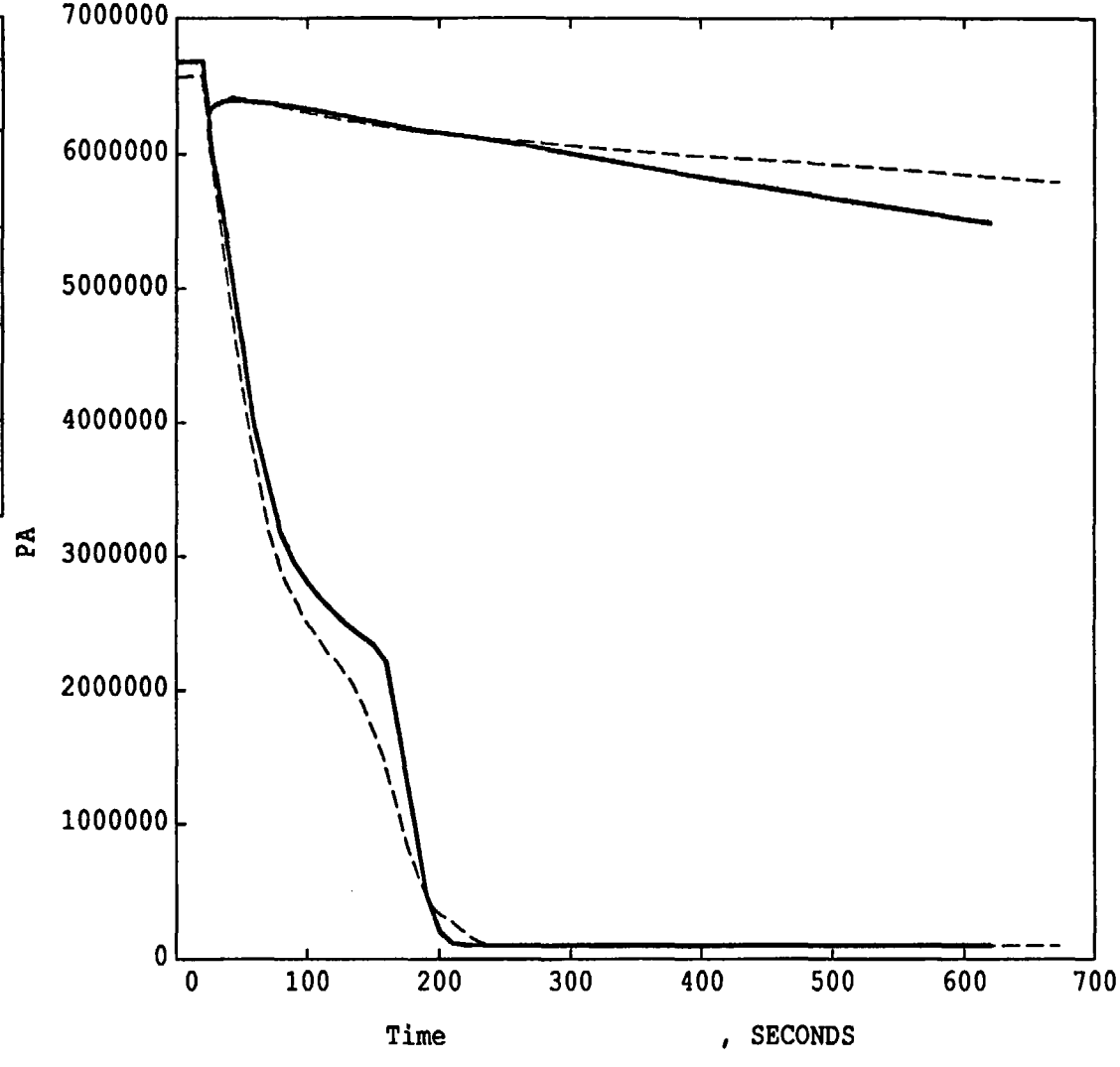

POST TEST ANALYSIS OF LOBI TEST BT-12 AEEW R2645

FIGURE 2 : PLOT OF SECONDARY PRESSURES

Winfrith

THE FOLLOWING ARE PLOTTED AGAINST Time

Vol Liquid Temp ,TF26H000 ,TF21H000

KEY		
SYM BOL	NAME	UNITS
——	Vol Liquid Temp BASE CASE CORE OUTLET LOC= 239010000 MNEM-TMPF INF=1	,K
— —	TF26H000 EXPERIMENT CORE OUTLET LOC= 12/ 0/ 0 MNEM-TF INF=4	,K
——	Vol Liquid Temp BASE CASE CORE INLET LOC= 200010000 MNEM-TMPF INF=1	,K
— —	TF21H000 EXPERIMENT CORE INLET LOC= 5/ 0/ 0 MNEM-TF INF=4	,K

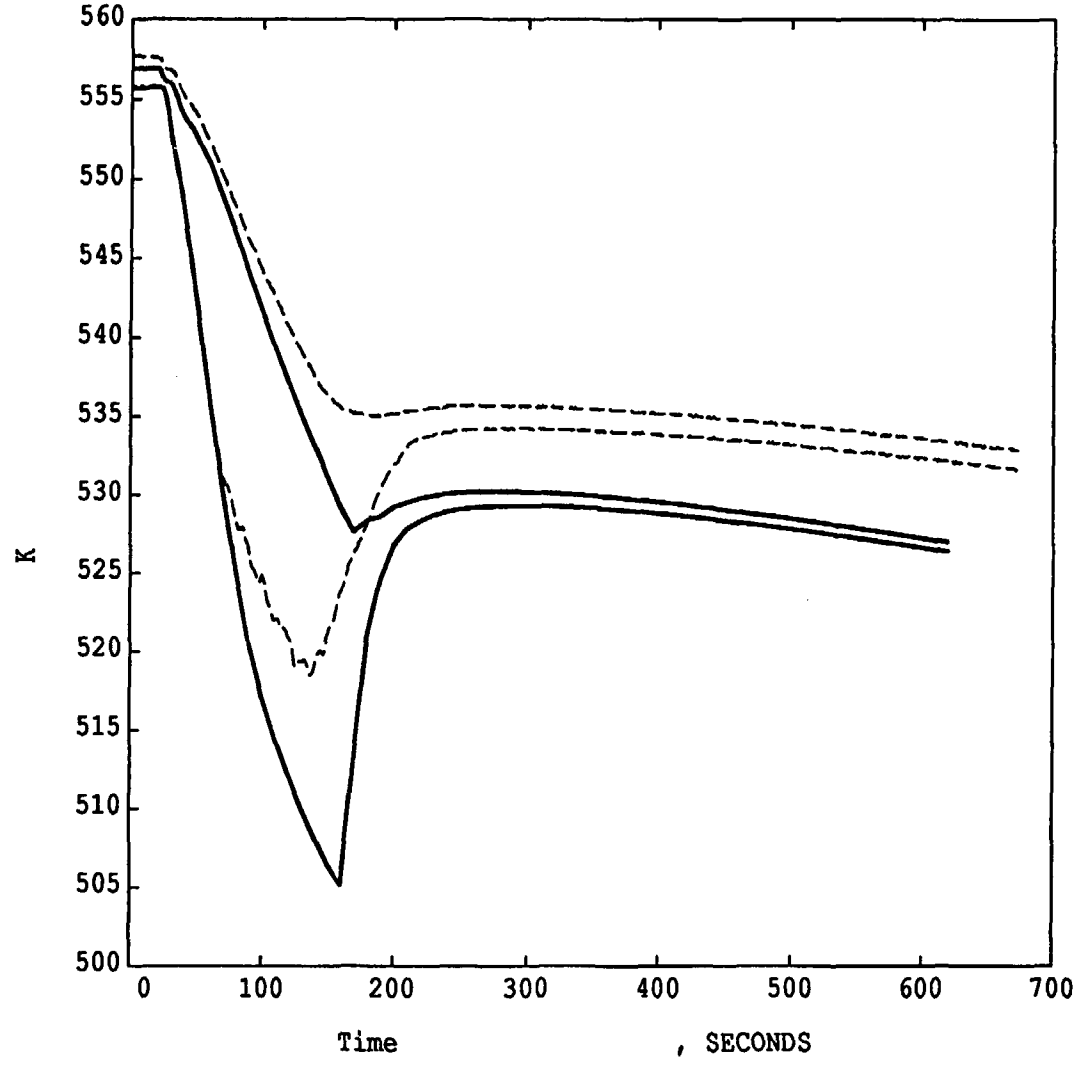

POST TEST ANALYSIS OF LOBI TEST BT-12 AEEW R2645

FIGURE 3 : PLOT OF PRIMARY TEMPERATURE BROKEN LOOP

Winfrith

THE FOLLOWING ARE PLOTTED AGAINST Time

Vol Liquid Temp ,TF16H000 ,TF11H000

KEY		
SYM BOL	NAME	UNITS
——	Vol Liquid Temp BASE CASE CORE OUTLET LOC= 139010000 MNEM-TMPF INF=1	,K
— —	TF16H000 EXPERIMENT CORE OUTLET LOC= 3/ 0/ 0 MNEM-TF INF=4	,K
——	Vol Liquid Temp BASE CASE CORE INLET LOC= 100010000 MNEM-TMPF INF=1	,K
— —	TF11H000 EXPERIMENT CORE INLET LOC= 174/ 0/ 0 MNEM-TF INF=3	,K

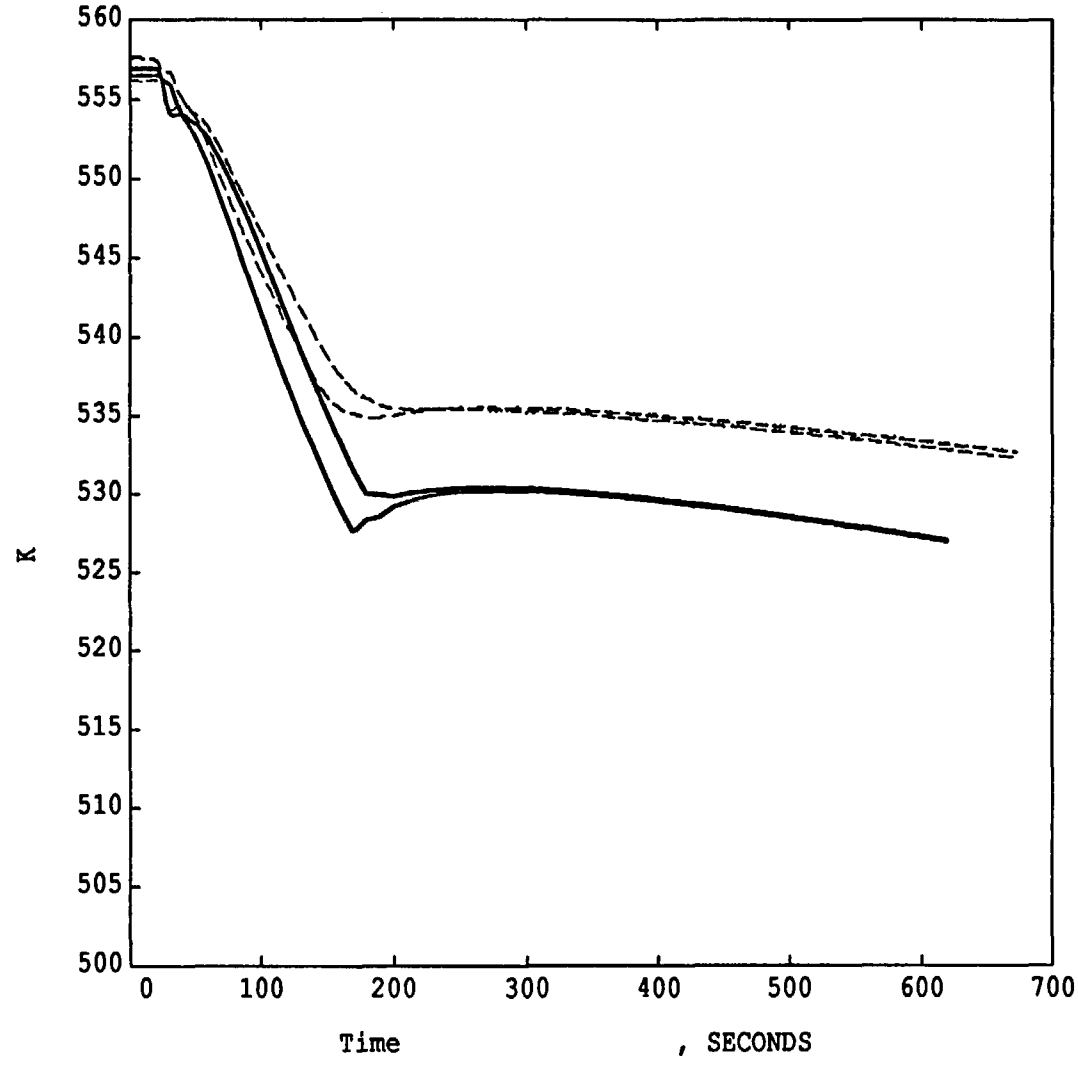

POST TEST ANALYSIS OF LOBI TEST BT-12 AEEW R2645

FIGURE 4 : PLOT OF PRIMARY TEMPERATURE INTACT LOOP

THE FOLLOWING ARE PLOTTED AGAINST Time

Control Component No,PD4340

Winfrith

KEY		
SYM BOL	NAME	UNITS
——	Control Component No,PA BASE CASE PRESSURISER DELTA-P LOC= 8/ 0/ 0 MNEM=CCNO INF=2	
— —	PD4340 ,PA EXPERIMENT: PRESSURISER DELTA-P LOC= 68/ 0/ 0 MNEM=PD INF=3	

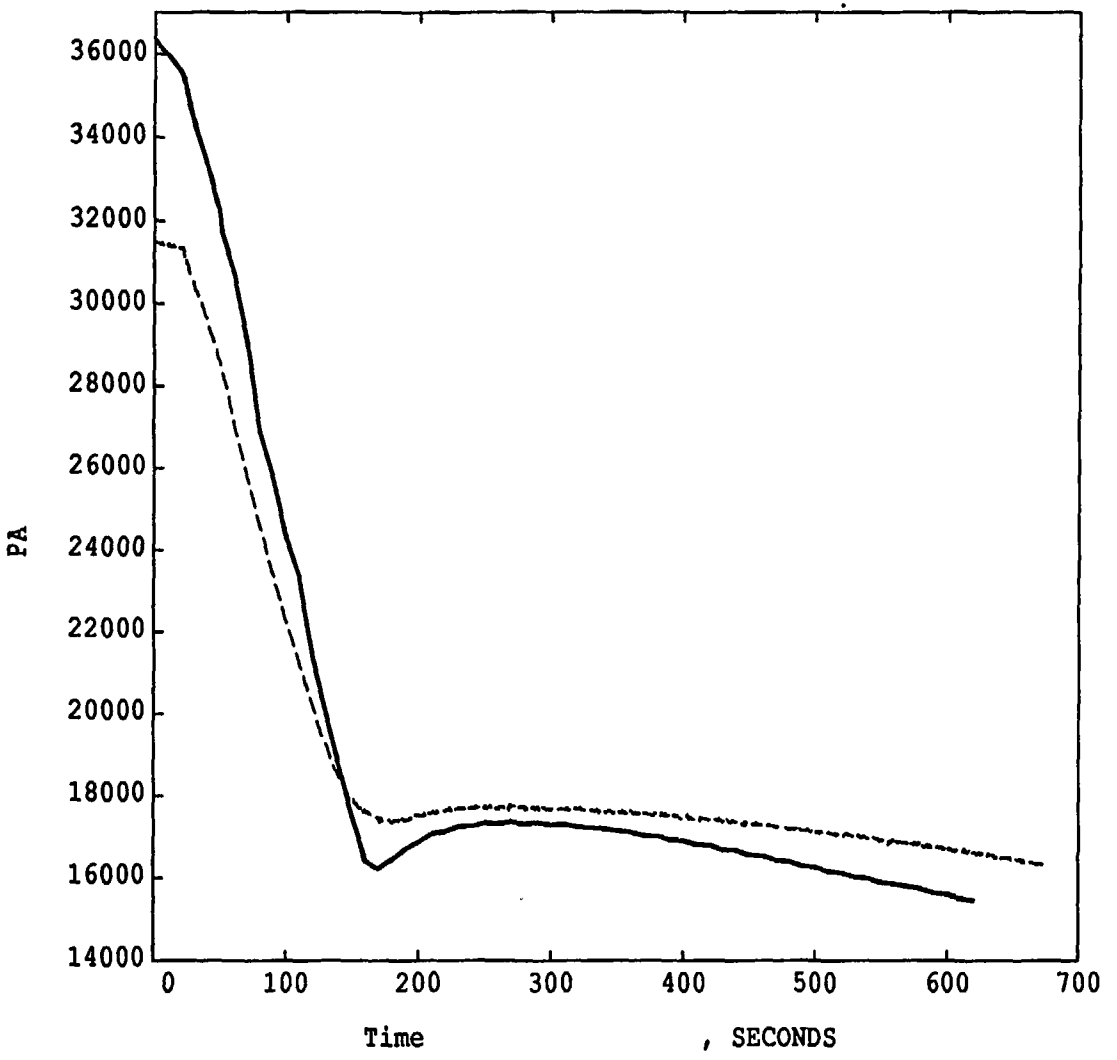

POST TEST ANALYSIS OF LOBI TEST BT-12 AEEW R2645

FIGURE 5 : PLOT OF PRESURISER DELTA-P

THE FOLLOWING ARE PLOTTED AGAINST Time

Control Component No

Winfrith

KEY		
SYM BOL	NAME	UNITS
——	Control Component No,M	
	RELAP5	
	LOC= 43/ 0/ 0 MNEM=CCNO INF=1	

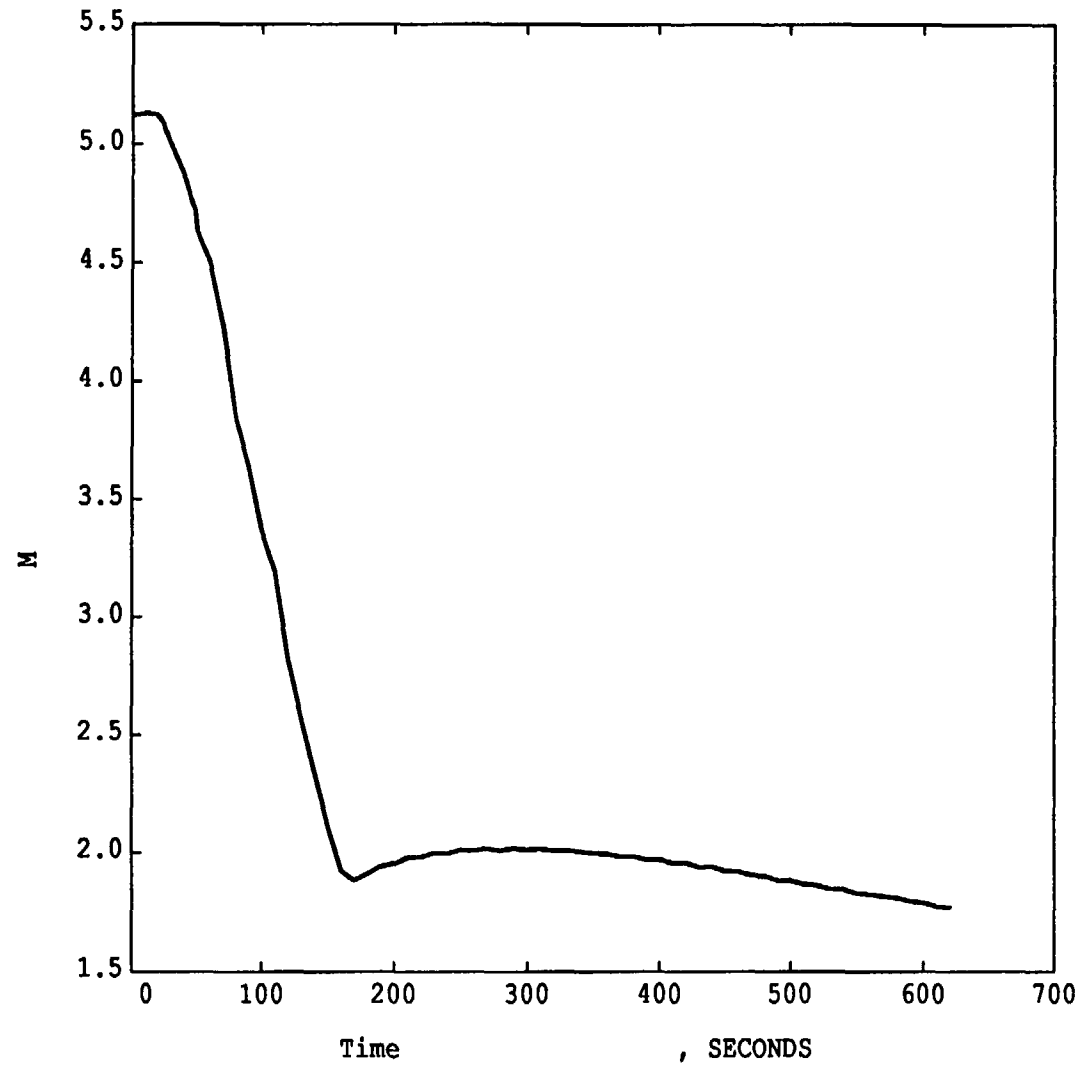

POST TEST ANALYSIS OF LOBI TEST BT-12 AEEW R2645

FIGURE 6 : BASE CASE PRESSURISER COLLAPSED LEVEL

Winfrith

THE FOLLOWING ARE PLOTTED AGAINST Time

Control Component No,PA40

KEY		
SYM BOL	NAME	UNITS
——	Control Component No,PA RELAP5 BASE CASE LOC= 5/ 0/ 0 MNEM=CCNO INF=2	
– –	PA40 EXPERIMENT LOC= 25/ 0/ 0 MNEM=PA INF=3	,PA

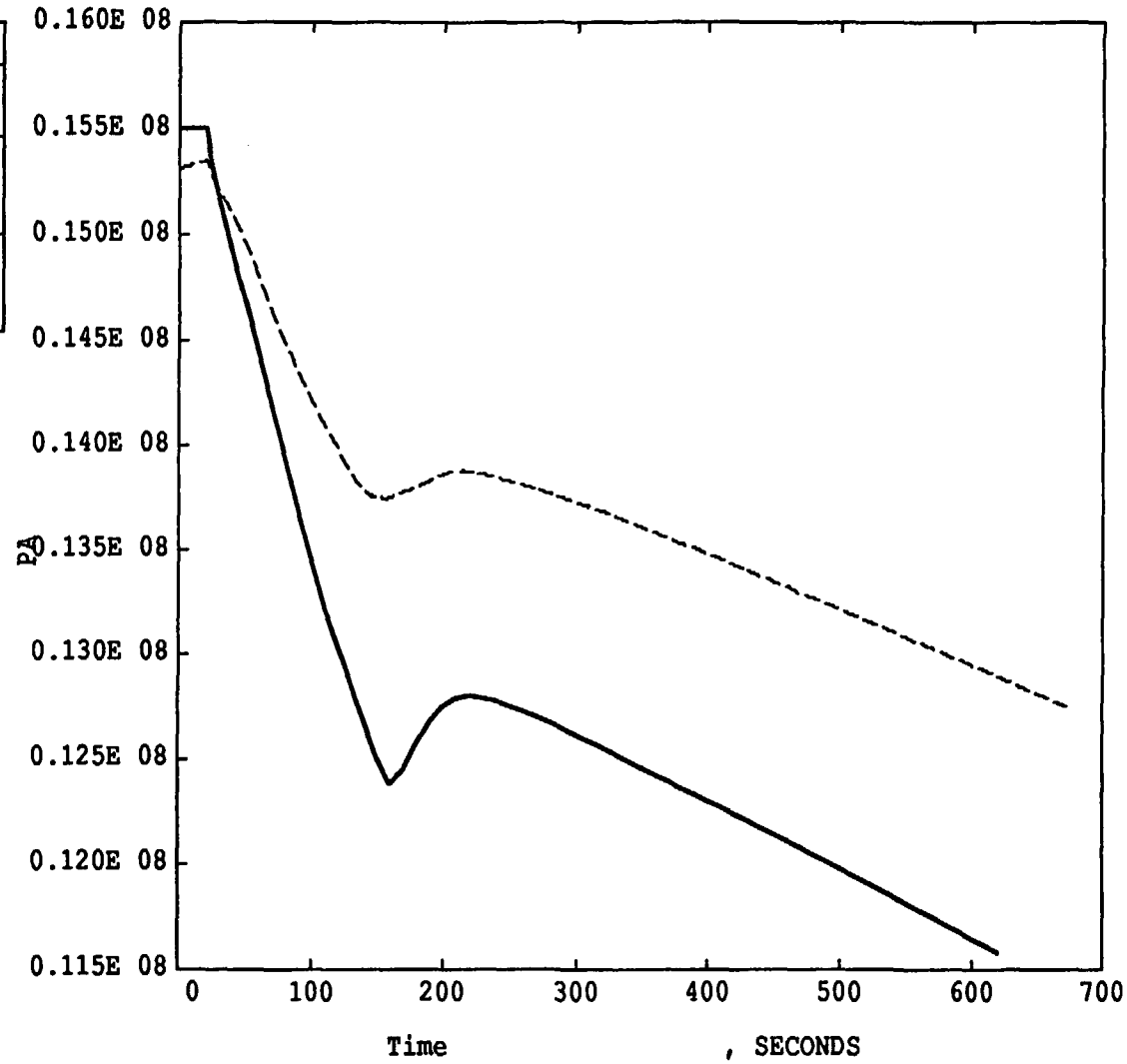

POST TEST ANALYSIS OF LOBI TEST BT-12 AEEW R2645

FIGURE 7 : BASE CASE PRESSURISER PRESSURE

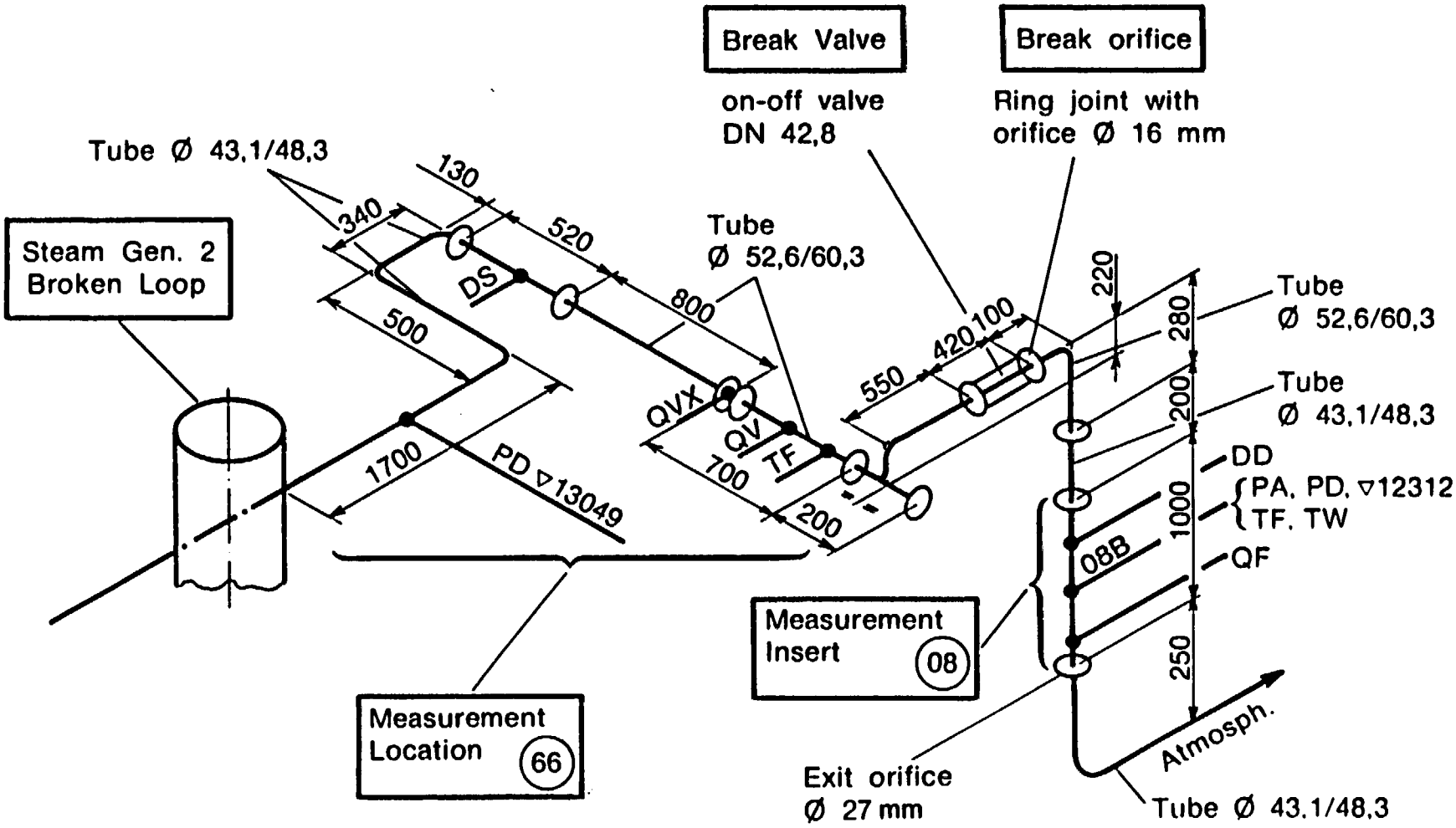

Fig. 8 CONFIGURATION of BROKEN LOOP STEAM LINE and BREAK SIMULATION for TEST BT-12

Winfrith

THE FOLLOWING ARE PLOTTED AGAINST Time

Liq + Vap Flowrate ,QV66H

KEY		
SYM BOL	NAME	UNITS
——	Liq + Vap Flowrate RELAP5 BASE CASE	,M**3/S
— —	QV66H EXPERIMENT BREAK VOLUMETRIC FLOW LOC= 165/ 0/ 0 MNEM=QV INF=3	,M**3/S

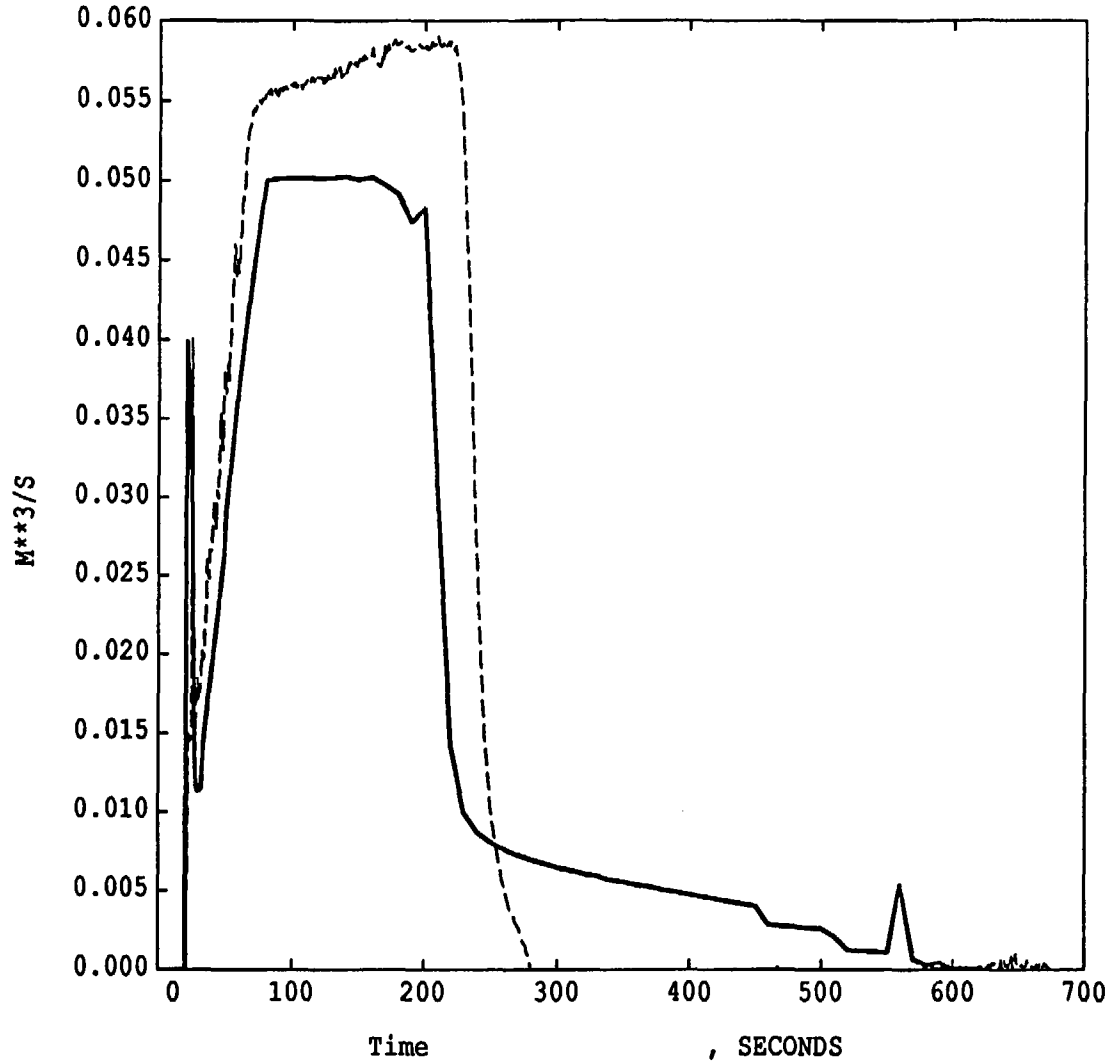

POST TEST ANALYSIS OF LOBI TEST BT-12 AEEW R2645

FIGURE 9 : BASE CASE BREAK VOLUMETRIC FLOW

Winfrith

THE FOLLOWING ARE PLOTTED AGAINST Time

Jun Liquid Density ,DS66FAN

KEY		
SYM BOL	NAME	UNITS
1	Jun Liquid Density RELAP5 BASE CASE	,KG/M**3
2	DS66FAN EXPERIMENT LOC= 14/ 0/ 0 MNEM=DS INF=3	,KG/M**3

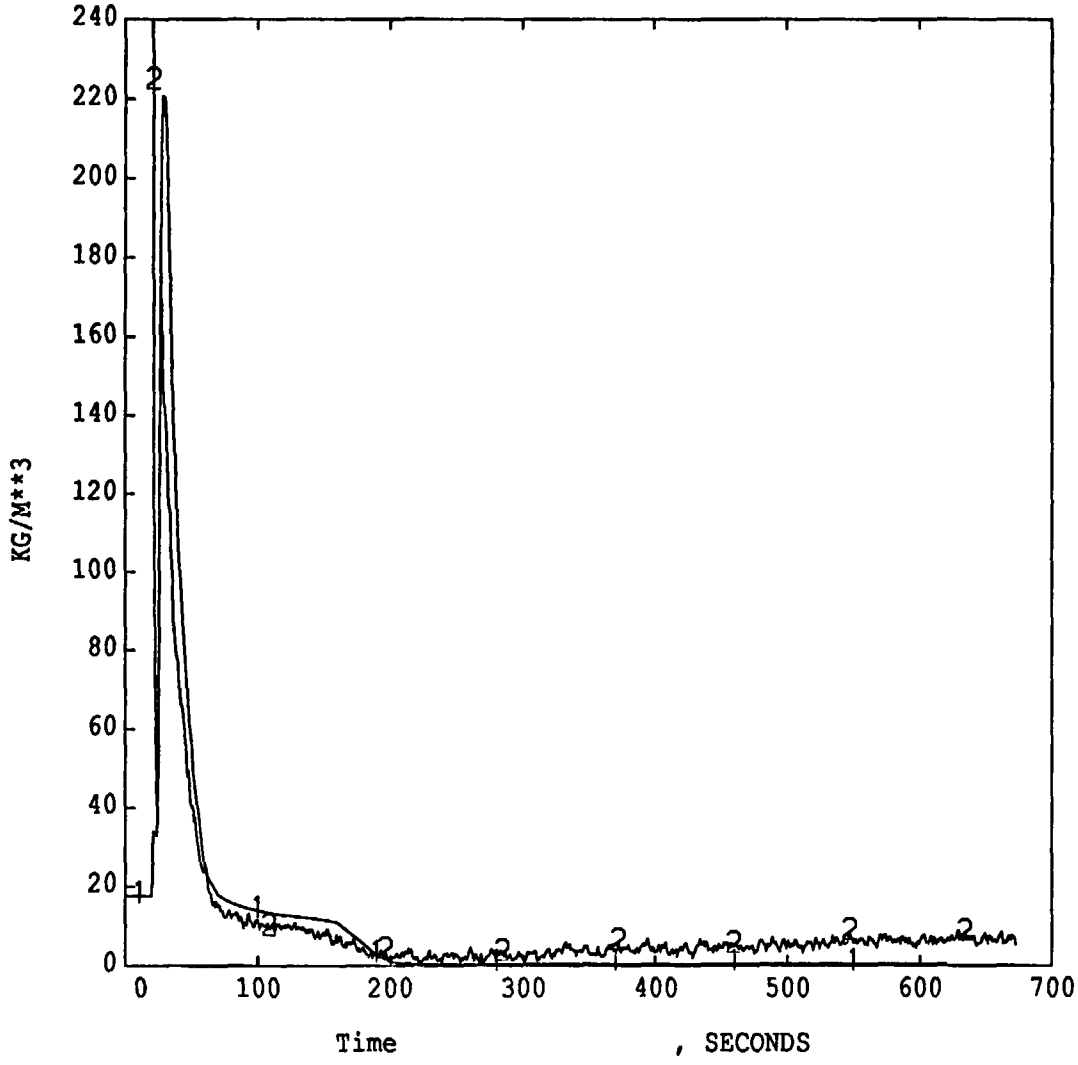

POST TEST ANALYSIS OF LOBI TEST BT-12 AEEW R2645

FIGURE 10 : BASE CASE BREAK AVERAGE DENSITY

THE FOLLOWING ARE PLOTTED AGAINST Time

Control Component No,PA87S ,PA97S

Winfrith

KEY		
SYM BOL	NAME	UNITS
——	Control Component No,PA LARGER ILSG HL: BROKEN LOOP LOC= 10/ 0/ 0 MNEM=CCNO INF=6	
----	Control Component No,PA BASE CASE BROKEN LOOP LOC= 10/ 0/ 0 MNEM=CCNO INF=2	
— —	PA87S ,PA EXPERIMENT BROKEN LOOP LOC= 26/ 0/ 0 MNEM=PA INF=3	
——	Control Component No,PA LARGER ILSG HL:INTACT LOOP LOC= 11/ 0/ 0 MNEM=CCNO INF=6	
----	Control Component No,PA BASE CASE INTACT LOOP LOC= 11/ 0/ 0 MNEM=CCNO INF=2	
— —	PA97S ,PA EXPERIMENT INTACT LOOP LOC= 27/ 0/ 0 MNEM=PA INF=3	

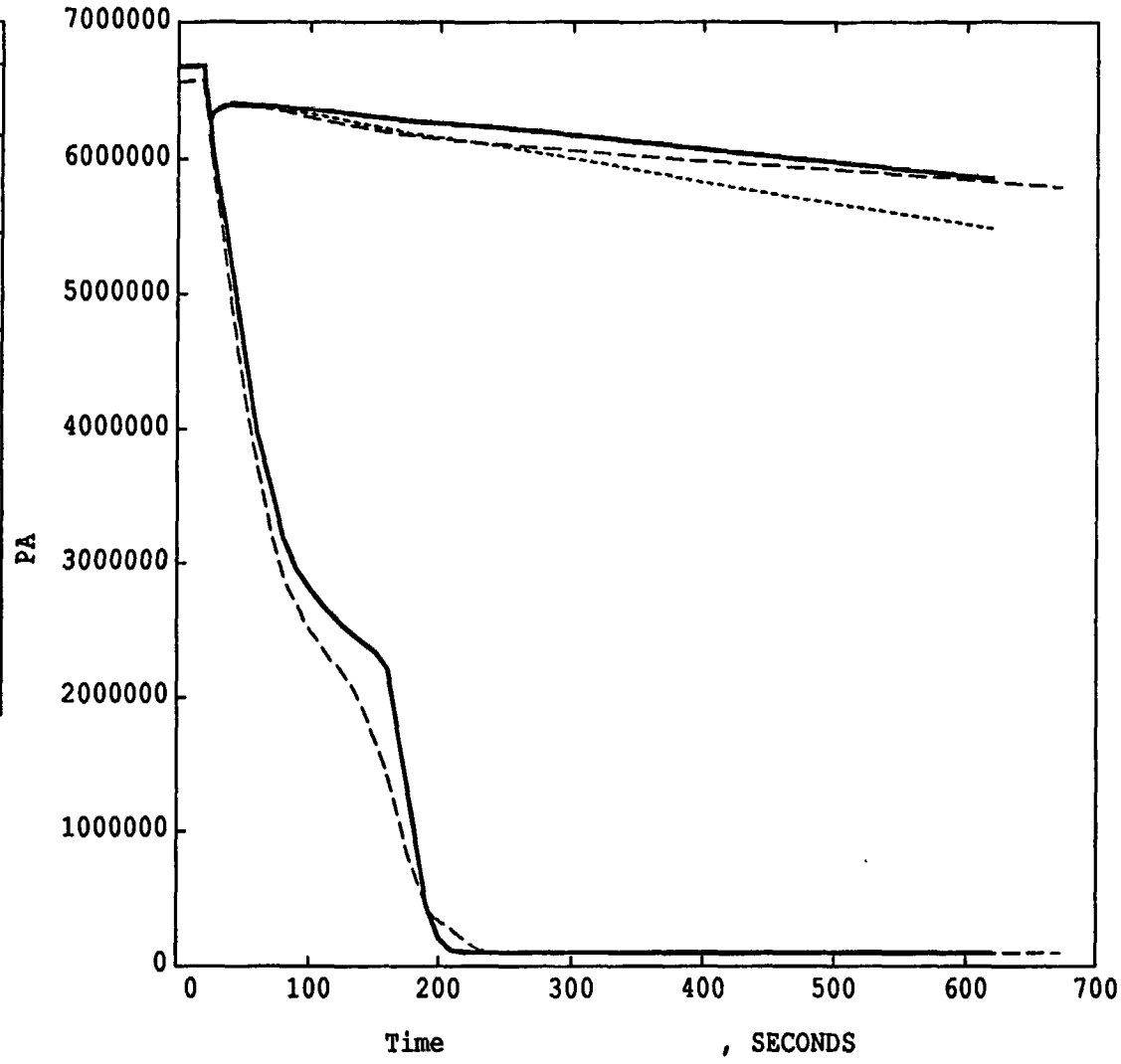

POST TEST ANALYSIS OF LOBI TEST BT-12 AEEW R2645

FIGURE 11 : SENSITIVITY 1 PLOT OF SECONDARY PRESSURES

Winfrith

THE FOLLOWING ARE PLOTTED AGAINST Time

Control Component No,PA40

KEY		
SYM BOL	NAME	UNITS
———	Control Component No,PA LARGER ILSG HL:RELAP5 LOC= 5/ 0/ 0 MNEM=CCNO INF=6	
----	Control Component No,PA RELAP5 BASE CASE LOC= 5/ 0/ 0 MNEM=CCNO INF=2	
— —	PA40 ,PA EXPERIMENT LOC= 25/ 0/ 0 MNEM=PA INF=3	

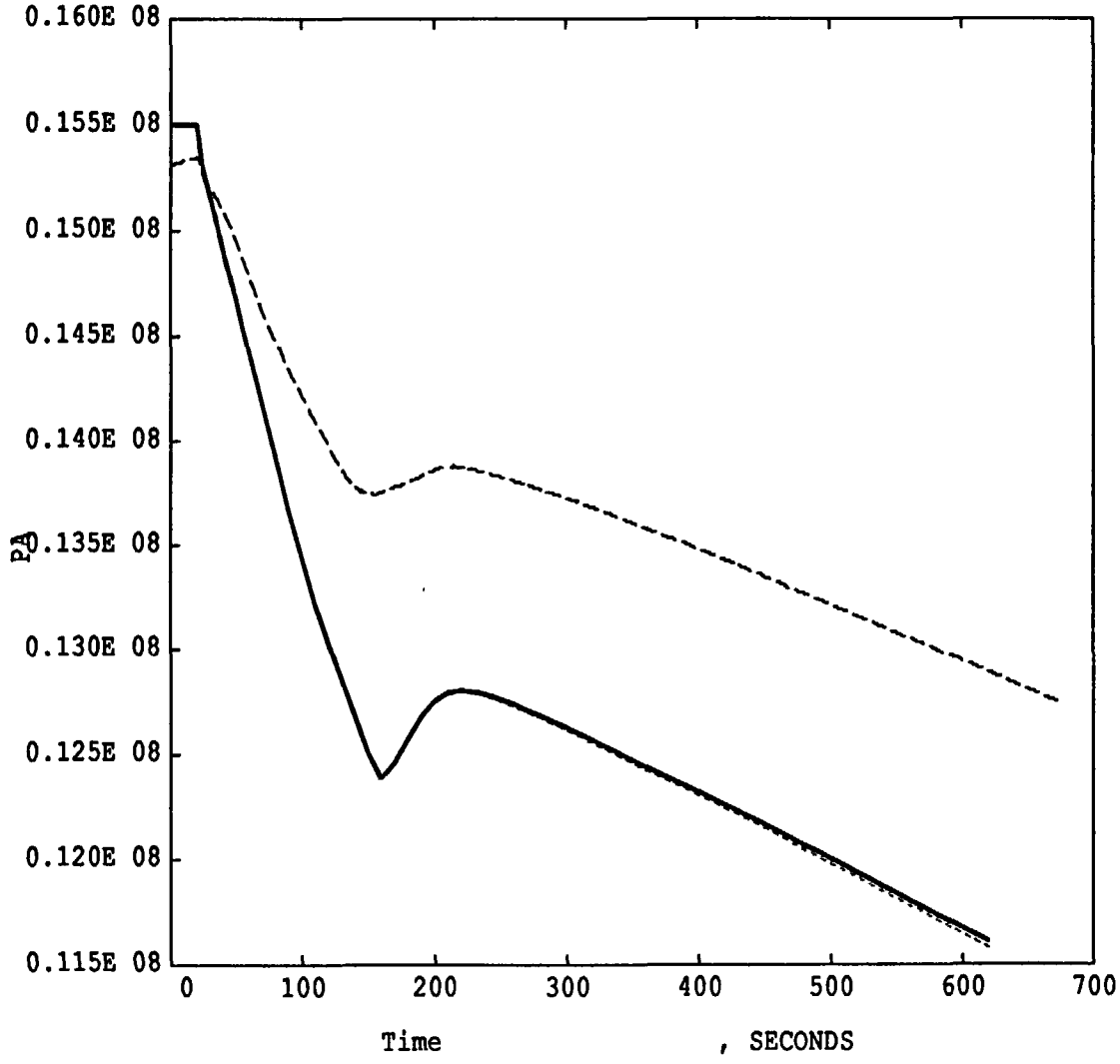

POST TEST ANALYSIS OF LOBI TEST BT-12 AEEW R2645

FIGURE 12 : SENSITIVITY 1 PRESSURISER PRESSURE

Winfrith

THE FOLLOWING ARE PLOTTED AGAINST Time

Liq + Vap Flowrate ,QV66H

KEY		
SYM BOL	NAME	UNITS
——	Liq + Vap Flowrate LARGER ILSG HL:RELAP5	,M**3/S
----	Liq + Vap Flowrate RELAP5 BASE CASE	,M**3/S
— —	QV66H EXPERIMENT BREAK VOLUMETRIC FLOW LOC= 165/ 0/ 0 MNEM=QV INF=3	,M**3/S

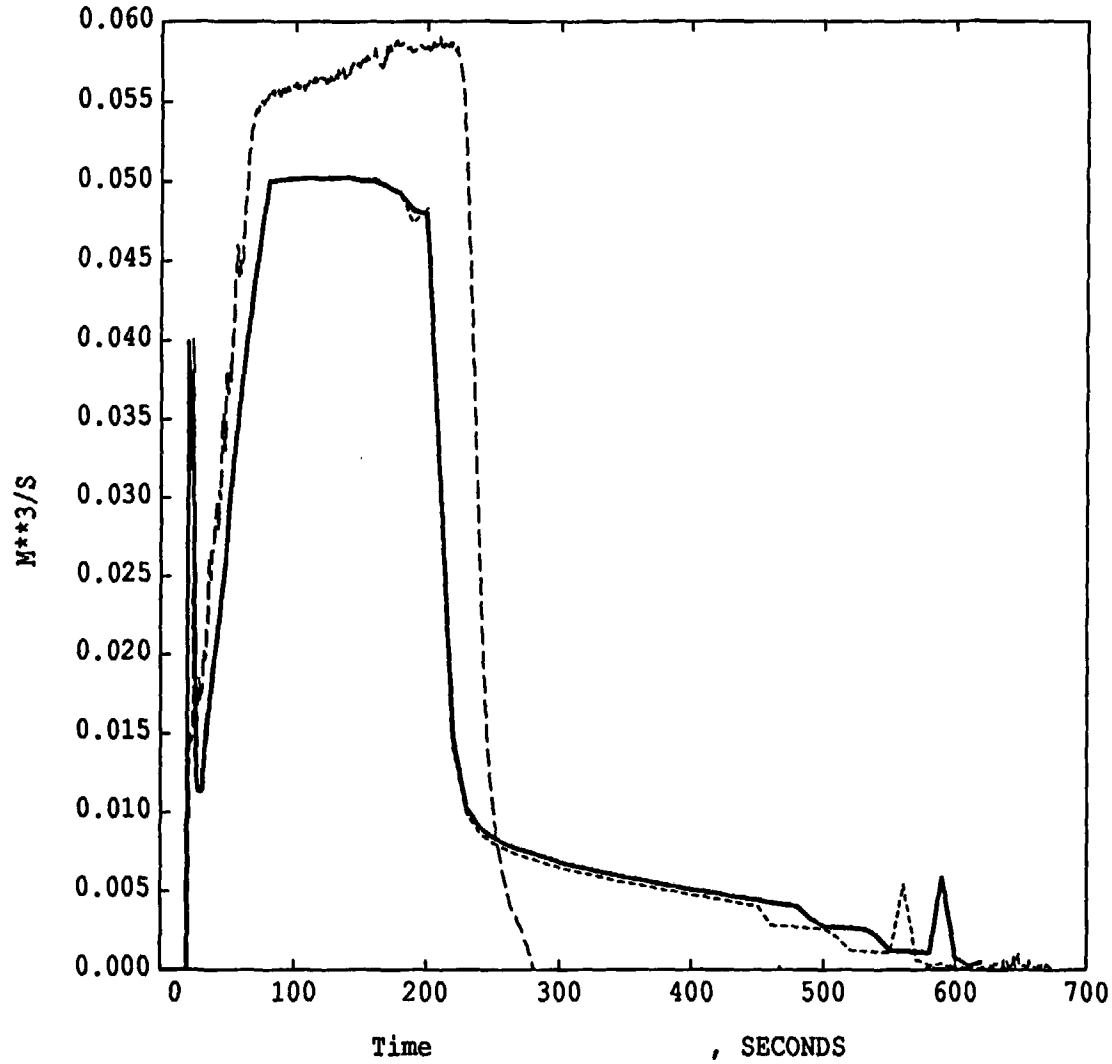

POST TEST ANALYSIS OF LOBI TEST BT-12 AEEW R2645

FIGURE 13 : SENSITIVITY 1 BREAK VOLUMETRIC FLOW

Winfrith

THE FOLLOWING ARE PLOTTED AGAINST Time

Jun Liquid Density ,DS66FAN

KEY		
SYM BOL	NAME	UNITS
——	Jun Liquid Density LARGER ILSG HL:RELAP5	,KG/M**3
----	Jun Liquid Density RELAP5 BASE CASE	,KG/M**3
— —	DS66FAN EXPERIMENT LOC= 14/ 0/ 0 MNEM=DS INF=3	,KG/M**3

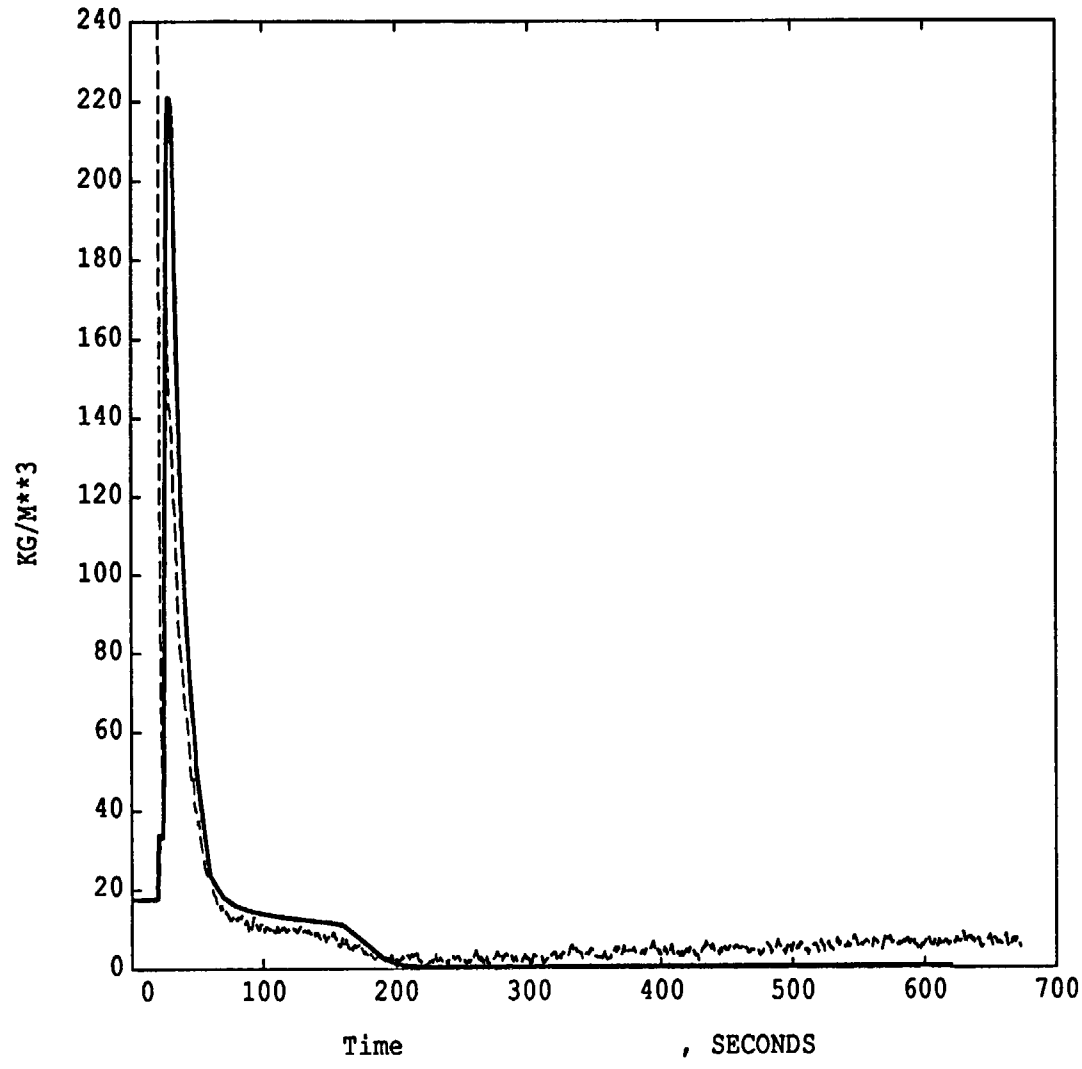

POST TEST ANALYSIS OF LOBI TEST BT-12 AEEW R2645

FIGURE 14 : SENSITIVITY 1 BREAK AVERAGE DENSITY

Winfrith

THE FOLLOWING ARE PLOTTED AGAINST TIME

TF90A ,TF92A ,TF95B0
Vol Liquid Temp

KEY		
SYM BOL	NAME	UNITS
1	TF90A	,K
	LOC= 77/ 0/ 0 MNEM=TF	INF=4
2	TF92A	,K
	LOC= 84/ 0/ 0 MNEM=TF	INF=4
3	TF95B0	,K
	LOC= 96/ 0/ 0 MNEM=TF	INF=4
4	Vol Liquid Temp	,K
	LOC= 110010000 MNEM=TMPF	INF=1
5	Vol Liquid Temp	,K
	LOC= 110160000 MNEM=TMPF	INF=1
6	Vol Liquid Temp	,K
	LOC= 530010000 MNEM=TMPF	INF=1

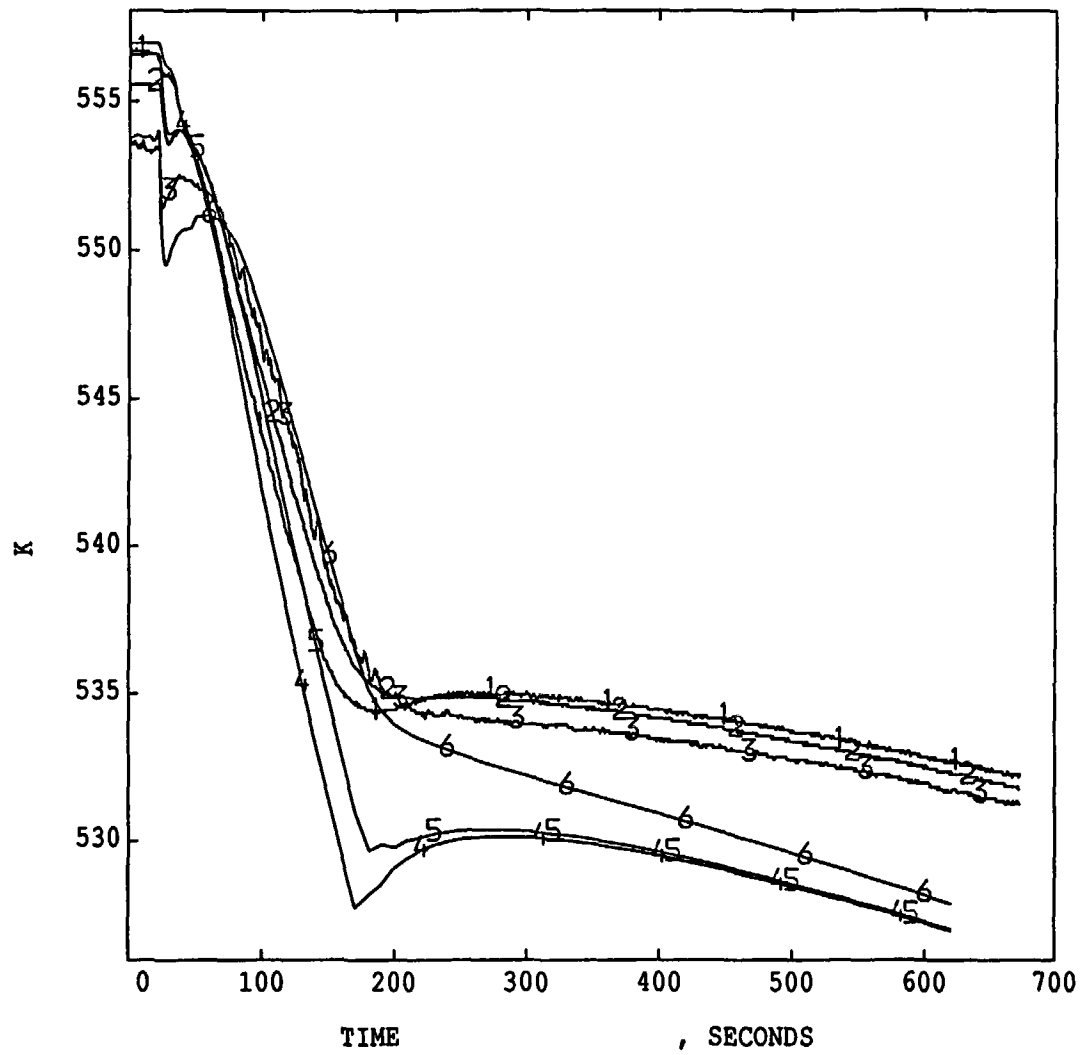

POST TEST ANALYSIS OF LOBI TEST BT-12 AEEW R2645
FIGURE 15 : SENSITIVITY 1 ILSG TEMPERATURES

Winfrith

THE FOLLOWING ARE PLOTTED AGAINST Time

Control Component No,PA87S ,PA97S

KEY		
SYM BOL	NAME	UNITS
——	Control Component No,PA LOSS COEF 1.0 : BROKEN LOOP LOC= 10/ 0/ 0 MNEM=CCNO INF=6	
----	Control Component No,PA BASE CASE BROKEN LOOP LOC= 10/ 0/ 0 MNEM=CCNO INF=2	
— —	PA87S ,PA EXPERIMENT BROKEN LOOP LOC= 26/ 0/ 0 MNEM=PA INF=3	
——	Control Component No,PA LOSS COEF 1.0 :INTACT LOOP LOC= 11/ 0/ 0 MNEM=CCNO INF=6	
----	Control Component No,PA BASE CASE INTACT LOOP LOC= 11/ 0/ 0 MNEM=CCNO INF=2	
— —	PA97S ,PA EXPERIMENT INTACT LOOP LOC= 27/ 0/ 0 MNEM=PA INF=3	

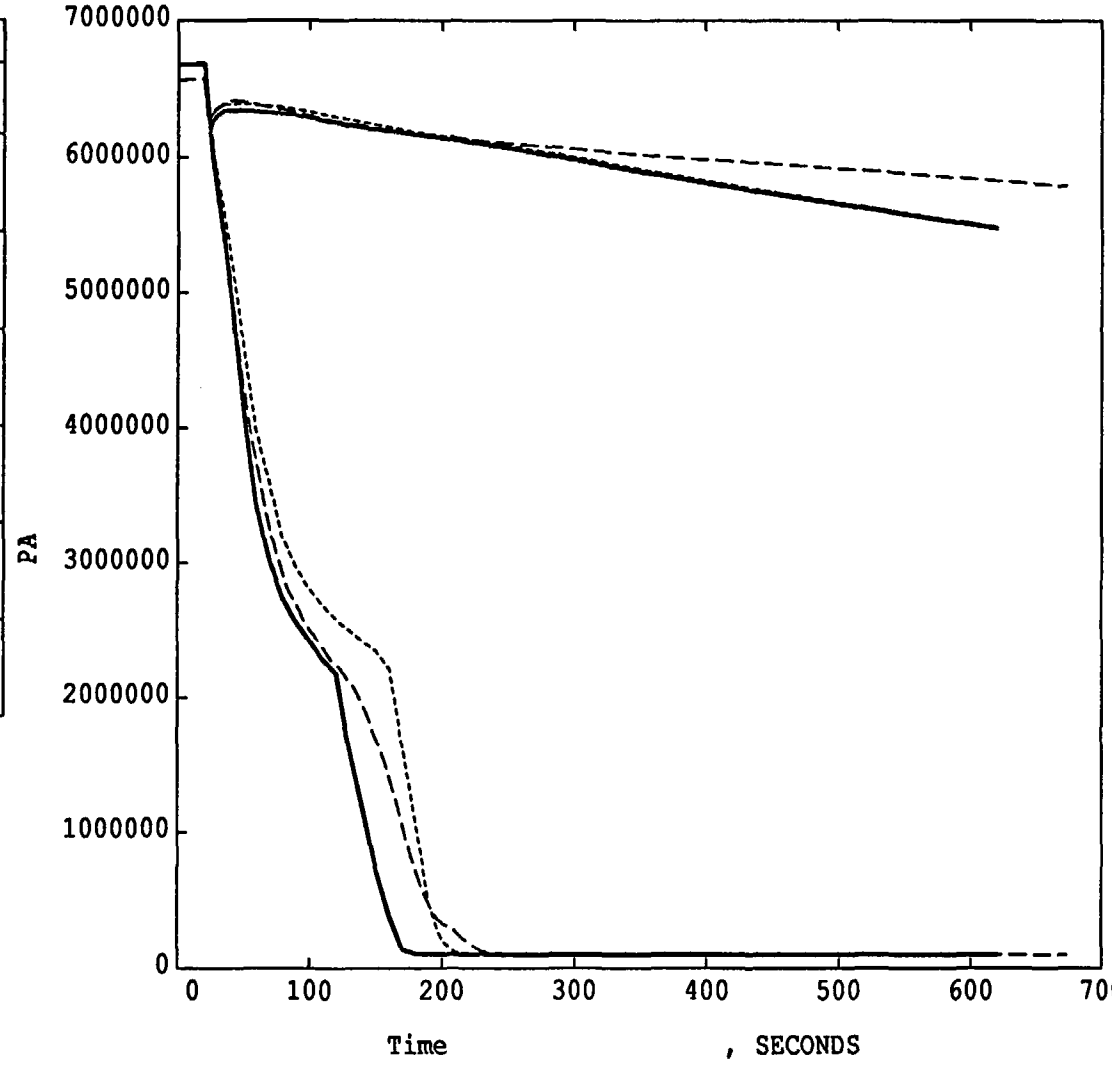

POST TEST ANALYSIS OF LOBI TEST BT-12

FIGURE 16 : SENSITIVITY 2 PLOT OF SECONDARY PRESSURES

Winfrith

THE FOLLOWING ARE PLOTTED AGAINST Time

Vol Liquid Temp ,TF26H000 ,TF21H000

KEY		
SYM BOL	NAME	UNITS
——	Vol Liquid Temp ,K LOSS COEF 1.0 : CORE OUTLET LOC= 239010000 MNEM=TMPF INF=5	
----	Vol Liquid Temp ,K BASE CASE CORE OUTLET LOC= 239010000 MNEM=TMPF INF=1	
— —	TF26H000 ,K EXPERIMENT CORE OUTLET LOC= 12/ 0/ 0 MNEM=TF INF=4	
——	Vol Liquid Temp ,K LOSS COEF 1.0 : CORE INLET LOC= 200010000 MNEM=TMPF INF=5	
----	Vol Liquid Temp ,K BASE CASE CORE INLET LOC= 200010000 MNEM=TMPF INF=1	
— —	TF21H000 ,K EXPERIMENT CORE INLET LOC= 5/ 0/ 0 MNEM=TF INF=4	

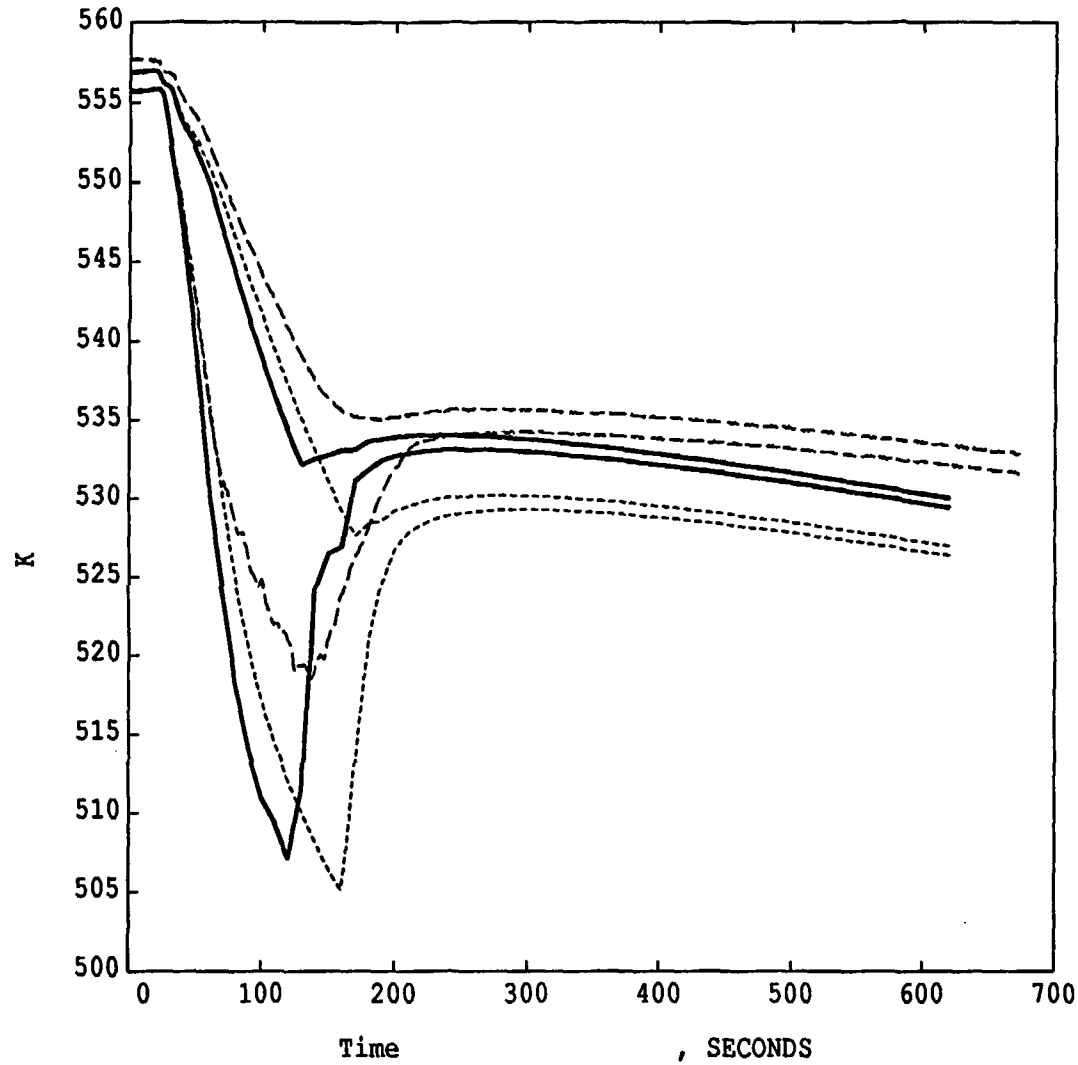

POST TEST ANALYSIS OF LOBI TEST BT-12

FIGURE 17 : SENSITIVITY 2 PRIMARY TEMPERATURE BROKEN LOOP

Winfrith

THE FOLLOWING ARE PLOTTED AGAINST Time

Vol Liquid Temp ,TF16H000 ,TF11H000

KEY		
SYM BOL	NAME	UNITS
——	Vol Liquid Temp LOSS COEF 1.0 : CORE OUTLET LOC= 139010000 MNEM=TMPF INF=5	,K
----	Vol Liquid Temp BASE CASE CORE OUTLET LOC= 139010000 MNEM=TMPF INF=1	,K
— —	TF16H000 EXPERIMENT CORE OUTLET LOC= 3/ 0/ 0 MNEM=TF INF=4	,K
——	Vol Liquid Temp LOSS COEF 1.0 : CORE INLET LOC= 100010000 MNEM=TMPF INF=5	,K
----	Vol Liquid Temp BASE CASE CORE INLET LOC= 100010000 MNEM=TMPF INF=1	,K
— —	TF11H000 EXPERIMENT CORE INLET LOC= 174/ 0/ 0 MNEM=TF INF=3	,K

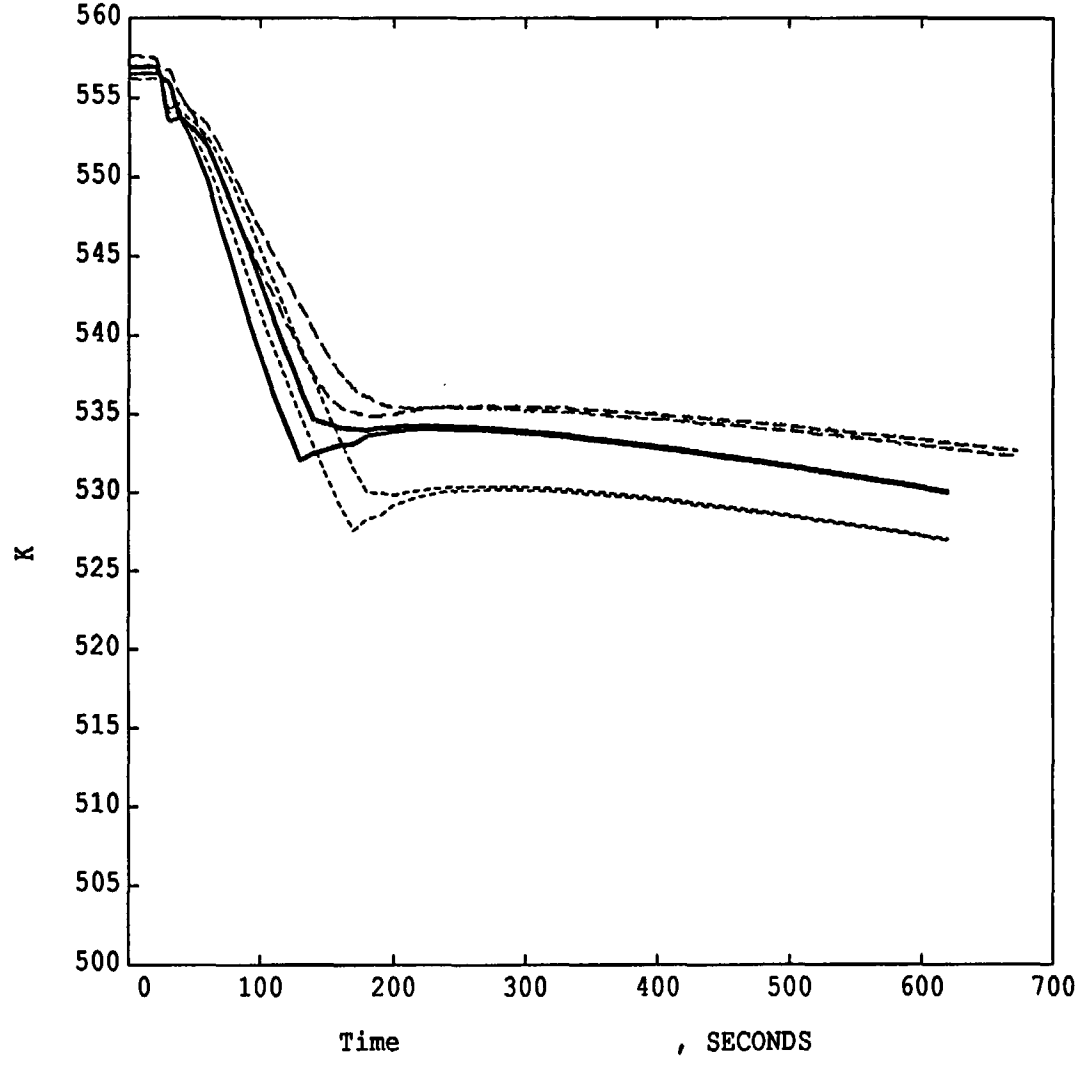

POST TEST ANALYSIS OF LOBI TEST BT-12

FIGURE 18 : SENSITIVITY 2 PRIMARY TEMPERATURE INTACT LOOP

Winfrith

THE FOLLOWING ARE PLOTTED AGAINST Time

Control Component No,PD4340

KEY		
SYM BOL	NAME	UNITS
——	Control Component No,PA LOSS COEF 1.0 LOC= 8/ 0/ 0 MNEM=CCNO INF=6	
----	Control Component No,PA BASE CASE LOC= 8/ 0/ 0 MNEM=CCNO INF=2	
— —	PD4340 ,PA EXPERIMENT: LOC= 68/ 0/ 0 MNEM=PD INF=3	

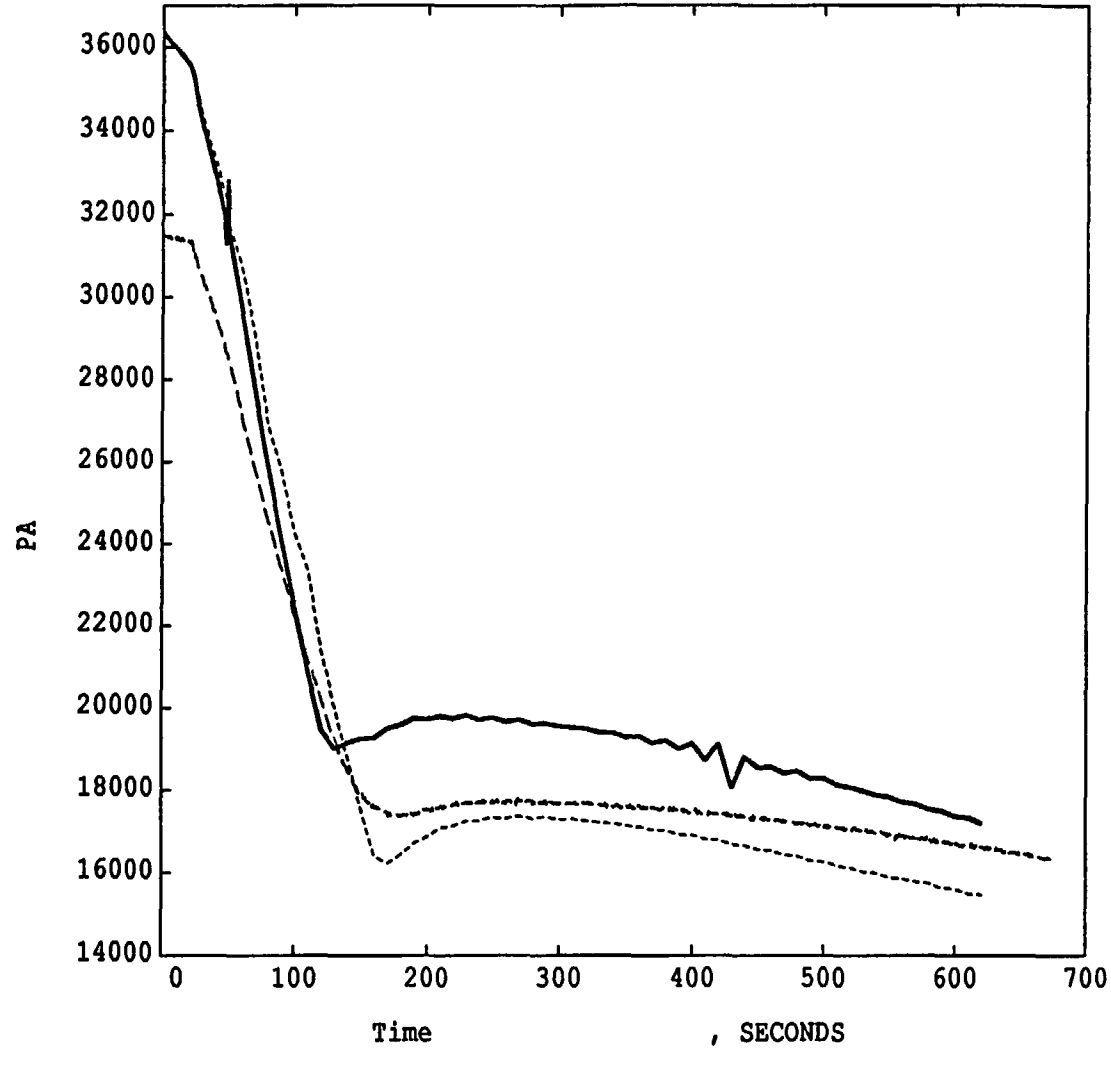

POST TEST ANALYSIS OF LOBI TEST BT-12

FIGURE 19 : SENSITIVITY 2 PRESURISER DELTA-P

Winfrith

THE FOLLOWING ARE PLOTTED AGAINST Time

Control Component No

KEY		
SYM BOL	NAME	UNITS
——	Control Component No,M LOSS COEF 1.0 LOC= 43/ 0/ 0 MNEM=CCNO INF=5	
----	Control Component No,M BASE CASE LOC= 43/ 0/ 0 MNEM=CCNO INF=1	

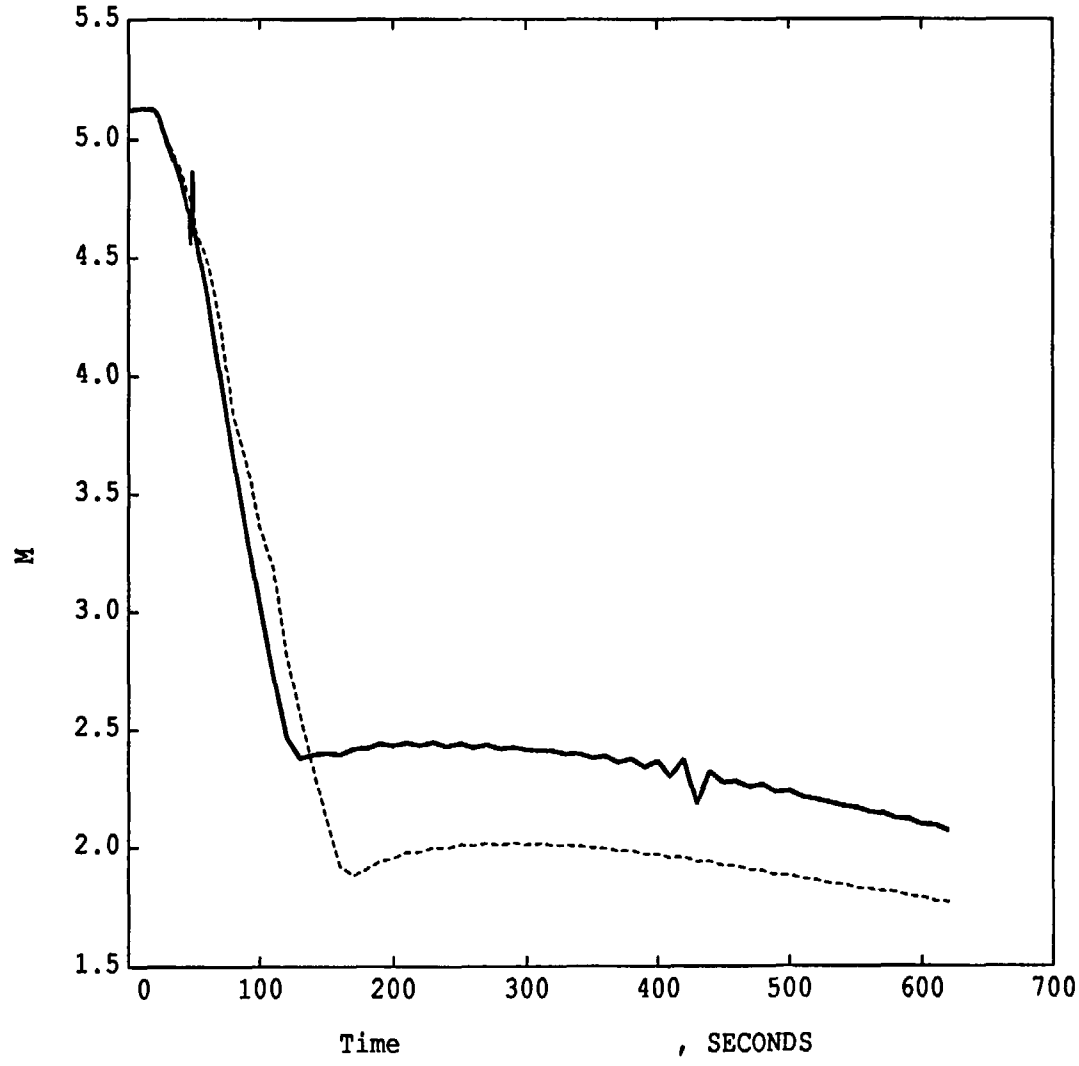

POST TEST ANALYSIS OF LOBI TEST BT-12

FIGURE 20 : SENSITIVITY 2 PRESSURISER COLLAPSED LEVEL

Winfrith

THE FOLLOWING ARE PLOTTED AGAINST Time

Control Component No,PA40

KEY		
SYM BOL	NAME	UNITS
——	Control Component No,PA LOSS COEF 1.0 LOC= 5/ 0/ 0 MNEM=CCNO INF=6	
----	Control Component No,PA BASE CASE LOC= 5/ 0/ 0 MNEM=CCNO INF=2	
— —	PA40 ,PA EXPERIMENT LOC= 25/ 0/ 0 MNEM=PA INF=3	

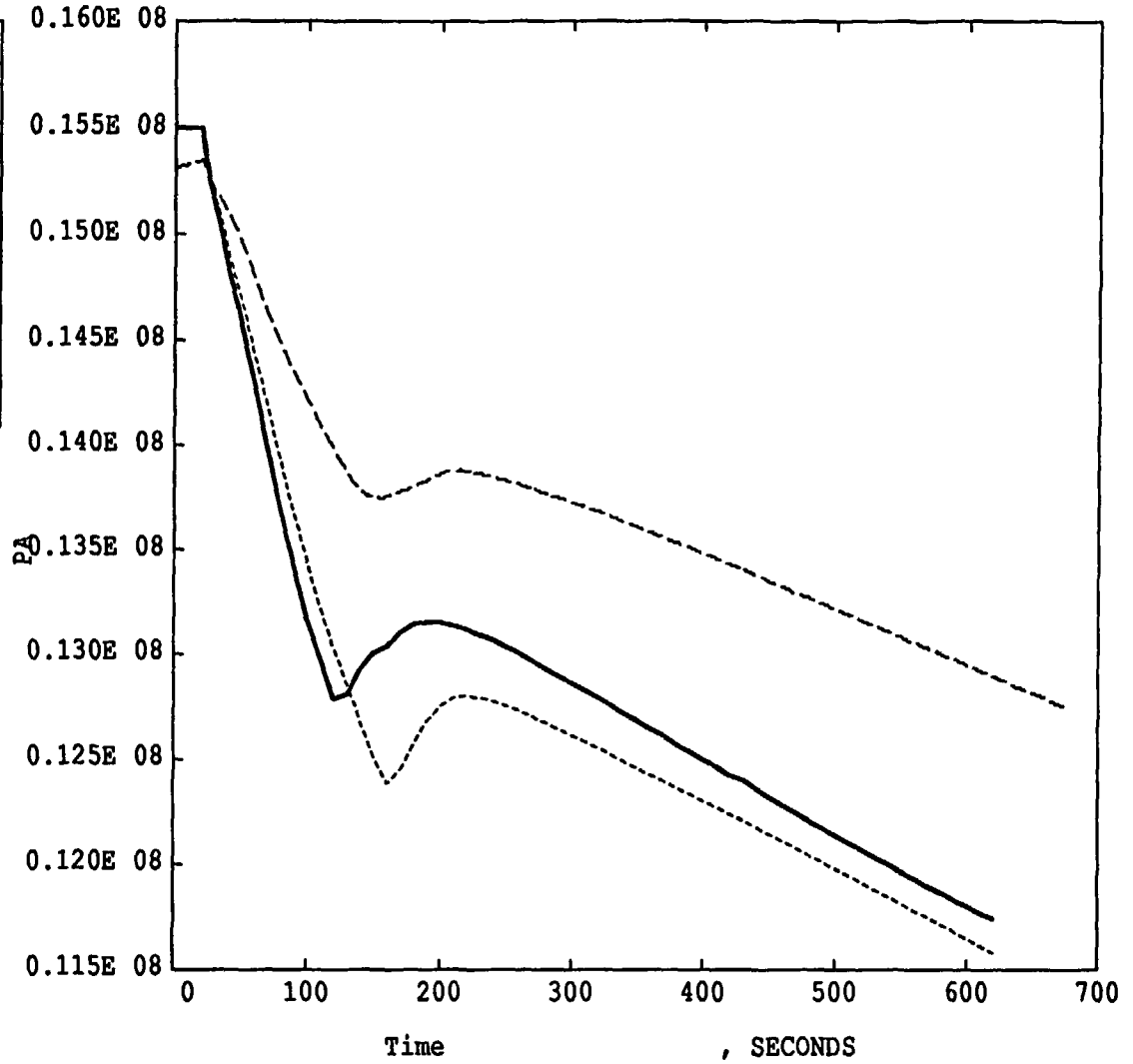

POST TEST ANALYSIS OF LOBI TEST BT-12

FIGURE 21 : SENSITIVITY 2 PRESSURISER PRESSURE

Winfrith

THE FOLLOWING ARE PLOTTED AGAINST Time

Liq + Vap Flowrate ,QV66H

KEY		
SYM BOL	NAME	UNITS
——	Liq + Vap Flowrate LOSS COEF 1.0	,M**3/S
----	Liq + Vap Flowrate RELAP5 BASE CASE	,M**3/S
— —	QV66H EXPERIMENT LOC= 165/ 0/ 0 MNEM=QV INF=3	,M**3/S

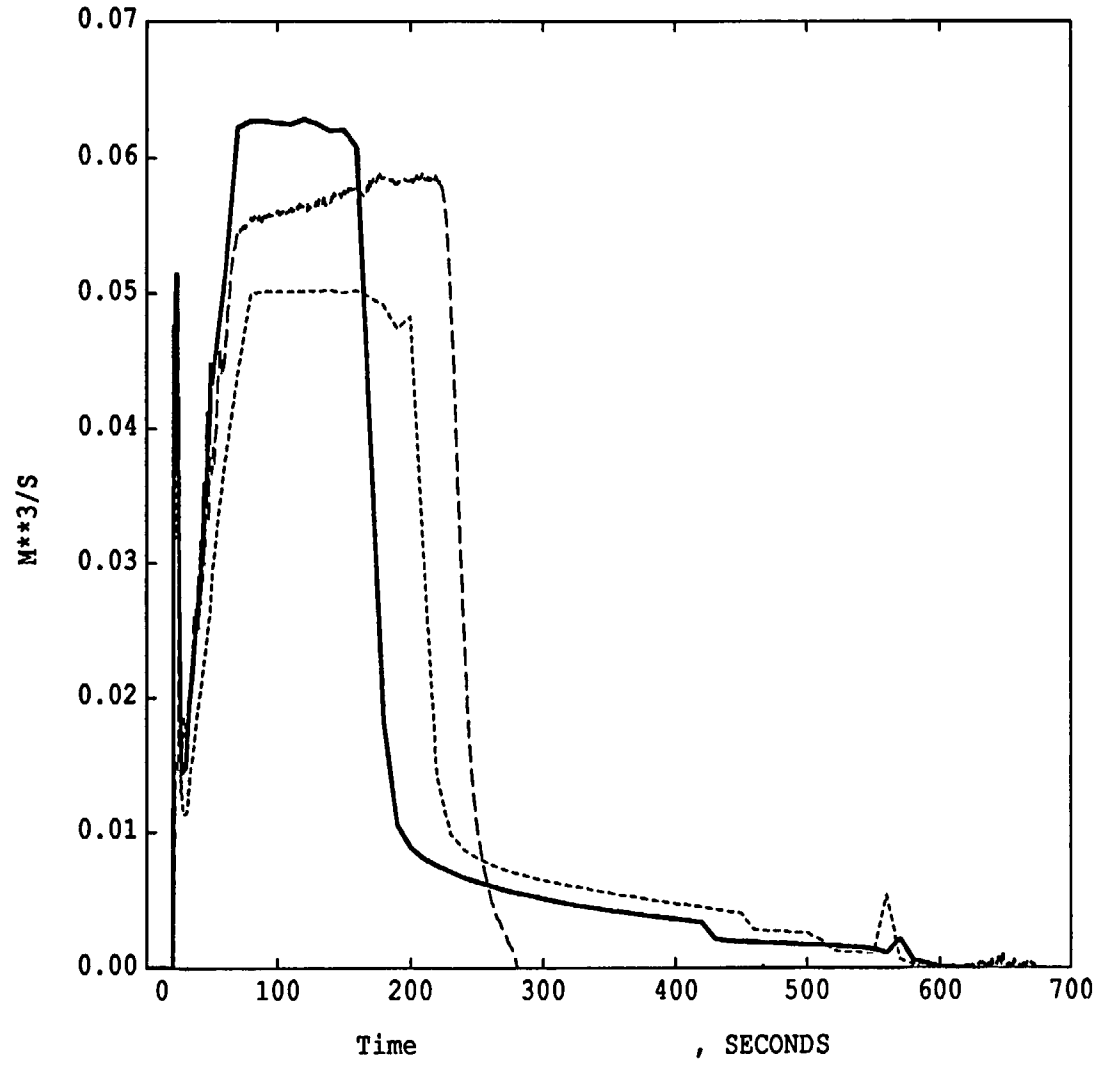

POST TEST ANALYSIS OF LOBI TEST BT-12

FIGURE 22 : SENSITIVITY 2 BREAK VOLUMETRIC FLOW

Winfrith

THE FOLLOWING ARE PLOTTED AGAINST Time

Jun Liquid Density ,DS66FAN

KEY		
SYM BOL	NAME	UNITS
——	Jun Liquid Density LOSS COEF 1.0	,KG/M**3
----	Jun Liquid Density RELAP5 BASE CASE	,KG/M**3
—1—	DS66FAN EXPERIMENT LOC= 14/ 0/ 0 MNEM=DS INF=3	,KG/M**3

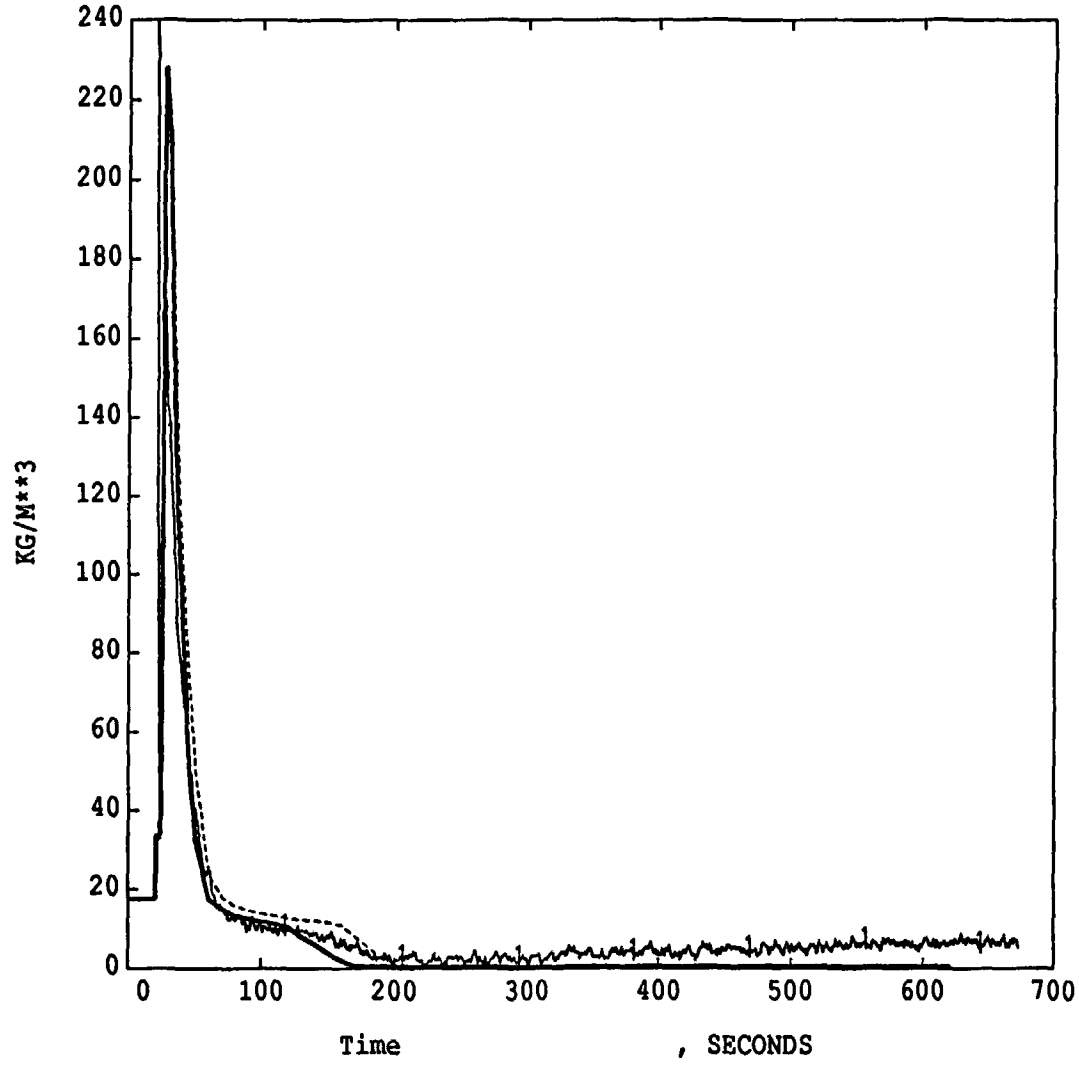

POST TEST ANALYSIS OF LOBI TEST BT-12

FIGURE 23 : SENSITIVITY 2 BREAK AVERAGE DENSITY

Winfrith

THE FOLLOWING ARE PLOTTED AGAINST Time

Control Component No,PA87S ,PA97S

KEY		
SYM BOL	NAME	UNITS
——	Control Component No,PA WATER IN SL : BROKEN LOOP LOC= 10/ 0/ 0 MNEM=CCNO INF=6	
----	Control Component No,PA BASE CASE BROKEN LOOP LOC= 10/ 0/ 0 MNEM=CCNO INF=2	
— —	PA87S ,PA EXPERIMENT BROKEN LOOP LOC= 26/ 0/ 0 MNEM=PA INF=3	
——	Control Component No,PA WATER IN SL :INTACT LOOP LOC= 11/ 0/ 0 MNEM=CCNO INF=6	
----	Control Component No,PA BASE CASE INTACT LOOP LOC= 11/ 0/ 0 MNEM=CCNO INF=2	
— —	PA97S ,PA EXPERIMENT INTACT LOOP LOC= 27/ 0/ 0 MNEM=PA INF=3	

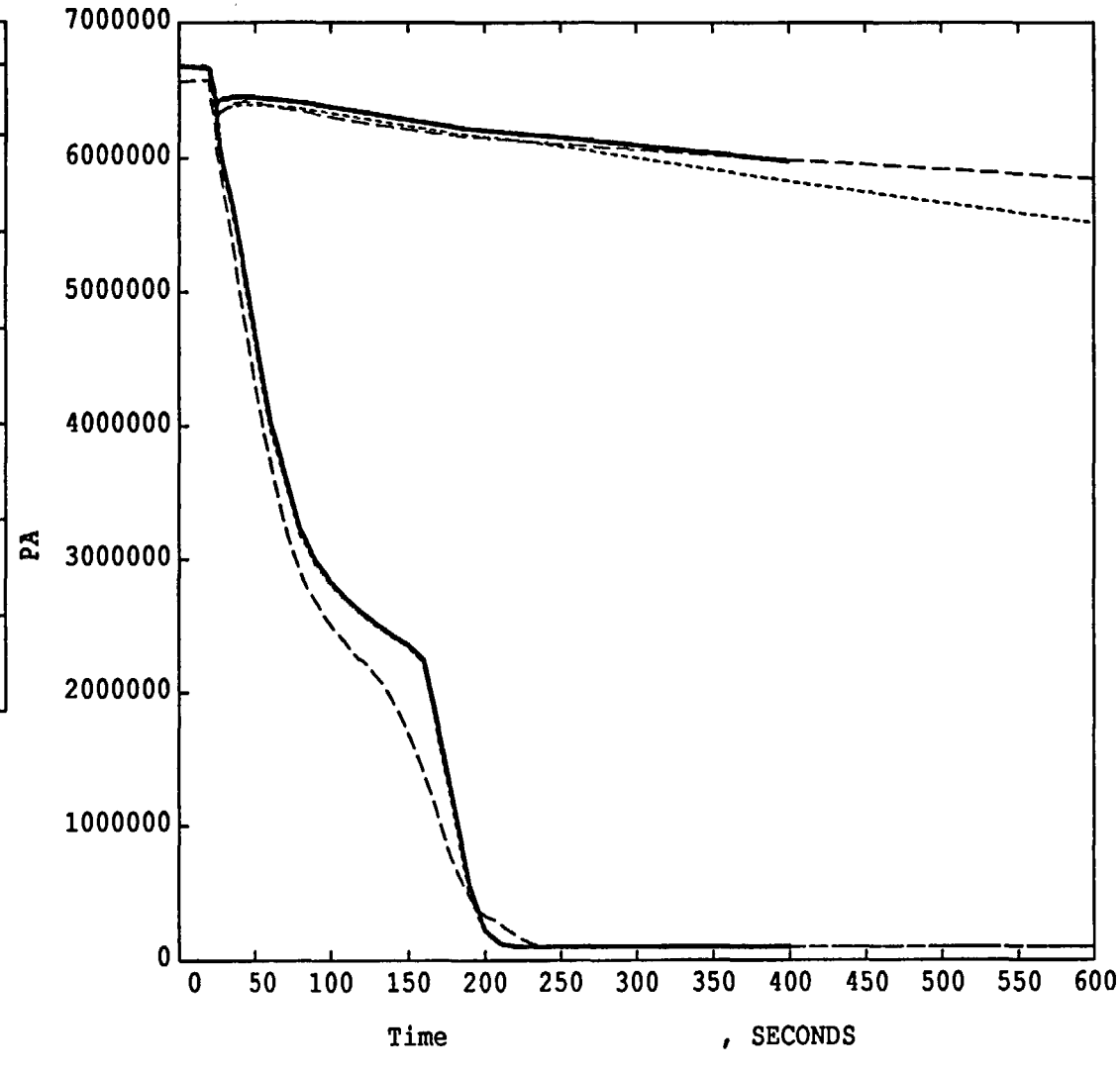

POST TEST ANALYSIS OF LOBI TEST BT-12 AEEW R2645

FIGURE 24: SENSITIVITY 3 PLOT OF SECONDARY PRESSURES

Winfrith

THE FOLLOWING ARE PLOTTED AGAINST Time

Liq + Vap Flowrate ,QV66H

KEY		
SYM BOL	NAME	UNITS
——	Liq + Vap Flowrate WATER IN SL	,M**3/S
----	Liq + Vap Flowrate RELAP5 BASE CASE	,M**3/S
— —	QV66H EXPERIMENT LOC= 165/ 0/ 0 MNEM=QV INF=3	,M**3/S

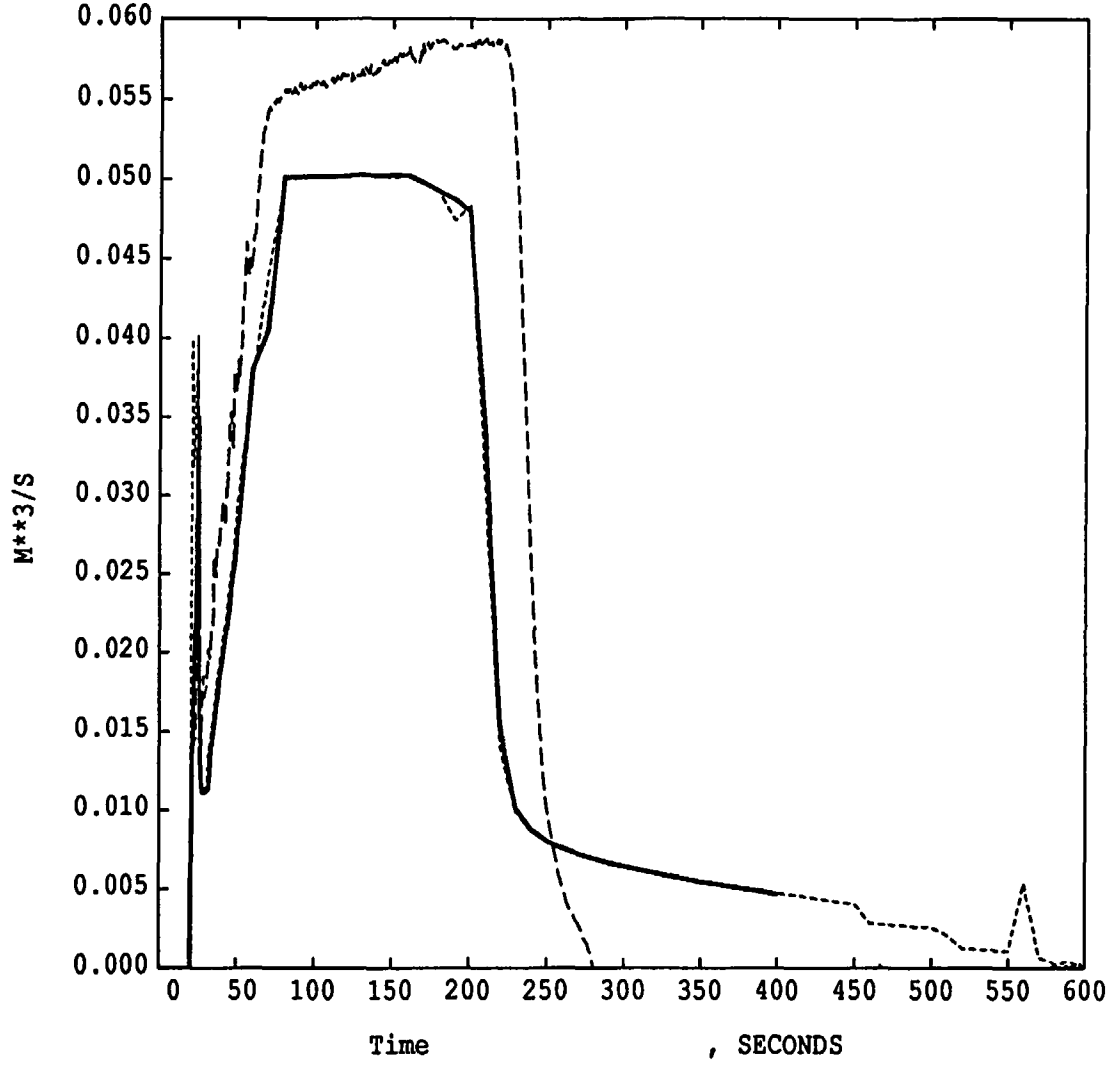

POST TEST ANALYSIS OF LOBI TEST BT-12 AEEW R2645

FIGURE 25: SENSITIVITY 3 BREAK VOLUMETRIC FLOW

THE FOLLOWING ARE PLOTTED AGAINST Time

Jun Liquid Density ,DS66FAN

Winfrith

KEY		
SYM BOL	NAME	UNITS
——	Jun Liquid Density WATER IN SL	,KG/M**3
----	Jun Liquid Density RELAP5 BASE CASE	,KG/M**3
—1—	DS66FAN EXPERIMENT LOC= 14/ 0/ 0 MNEM=DS INF=3	,KG/M**3

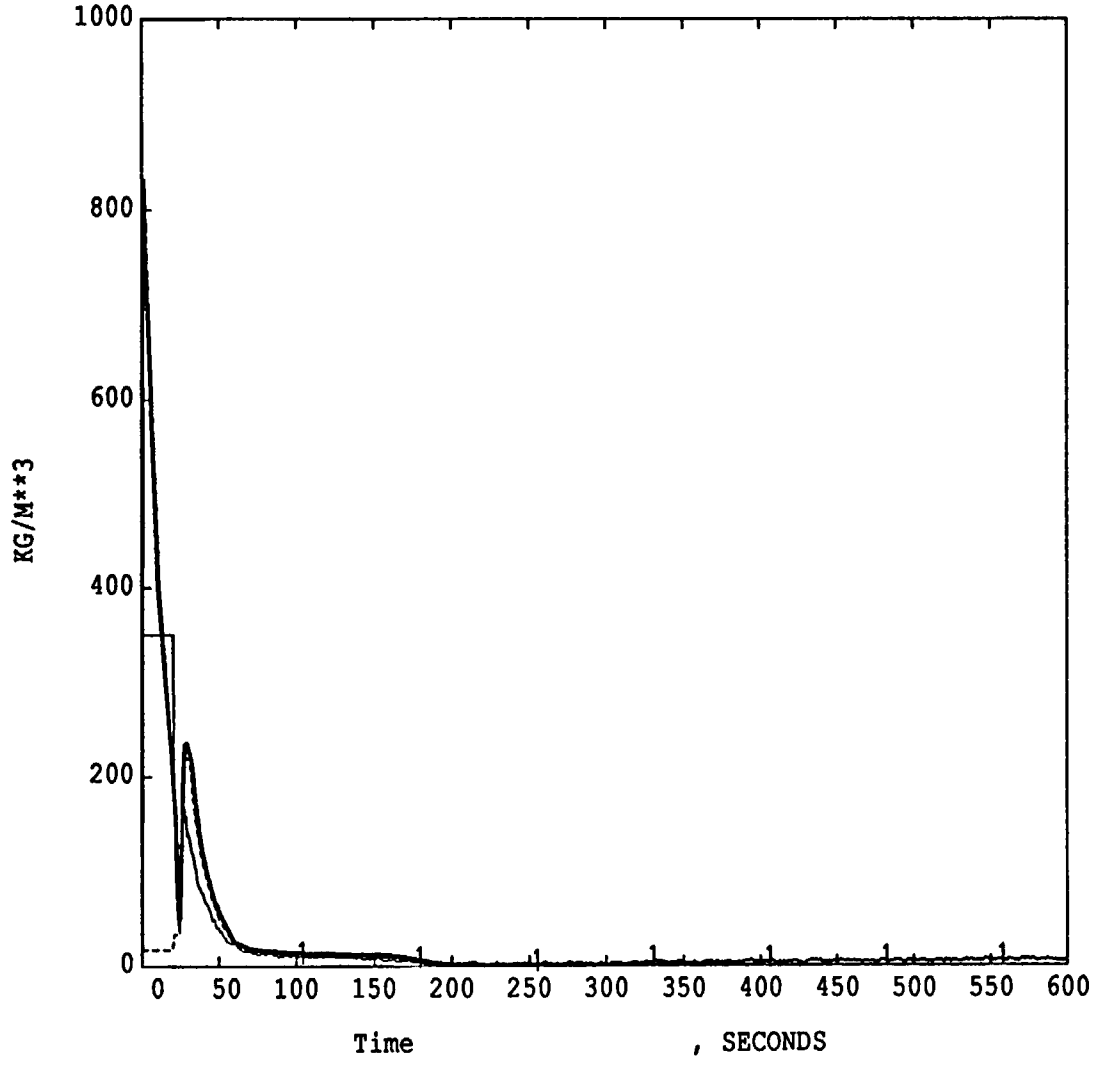

POST TEST ANALYSIS OF LOBI TEST BT-12 AEEW R2645

FIGURE 26: SENSITIVITY 3 BREAK AVERAGE DENSITY

THE FOLLOWING ARE PLOTTED AGAINST Time

Control Component No,PA87S ,PA97S

Winfrith

KEY		
SYM BOL	NAME	UNITS
——	Control Component No,PA NEARLY IMP. NUMERICS : BROKEN LO LOC= 10/ 0/ 0 MNEM=CCNO INF=6	
----	Control Component No,PA BASE CASE BROKEN LOOP LOC= 10/ 0/ 0 MNEM=CCNO INF=2	
— —	PA87S ,PA EXPERIMENT BROKEN LOOP LOC= 26/ 0/ 0 MNEM=PA INF=3	
——	Control Component No,PA NEARLY IMP. NUMERICS :INTACT LOO LOC= 11/ 0/ 0 MNEM=CCNO INF=6	
----	Control Component No,PA BASE CASE INTACT LOOP LOC= 11/ 0/ 0 MNEM=CCNO INF=2	
— —	PA97S ,PA EXPERIMENT INTACT LOOP LOC= 27/ 0/ 0 MNEM=PA INF=3	

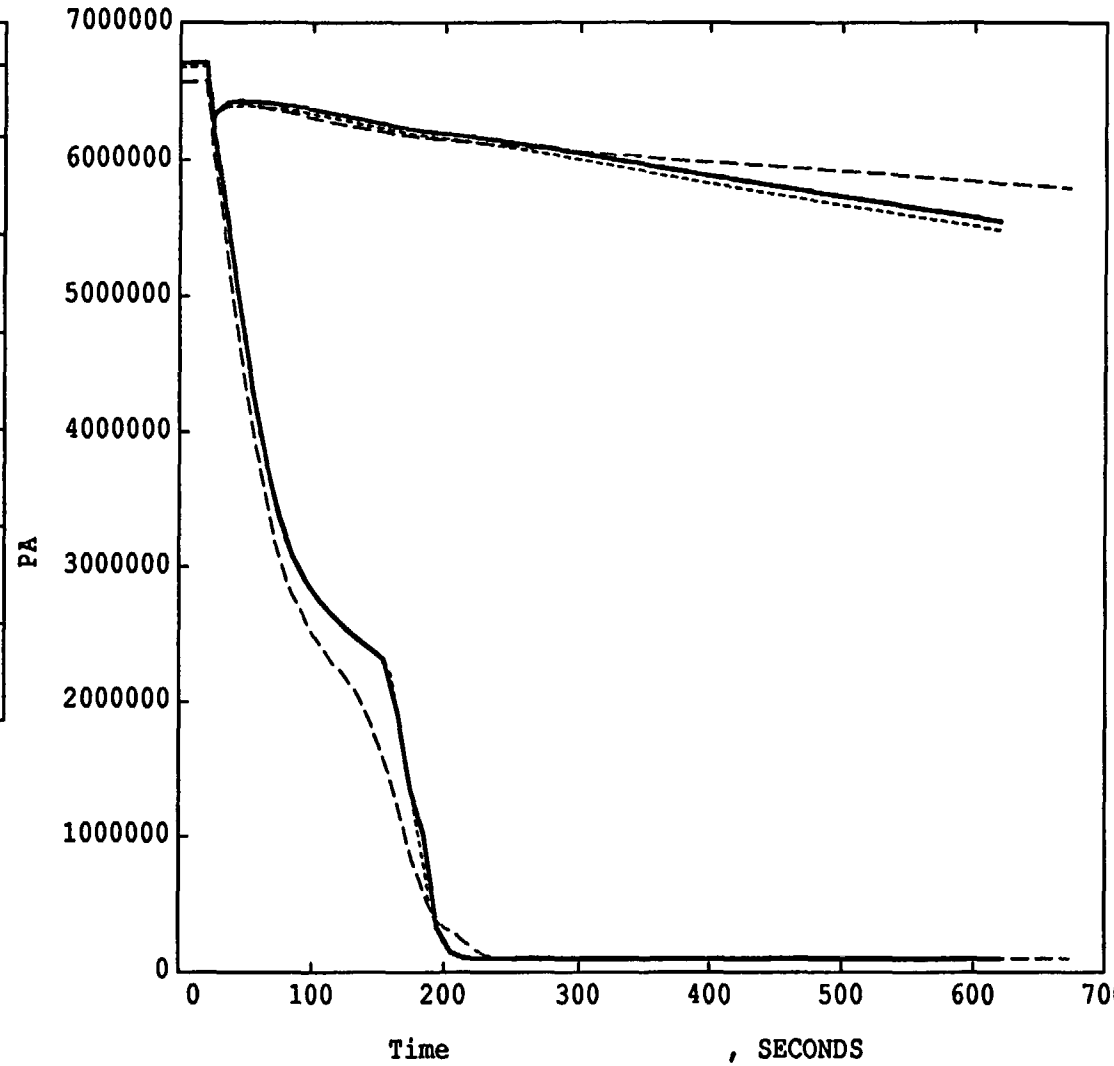

POST TEST ANALYSIS OF LOBI TEST BT-12 AEEW-R 2645

FIGURE 27: SENSITIVITY 4 PLOT OF SECONDARY PRESSURES

Winfrith

THE FOLLOWING ARE PLOTTED AGAINST Time

Vol Liquid Temp ,TF26H000 ,TF21H000

KEY		
SYM BOL	NAME	UNITS
——	Vol Liquid Temp NEARLY IMP. NUMERICS : CORE OUTL LOC= 239010000 MNEM-TMPF INF-5	,K
----	Vol Liquid Temp BASE CASE CORE OUTLET LOC= 239010000 MNEM-TMPF INF-1	,K
— —	TF26H000 EXPERIMENT CORE OUTLET LOC= 12/ 0/ 0 MNEM-TF INF-4	,K
——	Vol Liquid Temp NEARLY IMP. NUMERICS : CORE INLE LOC= 200010000 MNEM-TMPF INF-5	,K
----	Vol Liquid Temp BASE CASE CORE INLET LOC= 200010000 MNEM-TMPF INF-1	,K
— —	TF21H000 EXPERIMENT CORE INLET LOC= 5/ 0/ 0 MNEM-TF INF-4	,K

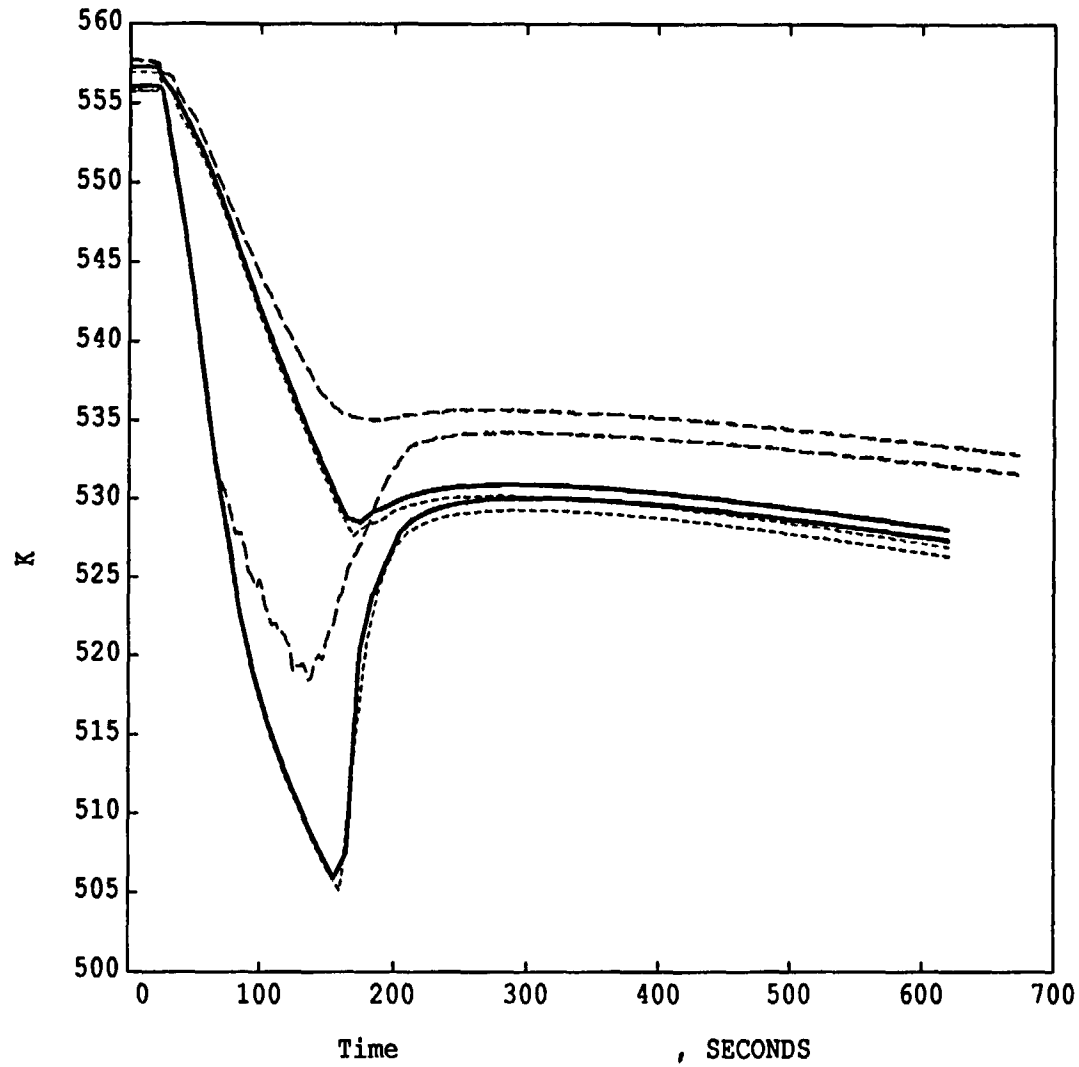

POST TEST ANALYSIS OF LOBI TEST BT-12 AEEW-R 2645

FIGURE 28: SENSITIVITY 4 PRIMARY TEMPERATURE BROKEN LOOP

Winfrith

THE FOLLOWING ARE PLOTTED AGAINST Time

Vol Liquid Temp ,TF16H000 ,TF11H000

KEY		
SYM BOL	NAME	UNITS
——	Vol Liquid Temp NEARLY IMP. NUMERICS : CORE OUTL LOC= 139010000 MNEM-TMPF INF=5	,K
----	Vol Liquid Temp BASE CASE CORE OUTLET LOC= 139010000 MNEM-TMPF INF=1	,K
— —	TF16H000 EXPERIMENT CORE OUTLET LOC= 3/ 0/ 0 MNEM=TF INF=4	,K
——	Vol Liquid Temp NEARLY IMP. NUMERICS : CORE INLE LOC= 100010000 MNEM-TMPF INF=5	,K
----	Vol Liquid Temp BASE CASE CORE INLET LOC= 100010000 MNEM-TMPF INF=1	,K
— —	TF11H000 EXPERIMENT CORE INLET LOC= 174/ 0/ 0 MNEM=TF INF=3	,K

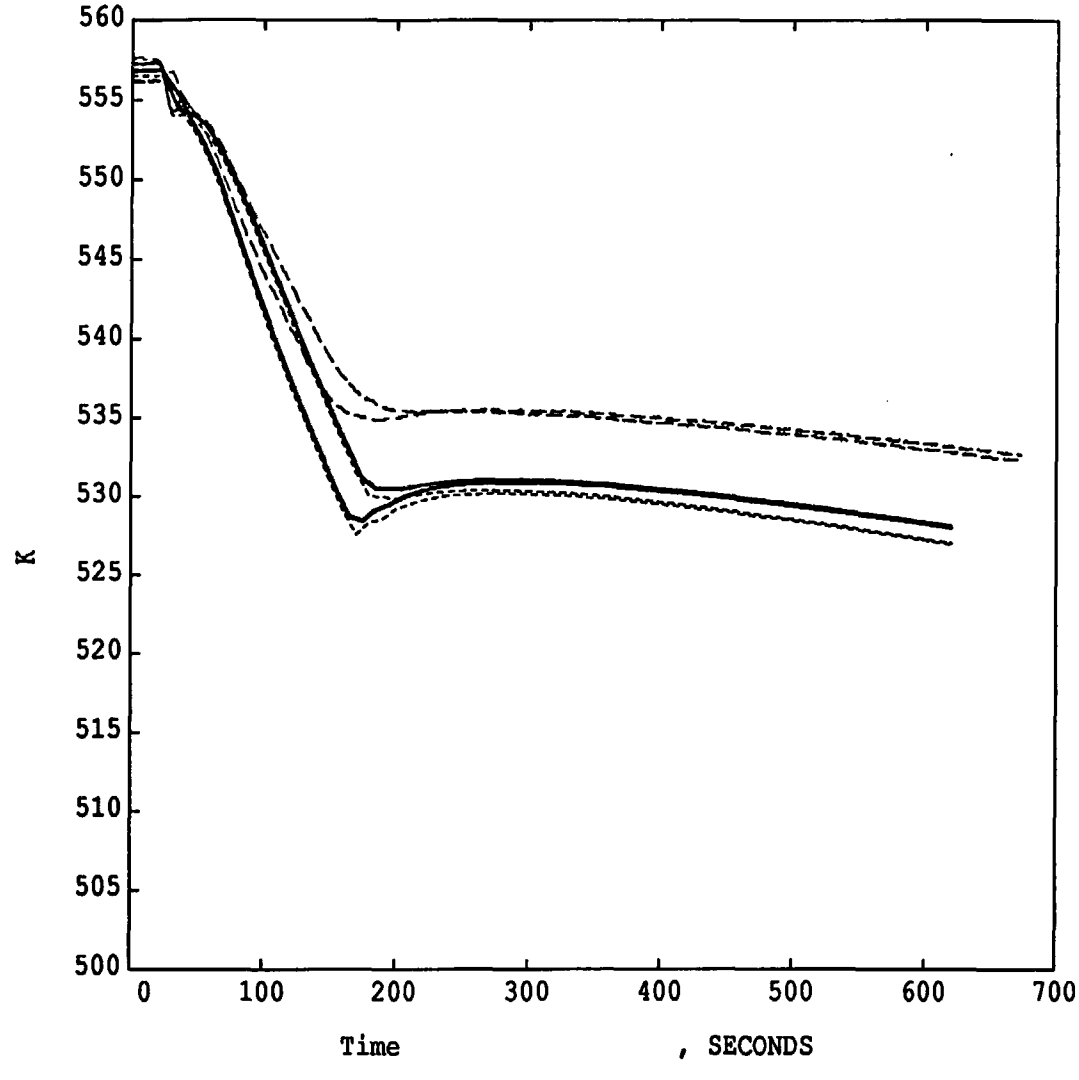

POST TEST ANALYSIS OF LOBI TEST BT-12 AEEW-R 2645

FIGURE 29: SENSITIVITY 4 PRIMARY TEMPERATURE INTACT LOOP

THE FOLLOWING ARE PLOTTED AGAINST Time

Control Component No,PD4340

Winfrith

KEY		
SYM BOL	NAME	UNITS
——	Control Component No,PA NEARLY IMP. NUMERICS LOC= 8/ 0/ 0 MNEM=CCNO INF=6	
----	Control Component No,PA BASE CASE LOC= 8/ 0/ 0 MNEM=CCNO INF=2	
— —	PD4340 ,PA EXPERIMENT: LOC= 68/ 0/ 0 MNEM=PD INF=3	

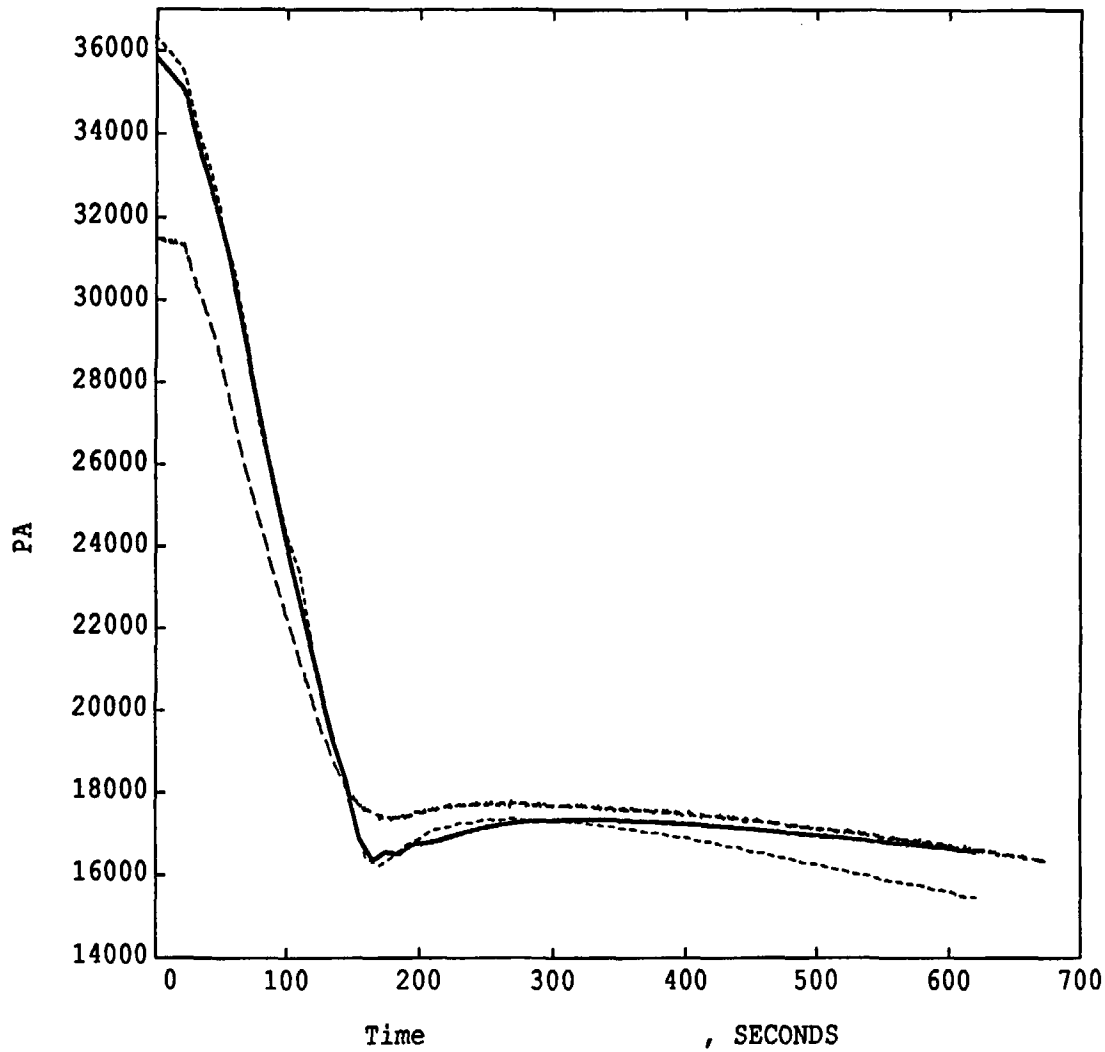

POST TEST ANALYSIS OF LOBI TEST BT-12 AEEW-R 2645

FIGURE 30: SENSITIVITY 4 PRESURISER DELTA-P

Winfrith

THE FOLLOWING ARE PLOTTED AGAINST Time

Control Component No

KEY		
SYM BOL	NAME	UNITS
——	Control Component No,M NEARLY IMP. NUMERICS LOC= 43/ 0/ 0 MNEM=CCNO INF=5	
----	Control Component No,M BASE CASE LOC= 43/ 0/ 0 MNEM=CCNO INF=1	

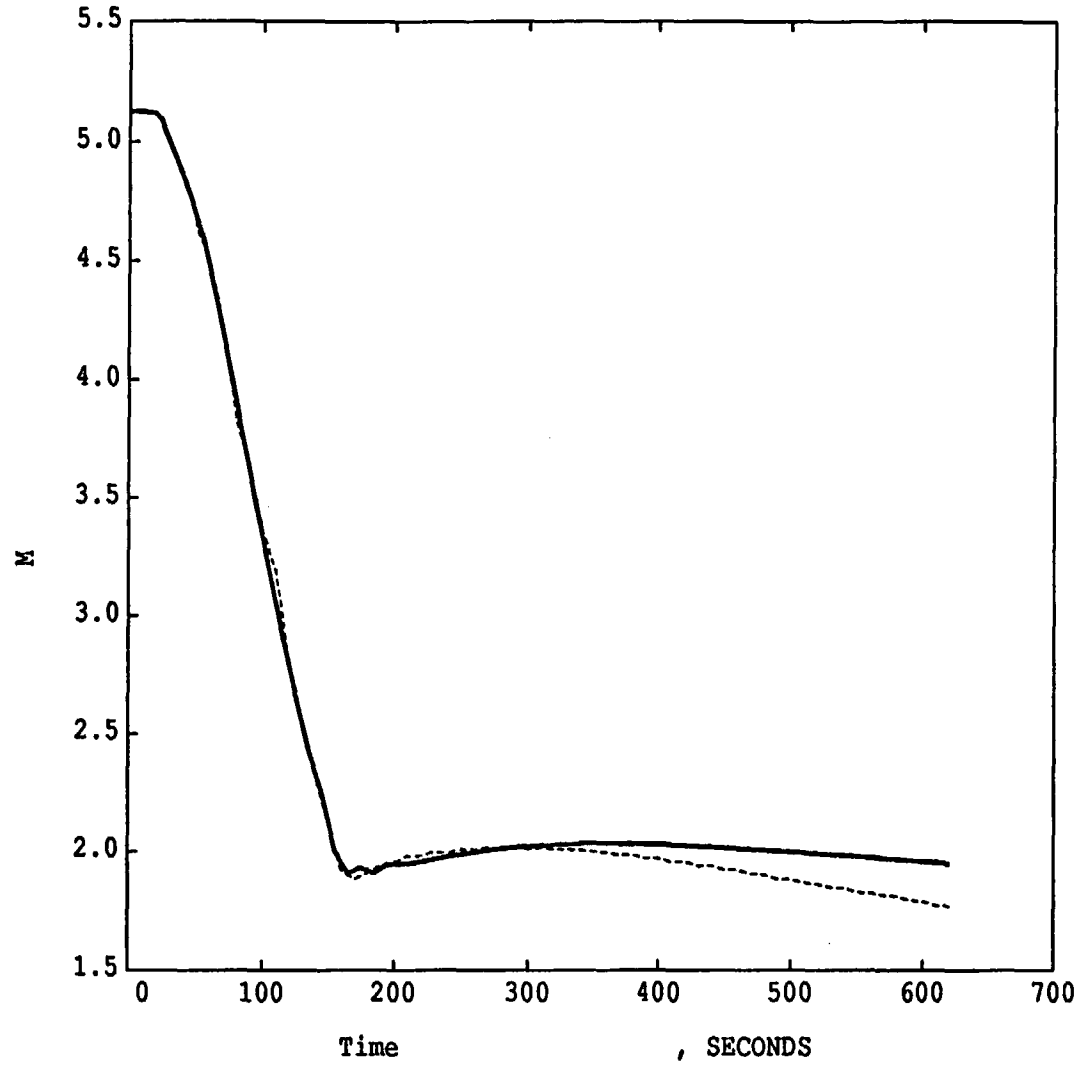

POST TEST ANALYSIS OF LOBI TEST BT-12 AEEW-R 2645

FIGURE 31: SENSITIVITY 4 PRESSURISER COLLAPSED LEVEL

Winfrith

THE FOLLOWING ARE PLOTTED AGAINST Time

Control Component No,PA40

KEY		
SYM BOL	NAME	UNITS
——	Control Component No,PA NEARLY IMP. NUMERICS LOC= 5/ 0/ 0 MNEM=CCNO INF=6	
----	Control Component No,PA BASE CASE LOC= 5/ 0/ 0 MNEM=CCNO INF=2	
— —	PA40 EXPERIMENT LOC= 25/ 0/ 0 MNEM=PA INF=3	,PA

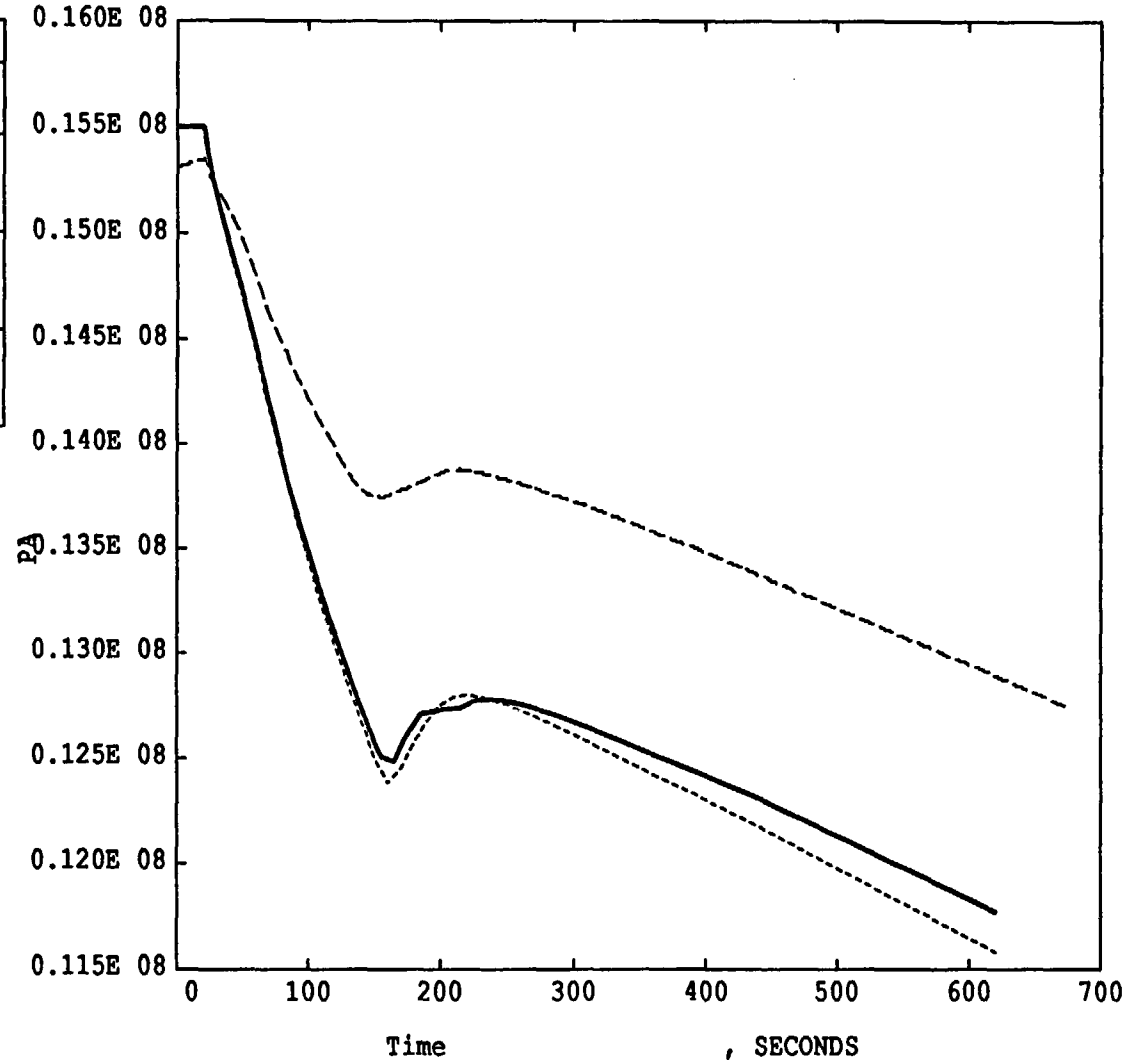

POST TEST ANALYSIS OF LOBI TEST BT-12 AEEW-R 2645

FIGURE 32: SENSITIVITY 4 PRESSURISER PRESSURE

Winfrith

THE FOLLOWING ARE PLOTTED AGAINST Time

Liq + Vap Flowrate ,QV66H

KEY		
SYMBOL	NAME	UNITS
——	Liq + Vap Flowrate NEARLY IMP. NUMERICS	,M**3/S
----	Liq + Vap Flowrate RELAP5 BASE CASE	,M**3/S
— —	QV66H EXPERIMENT LOC= 165/ 0/ 0 MNEM=QV INF=3	,M**3/S

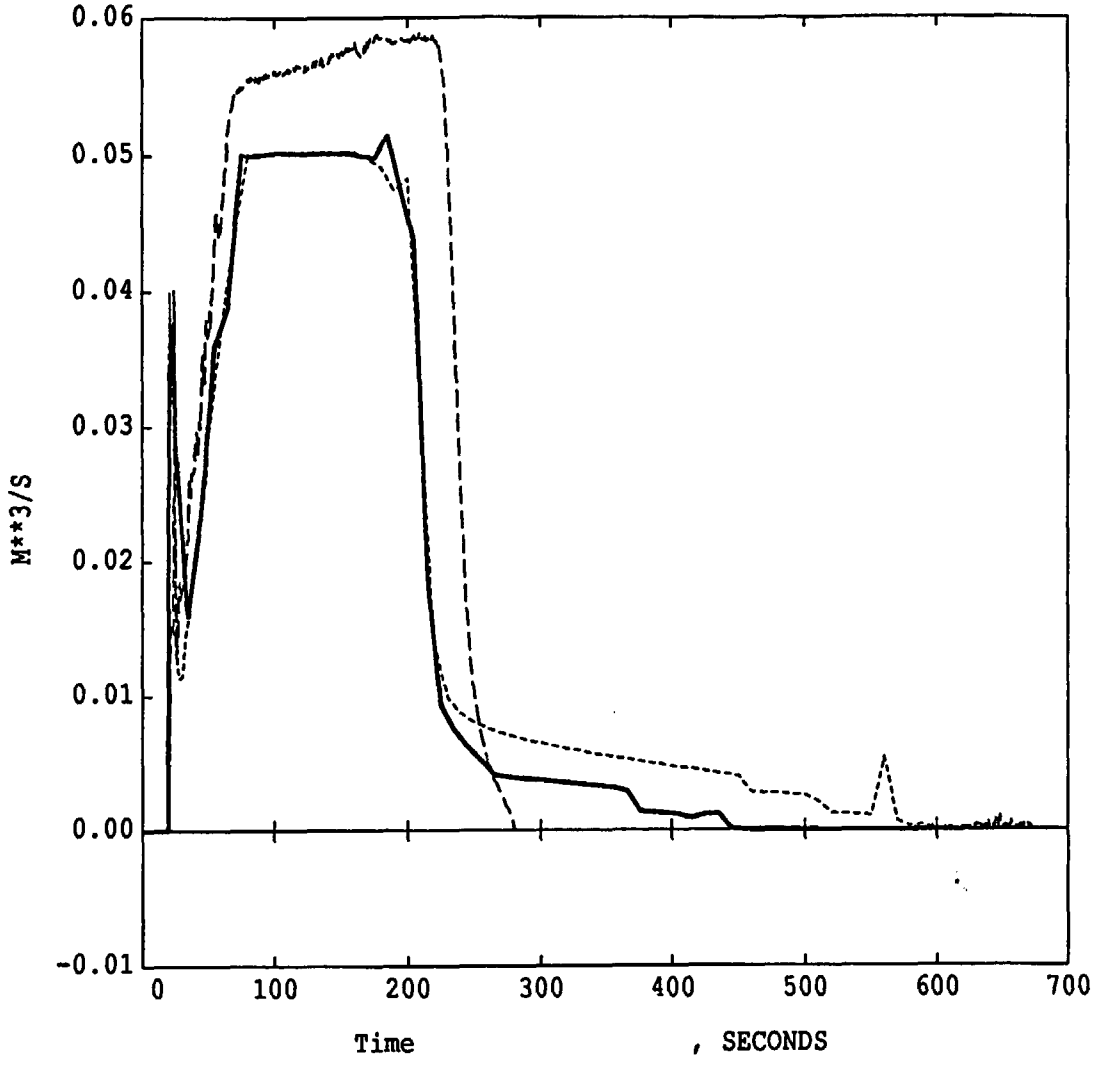

POST TEST ANALYSIS OF LOBI TEST BT-12 AEEW-R 2645

FIGURE 33: SENSITIVITY 4 BREAK VOLUMETRIC FLOW

Winfrith

THE FOLLOWING ARE PLOTTED AGAINST Time

Jun Liquid Density ,DS66FAN

KEY		
SYM BOL	NAME	UNITS
——	Jun Liquid Density NEARLY IMP. NUMERICS	,KG/M**3
----	Jun Liquid Density RELAP5 BASE CASE	,KG/M**3
—⊥—	DS66FAN EXPERIMENT LOC= 14/ 0/ 0 MNEM=DS INF=3	,KG/M**3

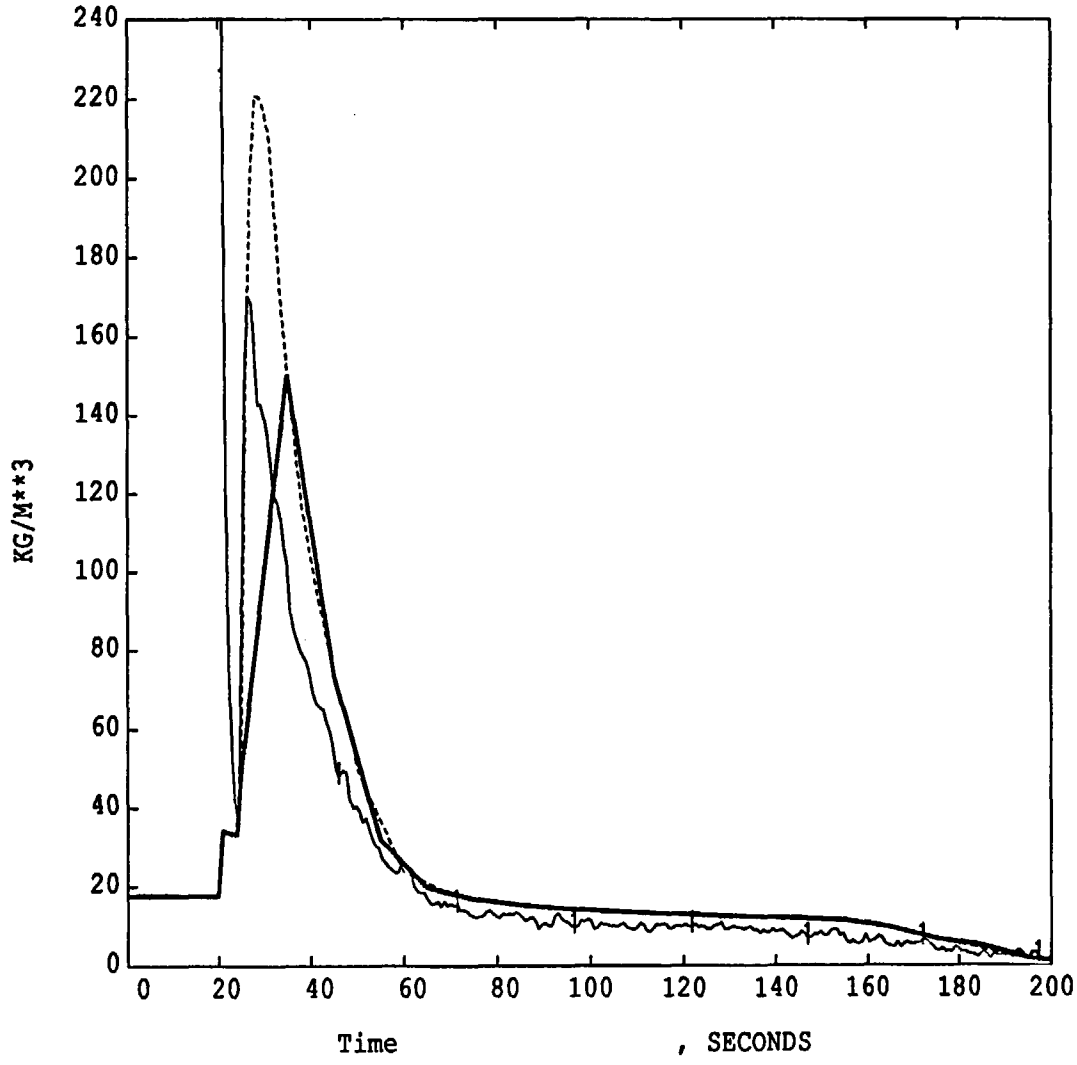

POST TEST ANALYSIS OF LOBI TEST BT-12 AEEW-R 2645

FIGURE 34: SENSITIVITY 4 BREAK AVERAGE DENSITY

Winfrith

THE FOLLOWING ARE PLOTTED AGAINST Time

Liq + Vap Flowrate ,QV66H

KEY		
SYM BOL	NAME	UNITS
——	Liq + Vap Flowrate LOSS COEF 1.0	,M**3/S
----	Liq + Vap Flowrate RELAP5 BASE CASE	,M**3/S
— —	QV66H EXPERIMENT LOC= 165/ 0/ 0 MNEM=QV INF=3	,M**3/S

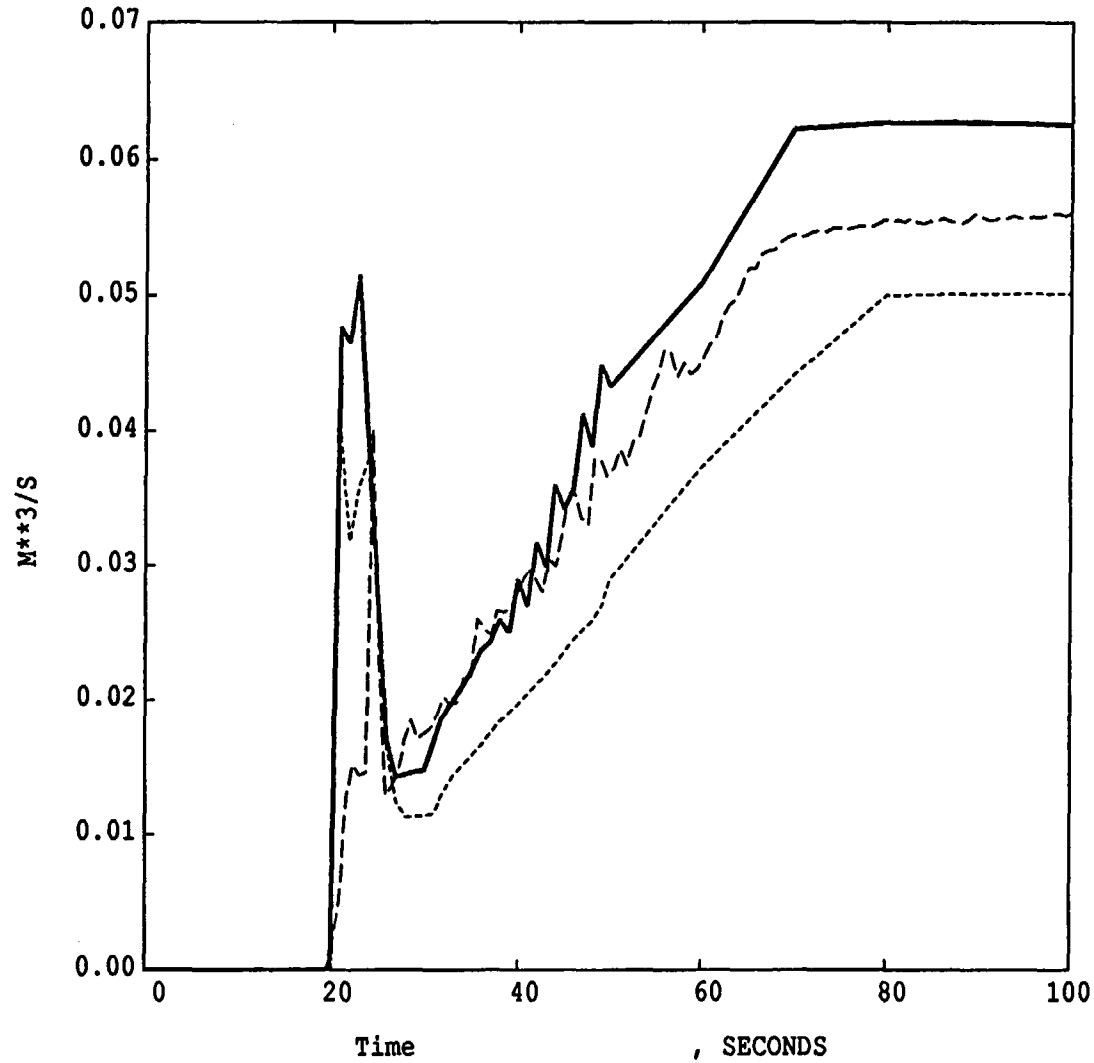

POST TEST ANALYSIS OF LOBI TEST BT-12 AEEW R2645

FIGURE 35: SENSITIVITY 2 BREAK VOLUMETRIC FLOW EXPANDED SCALE

Winfrith

THE FOLLOWING ARE PLOTTED AGAINST Time

Jun Liquid Density ,DS66FAN

KEY		
SYMBOL	NAME	UNITS
——	Jun Liquid Density LOSS COEF 1.0	,KG/M**3
----	Jun Liquid Density RELAP5 BASE CASE	,KG/M**3
—1—	DS66FAN EXPERIMENT LOC= 14/ 0/ 0 MNEM=DS INF=3	,KG/M**3

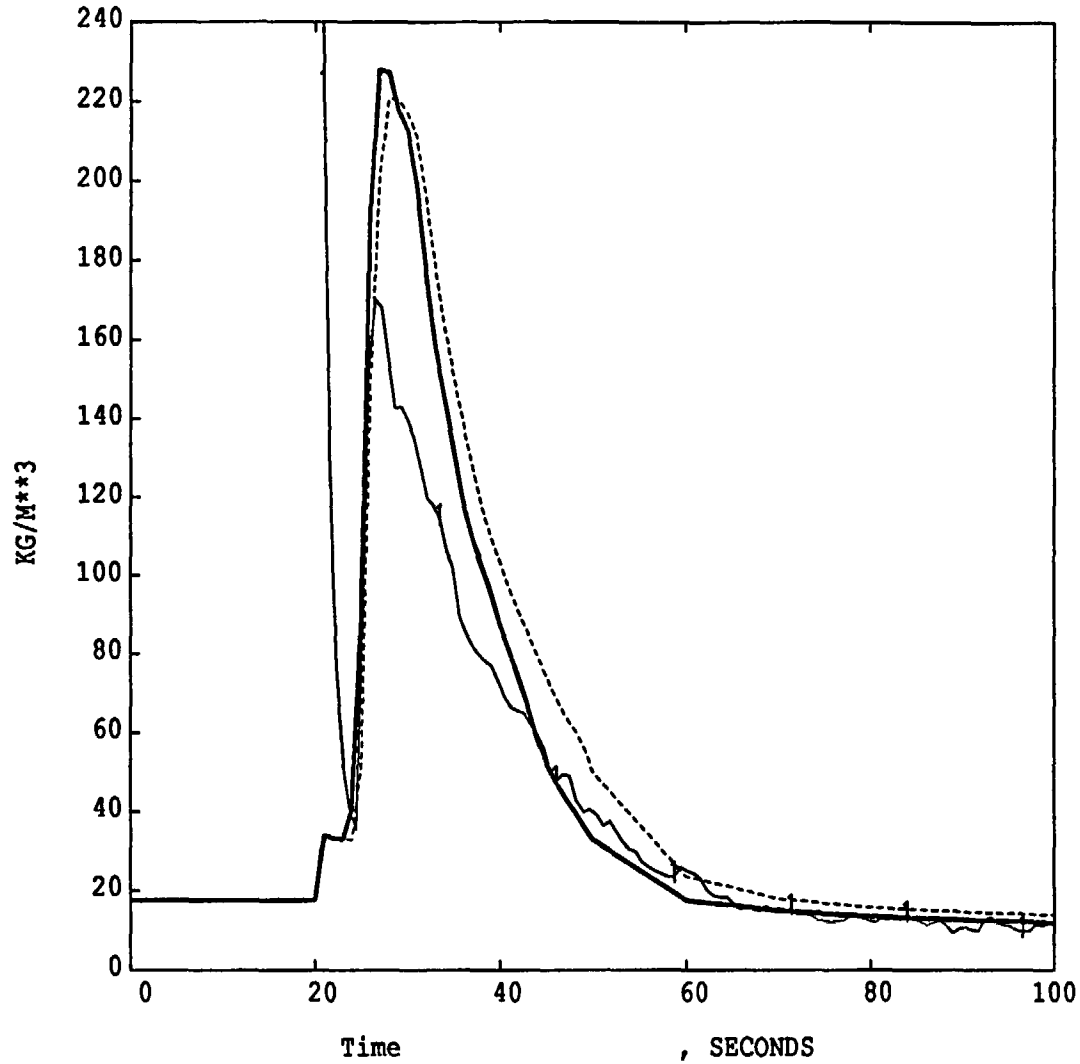

POST TEST ANALYSIS OF LOBI TEST BT-12 AEEW R2645

FIGURE 36: SENSITIVITY 2 BREAK AVERAGE DENSITY EXPANDED SCALE

THE FOLLOWING ARE PLOTTED AGAINST Time

Liq + Vap Flowrate ,QV66H

Winfrith

KEY		
SYM BOL	NAME	UNITS
——	Liq + Vap Flowrate WATER IN SL	,M**3/S
----	Liq + Vap Flowrate RELAP5 BASE CASE	,M**3/S
— —	QV66H EXPERIMENT LOC= 165/ 0/ 0 MNEM=QV INF=3	,M**3/S

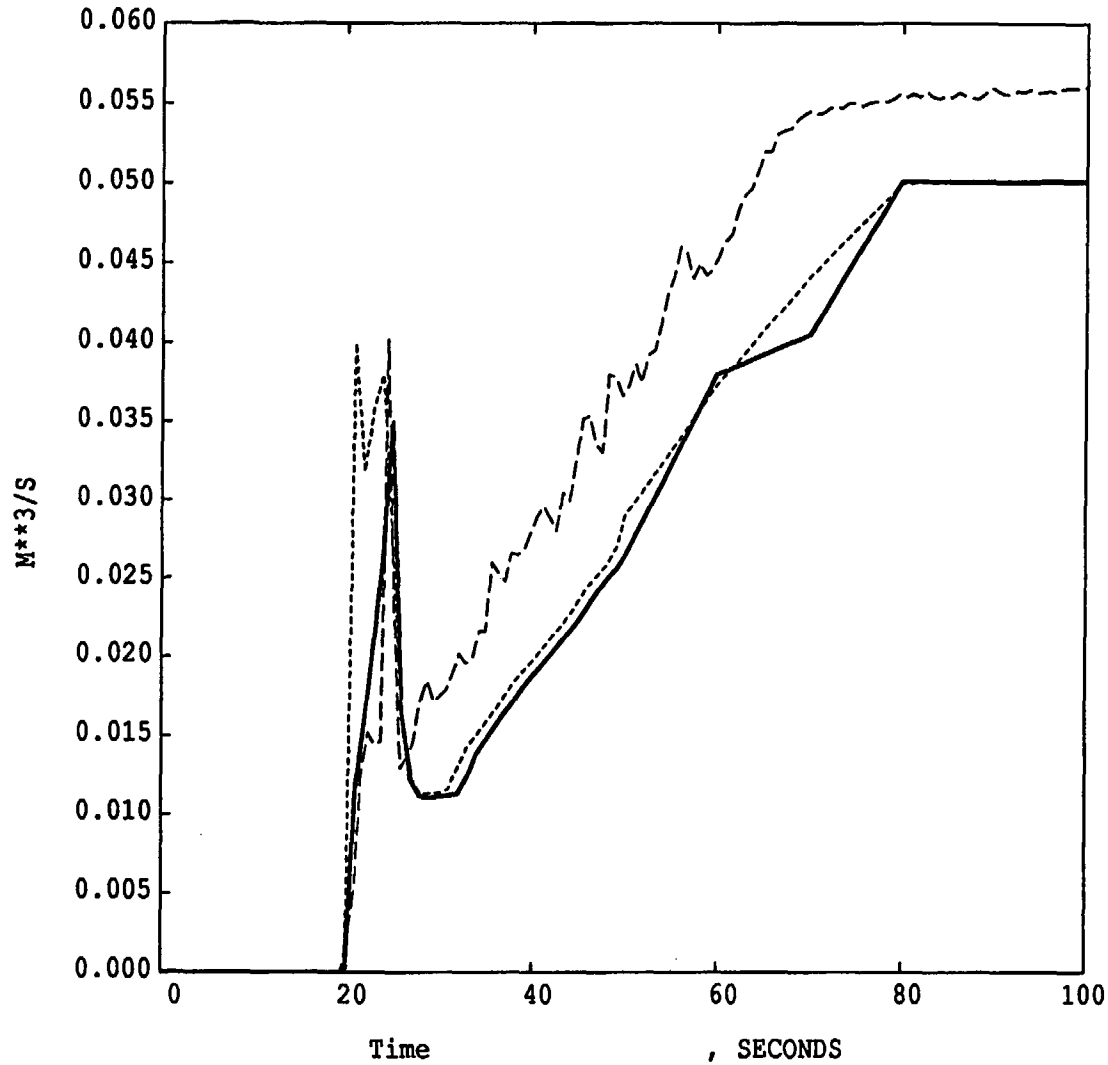

POST TEST ANALYSIS OF LOBI TEST BT-12 AEEW-R 2645

FIGURE 37: SENSITIVITY 3 BREAK VOLUMETRIC FLOW EXPANDED SCALE

THE FOLLOWING ARE PLOTTED AGAINST Time

Jun Liquid Density ,DS66FAN

Winfrith

KEY		
SYM BOL	NAME	UNITS
——	Jun Liquid Density WATER IN SL	,KG/M**3
----	Jun Liquid Density RELAP5 BASE CASE	,KG/M**3
—+—	DS66FAN EXPERIMENT LOC= 14/ 0/ 0 MNEM=DS INF=3	,KG/M**3

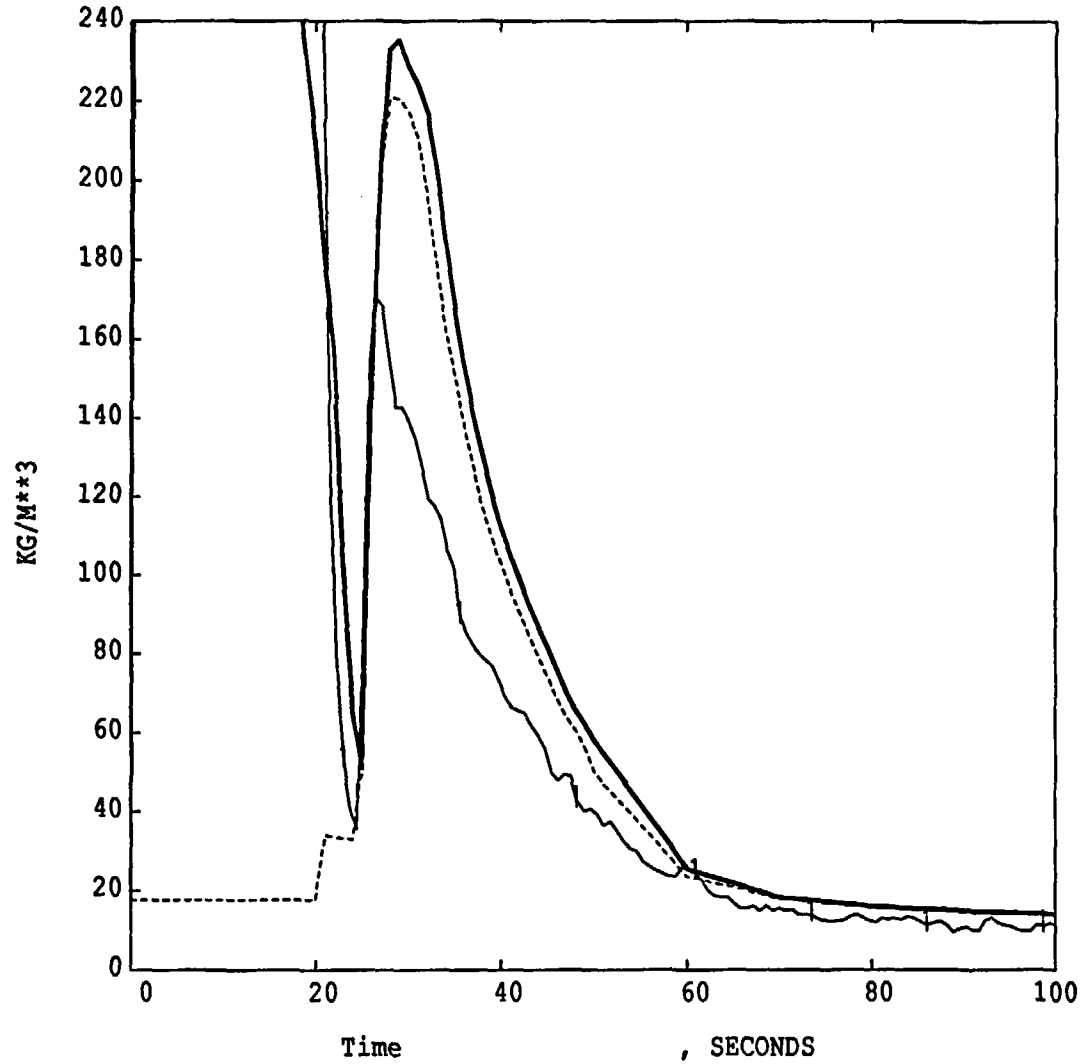

POST TEST ANALYSIS OF LOBI TEST BT-12 AEEW-R 2645

FIGURE 38: SENSITIVITY 3 BREAK AVERAGE DENSITY EXPANDED SCALE

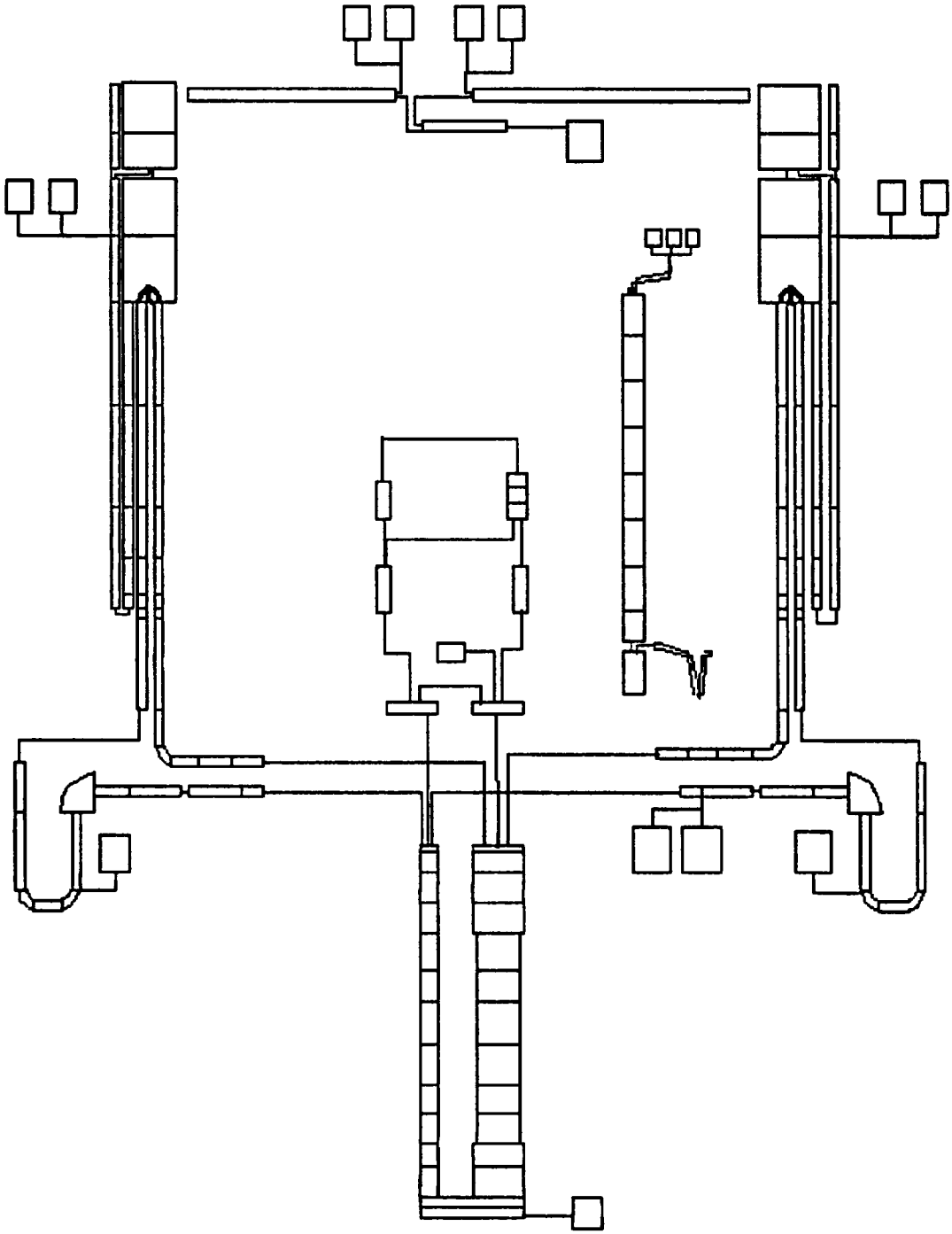

Figure 39 Nodalization diagram for RELAP5 model of LOBI.

TIME : 20.000 LOBI BT-12 Large SLB RELAP5 Figure 40

SimVu
Winfrith

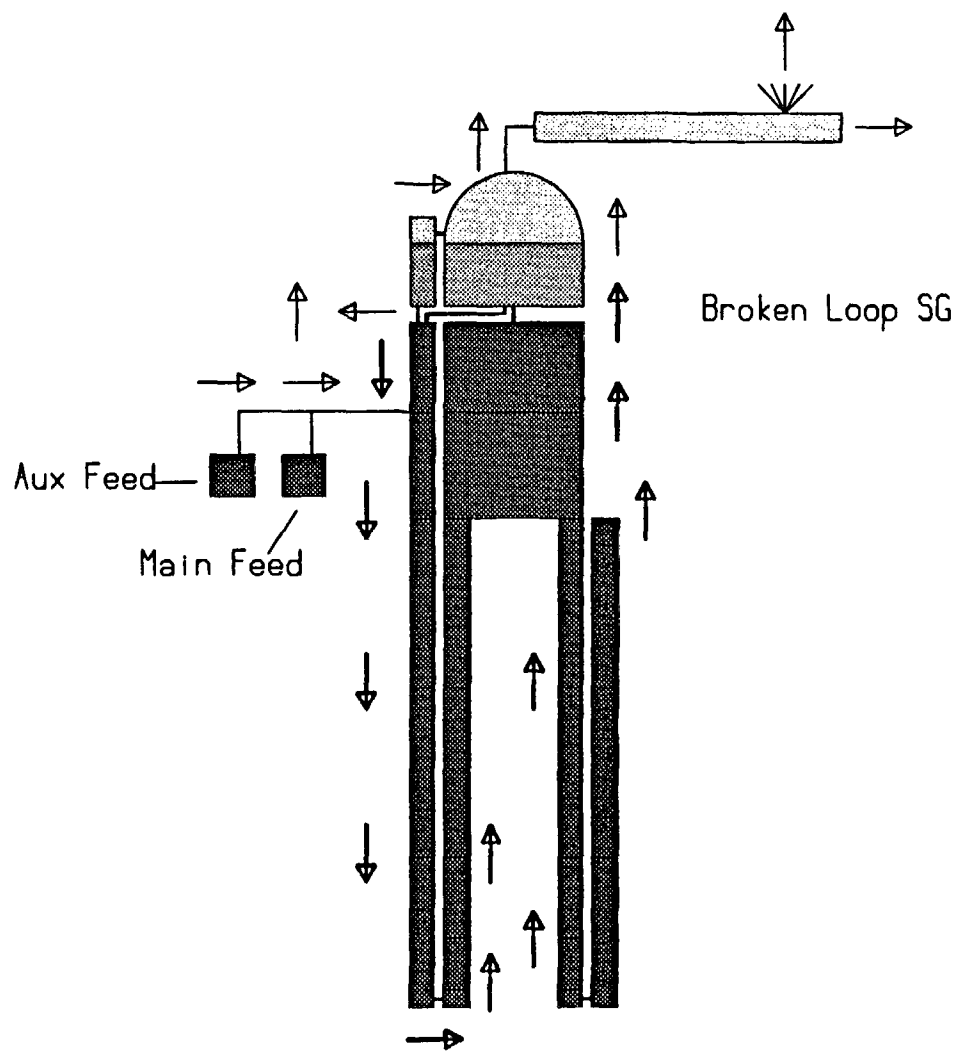

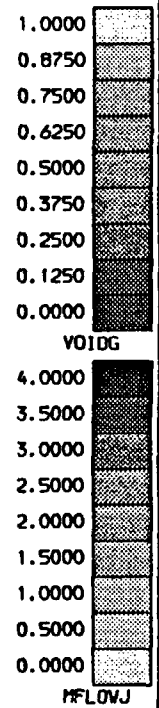

TIME : 21.000 LOBI BT-12 Large SLB RELAP5 Figure 41

SimVu
Winfrith

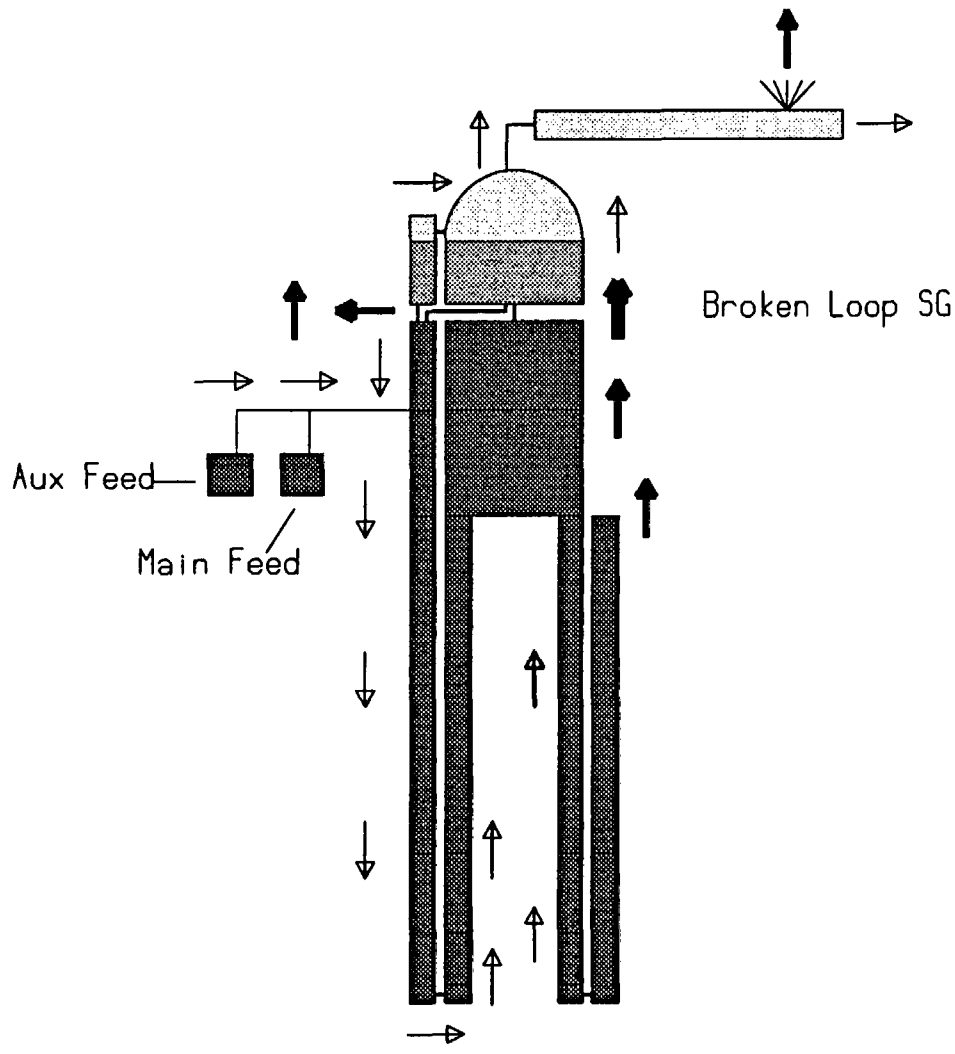

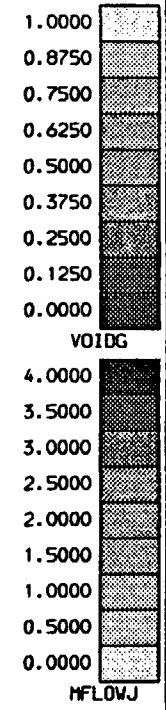

TIME : 25.000 LOBI BT-12 Large SLB RELAP5 Figure 42

SimVu
Winfrith

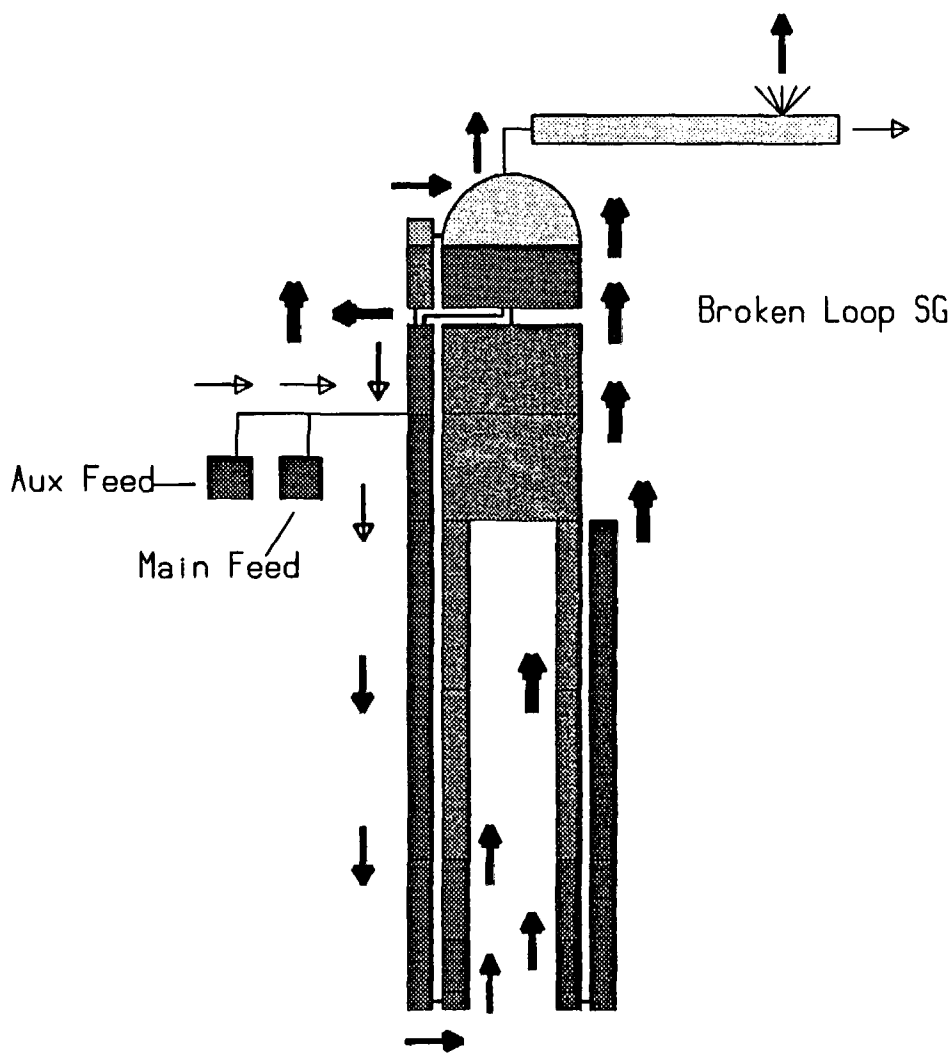

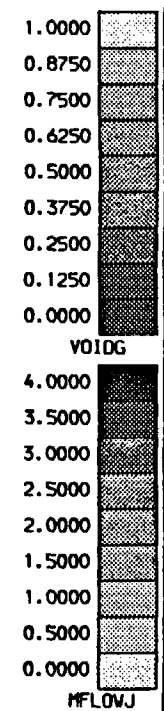

TIME : 27.000 LOBI BT-12 Large SLB RELAP5 Figure 43

SimVu
Winfrith

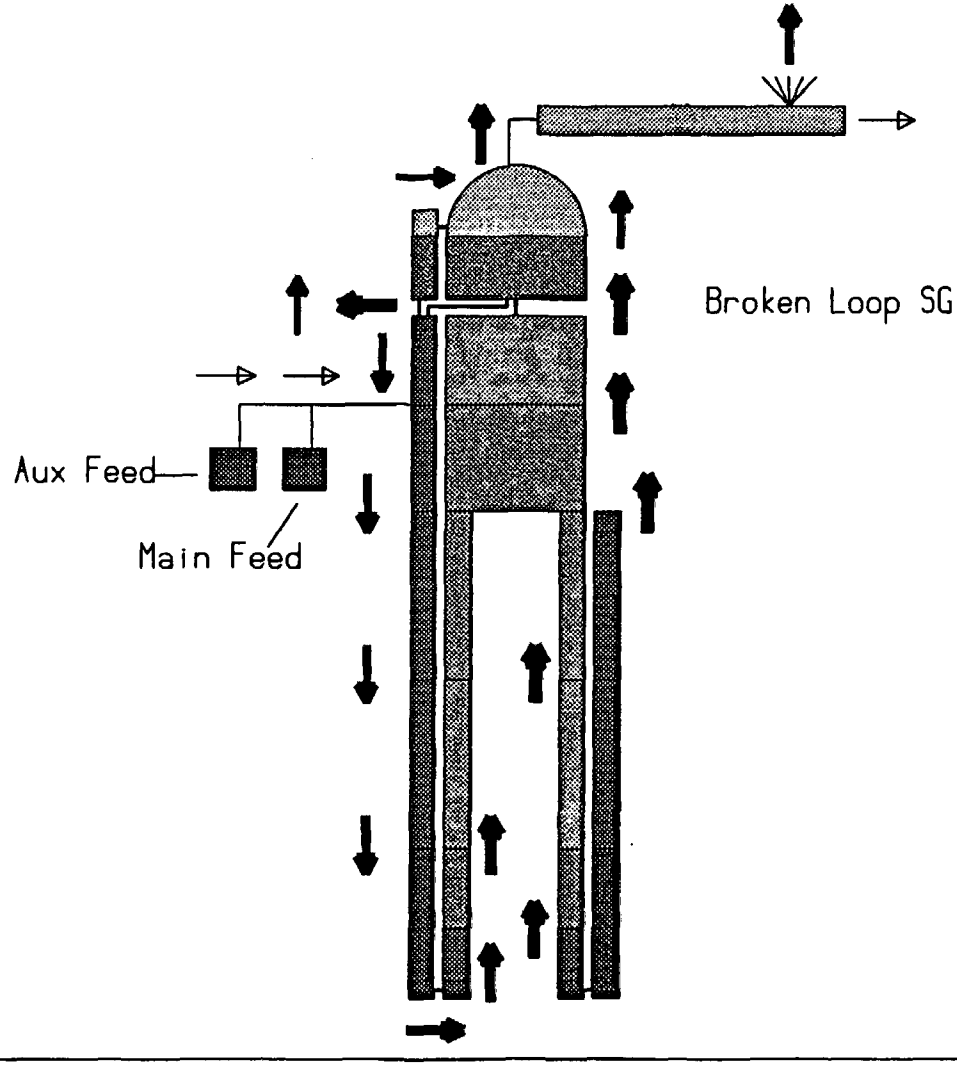

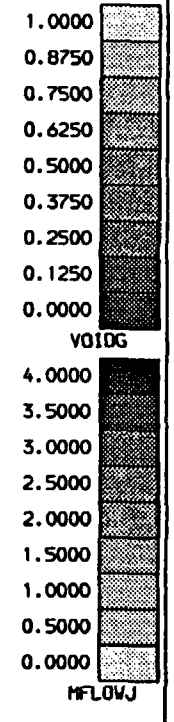

TIME : 37.000 LOBI BT-12 Large SLB RELAP5 Figure 44

SimVu
Winfrith

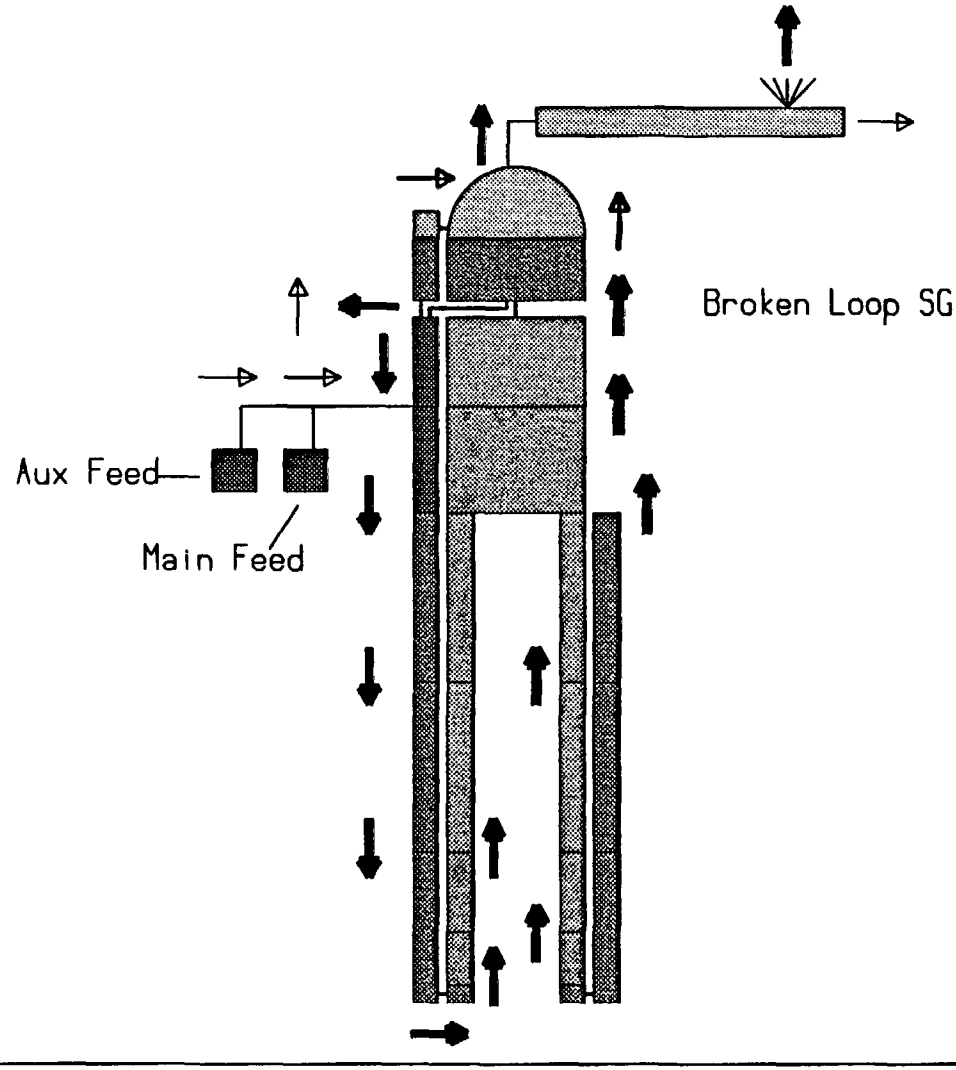

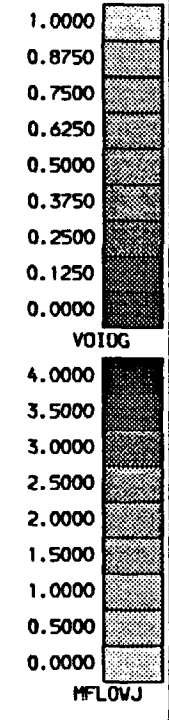

TIME : 39.000 LOBI BT-12 Large SLB RELAP5 Figure 45

SimVu
Winfrith

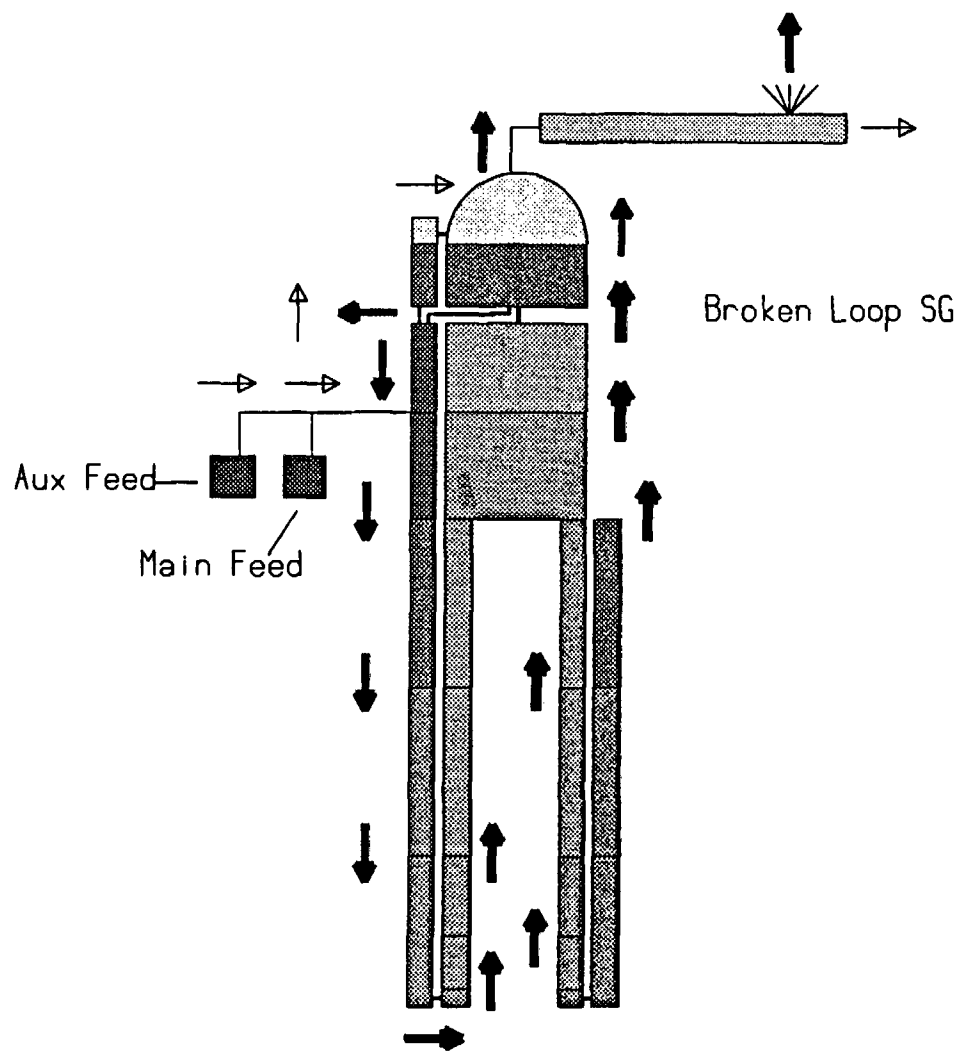

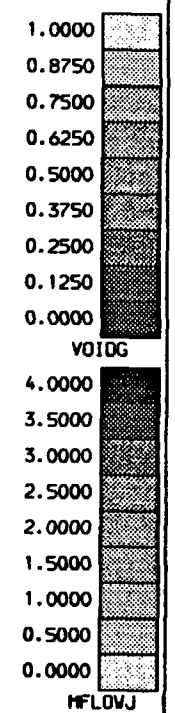

TIME : 50.000 LOBI BT-12 Large SLB RELAP5 Figure 46

SimVu
Winfrith

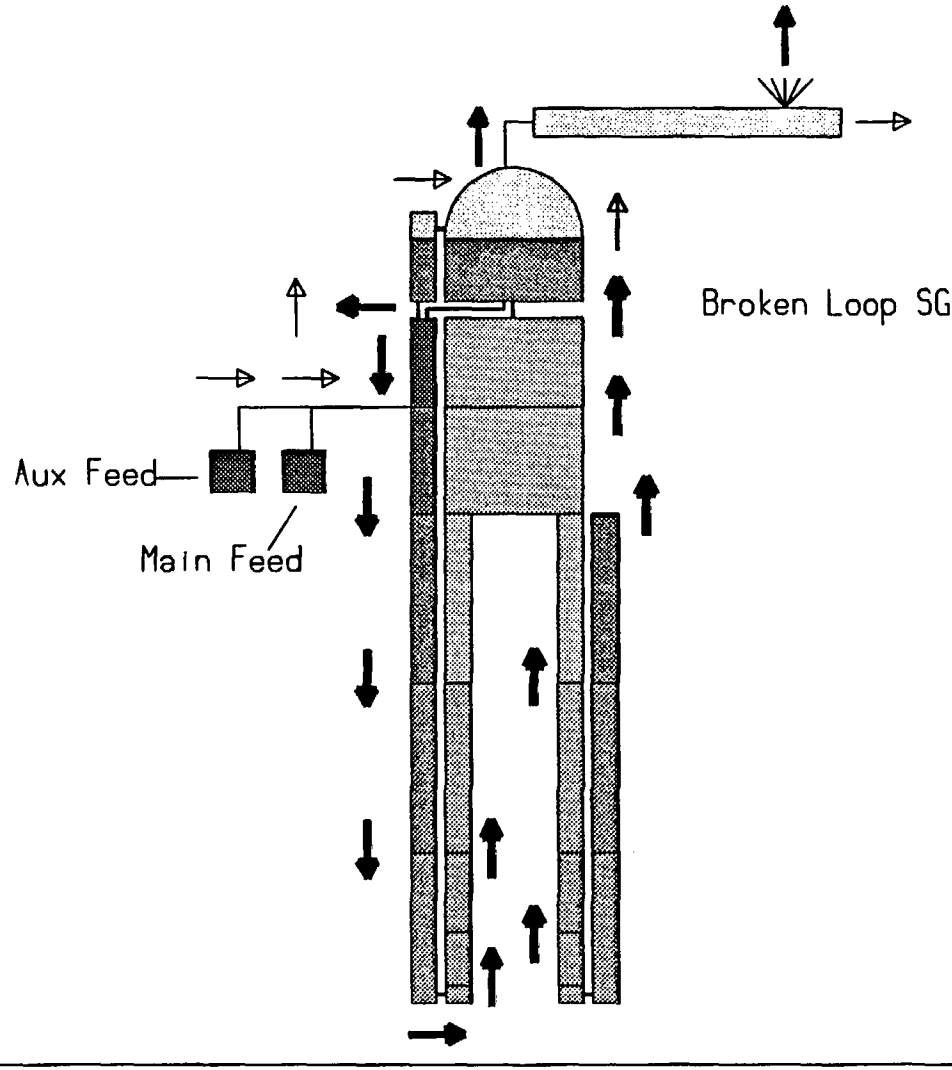

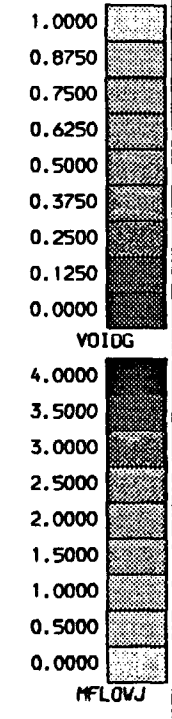

TIME : 60.000 LOBI BT-12 Large SLB RELAP5 Figure 47

SimVu
Winfrith

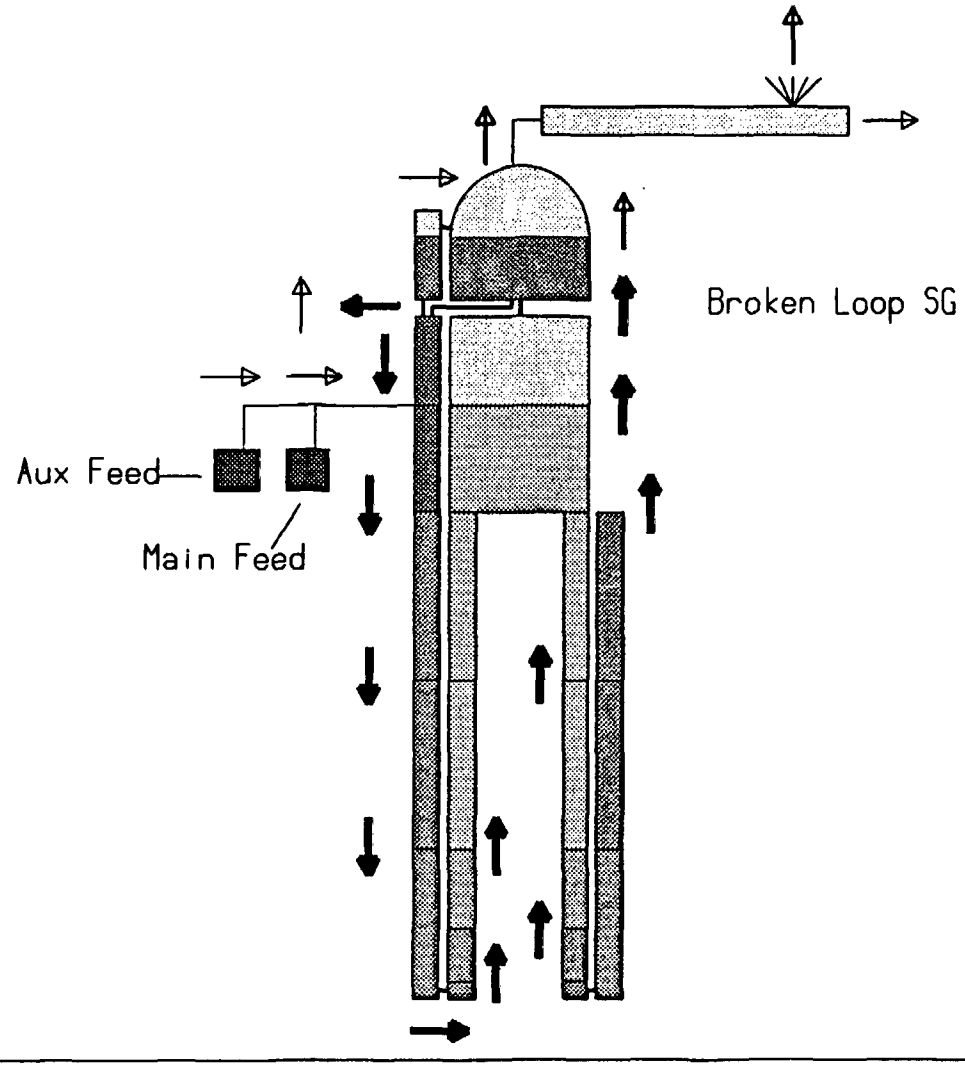

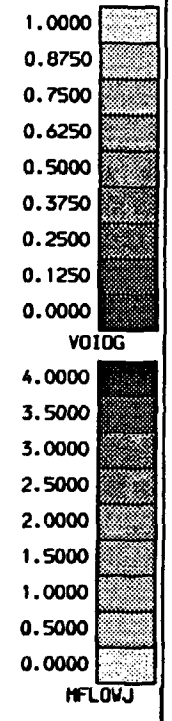

TIME : 80.000 LOBI BT-12 Large SLB RELAP5 Figure 48

SimVu
Winfrith

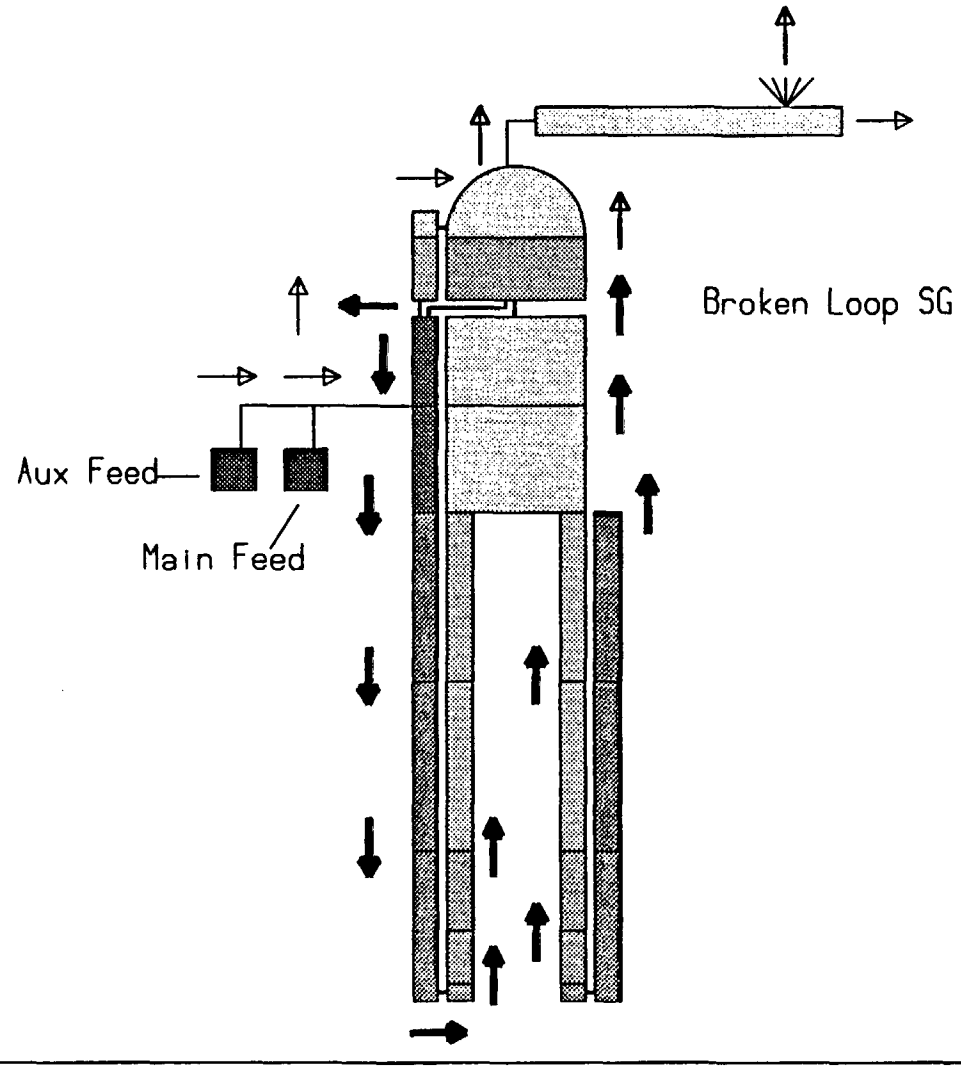

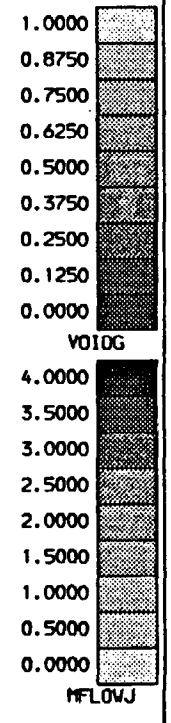

TIME : 130.000 LOBI BT-12 Large SLB RELAP5 Figure 49

SimVu
Winfrith

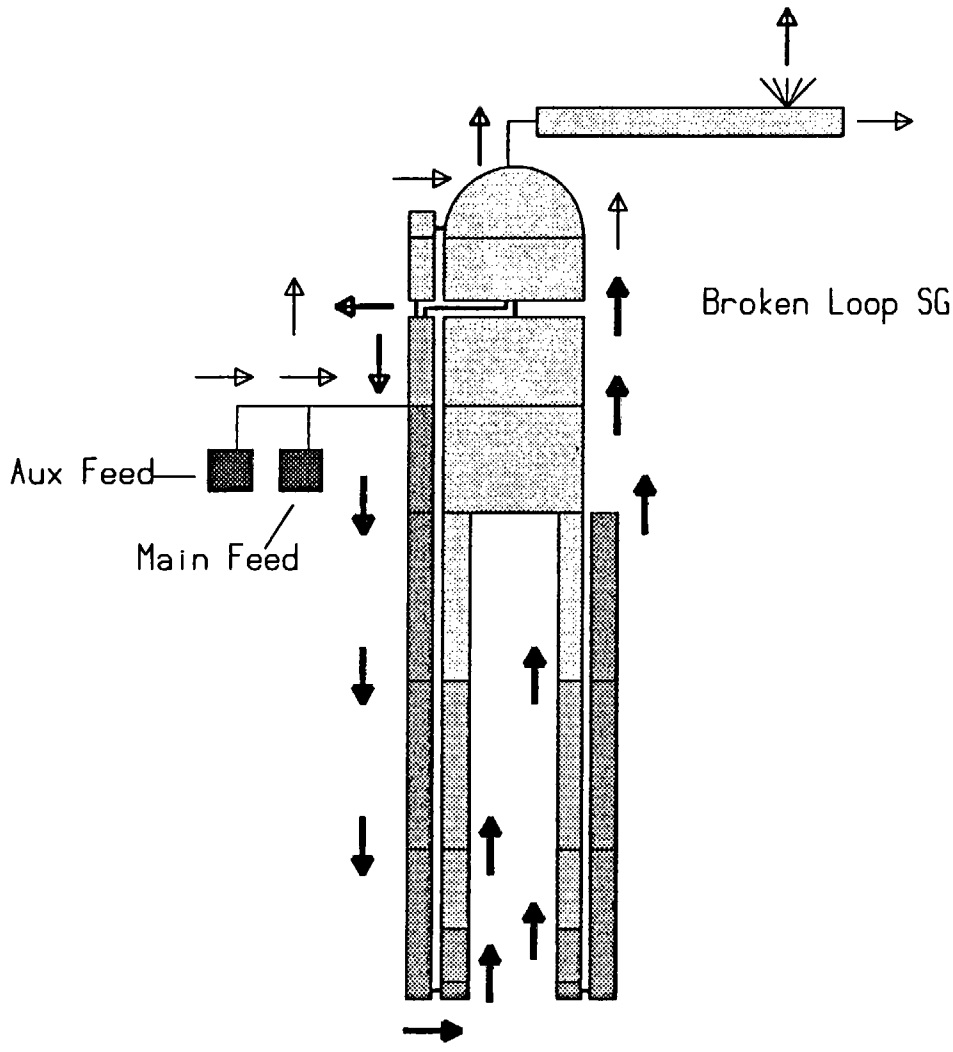

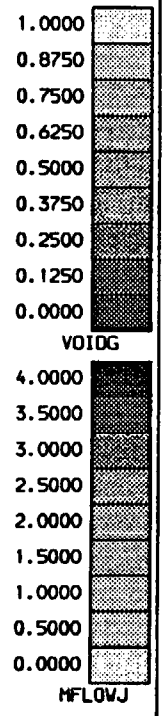

TIME : 160.000 LOBI BT-12 Large SLB RELAP5 Figure 50

SimVu
Winfrith

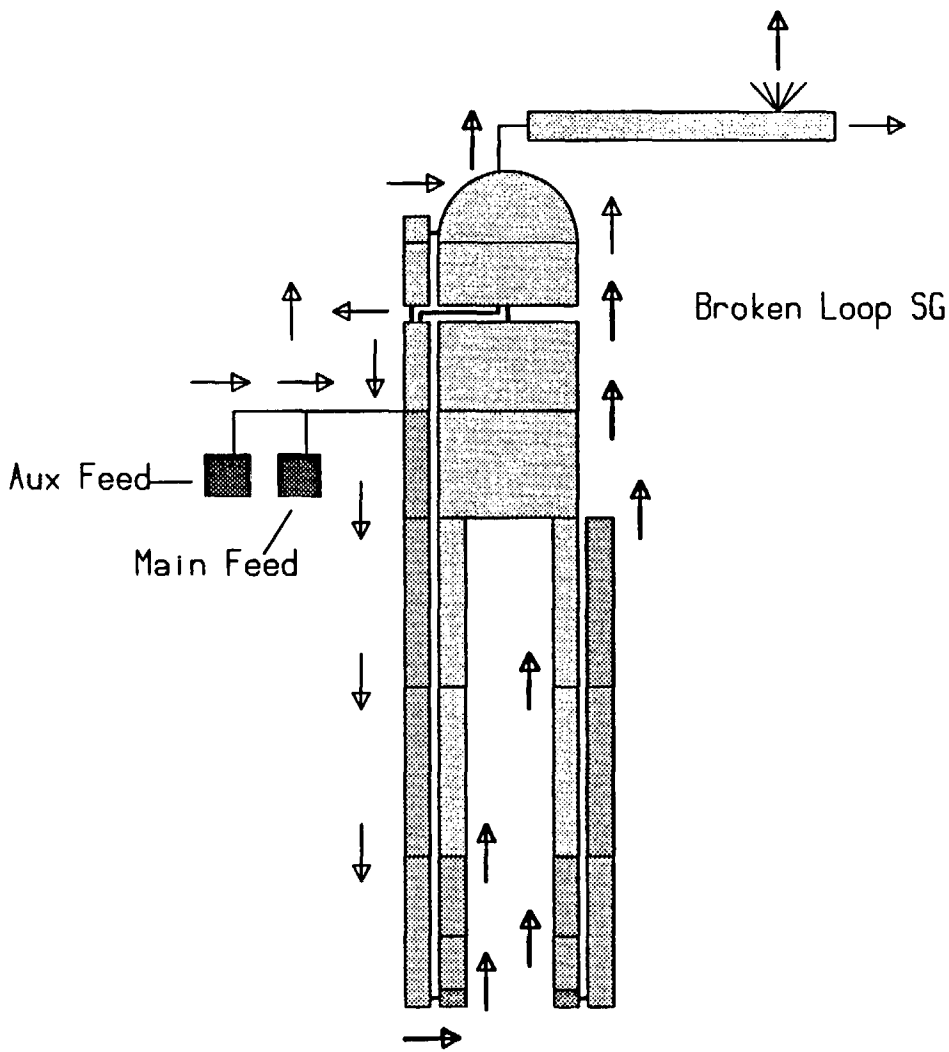

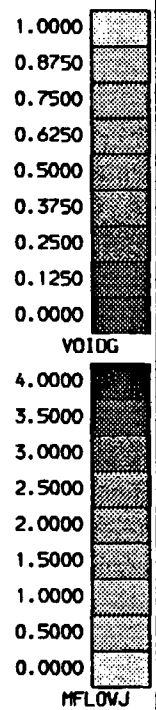

TIME : 200.000 LOBI BT-12 Large SLB RELAP5 Figure 51

SimVu
Winfrith

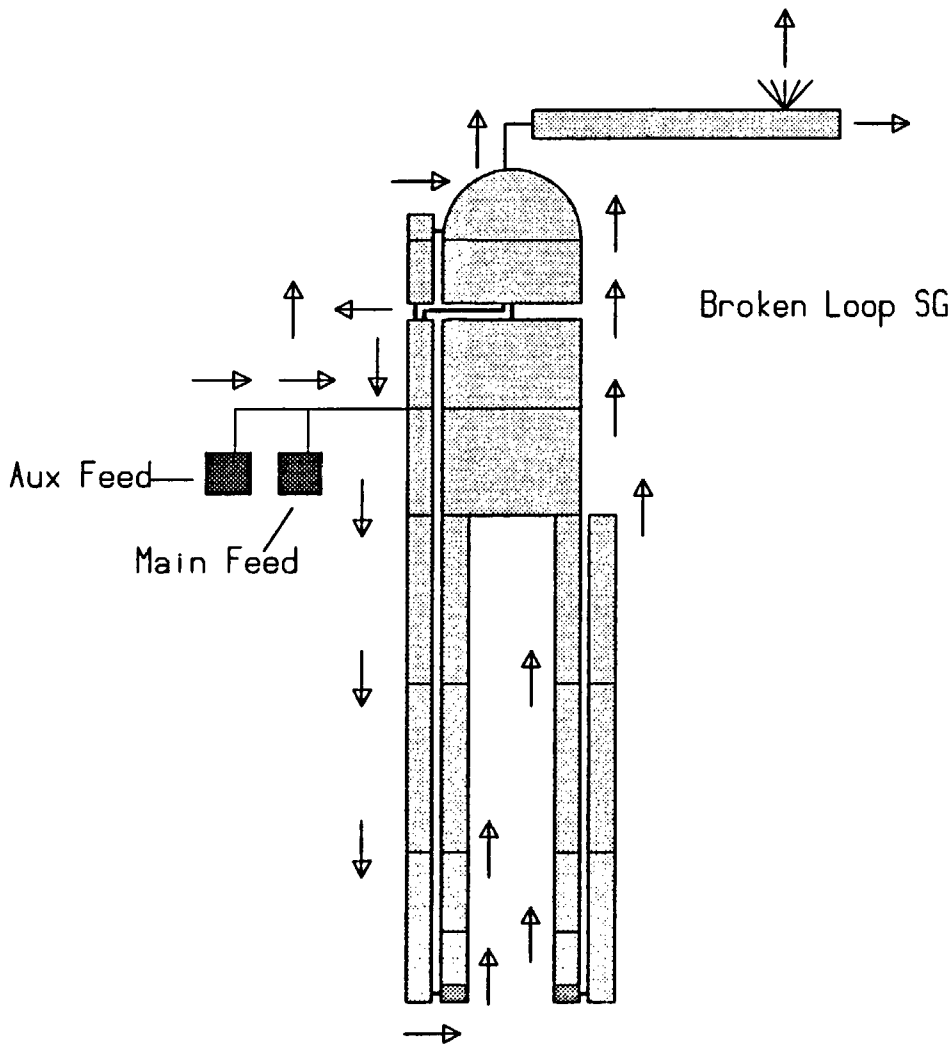

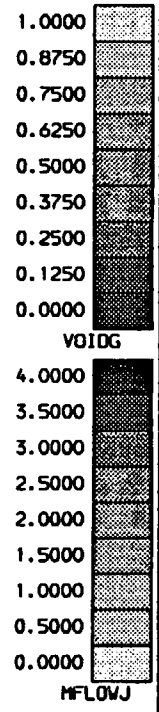

NRC FORM 335 (2-89) NRCM 1102, 3201, 3202

U.S. NUCLEAR REGULATORY COMMISSION

BIBLIOGRAPHIC DATA SHEET

(See instructions on the reverse)

1. REPORT NUMBER (Assigned by NRC, Add Vol., Supp., Rev., and Addendum Numbers, if any.)

NUREG/IA-0079
AEEW-R2645

2. TITLE AND SUBTITLE

Post-Test Analysis of LOBI Test BT-12 Using RELAP5/MOD2

3. DATE REPORT PUBLISHED

MONTH	YEAR
April	1992

4. FIN OR GRANT NUMBER

A4682

5. AUTHOR(S)

A.J. Smethurst

6. TYPE OF REPORT

Technical

7. PERIOD COVERED *(Inclusive Dates)*

8. PERFORMING ORGANIZATION – NAME AND ADDRESS *(If NRC, provide Division, Office or Region, U.S. Nuclear Regulatory Commission, and mailing address; if contractor, provide name and mailing address.)*

Winfrith
United Kingdom Atomic Energy Authority
Dorchester, Dorset
DT2 8DH, United Kingdom

9. SPONSORING ORGANIZATION – NAME AND ADDRESS *(If NRC, type "Same as above"; if contractor, provide NRC Division, Office or Region, U.S. Nuclear Regulatory Commission, and mailing address.)*

Office of Nuclear Regulatory Research
U.S. Nuclear Regulatory Commission
Washington, DC 20555

10. SUPPLEMENTARY NOTES

11. ABSTRACT *(200 words or less)*

This report describes calculations carried out with RELAP5/MOD2 on LOBI experiment BT-12, a large steam line break. The following sensitivity studies were performed: heat losses on the intact steam generator; discharge coefficient at break; water in steam lines; nearly implicit numerics. Qualitatively the general trends of BT-12 were predicted well, in particular the timing of events was fairly accurate.

12. KEY WORDS/DESCRIPTORS *(List words or phrases that will assist researchers in locating the report.)*

Post-Test
LOBI Test
BT-12
RELAP5/MOD2

13. AVAILABILITY STATEMENT

Unlimited

14. SECURITY CLASSIFICATION

(This Page)

Unclassified

(This Report)

Unclassified

15. NUMBER OF PAGES

16. PRICE

UNITED STATES
NUCLEAR REGULATORY COMMISSION
WASHINGTON, D.C. 20555

OFFICIAL BUSINESS
PENALTY FOR PRIVATE USE, $300

SPECIAL FOURTH-CLASS RATE
POSTAGE AND FEES PAID
USNRC
PERMIT NO. G-67

120555063572 4 1AN1CI
US NRC-RES
DIV OF SYSTEMS RESEARCH
BRANCH CHIEF
REACTOR & PLANT SYSTEMS BR
NL/N-353
WASHINGTON DC 20555