EQUIPMENT

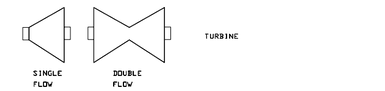

TURBINE

HORIZONTAL CENTRIFUGAL PUMP

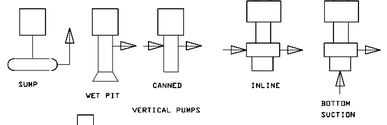

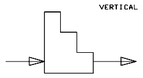
POSITIVE DISPLACEMENT PUMP

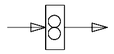
ROTARY GEAR PUMP

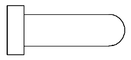
U-TUBE HEAT EXCHANGER

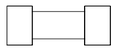
STRAIGHT TUBE HEAT EXCHANGER

PRESSURE VESSELS. VERTICAL (SHOWN) OR HORIZONTAL (TANKS, RECEIVERS, DRYERS SEPARATORS, ETC.)

CONE ROOF TANK

DIAPHRAGM TANK

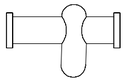
AFTERCOOLER

RECIPROCATING AIR COMPRESSOR (INSTR AND SERVICE)

MIXER

PRESSURIZED GAS BOTTLE

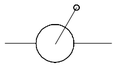
HAND PUMP

VACUUM PUMP OR COMPRESSOR

REBOILER

DOUBLE DIAPHRAGM SUMP PUMP

PROCESS PIPING

MAIN PROCESS FLOW

SECONDARY PROCESS FLOW

CONCENTRIC REDUCER INCREASER

ECCENTRIC REDUCER INCREASER

WELDED CAP

SCREWED CAP

HOSE CONNECTION

QUICK DISCONNECT

REMOVABLE SPOOL

FLEXIBLE CONNECTION

BLIND FLANGE

INSULATING FLANGES (IF) OR DIELECTRIC UNION (DU) (SHOWN)

BREATHER CAP

LOOP SEAL

DOWNWARD SLOPE (1' PER 8' SHOWN)

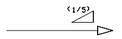

UPWARD SLOPE (1' PER 5' SHOWN)

ATMOSPHERIC VENT (STRAIGHT VENT IS REQ'D IN DRAINAGE SYSTEMS)

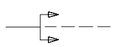
BURIED PIPE

HEAT TRACING
E- ELECTRICALLY TRACED (SHOWN)
S- STEAM TRACED

PIPING BY OTHER THAN BECHTEL

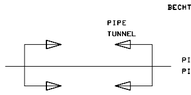

PIPING LOCATED WITHIN PIPE TUNNELS

HOSE CONNECTION WITH MALE THREADED DUST PLUG

LINE VALVES

GATE

GLOBE

Y-PATTERN GLOBE (WHERE ONLY Y-PATTERN IS ACCEPTABLE)

ANGLE

THREE-WAY (NOTE 17 M-020104)

FOUR-WAY (NOTE 17 M-020104)

NEEDLE

PLUG

DIAPHRAGM

PACKLESS GLOBE

BALL

BUTTERFLY

HOSE

PINCH

TANDEM BLOWDOWN

CHECK

FOOT

FLOW LIMITING (OR EXCESS FLOW) CHECK

BLEEDER TRIP

BACKFLOW PREVENTER

STOP CHECK

ANGLE STOP CHECK

OPERATOR
G = GEAR (SHOWN)
A = AIR WRENCH
CH = CHAIN
X = EXTENSION STEM
S = SPECIAL TYPE

VALVE IDENTIFICATION

VALVE SIZE AND MATERIAL ARE IDENTIFIED WITH THE PIPING

VALVE STATUS SYMBOLS

STEM LEAKOFF
RCDT-REACTOR COOLANT DRAIN TANK
CRW-CLEAN RADWASTE

OPEN DURING NORMAL OPERATION (ALL VALVES EXCEPT BUTTERFLY)

CLOSED DURING NORMAL OPERATION (ALL VALVES EXCEPT BUTTERFLY)

THROTTLED DURING NORMAL OPERATION (ALL VALVES EXCEPT BUTTERFLY)

OPEN DURING NORMAL OPERATION (BUTTERFLY ONLY)

CLOSED DURING NORMAL OPERATION (BUTTERFLY ONLY)

MISCELLANEOUS

SPECTACLE BLIND

CIRCULAR OR HAMER BLIND

SINGLE BASKET STRAINER

TWIN BASKET STRAINER

Y-TYPE STRAINER (SHOWN WITHOUT BLOWOFF VALVE)

TEMPORARY STARTUP STRAINER

SPACER RING (REPLACEMENT FOR START-UP STRAINER)

SCREEN TYPE STRAINER

FILTER

EXPANSION JOINT

FLAME ARRESTER

TRAP
ST=STEAM TRAP (SHOWN)
AT=AIR TRAP
DT=DRAIN TRAP

PIPE CLASS CHANGE

CONTAINMENT PENETRATION

AIR RELEASE VALVE

SEISMIC CATEGORY I AND QUALITY ASSURANCE REQUIREMENTS APPLY BETWEEN FLAGS

QUALITY ASSURANCE REQUIREMENTS APPLY BETWEEN FLAGS. USED ONLY IF SEISMIC CATEGORY I DOES NOT APPLY.

(NOT APPLICABLE FOR INSTRUMENT LINES)

FLEXIBLE HOSE

RETENTION SCREEN

MISCELLANEOUS (CONT.)

EJECTOR

EDUCTOR

EXHAUST HEAD

MANUAL HYDRO TEST DRAIN

MANUAL HYDRO TEST VENT

AUTOMATIC VENT

SPARGER (SHOWN WITH UPWARD FLOW)

WATER HAMMER ARRESTER

CROSS-REFERENCE

LINE BREAK OR RESUMPTION POINT.
* FOR BREAK POINT. ADD IDENTIFICATION OF EQUIPMENT TO WHICH THE LINE IS GOING.
** FOR RESUMPTION POINT. ADD IDENTIFICATION OF EQUIPMENT FROM WHICH THE LINE IS COMING

FURNISHED WITH EQUIPMENT

NSSS EQUIPMENT

CONTAINMENT PENETRATION IDENTIFICATION NUMBER
P ___ * LIQUID
V ___ * HVAC

IDENTIFICATION OF PIPING CONNECTION AT CONDENSER SEE M-02AD03/04 & 05 FOR CONNECTION LIST

BECHTEL-VENDOR INTERFACE

DESIGNATION FOR EQUIPMENT AND PIPING WHICH APPEAR ON OTHER P&ID'S OR WHEN INDICATED BY A NOTE FOR EQUIPMENT SUPPLIED BY OPERATIONS THAT MAY OR MAY NOT BE INSTALLED.

PIPING SPECIALTY IDENTIFICATION

SPRAY HEADER (OPEN HEAD)

SPRINKLER HEAD (CLOSED HEAD)

INSERVICE INSPECTION BOUNDRIES

U - VOLUMETRIC (ULTRASONIC)

PIPING IDENTIFICATION

LINE IDENTIFICATION NUMBER WILL BE AS FOLLOWS

PLANT UNIT NO — SYSTEM DESIGNATOR — SEQUENCE NO
2 - AD - 107

ADDITIONAL INFORMATION SUCH AS PIPE CLASS & SIZE WILL BE ADDED AS FOLLOWS:

2 - AD - 107 - EDB - 6"
PIPE CLASS — SIZE

GENERAL NOTES

1.- LINE NUMBERS AND SYSTEM DESIGNATORS WILL BE ASSIGNED IN ACCORDANCE WITH STANDARD ENGINEERING DEPARTMENT PROCEDURES LINE NUMBERS ABOVE 999 WILL BE INDICATED BY A LETTER FOLLOWED BY NUMERALS (E-G A02).

2.- UNIT NUMBER AND SYSTEM DESIGNATOR WILL APPEAR IN THE PAID TITLE BLOCK AND NOT BE REPEATED ON THE LINES

3.- PIPE AND VALVE CLASSES ARE DESIGNATED BY THREE LETTER CODE. THE FIRST LETTER INDICATES THE PRIMARY VALVE & FLANGE RATING. THE SECOND LETTER THE TYPE OF MATERIAL AND THE THIRD LETTER THE CODE TO WHICH THE PIPING IS DESIGNED. AS FOLLOWS:

FIRST LETTER - PRIMARY PRESSURE RATING (UNLESS OTHERWISE NOTED ALL RATINGS ARE IN ACCORDANCE WITH ANSI B16.5)

A - SPECIFIC PRESSURE & SPECIFIC TEMPERATURE
B - 2500 #
C - 1500 #
D - 900 #
E - 600 #
F - 400 #
G - 300 #
H - 150 #
J - 125 #ANSI B16.1
K - 175 #UL UNDERWRITERS LAB. INC.
L - 250 #ANSI B16.1
M - 200 #CB
N - 150 #ANSI B16.24
P - 100 #AWWA (OR MANUFACTURER'S RATING)
R - 75 #AWWA (OR MANUFACTURER'S RATING)
S - 50 #AWWA (OR MANUFACTURER'S RATING)
T - 25 #AWWA (OR MANUFACTURER'S RATING)
X - GRAVITY RATING
Y,Z -GENERAL USE AS DESIGNATED ON PIPING CLASS SHEETS.

SECOND LETTER - MATERIAL

A - ALLOY
B - CARBON STEEL
C - AUSTENITIC STAINLESS STEEL
D - COPPER, BRASS, OR BRONZE
E - ALUMINUM
F - CARBON STEEL, COPPER BEARING
G - CARBON STEEL, LINED
H - CAST IRON
J - CONCRETE PIPE
K - VITRIFIED CLAY PIPE
L - CARBON STEEL IMPACT TESTED
M - CAST IRON, HIGH SILICON
N - CARBON STEEL, GALVANIZED
P - CAST IRON, CEMENT-LINED
Q - ASBESTOS-CEMENT
R - DUCTILE IRON
S - 90-10 CU-NI
X,Y "SPECIAL MATERIAL SEE CLASS SHEET

THIRD LETTER - APPLICABLE CODES

A - NUCLEAR POWER PLANT COMPONENTS, ASME B & PV CODE, SEC III, CLASS 1
B - NUCLEAR POWER PLANT COMPONENTS, ASME B & PV CODE, SEC III, CLASS 2
C - NUCLEAR POWER PLANT COMPONENTS, ASME B & PV CODE, SEC III, CLASS 3
D - POWER PIPING CODE, ANSI B31.1
F - NATIONAL FIRE PROTECTION ASSOCIATION CODE
G - NATIONAL AND WISCONSIN ADMINISTRATIVE PLUMBING CODE.
H - POWER BOILERS, ASME B & PV CODE, SEC 1.
J - AWWA STANDARDS

4.- TUBING AND INSTRUMENT VALVE CLASSES ARE PROVIDED ON DRAWING J-07G10.

5.- DELETED

6.- DELETED

7.- DELETED

8.- FOR LOCKED VALVE STATUS SEE PROCEDURE AP21G-001 "CONTROL OF LOCKED COMPONENT STATUS".

12

USAR FIG. 1.1-1-02

ESSENTIAL DRAWING

(R) REVISED	INCORPORATES CHG. NOC.	CHANGE PKG. NO.	87321
○ ISSUED			
THIS DWG. SUPERSEDES	REV.	THIS DWG. SUPERSEDED	REV.
REVISION NOTES:	AS BUILT		

W CREEK NUCLEAR OPERATING CORPORATION — ELECTRONIC APPROVAL

SYMBOLS AND LEGEND FOR SYSTEM FLOW AND PIPING & INSTRUMENTATION DIAGRAMS

SCALE	DRAWING NUMBER	SHEET	REV
NONE	LR-WCGS-M-120102		04

24X36 E SIZE

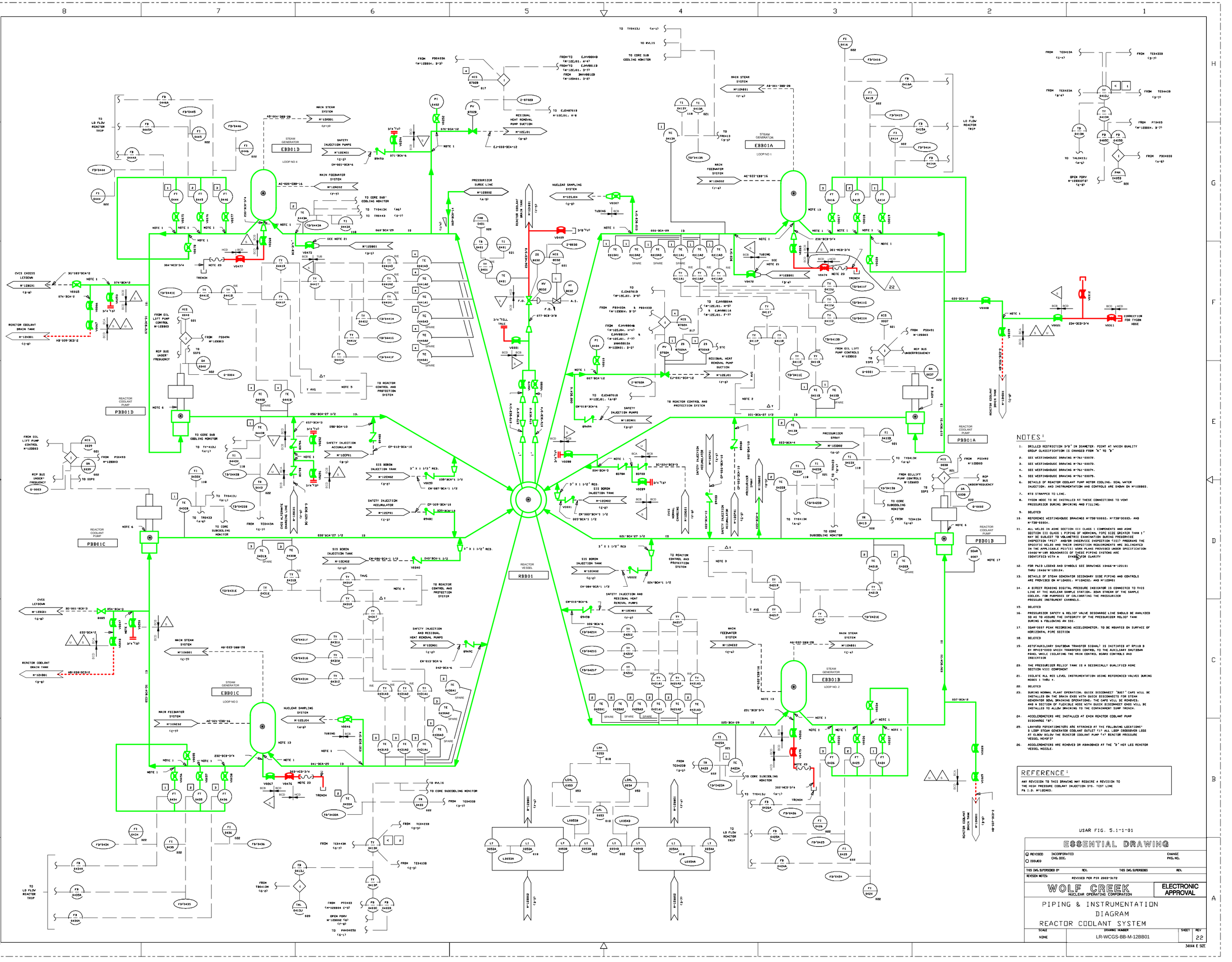
REACTOR COOLANT PUMP PBB01D
REACTOR COOLANT PUMP PBB01C
REACTOR COOLANT PUMP PBB01A
REACTOR COOLANT PUMP PBB01B
REACTOR VESSEL RBB01
STEAM GENERATOR EBB01D
STEAM GENERATOR EBB01A
STEAM GENERATOR EBB01C
STEAM GENERATOR EBB01B
RESIDUAL HEAT REMOVAL PUMP SUCTION
SAFETY INJECTION ACCUMULATOR
SIS BORON INJECTION TANK
PRESSURIZER SURGE LINE
PRESSURIZER SPRAY
REACTOR COOLANT DRAIN TANK
TO LD FLOW REACTOR TRIP
TO CORE SUBCOOLING MONITOR
TO REACTOR CONTROL AND PROTECTION SYSTEM
SAFETY INJECTION AND RESIDUAL HEAT REMOVAL PUMPS
MAIN FEEDWATER SYSTEM
MAIN STEAM SYSTEM
NUCLEAR SAMPLING SYSTEM
CVCS LETDOWN
CVCS EXCESS LETDOWN
RCP BUS UNDERFREQUENCY
TO SSPS
FROM OIL LIFT PUMP CONTROL
TRENCH
NOTES:
1. DRILLED RESTRICTION 3/8" IN DIAMETER. POINT AT WHICH QUALITY GROUP CLASSIFICATION IS CHANGED FROM "A" TO "B".
2. SEE WESTINGHOUSE DRAWING M-761-00072.
3. SEE WESTINGHOUSE DRAWING M-761-00073.
4. SEE WESTINGHOUSE DRAWING M-761-00074.
5. SEE WESTINGHOUSE DRAWING M-761-00075.
6. DETAILS OF REACTOR COOLANT PUMP MOTOR COOLING, SEAL WATER INJECTION, AND INSTRUMENTATION AND CONTROLS ARE SHOWN ON M-12BB03.
7. RTD STRAPPED TO LINE.
8. TYGON HOSE TO BE INSTALLED AT THESE CONNECTIONS TO VENT PRESSURIZER DURING DRAINING AND FILLING.
9. DELETED
10. REFERENCE WESTINGHOUSE DRAWINGS M-730-00002, M-730-00003, AND M-730-00004.
11. ALL WELDS IN ASME SECTION III CLASS 1 COMPONENTS AND ASME SECTION III CLASS 1 PIPING OF NOMINAL PIPE SIZE GREATER THAN 1" MAY BE SUBJECT TO VOLUMETRIC EXAMINATION DURING PRESERVICE INSPECTION (PSI) AND/OR INSERVICE INSPECTION (ISI) PROGRAMS THE SPECIFIC WELDS AND THEIR INSPECTION REQUIREMENTS ARE DELINEATED IN THE APPLICABLE PSI/ISI WORK PLANS PROVIDED UNDER SPECIFICATION 10466-M-100 BOUNDARIES OF THESE PIPING SYSTEMS ARE IDENTIFIED WITH A SYMBOL FOR CLARITY.
12. FOR P&ID LEGEND AND SYMBOLS SEE DRAWINGS 10466-M-120101 THRU 10466-M-120104.
13. DETAILS OF STEAM GENERATOR SECONDARY SIDE PIPING AND CONTROLS ARE PROVIDED ON M-12AB01, M-12AC02, AND M-12BH01
14. A DIRECT READING DIGITAL PRESSURE INDICATOR IS CONNECTED TO THIS LINE AT THE NUCLEAR SAMPLE STATION. DOWN STREAM OF THE SAMPLE COOLER. FOR PURPOSES OF CALIBRATING THE PRESSURIZER PRESSURE INSTRUMENT CHANNELS.
15. DELETED
16. PRESSURIZER SAFETY & RELIEF VALVE DISCHARGE LINE SHOULD BE ANALYZED SO AS TO ASSURE THE INTEGRITY OF THE PRESSURIZER RELIEF TANK DURING A FOLLOWING AN SIE.
17. SGAR-0007 PEAK RECORDING ACCELEROMETER. TO BE MOUNTED ON SURFACE OF HORIZONTAL PIPE SECTION
18. DELETED
19. AST&FAUXILIARY SHUTDOWN TRANSFER SIGNAL) IS INITIATED AT RP11D B BY RPHIE-0003 WHICH TRANSFERS CONTROL TO THE AUXILIARY SHUTDOWN PANEL WHILE ISOLATING THE MAIN CONTROL BOARD CONTROLS AND INDICATION
20. THE PRESSURIZER RELIEF TANK IS A SEISMICALLY QUALIFIED ASME SECTION VIII COMPONENT
21. ISOLATE ALL RCS LEVEL INSTRUMENTATION USING REFERENCED VALVES DURING MODES 1 THRU 4.
22. DELETED
23. DURING NORMAL PLANT OPERATION, QUICK DISCONNECT "DUST" CAPS WILL BE INSTALLED ON THE DRAIN ENDS WITH QUICK DISCONNECTS FOR STEAM GENERATOR BOWL DRAINING OPERATIONS. THE CAPS WILL BE REMOVED, AND A SECTION OF FLEXIBLE HOSE WITH QUICK DISCONNECT ENDS WILL BE INSTALLED TO ALLOW DRAINING TO THE CONTAINMENT SUMP TRENCH.
24. ACCELEROMETERS ARE INSTALLED AT EACH REACTOR COOLANT PUMP DISCHARGE (B).
25. LANYARD POTENTIOMETERS ARE ATTACHED AT THE FOLLOWING LOCATIONS: B LOOP STEAM GENERATOR COOLANT OUTLET (1) ALL LOOP CROSSOVER LEGS AT ELBOW BELOW THE REACTOR COOLANT PUMP (+) REACTOR PRESSURE VESSEL HEAD(S)
26. ACCELEROMETERS ARE REMOVED OR ABANDONED AT THE "B" HOT LEG REACTOR VESSEL NOZZLE.
REFERENCE:
ANY REVISION TO THIS DRAWING MAY REQUIRE A REVISION TO THE HIGH PRESSURE COOLANT INJECTION SYS. TEST LINE PB I.D. M-12EM03.
USAR FIG. 5.1-1-01
ESSENTIAL DRAWING
REVISED
ISSUED
INCORPORATED CHG. DOC.
CHANGE PKG. NO.
THIS DWG. SUPERSEDED BY
REV.
THIS DWG. SUPERSEDES
REV.
REVISION NOTES:
REVISED PER P1R 2003-3172
WOLF CREEK NUCLEAR OPERATING CORPORATION
ELECTRONIC APPROVAL
PIPING & INSTRUMENTATION DIAGRAM
REACTOR COOLANT SYSTEM
SCALE: NONE
DRAWING NUMBER: LR-WCGS-BB-M-12BB01
SHEET
REV: 22
34X44 E SIZE

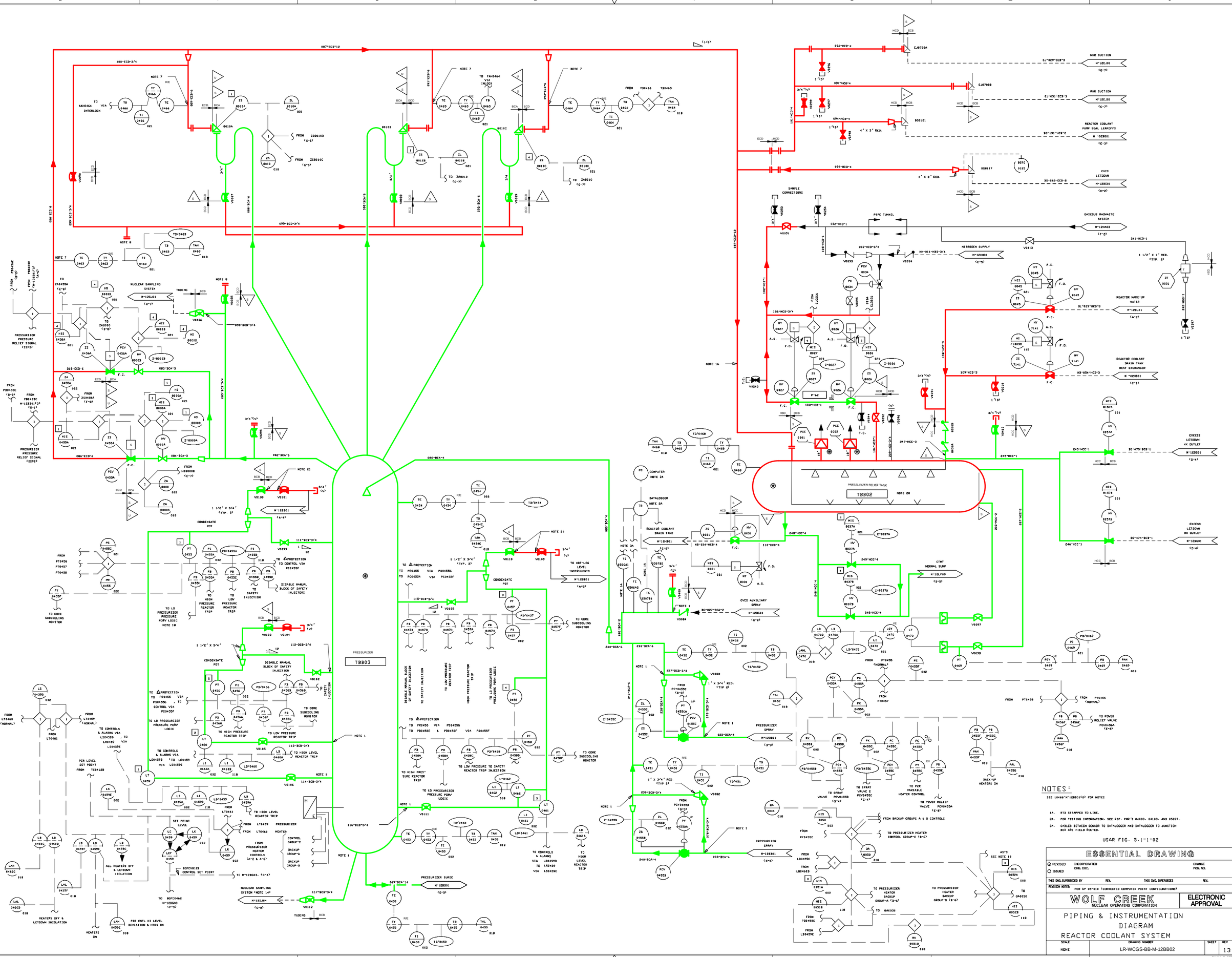
PRESSURIZER
TBB03
PRESSURIZER RELIEF TANK
TBB02
NOTES:
SEE 10466-M-12BB01(Q) FOR NOTES
1A. RTD STRAPPED TO LINE.
2A. FOR TESTING INFORMATION, SEE REF. PMC'S 04603, 04103, AND 05397.
3A. CABLES BETWEEN SENSOR TO DATALOGGER AND DATALOGGER TO JUNCTION BOX ARE FIELD ROUTED.
USAR FIG. 5.1-1-02
ESSENTIAL DRAWING
REVISED
ISSUED
INCORPORATED
CHG. DOC.
CHANGE PKG. NO.
THIS DWG. SUPERSEDED BY
REV.
THIS DWG. SUPERSEDES
REVISION NOTES:
PER AP 05-016 (CORRECTED COMPUTER POINT CONFIGURATIONS)
WOLF CREEK
NUCLEAR OPERATING CORPORATION
ELECTRONIC APPROVAL
PIPING & INSTRUMENTATION DIAGRAM
REACTOR COOLANT SYSTEM
SCALE
NONE
DRAWING NUMBER
LR-WCGS-BB-M-12BB02
SHEET
REV
13
34X44 E SIZE

INSTRUMENTATION CROSS REFERENCE

RC PUMP	PBB01A	PBB01B	PBB01C	PBB01D
THERMAL BARRIER COOLING	PI 0001	PI 0002	PI 0003	PI 0004
	PI 0005	PI 0006	PI 0007	PI 0008
	TE 0009	TE 0010	TE 0011	TE 0012
	TI 0009			
	HS 0009			
	TI 0009			
	FT 0017	FT 0018	FT 0019	FT 0020
	HIS 0013	HIS 0014	HIS 0015	HIS 0016
	HV 0013	HV 0014	HV 0015	HV 0016
	Z-0013	Z-0014	Z-0015	Z-0016
	FE 0017	FE 0018	FE 0019	FE 0020
	FS 0017	FS 0018	FS 0019	FS 0020
	FAHL 0017	FAHL 0018	FAHL 0019	FAHL 0020
	FI 0017	FI 0018	FI 0019	FI 0020
MOTOR COOLING	FE 0025	FE 0026	FE 0027	FE 0028
	FT 0025	FT 0026	FT 0027	FT 0028
	FSHL 0025	FSHL 0026	FSHL 0027	FSHL 0028
	FE 0029	FE 0030	FE 0031	FE 0032
	FT 0029	FT 0030	FT 0031	FT 0032
	FSHL 0029	FSHL 0030	FSHL 0031	FSHL 0032
	FE 0033	FE 0034	FE 0035	FE 0036
	FT 0033	FT 0034	FT 0035	FT 0036
	FSHL 0033	FSHL 0034	FSHL 0035	FSHL 0036
	FI 0033	FI 0034	FI 0035	FI 0036
	FAHL 0025			
REACTOR COOLANT PUMP CONTROL SWITCH	HIS 0037	HIS 0038	HIS 0039	HIS 0040
OIL LIFT PUMP CONTROL SWITCH	HIS 0041	HIS 0042	HIS 0043	HIS 0044
NO. 1 SEAL DELTA P	PT 0151	PT 0152	PT 0151	PT 0150
	PI 0153A	PI 0152A	PI 0151A	PI 0150A
	PB 0153	PB 0152	PB 0151	PB 0150
	PAL 0153			
	PDY 0153	PDY 0152	PDY 0151	PDY 0150
	PD 0153	PD 0152	PD 0151	PD 0150
PUMP INLET NO. 1 SEAL TEMPERATURE	T-0172	T-0170	T-0168	T-0166
	TE 0172	TE 0170	TE 0168	TE 0166
PUMP INLET NO. 1 SEAL TEMPERATURE	TE 0173	T-0171	T-0169	T-0167
	TE 0173	TE 0171	TE 0169	TE 0167
	HIS 0181	HIS 0180	HIS 0179	HIS 0178
RCP STAND-PIPE LEVEL	LS 0181	LS 0180	LS 0179	LS 0178
	LAH 0181	LAH 0180	LAH 0179	LAH 0178
	LAL 0181	LAL 0180	LAL 0179	LAL 0178
REACTOR MAKE-UP WATER SUPPLY	Z-0181	Z-0180	Z-0179	Z-0178
	LCV 0181	LCV 0180	LCV 0179	LCV 0178
	ZS 0181	ZS 0180	ZS 0179	ZS 0178
	LY 0181	LY 0180	LY 0179	LY 0178
NO. 2 SEAL LEAKOFF	FE 0194	FE 0193	FE 0192	FE 0191
	FIS 0194	FIS 0193	FIS 0192	FIS 0191
	FAH 0194			
UPPER OIL RESERVOIR LEVEL	LT 0495A	LT 0495B	LT 0495C	LT 0495D
	LI 0495A	LI 0495B	LI 0495C	LI 0495D
	LSHL 0495A	LSHL 0495B	LSHL 0495C	LSHL 0495D
LOWER OIL RESERVOIR	LS 0475B	LS 0476B	LS 0477B	LS 0478B
	LAHL 0475B			
THRUST BEARING UPPER SHOE	TE 0479A	TE 0480A	TE 0481A	TE 0482A
	T-0479A	T-0480A	T-0481A	T-0482A
THRUST BEARING LOWER SHOE	TE 0479B	TE 0480B	TE 0481B	TE 0482B
	T-0479B	T-0480B	T-0481B	T-0482B
UPPER RADIAL BEARING	TE 0483A	TE 0484A	TE 0485A	TE 0486A
	T-0483A	T-0484A	T-0485A	T-0486A
LOWER RADIAL BEARING	TE 0483B	TE 0484B	TE 0485B	TE 0486B
	T-0483B	T-0484B	T-0485B	T-0486B
STATOR WINDING	TE 0487	TE 0488	TE 0489	TE 0490
	T-0487	T-0488	T-0489	T-0490
	TR 0500			
OIL LIFT PUMP PRESSURE SWITCH	PS 0491	PS 0492	PS 0493	PS 0494
NO. 1 SEAL LEAKOFF	HIS 0141A	HIS 0141B	HIS 0141C	HIS 0141D
	HV 0141A	HV 0141B	HV 0141C	HV 0141D
	ZSH 0141A	ZSH 0141B	ZSH 0141C	ZSH 0141D
	Z-0141A	Z-0141B	Z-0141C	Z-0141D
	HY 0141A	HY 0141B	HY 0141C	HY 0141D
SEAL COOLING WATER INLET	HIS 0351A	HIS 0351B	HIS 0351C	HIS 0351D
	HV 0351A	HV 0351B	HV 0351C	HV 0351D
	Z-0351A	Z-0351B	Z-0351C	Z-0351D
VIBRATION MONITOR	YE 0471A	YE 0472A	YE 0473A	YE 0474A
	YE 0471B	YE 0472B	YE 0473B	YE 0474B
	YE 0471C	YE 0472C	YE 0473C	YE 0474C
	YE 0471D	YE 0472D	YE 0473D	YE 0474D
	YE 0471E	YE 0472E	YE 0473E	YE 0474E
	YT 0471A	YT 0472A	YT 0473A	YT 0474A
	YT 0471B	YT 0472B	YT 0473B	YT 0474B
	YT 0471C	YT 0472C	YT 0473C	YT 0474C
	YT 0471D	YT 0472D	YT 0473D	YT 0474D
	YT 0471E	YT 0472E	YT 0473E	YT 0474E
	YTIS 0471	YTIS 0472	YTIS 0473	YTIS 0474
	YTIS 0471A	YTIS 0472A	YTIS 0474A	YTIS 0474A
	YAH 0471			
	YAHH 0471			
UPPER BEARING OIL COOLER ENCLOSURE LEAK DETECTOR	LS 0496A	LS 0496B	LS 0496C	LS 0496D
	LA 0496			

LINE NUMBER CROSS REFERENCE

PBB01A	PBB01B	PBB01C	PBB01D
EG-120-HBC-4	EG-133-HBC-4	EG-150-HBC-4	EG-162-HBC-4
EG-121-HBC-1	EG-134-HBC-1	EG-151-HBC-1	EG-163-HBC-1
EG-123-HBC-3	EG-136-HBC-3	EG-153-HBC-3	EG-164-HBC-3
EG-301-CBC-3	EG-298-CBC-3	EG-247-CBC-3	EG-300-CBC-3
HB-001-HCD-1	HB-002-HCD-1	HB-003-HCD-1	HB-004-HCD-1
BG-164-BCB-2	BG-168-BCB-2	BG-171-BCB-2	BG-173-BCB-2
BG-167-BCB-3/4	BG-169-BCB-3/4	BG-172-BCB-3/4	BG-174-BCB-3/4
LF-890-HCD-1	LF-892-HCD-1	LF-893-HCD-1	LF-891-HCD-1
LF-894-HCD-1	LF-828-HCD-1	LF-811-HCD-1	LF-812-HCD-1
118-HBC-4	144-HBC-4	165-HBC-4	186-HBC-4
119-HBC-4	145-HBC-4	166-HBC-4	187-HBC-4
120-HBC-4	146-HBC-4	167-HBC-4	188-HBC-4
121-HBC-4	147-HBC-4	168-HBC-4	189-HBC-4
122-HBC-4	148-HBC-4	169-HBC-4	190-HBC-4
123-HBC-4	149-HBC-4	170-HBC-4	191-HBC-4
124-HBC-1	150-HBC-1	171-HBC-1	192-HBC-1
125-HBC-1	151-HBC-1	172-HBC-1	193-HBC-1
126-HCD-3/4	152-HCD-3/4	173-HCD-3/4	194-HCD-3/4
127-HCD-3/4	153-HCD-3/4	174-HCD-3/4	195-HCD-3/4
128-HCD-3/4	154-HCD-3/4	175-HCD-3/4	196-HCD-3/4
129-HCD-1	155-HCD-1	176-HCD-1	197-HCD-1
130-BCB-2	156-BCB-2	177-BCB-2	198-BCB-2
131-BCB-2	157-BCB-2	178-BCB-2	199-BCB-2
132-BCA-2	158-BCA-2	179-BCA-2	200-BCA-2
133-CBC-3	159-CBC-3	180-CBC-3	201-CBC-3
133-CBC-1 1/2	159-CBC-1 1/2	180-CBC-1 1/2	201-CBC-1 1/2
134-BCB-3/4	160-BCB-3/4	181-BCB-3/4	202-BCB-3/4
138-CBC-3	164-CBC-3	185-CBC-3	206-CBC-3
140-HBC-6	141-HBC-6	142-HBC-6	143-HBC-6
217-CBC-3/4	219-CBC-3/4	221-CBC-3/4	223-CBC-3/4
001-BCA-27 1/2	021-BCA-27 1/2	038-BCA-27 1/2	056-BCA-27 1/2
019-BCA-31	036-BCA-31	053-BCA-31	072-BCA-31

VALVE NUMBER CROSS REFERENCE

PBB01A	PBB01B	PBB01C	PBB01D
V0113	V0143	V0173	V0203
V0114	V0144	V0174	V0204
V0115	V0145	V0175	V0205
V0116	V0146	V0176	V0206
V0117	V0147	V0177	V0207
V0118	V0148	V0178	V0208
V0119	V0149	V0179	V0209
V0120	V0150	V0180	V0210
V0121	V0151	V0181	V0211
V0124	V0154	V0184	V0214
V0127	V0157	V0187	V0217
V0128	V0158	V0188	V0218
V0129	V0159	V0189	V0219
V0130	—	V0190	V0220
V0131	V0161	V0191	V0221
V0132	V0162	V0192	V0222
V0133	V0163	V0193	V0223
V0134	V0164	V0194	V0224
V0135	V0165	V0195	V0225
V0136	V0166	V0196	V0226
—	V0478	—	—
V0318	—	V0338	—
V0140	V0170	V0200	V0230
V0141	V0171	V0201	V0231
V0142	V0172	V0202	V0232
—	V0495	—	—
V0235	V0237	V0239	V0241
V0236	V0238	V0240	V0242
V0245	V0246	V0247	V0248
V0486	—	—	—
V0250	V0255	V0257	V0259
V0251	V0256	V0258	V0260
HV0013	HV0014	HV0015	HV0016
HV8141A	HV8141B	HV8141C	HV8141D
HV8351A	HV8351B	HV8351C	HV8351D
LCV0181	LCV0180	LCV0179	LCV0178
V0261	V0262	V0263	V0264
V0270	V0271	V0272	V0273
V0274	V0275	V0276	V0277
V0278	V0279	V0280	V0281
V0282	V0283	V0284	V0285
—	V0317	—	—
—	V0333	—	V0344
V0319	V0320	V0339	—
—	—	—	V0345
V0321	—	V0340	V0346
V0322	V0335	V0341	V0347
V0323	V0336	V0342	V0348
V0324	V0337	V0343	V0349
—	—	—	V0325
V0407	V0326	V0368	V0365
V0327	—	—	—
V0408	—	—	V0328
V0329	—	—	V0366
—	V0330	—	—
—	V0331	—	—
—	—	V0332	—
V0352	V0354	V0356	V0358
V0353	V0355	V0357	V0359
—	V0350	V0361	V0364
—	V0362	V0363	—
—	V0334	—	—
—	V0398	—	V0368
—	—	—	V0369
V0370	V0371	—	—
V0374	—	—	—
V0375	V0376	V0377	V0378
V0379	V0380	V0381	V0382
—	V0383	V0384	—
—	—	V0385	—
V0386	V0387	V0388	V0389

PBB01A	PBB01B	PBB01C	PBB01D
V0390	V0391	—	V0392
V0393	V0394	V0395	V0399
—	—	—	V0396
V0443	V0445	V0447	V0449
V0444	V0446	V0448	V0450
V0451	V0452	V0453	V0454

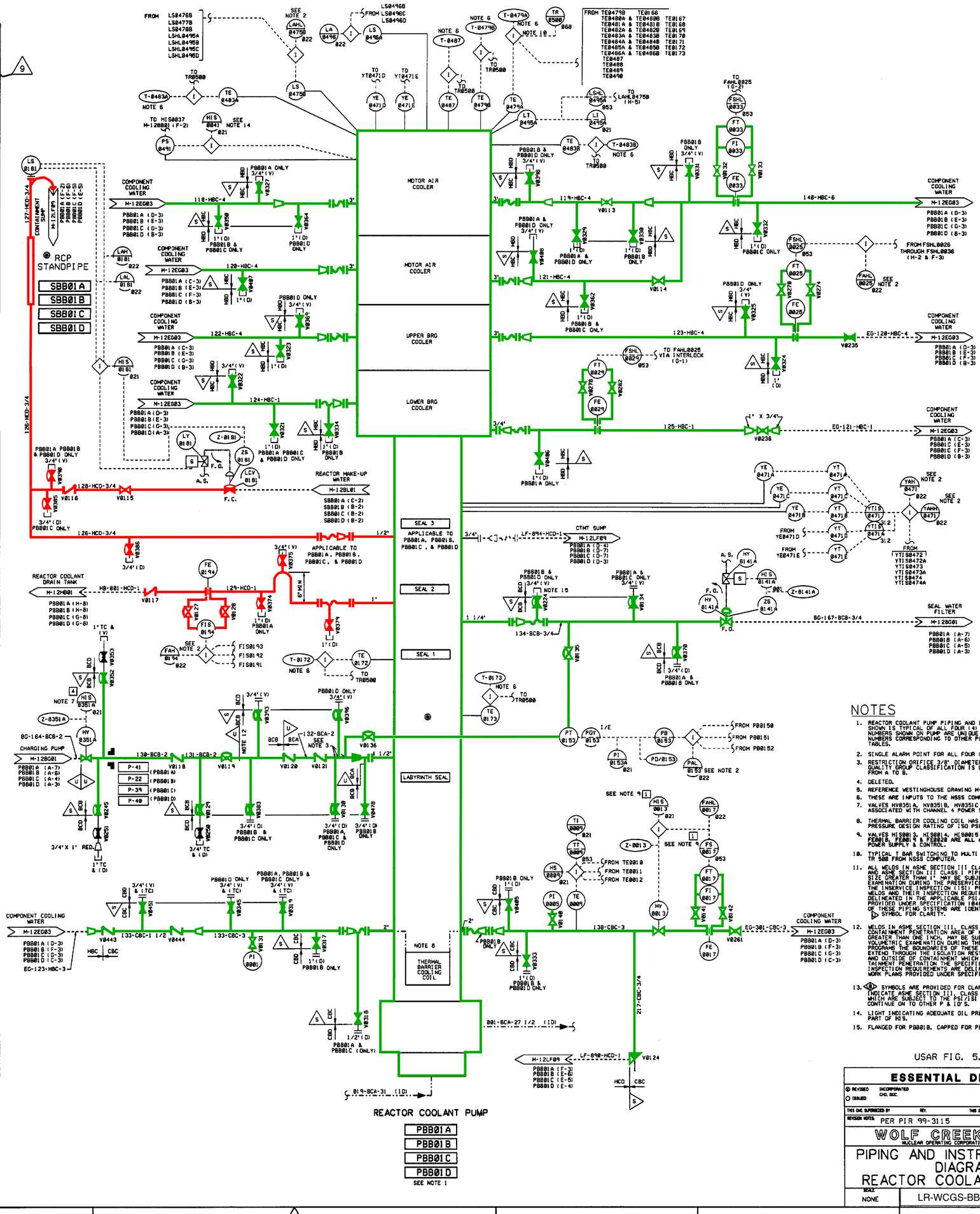

NOTES

1. REACTOR COOLANT PUMP PIPING AND INSTRUMENTATION SHOWN IS TYPICAL OF ALL FOUR (4) LOOPS TAG NUMBERS SHOWN ON PUMP ARE UNIQUE TO PUMP '4' TAG NUMBERS CORRESPONDING TO OTHER PUMPS ARE GIVEN IN TABLES.
2. SINGLE ALARM POINT FOR ALL FOUR (4) PUMPS.
3. RESTRICTION ORIFICE 3/8" DIAMETER POINT AT WHICH QUALITY GROUP CLASSIFICATION IS CHANGED FROM A TO B.
4. DELETED.
5. REFERENCE WESTINGHOUSE DRAWING M-738-88005.
6. THESE ARE INPUTS TO THE NSSS COMPUTER.
7. VALVES HV8351A, HV8351B, HV8351C & HV8351D ARE ALL ASSOCIATED WITH CHANNEL 4 POWER SUPPLY.
8. THERMAL BARRIER COOLING COIL HAS INTERNAL PRESSURE DESIGN RATING OF 150 PSIA.
9. VALVES HIS 0013, HIS 0014, HIS 0015 & HIS 0016 AND FE 0017, FE 0018, FE 0019 & FE 0020 ARE ALL ASSOCIATED WITH CHANNEL 1 POWER SUPPLY & CONTROL.
10. TYPICAL T BAR SWITCHING TO MULTI POINT RECORDER TR 500 FROM NSSS COMPUTER.
11. ALL WELDS IN ASME SECTION III CLASS 1 COMPONENTS AND ASME SECTION III CLASS 1 PIPING OF NOMINAL PIPE SIZE GREATER THAN 1" MAY BE SUBJECT TO VOLUMETRIC EXAMINATION DURING THE PRESERVICE INSPECTION (PSI) AND/OR THE INSERVICE INSPECTION (ISI) PROGRAMS THE SPECIFIC WELDS AND THEIR INSPECTION REQUIREMENTS ARE DELINEATED IN THE APPLICABLE PSI/ISI WORK PLANS PROVIDED UNDER SPECIFICATION 10466-M-184 BOUNDARIES OF THESE PIPING SYSTEMS ARE IDENTIFIED WITH A ▷ SYMBOL FOR CLARITY.
12. WELDS IN ASME SECTION III, CLASS 2 HIGH ENERGY PIPING CONTAINMENT PENETRATION AREA OF NOMINAL PIPE SIZE GREATER THAN ONE INCH, MAY BE SUBJECT TO VOLUMETRIC EXAMENATION DURING THE PSI AND/OR ISI PROGRAMS THE BOUNDARIES OF THESE PIPING SYSTEMS EXTEND THROUGH THE ISOLATION RESTRAINT SYSTEM INSIDE AND OUTSIDE OF CONTAINMENT WHICH PROTECTS THE CONTAINMENT PENETRATION THE SPECIFIC WELDS AND THEIR INSPECTION REQUIREMENTS ARE DELINEATED IN THE PSI/ISI WORK PLANS PROVIDED UNDER SPECIFICATION 10466-M-184.
13. (R) SYMBOLS ARE PROVIDED FOR CLARITY TO INDICATE ASME SECTION III CLASS 2 PIPING SYSTEMS WHICH ARE SUBJECT TO THE PSI/ISI PROGRAMS AND CONTINUE ON TO OTHER P & ID'S.
14. LIGHT INDICATING ADEQUATE OIL PRESSURE IS AN INTEGRAL PART OF HIS.
15. FLANGED FOR PB01B, CAPPED FOR PB01D.

USAR FIG. 5.1-1-03

ESSENTIAL DRAWING

◉ REVISED / ○ ISSUED	INCORPORATED CHG. DOC.	CHANGE PKG. NO.	03260
THIS DWG. SUPERSEDED BY	REV.	THIS DWG. SUPERSEDES	REV.
REVISION NOTES: PER PIR 99-3115			

WOLF CREEK NUCLEAR OPERATING CORPORATION — ELECTRONIC APPROVAL

PIPING AND INSTRUMENTATION DIAGRAM REACTOR COOLANT SYSTEM

SCALE	DRAWING NO.	SHEET	REV
NONE	LR-WCGS-BB-M-12BB03		09

34X44 E SIZE

RV CORE SUBCOOLING MONITOR

TRAIN	SEP. GRP.	T/C JUNCT. BOX NO.		T/C NUMBER							PENE-TRATION NO.
A	1	BB0004A		38	30	33	5	45	41	SPR	75
				48	20	44	47	49	43	SPR	76
				42	39	15	35	13	46	7	77
				31	27	32	29	4	1	SPR	78
B	4	BB0004B		37	9	17	12	36	11	SPR	75
				24	23	19	50	25	22	18	76
				40	16	14	34	10	21	SPR	77
				26	2	8	28	3	6	SPR	78

RV CORE SUBCOOLING MONITOR NOTE 8

THERMOCOUPLE/CORE COOLING MONITOR	
DISPLAY INSTRUMENTS FOR CONTROL BOARD SECTION AND OR OTHER CABINETS	
INSTRUMENT TAG NO.	LOCATION
UU1390A	RP001A
UU1390B	RP001B
TR1390A	RP001A
TR1390B	RP001B
TI1390A	RL0022
TI1390B	RL0022
TAL1390A	RK0020
TALL1390B	RK0020

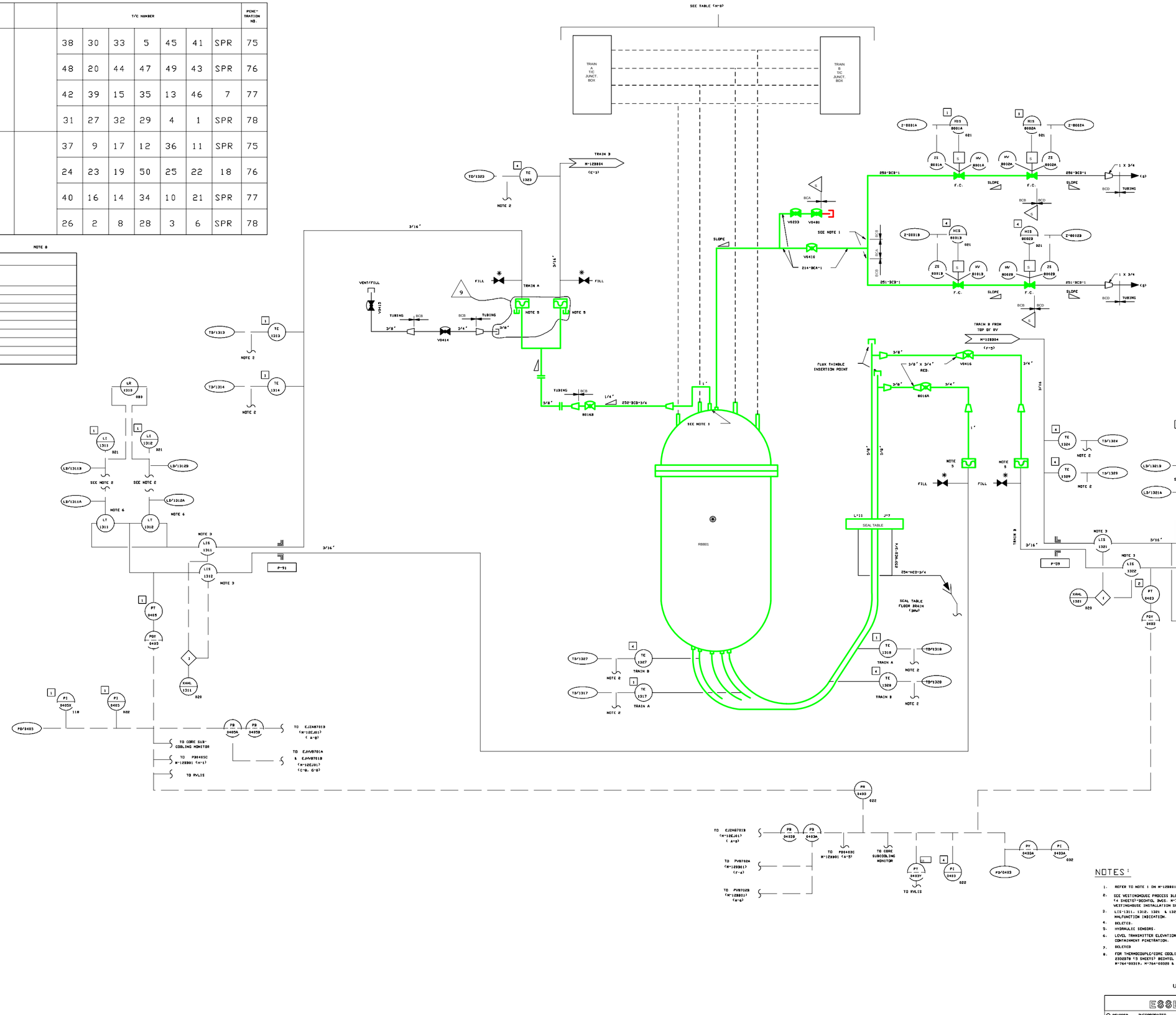

USAR FIG. 5.1-1-04

NOTES:

1. REFER TO NOTE 1 ON M-123881.
2. SEE WESTINGHOUSE PROCESS BLOCK DIAGRAMS-V DWG. NO. 2326390 (4 SHEETS) 3CONTEL DWGS. M-761-30441, 442, 443 & 444, AND WESTINGHOUSE INSTALLATION SCHEMATIC.
3. LIS-1311, 1312, 1321 & 1322 ARE HYDRAULIC ISOLATORS WITH A MALFUNCTION INDICATION.
4. DELETED.
5. HYDRAULIC SENSORS.
6. LEVEL TRANSMITTER ELEVATION ABOVE HYDRAULIC ISOLATOR AND NEAR CONTAINMENT PENETRATION.
7. DELETED
8. FOR THERMOCOUPLE/CORE COOLING MONITOR SEE WESTINGHOUSE DRAWING 2326378 (5 SHEETS) BECHTEL DRAWINGS M-764-00317, M-764-00318, M-764-00319, M-764-00320 & M-764-00321.

ESSENTIAL DRAWING			
◐ REVISED ○ ISSUED	INCORPORATED CHG. DOC.	VSP-M-123904-447-C-1, R/6	CHANGE PKG. NO. 011197
THIS DWG. SUPERSEDED BY	REV.	THIS DWG. SUPERSEDES	REV.
REVISION NOTES:			

WOLF CREEK NUCLEAR OPERATING CORPORATION — ELECTRONIC APPROVAL

PIPING & INSTRUMENTATION DIAGRAM REACTOR COOLANT SYSTEM

SCALE	DRAWING NUMBER	SHEET	REV
NONE	LR-WCGS-BB-M-12BB04		09

34X44 E SIZE

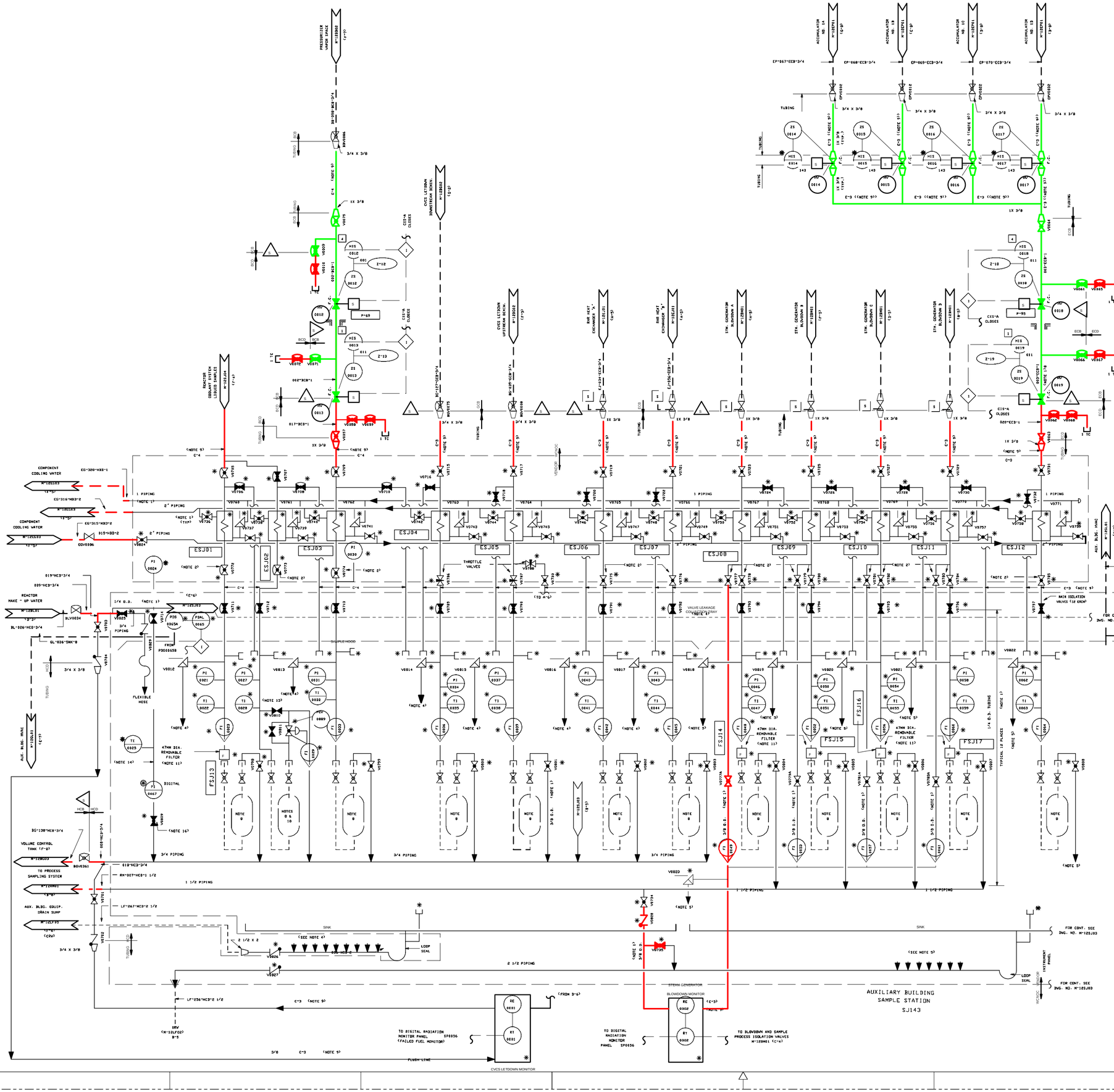

NOTES:

1. ALL VENDOR SAMPLE LINES ARE AUSTENITIC STAINLESS STEEL TUBING IN ACCORDANCE WITH STANDARD CODES FOR POWER PIPING ANSI B31.1-1973 ALL TUBING IS 3/8 INCH O.D.X.065 INCH WALL THICKNESS UNLESS OTHERWISE NOTED. TUBING THROUGH THE SAMPLE COOLERS MAY BE 1/4 INCH O.D. TUBING DOWNSTREAM OF THE MAIN ISOLATION VALVES MAY BE 1/4 INCH O.D. TUBING THROUGHOUT THE RADWASTE BUILDING PANEL (M-123EJ02) MAY BE 1/4 INCH O.D. DRAIN MANIFOLDS HEADERS, AND COOLER PIPING/TUBING SHALL ALSO MEET THE REQUIREMENTS OF ANSI B31.1-1973.
2. THIS VALVE IS AN ADJUSTABLE ROD - IN - TUBE TYPE FOR PRESSURE DROP AND FLOW CONTROL.
3. VALVE POSITIONS ARE SHOWN WHEN THE SAMPLE SYSTEM IS NOT IN OPERATION.
4. DIRECT DISCHARGE VIA A CLOSED CONNECTION TO A SINK DRAIN HEADER (TO AUX. BLDG. EQUIP. DRAIN SUMP (CDV)).
5. DIRECT DISCHARGE VIA A CLOSED CONNECTION TO A SINK DRAIN HEADER (TO AUX. BLDG. SUMP (SDV)).
6. DIRECT DISCHARGE VIA A CLOSED CONNECTION TO A SINK DRAIN HEADER (TO RADWASTE BLDG. EQUIP. DRAIN SUMP (CDV)).
7. DIRECT DISCHARGE VIA A CLOSED CONNECTION TO A SINK DRAIN HEADER (TO RADWASTE BLDG. SUMP (SDV)).
8. DENOTES SAMPLING CONNECTIONS FOR SAMPLE VESSELS. GRAB SAMPLES AND HOOK UP FOR IN LINE ANALYZERS CONNECTIONS ARE QUICK DISCONNECT COUPLINGS. VENDOR SHALL SUPPLY TEN (10) 300 ML CAPACITY SAMPLE VESSELS AND AT LEAST SIX (6) FAUCET ASSEMBLIES USED TO PROVIDE GRAB SAMPLES TO AN OPEN CONTAINER.
9. FOR INSTRUMENT PIPING CLASS SPECIFICATION FOR STAINLESS STEEL TUBING SEE 3WG- J07G10.
10. THIS SAMPLE SHALL BE TAKEN, AT HIGHER PROCESS PRESSURES TO PREVENT FLASHING IN ANY PORTION OF THE SAMPLE LINE. FOR PURPOSES OF DETERMINING DISSOLVED GAS CONCENTRATIONS.
11. REMOVABLE IN - LINE FILTERS. FOR TRANSPORT TO THE HOT LABORATORY FOR FURTHER ANALYSIS.
12. FOUR (4) SPARE SAMPLE LINES, COMPLETE WITH TUBING, INSTRUMENTS, ISOLATION VALVES, QUICK DISCONNECTS AND THROTTLE VALVES. SHALL BE BUILT INTO THE VENDORS PANEL AS SHOWN. FOR FUTURE EXPANSION. THE VENDOR SHALL CAP EACH SAMPLE LINE, AT THE INLET AND OUTLET, ON THE EXTERNAL SIDE OF HIS BULKHEAD FITTINGS.
13. THIS VALVE IS USED TO RELEASE THE SAMPLE LINE PRESSURE TO ATMOSPHERE, BEFORE QUICK DISCONNECTING THE SAMPLE VESSEL, WHEN OBTAINING HIGH PRESSURE RCS PROCESS SAMPLES.
14. THE PRESSURE SENSING LINE SHOULD FORM A DEAD LEG OR A LOOP SEAL TO PROVIDE THERMAL BARRIER, IN THE CASE OF LOSS OF COMPONENT COOLING WATER TO THE SAMPLE COOLER.
15. (W) ITEMS SUPPLIED BY WESTINGHOUSE ELECTRIC CORP (WSSS).
16. DIGITAL PRESSURE INDICATOR BLEED VALVE SHALL BE PANEL MOUNTED IN CLOSE PROXIMITY TO THE INDICATOR. DIGITAL PRESSURE INDICATOR USED TO CALIBRATE REACTOR COOLANT SYSTEM PRESSURE INSTRUMENTATION.
17. THE Q-LISTED PORTION OF THIS SYSTEM IS ONLY THE PIPING AND VALVES ASSOCIATED WITH CONTAINMENT PENETRATIONS.
18. CONTAINMENT PENETRATION PIPING 803"EC8"-1 IS SCH- 80S.
19. SWITCH PROVIDED FOR POWER LOCKOUT.
20. DELETED.
21. AIR PURGE OPERATES DURING PASS OPERATION TO CLEAR LINE OF RADIOACTIVE EFFLUENT. (REFERENCE PIR 94-0744)
22. FOR RADWASTE BUILDING SAMPLE STATION SJ144. MAIN ISOLATION VALVES MAY BE BALL TYPE.

USAR FIG. 9.3-2-01

ESSENTIAL DRAWING

(A) REVISED	INCORPORATED CHG. DOC.	CHANGE PKG. NO.
○ ISSUED		
THIS DWG SUPERSEDES (P*	REV.	THIS DWG SUPERSEDES P-125J01P REV. 08

REVISION NOTES: ELECTRONICALLY CONVERTED PER AP 05-010

WOLF CREEK NUCLEAR OPERATING CORPORATION

ELECTRONIC APPROVAL

PIPING AND INSTRUMENTATION DIAGRAM
NUCLEAR SAMPLING SYSTEM

SCALE	DRAWING NUMBER	SHEET	REV
NONE	LR-WCGS-SJ-M-12SJ01		09

34X44 E SIZE

NOTES:

1. SEE SHEET M-12SJ01 FOR NOTES.

BORIC ACID TANK B M-12SG05 (D-7)

BORIC ACID TANK A M-12SG05 (C-7)

REACTOR COOLANT DRAIN TANK M-12SB31 (C-8)

BORON THERMAL REGEN OUT M-12SB54 (E-8)

BE-339-302C-3/4

BE-433-302C-3/4

BE-318-MC3-3/4

BE-332-252-3/4

BGV0339

BGV0338

HBV0613

BGV0336

TUBING

TUBING HCC

C-3 (NOTE 9)

C-3 (NOTE 9)

C-3 (NOTE 9)

C-3 (NOTE 9)

CONT. FROM DWG. NO. M-12SJ01

1/4 O.D. (NOTE 1)

M-12SJ01 (D-7)

VENDOR WCNOC

INSTR. PANEL

SPARES

3/8 O.D. (NOTE 1)

VB829 VB831 VB832 VB833 VB834 VB835 VB836 VB837 VB838

VALVE LEAKAGE COLLECTION TRAY

MAIN ISOLATION VALVES (8 EACH)

SAMPLE HOOD

CONT. FROM DWG. NO. M-12SJ01

TI 0067 TI 0069 TI 0071 TI 0073 TI 0075 TI 0077 TI 0079 TI 0081 TI 0083

FI 0068 FI 0070 FI 0072 FI 0074 FI 0076 FI 0078 FI 0080 FI 0082 FI 0084

THROTTLE VALVES (8 EACH)

VENDOR WCNOC

INSTRUMENT PANEL

VB839 VB840 VB841 VB842 VB843 VB844 VB845 VB846 VB847

NOTE 8

NOTES 8 & 12

1/4 O.D. TUBING, TYPICAL 8 PLACES (NOTE 1)

3/8 O.D. (NOTE 1)

3/8 O.D. (NOTE 1)

3/8 O.D. (NOTE 1)

M-12SJ01 (B-8)

3/4" PIPING

3/8 O.D. (NOTE 1)

3/8 O.D. (NOTE 1)

BORON RECYCLE EVAPORATOR FEED BE"MIN INLET (B8?)

M-12HE01 (A-8)

BORIC ACID TANK A M-12SG05 (D-7)

BORIC ACID TANK B M-12SG05 (D-7)

BG-332-HCD-3/4

HEV0123

HE-332-HCD-3/4

BGV0349

BG-410-HCC-3/4

TUBING HCC

BGV0349

BG-499-HCC-3/4

S

CONT. FROM DWG. NO. M-12SJ01

SINK

CONT. FROM DWG. NO. M-12SJ01

AUXILIARY BUILDING
SAMPLE STATION
SJ0143

USAR FIG. 9.3-2-02

ESSENTIAL DRAWING

(A) REVISED — INCORPORATED CHG. DOC. — CHANGE PKG. NO.

(B) ISSUED

THIS DWG. SUPERSEDED BY: REV. — THIS DWG. SUPERSEDES M-12SJ03 REV. 00

REVISION NOTES: ELECTRONICALLY CONVERTED PER AP 05-010

WOLF CREEK NUCLEAR OPERATING CORPORATION

ELECTRONIC APPROVAL

PIPING & INSTRUMENTATION DIAGRAM
NUCLEAR SAMPLING SYSTEM

SCALE	DRAWING NUMBER	SHEET	REV
NONE	LR-WCGS-SJ-M-12SJ03		01

34X44 E SIZE

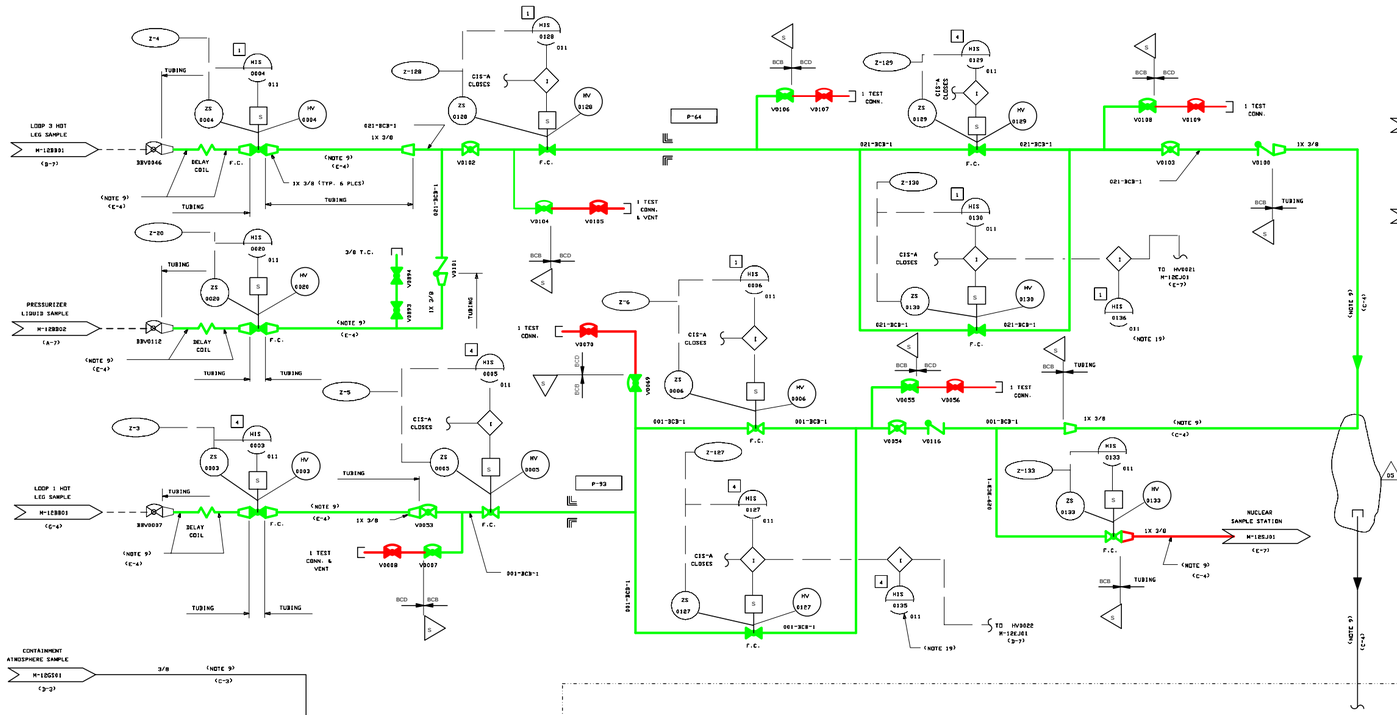
LOOP 3 HOT LEG SAMPLE
M-12EB01
(B-7)
PRESSURIZER LIQUID SAMPLE
M-12EB02
(A-7)
LOOP 1 HOT LEG SAMPLE
M-12EB01
(C-6)
BBV0046
BBV0112
BBV0037
Z-4
Z-20
Z-5
Z-3
Z-128
Z-6
Z-129
Z-130
Z-187
Z-132
Z-133
Z-131
HIS 0128
HIS 0129
HIS 0130
HIS 0131
HIS 0132
HIS 0133
HIS 0135
HIS 0136
HIS 0137
HIS 0004
HIS 0020
HIS 0025
HIS 0003
HIS 0006
HIS 0127
ZS 0128
ZS 0129
ZS 0130
ZS 0131
ZS 0132
ZS 0133
ZS 0135
ZS 0136
ZS 0137
ZS 0004
ZS 0020
ZS 0025
ZS 0003
ZS 0006
ZS 0127
HV 0128
HV 0129
HV 0130
HV 0131
HV 0132
HV 0133
HV 0135
HV 0136
HV 0137
HV 0004
HV 0020
HV 0025
HV 0003
HV 0006
HV 0127
DELAY COIL
TUBING
F.C.
CIS-A CLOSES
BCB
BCD
S
I
011
021-3CB-1
1X 3/8
(NOTE 9) (C-4)
1X 3/8 (TYP. 6 PLCS)
V0102
V0103
V0104
V0105
V0106
V0107
V0108
V0109
V0110
V0111
V0112
V0113
V0114
V0115
V0116
V0117
V0118
V0119
V0120
V0121
V0122
V0123
V0124
V0125
V0126
V0127
V0128
V0129
V0130
V0131
V0132
V0133
V0134
V0135
V0136
V0137
V0669
V0670
V0671
V0672
V0673
V0674
V0675
V0676
V0677
V0678
V0679
V0680
V0681
V0682
V0683
V0684
V0685
V0686
V0687
V0688
1 TEST CONN.
1 TEST CONN. & VENT
3/8 T.C.
001-3CB-1
027-3CB-1
024-3CB-1
023-3CB-1
036-3CB-1
033-3CB-1
029-3CB-1
028-3CB-1
P-64
P-93
P-37
TO HV0021 M-12EJ01 (C-7)
TO HV0022 M-12EJ01 (B-7)
(NOTE 19)
CONTAINMENT RECIRCULATION SUMP "A" M-12EJ01 (F-6)
CONTAINMENT RECIRCULATION SUMP "B" M-12EJ01 (B-6)
NUCLEAR SAMPLE STATION M-12EJ01 (E-7)
(NOTE 9) (C-3)
(NOTE 9) (C-4)
(NOTE 9) (C-5)
(NOTE 9) (C-6)
(NOTE 9) (C-7)
(NOTE 9) (C-8)
(NOTE 9) (C-9)
(NOTE 9) (C-10)
(NOTE 9) (C-11)
(NOTE 9) (C-12)
(NOTE 9) (C-13)
(NOTE 9) (C-14)
(NOTE 9) (C-15)
(NOTE 9)

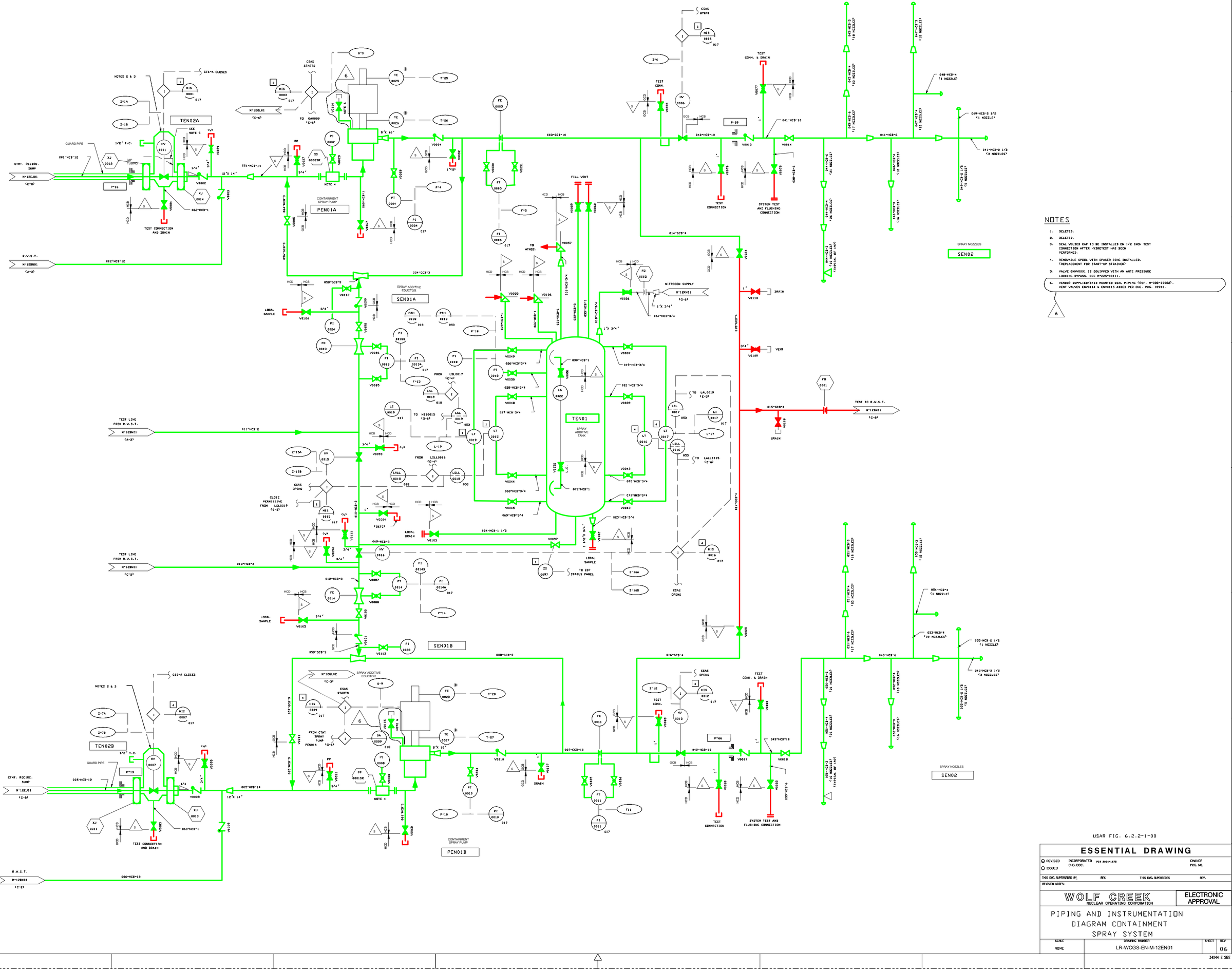

NOTES

1. DELETED.
2. DELETED.
3. SEAL WELDED CAP TO BE INSTALLED ON 1/2 INCH TEST CONNECTION AFTER HYDROTEST HAS BEEN PERFORMED.
4. REMOVABLE SPOOL WITH SPACER RING INSTALLED. (REPLACEMENT FOR START-UP STRAINER)
5. VALVE ENHV0001 IS EQUIPPED WITH AN ANTI PRESSURE LOCKING BYPASS. SEE M-225-00111.
6. VENDOR SUPPLIED/SKID MOUNTED SEAL PIPING (REF. M-008-00002). VENT VALVES ENV0114 & ENV0115 ADDED PER CHG. PKG. 09986.

USAR FIG. 6.2.2-1-00

ESSENTIAL DRAWING

◉ REVISED ○ ISSUED	INCORPORATED CHG. DOC.	P.I.R. 2004-1675	CHANGE PKG. NO.
THIS DWG. SUPERSEDED BY:	REV.	THIS DWG. SUPERSEDES	REV.
REVISION NOTES:			

WOLF CREEK NUCLEAR OPERATING CORPORATION — ELECTRONIC APPROVAL

PIPING AND INSTRUMENTATION DIAGRAM CONTAINMENT SPRAY SYSTEM

SCALE	DRAWING NUMBER	SHEET	REV
NONE	LR-WCGS-EN-M-12EN01		06

34144 E SIZE

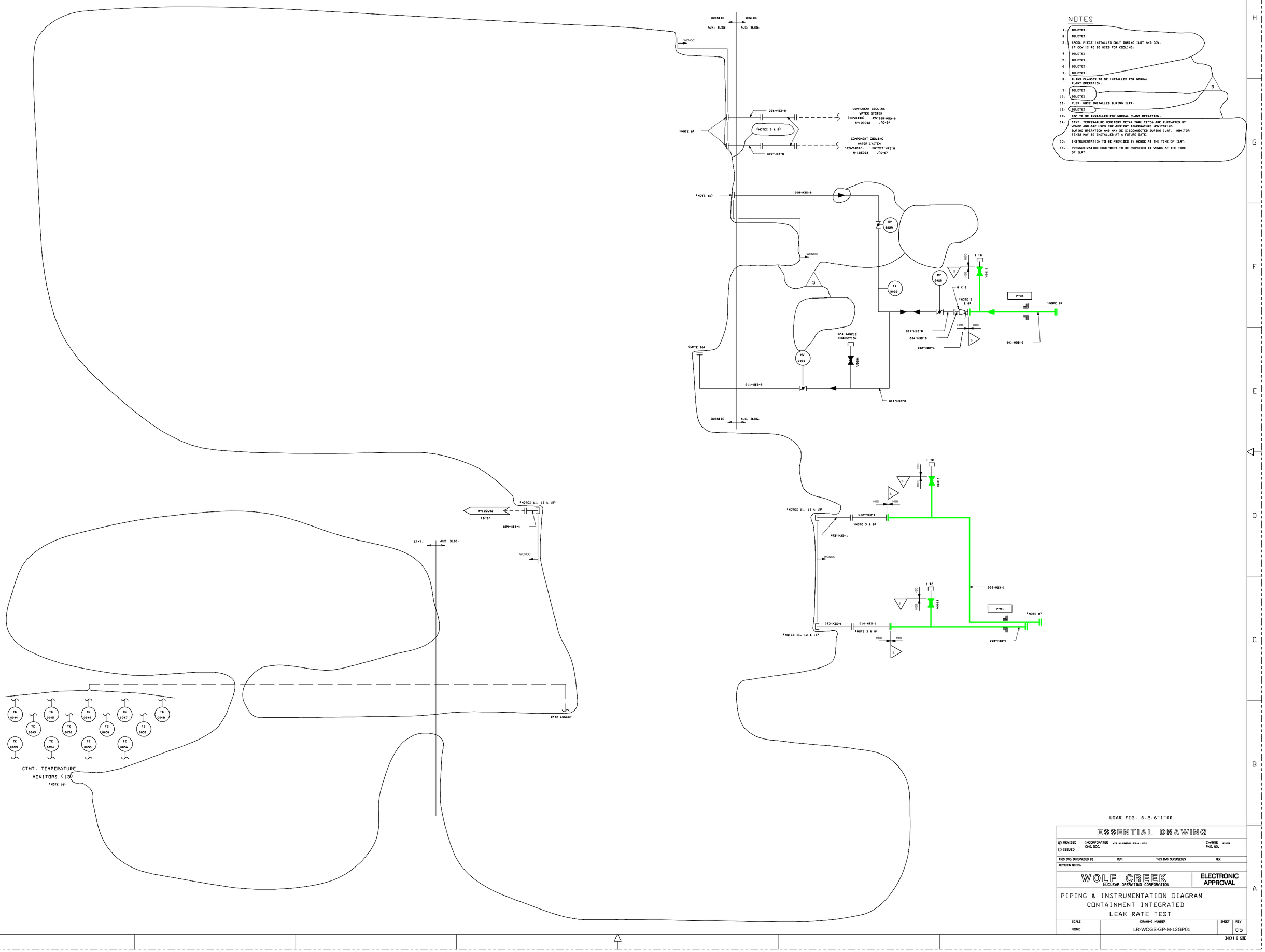

USAR FIG. 6.2.6-1-00

ESSENTIAL DRAWING

○ REVISED ● ISSUED INCORPORATED CHG. DOC. WCP-M-12GP01-03-A, 0/0 CHANGE PKG. NO. 091139

THIS DWG. SUPERSEDED BY: REV. THIS DWG. SUPERSEDES: REV.

REVISION NOTES:

WOLF CREEK NUCLEAR OPERATING CORPORATION — ELECTRONIC APPROVAL

PIPING & INSTRUMENTATION DIAGRAM
CONTAINMENT INTEGRATED
LEAK RATE TEST

SCALE	DRAWING NUMBER	SHEET	REV
NONE	LR-WCGS-GP-M-12GP01		05

34X44 E SIZE

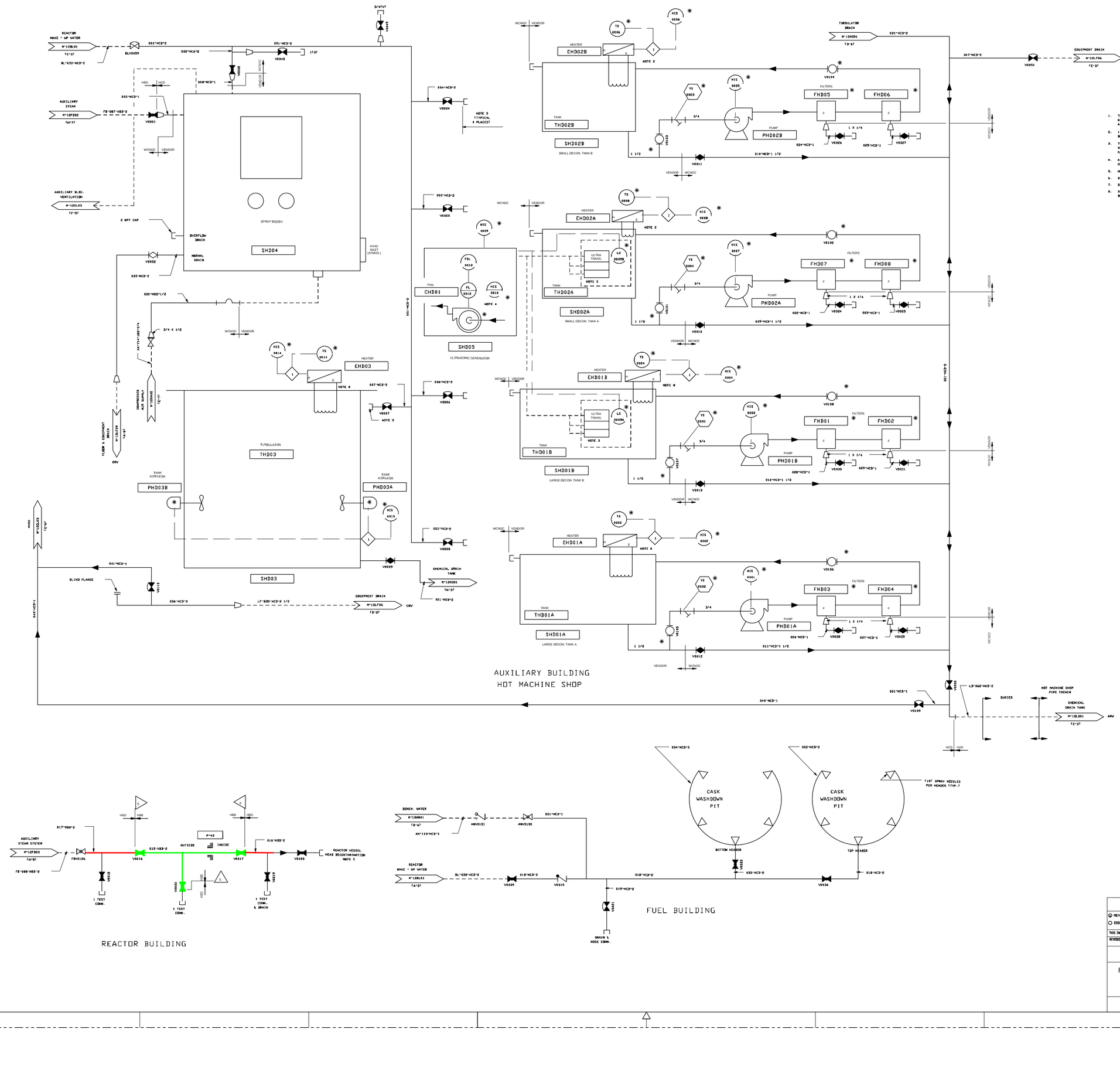

USAR FIG. 12.3-4-00

ESSENTIAL DRAWING

(X) REVISED ( ) ISSUED	INCORPORATED CHG. DOC.	WCP-M-12GM01-M01A R/0	CHANGE PKG. NO. 95479
THIS DWG. SUPERSEDED BY	REV.	THIS DWG. SUPERSEDES M12GM01	REV. 0

REVISION NOTES: ELECTRONICALLY CONVERTED PER AP-03-010

WOLF CREEK NUCLEAR OPERATING CORPORATION

ELECTRONIC APPROVAL

PIPING AND INSTRUMENTATION DIAGRAM DECONTAMINATION SYSTEM

SCALE	DRAWING NUMBER	SHEET	REV
NONE	LR-WCGS-HD-M-12HD01	04	

34X44 E SIZE

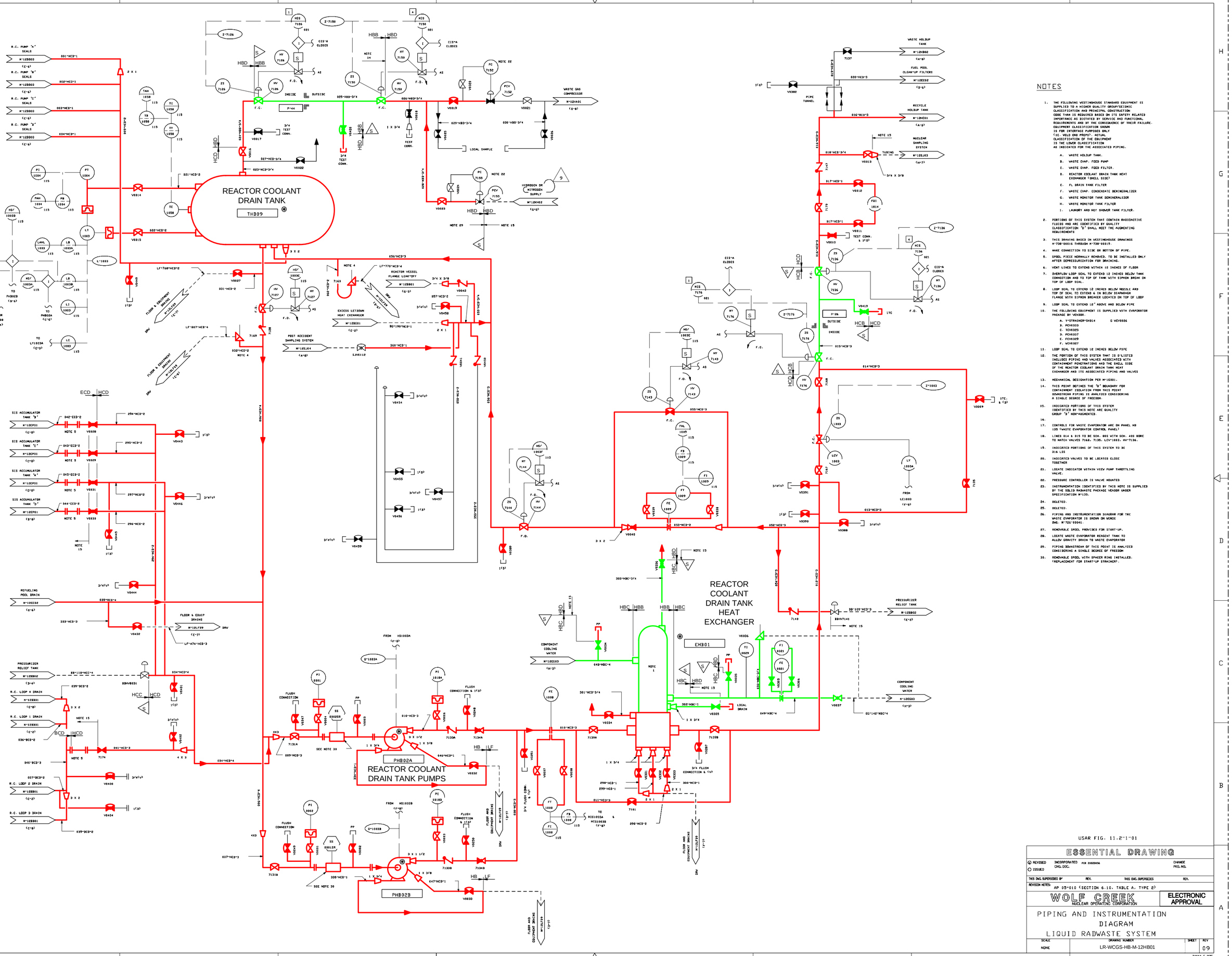

NOTES

1. THE FOLLOWING WESTINGHOUSE STANDARD EQUIPMENT IS SUPPLIED TO A HIGHER QUALITY GROUP/SEISMIC CLASSIFICATION AND PRINCIPAL CONSTRUCTION CODE THAN IS REQUIRED BASED ON ITS SAFETY RELATED IMPORTANCE AS DICTATED BY SERVICE AND FUNCTIONAL REQUIREMENTS AND BY THE CONSEQUENCE OF THEIR FAILURE. EQUIPMENT CLASSIFICATION SHOWN IS FOR INTERFACE PURPOSES ONLY (I.E. WELD END PREPS). ACTUAL CLASSIFICATION OF THE EQUIPMENT IS THE LOWER CLASSIFICATION AS INDICATED FOR THE ASSOCIATED PIPING.
   - A. WASTE HOLDUP TANK.
   - B. WASTE EVAP. FEED PUMP
   - C. WASTE EVAP. FEED FILTER.
   - D. REACTOR COOLANT DRAIN TANK HEAT EXCHANGER (SHELL SIDE)
   - E. FL DRAIN TANK FILTER
   - F. WASTE EVAP. CONDENSATE DEMINERALIZER
   - G. WASTE MONITOR TANK DEMINERALIZER
   - H. WASTE MONITOR TANK FILTER
   - I. LAUNDRY AND HOT SHOWER TANK FILTER.
2. PORTIONS OF THIS SYSTEM THAT CONTAIN RADIOACTIVE FLUIDS AND ARE IDENTIFIED BY QUALITY CLASSIFICATION "B" SHALL MEET THE AUGMENTING REQUIREMENTS
3. THIS DRAWING BASED ON WESTINGHOUSE DRAWINGS M-738-00816 THROUGH M-738-00819.
4. MAKE CONNECTION TO SIDE OR BOTTOM OF PIPE.
5. SPOOL PIECE NORMALLY REMOVED. TO BE INSTALLED ONLY AFTER DEPRESSURIZATION FOR DRAINING.
6. VENT LINES TO EXTEND WITHIN 12 INCHES OF FLOOR
7. OVERFLOW LOOP SEAL TO EXTEND 12 INCHES BELOW TANK CONNECTION AND TO TOP OF TANK WITH SIPHON BREAK ON TOP OF LOOP SEAL.
8. LOOP SEAL TO EXTEND 12 INCHES BELOW NOZZLE AND TOP OF SEAL TO EXTEND 4 IN BELOW DIAPHRAGM FLANGE WITH SIPHON BREAKER LOCATED ON TOP OF LOOP
9. LOOP SEAL TO EXTEND 12" ABOVE AND BELOW PIPE
10. THE FOLLOWING EQUIPMENT IS SUPPLIED WITH EVAPORATOR PACKAGE BY VENDOR:
    - A. Y-STRAINER-3NB14 G VEV0026
    - B. PCV0333
    - C. TCV0325
    - D. PCV0327
    - E. PCV0329
    - F. VEV0327
11. LOOP SEAL TO EXTEND 12 INCHES BELOW PIPE
12. THE PORTION OF THIS SYSTEM THAT IS Q-LISTED INCLUDES PIPING AND VALVES ASSOCIATED WITH CONTAINMENT PENETRATIONS AND THE SHELL SIDE OF THE REACTOR COOLANT DRAIN TANK HEAT EXCHANGER AND ITS ASSOCIATED PIPING AND VALVES
13. MECHANICAL DESIGNATION PER M-10301.
14. THIS POINT DEFINES THE "Q" BOUNDARY FOR CONTAINMENT ISOLATION FROM THIS POINT DOWNSTREAM PIPING IS ANALYZED CONSIDERING A SINGLE DEGREE OF FREEDOM.
15. INDICATED PORTIONS OF THIS SYSTEM IDENTIFIED BY THIS NOTE ARE QUALITY GROUP "B" NON-AUGMENTED.
16.
17. CONTROLS FOR WASTE EVAPORATOR ARE ON PANEL HB 135 (WASTE EVAPORATOR CONTROL PANEL)
18. LINES 014 & 015 TO BE SCH. 80S WITH SCH. 40S BORE TO MATCH VALVES 7146, 7139, LCV-1003, HV-7136.
19. INDICATED PORTIONS OF THIS SYSTEM TO BE 316 LSS
20. INDICATED VALVES TO BE LOCATED CLOSE TOGETHER
21. LOCATE INDICATOR WITHIN VIEW PUMP THROTTLING VALVE.
22. PRESSURE CONTROLLER IS VALVE MOUNTED
23. INSTRUMENTATION IDENTIFIED BY THIS NOTE IS SUPPLIED BY THE SOLID RADWASTE PACKAGE VENDOR UNDER SPECIFICATION M-135.
24. DELETED.
25. DELETED.
26. PIPING AND INSTRUMENTATION DIAGRAM FOR THE WASTE EVAPORATOR IS SHOWN ON VENDOR DWG. M-725-00041.
27. REMOVABLE SPOOL PROVIDED FOR START-UP.
28. LOCATE WASTE EVAPORATOR REAGENT TANK TO ALLOW GRAVITY DRAIN TO WASTE EVAPORATOR
29. PIPING DOWNSTREAM OF THIS POINT IS ANALYZED CONSIDERING A SINGLE DEGREE OF FREEDOM
30. REMOVABLE SPOOL WITH SPACER RING INSTALLED. (REPLACEMENT FOR START-UP STRAINER).

USAR FIG. 11.2-1-01

ESSENTIAL DRAWING

◎ REVISED ○ ISSUED	INCORPORATED CHG. DOC.	PIR 20003696	CHANGE PKG. NO.
THIS DWG SUPERSEDES IN:	REV.	THIS DWG. SUPERSEDES:	REV.

REVISION NOTES: AP 05-010 (SECTION 6.10, TABLE A, TYPE 2)

WOLF CREEK NUCLEAR OPERATING CORPORATION

ELECTRONIC APPROVAL

PIPING AND INSTRUMENTATION DIAGRAM LIQUID RADWASTE SYSTEM

SCALE	DRAWING NUMBER	SHEET	REV
NONE	LR-WCGS-HB-M-12HB01		09

34X44 E SIZE

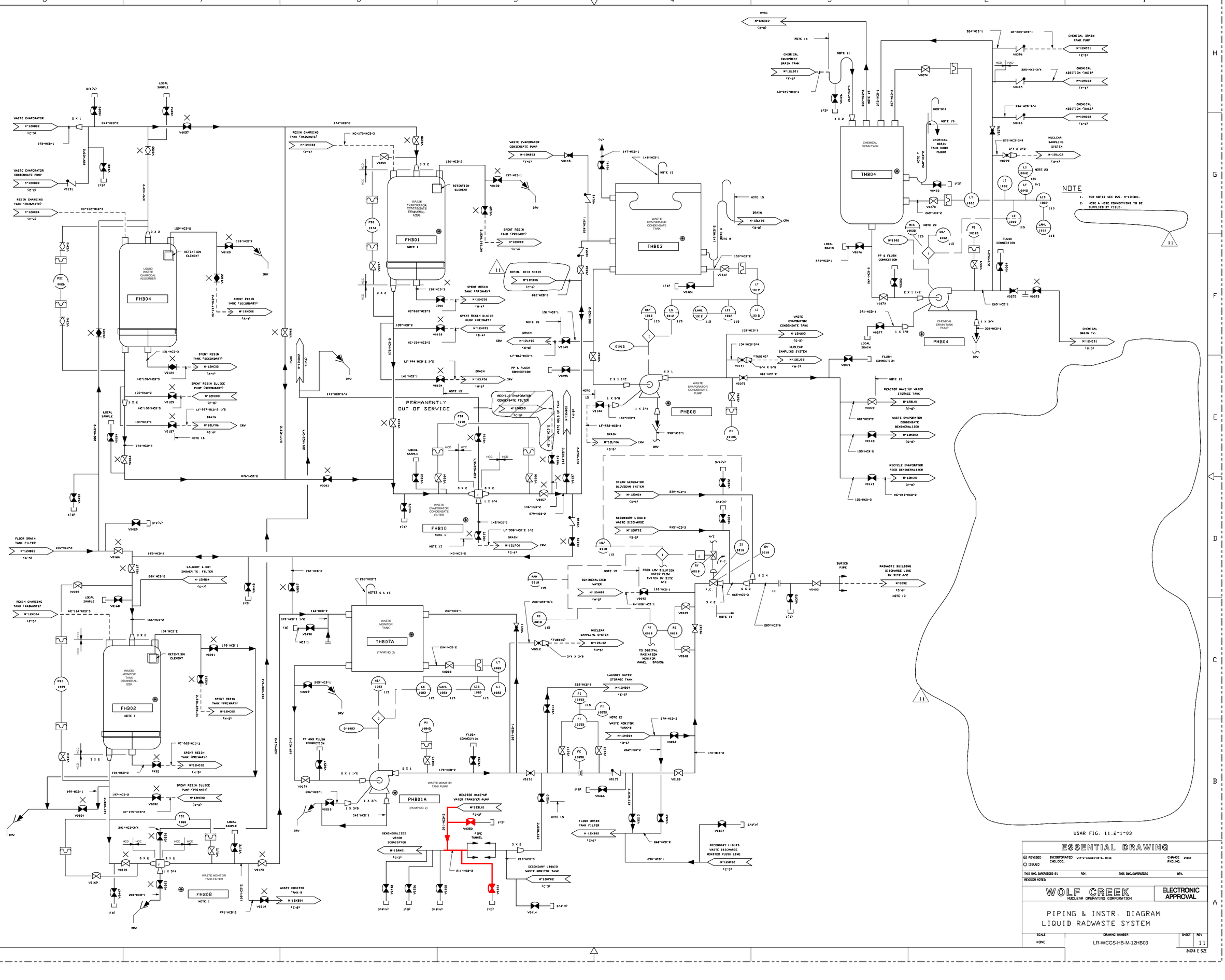

ESSENTIAL DRAWING

◉ REVISED ○ ISSUED	INCORPORATED CHG. DOC.	VTP-M-12HB03-09-A, R/00	CHANGE PKG. NO. 99307
THIS DWG. SUPERSEDED BY:	REV.	THIS DWG. SUPERSEDES	REV.
REVISION NOTES:			

WOLF CREEK NUCLEAR OPERATING CORPORATION

ELECTRONIC APPROVAL

PIPING & INSTR. DIAGRAM LIQUID RADWASTE SYSTEM

SCALE	DRAWING NUMBER	SHEET	REV
NONE	LR-WCGS-HB-M-12HB03		11

34X44 E SIZE

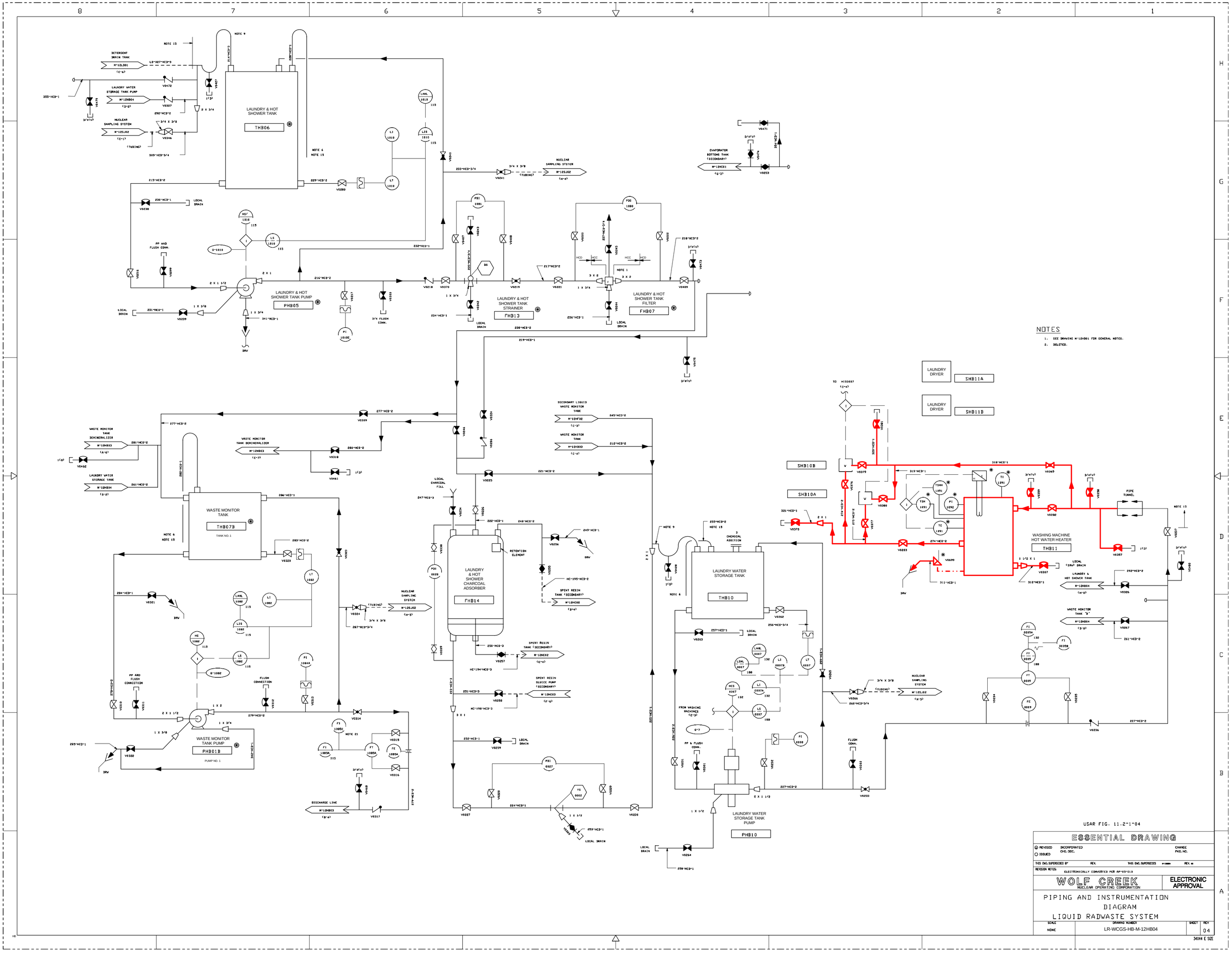
LAUNDRY & HOT SHOWER TANK
THB06
LAUNDRY & HOT SHOWER TANK PUMP
PHB05
LAUNDRY & HOT SHOWER TANK STRAINER
FHB13
LAUNDRY & HOT SHOWER TANK FILTER
FHB07
WASTE MONITOR TANK
THB07B
WASTE MONITOR TANK PUMP
PHB01B
LAUNDRY & HOT SHOWER CHARCOAL ADSORBER
FHB14
LAUNDRY WATER STORAGE TANK
THB10
LAUNDRY WATER STORAGE TANK PUMP
PHB10
WASHING MACHINE HOT WATER HEATER
THB11
LAUNDRY DRYER
SHB11A
LAUNDRY DRYER
SHB11B
SHB10B
SHB10A
NOTES
1. SEE DRAWING M-12HB01 FOR GENERAL NOTES.
2. DELETED.
USAR FIG. 11.2-1-04
ESSENTIAL DRAWING
REVISED
ISSUED
INCORPORATED CHG. DOC.
CHANGE PKG. NO.
THIS DWG. SUPERSEDED BY
REV.
THIS DWG. SUPERSEDES
REV.
REVISION NOTES:
ELECTRONICALLY CONVERTED PER AP-05-010
WOLF CREEK
NUCLEAR OPERATING CORPORATION
ELECTRONIC APPROVAL
PIPING AND INSTRUMENTATION DIAGRAM
LIQUID RADWASTE SYSTEM
SCALE
NONE
DRAWING NUMBER
LR-WCGS-HB-M-12HB04
SHEET
REV
04
34X44 E SIZE

NOTES

1. THE PORTIONS OF THE REACTOR MAKE - UP WATER SYSTEM WHICH ARE Q-LISTED INCLUDE THE PIPING AND VALVES ASSOCIATED WITH CONTAINMENT ISOLATION ONLY.
2. DELETED.
3. AN ABOVE GRADE STRUCTURE IS PROVIDED TO HOUSE PIPING AND VALVES AJACENT TO THE REACTOR MAKEUP WATER STORAGE TANK.
4. FOR P & ID LEGEND & SYMBOLS SEE DRAWINGS 10466-M-120101, M-120102, M-120103 AND M-020104
5. DELETED
6. START - UP FLUSHING CONNECTIONS.
7. REMOVABLE SPOOL WITH SPACER RING INSTALLED. (REPLACEMENT FOR START - UP STRAINER).

USAR FIG. 9.2-13-00

ESSENTIAL DRAWING

⊗ REVISED ○ ISSUED	INCORPORATED CHG. DOC. PIR 2004-0894	CHANGE PKG. NO.
THIS DWG. SUPERSEDED BY REV.	THIS DWG. SUPERSEDES REV.	
REVISION NOTES:		

WOLF CREEK
NUCLEAR OPERATING CORPORATION

ELECTRONIC APPROVAL

PIPING & INSTRUMENTATION DIAGRAM
REACTOR MAKE-UP WATER SYSTEM

SCALE	DRAWING NUMBER	SHEET	REV
NONE	LR-WCGS-BL-M-12BL01		10

34X44 E SIZE

AUXILIARY BUILDING

CONTAINMENT BUILDING

AUXILIARY BUILDING

NOTES

1. CPIS = CONTAINMENT PURGE ISOLATION SIGNAL FROM ESFAS
2. BROKEN LINE DENOTES UNIT ENCLOSURE. REF. J-PBS-20020.
3. FIRE HOSE FROM HOSE STATION 033 TO CONNECT TO WATER SPRAY SYSTEM INLET. WHEN REQUIRED.
4. BLIND FLANGE TO BE REMOVED AND REPLACED WITH SPACER RING DURING PLANT MODES 5 & 6 AS REQD.
5. CHILLED WATER RETURN FLOW IS NORMALLY ISOLATED FROM SGT01 AND FLOW IS ALIGNED TO SGF01.
6. THESE COMPUTER OUTPUT POINTS REPRESENT THE FLOW RATE THROUGH THE UNIT VENT. BASED ON FAN RUN STATUS FOR VENTILATION SYSTEMS THAT DISCHARGE VIA THE UNIT VENT.

LEGEND

- SCREEN

USAR FIG. 9.4-6-04

ESSENTIAL DRAWING

REVISED / ISSUED — INCORPORATED CHG. DOC. — PIR 2001-1183 — CHANGE PKG. NO. —

THIS DWG. SUPERSEDED BY: — REV. — THIS DWG. SUPERSEDES — REV.

REVISION NOTES:

WOLF CREEK NUCLEAR OPERATING CORPORATION

ELECTRONIC APPROVAL

PIPING & INSTRUMENTATION DIAGRAM
CONTAINMENT PURGE SYSTEMS
HVAC

SCALE	DRAWING NUMBER	SHEET	REV
NONE	LR-WCGS-GT-M-12GT01		11

34X44 E SIZE

NOTES

1. THE PIPING AND VALVES ASSOCIATED WITH CONTAINMENT ISOLATION ARE THE ONLY PORTIONS OF THIS SYSTEM THAT ARE Q-LISTED.

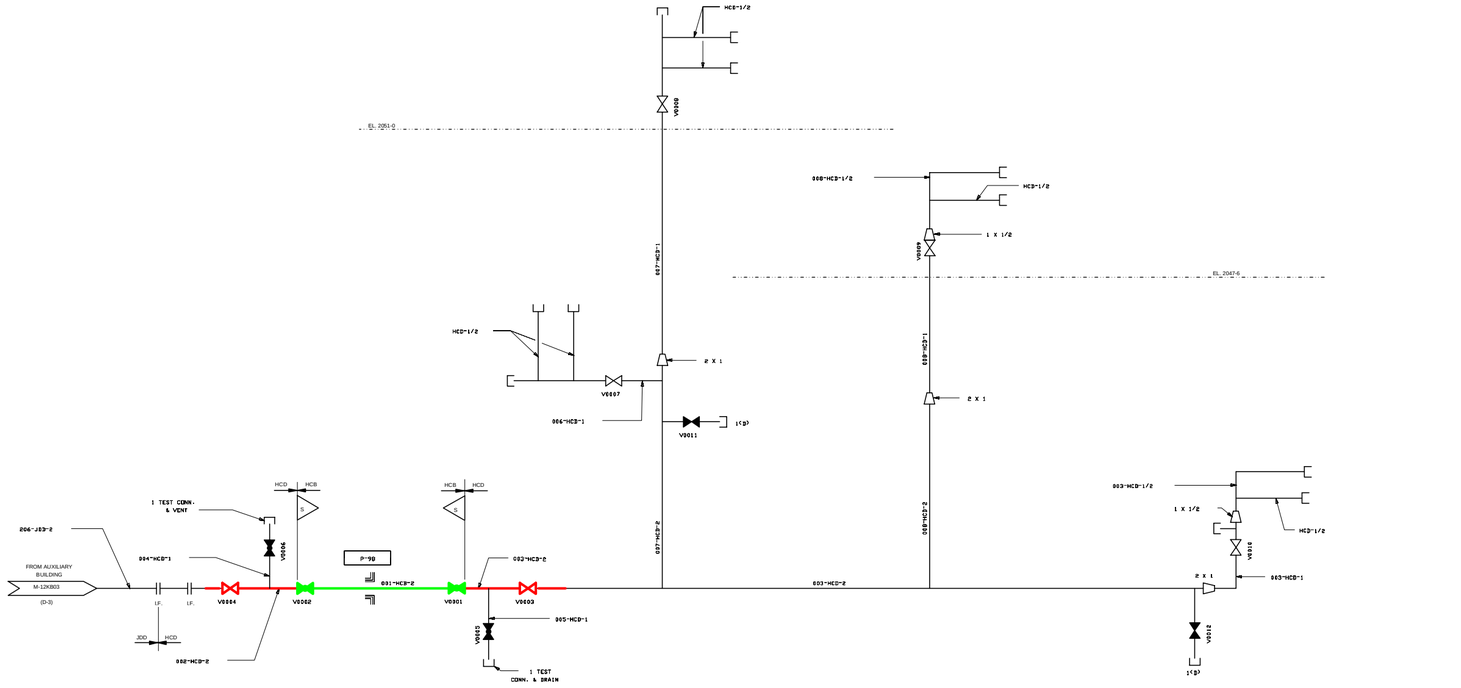

USAR FIG. 9.5.10-01

ESSENTIAL DRAWING

◉ REVISED ○ ISSUED	INCORPORATED CHG. DOC.	CHANGE PKG. NO.	
THIS DWG. SUPERSEDED BY	REV.	THIS DWG. SUPERSEDES	REV. 03

REVISION NOTES: ELECTRONICALLY CONVERTED PER AP-05-010

WOLF CREEK NUCLEAR OPERATING CORPORATION

ELECTRONIC APPROVAL

PIPING & INSTRUMENTATION DIAGRAM BREATHING AIR SYSTEM

SCALE	DRAWING NUMBER	SHEET	REV
NONE	LR-WCGS-KB-M-12KB01		04

34X44 E SIZE

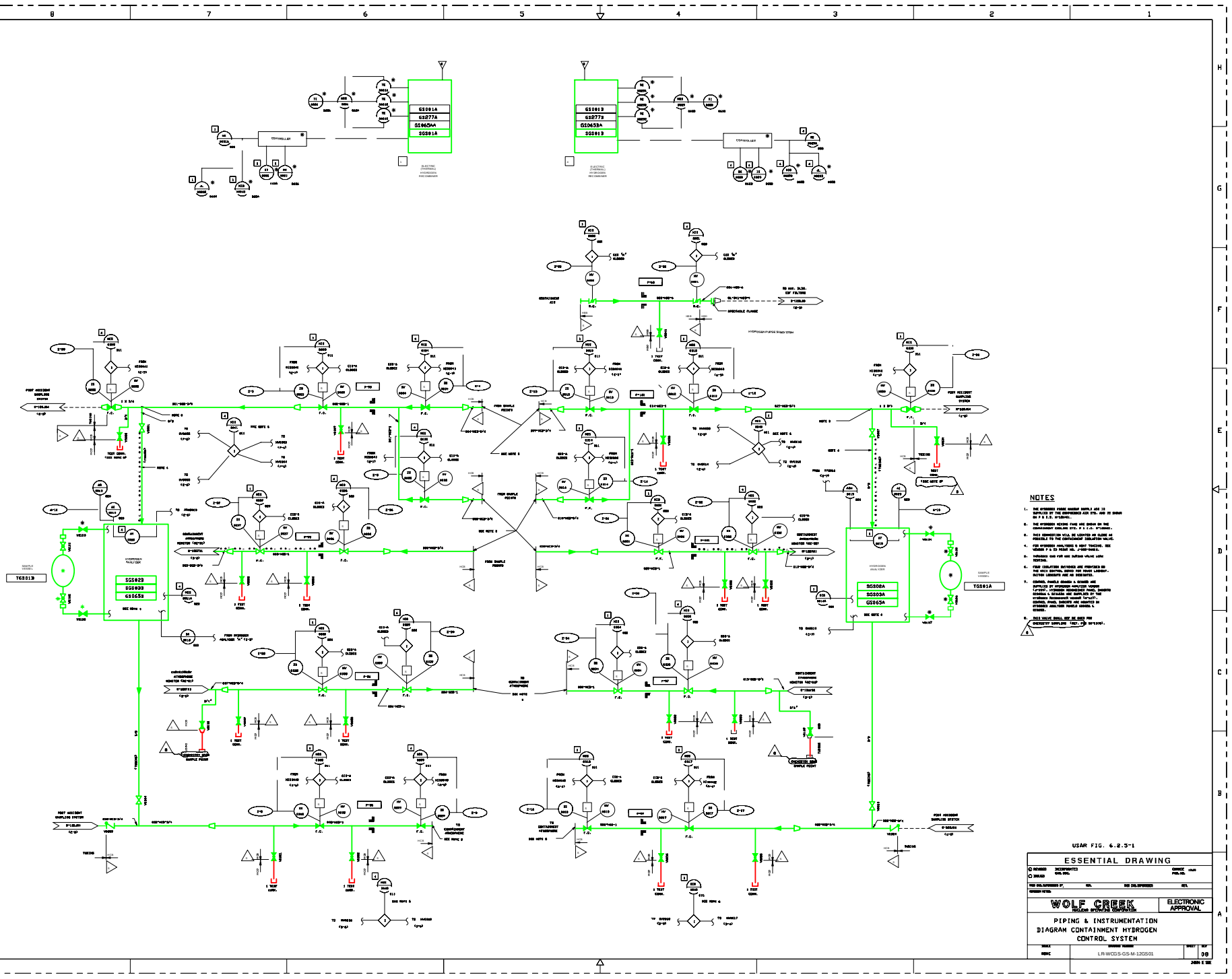
GS001A
GS277A
GS063AA
SGS01A
GS001B
GS277B
GS063AB
SGS01B
CONTROLLER
ELECTRIC (THERMAL) HYDROGEN RECOMBINER
HYDROGEN PURGE SYSTEM
HYDROGEN ANALYZER
SGS02B
SGS03B
GS063B
SGS02A
SGS03A
GS063A
TGS01B
TGS01A
SAMPLE VESSEL
NOTES
USAR FIG. 6.2.5-1
ESSENTIAL DRAWING
WOLF CREEK
NUCLEAR OPERATING CORPORATION
ELECTRONIC APPROVAL
PIPING & INSTRUMENTATION
DIAGRAM CONTAINMENT HYDROGEN
CONTROL SYSTEM
LR-WCGS-GS-M-12GS01
08

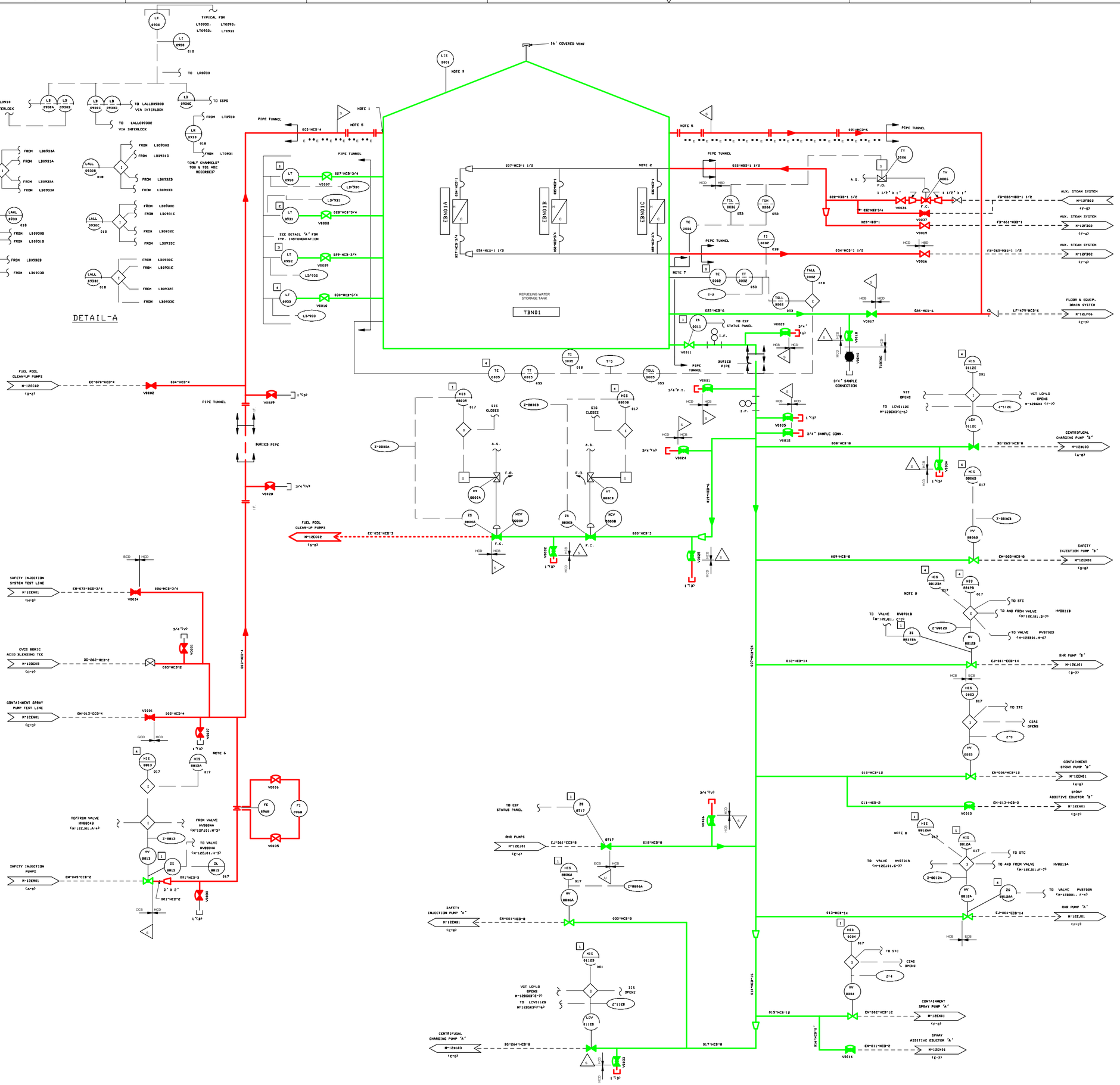

NOTES

1. LOCATE CONNECTION ABOVE NORMAL WATER LEVEL.
2. HEATING COIL AND STEAM SUPPLY AND RETURN LINES ARE NOT D-LISTED.
3. REFERENCED WESTINGHOUSE DRAWINGS: M-730-90007, M-730-90019, M-730-90011, M-730-90012, M-730-90013.
4. DELETED.
5. REMOVABLE SPOOL PIPE REQUIRES FOR HYDROTESTING
6. ISOLATION SWITCH PROVIDED IN THE CONTROL ROOM FOR POWER LOCKOUT OF VALVE HV-8813.
7. THE THERMOWELL FOR TE-6 WILL BE IN ACCORDANCE WITH SPEC. J-363(3).
8. TEST INDICATING SWITCH TO VERIFY CIRCUIT OPERABILITY
9. INSTRUMENT INSTALLED, BUT NOT IN SERVICE.

REFERENCE:

ANY REVISION TO THIS DRAWING MAY REQUIRE A REVISION TO THE HIGH PRESSURE COOLANT INJECTION SYS. TEST LINE P & I.D. M-12EM03.

USAR FIG. 6.3-1-01

ESSENTIAL DRAWING

REVISED INCORPORATED CHG. DOC. CHANGE PKG. NO.
ISSUED

THIS DWG. SUPERSEDED Ø, REV. THIS DWG. SUPERSEDES Ø-0000 REV. 00

REVISION NOTES: ELECTRONICALLY CONVERTED PER PIR 99-3192

WOLF CREEK NUCLEAR OPERATING CORPORATION

ELECTRONIC APPROVAL

PIPING & INSTRUMENTATION DIAGRAM
BORATED REFUELING
WATER STORAGE SYSTEM

SCALE	DRAWING NUMBER	SHEET	REV
NONE	LR-WCGS-EM-M-12BN01		09

34X44 E SIZE

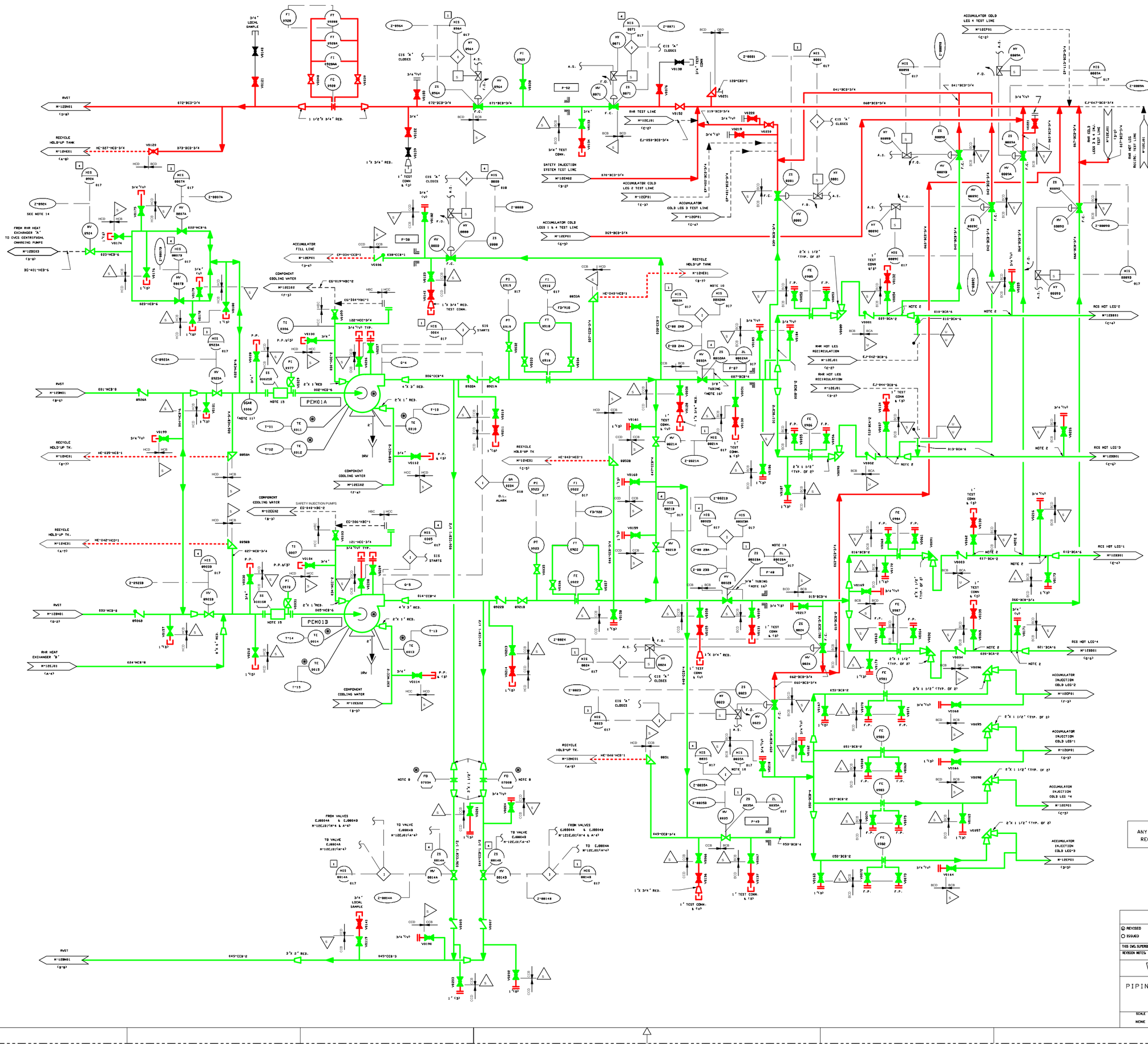

NOTES

1. DELETED.
2. DRILLED RESTRICTION 3/8" IN DIAMETER. POINT AT WHICH QUALITY GROUP CLASSIFICATION IS CHANGED FROM "A" TO "B". INSERVICE INSPECTION WILL BE PERFORMED ON CLASS "A" PIPE UP TO THIS ORIFICE.
3. SEE WESTINGHOUSE DRAWINGS M-738-00011, M-738-00018, AND M-738-00813.
4. DELETED.
5. DELETED.
6. PIPING CONTAINING 12 PERCENT BORIC ACID WILL HAVE TEES WITH A CLEANOUT TO PERMIT CLEANING OF SYSTEM AS REQUIRED.
7. FOR P&ID LEGEND AND SYMBOLS SEE DRAWING M-020101 THRU M-020104.
8. MINIFLOW ORIFICE SUPPLIED BY S1 PUMP VENDOR
9. HEAT TRACING NON-CLASS 1E.
10. ISOLATION SWITCH PROVIDED IN THE CONTROL ROOM FOR POWER LOCKOUT OF VALVES 8802A, B AND 8835.
11. SG-AM-6, PEAK RECORDING ACCELEROMETER, TO BE MOUNTED ON SURFACE OF HORIZONTAL PIPE SECTION.
12. DELETED.
13. ALL WELDS IN ASME SECTION III CLASS 1 COMPONENTS AND ASME SECTION III CLASS 1 PIPING OF NOMINAL PIPE SIZE GREATER THAN 1" MAY BE SUBJECT TO VOLUMETRIC EXAMINATION DURING THE PRESERVICE INSPECTION (PSI) AND/OR THE INSERVICE INSPECTION (IST) PROGRAMS. THE SPECIFIC WELDS AND THEIR INSPECTION REQUIREMENTS ARE DELINEATED IN THE APPLICABLE PSI/IST WORK PLANS PROVIDED UNDER SPECIFICATION M-189. BOUNDARIES OF THESE PIPING SYSTEMS ARE IDENTIFIED WITH A SYMBOL FOR CLARITY.
14. CIRCUIT BREAKER FOR EMHV0924 SHALL BE LOCKED OPEN AT ALL TIMES.
15. REMOVABLE SPOOL WITH SPACER RING INSTALLED. (REPLACEMENT FOR START-UP STRAINER).
16. VALVES EMHV8802A & EMHV8802B ARE EQUIPPED WITH AN ANTI PRESSURE LOCKING BYPASS. SEE M-704-02803.

ANY REVISION TO THIS DRAWING MAY REQUIRE A REVISION TO M-12EM03.

USAR FIG. 6.3-1-02

ESSENTIAL DRAWING

◉ REVISED ○ ISSUED	INCORPORATED CHG. DOC.	PIR 2001-2498	CHANGE PKG. NO.
THIS DWG. SUPERSEDES 8*,	REV.	THIS DWG. SUPERSEDES	REV.
REVISION NOTES:	CORRECTED COPY PER PIR 2001-2498		

WOLF CREEK NUCLEAR OPERATING CORPORATION

ELECTRONIC APPROVAL

PIPING & INSTRUMENTATION DIAGRAM
HIGH PRESSURE COOLANT
INJECTION SYSTEM

SCALE	DRAWING NUMBER	SHEET	REV
NONE	LR-WCGS-EM-M-12EM01	26	

34X44 E SIZE

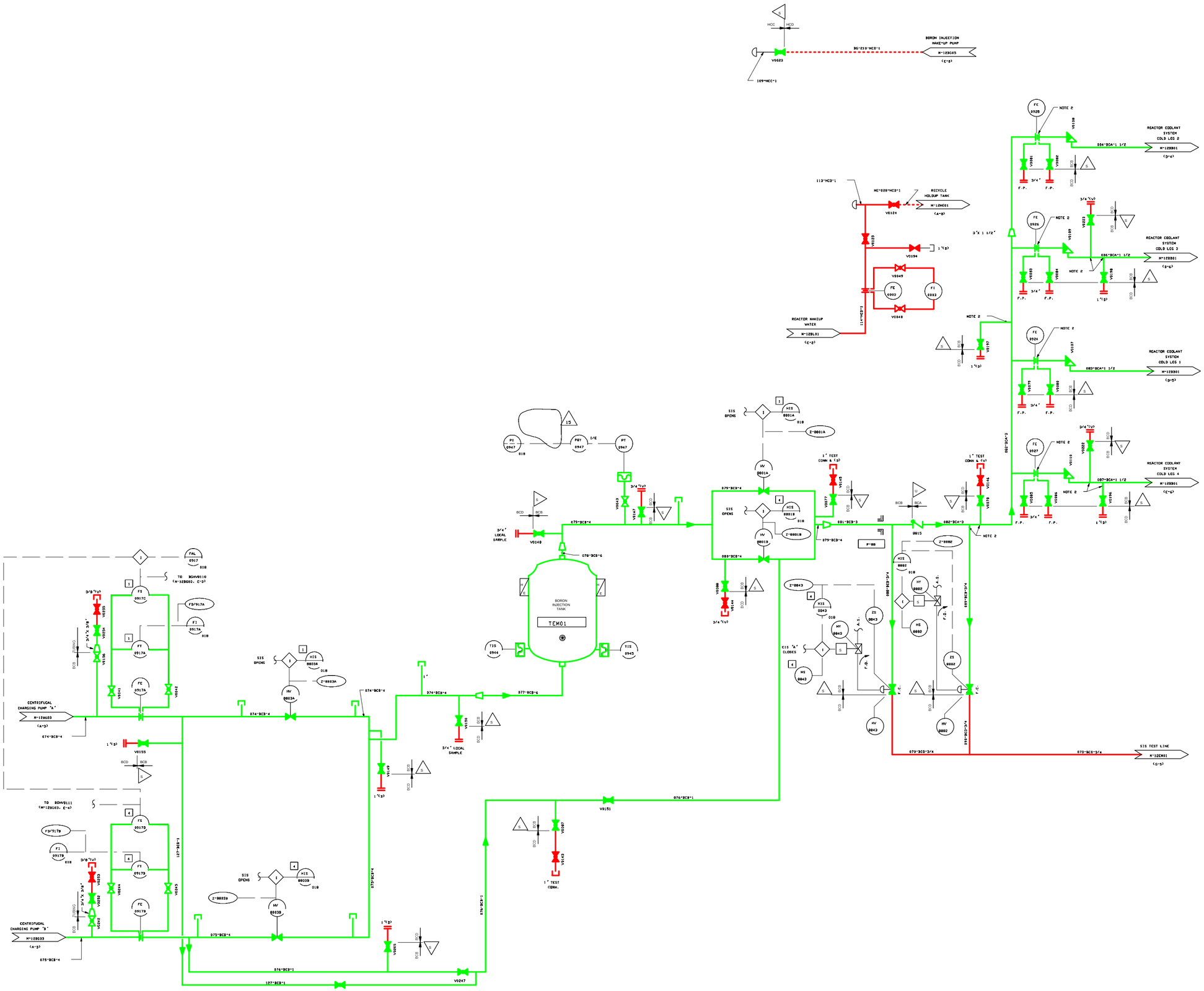
HCC
HCD
3G-219-HC8-1
BORON INJECTION MAKE-UP PUMP
M-12BG05
(E-8)
V0623
109-HCC-1
113-HC3-1
HC-828-HC3-1
RECYCLE HOLDUP TANK
M-12HE01
(A-8)
V0124
1"(B)
V0194
V0049
FE 0903
FI 0903
V0048
1-GDH-111
REACTOR MAKEUP WATER
M-12BL01
(C-8)
NOTE 2
FE 0928
V0108
REACTOR COOLANT SYSTEM COLD LEG 2
M-12BB01
(D-4)
884-BCA-1 1/2
V0981
V0982
3/4"
F.P.
BCD
S
3/4"(V)
V0122
3"X 1 1/2"
FE 0926
V0109
V0823
V0824
1"(B)
884-BCA-1 1/2
REACTOR COOLANT SYSTEM COLD LEG 3
M-12BB01
(D-6)
V0157
1"(B)
FE 0924
V0107
883-BCA-1 1/2
REACTOR COOLANT SYSTEM COLD LEG 1
M-12BB01
(D-5)
V0979
V0980
FE 0927
V0110
3/4"(V)
V0282
V0985
V0986
087-BCA-1 1/2
REACTOR COOLANT SYSTEM COLD LEG 4
M-12BB01
(E-6)
1"(B)
V0146
1" TEST CONN & (V)
V0278
V0145
1" TEST CONN & (B)
V0277
V0148
SIS OPENS
HIS 8001A
1
2-8001A
HV 8001A
HV 8001B
2-8001B
HIS 8001B
V0143
V0147
3/4"(V)
3/4" LOCAL SAMPLE
V0149
675-BCB-4
676-BCB-4
BORON INJECTION TANK
TEM01
T1S 0944
T1S 0945
678-BCB-6
679-BCB-4
680-BCB-3
F-88
681-BCB-3
V0288
V0144
3/4"(V)
2-8015
HIS 8002
HY 8002
HS 8002
ZS 8002
F.C.
2-8043
HIS 8043
HY 8043
HS 8043
ZS 8043
C1S 'A' CLOSES
A.S.
F.O.
682-BCA-3
684-BCA-3
686-BCA-3
679-BCB-3/4
670-BCE-3/4
SIS TEST LINE
M-12EM01
(G-5)
FAL 0917
TO BOHV8110 (M-12BG03, E-3)
FS 0917C
FT 0917A
FE 0917A
FS/917A
FI 0917A
3/8"(V)
3/4"X 3/4"
V0836
V0838
V0841
V0842
CENTRIFUGAL CHARGING PUMP 'A'
M-12BG03
(A-3)
074-BCB-4
V0155
1"(B)
TO BOHV8111 (M-12BG03, E-4)
FS 0917D
FT 0917B
FE 0917B
FS/917B
FI 0917B
V0843
V0844
V0845
V0846
CENTRIFUGAL CHARGING PUMP 'B'
M-12BG03
(A-3)
075-BCB-4
SIS OPENS
HIS 8003A
HV 8003A
2-8003A
074-BCB-4
1"
074-BCB-4
077-BCB-6
3/4" LOCAL SAMPLE
V0159
1"(B)
V0149
1"(B)
SIS OPENS
HIS 8003B
HV 8003B
2-8003B
075-BCB-4
1"(B)
V0985
076-BCB-1
V0151
V0987
V0143
1" TEST CONN.
076-BCB-1
074-BCB-1
127-BCB-1
V0246
V0247
NOTES
1. FOR GENERAL NOTES & REFERENCES SEE DWG. M-12EM01.
2. SEE DRAWINGS M-12EM02, M-13EM39 AND M-12EM10 FOR EQUIPMENT NOT SHOWN ON THIS DRAWING THAT HAS BEEN PERMANENTLY REMOVED FROM SERVICE
ANY REVISION TO THIS DRAWING MAY REQUIRE A REVISION TO M-12EM03.
USAR FIG. 6.3-1-03
ESSENTIAL DRAWING
REVISED
ISSUED
INCORPORATED CHG. DOC.
VUF-R-12EM02-14-4, 8/08
CHANGE PKG. NO. 89913
THIS ENG. SUPERSEDES R#
REV.
THIS ENG. SUPERSCEDES
REV.
REVISION NOTES:
WOLF CREEK NUCLEAR OPERATING CORPORATION
ELECTRONIC APPROVAL
PIPING & INSTRUMENTATION DIAGRAM
HIGH PRESSURE COOLANT
INJECTION SYSTEM
SCALE
NONE
DRAWING NUMBER
LR-WCGS-EM-M-12EM02
SHEET
REV
15
34X44 E SIZE

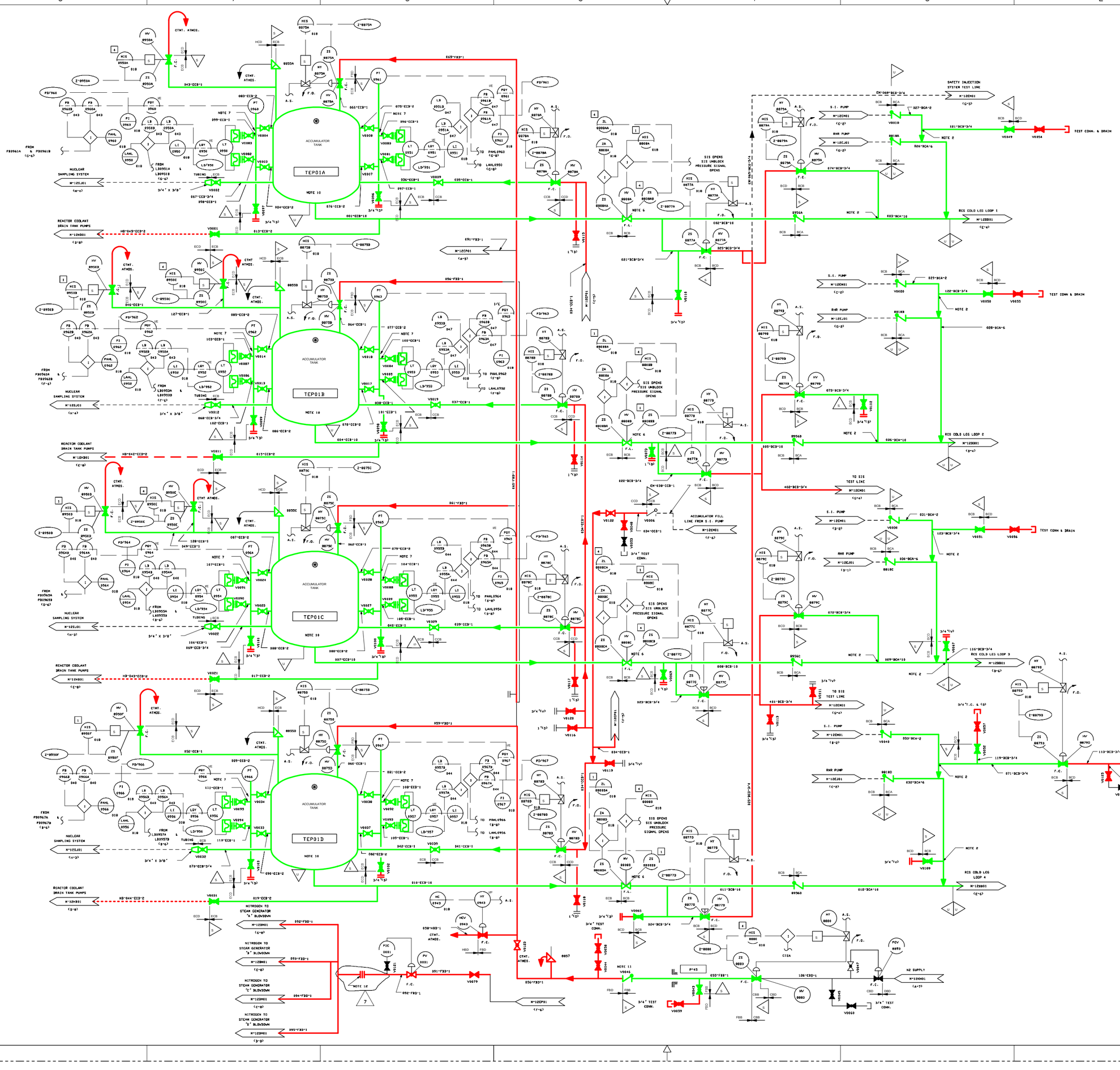

NOTES

1. ALL WELDS IN ASME SECTION III, CLASS I COMPONENTS AND ASME SECTION III, CLASS I PIPING OF NOMINAL PIPE SIZE GREATER THAN 1" MAY BE SUBJECT TO VOLUMETRIC EXAMINATION DURING PRESERVICE INSPECTION (PSI) AND/OR INSERVICE INSPECTION (ISI) PROGRAMS. THE SPECIFIC WELDS AND THEIR INSPECTION REQUIREMENTS ARE DELINEATED IN THE APPLICABLE PSI/ISI WORK PLANS PROVIDED UNDER SPECIFICATION M-109. BOUNDARIES OF THESE PIPING SYSTEMS ARE IDENTIFIED WITH A SYMBOL FOR CLARITY.
2. PROVIDE 3/8" I.D. FLOW RESTRICTOR FOR INTERFACE BOUNDARY BETWEEN QUALITY GROUP CLASSIFICATION "A" AND "B". INSERVICE INSPECTION REQUIREMENTS NOT APPLICABLE TO THE QUALITY GROUP CLASSIFICATION "B".
3. THIS DRAWING IS BASED ON WESTINGHOUSE DRAWING M-738-00012.
4. DELETED.
5. DELETED.
6. THE MOTOR CONTROL CENTER CIRCUIT BREAKER SHALL BE LOCKED FOR VALVES MV-8808A, B, C & D, UNDER NORMAL PLANT OPERATION IN THE POWER DISCONNECTED POSITION.
7. THE 2" DIAMETER ACCUMULATOR STANDPIPE, LOCATED BETWEEN THE UPPER AND LOWER TANK TAPS, SHOULD HAVE TRANSMITTER TAPS LOCATED 8 INCHES ABOVE AND BELOW THE NORMAL WATER LEVEL OF THE ACCUMULATOR TANK.
8. WELDS IN ASME SECTION III, CLASS 2 PIPING SYSTEMS OF NOMINAL PIPE SIZE GREATER THAN 4", WITHIN THE BOUNDARIES IDENTIFIED BY THE SYMBOL MAY BE SUBJECT TO VOLUMETRIC EXAMINATION DURING THE PSI AND/OR ISI PROGRAMS. THE SPECIFIC WELDS WITHIN THESE BOUNDARIES AND THEIR INSPECTION REQUIREMENTS ARE DELINEATED IN THE PSI/ISI WORK PLANS PROVIDED UNDER SPECIFICATION M-109.
9. SYMBOLS ARE PROVIDED FOR CLARITY TO INDICATE THAT PIPING BOUNDARIES, WHICH ARE SUBJECT TO PSI/ISI PROGRAMS, CONTINUE ONTO OTHER P & ID'S.
10. WELDS OF THE ACCUMULATOR TANKS ARE SUBJECT TO PSI/ISI EXAMINATION AS DELINEATED IN THE PSI/ISI WORK PLANS PROVIDED UNDER SPECIFICATION M-109.
11. VALVE V0046 IS BOUGHT UNDER SPECIFICATION J-603A AND IS VALVE CLASS ECD. SEE DWG. J-603A-00091.
12. FIELD FABRICATED BLIND FLANGE, PER CCP 06403 MAY BE INSTALLED.

7

ANY REVISION TO THIS DRAWING MAY REQUIRE A REVISION TO M-12EM03.

USAR FIG. 6.3-1-04

ESSENTIAL DRAWING

REVISED	INCORPORATED		CHANGE 06403
ISSUED	CHG. DOC.	WIP-M-12EP01-03-A, R/1	PKG. NO.

THIS DWG. SUPERSEDED BY: REV. THIS DWG. SUPERSEDES: REV.

REVISION NOTES:

WOLF CREEK
NUCLEAR OPERATING CORPORATION

ELECTRONIC APPROVAL

PIPING & INSTRUMENTATION DIAGRAM
ACCUMULATOR SAFETY INJECTION

SCALE	DRAWING NUMBER	SHEET	REV
NONE	LR-WCGS-EM-M-12EP01		07

34X44 E SIZE

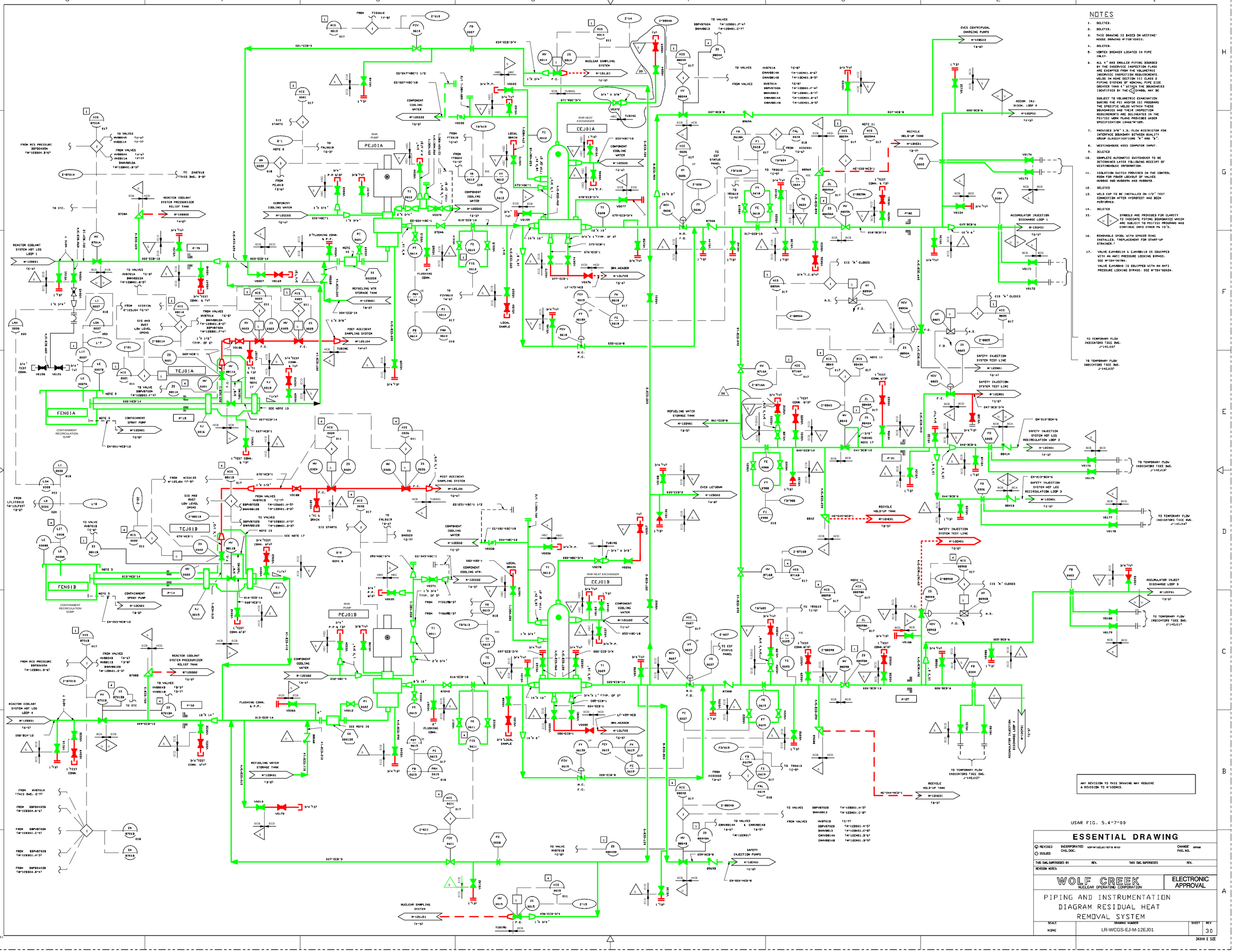
NOTES
1. DELETED.
2. DELETED.
3. THIS DRAWING IS BASED ON WESTINGHOUSE DRAWING M-730-E8815.
4. DELETED.
5. VORTEX BREAKER LOCATED IN PIPE INLET.
6. ALL 4" AND SMALLER PIPING BORDERED BY THE INSERVICE INSPECTION FLAGS ARE EXEMPTED FROM THE VOLUMETRIC INSERVICE INSPECTION REQUIREMENTS. WELDS IN ASME SECTION III CLASS 2 PIPING SYSTEMS OF NOMINAL PIPE SIZE GREATER THAN 4" WITHIN THE BOUNDARIES IDENTIFIED BY THE SYMBOL MAY BE SUBJECT TO VOLUMETRIC EXAMINATION DURING THE PSI AND/OR ISI PROGRAMS. THE SPECIFIC WELDS WITHIN THESE BOUNDARIES AND THEIR INSPECTION REQUIREMENTS ARE DELINEATED IN THE PSI/ISI WORK PLANS PROVIDED UNDER SPECIFICATION 13466-M-189.
7. PROVIDED 3/8" I.D. FLOW RESTRICTOR FOR INTERFACE BOUNDARY BETWEEN QUALITY GROUP CLASSIFICATIONS "A" AND "B".
8. WESTINGHOUSE NSSS COMPUTER INPUT.
9. DELETED
10. COMPLETE AUTOMATIC SWITCHOVER TO BE DETERMINED LATER FOLLOWING RECEIPT OF WESTINGHOUSE INFORMATION.
11. ISOLATION SWITCH PROVIDED IN THE CONTROL ROOM FOR POWER LOCKOUT OF VALVES HV8884 AND HV8889A AND HV8889B.
12. DELETED
13. WELD CAP TO BE INSTALLED ON 1/8" TEST CONNECTION AFTER HYDROTEST HAS BEEN PERFORMED.
14. DELETED
15. SYMBOLS ARE PROVIDED FOR CLARITY TO INDICATE PIPING BOUNDARIES WHICH ARE SUBJECT TO PSI/ISI PROGRAMS AND CONTINUE ONTO OTHER PA 19 'S.
16. REMOVABLE SPOOL WITH SPACER RING INSTALLED. (REPLACEMENT FOR START-UP STRAINER.)
17. VALVE EMHV8811A & EJHV8811B IS EQUIPPED WITH AN ANTI PRESSURE LOCKING BYPASS. SEE M-724-00784.
VALVE EMHV8840 IS EQUIPPED WITH AN ANTI PRESSURE LOCKING BYPASS. SEE M-724-00624.
TEJ01A
TEJ01B
FEN01A
FEN01B
PEJ01A
PEJ01B
EEJ01A
EEJ01B
REACTOR COOLANT SYSTEM HOT LEG LOOP 1
REACTOR COOLANT SYSTEM HOT LEG LOOP 4
REACTOR COOLANT SYSTEM PRESSURIZER RELIEF TANK
CONTAINMENT SPRAY PUMP
CONTAINMENT RECIRCULATION SUMP
RHR PUMP
RHR HEAT EXCHANGER
COMPONENT COOLING WATER
REFUELING WTR STORAGE TANK
SIS AND RVST LOW LEVEL OPENS
SIS STARTS
POST ACCIDENT SAMPLING SYSTEM
NUCLEAR SAMPLING SYSTEM
CVCS CENTRIFUGAL CHARGING PUMPS
ACCUM. INJ. 31SCH. LOOP 2
RECYCLE HOLD-UP TANK
ACCUMULATOR INJECTION DISCHARGE LOOP 1
SAFETY INJECTION SYSTEM TEST LINE
SAFETY INJECTION SYSTEM HOT LEG RECIRCULATION LOOP 2
SAFETY INJECTION SYSTEM HOT LEG RECIRCULATION LOOP 3
SAFETY INJECTION PUMPS
CIS "A" CLOSES
TO TEMPORARY FLOW INDICATORS (SEE DWG. J-14EJ13)
ANY REVISION TO THIS DRAWING MAY REQUIRE A REVISION TO M-12EM03.
USAR FIG. 5.4-7-00
ESSENTIAL DRAWING
ELECTRONIC APPROVAL
WOLF CREEK NUCLEAR OPERATING CORPORATION
PIPING AND INSTRUMENTATION DIAGRAM RESIDUAL HEAT REMOVAL SYSTEM
LR-WCGS-EJ-M-12EJ01
SCALE: NONE
SHEET: 30
REV
34X44 E SIZE

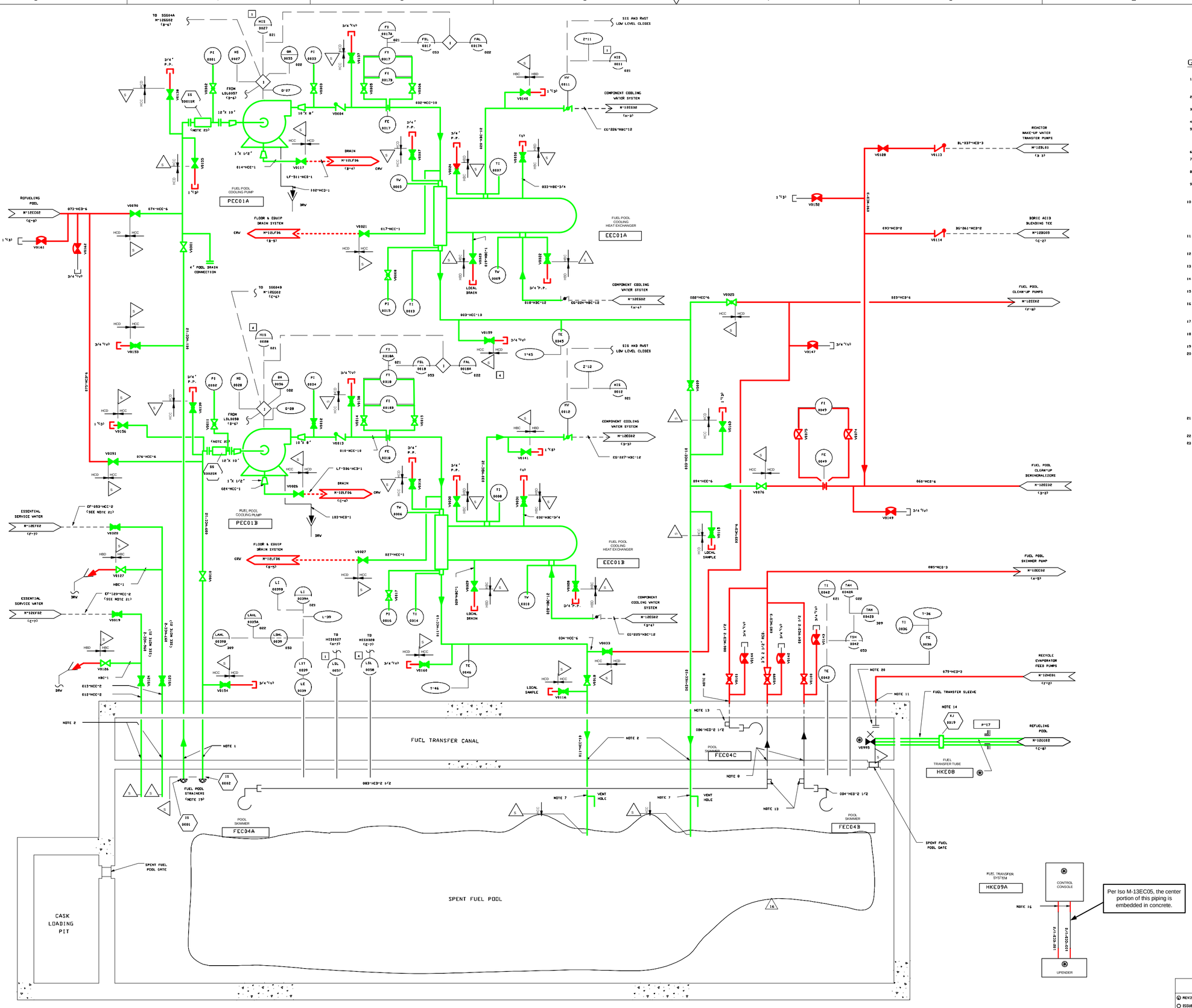

GENERAL NOTES

1. PIPING PENETRATES POOL BOUNDARY 3'-9" BELOW THE NORMAL WATER LEVEL OF THE POOL SUCTION AT 6'-0" BELOW NORMAL WATER LEVEL
2. PIPING PENETRATES POOL BOUNDARY AT 18" BELOW THE NORMAL WATER LEVEL OF THE POOL
3. PIPING PENETRATES POOL BOUNDARY 6'-0" BELOW NORMAL WATER LEVEL
4. DELETED
5. ALL PIPING THAT PENETRATES POOL BOUNDARY DOES SO AT EXTREME END OF FUEL TRANSFER CANAL OPPOSITE FUEL TRANSFER TUBE, WITH THE EXCEPTION OF 79-HCD-3 & 86-HCD-2 1/2
6. DELETED
7. 3" DIA. VENT HOLES TO BE LOCATED WITH CENTERLINE AT ELEVATION 2043'-2".
8. PIPING PENETRATES POOL BOUNDARY 6 INCHES BELOW NORMAL POOL WATER LEVEL.
9. PIPING PENETRATES REFUELING POOL AT BOTTOM OF ROD CLUSTER CONTROL (RCC) CHANGING FIXTURE PIT.
10. PIPING PENETRATES REFUELING POOL ABOVE NORMAL WATER LEVEL AT THE CONTROL ROD DRIVE MECHANISM (CRDM) SEISMIC SUPPORT POCKET. REMOVABLE ELBOW, WHICH EXTENDS 13 INCHES BELOW NORMAL WATER LEVEL, WILL BE PROVIDED.
11. PIPING PENETRATES FUEL TRANSFER CANAL WALL 12 INCHES ABOVE NORMAL WATER LEVEL.
12. REFUELING POOL DRAIN LINES, FLANGED ONLY DURING REFUELING.
13. 3/4 INCH DIA. VENT HOLES TO BE LOACTED ON TOP OF PIPE.
14. EXPANSION JOINT FOR FUEL TRANSFER SLEEVE ONLY.
15. CONTAINMENT PENETRATION LINES 667, 072, AND 081 TO BE SCHEDULE 80S.
16. LINE NO. 102.103.104.105 ARE EMBEDDED & SLOPED & CONNECT THE FUEL TRANSFER SYSTEM'S CONTROL CONSOLE WITH THE UPENDING MACHINE
17. LINE NO. 107-HCD-2 TO EXTEND TO AT LEAST ELEVATION 2050' BEFORE GOODENECK.
18. DELETE 16
19. INLET STRAINER.
20. AN OWNER APPROVED, OPEN-ENDED HOSE MAY BE INSTALLED ONTO THE FLANGED END OF LINE EC-079-HCC-3. THE OPEN-ENDED PORTION OF THE HOSE MUST NOT REST BELOW LEVEL 2046'-6" IN ORDER TO ELIMINATE THE POSSIBILITY OF SIPHONING THE SPENT FUEL POOL. TO WITHSTAND A SEISMIC EVENT THE HOSE MUST BE SECURED IN A MANNER TO WITHSTAND FIVE TIMES THE WEIGHT OF THE HOSE ASSEMBLY, INCLUDING THE WEIGHT OF WATER WHEN THE HOSE IS COMPLETELY FILLED.
21. PIPING SHALL BE FABRICATED PER MS-02, CLASS MCC, EXCEPT FOR MATERIAL TYPE WHICH SHALL BE TYPE 316L. PIPING ON THE EC SYSTEM MAY BE TYPE 304
22. REMOVABLE STRAINER TO BE INSTALLED IN DRAIN INLET.
23. REMOVABLE SPOOL WITH SPACER RING INSTALLED. (REPLACEMENT FOR START-UP STRAINER)

USAR FIG. 9.1-3-01

ESSENTIAL DRAWING

REVISED / ISSUED — INCORPORATED CHG. DOC. — CHANGE PKG. NO.

THIS DWG. SUPERSEDED BY — REV. — THIS DWG. SUPERSEDES — REV.

REVISION NOTES:

WOLF CREEK NUCLEAR OPERATING CORPORATION

ELECTRONIC APPROVAL

PIPING & INSTRUMENTATION DIAGRAM
FUEL POOL COOLING
AND CLEAN-UP SYSTEM

SCALE	DRAWING NUMBER	SHEET	REV
NONE	LR-WCGS-EC-M-12EC01		16

34X44 E SIZE

NOTES

1. FOR GENERAL NOTES, SEE M-12EC01.

REFUELING WATER STORAGE TANK M-12WM01 (C-6)
SPENT FUEL POOL M-12EC01 (F-2)
FUEL POOL COOLING LOOP M-12EC01 (C-8)
FUEL TRANSFER CANAL M-12EC01 (C-2)
SPENT FUEL POOL & FUEL TRANSFER CANAL SKIMMERS M-12EC01 (D-8)
NUCLEAR SAMPLING SYSTEM M-12SJ02 (H-6)
RESIN CHARGING TANK (WASTE) M-12WC64 (F-3)
SPENT RESIN STORAGE TANK (PRIMARY) M-12WC62 (H-5)
SPENT RESIN STORAGE TANK (PRIMARY) M-12WC62 (H-5)
SPENT RESIN SLUICE PUMP (PRIMARY) M-12WC63 (B-5)
REACTOR COOLANT DRAIN TANK PUMP M-12WB01 (H-2)
REACTOR COOLANT DRAIN TANK PUMP M-12WB01 (D-8)
RECYCLE HOLD-UP TANKS M-12HC61 (C-4)
REFUELING WATER STORAGE TANK M-12WB01 (F-8)
FUEL POOL COOLING RETURN M-12EC01 (C-8)
SPENT RESIN STORAGE TANK (PRIMARY) M-12WC62 (H-5)
HVAC M-12EC02 (F-8)
FLOOR & EQUIPMENT DRAIN SYSTEM M-12LF06 (H-5)
FLOOR & EQUIPMENT DRAIN SYSTEM M-12LF06 (F-5)
FLOOR & EQUIPMENT DRAIN SYSTEM M-12LF06 (B-3)
FLOOR & EQUIPMENT DRAIN SYSTEM M-12LF06 (G-5)
FLOOR & EQUIPMENT DRAIN SYSTEM M-12LF06 (C-5)
FLOOR & EQUIPMENT DRAIN SYSTEM M-12LF06 (C-5)

PEC02A FUEL POOL CLEAN-UP PUMP
PEC02B FUEL POOL CLEAN-UP PUMP
FEC01A FUEL POOL CLEAN-UP FILTER
FEC01B FUEL POOL CLEAN-UP FILTER
FEC03 FUEL POOL CLEAN-UP DEMINERALIZER
FEC02 FUEL POOL SKIMMER FILTER
PEC03 FUEL POOL SKIMMER PUMP
FEC04D POOL SKIMMERS
FEC04E POOL SKIMMERS
HKE08 FUEL TRANSFER TUBE
HKE09B FUEL TRANSFER SYSTEM
CONTROL CONSOLE
UPENDER
REFUELING POOL
REFUELING POOL STRAINER
FUEL TRANSFER SLEEVE
RETENTION ELEMENTS
PIPE TUNNEL
BURIED PIPE
NEAR FUEL POOL CLEANUP PUMP CONTROLS
SKIMMER PUMP DEAERATOR COLUMN

Per Iso M-13EC01, the center portion of this piping is embedded in concrete.

USAR FIG. 9.1-3-02

ESSENTIAL DRAWING			
◉ REVISED ○ ISSUED	INCORPORATED CHG. DOC.	CHANGE PKG. NO.	811339
THIS DWG. SUPERSEDES P',	REV.	THIS DWG. SUPERSEDES	REV.
REVISION NOTES:	AS-BUILT INFORMATION INCORPORATED		
WOLF CREEK NUCLEAR OPERATING CORPORATION		ELECTRONIC APPROVAL	
PIPING & INSTRUMENTATION DIAGRAM FUEL POOL COOLING AND CLEAN-UP SYSTEM			
SCALE: NONE	DRAWING NUMBER: LR-WCGS-EC-M-12EC02	SHEET: 05	REV:

34X44 E SIZE

'A' TRAIN

'B' TRAIN

FROM ULTIMATE HEAT SINK

SERVICE WATER SYSTEM

CLASS 1E SWITCHGEAR A/C CONDENSER

DIESEL GENERATOR COOLERS

CENTRIFUGAL CHARGING PUMP ROOM COOLER

SAFETY INJECTION PUMP ROOM COOLER

CONTAINMENT SPRAY PUMP ROOM COOLER

RHR PUMP ROOM COOLER

CONTROL ROOM A/C CONDENSER

AIR COMPRESSOR AND AFTER COOLER

AUXILIARY FEEDWATER PUMP ROOM COOLER

AUXILIARY FEEDWATER SYSTEM MOTOR DRIVEN PUMP

AUXILIARY FEEDWATER SYSTEM TURBINE DRIVEN PUMP

SIS. LOSS OF OFF-SITE POWER OR AUX FEED WATER LSP (FROM ESFAS)

CKA01B

NOTES

1. FOR NOTES SEE DRAWING M-12EF02

USAR FIG. 9.2-2 -01

ESSENTIAL DRAWING

(A) REVISED	INCORPORATED CHGS. DOC.	WCP-M-14EF01-10-A 8/0	CHANGE PKG. NO. 19960
○ ISSUED			

THIS ENG. SUPERSEDED BY: REV. THIS ENG. SUPERSEDES REV.

REVISION NOTES:

WOLF CREEK NUCLEAR OPERATING CORPORATION

ELECTRONIC APPROVAL

PIPING & INSTRUMENTATION DIAGRAM

ESSENTIAL SERVICE WATER SYSTEM

SCALE	DRAWING NUMBER	SHEET	REV
NONE	LR-WCGS-EF-M-12EF01		17

34X44 E SIZE

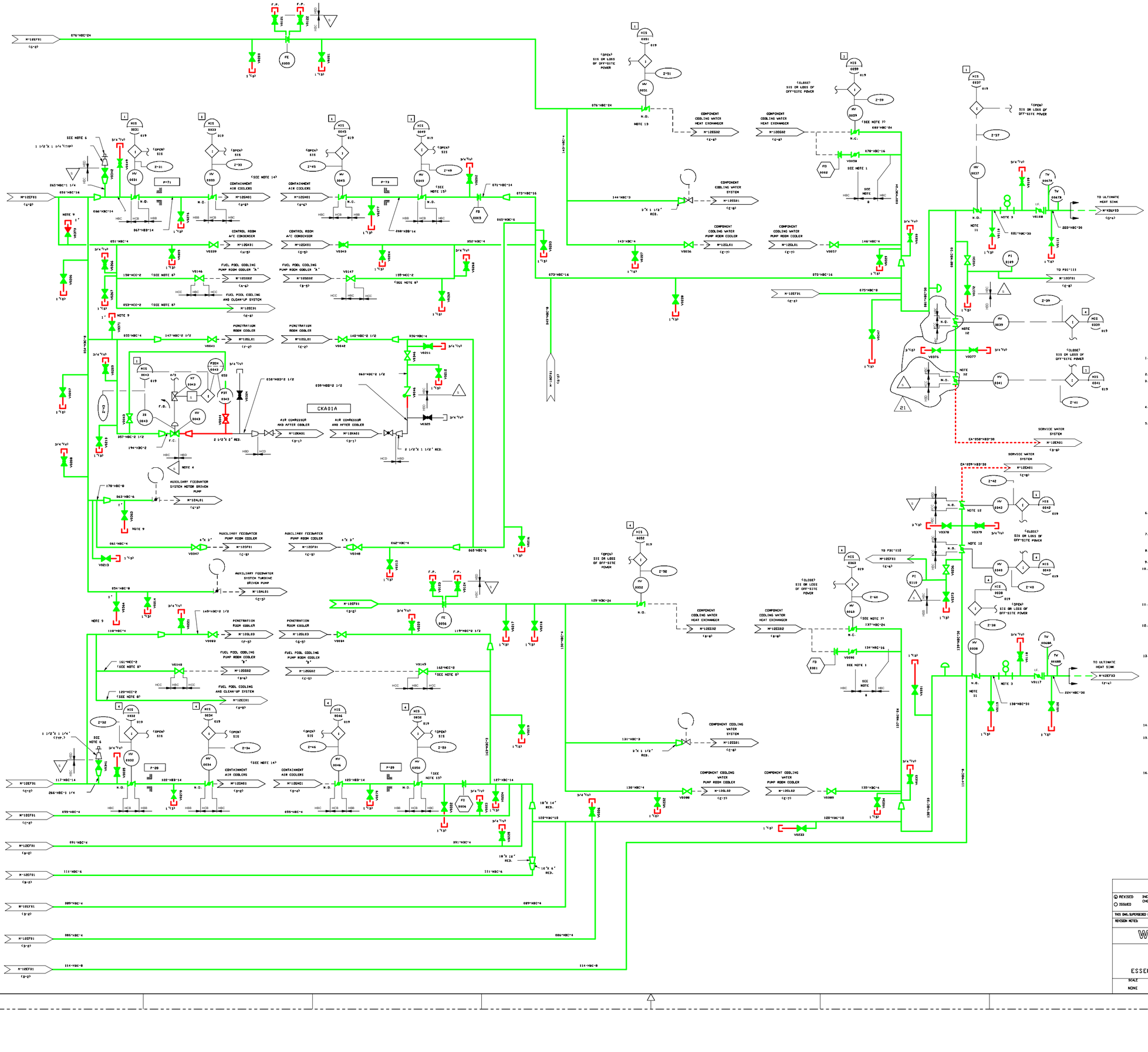

NOTES

1. VALVE ADJUSTED FOR PROPER FLOW FOR SIS OR LOSS OF OFF-SITE POWER OPERATION. AND LOCKED IN POSITION.
2. DELETED
3. THE OUTLET SPECTACLE FLANGES ARE BORED TO MATCH THE INSIDE DIAMETER OF THE PIPE. THE SPECTACLE BLIND FLANGES MAY BE SEPARATED AND STORED SAFELY IN THE ADJACENT AREA FOR FUTURE USE.
4. SEISMIC ANALYSIS AND SUPPORTS FOR PIPING EXTEND BEYOND THE INSTRUMENT CONNECTION FOR THE PBT INITIATING CLOSURE OF THE VALVE.
5. TYPICAL DETAIL FOR ALL CARBON STEEL VENTS AND DRAINS.

PIPING SHALL BE FABRICATED PER MS-02 CLASS HCE, EXCEPT FOR MATERIAL TYPE WHICH SHALL BE TYPE 316L.

6. PIPING CONNECTION PROVIDED FOR REMOVABLE TYPE ANNUBAR. ANNUBAR IS NOT TO BE USED TO SET OR VERIFY CONTAINMENT COOLER FLOW RATES DUE TO EXCESSIVE CALIBRATION ERROR.
7. WHEN OPENED, VALVES HV-0039 & HV-0040 WILL BE MAINTAINED IN A THROTTLED POSITION TO ENSURE THE COMPONENTS RED 'S FLOW.
8. PIPING SHALL BE FABRICATED PER MS-02 CLASS HCE, EXCEPT FOR MATERIAL TYPE WHICH SHALL BE TYPE 316L.
9. CHEMICAL ADDITION TAP.
10. BASED ON THE DESIGN OF THE BACKPRESSURE ORIFICES (EAF0301,EAF0306, AND EFF0689,EFF0684), VALVES EFHV0037,EFHV0038,(EFHV0039,EFHV0040,EFHV0041 & EFHV0042 MUST BE THROTTLED DURING NORMAL OPERATION AND NORMAL SHUTDOWN TO ASSURE PROPER SYSTEM BACKPRESSURE AND TO AVOID EXCESSIVE FLOW THROUGH SYSTEM COMPONENTS.
11. VALVES EFHV0037 & EFHV0038 ARE THROTTLED TO REGULATE THE FLOW RETURNING TO THE UHS DURING NORMAL OPERATION & NORMAL SHUTDOWN. VALVES FULL OPEN ON SIS OR LOSP TO ALLOW FULL FLOW TO THE UHS.
12. VALVES EFHV0039,EFHV0040,EFHV0041 & EFHV0042 ARE THROTTLED TO REGULATE THE FLOW RETURNING TO THE SERVICE WATER SYSTEM DURING NORMAL OPERATION AND NORMAL SHUTDOWN. ORIFICES DOWNSTREAM OF THE VALVES ARE SIZED FOR 6600 GPM FROM EDG WITH VALVES FULL OPEN. VALVES CLOSE ON SIS OR LOSP.
13. VALVE EFHV0031 OR EFHV0032 MAY BE THROTTLED TO MAINTAIN MINIMUM COMPONENT COOLING WATER (CCW) SYSTEM TEMPERATURE FOR THE TRAIN WITH THE OPERATING CCW HEAT EXCHANGER (HX). WHENEVER CCW HX FLOW IS REDUCED, EDG TRAIN COOLING WATER FLOW MUST ALSO BE REDUCED BY THE SAME AMOUNT. ULTIMATE HEAT SINK AND SERVICE WATER SYSTEM CROSS-CONNECT RETURN VALVES EFHV0037,EFHV0038, EFHV0039,EFHV0040,EFHV0041, OR EFHV0042 SHALL BE THROTTLED TO ASSURE ADEQUATE BACKPRESSURE IS MAINTAINED FOR COMPONENTS AND VALVES. WHENEVER CCW FLOW IS ADJUSTED, VALVES EFHV0049,EFHV0050 MAY NEED TO BE ADJUSTED TO MAINTAIN ADEQUATE CONTAINMENT AIR COOLER FLOW AND BACKPRESSURE.
14. SEE M-11E781 FOR DESIGN REQUIREMENT AT REDUCED EDG FLOW TO 5080 A- B, C & D.
15. EFHV0049, EFHV0050 TO BE MANUALLY ADJUSTED TO A THROTTLED POSITION AS DETERMINED BY FLOW BALANCING. WHENEVER EDG FLOW IS ADJUSTED, VALVES EFHV-49, 50 MAY NEED TO BE ADJUSTED TO MAINTAIN ADEQUATE CONTAINMENT AIR COOLER FLOW AND BACKPRESSURE.
16. COMBINATION 1" VENT AND CHEMICAL ADDITION TAP.

USAR FIG. 9.2-2-02

ESSENTIAL DRAWING

REVISED / ISSUED — INCORPORATED CHG. DOC. VCP-M-12EF08-16-A, R/08 — CHANGE PKGS. NO. 07416

THIS DWG. SUPERSEDES R', REV. — THIS DWG. SUPERSEDES REV.

REVISION NOTES

WOLF CREEK NUCLEAR OPERATING CORPORATION — ELECTRONIC APPROVAL

PIPING & INSTRUMENTATION DIAGRAM

ESSENTIAL SERVICE WATER SYSTEM

SCALE	DRAWING NUMBER	SHEET	REV
NONE	LR-WCGS-EF-M-12EF02		21

34X44 E SIZE

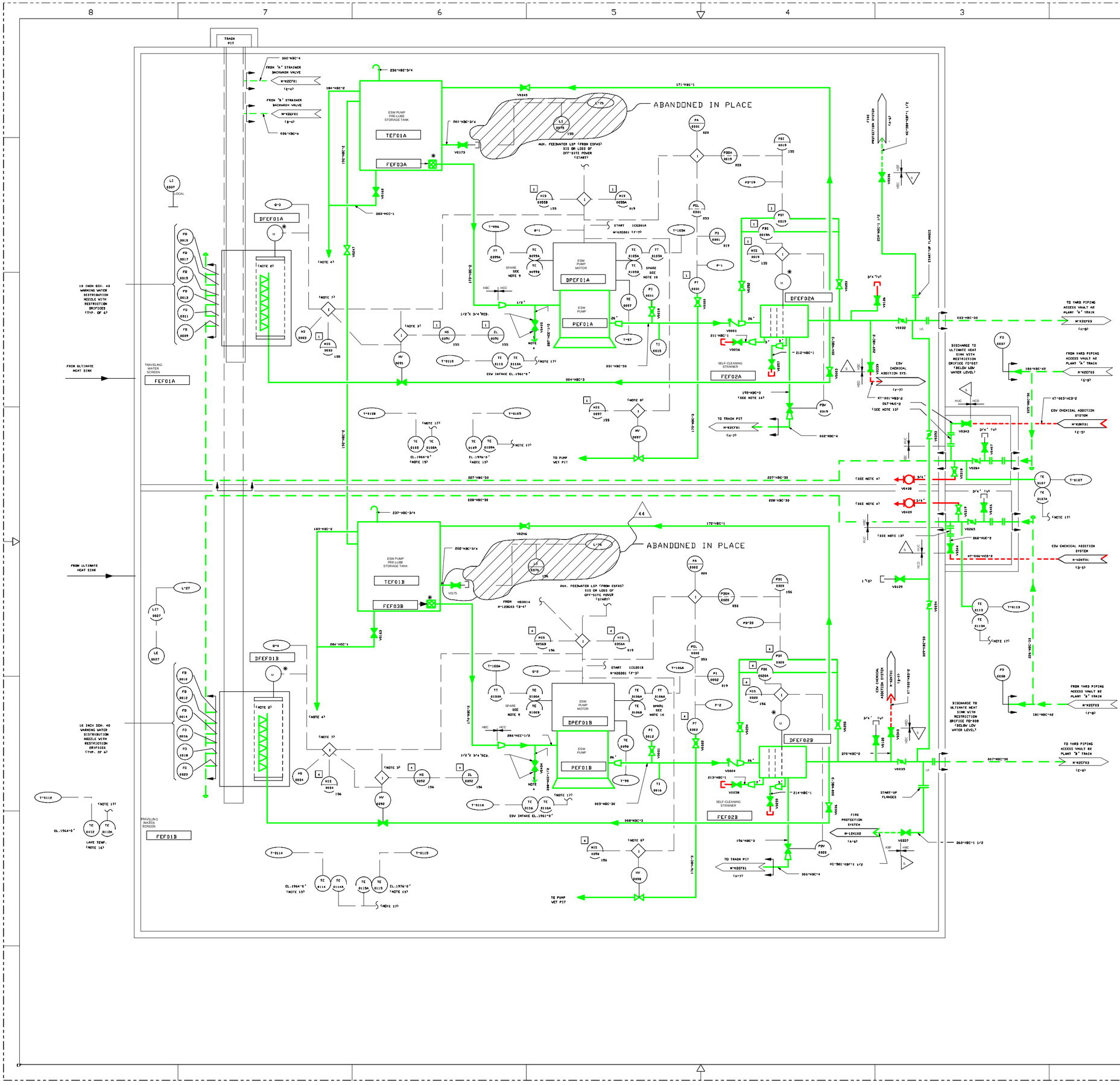

NOTES

1. ALL MECHANICAL COMPONENTS, PIPING AND VALVES SHOWN ON THIS P & ID ARE SEISMIC CATEGORY 1.
2. SPRAY PIPING BY VENDOR. SPRAY NOZZLES BY TRAVELING WATER SCREEN VENDOR.
3. ESV PUMP START OPENS SCREEN WASH WATER VALVE
4. ROUTED TO JUST ABOVE FLOOR DRAIN TO ALLOW OPERATOR TO VISUALLY VERIFY FLOW.
5. THIS IS A DUAL PURPOSE RESTRICTION ORIFICE USED TO PROVIDE BOTH BACKPRESSURE REQUIRED FOLLOWING A LOCA AND FLOW MEASUREMENT DURING NORMAL OPERATION AND NORMAL SHUTDOWNS.
6. DELETED
7. TRAVELING WATER SCREEN STARTS AFTER ESV PUMP START AND SCREEN WASH WATER VALVE OPENS.
8. VALVE CLOSES 15 SECONDS AFTER ESV PUMP STARTS.
9. COMPUTER POINT IS FOR MOTOR LOWER GUIDE BEARING THERMOCOUPLE.
10. COMPUTER POINT IS FOR MOTOR UPPER THRUST BEARING THERMOCOUPLE.
11. THE FOLLOWING CODE/NON-CODE BOUNDARIES APPLY TO ALL CARBON STEEL VENTS AND DRAINS:

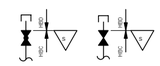

12. THE TEMPERATURE INDICATOR IS PROVIDED FOR MONITORING DURING COLD WEATHER CONDITIONS. THIS MONITORING IS REQUIRED TO ASSURE THAT THE VAULT TEMPERATURES DO NOT DROP BELOW 35°F. THE VAULT IS DESIGNED TO REMAIN DRY AND THE ASME PIPING IS NOT DESIGNED FOR SUBMERGENCE. THE LEVEL INDICATOR IS PROVIDED FOR PERIODIC MONITORING TO ENSURE THAT THE LONG TERM OPERABILITY OF THE PIPING IS NOT AFFECTED. A PUMPOUT LINE AND ASSOCIATED VENT ALLOW FOR WATER REMOVAL WITHOUT OPENING THE VAULTS.
13. REMOVABLE SPOOL TO SERVICE CHEMICAL ADDITION INJECTION NOZZLE.
14. ONE ELBOW ON THIS LINE IS REPLACED WITH SS 34400WP304.
15. LOCATE CLOSE TO TRASH RACK IN A 3"DIA.,SCH.40S PIPE.
16. 3"DIA.,SCH.40S PIPE CLOSE TO LAKE.
17. TERMINATED AT LOCAL TEMPERATURE TESTPOINT PANEL.

USAR FIG. 9.2-2-03

ESSENTIAL DRAWING

REVISED / ISSUED	INCORPORATED CHG. DOC.	V1P-M-K2EF01-K2-A, 8/00	CHANGE PKG. NO. 10310
THIS DWG. SUPERSEDED BY	REV.	THIS DWG. SUPERSEDES	REV.
REVISION NOTES:			

WOLF CREEK NUCLEAR OPERATING CORPORATION

ELECTRONIC APPROVAL

PIPING AND INSTRUMENTATION DIAGRAM
ESSENTIAL SERVICE WATER SYSTEM

SCALE	DRAWING NUMBER	SHEET	REV
NONE	LR-WCGS-EF-M-K2EF01	44	

34X44 E SIZE

NOTES

1. FOR NOTES SEE DWG. M-K2EF01.
2. SPARE INSTRUMENTS FEFT0003,FEFT0004, FEFI0003 & FEFI0004 IN PLACE.
3. THE INTERNALS OF VALVE EFV0241 AND EFV0242 HAVE BEEN REMOVED PER DCP 09756. (08)

USAR FIG. 9.2-2 -4

ESSENTIAL DRAWING

⊗ REVISED ○ ISSUED	INCORPORATED CHG. DOC. WIP-M-K2EF03-06-A, R/00	CHANGE PKG. NO. 09756
THIS DWG. SUPERSEDED BY: REV.	THIS DWG. SUPERSEDES REV.	
REVISION NOTES:		

WOLF CREEK
NUCLEAR OPERATING CORPORATION

ELECTRONIC APPROVAL

PIPING & INSTRUMENTATION DIAGRAM ESSENTIAL SERVICE WATER SYSTEM

SCALE	DRAWING NUMBER	SHEET	REV
NONE	LR-WCGS-EF-M-K2EF03		08

34X44 E SIZE

PUMP CONNECTION DETAILS

(SEE NOTE 2)

CONN.	PUMP	VALVE NO.	LINE NO.	PURPOSE
C	A	———	280-HBD-3/4"	STUFF. BOX OVERFLOW
	C	———	281-HBD-3/4"	STUFF. BOX OVERFLOW
	B	———	282-HBD-3/4"	STUFF. BOX OVERFLOW
	D	———	283-HBD-3/4"	STUFF. BOX OVERFLOW
D	A	———	284-HBD-3/4"	STUFF. BOX OVERFLOW
	C	———	285-HBD-3/4"	STUFF. BOX OVERFLOW
	B	———	286-HBD-3/4"	STUFF. BOX OVERFLOW
	D	———	287-HBD-3/4"	STUFF. BOX OVERFLOW
E	A	V0297	———	CASING VENT
	C	V0299	———	CASING VENT
	B	V0301	———	CASING VENT
	D	V0303	———	CASING VENT
F	ALL	PLUGGED		CASING PRIME
G	A	V0343	288-HBC-3/4"	CASING DRAIN
	C	V0344	289-HBC-3/4"	CASING DRAIN
	B	V0345	290-HBC-3/4"	CASING DRAIN
	D	V0346	291-HBC-3/4"	CASING DRAIN
H	A	V0347	292-HBC-3/4"	CASING DRAIN
	C	V0348	293-HBC-3/4"	CASING DRAIN
	B	V0349	294-HBC-3/4"	CASING DRAIN
	D	V0350	295-HBC-3/4"	CASING DRAIN
I	ALL	PLUGGED		OIL DRAIN
J	ALL	PLUGGED		OIL DRAIN
K	A	V0298	274-HBC-1"	BASEPLATE DRAIN
	C	V0300	275-HBC-1"	BASEPLATE DRAIN
	B	V0302	276-HBC-1"	BASEPLATE DRAIN
	D	V0304	277-HBC-1"	BASEPLATE DRAIN

NOTES

1. ALL CAPPED DRAINS: DRAIN TO PORTABLE CONTAINER OR TO THE COMPONENT COOLING WATER SURGE TANK VIA PORTABLE PUMP.
2. THE FOLLOWING APPLIES TO ALL VENTS, DRAINS, LOCAL SAMPLES, FLUSH CONNECTIONS, TEST CONNECTIONS AND FLOW TAPS:

3. DELETED
4. PUMP MOTOR DRIVING END BEARING TEMPERATURE (THERMOCOUPLE).
5. PUMP MOTOR OUTBOARD END BEARING TEMPERATURE (THERMOCOUPLE).
6. DRILLED 3/16" DIAMETER RESTRICTION TO MINIMIZE FLOW TO RE.
7. DELETED
8. DELETED
9. REMOVABLE SPOOL WITH SPACER RING INSTALLED. (REPLACEMENT FOR START-UP STRAINER).

USAR FIG. 9.2-15-01

ESSENTIAL DRAWING

⊗ REVISED INCORPORATED CHG. DOC. DDCN M-12EG01-11-02 CHANGE PKG. NO. 09471
○ ISSUED

THIS DWG. SUPERSEDED BY REV. THIS DWG. SUPERSEDES REV.

REVISION NOTES:

WOLF CREEK NUCLEAR OPERATING CORPORATION

ELECTRONIC APPROVAL

PIPING & INSTRUMENTATION DIAGRAM COMPONENT COOLING WATER SYSTEM

SCALE	DRAWING NUMBER	SHEET	REV
NONE	LR-WCGS-EG-M-12EG01		13

34X44 E SIZE

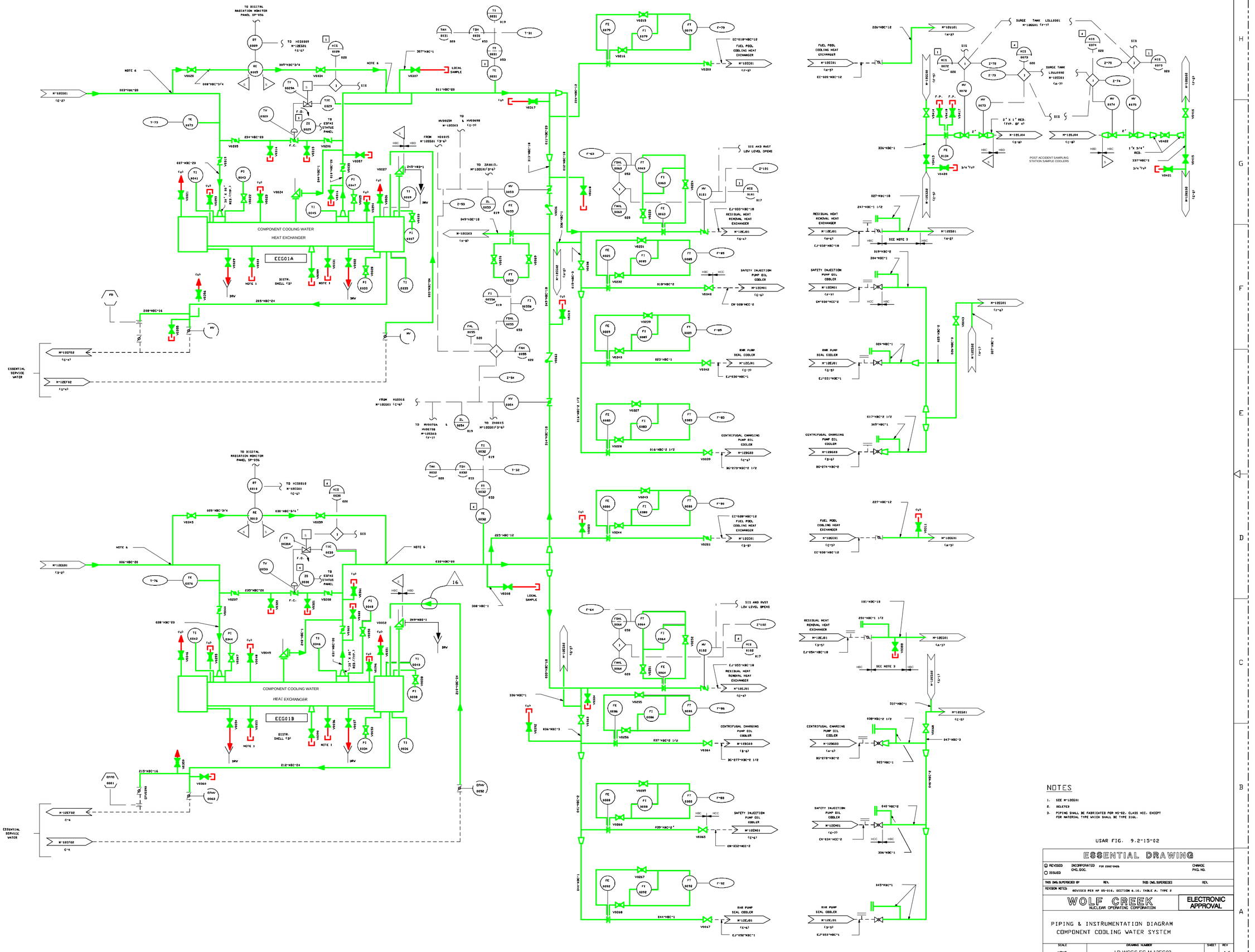

NOTES

1. SEE M-12EG01
2. DELETED
3. PIPING SHALL BE FABRICATED PER MS-02, CLASS HCC, EXCEPT FOR MATERIAL TYPE WHICH SHALL BE TYPE 316L.

USAR FIG. 9.2-15-02

ESSENTIAL DRAWING

REVISED / ISSUED — INCORPORATED CHG. DOC. — PIR 2006-0406 — CHANGE PKG. NO.

THIS DWG SUPERSEDED BY — REV. — THIS DWG SUPERSEDES — REV.

REVISION NOTES: REVISED PER AP 05-010, SECTION 6.16, TABLE A, TYPE B

WOLF CREEK NUCLEAR OPERATING CORPORATION

ELECTRONIC APPROVAL

PIPING & INSTRUMENTATION DIAGRAM
COMPONENT COOLING WATER SYSTEM

SCALE	DRAWING NUMBER	SHEET	REV
NONE	LR-WCGS-EG-M-12EG02		16

34X44 E SIZE

NOTES

1. SEE M-12EG01
2. SEISMIC ANALYSIS AND SUPPORTS FOR PIPING EXTEND BEYOND THE INSTRUMENT CONNECTION FOR FT0167.
3. ISOLATION SWITCH PROVIDED IN THE CONTROL ROOM FOR POWER LOCKOUT OF VALVES HV0126, HV0127, HV0130, HV0131, HV0132, AND HV0133. A C15-9 SIGNAL IS NOT REQUIRED FOR CLOSURE OF THESE VALVES SINCE THEY ARE MAINTAINED CLOSED.
4. FLOW INDICATOR EGF10117 IS ABANDONED IN PLACE.

07

REACTOR COOLANT PUMPS

USAR FIG. 9.2-15-03

ESSENTIAL DRAWING

(X) REVISED	INCORPORATED CHG. DOC.	CHANGE PKG. NO.	68961
( ) ISSUED			
THIS DWG SUPERSEDES	REV.	THIS DWG SUPERSEDES	REV.
REVISION NOTES:			

WOLF CREEK NUCLEAR OPERATING CORPORATION

ELECTRONIC APPROVAL

PIPING AND INSTRUMENTATION DIAGRAM
COMPONENT COOLING WATER SYSTEM

SCALE	DRAWING NUMBER	SHEET	REV
NONE	LR-WCGS-EG-M-12EG03		07

34X44 E SIZE

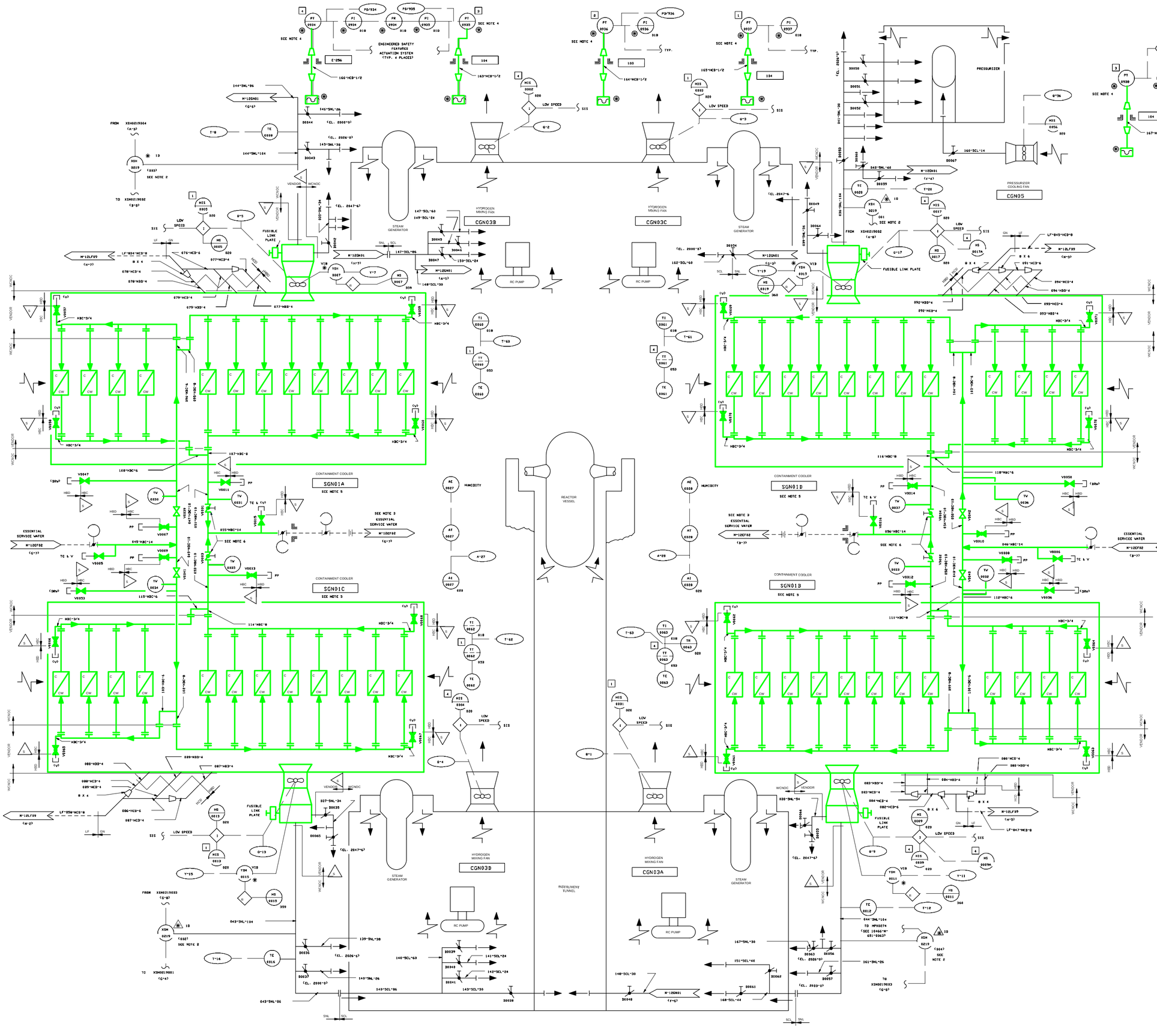

NOTE

1. DUCTWORK SIZE ARE INDICATED AS EQUIVALENT ROUND.
2. LETTERS AND NUMBERS REFER TO DESIGNATIONS IN THE FIRE PROTECTION SYSTEM. XX (REFER TO M-12EK01) NUMBERS IN THE PARENTHESIS REFER TO ZONE DETECTOR SEQUENCE NUMBERS.
3. SEE M-12GN01 FOR DESIGN REQUIREMENT AT REDUCED ESW FLOW TO SGN01A, B, C, & D.
4. ORIGINAL TRANSMITTERS SUPPLIED BY WESTINGHOUSE ARE BARTON. RESIGNENT TRANSMITTERS HAVE BEEN PROCURED AS REPLACEMENTS & WILL BE INSTALLED ON AN AS NEEDED BASIS.
5. INDIVIDUAL COOLING COILS MAY BE REMOVED PER ENGINEERING APPROVAL. WO 04-02611975-001 CUT COIL AT EACH END AND ADDED BLIND FLANGE. SEE VO FOR MORE INFO. 14
6. V081, V082, V083, AND V084 TO BE MANUALLY ADJUSTED TO A THROTTLED POSITION AS DETERMINED BY FLOW BALANCING. ONCE BALANCED, THESE VALVES TO BE LOCKED TO THE THROTTLED POSITION. WHENEVER ESW FLOW IS ADJUSTED, THESE VALVES MAY NEED TO BE ADJUSTED.

USAR FIG. 9.4-6-01

ESSENTIAL DRAWING

◉ REVISED ○ ISSUED	INCORPORATED CHG. DOC.	CHANGE PKG. NOS.	07111
THIS DWG. SUPERSEDES IT,	REV.	THIS DWG. SUPERSEDES	REV.
REVISION NOTES:	AS-BUILT INFORMATION INCORPORATED PER WO 04-02611975-002		

WOLF CREEK NUCLEAR OPERATING CORPORATION — ELECTRONIC APPROVAL

PIPING AND INSTRUMENTATION DIAGRAM
CONTAINMENT COOLING SYSTEM

SCALE	DRAWING NUMBER	SHEET	REV
NONE	LR-WCGS-GN-M-12GN01		14

34X44 E SIZE

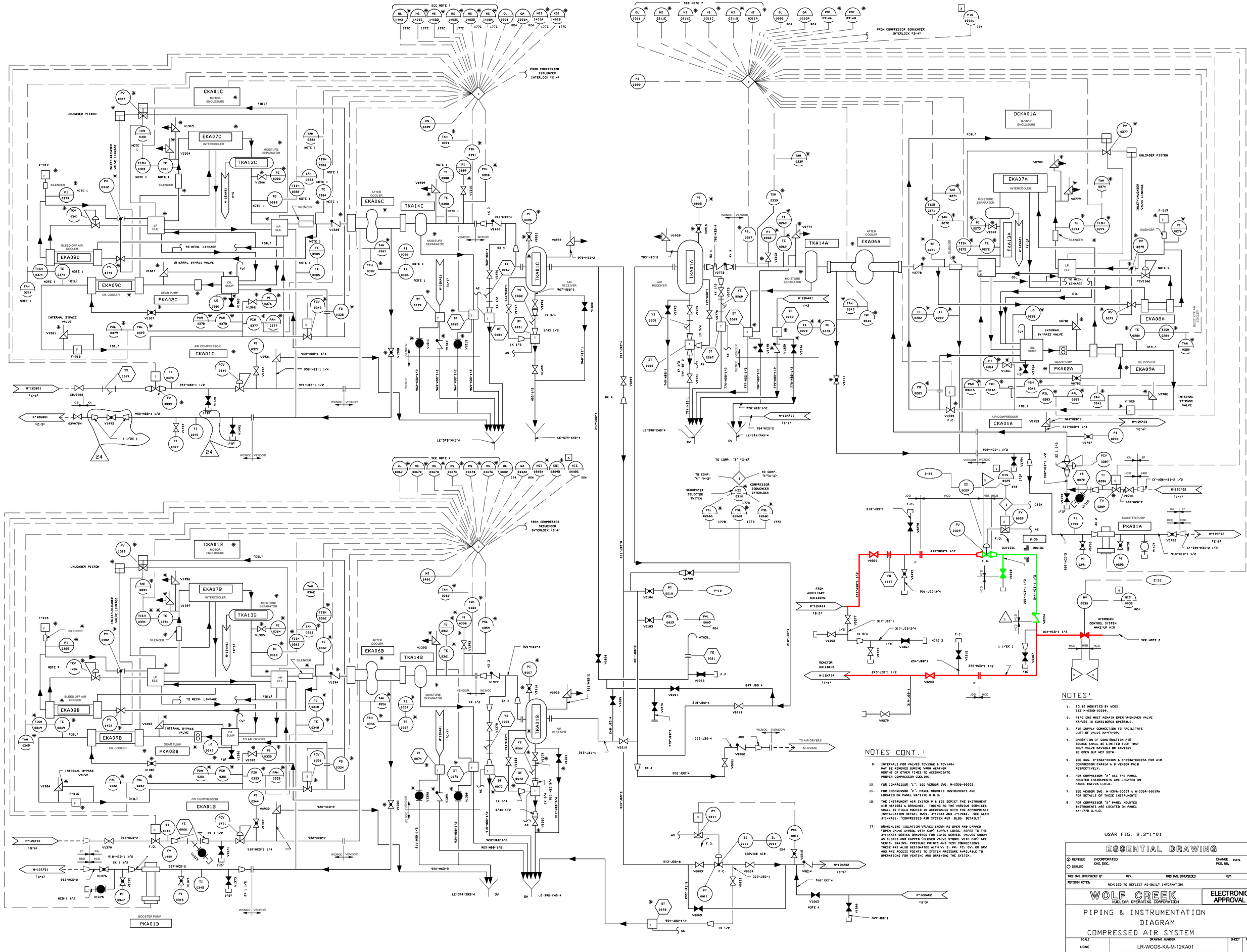

NOTES:

1. TO BE MODIFIED BY WCGS. SEE M-0508-00009.
2. PIPE END MUST REMAIN OPEN WHENEVER VALVE KAHV05 IS CONSIDERED OPERABLE.
3. AIR SUPPLY CONNECTION TO FACILITATE LLRT OF VALVE KA-PV-29.
4. OPERATION OF CONSTRUCTION AIR SOURCE SHALL BE LIMITED SUCH THAT ONLY VALVE KAV1864 OR KAV1865 BE OPEN BUT NOT BOTH.
5. SEE DWG. M-0508-00005 & M-0508A-00005A FOR AIR COMPRESSOR CKA01A & B VENDOR P&ID RESPECTIVELY.
6. FOR COMPRESSOR 'A' ALL THE PANEL MOUNTED INSTRUMENTS ARE LOCATED ON PANEL KA177A U.N.O.
7. SEE VENDOR DWG. M-0508-00009 & M-0508A-00009A FOR DETAILS OF THESE INSTRUMENTS
8. FOR COMPRESSOR 'B' PANEL MOUNTED INSTRUMENTS ARE LOCATED ON PANEL KA-177B U.N.O.

NOTES CONT.:

9. INTERNALS FOR VALVES TCV1362 & TCV1404 MAY BE REMOVED DURING WARM WEATHER MONTHS OR OTHER TIMES TO ACCOMMODATE PROPER COMPRESSOR COOLING.
10. FOR COMPRESSOR 'C'. SEE VENDOR DWG. M-0508-00005.
11. FOR COMPRESSOR 'C'. PANEL MOUNTED INSTRUMENTS ARE LOCATED ON PANEL KA-177C U.N.O.
12. THE INSTRUMENT AIR SYSTEM P & IDS DEPICT THE INSTRUMENT AIR HEADERS & BRANCHES. TUBING TO THE VARIOUS SERVICES SHALL BE FIELD ROUTED IN ACCORDANCE WITH THE APPROPRIATE INSTALLATION DETAIL DWGS. J-1702A AND J-1702B. SEE ALSO J-1404A1. "COMPRESSED AIR SYSTEM AUX. BLDG. DETAILS"
13. BRANCHLINE ISOLATION VALVES SHOWN AS OPEN AND CAPPED (OPEN VALVE SYMBOL WITH CAP) SUPPLY LOADS. REFER TO THE J-1404BX SERIES DRAWINGS FOR LOADS SERVED. VALVES SHOWN AS CLOSED AND CAPPED (CLOSED VALVE SYMBOL WITH CAP) ARE VENTS, DRAINS, PRESSURE POINTS AND TEST CONNECTIONS. THESE ARE ALSO DESIGNATED WITH V, D, PP, TC, DV, OR DRV AND ARE ACCESS POINTS TO SYSTEM PRESSURE AVAILABLE TO OPERATIONS FOR VENTING AND DRAINING THE SYSTEM.

USAR FIG. 9.3-1-01

ESSENTIAL DRAWING

(A) REVISED	INCORPORATED	CHANGE	55074
( ) ISSUED	CHG. DOC.	PKG. NO.	
THIS DWG SUPERSEDED BY	REV.	THIS DWG SUPERSEDES	REV.
REVISION NOTES:	REVISED TO REFLECT AS-BUILT INFORMATION		

WOLF CREEK NUCLEAR OPERATING CORPORATION

ELECTRONIC APPROVAL

PIPING & INSTRUMENTATION DIAGRAM COMPRESSED AIR SYSTEM

SCALE	DRAWING NUMBER	SHEET	REV
NONE	LR-WCGS-KA-M-12KA01		0

34X44 E SIZE

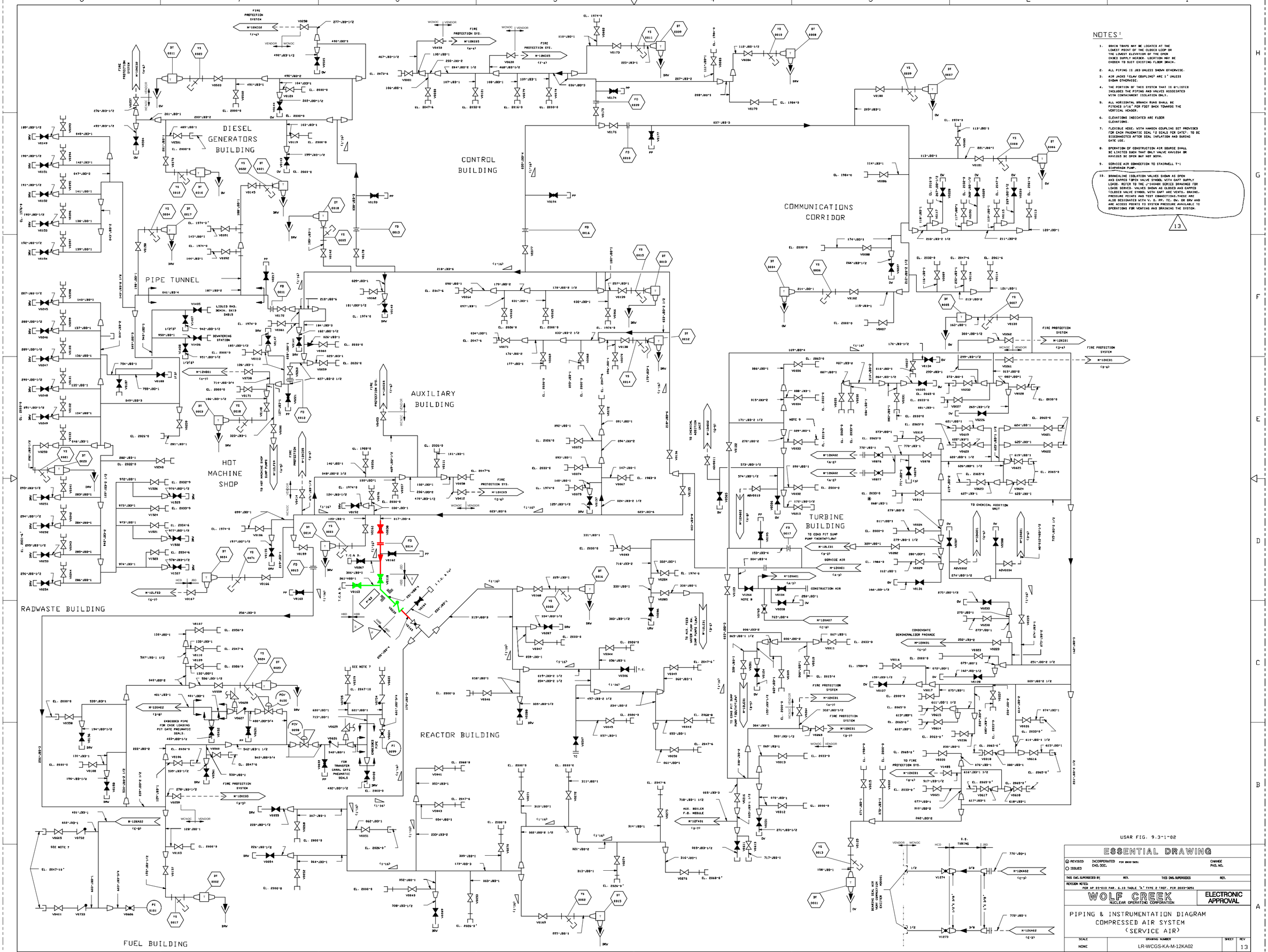

NOTES:

1. DRAIN TRAPS MAY BE LOCATED AT THE LOWEST POINT OF THE CLOSED LOOP OR THE LOWEST ELEVATION OF THE OPEN ENDED SUPPLY HEADER. LOCATION MAY BE CHOSEN TO SUIT EXISTING FLOOR DRAIN.
2. ALL PIPING IS JB3 UNLESS SHOWN OTHERWISE.
3. AIR JACKS 'CLAW COUPLING' ARC 3" UNLESS SHOWN OTHERWISE.
4. THE PORTION OF THIS SYSTEM THAT IS SEISMICALLY INCLUDES THE PIPING AND VALVES ASSOCIATED WITH CONTAINMENT ISOLATION ONLY.
5. ALL HORIZONTAL BRANCH RUNS SHALL BE PITCHED 1/16" PER FOOT BACK TOWARDS THE VERTICAL HEADER.
6. ELEVATIONS INDICATED ARE FLOOR ELEVATIONS.
7. FLEXIBLE HOSE, WITH HANSEN COUPLING SET PROVIDED FOR EACH PNUEMATIC SEAL (2 SEALS PER GATE). TO BE DISCONNECTED AFTER SEAL INFLATION AND DURING GATE USE.
8. OPERATION OF CONSTRUCTION AIR SOURCE SHALL BE LIMITED SUCH THAT ONLY VALVE KAV1264 OR KAV1265 BE OPEN BUT NOT BOTH.
9. SERVICE AIR CONNECTION TO STARWELL T-1 DIAPHRAGM PUMP.
10. BRANCHLINE ISOLATION VALVES SHOWN AS OPEN AND CAPPED (OPEN VALVE SYMBOL WITH CAP) SUPPLY LOADS. REFER TO THE J-144XABX SERIES DRAWINGS FOR LOADS SERVED. VALVES SHOWN AS CLOSED AND CAPPED (CLOSED VALVE SYMBOL WITH CAP) ARE VENTS, DRAINS, PRESSURE POINTS AND TEST CONNECTIONS. THESE ARE ALSO DESIGNATED WITH V, D, PP, TC, DV, OR DRV AND ARE ACCESS POINTS TO SYSTEM PRESSURE AVAILABLE TO OPERATIONS FOR VENTING AND DRAINING THE SYSTEM.

13

USAR FIG. 9.3-1-02

ESSENTIAL DRAWING

◉ REVISED	INCORPORATED PIR 2003-3051	CHANGE PKG. NO.	
○ ISSUED	CHG. DOC.		
THIS DWG. SUPERCEDED BY:	REV.	THIS DWG. SUPERSEDES	REV.

REVISION NOTES:
PER AP 03-010 PAR. 6.10 TABLE "A" TYPE 2 (REF. PIR 2003-3051

WOLF CREEK NUCLEAR OPERATING CORPORATION

ELECTRONIC APPROVAL

PIPING & INSTRUMENTATION DIAGRAM
COMPRESSED AIR SYSTEM
(SERVICE AIR)

SCALE	DRAWING NUMBER	SHEET	REV
NONE	LR-WCGS-KA-M-12KA02	13	

34X44 E SIZE

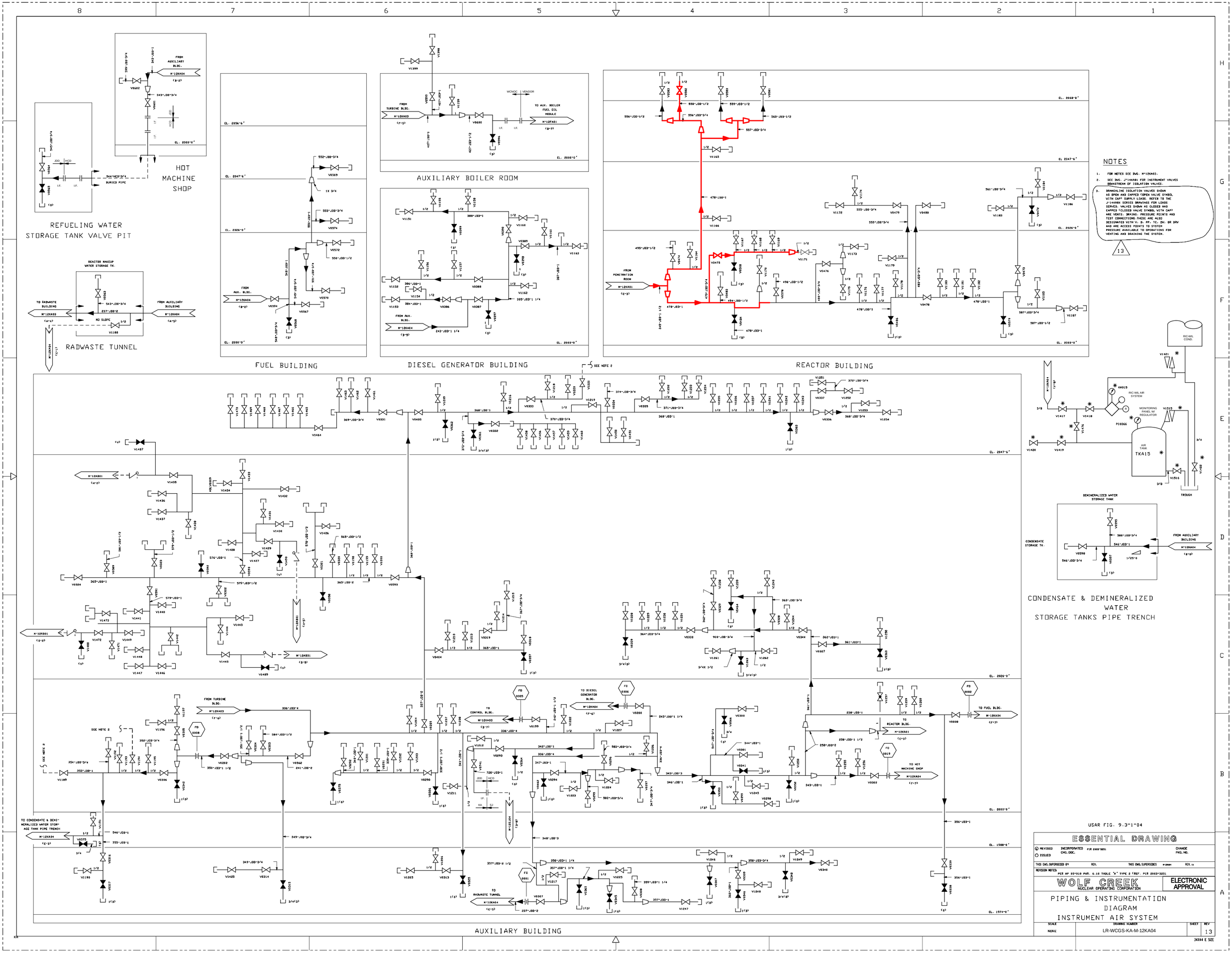

HOT MACHINE SHOP
REFUELING WATER STORAGE TANK VALVE PIT
RADWASTE TUNNEL
FUEL BUILDING
AUXILIARY BOILER ROOM
DIESEL GENERATOR BUILDING
REACTOR BUILDING
AUXILIARY BUILDING
CONDENSATE & DEMINERALIZED WATER STORAGE TANKS PIPE TRENCH
NOTES
1. FOR NOTES SEE DWG. M-12KA03.
2. SEE DWG. J-14KA01 FOR INSTRUMENT VALVES DOWNSTREAM OF ISOLATION VALVES.
3. BRANCHLINE ISOLATION VALVES SHOWN AS OPEN AND CAPPED (OPEN VALVE SYMBOL WITH CAP) SUPPLY LOADS. REFER TO THE J-14KA01 SERIES DRAWINGS FOR LOADS SERVED. VALVES SHOWN AS CLOSED AND CAPPED (CLOSED VALVE SYMBOL WITH CAP) ARE VENTS, DRAINS, PRESSURE POINTS AND TEST CONNECTIONS. THESE ARE ALSO DESIGNATED WITH V, D, PP, TC, DW, OR DRV AND ARE ACCESS POINTS TO SYSTEM PRESSURE AVAILABLE TO OPERATIONS FOR VENTING AND DRAINING THE SYSTEM.
13
USAR FIG. 9.3-1-04
ESSENTIAL DRAWING
REVISED
ISSUED
INCORPORATED CHG. DOC.
CHANGE PKG. NO.
THIS DWG. SUPERSEDED BY
REV.
THIS DWG. SUPERSEDES
REV. 11
REVISION NOTES
PER AP 05-010 PAR. 6.10 TABLE "A" TYPE 2 (REF. PIR 2003-3251
WOLF CREEK
NUCLEAR OPERATING CORPORATION
ELECTRONIC APPROVAL
PIPING & INSTRUMENTATION DIAGRAM
INSTRUMENT AIR SYSTEM
SCALE
NONE
DRAWING NUMBER
LR-WCGS-KA-M-12KA04
SHEET
REV
13
34X44 E SIZE

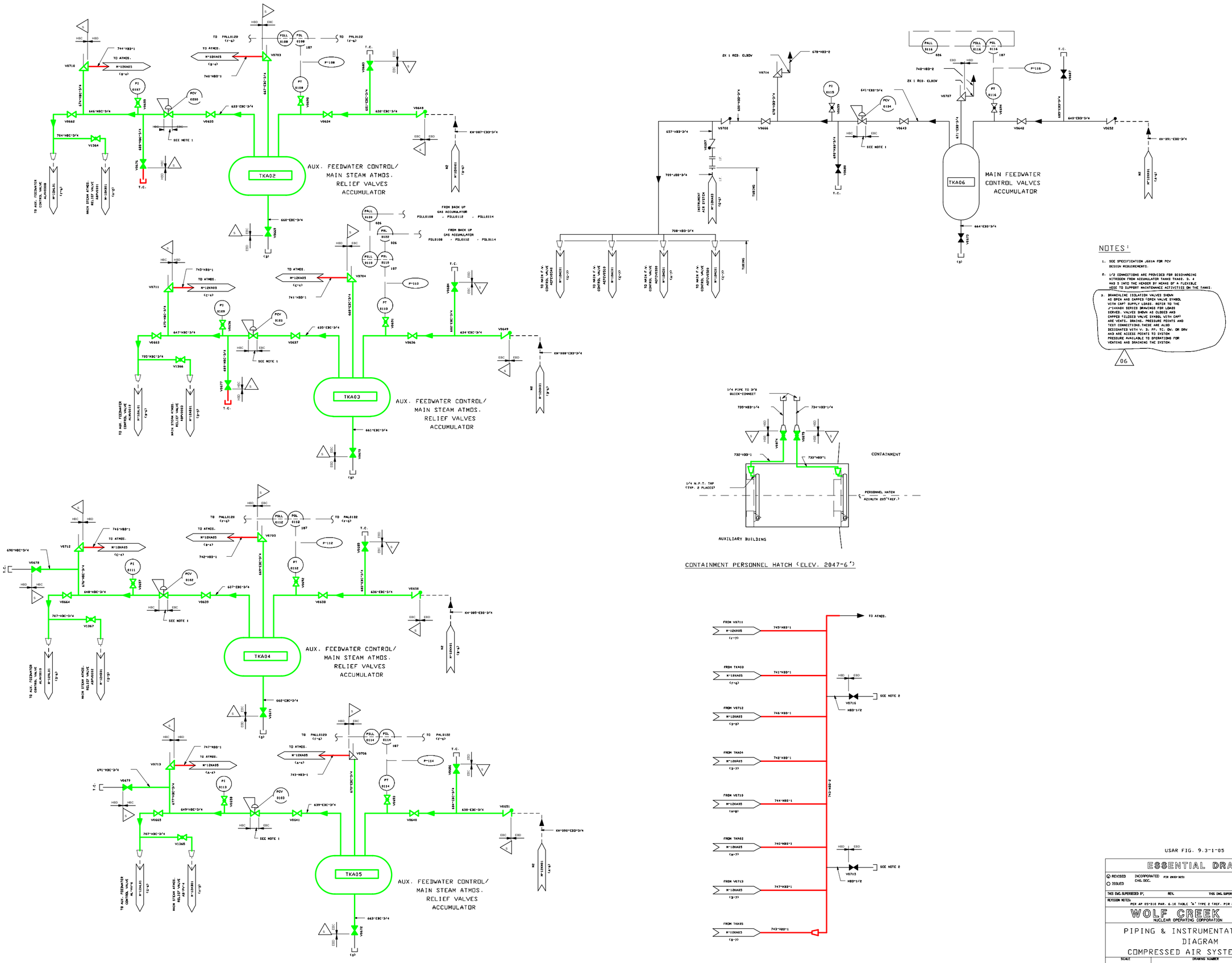

NOTES:

1. SEE SPECIFICATION J601A FOR PCV DESIGN REQUIREMENTS.
2. 1/2 CONNECTIONS ARE PROVIDED FOR DISCHARGING NITROGEN FROM ACCUMULATOR TANKS TKA02, 3, 4 AND 5 INTO THE HEADER BY MEANS OF A FLEXIBLE HOSE TO SUPPORT MAINTENANCE ACTIVITIES ON THE TANKS.
3. BRANCHLINE ISOLATION VALVES SHOWN AS OPEN AND CAPPED (OPEN VALVE SYMBOL WITH CAP) SUPPLY LOADS. REFER TO THE J-14XA05 SERIES DRAWINGS FOR LOADS SERVED. VALVES SHOWN AS CLOSED AND CAPPED (CLOSED VALVE SYMBOL WITH CAP) ARE VENTS, DRAINS, PRESSURE POINTS AND TEST CONNECTIONS. THESE ARE ALSO DESIGNATED WITH V, D, PP, TC, OV, OR DRV AND ARE ACCESS POINTS TO SYSTEM PRESSURE AVAILABLE TO OPERATIONS FOR VENTING AND DRAINING THE SYSTEM.

06

USAR FIG. 9.3-1-05

ESSENTIAL DRAWING

REVISED / ISSUED — INCORPORATED CHG. DOC. PIR 2003-3251 — CHANGE PKG. NO.

THIS DWG. SUPERSEDED BY, REV. — THIS DWG. SUPERSEDES P-10000FP REV. 04

REVISION NOTES: PER AP 05-310 PAR. 6.10 TABLE "A" TYPE 2 (REF. PIR 2003-3251

WOLF CREEK NUCLEAR OPERATING CORPORATION

ELECTRONIC APPROVAL

PIPING & INSTRUMENTATION DIAGRAM
COMPRESSED AIR SYSTEM

SCALE	DRAWING NUMBER	SHEET	REV
NONE	LR-WCGS-KA-M-12KA05		06

34X44 E SIZE

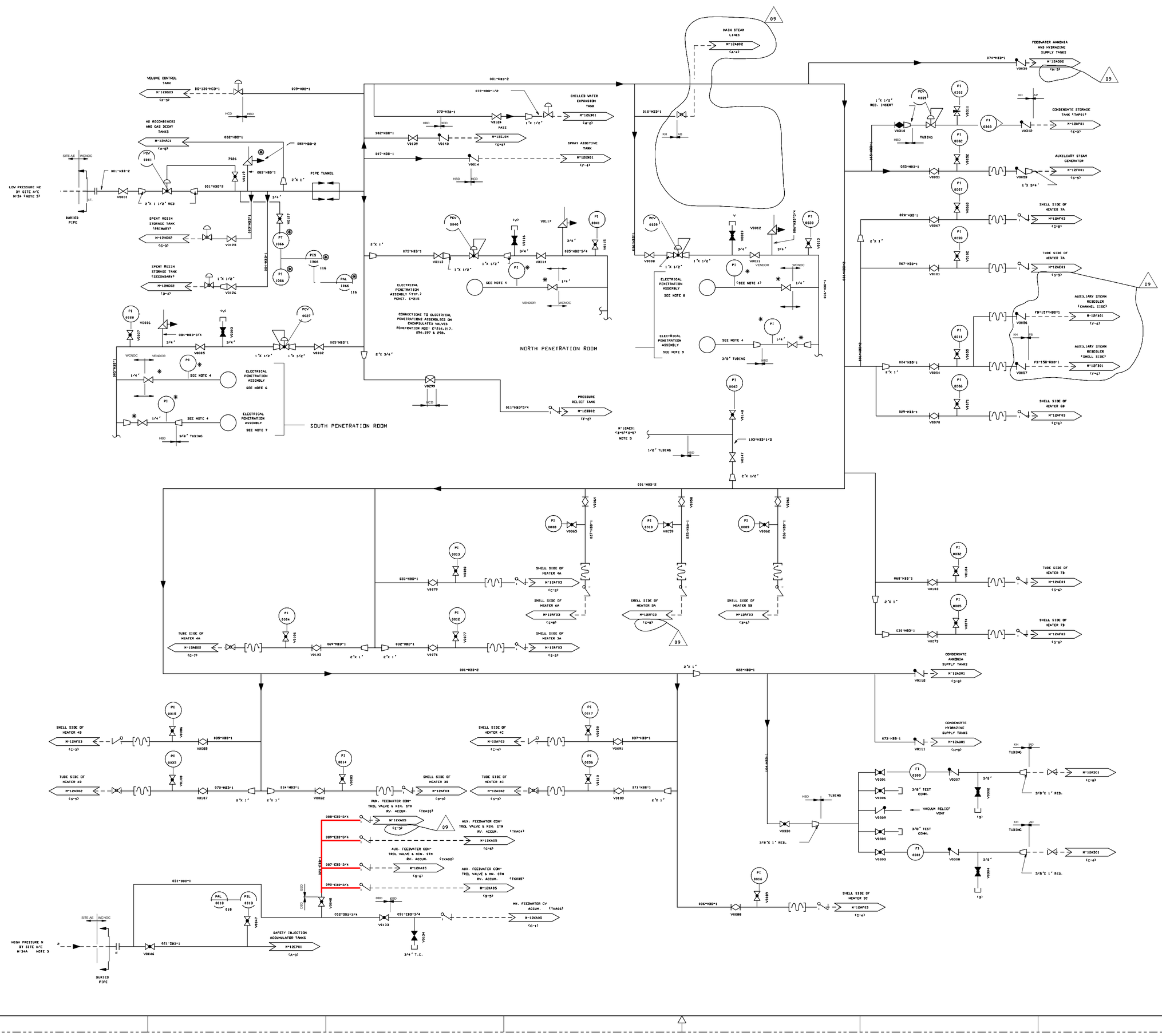

NOTES

1. FOR P & ID LEGEND AND SYMBOLS SEE DRAWINGS M-020101 THRU M-020104.
2. DELETED.
3. MECHANICAL DESIGNATION PER M-0GD01.
4. COMPONENT NUMBERS FOR PIS ASSOCIATED WITH N SUPPLY TO ELECTRICAL PENETRATIONS WILL BE THE SAMEAS THE PENETRATION NUMBER. ASSOCIATED VENDOR SUPPLIED VALVE WILL BE SIMILARLY NUMBERED, BUT WITH A LETTER "V" PREFIX.
5. FIELD ROUTES TUBING TO SERVE AS NITROGEN BACK-UP FOR LOSS OF CONTROL AIR TO VALVES AC-FV-19 AND AC-FV-18.
6. FOR PENETRATION NOS. E-249,250,252,253,254,255 AND 259.
7. FOR PENETRATION NOS. E-207,208,216,218,219,222, 223,224,225,226,233,234,249, AND 263.
8. FOR PENETRATION NOS. E-288,289,290,291,292,293, 294 AND 295.
9. FOR PENETRATION NOS. E-264,265,267,268,269,271, 272,274,275,276,277,278,279,280,281,282,283, 284,285 AND 287.

USAR FIG. 9.3-9-01

ESSENTIAL DRAWING

◉ REVISED ○ ISSUED	INCORPORATED CHG. DOC.	P.I.R. 2004-0635	CHANGE PKG. NO.
THIS DWG. SUPERSEDED BY	REV.	THIS DWG. SUPERSEDES	REV.
REVISION NOTES:			

WOLF CREEK NUCLEAR OPERATING CORPORATION — ELECTRONIC APPROVAL

PIPING AND INSTRUMENTATION DIAGRAM
SERVICE GAS SYSTEM

SCALE	DRAWING NUMBER	SHEET	REV
NONE	LR-WCGS-KA-M-12KH01		09

34X44 E SIZE

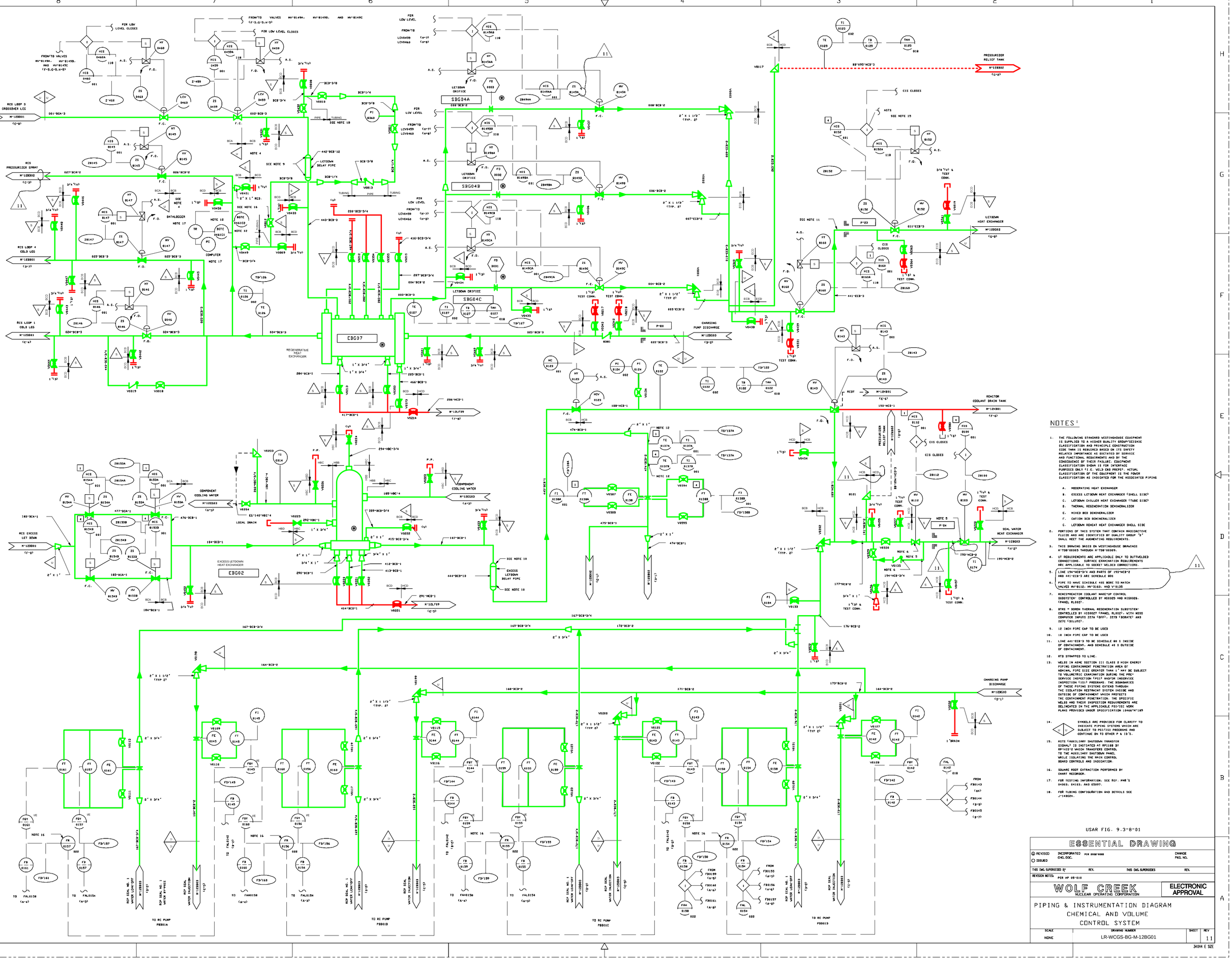

NOTES:

1. THE FOLLOWING STANDARD WESTINGHOUSE EQUIPMENT IS SUPPLIED TO A HIGHER QUALITY GROUP/SEISMIC CLASSIFICATION AND PRINCIPLE CONSTRUCTION CODE THAN IS REQUIRED BASED ON ITS SAFETY RELATED IMPORTANCE AS DICTATED BY SERVICE AND FUNCTIONAL REQUIREMENTS AND BY THE CONSEQUENCE OF THEIR FAILURE. EQUIPMENT CLASSIFICATION SHOWN IS FOR INTERFACE PURPOSES ONLY (I.E. WELD END PREPS). ACTUAL CLASSIFICATION OF THE EQUIPMENT IS THE POWER CLASSIFICATION AS INDICATED FOR THE ASSOCIATED PIPING
   A. REGENERATIVE HEAT EXCHANGER
   B. EXCESS LETDOWN HEAT EXCHANGER (SHELL SIDE)
   C. LETDOWN CHILLER HEAT EXCHANGER (TUBE SIDE)
   D. THERMAL REGENERATION DEMINERALIZER
   E. MIXED BED DEMINERALIZER
   F. CATION BED DEMINERALIZER
   G. LETDOWN REHEAT HEAT EXCHANGER SHELL SIDE
2. PORTIONS OF THIS SYSTEM THAT CONTAIN RADIOACTIVE FLUIDS ARE ARE IDENTIFIED BY QUALITY GROUP "B" SHALL MEET THE AUGMENTING REQUIREMENTS.
3. THIS DRAWING BASED ON WESTINGHOUSE DRAWINGS M-738-60065 THROUGH M-738-60069.
4. UT REQUIREMENTS ARE APPLICABLE ONLY TO BUTTWELDED CONNECTIONS. SURFACE EXAMINATION REQUIREMENTS ARE APPLICABLE TO SOCKET WELDED CONNECTIONS.
5. LINE 194"HCB-3/4 AND PARTS OF 193"HCB-2 AND 441-ECB-3 ARE SCHEDULE 80S
6. PIPE TO HAVE SCHEDULE 40S BORE TO MATCH VALVES HV-8163 AND V-8135
7. RCWCP=REACTOR COOLANT MAKE=UP CONTROL SUBSYSTEM' CONTROLLED BY HS0025 AND HS0026. (PANEL RL002).
8. RTRS = BORON THERMAL REGENERATION SUBSYSTEM' CONTROLLED BY HS0027 (PANEL RL002). WITH HSS COMPUTER INPUTS 227A (BPF), 227B (BORATE) AND 227C (BLUTE).
9. 12 INCH PIPE CAP TO BE USED
10. 10 INCH PIPE CAP TO BE USED
11. LINE 441-ECB-3 TO BE SCHEDULE 80 S INSIDE OF CONTAINMENT, AND SCHEDULE 40 S OUTSIDE OF CONTAINMENT.
12. RTD STRAPPED TO LINE.
13. WELDS IN ASME SECTION III CLASS 2 HIGH ENERGY PIPING CONTAINMENT PENETRATION AREA OF NOMINAL PIPE SIZE GREATER THAN 1" MAY BE SUBJECT TO VOLUMETRIC EXAMINATION DURING THE PRE-SERVICE INSPECTION (PSI) AND/OR INSERVICE INSPECTION (ISI) PROGRAMS. THE BOUNDARIES OF THESE PIPING SYSTEMS EXTEND THROUGH THE ISOLATION RESTRAINT SYSTEM INSIDE AND OUTSIDE OF CONTAINMENT WHICH PROTECTS THE CONTAINMENT PENETRATION. THE SPECIFIC WELDS AND THEIR INSPECTION REQUIREMENTS ARE DELINEATED IN THE APPLICABLE PSI/ISI WORK PLANS PROVIDED UNDER SPECIFICATION 10466"M"109
14. SYMBOLS ARE PROVIDED FOR CLARITY TO INDICATE PIPING SYSTEMS WHICH ARE SUBJECT TO PSI/ISI PROGRAMS AND CONTINUE ON TO OTHER P & I'S.
15. ASTS (AUXILIARY SHUTDOWN TRANSFER SIGNAL) IS INITIATED AT RP108 BY RP-108-2 WHICH TRANSFERS CONTROL TO THE AUXILIARY SHUTDOWN PANEL WHILE ISOLATING THE MAIN CONTROL BOARD CONTROLS AND INDICATION.
16. SQUARE ROOT EXTRACTION PERFORMED BY CHART RECORDER.
17. FOR TESTING INFORMATION, SEE REF. PNR'S 04003, 04103, AND 05097.
18. FOR TUBING CONFIGURATION AND DETAILS SEE J"149084.

USAR FIG. 9.3-8-01

ESSENTIAL DRAWING

◉ REVISED ○ ISSUED	INCORPORATED CHG. DOC. PIR 8608-8989	CHANGE PKG. NO.	
THIS DWG. SUPERSEDED BY	REV.	THIS DWG. SUPERSEDES	REV.
REVISION NOTES: PER AP 05-010			

WOLF CREEK NUCLEAR OPERATING CORPORATION

ELECTRONIC APPROVAL

PIPING & INSTRUMENTATION DIAGRAM CHEMICAL AND VOLUME CONTROL SYSTEM

SCALE	DRAWING NUMBER	SHEET	REV
NONE	LR-WCGS-BG-M-12BG01		11

34X44 E SIZE

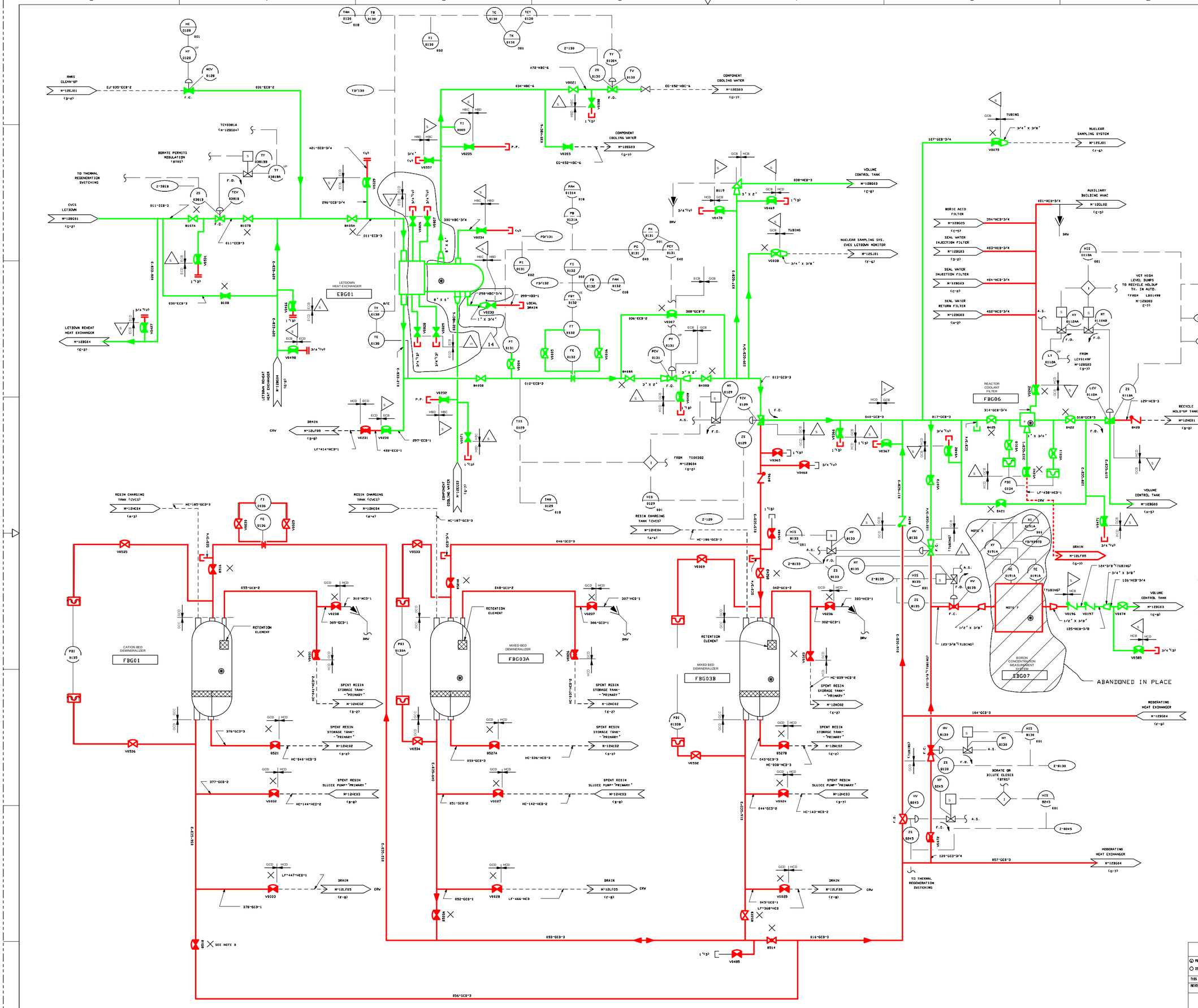

NOTES

1. THE FOLLOWING STANDARD WESTINGHOUSE EQUIPMENT IS SUPPLIED TO A HIGHER QUALITY GROUP/SEISMIC CLASSIFICATION AND PRINCIPLE CONSTRUCTION CODE THAN IS REQUIRED BASED ON ITS SAFETY RELATED IMPORTANCE AS DICTATED BY SERVICE AND FUNCTIONAL REQUIREMENTSAND BY THE CONSEQUENCE OF THEIR FAILURE. EQUIPMENT CLASSIFICATION SHOWN IS FOR INTERFACE PURPOSE ONLY (IE. WELD EN PREPS). ACTUAL CLASSIFICATION OF THE EQUIPMENT IS THE LOWER CLASSIFICATION AS INDICATED FOR THE ASSOCIATED PIPING.
   - A. MODERATING HEAT EXCHANGER
   - B. EXCESS LETDOWN HEAT EXCHANGER (SHELL SIDE)
   - C. LETDOWN CHILLER HEAT EXCHANGER (TUBE SIDE)
   - D. THERMAL REGENERATION DEMINERALIZERS
   - E. MIXED BED DEMINERALIZERS
   - F. CATION BED DEMINERALIZERS
   - G. LETDOWN REHEAT HEAT EXCHANGER (SHELL SIDE)
2. PORTIONS OF THIS SYSTEM THAT CONTAIN RADIOACTIVE FLUIDS AND ARE IDENTIFIED BY QUALITY GROUP CLASSIFICATION "D" SHALL MEET THE AUGMENTING REQUIREMENTS.
3. THIS DRAWING BASED ON WESTINGHOUSE DRAWINGS M-730-00005 THROUGH M-730-00009.
4. REFER TO NOTES 7 AND 8 ON M-12BG01.
5. PROCESSOR MEASURES NEUTRON FLUX. COMPENSATES FOR TEMPERATURE AND GIVES READ-OUT IN BORON CONCENTRATION.
6. DELETED
7. SEE WESTINGHOUSE DRAWING M-770-00031.
8. REACH ROD FOR VALVE BG8510 HAS BEEN DISCONNECTED. THIS VALVE MAY BE OPERATED LOCALLY UNTIL SUCH TIME THAT THE RADIATION LEVEL IN ROOM 1308 BECOMES PROHIBITIVE.

USAR FIG. 9.3-8-02

ESSENTIAL DRAWING

◎ REVISED ○ ISSUED	INCORPORATED CHG. DOC.	VTP-M-12BG02-013-3-1, 8/00 VTP-M-12BG02-13-4, 8/00	CHANGE PKG. NO. 11699 10324
THIS DWG. SUPERSEDED BY	REV.	THIS DWG. SUPERSEDES	REV.

REVISION NOTES:

WOLF CREEK NUCLEAR OPERATING CORPORATION

ELECTRONIC APPROVAL

PIPING & INSTRUMENTATION DIAGRAM CHEMICAL & VOLUME CONTROL SYSTEM

SCALE	DRAWING NUMBER	SHEET	REV
NONE	LR-WCGS-BG-M-12BG02		14

34X44 E SIZE

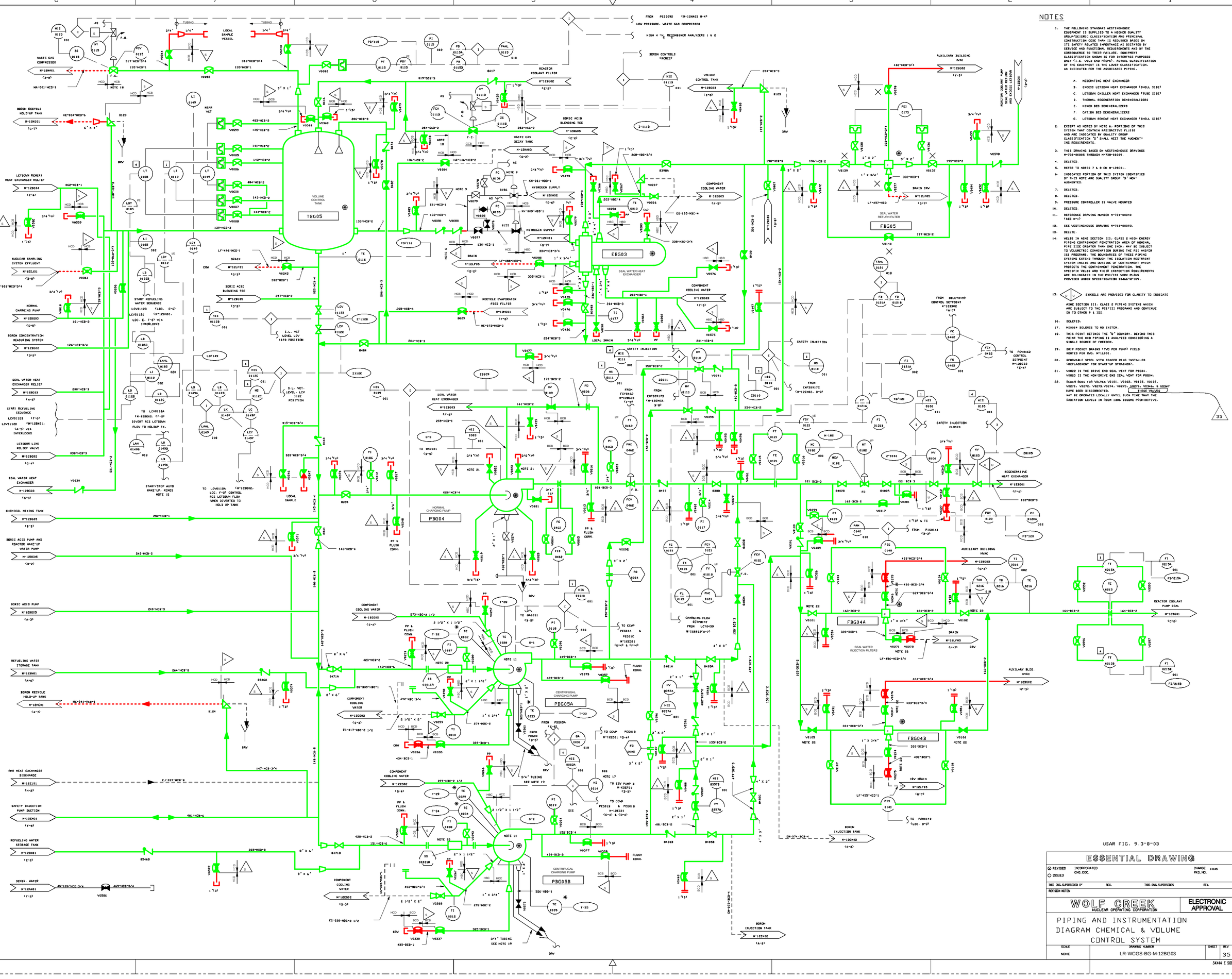

NOTES

1. THE FOLLOWING STANDARD WESTINGHOUSE EQUIPMENT IS SUPPLIED TO A HIGHER QUALITY GROUP/SEISMIC CLASSIFICATION AND PRINCIPAL CONSTRUCTION CODE THAN IS REQUIRED BASED ON ITS SAFETY RELATED IMPORTANCE AS DICTATED BY SERVICE AND FUNCTIONAL REQUIREMENTS AND BY THE CONSEQUENCE TO THEIR FAILURE. EQUIPMENT CLASSIFICATION SHOWN IS FOR INTERFACE PURPOSES ONLY (I.E. WELD END PREPS). ACTUAL CLASSIFICATION OF THE EQUIPMENT IS THE LOWER CLASSIFICATION, AS INDICATED FOR THE ASSOCIATED PIPING.
   - A. MODERATING HEAT EXCHANGER
   - B. EXCESS LETDOWN HEAT EXCHANGER (SHELL SIDE)
   - C. LETDOWN CHILLER HEAT EXCHANGER (TUBE SIDE)
   - D. THERMAL REGENERATION DEMINERALIZERS
   - E. MIXED BED DEMINERALIZERS
   - F. CATION BED DEMINERALIZERS
   - G. LETDOWN REHEAT HEAT EXCHANGER (SHELL SIDE)
2. EXCEPT AS NOTED BY NOTE 6, PORTIONS OF THIS SYSTEM THAT CONTAIN RADIOACTIVE FLUIDS AND ARE INDICATED BY QUALITY GROUP CLASSIFICATION 'D' SHALL MEET THE AUGMENTING REQUIREMENTS.
3. THIS DRAWING BASED ON WESTINGHOUSE DRAWINGS M-738-00005 THROUGH M-738-00009.
4. DELETED.
5. REFER TO NOTES 7 & 8 ON M-12BG01.
6. INDICATED PORTION OF THIS SYSTEM IDENTIFIED BY THIS NOTE ARE QUALITY GROUP 'D' NON-AUGMENTED.
7. DELETED.
8. DELETED.
9. PRESSURE CONTROLLER IS VALVE MOUNTED
10. DELETED.
11. REFERENCE DRAWING NUMBER M-721-00040 (SEE M-1)
12. SEE WESTINGHOUSE DRAWING M-761-00093.
13. DELETE.
14. WELDS IN ASME SECTION III, CLASS 2 HIGH ENERGY PIPING CONTAINMENT PENETRATION AREA OF NOMINAL PIPE SIZE GREATER THAN ONE INCH, MAY BE SUBJECT TO VOLUMETRIC EXAMINATION DURING THE PSI AND/OR ISI PROGRAMS. THE BOUNDARIES OF THESE PIPING SYSTEMS EXTEND THROUGH THE ISOLATION RESTRAINT SYSTEM INSIDE AND OUTSIDE OF CONTAINMENT WHICH PROTECTS THE CONTAINMENT PENETRATION. THE SPECIFIC WELDS AND THEIR INSPECTION REQUIREMENTS ARE DELINEATED IN THE PSI/ISI WORK PLANS PROVIDED UNDER SPECIFICATION 10466-M-109.
15. U/U SYMBOLS ARE PROVIDED FOR CLARITY TO INDICATE ASME SECTION III, CLASS 2 PIPING SYSTEMS WHICH ARE SUBJECT TO THE PSI/ISI PROGRAMS AND CONTINUE ON TO OTHER P & IDS.
16. DELETED.
17. M50014 BELONGS TO NO SYSTEM.
18. THIS POINT DEFINES THE 'Q' BOUNDRY. BEYOND THIS POINT THE HCD PIPING IS ANALYZED CONSIDERING A SINGLE DEGREE OF FREEDOM.
19. DRIP POCKET DRAINS (TWO PER PUMP) FIELD ROUTED PER DWG. M-1L001.
20. REMOVABLE SPOOL WITH SPACER RING INSTALLED (REPLACEMENT FOR START-UP STRAINER).
21. V0022 IS THE DRIVE END SEAL VENT FOR PBG04. V0023 IS THE NON-DRIVE END SEAL VENT FOR PBG04.
22. REACH RODS FOR VALVES V0101, V0102, V0105, V0106, V0271, V0272, V0273, V0274, V0275, V0276, V0346, & V0347 HAVE BEEN DISCONNECTED. THESE VALVES MAY BE OPERATED LOCALLY UNTIL SUCH TIME THAT THE RADIATION LEVELS IN ROOM 1306 BECOME PROHIBITIVE.

USAR FIG. 9.3-8-03

ESSENTIAL DRAWING

REVISED / ISSUED	INCORPORATED CHG. DOC.	CHANGE PKG. NO.	10045
THIS DWG. SUPERSEDED BY	REV.	THIS DWG. SUPERSEDES	REV.
REVISION NOTES:			

WOLF CREEK NUCLEAR OPERATING CORPORATION

ELECTRONIC APPROVAL

PIPING AND INSTRUMENTATION DIAGRAM CHEMICAL & VOLUME CONTROL SYSTEM

SCALE	DRAWING NUMBER	SHEET	REV
NONE	LR-WCGS-BG-M-12BG03		35

34X44 E SIZE

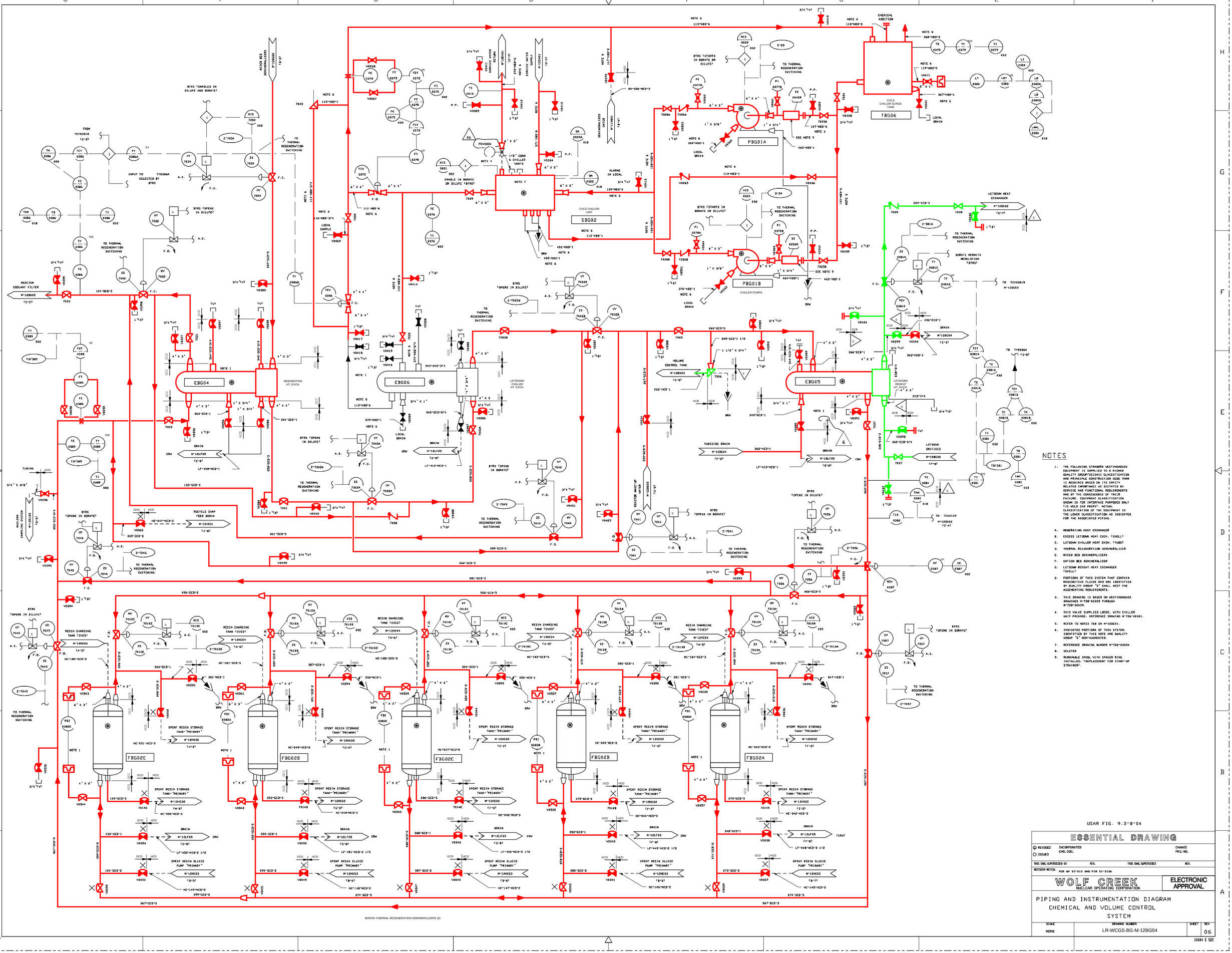

NOTES

1. THE FOLLOWING STANDARD WESTINGHOUSE EQUIPMENT IS SUPPLIED TO A HIGHER QUALITY GROUP/SEISMIC CLASSIFICATION AND PRINCIPLE CONSTRUCTION CODE THAN IS REQUIRED BASED ON ITS SAFETY RELATED IMPORTANCE AS DICTATED BY SERVICE AND FUNCTIONAL REQUIREMENTS AND BY THE CONSEQUENCE OF THEIR FAILURE. EQUIPMENT CLASSIFICATION SHOWN IS FOR INTERFACE PURPOSES ONLY TO WOLF CREEK PROJECT. ACTUAL CLASSIFICATION OF THE EQUIPMENT IS THE LOWER CLASSIFICATION AS INDICATED FOR THE ASSOCIATED PIPING.

A. MODERATING HEAT EXCHANGER
B. EXCESS LETDOWN HEAT EXCH. (SHELL)
C. LETDOWN CHILLER HEAT EXCH. (TUBE)
D. THERMAL REGENERATION DEMINERALIZER
E. MIXED BED DEMINERALIZERS
F. CATION BED DEMINERALIZER
G. LETDOWN REHEAT HEAT EXCHANGER (SHELL)

2. PORTIONS OF THIS SYSTEM THAT CONTAIN RADIOACTIVE FLUIDS AND ARE IDENTIFIED BY QUALITY GROUP "B" SHALL MEET THE AUGMENTING REQUIREMENTS.

3. THIS DRAWING IS BASED ON WESTINGHOUSE DRAWINGS M-738-00008 THROUGH M-738-00009.

4. THIS VALVE SUPPLIED LOOSE. WITH CHILLER UNIT PACKAGE. REFERENCE DRAWING M-726-00301.

5. REFER TO NOTES 7&8 ON M-12BG01.

6. INDICATED PORTIONS OF THIS SYSTEM, IDENTIFIED BY THIS NOTE ARE QUALITY GROUP "B" NON-AUGMENTED.

7. REFERENCE DRAWING NUMBER M-726-00034.

8. DELETED

9. REMOVABLE SPOOL WITH SPACER RING INSTALLED. (REPLACEMENT FOR START-UP STRAINER).

USAR FIG. 9.3-8-04

ESSENTIAL DRAWING

◉ REVISED	INCORPORATED	CHANGE	
○ ISSUED	CHG. DOC.	PKG. NO.	
THIS DWG SUPERSEDED BY	REV.	THIS DWG. SUPERSEDES	REV.
REVISION NOTES	PCR AP 85-016 AND PIR 01-3156		

WOLF CREEK NUCLEAR OPERATING CORPORATION

ELECTRONIC APPROVAL

PIPING AND INSTRUMENTATION DIAGRAM
CHEMICAL AND VOLUME CONTROL SYSTEM

SCALE	DRAWING NUMBER	SHEET	REV
NONE	LR-WCGS-BG-M-12BG04		06

34X44 E SIZE

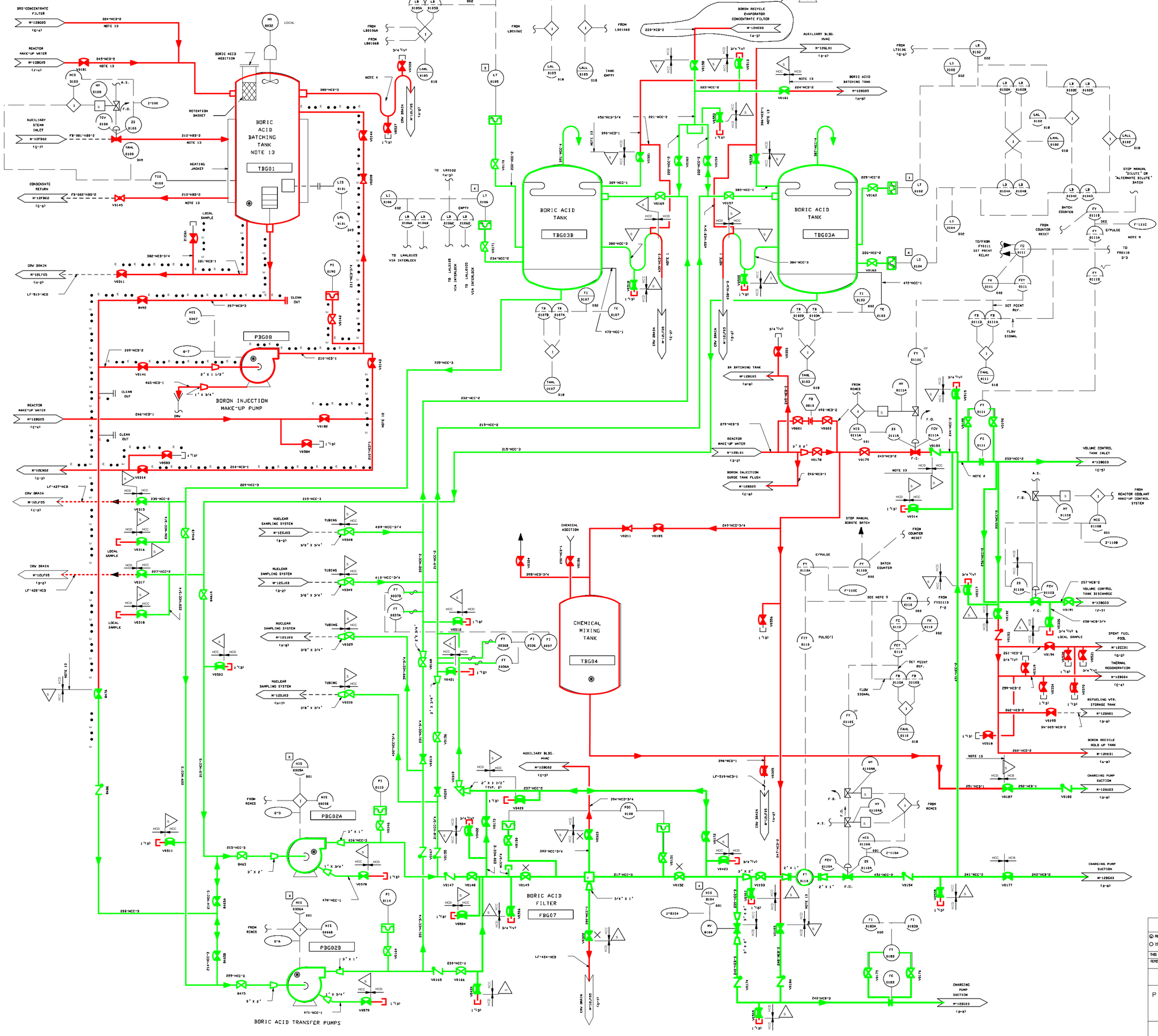

NOTES

1. LOWER LOOP TO EXTEND 12' BELOW NOZZLE. UPPER LOOP TO EXTEND 6' BELOW DIAPHRAM FLANGE. SIPHON BREAK LOCATED AT TOP OF PIPE.
2. CONNECT PIPING TO BORIC ACID BLENDING TEE AS SHOWN.
3. THIS DRAWING BASED ON WESTINGHOUSE DRAWINGS M-730-00065, M-730-00096, M-730-00097, M-730-00088 & M-730-00069.
4. LOOP SEAL TO EXTEND 12" ABOVE AND BELOW TANK NOZZLE.
5. THE FOLLOWING STANDARD WESTINGHOUSE EQUIPMENT IS SUPPLIED TO A HIGHER QUALITY GROUP/SEISMIC CLASSIFICATION AND PRINCIPLE CONSTRUCTION CODE THAN IS REQUIRED BASED ON ITS SAFETY RELATED IMPORTANCE AS DICTATED BY SERVICE AND FUNCTIONAL REQUIREMENTS AND BY THE CONSEQUENCE OF THEIR FAILURE. EQUIPMENT CLASSIFICATION SHOWN IS FOR INTERFACE PURPOSES ONLY (I.E. WELD END PREPS). ACTUAL CLASSIFICATION OF THE EQUIPMENT IS THE LOWER CLASSIFICATION, AS INDICATED FOR THE ASSOCIATED PIPING.
   - A. MODERATING HEAT EXCHANGER
   - B. EXCESS LETDOWN HEAT EXCHANGER (SHELL SIDE)
   - C. LETDOWN CHILLER HEAT EXCHANGER (TUBE SIDE)
   - D. THERMAL REGENERATION DEMINERALIZERS
   - E. MIXED BED DEMINERALIZERS
   - F. CATION BED DEMINERALIZER
   - G. LETDOWN REHEAT HEAT EXCHANGER (SHELL SIDE)
6. PORTIONS OF THIS SYSTEM THAT CONTAIN RADIOACTIVE FLUIDS AND ARE IDENTIFIED BY QUALITY GROUP CLASSIFICATION "B" SHALL MEET THE AUGMENTING REQUIREMENTS.
7. DELETED.
8. DELETED.
9. NSSS COMPUTER INPUT
10. REFER TO NOTES 7 & 8 ON DRAWING M-12BG01.
11. DELETED
12. VALVES V-0143, V-0182, V-0314 TO BE LOCATED CLOSE TO EACH OTHER AND TO TEE OF LINE 246 WITH 210.
13. INDICATES PORTIONS OF THIS SYSTEM IDENTIFIED BY THIS NOTE ARE QUALITY GROUP D NON-AUGMENTED
14. DELETED

USAR FIG. 9.3-8-05

ESSENTIAL DRAWING

(A) REVISED / ( ) ISSUED	INCORPORATED CHG. DOC.	WCP-M-12BG05-18-A, 8/00	CHANGE PKG. NO. 68244
THIS DWG. SUPERSEDED BY	REV.	THIS DWG. SUPERSEDES	REV.
REVISION NOTES:			

WOLF CREEK NUCLEAR OPERATING CORPORATION

ELECTRONIC APPROVAL

PIPING & INSTRUMENTATION DIAGRAM
CHEMICAL & VOLUME CONTROL SYSTEM

SCALE	DRAWING NUMBER	SHEET	REV
NONE	LR-WCGS-BG-M-12BG05		11

34X44 E SIZE

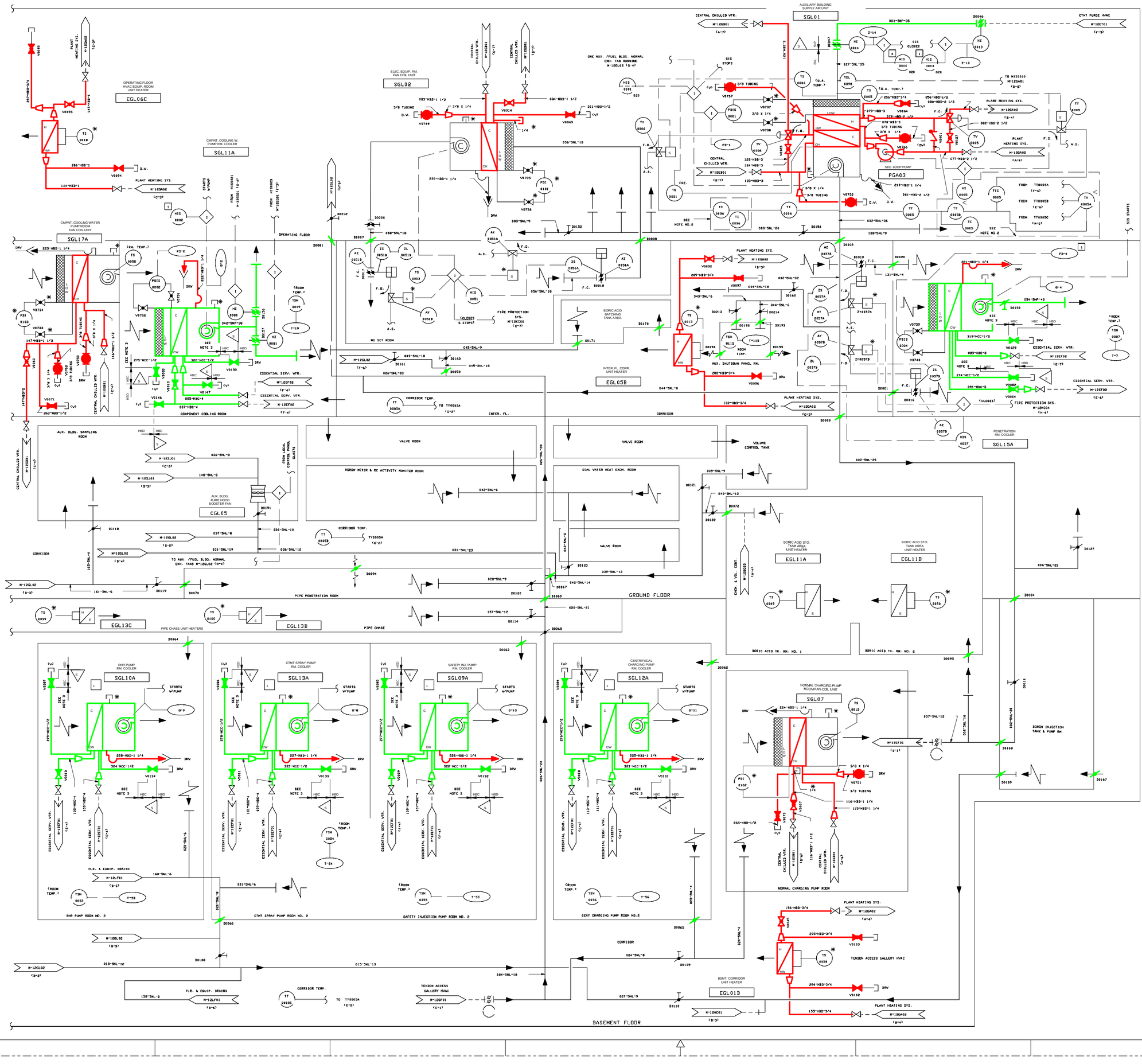

NOTES

1. DUCTWORK SIZE ARE INDICATED AS EQUIVALENT ROUND.
2. LINE DENOTES UNIT ENCLOSURE REF. J-0859-0020.
3. THE INDICATED PORTION OF PIPING REFERENCED TO THIS NOTE SHALL BE FABRICATED PER NS-2. CLASS HCC USING SCHEDULE 80 PIPE.

USAR FIG. 9.4-3 -05

ESSENTIAL DRAWING

◉ REVISED ○ ISSUED	INCORPORATED CHG. DOC.	CHANGE PKG. NO.
THIS DWG. SUPERSEDED BY,	REV.	THIS DWG. SUPERSEDES REV. 09

REVISION NOTES: ELECTRONICALLY CONVERTED PER AP-05-010

WOLF CREEK NUCLEAR OPERATING CORPORATION — ELECTRONIC APPROVAL

PIPING AND INSTRUMENTATION DIAGRAM
AUXILIARY BUILDING HVAC

SCALE	DRAWING NUMBER	SHEET	REV
NONE	LR-WCGS-GL-M-12GL01		10

34X44 E SIZE

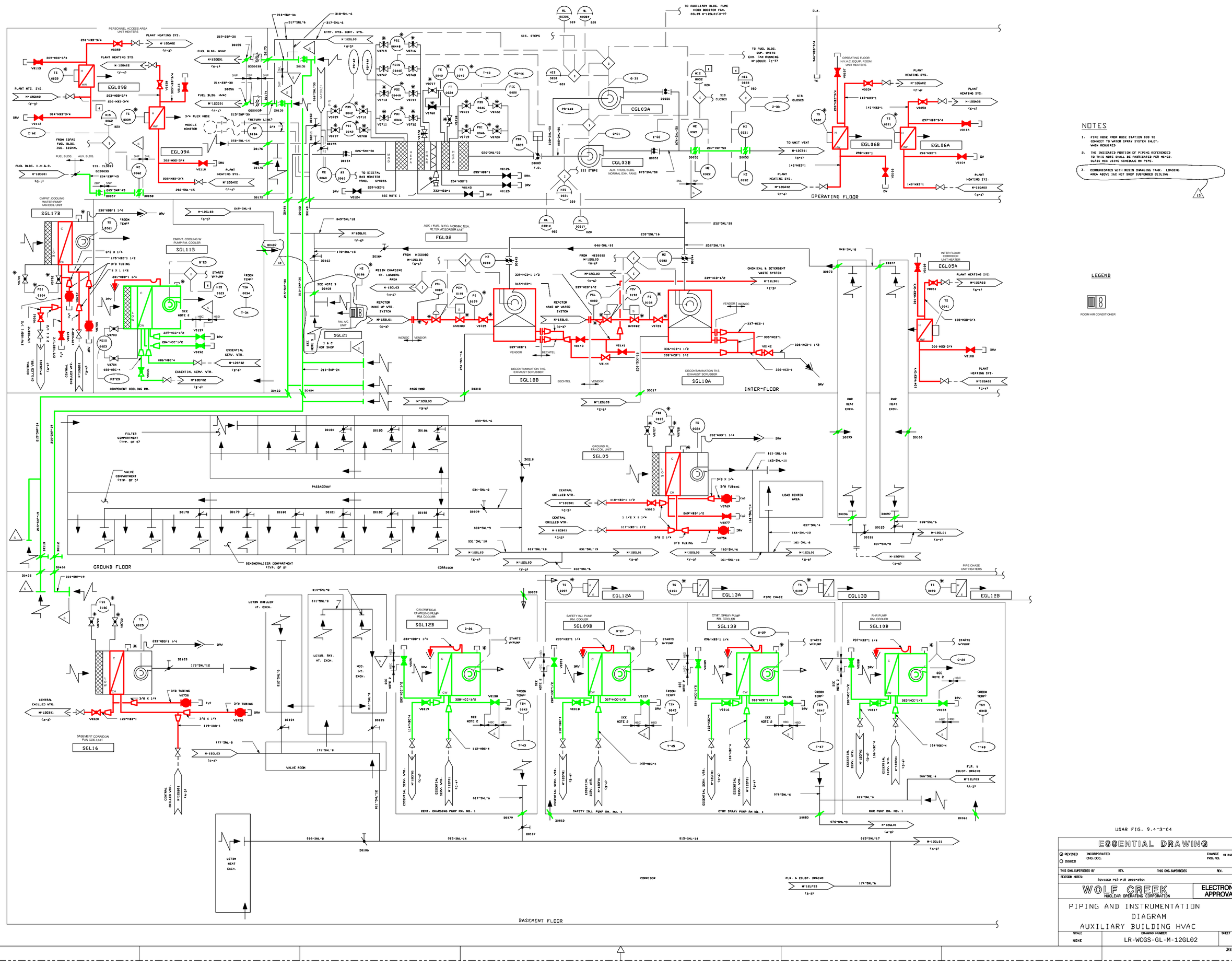

USAR FIG. 9.4-3-04

ESSENTIAL DRAWING

◉ REVISED ○ ISSUED	INCORPORATED CHG. DOC.	CHANGE PKG. NO.	011469
THIS DWG. SUPERSEDED BY	REV.	THIS DWG. SUPERSEDES	REV.

REVISION NOTES: REVISED PER PIR 2002-2964

WOLF CREEK NUCLEAR OPERATING CORPORATION

ELECTRONIC APPROVAL

PIPING AND INSTRUMENTATION DIAGRAM AUXILIARY BUILDING HVAC

SCALE	DRAWING NUMBER	SHEET	REV
NONE	LR-WCGS-GL-M-12GL02		13

34X44 E SIZE

USAR FIG. 9.4-3-03

ESSENTIAL DRAWING

REVISED / ISSUED — INCORPORATED CHG. DOC. — CHANGE PKG. NO.

THIS DWG. SUPERSEDED BY — REV. — THIS DWG. SUPERSEDES M-12GL03 — REV. 07

REVISION NOTES: ELECTRONICALLY CONVERTED PER AP-05-010

WOLF CREEK NUCLEAR OPERATING CORPORATION — ELECTRONIC APPROVAL

PIPING & INSTRUMENTATION DIAGRAM
AUXILIARY BUILDING HVAC

SCALE	DRAWING NUMBER	SHEET	REV
NONE	LR-WCGS-GL-M-12GL03		08

34X44 E SIZE

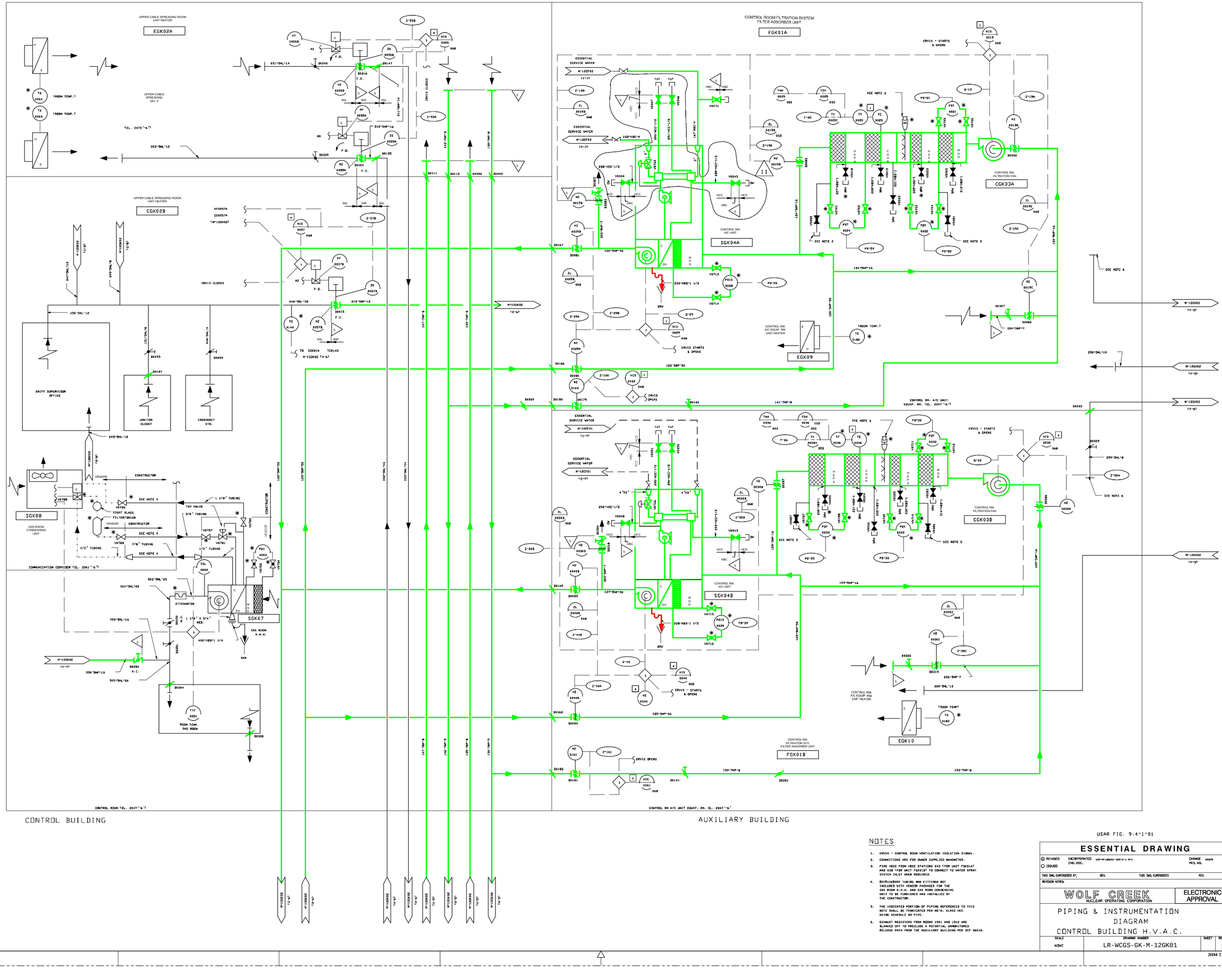

USAR FIG. 9.4-1-01

NOTES

1. CRVIS - CONTROL ROOM VENTILATION ISOLATION SIGNAL.
2. CONNECTIONS ARE FOR OWNER SUPPLIED MANOMETER.
3. FIRE HOSE FROM HOSE STATIONS 043 (FOR UNIT FGK01A) AND 038 (FOR UNIT FGK01B) TO CONNECT TO WATER SPRAY SYSTEM INLET WHEN REQUIRED.
4. REFRIGERANT TUBING AND FITTINGS NOT INCLUDED WITH VENDOR PACKAGES FOR THE SAS ROOM A.H.U. AND SAS ROOM CONDENSING UNIT TO BE FURNISHED AND INSTALLED BY THE CONSTRUCTOR.
5. THE INDICATED PORTION OF PIPING REFERENCED TO THIS NOTE SHALL BE FABRICATED PER NS-2, CLASS HCC USING SCHEDULE 80 PIPE.
6. EXHAUST REGISTERS FROM ROOMS 1501 AND 1512 ARE BLANKED OFF TO PRECLUDE A POTENTIAL UNMONITORED RELEASE PATH FROM THE AUXILIARY BUILDING PER DCP 06018.

ESSENTIAL DRAWING

◉ REVISED ○ ISSUED	INCORPORATED DWG. DOC.	WSF-M-12GK01-009-1 R/1	CHANGE PKG. NO. 09879
THIS DWG. SUPERSEDES	REV.	THIS DWG. SUPERSEDES	REV.
REVISION NOTES			

WOLF CREEK NUCLEAR OPERATING CORPORATION — ELECTRONIC APPROVAL

PIPING & INSTRUMENTATION DIAGRAM
CONTROL BUILDING H.V.A.C.

SCALE	DRAWING NUMBER	SHEET	REV
NONE	LR-WCGS-GK-M-12GK01	1	11

34X44 E SIZE

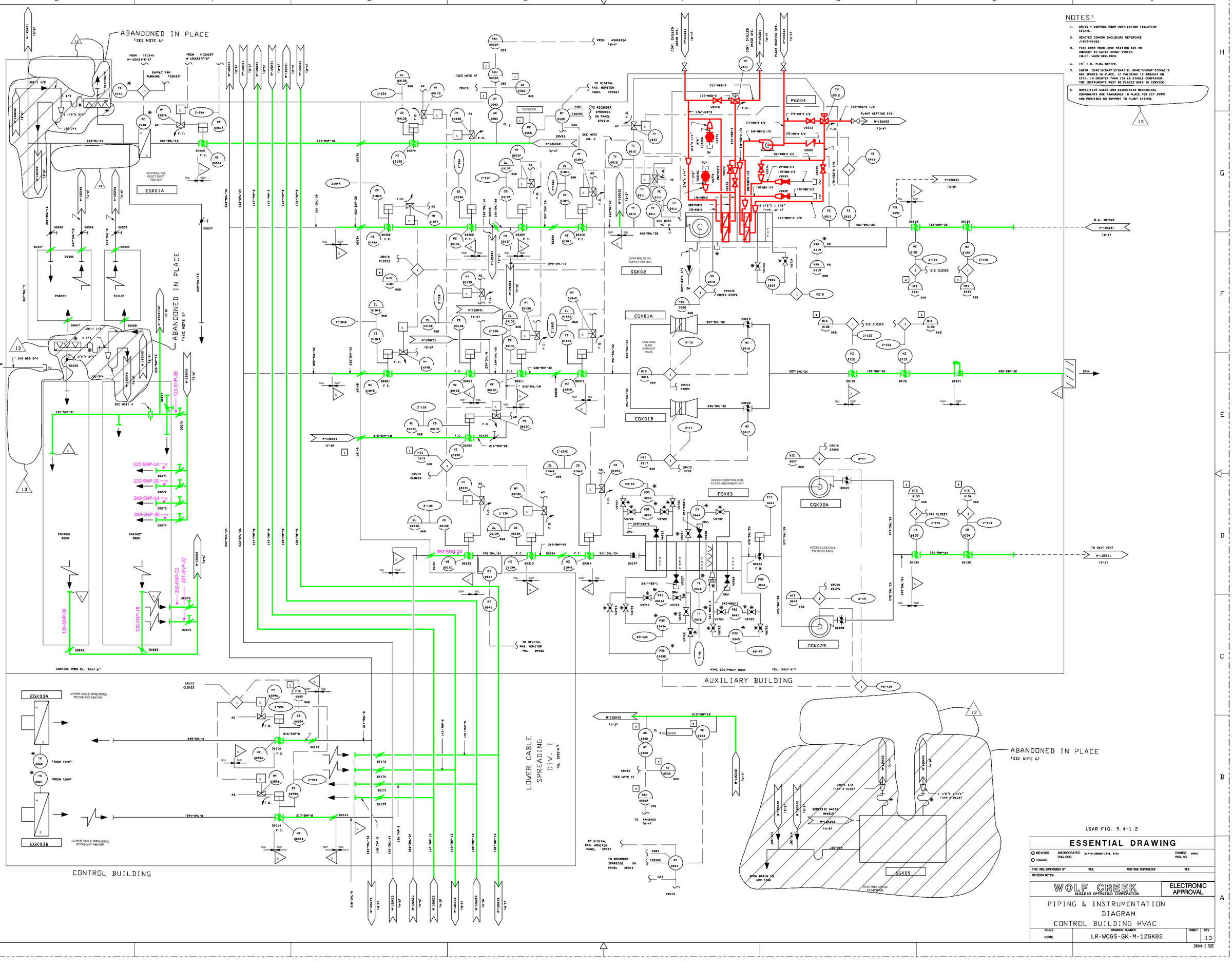

NOTES:

1. CRVIS - CONTROL ROOM VENTILATION ISOLATION SIGNAL.
2. DENOTES COMMON ENCLOSURE REFERENCE J-005-00020.
3. FIRE HOSE FROM HOSE STATION 645 TO CONNECT TO WATER SPRAY SYSTEM INLET, WHEN REQUIRED.
4. 15" I.D. FLOW ORIFICE.
5. INSTR. GKAE-2/GKAT-2/GKAI-2, GKAE-3/GKAT-3/GKAI-3 ARE SPARED IN PLACE. IF CHLORINE IS BROUGHT ON SITE, IN GREATER THAN 150 LB SINGLE CONTAINER, THE INSTRUMENTS MUST BE PLACED BACK IN SERVICE.
6. HUMIDIFIER SGK09 AND ASSOCIATED MECHANICAL COMPONENTS ARE ABANDONED IN PLACE PER CCP 09991 AND PROVIDES NO SUPPORT TO PLANT SYSTEM.

USAR FIG. 9.4-1.2

ESSENTIAL DRAWING

REVISED / ISSUED	INCORPORATED CHG. DOC. VEP-M-12GK02-12-B, 8/01	CHANGE PKG. NO. 09991	
THIS DWG. SUPERSEDED BY	REV.	THIS DWG. SUPERSEDES	REV.
REVISION NOTES:			

WOLF CREEK NUCLEAR OPERATING CORPORATION

ELECTRONIC APPROVAL

PIPING & INSTRUMENTATION DIAGRAM
CONTROL BUILDING HVAC

SCALE	DRAWING NUMBER	SHEET	REV
NONE	LR-WCGS-GK-M-12GK02		13

34X44 E SIZE

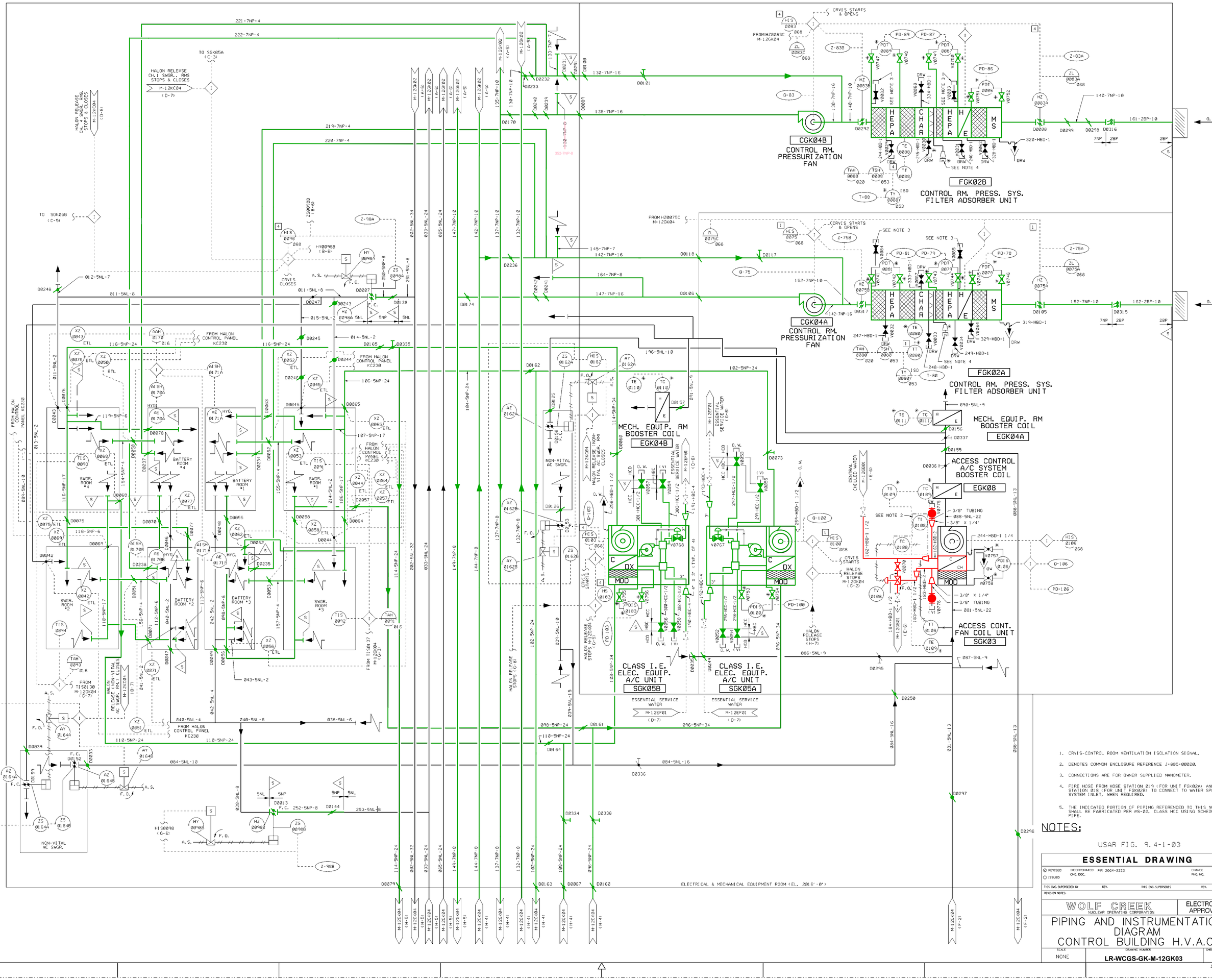
CGK04B
CONTROL RM. PRESSURIZATION FAN
FGK02B
CONTROL RM. PRESS. SYS. FILTER ADSORBER UNIT
CGK04A
CONTROL RM. PRESSURIZATION FAN
FGK02A
CONTROL RM. PRESS. SYS. FILTER ADSORBER UNIT
MECH. EQUIP. RM BOOSTER COIL
EGK04B
MECH. EQUIP. RM BOOSTER COIL
EGK04A
ACCESS CONTROL A/C SYSTEM BOOSTER COIL
EGK08
CLASS I.E. ELEC. EQUIP. A/C UNIT
SGK05B
CLASS I.E. ELEC. EQUIP. A/C UNIT
SGK05A
ACCESS CONT. FAN COIL UNIT
SGK03
ELECTRICAL & MECHANICAL EQUIPMENT ROOM (EL. 2016'-0")
NON-VITAL AC SWGR.
ESSENTIAL SERVICE WATER
M-12EF01 (D-7)
CRVIS STARTS & OPENS
CRVIS CLOSES
HALON RELEASE CH. 1 SWGR. RMS STOPS & CLOSES M-12KC04 (D-6)
HALON RELEASE CH. 2 SWGR. RMS STOPS & CLOSES M-12KC04 (D-7)
HALON RELEASE STOPS (G-8)
HALON RELEASE STOPS (G-5)
HALON RELEASE STOPS (H-7)
HALON RELEASE/NON-VITAL AC SWGR. RM'S CLOSES M-12KC04 (D-7)
FROM HALON CONTROL PANEL KC230
FROM MAIN CONTROL PANEL KC230
BATTERY ROOM #1
BATTERY ROOM #2
BATTERY ROOM #3
BATTERY ROOM #4
SWGR. ROOM #1
SWGR. ROOM #2
SWGR. ROOM #3
SWGR. ROOM #4
HEPA
CHAR
HEPA
MS
SEE NOTE 3
SEE NOTE 4
O. A.
F. O.
A. S.
F. C.
ETL
DRW
MOD
CH
DX
HCD
HCC
HBC
O. W.
TYP. OF 4
NOTES:
USAR FIG. 9.4-1-03
1. CRVIS-CONTROL ROOM VENTILATION ISOLATION SIGNAL.
2. DENOTES COMMON ENCLOSURE REFERENCE J-805-00020.
3. CONNECTIONS ARE FOR OWNER SUPPLIED MANOMETER.
4. FIRE HOSE FROM HOSE STATION 019 (FOR UNIT FGK02A) AND HOSE STATION 018 (FOR UNIT FGK02B) TO CONNECT TO WATER SPRAY SYSTEM INLET, WHEN REQUIRED.
5. THE INDICATED PORTION OF PIPING REFERENCED TO THIS NOTE SHALL BE FABRICATED PER MS-02, CLASS HCC USING SCHEDULE 80 PIPE.
ESSENTIAL DRAWING
WOLF CREEK NUCLEAR OPERATING CORPORATION
ELECTRONIC APPROVAL
PIPING AND INSTRUMENTATION DIAGRAM
CONTROL BUILDING H.V.A.C.
SCALE NONE
DRAWING NUMBER LR-WCGS-GK-M-12GK03
SHEET 14
REV
34X44 E SIZE
Released by Document Services Release Date: 12/13/04

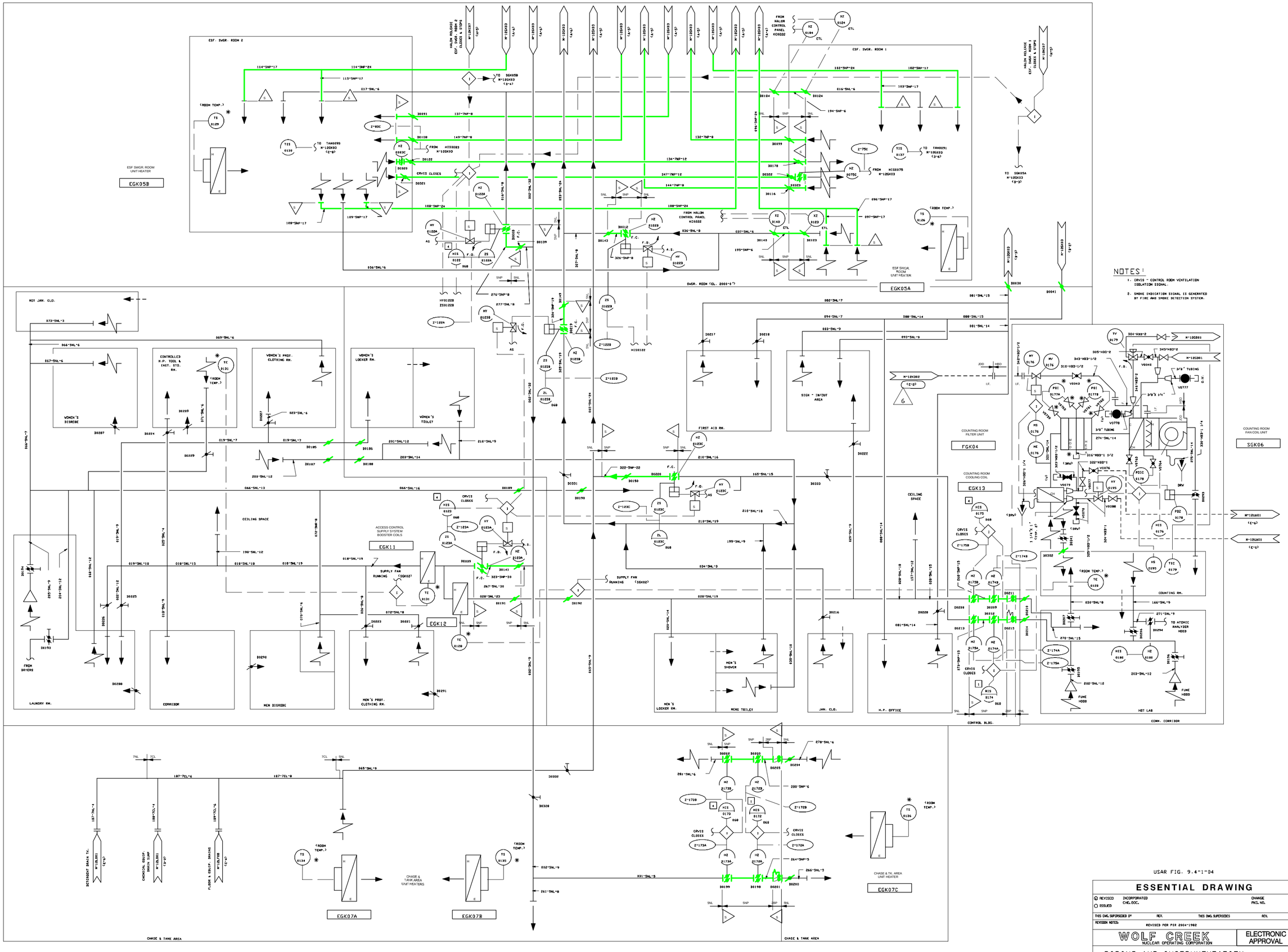
ESF. SWGR. ROOM 2
ESF. SWGR. ROOM 1
ESF SWGR. ROOM UNIT HEATER
EGK05B
EGK05A
SWGR. ROOM (EL. 2066'-6")
NOTES:
1. CRVIS - CONTROL ROOM VENTILATION ISOLATION SIGNAL.
2. SMOKE INDICATION SIGNAL IS GENERATED BY FIRE AND SMOKE DETECTION SYSTEM.
HOT JAN. CLG.
WOMEN'S DISROBE
CONTROLLED H.P. TOOL & INST. STG. RM.
WOMEN'S PROT. CLOTHING RM.
WOMEN'S LOCKER RM.
WOMEN'S TOILET
FIRST AID RM.
SIGN - IN/OUT AREA
COUNTING ROOM FILTER UNIT
FGK04
COUNTING ROOM COOLING COIL
EGK13
COUNTING RM.
CEILING SPACE
ACCESS CONTROL SUPPLY SYSTEM BOOSTER COILS
EGK11
EGK12
LAUNDRY RM.
CORRIDOR
MEN DISROBE
MEN'S PROT. CLOTHING RM.
MEN'S SHOWER
MEN'S TOILET
MEN'S LOCKER RM.
JAN. CLG.
H.P. OFFICE
CONTROL BLDG.
HBT LAB
COMM. CORRIDOR
CHASE & TANK AREA
CHASE & TANK AREA UNIT HEATERS
EGK07A
EGK07B
EGK07C
COUNTING ROOM FAN COIL UNIT
SGK06
USAR FIG. 9.4-1-04
ESSENTIAL DRAWING
REVISED
ISSUED
INCORPORATED CHG. DOC.
CHANGE PKG. NO.
THIS DWG. SUPERSEDES
REVISION NOTES:
REVISED PER PIR 2004-1982
WOLF CREEK NUCLEAR OPERATING CORPORATION
ELECTRONIC APPROVAL
PIPING AND INSTRUMENTATION DIAGRAM CONTROL BUILDING H.V.A.C.
SCALE: NONE
DRAWING NUMBER: LR-WCGS-GK-M-12GK04
SHEET
REV: 06
34X44 E SIZE

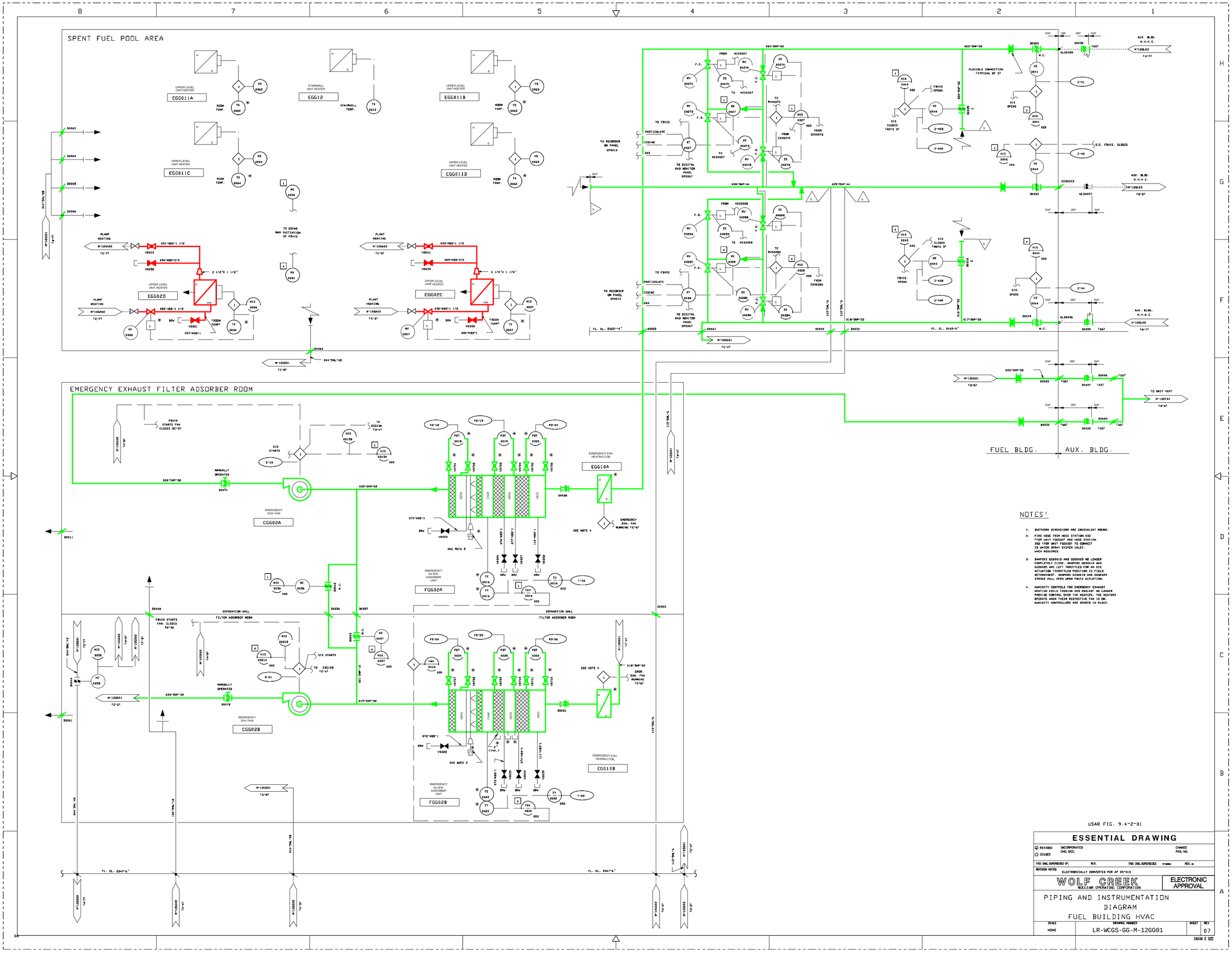

NOTES:

1. DUCTWORK DIMENSIONS ARE EQUIVALENT ROUND.
2. FIRE HOSE FROM HOSE STATION 032 (FOR UNIT FGG02A) AND HOSE STATION 052 (FOR UNIT FGG02B) TO CONNECT TO WATER SPRAY SYSTEM INLET. WHEN REQUIRED.
3. DAMPERS GGD0010 AND GGD0025 NO LONGER COMPLETELY CLOSE. DAMPERS GGD0010 AND GGD0025 ARE LEFT THROTTLED FOR AN SIS ACTUATION (THROTTLED POSITION IS FIELD DETERMINED). DAMPERS GGD0010 AND GGD0025 STROKE FULL OPEN UPON FBVIS ACTUATION.
4. HUMIDITY CONTROLS FOR EMERGENCY EXHAUST HEATING COILS (EGG10A AND EGG10B) NO LONGER PROVIDE CONTROL OVER THE HEATERS. THE HEATERS OPERATE WHEN THEIR RESPECTIVE FAN IS ON. HUMIDITY CONTROLLERS ARE SPARED IN PLACE.

USAR FIG. 9.4-2-01

ESSENTIAL DRAWING

REVISED / ISSUED — INCORPORATED CHG. DOC. — CHANGE PKG. NO.

THIS DWG. SUPERSEDED BY: REV. — THIS DWG. SUPERSEDES: REV. 06

REVISION NOTES: ELECTRONICALLY CONVERTED PER AP 05-010

WOLF CREEK NUCLEAR OPERATING CORPORATION — ELECTRONIC APPROVAL

PIPING AND INSTRUMENTATION DIAGRAM
FUEL BUILDING HVAC

SCALE	DRAWING NUMBER	SHEET	REV
NONE	LR-WCGS-GG-M-12GG01		07

34X44 E SIZE

8 7 6 5 4 3 2 1

H G F E D C B A

FUEL BLDG. HVAC EQUIPMENT ROOM

ENERG. EXH. FAN EGG08 M-12EG83 (C-7)

ENERG. EXH. FAN EGG07A M-12EG83 (C-7)

M-12EG83 (A-3)

D0049 FL. EL. 2047'-6"

FROM M-12GL92 (C-3)

NORMAL EXH. FAN OPERATING

3/8" TUBING

V0725 3RV

V0722 3RV

Q-38

FSV15/21S STOPS

M-12GG01 (C-7)

Z-38

HZ 0038

D0635

3/8"X 1/4"

V0664

V0665

V0726 3RV

TT 0052

TC 0052

TI 0052

TY 0052

F.O.

SEE NOTE 2

CENTRAL CHILLER WTR. M-12GB03 (C-4)

FUEL BLDG. SUPPLY AIR UNIT SGG01A

HEATING COIL UNIT SGG03

STOPS FAN

TS 0001 FRZ.

PDIS 0001

V0713

V0714

TS 0002

D0003

D0004

SNP SNL

TS 0035

124"-HBD-2

103"-HBD-2

3"X 2"

1/2"X 1/4"

193"-HBD-3

FE 0035

FT 0035

FY 0035

0661"-HBD-1/2

060"-HBD-1/2

SECONDARY LOOP PUMP PGA05

2"

035"-HBD-3

101"-HBD-3

V3061 3RV

HIS 0030

102"-HBD-3

V3050

TV 0029

TY 0029

F.O.

S

AS

PLANT HEATING M-12GA92 (F-7)

034"-HBD-3

PLANT HEATING M-12GA92 (F-6)

035"-HBD-3

FUEL BLDG. SUPPLY AIR UNIT SGG01B

TY 0029

TI 0029

TY 06298

TIC 0029

TY 0029A

FROM TT0029A (C-4)

FROM TT06298 (G-2)

FROM TT0029C (C-4)

NORMAL EXH. FAN OPERATING

V0727

V0723

Q-39

FSV15/21S STOPS

M-12GG01 (C-7)

Z-39

HZ 0039

D0636

V0666

V0667

V0720 3RV

V0654

V0724

TT 0053

TC 0053

TI 0053

TY 0053

SEE NOTE 2

CENTRAL CHILLER WTR. M-12GB03 (C-4)

MANUALLY OPERATED D0638

FUEL HANDLING AREA COOLING COIL EGG09

M-12GG02 (B-2)

D0652 D0649

FL. EL. 2026'-9"

D0038

SPENT FUEL POOL COOLING PUMP ROOM B

START W/PUMP PEC01B M-12EC01 (H-7)

ESS SERV. WTR. M-12EF02 (C-6)

Q-34

HCC-3

HBC HBD

V0036

V0715

PDIS 0361

PD-61

V0716

SEE NOTE 3

V0037

SEE NOTE 4

SPENT FUEL POOL PUMP ROOM COOLER SGG04B

SPENT FUEL POOL COOLING PUMP ROOM A

START W/PUMP PEC01A M-12EC01 (H-7)

Q-35

V0034

V0717

PDIS 0360

PD-60

V0718

V0035

TT 0029C

TH 0030

T-32

TB TY0029A (C-4)

ROOM TEMP

TSH 0033

T-33

FUEL BLDG. SUMP VENT M-12LF08 (C-6)

WEST WALL UNIT HEATER EGG06

PLANT HEATING M-12GA92 (G-6)

V0644

V0645

TS 0031

SOUTH WALL UNIT HEATER EGG04

TS 0010

V0646

V0647

EAST WALL UNIT HEATER EGG05

TS 0035

V0628

D0016

D0069

D0814

FUEL BLDG. EQUIP. DRAIN SUMP VENT M-12LF06 (B-3)

M-12GG02 (C-3)

ELECTRICAL EQUIPMENT ROOM

D0013

D0007

FUEL BLDG. ELEV. 2020'-6" DA.

TT 06298

TD TY0029A (C-6)

D0010

CASK SHIPPING AND RECEIVING AREA

NOTES

1. FOR GENERAL NOTES AND REFERENCES SEE DRAWING M-12GG01.
2. DENOTES COMMON ENCLOSURE. REFERENCE J-663-99020
3. THE INDICATED PORTION OF PIPING REFERENCED TO THIS NOTE SHALL BE FABRICATED PER MS-2. CLASS HCC USING SCHEDULE 80 PIPE.
4. PIPING SHALL BE FABRICATED PER MS-02. CLASS HCC. EXCEPT FOR MATERIAL TYPE WHICH SHALL BE TYPE 316L.

USAR FIG. 9.4-2-02

ESSENTIAL DRAWING

◉ REVISED ○ ISSUED	INCORPORATED CHG. DOC.	PIR 0000-1350	CHANGE PKG. NO.
THIS DWG. SUPERSEDES ST.	REV.	THIS DWG. SUPERSEDES M-12GG02	REV. 08
REVISION NOTES: ELECTRONICALLY CONVERTED PER AP 05-010			

WOLF CREEK NUCLEAR OPERATING CORPORATION

ELECTRONIC APPROVAL

PIPING AND INSTRUMENTATION DIAGRAM
FUEL BUILDING HVAC

SCALE	DRAWING NUMBER	SHEET	REV
NONE	LR-WCGS-GG-M-12GG02		09

34X44 E SIZE

ESSENTIAL SERVICE WATER
PUMPHOUSE H.V.A.C.

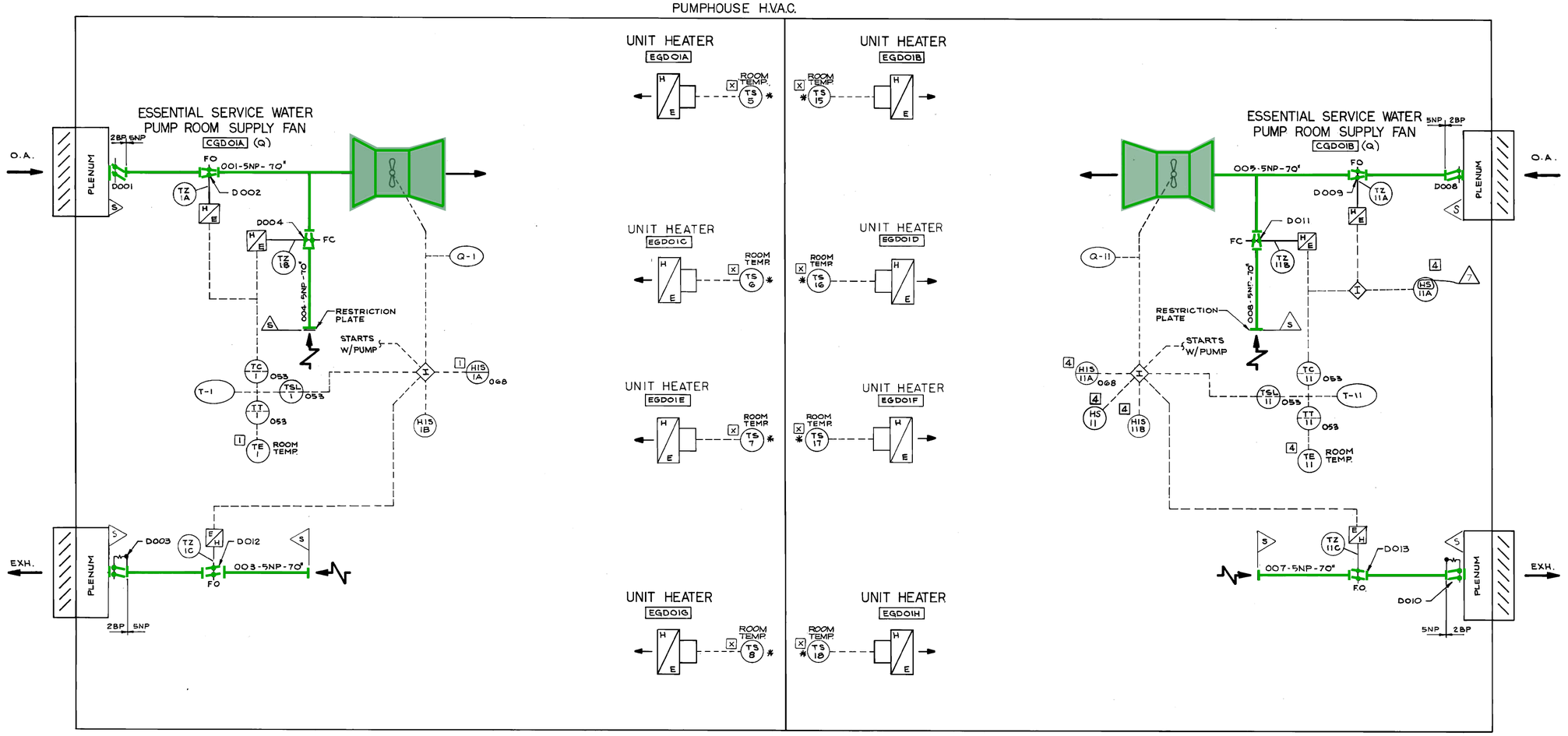

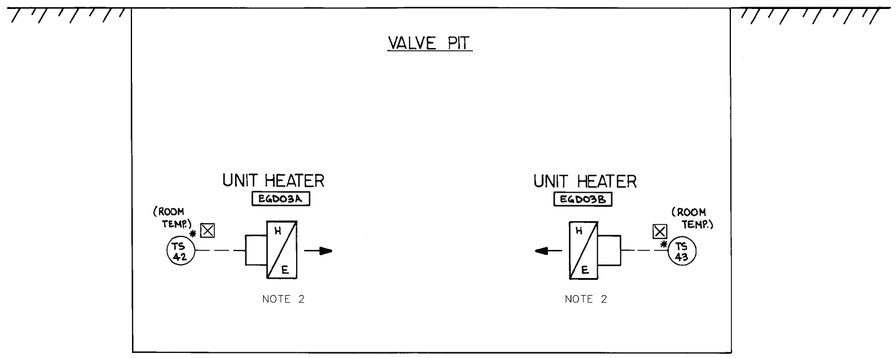

NOTE:

1. DRAWING APPLICABLE TO WOLF CREEK UNIT 1 ONLY.
2. UNIT HEATER & TEMPERATURE SWITCH ARE ABANDONED IN PLACE.

USAR FIG. 9.4-8-00

ESSENTIAL DRAWING

ⓧ REVISED ○ ISSUED	INCORPORATED CHG. DOC.	CHANGE PKG. NO.	07374
THIS DWG. SUPERSEDED BY	REV.	THIS DWG. SUPERSEDES	REV.
REVISION NOTES:			

WOLF CREEK NUCLEAR OPERATING CORPORATION — ELECTRONIC APPROVAL

PIPING & INSTRUMENTATION DIAGRAM
ESSENTIAL SERVICE WATER PUMP HOUSE HVAC

SCALE	DRAWING NUMBER	SHEET	REV
NONE	LR-WCGS-GD-M-K2GD01		7

34X44 E SIZE

Released By Document Services Release Date: 09/17/97

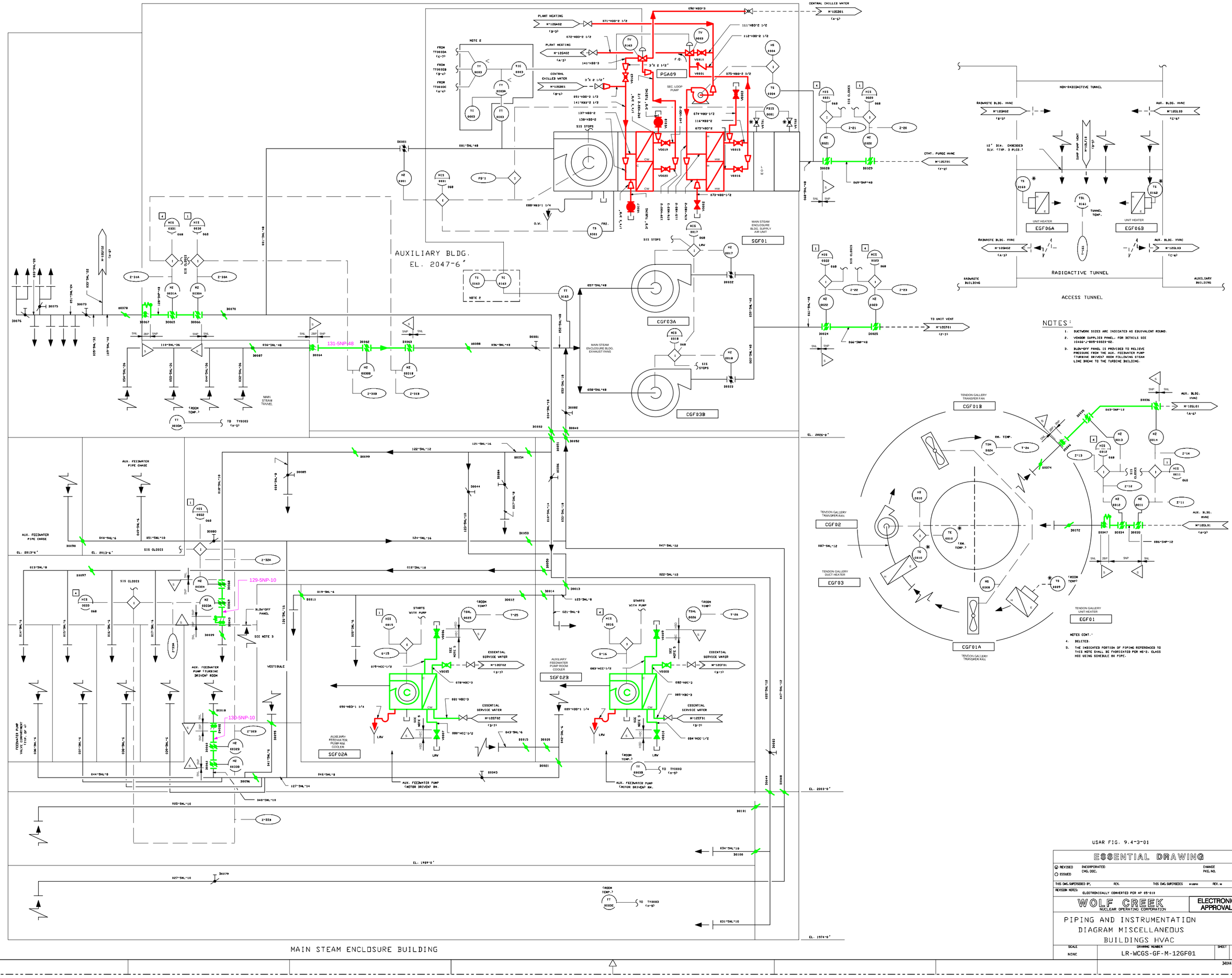

USAR FIG. 9.4-3-01

ESSENTIAL DRAWING

◉ REVISED	INCORPORATED CHG. DOC.	CHANGE PKG. NO.	
○ ISSUED			
THIS DWG. SUPERSEDED BY:	REV.	THIS DWG. SUPERSEDES	REV. 08

REVISION NOTES: ELECTRONICALLY CONVERTED PER AP 05-019

WOLF CREEK NUCLEAR OPERATING CORPORATION

ELECTRONIC APPROVAL

PIPING AND INSTRUMENTATION DIAGRAM MISCELLANEOUS BUILDINGS HVAC

SCALE	DRAWING NUMBER	SHEET	REV
NONE	LR-WCGS-GF-M-12GF01		09

34X44 E SIZE

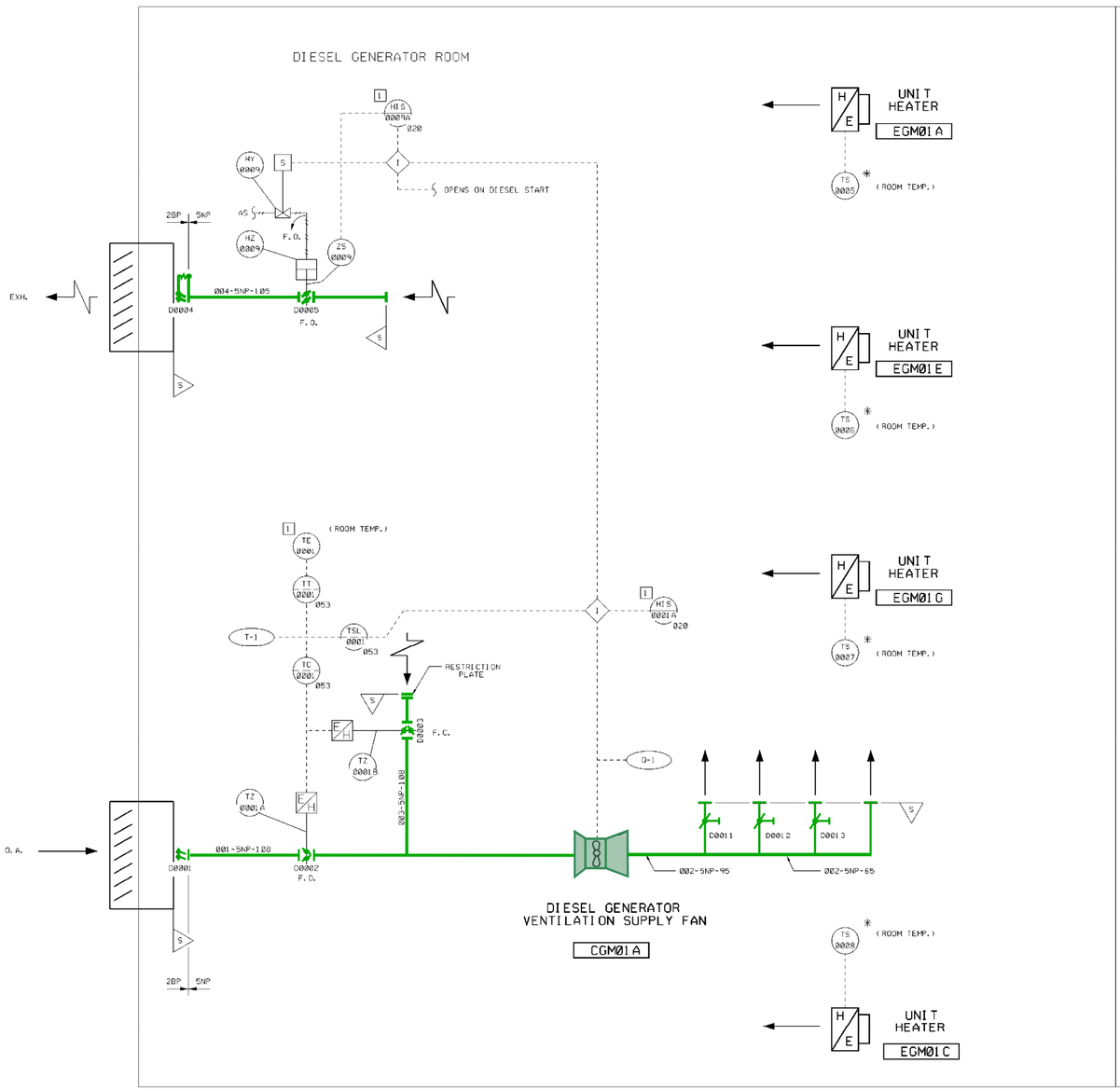

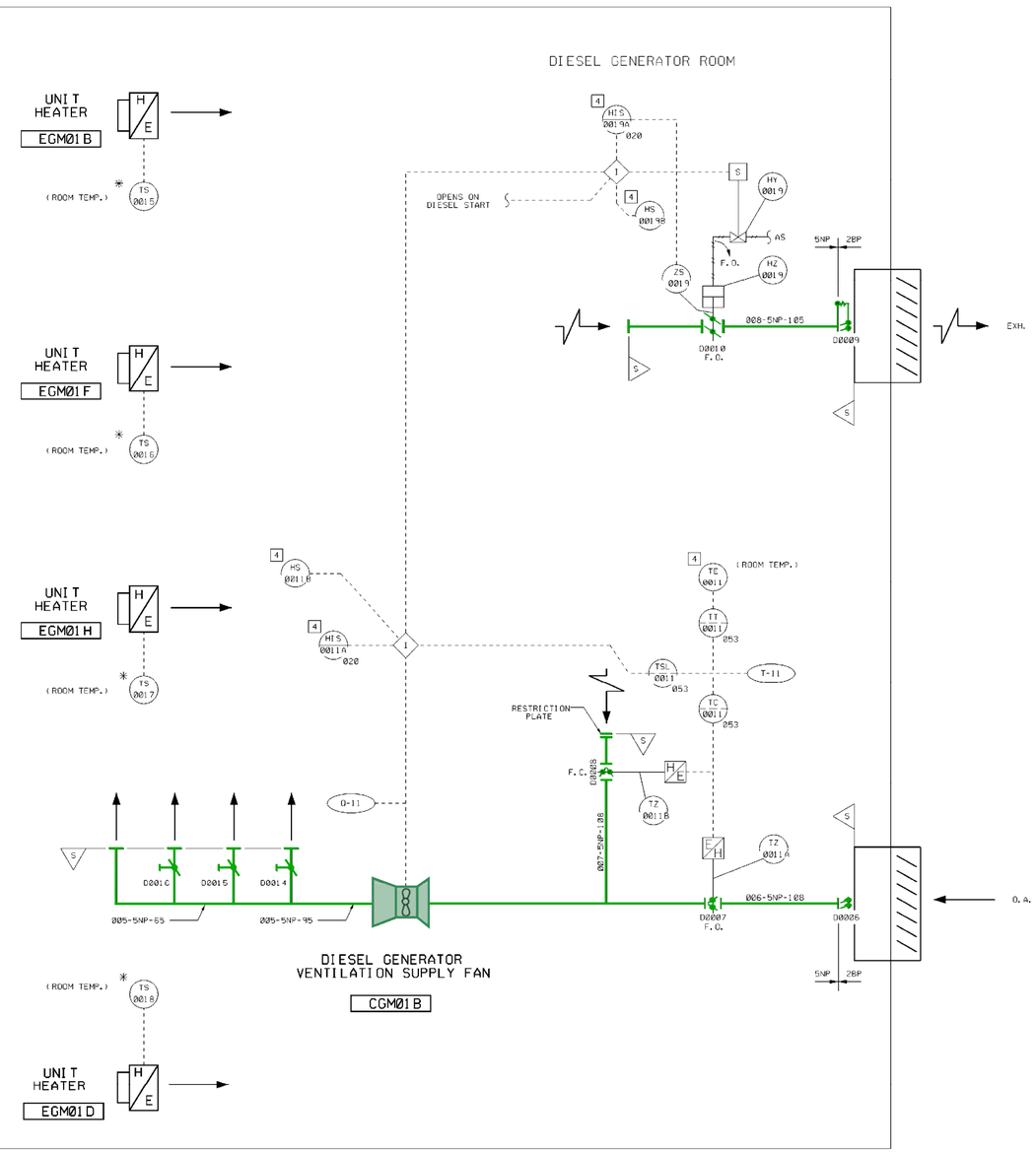

USAR FIG. 9.4-7-00

ESSENTIAL DRAWING

◉ REVISED ○ ISSUED	INCORPORATED CHG. DOC.		CHANGE PKG. NO.
THIS DWG SUPERSEDED BY	REV.	THIS DWG SUPERSEDES	M-12GM01 REV. 00
REVISION NOTES:	ELECTRONICALLY CONVERTED PER AP-05-010		

WOLF CREEK NUCLEAR OPERATING CORPORATION — ELECTRONIC APPROVAL

PIPING & INSTRUMENTATION DIAGRAM DIESEL GENERATORS BUILDING HVAC

SCALE	DRAWING NUMBER	SHEET	REV
NONE	LR-WCGS-GM-M-12GM01		01

34X44 E SIZE

NOTES

1. GLOBE, GATE, AND CHECK VALVES TO BE FURNISHED UNDER SPECIFICATION A-3815 UNLESS OTHERWISE NOTED.
2. INDOOR SERVICE WATER PIPING TO BE FURNISHED AND INSTALLED UNDER SPECIFICATION A-3838 UNLESS OTHERWISE NOTED. PIPING PENETRATION THROUGH SCREEN HOUSE FLOOR TO BE FURNISHED AND INSTALLED UNDER SPECIFICATION A-3862.
3. OUTDOOR SERVICE WATER PIPING TO BE FURNISHED UNDER SPECIFICATION A-3811.
4. INTERFACE LOCATION BETWEEN SITE AND POWER BLOCK SERVICE WATER PIPING IS GIVEN ON DRAWING M-52
5. ALL EQUIPMENT, PIPING, VALVES, AND INSTRUMENTATION TO BE INSTALLED UNDER SPECIFICATION A-3838 UNLESS OTHERWISE NOTED.
6. INSTRUMENTATION AND COMPONENTS WHICH ARE MARKED WITH AN ASTERISK (*) ARE FURNISHED UNDER SPECIFICATION A-3823.
7. BUTTERFLY VALVES ARE FURNISHED UNDER SPECIFICATION M-260 UNLESS OTHERWISE NOTED.
8. MOTOR PROTECTIVE TRIPS ALARMED ON MAIN CONTROL BOARD AND INPUT TO PLANT COMPUTER. SEE DRAWING M-252.
9. ALL PANEL MOUNTED INSTRUMENTS LOCATED ON 1PL14J, UNLESS OTHERWISE NOTED.
10. NUMBERS WITHIN QUOTATION MARKS REFER TO THE NUMBER OF THE APPLICABLE SARGENT & LUNDY PIPING DESIGN TABLE. FIRE PROTECTION SYSTEM (FP) TO BE PER NFPA NO. 20.
11. ALL PIPING IS PIPING DESIGN TABLE '100' UNLESS OTHERWISE NOTED.
12. INSTRUMENTS 1PIWS005, 1PIWS006, 1PIWS007, 1PIWS008, 1PIWS009, 1PIWS010, AND 1PIWS011 WERE NOT INSTALLED AS PER SARGENT & LUNDY INSTALLATION DETAIL MF 130.10.4 FOR INSTALLATION DETAIL REFER TO FCR 1-0195-P AND FCR 1-0196-P.
13. DELETED
14. CHEMICAL ADDITION TAP

USAR FIG. 9.2-1-03

ESSENTIAL DRAWING

◉ REVISED ○ ISSUED	INCORPORATED CHG. DOC.	CHANGE PKG. NO. 05949
THIS DWG. SUPERSEDED BY: REV.	THIS DWG. SUPERSEDES M-0022 SHT 1	REV. 38

REVISION NOTES: ELECTRONICALLY CONVERTED PER AP 05-010 & REFLECT AS-BUILT PIPE ARRANGEMENT FOR CCP 05949.

WOLF CREEK NUCLEAR OPERATING CORPORATION — ELECTRONIC APPROVAL

PIPING & INSTRUMENTATION DIAGRAM
PLANT SERVICE WATER
SYSTEM (WS)

SCALE	DRAWING NUMBER	SHEET	REV
NONE	LR-WCGS-KC-M-0022-1	1	39

34X44 E SIZE

NOTES

1. COMPLETE FIRE PROTECTION SYSTEM (PUMPS, DRIVES, VALVES, PIPING, HYDRANTS, INSTRUMENTATION) TO BE FURNISHED AND INSTALLED UNDER SPECIFICATION A-3824, UNLESS INDICATED OTHERWISE
2. INDICATES FLOW ALARM CHECK VALVE. ALARM INDICATES IN MAIN CONTROL ROOM AND LOCALLY. 1FP022 INCLUDES (2) PRESSURE INDICATORS' 1PI-FP022A (UPSTREAM), 1PI-FP022B (DOWNSTREAM).
3. INDICATES VALVE WITH VISUAL POSITION INDICATOR.
4. INDICATES VALVE WITH VISUAL INDICATOR AND ELECTRIC TAMPER SWITCH TO ACTUATE MAIN CONTROL ROOM ALARMS INDICATED.
5. A. SEE LOGIC DWG. M-0253 FOR ALARMS INITIATED BY FIRE PUMPS.
   B. SEE P&ID DWG. M-0042 FOR AUTOMATIC START OF EXHAUST FAN 1VH19C
6. PIPING PENETRATIONS THROUGH SCREEN HOUSE FLOOR TO BE FURNISHED AND INSTALLED UNDER SPECIFICATION A-3862
7. NUMBERS WITHIN QUOTATION MARKS OF THE APPLICABLE S&L PIPING DESIGN TABLE.
8. ALL PRESSURE TRANSMITTERS AND/OR INSTRUMENTS MOUNTED OR PANEL 1PL19J FURNISHED AND INSTALLED BY SPEC. A-3838.
9. FILL AREA BETWEEN PIPE AND SLEEVE OF DIESEL EXHAUST WITH INSULATION.
10. PROVIDE HEAT SHIELDING FOR DIESEL ENGINE EXHAUST PIPING FOR PERSONNEL PROTECTION. APPLY WHERE PIPING CAN BE INADVERTENTLY TOUCHED, UP TO 8'-0" ABOVE THE FINISH FLOOR (MINIMUM).
11. DRILL 3/32" DIA. HOLE THROUGH CLAPPER.
12. FLANGED ORIFICE WITH 1/4" THICK SS PLATE WITH 3/16" DIA. SQUARE EDGED HOLE.
13. SEE INSTRUMENT DATA SHEETS (8025-J-DD-00 SERIES) FOR INSTRUMENT INFORMATION AND TOLERANCES.
14. THE SPOOL PIECE AND ELBOW IMMEDIATELY DOWNSTREAM OF THE FLANGED ORIFICE HAS BEEN UPGRADED TO 316 S.S., TO ADDRESS EROSION CORROSION CONCERNS.
15. CHEMICAL ADDITION TAP

USAR FIG. 9.5-1-01

ESSENTIAL DRAWING

⊗ REVISED / ○ ISSUED	INCORPORATED CHG. DOC.	CHANGE PKG. NO.	11126
THIS DWG. SUPERSEDED BY	REV.	THIS DWG. SUPERSEDES	REV.
REVISION NOTES:			

WOLF CREEK
NUCLEAR OPERATING CORPORATION

ELECTRONIC APPROVAL

P&ID
FIRE PROTECTION SYSTEM (FP)

SCALE	DRAWING NUMBER	SHEET	REV
NONE	LR-WCGS-KC-M-0023-1	1	36

34X44 E SIZE

NOTES

1.) INTERFACE BETWEEN SITE FIRE PROTECTION SYSTEM AND POWER BLOCK, WAREHOUSE, AND SWITCHYARD FIRE PROTECTION SYSTEMS ARE GIVEN ON DRAWING M-0052.

2.) NUMBERS IN ⬡ CORRESPOND TO TERMINAL NUMBERS GIVEN ON DRAWING M-0052.

3.) ZA INDICATES VALVE WITH VISUAL INDICATOR AND ELECTRIC TAMPER SWITCH TO ACTUATE MAIN CONTROL ROOM ALARMS INDICATED.

4.) HH DENOTES STANDARD HOSE HOUSE INCLUDING 250 FT. OF 2 1/2 INCH, WOVEN JACKET, LINED, U.L. LISTED FIRE HOSE, 2 SPRAY NOZZLES WITH NATIONAL STANDARD THREADS (7 1/2 PER INCH), 1-AXE, 1-BAR, EMERGENCY LIGHT, 6-SPANNERS AND 2-WRENCHES.

5.) DENOTES FIRE HYDRANT WITH (2) - 2 1/2" HOSE GATE VALVES.

6.) UNDERGROUND FIRE PROTECTION YARD LOOP TO BE PER NFPA NO. 24.

7.) NUMBERS WITHIN QUOTATION MARKS REFER TO THE NUMBER OF THE APPLICABLE S&L PIPING DESIGN TABLE.

USAR FIG. 9.5-1-02

ESSENTIAL DRAWING

◉ REVISED ○ ISSUED	INCORPORATED CHG. DOC. VIP-M-0023-P-A-2, R/0	CHANGE PKG. NO.	09566
THIS DWG. SUPERSEDED BY:	REV.	THIS DWG. SUPERSEDES M-0023 SHT 2	REV. P

REVISION NOTES: ELECTRONICALLY CONVERTED PER AP 05-010

WOLF CREEK NUCLEAR OPERATING CORPORATION — ELECTRONIC APPROVAL

P&ID
FIRE PROTECTION
SYSTEM (FP)

SCALE	DRAWING NUMBER	SHEET	REV
NONE	LR-WCGS-KC-M-0023-2	2	17

34X44 E SIZE

FP

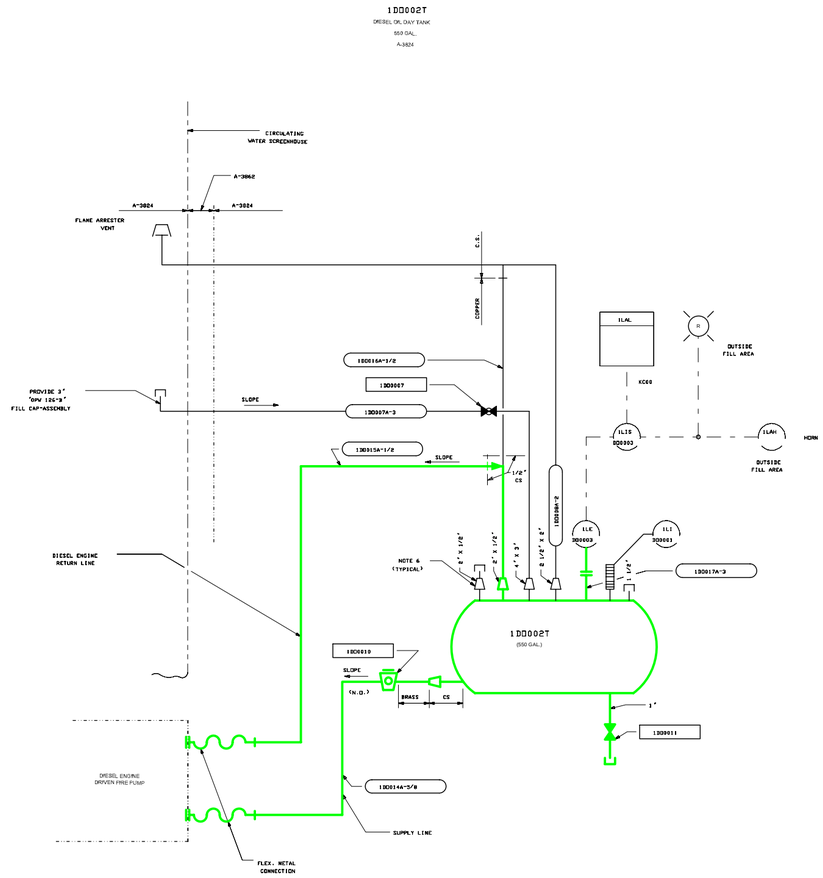

NOTES

1.) DIESEL FIRE PUMP OIL DAY TANK. PIPING, VALVES, AND INSTRUMENTATION TO BE FURNISHED AND INSTALLED UNDER SPECIFICATION A-3824 EXCEPT AS NOTED.

2.) DIESEL FIRE PUMP, DIESEL OIL SYSTEM TO BE PER NFPA NO. 20.

3.) NUMBERS WITHIN QUOTATION MARKS REFER TO THE NUMBER OF THE APPLICABLE BAL PIPING DESIGN TABLE.

4.) INDOOR PIPING TO BE SIZED & ROUTED BY A-3824 CONTRACTOR.

5.) REFERENCE DRAWING M-257 FOR LOGIC RELATIVE TO THIS SYSTEM.

6.) REDUCING BUSHINGS, SCREWED DIRECTLY TO TANK.

ESSENTIAL DRAWING

(•) REVISED ( ) ISSUED — INCORPORATED CHG. DOC. — CHANGE PKG. NO.

THIS DWG. SUPERSEDED BY — REV. — THIS DWG. SUPERSEDES ▪▪▪▪ — REV. 0

REVISION NOTES:

ELECTRONICALLY CONVERTED PER AP 05-010

WOLF CREEK NUCLEAR OPERATING CORPORATION

ELECTRONIC APPROVAL

P&ID

DIESEL OIL

SYSTEM (DD)

SCALE	DRAWING NUMBER	SHEET	REV
NONE	LR-WCGS-KC-M-0028		08

34X44 E SIZE

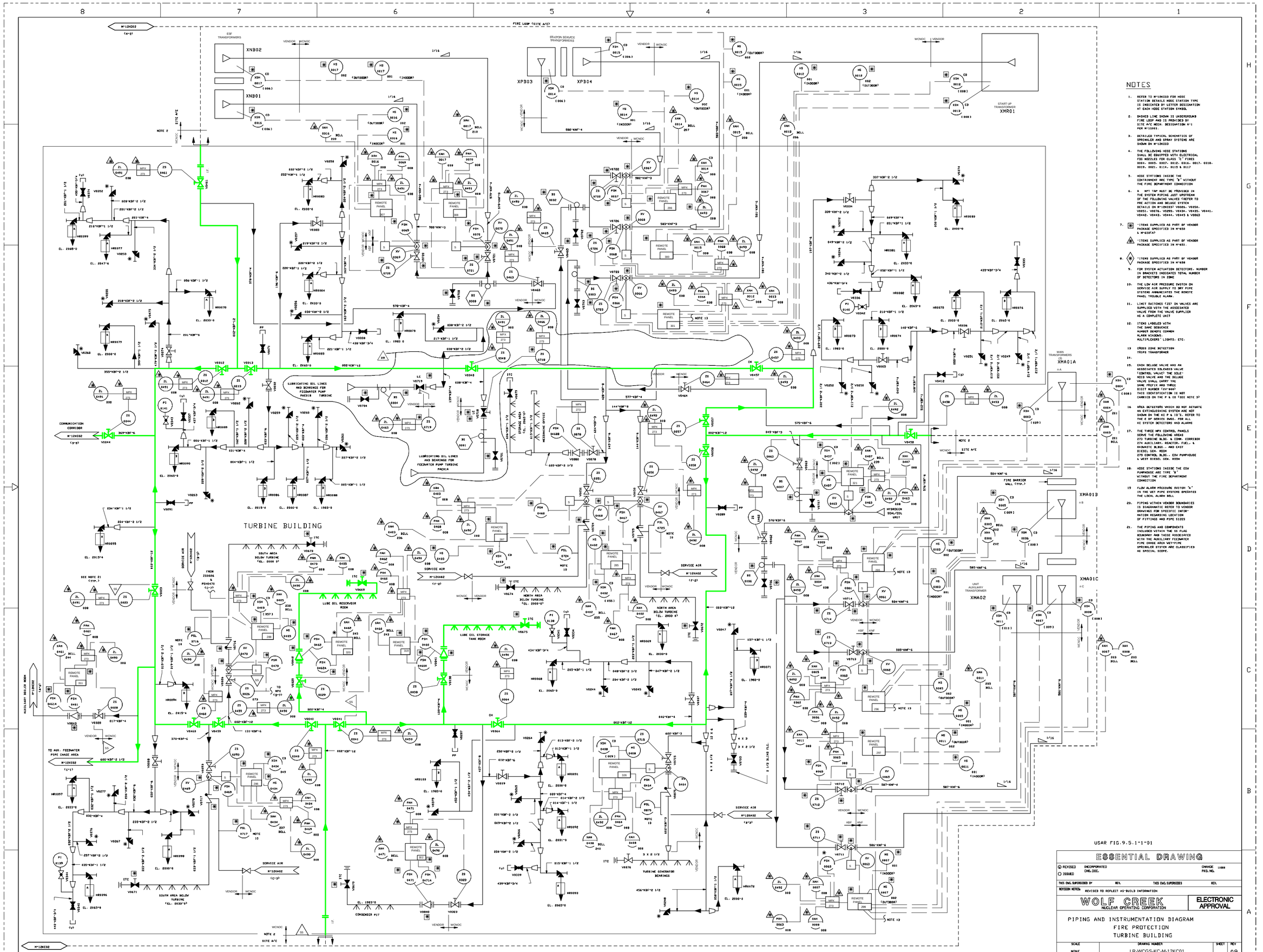
TURBINE BUILDING
FIRE LOOP (SITE A/E)
ESF TRANSFORMERS
XNB02
XNB01
STATION SERVICE TRANSFORMERS
XPB03
XPB04
START UP TRANSFORMER
XMR01
MAIN TRANSFORMERS
XMA01A
XMA01B
XMA01C
UNIT AUXILIARY TRANSFORMER
XMA02
LUBRICATING OIL LINES AND BEARINGS FOR FEEDWATER PUMP PAC01A TURBINE
LUBRICATING OIL LINES AND BEARINGS FOR FEEDWATER PUMP TURBINE PAC01A
SOUTH AREA BELOW TURBINE (EL. 2000'-0")
NORTH AREA BELOW TURBINE (EL. 2000'-0")
LUBE OIL RESERVOIR ROOM
LUBE OIL STORAGE TANK ROOM
SOUTH AREA BELOW TURBINE (EL. 2037'-9")
TURBINE GENERATOR BEARINGS
HYDROGEN SEAL/OIL UNIT
CONDENSER PIT
AUXILIARY BOILER ROOM
TO AUX. FEEDWATER PIPE CHASE AREA
SERVICE AIR
FIRE BARRIER WALL CTYP.7
COMMUNICATION CDR12C02
SEE NOTE 21 (TYP.7)
FROM ZS0626 & PSH0472 (C-7)
TO MPX (D-7)
SITE A/E
NOTE 2
NOTES
1. REFER TO M-12KC03 FOR HOSE STATION DETAILS HOSE STATION TYPE IS INDICATED BY LETTER DESIGNATION AT EACH HOSE STATION SYMBOL
2. DASHED LINE SHOWN IS UNDERGROUND FIRE LOOP AND IS PROVIDED BY SITE A/E MECH. DESIGNATION M-1 PER M-10001.
3. DETAILED TYPICAL SCHEMATICS OF SPRINKLER AND SPRAY SYSTEMS ARE SHOWN ON M-12KC03
4. THE FOLLOWING HOSE STATIONS SHALL BE EQUIPPED WITH ELECTRICAL FOG NOZZLES FOR CLASS 'C' FIRES 9004, 9005, 9007, 9010, 9016, 0017, 0018, 9019, 9021, 9114, 9115 & 0117
5. HOSE STATIONS INSIDE THE CONTAINMENT ARE TYPE 'B' WITHOUT THE FIRE DEPARTMENT CONNECTION
6. A NPT TAP MUST BE PROVIDED IN THE SYSTEM PIPING JUST UPSTREAM OF THE FOLLOWING VALVES (REFER TO PRE ACTION AND DELUGE SYSTEM DETAILS ON M-12KC03)? V0080, V0050, V0051, V0076, V0093, V0330, V0435, V0441, V0442, V0443, V0444, V0445 & V0062
7. [▣] -ITEMS SUPPLIED AS PART OF VENDOR PACKAGE SPECIFIED IN M-650 & M-650A?
8. [△] -ITEMS SUPPLIED AS PART OF VENDOR PACKAGE SPECIFIED IN M-651.
9. [◈] -ITEMS SUPPLIED AS PART OF VENDOR PACKAGE SPECIFIED IN M-638
9. FOR SYSTEM ACTUATION DETECTORS. NUMBER IN BRACKETS INDICATES TOTAL NUMBER OF DETECTORS IN ZONE
10. THE LOW AIR PRESSURE SWITCH ON SERVICE AIR SUPPLY TO DRY PIPE SYSTEMS ANNUNCIATES THE REMOTE PANEL TROUBLE ALARM.
11. LIMIT SWITCHES (2S) ON VALVES ARE SUPPLIED WITH THE ASSOCIATED VALVE FROM THE VALVE SUPPLIER AS A COMPLETE UNIT
12. ITEMS LABELED WITH THE SAME SEQUENCE NUMBER DENOTE COMMON ALARM WINDOWS, MULTIPLEXERS' LIGHTS, ETC.
13. CROSS ZONE DETECTION TRIPS TRANSFORMER
14.
15. EACH DELUGE VALVE HAS AN ASSOCIATED SOLENOID VALVE ('CONTROL VALVE)? THE SOLENOID VALVE AND THE DELUGE VALVE SHALL CARRY THE SAME PREFIX AND THREE DIGIT NUMBER 'XV-####? THIS IDENTIFICATION IS NOT CARRIED ON THE P & ID'S (SEE NOTE 3?
16. AREA DETECTORS WHICH DO NOT ACTUATE AN EXTINGUISHING SYSTEM ARE NOT SHOWN ON THE KC P & ID'S. REFER TO THE E OF SERIES DWGS. FOR ALL KC SYSTEM DETECTORS AND ALARMS
17. THE THREE MPX CONTROL PANELS SERVE THE FOLLOWING AREAS 273 TURBINE BLDG. & COMM. CORRIDOR 274 AUXILIARY BUILDING, FUEL, & RADWASTE BLDGS., AND EAST DIESEL GEN. ROOM 275 CONTROL BLDG., CDV PUMPHOUSE & WEST DIESEL GEN. ROOM
18. HOSE STATIONS INSIDE THE CDV PUMPHOUSE ARE TYPE 'B' WITHOUT THE FIRE DEPARTMENT CONNECTION
19. FLOW ALARM PRESSURE SWITCH 'A' IN THE WET PIPE SYSTEMS OPERATES THE LOCAL ALARM BELL
20. PIPING WITHIN VENDOR BOUNDARIES IS DIAGRAMMATIC REFER TO VENDOR DRAWINGS FOR SPECIFIC INFORMATION REGARDING LOCATION OF FITTINGS AND PIPE SIZES
21. THE PIPING AND COMPONENTS INCLUDED WITHIN THE SS FLAG BOUNDARY ARE THOSE ASSOCIATED WITH THE AUXILIARY FEEDWATER PIPE CHASE AREA WET-PIPE SPRINKLER SYSTEM ARE CLASSIFIED AS SPECIAL SCOPE.
USAR FIG.9.5.1-1-01
ESSENTIAL DRAWING
REVISED
ISSUED
INCORPORATED DWG. DOC.
CHANGE PKG. NO.
THIS DWG. SUPERSEDED BY
REV.
THIS DWG. SUPERSEDES
REV.
REVISION NOTES: REVISED TO REFLECT AS-BUILT INFORMATION
WOLF CREEK NUCLEAR OPERATING CORPORATION
ELECTRONIC APPROVAL
PIPING AND INSTRUMENTATION DIAGRAM
FIRE PROTECTION
TURBINE BUILDING
SCALE: NONE
DRAWING NUMBER: LR-WCGS-KC-M-12KC01
SHEET: 09
REV: 34344 E SIZE

DIESEL GENERATOR ROOM (B)

DIESEL GENERATOR ROOM (A)

CONTROL BUILDING

ACCESS CONTROL BELOW CEILING

AUXILIARY BUILDING

HOT MACHINE SHOP

COMMUNICATIONS CORRIDOR

SOUTH CABLE PENETRATION AREA

NORTH CABLE PENETRATION AREA

REACTOR BUILDING

TURBINE DRIVEN AUX. FEED - WATER PUMP ROOM

LUBRICATING OIL LINES AND BEARINGS

AUXILIARY BOILER ROOM

AUX. FEEDWATER PIPE CHASE AREA EL. 1989-0

ESW PUMP HOUSE

CIV SYSTEM

NOTE

1. THE PIPING AND VALVES ASSOCIATED WITH CONTAINMENT ISOLATION ARE THE ONLY PORTIONS OF THIS SYSTEM THAT ARE G - LISTED.
2. FOR GENERAL NOTES SEE DWG. M-12KC01.
3. THE PIPING INSIDE THE AUXILIARY FEEDWATER PIPE CHASE AREA IS CLASSIFIED AS 1S/1.

USAR FIG. 9.5.1-1-02

ESSENTIAL DRAWING

REVISED / ISSUED	INCORPORATED CHG. DOC.	CHANGE PKG. NO.	001098
THIS DWG. SUPERSEDED BY	REV.	THIS DWG. SUPERSEDES	REV.

REVISION NOTES: REVISED TO REFLECT AS-BUILT INFORMATION

WOLF CREEK NUCLEAR OPERATING CORPORATION

ELECTRONIC APPROVAL

PIPING & INSTRUMENTATION DIAGRAM
FIRE PROTECTION SYSTEM

SCALE	DRAWING NUMBER	SHEET	REV
NONE	LR-WCGS-KC-M-12KC02		09

34X44 E SIZE

HOSE RACK ASSEMBLY CONSISTING OF:
HOSE RACK: 75 FT. HOSE. 1 1/2 COMBINATION PRESSURE RESTRICTING ANGLE VALVE WITH FEMALE INLET & OUTLET. 1 1/2 NIPPLE & 1 1/2 FOG NOZZLE.
TYPICAL EXCEPT HOSE RACK STATIONS HR0016, HR0036, HR0038, HR0050, HR0062, HR0644, & HR0649 TO HAVE 100 FT. HOSE.

STAND PIPE RISER

FIRE DEPARTMENT CONN. 2 1/2 COMBINATION PRESSURE RESTRICTING ANGLE VALVE WITH FEMALE INLET AND MALE OUTLET.

INSIDE STAIRWAY ENCLOSURE

TYPICAL HOSE STATION TYPE 'A'
(AT STAIRWAYS)

STANDPIPE RISER

HOSE RACK ASSEMBLY SAME AS TYPE 'A'

2 1/2 GALLON PRESSURIZED WATER PORTABLE EXTINGUISHER

FLUSH MOUNTED FIRE HOSE CABINET

TYPICAL HOSE STATION - TYPE 'C'
(IN FINISHED AREAS)

STANDPIPE RISER

2 1/2 X 2 1/2 RED.

FIRE DEPARTMENT CONN. SAME AS TYPE 'A'

HOSE RACK ASSEMBLY SAME AS TYPE 'A'

TYPICAL HOSE RACK - TYPE 'B'
(AT INTERIOR COLUMNS)

TYPICAL AUTOMATIC WATER SPRAY SYSTEM
(SHOWN WITH CROSS ZONE DETECTION)

TYPICAL WET PIPE SPRINKLER SYSTEM

TYPICAL PRE - ACTION SPRINKLER SYSTEM
(SHOWN WITH THERMAL DETECTION ACTUATION. IONIZATION DETECTOR ACTUATED SYSTEMS HAVE DETECTOR CIRCUIT WIRED DIRECTLY TO MPX. DISCHARGE SIGNAL TO DELUGE VALVE IS GENERATED BY MPX PANEL.)

RADWASTE STORAGE BLDG.

RADWASTE BLDG. WASTE BALE DRUMMING AREA

RADWASTE BUILDING

FUEL BUILDING

FIRE LOOP (SITE A/E)

NON - RADIOACTIVE PIPE TUNNEL
ELECTRICAL CHASE, & PERSONNEL ACCESS

RADIOACTIVE PIPE TUNNEL

NOTES

1. FOR GENERAL NOTES SEE DRAWING M-12KC01.
2. ITC INSPECTORS TEST CONNECTION CONSISTS OF A SHUT OFF VALVE AND A SMOOTH BORE BRASS BUSHING. THE BUSHING SHOULD BE A STANDARD ORIFICE SIZE SPRINKLER HEAD WITH FRAME AND FUSIBLE LINK REMOVED.
3. THE AIR PRESSURE REGULATING VALVE (PRESSURE CONTROL VALVE) ASSOCIATED WITH EACH PRE - ACTION SPRINKLER SYSTEM SHALL BE IDENTIFIED BY THE NUMBER OF THE RESPECTIVE PRE - ACTION SPRINKLER SYSTEM DELUGE VALVE WITH THE PREFIX PCV. THIS IDENTIFICATIONS NOT CARRIED ON THE P & ID.
4. PRESSURE INDICATORS ASSOCIATED WITH THE SPRINKLER AND SPRAY SYSTEMS SHALL BE IDENTIFIED BY THE THREE DIGIT NUMBER OF THE RESPECTIVE ALARM FLOW PRESSURE SWITCH WITH THE PREFIX PI AND THE SUFFIX A, B, OR C. FOR WET-PIPE SYSTEMS, THE SUFFIX A SHALL APPLY TO THE SUPPLY SIDE PRESSURE GAUGE AND THE SUFFIX B SHALL APPLY TO THE SYSTEM SIDE PRESSURE GAUGE. FOR PRE-ACTION AND WATER SPRAY SYSTEMS, THE SUFFIX A SHALL APPLY TO THE SYSTEM SIDE PRESSURE GAUGE AND THE SUFFIX B SHALL APPLY TO THE SUPPLY SIDE PRESSURE GAUGE. THE SUFFIX C SHALL APPLY TO THE AIR PRESSURE GAUGE USED IN THE PRE - ACTION SYSTEMS. THIS IDENTIFICATION IS NOT CARRIED ON THE P&ID EXCEPT IN THE "TYPICAL" DIAGRAMS.
5. PRECAUTION SYSTEM RELIEF VALVES SHALL BE IDENTIFIED BY THE THREE DIGIT NUMBER OF THE ASSOCIATED DELUGE VALVE, WITH THE PREFIX "RV". THIS IDENTIFICATION IS NOT CARRIED ON THE P & ID.
6. COMPONENTS AND ITEMS IDENTIFIED WITH * ARE SUPPLIED AS PART OF THE VENDOR PACKAGE (REF. 2067AA-M-SERIES DOCUMENTS).
7. THESE HOSE RACK ASSEMBLIES CONSIST OF THE HOSE RACK: 75 FEET HOSE. 1 1/2" COMBINATION PRESSURE RESTRICTING ANGLE VALVE WITH FEMALE INLET AND OUTLET. 1 1/2" NIPPLE AND 1 1/2" FOG NOZZLE (TYPICAL OF HOSE STATIONS TYPE A OR TYPE B EXCEPT 2 1/2" FIRE DEPARTMENT CONNECTION).

USAR FIG. 9.5.1-1-03

ESSENTIAL DRAWING

REVISED / ISSUED — INCORPORATED CHG. DOC. — CHANGE PKG. NO.

THIS DWG SUPERSEDED BY, REV. — THIS DWG SUPERSEDES REV.

REVISION NOTES:

WOLF CREEK NUCLEAR OPERATING CORPORATION — ELECTRONIC APPROVAL

PIPING & INSTRUMENTATION DIAGRAM
FIRE PROTECTION SYSTEM

SCALE	DRAWING NUMBER	SHEET	REV
NONE	LR-WCGS-KC-M-12KC03		04

34X44 E SIZE

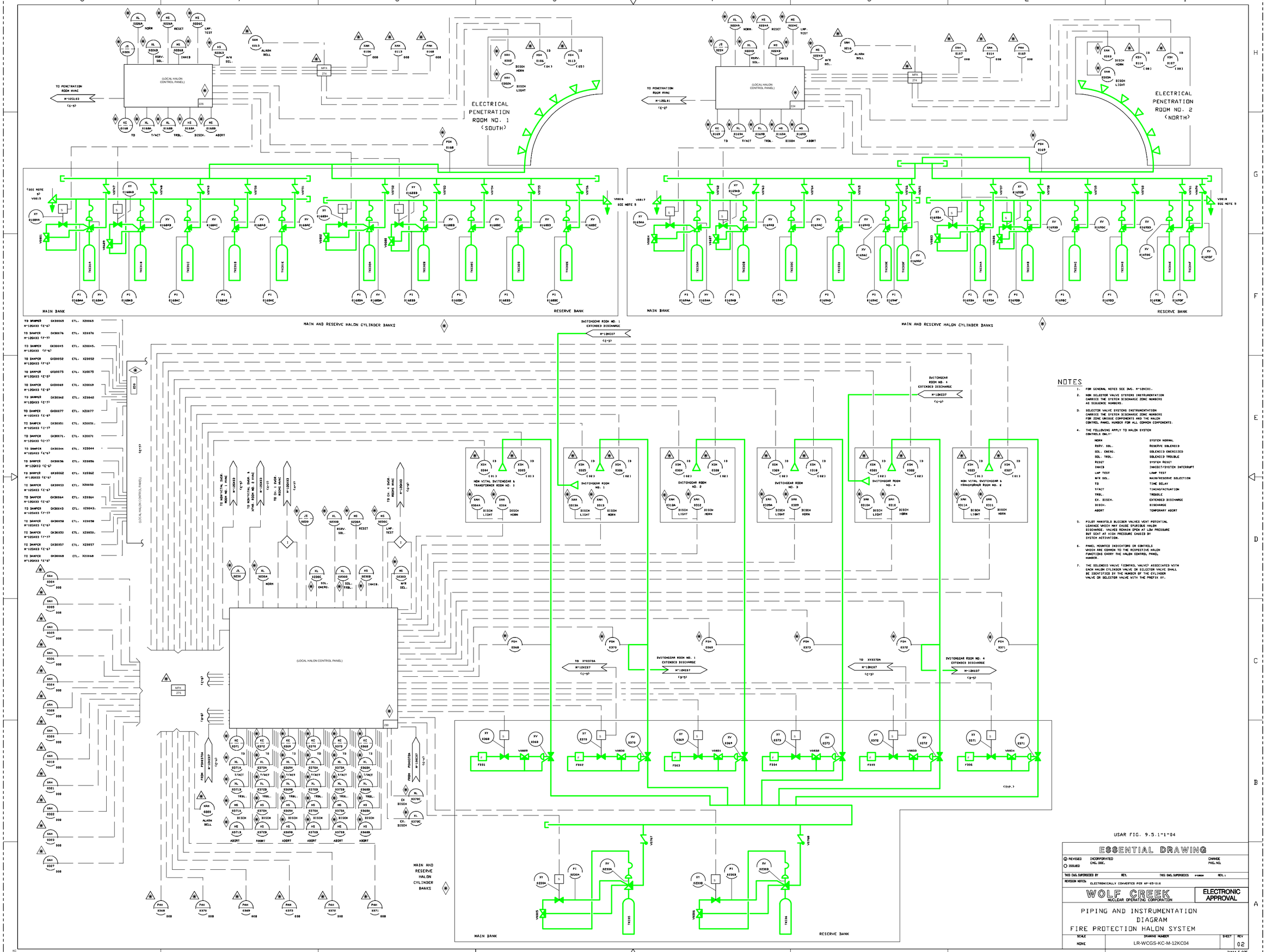

NOTES

1. FOR GENERAL NOTES SEE DWG. M-12KC01.
2. NON SELECTOR VALVE SYSTEMS INSTRUMENTATION CARRIES THE SYSTEM DISCHARGE ZONE NUMBERS AS SEQUENCE NUMBERS.
3. SELECTOR VALVE SYSTEMS INSTRUMENTATION CARRIES THE SYSTEM DISCHARGE ZONE NUMBERS FOR ZONE UNIQUE COMPONENTS AND THE HALON CONTROL PANEL NUMBER FOR ALL COMMON COMPONENTS.
4. THE FOLLOWING APPLY TO HALON SYSTEM CONTROLS ONLY:

NORM	SYSTEM NORMAL
RSRV. SOL.	RESERVE SOLENOID
SOL. ENERG.	SOLENOID ENERGIZED
SOL. TRBL.	SOLENOID TROUBLE
RESET	SYSTEM RESET
INHIB	INHIBIT/SYSTEM INTERRUPT
LMP TEST	LAMP TEST
M/R SEL.	MAIN/RESERVE SELECTION
TD	TIME DELAY
T/ACT	TIMING/ACTUATION
TRBL.	TROUBLE
EX. DISCH.	EXTENDED DISCHARGE
DISCH.	DISCHARGE
ABORT	TEMPORARY ABORT

5. PILOT MANIFOLD BLEEDER VALVES VENT POTENTIAL LEAKAGE WHICH MAY CAUSE SPURIOUS HALON DISCHARGE. VALVES REMAIN OPEN AT LOW PRESSURE BUT SEAT AT HIGH PRESSURE CAUSED BY SYSTEM ACTIVATION.
6. PANEL MOUNTED INDICATORS OR CONTROLS WHICH ARE COMMON TO THE RESPECTIVE HALON FUNCTIONS CARRY THE HALON CONTROL PANEL NUMBER.
7. THE SOLENOID VALVE (CONTROL VALVE) ASSOCIATED WITH EACH HALON CYLINDER VALVE OR SELECTOR VALVE SHALL BE IDENTIFIED BY THE NUMBER OF THE CYLINDER VALVE OR SELECTOR VALVE WITH THE PREFIX XY.

USAR FIG. 9.5.1-1-04

ESSENTIAL DRAWING

REVISED / ISSUED — INCORPORATED CHG. DOC. — CHANGE PKG. NO.

THIS DWG. SUPERSEDES BY — REV. — THIS DWG. SUPERSEDES — REV. 1

REVISION NOTES: ELECTRONICALLY CONVERTED PER AP-05-016

WOLF CREEK NUCLEAR OPERATING CORPORATION

ELECTRONIC APPROVAL

PIPING AND INSTRUMENTATION DIAGRAM
FIRE PROTECTION HALON SYSTEM

SCALE	DRAWING NUMBER	SHEET	REV
NONE	LR-WCGS-KC-M-12KC04		02

34X44 E SIZE

CABLE TRAYS
EL. 2026'-0

CABLE TRAYS
EL. 2000'-0

CABLE TRAYS
EL. 1974'-0

SOUTH CABLE CHASE

NORTH CABLE CHASE

AUXILIARY BUILDING

UPPER CABLE
SPREADING ROOM

LOWER CABLE
SPREADING ROOM

CONTROL BUILDING
FLOOR ELEVATION 1974'-0

VERTICAL CABLE CHASE

CABLE AREA ABOVE
ACCESS CONTROL AREA

CONTROL BUILDING

NOTES

1. FOR GENERAL NOTES SEE DWG. M-12KC01.

USAR FIG. 9.5.1-1-05

ESSENTIAL DRAWING

(A) REVISED	INCORPORATED CNCL. DOC.	CHANGE PKG. NO.	
○ ISSUED			
THIS DWG. SUPERSEDES:	REV.	THIS DWG. SUPERSEDES	REV.
REVISION NOTES:	ELECTRONICALLY CONVERTED PER AP-05-010		

WOLF CREEK
NUCLEAR OPERATING CORPORATION

ELECTRONIC APPROVAL

PIPING AND INSTRUMENTATION
DIAGRAM FIRE PROTECTION
SYSTEM

SCALE	DRAWING NUMBER	SHEET	REV
NONE	LR-WCGS-KC-M-12KC05		01

34X44 E SIZE

NOTES

1. FOR HALON SYSTEM GENERAL NOTES SEE DWG. M-12KC04.
   FOR FIRE PROTECTION SYSTEM GENERAL NOTES SEE DWG. M-12KC01.

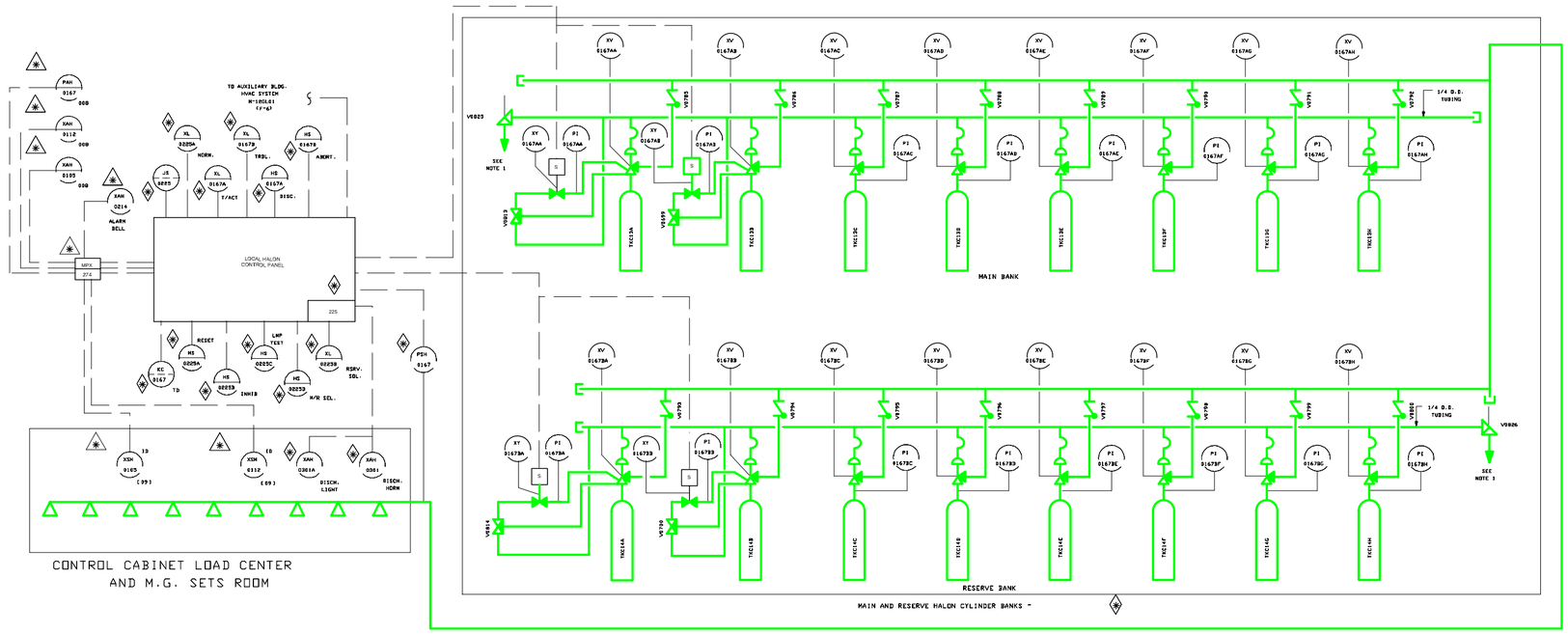

USAR FIG. 9.5.1-1-06

ESSENTIAL DRAWING

REVISED / ISSUED — INCORPORATED CHG. DOC. — CHANGE PKG. NO.

THIS DWG. SUPERSEDED BY: REV. THIS DWG. SUPERSEDES REV.

REVISION NOTES: ELECTRONICALLY CONVERTED PER AP-05-010

WOLF CREEK NUCLEAR OPERATING CORPORATION

ELECTRONIC APPROVAL

PIPING & INSTRUMENTATION DIAGRAM FIRE PROTECTION HALON SYSTEM

SCALE	DRAWING NUMBER	SHEET	REV
NONE	LR-WCGS-KC-M-12KC06		01

34X44 E SIZE

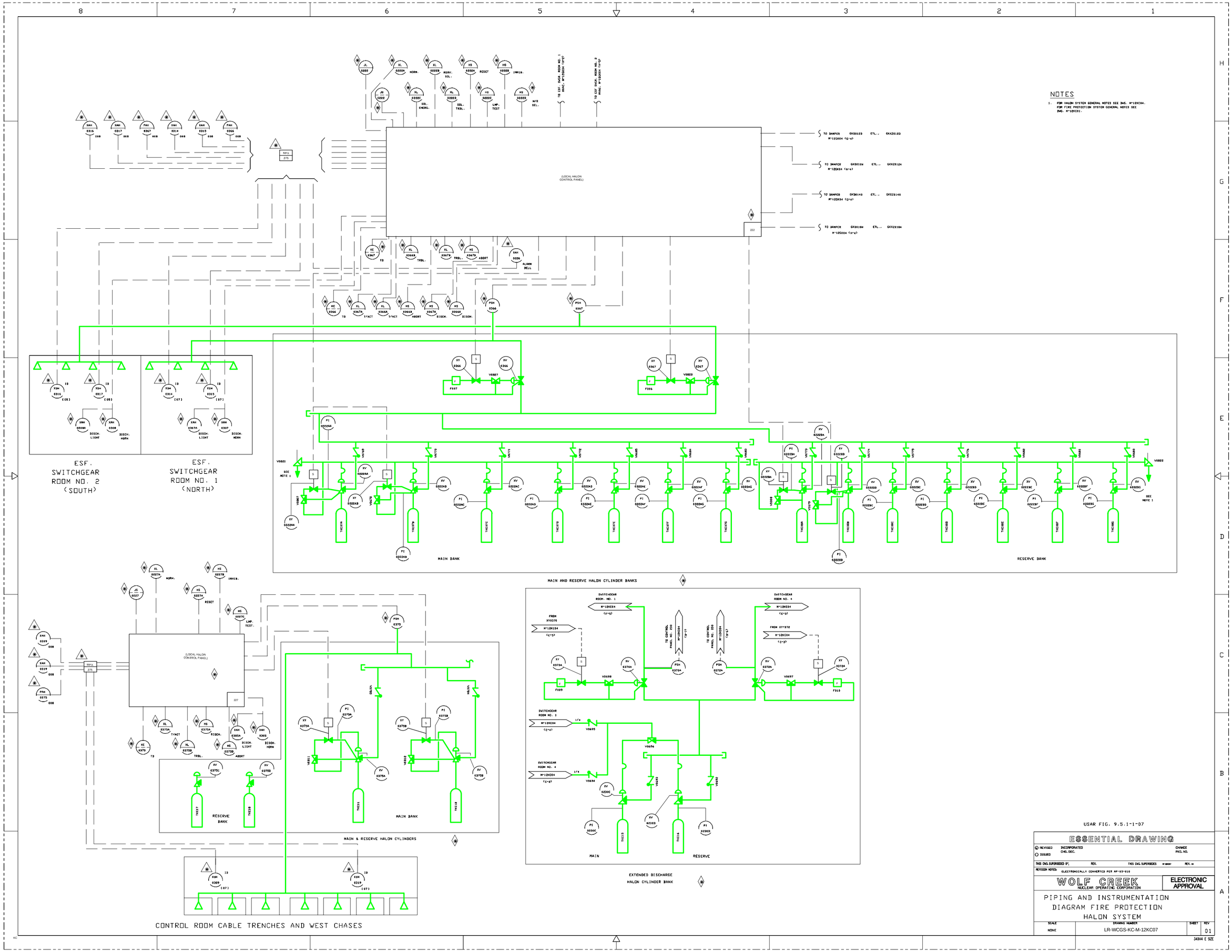

NOTES

1. FOR HALON SYSTEM GENERAL NOTES SEE DWG. M-12KC04. FOR FIRE PROTECTION SYSTEM GENERAL NOTES SEE DWG. M-12KC01.

USAR FIG. 9.5.1-1-07

ESSENTIAL DRAWING

REVISED / ISSUED — INCORPORATED CHG. DOC. — CHANGE PKG. NO.

THIS DWG. SUPERSEDED BY, REV. — THIS DWG. SUPERSEDES M-12KC07 REV. 00

REVISION NOTES: ELECTRONICALLY CONVERTED PER AP-03-010

WOLF CREEK NUCLEAR OPERATING CORPORATION — ELECTRONIC APPROVAL

PIPING AND INSTRUMENTATION DIAGRAM FIRE PROTECTION HALON SYSTEM

SCALE: NONE — DRAWING NUMBER: LR-WCGS-KC-M-12KC07 — SHEET — REV 01

34X44 E SIZE

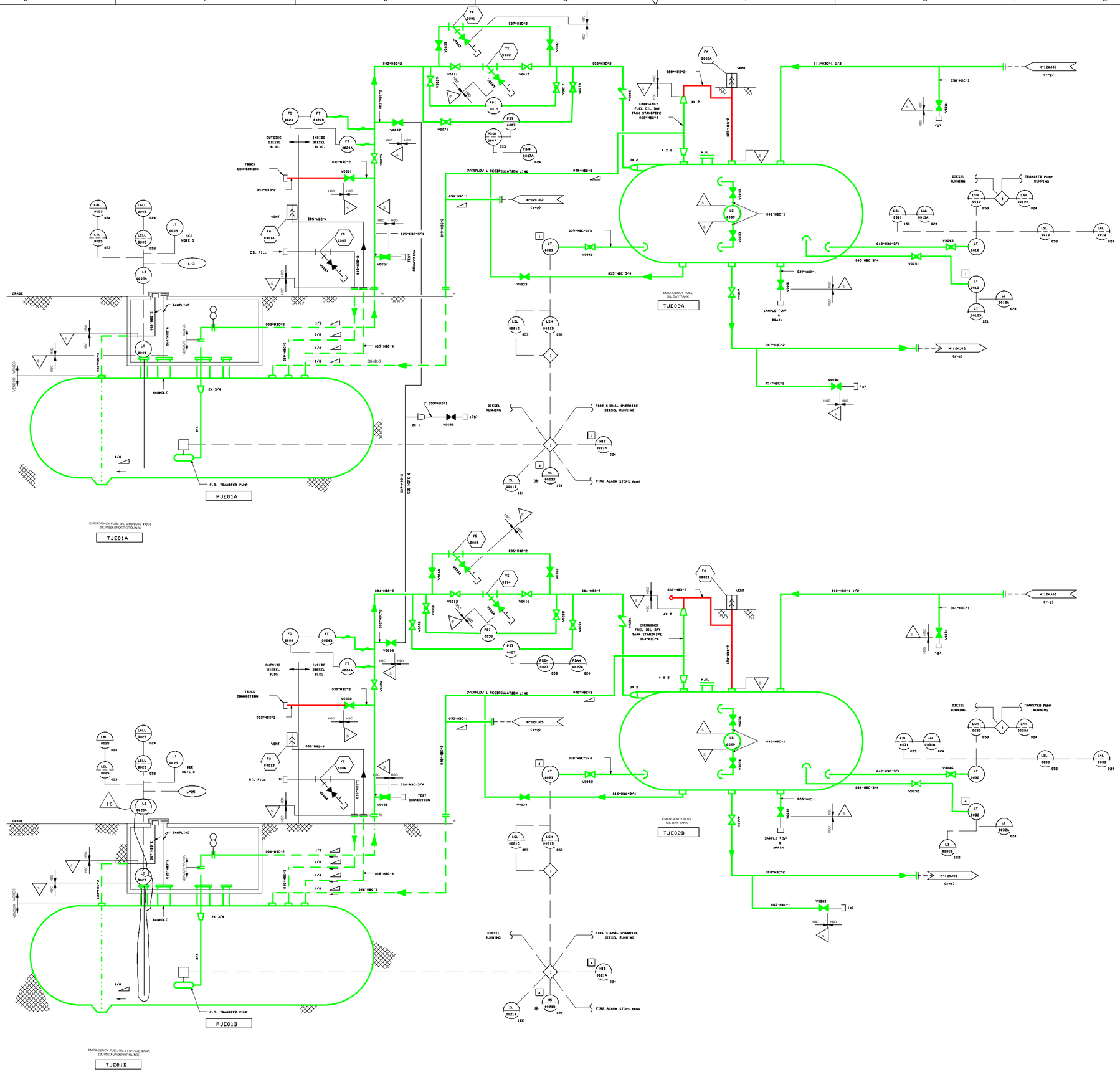

NOTES

1. THE ASME SECTION III, CLASS 3 COMPONENTS ARE SUBJECT TO VISUAL INSERVICE INSPECTION REQUIREMENTS.
2. HYDROTESTING FOR INSERVICE INSPECTION SHALL BE WITH NO. 2 DIESEL OIL.
3. ALL BURIED LINES TO SLOPE 1/8" PER FOOT TOWARD EMERGENCY FUEL OIL STORAGE TANKS.
4. INSULATING FLANGES MATERIALS SHALL BE COMPATIBLE WITH NO. 2 DIESEL FUEL OIL.
5. LI0005 & LI0025 ARE LOCATED OUTSIDE THE DIESEL BUILDING ADJACENT TO THE FILL CONNECTION.
6. SEISMICALLY SUPPORTED.

USAR FIG. 9.5.4-1-00

ESSENTIAL DRAWING

REVISED / ISSUED	INCORPORATED CHG. DOC.	VEP-M-12JE01-14-A, 8/00	CHANGE PKG. NO. 10264
THIS DWG. SUPERSEDED BY:	REV.	THIS DWG. SUPERSEDES	REV.
REVISION NOTES:			

WOLF CREEK NUCLEAR OPERATING CORPORATION

ELECTRONIC APPROVAL

PIPING & INSTRUMENTATION DIAGRAM
EMERGENCY FUEL OIL SYSTEM

SCALE	DRAWING NUMBER	SHEET	REV
NONE	LR-WCGS-JE-M-12JE01		16

34X44 E SIZE

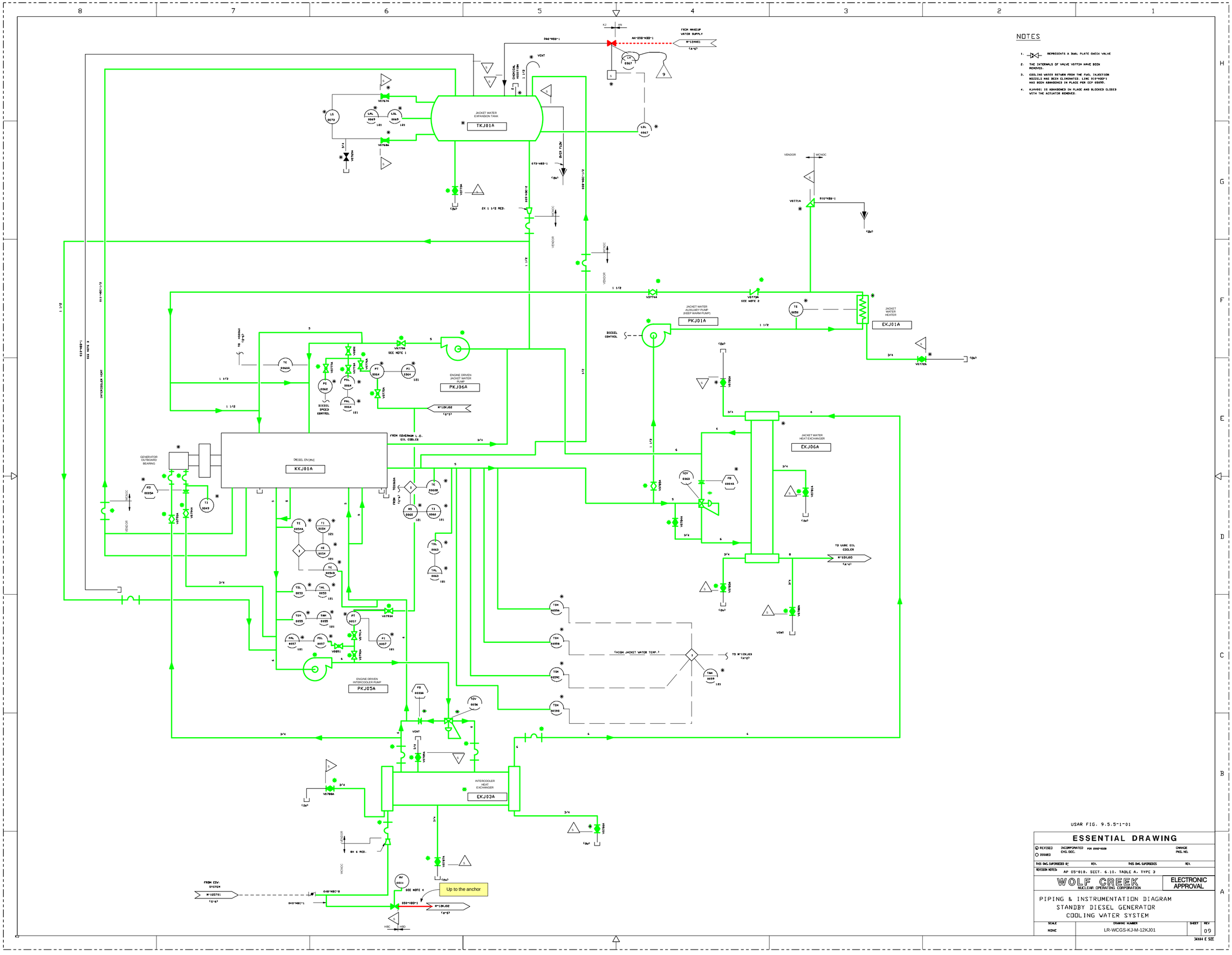

NOTES

1. REPRESENTS A DUAL PLATE CHECK VALVE
2. THE INTERNALS OF VALVE V0773A HAVE BEEN REMOVED.
3. COOLING WATER RETURN FROM THE FUEL INJECTION NOZZELS HAS BEEN ELIMINATED. LINE 010-HB3-1 HAS BEEN ABANDONED IN PLACE PER CCP 05099.
4. KJHV001 IS ABANDONED IN PLACE AND BLOCKED CLOSED WITH THE ACTUATOR REMOVED.

USAR FIG. 9.5.5-1-01

ESSENTIAL DRAWING

REVISED / ISSUED — INCORPORATED CHG. DOC. — FOR 2002-0020 — CHANGE PKG. NO.

THIS DWG. SUPERSEDES 0 — REV. — THIS DWG. SUPERSEDES — REV.

REVISION NOTES: AP 05-010, SECT. 6.10, TABLE A, TYPE 3

WOLF CREEK NUCLEAR OPERATING CORPORATION

ELECTRONIC APPROVAL

PIPING & INSTRUMENTATION DIAGRAM
STANDBY DIESEL GENERATOR
COOLING WATER SYSTEM

SCALE	DRAWING NUMBER	SHEET	REV
NONE	LR-WCGS-KJ-M-12KJ01		09

34X44 E SIZE

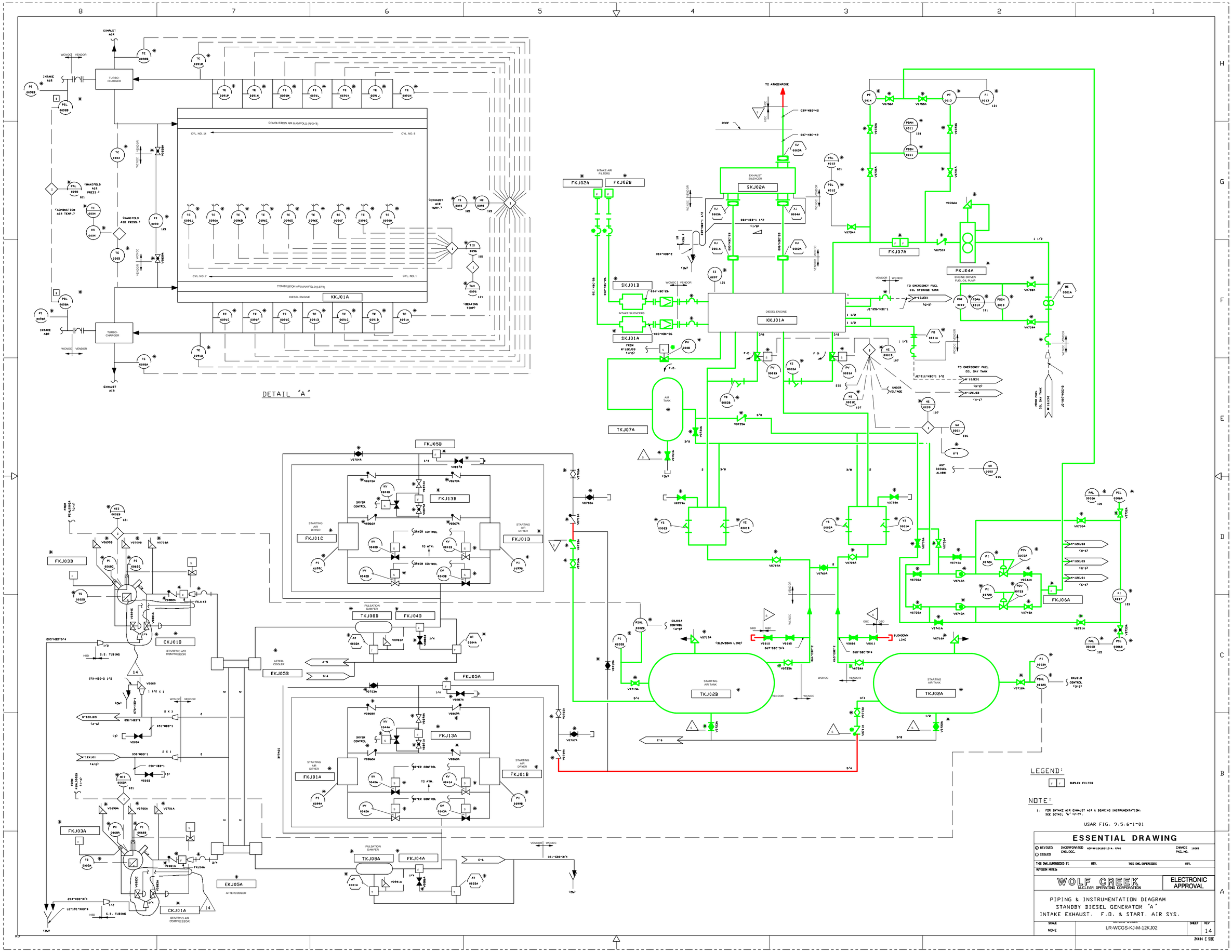
DETAIL "A"
TURBO-CHARGER
COMBUSTION AIR MANIFOLD (RIGHT)
COMBUSTION AIR MANIFOLD (LEFT)
DIESEL ENGINE
KKJ01A
EXHAUST AIR
INTAKE AIR
TO ATMOSPHERE
EXHAUST SILENCER
SKJ02A
FKJ02A
FKJ02B
SKJ01B
SKJ01A
INTAKE SILENCERS
KKJ01A
FKJ07A
PKJ04A
ENGINE DRIVEN FUEL OIL PUMP
TO EMERGENCY FUEL OIL STORAGE TANK
TO EMERGENCY FUEL OIL DAY TANK
AIR TANK
TKJ07A
FKJ05B
FKJ13B
FKJ01C
FKJ01D
STARTING AIR DRYER
DRYER CONTROL
TO ATM.
FKJ03B
CKJ01B
STARTING AIR COMPRESSOR
PULSATION DAMPER
TKJ08B
FKJ04B
AFTER COOLER
EKJ05B
FKJ05A
FKJ13A
FKJ01A
FKJ01B
FKJ03A
CKJ01A
EKJ05A
TKJ08A
FKJ04A
FKJ06A
STARTING AIR TANK
TKJ02B
TKJ02A
BLOWDOWN LINE
LEGEND:
DUPLEX FILTER
NOTE:
1. FOR INTAKE AIR EXHAUST AIR & BEARING INSTRUMENTATION, SEE DETAIL "A" (F-7).
USAR FIG. 9.5.6-1-01
ESSENTIAL DRAWING
REVISED
ISSUED
INCORPORATED CHG. DOC.
CHANGE PKG. NO.
THIS DWG. SUPERSEDED BY:
REV.
THIS DWG. SUPERSEDES
REV.
REVISION NOTES:
WOLF CREEK
NUCLEAR OPERATING CORPORATION
ELECTRONIC APPROVAL
PIPING & INSTRUMENTATION DIAGRAM
STANDBY DIESEL GENERATOR 'A'
INTAKE EXHAUST. F.O. & START. AIR SYS.
SCALE
NONE
LR-WCGS-KJ-M-12KJ02
SHEET
REV
14
34X44 E SIZE

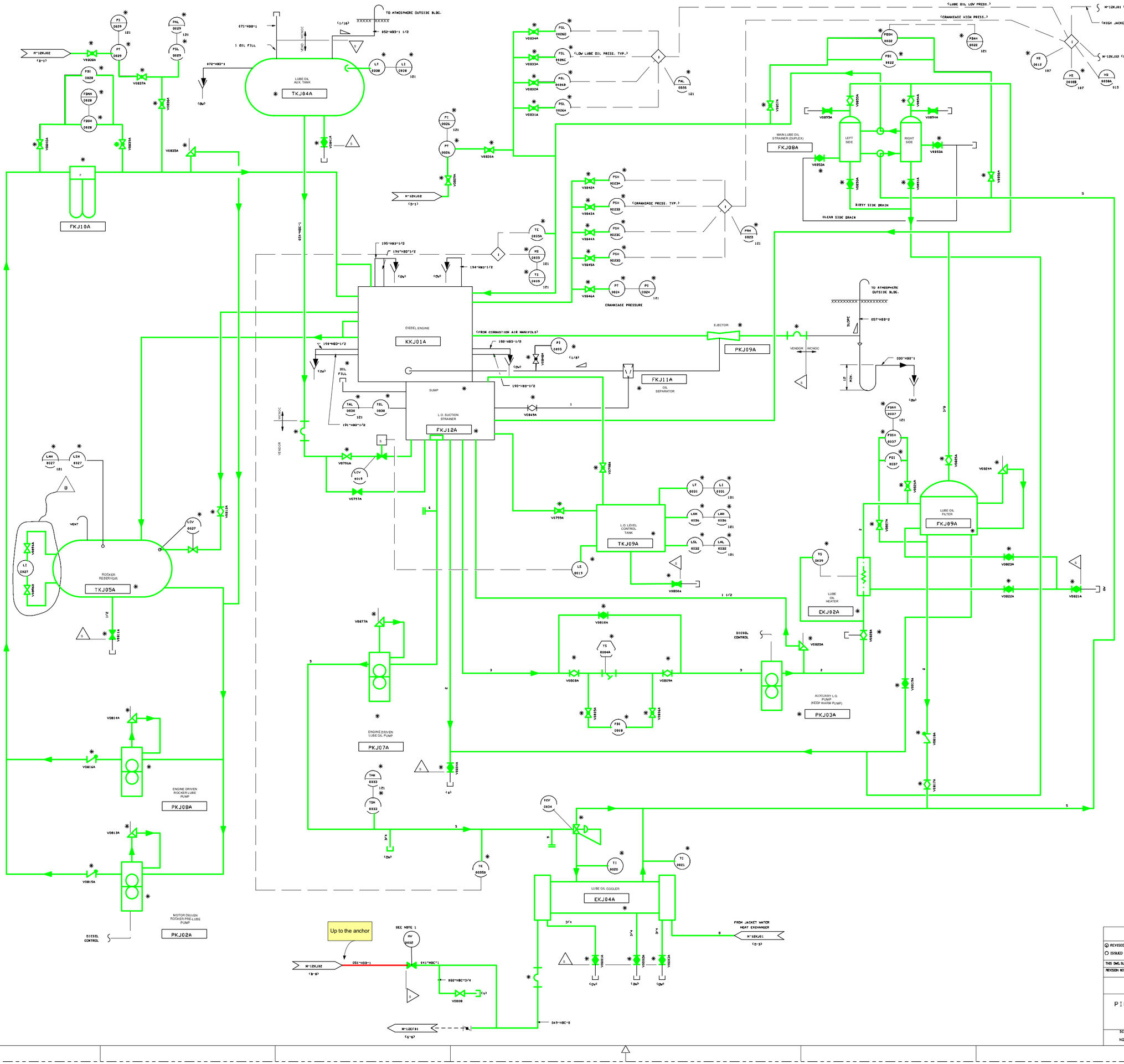

NOTES

1. KJAV0660 IS ABANDONED IN PLACE AND BLOCKED CLOSED WITH THE ACTUATOR REMOVED.

USAR FIG. 9.5.7-1-01

ESSENTIAL DRAWING

◐ REVISED / ○ ISSUED	INCORPORATED CHG. DOC. FIR 2003-0161	CHANGE PKGL NO.	
THIS DWG. SUPERSEDED BY	REV.	THIS DWG. SUPERSEDES	REV.
REVISION NOTES:			

WOLF CREEK NUCLEAR OPERATING CORPORATION — ELECTRONIC APPROVAL

PIPING & INSTRUMENTATION DIAGRAM
STANDBY DIESEL GENERATOR
'A' LUBE OIL SYSTEM

SCALE	DRAWING NUMBER	SHEET	REV
NONE	LR-WCGS-KJ-M-12KJ03		08

34X44 E SIZE

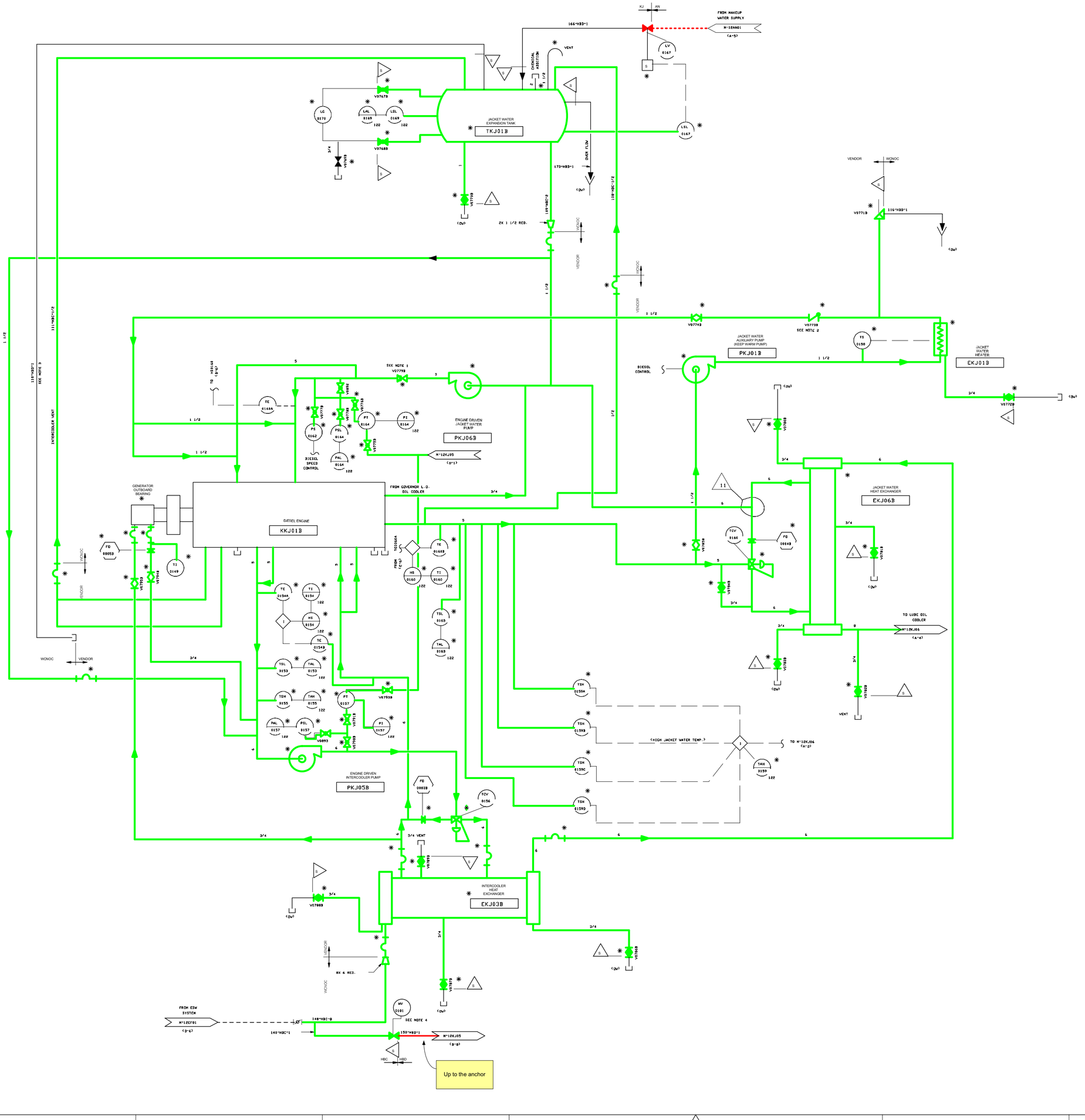

NOTES

1. REPRESENTS A DUAL PLATE CHECK VALVE.
2. THE INTERNALS OF VALVE V07738 HAS BEEN REMOVED.
3. COOLING WATER RETURN FROM THE FUEL INJECTION NOZZLES HAS BEEN ELIMINATED. LINE 110"-HB3"-1 HAS BEEN ABANDONED IN PLACE PER CCP 05999.
4. KJHV0101 IS ABANDONED IN PLACE AND BLOCKED CLOSED WITH THE ACTUATOR REMOVED.

USAR FIG. 9.5.5-1-02

ESSENTIAL DRAWING

◉ REVISED ○ ISSUED	INCORPORATED CHG. DOC. PIR 2004-0198		CHANGE PKG. NO.
THIS DWG SUPERSEDED BY	REV.	THIS DWG SUPERSEDES	REV.
REVISION NOTES:			

WOLF CREEK NUCLEAR OPERATING CORPORATION

ELECTRONIC APPROVAL

PIPING & INSTRUMENTATION DIAGRAM
STANDBY DIESEL GENERATOR 'B'
COOLING WATER SYSTEM

SCALE	DRAWING NUMBER	SHEET	REV
NONE	LR-WCGS-KJ-M-12KJ04		11

34X44 E SIZE

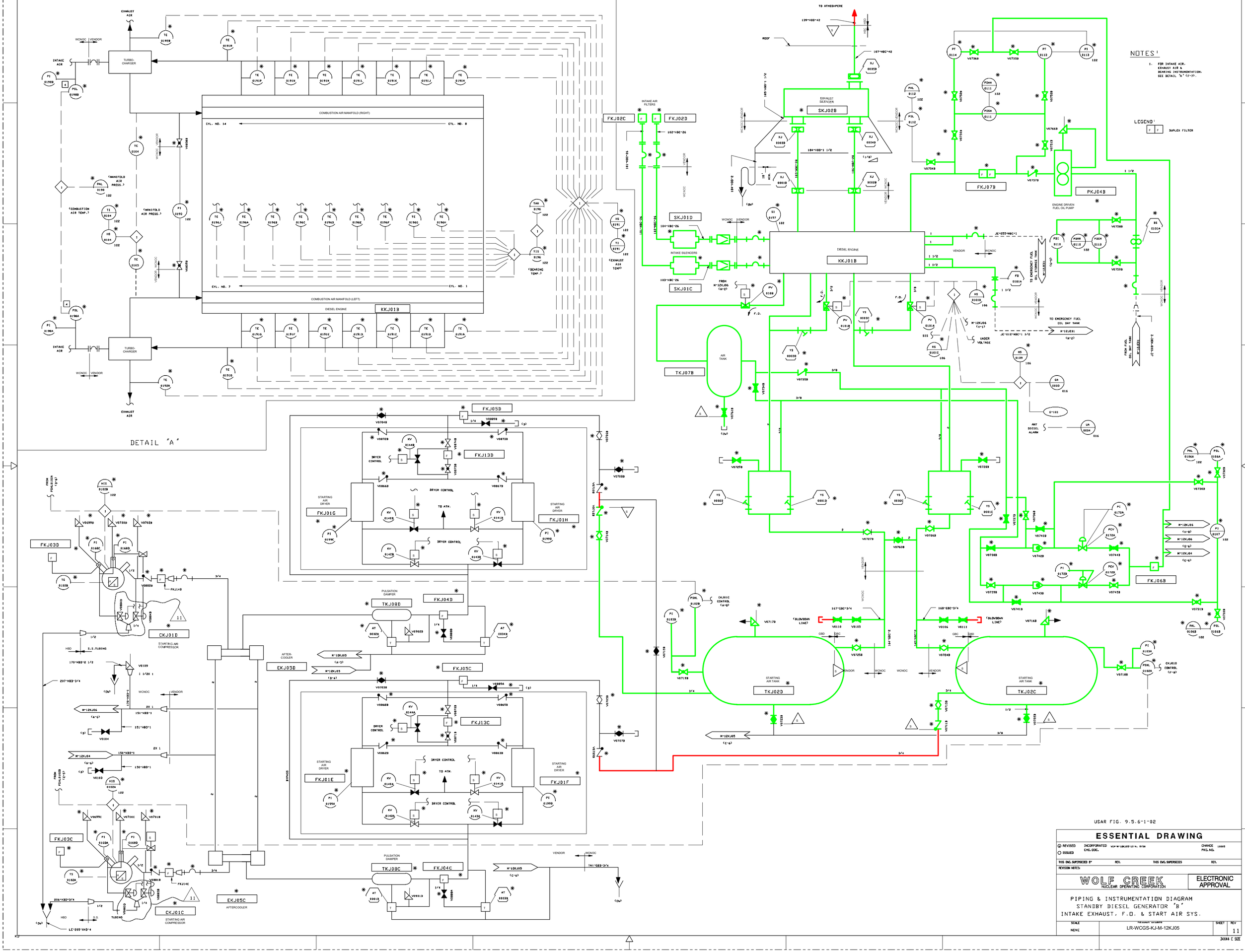

DETAIL "A"
COMBUSTION AIR MANIFOLD (RIGHT)
COMBUSTION AIR MANIFOLD (LEFT)
DIESEL ENGINE
KKJ01B
TURBO-CHARGER
INTAKE AIR
EXHAUST AIR
INTAKE AIR FILTERS
FKJ02C
FKJ02D
SKJ01D
SKJ01C
INTAKE SILENCERS
EXHAUST SILENCER
SKJ02B
DIESEL ENGINE
KKJ01B
FKJ07B
PKJ04B
ENGINE DRIVEN FUEL OIL PUMP
TO ATMOSPHERE
ROOF
AIR TANK
TKJ07B
FKJ05D
FKJ13D
FKJ01G
FKJ01H
STARTING AIR DRYER
DRYER CONTROL
TO ATM.
FKJ03D
CKJ01D
STARTING AIR COMPRESSOR
PULSATION DAMPER
TKJ08D
FKJ04D
AFTER-COOLER
EKJ05D
FKJ05C
FKJ13C
FKJ01E
FKJ01F
FKJ03C
CKJ01C
EKJ05C
TKJ08C
FKJ04C
FKJ06B
TKJ02D
TKJ02C
STARTING AIR TANK
NOTES:
1. FOR INTAKE AIR, EXHAUST AIR & BEARING INSTRUMENTATION, SEE DETAIL "A" (F-7).
LEGEND:
DUPLEX FILTER
USAR FIG. 9.5.6-1-02
ESSENTIAL DRAWING
REVISED
ISSUED
INCORPORATED CHG. DOC.
CHANGE PKG. NO.
THIS DWG. SUPERSEDED BY
REV.
THIS DWG. SUPERSEDES
REV.
REVISION NOTES:
WOLF CREEK
NUCLEAR OPERATING CORPORATION
ELECTRONIC APPROVAL
PIPING & INSTRUMENTATION DIAGRAM
STANDBY DIESEL GENERATOR "B"
INTAKE EXHAUST, F.O. & START AIR SYS.
SCALE
NONE
LR-WCGS-KJ-M-12KJ05
SHEET
REV
11
34X44 E SIZE

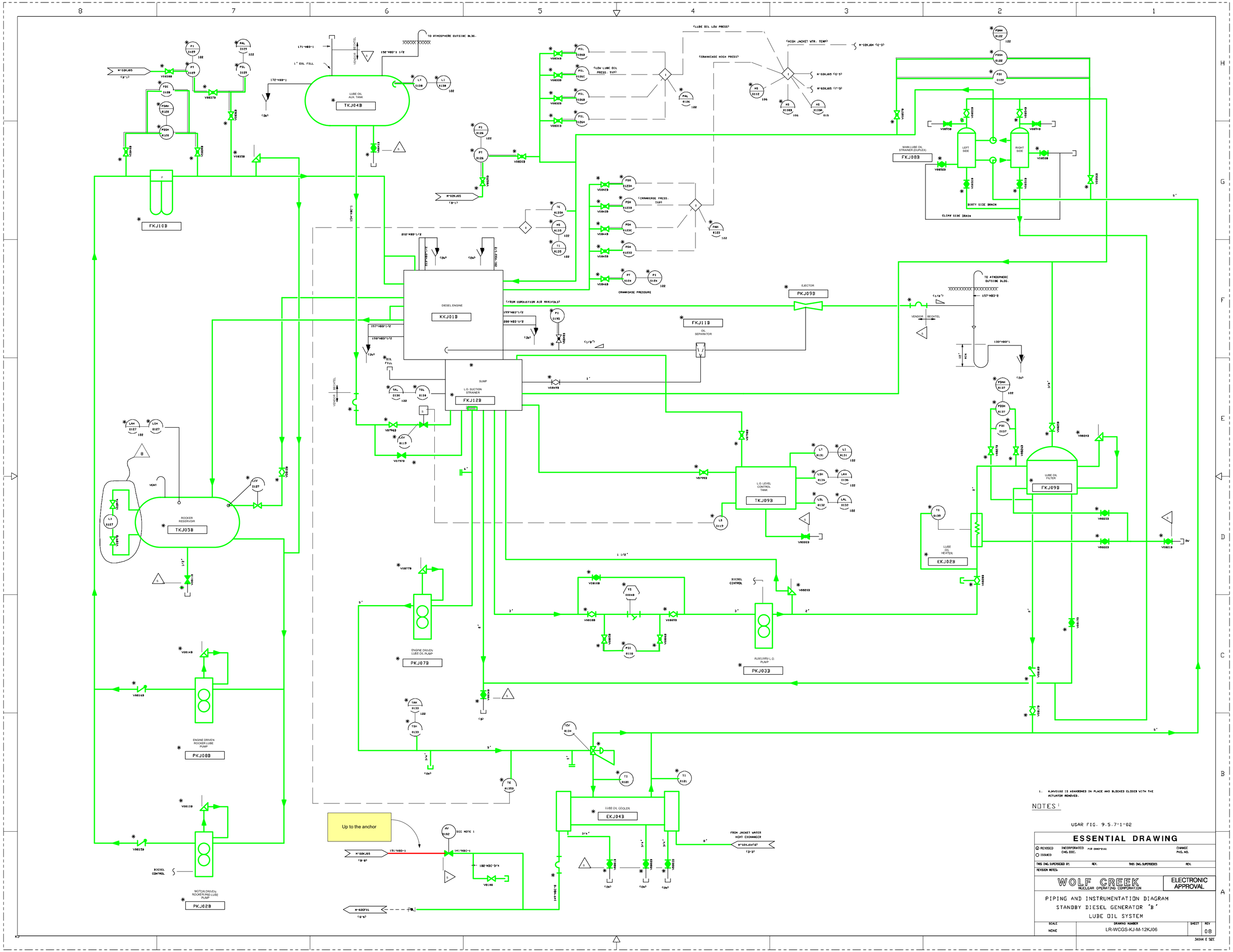

1. HJHV0102 IS ABANDONED IN PLACE AND BLOCKED CLOSED WITH THE ACTUATOR REMOVED.

NOTES:

USAR FIG. 9.5.7-1-02

ESSENTIAL DRAWING

REVISED / ISSUED	INCORPORATED CHG. DOC.	PIR 0003-2161	CHANGE PKG. NO.
THIS DWG. SUPERSEDED BY	REV.	THIS DWG. SUPERSEDES	REV.
REVISION NOTES:			

WOLF CREEK NUCLEAR OPERATING CORPORATION

ELECTRONIC APPROVAL

PIPING AND INSTRUMENTATION DIAGRAM
STANDBY DIESEL GENERATOR 'B'
LUBE OIL SYSTEM

SCALE	DRAWING NUMBER	SHEET	REV
NONE	LR-WCGS-KJ-M-12KJ06		08

34X44 E SIZE

NOTES

1. THE AUXILIARY BUILDING AND RHR PUMP ROOM SEISMIC CATEGORY I LEVEL INDICATORS WILL BE INSTALLED ON A SEPARATE TRIANGULAR COVER PROVIDED BY BECHTEL. SPACE FOR THIS COVER WILL BE MADE BY HAVING A TRIANGULAR CUT OF SAME SIZE ON ORIGINAL SUMP COVER PLATE. TRIANGULAR COVER WILL BE CATEGORY I.
2. DRAWING D-LIST PERTAINS TO LEVEL INDICATORS L-102, L-103, AND L-104 ONLY.
3. ▽ CAPPED EQUIP. DRAIN.
4. ▽ PLUGGED FLOOR DRAIN.
5. DRAINS SHOWN FOR VALVE STEM LEAKOFFS ARE THE RECOMMENDED DRAINS. CONSTRUCTOR MAY REROUTE VALVE STEM LEAKOFFS TO ANY OTHER CONVENIENT DRAIN(S) PROVIDED CNV AND IRW DRAINS ARE SEGREGATED FROM EACH OTHER.
6. RECIRCULATION ORIFICES (DRILLED HOLE) ARE TO EXTEND PUMP LIFE DURING SHUT - OFF CONDITIONS ON SIS.

FL. EL. 1988-0
FL. EL. 1974-0

FROM AUX. BLDG. FUEL BLDG., RAD. WASTE BLDG., CONTROL BLDG., RADWASTE TUNNEL, NON-RADIOACTIVE PIPE TUNNEL, SOLIDIFICATION AREA & HOT MACHINE SHOP SUMPS

LAH 0116 (024)

AUX. BLDG. FLOOR & EQUIP DRAINS M-12LF32 (A-8)
AUX. BLDG. FLOOR & EQUIP DRAINS M-12LF32 (A-7)
AUX. BLDG. FLOOR & EQUIP DRAINS M-12LF32 (A-6)
AUX. BLDG. FLOOR & EQUIP DRAINS M-12LF32 (A-5)
AUX. BLDG. FLOOR & EQUIP. DRAINS M-12LF32 (A-4)
AUX. BLDG. FLOOR & EQUIP DRAINS M-12LF32 (A-3)
AUX. BLDG. FLOOR & EQUIP DRAINS M-12LF32 (A-2)

AUX. BLDG. FLOOR & EQUIP DRAINS M-12LF03 (C-3)
AUX. BLDG. FLOOR & EQUIP DRAINS M-12LF03 (C-3)

118"-HC3-4
117"-HC3-4
120"-HCD-4
123"-HCD-4
116"-HCD-4
124"-HCD-4
PIPE CHASE
124"-HCD-4
133"-HCD-4
125"-HCD-4
127"-HC3-4
139"-HC3-4
129"-HCD-4
A15"-HCD-4
134"-HC3-4
129"-HC3-4
IRW
CNV
DRV

613"-HCD-6
611"-HCD-4
609"-HCD-4
393"-HCD-4
608"-HC3-6
607"-HC3-6
610"-HCD-4
CORRIDOR
MISC. DRAIN HUB
263"-HC3-4
614"-HCD-4
BORIC ACID TANK ROOM
613"-HCD-4
NORMAL CHARGING PUMP ROOM
616"-HCD-4
615"-HCD-4
617"-HCD-4
NORMAL CHARGING PUMP
619"-HCD-4
NORMAL CHARGING PUMP ROOM & ROOM COOLER
618"-HCD-4
155"-HCD-4
156"-HCD-8
DISCHARGE ON FLOOR EL. 1974-0
824"-HCD-4
625"-HCD-4
PIPING LOW POINT DRAIN
620"-HC3-4
281"-HCD-4
MISC. DRAIN HUB
627"-HCD-4
629"-HCD-4
BORON INJ TANK ROOM LOW POINT DRAIN
628"-HC3-4
BORON INJECTION TANK ROOM
131"-HCD-2 1/2
STEAM GEN. BLOWDOWN PUMP & VALVE STEM LEAKOFF
626"-HCD-4
623"-HCD-4
622"-HC3-4
636"-HCD-4
BORIC ACID TANK ROOM
631"-HCD-4
633"-HCD-4
264"-HCD-4
633"-HCD-4
632"-HCD-4
CENTRIFUGAL CHARGING PUMP ROOM COOLER EL. 1974-0
CENTRIFUGAL CHARGING PUMP ROOM EL. 1974-0
CENTRIFUGAL CHARGING PUMP EL. 1974-0
686"-HCD-4
685"-HCD-4
684"-HCD-4
CENTRIFUGAL CHARGING PUMP ROOM EL. 1974-0 & VALVE STEM LEAKOFF [(C-3) V6483A
678"-HC3-4
682"-HCD-4
681"-HCD-4
SAFETY INJECTION PUMP ROOM & ROOM COOLER EL. 1974-0
SAFETY INJECTION PUMP EL. 1974-0
683"-HCD-4
SAFETY INJECTION PUMP ROOM EL. 1974-0
680"-HC3-4
676"-HC3-4
RHR PUMP EL. 1967-0
677"-HCD-4
671"-HCD-4
RHR PUMP ROOM COOLER EL. 1967-0
675"-HC3-4
RHR PUMP ROOM EL. 1967-0
670"-HCD-6
672"-HC3-4
CTMT SPRAY PUMP ROOM EL. 1967-0
674"-HCD-4
CTMT SPRAY PUMP EL. 1967-0
673"-HCD-4
CTMT SPRAY PUMP ROOM COOLER EL. 1967-0
TOP OF SUMP EL. 1967-0

FLOOR DRAIN TANK M-12LF32 (C-4)
108"-HCB-6
L1 0103 (023)
L-103
LIT 0103
SEE NOTES 1 & 2
AUX. BLDG. FLOOR & EQUIP DRAINS M-12LF03 (C-3)
LE 0103B
LE 0103A
TOP OF SUMP EL. 1967-0
CORRIDOR EL. 1967-0
628"-HCB-4
V0032
V0034
V0041
V0043
L1 0104 (023)
L-104
LIT 0104
SEE NOTES 1 & 2
ALTERNATOR
30V
LE 0104A
LE 0104B
HS 0001
HS 0002
LE 0003
LSH 0004
Q-1
Q-2
TO LAH0116 (H-6)
AUX. BLDG. EXHAUST SYSTEM M-12GL01 (A-7)
AUX. BLDG. EXHAUST SYSTEM M-12GL01 (B-8)
179"-HCB-4
185"-HCB-4
835"-HCB-8
5/16 DIA. ORIFICE HOLE (SEE NOTE 6)
PLF02B
AUXILIARY BUILDING SUMPS AND PUMPS (DRW)
PLF02A
797"-HCB-8 1/2
178"-HCB-4
177"-HCB-8 1/2
CONT BLDG. FLOOR & EQUIP DRAIN SUMP DISCHARGE M-12LF68 (C-3)
V0070
V0072
V0005
V0006
V0007
V0008
804"-HCB-4
CORRIDOR
L1 0168 (023)
L-102
LIT 0102
SEE NOTES 1 & 2
ALTERNATOR
HIS 0006
HS 0005
LE 0007
LSH 0008
LAH 0009
Q-3
Q-4
Q-5
LE 0102A
LE 0102B
AUX. BLDG. EXHAUST SYSTEM M-12GL01 (B-8)
179"-HCB-2
179"-HCB-2
1/4 DIA. ORIFICE HOLE (SEE NOTE 6)
PLF01B
RHR PUMP ROOM SUMP AND PUMPS (DRW)
PLF01A

FL. EL. 1974-0

USAR FIG. 9.3-5-08

ESSENTIAL DRAWING

(X) REVISED	INCORPORATED	CHANGE
( ) ISSUED	CHG. DOC.	PKG. NO.

THIS DWG. SUPERSEDED BY — REV. — THIS DWG. SUPERSEDES 9706170101 REV. 00

REVISION NOTES: ELECTRONICALLY CONVERTED PER AP 05-010

WOLF CREEK NUCLEAR OPERATING CORPORATION — ELECTRONIC APPROVAL

PIPING AND INSTRUMENTATION DIAGRAM
AUXILIARY BUILDING
FLOOR AND EQUIPMENT DRAIN SYSTEM

SCALE	DRAWING NUMBER	SHEET	REV
NONE	LR-WCGS-LF-M-12LF01		01

34X44 E SIZE

NOTES

1. THE RHR PUMP ROOM SEISMIC CATEGORY I LEVEL INDICATORS WILL BE INSTALLED ON A SEPARATE TRIANGULAR COVER PROVIDED BY BECHTEL. SPACE FOR THIS COVER WILL BE MADE BY HAVING A TRIANGULAR CUT OF SAME SIZE ON ORIGINAL SUMP COVER PLATE. COVER WILL BE CATEGORY I.
2. DRAWING G - 1157 PERTAINS TO LEVEL INDICATOR L-101 AND VALVES HV8105 AND HV8106 ONLY.
3. RECIRCULATION ORIFICES (DRILLED HOLES) ARE TO EXTEND PUMP LIFE DURING SHUT - OFF CONDITION ON SIS.

FL. EL. 1988-0
FL. EL. 1974-0

PIPE CHASE
112"-HCB"-4
111"-HCB"-4
109"-HCB"-4
110"-HCB"-4
L-30"-SS3
M-12EA62 (C-7)
AUX. BLDG. FLOOR AND EQUIP. DRAINS M-12EF04 (A-7)
A12"-XND"-4
ELECT. CHASE
A11"-XND"-4
113"-HCB"-4
105"-HCB"-4
324"-HCB"-4
V0890
V0889
324"-HCB-1/2
DRV
115"-HCB"-4
119"-HCB"-4
121"-HCB"-4
118"-HCD"-4
120"-HCB"-4
AUX. BLDG. FLOOR AND EQUIP. DRAINS M-12LF01 (G-8)
LETDOWN HT. EXCH. VLV. COMPT.
057"-HCB"-4
CORRIDOR
056"-HCB"-4
LETDOWN HT. EXCH. ROOM
049"-HCB"-4
LETDOWN HEAT EXCH. VLV. COMPT.
054"-HCB"-4
LETDOWN CHILLER HT. EXCH. ROOM
MODERATING HT. EXCH. ROOM
LETDOWN REHEAT HT. EXCH. ROOM
HT. EXCH. VLV. COMPTS.
868"-HCB"-4
867"-HCB"-4
866"-HCB"-4
059"-HCB"-4
394"-HCB"-4
MISC. DRAIN HUB
053"-HCD"-4
CORRIDOR
862"-HCD"-4
CHILLER
861"-HCB"-4
051"-HCB"-4
REACTOR MAKE - UP WATER PUMPS
052"-HCB"-4
288"-HCB"-4
MISC. DRAIN HUB
965"-HCB"-6
DISCHARGE ON FLOOR EL. 1974-0
106"-HCB"-6
CORRIDOR
197"-HCD"-4
CORRIDOR
037"-HCD"-4
036"-HCB"-6
HT. EXCH. VLV. COMPT.
060"-HCB"-4
058"-HCB"-6
DRV
CLOSES ON SIS
035"-HCB"-8
041"-HCB"-4
CORRIDOR
FAN COIL UNIT
046"-HCD"-4
CORRIDOR
045"-HCB"-4
CORRIDOR
043"-HCB"-4
MISC. DRAIN HUB
392"-HCB"-4
CORRIDOR
044"-HCB"-4
114"-HCB"-6
048"-HCB"-4
CORRIDOR
047"-HCD"-4
CORRIDOR
039"-HCD"-4
AUX. BLDG. FLOOR AND EQUIP. DRAINS M-12LF01 (B-8)
CONTROL BLDG. FLOOR AND EQUIPMENT DRAIN SUMP, RHR PUMP ROOM SUMP AND AUX. BLDG. SUMP DISCHARGE M-12LF01 (C-8)
FLOOR DRAIN TANK M-12LF07 (H-7)
HCB-3
V8100
FLUSH CONN.
181"-HCB"-6
HV 8105
HV 8106
F.L.
HCD
HCC
S
Z-105
Z-106
MS 8105
MS 8106
023
029
132"-HCB"-6
108"-HCB"-6
132"-HCB"-21
V8071
V8049
364"-HCB"-2 1/2
V8010
V8012
V8009
V8011
SAFETY INJECTION PUMP ROOM COOLER EL. 1974-0
CENTRIFUGAL CHARGING PUMP ROOM EL. 1974-0
099"-HCD"-4
SAFETY INJECTION PUMP ROOM EL. 1974-0
103"-HCD"-4
CENTRIFUGAL CHARGING PUMP ROOM COOLER EL. 1974-0
CENTRIFUGAL CHARGING PUMP EL. 1974-0
102"-HCD"-4
098"-HCB"-4
SAFETY INJECTION PUMP EL. 1974-0
SAFETY INJECTION PUMP ROOM EL. 1974-0
100"-HCB"-4
101"-HCB"-4
897"-HCB"-4
CENTRIFUGAL CHARGING PUMP ROOM EL. 1974-0
095"-HCD"-4
DRV
CTMT. SPRAY PUMP ROOM EL. 1967-0
CTMT. SPRAY PUMP EL. 1967-0
091"-HCD"-4
090"-HCD"-4
CTMT. SPRAY PUMP ROOM COOLER EL. 1967-0
093"-HCB"-4
092"-HCB"-4
889"-HCB"-4
094"-HCD"-4
RHR PUMP & ROOM EL. 1967-0
088"-HCD"-4
RHR PUMP ROOM COOLER EL. 1967-0
DRV
887"-HCB"-6
ALTERNATOR
MS 8020
MS 8019
MS 8021
LS 8021
LAH 8022
LSH 8022
LIT 8101
LE 8101A
LT 8101
LE 8101B
L-101 (SEE NOTES 1 AND 2)
Q-19
Q-20
AUX. BLDG. EXH. SYSTEM M-12GL02 (B-2)
382"-HCB"-2
383"-HCB"-2
TOP OF SUMP EL. 1967-0
1/4 ORIFICE HOLE (SEE NOTE 3)
PLF01D
PLF01C
FL. EL. 1974-0
FL. EL. 1974-0

RHR PUMP ROOM SUMP AND PUMPS (DRV)

USAR FIG. 9.3-5-10

ESSENTIAL DRAWING

☒ REVISED ○ ISSUED	INCORPORATED CHG. DOC.	CHANGE PKG. NO.
THIS DWG. SUPERSEDED BY	REV.	THIS DWG. SUPERSEDES M-12LF01P REV. 02

REVISION NOTES: ELECTRONICALLY CONVERTED PER AP 05-010

WOLF CREEK NUCLEAR OPERATING CORPORATION

ELECTRONIC APPROVAL

PIPING AND INSTRUMENTATION DIAGRAM
AUXILIARY BUILDING FLOOR AND
EQUIPMENT DRAIN SYSTEM

SCALE	DRAWING NUMBER	SHEET	REV
NONE	LR-WCGS-LF-M-12LF03		03

34X44 E SIZE

8 7 6 5 4 3 2 1

EL. 2026-0
EL. 2000-0
EL. 1974-0

BORIC INJECTION MAKE-UP PUMP
BORIC ACID BATCHING TANK & OVERFLOW & CVCS CHEMICAL MIXING TANK
517-HCB-4
519-HCB-4
M-12BG05 (B-4) (G-6) (F-8)

BORON THERMAL REGENERATION DEMINERALIZERS
M-12BG04 (A-7)
M-12BG04 (A-6)
M-12BG04 (A-5)
M-12BG04 (A-4)
M-12BG04 (A-3)
452-HCD-2 1/2
451-HCB-2 1/2
456-HCB-2 1/2
449-HCB-2 1/2
448-HCD-2 1/2

CATION DEMINERALIZERS
M-12BG02 (B-7)
447-HCB-1
447-HCB-2 1/2
466-HCB-2 1/2
RESIN CHARGING TANK
M-12HC04 (B-2)
445-HCB-3/4
MIXED BED DEMINERALIZERS
M-12BG02 (B-5)
M-12BG02 (B-4)
368-HCB-2 1/2
444-HCD-4

458-HCB-2 1/2
458-HCD-1 REACTOR COOLANT FILTER
M-12BG02 (B-2)
Structural Integrity
457-HCD-1 SEAL WATER RETURN FILTER
457-HCD-2 1/2
M-12BG03 (G-2)
455-HCB-2 1/2
456-HCD-1 SEAL WATER INJECTION FILTER
M-12BG03 (B-2)
454-HCD-1 BORIC ACID FILTER
454-HCD-2 1/2
M-12BG05 (A-5)
456-HCD-1 SEAL WATER INJECTION FILTER
M-12BG03 (C-2)
456-HCB-2 1/2
455-HCB-4
454-HCD-4
439-HCB-4
442-HCB-4

PIPING PENETRATION ROOM LOW POINT DRAINS
443-HCB-4
466-HCD-4

RHR HEAT EXCHANGER VALVE COMPARTMENT
459-HCD-1
RHR HEAT EXCHANGER (TUBE SIDE)
M-12EJ01 (B-4)
459-HCB-4

RHR HEAT EXCHANGER VALVE COMPARTMENT
475-HCD-1
RHR HEAT EXCHANGER (TUBE SIDE)
475-HCB-4
M-12EJ01 (F-4)
3/8 TUBING
RV DISCH. ON SJ-145
M-12EJ04 (B-4)
467-HCD-2 1/2
HCD
C-3
(SEE NOTE 3)
461-HCD-4
SEAL WTR. HT. EXCHANGER VALVE COMPARTMENT LOW POINT DRAIN
460-HCD-4
AUX. BLDG. SAMPLING ROOM MISC. DRAIN HUB
AUX. BLDG. SAMPLING ROOM SINK
267-HCB-2 1/2
M-12EJ01 (A-8)
445-HCB-4

VOLUME CONTROL TANK AREA LOW POINT DRAIN
VOLUME CONTROL TANK VALVE COMPARTMENT
M-12BG03 (E-7)
499-HCB-2 1/2
Structural Integrity
496-HCD-1
496-HCB-4
493-HCD-4

PIPING PENETRATION ROOM LOW POINT DRAINS
497-HCB-4
492-HCB-4
SEAL WATER HEAT EXCHANGER (TUBE SIDE)
M-12BG03 (F-5)
495-HCB-4
490-HCB-2 1/2

NOTES
1. EQUIPMENT DRAIN HUBS SHALL RECEIVE DIRECT DRAINS FROM THE PROCESS SERVICE INDICATED. EQUIPMENT DRAIN LINES AND VALVE STEM LEAKOFFS SHALL BE SIZED AND ARRANGED AS NECESSARY TO CONNECT TO THE DRAIN HUBS INDICATED.
2. ( ) & ( ) INDICATES MULTI - DRAIN CONNECTION FROM LINES INDICATED ON SAME PROCESS P & ID SHEET.
3. BRACKETED VALVE NUMBERS INDICATES MULTI - VALVE STEM LEAKOFF CONNECTIONS TO HUB.
4. INDICATES CAPPED EQUIPMENT DRAIN.
5. SEE DWG. J07G10 FOR INSTRUMENT PIPING CLASS SPEC. FOR STAINLESS STEEL TUBING.

EL. 2000-0
EL. 1974-0

MODERATING HEAT EXCHANGER (SHELL AND TUBE SIDE)
LETDOWN CHILLER HEAT EXCHANGER (TUBE SIDE)
M-12BG04 (E-7)
499-HCD-4
412-HCB-4
M-12BG04 (E-6)
413-HCD-1
LETDOWN REHEAT HEAT EXCHANGER (TUBE AND SHELL SIDE)
M-12BG04 (E-3)
Structural Integrity
413-HCD-4
411-HCB-6
LETDOWN HT. EXCH. VALVE COMPARTMENT VALVE STEM LEAKOFFS
416-HCB-4
HEAT EXCHANGER VALVE COMPARTMENT
469-HCD-4
HEAT EXCHANGER VALVE COMPARTMENT
437-HCB-6
405-HCB-4
REACTOR MAKE-UP WTR. PUMP & AUX. BLDG. EQUIP. DRAIN SUMP FLUSH LINE
414-HCD-4
414-HCD-1
LETDOWN HEAT EXCHANGER (TUBE SIDE)
M-12BG02 (E-6)
Structural Integrity
402-HCD-4
SAFETY INJECTION PUMP
277-HCB-4
CENTRIFUGAL CHARGING PUMP
404-HCB-4
CENTRIFUGAL CHARGING PUMP
429-HCB-4
CENTRIFUGAL CHARGING PUMP
433-HCB-4
406-HCB-4
REACTOR MAKE-UP WATER PUMP
WASTE HOLD - UP TANK
M-12LF06 (E-3)
436-HCD-4
ALTERNATOR
LS 0033
HS 0031
HS 0032
Q-31
Q-32
LSH 0034
TO LAH0116 M-12LF01 (H-6)
V0016
V0017
V0018
V0019
AUXILIARY BUILDING EXHAUST SYSTEM
M-12GL02 (A-3)
TOP OF SUMP EL. 1967-0
403-HCB-6
434-HCD-3
435-HCD-3
PLF08A
PLF08B

RHR PUMP
431-HCB-4
RHR PUMP
418-HCB-2 1/2
CONTAINMENT SPRAY PUMP
419-HCD-4
417-HCB-4
439-HCD-4
RHR PUMP
437-HCB-4
RHR PUMP
CONTAINMENT SPRAY PUMP
416-HCB-4
CENTRIFUGAL CHARGING PUMP
421-HCB-4
442-HCB-6
CENTRIFUGAL CHARGING PUMP
278-HCD-4
482-HCB-4
SAFETY INJECTION PUMP
423-HCB-6

EL. 2000-0
EL. 1974-0

BORIC ACID TRANSFER PUMP AREA
426-HCD-4
427-HCD-2
BORIC ACID TANK T&G03
427-HCB-4
M-12BG05 (E-8)
Structural Integrity
279-HCB-4
MISC. DRAIN HUB
BG-439-HCD-3
BORIC ACID TANK OVERFLOW T&G03
272-HCB-4
M-12BG05 (F-5)
LF
BG
BORIC ACID TANK OVERFLOW T&G03A
273-HCB-4
BG-438-HCD-3
M-12BG05 (F-4)
423-HCB-4
BORIC ACID TRANSFER PUMP AREA
428-HCD-2
BORIC ACID TANK T&G03A
428-HCB-4
M-12BG05 (B-8)
NORMAL CHARGING PUMP ROOM
425-HCB-4
438-HCD-4
MISC. DRAIN HUB
424-HCD-6
416-HCB-4

USAR FIG. NO. 9.3-5-12

ESSENTIAL DRAWING

◉ REVISED ○ ISSUED	INCORPORATED CHGS. DOC.	PIR 1999-3331	CHANGE PKGS. NO.
THIS DWG. SUPERSEDES B;	REV.	THIS DWG. SUPERSEDES 970139	REV. M

REVISION NOTES: ELECTRONICALLY CONVERTED PER AP 05-010

WOLF CREEK NUCLEAR OPERATING CORPORATION — ELECTRONIC APPROVAL

PIPING & INSTRUMENTATION DIAGRAM
AUXILIARY BUILDING
FLOOR & EQUIP. DRAIN SYSTEM

SCALE	DRAWING NUMBER	SHEET	REV
NONE	LR-WCGS-LF-M-12LF05		03

34X44 E SIZE

H G F E D C B A

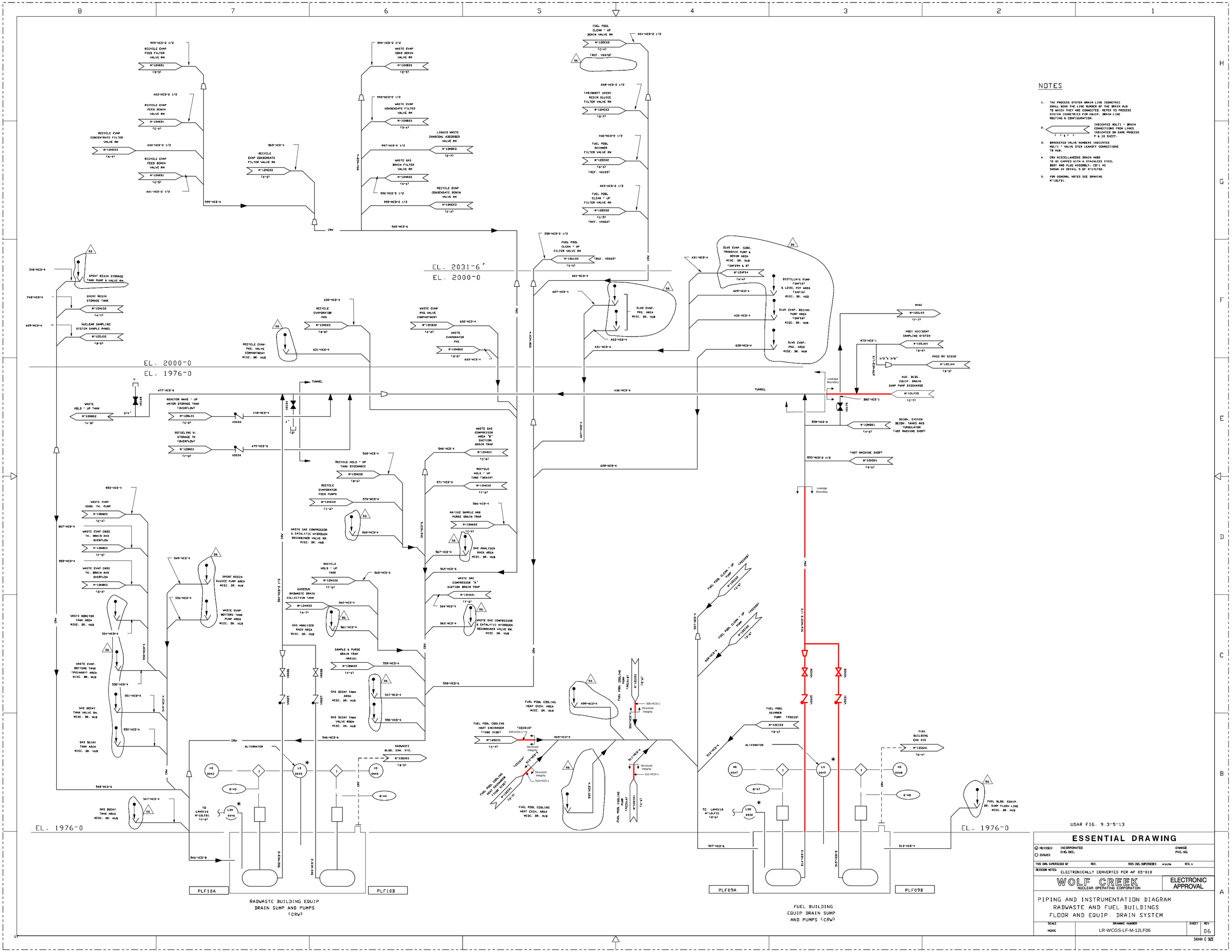

NOTES

1. THE PROCESS SYSTEM DRAIN LINE ISOMETRIC SHALL BEAR THE LINE NUMBER OF THE DRAIN HUB TO WHICH THEY ARE CONNECTED. REFER TO PROCESS SYSTEM ISOMETRICS FOR EQUIP. DRAIN LINE ROUTING & CONFIGURATION.
2. ( ) & ( ) INDICATES MULTI - DRAIN CONNECTIONS FROM LINES INDICATED ON SAME PROCESS P & ID SHEET.
3. BRACKETED VALVE NUMBERS INDICATES MULTI - VALVE STEM LEAKOFF CONNECTIONS TO HUB.
4. CRV MISCELLANEOUS DRAIN HUBS TO BE CAPPED WITH A STAINLESS STEEL BODY AND PLUG ASSEMBLY. CD-1 AS SHOWN IN DETAIL 5 OF M-17LF02.
5. FOR GENERAL NOTES SEE DRAWING M-12LF01.

USAR FIG. 9.3-5-13

ESSENTIAL DRAWING

◉ REVISED	INCORPORATED		CHANGE
○ ISSUED	CHG. DOC.		PKG. NO.
THIS DWG. SUPERSEDED BY	REV.	THIS DWG. SUPERSEDES	REV. 5

REVISION NOTES: ELECTRONICALLY CONVERTED PER AP 05-010

WOLF CREEK NUCLEAR OPERATING CORPORATION

ELECTRONIC APPROVAL

PIPING AND INSTRUMENTATION DIAGRAM
RADWASTE AND FUEL BUILDINGS
FLOOR AND EQUIP. DRAIN SYSTEM

SCALE	DRAWING NUMBER	SHEET	REV
NONE	LR-WCGS-LF-M-12LF06		06

34X44 E SIZE

8 7 6 5 4 3 2 1

CONTROL BLDG. FLOOR AND EQUIPMENT DRAIN SUMPS AND AUXILIARY BLDG. SUMPS
M-12LF03 (C-5)

CTMT. BLDG. SUMPS
M-12LF69 (F-2)

FUEL BLDG. SUMP
M-12LF08 (C-7)

PIPE TUNNEL SUMPS
M-12LF18 (C-8)

FLOOR DRAIN TANK
M-12HB62 (C-8)

SOLIDIFICATION AREA SUMP PUMPS
M-12HC01 (D-8)

HOT MACHINE SHOP OILY WATER SEPARATOR RADWASTE BLDG
M-12LF69 (B-3)

TUNNEL

CORRIDOR

MISC. DRAIN HUB

RECYCLE EVAP. FEED DEMIN.

RECYCLE EVAP. COND. DEMIN.

WASTE EVAP. COND. DEMIN.

LIQUID WASTE CHARCOAL ADSORBER DEMIN.

DEMIN. VLV. COMPT.

RECYCLE EVAP. FEED DEMIN. AND DEMIN. OVER FLOW.

PIPE CHASE

RADWASTE BLDG. EXHAUST FILTER ADSORBER UNIT AREA

MISC. EQUIP. DRAIN

LAUNDRY & HOT SHOWER TANK & AREA

LAUNDRY WATER STORAGE TANK & AREA

WASTE MONITOR TANK & PUMP

WASTE MONITOR TANK AREA

MISC. EQUIP. & FLOOR DRAIN

LAUNDRY AND HOT SHOWER CHARCOAL ADSORBER

WASTE MONITOR TANK

WASTE MONITOR TANK PUMP

WASTE MONITOR TANK ROOM

WASTE EVAP. CNDS. TK. PUMP & AREA

WASTE EVAP. CNDS. TANK

WASTE EVAP. BOTTOMS TANK & AREA

WASTE EVAP. BOTTOMS TANK PUMP

PUMP ROOM

SPENT RESIN SLUICE PUMP

FLOOR DRAIN TK. & AREA

FLOOR DRAIN TK. PUMP & AREA

SLWS MONITOR TANK

SLWS MONITOR TK. ROOM

SLWS DISCHARGE PUMPS

SLWS MONITOR TANKS & AREA

MISC. STORAGE AREA

S.G. BLDN. SURGE TK.

CONTROL ROOM FAN COIL UNIT

CONTROL ROOM

FLOOR DRAIN TANK & AREA

FLOOR DRAIN TK. PUMPS & AREA

FLOOR DR. TK. PUMPS & AREA

RECYCLE EVAPORATOR PACKAGE AREA

RECYCLE EVAP. PACK & ROOM

RECYCLE EVAP. PACK VLV. COMPT.

WASTE EVAP. PACK & AREA

FAN COIL UNIT

RECYCLE EVAP. PACK VLV. RM.

MISC. EQUIP. DRAIN

WASTE EVAP. PACK VLV. RM.

WASTE EVAP. PACK ROOM

WASTE EVAP. PACK VLV. RM.

CATALYTIC HYDROGEN RECOMBINER ROOM

CATALYTIC HYDROGEN RECOMBINER VALVE ROOM

WASTE GAS COMPR. AREA

RECYCLE EVAP. FEED PUMP ROOM

PIPE CHASE

GASEOUS RADWASTE DRAIN COLLECTION TANK AREA

GAS DECAY TK. DR. PUMP

GAS DECAY TKS & AREA

GAS DECAY TANK ROOM

GAS DECAY TANK VALVE ROOM

GAS DECAY TANK AREA

WASTE GAS COMPRESSOR ROOM

WASTE GAS COMPRESSOR VALVE ROOM

FAN COIL UNIT

AUX. STEAM CNDS. RECOVERY TANK TRANSFER PUMPS & AREA

WASTE HOLD-UP TANK & AREA

WASTE EVAP. FEED PUMP & AREA

MISC. EQUIP. DRAIN

S.G. BLDN. SURGE TK.

SAMPLE LAB

SAMPLE PANEL

EVAPORATOR BOTTOMS TK. & AREA

SPENT RESIN STORAGE TANK

SPENT RESIN STORAGE TK. PUMP AND VLV. ROOM

SPENT RESIN STORAGE TK. AREA

CONTROL ROOM FAN COIL UNIT

SLWS EVAP. AREA

SLWS EVAPORATOR AREA

SUBCOOLER AND COND. AREA EL. 2033-6

SECONDARY SPENT RESIN SLUICE FILTER ROOM

SECONDARY SPENT RESIN SLUICE FILTER

FILTER VALVE COMPARTMENT

RECYCLE EVAP. FEED FILTER ROOM

RECYCLE EVAP. CONCENTRATE FILTER ROOM

FILTER VALVE COMPARTMENT

RECYCLE EVAP. COND. FILTER ROOM

WASTE GAS DRAIN FILTER ROOM

STEM GEN. BLDN. FILTER

STEM GEN. BLDN. FILTER ROOM

WASTE EVAP. COND. FILTER ROOM

WASTE MONITOR TANK FILTER ROOM

WASTE EVAP. FEED FILTER ROOM

WASTE EVAP FEED FILTER

FLOOR DRAIN TANK FILTER ROOM

FUEL POOL CLEAN - UP FILTER ROOM

FUEL POOL CLEAN - UP FILTER ROOM

FUEL POOL SKIMMER FILTER ROOM

FILTER VLV. COMPT.

FLOOR DRAIN TANK FILTER

WASTE MONITOR TANK FILTER

LOW TDS FILTER ROOM

LAUNDRY & HOT SHOWER TANK FILTER

LAUNDRY & HOT SHOWER TK. FILTER ROOM

STEAM GEN. BLDN. FILTER ROOM

SECONDARY LIQUID WASTE EVAP. FEED FILTER ROOM

SECONDARY LIQUID WASTE EVAP FEED FILTER

FUEL POOL CLEAN - UP

LOW TDS FILTER

SLWS DEMIN.

DEMIN. VLV. COMPT.

FILTER VLV. COMPT.

SECONDARY SPENT RESIN SLUICE FILTER ROOM

WASTE MONITOR TK. DEMIN

S.G. BLDN. MIXED BED DEMIN

DEMIN. VLV. COMPT.

S.G. BLDN. MIXED BED DEMIN.

SLWS CHARCOAL ADSORBER DEMIN

CHEMICAL DR. TK. PUMP

CHEMICAL DRAIN TK. & AREA

RECYCLE HOLD - UP TK. AREA

S.G. BLDN. SURGE TANK PUMPS AREA

ENTRANCE TO RADIOACTIVE PIPE TUNNEL

RADIOACTIVE PIPE TUNNEL VALVE COMPARTMENT

MISC. EQUIP. DRAINS

LOAD CENTER AREA

S.G. BLDN. SURGE TK. PUMPS

LIQUID RADWASTE DEMIN. SKID ROOM

RADWASTE BLDG. EXHAUST SYS.
M-12GH01 (C-3)

TO LMH0116 M-12LF01 (B-3)

RADWASTE BLDG. SUMP AND PUMPS (DRW)

PLF04A

PLF04B

USAR FIG. 9.3-5-14

ESSENTIAL DRAWING

A REVISED
O ISSUED
INCORPORATED CHG. DOC.
CHANGE PKG. NO.

THIS DWG. SUPERSEDES #'
REV.
THIS DWG. SUPERSEDED BY
REV. 01

REVISION NOTES: ELECTRONICALLY CONVERTED PER AP 05-010

WOLF CREEK NUCLEAR OPERATING CORPORATION

ELECTRONIC APPROVAL

PIPING AND INSTRUMENTATION DIAGRAM
RADWASTE BUILDING
FLOOR AND EQUIPMENT DRAIN SYSTEM

SCALE	DRAWING NUMBER	SHEET	REV
NONE	LR-WCGS-LF-M-12LF07		02

34X44 E SIZE

D C B A

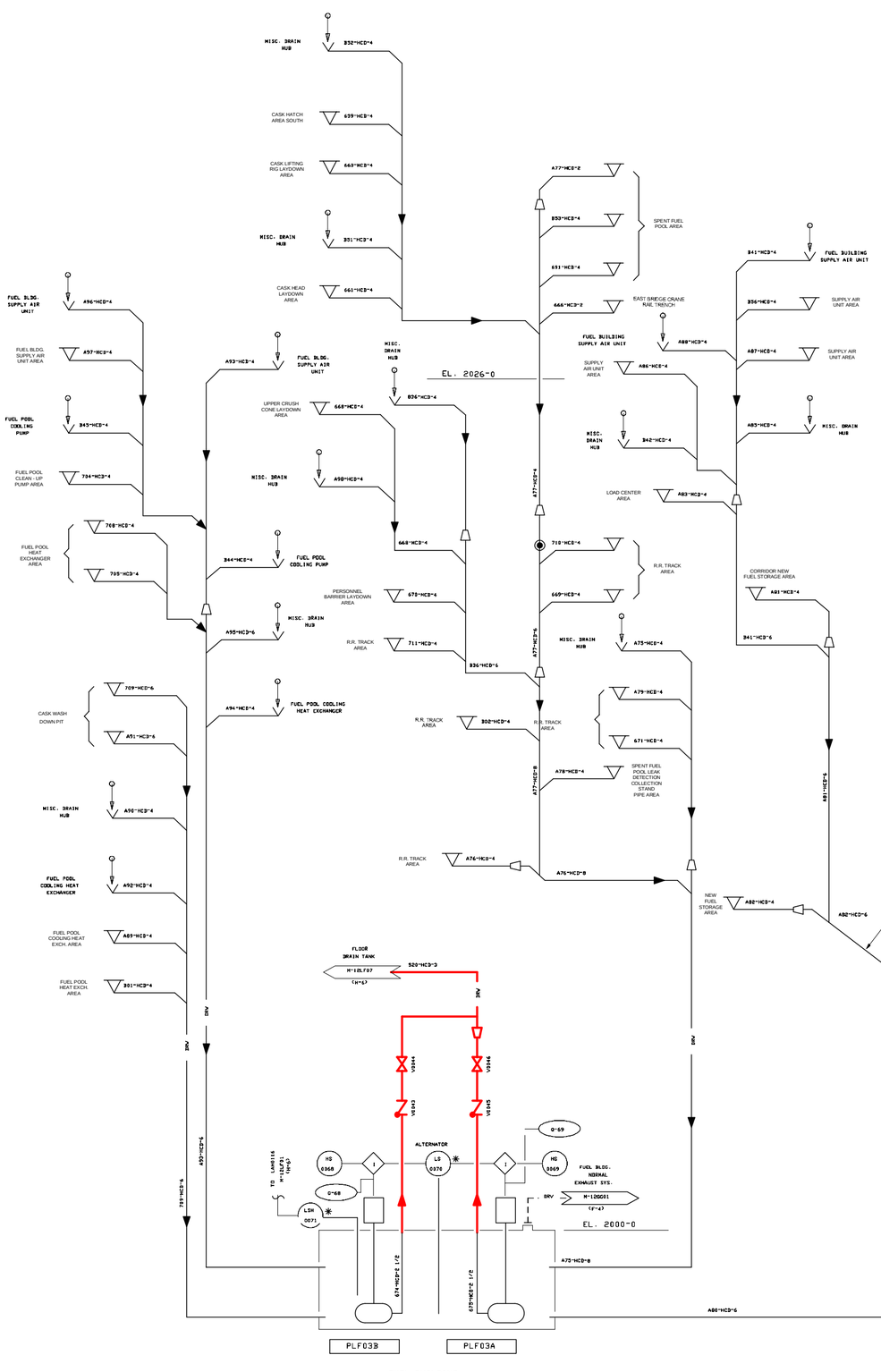

FUEL BUILDING SUMP AND PUMPS (DRW)

CONTROL BUILDING FLOOR AND EQUIPMENT DRAIN SUMP AND PUMPS (DRW)

NOTES

1. DRAWING Q-LIST PERTAINS TO LI0124, LI0125, LIT0124, LIT0125, LC0124 AND LC0125.
2. RECIRCULATION ORIFICES (DRILLED HOLES) ARE TO EXTEND PUMP LIFE DURING SHUT - OFF CONDITIONS ON SIS.

CONTROL BUILDING ELECTRICAL CHASE DRAINS

USAR FIG. 9.3-5-15

ESSENTIAL DRAWING

A REVISED / O ISSUED	INCORPORATED CHG. DOC.	CHANGE PKG. NO.
THIS DWG. SUPERSEDED "A"	REV.	THIS DWG. SUPERSEDES W/A/R/M REV. 01

REVISION NOTES: ELECTRONICALLY CONVERTED PER AP 05-010

WOLF CREEK NUCLEAR OPERATING CORPORATION

ELECTRONIC APPROVAL

PIPING AND INSTRUMENTATION DIAGRAM
CONTROL AND FUEL BLDGS.
FLOOR AND EQUIPMENT DRAIN SYSTEM

SCALE	DRAWING NUMBER	SHEET	REV
NONE	LR-WCGS-LF-M-12LF08		03

34X44 E SIZE

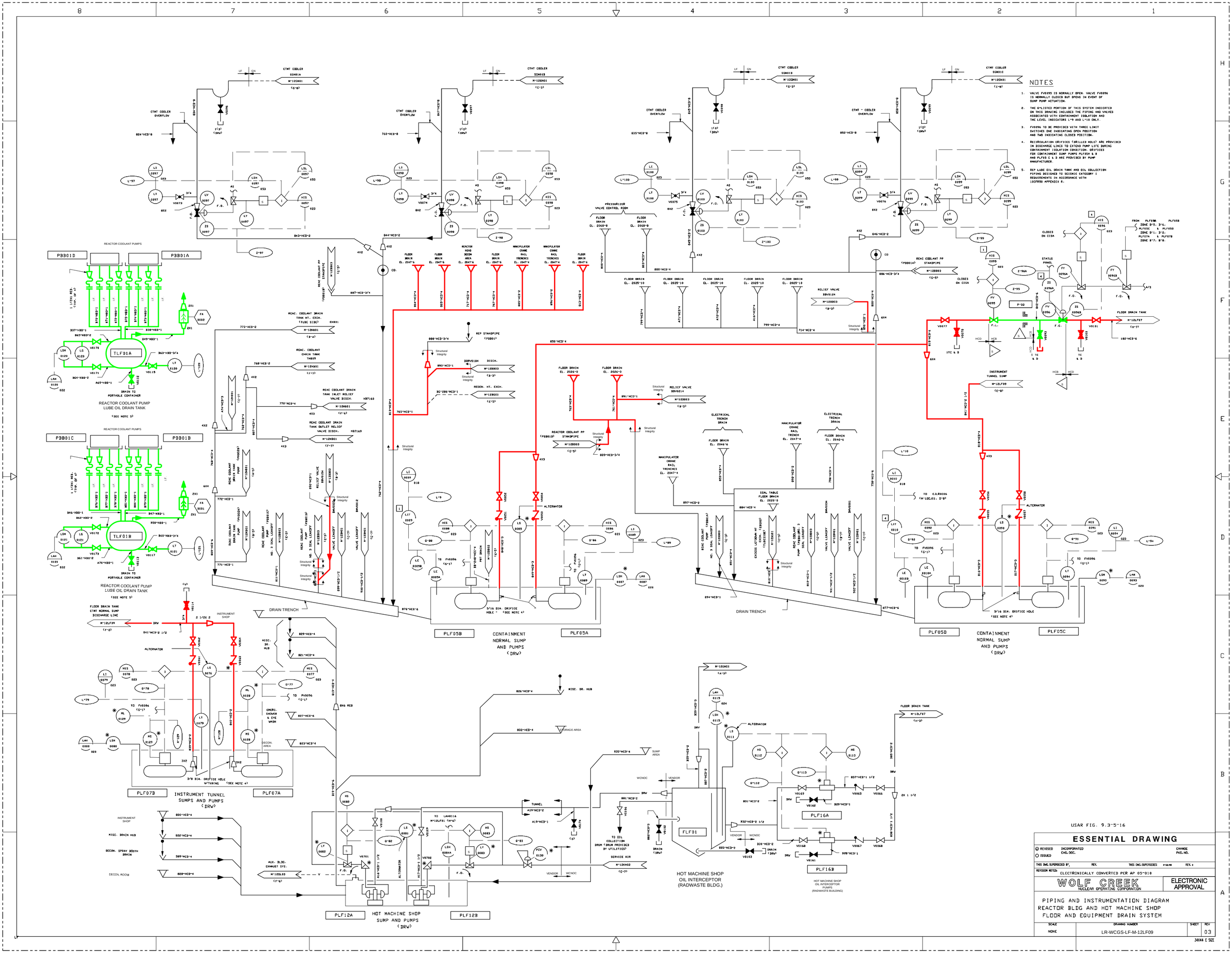

NOTES

1. VALVE FV0095 IS NORMALLY OPEN. VALVE FV0096 IS NORMALLY CLOSED BUT OPENS IN EVENT OF SUMP PUMP ACTUATION.
2. THE G-LISTED PORTION OF THIS SYSTEM INDICATED ON THIS DRAWING INCLUDES THE PIPING AND VALVES ASSOCIATED WITH CONTAINMENT ISOLATION AND THE LEVEL INDICATORS L-9 AND L-10 ONLY.
3. FV0096 TO BE PROVIDED WITH THREE LIMIT SWITCHES ONE INDICATING OPEN POSITION AND TWO INDICATING CLOSED POSITION.
4. RECIRCULATION ORIFICES (DRILLED HOLE) ARE PROVIDED IN DISCHARGE LINES TO EXTEND PUMP LIFE DURING CONTAINMENT ISOLATION CONDITION. ORIFICES FOR CONTAINMENT SUMP PUMPS PLF05A & B AND PLF05 C & D ARE PROVIDED BY PUMP MANUFACTURER.
5. RCP LUBE OIL DRAIN TANK AND OIL COLLECTION PIPING DESIGNED TO SEISMIC CATEGORY I REQUIREMENTS IN ACCORDANCE WITH 10CFR50 APPENDIX R.

USAR FIG. 9.3-5-16

ESSENTIAL DRAWING

⊙ REVISED / ○ ISSUED	INCORPORATED CHG. DOC.	CHANGE PKG. NO.
THIS DWG. SUPERSEDED BY,	REV.	THIS DWG. SUPERSEDES 8-18-99 REV. 0
REVISION NOTES:	ELECTRONICALLY CONVERTED PER AP 05-010	

WOLF CREEK NUCLEAR OPERATING CORPORATION

ELECTRONIC APPROVAL

PIPING AND INSTRUMENTATION DIAGRAM
REACTOR BLDG AND HOT MACHINE SHOP
FLOOR AND EQUIPMENT DRAIN SYSTEM

SCALE	DRAWING NUMBER	SHEET	REV
NONE	LR-WCGS-LF-M-12LF09		03

34X44 E SIZE

NOTES:

1. BRACKETED VALVE NUMBERS INDICATE MULTI - VALVE STEM LEAKOFF PIPING TO RADWASTE TUNNEL TRENCH.

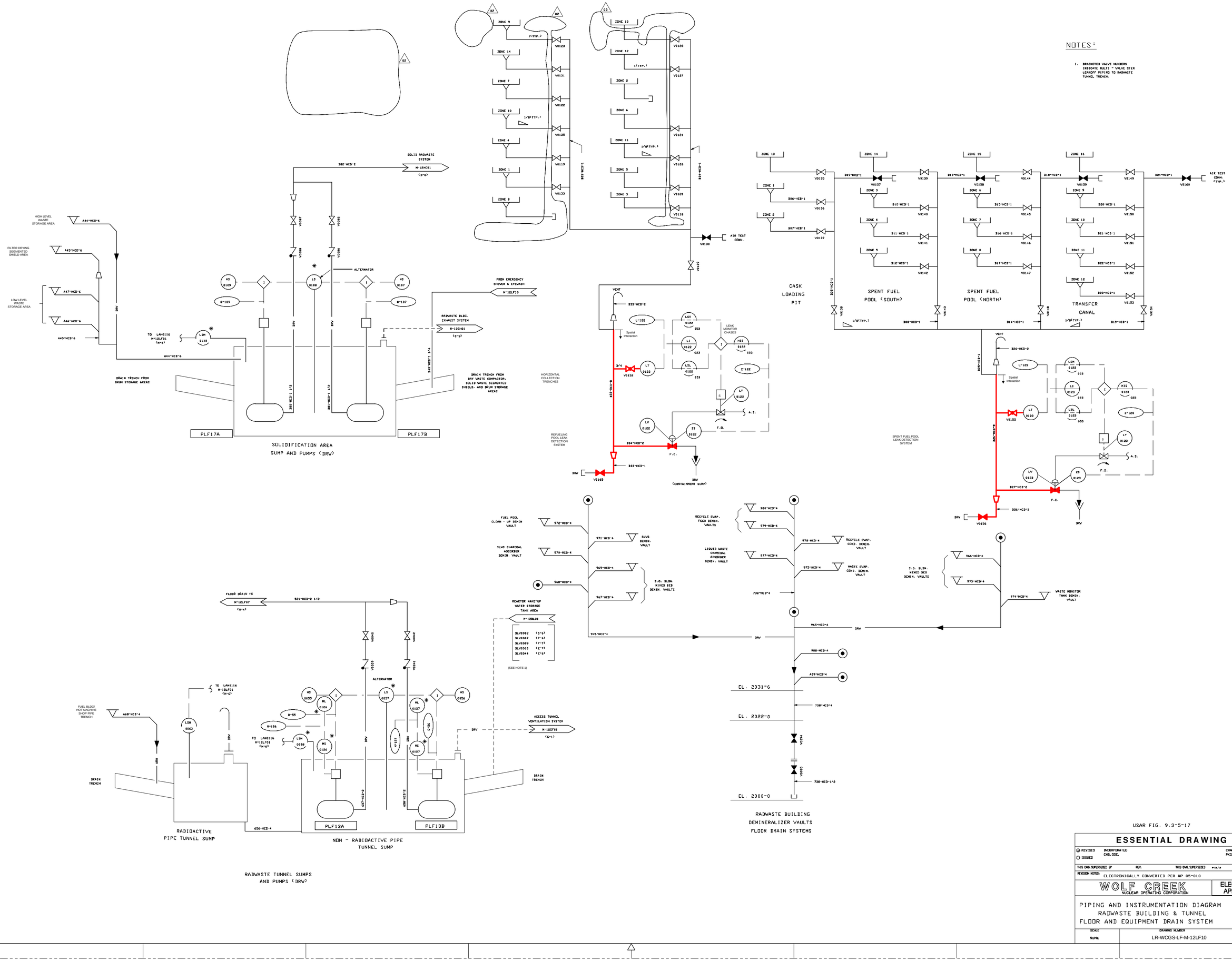

USAR FIG. 9.3-5-17

ESSENTIAL DRAWING

◉ REVISED ○ ISSUED	INCORPORATED CHG. DOC.	CHANGE PKG. NO.
THIS DWG. SUPERSEDED BY	REV.	THIS DWG. SUPERSEDES M-12LF10 REV. 01
REVISION NOTES:	ELECTRONICALLY CONVERTED PER AP 05-010	

WOLF CREEK NUCLEAR OPERATING CORPORATION — ELECTRONIC APPROVAL

PIPING AND INSTRUMENTATION DIAGRAM
RADWASTE BUILDING & TUNNEL
FLOOR AND EQUIPMENT DRAIN SYSTEM

SCALE	DRAWING NUMBER	SHEET	REV
NONE	LR-WCGS-LF-M-12LF10		02

J4644 E SIZE

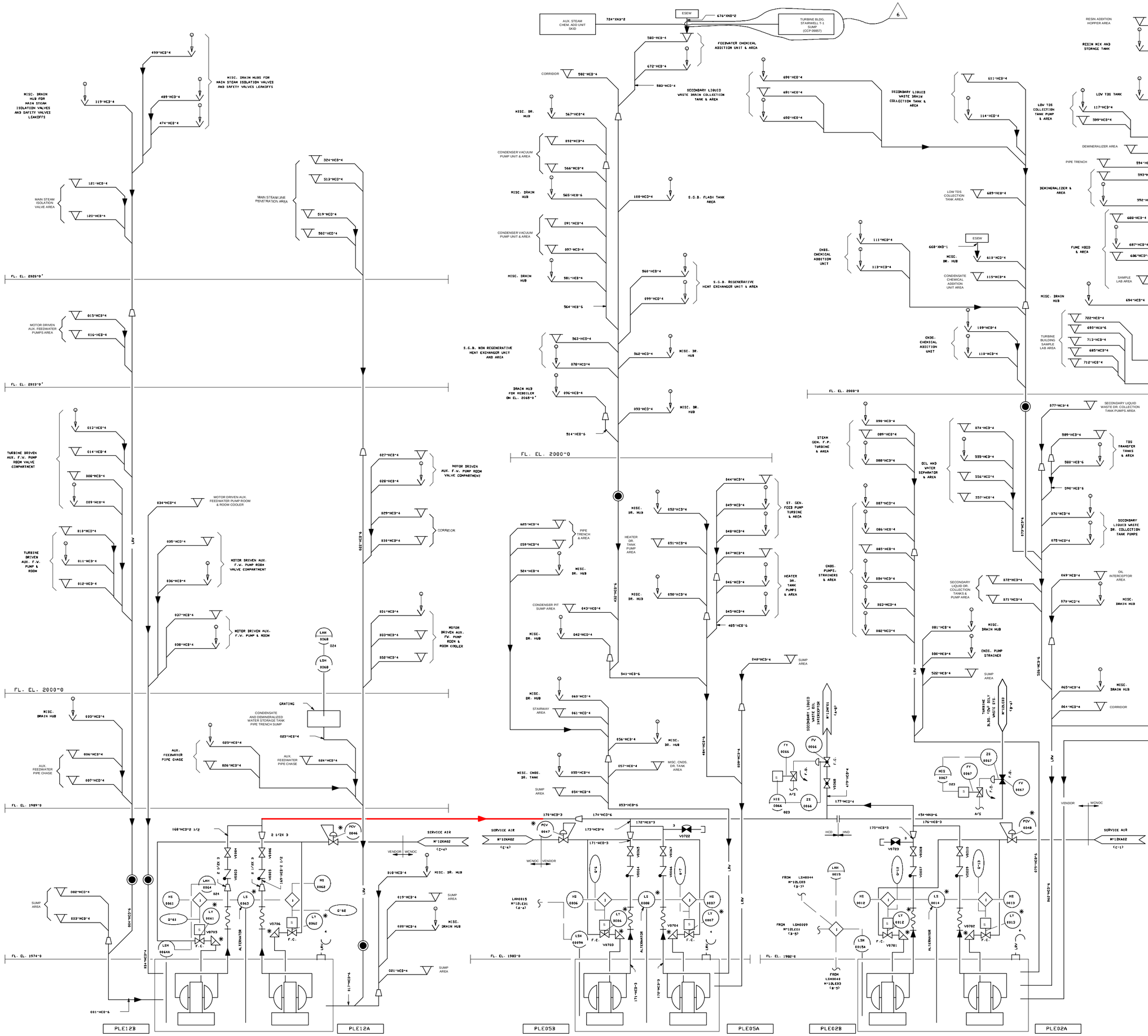

USAR FIG. 9.3-5-04

ESSENTIAL DRAWING

◉ REVISED ○ ISSUED	INCORPORATED CHG. DOC.	CHANGE PKG. NO.	09857
THIS DWG. SUPERSEDES:	REV.	THIS DWG. SUPERSEDES	REV.
REVISION NOTES:			

WOLF CREEK NUCLEAR OPERATING CORPORATION

ELECTRONIC APPROVAL

PIPING AND INSTRUMENTATION DIAGRAM
TURB. BLDG. AND AUX. FEEDWATER
PUMP ROOMS OILY WASTE SYSTEM

SCALE	DRAWING NUMBER	SHEET	REV
NONE	LR-WCGS-LE-M-12LE01		06

34X44 E SIZE

NOTES

1. DRAWING G-LIST PERTAINS TO LEVEL INDICATORS LI0105 AND LI0106.
2. CAPPED EQUIP. DRAIN.

MISC. DRAIN HUB
AIR DRYERS
INTERCOOLER HEAT EXCHANGER
INTERCOOLER HEAT EXCHANGER AREA
EXPANSION TANK
FUEL OIL DAY TANK AREA
MISC. DRAIN HUB
AIR FILTER
EXHAUST SILENCER AREA
STARTING AIR TANKS AND AIR COMPRESSORS
DIESEL GENERATOR FLOOR AREA
DIESEL GENERATOR
DIESEL GENERATOR BLDG. TRENCH
AIR INTAKE SILENCER AREA
JACKET WATER COOLER
AIR FILTER AREA
CONTROL ROOM
FOYER
UPPER CABLE SPREADING ROOM
COMPUTER ROOM
COMPUTER ROOM AREA
CONTAINMENT MINI PURGE AIR SUPPLY UNIT
MAIN STEAM ENCLOSURE BLDG. AIR SUPPLY UNIT
CONTAINMENT PURGE AIR SUPPLY UNIT
AUX. BLDG. AIR SUPPLY UNIT
CONTROL BLDG. AIR SUPPLY UNIT
SWITCHBOARD RM. NO. 2
SWITCHBOARD RM. NO. 4
NON-VITAL A/C SWITCHBOARD & TRANSFORMER ROOM
CORRIDOR
COMPUTER ROOM A/C UNIT AREA
COMPUTER ROOM A/C UNIT
COMM. CORR. SUPPLY UNIT & AREA
CLASS 1E ELECT. EQUIP. A/C UNIT AREA
CLASS 1E ELECT. EQUIP. A/C UNIT
EMER. SHOWER & EYE WASH
CONTROL RM. PRESSURIZATION SYS. FILTER UNITS AREA
CLASS 1E ELECT. EQUIP. A/C UNIT AND AREA
ACCESS CONTROL A/C UNIT
PLANT HOT WATER HEATING EQUIP.
SWITCHBOARD RM. NO. 3
SWITCHBOARD RM. NO. 1
NON-VITAL A/C SWGR. & TRANS. RM.
COMMUNICATION CORRIDOR
CHILLED WATER EXPANSION TANK
ESF SWITCHGEAR ROOMS
BREATHING AIR PKG. & AREA
DOMESTIC HOT WATER PKG.
CENTRAL CHILLED WATER PACKAGE AREA
CENTRAL CHILLED WATER PUMP & AREA
CENTRAL CHILLED WATER PACKAGE
LOWER CABLE SPREADING ROOM
COMM. CORRIDOR BATTERY ROOM NO. 1
BATTERY ROOM NO. 2
BATTERY ROOM NO. 4
BATTERY ROOM NO. 3
BATTERY ROOM NO. 1
ACID NEUTRALIZER TANK
TURBINE BLDG. OILY WASTE SYSTEM
PIPE CHASE
MISC. DRAIN HUB
DIESEL BLDG.
CONTROL BLDG.
TRUCK CONNECTION
ROOF
FL. EL. 2061'-6
FL. EL. 2047'-6
FL. EL. 2032'-0
FL. EL. 2016'-9
FL. EL. 2000'-0
FL. EL. 1984'-0
FL. EL. 2004'-0
FL. EL. 1974'-9
AUX. BLDG. EL. 2047'-6
DV
AV

PLE06A DIESEL GENERATORS BUILDING SUMP (DW)
PLE06B
PLE06C DIESEL GENERATORS BUILDING SUMP (DW)
PLE06D
PLE07B CONTROL BUILDING OILY WASTE SUMP (DW)
PLE07A

USAR FIG. 9.3-5-05

ESSENTIAL DRAWING

A REVISED	INCORPORATED ENG. DOC.	CHANGE PKG. NO.
ISSUED		
THIS DWG. SUPERSEDED BY	REV.	THIS DWG. SUPERSEDES W-13-233 REV. 02

REVISION NOTES: ELECTRONICALLY CONVERTED PER AP 05-010

WOLF CREEK NUCLEAR OPERATING CORPORATION — ELECTRONIC APPROVAL

PIPING & INSTRUMENTATION DIAGRAM
CONTROL & DIESEL GEN. BLDG.
OILY WASTE SYSTEM

SCALE	DRAWING NUMBER	SHEET	REV
NONE	LR-WCGS-LE-M-12LE02		03

34X44 E SIZE

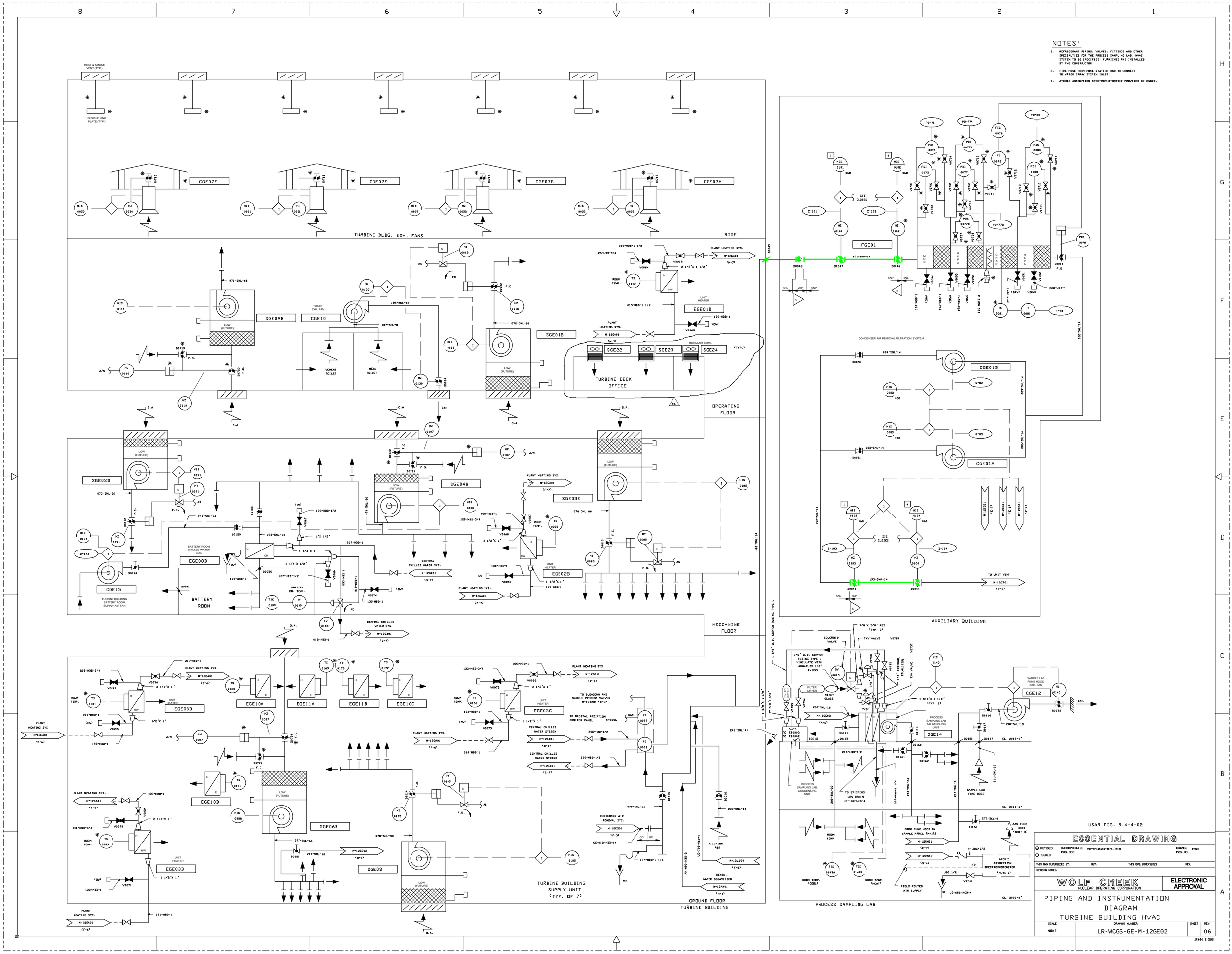

NOTES:
1. REFRIGERANT PIPING, VALVES, FITTINGS AND OTHER SPECIALTIES FOR THE PROCESS SAMPLING LAB. HVAC SYSTEM TO BE SPECIFIED, FURNISHED AND INSTALLED BY THE CONSTRUCTOR.
2. FIRE HOSE FROM HOSE STATION 050 TO CONNECT TO WATER SPRAY SYSTEM INLET.
3. ATOMIC ABSORPTION SPECTROPHOTOMETER PROVIDED BY OWNER.
TURBINE BLDG. EXH. FANS
ROOF
OPERATING FLOOR
MEZZANINE FLOOR
TURBINE BUILDING SUPPLY UNIT (TYP. OF 7)
GROUND FLOOR TURBINE BUILDING
AUXILIARY BUILDING
PROCESS SAMPLING LAB
CONDENSER AIR REMOVAL FILTRATION SYSTEM
TURBINE DECK OFFICE
BATTERY ROOM
USAR FIG. 9.4-4-02
ESSENTIAL DRAWING
WOLF CREEK
NUCLEAR OPERATING CORPORATION
ELECTRONIC APPROVAL
PIPING AND INSTRUMENTATION DIAGRAM
TURBINE BUILDING HVAC
SCALE NONE
DRAWING NUMBER LR-WCGS-GE-M-12GE02
SHEET
REV 06
34X44 E SIZE

NOTES:

1. ALL TE'S ARE MONITORING CONCRETE TEMPERATURE.
2. DUCTWORK SIZES ARE INDICATED AS EQUIVALENT ROUND.
3. DENOTES COMMON ENCLOSURE REFERENCE J-805-00020.

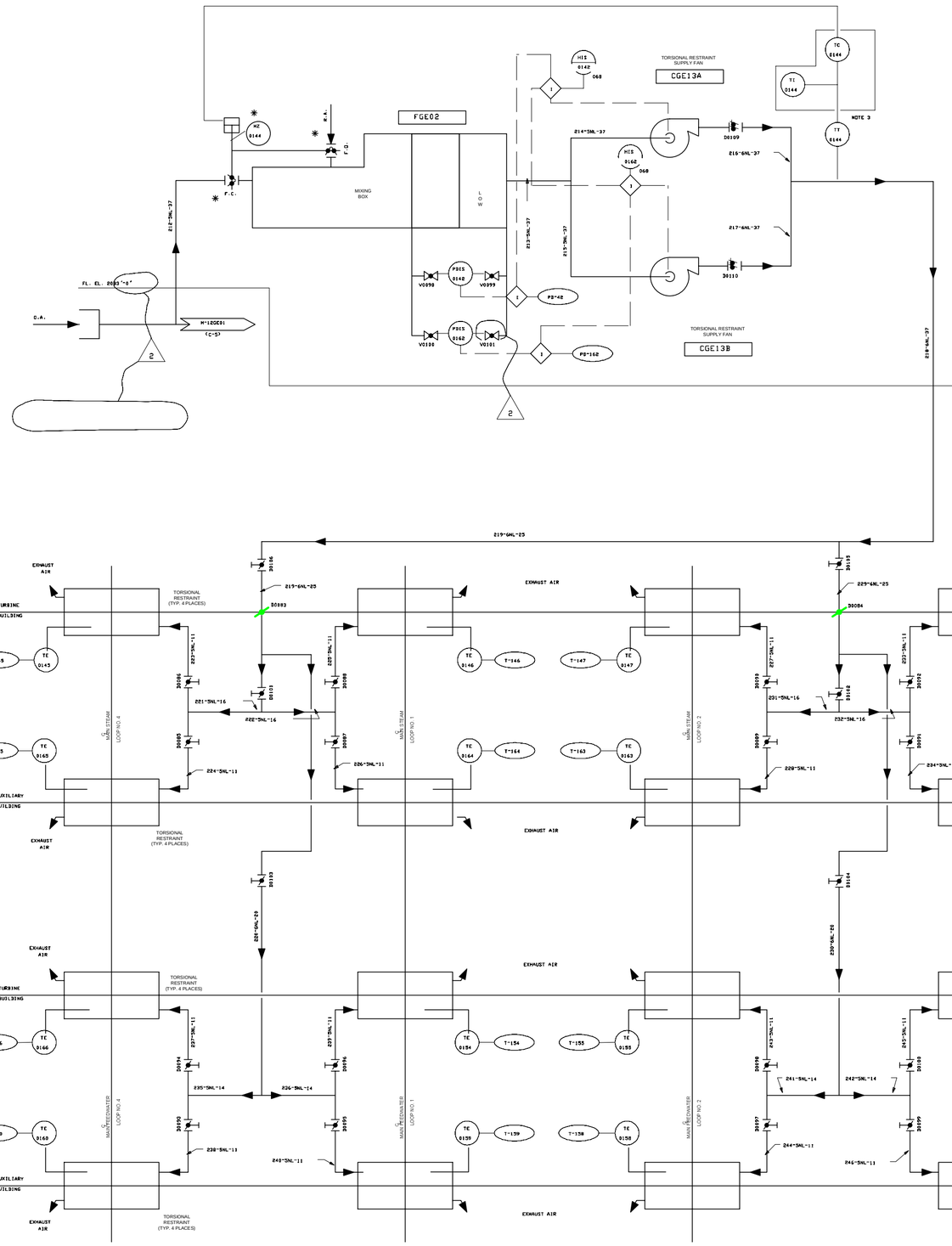

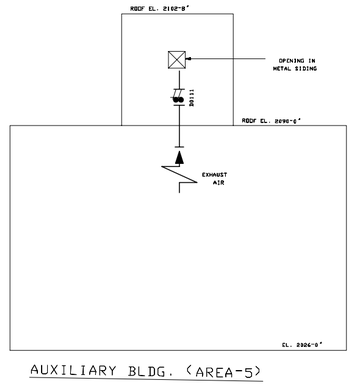

AUXILIARY BLDG. (AREA-5)

USAR FIG. 9.4-4-04

ESSENTIAL DRAWING			
◉ REVISED ○ ISSUED	INCORPORATED DMG. DOC. PIR 2002-2437		CHANGE PKG. NO.
THIS DWG. SUPERSEDED BY	REV.	THIS DWG. SUPERSEDES	REV.
REVISION NOTES: REVISED PER AP 05-010, SECTION 6.10, TABLE A, TYPES 1 & 2			

WOLF CREEK NUCLEAR OPERATING CORPORATION — ELECTRONIC APPROVAL

PIPING AND INSTRUMENTATION DIAGRAM
TURBINE BUILDING HVAC

SCALE	DRAWING NUMBER	SHEET	REV
NONE	LR-WCGS-GE-M-12GE04		02

34X44 E SIZE

NOTES

1. THIS IS A DUAL PURPOSE ORIFICE USED TO PROVIDE BOTH BACKPRESSURE AND FLOW MEASUREMENTS.
2. CHEMICAL ADDITION TAP.
3. MECHANICAL DESIGNATION PER M-1G001. SITE A/E (SARGENT & LUNDY) SERVICE WATER (WS) P & ID DRAWING NUMBER IS M-22.
4. DELETED
5. PIPING SHALL BE FABRICATED PER MS-2, CLASS HCD, EXCEPT FOR MATERIAL TYPE WHICH SHALL BE TYPE 316L SS. CLASS HBD MATERIAL IS ALSO ACCEPTABLE.
6. ALTERNATE SUPPLY FOR BREATHING AIR COMPRESSORS, FOR FUTURE USE IF REQUIRED.
7. THE SERVICE WATER TO THE MAKEUP DEMIN. SYSTEM CROSSTIE SHALL NOT BE USED WHEN A CONTRACT VENDOR IS USED TO SUPPLY MAKEUP DEMIN. WATER FOR WCNOC.
8. THE SERVICE WATER TO THE MAKEUP DEMIN. SYSTEM CROSSTIE SHALL BE ISOLATED DURING COPPERTROL ADDITION TO THE SERVICE WATER SYSTEM.
9. EAPCV0010 IS ALSO A SELF-CONTAINED CHECK VALVE.

USAR FIG. 9.2-1 -01

ESSENTIAL DRAWING

(X) REVISED INCORPORATED CHG. DOC. WIP-M-12EA01-012-A-1, R/00 CHANGE PKG. NO. 09954
( ) ISSUED

THIS DWG. SUPERSEDED BY: REV. THIS DWG. SUPERSEDES REV.

REVISION NOTES:

WOLF CREEK NUCLEAR OPERATING CORPORATION

ELECTRONIC APPROVAL

PIPING & INSTRUMENTATION DIAGRAM
SERVICE WATER SYSTEM

SCALE	DRAWING NUMBER	SHEET	REV
NONE	LR-WCGS-EA-M-12EA01		13

34X44 E SIZE

NOTES:

1. ITEMS IDENTIFIED BY THIS NOTE ARE OWNER FURNISHED.
2. DELETED.
3. FOR HOSE CONNECTION TO SUPPLY CHEMICALS FOR PUMPHOUSE BAYS.
4. VALVE V0001 MAY BE THROTTLED AS NEEDED TO FINE TUNE THE ESW SUPPLY WITH THE CHEMICAL INJECTION SYSTEM.

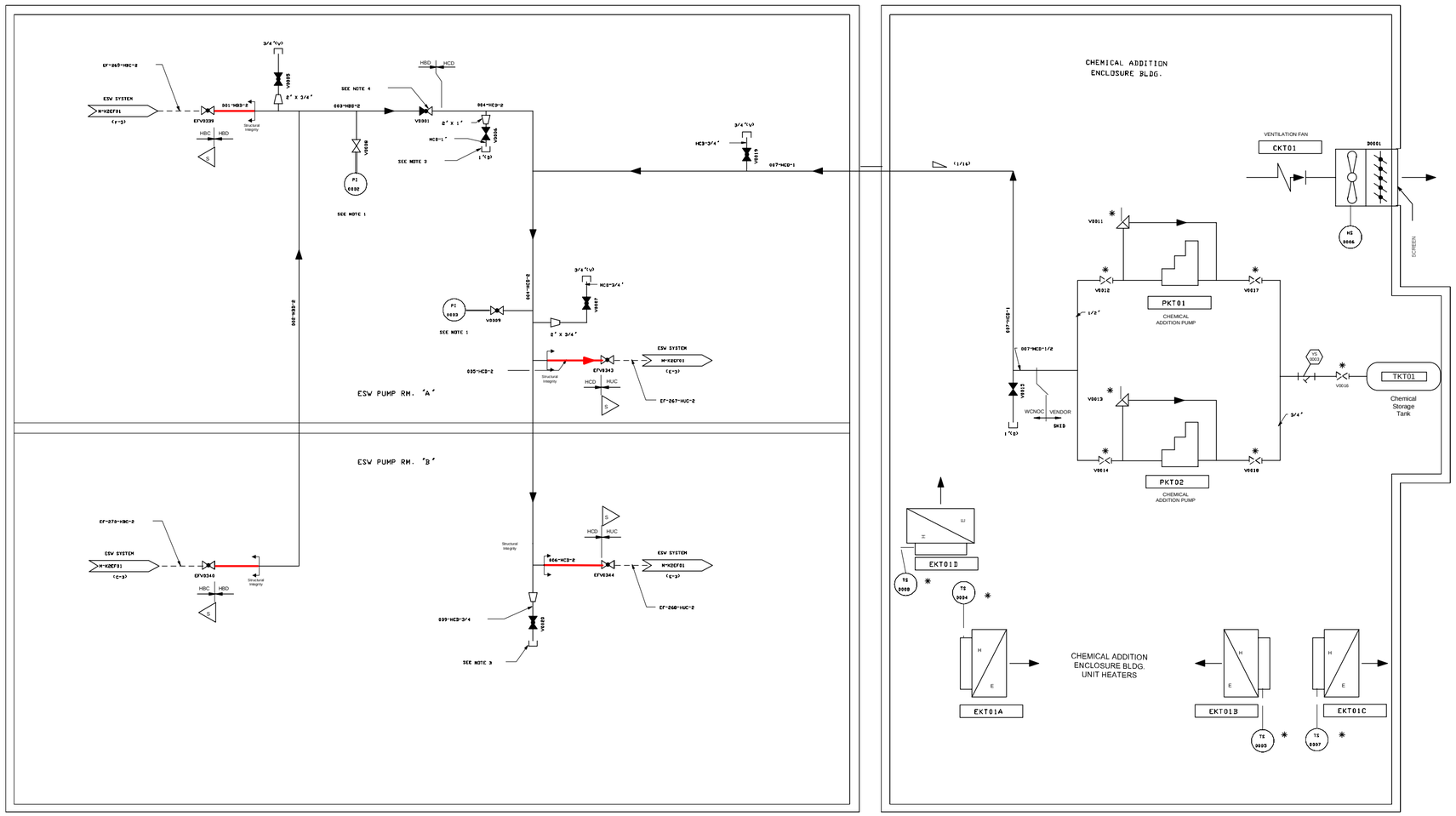

ESSENTIAL DRAWING

REVISED / ISSUED — INCORPORATED CHG. DOC. — CHANGE PKG. NO.

THIS DWG. SUPERSEDES BY, REV. — THIS DWG. SUPERSEDES — REV.

REVISION NOTES:

WOLF CREEK NUCLEAR OPERATING CORPORATION — ELECTRONIC APPROVAL

PIPING AND INSTRUMENTATION DIAGRAM
ESWS CHEMICAL ADDITION SYSTEM

SCALE	DRAWING NUMBER	SHEET	REV
NONE	LR-WCGS-KT-M-K2KT01		04

34X44 E SIZE

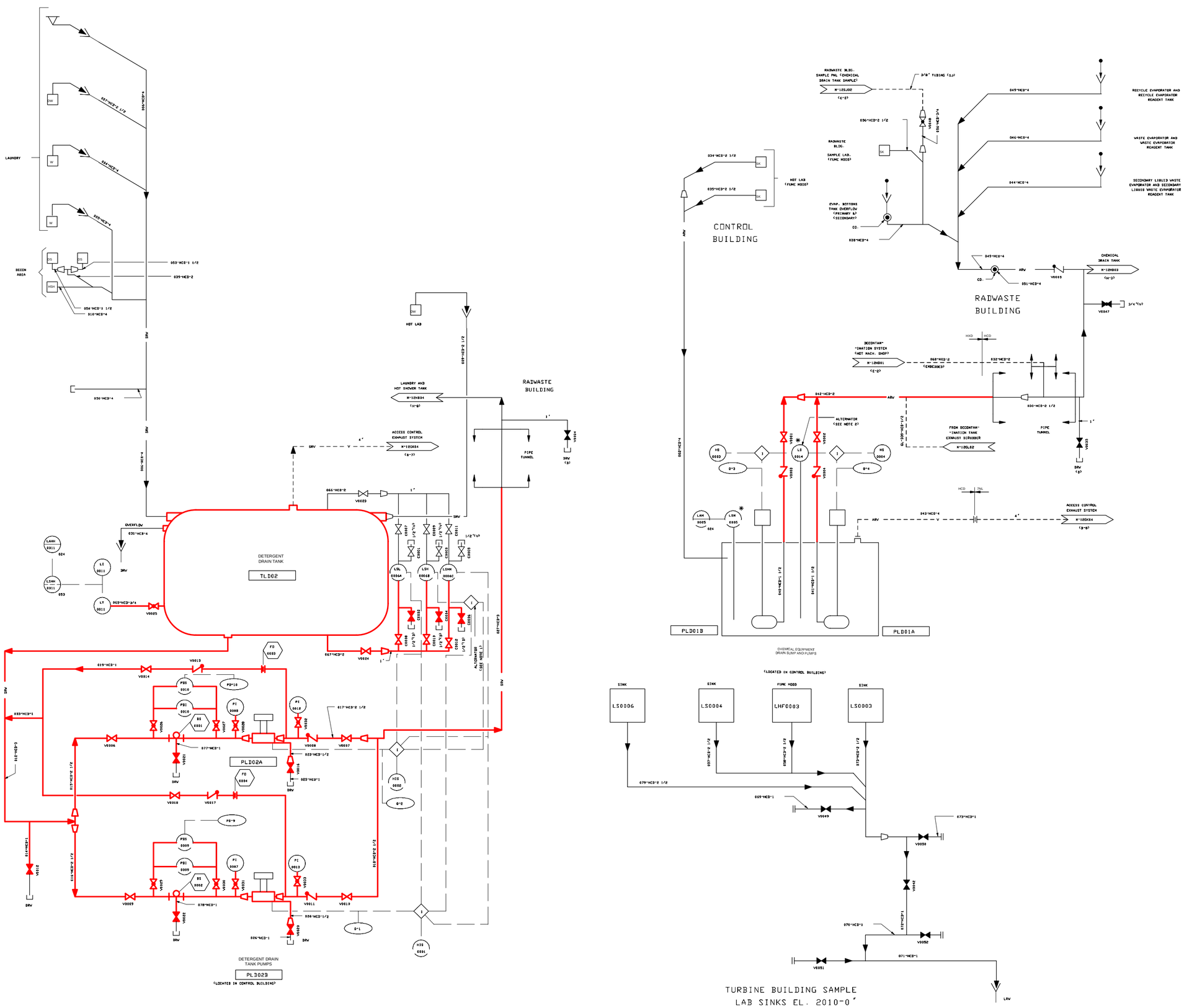

NOTES

1. ELECTRICAL ALTERNATOR ALTERNATES PUMP OPERATION WHEN TANK LEVEL IS HIGH. BOTH PUMPS RUN WHEN TANK LEVEL IS HIGH - HIGH.
2. MECHANICAL ALTERNATOR ALTERNATES PUMP OPERATION WHEN SUMP LEVEL IS HIGH. BOTH PUMPS RUN WHEN SUMP LEVEL IS HIGH - HIGH.
3. DS - DEEP SINK.
4. HSH AND DS TO BE USED FOR DECONTAMINATION PURPOSES ONLY.
5. HSH - HOT SHOWER.
6. DELETED.

USAR FIG. 9.3-5-03

ESSENTIAL DRAWING

REVISED / ISSUED — INCORPORATED CHG. DOC. — CHANGE PKG. NO.

THIS DWG. SUPERSEDED BY: REV. — THIS DWG. SUPERSEDES: REV.

REVISION NOTES: ELECTRONICALLY CONVERTED PER AP 05-010

WOLF CREEK NUCLEAR OPERATING CORPORATION — ELECTRONIC APPROVAL

PIPING & INSTRUMENTATION DIAGRAM CHEMICAL & DETERGENT WASTE

SCALE	DRAWING NUMBER	SHEET	REV
NONE	LR-WCGS-LD-M-12LD01		02

34X44 E SIZE

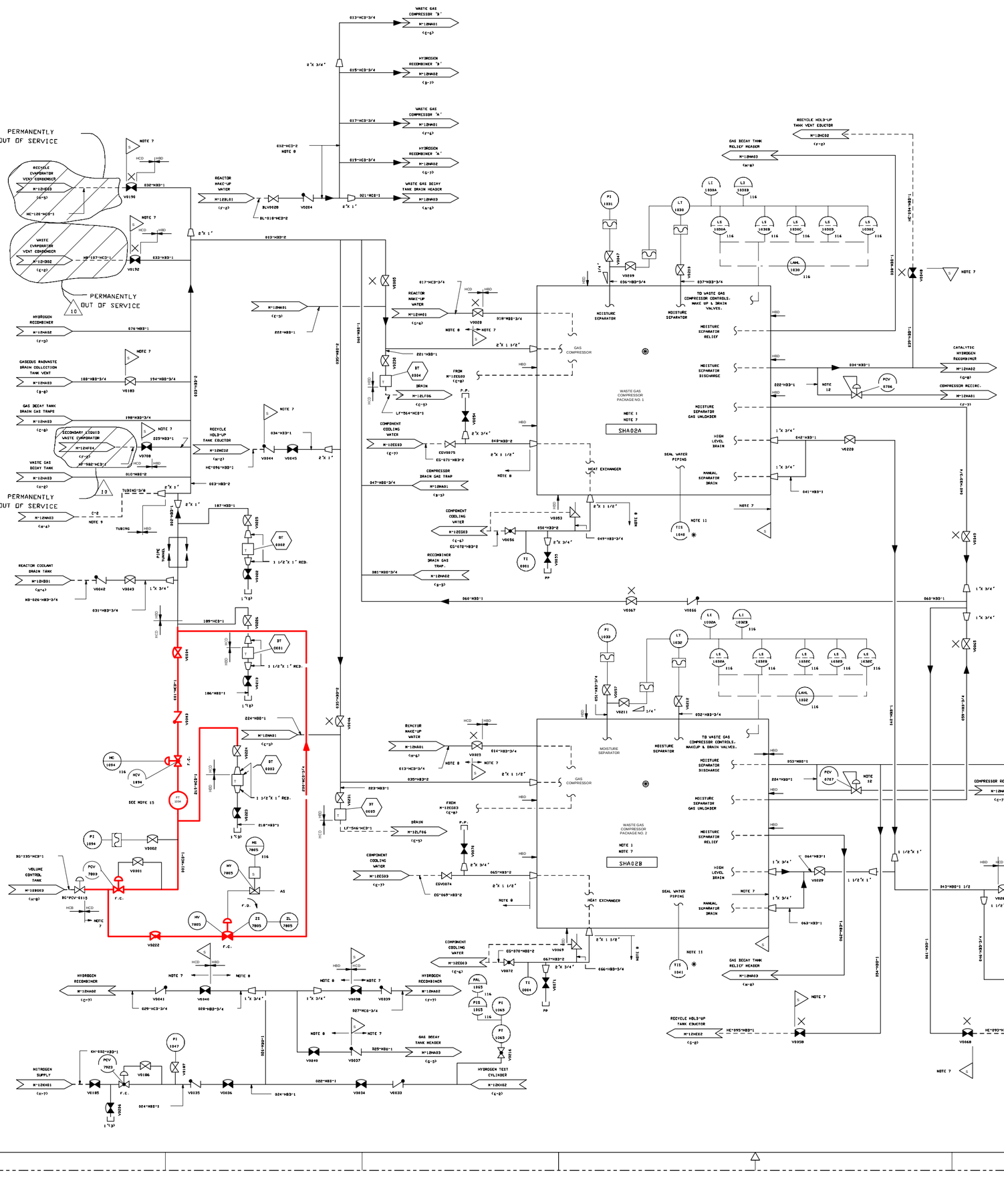

NOTES

1. SEE DRAWING NUMBER M-721-00615.
2. QUALITY GROUP 'D' PORTIONS OF THIS SYSTEM (NOT IDENTIFIED BY NOTE 6) SHALL MEET THE AUGMENTING REQUIREMENTS
3. THIS DRAWING BASED ON WESTINGHOUSE DRAWINGS M-738-00025 THROUGH M-738-00027.
4. THE FOLLOWING WESTINGHOUSE STANDARD EQUIPMENT IS SUPPLIED TO A HIGHER QUALITY GROUP/SEISMIC CLASSIFICATION AND PRINCIPLE CONSTRUCTION CODE THAN IS REQUIRED BASED ON IT'S SAFETY RELATED IMPORTANCE AS DICTATED BY SERVICE AND FUNCTIONAL REQUIREMENTS AND BY THE CONSEQUENCE OF THEIR FAILURE. EQUIPMENT CLASSIFICATION SHOWN IS FOR INTERFACE PURPOSES ONLY (i.e. WELD END PREPS?. ACTUAL CLASSIFICATION OF THE EQUIPMENT IS THE LOWER CLASSIFICATION AS INDICATED FOR THE ASSOCIATED PIPING.

   A. GAS DECAY TANKS
   B. WASTE GAS DRAIN FILTER

5. SEE DRAWING NUMBER M-725-00019.
6. DIVISION PRESSURE REGULATOR, PRESSURE INDICATORS, AND PRESSURE SWITCH, ARE PRODUCTS UNDER W.R. 10466/M-159. PRESSURE SWITCH ISOLATION VALVE, RELIEF VALVE, AND ORIFICE UNION ARE PROCURED AS PART OF THE WESTINGHOUSE RECOMBINER PACKAGE (M-725-3087
7. IDENTIFIED PORTIONS OF THE GASEOUS RADWASTE SYSTEM ARE ANALYZED CONSIDERING A SINGLE DEGREE OF FREEDOM.
8. INDICATED PORTIONS OF THIS SYSTEM IDENTIFIED BY THIS NOTE ARE QUALITY GROUP "D" NON-AUGMENTED.
9. SEE INSTRUMENTATION DRAWING J-07G101-03- INSTRUMENT PIPING CLASS SPECIFICATION.
10. TUBING JOINTS FOR INSTRUMENTS OFF PIPING COVERED BY NOTE 7 SHALL BE SEAL WELDED.
11. THIS INDICATING SWITCH IS REQUIRED FOR INDICATION ONLY.
12. VALVE TO BE SET TO RELIEVE AT 80 PSIG + 10 PSIG.
13. FLANGED WYE PIECE INSTALLED UPSTREAM AND DOWNSTREAM OF DRAIN TRAPS FHA04 AND FHA05 TO FACILITATE REMOVAL FOR MAINTENANCE.
14. DELETED.
15. ABANDONED IN PLACE

USAR FIG. 11.3-1-01

ESSENTIAL DRAWING

(A) REVISED / ISSUED	INCORPORATED CHG. DOC.	CHANGE PKG. NO.	
THIS DWG. SUPERSEDES	REV.	THIS DWG. SUPERSEDES	REV.
REVISION NOTES:			

WOLF CREEK NUCLEAR OPERATING CORPORATION

ELECTRONIC APPROVAL

PIPING & INSTRUMENTATION DIAGRAM
GASEOUS RADWASTE SYSTEM

SCALE	DRAWING NUMBER	SHEET	REV
NONE	LR-WCGS-HA-M12HA01		10

34X44 E SIZE

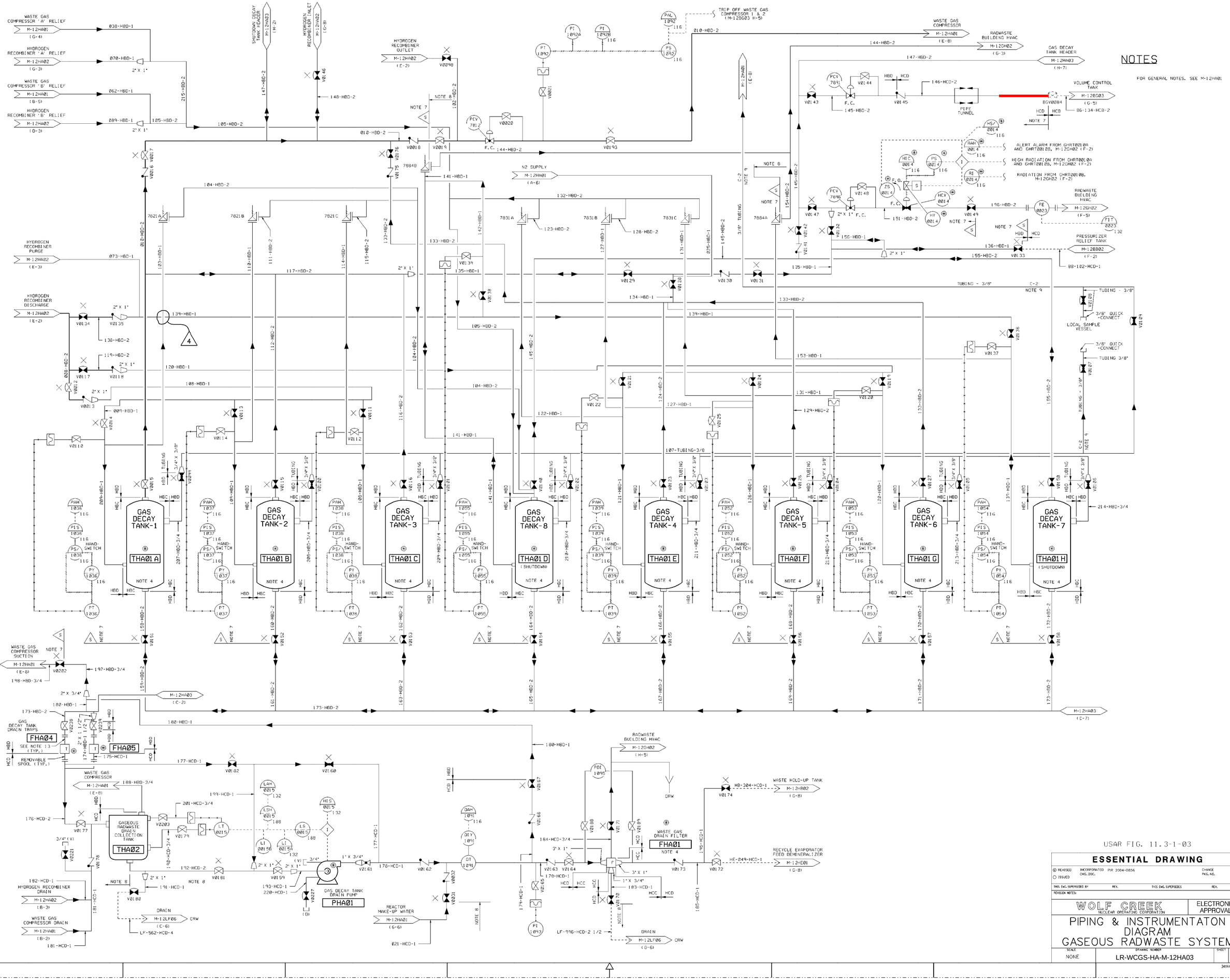
NOTES
FOR GENERAL NOTES, SEE M-12HA01
WASTE GAS COMPRESSOR 'A' RELIEF
M-12HA01 (G-4)
038-HBD-1
HYDROGEN RECOMBINER 'A' RELIEF
M-12HA02 (G-3)
070-HBD-1
WASTE GAS COMPRESSOR 'B' RELIEF
M-12HA01 (B-5)
062-HBD-1
HYDROGEN RECOMBINER 'B' RELIEF
M-12HA02 (D-3)
089-HBD-1
SHUTDOWN DECAY TANK HEADER M-12HA03 (H-2)
HYDROGEN RECOMBINER INLET M-12HA02 (G-8)
HYDROGEN RECOMBINER OUTLET M-12HA02 (E-2)
TRIP OFF WASTE GAS COMPRESSOR 1 & 2 (M-12BG03 H-5)
WASTE GAS COMPRESSOR M-12HA01 (E-8)
RADWASTE BUILDING HVAC M-12GH02 (G-3)
GAS DECAY TANK HEADER M-12HA03 (H-7)
VOLUME CONTROL TANK M-12BG03 (G-5)
PIPE TUNNEL
N2 SUPPLY M-12HA01 (A-6)
HYDROGEN RECOMBINER PURGE M-12HA02 (E-3)
HYDROGEN RECOMBINER DISCHARGE M-12HA02 (E-2)
GAS DECAY TANK-1 THA01 A
GAS DECAY TANK-2 THA01 B
GAS DECAY TANK-3 THA01 C
GAS DECAY TANK-8 THA01 D (SHUTDOWN)
GAS DECAY TANK-4 THA01 E
GAS DECAY TANK-5 THA01 F
GAS DECAY TANK-6 THA01 G
GAS DECAY TANK-7 THA01 H (SHUTDOWN)
GAS DECAY TANK DRAIN TRAPS FHA04 FHA05
GASEOUS RADWASTE DRAIN COLLECTION TANK THA02
GAS DECAY TANK DRAIN PUMP PHA01
WASTE GAS DRAIN FILTER FHA01
WASTE GAS COMPRESSOR SUCTION M-12HA01 (E-6)
WASTE GAS COMPRESSOR DISCHARGE M-12HA01 (E-8)
HYDROGEN RECOMBINER DRAIN M-12HA02 (B-3)
WASTE GAS COMPRESSOR DRAIN M-12HA01 (B-2)
DRAIN M-12LF06 (C-6)
REACTOR MAKE-UP WATER M-12HA01 (G-6)
WASTE HOLD-UP TANK M-12HB02 (G-8)
RECYCLE EVAPORATOR FEED DEMINERALIZER M-12HE01 (G-8)
RADWASTE BUILDING HVAC M-12GH02 (H-5)
RADWASTE BUILDING HVAC M-12GH02 (F-5)
PRESSURIZER RELIEF TANK M-12BB02 (F-2)
M-12HA03 (C-2)
M-12HA03 (C-7)
ALERT ALARM FROM GHRT0010A AND GHRT0010B, M-12GH02 (F-2)
HIGH RADIATION FROM GHRT0010A AND GHRT0010B, M-12GH02 (F-2)
RADIATION FROM GHRT0010B, M-12GH02 (F-2)
88-102-HCD-1
TUBING - 3/8"
3/8" QUICK -CONNECT
LOCAL SAMPLE VESSEL
TUBING 3/8"
214-HBD-3/4
USAR FIG. 11.3-1-03
ESSENTIAL DRAWING
REVISED
ISSUED
INCORPORATED CHG. DOC. PIR 2004-0856
CHANGE PKG. NO.
THIS DWG. SUPERSEDED BY
REV.
THIS DWG. SUPERSEDES
REVISION NOTES:
WOLF CREEK NUCLEAR OPERATING CORPORATION
ELECTRONIC APPROVAL
PIPING & INSTRUMENTATON DIAGRAM
GASEOUS RADWASTE SYSTEM
SCALE NONE
DRAWING NUMBER LR-WCGS-HA-M-12HA03
SHEET 04
REV
34X44 E SIZE
Released by Document Services Release Date: 04/29/04

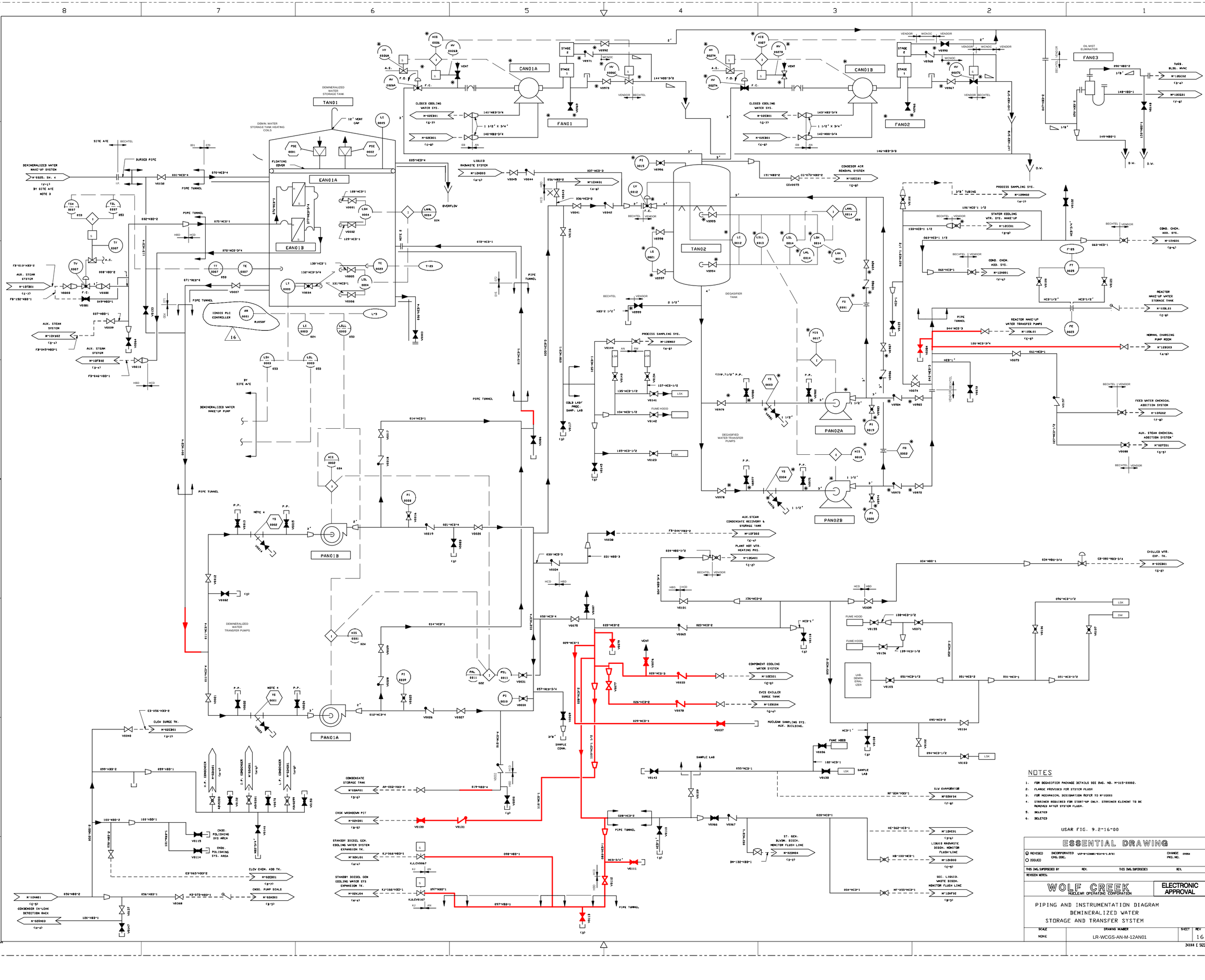

NOTES

1. FOR DEGASIFIER PACKAGE DETAILS SEE DWG. NO. M-115-00002.
2. FLANGE PROVIDED FOR SYSTEM FLUSH
3. FOR MECHANICAL DESIGNATION REFER TO M-1G001
4. STRAINER REQUIRED FOR START-UP ONLY. STRAINER ELEMENT TO BE REMOVED AFTER SYSTEM FLUSH.
5. DELETED
6. DELETED

USAR FIG. 9.2-16-00

ESSENTIAL DRAWING

REVISED / ISSUED — INCORPORATED CHG. DOC. — VOP-M-12AN01-01(A-1.0/0) — CHANGE PKG. NO. 09964

THIS DWG. SUPERSEDED BY — REV. — THIS DWG. SUPERSEDES — REV.

REVISION NOTES:

WOLF CREEK NUCLEAR OPERATING CORPORATION

ELECTRONIC APPROVAL

PIPING AND INSTRUMENTATION DIAGRAM
DEMINERALIZED WATER
STORAGE AND TRANSFER SYSTEM

SCALE	DRAWING NUMBER	SHEET	REV
NONE	LR-WCGS-AN-M-12AN01		16

34X44 E SIZE

NOTES

1. PIPING, VALVES AND OTHER COMPONENTS AS INDICATED FOR THE DOMESTIC WATER SYSTEM, SHALL BE FURNISHED, INSTALLED, CLEANED AND TESTED, BY THE CONTRACTOR IN ACCORDANCE WITH THE UNIFORM PLUMBING CODE AND THE APPLICABLE STATE AND/OR LOCAL CODE.
2. FOR GENERAL NOTES, SYMBOLS, SCHEDULES DETAILS, AND SIZE OF BRANCH SERVING INDIVIDUAL PLUMBING FIXTURES, SEE DWG'S. M-17LF01 AND M-17LF02
3. FOR DOMESTIC WATER SYSTEM PIPING, VALVES, AND FITTINGS MATERIAL SEE SPEC. NO. MS-2, AND NO. MS-3.
4. FOR PLUMBING FIXTURES SEE SPEC. NO. A-220. AND NO. A-182.
5. SHOCK ABSORBERS SHALL BE INSTALLED ON COLD AND HOT WATER SUPPLIES TO PLUMBING FIXTURES AS SHOWN ON THE PIPING DWG'S. AIR CHAMBERS SHALL BE INSTALLED ON COLD AND HOT WATER SUPPLIES TO SINGLE PLUMBING FIXTURES.
6. DOMESTIC WATER HEATERS SHALL BE SUPPLIED WITH EQUIPMENT, INDICATED ON M-12KD02. SEE SPEC. M-673.
7. SEE DWG. M-13KD08 FOR WASHDOWN (W-1) DETAILS
8. SHOCK ABSORBERS AND PRESSURE REGULATING VALVES SHALL BE INSTALLED AS SHOWN ON DWGS. M-13KD01 THRU M-13KD17.
9. SHOWERS TO BE USED FOR OTHER THAN EMERGENCY PURPOSES SHALL BE EQUIPPED WITH FLOW CONTROL DEVICES WHICH WILL LIMIT THE TOTAL FLOW THROUGH THE SHOWER HEAD TO A MAXIMUM OF 3 GPM, IN ACCORDANCE WITH THE WISCONSIN ADMINISTRATIVE CODE, MAY, 1978.
10. BECHTEL SCOPE OF SUPPLY FOR CALLAWAY UNITS 1 & 2. (SEE KS SYSTEM), FOR OTHER SITE, MAY BE CAPPED OR USED AS REQUIRED.
11. ALL FIXTURES SHALL HAVE A SHUT OFF OR LOCAL CONTROL VALVE AS REQUIRED.
12. MECHANICAL DESIGNATION PER M-1G001.
13. VALVE NOS. IN THE DOMESTIC WATER SYSTEM ARE SHOWN ON THE P&ID FOR COMPONENT NUMBERING ONLY & ARE NOT REQUIRED ON THE ORTHOGRAPHIC PLAN DRAWINGS.

USAR FIG. 9.2-17-01

ESSENTIAL DRAWING

⊗ REVISED ○ ISSUED	INCORPORATED CHG. DOC.	CHANGE PKG. NO.
THIS DWG. SUPERSEDED BY REV.	THIS DWG. SUPERSEDES M-12KD01	REV. 05

REVISION NOTES: REV. TO INCORP. COMPONENT IDENTIFICATION NUMBERS PER PIR 2003-0913

WOLF CREEK NUCLEAR OPERATING CORPORATION — ELECTRONIC APPROVAL

PIPING & INSTRUMENTATION DIAGRAM
DOMESTIC WATER SYSTEM

SCALE	DRAWING NUMBER	SHEET	REV
NONE	LR-WCS-KD-M-12KD01		08

34X44 E SIZE

ABANDONED IN PLACE

MAKEUP TO ELECTRIC STEAM HUMIDIFIER M-12DG002 (B-3)

V0325 (SEE NOTE 4) V0326

18

MSK-1 EWC-1 LR-1 L-1 HB-1 PS-1 WC-1

V0131 V0132 V0127 V0128 V0129 V0130 V0123 V0124

BALANCING FITTING (TYP.)

EWC-1 DS-2 ESEW-2

NOTE

1. FOR GENERAL NOTES, SEE DRAWING M-12EK001.
2. VALVE V0330 MUST BE LOCKED OPEN WHEN EITHER HEATER IS OPERATING.
3. EACH HEATER'S OUTLET VALVE MUST BE LOCKED OPEN DURING THAT HEATER'S OPERATION.
4. PIPE IS CAPPED AND ABANDONED IN PLACE PER CCP 99991.

18

EL. 2047'-6"

EL. 2032'-9"

CONTROL ROOM PANTRY, TOILETS AND JANITOR'S CLOSET

INSTRUMENT SHOP AREA

EL. 2016'-9"

ESEW-1 HB-1

DOMESTIC WATER SUPPLY FROM TURBINE BLDG. M-12EK302 (B-4)

CONTRACTOR OWNER HOT WATER CIRCULATOR PKD01

V0322 V0323 V0324 REGULATING PLUG VALVE

TKD02 200 GAL TKD01 200 GAL

V0549 V0548 FCD 2 1/2" X 1 1/2"

NOTE 3 V0545 V0544 V0543 V0542

TKD09 V0550 NOTE 2 V0221

V0206 V0205 V0225 V0201 V0202 3/4" DV

EL. 2002'-0"

CONTRACTOR OWNER YE 0006 V0527 V0529 V0528 V0533 V0493 V0494 V0495 V0496 V0497

KB-412-JDG-3/4 TO BREATHING AIR COMPRESSOR SKB01A M-12KB02 (A-8)

KB-412-JDG-3/4 TO BREATHING AIR COMPRESSOR SKB01B M-12KB02 (A-8)

BACKFLOW PREVENTOR VALVE V0526 TO HUMIDIFIER M-12GK04 (C-3) SKMV8176

CONTRACTOR VENDOR SKID

EL. 2004'-9"

HV CV HWR JDG-1 1/2" JDG-1/2" JDG-2 1/2" JDG-2" JDG-3" JDG-3/4" JDG-4" JDG-4 1/2"

V0325 V0326 V0327 V0328 V0329 V0330 V0331 V0332 V0333 V0334 V0335 V0336 V0337 V0338 V0339 V0340 V0341 V0342 V0343 V0344 V0345 V0346 V0347 V0348 V0349 V0350 V0351 V0352 V0353 V0354 V0355 V0356 V0357 V0358 V0359 V0360 V0361 V0362 V0363 V0364 V0365 V0366 V0367 V0368 V0369 V0370 V0371 V0372 V0373 V0374 V0375 V0376 V0377 V0378 V0379 V0380 V0381 V0382 V0383 V0384 V0385 V0386 V0387 V0388 V0389 V0390 V0391 V0392 V0393 V0394 V0395 V0396 V0397 V0398 V0399

HB-1 L-1 L-1 WC-1 WC-1 SGK-1 SH-1 SH-1 EWC-1

HMSK-1 HB-1 DS-1 DS-1 SH-2 SH-1 SH-1 SH-1 L-1 L-1 L-1 L-1 L-1 HB-1 L-1 WC-1 WC-1 WC-1 WC-1 UR-1 UR-1 UR-1 MSK-1

ACCESS CONTROL AREA

HOT LAB

EWC-1 EWF-1 LS-1 LHF-1 LHF-2 LS-2 ESEW-2

EL. 1984'-9"

EL. 1974'-9"

CONTROL BUILDING

COMMUNICATIONS CORRIDOR

TURBINE BLDG. TOILETS AREA

TURB. BLDG. DOMESTIC HOT WTR. HEATER (NORTH) TKD05

V0203 V0204 V0074 V0075 V0076 V0077 V0078 V0079 V0080 V0081 V0082 V0083 V0084 V0085 V0086 V0087 V0088 V0089 V0090 V0091 V0092

EL. 2065'-6"

EL. 2033'-6"

TURBINE BLDG. TOILETS AREA

TURB. BLDG. DOMESTIC HOT WTR. HEATER (SOUTH) TKD06

CONTROL AND COMM. CONR. BLDG'S. DOMESTIC WTR. SYS. M-12EK002 (C-2)

TURBINE BUILDING DOMESTIC WTR. SYS. M-12EK301 (C-4)

TURBINE BUILDING DOMESTIC WTR. SYS. M-12EK001 (C-4)

PROCESS SAMPLING LAB DOMESTIC HOT WATER HEATER TKD07

ATOMIC ABSORPTION SPECTROPHOTOMETER M-12EE01 (C-3)

LS-4 HB-1 LHF-3 LS-3 LS-6 LS-5 HB-1 L-1 WC-1 WC-1 UR-1 L-1 MSK-1 EWC-2

EL. 2039'-6"

EL. 2008'-9"

EL. 2000'-0"

TURBINE BUILDING SAMPLE LAB

USAR FIG. 9.2-17-02

ESSENTIAL DRAWING

☑ REVISED ☐ ISSUED INCORPORATED CHG. DOC. VTP-WCEK00-F17-A, R/08 CHANGE PKG. NO. 99991

THIS DWG. SUPERSEDED BY: REV. THIS DWG. SUPERSEDES REV.

REVISION NOTES:

WOLF CREEK NUCLEAR OPERATING CORPORATION

ELECTRONIC APPROVAL

PIPING & INSTRUMENTATION DIAGRAM

DOMESTIC WATER SYSTEM

SCALE	DRAWING NUMBER	SHEET	REV
NONE	LR-WCGS-KD-M-12KD02		18

34X44 E SIZE

See M-13GA17 for details of the boundary.

See M-13GA18 for details of the boundary.

Area 136

Area 133

Area 136

AUX BLDG

HOT MACHINE SHOP

FUEL BLDG.

RADWASTE BLDG.

AUX BLDG

Only the portions in Aux Building are in scope. See M-13GA01 and M-13GA03 for details of boundary.

Components downstream of the hot water supply isolation valves and upstream of the return isolation valves are evaluated in the subject HVAC systems. For this example, they are evaluated in LRID GL.

NOTES

1. DELETE

USAR FIG. 9.4-9-02

ESSENTIAL DRAWING

(Q) REVISED	INCORPORATED CHG. DOC.	CHANGE PKG. NO.	
○ ISSUED			
THIS DWG. SUPERSEDED BY	REV.	THIS DWG. SUPERSEDES P-13GA02	REV. 0
REVISION NOTES	ELECTRONICALLY CONVERTED PER AP 05-010		

WOLF CREEK NUCLEAR OPERATING CORPORATION

ELECTRONIC APPROVAL

PIPING AND INSTRUMENTATION DIAGRAM

PLANT HEATING SYSTEM

SCALE	DRAWING NUMBER	SHEET	REV
NONE	LR-WCGS-GA-M-12GA02		01

34X44 E SIZE

NOTES

1. THE FOLLOWING WESTINGHOUSE STANDARD EQUIPMENT IS SUPPLIED TO A HIGHER QUALITY GROUP/SEISMIC CLASSIFICATION AND PRINCIPAL CONSTRUCTION CODE THAN IS REQUIRED BASED ON ITS SAFETY RELATED IMPORTANCE AS RECITED BY SERVICE AND FUNCTIONAL REQUIREMENTS AND BY THE CONSEQUENCE OF THEIR FAILURE. EQUIPMENT CLASSIFICATION SHOWN IS FOR INTERFACE PURPOSES ONLY (I.E. WELD END PREPS). ACTUAL CLASSIFICATION OF THE EQUIPMENT IS THE LOWER CLASSIFICATION AS INDICATED FOR THE ASSOCIATED PIPING.

   A. RECYCLE EVAPORATOR FEED DEMINERALIZER.
   B. RECYCLE EVAPORATOR FEED FILTER.
   C. RECYCLE EVAPORATOR FEED PUMPS.
   D. RECYCLE EVAPORATOR.
   E. R.H.T. VENT EDUCTOR.
   F. RECYCLE EVAPORATOR CONDENSATE DEMINERALIZER
   G. RECYCLE EVAPORATOR CONDENSATE FILTER
   H. RECYCLE EVAPORATOR CONCENTRATE FILTER
   J. RECYCLE EVAPORATOR CONCENTRATE PUMP

2. PORTIONS OF THIS SYSTEM THAT CONTAIN RADIOACTIVE FLUIDS AND ARE IDENTIFIED BY QUALITY GROUP CLASSIFICATION "D" SHALL MEET AUGMENTING REQUIREMENTS.

3. THIS DRAWING BASED ON WESTINGHOUSE DRAWINGS M-730-90014 THROUGH M-730-90015.

4. LOCATE RECYCLE EVAPORATOR REAGENT TANK TO ALLOW GRAVITY DRAIN TO RECYCLE EVAPORATOR.

5. THE FOLLOWING EQUIPMENT IS SUPPLIED WITH EVAPORATOR PACKAGE BY VENDOR:

   A. PCV-316
   B. TCV-364
   C. PCV-317
   D. Y-STRAINER: SHEET 4
   E. FCV-367
   F. RCP-26
   G. RCP-27
   H. SHEET 3

6. LOWER LOOP TO EXTEND 96 INCHES BELOW OVERFLOW CONNECTION. UPPER LOOP TO EXTEND 6 INCHES ABOVE DIAPHRAGM FLANGE. LOCATE SIPHON BREAK ON TOP OF UPPER LOOP.

7. HIGH POINT OF PIPE DOWNSTREAM OF THIS POINT TO BE ONE FOOT BELOW DIAPHRAGM FLANGE.

8. INDICATED PORTIONS OF THIS SYSTEM IDENTIFIED BY THIS NOTE ARE QUALITY GROUP "D" NON - AUGMENTED.

9. CONTROLS FOR THE RECYCLE EVAPORATOR ARE ON PANEL ME-136.

10. PIPING AND INSTRUMENTATION DIAGRAM FOR THE RECYCLE EVAPORATOR IS SHOWN ON BECHTEL DRAWING M-726-60939.

11. REMOVABLE SPOOL PROVIDED FOR START - UP.

12. 1" VACUUM BREAKER LINE TO BE TERMINATED BETWEEN 12 AND 18 INCHES FROM LOCAL HVAC EXHAUST REGISTER.

USAR FIG. 9.3-11-01

ESSENTIAL DRAWING

◇ REVISED ○ ISSUED	INCORPORATED CHG. DOC.	CHANGE PKG. NO.	
THIS ENG. SUPERSEDED BY:	REV.	THIS ENG. SUPERSEDES	REV.
REVISION NOTES: ELECTRONICALLY CONVERTED PER AP 05-010			

WOLF CREEK NUCLEAR OPERATING CORPORATION — ELECTRONIC APPROVAL

PIPING & INSTRUMENTATION DIAGRAM
BORON RECYCLE SYSTEM

SCALE	DRAWING NUMBER	SHEET	REV
NONE	LR-WCGS-HE-M-12HE01		03

34X44 E SIZE

NOTES

1. FOR GENERAL NOTES SEE DRAWING M-12HE01.
2. THE FOLLOWING EQUIPMENT IS SUPPLIED WITH EVAPORATOR PACKAGE BY VENDOR:
   A. LT00315, BELLOWS, AND ASSOCIATED TUBING.

RECYCLE EVAPORATOR PACKAGE
SHE02
NOTE 1
NOTE 9
NOTE 10
SEE M-726-00039 FOR ACTIVE SUB COMPONENTS

PERMANENTLY OUT OF SERVICE

USAR FIG. 9.3-11-03

ESSENTIAL DRAWING			
ⓐ REVISED	INCORPORATED WIP-M-12HE03-04-A R/00	CHANGE 06244	
ⓘ ISSUED	CHG. DOC.	PKG. NO.	
THIS DWG SUPERSEDED BY	REV.	THIS DWG SUPERSEDES	REV.
REVISION NOTES			
WOLF CREEK NUCLEAR OPERATING CORPORATION		ELECTRONIC APPROVAL	
PIPING & INSTRUMENTATION DIAGRAM BORON RECYCLE SYSTEM			
SCALE: NONE	DRAWING NUMBER: LR-WCGS-HE-M-12HE03	SHEET: 05	REV
34X44 E SIZE			

Released by Document Services Release Date: 10/31/02

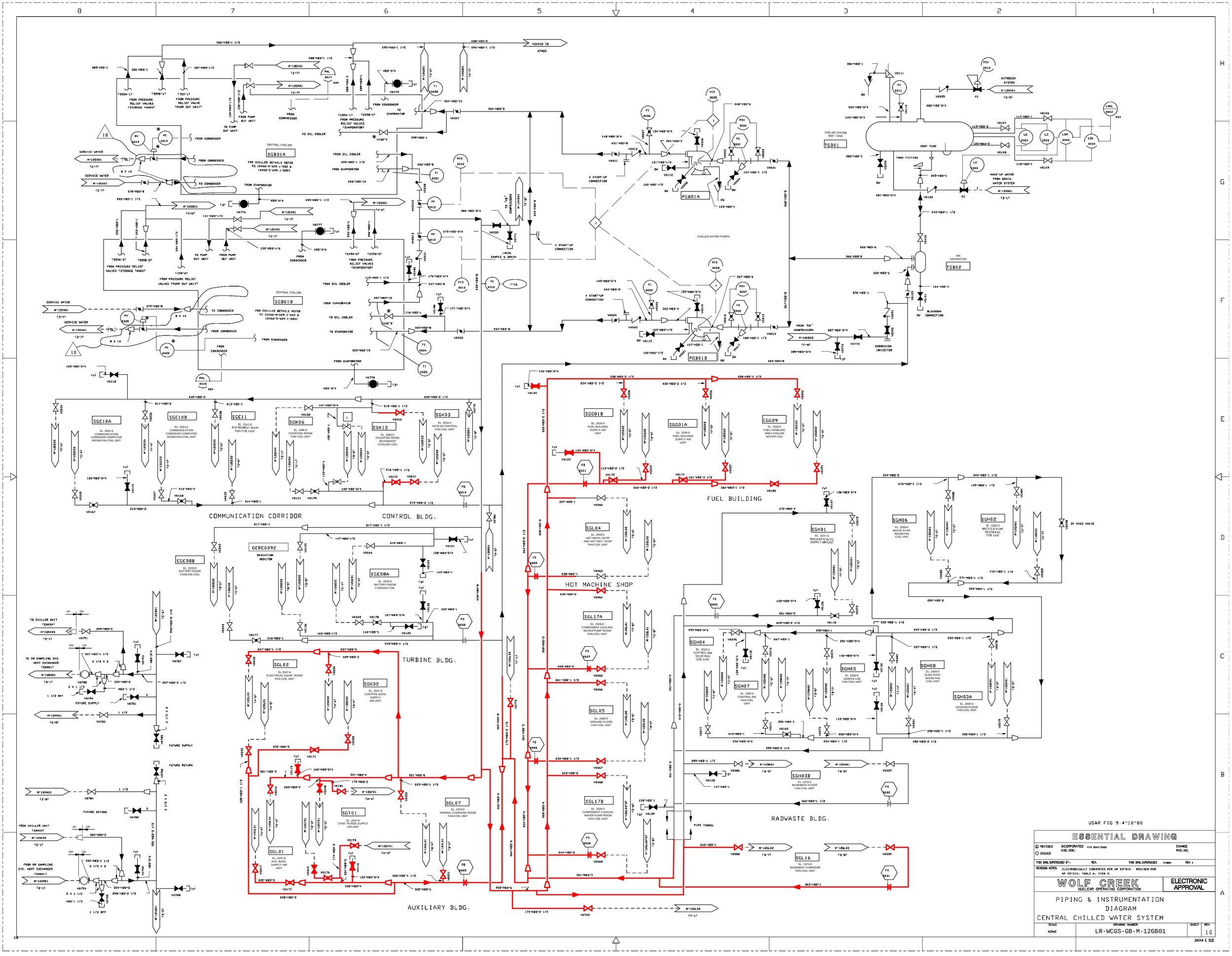

COMMUNICATION CORRIDOR
CONTROL BLDG.
TURBINE BLDG.
AUXILIARY BLDG.
FUEL BUILDING
HOT MACHINE SHOP
RADWASTE BLDG.
CHILLED WATER PUMPS
CENTRAL CHILLER
SGB01A
SGB01B
PGB01A
PGB01B
TGB01
TGB02
SGE10A
SGE10B
SGE11
SGK06
EGK13
SGK03
EGE08B
EGE08A
GERE0092
SGL02
SGK02
SGT01
SGL01
SGL07
SGG01B
SGG01A
EGG09
SGL04
SGL17A
SGL05
SGL17B
SGH01
SGH06
SGH02
SGH04
SGH07
SGH05
SGH08
SGH03A
SGH03B
SGL16
USAR FIG 9.4-10-00
ESSENTIAL DRAWING
REVISED
ISSUED
INCORPORATED CHG. DOC.
CHANGE PKG. NO.
THIS DWG. SUPERSEDED BY:
REV.
THIS DWG. SUPERSEDES
REVISION NOTES: ELECTRONICALLY CONVERTED PER AP 05-010. REVISED PER AP 05-010, TABLE A, ITEM 3.
WOLF CREEK
NUCLEAR OPERATING CORPORATION
ELECTRONIC APPROVAL
PIPING & INSTRUMENTATION DIAGRAM
CENTRAL CHILLED WATER SYSTEM
SCALE
NONE
DRAWING NUMBER
LR-WCGS-GB-M-12GB01
SHEET
REV
10
34X44 E SIZE

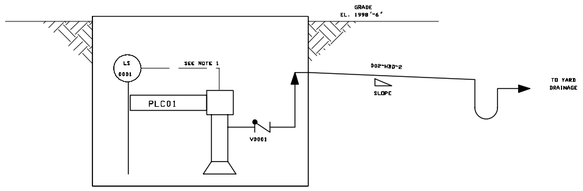

ELECT. PIT SUMP & PUMP
MH #138
(LOCATED WEST OF COMM. CORR.)

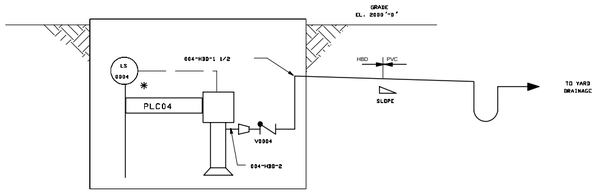

ELECT. PIT SUMP & PUMP
EMH BI-1
(LOCATED WEST OF SECURITY BLDG.)

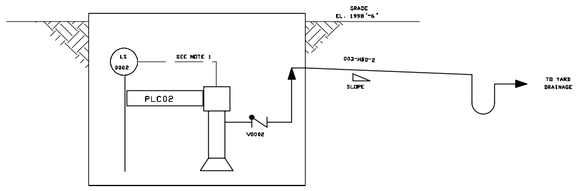

ELECT. PIT SUMP & PUMP
MH #157
(LOCATED EAST OF RADWASTE BLDG.)

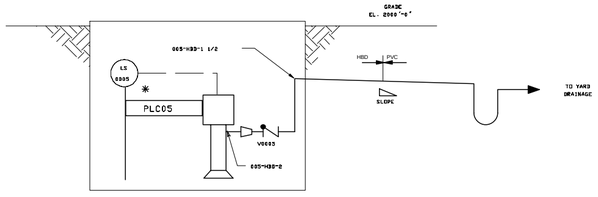

ELECT. PIT SUMP & PUMP
EMH BI-2
(LOCATED WEST OF SECURITY BLDG.)

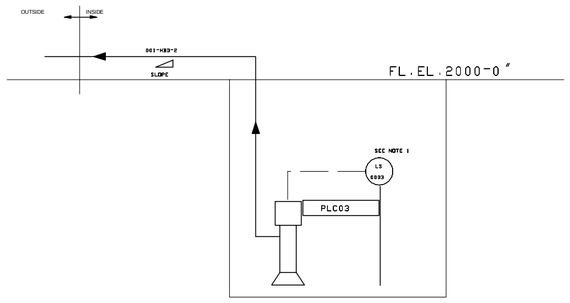

TURBINE BLDG. CABLE PIT SUMP & PUMP

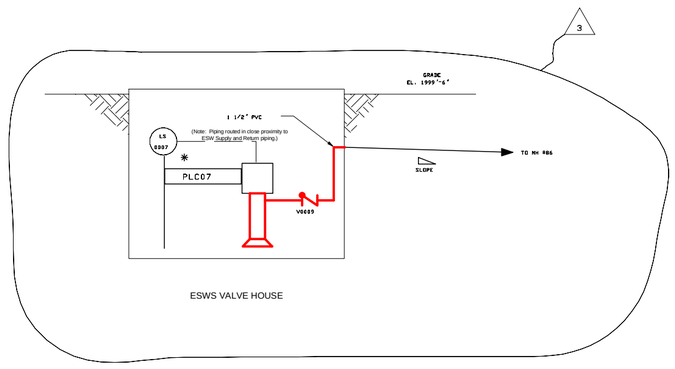

ESWS VALVE HOUSE

NOTES

1. SUMP PUMPS PLC01 AND PLC02 ASSOCIATED PIPING, VALVES AND LEVEL SWITCHES AND THE LEVEL SWITCH TO SUMP PUMP PLC03 ARE DESIGNED BY THE OWNER.

ESSENTIAL DRAWING

REVISED / ISSUED — INCORPORATED CHG. DOC. — CHANGE PKG. NO.

THIS DWG. SUPERSEDED BY, REV. — THIS DWG. SUPERSEDES REV.

REVISION NOTES:

WOLF CREEK NUCLEAR OPERATING CORPORATION — ELECTRONIC APPROVAL

PIPING & INSTRUMENTATION DIAGRAM
YARD DRAINS

SCALE	DRAWING NUMBER	SHEET	REV
NONE	LR-WCGS-LC-M-12LC01		03

34X44 E SIZE

Evaluated in LRID HB

Evaluated in LRID BM.

Only the portions in the Auxiliary Building are in scope. For details of the boundary, refer to M-03HF01 and M-03HF10.

Evaluated in LRID LE

PERMANENTLY OUT OF SERVICE

PERMANENTLY OUT OF SERVICE

NOTES

1. INDICATED PORTIONS OF THIS SYSTEM THAT ARE IDENTIFIED BY THIS NOTE AND QUALITY GROUP CLASSIFICATION 'D' SHALL MEET THE AUGMENTING REQUIREMENTS.
2. DELETED.
3. HIGH POINT VENTS AND LOW POINT DRAINS WILL BE SHOWN LATER.
4. INDICATED PORTIONS OF THIS SYSTEM TO BE 316 L SS.
5. REFERENCE SLV. EVAPORATOR VENDOR PAID DRAWING NOS. M-134-E0005, M-134-E0036, M-134-E0067, M-134-E0339.
6. TOP OF 2'-6" LOOP SEAL NOT TO BE ABOVE DRAIN NOZZLE ON BOTTOM OF ENTRAINMENT SEPARATOR.
7. INDICATED VALVES TO BE LOCATED AS CLOSE TO LINE 843"-HC3-1 1/2 AS PRACTICAL.
8. INDICATED VALVES TO BE LOCATED AS CLOSE AS POSSIBLE TO THE SECONDARY BOTTOMS TANK NOZZLE.
9. ALL VALVES & INSTRUMENTS WITH 700, 800 OR 900 SERIES NUMBERS TO BE SUPPLIED WITH EVAPORATOR BY EVAPORATOR VENDOR.
10. INDICATED VALVE TO BE LOCATED IN PRIMARY BOTTOMS TANK VALVE GALLERY, AS CLOSE AS POSSIBLE TO TANK NOZZLE.
11. DELETED.
12. CONE BOTTOM TANK WITH INTERNAL BAFFLES TO ENHANCE GRUD SETTLING AND VARIABLE OUTLET POSITIONING.
13. * DENOTES EQUIPMENT SUPPLIED BY HP3 INCORPORATED.
14. ■ DENOTES EQUIPMENT SUPPLIED BY GRAVER.
15. △DENOTES EQUIPMENT SUPPLIED BY THE SECONDARY LIQUID WASTE OIL INTERCEPTOR VENDOR.
16. INDICATED VALVES TO BE LOCATED CLOSE TOGETHER.
17. ALL STEAM/WATER MIXING VALVES (S)-705, S-786, S-787, S-788 ARE BRONZE.
18. PROVIDE 1 1/2" NPT CROSS FITTING FOR INSTALLATION OF H INSTRUMENTATION PER DWG. M-134-00350 AND INSTRUCTIONS M-134-00307.
19. ULTRASONIC GENERATOR AND TRANSDUCER.
20. HEAT TRACING FOR SLV. EVAPORATOR CONCENTRATES LINES TO BE INSTALLED PER M-134-00308 AND M-134-00066. HEAT TRACING TO BE PROVIDED BY EBSE.

USAR FIG. 10.4-12-01

ESSENTIAL DRAWING

A REVISED / ○ ISSUED	INCORPORATED CHG. DOC.	WCP-M-12HF01-03-B, R/0	CHANGE PKG. NO. 87410
THIS DWG SUPERSEDES (P)	REV.	THIS DWG. SUPERSEDES	REV.
REVISION NOTES:			

WOLF CREEK NUCLEAR OPERATING CORPORATION

ELECTRONIC APPROVAL

PIPING AND INSTRUMENTATION DIAGRAM
SECONDARY LIQUID WASTE SYSTEM

SCALE	DRAWING NUMBER	SHEET	REV
NONE	LR-WCGS-HF-M-12HF01		08

34X44 E SIZE

Evaluated in LRID BM.

Evaluated in LRID SJ.

Evaluated in LRID HB.

Evaluated in LRID XM04.

Evaluated in LRID AD.

This portion is in Turbine Building

Only the portions in the Auxiliary Building are in scope. For details of the boundary, refer to M-03HF02.

Evaluated in LRID HB.

Evaluated in LRID XM11.

NOTES

REFER TO M-12HF01 FOR NOTES

USAR FIG. 10.4-12-02

ESSENTIAL DRAWING

REVISED / ISSUED — INCORPORATED CHG. DOC. VOP-M-12HF48-04-A, R/00 — CHANGE PKG. NO. 49337

THIS DWG. SUPERSEDED BY, REV. — THIS DWG. SUPERSEDES REV.

REVISION NOTES:

WOLF CREEK NUCLEAR OPERATING CORPORATION — ELECTRONIC APPROVAL

PIPING AND INSTRUMENTATION DIAGRAM SECONDARY LIQUID WASTE SYSTEM

SCALE	DRAWING NUMBER	SHEET	REV
NONE	LR-WCGS-HF-M-12HF02		05

34X44 E SIZE

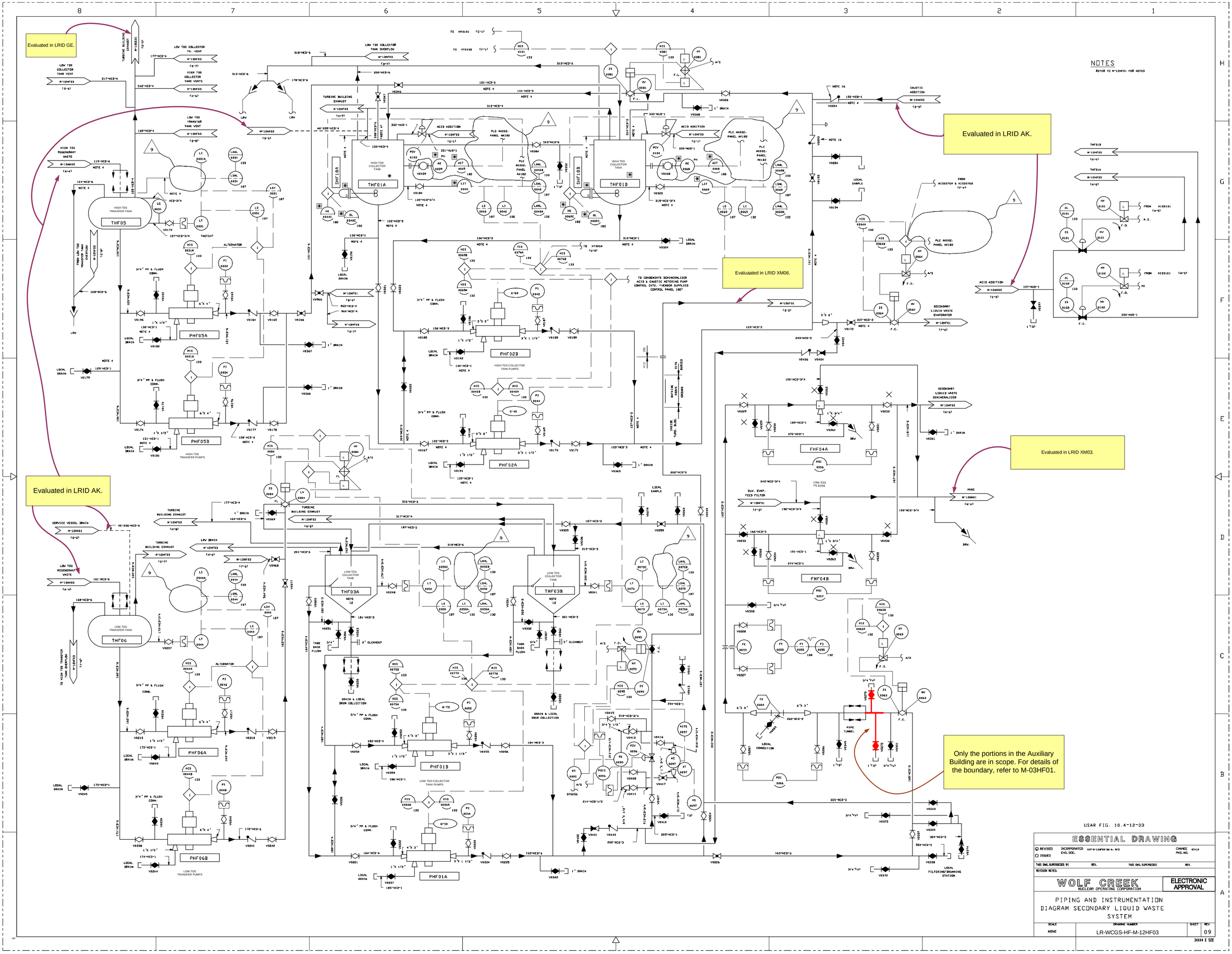

Evaluated in LRID GE.
Evaluated in LRID AK.
Evaluated in LRID AK.
Evaluated in LRID XM06.
Evaluated in LRID XM03.
Only the portions in the Auxiliary Building are in scope. For details of the boundary, refer to M-03HF01.
NOTES
REFER TO M-12HF01 FOR NOTES
THF05
THF01A
THF01B
THF06
THF03A
THF03B
PHF05A
PHF05B
PHF02B
PHF02A
PHF06A
PHF06B
PHF01B
PHF01A
FHF04A
FHF04B
USAR FIG. 10.4-12-03
ESSENTIAL DRAWING
WOLF CREEK
NUCLEAR OPERATING CORPORATION
ELECTRONIC APPROVAL
PIPING AND INSTRUMENTATION DIAGRAM SECONDARY LIQUID WASTE SYSTEM
SCALE NONE
DRAWING NUMBER LR-WCGS-HF-M-12HF03
SHEET
REV 09
34X44 E SIZE

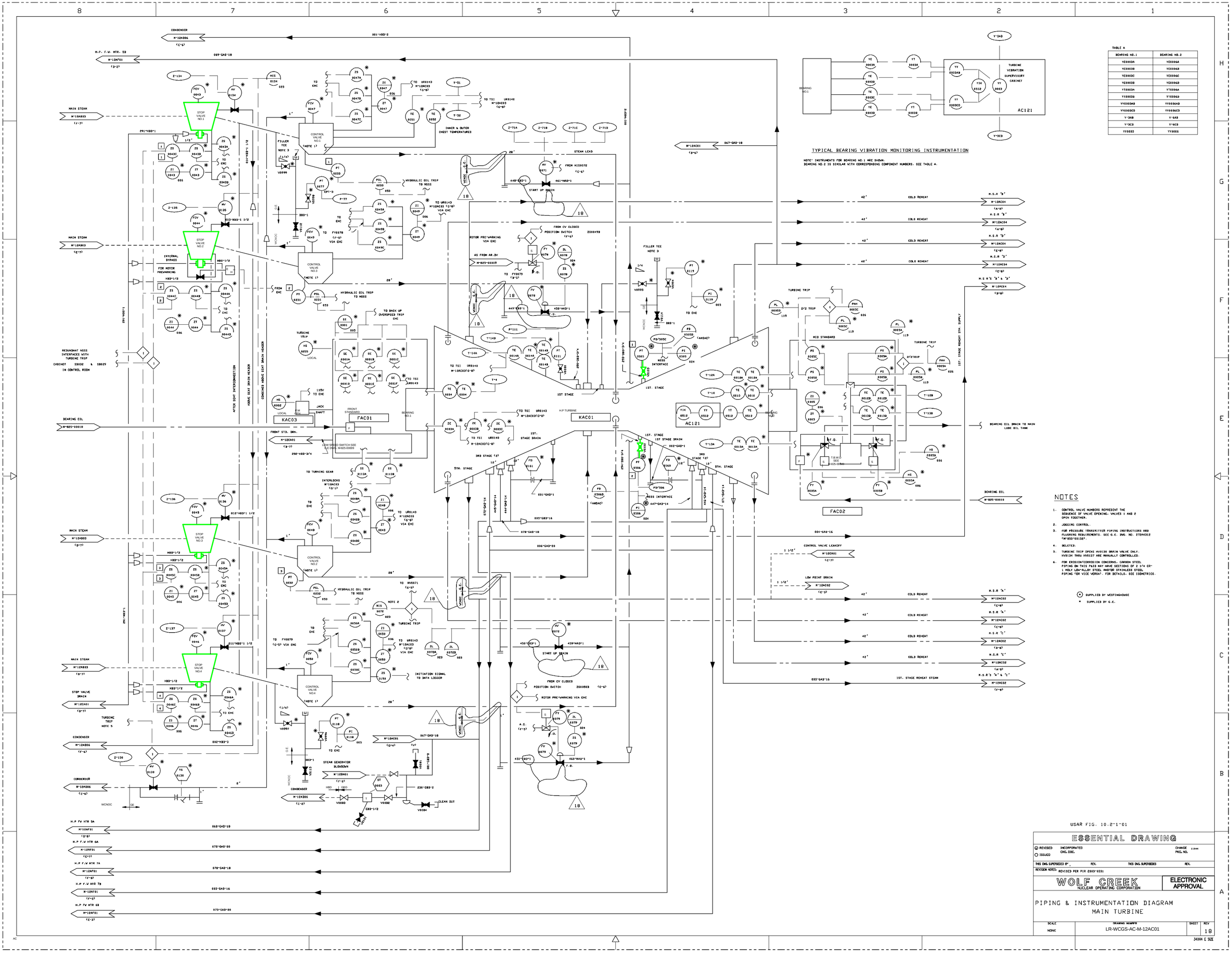

TYPICAL BEARING VIBRATION MONITORING INSTRUMENTATION

NOTE: INSTRUMENTS FOR BEARING NO.1 ARE SHOWN.
BEARING NO.2 IS SIMILAR WITH CORRESPONDING COMPONENT NUMBERS. SEE TABLE A.

TABLE A

BEARING NO.1	BEARING NO.2
YE0003A	YE0006A
YE0003B	YE0006B
YE0003C	YE0006C
YE0003D	YE0006D
YT0003A	YT0006A
YT0003B	YT0006B
YY0003AB	YY0006AB
YY0003CD	YY0006CD
Y-3AB	Y-6AB
Y-3CD	Y-6CD
YY0003	YY0006

NOTES

1. CONTROL VALVE NUMBERS REPRESENT THE SEQUENCE OF VALVE OPENING. VALVES 1 AND 2 OPEN TOGETHER.
2. JOGGING CONTROL.
3. FOR PRESSURE TRANSMITTER PIPING INSTRUCTIONS AND FLUSHING REQUIREMENTS. SEE G.E. DWG. NO. 272A4312 (M-855-00152).
4. DELETED.
5. TURBINE TRIP OPENS HV0130 DRAIN VALVE ONLY. HV0134 THRU HV0137 ARE MANUALLY CONTROLLED.
6. FOR EROSION/CORROSION CONCERNS, CARBON STEEL PIPING ON THIS P&ID MAY HAVE SECTIONS OF 2 1/4 CR-1 MOLY LOW-ALLOY STEEL AND/OR STAINLESS STEEL PIPING (OR VICE VERSA). FOR DETAILS, SEE ISOMETRICS.

(*) SUPPLIED BY WESTINGHOUSE
* SUPPLIED BY G.E.

USAR FIG. 10.2-1-01

ESSENTIAL DRAWING

REVISED / ISSUED — INCORPORATED CHG. DOC. — CHANGE PKG. NO. 11044

THIS DWG. SUPERSEDES BY _ REV. — THIS DWG. SUPERSEDES REV.

REVISION NOTES: REVISED PER PIR 2003-0331

WOLF CREEK NUCLEAR OPERATING CORPORATION

ELECTRONIC APPROVAL

PIPING & INSTRUMENTATION DIAGRAM
MAIN TURBINE

SCALE	DRAWING NUMBER	SHEET	REV
NONE	LR-WCGS-AC-M-12AC01		18

34X44 E SIZE

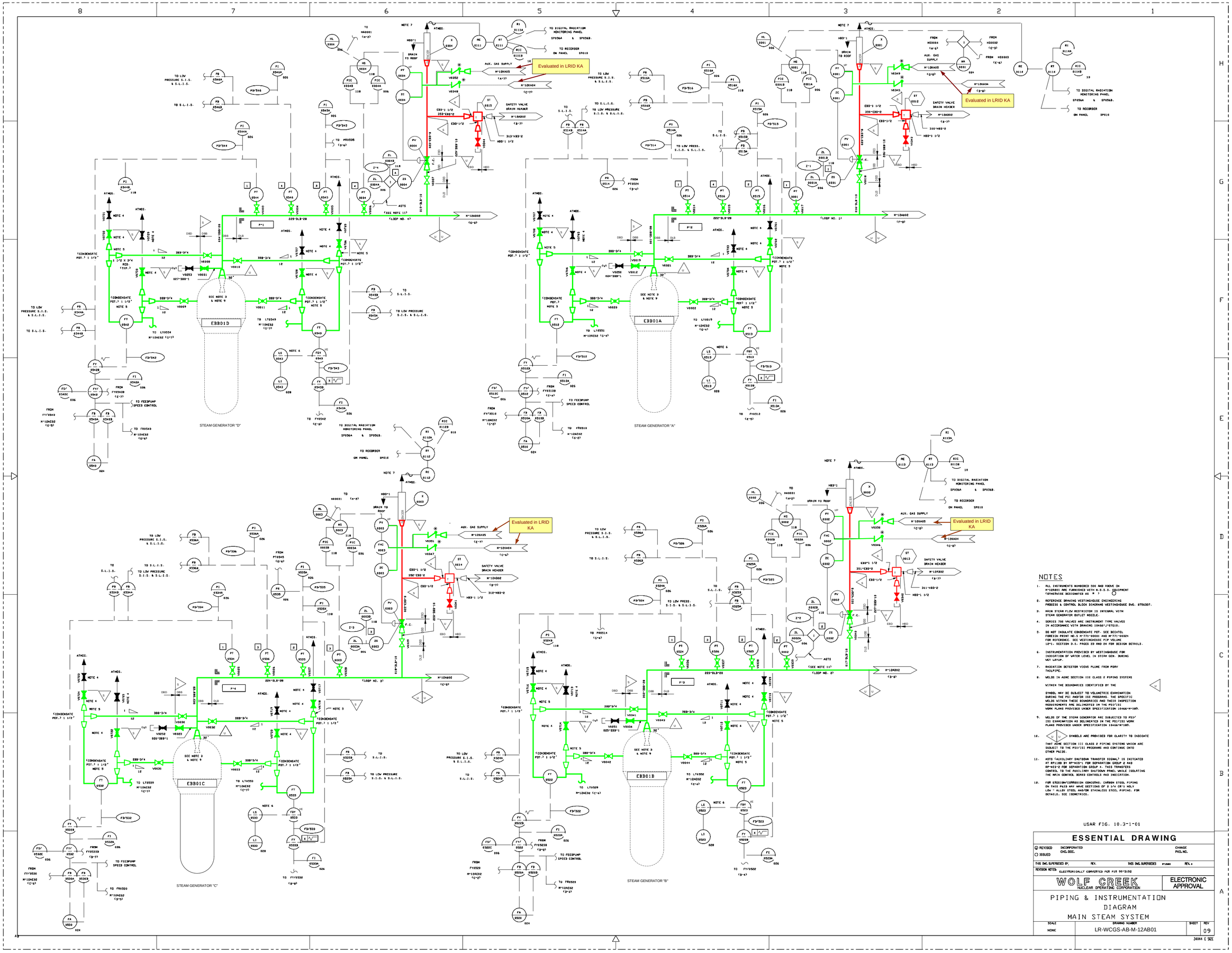

NOTES

1. ALL INSTRUMENTS NUMBERED 500 AND ABOVE ON M-12AB01 ARE FURNISHED WITH N.S.S.S. EQUIPMENT (OTHERWISE DESIGNATED AS ■)
2. REFERENCE DRAWING WESTINGHOUSE ENGINEERING PROCESS & CONTROL BLOCK DIAGRAMS WESTINGHOUSE DWG. 8756307.
3. MAIN STEAM FLOW RESTRICTOR IS INTEGRAL WITH STEAM GENERATOR OUTLET NOZZLE.
4. SERIES 700 VALVES ARE INSTRUMENT TYPE VALVES IN ACCORDANCE WITH DRAWING 10466-J-07G10.
5. DO NOT INSULATE CONDENSATE POT. SEE BECHTEL FOREIGN PRINT NO.S M-771-00001 AND M-771-00024 FOR REFERENCE. SEE WESTINGHOUSE PIP VOLUME 12*1. SECTION 3.5. PAGES 23 AND 24 FOR DESIGN DETAILS.
6. INSTRUMENTATION PROVIDED BY WESTINGHOUSE FOR INDICATION OF WATER LEVEL IN STEAM GEN. DURING WET LAYUP.
7. RADIATION DETECTOR VIEWS PLUME FROM PORV TAILPIPE.
8. WELDS IN ASME SECTION III CLASS 2 PIPING SYSTEMS

   WITHIN THE BOUNDARIES IDENTIFIED BY THE

   SYMBOL MAY BE SUBJECT TO VOLUMETRIC EXAMINATION DURING THE PSI AND/OR ISI PROGRAMS. THE SPECIFIC WELDS WITHIN THESE BOUNDARIES AND THEIR INSPECTION REQUIREMENTS ARE DELINEATED IN THE PSI/ISI WORK PLANS PROVIDED UNDER SPECIFICATION 10466-M-109.
9. WELDS OF THE STEAM GENERATOR ARE SUBJECTED TO PSI/ISI EXAMINATION AS DELINEATED IN THE PSI/ISI WORK PLANS PROVIDED UNDER SPECIFICATION 10466-M-109.
10. U SYMBOLS ARE PROVIDED FOR CLARITY TO INDICATE THAT ASME SECTION III CLASS 2 PIPING SYSTEMS WHICH ARE SUBJECT TO THE PSI/ISI PROGRAMS AND CONTINUE ONTO OTHER PAIDS.
11. ASTS (AUXILIARY SHUTDOWN TRANSFER SIGNAL) IS INITIATED AT RP1100 BY RP-HIS-1 FOR SEPARATION GROUP 2 AND RP-HIS-2 FOR SEPARATION GROUP 4. THIS TRANSFERS CONTROL TO THE AUXILIARY SHUTDOWN PANEL WHILE ISOLATING THE MAIN CONTROL BOARD CONTROLS AND INDICATION.
12. FOR EROSION/CORROSION CONCERNS, CARBON STEEL PIPING ON THIS PAID MAY HAVE SECTIONS OF 2 1/4 CR-1 MOLY LOW - ALLOY STEEL AND/OR STAINLESS STEEL PIPING. FOR DETAILS, SEE ISOMETRICS.

USAR FIG. 10.3-1-01

ESSENTIAL DRAWING

◎ REVISED ○ ISSUED	INCORPORATED CHG. DOC.		CHANGE PKG. NO.
THIS DWG. SUPERSEDED BY	REV.	THIS DWG. SUPERSEDES	REV.
REVISION NOTES	ELECTRONICALLY CONVERTED PER PIR 99-3192		

WOLF CREEK NUCLEAR OPERATING CORPORATION

ELECTRONIC APPROVAL

PIPING & INSTRUMENTATION DIAGRAM
MAIN STEAM SYSTEM

SCALE	DRAWING NUMBER	SHEET	REV
NONE	LR-WCGS-AB-M-12AB01		09

34X44 E SIZE

SPRING LOADED SAFETY VALVES

SPRING LOADED SAFETY VALVES

SPRING LOADED SAFETY VALVES

SPRING LOADED SAFETY VALVES

The anchor for seismic support is identified in drawing M-19AB08. This is evaluated in LRID AD.

The anchor for seismic support is identified in drawing M-19AB08. This is evaluated in LRID AD.

The anchor for seismic support is identified in drawing M-19AB08. This is evaluated in LRID AD.

TABLE FOR LINE NUMBERS

DESCRIPTION	SAFETY VALVE NUMBERS																	
	V0045	V0046	V0047	V0048	V0049	V0055	V0056	V0057	V0058	V0059	V0065	V0066	V0067	V0068	V0069	V0075	V0076	V0077	V0078	V0079
'A'	483	488	493	498	503	456	461	466	471	476	429	434	439	444	449	482	487	412	417	422
'B'	484	489	494	499	504	457	462	467	472	477	430	435	440	445	450	483	488	413	418	423
'C'	* 485	490	* 495	500	* 505	* 458	463	* 468	* 473	* 478	* 431	436	* 441	446	* 451	* 484	489	* 414	* 419	* 424
'D'	486	491	496	501	506	459	464	469	474	479	432	437	442	447	452	485	410	415	420	425
'E'	487	492	497	502	507	460	465	470	475	480	433	438	443	448	453	486	411	416	421	426
'F'	481	481	481	481	481	454	454	454	454	454	427	427	427	427	427	480	480	480	480	480
'G'	323	323	323	323	323	316	316	316	316	316	321	321	321	321	321	312	312	312	312	312
'H'	313	313	313	313	313	322	322	322	322	322	311	311	311	311	311	320	320	320	329	320
'J'	492	492	492	492	492	455	455	455	455	455	428	428	428	428	428	491	491	491	491	491

TYPICAL FOR EACH SAFETY VALVE ARRANGEMENT

NOTES

1. CLASS CHANGE (3LB TO DBD) AND SEISMIC CHANGE IS AT FIRST WELD INSIDE TURBINE BLDG. WALL.
2. THE MAIN STEAM ISOLATION VALVE ACUATORS INCLUDE HYDRAULIC ACCUMULATORS CHARGED WITH HIGH PRESSURE NITROGEN. SEE M-12KH02 FOR NITROGEN SUPPLY.
3. FOR GENERAL NOTES & REFERENCES SEE DWG. M-12AB01(G).
4. ASTS (AUXILIARY SHUTDOWN TRANSFER SIGNAL) IS INITIATED AT RP188 BY RP-MIS'I WHICH TRANSFERS CONTROL TO THE AUXILLARY SHUTDOWN PANEL WHILE ISOLATING THE MAIN CONTROL BOARD CONTROLS AND INDICATION.
5. FOR EROSION/CORROSION CONCERNS: CARBON STEEL PIPING ON THIS P&ID MAY HAVE SECTIONS OF 2 1/4 CR-1 MOLY LOW-ALLOY STEEL AND/OR STAINLESS STEEL PIPING. FOR DETAILS, SEE ISOMETRICS.

USAR FIG. 10.3-1-2

ESSENTIAL DRAWING

◉ REVISED	INCORPORATED	CHANGE	
○ ISSUED	CHG. DOC.	PKG. NO.	

THIS DWG. SUPERSEDED BY: REV. | THIS DWG. SUPERSEDES M-12AB02 REV. 7

REVISION NOTES: ELECTRONICALLY CONVERTED PER PIR 99-3192

WOLF CREEK NUCLEAR OPERATING CORPORATION — ELECTRONIC APPROVAL

PIPING & INSTRUMENTATION DIAGRAM MAIN STEAM SYSTEM

SCALE	DRAWING NUMBER	SHEET	REV
NONE	LR-WCGS-AB-M-12AB02		08

34X44 E SIZE

To be evaluated in LRID AE, Feedwater System

'STEAM DUMP PERMISSIVES'

To be evaluated in LRID AC

To be evaluated in LRID AC

To be evaluated in LRID AC

To be evaluated in LRID AC

The valve is evaluated in LRID AD

The valve is evaluated in LRID AD

The valve is evaluated in LRID AD

The valve is evaluated in LRID AD

NOTES

1. FOR THE ORIGIN OF STEAM DUMP SIGNALS SEE BECHTEL DRAWING M-744-00027
2. MUST BE SLOPED TO THE CONDENSER FOR CONTINUOUS DRAINAGE.
3. ALL "GBD" PIPING IN STEAM DUMP IS SCHEDULE 120 FOR NOISE AND VIBRATION SUPPRESSION
4. FOR EROSION/CORROSION CONCERNS CARBON STEEL PIPING ON THIS PAID MAY HAVE SECTIONS OF 2 1/4 CR-1 MOLY LOW-ALLOY STEEL AND/OR STAINLESS STEEL PIPING. FOR DETAILS SEE ISOMETRICS
5. OPERATION OF FEEDWATER PREHEAT THRU PCV'S 359 AND 360 IS FOR USE DURING START UPS AND CONTROLLED COOLDOWNS FROM P-25/POWER ('THERMAL') ONLY VALVES AB-V353 THRU 358 AND PCV'S 359 & 360 SHALL REMAIN CLOSED ABOVE 25/POWER ('THERMAL')
6. USE OF FEEDWATER PREHEAT SUBSYSTEM REQUIRES BOTH FEEDWATER HEATERS 6A & 6B OR 7A & 7B TO BE IN USE TOGETHER TO TAKE CREDIT FOR THE RELIEF VALVES ON BOTH 6A & 6B FOR DOWNSTREAM OF PCV 359 AND ON 7A & 7B FOR DOWNSTREAM OF PCV-360

USAR FIG. 10.3-1-03

ESSENTIAL DRAWING

REVISED / ISSUED — INCORPORATED CHG. DOC. VIP-M-12AB03-15-A, R/08 — CHANGE PKG. NO. 10805

THIS DWG. SUPERSEDED BY: — REV. — THIS DWG. SUPERSEDES — REV.

REVISION NOTES:

WOLF CREEK NUCLEAR OPERATING CORPORATION — ELECTRONIC APPROVAL

PIPING AND INSTRUMENTATION DIAGRAM
MAIN STEAM SYSTEM

SCALE	DRAWING NUMBER	SHEET	REV
NONE	LR-WCGS-AB-M-12AB03		16

34X44 E SIZE

Boundary stops at Anchor A002. See Drawing M-15FB01, Zone (C-6).

This section is evaluated in LRID AL.

Only the sections in areas 125 and 135 are applicable for NSAS effects. See M-03FB04 for details of the sections in scope.

NOTES

1. PIPE IS SCHEDULE 80 FOR NOISE & VIBRATION SUPPRESSION.
2. DELETED
3. ALIGNS MAIN STEAM TO FEEDWATER HEATERS 6A AND 6B THROUGH CONTROL VALVE FB-PV-17A.
4. CONTROLS FINAL FEEDWATER TEMPERATURE DURING START-UP AND SHUTDOWN.
5. FOR EROSION/CORROSION CONCERNS, CARBON STEEL PIPING ON THIS P&ID MAY HAVE SECTIONS OF 2 1/4 CR-1 MOLY LOW-ALLOY STEEL AND/OR STAINLESS STEEL PIPING. FOR DETAILS, SEE ISOMETRICS.

USAR FIG. 9.5.9-1-2

ESSENTIAL DRAWING

◉ REVISED ○ ISSUED	INCORPORATED CHG. DOC. 2004-0035	CHANGE PKG. NO.	
THIS DWG. SUPERSEDED BY	REV.	THIS DWG. SUPERSEDES	REV.
REVISION NOTES:			

WOLF CREEK NUCLEAR OPERATING CORPORATION — ELECTRONIC APPROVAL

PIPING & INSTRUMENTATION DIAGRAM
AUXILIARY STEAM SYSTEM

SCALE	DRAWING NUMBER	SHEET	REV
NONE	LR-WCGS-AB-M-12FB01		14

34X44 E SIZE

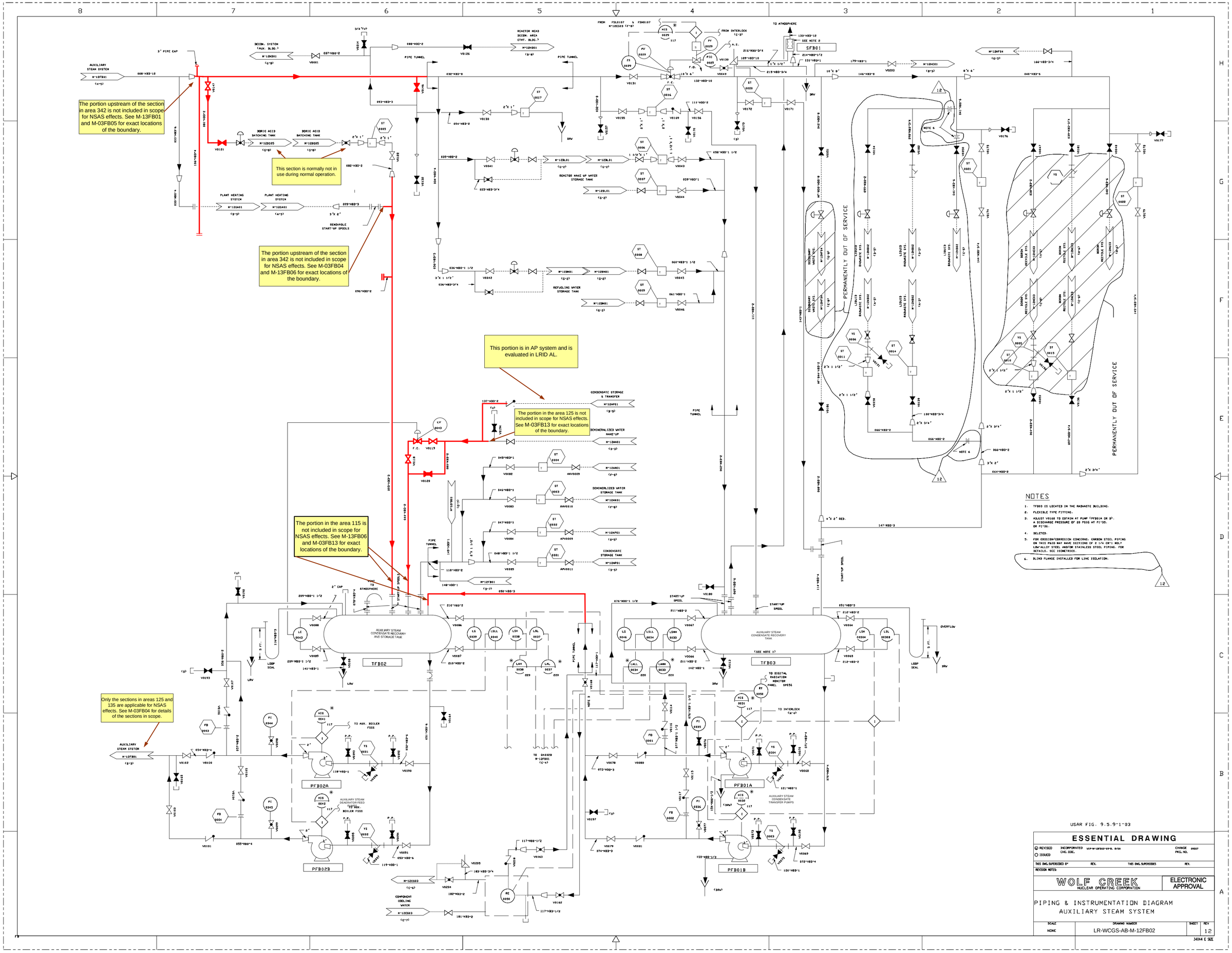

NOTES

1. TFB03 IS LOCATED IN THE RADWASTE BUILDING.
2. FLEXIBLE TYPE FITTING.
3. ADJUST V0160 TO OBTAIN AT PUMP (PFB01A OR B). A DISCHARGE PRESSURE OF 20 PSIG AT PI-35. OR PI-36.
4. DELETED.
5. FOR EROSION/CORROSION CONCERNS, CARBON STEEL PIPING ON THIS PAID MAY HAVE SECTIONS OF 2 1/4 CR-1 MOLY LOW-ALLOY STEEL AND/OR STAINLESS STEEL PIPING. FOR DETAILS, SEE ISOMETRICS.
6. BLIND FLANGE INSTALLED FOR LINE ISOLATION.

USAR FIG. 9.5.9-1-03

ESSENTIAL DRAWING

REVISED / ISSUED — INCORPORATED CHG. DOC. VIP-M-12FB02-09-B, 8/00 — CHANGE PKG. NO. 09037

THIS DWG. SUPERSEDED BY — REV. — THIS DWG. SUPERSEDES — REV.

REVISION NOTES:

WOLF CREEK NUCLEAR OPERATING CORPORATION — ELECTRONIC APPROVAL

PIPING & INSTRUMENTATION DIAGRAM
AUXILIARY STEAM SYSTEM

SCALE	DRAWING NUMBER	SHEET	REV
NONE	LR-WCGS-AB-M-12FB02		12

34X44 E SIZE

The highlighted pipe line from Auxiliary Steam (AB) is NSR for system integrity of the FC steam line to the Aux Feed Pump Turbine. This portion of the line up to the first anchor is in-scope for the AB System.

The lube oil loop is evaluated in LRID AL.

The pipe is anchored at the penetration.

NOTES

1. PIPE CLASS CHANGE IS MADE AT FIRST WELD DOWNSTREAM OF ISOLATION RESTRAINT SYSTEM.
2. RADIATION DETECTOR VIEWS PLUME FROM TURBINE EXHAUST.
3. WELDS IN ASME SECTION III, CLASS 2 PIPING SYSTEMS WITHIN THE BOUNDARIES IDENTIFIED BY THE SYMBOL MAY BE SUBJECT TO VOLUMETRIC EXAMINATION DURING THE PSI AND/OR ISI PROGRAMS THE SPECIFIC WELDS WITHIN THESE BOUNDARIES AND THEIR INSPECTION REQUIREMENTS ARE DELINEATED IN THE PSI/ISI WORK PLANS PROVIDED UNDER SPECIFICATION 10466-W-189.
4. <1> SYMBOLS ARE PROVIDED FOR CLARITY TO INDICATE THAT ASME SECTION III CLASS 2 PIPING SYSTEMS WHICH ARE SUBJECT TO THE PSI/ISI PROGRAMS CONTINUE ON TO OTHER P & IDS.
5. DELETED.
6. DELETED.
7. ASTS ('AUXILIARY SHUTDOWN TRANSFER SIGNAL') IS INITIATED AT RP110B BY RP-MIS-1 WHICH TRANSFERS CONTROL TO THE AUXILIARY SHUTDOWN PANEL WHILE ISOLATING THE MAIN CONTROL BOARD CONTROLS AND INDICATION.
8. IF VIBRATION PROBE IS NOT USED, A STEEL/STAINLESS STEEL PLUG MAY BE SUBSTITUTED AS DESIRED.
9. THE AUXILIARY FEEDWATER PUMP TURBINE IS SUPPLIED NEMA SM02 'NON-ASME', BUT IS DESIGNED SAFETY RELATED AND IS SEISMICALLY QUALIFIED DUE TO ITS SAFETY RELATED FUNCTION. THE PIPING AND VALVES SUPPLIED BY THE VENDOR WITH THE TURBINE ARE ALSO NON-ASME. THE LUBE OIL COOLER AND COOLING WATER PIPING ARE SUPPLIED ASME SECTION III CLASS 3. THE NON-ASME PIPING WITHIN THE ◇ PLACE IS SAFETY RELATED ANSI B31.1 PIPING.
10. FOR EROSION/CORROSION CONCERNS, CARBON STEEL PIPING ON THIS P&ID MAY HAVE SECTIONS OF 2 1/4 CR-1 MOLY LOW - ALLOY STEEL AND/OR STAINLESS STEEL PIPING. FOR DETAILS, SEE ISOMETRICS.

USAR FIG. 10.4-10-00

ESSENTIAL DRAWING

◎ REVISED / ○ ISSUED	INCORPORATED CHG. DOC.	CHANGE PKG. NO.	04684
THIS DWG. SUPERSEDED BY	REV.	THIS DWG. SUPERSEDES	REV.

REVISION NOTES: AP 05-018 (SECTION 6.16, TABLE A, TYPE 4)

WOLF CREEK NUCLEAR OPERATING CORPORATION — ELECTRONIC APPROVAL

PIPING & INSTRUMENTATION DIAGRAM
AUXILIARY TURBINES
AUXILIARY FEEDWATER PUMP TURBINE

SCALE	DRAWING NUMBER	SHEET	REV
NONE	LR-WCGS-AB-M-12FC02		19

34X44 E SIZE

This section is evaluated in LRID AB.

MAIN STEAM M-12AB03 (M-5)

AUX. STEAM M-12FB01 (L-7)

H.S.R. "B" M-12AC64 (J-2)

CONN. NO. 448 M-12AB05

LOW POINT DRAIN M-12FC04 (C-6)

CLOSED COOLING WTR. M-12EB01 (G-5)

CLOSED COOLING WTR. M-12EB01 (G-5)

CLOSED COOLING WTR. M-12EB01 (F-5)

CLOSED COOLING WTR. M-12EB01 (E-5)

LUBE OIL COOLERS

EFC01A

EFC01B

LUBE OIL RESERVOIR TFC01A

M.O.P. "A" PFC01A

M.O.P. "A" PFC02A

E.B.O.P. "A" PFC03A

H.P. STOP VALVE W/ INTEGRAL STRAINER

L.P. STOP VALVE W/ INTEGRAL STRAINER

L.P. CONTROL VALVE OPERATING CYLINDER (C-5)

TO L.P. CONTROL VALVE OPERATING CYLINDER (C-5)

LOCAL

F.O.

FROM SSPS (TRIP)

FROM PSH0247 2/3 LOGIC M-12AC01 (E-4) TRIP

TRIP, RESET & OVERSPEED DEVICES PER DWG. M-012-00003 & M-012-00044

FROM ESFAS (TRIP TURBINE ON FIS)

TO STATUS INDICATION

TO ESFAS AUX. FEEDWATER SYS.

FROM PT0507 M-12AB03 (B-7) PT0508 M-12AC01 (G-6)

TO GOVERNOR (C-5)

TBWD, LOW SPEED INTERLOCK & SPEED SENSING DEVICES DWG. M-012-00043

HIGH PRESSURE OPERATING OIL

LOW PRESSURE CONTROL OIL

SPEED GOVERNOR PER DWG. M-012-043

FROM SPEED SENSORS (B-6)

FROM M.P. HDR (E-4)

TO SPEED GOVERNOR OF TURBINE 'B' M-12FC04 (C-5)

FROM FY0542, FY0532, M-12AB01

TURNING GEAR INTERLOCKS (E-2)

TO TSI M-12AC03 (G-8)

FROM SSPS (STEAM GEN. HI - HI LEVEL) (TRIP)

FROM CONDENSATE PUMP LOGIC M-12AB02 (E-4)

TO C.V. RESET

TO TGN (E-3)

TO TGM (C-6)

FROM PSL0606 M-12AE01 (B-3) (START PERMISSIVE)

FROM PSH0226 M-12AC01 (E-4)

FROM PY0125 M-12FC04 (C-4)

FROM PY0126 M-12FC04 (C-4)

TO SCO509C M-12FC04 (B-3)

TO TSI AC 120

TURBINE KFC01A

EXHAUST CASING

L.P. CONTROL VALVE

M.P. CONTROL VALVE

BRG

PATHWAY

GUARD LINE OIL RETURN

JUNCTION BOX BY G.E.

S.G.F.P. TURBINE EXHAUST DUCT. SFC01A

TURNING GEAR KFC03A

TURBINE BRG. OIL P.S. SPEED GOVERNOR (B-5)

LOW SPEED SWITCH (D-6)

PUMP BRG. OIL P.S. (A-5)

RESET

H.P.S.V. ABOVE SEAT DRAIN M-12AB06 (B-6)

H.P.S.V. BELOW SEAT DRAIN M-12AB06 (A-6)

L.P.S.V. ABOVE SEAT DRAIN M-12FC62 (F-7)

L.P.S.V. BELOW SEAT DRAIN M-12FC62 (F-7)

STEAM SEAL M-12EA01 (D-6)

STEAM SEAL M-12EA91 (D-5)

FROM S.G.F.P. B VIB. MONITORS M-12FC64(C-8)

EXHAUST STEAM TO I.P. CONDENSER 'B' M-12AB01 (C-4)

1ST STAGE START - UP DRAIN TO CONDENSER M-12AB01 (C-4)

STAGE MOISTURE DRAINS TO CONDENSER M-12AB01 (C-4)

NOTES:

1. ALL INSTRUMENT NO.'S 5E0 & UP SUPPLIED BY W .
2. SPARE THERMOCOUPLE - REPLACEMENT FOR TE0053.
3. DELETED.
4. FOR EROSION/CORROSION CONCERNS, CARBON - STEEL PIPING ON THIS P&ID MAY HAVE SECTIONS OF 2 1/4 CR-1 MOLY LOW - ALLOY STEEL AND/OR STAINLESS STEEL PIPING. FOR DETAILS SEE ISOMETRICS.

USAR FIG. 10.4-6-07

ESSENTIAL DRAWING

◎ REVISED ○ ISSUED	INCORPORATED CHG. DOC. P/R 00000109	CHANGE PKG. NO.
THIS DWG. SUPERSEDED BY	REV.	THIS DWG. SUPERSEDES REV.

REVISION NOTES: PER AP 05-010 (SECTION 6.10, TABLE A, TYPE 2)

WOLF CREEK NUCLEAR OPERATING CORPORATION

ELECTRONIC APPROVAL

PIPING & INSTRUMENTATION DIAGRAM
AUXILIARY TURBINES
S.G.F.P. TURBINE 'A'

SCALE	DRAWING NUMBER	SHEET	REV
NONE	LR-WCGS-AB-M-12FC03		10

34X44 E SIZE

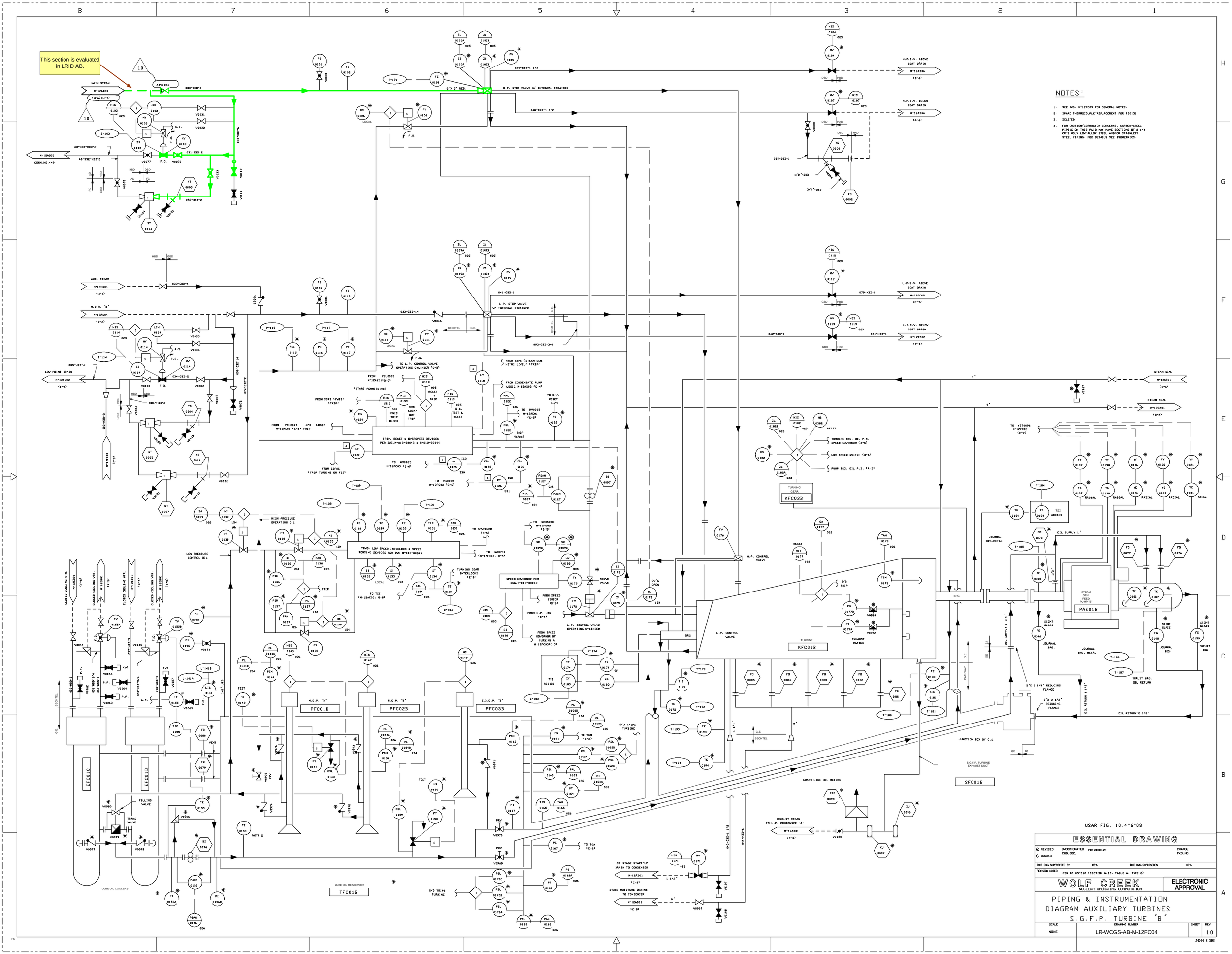
This section is evaluated in LRID AB.
MAIN STEAM
AUX. STEAM
LOW POINT DRAIN
H.P. STOP VALVE W/ INTEGRAL STRAINER
L.P. STOP VALVE W/ INTEGRAL STRAINER
H.P.S.V. ABOVE SEAT DRAIN
H.P.S.V. BELOW SEAT DRAIN
L.P.S.V. ABOVE SEAT DRAIN
L.P.S.V. BELOW SEAT DRAIN
STEAM SEAL
TRIP, RESET & OVERSPEED DEVICES PER DWG. M-012-00043 & M-012-00044
TRVD. LOW SPEED INTERLOCK & SPEED SENSING DEVICES PER DWG M-012-00043
SPEED GOVERNOR PER DWG. M-012-00043
L.P. CONTROL VALVE
H.P. CONTROL VALVE
TURBINE
KFC01B
TURNING GEAR
KFC03B
STEAM GEN. FEED PUMP "B"
PAE01B
JOURNAL BRG. METAL
JOURNAL BRG.
THRUST BRG.
OIL SUPPLY 1"
OIL RETURN-2 1/2"
JUNCTION BOX BY G.E.
S.G.F.P. TURBINE EXHAUST DUCT
SFC01B
GUARD LINE OIL RETURN
EXHAUST STEAM TO L.P. CONDENSER "A"
M-12AD01
1ST STAGE START-UP DRAIN TO CONDENSER
STAGE MOISTURE DRAINS TO CONDENSER
M-12AD01
M-12AD01
M.O.P. "B"
PFC01B
M.O.P. "B"
PFC02B
E.B.O.P. "B"
PFC03B
EFC01C
EFC01D
LUBE OIL COOLERS
LUBE OIL RESERVOIR
TFC01B
2/3 TRIPS TURBINE
NOTE 2
NOTES:
1. SEE DWG. M-12FC03 FOR GENERAL NOTES.
2. SPARE THERMOCOUPLE-REPLACEMENT FOR TE0155
3. DELETED
4. FOR EROSION/CORROSION CONCERNS, CARBON-STEEL PIPING ON THIS P&ID MAY HAVE SECTIONS OF 2 1/4 CR-1 MOLY LOW-ALLOY STEEL AND/OR STAINLESS STEEL PIPING. FOR DETAILS SEE ISOMETRICS.
USAR FIG. 10.4-6-08
ESSENTIAL DRAWING
REVISED
ISSUED
INCORPORATED CHG. DOC.
CHANGE PKG. NO.
THIS DWG. SUPERSEDED BY
REV.
THIS DWG. SUPERSEDES
REV.
REVISION NOTES: PER AP 05-010 (SECTION 6.10, TABLE A, TYPE 2)
WOLF CREEK
NUCLEAR OPERATING CORPORATION
ELECTRONIC APPROVAL
PIPING & INSTRUMENTATION
DIAGRAM AUXILIARY TURBINES
S.G.F.P. TURBINE "B"
SCALE
NONE
DRAWING NUMBER
LR-WCGS-AB-M-12FC04
SHEET
REV
10
34X44 E SIZE

NOTES

1. PIPE CLASS CODE ABD RUNS TO CONDENSER TO MINIMIZE VIBRATION AND PROVIDE EROSION PROTECTION.
2. FLOW TUBES ARE LOW-LOSS INSERT TYPE MOUNTED BETWEEN FLANGES. INSTRUMENT CONNECTIONS ARE ON FLOW TUBE FLANGE.
3. CONTAINS INTEGRAL BYPASS. FILTER BYPASSES AUTOMATICALLY AT HIGH DIFFERENTIAL PRESSURE. INDICATOR SHOWS: 1) FILTER IS CLEAN. 2) FILTER NEEDS CLEANING 3) FILTER IS BYPASSING.
4. TWO START-UP STRAINERS PER PUMP SUPPLIED.
5. INPUT TO THE NSSS COMPUTER.
6. A BLIND FLANGE IS PROVIDED TO SUPPORT SYSTEM HYDROTEST AND FLUSH.
7. DELETED
8. FIELD ROUTED TUBING TO SERVE AS NITROGEN BACKUP FOR LOSS OF CONTROL AIR TO VALVES AE-FV-1B AND AE-FV-2B. FAIL POSITION SHOWN IS FOR LOSS OF ELECTRICAL POWER.
9. AEV0361 AND AEV0362 SHALL REMAIN LOCKED OPEN UNLESS A FEEDWATER PRESSURE RELIEF PATH IS AVAILABLE OR THERE IS NO PRESSURE IN THE SYSTEM.
10. PRESSURE POINTS WITH QUICK-CONNECTS TO BE FIELD INSTALLED FOR PERIODIC PRESSURE MONITORING.
11. ORIFICES FO-3 AND FO-4 ARE DESIGNED TO LIMIT THE WARM UP LINE FLOW IN CONJUNCTION WITH OPERATION OF THE CONDENSATE PUMPS. VALVES V-274 AND V-275 MUST BE CLOSED PRIOR TO STARTUP OF THE STEAM GENERATOR FEED PUMPS.
12. SEE FLOW DIAGRAM M-11EA01 FOR GUIDANCE ON PROVISION OF COOLING WATER FLOW AND PUMP OPERATION.
13. FOR EROSION/CORROSION CONCERNS, CARBON STEEL PIPING ON THIS P&ID MAY HAVE SECTIONS OF 2 1/4 CR-1 MOLY LOW-ALLOY STEEL AND/OR STAINLESS STEEL PIPING. FOR DETAILS, SEE ISOMETRICS.

USAR FIG. 10.4.6-01

ESSENTIAL DRAWING

REVISED INCORPORATED CHG. DOC. WIP-M-12AE01-27-A, R/00 CHANGE PKG. NO. 10017

ISSUED

THIS DWG. SUPERSEDED BY REV. THIS DWG. SUPERSEDES REV.

REVISION NOTES:

WOLF CREEK NUCLEAR OPERATING CORPORATION

ELECTRONIC APPROVAL

PIPING & INSTRUMENTATION DIAGRAM

FEEDWATER SYSTEM

SCALE	DRAWING NUMBER	SHEET	REV
NONE	LR-WCGS-AE-M-12AE01		28

34X44 E SIZE

The Steam Generators are evaluated in LRID SGR.

The Steam Generators are evaluated in LRID SGR.

The Steam Generators are evaluated in LRID SGR.

The Steam Generators are evaluated in LRID SGR.

This section is evaluated in LRID AL.

This section is evaluated in LRID AL.

NOTES

1. ALL INSTRUMENTS NUMBERED 400 AND ABOVE ON M-12AE02 ARE FURNISHED WITH NSSS EQUIPMENT (OTHERWISE DESIGNATED AS ⊛).
2. FIRST WELD BEYOND AUX. BLDG. WALL.
3. DO NOT APPLY INSULATION TO CONDENSATE POT. SEE DWG. NOS M-771-00631 AND M-771-00624 FOR REFERENCE. SEE WESTINGHOUSE PIP VOLUME 12-1, SECTION 3.8, PAGES 29 AND 24 FOR DESIGN DETAILS.
4. SERIES 700 VALVES ARE TO BE INSTRUMENT TYPE VALVES BOUGHT IN ACCORDANCE WITH DRAWING 10466-J-1701E.
5. PIPING INSIDE CONTAINMENT WILL BE NORMALIZED AFTER FABRICATION OR IMPACT TESTED.
6. THE FEEDWATER ISOLATION VALVE ACTUATORS INCLUDE HYDRAULIC ACCUMULATORS CHARGED WITH HIGH PRESSURE NITROGEN. SEE M-12GH02 FOR NITROGEN SUPPLY.
7. S.G. WET LAYUP CONNECTION. FOR CONTINUATION OF PIPE, SEE DWG. M-12EBH03 (A-7, D-7, & B-7).
8. THE FOLLOWING CODE/MSN = CODE BOUNDARIES APPLY TO ALL CARBON STEEL VENTS & DRAINS:

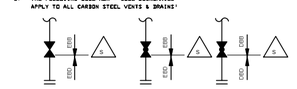

9. WELDS IN THE STEAM GENERATORS AND FEEDWATER FLOW ELEMENTS ARE SUBJECT TO PSI AND ISI EXAMINATION AS DELINEATED IN THE PSI/ISI WORK PLANS PROVIDED UNDER SPEC. 10466-M-189.
10. WELDS IN ASME III, CLASS 2 PIPING SYSTEMS WITHIN THE BOUNDARIES IDENTIFIED BY THE ⊛ SYMBOL MAY BE SUBJECT TO VOLUMETRIC EXAMINATION DURING THE PSI AND/OR ISI PROGRAMS. THE SPECIFIC WELDS WITHIN THESE BOUNDARIES AND THEIR INSPECTION REQUIRE-MENTS ARE DELINEATED IN THE PSI/ISI WORK PLANS PROVIDED UNDER SPEC. 10466-M-189.
11. FOR EROSION/CORROSION CONCERNS, CARBON STEEL PIPING IN THIS P&ID MAY HAVE SECTIONS OF 8 1/4" OR 1 HOLY LOW - ALLOY STEEL AND/OR STAINLESS STEEL PIPING. FOR DETAILS: SEE ISOMETRICS.

USAR FIG. 10.4-6-2

ESSENTIAL DRAWING

◉ REVISED ○ ISSUED	INCORPORATED CHG. DOC. VIP-M-12AE02-05-A, R/00	CHANGE PKG. NO.	99206
THIS DWG. SUPERSEDED BY	REV.	THIS DWG. SUPERSEDES	REV.
REVISION NOTES			

WOLF CREEK NUCLEAR OPERATING CORPORATION

ELECTRONIC APPROVAL

PIPING AND INSTRUMENTATION DIAGRAM
FEEDWATER SYSTEM

SCALE	DRAWING NUMBER	SHEET	REV
NONE	LR-WCGS-AE-M-12AE02		06

34444 E SIZE

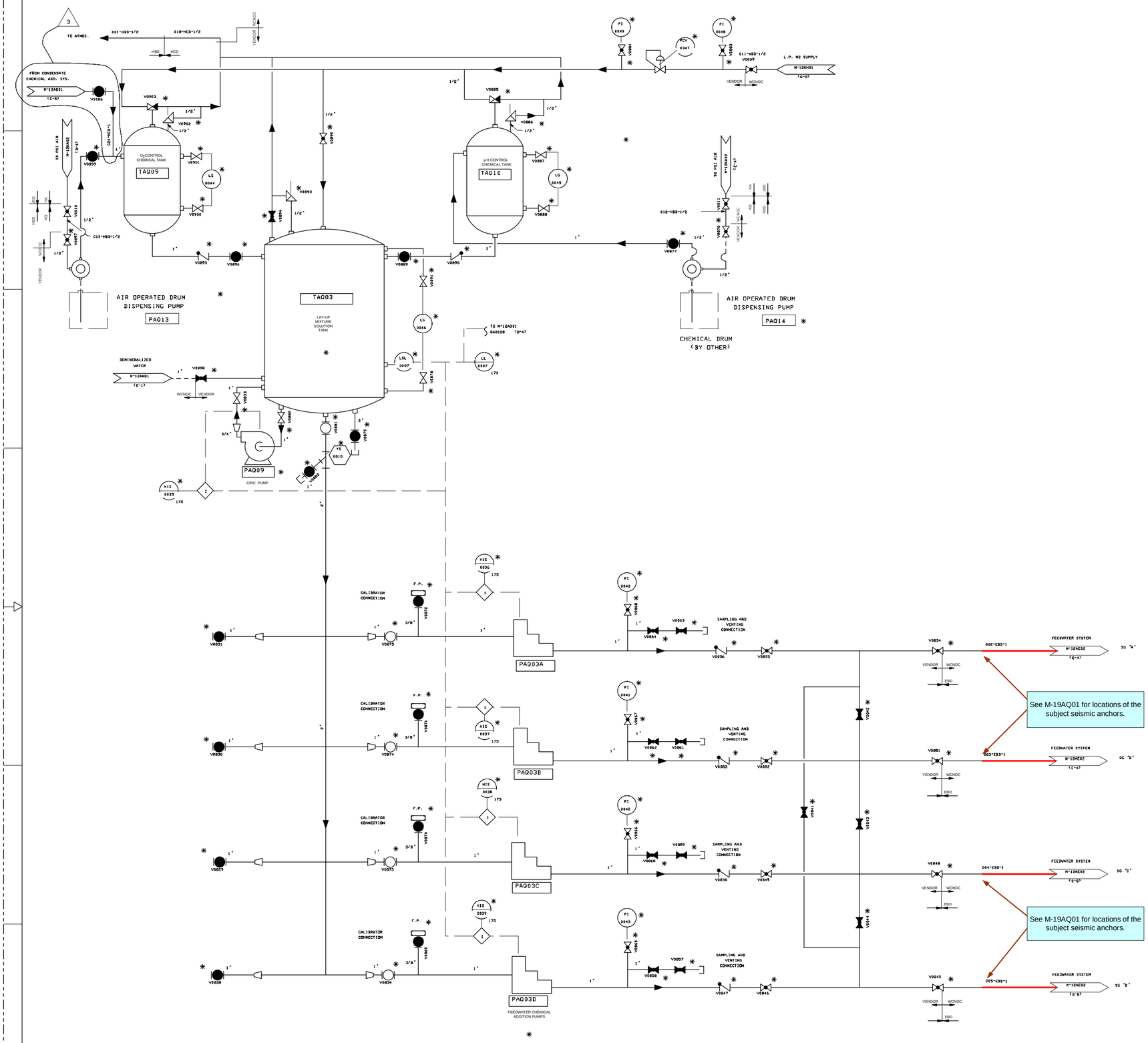

NOTES

1. ALL VENDOR SUPPLIED PIPE 316 OR 304 S.S. SCH 40.
2. ALL VENDOR PIPE FITTINGS ARE SOCKET WELD 316 OR 304 S.S., 3000 LBS. - DESIGNED AND TESTED PER ANSI B16.11 AND FULLY CONFORM TO ANSI B31.1 POWER PIPING CODE.

USAR FIG. 10.4-7 -02

ESSENTIAL DRAWING

(X) REVISED / ( ) ISSUED	INCORPORATED CHG. DOC. WCP-M-12AQ02-SD-A R/0	CHANGE PKG. NO. 19025	
THIS DWG. SUPERSEDES BY:	REV.	THIS DWG. SUPERSEDES: M-12AQ02	REV. 2
REVISION NOTES: ELECTRONICALLY CONVERTED PER AP 05-010			

WOLF CREEK NUCLEAR OPERATING CORPORATION — ELECTRONIC APPROVAL

PIPING AND INSTRUMENTATION DIAGRAM
FEEDWATER CHEMICAL
ADDITION SYSTEM

SCALE	DRAWING NUMBER	SHEET	REV
NONE	LR-WCGS-AE-M-12AQ02		03

34X44 E SIZE

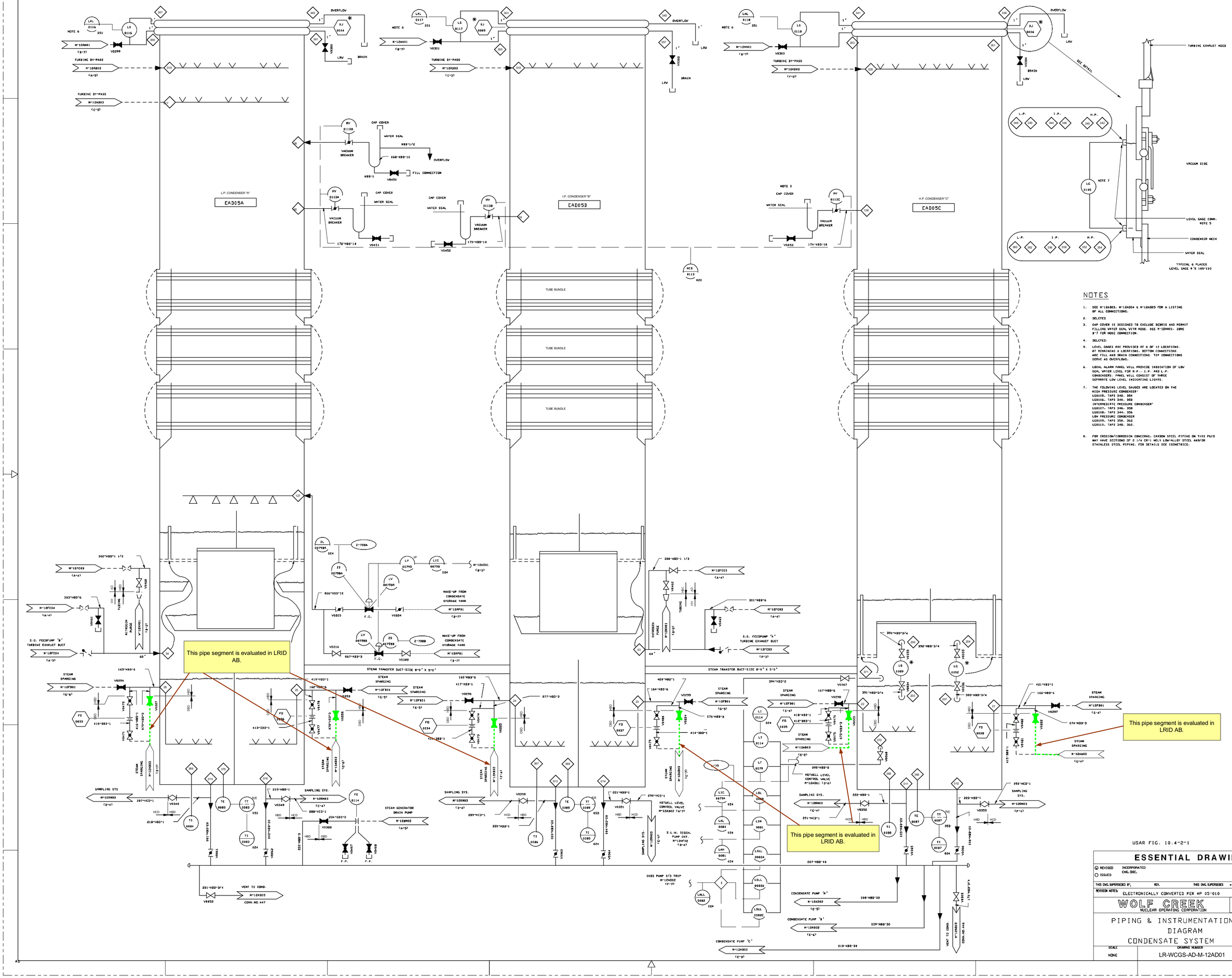

NOTES

1. SEE M-12AB02, M-12AD04 & M-12AD05 FOR A LISTING OF ALL CONNECTIONS.
2. DELETED
3. CAP COVER IS DESIGNED TO EXCLUDE DEBRIS AND PERMIT FILLING WATER SEAL WITH HOSE. SEE M-12AN01, ZONE 3-7 FOR HOSE CONNECTION.
4. DELETED.
5. LEVEL GAGES ARE PROVIDED AT 6 OF 12 LOCATIONS. AT REMAINING 6 LOCATIONS, BOTTOM CONNECTIONS ARE FILL AND DRAIN CONNECTIONS. TOP CONNECTIONS SERVE AS OVERFLOWS.
6. LOCAL ALARM PANEL WILL PROVIDE INDICATION OF LOW SEAL WATER LEVEL FOR H.P., I.P. AND L.P. CONDENSERS. PANEL WILL CONSIST OF THREE SEPARATE LOW LEVEL INDICATING LIGHTS.
7. THE FOLOWING LEVEL GAUGES ARE LOCATED ON THE HIGH PRESURE CONDENSER' LG0105, TAPS 348, 354 LG0106, TAPS 348, 352 INTERMEDIATE PRESSURE CONDENSER' LG0107, TAPS 346, 358 LG0108, TAPS 344, 356 LOW PRESSURE CONDENSER LG0109, TAPS 258, 262 LG0110, TAPS 248, 260.
8. FOR EROSION/CORROSION CONCERNS, CARBON STEEL PIPING ON THIS P&ID MAY HAVE SECTIONS OF 2 1/4 CR-1 MOLY LOW-ALLOY STEEL AND/OR STAINLESS STEEL PIPING. FOR DETAILS SEE ISOMETRICS.

USAR FIG. 10.4-2-1

ESSENTIAL DRAWING

◉ REVISED ○ ISSUED	INCORPORATED CHG. DOC.	CHANGE PKGS. NO.	
THIS DWG. SUPERSEDES #'s	REV.	THIS DWG. SUPERSEDES #-12AD05	REV. 02

REVISION NOTES: ELECTRONICALLY CONVERTED PER AP 05-010

WOLF CREEK NUCLEAR OPERATING CORPORATION — ELECTRONIC APPROVAL

PIPING & INSTRUMENTATION DIAGRAM CONDENSATE SYSTEM

SCALE	DRAWING NUMBER	SHEET	REV
NONE	LR-WCGS-AD-M-12AD01		03

34X44 E SIZE

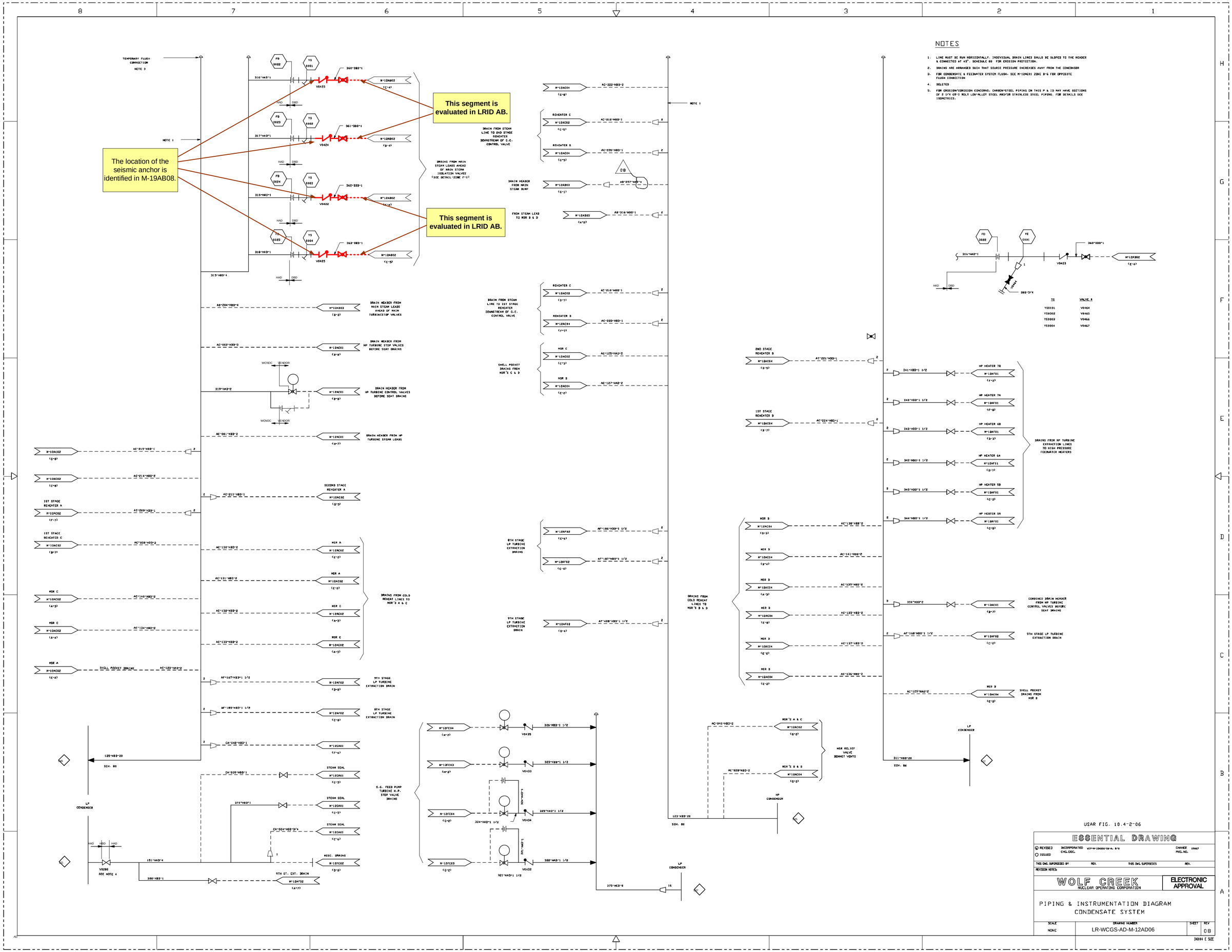

This segment is evaluated in LRID AB.
The location of the seismic anchor is identified in M-19AB08.
This segment is evaluated in LRID AB.
NOTES
1. LINE MUST BE RUN HORIZONTALLY. INDIVIDUAL DRAIN LINES SHALL BE SLOPED TO THE HEADER & CONNECTED AT 45°. SCHEDULE 80 FOR EROSION PROTECTION.
2. DRAINS ARE ARRANGED SUCH THAT SOURCE PRESSURE INCREASES AWAY FROM THE CONDENSOR
3. FOR CONDENSATE & FEEDWATER SYSTEM FLUSH. SEE M-12AE01 ZONE B-6 FOR OPPOSITE FLUSH CONNECTION
4. DELETED
5. FOR EROSION/CORROSION CONCERNS. CARBON-STEEL PIPING ON THIS P & ID MAY HAVE SECTIONS OF 2 1/4 CR-1 MOLY LOW-ALLOY STEEL AND/OR STAINLESS STEEL PIPING. FOR DETAILS SEE ISOMETRICS.
USAR FIG. 10.4-2-06
ESSENTIAL DRAWING
REVISED
ISSUED
INCORPORATED CHG. DOC.
CHANGE PKG. NO.
THIS DWG. SUPERSEDED BY
REV.
THIS DWG. SUPERSEDES
REV.
REVISION NOTES:
WOLF CREEK
NUCLEAR OPERATING CORPORATION
ELECTRONIC APPROVAL
PIPING & INSTRUMENTATION DIAGRAM
CONDENSATE SYSTEM
SCALE
NONE
DRAWING NUMBER
LR-WCGS-AD-M-12AD06
SHEET
REV
08
34X44 E SIZE

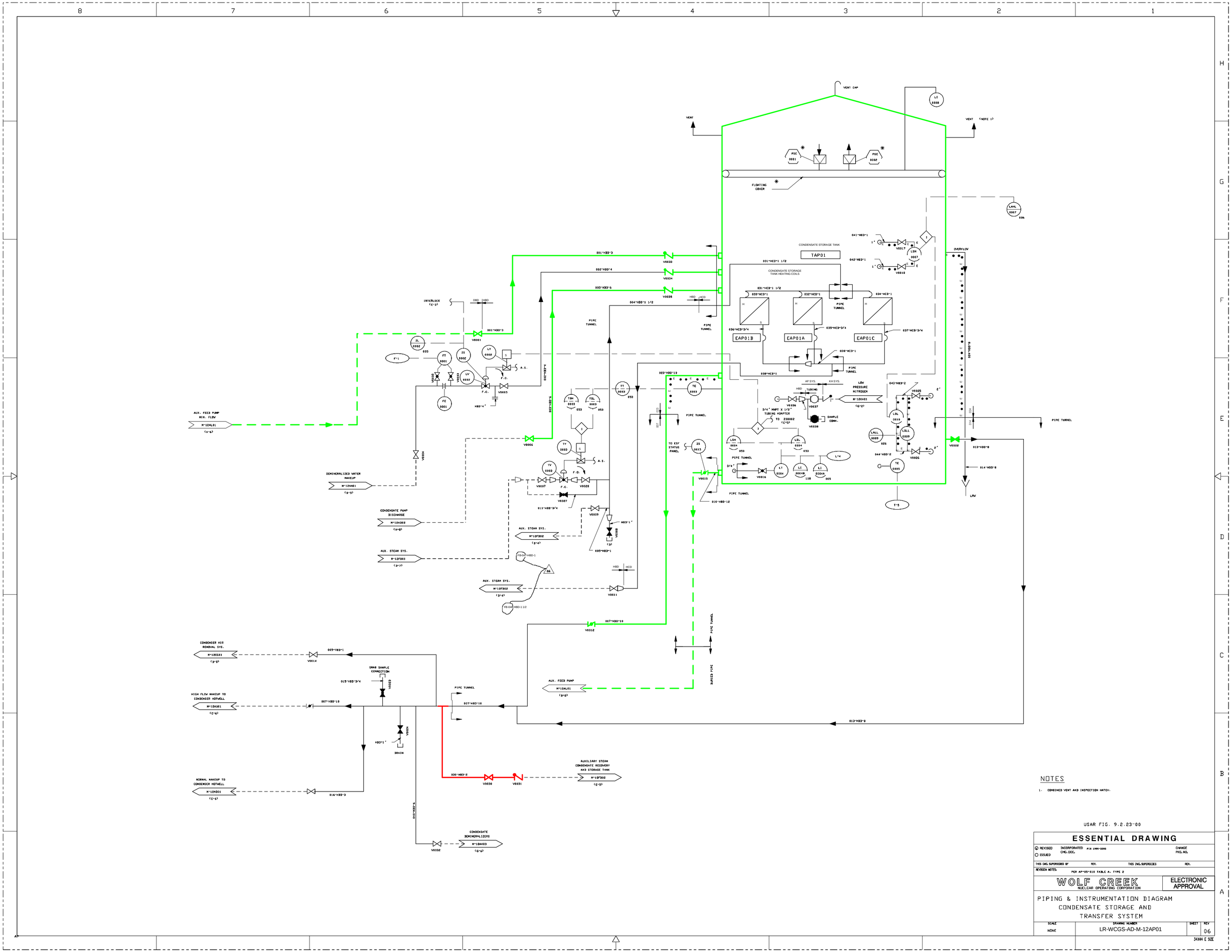

NOTES

1. COMBINED VENT AND INSPECTION HATCH.

USAR FIG. 9.2.23-00

ESSENTIAL DRAWING

⊙ REVISED / ○ ISSUED	INCORPORATED CMG. DOC.	PIR 1999-3393	CHANGE PKG. NO.
THIS DWG. SUPERSEDED BY	REV.	THIS DWG. SUPERSEDES	REV.
REVISION NOTES:	PER AP-05-010 TABLE A, TYPE 2		

WOLF CREEK NUCLEAR OPERATING CORPORATION

ELECTRONIC APPROVAL

PIPING & INSTRUMENTATION DIAGRAM
CONDENSATE STORAGE AND
TRANSFER SYSTEM

SCALE	DRAWING NUMBER	SHEET	REV
NONE	LR-WCGS-AD-M-12AP01		06

34X44 E SIZE

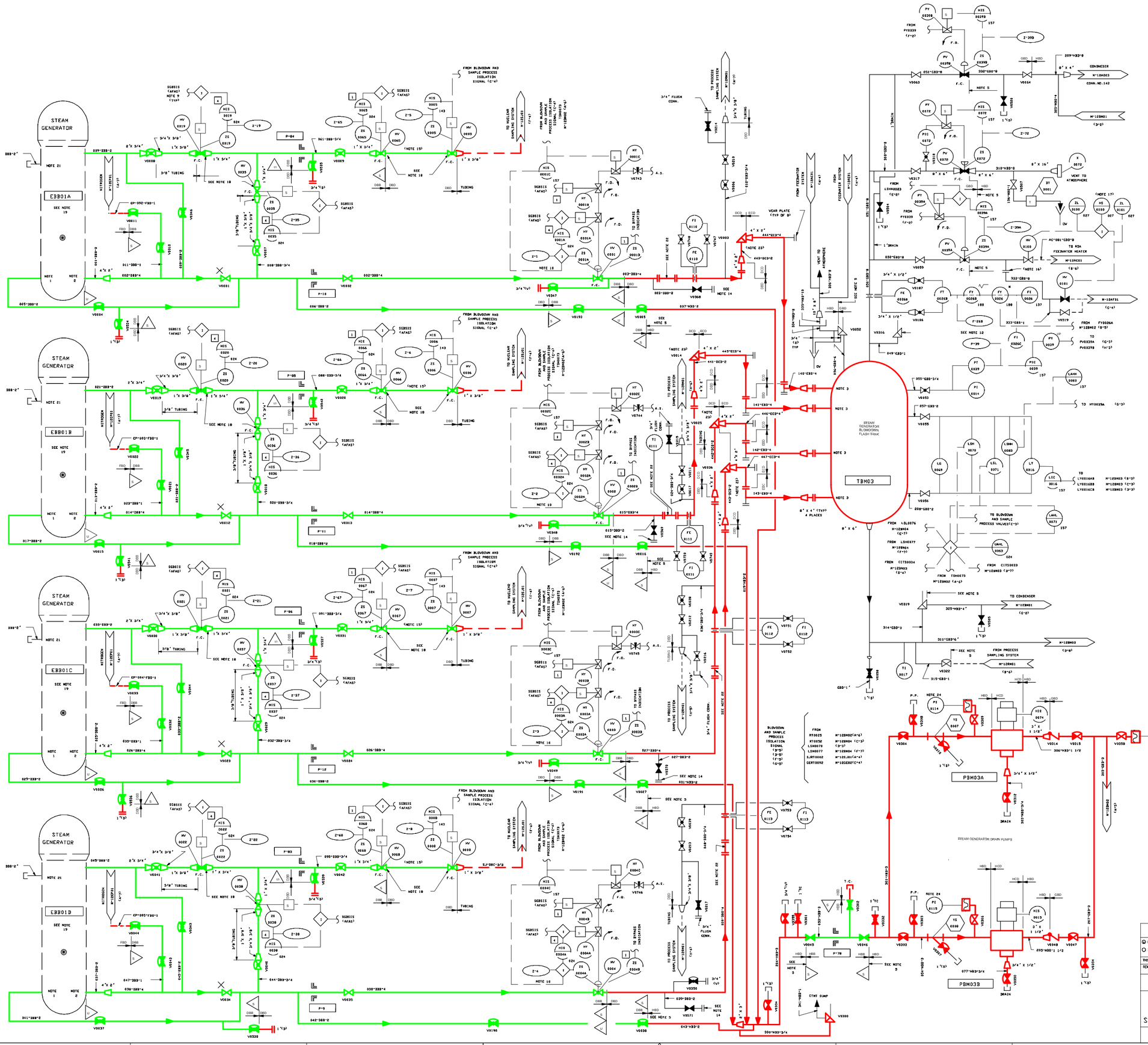
STEAM GENERATOR
EB801A
EB801B
EB801C
EB801D
TBM03
PBM03A
PBM03B
STEAM GENERATOR BLOWDOWN FLASH TANK
STEAM GENERATOR DRAIN PUMPS
NOTES
1. STEAM GENERATOR TUBE SHEET DRAIN.
2. STEAM GENERATOR BLOWDOWN LINE.
3. NOZZLES TO ENTER TANGENTIALLY.
4. PORTIONS OF THIS SYSTEM THAT CONTAIN RADIOACTIVE FLUIDS AND ARE IDENTIFIED BY QUALITY CLASSIFICATION 'D' SHALL MEET THE HUMONITING REQUIREMENTS AS GIVEN IN TABLE 9.4-2 OF THE SAR.
5. INDICATED PORTIONS OF THIS SYSTEM IDENTIFIED BY THIS NOTE ARE QUALITY GROUP 'C' NONHUMONITED.
6. THE PORTION OF THIS SYSTEM THAT IS ENCLOSED INCLUDES LINES EMANATING FROM THE STEAM GENERATORS WHICH SERVE AS AN EXTENSION OF THE CONTAINMENT PRESSURE BOUNDARY
7. BLOWDOWN PIPING UPSTREAM OF THE BLOWDOWN FLASH TANK SHALL BE SCH 160.
8. OVERFLOW LOOP SEAL TO EXTEND 12' BELOW TANK CONNECTION AND TO TOP OF TANK WITH SIPHON BREAKER ON TOP OF LOOP SEAL.
9. SGBSIS 'AFAS3' IS THE STEAM GENERATOR BLOWDOWN AND SAMPLE ISOLATION SIGNAL. THIS SIGNAL IS COMPOSED OF MOTOR DRIVEN AND TURBINE DRIVEN AUXILIARY FEEDWATER PUMP ACTUATION SIGNALS WITH THE SAFETY INJECTION SIGNAL.
10. THREE LIMIT SWITCHES TO BE PROVIDED. TWO SWITCHES INDICATING CLOSED POSITIONS ('SEPARATION GROUP 1 AND 4') ONE SWITCH INDICATING OPEN POSITION ('SEPARATION GROUP 4').
11. DELETED.
12. P-39 IS UTILIZED TO COMPENSATE F-268 FOR DENSITY. F-66A ARE F-266 ARE ADDED TO GIVE TOTAL BLOWDOWN FLOW.
13. DELETED.
14. STEAM GENERATOR WET LAYUP CONN. FOR CONTINUATION OF PIPE, SEE DWG. M-12BM05 (M-4,F-4,D-4, & B-4).
15. VALVES ARE CONNECTED BY A 1" SOCKET WELD COUPLING.
16. A BLIND FLANGE IS PROVIDED TO SUPPORT SYSTEM HYDROTEST
17. ALIGNS STEAM GENERATOR BLOWDOWN FLASH TANK STEAM TO FEEDWATER HEATERS 5A & 5B FOR FEEDWATER HEATING DURING START-UP.
18. THE VALVES CALLED OUT BY THIS NOTE ARE PURCHASED UNDER SPECIFICATION J-603A AND ARE STAINLESS STEEL. VALVE CLASS CCD.
19. WELDS TO THE STEAM GENERATOR ARE SUBJECT TO PSI/ISI EXAMINATION AS DELINEATED IN THE PSI/ISI WORK PLANS PROVIDED UNDER SPECIFICATION 10466-M-189.
20. WELDS IN ASME SECTION III CLASS 2 PIPING SYSTEMS WITHIN THE BOUNDARIES IDENTIFIED BY THE ⟨ SYMBOL MAY BE SUBJECT TO VOLUME TRIC EXAMINATION DURING THE PSI AND/OR ISI PROGRAMS. THE SPECIFIC WELDS WITHIN THESE BOUNDARIES AND THEIR INSPECTION REQUIREMENTS ARE DELINEATED IN THE PSI/ISI WORK PLANS PROVIDED UNDER SPECIFICATION 10466-M-189.
21. CLOSURE ARRANGEMENT SHOWN IS FOR STEAM GENERATOR WET LAYUP TAP. WET LAYUP TAPS ARE NOT IN USE ON SNUPPS
22. FLANGED SPOOL PIECE PROVIDES FOR FUTURE VORTEC METER.
23. VALVES IDENTIFIED BY THIS NOTE ARE 1 1/2" VALVES WELDED TO 2" XXS PIPE.
24. EQUIPMENT SPECIFIED AND PROCURED BY VENDOR.
25. FOR EROSION/CORROSION CONCERNS, CARBON STEEL PIPING ON THIS P&ID MAY HAVE SECTIONS OF 2 1/4 CR-1 MOLY LOW-ALLOY STEEL AND/OR STAINLESS STEEL PIPING. FOR DETAILS, SEE ISOMETRICS.
USAR FIG. 10.4-8-1
ESSENTIAL DRAWING
REVISED
ISSUED
INCORPORATED CHG. DOC.
CHANGE PKG. NO.
THIS DWG. SUPERSEDED BY
REV.
THIS DWG. SUPERSEDES
REV.
REVISION NOTES:
ELECTRONICALLY CONVERTED PER PIR 99-2192
WOLF CREEK NUCLEAR OPERATING CORPORATION
ELECTRONIC APPROVAL
PIPING AND INSTRUMENTATION DIAGRAM
STEAM GENERATOR BLOWDOWN SYS.
SCALE NONE
DRAWING NUMBER LR-WCGS-BM-M-12BM01
SHEET 13
REV
34X44 E SIZE

NOTES

1. FOR GENERAL NOTES SEE DRAWING M-12BM01.
2. A BLIND FLANGE IS PROVIDED TO SUPPORT SYSTEM HYDROTEST & FLUSH.
3. FOR EROSION/CORROSION CONCERNS, CARBON STEEL PIPING ON THIS P&ID MAY HAVE SECTIONS OF 2 1/4 CR-1 MOLY LOW-ALLOY STEEL AND/OR STAINLESS STEEL PIPING. FOR DETAILS, SEE ISOMETRICS.

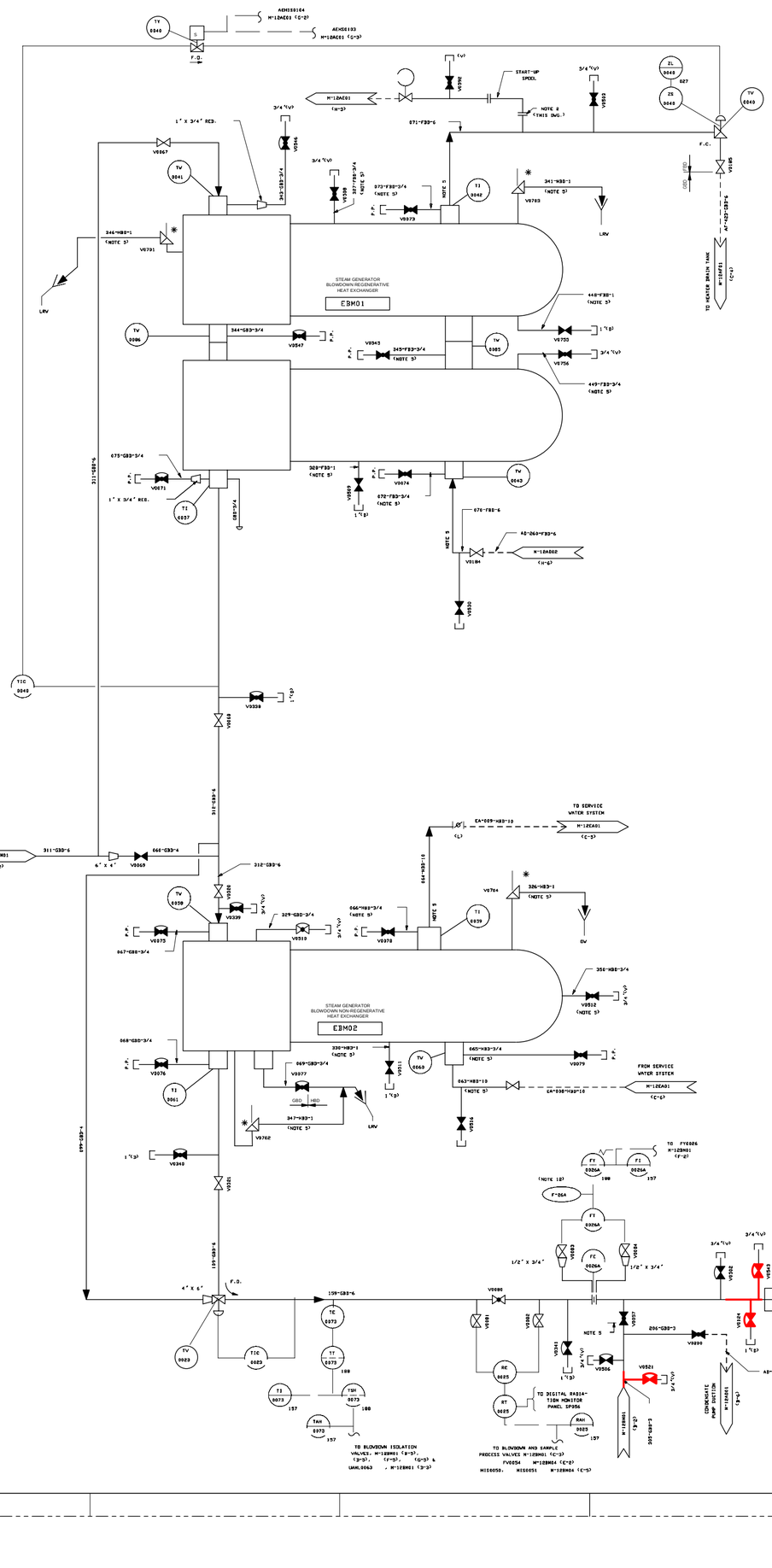

USAR FIG. 10.4-8-2

ESSENTIAL DRAWING

(X) REVISED	INCORPORATED	CHANGE	
( ) ISSUED	CHG. DOC.	PKG. NO.	
THIS DWG. SUPERSEDES #",	REV.	THIS DWG. SUPERSEDES #-12BM08	REV. #"

REVISION NOTES: ELECTRONICALLY CONVERTED PER PIR 99-3192

WOLF CREEK NUCLEAR OPERATING CORPORATION

ELECTRONIC APPROVAL

PIPING AND INSTRUMENTATION DIAGRAM
STEAM GENERATOR BLOWDOWN SYSTEM

SCALE	DRAWING NUMBER	SHEET	REV
NONE	LR-WCGS-BM-M-12BM02		08

3A144 E SIZE

NOTES

1. FOR GENERAL NOTES SEE DRAWING M-12BM01.
2. FOR EROSION/CORROSION CONCERNS, CARBON STEEL PIPING ON THIS P & ID MAY HAVE SECTIONS OF 2 1/4 CR-1 MOLY LOW ALLOY STEEL AND/OR STAINLESS STEEL PIPING. FOR DETAILS, SEE ISOMETRICS.

FBM02A

FBM02B

FBM02C

FBM02D

STEAM GENERATOR BLOWDOWN MIXED BED DEMINERALIZERS

USAR FIG. 10.4-8-3

ESSENTIAL DRAWING

A REVISED — INCORPORATED CHG. DOC. PIR 1999-3503 — CHANGE PKG. NO.

O ISSUED

THIS DWG SUPERSEDED BY, REV. — THIS DWG. SUPERSEDES M-12BM03 REV. 01

REVISION NOTES: REV.PER PIR 1999-3503 AND AP-05-010

WOLF CREEK NUCLEAR OPERATING CORPORATION

ELECTRONIC APPROVAL

PIPING AND INSTRUMENTATION DIAGRAM STEAM GENERATOR BLOWDOWN SYSTEM

SCALE	DRAWING NUMBER	SHEET	REV
NONE	LR-WCGS-BM-M-12BM03		03

34X44 E SIZE

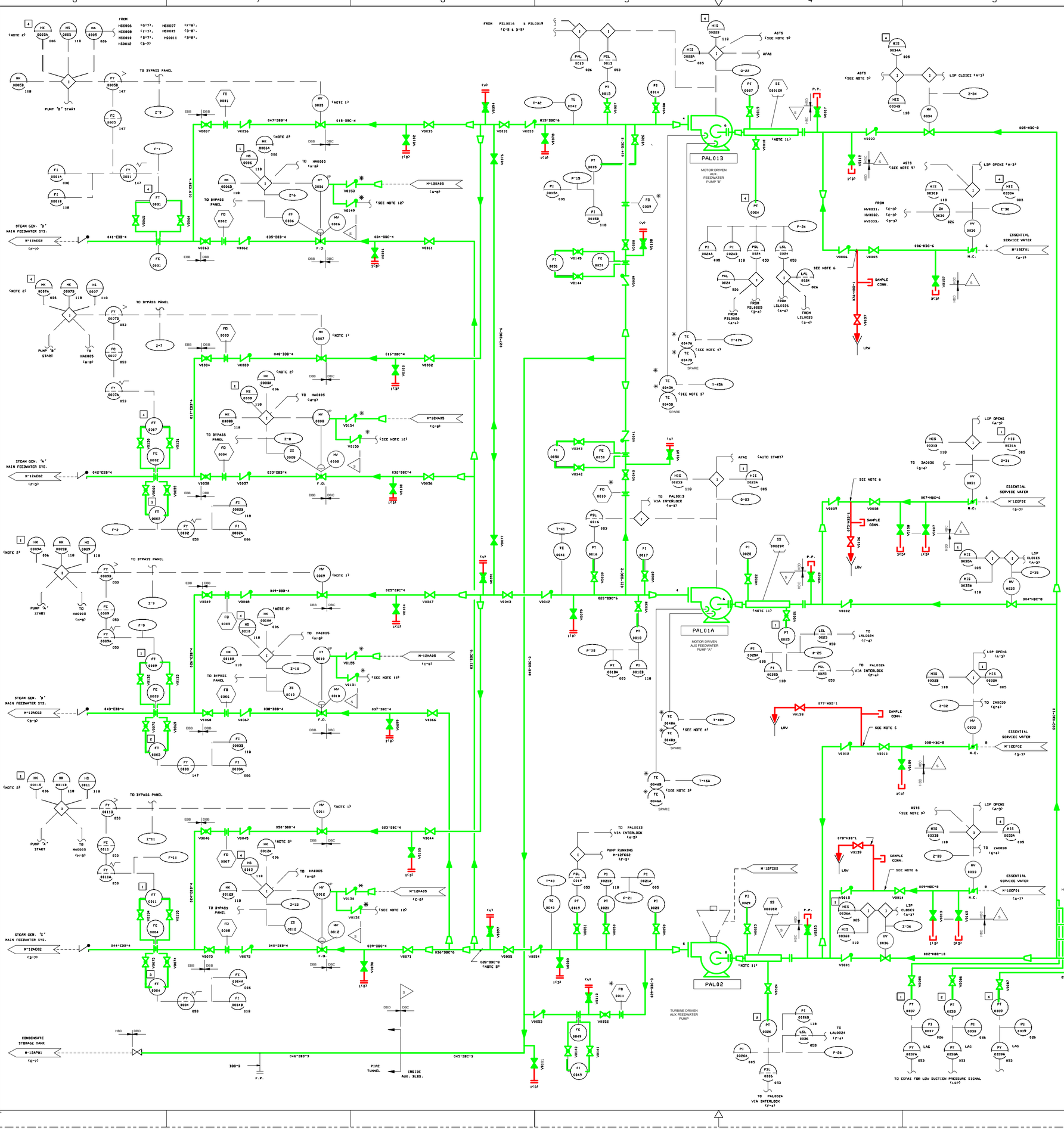

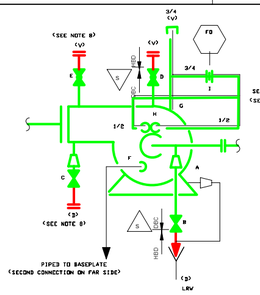

PUMP CONNECTION DETAIL-MOTOR DRIVEN PUMP

CONN.	CONN. SIZE	PUMP	VALVE#	LINE NUMBER	ORIFICE*	PURPOSE
A	1 1/4 IN.	A	-	052-HBD*1	-	BASEPLATE DRAIN
		B	-	053-HBD*1	-	BASEPLATE DRAIN
B	3/4 IN.	A	V0115	054-3BC*1	-	DRAIN-SUCTION NOZZLE
		DOWNSTREAM OF VALVE		055-HBD*1	-	DRAIN-SUCTION NOZZLE
		B	V0116	056-3BC*1	-	DRAIN-SUCTION NOZZLE
		DOWNSTREAM OF VALVE		057-HBD*1	-	DRAIN-SUCTION NOZZLE
C	3/4 IN.	A	V0117	058-3BC*1	-	DRAIN-DISCHARGE NOZZLE
		B	V0118	059-3BC*1	-	DRAIN-DISCHARGE NOZZLE
D	3/4 IN.	A	V0119	079-3BC-3/4	-	SUCTION VENT
		B	V0120	080-3BC-3/4	-	SUCTION VENT
E	3/4 IN.	A	V0121	081-3BC-3/4	-	CASING VENT
		B	V0122	082-3BC-3/4	-	CASING VENT
F	3/4 IN.	A	-	060-HBD-3/4	-	DRAIN-BEARING BRACKET
			-	061-HBD-3/4	-	DRAIN-BEARING BRACKET
		B	-	062-HBD-3/4	-	DRAIN-BEARING BRACKET
			-	063-HBD-3/4	-	DRAIN-BEARING BRACKET
G	3/4 IN.	A & B	-	-	-	1ST STG. BLEEDOFF
H	1/2 IN.	A & B	-	-	-	STUFFING BOX INLET (2)
I	3/4X 1/2	A	-	-	FD0812	STUFFING BOX SEAL WTR.
		B	-	-	FD0813	STUFFING BOX SEAL WTR.

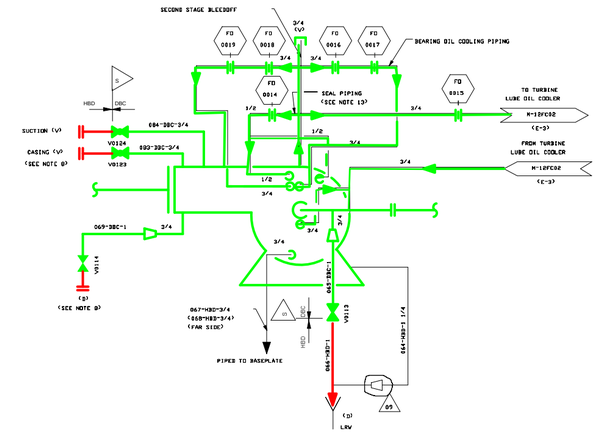

PUMP CONNECTION DETAIL TURBINE DRIVEN PUMP

(SEE NOTE 13)

NOTES:

1. ALHV0005, ALHV0007, ALHV0009, AND ALHV0011 ARE POSITIONABLE.
2. MANUAL CONTROL STATIONS WILL HAVE INTEGRAL POSITION LIGHTS AND REMOTE CONTROL LIGHT.
3. INBOARD MOTOR BEARING TEMPERATURE (COPPER-CONSTANTAN THERMOCOUPLE)
4. OUTBOARD MOTOR BEARING TEMPERATURE (COPPER-CONSTANTAN THERMOCOUPLE).
5. FOR LINE NO. 028-3BC-8, PIPING WILL BE NORMALIZED AFTER FABRICATION.
6. DRILLED 3/16 DIAMETER RESTRICTION TO MINIMIZE FLOW DURING ESV SYSTEM OPERATION.POINT AT WHICH QUALITY GROUP & SEISMIC CLASSIFICATION IS CHANGED FROM "C" & SEISMIC TO "D" & NON-SEISMIC.
7. DELETED.
8. THE FOLLOWING CODE/ANCH CODE BOUNDARIES APPLY TO ALL CARBON STEEL VENTS, DRAINS AND FLOW TAPS ON THE DISCHARGE PIPING OF PUMPS PAL01A, PAL01B AND PAL02.

9. ASTS (AUXILIARY SHUTDOWN TRANSFER SIGNAL) IS INITIATED AT RP1188 BY RP-HIS*8 WHICH TRANSFERS CONTROL TO THE AUXILIARY SHUTDOWN PANEL WHILE ISOLATING THE MAIN CONTROL BOARD CONTROLS AND INDICATION.
10. THE TURBINE DRIVEN AUXILIARY FEEDWATER PUMP IS SUPPLIED ASME SECTION III, CLASS 3. THE COOLING WATER PIPING ASSOCIATED WITH THE LUBE OIL COOLER IS ALSO SUPPLIED ASME SECTION III CLASS 3.
11. REMOVABLE SPOOL WITH SPACER RING INSTALLED (REPLACEMENT FOR START-UP STRAINER).
12. SEE J*14KAB1 FOR VALVES ON FIELD ROUTED INSTRUMENT LINES.
13. FOR SEAL WATER PIPING SEE M-021-00002 (MOTOR DRIVEN PUMP) & M-021-00121 (TURBINE DRIVEN PUMP).

USAR FIG. 10.4-9-00

ESSENTIAL DRAWING

◉ REVISED ○ ISSUED	INCORPORATED CHG. DOC.	P2# 00002705	CHANGE PKG. NO.
THIS ENG.SUPERSEDED BY:	REV.	THIS ENG. SUPERSEDES	REV.
REVISION NOTES: REMOVED E OTHER SNUPPS UNIT INFO., PER AP-65-010, TABLE A, TYPE I			

WOLF CREEK NUCLEAR OPERATING CORPORATION — ELECTRONIC APPROVAL

PIPING & INSTRUMENTATION DIAGRAM
AUXILIARY FEEDWATER SYSTEM

SCALE	DRAWING NUMBER	SHEET	REV
NONE	LR-WCGS-AL-M-12AL01		09

34X44 E SIZE

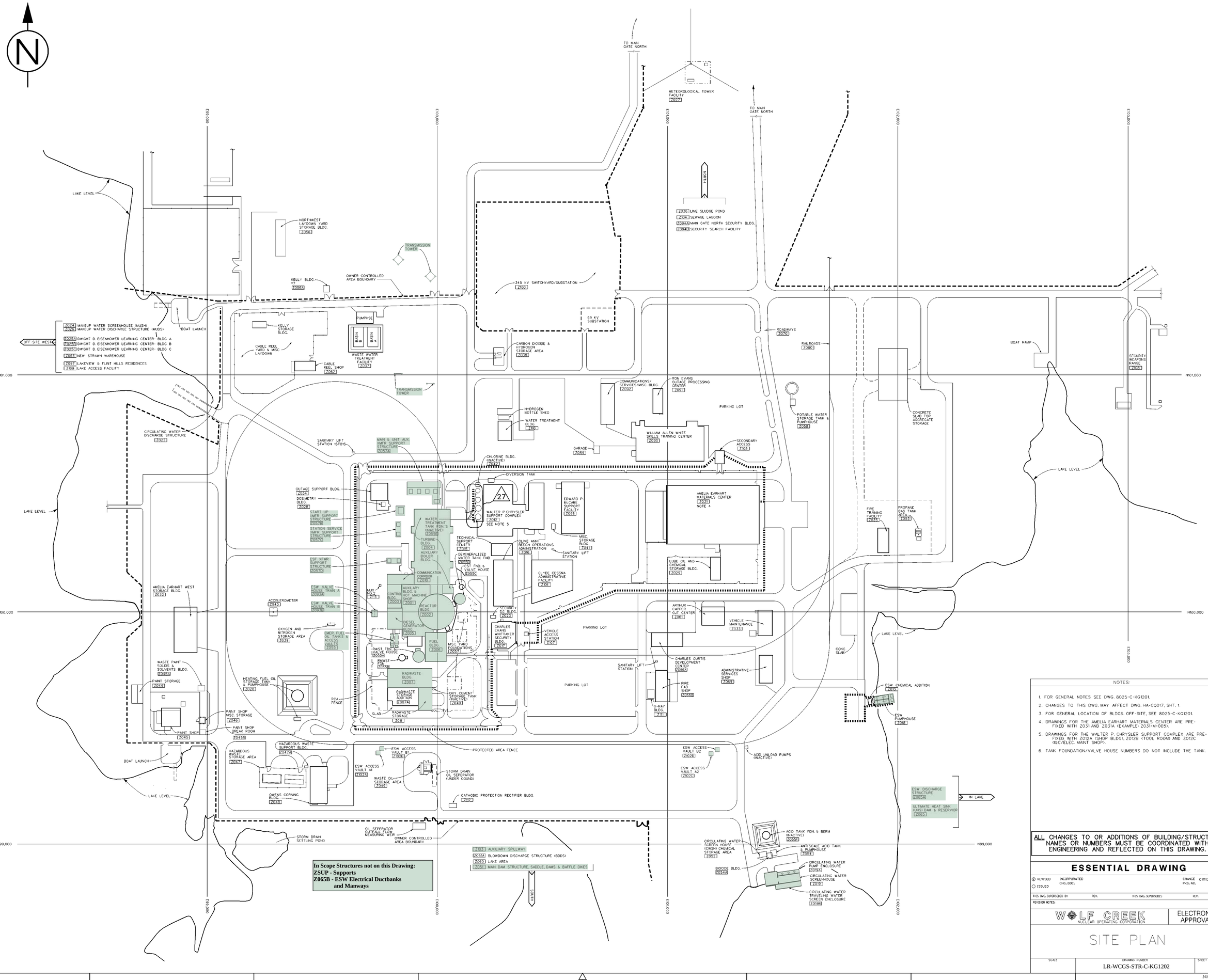

NOTES:

1. FOR GENERAL NOTES SEE DWG. 8025-C-KG1201.
2. CHANGES TO THIS DWG. MAY AFFECT DWG. HA-C0017, SHT. 1.
3. FOR GENERAL LOCATION OF BLDGS. OFF-SITE, SEE 8025-C-KG1201.
4. DRAWINGS FOR THE AMELIA EARHART MATERIALS CENTER ARE PRE-FIXED WITH Z031 AND Z031A (EXAMPLE: Z031-M-005).
5. DRAWINGS FOR THE WALTER P. CHRYSLER SUPPORT COMPLEX ARE PRE-FIXED WITH Z012A (SHOP BLDG), Z012B (TOOL ROOM) AND Z012C (I&C/ELEC. MAINT SHOP).
6. TANK FOUNDATION/VALVE HOUSE NUMBERS DO NOT INCLUDE THE TANK.

ALL CHANGES TO OR ADDITIONS OF BUILDING/STRUCTURE NAMES OR NUMBERS MUST BE COORDINATED WITH ENGINEERING AND REFLECTED ON THIS DRAWING.

ESSENTIAL DRAWING

◉ REVISED INCORPORATED CHNGE 011113
○ ISSUED CHG. DOC.: PKG. NO.:

THIS DWG. SUPERSEDED BY REV. THIS DWG. SUPERSEDES REV.

REVISION NOTES:

WOLF CREEK NUCLEAR OPERATING CORPORATION

ELECTRONIC APPROVAL

SITE PLAN

SCALE	DRAWING NUMBER	SHEET	REV.
	LR-WCGS-STR-C-KG1202		27

34X44 E SIZE

Released by Document Services Release Date: 01/05/06

LEGEND

CSP	CONTAINMENT SPRAY PUMP.
RCP	REACTOR COOLANT PUMP
RHRP	RESIDUAL HEAT REMOVAL PUMP
SIP	SAFETY INJECTION PUMP
CCP	CENTRIFUGAL CHARGING PUMP
CCWP	COMPONENT COOLING WATER PUMP
AFWP	AUXILIARY FEEDWATER PUMP
ESWP	ESSENTIAL SERVICE WATER PUMP
HTDP	HEATER DRAIN PUMP
CDP	CONDENSATE PUMP
CCHC	CENTRAL CHILLER COMPRESSOR
MUP	MAKEUP WATER PUMP
SWP	SERVICE WATER PUMP
FP	FIRE PUMP
CWP	CIRCULATING WATER PUMP
ESF	ENGINEERED SAFETY FEATURES
DG	DIESEL GENERATOR
CLASS 1E SYSTEM	NUCLEAR SAFETY RELATED ELECTRICAL SYSTEMS
△Q	QUALITY ASSURANCE EQUIPMENT
	BLDG. EXTERIOR WALL
	POWER BLOCK COMPLEX INTERIOR WALL
FWP	FEED WATER PUMP

NOTES:

1. THIS DRAWING IS FOR PLANNING PURPOSES ONLY. SEE SYSTEM OPERATION ONE - LINE DIAGRAM AND ELECTRICAL DRAWINGS FOR SWITCHING INFORMATION AND DETAILS.
2. S, P & N DEVICE PREFIX'S ARE NOT SHOWN AND ARE DETERMINED AS FOLLOWS:
   (A)(B).S, P & N DEVICE NUMBERS
   BLANK - 480V & BELOW
   (A) 1 - 4160V
   3 - 25kV
   2 - 13.8kV
   4 - GREATER THAN 25KV
   (B) 52 - CIRCUIT BREAKERS
   89 - DISCONNECT SWITCH, FUSED & UNFUSED
3. BUSES, TRANSFORMERS AND GENERATORS HAVE NO PREFIX.
4. THIS DWG. IS NOT PHYSICALLY ORIENTED
5. EQUIPMENT NUMBER IN PARENTHESIS ( ) S THE S & L I.D. NUMBER (ALSO THE CSARS I.D. NUMBER)
6. REFER TO DWG. E-1021 FOR CONTINUATION.

BENTON 345KV
LA CYGNE 345KV
ROSE HILL 345KV
PHILLIPS 69KV
BURLINGTON 69KV
ATHENS 69KV
EAST CONST. CKT.
TO PS SYSTEM WEST CONST. CKT./WNT. NOTE 6
SUBSTATION FENCE
WOLF CREEK SUBSTATION
NO. 1 SWITCHGEAR
NO. 7 XFMR 60/80/100 MVA 345-13.8-13.8
NO. 6 XFMR. 60/80/100MVA 345-69KV
NO. 5 XFMR. 67-13.8KV 10/14MVA
NO. 4 XFMR. 67-13.8KV 10/14MVA
STA. PWR. 208/120V
ATS13
ATS14
NORMAL
STDBY
PREFERRED STA. PWR. XFMR. XSL7A 13800-208/120V 300KVA
STANDBY D.G. 150KW
STANDBY STA PWR XFMR. XSL2F 13800-208/120V 300KVA
NO. 1 MAIN XFMR. XMA01A, XMA01B, XMA01C (3-1Ø) 345-23.75KV 3-448.2MVA FOA 65°C
NO. 1 START - UP XFMR. XMR01 345-13.8KV 60/80/100MVA
MAIN GEN. NO. 1 MA001 0.9 PF 1,374,755 KVA 25KV
GRD XFMR MA003
DISCONNECT LINK
NO. 1 UNIT AUX. XFMR. XMA02 25-13.8KV 75/100MVA
TERMINAL CABINET
SUBMARINE CABLE (UNDER LAKE)
STATION SERVICE XFMR. XFB03 13.8-4.16KV 12/16MVA
STATION SERVICE XFMR. XFB04 13.8-4.16KV 12/16MVA
ESF NO. 1 XFMR. XNB01 13.8-4.16KV 12/16MVA
ESF NO. 2 XFMR. XNB02 13.8-4.16KV 12/16MVA
CLASS 1E SYSTEM
TECHNICAL SUPPORT CENTER
AUXILIARY WAREHOUSE
GUARDHOUSE
SHOP BUILDING
ADMINISTRATION BUILDING
ESSENTIAL SERVICE PUMPHOUSE
CIRCULATING WATER SCREENHOUSE
WATER TREATMENT BLDG NORTH Z110
FROM 13.8KV CONSTRUCTION POWER DISTRIBUTION ONE LINE REF. DWG. 8025-E-1021
CONTROL BUILDING
MAKEUP WATER SCREENHOUSE
MAKEUP WATER DISCHARGE STRUCTURE
TURBINE BUILDING
RADWASTE BUILDING
AUXILIARY BUILDING
FUEL HANDLING BUILDING

USAR FIG. 8.2-4-00

ESSENTIAL DRAWING

REVISED / ISSUED — INCORPORATED CHG. DOC. WP-KD-7496-025-A-1, R/01 — CHANGE PKG. NO. 09954

THIS ENG. SUPERSEDES BY — REV. — THIS ENG. SUPERSEDES — REV.

REVISION NOTES: PARTIAL INCORPORATION OF WP. ADDED COMPONENT NO.'S

WOLF CREEK NUCLEAR OPERATING CORPORATION | ELECTRONIC APPROVAL

ONE LINE DIAGRAM

SCALE	DRAWING NUMBER	SHEET	REV
NONE	LR-WCGS-ELEC-KD-7496		26

34144 E 92

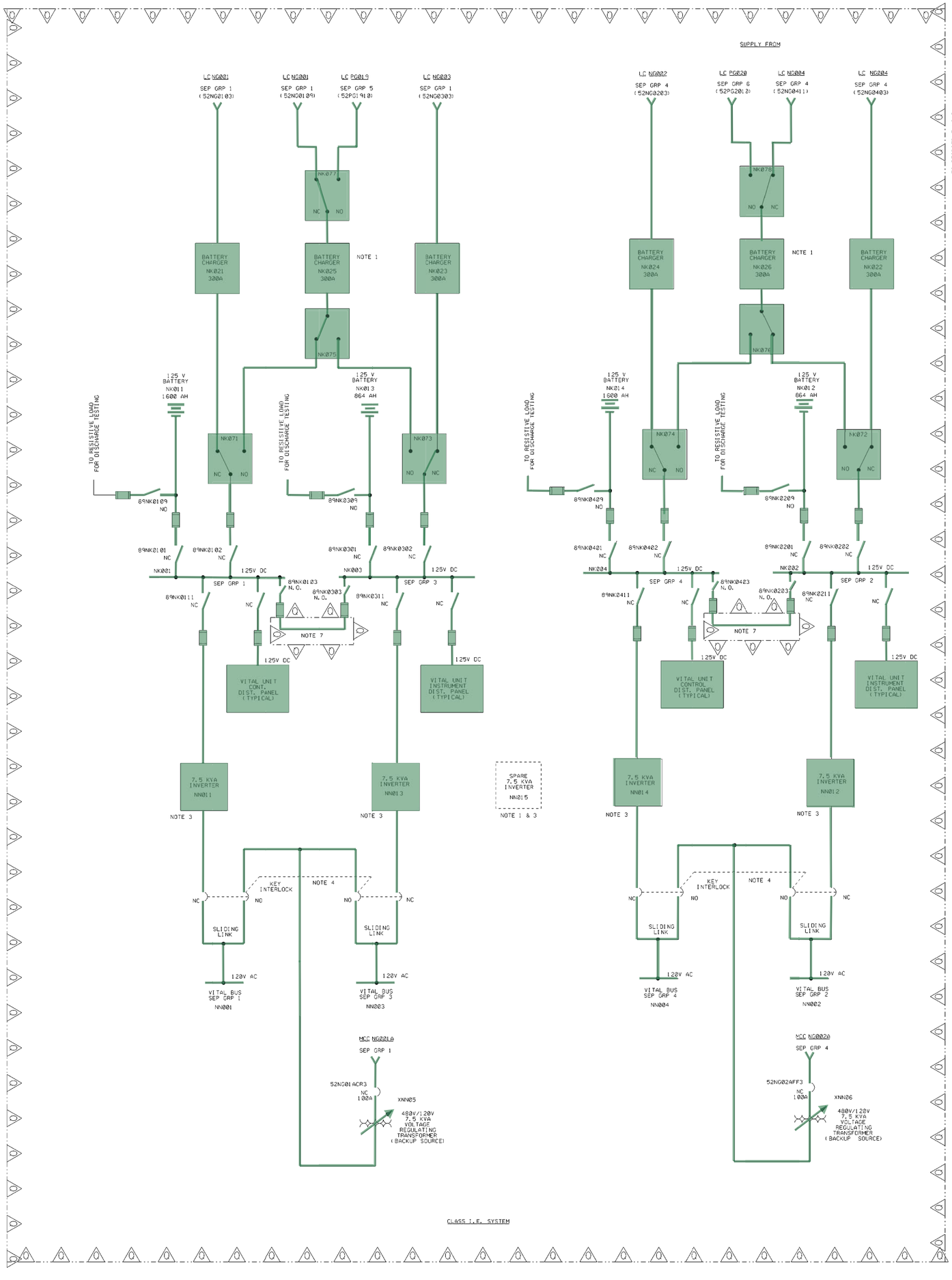

NOTES

1. THE SPARE BATTERY CHARGER AND INVERTER WILL HAVE A CAPACITY EQUAL TO THE LARGEST CHARGER OR INVERTER IT MUST REPLACE. THE SPARE INVERTER IS PHYSICALLY LOCATED CENTRAL TO THE CLASS I.E. DC SYSTEM. HOWEVER, IT IS NOT ELECTRICALLY CONNECTED TO THE LOAD. IN THE EVENT OF AN INVERTER FAILURE, THE SPARE WILL PHYSICALLY REPLACE THE DEFECTIVE UNIT.

   SPARE CHARGERS NK25 & NK26 RECEIVE POWER ONLY FROM CLASS I.E. BUSES DURING PLANT OPERATION. IN THE EVENT OF A PRIMARY CHARGER FAILURE, THE APPLICABLE SPARE CHARGER IS CONNECTED INTO SERVICE VIA TRANSFER SWITCHES.
2. ALL VOLTAGE RATINGS ARE NOMINAL.
3. CLASS I.E. INVERTERS BY WESTINGHOUSE NSSS.
4. BACKUP SOURCE BREAKERS ARE KEY INTERLOCKED SUCH THAT ONLY ONE BREAKER FED FROM THE SAME SEPARATION GROUP CAN BE CLOSED AT ANY ONE TIME. THE KEY CAN BE REMOVED ONLY WHEN THE BREAKER IS TRIPPED. A SLIDING LINK BETWEEN PANEL FEEDER BREAKERS PREVENTS BOTH BREAKERS FROM BEING CLOSED AT ANY ONE TIME.
5. DELETED
6. FOR BUS PK03 AND PK24 SEE DWG. E-11010A.
7. MAINTENANCE BUS TIE TO BE MAINTAINED WITH BREAKERS NORMALLY OPEN AND FUSES REMOVED. BUS TIE TO BE USED ONLY DURING MAINTENANCE OPERATIONS.

USAR FIG. 8.3-6-01

ESSENTIAL DRAWING

ⓧ REVISED ○ ISSUED	INCORPORATED CHG DOC		CHANGE PKG NO.
THIS DWG SUPERSEDED BY	REV.	THIS DWG SUPERSEDES E-11010	REV 06
REVISION NOTES: ELECTRONICALLY CONVERTED PER AP 05-010			

WOLF CREEK NUCLEAR OPERATING CORPORATION — ELECTRONIC APPROVAL

DC MAIN SINGLE LINE DIAGRAM

SCALE	DRAWING NUMBER	SHEET	REV
NONE	LR-WCGS-ELEC-E-11010		07

34X44 E SIZE

THIS DRAWING AND THE DESIGN IT COVERS IS THE PROPERTY OF THE UTILITIES WHICH ARE PARTICIPATING IN THE SNUPPS PROJECT IT IS LOANED ON THE BORROWER'S EXPRESS AGREEMENT THAT IT WILL NOT BE REPRODUCED, COPIED, LOANED, EXHIBITED, OR USED EXCEPT IN THE LIMITED WAY AND PRIVATE USE PERMITTED BY WRITTEN CONSENT GIVEN BY THE SNUPPS UTILITIES TO THE BORROWER.

Released by Document Services Release Date: 11/06/02