Westinghouse

Westinghouse Electric Company
Nuclear Power Plants
P.O. Box 355
Pittsburgh, Pennsylvania 15230-0355
USA

U.S. Nuclear Regulatory Commission
ATTENTION: Document Control Desk
Washington, D.C. 20555

Direct tel: 412-374-6306
Direct fax: 412-374-5456
e-mail: sterdia@westinghouse.com

Your ref: Project Number 740
Our ref: DCP/NRC1782

September 22, 2006

Subject: AP1000 COL Standard Technical Report Submittal

In support of Combined License application pre-application activities, Westinghouse is submitting Revision 0 of AP1000 Standard Combined License Technical Report Number 23. This report completes and documents, on a generic basis, activities required for COL Information Item 5.3-3 in the AP1000 Design Control Document. Changes to the Design Control Document identified in Technical Report Number 23 are intended to be incorporated into FSARs referencing the AP1000 design certification or incorporated into the design certification using supplemental rulemaking if Part 52 is revised to permit revision of the design certification. This report is submitted as part of the NuStart Bellefonte COL Project (NRC Project Number 740). The information included in this report is generic and is expected to apply to all COL applications referencing the AP1000 Design Certification.

The purpose for submittal of this report was explained in a March 8, 2006 letter from NuStart to the U.S. Nuclear Regulatory Commission.

Pursuant to 10 CFR 50.30(b), APP-GW-GLR-023, Revision 0, "Surveillance Capsule Lead Factor and Azimuthal Location Confirmation," Technical Report Number 23, is submitted as Enclosure 1 under the attached Oath of Affirmation.

It is expected that when the NRC review of Technical Report Number 23 is complete, COL Information Item 5.3-3 will be considered complete for COL applicants referencing the AP1000 Design Certification.

Figure 6 of Technical Report 23 provides an updated DCD Figure 3.9-8. This figure includes pictorial representations of updates to the reactor internals design that will be discussed in a separate technical report.

Questions or requests for additional information related to the content and preparation of this report should be directed to Westinghouse. Please send copies of such questions or requests to the prospective applicants for combined licenses referencing the AP1000 Design Certification. A representative for each applicant is included on the cc: list of this letter.

Very truly yours,

Monte D Bartley FOR

A. Sterdis, Manager
Licensing and Customer Interface
Regulatory Affairs and Standardization

/Attachment

1. "Oath of Affirmation," dated September 22, 2006

/Enclosure

1. APP-GW-GLR-023, Revision 0, "Surveillance Capsule Lead Factor and Azimuthal Location Confirmation," Technical Report Number 23, dated September 2006.

cc:	S. Bloom	-	U.S. NRC	1E	1A
	S. Coffin	-	U.S. NRC	1E	1A
	G. Curtis	-	TVA	1E	1A
	P. Grendys	-	Westinghouse	1E	1A
	P. Hastings	-	Duke Power	1E	1A
	C. Ionescu	-	Progress Energy	1E	1A
	D. Lindgren	-	Westinghouse	1E	1A
	A. Monroe	-	SCANA	1E	1A
	M. Moran	-	Florida Power & Light	1E	1A
	C. Pierce	-	Southern Company	1E	1A
	E. Schmiech	-	Westinghouse	1E	1A
	G. Zinke	-	NuStart/Entergy	1E	1A

ATTACHMENT 1

"Oath of Affirmation"

ATTACHMENT 1

UNITED STATES OF AMERICA

NUCLEAR REGULATORY COMMISSION

In the Matter of:	)
NuStart Bellefonte COL Project	)
NRC Project Number 740	)

APPLICATION FOR REVIEW OF
"AP1000 GENERAL COMBINED LICENSE INFORMATION"
FOR COL APPLICATION PRE-APPLICATION REVIEW

W. E. Cummins, being duly sworn, states that he is Vice President, Regulatory Affairs & Standardization, for Westinghouse Electric Company; that he is authorized on the part of said company to sign and file with the Nuclear Regulatory Commission this document; that all statements made and matters set forth therein are true and correct to the best of his knowledge, information and belief.

W E Cummins

W. E. Cummins
Vice President
Regulatory Affairs & Standardization

Subscribed and sworn to
before me this 22nd day
of September 2006.

COMMONWEALTH OF PENNSYLVANIA
Notarial Seal
Debra McCarthy, Notary Public
Monroeville Boro, Allegheny County
My Commission Expires Aug. 31, 2009
Member, Pennsylvania Association of Notaries

Notary Public

ENCLOSURE 1

APP-GW-GLR-023, Revision 0

Surveillance Capsule Lead Factor and Azimuthal Location Confirmation

Technical Report Number 23

AP1000 DOCUMENT COVER SHEET

TDC: _____ Permanent File: _____ APY _____

RFS#: _____ RFS ITEM #: _____

AP1000 DOCUMENT NO.	REVISION NO.		ASSIGNED TO
APP-GW-GLR-023	0	Page 1 of 15	W-Sterdis

ALTERNATE DOCUMENT NUMBER: WORK BREAKDOWN #:

ORIGINATING ORGANIZATION:

TITLE: **Surveillance Capsule Lead Factor and Azimuthal Location Confirmation**

ATTACHMENTS:	DCP #/REV. INCORPORATED IN THIS DOCUMENT REVISION:
CALCULATION/ANALYSIS REFERENCE:	

ELECTRONIC FILENAME	ELECTRONIC FILE FORMAT	ELECTRONIC FILE DESCRIPTION
APP-GW-GLR-023 R0.doc	MS Word	

(C) WESTINGHOUSE ELECTRIC COMPANY LLC - 2006

☐ WESTINGHOUSE PROPRIETARY CLASS 2

This document is the property of and contains Proprietary Information owned by Westinghouse Electric Company LLC and/or its subcontractors and suppliers. It is transmitted to you in confidence and trust, and you agree to treat this document in strict accordance with the terms and conditions of the agreement under which it was provided to you.

☒ WESTINGHOUSE CLASS 3 (NON PROPRIETARY)

ORIGINATOR E. Botta	SIGNATURE/DATE E Botta	09/21/2006
REVIEWERS	SIGNATURE/DATE	
VERIFIER D. Wiseman	SIGNATURE/DATE D.A. Wiseman 9/21/06	VERIFICATION METHOD PAGE BY PAGE REVIEW
AP1000 RESPONSIBLE MANAGER K. Quinn	SIGNATURE* D.A. Wiseman for K. Quinn	APPROVAL DATE 9/21/06

* Approval of the responsible manager signifies that document is complete, all required reviews are complete, electronic file is attached and document is released for use.

APP-GW-GLR-023
Revision 0

September 2006

AP1000 Standard Combined License Technical Report

Surveillance Capsule Lead Factor and Azimuthal Location Confirmation

Revision 0

Westinghouse Electric Company LLC
Nuclear Power Plants
Post Office Box 355
Pittsburgh, PA 15230-0355

©2006 Westinghouse Electric Company LLC
All Rights Reserved

INTRODUCTION

The purpose of this report is to provide closure of a Combined Operating License (COL) information item by providing the surveillance capsule lead factors and confirmation of the capsule/holder azimuthal locations resulting from analyses that include modeling of the capsule/holder.

The determination of the surveillance capsule locations has to ensure that the proposed placement of the capsules yields lead factors between 1.0 and 3.0. The irradiation specimen baskets lead factor is defined as the ratio between the fast-neutron fluence at energy E greater than 1.0 million electron volts on the center of specimen location and the maximum fast-neutron fluence on the reactor pressure vessel body inner surface. To obtain lead factors within the specified range, the basket azimuthal locations were modified relative to those shown in Revision 15 of the AP1000 Design Control Document (DCD).

In the AP1000 reactor the irradiation specimen baskets are located on the core barrel outer surface and since only three baskets holders can be located in the low fluence regions, two locations will have a three-basket arrangement and a third location will retain a two-basket arrangement. This design maintains the total of eight baskets.

The surveillance capsule azimuthal locations are identified in Figure 1.

The documentation of the surveillance capsule lead factor and confirmation of the capsule/holder azimuthal locations are identified as COL Information Item 5.3-3 (FSER Action 5.3.2.2-1) in DCD Subsection 5.3.6.3 to be completed by the Combined License applicant.

The COL item from the DCD reads:

> "The Combined License applicant will address confirmation of the surveillance capsule lead factors and azimuthal locations through an analysis which includes modeling of the capsule/holder."

With the completion of the analyses documented in this report and modification to the DCD, the NRC should consider the COL item requiring the surveillance capsule lead factor and basket locations to be closed, and the design change acceptable and applicable to all COL applications referencing the AP1000 design certification.

TECHNICAL BACKGROUND

Appendix H, "Reactor Vessel Material Surveillance Program Requirements," to 10 CFR Part 50 presents the requirements for a material surveillance program for operating reactors. The purpose of the material surveillance program is to monitor changes in the fracture toughness properties of ferritic materials in the reactor vessel beltline region which result from exposure of these materials to neutron irradiation. Material surveillance is accomplished using surveillance capsules which are holders of archival beltline material and fast neutron (E is greater than 1.0 million electron volts) dosimeters. Measurement of the irradiated material samples yields an assessment of the embrittlement, and measurement of the dosimeter activation estimates the irradiation exposure.

RG 1.190, "Calculational and Dosimetry Methods for Determining Pressure Vessel Neutron Fluence," which is based on GDC 14, 30, and 31, describes methods and practices acceptable to the NRC regarding calculation techniques and statistical practices using the dosimetry measurements. In addition, the results of the dosimetry are used to benchmark and validate calculation methods for estimating vessel irradiation.

The lead factor evaluation is performed via an expansion of the results of the calculations of the AP1000 reactor vessel fluence. The specimen basket and capsules have been modeled in order to properly consider

both the impact of the heterogeneity of the core shroud and the perturbation on the neutron flux distribution due to the presence of the basket itself.

All the calculations performed have been based on the use of the DOOR3.2 computer program (TORT) and the BUGLE-96 macroscopic cross section library using the following options:

- 67 energy groups
- P3 Legendre expansion of the scattering cross sections
- S8 angular quadrature

Due to the heterogeneity of the core shroud and to the presence of the neutron pads, an R-Θ -Z model representing 1/8 of the reactor pressure vessel was developed in order to evaluate the fluence on the vessel. Two different geometrical models were developed: one to estimate the lead factor for the three-basket location, and a second one to estimate the lead factor for the two-basket location.

On the basis of above and assuming the reference power distribution is kept constant for the entire 56 EFPY (Equivalent Full Power Year), the lead factor (LF) can be calculated by the following formula:

$$LF = \frac{\Phi\ (r_s, \theta_s, z)}{\Phi_{max}\ (r_{rpv}, \vartheta, z)}$$

where :

- $\Phi(r_s, \theta_s, z)$ is the fast flux (E≥ 1 MeV) at the distance r_s from the core center and azimuthal angle θ_s, where the surveillance capsule center is placed,

- $\Phi_{max}(r_{rpv}, \theta, z)$ is the maximum of the fast flux (E≥ 1 MeV) in front of the active core length on the inner surface of the reactor pressure vessel body at the distance r_{rpv} from the core center,

The LF, as defined above, has been evaluated via an MS-EXCEL worksheet. The reference power distribution used in the fluence calculations is a radial long term power distribution, enveloping the planned AP1000 UO_2 equilibrium core power distribution, combined with an axial peaked power profile (peaking factor equal to 1.2) for the three-dimensional combination of the source distribution.

The following interface data were used in the analyses:

a) the radial location of the pressure vessel body maximum fast neutron flux is at the pressure vessel body inner surface which is at a radius of 79.72 inches (202.49 cm)
b) the surveillance capsule center is located at a radius of 73.31 inches (186.21 cm)
c) the azimuthal locations of the pressure vessel maximum fast flux is 0° about the center of the reactor core flats.

The initial analyses of the surveillance specimen holder locations as shown in Figure 7 (DCD Revision 15 Figure 5.3-4) resulted in lead factors greater than four. To obtain lead factors less than three to meet the guidelines of ASTM E 185, it was determined that the specimen holders would have to be located azimuthally near the lowest fluence locations, which are at 45, 135, 225, and 315 degrees. However, at the 45 degree location, there is a roto lock insert for the internals lifting rig which would prevent access for removal of specimens from the baskets. Therefore, the revised specimen holder azimuthal locations are at 135, 225, and 315 degrees as shown in Figure 1. To maintain eight specimen baskets, two locations (135 and 315 degrees) have three baskets and one location (225 degrees) has two baskets. An asymmetric arrangement of specimen basket holders also exists in the Westinghouse 3XL reactor internals design.

The resulting calculated lead factors are between approximately 1.8 and 2.3, as shown in Figure 2.

REGULATORY IMPACT

The material surveillance specimen capsules lead factors and azimuthal locations are discussed in Subsection 5.3.2.2 of the NRC Final Safety Evaluation Report (FSER) for the AP1000. Providing the surveillance capsule lead factors and azimuthal locations resulting from an analysis model which includes the surveillance basket and holder structure is identified in the FSER as COL Action Item 5.3.2.2-1. The analysis results require a change to the azimuthal locations of the material surveillance basket holders, but do not alter the conclusions in the FSER.

EVALUATION OF DEPARTURE FROM TIER 2 INFORMATION

10 CFR Part 52, Appendix D, Section VIII. B.5.a. provides that an applicant for a combined licensee who references the AP1000 design certification may depart from Tier 2 information, without prior NRC approval, if it does not require a license amendment under paragraph B.5.b. The questions below address the criteria of B.5.b.

1. Does the proposed departure result in more than a minimal increase in the frequency of occurrence of an accident previously evaluated in the plant-specific DCD?

   No, the identification of surveillance capsule lead factors and azimuthal locations does not change the frequency of an accident because the surveillance capsule and reactor internals are not an initiator of any accident. The identification of surveillance capsule lead factors and azimuthal locations does not alter the flow through the reactor internals. The identification of surveillance capsule lead factors and azimuthal locations does not introduce a new failure mode in components that would result in an accident previously evaluated.

2. Does the proposed departure result in more than a minimal increase in the likelihood of occurrence of a malfunction of a structure, system, or component (SSC) important to safety and previously evaluated in the plant-specific DCD?

   No, the identification of surveillance capsule lead factors and azimuthal locations does not introduce the possibility of a change in the likelihood of a malfunction because surveillance capsules and reactor internals are not an initiator of any malfunctions. The identification of surveillance capsule lead factors and azimuthal locations will not adversely alter heat transfer or flow rates in equipment relied on to cool or transfer reactor coolant. The identification of surveillance capsule lead factors and azimuthal locations does not introduce a new failure mode in equipment relied upon to prevent or mitigate design basis accidents.

3. Does the proposed departure result in more than a minimal increase in the consequences of an accident previously evaluated in the plant-specific DCD?

   No, the identification of surveillance capsule lead factors and azimuthal locations does not introduce the possibility of a change in the consequences of an accident. The identification of surveillance capsule lead factors and azimuthal locations does not change the response of the reactor coolant system and engineered safeguard systems to postulated accident conditions.

4. Does the proposed departure result in more than a minimal increase in the consequences of a malfunction of an SSC important to safety previously evaluated in the plant-specific DCD?

No, the identification of surveillance capsule lead factors and azimuthal locations does not introduce the possibility of a change in the consequences of a malfunction because the identification of surveillance capsule lead factors and azimuthal locations will not cause pumps, valves, and heat exchangers to malfunction and result in a larger release to the environment. The identification of surveillance capsule lead factors and azimuthal locations has no effect on systems and components used to mitigate the consequences of postulated accidents.

5. Does the proposed departure create a possibility for an accident of a different type than any evaluated previously in the plant-specific DCD?

   No, the identification of surveillance capsule lead factors and azimuthal locations does not introduce the possibility of a new accident because the identification of surveillance capsule lead factors and azimuthal locations does not introduce a new failure mode in systems that provide fission product barriers and mitigate postulated accidents. The identification of surveillance capsule lead factors and azimuthal locations will not change the manner in which the operator controls the plant or responds to transients or accident conditions. The identification of surveillance capsule lead factors and azimuthal locations will not alter the response of the reactor coolant system or engineered safeguards systems to transient conditions.

   The identification of surveillance capsule lead factors and azimuthal locations does not introduce the possibility of a new accident with respect to the fuel because the identification of surveillance capsule lead factors and azimuthal locations does not introduce a new failure mode in the fuel.

6. Does the proposed departure create a possibility for a malfunction of an SSC important to safety with a different result than any evaluated previously in the plant-specific DCD?

   No, the identification of surveillance capsule lead factors and azimuthal locations does not introduce the possibility for a malfunction of an SSC with a different result because identification of surveillance capsule lead factors and azimuthal locations does not change the operation or function of systems and components and does not introduce a new failure mode in systems and components. Clearances and dimensions in the core are not altered by the identification of surveillance capsule lead factors and azimuthal locations.

7. Does the proposed departure result in a design basis limit for a fission product barrier as described in the plant-specific DCD being exceeded or altered?

   No, the identification of surveillance capsule lead factors and azimuthal locations does not result in a change that would cause a system parameter to change. The identification of surveillance capsule lead factors and azimuthal locations will have no effect on the stresses in the reactor internals. The fuel performance design evaluation models are not changed by the identification of surveillance capsule lead factors and azimuthal locations. Therefore, the identification of surveillance capsule lead factors and azimuthal locations does not result in a design basis limit for a fission product barrier as described in the DCD being exceeded or altered.

8. Does the proposed departure result in a departure from a method of evaluation described in the plant-specific DCD used in establishing the design bases or in the safety analyses?

   No, the methods used to evaluate the identification of surveillance capsule lead factors and azimuthal locations do not constitute a departure from a method of evaluation described in the DCD. Detailed evaluations of identification of surveillance capsule lead factors and azimuthal locations are not included in the DCD. The methods used to evaluate surveillance capsule lead factors and azimuthal locations are the same as the overall methodology used to determine fast neutron exposures which is currently outlined in the DCD.

The answers to the evaluation questions above are "NO" and the proposed departure from Tier 2 does not require prior NRC review to be included in plant specific FSARs as provided in 10 CFR Part 52, Appendix D, Section VIII. B.5.b

The identification of the surveillance specimen lead factors and basket azimuthal locations have also been evaluated against severe accident change criteria. The identification of the specimen lead factors and basket azimuthal locations does not result in an impact on features that mitigate severe accidents. The severe accident change criteria are not applicable because mitigation features are not impacted.

The closure of the COL Information Item will not alter barriers or alarms that control access to protected areas of the plant. The closure of the COL Information Item will not alter requirements for security personnel. Therefore, the closure of the COL Information Item does not have an adverse impact on the security assessment of the AP1000.

DCD MARKUP

As a result of the completion of the COL item, the text in DCD Subsection 5.3.6.3 is modified and a reference is added to DCD Subsection 5.3.7. See below for changes to these two subsections.

5.3.6.3 Surveillance Capsule Lead Factor and Azimuthal Location Confirmation

Confirmation of the surveillance capsule lead factors and azimuthal locations through an analysis which includes modeling of the capsule/holder is complete. Results of the analyses are provided in APP-GW-GLR-023 (Reference 7). The combined license information item is complete.

5.3.7 References

7. APP-GW-GLR-023, Surveillance Capsule Lead Factor and Azimuthal Location Confirmation, Westinghouse Electric Company, LLC, September 2006.

The change in the azimuthal locations of the specimen holders results in changes to three figures in the DCD Tier 2. The current DCD figures and the revised figures are included in this report as follows:

- DCD Figure 3.9-5 – The current and revised figures are shown as Figures 3 and 4, respectively
- DCD Figure 3.9-8 – The current and revised figures are shown as Figures 5 and 6, respectively
- DCD Figure 5.3-4 – The current and revised figures are shown as Figures 7 and 8, respectively.

Figure 1: Surveillance Capsule Azimuthal Location

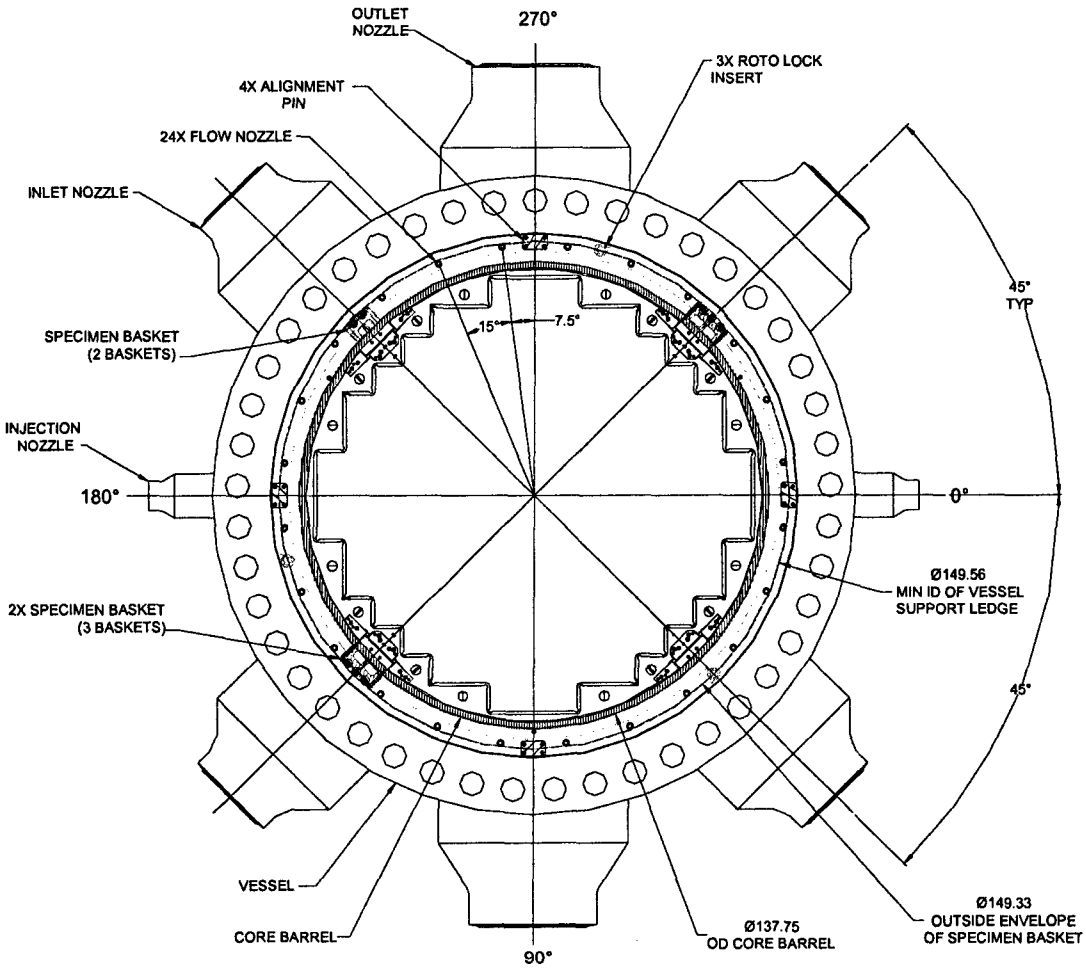

SECTION SHOWING MODIFIED DESIGN
(3 SPECIMEN BASKETS AT 45 DEG FROM 0-180)

Figure 2: Lead Factor Along the Specimen Length

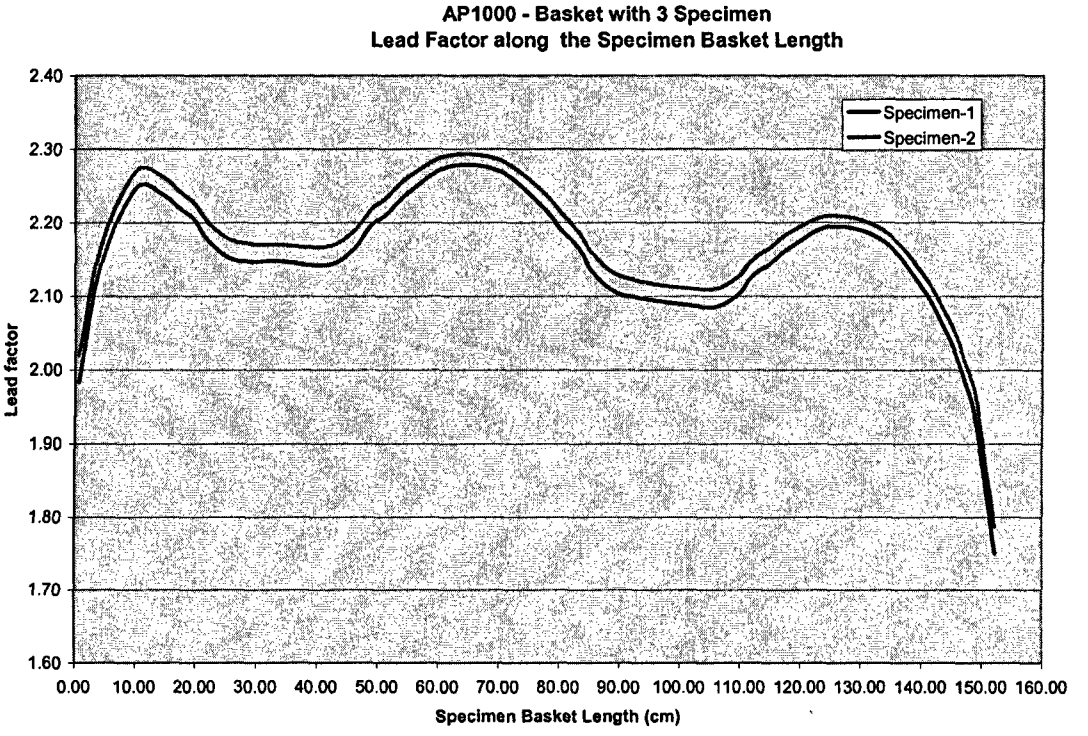

Note: Specimen-1 represents the center basket location; Specimen-2 represents the other two basket locations

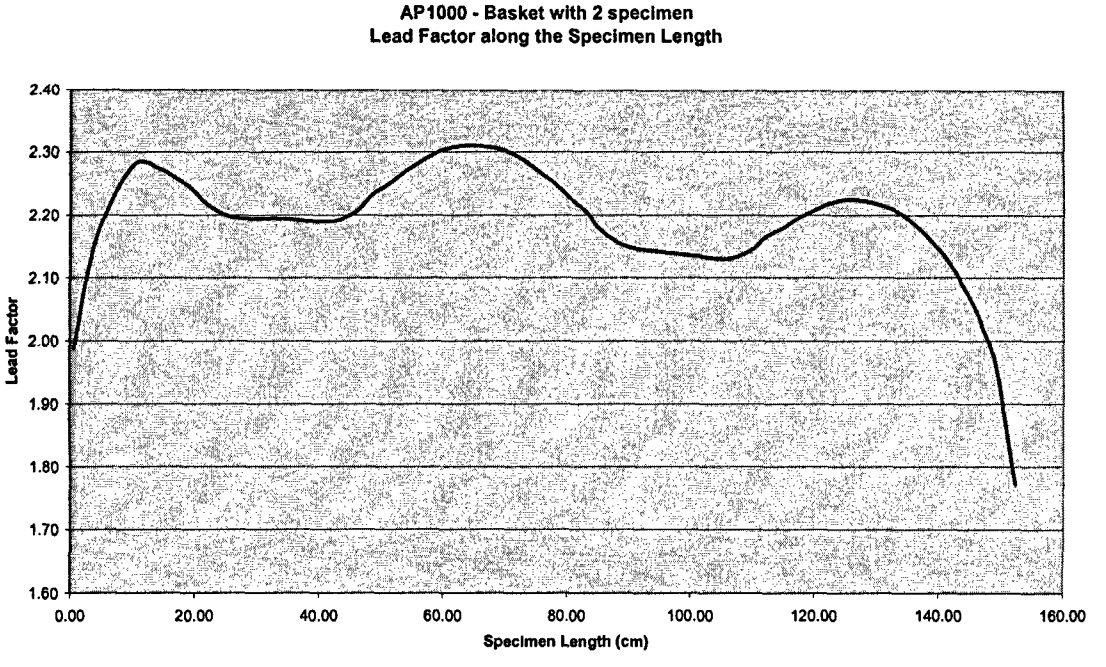

Figure 3: Current DCD Figure 3.9-5

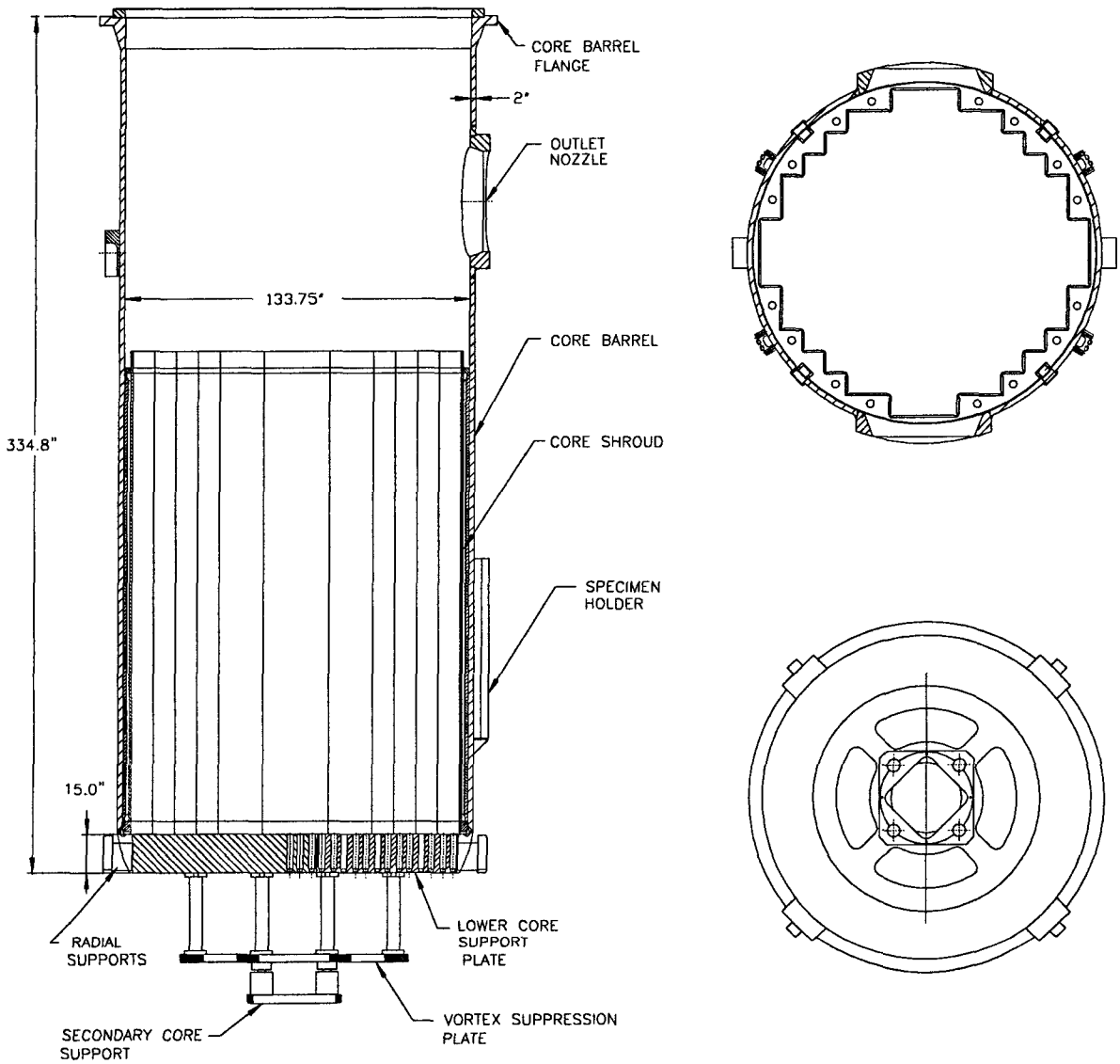

Figure 3.9-5

Lower Reactor Internals

Figure 4: Revised DCD Figure 3.9-5

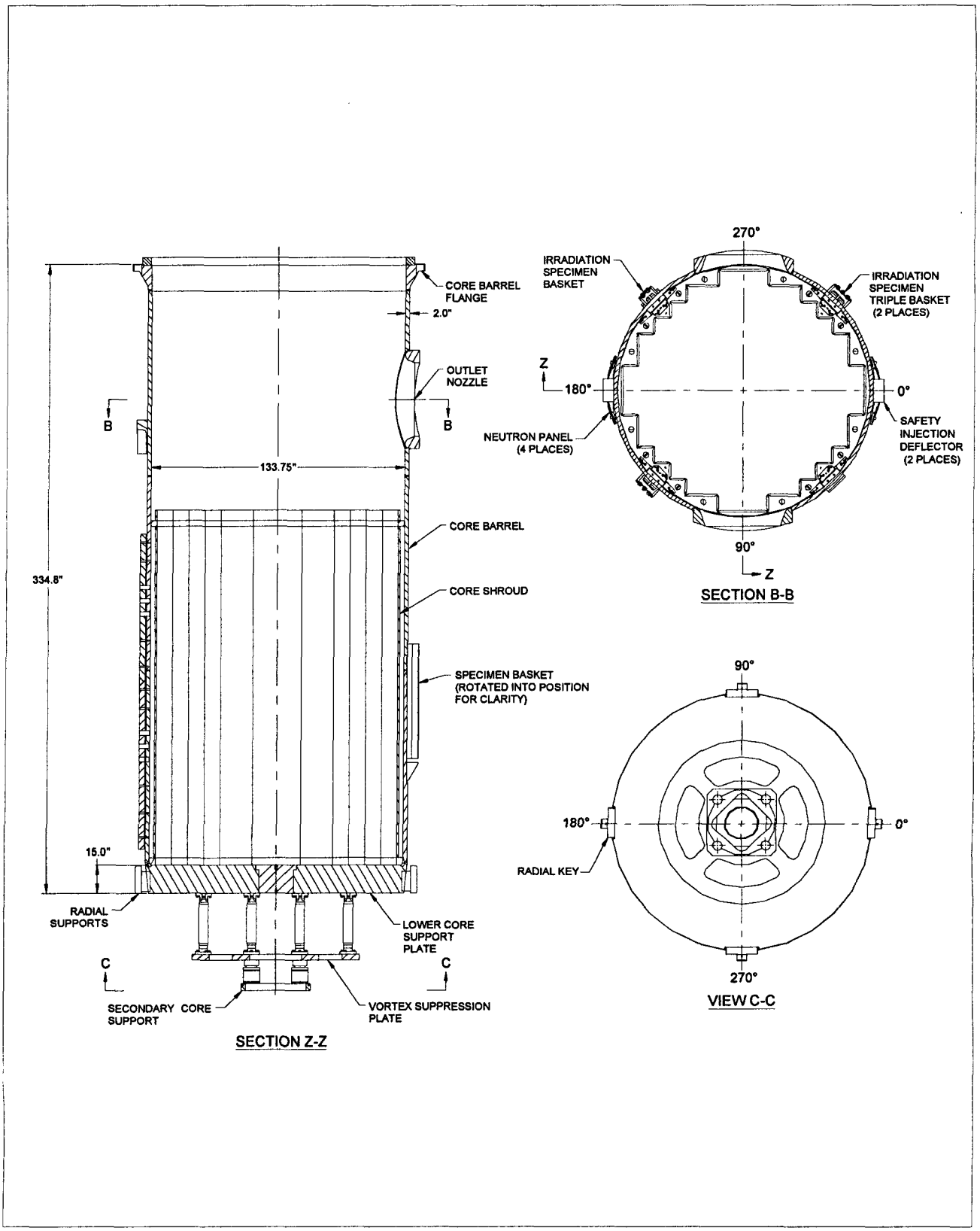

Figure 5: Current DCD Figure 3.9-8

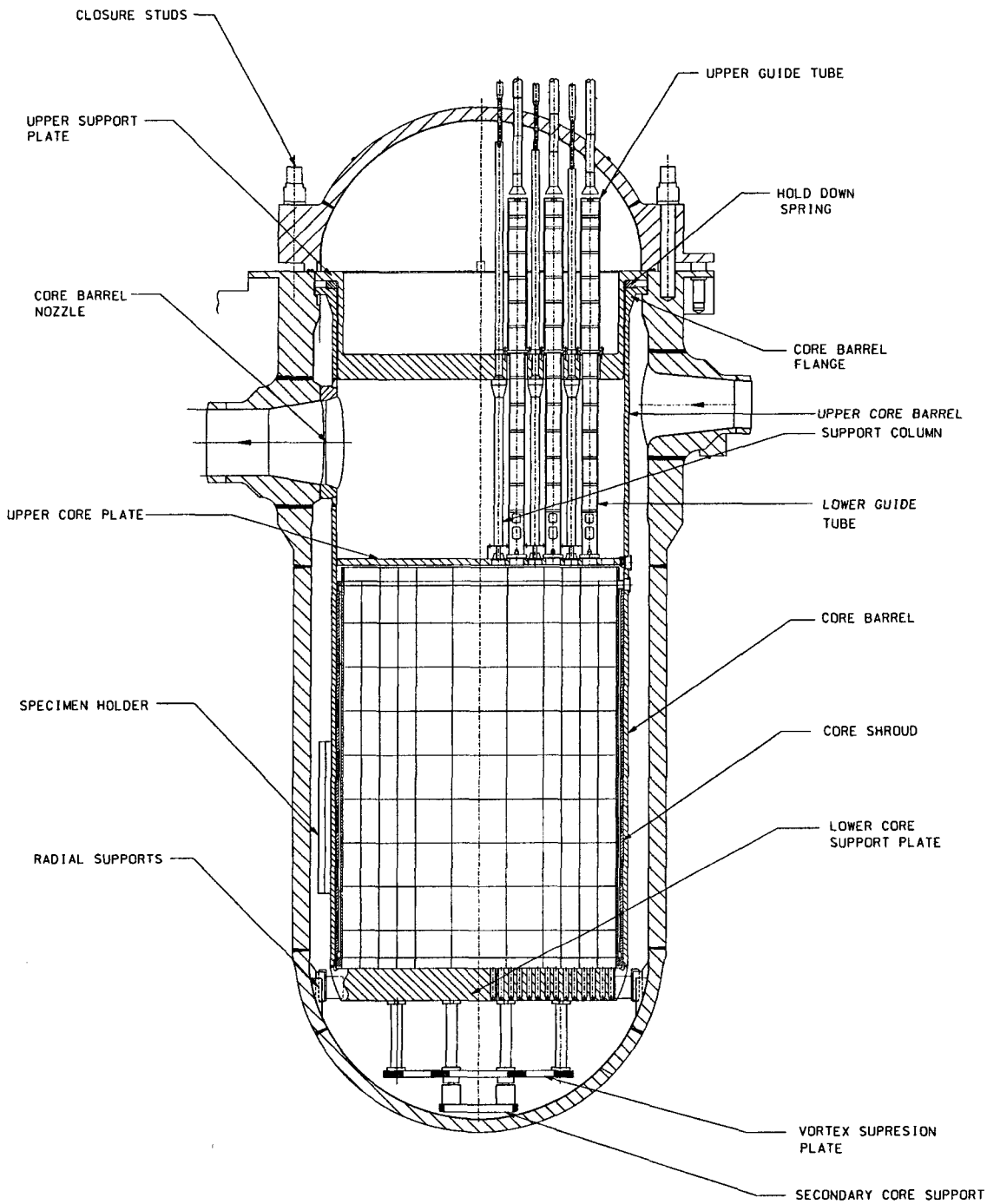

Figure 3.9-8

Reactor Internals Interface Arrangement

Figure 6: Revised DCD Figure 3.9-8

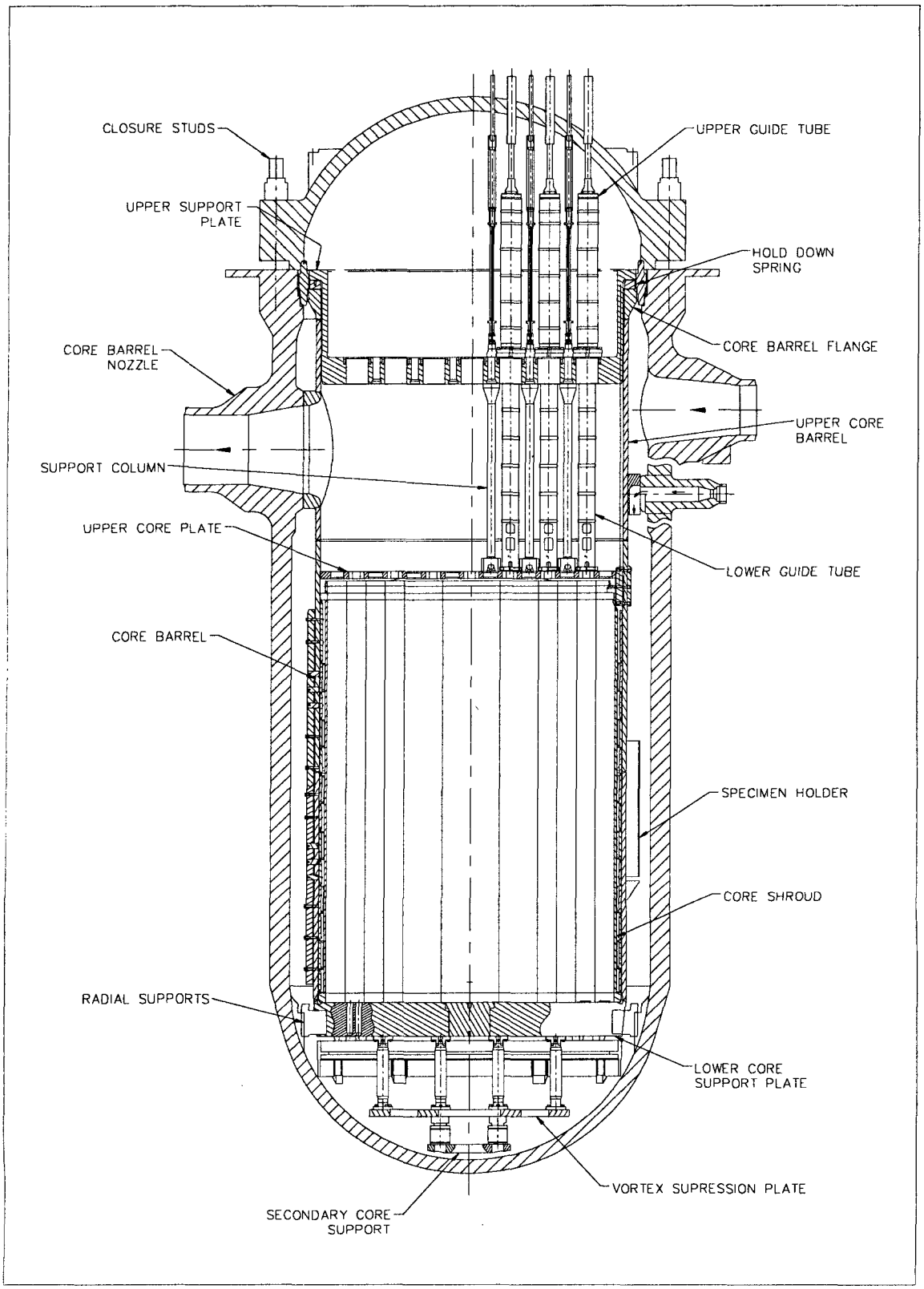

Figure 7: Current DCD Figure 5.3-4

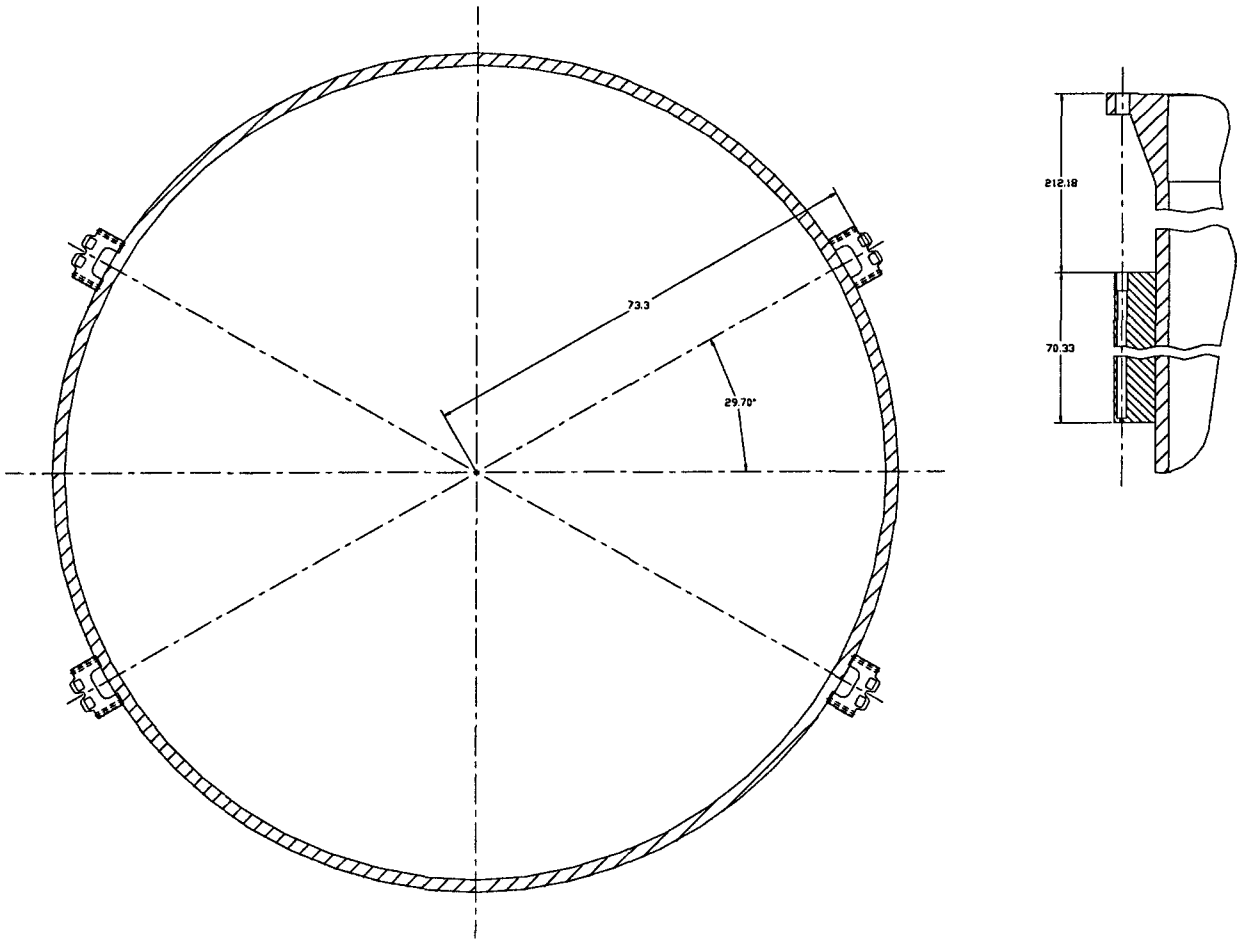

Figure 5.3-4

AP1000 Reactor Vessel Surveillance Capsules Locations
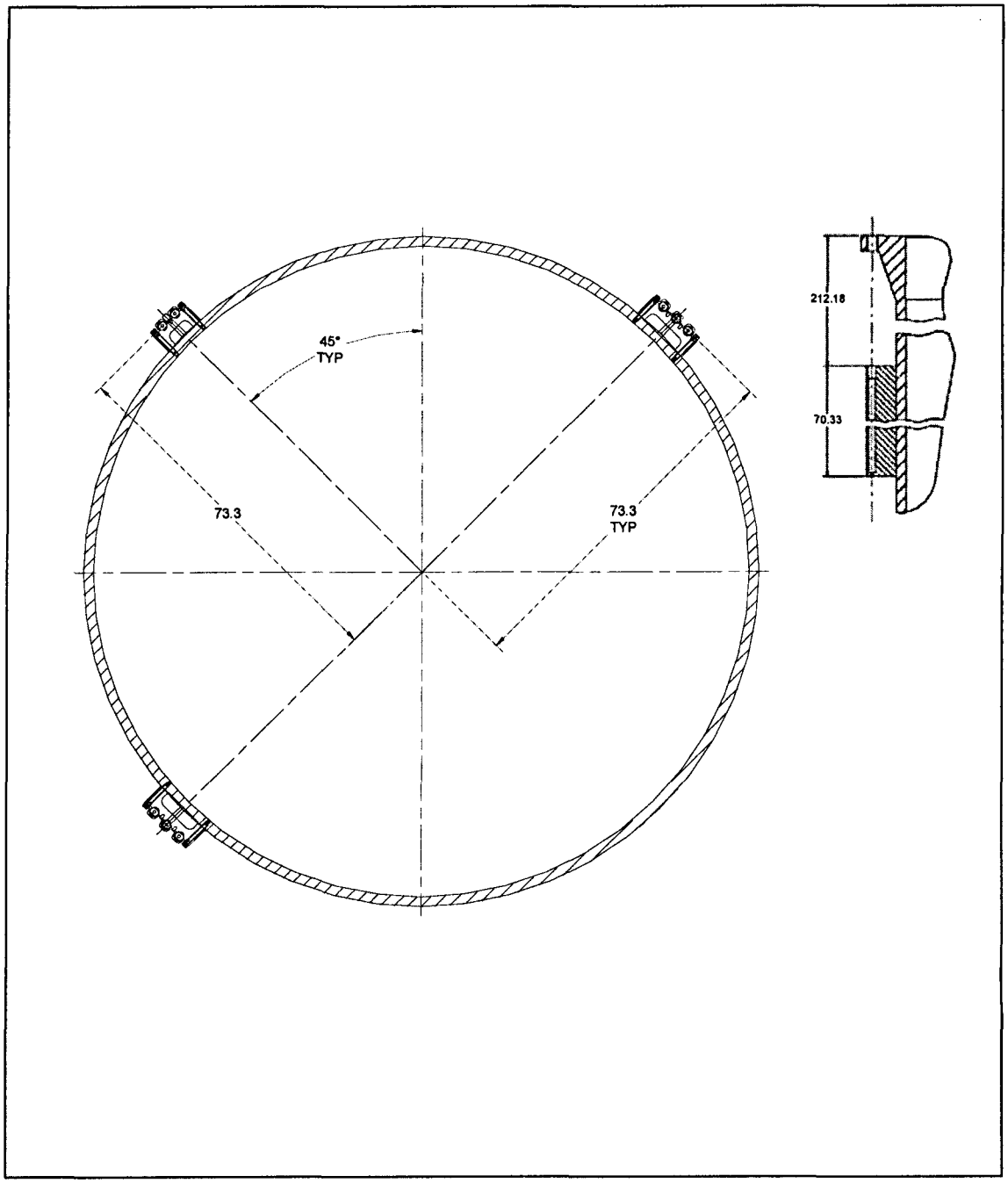
Figure 8: Revised DCD Figure 5.3-4