RAS 12268

VERMONT YANKEE NUCLEAR POWER CORPORATION

P.O. Box 157, Governor Hunt Road
Vernon, Vermont 05354-0157
802-257-5271

DOCKET NUMBER
PROD. & UTIL. FAC. 50-271-OLA

June 6, 1991
VYV # 91-135

DOCKETED
USNRC
2006 SEP 19 PM 3:36
OFFICE OF SECRETARY
RULEMAKINGS AND
ADJUDICATIONS STAFF

U.S. Nuclear Regulatory Commission
Document Control Desk
Washington, D.C. 20555

REFERENCE: Operating License DPR-28
Docket No. 50-271
Reportable Occurrence No. LER 91-09

Dear Sirs:

As defined by 10 CFR 50.73, we are reporting the attached Reportable Occurrence as LER 91-09.

This report was originally scheduled for submittal on 05/23/91. However, a two week extension was granted on 05/22/91 by R. Barkley, Acting Section Chief, Reactor Projects 3A (via T. Hiltz, NRC Resident Engineer at Vermont Yankee).

Very truly yours,

VERMONT YANKEE NUCLEAR POWER CORPORATION

Robert J Wanczyk
for Donald A. Reid
Plant Manager

cc: Regional Administrator
USNRC
Region I
475 Allendale Road
King of Prussia, PA 19406

U.S. NUCLEAR REGULATORY COMMISSION
In the Matter of Entergy Nuclear Vermont Yankee L.L.C.
Docket No. 50-271 Official Exhibit No. Entergy 18
OFFERED by: (Applicant/Licensee) Intervenor ____
NRC Staff Other ____
IDENTIFIED on 9/13/06 Witness/Panel Nichols/Casillas
Action Taken: (ADMITTED) REJECTED WITHDRAWN
Reporter/Clerk MAC

Template=SECY-028

IE22
SECY-02

NRC Form 366 (6-89) U.S. NUCLEAR REGULATORY COMMISSION

LICENSEE EVENT REPORT (LER)

APPROVED OMB NO.3150-0104
EXPIRES 4/30/92
ESTIMATED BURDEN PER RESPONSE TO COMPLY WITH THIS INFORMATION COLLECTION REQUEST: 50.0 HRS. FORWARD COMMENTS REGARDING BURDEN ESTIMATE TO THE RECORDS AND REPORTS MANAGEMENT BRANCH (P-530), U.S. NUCLEAR REGULATORY COMMISSION, WASHINGTON, DC 20555, AND TO THE PAPERWORK REDUCTION PROJECT (3160-0104), OFFICE OF MANAGEMENT AND BUDGET, WASHINGTON, DC 20503.

FACILITY NAME (1)	DOCKET NO. (2)	PAGE (3)
VERMONT YANKEE NUCLEAR POWER STATION	0 5 0 0 0 2 7 1	0 1 OF 0 9

TITLE (4)
Reactor Scram Due to Loss of Normal Off-site Power (LNP) Caused By Inadequate Procedure Guideline

EVENT DATE (5)			LER NUMBER (6)			REPORT DATE (7)			OTHER FACILITIES INVOLVED (8)	
MONTH	DAY	YEAR	YEAR	SEQ. #	REV#	MONTH	DAY	YEAR	FACILITY NAMES	DOCKET NO.(S)
0 4	2 3	9 1	9 1	- 0 0 9 -	0 0	0 5	2 3	9 1		0 5 0 0 0
										0 5 0 0 0

OPERATING MODE (9)	N	THIS REPORT IS SUBMITTED PURSUANT TO REQ'MTS OF 10CFR §: ✓ ONE OR MORE (11)			
		20.402(b)	20.405(c)	X 50.73(a)(2)(iv)	73.71(b)
POWER LEVEL(10)	1 0 0	20.405(a)(1)(i)	50.36(c)(1)	50.73(a)(2)(v)	73.71(c)
		20.405(a)(1)(ii)	50.36(c)(2)	50.73(a)(2)(vii)	OTHER:
		20.405(a)(1)(iii)	X 50.73(a)(2)(i)	50.73(a)(2)(viii)(A)	
		20.405(a)(1)(iv)	50.73(a)(2)(ii)	50.73(a)(2)(viii)(B)	
		20.405(a)(1)(v)	50.73(a)(2)(iii)	50.73(a)(2)(x)	

LICENSEE CONTACT FOR THIS LER (12)

NAME	TELEPHONE NO. (AREA CODE)
DONALD A. REID, PLANT MANAGER	8 0 2 2 5 7 - 7 7 1 1

COMPLETE ONE LINE FOR EACH COMPONENT FAILURE DESCRIBED IN THIS REPORT (13)

CAUSE	SYST	COMPNT	MFR	REPORTABLE TO NPRDS	CAUSE	SYST	COMPNT	MFR	REPORTABLE TO NPRDS
X	F K	B Y C	E 3 5 3	N	N/A				
X	F K	2 4	W 3 5 1	N	N/A				

SUPPLEMENTAL REPORT EXPECTED (14)		EXPECTED SUBMISSION DATE (15)	MO	DA	YR
X YES (If yes, complete EXPECTED SUBMISSION DATE)	NO		0 8	3 0	9 1

ABSTRACT (Limit to 1400 spaces, i.e., approx. fifteen single-space typewritten lines) (16)

On 04/23/91 at 1448 hours, during normal operation with Reactor power at 100%, a Reactor Scram occurred as a result of a Generator/Turbine trip on Generator Load Reject due to the receipt of a 345KV Breaker Failure Signal. The Failure Signal was the result of Breaker Failure Interlock (BFI) signals that occurred simultaneously in the 345KV and 115KV Breaker control circuitry during the restoration of a battery bank to Switchyard Bus DC 4A. The cumulative effects of both (BFI) signals resulted in a total loss of 345KV and 115KV off-site power. An Unusual Event was declared at 1507 hours. Both Emergency Diesel Generators provided power for essential safety related systems during the LNP until approximately 0430 hours on 04/24/91 at which point off-site 345KV power was restored and backfed through the Station Auxiliary Transformer. During the event, Torus Water volume exceeded the Technical Specification limit of 70,000 cubic ft. The Unusual Event was terminated at 1950 hours on 04/24/91. The reactor reached Cold Shutdown at 0357 hours on 04/25/91 and was returned to critical at 0300 hours on 04/30/91. The Root Cause of this event is failure of the repair department personnel to recognize the consequences of operating a DC bus without a connected battery bank. Corrective Actions to prevent reoccurence are presently being finalized and will be presented in a supplemental report.

DESCRIPTION OF EVENT

On 04/23/91 at 1448 hours, during normal operation with Reactor power at 100%, a Reactor scram occurred as a result of a Generator/Turbine trip on Generator Load Reject due to the receipt of a 345KV Breaker Failure Signal. The 345KV Breaker Failure Signal was received as a result of Breaker Failure Interlock (BFI) signals that occurred simultaneously in the 345KV Breaker 81-1T and 115 KV Breaker K-1 control circuitry.

The (BFI) signal from 115KV Breaker K-1 initiated the following automatic system responses:

- Opening of 115KV Breaker K-186
- Opening of 345KV Breakers 379 and 381

The loss of 381 and 379 breakers removed all power sources to the Auto Transformer which in conjunction with the K186 trip resulted in a total loss of 115KV power.

The (BFI) signal from 345KV Breaker 81-1T initiated the following automatic system responses:

- Generation of 345KV Breaker Failure Signal
- Opening of 345KV Breakers 381 and 1T
- Lockout of Main Generator 86GP and 86GB relays, causing the Main Generator and Exciter Field breakers to open

The Generator Primary and Backup Lockout relays initiated the following automatic system responses:

- Main Turbine Trip
- Opening of 345KV Breaker 81-1T and Northfield Line trip at Northfield
- Attempted Fast Transfer of 4KV Buses 1 and 2 to the Startup Transformers but 115KV power was unavailable

The cumulative effects of both (BFI) signals resulted in a total loss of 345KV and 115KV off-site power. However, an additional off-site power source was available through the Vernon Hydro Station Tie line. The 4KV Hydro station output, which is designated as a delayed access off-site power source, was available throughout the event.

Prior to the event, the plant was in the process of completing the replacement of Switchyard Battery Bank 4A in accordance with a Maintenance Department guideline. All work with the exception of restoring the connection of the battery bank to the DC 4A bus, was completed without incident. While performing the final sequence of actions necessary to reconnect the battery bank to DC Bus 4A, a DC voltage transient occurred on the bus which initiated the event.

DESCRIPTION OF EVENT (cont.)

During the first second of the event (1448:29 hours), as a result of the inablility to reenergize 4KV buses 1 and 2 from Fast Transfer to the Startup transformers, all station loads fed from these buses were lost. Major system responses to the loss of the power included the trip of Reactor Protection System (RPS)(*JC) "A" and "B" MG sets and receipt of Primary Containment Isolation Signals (PCIS)(*JM) Groups 1, 2, 3 and 5 resulting in the required closure of PCIS Groups 1, 2, and 3 isolation valves. (Motor operated valve closures within these Groups occurred after Emergency Diesel Generator power was supplied to the respective buses).

The loss of all power on 4KV Buses 1 thru 4 initiated the opening of Tie breakers 3T1 and 4T2 to provide isolation of Safety Buses 3 and 4 which, in the event of normal power loss, are aligned with the station Emergency Diesel Generators. An autostart of both diesels followed which reenergized Bus 3 and Bus 4 at 1448:45 hours. Both diesels remained in operation without incident until approximately 0430 hours on 04/24/91 at which time off-site 345KV power was restored and backfed through the Station Auxiliary Transformer.

In response to the Scram, Operation personnel entered Emergency Operating Procedure OE 3100, "Scram Procedure" which governs reactor operation in a post-scram environment. Immediate actions initiated at 1450 hours by Operations personnel to stabilize Reactor pressure and level included the manual lifting of Safety Relief Valve (SRV)-A, the manual initiation of High Pressure Coolant Injection System (HPCI)(*BJ), and startup of both RHR loops in the Torus Cooling mode. Both RPS MG sets were successfully restarted and RPS buses reenergized at 1515 hours. The initial scram was reset at 1533 hours.

During the period from 1450 hours on 04/23/91 to 1346 hours on 04/24/91, the combination of HPCI and Reactor Core Isolation Cooling (RCIC) (*BN) systems and SRV's were manually employed in accordance with procedure OE 3100 to control Reactor pressure level. The first use of RCIC system began at 1645 hours on 04/23/91. During the above 23 hour period, several additional events transpired. The following is a summary and discussion of those events:

* Energy Information Identification System (EIIS) component Identifier

DESCRIPTION OF EVENT (cont.)

A. Reactor Scrams on "Lo" Reactor Water Level were experienced at 1534 hours and 2112 hours on 04/23/91.

The first Scram occurred due to low Reactor water level during the process of securing HPCI and transferring to RCIC. Prior to the scram, reactor pressure and level had been steadily decreasing during the first 30 minutes of HPCI operation which prompted a change in cooling systems by Operations personnel. During the process of securing HPCI, Reactor Water level continued to decline to the 132 inch "Lo" level setpoint which initiated the Reactor scram. PCIS - Groups 2, 3, and 5 isolations which would normally initiate on "Lo" Reactor water level were already present from the initial Scram at 1448 hours. After receiving the Scram, Operations personnel completed the transfer to RCIC for level and pressure control. Reactor pressure and level recovered after RCIC initiation. The Scram and PCIS Groups 2, 3, and 5 isolations were subsequently reset at 1548 hours.

The second Scram resulted as a momentary drop in water level was experienced due to level shrink resulting from an increase in Reactor pressure experienced after cycling SRV-D. Water level dropped to approximately 112 inches during the pressure surge. The initiation of PCIS Groups 2, 3, and 5 logic occurred coincident with the level drop as required. The scram was subsequently reset at 2127 hours. PCIS Groups 2 and 5 logic were reset at 2128 hours and Group 3 logic later reset at 2154 hours.

B. Emergency Operating Procedure OE 3104, "Torus Temperature and Level Control Procedure", was entered at 1533 hours and 2112 hours on 04/23/91 due to Torus water volume exceeding the Technical Specification limit of 70,000 cubic ft.

In both occurrences, actions were taken in accordance with OE 3104 to reduce Torus water volume. Water reduction actions undertaken after the first entry into OE 3104 were successful and Torus water volume was reduced and maintained below 70,000 cubic ft. Later in the event, at 2112 hours, Torus water volume was not able to be maintained below 70,000 cubic ft. This resulted in the entry into the Technical Specification, "Required Cold Shutdown in 24 Hour" requirement. Due to the volume limitations of Torus water being processed through Radwaste, the Torus volume remained above 70,000 cubic ft. until 1925 hours on 04/24/91. The Technical Specification cold shutdown requirement and OE 3104 were excited at this time.

C. RCIC tripped on overspeed at 1904 hours on 04/23/91. The overspeed trip was reset at 1912 hours and operation of the system resumed.

* Energy Information Identification System (EIIS) Component Identifier

DESCRIPTION OF EVENT (cont.)

The trip is attributed to an operator error in the adjustment of the RCIC Flow Controller prior to switching from the MANUAL to AUTO mode.

D. The "A" Station Air Compressor tripped at 1542 hours on 04/23/91 due to inadequate Service Water cooling flow. A reserve diesel air compressor was subsequently connected to the outlet of the "D" Station air compressor and became operable at 1759 hours. The remaining "B" Station Air compressor also tripped at 1731 hours on thermal overload due to inadequate Service Water cooling flow and was subsequently restarted at 1736 hours. The "C" and "D" station Air compressors were unavailable due to the LNP. The five (5) minute interval in which all Station Air compressors were out of service resulted in a 15 psig. Instrument Air header pressure drop. In response to the "B" Station Air Compressor Trip, Operations personnel entered procedure ON 3146, "Low Instrument/Scram Air Header Pressure", and initiated immediate efforts to restart the "B" Station Air Compressor. No air supplied equipment malfunctions were experienced during this interval. The reduced Service Water flow to the Station Air compressors and other plant equipment is being reported separately as Licensee Event Report (LER) 91-12.

At 1925 hours on 04/23/91, 115KV Breaker K186 was manually closed which restored power to the Startup transformers via the Keene (K186) line. 4 KV bus breakers 13 and 23 were subsequently closed to reenergize Buses 1 and 2 which power the normal station loads. Because of the fact that testing was continuing in the Switchyard with only one breaker closed, the decision was made to leave the emergency diesels connected to 4KV buses 3 and 4. This would ensure that power to 4KV buses 3 and 4 would not be interrupted if another LNP occurred.

At 1950 hours on 04/24/91, based on normal off-site power having been restored and Torus water volume having been reduced below 70,000 cubic ft., the Unusual Event was terminated. At 0207 hours on 04/25/91, Shutdown Cooling using the "D" RHR pump on the "B" loop was initiated. The reactor reached cold shutdown at 0357 hours. The reactor was returned to critical at 0300 hours on 04/30/91.

Investigations into the cause of the event, along with troubleshooting, testing, and repair efforts were initiated immediately after the start of the event. A Switchyard response team was formed with specific directives to:

- recover off-site power
- stabilize the switchyard
- gather technical information related to the event
- begin root cause analysis research

DESCRIPTION OF EVENT (cont.)

The recovery of off-site power began with the attempt to restore 115KV power from the Switchyard via 115KV Breaker K186 and the Startup transformers. This was determined to be the easiest path in obtaining an off-site power source due to the need to close only one breaker. However, the K1 Breaker BFI signal remained locked in due to a failed zener diode on the associated trip card and prevented the closure of K186. At 1925 hours, the BFI signal from the K1 to the K186 Breaker was blocked allowing reclosure of K186 and subsequent restoration of power to 4KV buses 1 and 2. The K1 BFI trip card was subsequently replaced with an identical card from a spare breaker. The 4 hour effort to close the K186 breaker was a direct result of the length of time required for New England Power Service Co. (NEPSCO) relay technicians to travel to Vermont Yankee from Providence, Rhode Island.

After 115 KV power was established through the Keene K186 line, efforts to close Breaker K1 continued in order to establish a more reliable source of 115KV power through the Auto Transformer. However, due to communication problems between VY and the New England Switching Authority (REMVEC) concerning priorities over breaker testing, a three hour delay occurred before 115KV power was made available through the Auto Transformer. While Vermont Yankee was attempting to close the K1 breaker, REMVEC was pursuing efforts to establish connections between the ring bus and the Northfield line by reclosing the 81-1T breaker.

In a parallel effort, at 1900 hours, Operation orders were given to complete backfeeding of the plant from the 345 yard through the Main Transformer. The effort to backfeed was possible due to the availability of the Coolidge and Scobie lines. The Northfield line was unavailable due to the 81-1T BFI signal. Again, the backfeed effort was hampered by communication problems with REMVEC, personnel delays, and equipment malfunctions. Backfeeding was completed at 0410 hours on 04/24/91. Vermont Yankee Technical Specification requirements for Off-Site Power were met during the Backfeeding effort by the availability of one off-site transmission line (Keene K186 line in service) and a delayed access power source (Vernon Hydro Station).

In conjunction with the above efforts, Maintenance department personnel with the help of technicians supplied by NEPSCO and the battery charger vendor, performed preventative and corrective maintenance on the four battery chargers related to DC Bus 4A and 5A. Significant repairs and testing were performed on the affected units. Additional testing and repairs were initiated to the Stuck Breaker Failure Unit (SBFU) Logic trip cards for the 81-1T, 381 and K1 breakers. The cards for 381 and K1 breakers were found to have failed zener diodes. The 81-1T (SBFU) relay was found to be functioning properly.

DESCRIPTION OF EVENT (cont.)

Discussions with the manufacturer indicated that the zener diodes are no longer employed on newer revision trip cards and have recommended the removal of the zener diodes based on their vulnerability to voltage transients. Based on this recommendation, the Maintenance Dept. has removed the zener diodes from these units in accordance with written direction from the vendor.

After response team efforts were completed, a Root Cause/Corrective Action Report (CAR) was drafted on the event from a Switchyard perspective. In the draft report, the following conclusions were reached:

- The voltage transient on the DC 4A bus occurred when battery charger 4A-5A was disconnected from the DC-5A bus which rendered bus DC 4A susceptible to voltage spikes due to the absence of a battery bank.

- The specific cause of the zener diode failures which resulted in the 81-1T and K1 breaker (BFI) signals is attributed to the voltage transient which occurred on Bus DC 4A.

- A portion of the additional problems found with DC Bus 4A and 5A battery chargers which ranged from shorted diodes/SCRs and blown surge suppressor fuses, were concluded to be pre-existing and were responsible for the voltage transient.

CAUSE OF EVENT

The Root Cause of this event is the failure of the repair department personnel to recognize the consequences of operating a DC bus without a connected battery bank. The Maintenance Guideline, an internal Maintenance Department document prepared by the department Electrical Engineering staff, was inadequate in that it did not take into consideration all battery charger failure modes when floating a DC bus without a battery bank. The consequences of losing battery charger power while the bus is energized without a battery connected were considered during the revision of the Guideline, but not the potential of the battery chargers to fail high or induce a high voltage spike on the bus, both which have the potential to damage electronic circuitry.

The previous revision of the Guideline called for the two DC buses (4A & 5A) to be cross-connected and fed jointly by the 4A/5A battery charger during the maintenance on the batteries. Following cross-connection, the Guideline required opening of the battery breakers. This evolution was successfully accomplished and the required work on the

CAUSE OF EVENT (cont.)

batteries was completed without incident. Recovery of the battery required the closure of the battery output breaker first, essentially paralleling the two battery banks until the 4A/5A charger output breaker was opened. In June 1990, the Guideline was revised due to Operations Department concern with paralleling batteries. The new revision required that the cross connection between bus 4A and 5A provided by battery charger 4A/5A be opened prior to the reclosure of the bus 4A battey breaker. This configuration rendered bus 4A without a battery and susceptible to voltage excursions from either the 4A or 4A/5A battery chargers.

CONTRIBUTING CAUSES

1. 345KV and 115KV breaker failure relays were susceptible to false initiation due to control voltage transients.

2. The switchyard battery chargers were in a degraded mode such that they created DC bus control voltage disturbance when the chargers were disconnected from associated batteries.

3. Lack of Switchyard battery charger and overall Switchyard preventative maintenance.

ANALYSIS OF EVENT

The events had minimal adverse safety implications.

1. The plant responded to the reactor trip and LNP as designed. The Emergency Diesel Generators operated as designed and supplied power to Emergency plant buses until off-site power was restored.

2. The Reactor Protective System operated as designed and scrammed the reactor on Generator Load Reject resulting from the 345KV Breaker Failure Signal

3. An evaluation was performed by the Operations Department relevant to the loss of both "A" and "B" Station Air compressors. The analysis concluded that the 5 minute interval in which the "B" Station Air compressor was out of service which resulted in a 15 psig. drop in the station air supply system did not significantly challenge any plant equipment.

4. All other safety systems responded as expected.

CORRECTIVE ACTIONS

SHORT TERM CORRECTIVE ACTIONS

1. Immediate corrective actions included recovering from the reactor scram, restoration of off-site power, and Switchyard and reactor stabilization utilizing appropriate plant procedures.

2. The current revision of the Maintenance Dept. Guideline has been cancelled and the previous revision reinstated with an additional requirement that a review be performed prior to its use for dealing with any evolution requiring switchyard battery removal.

3. Review all other plant guidelines and Procedures pertaining to battery switching operations.

LONG TERM CORRECTIVE ACTIONS

Long Term Corrective Actions are presently being addressed per our Root Cause/Corrective Action process. The Corrective Action Report is presently being finalized. In accordance with prior commitments made to the NRC at the AIT exit meeting held in King of Prussia on 05/14/91, a letter detailing plant Corrective Actions to be initiated in response to the event and NRC concerns will be forwarded to the NRC by 07/15/91. Based on information presented in the finalized Corrective Action Report, a supplement to this report will be forwarded to the Commission.

ADDITIONAL INFORMATION

There have been no similar events of this type reported to the commission in the past five years.

ATTACHMENTS

Sketches: a. Switchyard Distribution

b. Switchyard DC Bus System

UTILITY NAME (1)	DOCKET NO. (2)	LER NUMBER (6) YEAR	SEQ. #	REV#	PAGE (3)
VERMONT YANKEE NUCLEAR POWER STATION	0 5 0 0 0 2 7 1	9 1	- 0 0 9	- 1	1 OF 1

TEXT (If more space is required, use additional NRC Form 366A) (17)

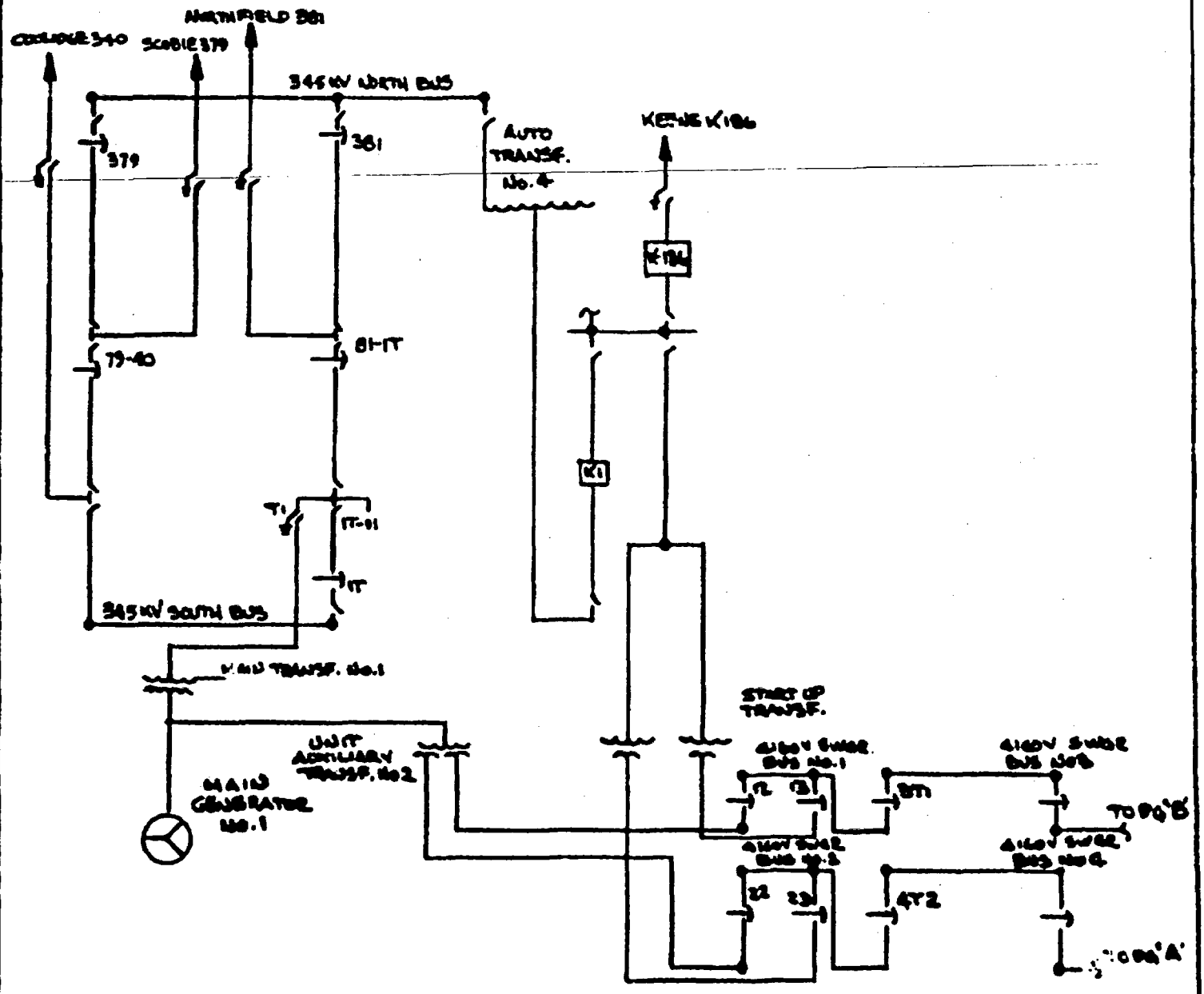

SWITCHYARD DISTRIBUTION

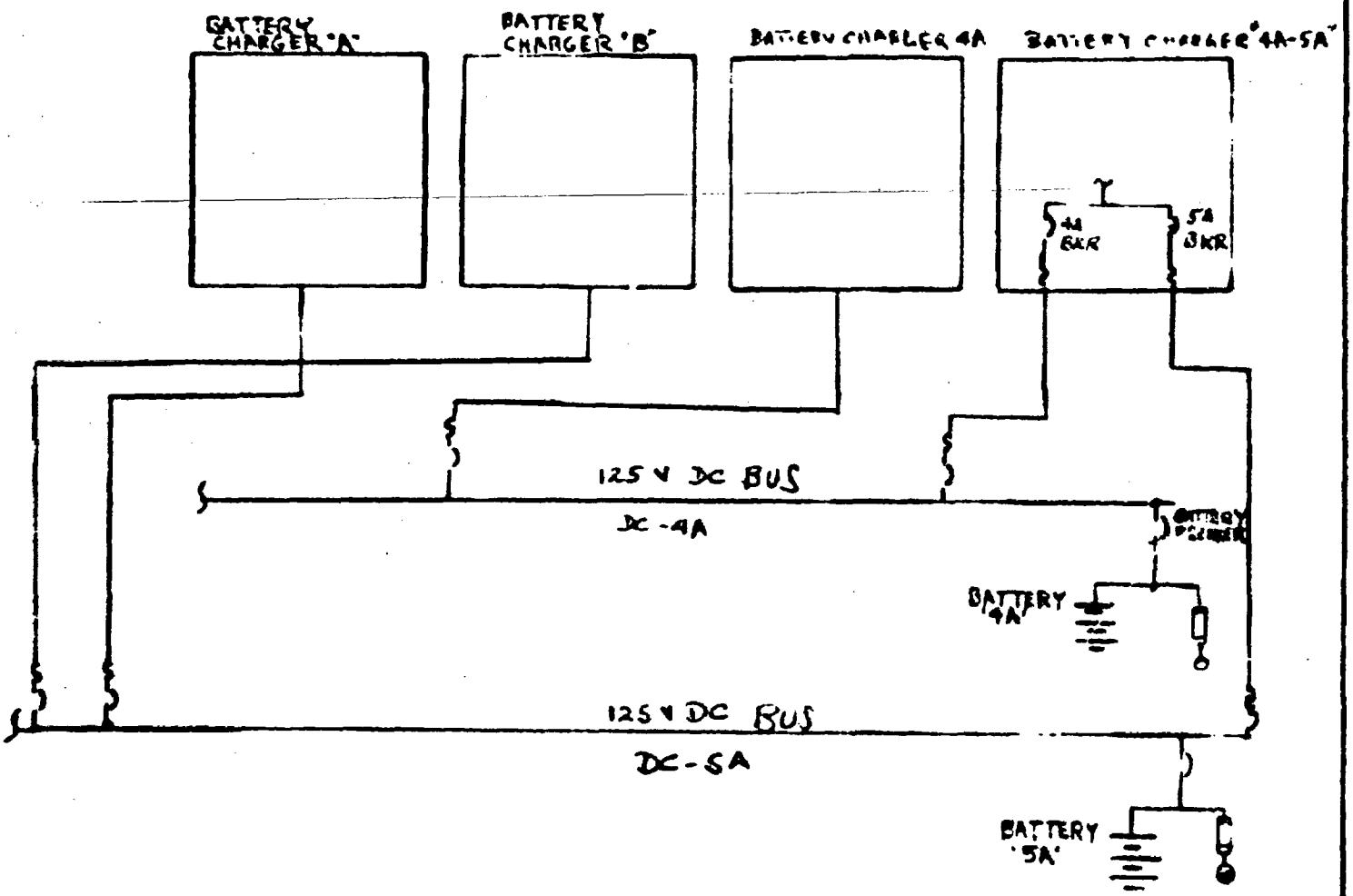

SWITCHYARD DC BUS SYSTEM