BRUCE H HAMILTON
Vice President
Oconee Nuclear Station

Duke Energy Corporation
ON01VP / 7800 Rochester Highway
Seneca, SC 29672

864 885 3487
864 885 4208 fax
bhhamilton@duke-energy.com

July 14, 2006

U.S. Nuclear Regulatory Commission
Document Control Desk
Washington, DC 20555

Subject: Duke Power Company LLC
Oconee Nuclear Station, Unit 3
Docket Nos. 50-287
Third Ten Year Inservice Inspection Interval
Request for Relief No. 05-ON-002, Rev 1

By letter dated June 24, 2005, Duke Power Company (Duke), now Duke Power Company LLC d/b/a Duke Energy Carolinas, LLC, submitted Request for Relief 05-ON-002, seeking relief from the requirement to examine 100% of the volume specified by the ASME Boiler and Pressure Vessel Code, Section XI, 1989 Edition with no Addenda (as modified by Code Case N-460).

During the NRC review of this request, the reviewer communicated a Request for Additional Information to Duke via the NRC Project Manager assigned to Oconee. Enclosed is a copy of that request, followed by the Duke response to each question. This response should satisfy the reviewer's request.

In addition, following submittal of 05-ON-002, Duke noted that the request included a statement which continued to credit the reactor building gaseous radiation monitor for leak detection. Industry experience has discovered that current fuel performance has reduced the level of failed fuel, such that these monitors are not sufficiently sensitive to detect leakage promptly. Therefore the statement in the relief was inappropriate. Paragraph I of the original relief request has been revised to correct the statement.

As a result of the above, Revision 1 to the original request is also enclosed. Revision 1 includes changes to incorporate both the additional information requested, including updates to Enclosures B and C, and a correction to Paragraph I.

Please refer any additional questions regarding either the relief request or this response to Randy Todd - ONS Regulatory Compliance at (864) 885-3418.

Sincerely,

Bruce Hamilton

Bruce H. Hamilton, Vice President
Oconee Nuclear Site

Enclosures (2)

xc w/enc: Mr. William D. Travers
Administrator, Region II
U.S. Nuclear Regulatory Commission
Atlanta Federal Center
61 Forsyth St., SWW, Suite 23T85
Atlanta, GA 30303

L. N. Olshan, Project Manager, Section 1
Project Directorate II
Division of Licensing Project Management
Office of Nuclear Reactor Regulation
U. S. Nuclear Regulatory Commission
Washington, DC 20555-0001

xc(w/o enc):

D. W. Rich
Senior NRC Resident Inspector
Oconee Nuclear Station

Mr. Henry Porter
Division of Radioactive Waste Management
Bureau of Land and Waste Management
SC Dept. of Health & Environmental Control
2600 Bull St.
Columbia, SC 29201

Enclosure 1

Request for Additional Information
With Response Re:

Request for Relief

05-ON-002

Limited Examinations
on Reactor Vessel

3EOC 21

TECHNICAL LETTER REPORT
REQUEST FOR ADDITIONAL INFORMATION
ON THIRD 10-YEAR INSERVICE INSPECTION INTERVAL
REQUEST FOR RELIEF 05-ON-002
FOR
DUKE POWER COMPANY
OCONEE NUCLEAR STATION, UNIT 3
DOCKET NUMBER 50-287

1. SCOPE

By letter dated June 24, 2005, the licensee, Duke Power Company, submitted Request for Relief 05-ON-002 from the requirements of the American Society of Mechanical Engineers (ASME) *Boiler and Pressure Vessel Code*, Section XI, for Oconee Nuclear Station, Unit 3 (Oconee 3). The requests for relief are for the third 10-year inservice inspection (ISI) interval, in which Oconee 3 adopted the 1989 Edition of ASME Section XI as the code of record.

In accordance with 10CFR50.55a(g)(5)(iii), the licensee has submitted Relief Request 05-ON-002 for certain reactor pressure vessel weld examinations. The ASME Code requires that 100% of the examination volumes described in Tables IWB-2500-1 be completed. The licensee has claimed that 100% of the ASME Code-required volumes are impractical to obtain at Oconee 3. 10 CFR 50.55a(g)(5)(iii) states that when licensees determine that conformance with ASME Code requirements is impractical at their facility, they shall submit information to support this determination. The NRC will evaluate such requests based on impracticality, and may impose alternatives, giving due consideration to public safety and the burden imposed on the licensee.

Pacific Northwest National Laboratory (PNNL) reviewed the information submitted by the licensee, and based on this review, determined the following information is required to complete the evaluation.

2. REQUEST FOR ADDITIONAL INFORMATION

2.1 General Information

The licensee's submittal stated that this request is for Oconee 3, however, the transmittal letter shows docket number 50-270. Confirm that Request for Relief 05-ON-002 is applicable only to Oconee Nuclear Station, Unit 3, and that the correct docket number is 50-287.

Duke Power (DUKE) response:

05-ON-002 is for Unit 3 only and 50-287 is the correct docket number.

2.2 Examination Category B-A, Pressure Retaining Welds 3-RPV-WR34, -WR35, and -WR19, on the Reactor Pressure Vessel (RPV)

2.2(a) For RPV shell-to-lower head Weld 3-RPV-WR34, the licensee stated that core support/guide lugs caused restrictions to the scanning access for these welds. Please be more specific as to how the RPV appurtenances restrict scanning access. Describe the remote UT fixture, including the transducer sled dimensions, and how the guide lugs prevented placing the transducer sled in a proper position for performing the examinations. Provide similar information for lower head ring Weld 3-RPV-WR35.

Duke response:

For weld 3-RPV-WR34:
Pages 2 of 4 and 4 of 4 were added to attachment B that should help to answer the question.
(note: Page 2 of 4 should have been sent with the original request for relief but may have been lost during the transmittal process. Page 4 of 4 is a new page.)

For weld 3-RPV-WR35:
Pages 2 of 5, 3 of 5, 4 of 5 and 5 of 5 were added to attachment C that should help to answer the question.
(note: Pages 2 of 5 and 3 of 5 should have been sent with the original request for relief but may have been lost during the transmittal process. Pages 4 of 5 and 5 of 5 are new pages.)

2.2(b) The licensee stated that ultrasonic examination of Welds 3-RPV-WR34, -WR35, and -WR19 were conducted using personnel, equipment and procedures qualified in accordance with ASME Section XI, Appendix VIII, Supplements 4 and 6, 1995 Edition with the 1996 Addenda, as administered by the industry's Performance Demonstration Initiative. This is appropriate for Welds 3-RPV-WR34 and -WR35, because they are both RPV shell and head welds, and are required by CFR to be inspected by these type of performance-demonstrated methods.

However, Weld 3-RPV-WR19 is a shell-to-flange weld, and is specifically excluded, by Article I-2000, from the requirements of Appendix VIII. This weld must be examined using the procedures, personnel and equipment requirements listed in ASME Code Section V, Article 4, as supplemented by ASME Code Section XI, Article I.

While the NRC would like to encourage the use of performance-demonstrated UT methods for components not currently within the scope of Appendix VIII, the actual ASME Code requirement for Weld 3-RPV-WR19 at Oconee 3 is to use Article 4 of ASME Section V, supplemented by Article I of ASME Section XI. The licensee has not met this requirement, and therefore, must propose an alternative, in accordance with 10 CFR 50.55a(a)(3)(I), to use personnel, equipment and procedures qualified in accordance with ASME Section XI, Appendix VIII, Supplements 4 and 6, 1995 Edition with the 1996 Addenda, for Weld 3-RPV-WR19.

Duke response:

Duke submitted Relief 04-GO-002 on 7-14-2004, which was approved by the NRC by letter of 10-20-2004. This was a proposed alternative to use personnel, equipment and procedures qualified in accordance with ASME Section XI, Appendix VIII, Supplements 4 and 6, 1995 Edition with the 1996 Addenda, for several welds, including Weld 3-RPV-WR19.

2.3 <u>Examination Category B-D, Item B3.90, Nozzle-to-Vessel Welds 3-RPV-WR54 and-WR54A on the Reactor Pressure Vessel (RPV)</u>

2.3(a) These nozzle-to-vessel welds are on core flood nozzles located at 0 and 180 degrees on the RPV. The licensee stated that these examinations were performed during December 2004, and that examination of nozzle-to-vessel Welds 3-RPV-WR54 and -WR45A were conducted using personnel, procedures and equipment qualified in accordance with ASME Section XI, Appendix I, 1989 Edition, with no Addenda.

However, 10 CFR 50.55a(g)(6)(ii)(C) requires licensees to implement the 1995 Edition, with 1996 Addenda, of ASME Section XI, Appendix VIII, Supplements 5 and 7, for RPV nozzle-to-vessel welds examined after November 22, 2002. These Supplements list the requirements for performance demonstration of procedures, personnel and equipment. The licensee should clarify whether the stated UT qualifications

were mistakenly identified or explain why the examination of Welds 3-RPV-WR54 and -WR54A were not performed using personnel, procedures and equipment qualified under Supplements 5 and 7, as required by CFR.

Duke response:

The wrong reference was used. Paragraph H of the Original Relief Request will be revised to read as shown below:

Paragraph H:

> Ultrasonic examination of areas/welds for item numbers B03.090 were conducted using personnel, equipment and procedures qualified in accordance with ASME Section XI, Appendix VIII, Supplements 4, 6, & 7, 1995 Edition with the 1996 Addenda. Although limited scanning prevented 100% coverage of the examination volume, the amount of coverage obtained for these examinations provides an acceptable level of quality and integrity. (See Paragraph I for additional justification.)

Note: Supplement 5 was not used to examine the nozzle inside radius because an enhanced visual examination was performed in lieu of UT examination per Code Case N-648-1.

Enclosure 2

Request for Relief

05-ON-002
Revision 1

Limited Examinations
on Reactor Vessel

3EOC 21

Proposed Relief in Accordance with 10 CFR 50.55a(g)(5)(iii)
Inservice Inspection Impracticality
Duke Energy Corporation
Oconee Nuclear Station – Unit 3 (EOC-21)
Third 10-Year Interval – Inservice Inspection Plan
Interval Start Date = 12-16-1994 Interval End Date = 1-2-2005
ASME Section XI Code – 1989 Edition with No Addenda
Code Case N-460 is applicable

	I.	II.	III.	IV. &V.	VI.	VII.	VIII.
List Number	**Limited Area/Weld I.D. Number**	**System / Component for Which Relief is Requested:** Area or Weld to be Examined	**Code Requirement from Which Relief is Requested:** 100% Exam Volume Coverage Exam Category Item No. Fig. No. Limitation Percentage	**Impracticality/ Burden Caused by Compliance**	**Proposed Alternate Examinations or Testing**	**Implementation Schedule and Duration**	**Justification for Granting Relief**
1.	3-RPV-WR34	NC System Reactor Vessel Lower Shell to Lower Head Ring Circumferential Weld	Exam Category B-A Item No. B01.011.004 Fig. IWB-2500-1 44.5% Volume Coverage	See Paragraph "A"	See Paragraph "E"	See Paragraph "F"	See Paragraph "G"
2.	3-RPV-WR35	NC System Reactor Vessel Lower Head Cap to Lower Head Ring Circumferential Weld	Exam Category B-A Item No. B01.021.003 Fig. IWB-2500-3 50% Volume Coverage	See Paragraph "B"	See Paragraph "E"	See Paragraph "F"	See Paragraph "G"
3	3-RPV-WR19	NC System Reactor Vessel Upper Shell to Flange Circumferential Weld	Exam Category B-A Item No. B01.030.001 Fig. IWB-2500-4 85.8% Volume Coverage	See Paragraph "C"	See Paragraph "E"	See Paragraph "F"	See Paragraph "G"
4.	3-RPV-WR54	NC System Reactor Vessel Core Flood Nozzle-to-Vessel Weld @ 0°	Exam Category B-D Item No. B03.090.007 (UT from vessel I.D.) Fig. IWB-2500-7(a) 84.2% Volume Coverage	See Paragraph "D"	See Paragraph "E"	See Paragraph "F"	See Paragraph "H"

	I.	II.	III.	IV. &V.	VI.	VII.	VIII.
List Number	**Limited Area/Weld I.D. Number**	**System / Component for Which Relief is Requested:** Area or Weld to be Examined	**Code Requirement from Which Relief is Requested:** 100% Exam Volume Coverage Exam Category Item No. Fig. No. Limitation Percentage	**Impracticality/ Burden Caused by Compliance**	**Proposed Alternate Examinations or Testing**	**Implementation Schedule and Duration**	**Justification for Granting Relief**
5.	3-RPV-WR54	NC System Reactor Vessel Core Flood Nozzle-to-Vessel Weld @ 0°	Exam Category B-D Item No. B03.090.007A (UT from nozzle bore.) Fig. IWB-2500-7(a) 84.2% Volume Coverage	See Paragraph "D"	See Paragraph "E"	See Paragraph "F"	See Paragraph "H"
6.	3-RPV-WR54A	NC System Reactor Vessel Core Flood Nozzle-to-Vessel Weld @ 180°	Exam Category B-D Item No. B03.090.008 (UT from vessel ID) Fig. IWB-2500-7(a) 84.2% Volume Coverage	See Paragraph "D"	See Paragraph "E"	See Paragraph "F"	See Paragraph "H"
7.	3-RPV-WR54A	NC System Reactor Vessel Core Flood Nozzle-to-Vessel Weld @ 180°	Exam Category B-D Item No. B03.090.008A (UT from nozzle bore) Fig. IWB-2500-7(a) 84.2% Volume Coverage	See Paragraph "D"	See Paragraph "E"	See Paragraph "F"	See Paragraph "H"

See Attachment A for area/weld locations.

Note: The welds listed in the table above were inspected in December of 2004.

IV. & V. Impracticality/ Burden Caused by Code Compliance

Paragraph A: (The Lower Shell and Lower Head Ring material is SA508 CL2. This weld has a diameter of 170.250 inches and a wall thickness of 5.5 inches.)

During ultrasonic examination, 100% coverage of the required examination volume could not be obtained. Twelve core guide lugs restrict the scanning surface, as shown on the Attachment B drawing, causing limitations that resulted in 44.5% coverage. The percentage of coverage reported represents the aggregate coverage from all scans parallel and perpendicular to the weld. The weld and adjacent base material were examined using 45° refracted shear waves and 45° refracted longitudinal waves. Examination volumes directly below the core guide lugs received no coverage when scanned parallel to the weld. Additionally no scans were performed perpendicular to the weld directly below the core guide lugs. Scans parallel to the weld were restricted to 7.6 inches on either side of each core guide lug and scans perpendicular to the weld were restricted to 4.7 inches on either side of each core guide lug. In order to achieve more coverage, the core guide lugs would have to be moved to allow greater access, which is impractical. There were no recordable indications found in the areas that were examined.

54% of the weld and base material volume received coverage in two directions perpendicular to the weld.

35% of the weld and base material volume received coverage in two directions parallel to the weld.

55.50% of the weld and base material volume received no coverage.

(See Attachment B for exam information)

Paragraph B: (The Lower Head Cap material is SA533 CL1 GRB and Lower Head Ring material is SA508 CL2. This weld has a diameter of 143.00 inches and a wall thickness of 5.375 inches.)

During ultrasonic examination, 100% coverage of the required examination volume could not be obtained. The examination coverage was limited to 50%. The percentage of coverage reported represents the aggregate coverage from all scans parallel and perpendicular to the weld. The flow stabilizers, core guide lugs and in-core nozzles that restrict the scanning surface, as shown on the Attachment C drawing, caused the limitations. The weld and adjacent base material were examined using 45° refracted shear waves and 45° refracted longitudinal waves. There were no recordable indications found in the areas that were examined. In order to achieve more coverage the flow stabilizers, core guide lugs and in-core nozzles would have to be moved to allow greater access for scanning, which is impractical.

53.33% of the weld and base material volume received coverage in two directions perpendicular to the weld.

46.66% of the weld and base material volume received coverage in two directions parallel to the weld.

50% of the weld and base material received no coverage.

(See Attachment C for exam information)

Paragraph C: (The Upper Shell and Flange material is SA508 CL2. This weld has a diameter of 167.630 inches and a wall thickness of 12.00 inches.)

During ultrasonic examination, 100% coverage of the required examination volume could not be obtained. The examination coverage was limited to 85.8%. The percentage of coverage reported represents the aggregate coverage from all scans parallel and perpendicular to the weld. Limitations were caused by inside surface taper and the ledge shown in Attachment D. The percentage of coverage reported represents the aggregate coverage from all scans. The weld and adjacent base material were examined using 45° refracted shear waves and 45° refracted longitudinal waves. There were no recordable indications found in the areas that were examined. In order to achieve more coverage, the weld would have to be redesigned which is impractical.
(See Attachment D for exam information)

Paragraph D: (The Upper Shell and Core Flood Nozzle material is SA508 CL2. This weld has a diameter of 25.00 inches and a wall thickness of 12.00 inches.)

During ultrasonic examination, 100% coverage of the required examination volume could not be obtained. The examination coverage was limited to 84.2% of the required volume. The Core Flood Nozzles of a B&W 177 plant have several obstructions which limit ultrasonic examination coverage. In order of significance these are:

- The flow restrictor which is welded to the inner bore of the nozzle;
- The inlet nozzles located 30° on either side of each core flood nozzle;
- The taper above the core flood nozzles associated with the Core Support Ledge.

The percentage of exam volume coverage reported represents the aggregate coverage as follows:

Weld and adjacent base material = 87.6% scanned parallel to the weld in two opposite directions and 72.9% scanned perpendicular to the weld centerline from the nozzle bore and the vessel inside surface.

There were no recordable indications found in the areas that were examined for either of these welds. In order to achieve more coverage, the inlet nozzles would have to be moved, and the taper on the flange would have to be redesigned to allow greater access for scanning, which is impractical. In addition, because of the proximity of the flow restrictors limited scanning was performed from the nozzle I.D. as shown in Attachment E. In order to achieve more coverage, the flow restrictor would have to be moved to allow access for scanning, which is impractical.

(See Attachment E for exam information)

VI. Proposed Alternate Examinations or Testing

Paragraph E:
The scheduled 10-year code examination was performed on the referenced area/weld and it resulted in the noted limited scanning and coverage of the required ultrasonic volume. No additional examinations are planned for the area/weld during the current inspection interval.

VII. Implementation Schedule and Duration

Paragraph F
The scheduled third 10-year interval plan code examination was performed on the referenced area/weld resulting in limited scanning and volumetric coverage. No additional examinations are planned for the area/weld during the current inspection interval. The same area/weld may be examined again as part of the next (fourth) 10-year interval plan, depending on the applicable code year edition and addenda requirements adopted in the future.

VIII. Justification for Granting Relief

Paragraph G:
Ultrasonic examination of welds for item numbers B01.011, B01.021 and B01.30 were conducted using personnel, equipment and procedures qualified in accordance with ASME Section XI, Appendix VIII, Supplements 4 and 6, 1995 Edition with the 1996 Addenda as administered through the Performance Demonstration Initiative (PDI) Program. Although limited scanning prevented 100% coverage of the examination volume, the amount of coverage obtained for these examinations along with the additional volumetric and visual examinations (listed in the next paragraph) provides an acceptable level of quality and integrity. (See Paragraph I for additional justification.)

In addition to the Category B-A welds that relief is being sought for, there were 3 circumferential Category B-A welds that were inspected and all obtained greater than 90 % coverage and there were no reportable indications found during the inspections. Visual examinations were also performed as part of the reactor vessel inspections (item number B13.010.001 and B13.050.001) and were found to be without any reportable indications.

Paragraph H:
Ultrasonic examination of areas/welds for item numbers B03.090 were conducted using personnel, equipment and procedures qualified in accordance with ASME Section XI, Appendix VIII, Supplements 4, 6, & 7, 1995 Edition with the 1996 Addenda. Although limited scanning prevented 100% coverage of the examination volume, the amount of coverage obtained for these examinations provides an acceptable level of quality and integrity. (See Paragraph I for additional justification.)

Paragraph I:
Duke Energy will use the Code required pressure testing and VT-2 visual examination to compliment the limited examination coverage. The Code requires (reference Table IWB-2500-1, item numbers B15.010 and B15.050) that a system leakage test be performed after each refueling outage for Class 1. Additionally a system hydrostatic test (reference Table IWB-2500-1, item numbers B15.011 and B15.051) is required once during each 10-year inspection interval; however, Code Case N-498-1 was invoked in lieu of performing the hydrostatic test. These tests require a VT-2 visual examination for evidence of leakage. This testing provides adequate additional assurance of pressure boundary integrity.

Duke Energy will use VT-3 visual examination to compliment the limited examination coverage. The Code requires (reference Table IWB-2500-1, item number B13.010) that a VT-3 examination be performed after the first refueling outage and subsequent refueling outages at approximately 3 year periods. During the first and second periods of an interval a VT-3 examination is performed on areas above and below the reactor core that are made accessible for examination by removal of components during normal refueling outages. During the third period of an interval the VT-3 examination is performed on all of the reactor vessel interior surfaces at the same time that the automated UT exams are performed on the reactor vessel welds. These examinations provide adequate additional assurance of pressure boundary integrity.

In addition to the above Code required examinations (volumetric, pressure test, and VT-3), there are other activities which provide a high level of confidence that, in the unlikely case that leakage did occur through these welds, it would be detected and the Unit shutdown for repairs. Specifically, Technical Specification 3.4.13, "Reactor Coolant System Leakage" requires evaluation of Reactor Coolant System (RCS) leakage every 72 hours. This requirement is met using procedure PT/3/A/0600/10, "RCS Leakage," which is performed daily. In addition, Technical Specification 3.4.15, "RCS Leakage Detection Instrumentation" requires that a Reactor Building normal sump level indicator and a containment atmosphere radioactivity monitor be operable for RCS leakage detection. This requirement is met using the normal sump level indicator and the Reactor Building air particulate monitor (3RIA-47). An unexpected loss of level in the Letdown Storage Tank is another indication of potential RCS leakage.

Duke Energy Corporation has examined the welds/components referenced in this request to the maximum extent possible utilizing the latest in examination techniques and equipment. These welds were rigorously inspected by volumetric NDE methods during construction and verified to be free from unacceptable fabrication defects. Based on the coverage and results of the required volumetric and visual examinations performed during this outage, it is Duke's belief that this combination of elements provides a reasonable assurance of component integrity.

IX. Other Information

The following individuals contributed to the development of this relief request:

James J. McArdle (Principal NDE Level III Inspector) provided Sections III through V and part of Section VIII.

B. W. Carney, Jr. (Oconee Engineering) provided part of Section VIII.

Larry C. Keith (Oconee ISI Plan Manager) compiled the remaining sections.

Sponsored By: Larry C. Keith **Date** 6-28-06

Approved By: R. Kevin Rhyne **Date** 6/29/06

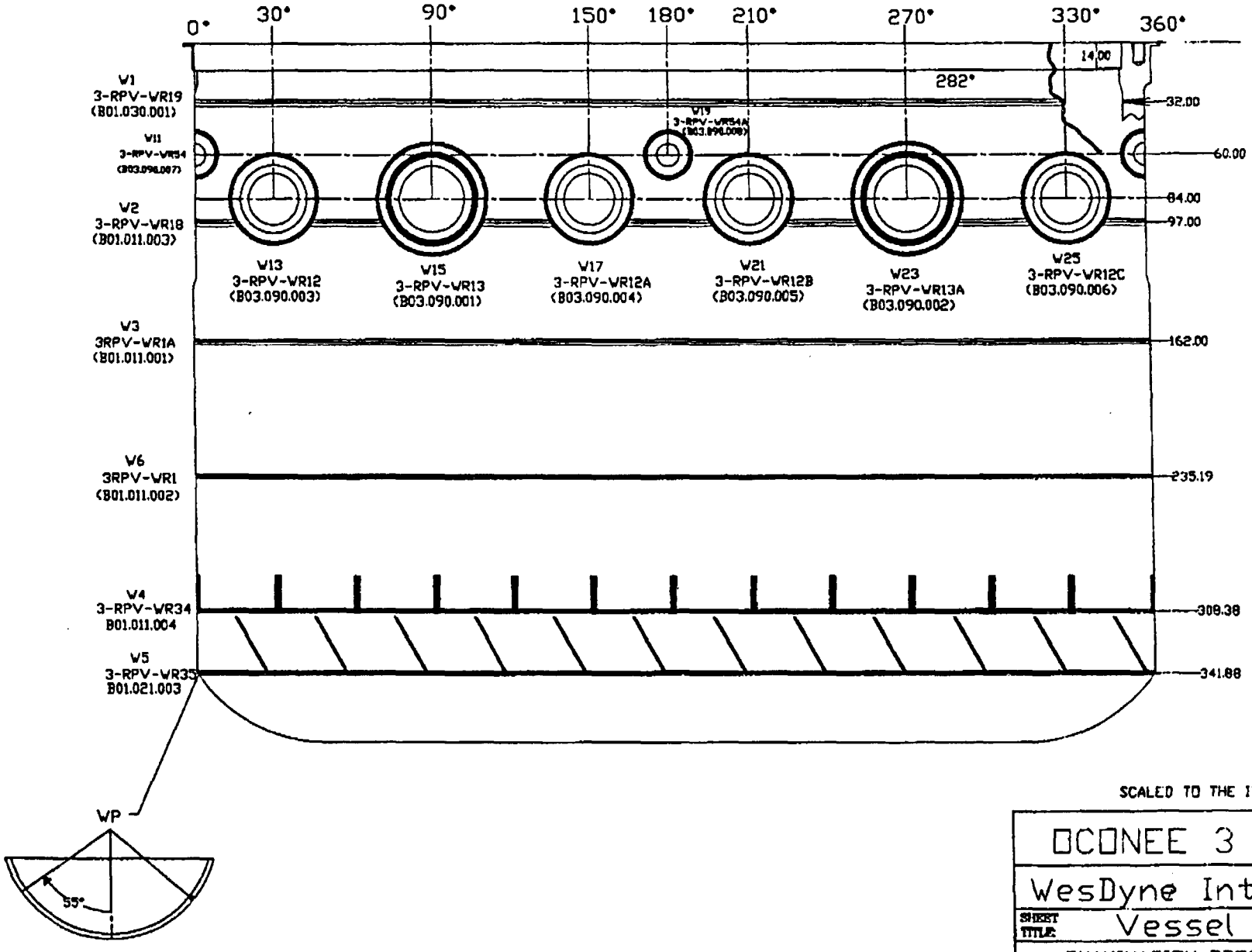

SCALED TO THE ID SURFACE

OCONEE 3 BOCO3	
WesDyne International	
SHEET TITLE	Vessel Rollout
EXAMINATION PROGRAM PLAN 2004	
ALL DIMENSIONS IN INCHES UNLESS OTHERWISE NOTED	SHEET 1 OF 22

Westinghouse Proprietary Class 2C

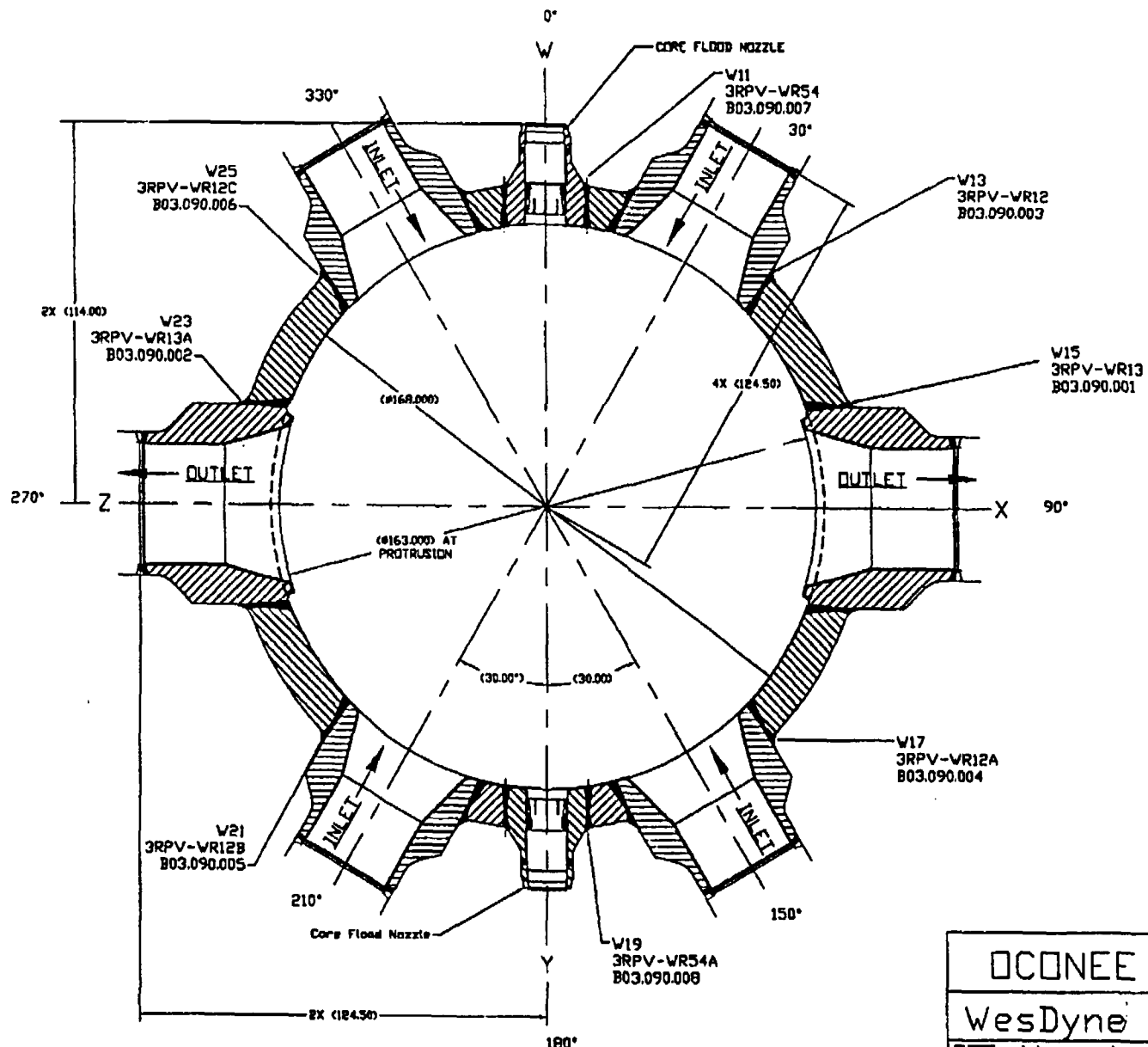

OCONEE 3 BOC03	
WesDyne International	
SHEET TITLE: Nozzle Orientation	
EXAMINATION PROGRAM PLAN 2004	
ALL DIMENSIONS IN INCHES UNLESS OTHERWISE NOTED	SHEET 3 OF 22

R.V. COVERAGE ESTIMATE BREAKDOWNS

PLANT NAME Oconee

WesDyne International

WELD NO. W4 (3-RPV-WR34)

COMPONENT Transition to Lower Shell Circ. Weld

BEAM ANGLE BREAK DOWN

BEAM DIRECTION	45 Shear		45 L Single		45 L Dual			
	WELD	VOLUME	WELD	VOLUME	WELD	VOLUME	WELD	VOLUME
Perpendicular	54.00	54.00	54.00	54.00	54.00	54.00		
Parallel	35.00	35.00	35.00	35.00	35.00	35.00		
AVERAGE	44.50		44.50		44.50			

Comments:

Combined Perp. 54.00 Combined Para. 35.00 Combined Average 44.50

Analyst [signature] Date 12/4/04

Westinghouse Proprietary Class 2C

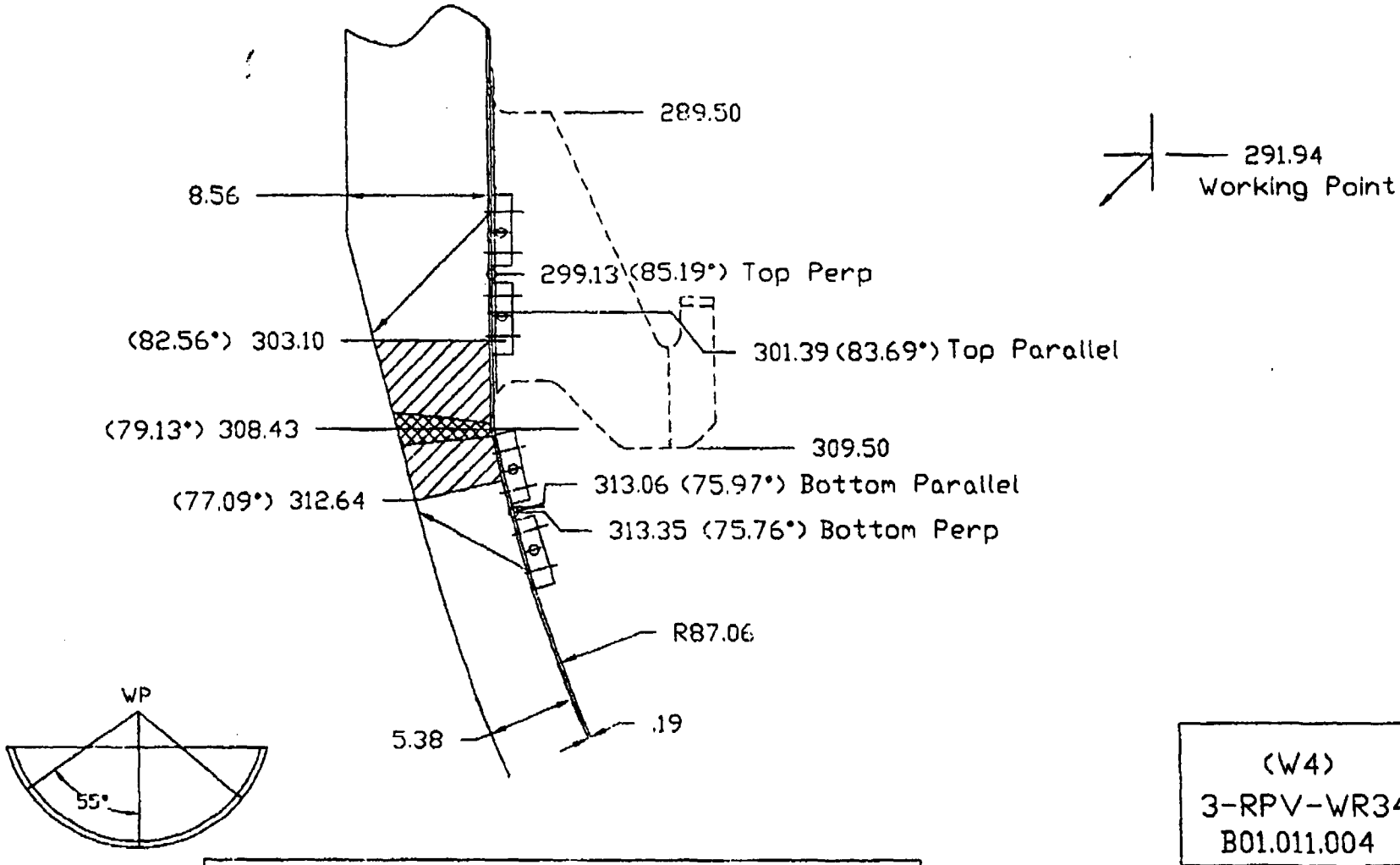

(W4)
3-RPV-WR34
B01.011.004

Scan Increment = 0.329° (0.5") for Parallel Scans
= 0.329° (0.50") for Perp Scans

Parallel Scan Limits +/- 4.6° Either Side of Core Guide Lugs
Perp Scan Limits +/- 3.1° Either Side of Core Guide Lugs
No Scans Performed Below Core Guide Lugs

OCONEE 3 BOC03

WesDyne International

SHEET TITLE Transition to Lower Shell Circ Weld

EXAMINATION PROGRAM PLAN 2004

ALL DIMENSIONS IN INCHES UNLESS OTHERWISE NOTED

SHEET 8 OF 22

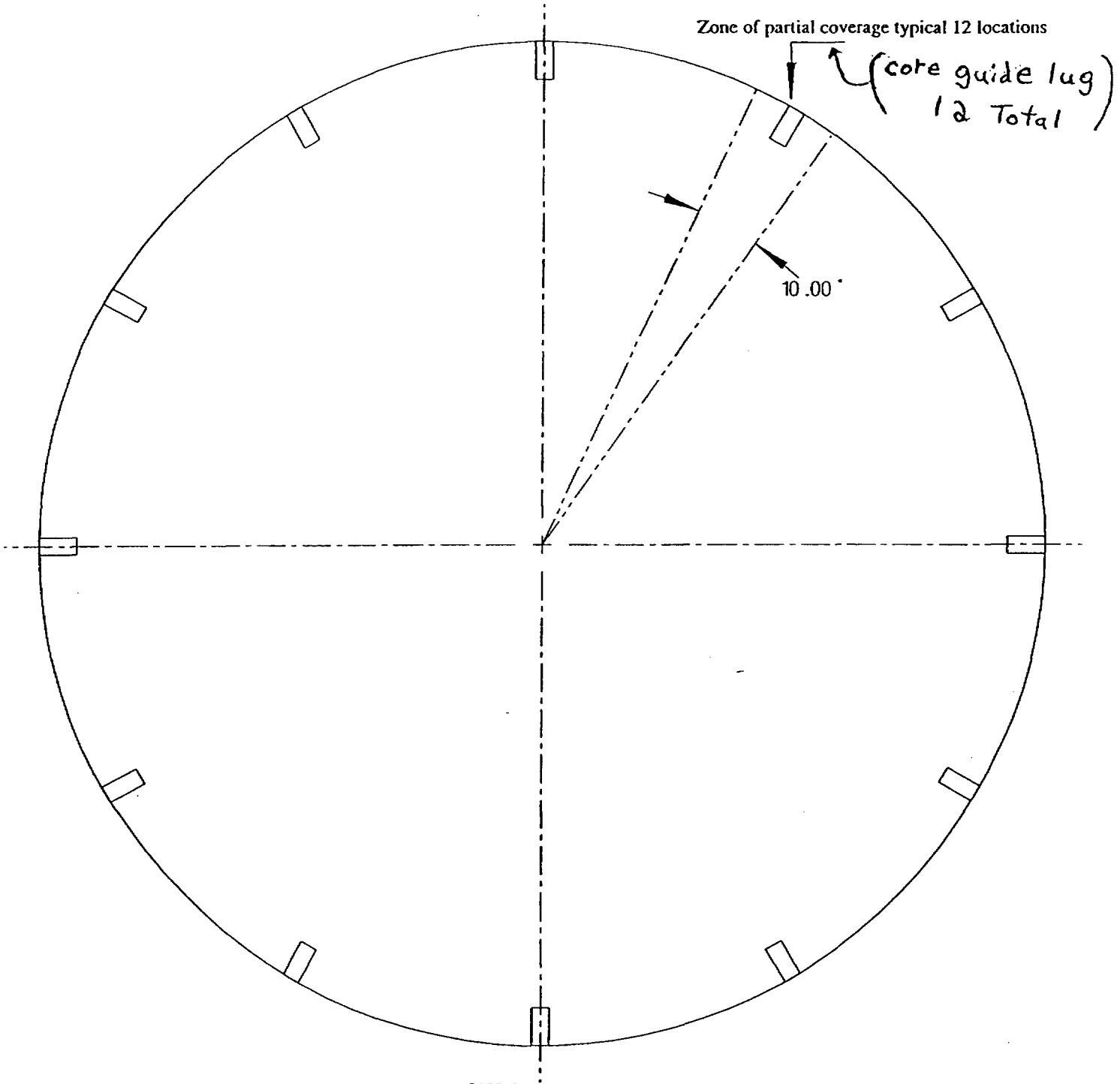

ONS-3
3-RPV-WR34

Westinghouse Proprietary Class 2C

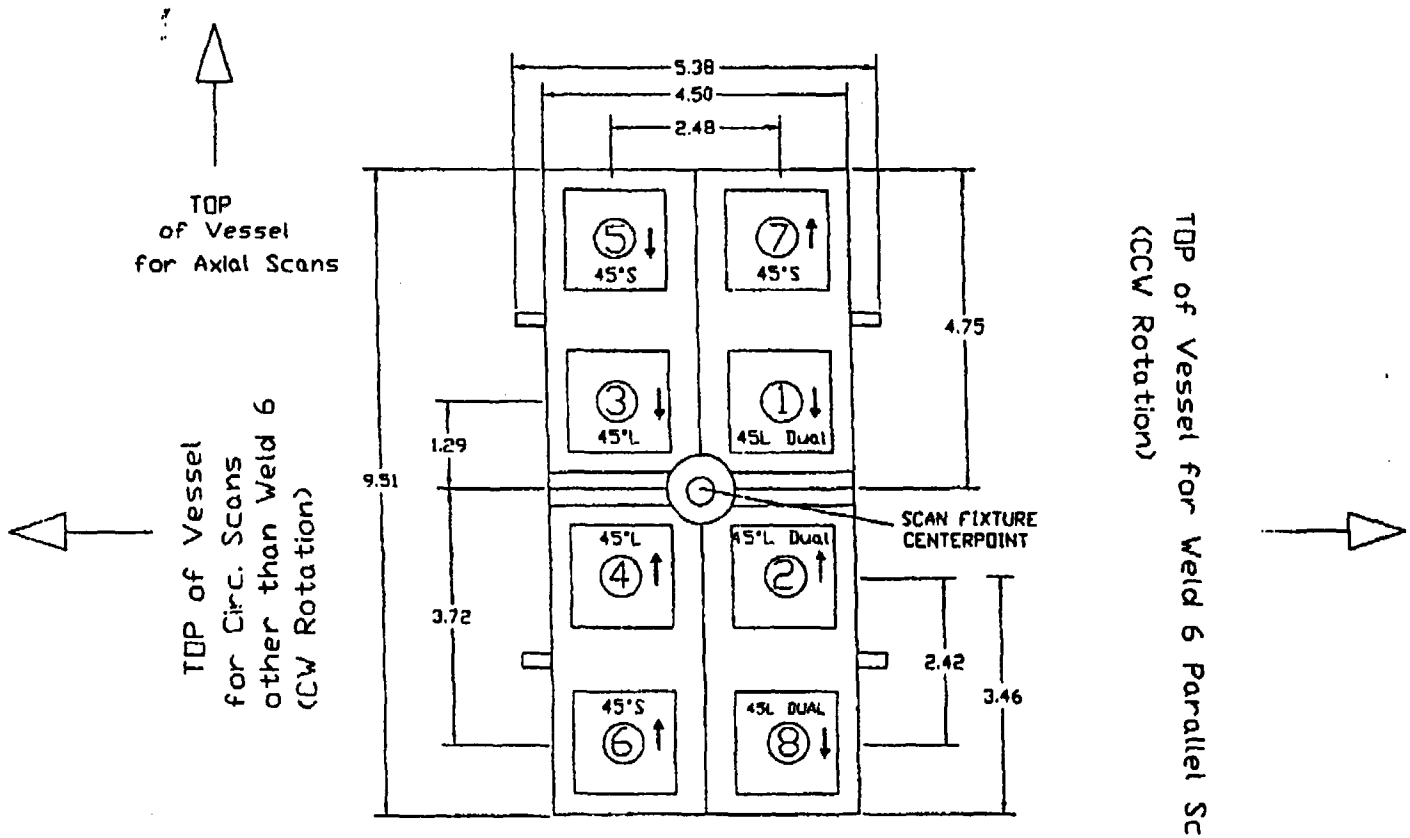

APPENDIX VIII SHELL EXAM CONFIGURATION
WITH EXTRA COVERAGE DUCERS

Note: US1-8 = Upper Robot
LS1-8 = Lower Robot

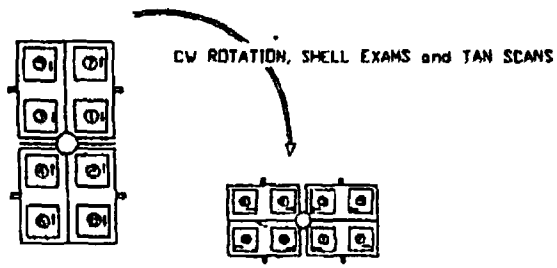

VIEW: FROM VESSEL CENTERLINE

OCONEE 3 BOC03	
WesDyne International	
SHEET TITLE	Appendix VIII Shell Sled
EXAMINATION PROGRAM PLAN	
ALL DIMENSIONS IN INCHES UNLESS OTHERWISE NOTED	

R.V. COVERAGE ESTIMATE BREAKDOWNS

PLANT NAME Oconee

WELD NO. W5 (3-RPV-WR35)

COMPONENT Lower Head to Transition Circ. Weld

WesDyne International

BEAM ANGLE BREAK DOWN

BEAM DIRECTION	45 Shear		45 L Single		45 L Dual			
	WELD	VOLUME	WELD	VOLUME	WELD	VOLUME	WELD	VOLUME
Perpendicular	53.33	53.33	53.33	53.33	53.33	53.33		
Parallel	46.66	46.66	46.66	46.66	46.66	46.66		
AVERAGE	50.00		50.00		50.00			

Comments:

COMBINED AVERAGE 50.00 Analyst [signature] Date 12/4/04

Westinghouse Proprietary Class 2C

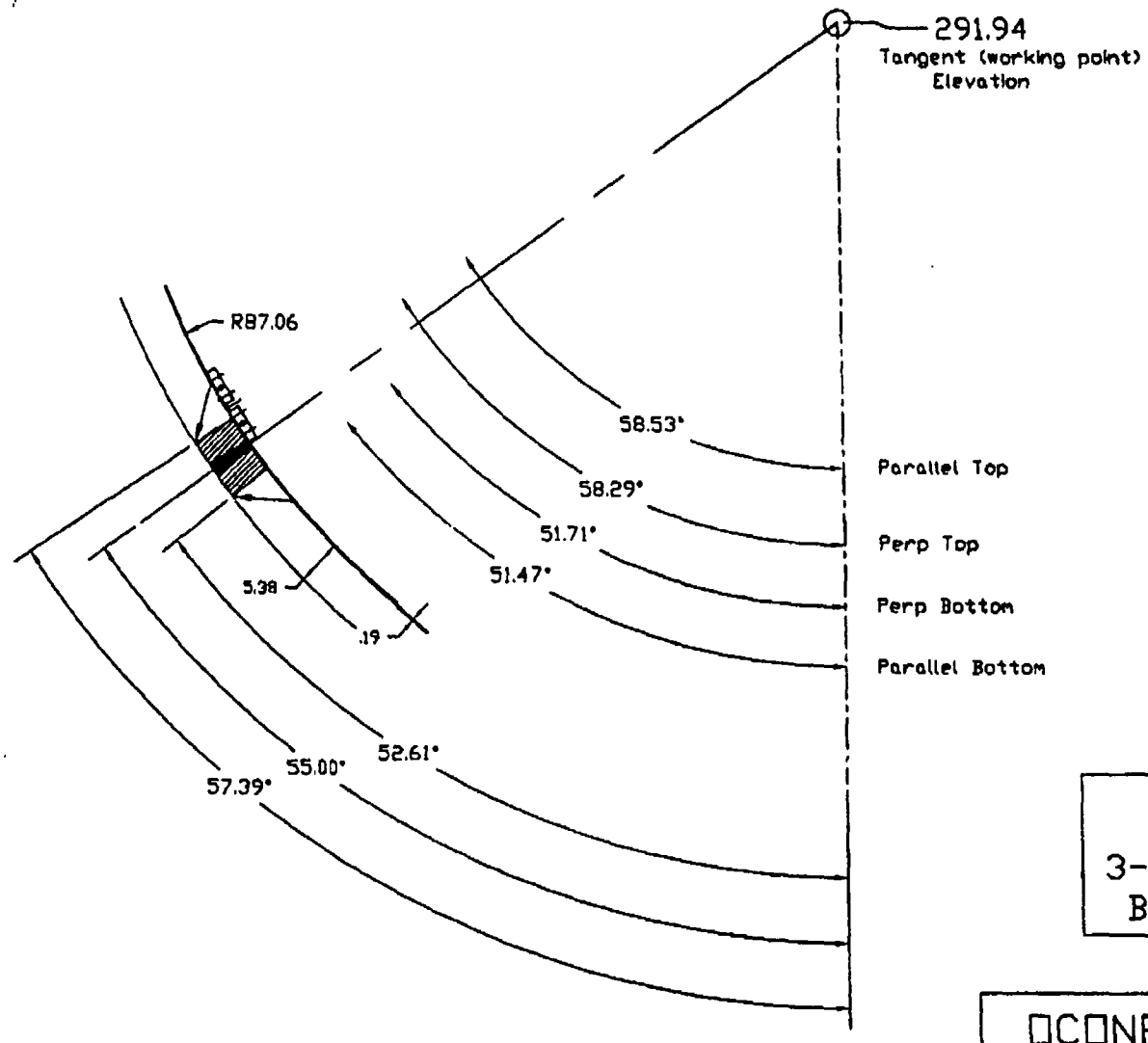

(W5)
3-RPV-WR35
B01.021.003

Scan Increment = 0.329° (0.5") for Parallel Scans
= 0.329° (0.50") for Perp Scans

OCONEE 3 BOC03	
WesDyne International	
SHEET TITLE Lower Head to Transition Circ Weld	
EXAMINATION PROGRAM PLAN 2004	
ALL DIMENSIONS IN INCHES UNLESS OTHERWISE NOTED	SHEET 9 OF 22

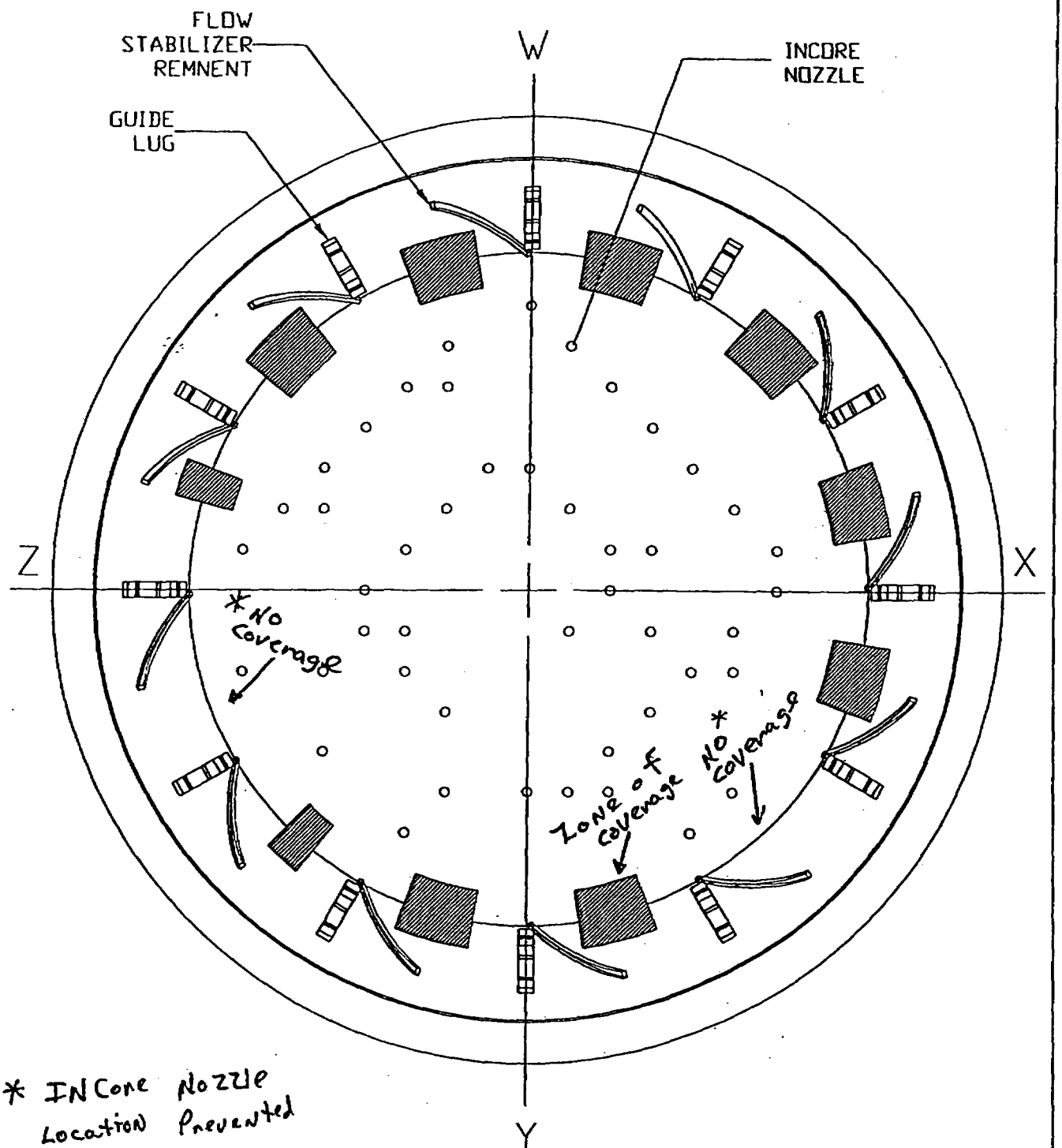

* INCore Nozzle Location Prevented Scanning

OCONEE-3
3-RPV-WR35
B01.021.003

Westinghouse Proprietary Class 2C

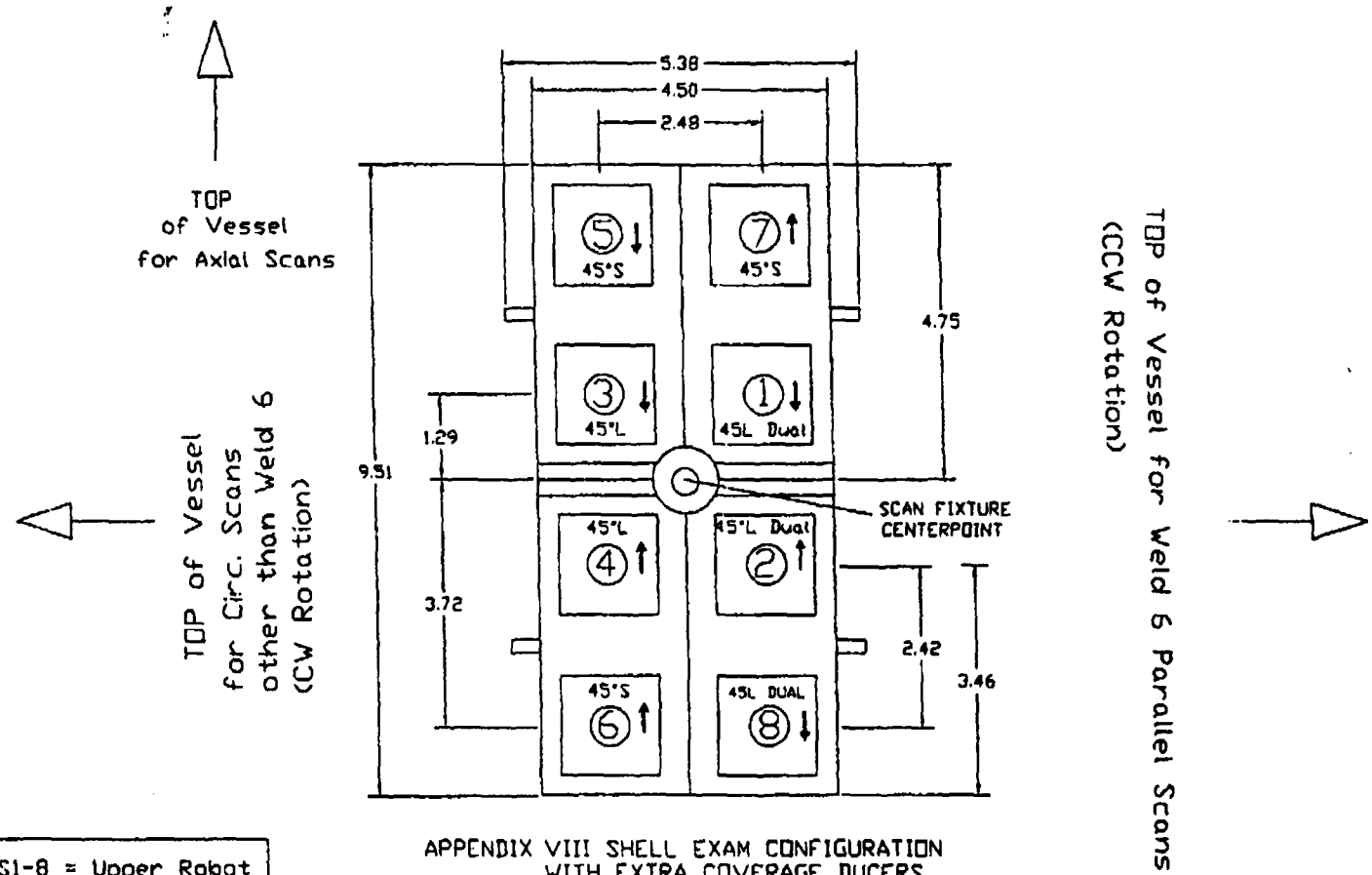

APPENDIX VIII SHELL EXAM CONFIGURATION
WITH EXTRA COVERAGE DUCERS

Note: US1-8 = Upper Robot
LS1-8 = Lower Robot

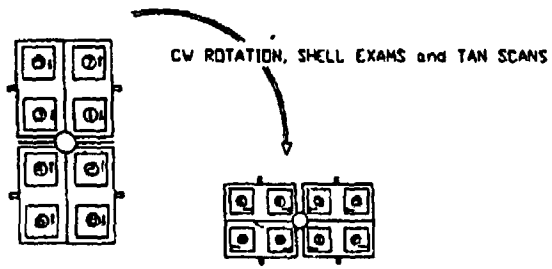

VIEW: FROM VESSEL CENTERLINE

OCONEE 3 BOC03	
WesDyne International	
SHEET TITLE:	Appendix VIII Shell Sled
EXAMINATION PROGRAM PLAN	
ALL DIMENSIONS IN INCHES UNLESS OTHERWISE NOTED	

Westinghouse Proprietary Class 2C

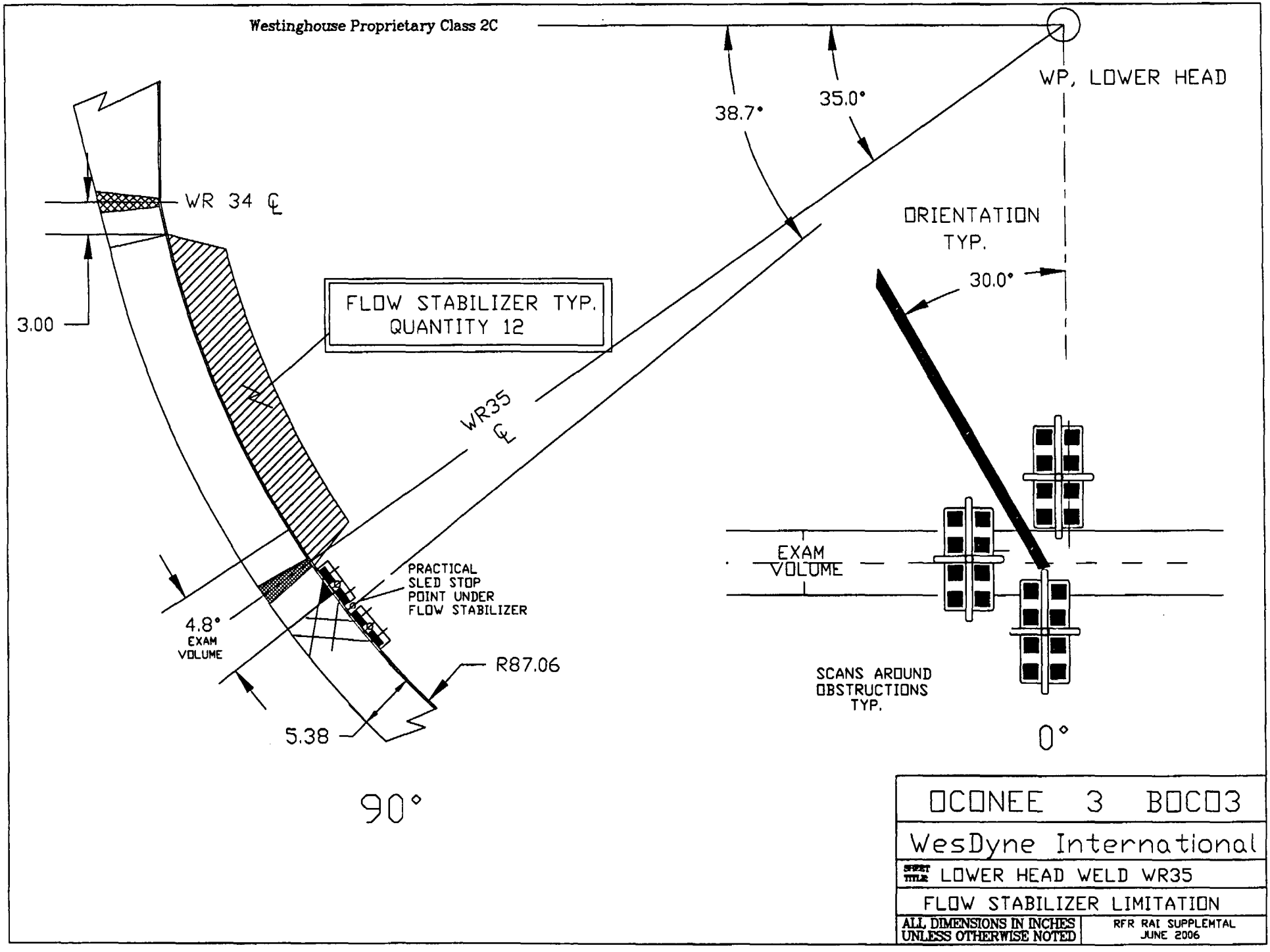

R.V. COVERAGE ESTIMATE BREAKDOWNS

PLANT NAME OCONEE

WesDyne International

WELD NO. W1 (3-RPV-WR19)

COMPONENT Shell to Flange Weld

BEAM ANGLE BREAK DOWN

BEAM DIRECTION	45 Shear		45 L Single		45 L Dual			
	WELD	VOLUME	WELD	VOLUME	WELD	VOLUME	WELD	VOLUME
Perpendicular	86.66	86.66	86.66	86.66	86.66	86.66		
Parallel	85.00	85.00	85.00	85.00	85.00	85.00		
AVERAGE	85.83		85.83		85.83			

Comments:

Combined Perp. 86.66 Combined Para. 85.00 Combined Average 85.83

Analyst [signature] Date 12/4/04

Reclassified as Westinghouse Non-Proprietary Class 3 on 8/7/08

Westinghouse Proprietary Class 2C

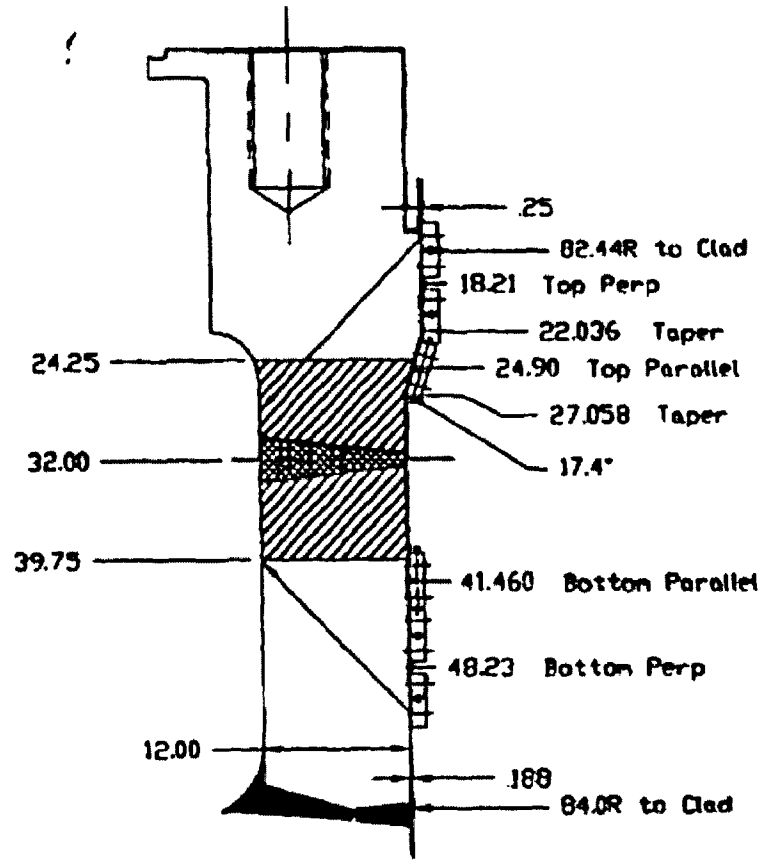

(W1)
3-RPV-WR19
B01.030.001

Scan Increment = 0.5° for Parallel Scans
= 0.341° for Perp Scans

OCONEE 3 B0C03

WesDyne International

Upper Shell to Flange

EXAMINATION PROGRAM PLAN 2004

SHEET 4 OF 22

R.V. COVERAGE ESTIMATE BREAKDOWNS

PLANT NAME Oconee

WesDyne International

WELD NO. W11 (3-RPV-WR54)

COMPONENT Core Flood Nozzle to Shell @ 0°

BEAM ANGLE BREAK DOWN

BEAM DIRECTION	45 Shear		45 L Single		45 L Dual		Combined Bore/Star	
	WELD	VOLUME	WELD	VOLUME	WELD	VOLUME	WELD	VOLUME
TAN Scan								
Parallel	94.22	80.95	100.00	98.71	100.00	100.00		
Combined Bore&Star								
Perpendicular							74.75	71.01
AVERAGE	87.59		99.35		100.00		72.88	

Comments: Coverage calculation is based on the Bore and Star scan (combined) as perpendicular, and the Tan Scan (parallel). Limitation is due to vessel saddle effect at 90° & 270° and the flow restrictor located in the inside of the nozzle.

Combined Perp. 72.88 Combined Para. 95.65 Combined Average 84.26

Analyst [signature] Date 12/4/04

R.V. COVERAGE ESTIMATE BREAKDOWNS

PLANT NAME Oconee

WesDyne International

WELD NO. W19 (3-RPV-WR54A)

COMPONENT Core Flood Nozzle to Shell @ 180°

BEAM ANGLE BREAK DOWN

BEAM DIRECTION	45 Shear		45 L Single		45 L Dual		Combined Bore/Star	
	WELD	VOLUME	WELD	VOLUME	WELD	VOLUME	WELD	VOLUME
TAN Scan								
Parallel	94.22	80.95	100.00	98.71	100.00	100.00		
Combined Bore&Star								
Perpendicular							74.75	71.01
AVERAGE	87.59		99.35		100.00		72.88	

Comments: Coverage calculation is based on the Bore and Star scan (combined) as perpendicular, and the Tan Scan (parallel). Limitation is due to vessel saddle effect at 90° & 270° and the flow restrictor located in the inside of the nozzle.

Combined Perp. 72.88 Combined Para. 95.65 Combined Average 84.26

Analyst [signature] Date 12/4/01

Westinghouse Proprietary Class 2C

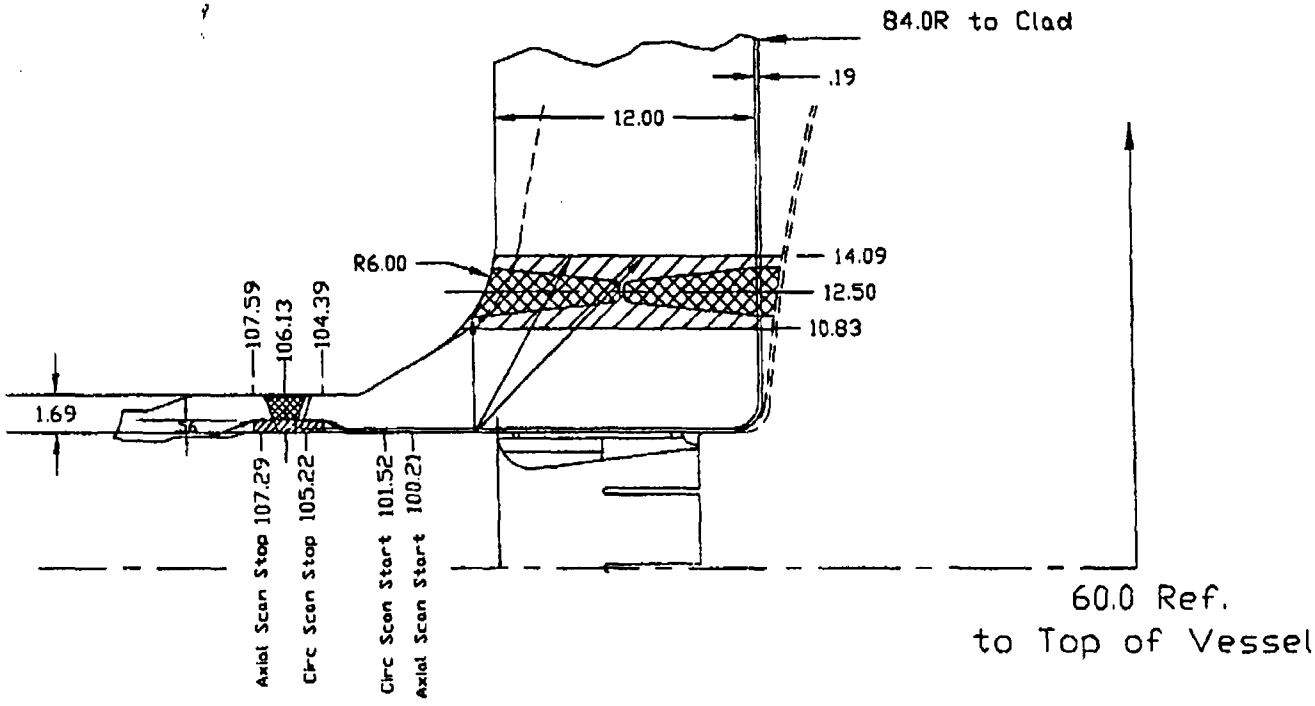

Core Flood Nozzle to Shell @ 0° - 3RPV-WR54 (B03.090.007A)
Core Flood Nozzle to Shell @ 180° - 3RPV-WR54A (B03.090.008A)

Core Flood Nozzle Safe End @ 0° - 3RPV-WR53 (B05.010.001A, B05.010.001B)
Core Flood Nozzle Safe End @ 180° - 3RPV-WR53A (B05.010.002A, B05.010.002B)

OCONEE 3 B0C03	
WesDyne International	
SHEET TITLE Core Flood Nozzle to Shell & Safe End Welds	
EXAMINATION PROGRAM PLAN 2004	
ALL DIMENSIONS IN INCHES UNLESS OTHERWISE NOTED	SHEET 19 OF 22

Westinghouse Proprietary Class 2C

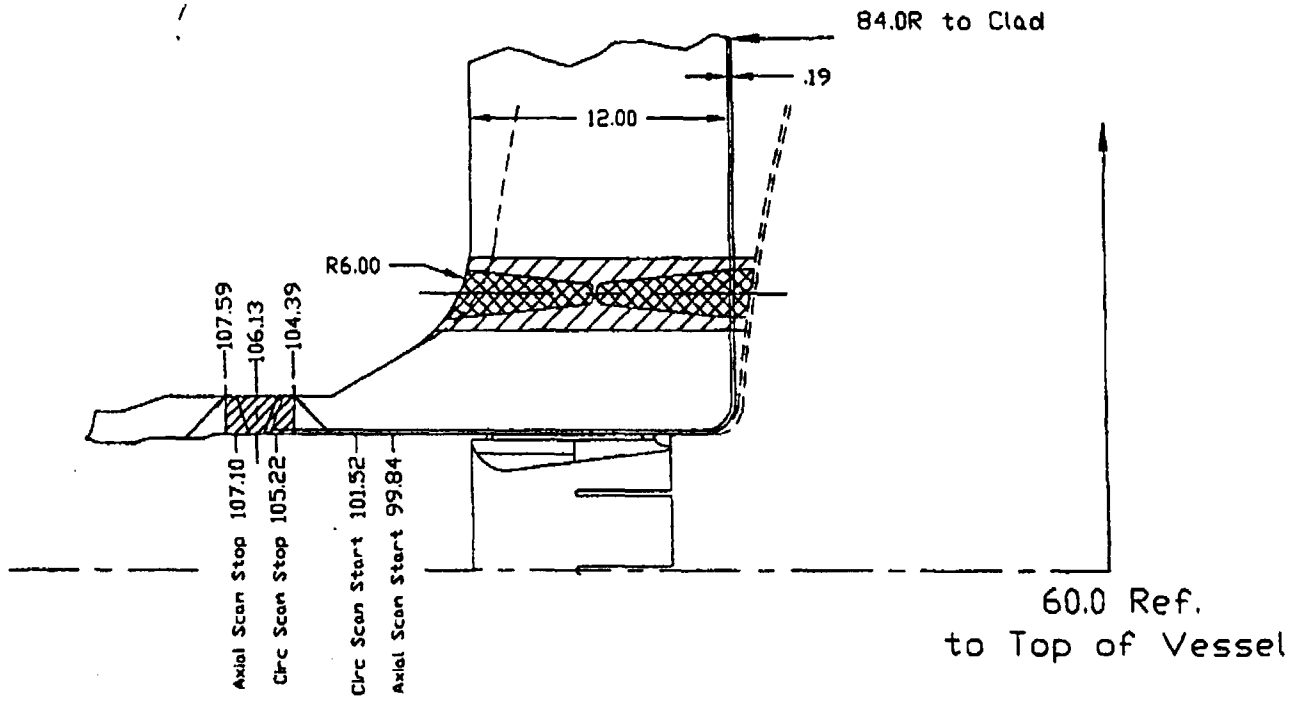

Core Flood Nozzle Safe End @ 0° - 3RPV-WR53 (B05.010.001A, B05.010.001B)
Core Flood Nozzle Safe End @ 180° - 3RPV-WR53A (B05.010.002A, B05.010.002B)

Core Flood Nozzle Safe End @ 0° (OD Alternative) - 3RPV-WR53 (B05.010.001)
Core Flood Nozzle Safe End @ 180° (OD Alternative) - 3RPV-WR53A (B05.010.002)

Scan Increment: Axial Scans = 0.125" (1.17°)
Circ Scans = 0.080"

OCONEE 3	BOC03
WesDyne International	
Core Flood Safe End Welds Sizing & OD Alternative	
EXAMINATION PROGRAM PLAN 2004	
ALL DIMENSIONS IN INCHES UNLESS OTHERWISE NOTED	SHEET 20 OF 22

Westinghouse Proprietary Class 2C

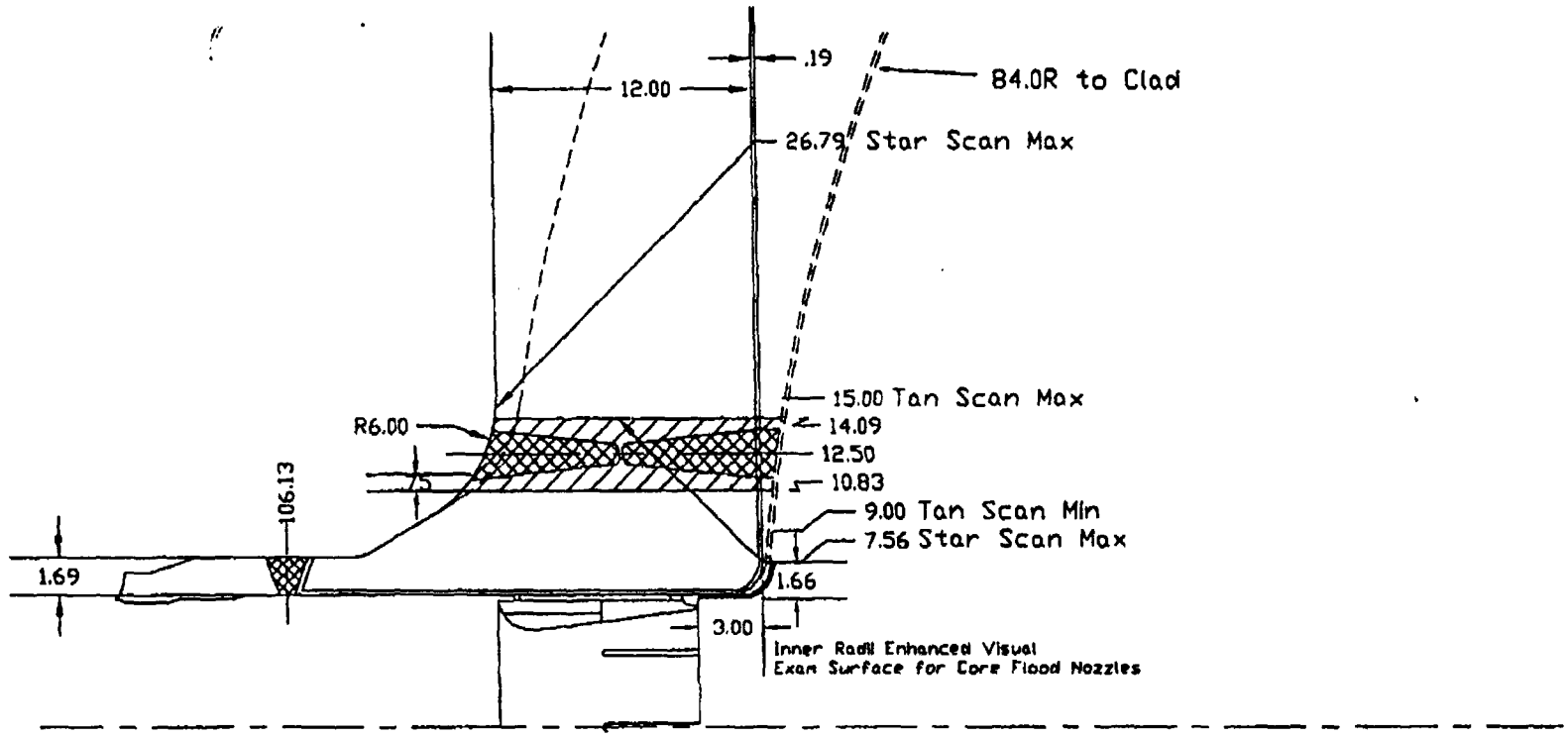

Core Flood Nozzle to Shell @ 0° Inner Radius VT-- 3RPV-WR54 (B03.100.007)
Core Flood Nozzle to Shell @ 180° Inner Radius VT- 3RPV-WR54A (B03.100.008)

Core Flood Nozzle to Shell @ 0° - 3RPV-WR54 (B03.090.007)
Core Flood Nozzle to Shell @ 180° - 3RPV-WR54A (B03.090.008)

Scan Increment: Star Scans = 2.29° (0.50" @ Nozzle to Shell Weld ℄
Tan Scans = 0.50"

OCONEE 3 B0C03	
WesDyne International	
SHEET TITLE Core Flood Nozzle to Shell TAN, Star IR Exams	
EXAMINATION PROGRAM PLAN 2004	
ALL DIMENSIONS IN INCHES UNLESS OTHERWISE NOTED	SHEET 21 OF 22

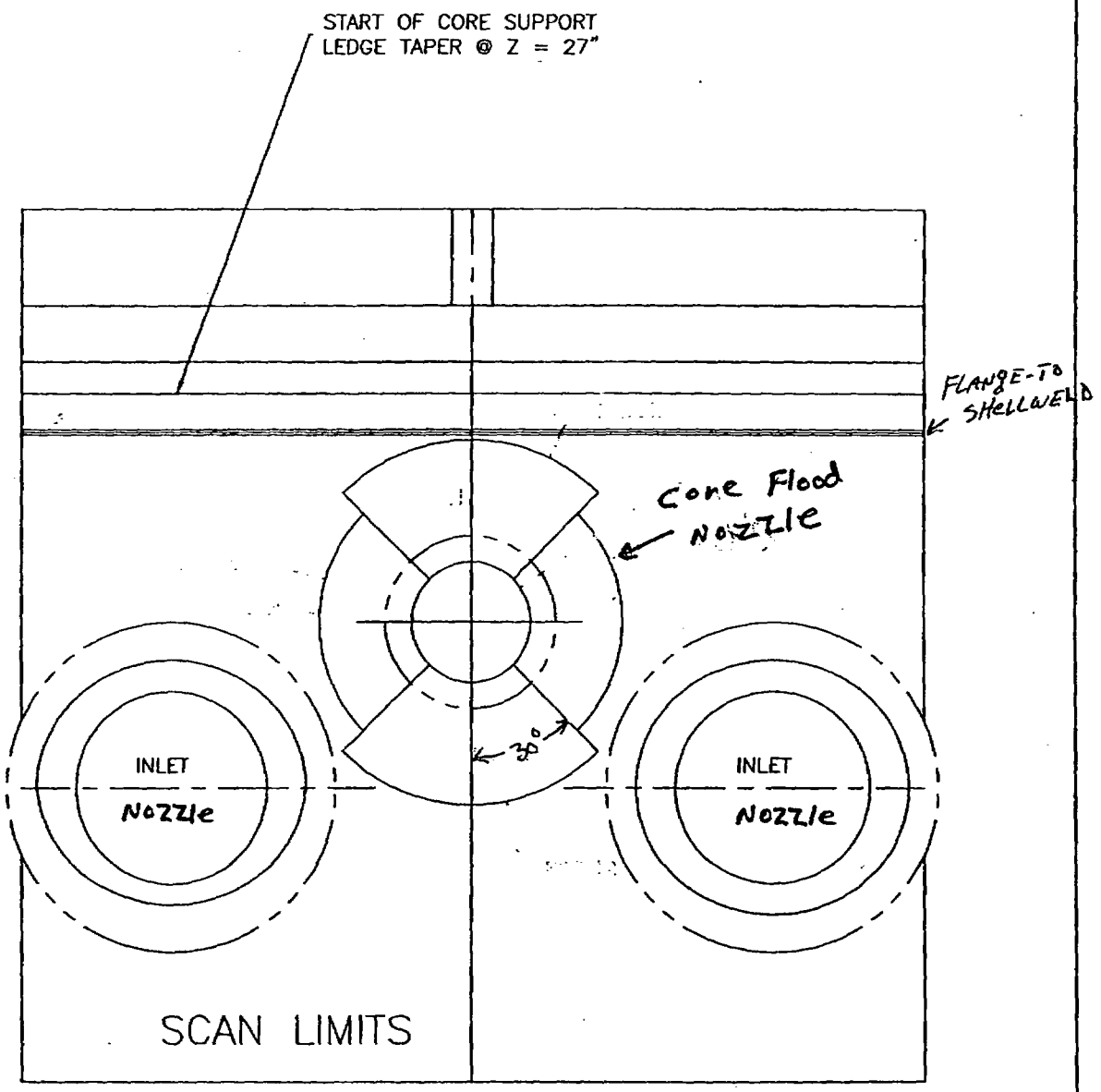
START OF CORE SUPPORT
LEDGE TAPER @ Z = 27"
FLANGE-TO
SHELLWELD
Core Flood
NOZZLE
30°
INLET
NOZZLE
INLET
NOZZLE
SCAN LIMITS

ATTACHMENT E
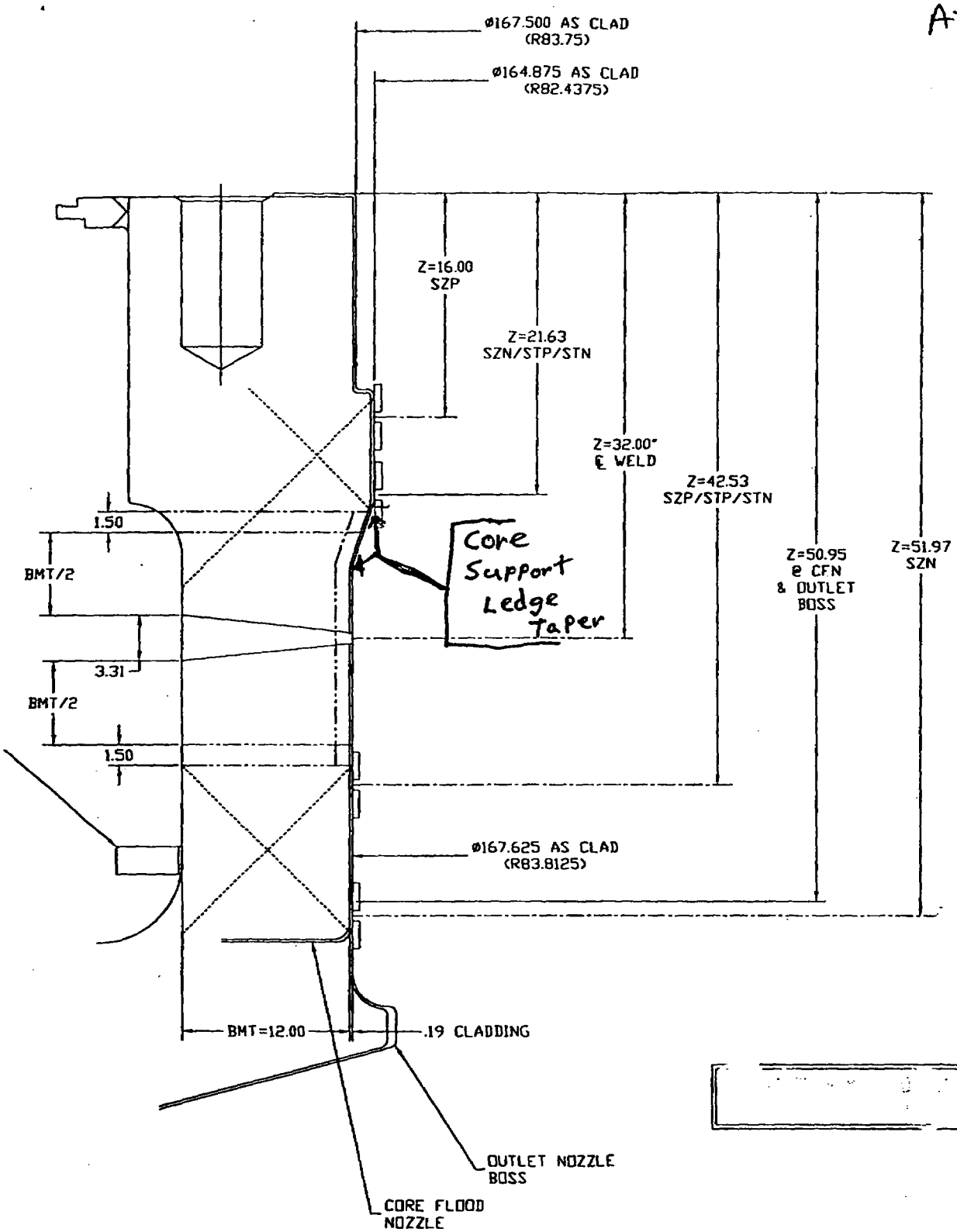
Page 6 of 6