10 CFR 50.90

Palo Verde Nuclear Generating Station

David Mauldin
Vice President
Nuclear Engineering

Tel: 623-393-5553
Fax: 623-393-6077

Mail Station 7605
PO Box 52034
Phoenix, Arizona 85072-2034

102-05546-CDM/SAB/GAM
August 16, 2006

Attn: Document Control Desk
U.S. Nuclear Regulatory Commission
Washington, DC 20555-0001

Dear Sirs:

Subject: Palo Verde Nuclear Generating Station (PVNGS)
Units 1, 2 and 3
Docket Nos. STN 50-528, 50-529, and 50-530
Request for Amendment to Technical Specification Section 3.8.1, AC Sources – Operating, Surveillance Requirements 3.8.1.9, 3.8.1.10, and 3.8.1.14

Pursuant to 10 CFR 50.90, Arizona Public Service Company (APS) hereby requests changes to Technical Specification (TS) Section 3.8.1, AC Sources – Operating. The proposed changes would revise the Palo Verde Nuclear Generating Station (PVNGS) Units 1, 2, and 3 Operating Licenses to modify the notes to TS Surveillance Requirements (SRs) 3.8.1.9, diesel generator (DG) single largest load rejection test, 3.8.1.10, DG full load rejection test, and 3.8.1.14, DG endurance and margin test to (1) allow these SRs to be performed, or partially performed, in reactor modes that currently are not allowed by the TSs, and (2) require that SRs 3.8.1.10 and 3.8.1.14 be performed at a power factor of ≤ 0.9 if performed with the emergency DGs synchronized to the grid unless grid conditions do not permit.

The proposed change to allow SR 3.8.1.9 to be performed in reactor modes that currently are not allowed by the TS is consistent with NRC-approved Industry/Technical Specification Task Force (TSTF) 283, Revision 3. The proposed changes to SRs 3.8.1.10 and 3.8.1.14 to require that these SRs be performed at a power factor of ≤ 0.9 if performed with the emergency diesel generators synchronized to the grid unless grid conditions do not permit are consistent with NRC-approved NUREG-1432, Standard Technical Specifications, Combustion Engineering Plants, and NRC-approved TSTF-276, Revision 2. The provisions in NUREG-1432 and TSTF-276 regarding performing SR 3.8.1.9 at a power factor of ≤ 0.9 if performed with the emergency diesel generators

A001

synchronized to the grid is not being implemented because SR 3.8.1.9 is never performed with the emergency diesel generators synchronized to the grid, as stated in both the PVNGS and NUREG-1432 TS Bases for SR 3.8.1.9.

APS requests approval of the proposed amendment by March 31, 2006. Once approved, the amendment shall be implemented within 120 days.

In accordance with the PVNGS Quality Assurance Program, the Plant Review Board and the Offsite Safety Review Committee have reviewed and concurred with this proposed amendment. By copy of this letter, this submittal is being forwarded to the Arizona Radiation Regulatory Agency (ARRA) pursuant to 10CFR 50.91(b)(1).

No commitments are being made to the NRC by this letter. If you have any questions, please contact Thomas N. Weber at (623) 393-5764.

Sincerely,

David Mauldin

CDM/SAB/GAM/

Enclosures:
1. Notarized affidavit
2. APS' Evaluation of the Proposed Change(s)

Attachments:
2A. Proposed Technical Specification Pages (Mark-up)
2B. Proposed Technical Specification Pages (Retyped)
2C. Changes to TS Bases Pages

cc:	B. S. Mallett	NRC Region IV Regional Administrator
	M. B. Fields	NRC NRR Project Manager
	G. G. Warnick	NRC Senior Resident Inspector for PVNGS
	A. V. Godwin	Arizona Radiation Regulatory Agency (ARRA)
	T. Morales	Arizona Radiation Regulatory Agency (ARRA)

ENCLOSURE 1

AFFIDAVIT

STATE OF ARIZONA)
) ss.
COUNTY OF MARICOPA)

I, David Mauldin, represent that I am Vice President, Nuclear Engineering, Arizona Public Service Company (APS), that the foregoing document has been signed by me on behalf of APS with full authority to do so, and that to the best of my knowledge and belief, the statements made therein are true and correct.

David Mauldin

David Mauldin

Sworn To Before Me This 16th Day Of August, 2006.

Cassandra Justiss

Notary Public

OFFICAL SEAL
Cassandre Justiss
NOTARY PUBLIC - STATE of ARIZONA
MARICOPA COUNTY
MY COMM. EXPIRES October 30, 2006

Notary Commission Stamp

ENCLOSURE 2

ARIZONA PUBLIC SERVICE COMPANY'S EVALUATION

Subject: **Request for Amendment to Technical Specification Section 3.8.1, AC Sources – Operating, Surveillance Requirements 3.8.1.9, 3.8.1.10, and 3.8.1.14**

1.0 DESCRIPTION

The proposed changes would revise the Palo Verde Nuclear Generating Station (PVNGS) Units 1, 2, and 3 Operating Licenses to modify the notes to Technical Specification (TS) Surveillance Requirements (SRs) 3.8.1.9, diesel generator (DG) single largest load rejection test, 3.8.1.10, DG full load rejection test, and 3.8.1.14, DG endurance and margin test to (1) allow these SRs to be performed, or partially performed, in reactor modes that currently are not allowed by the TSs, and (2) require that SRs 3.8.1.10 and 3.8.1.14 be performed at a power factor of ≤ 0.9 if performed with the emergency diesel generators synchronized to the grid unless grid conditions do not permit.

The proposed change to allow SR 3.8.1.9 to be performed in reactor modes that currently are not allowed by the TS is consistent with NRC-approved Industry/Technical Specification Task Force (TSTF) 283, Revision 3. The proposed changes to SRs 3.8.1.10 and 3.8.1.14 to require that these SRs be performed at a power factor of ≤ 0.9 if performed with the emergency diesel generators synchronized to the grid unless grid conditions do not permit are consistent with NRC-approved NUREG-1432, Standard Technical Specifications, Combustion Engineering Plants, and NRC-approved TSTF-276, Revision 2. The provisions in NUREG-1432 and TSTF-276 regarding performing SR 3.8.1.9 at a power factor of ≤ 0.9 if performed with the emergency diesel generators synchronized to the grid is not being implemented because SR 3.8.1.9 is never performed with the emergency diesel generators synchronized to the grid, as stated in both the PVNGS and NUREG-1432 TS Bases for SR 3.8.1.9.

2.0 PROPOSED CHANGES

2.1. SR 3.8.1.9

The note in SR 3.8.1.9, DG single largest load rejection test, currently states:

> *This Surveillance shall not be performed in MODE 1, 2, 3, or 4.*

The note will be changed for consistency with TSTF-283, Revision 3, to state:

> *This Surveillance shall not normally be performed in MODE 1, 2, 3, or 4. However, this Surveillance may be performed to reestablish OPERABILITY provided an assessment determines the safety of the plant is maintained or enhanced.*

The associated TS Bases for SR 3.8.1.9 will be revised to be consistent with TSTF-283, Revision 3, as shown in attachment 2C.

2.2. SR 3.8.1.10

The note in SR 3.8.1.10, DG full load rejection test, currently states:

This Surveillance shall not be performed in MODE 1 or 2.

This note will be deleted.

In addition, the following new note, consistent with NUREG-1432 and TSTF-276, Revision 2, will be added:

If performed with the DG synchronized with offsite power, it shall be performed at a power factor ≤ 0.9. However, if grid conditions do not permit, the power factor limit is not required to be met. Under this condition the power factor shall be maintained as close to the limit as practicable.

The associated TS Bases for SR 3.8.1.10 will be revised to be consistent with TSTF-276, Revision 2, with site-specific enhancements describing when the power factor should be able to be achieved and when it cannot be achieved, as shown in attachment 2C.

2.3. SR 3.8.1.14

The note in SR 3.8.1.14, DG endurance and margin test, currently states:

This Surveillance shall not be performed in MODE 1 or 2.

This note will be deleted.

In addition, the following new note, consistent with NUREG-1432 and TSTF-276, Revision 2, will be added:

If performed with the DG synchronized with offsite power, it shall be performed at a power factor ≤ 0.9. However, if grid conditions do not permit, the power factor limit is not required to be met. Under this condition the power factor shall be maintained as close to the limit as practicable.

The TS Bases for SR 3.8.1.14 will be revised to be consistent with TSTF-276, Revision 2, with site-specific enhancements describing when the power factor should be able to be achieved and when it cannot be achieved, as shown in attachment 2C.

Additionally, the following compensatory measures for SR 3.8.1.14 would be added to the TS Bases, as shown in the TS Bases markup pages in Attachment 2C:

> *The following compensatory measures shall be implemented prior to the performance of this SR in MODE 1 or 2 with the DG connected to an offsite circuit:*
>
> a. *Weather conditions will be assessed, and the SR will not be scheduled when severe weather conditions and/or unstable grid conditions are predicted or present.*
>
> b. *No discretionary maintenance activities will be scheduled in the APS switchyard or the unit's 13.8 kV power supply lines and transformers which could cause a line outage or challenge offsite power availability to the unit performing this SR.*
>
> c. *All activity, including access, in the Salt River Project (SRP) switchyard shall be closely monitored and controlled. Discretionary maintenance within the switchyard that could challenge offsite power supply availability will be evaluated in accordance with 10 CFR 50.65(a)(4) and managed on a graded approach according to risk significance.*

3.0 BACKGROUND

By letter no. 102-04946, dated May 28, 2003, Arizona Public Service Company (APS) requested PVNGS operating license amendments to revise several surveillance requirements (SRs) in TS 3.8.1 on AC sources and SR 3.8.4.6 for DC sources for plant operation. The revised SRs have notes deleted or modified to adopt in part the NRC-approved TS Task Force (TSTF) 283, Revision 3, which allow these revised SRs to be performed, or partially performed, in reactor modes that previously were not allowed by the TSs. By letter no. 102-0349, dated September 27, 2005, APS withdrew the proposed changes to SR 3.8.1.9, 3.8.1.10, and 3.8.1.14 that were part of the May 28, 2003 amendment request because the NRC informed APS that the proposed changes could not be approved unless they were revised to include the requirement to be performed at a specified power factor as described in NUREG-1432, Standard Technical Specifications, Combustion Engineering Plants. Although PVNGS converted to the improved Standard Technical Specifications in 1998, the requirements to perform the SRs at a specified power factor were not in the old TSs prior to conversion and therefore were not included in the revised TSs (Amendment No. 117). Separately, the proposed changes to SRs 3.8.4.7 and 3.8.4.8 were withdrawn by letter no. 102-05120, dated June 23, 2004.

By letter dated September 29, 2005, the NRC issued Amendment No. 156 to the PVNGS operating licenses which approved the May 28, 2003 amendment request with the exception of the proposed changes to SRs 3.8.1.9, 3.8.1.10, 3.8.1.14, 3.8.4.7, and 3.8.4.8. This proposed amendment request is resubmitting the proposed changes to

SRs 3.8.1.9, 3.8.1.10, and 3.8.1.14 that were part of the May 28, 2003 amendment request, with additional proposed changes to add the power factor testing requirements to SRs 3.8.1.10 and 3.8.1.14 from NUREG-1432 as modified by NRC-approved TSTF-276, Revision 2. The provisions in NUREG-1432 and TSTF-276 regarding performing SR 3.8.1.9 at a power factor of ≤ 0.9 if performed with the emergency diesel generators synchronized to the grid is not being implemented because SR 3.8.1.9 is never performed with the emergency diesel generators synchronized to the grid, as stated in both the PVNGS and NUREG-1432 TS Bases for SR 3.8.1.9.

Pursuant to 10 CFR 50.90, APS hereby requests changes to TS SRs 3.8.1.9, 3.8.1.10, and 3.8.1.14 to (1) allow these SRs to be performed, or partially performed, in reactor modes that currently are not allowed by the TSs, and (2) require that SRs 3.8.1.10 and 3.8.1.14 be performed at a power factor of ≤ 0.9 if performed with the emergency DGs synchronized to the grid, unless grid conditions do not permit.

3.1 Description of Class 1E Alternating Current (AC) Power System and Emergency Diesel Generators

Palo Verde Nuclear Generating Station (PVNGS) TS 3.8.1, "AC Sources – Operating," specifies requirements for the Class 1E AC electrical power distribution system. The unit Class 1E Electrical Power Distribution System AC sources consist of the offsite power sources (preferred power sources: normal and alternate(s)), and the onsite standby power sources (Train A and Train B diesel generators (DGs)). As required by 10 CFR 50, Appendix A, GDC 17, the design of the AC electrical power system provides independence and redundancy to ensure an available source of power to the Engineered Safety Features (ESF) systems.

Two circuits between the offsite transmission network and the onsite Class 1E Electrical Power Distribution System and separate and independent DGs for each train ensure availability of the required power to shut down the reactor and maintain it in a safe shutdown condition after an anticipated operational occurrence or a postulated design basis accident (DBA).

The startup transformers (NAN-X01, NAN-X02, and NAN-X03) convert the 525 kV offsite power to the Non-Class 1E 13.8 kV power. Each secondary winding of a startup transformer normally provides power to one of two interconnected 13.8 kV intermediate buses (NAN-S05 and NAN-S06) per unit, in such a way that the two 13.8 kV intermediate buses of the same unit receive power from two different start-up transformers (preferred offsite sources: normal and alternate supply). For example, Unit 1 NAN-S05's normal supply is from a NAN-X03 secondary winding and NAN-S05's alternate supply is from a NAN-X01 secondary winding; Unit 1 NAN-S06's normal supply is from a NAN-X02 secondary winding and NAN-S06's alternate supply is from a NAN-X01 secondary winding. The secondary winding are sized to start and carry one-half of the non-Class 1E loads of one unit and two trains of ESF loads, one which is from another unit, during unit trips or during startup/shutdown operation.

The 13.8 kV intermediate buses (NAN-S05 and NAN-S06), in turn, distribute power to the 4.16 kV Class 1E buses (PBA-S03 and PBB-S04) via a 13.8 kV bus (NAN-S03 or NAN-S04) and an ESF transformer (NBN-X03 or NBN-X04).

Two fast bus transfer circuits are also provided to transfer the non-Class 1E house loads fed from NAN-S01 and NAN-S02 to 13.8 kV buses NAN-S03 and NAN-S04 respectively during a plant trip or during startup/shutdown operation. Prior to a plant trip, NAN-S01 and NAN-S02 are fed from the auxiliary transformer, and are fed from NAN-S03 and NAN-S04 respectively after the plant trip.

The onsite standby power source for each 4.16 kV ESF bus is dedicated DG. DG-A and DG-B are dedicated to ESF buses PBA-S03 and PBB-S04, respectively. A DG starts automatically (in emergency mode) on a safety injection actuation signal (SIAS) (i.e., low pressurizer pressure or high containment pressure signals), auxiliary feedwater actuation signals (AFAS-1 and AFAS-2) (e.g., low steam generator level), or on a loss of power (an ESF bus degraded voltage or undervoltage signal). After the DG has started, it will automatically tie to its respective bus after offsite power is tripped as a consequence of ESF bus undervoltage or degraded voltage, independent of or coincident with a SIAS or AFAS signal. Following the loss of offsite power, the sequencer sheds nonpermanent loads from the ESF bus. When the DG is tied to the ESF bus, loads are then sequentially connected to its respective ESF bus by the automatic load sequencer. The sequencing logic controls the permissive and starting signals to motor breakers to prevent overloading the DG by automatic load application. The DGs will also start and operate in the standby mode (running unloaded) without tying to the ESF bus on a SIAS or AFAS.

In the event of a loss of preferred power, the ESF electrical loads are automatically connected to the DGs in sufficient time to provide for safe reactor shutdown and to mitigate the consequences of a Design Basis Accident (DBA) such as a loss of coolant accident (LOCA).

A detailed description of the offsite power network and the circuits to the Class 1E buses is found in the PVNGS Updated Final Safety Analysis Report (UFSAR), Chapter 8. Single line diagrams of the onsite AC distribution system are shown in Figure 1 (Onsite 525 kV/13.8 kV Distribution System) and Figure 2 (Onsite Class 4.16 kV System) below.

Figure 1

Onsite 525 kV/13.8 kV Distribution System

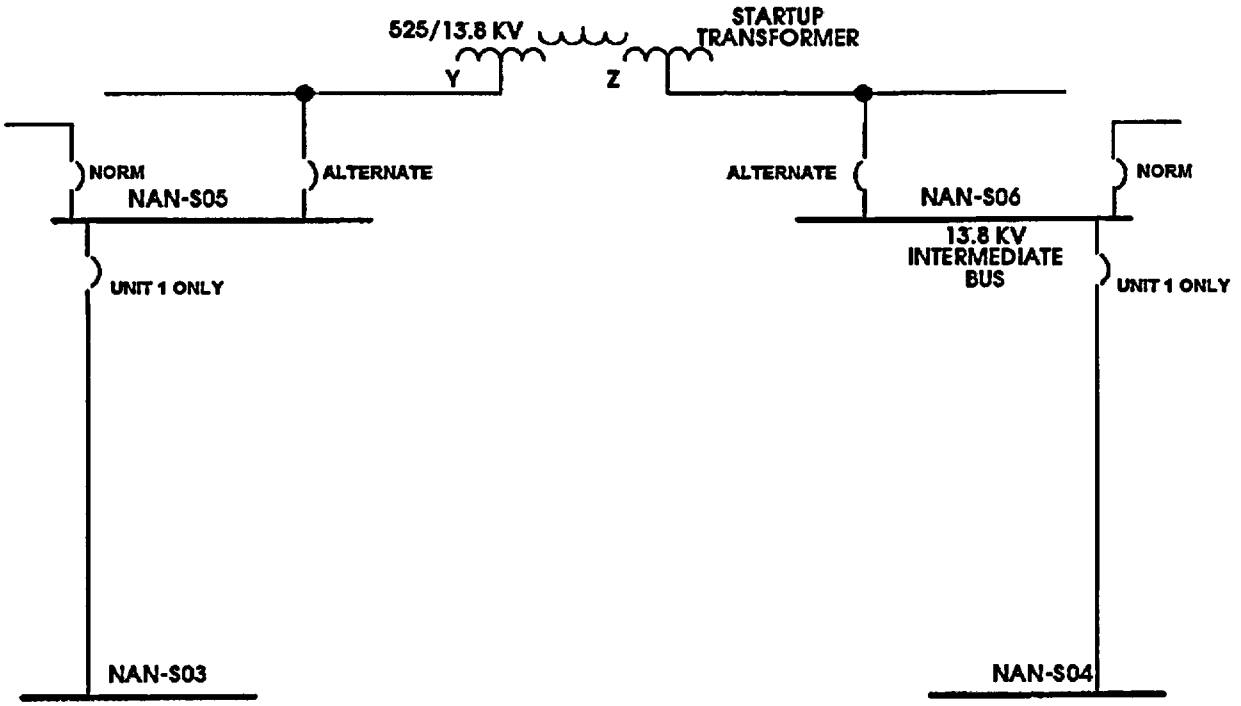

Figure 2

Onsite Class 4.16 kV System

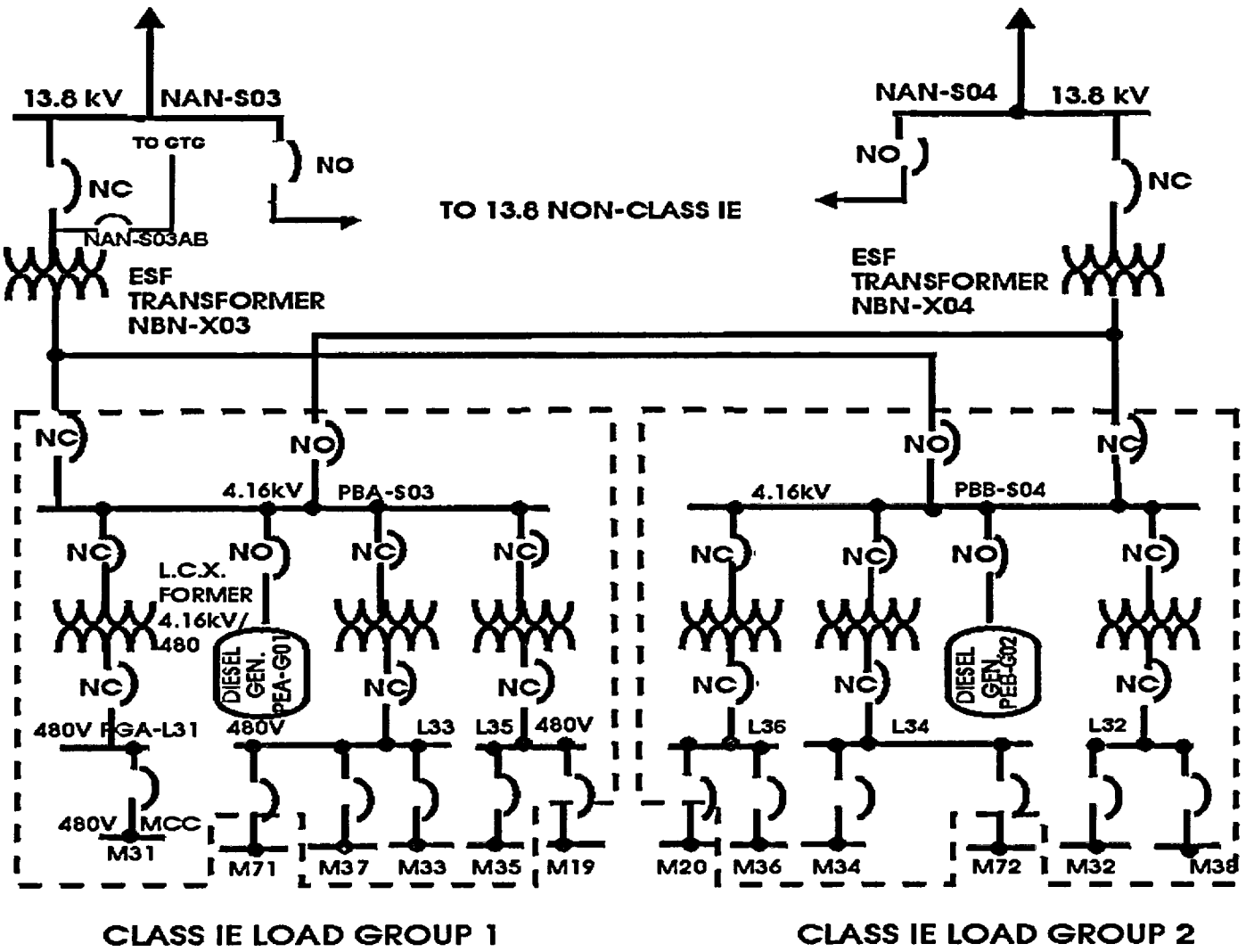

3.2 Description of Non-Class 1E AC System

The non-Class 1E ac system distributes power at 13.8 kV, 4.16 kV, 480V, and 208/120V for nonsafety-related loads. Only nonsafety-related loads are supplied by the non-Class 1E ac system. There will be an interconnection during startup between the preferred ac power supply, the non-Class 1E ac system and the Class 1E ac system.

During normal plant operation, power for the onsite non-Class 1E ac system is supplied through the unit auxiliary transformer connected to the generator isolated phase bus. Two offsite sources are provided to meet startup, shutdown, and post-shutdown

requirements of the unit. Each unit's non-Class 1E power system is divided into two parts arranged so that the possibility of a forced shutdown due to loss of one part will be minimized. Each of the two parts supplies a load group including approximately half of the unit auxiliaries.

Three startup transformers connected to the 525 kV switchyard are shared between Units 1, 2, and 3 and are connected to 13.8 kV buses of the units. Each startup transformer is capable of supplying 100% of the startup or normally operating loads of one unit simultaneously with the engineered safety feature (ESF) loads associated with two load groups of another unit. The non-Class 1E ac buses normally are supplied through the unit auxiliary transformer, and the Class 1E buses normally are supplied through the startup transformers. In the event of loss of supply from the unit auxiliary transformer (except for overcurrent trip), an automatic fast transfer of the 13.8 kV buses to the startup transformers is initiated to provide power to the auxiliary loads. Transfers of all buses can be initiated by the operator from the control room. Preferred power for Class 1E buses is supplied from the startup transformers through the 13.8 kV switchgear and the 13.8 to 4.16 kV ESF transformers.

3.3 Description of SR 3.8.1.9

Each DG is provided with an engine overspeed trip to prevent damage to the engine. Recovery from the transient caused by the loss of a large load could cause diesel engine overspeed, which, if excessive, might result in a trip of the engine. This Surveillance demonstrates the DG load response characteristics and capability to reject the largest single load, or equivalent load, without exceeding predetermined voltage and frequency and while maintaining a specified margin to the overspeed trip. Train A Normal Water Chiller (at 842 kW) and Train B AFW pump (at 936 kW) are the bounding loads for the DG A and DG B to reject, respectively. This Surveillance may be accomplished by:

a. Tripping the DG output breaker with the DG carrying greater than or equal to its associated single largest post-accident load while solely supplying the bus; or

b. Tripping its associated single largest post-accident load with the DG solely supplying the bus.

As required by IEEE-308, the load rejection test is acceptable if the increase in diesel speed does not exceed 75% of the difference between synchronous speed and the overspeed trip setpoint, or 15% above synchronous speed, whichever is lower.

This SR is performed in emergency mode (not paralleled to the grid) ensuring that the DG is tested under load conditions that are as close to design basis conditions as possible.

3.4 Description of SR 3.8.1.10

This Surveillance demonstrates the DG capability to reject a full load without overspeed tripping or exceeding the predetermined voltage limits. The DG full load rejection may occur because of a system fault or inadvertent breaker tripping. This Surveillance ensures proper engine generator load response under the simulated test conditions. This test simulates the loss of the total connected load that the DG experiences following a full load rejection and verifies that the DG will not trip upon loss of the load. These acceptance criteria provide DG damage protection. While the DG is not expected to experience this transient during an event and continues to be available, this response ensures that the DG is not degraded for future application, including reconnection to the bus if the trip initiator can be corrected or isolated.

In order to ensure that the DG is tested under load conditions that are as close to design basis conditions as possible, testing is performed using design basis kW loading and maximum kVAR loading permitted during testing. These loads represent the inductive loading that the DG would experience to the extent practicable and is consistent with the guidance of Regulatory Guide 1.9. Consistent with the guidance provided in the Regulatory Guide 1.9 full-load rejection test description, the 4950 - 5500 kW band will demonstrate the DG's capability to reject a load equal to 90 to 100 percent of its continuous rating. Administrative limits have been placed upon the Class 1E 4160 V buses due to high voltage concerns. As a result, power factors deviating much from unity are currently not possible when the DG runs parallel to the grid while the plant is shutdown. To the extent practicable, VARs will be provided by the DG during this SR.

3.5 Description of SR 3.8.1.14

Regulatory Guide 1.9, paragraph 2.2.9, requires demonstration once per 18 months that the DGs can start and run continuously at full load capability for an interval of not less than 24 hours, ≥ 2 hours of which is at a load equivalent to 105 to 110% of the continuous rating of the DG (5775 - 6050 kW) and ≥ 22 hours at a load equivalent to 90 to 100% of the continuous duty rating of the DG (4950 - 5500 kW). The DG starts for this Surveillance can be performed either from normal keep-warm or hot conditions. The provisions for prelubricating and warmup, discussed in SR 3.8.1.2, and for gradual loading, discussed in SR 3.8.1.3, are applicable to this SR (Note 3 and Note 4).

In order to ensure that the DG is tested under load conditions that are as close to design conditions as possible, testing is performed using design basis kW loading and maximum kVAR loading permitted during testing. These loads represent the inductive loading that the DG would experience to the extent practicable and is consistent with the intent of Regulatory Guide 1.9. Administrative limits have been placed upon the Class 1E 4160 V buses due to high voltage concerns. As a result, power factors deviating much from unity are currently not possible when the DG runs parallel to the grid. To the extent practicable, VARs will be provided by the DG during this SR. The load band is provided to avoid routine overloading of the DG. Routine overloading may

result in more frequent teardown inspections in accordance with vendor recommendations in order to maintain DG OPERABILITY.

4.0 TECHNICAL ANALYSIS

4.1 Changes to SR 3.8.1.9, EDG single largest load rejection test to incorporate TSTF-283, Revision 3 changes.

The proposed change modifies the note in TS SR 3.8.1.9, single largest load rejection test, to allow performance of the surveillances in the prohibited modes (modes 1, 2, 3, or 4) in order to reestablish operability following corrective maintenance. The change to the note is consistent with NRC approved change TSTF-283, Revision 3.

The TS Bases for SR 3.8.1.9 are being revised to allow testing to reestablish operability provided an assessment is performed to assure plant safety is maintained or enhanced. The TS Bases are being updated consistent with TSTF-283, Revision 3, to provide the following guidance relative to this assessment: "This assessment shall, as a minimum, consider the potential outcomes and transients associated with a failed surveillance, a successful surveillance, and a perturbation of the offsite or onsite system when they are tied together or operated independently for the surveillance; as well as the operator procedures available to cope with these outcomes. These shall be measured against the avoided risk of a plant shutdown and startup to determine that plant safety is maintained or enhanced when the surveillance, or portions of the surveillance, is performed in these normally restricted modes. Risk insights or deterministic methods may be used for this assessment."

4.2 Changes to SR 3.8.1.10, EDG full load rejection test

4.2.1 Deletion of SR 3.8.1.10 mode restriction

The historical approach for performance of the load rejection test in SR 3.8.1.10 has been to parallel the DG with offsite power while the reactor is in Mode 5 or 6, manually raise the DG to the required 100% load, and then open the DG output breaker. Opening of the DG output breaker separates the DG from its associated vital bus and allows the offsite circuit to continue to supply that bus.

The current surveillance tests are performed in Mode 5 or 6, when only one of the two DGs and vital buses is required to be operable. Therefore, the current testing process does not require the DG and vital bus being tested to remain operable, even though the performance of this test does not require the DG to be declared inoperable. This LAR is proposing that this testing be also allowed in Mode 1, 2, 3 or 4 when both DGs are required to be operable per Technical Specification 3.8.1.

The concerns associated with performing the full load rejection test in Modes 1-4 are that the DG being tested is susceptible to damage caused by grid disturbances, disconnecting the DG while paralleled to the vital buses at 100% rated load might cause

electrical system perturbations, and the DG in test is more susceptible to tripping due to the extra protective trip relays that are in effect during test mode operations.

4.2.1.1 Grid Disturbances

Only one DG per unit is paralleled to offsite power at any one time and any offsite grid disturbances would only possibly affect one operable DG. Therefore, the justification for this proposed change is based on the fact that the remaining DG would remain operable and is capable of mitigating a Design Base Accident (DBA). The onsite AC power system is fully capable of mitigating a DBA or providing for safe shutdown of the associated unit with the remaining DG operable.

4.2.1.2 Electrical Perturbations

Another concern during this testing is that suddenly disconnecting a DG from the associated bus on a full load rejection test would cause a voltage fluctuation on that bus that could potentially perturb the onsite AC electrical system. However, industry experience shows that there is no significant electrical distribution system effect on the associated bus during a full load rejection test. Furthermore, at PVNGS when the DG full load reject SR is performed at shutdown, the voltage transients experienced by the loads on the associated bus are considered minimal (an approximate 10 percent step change (400 VAC) in the bus voltage at the 4.16 kV level, with voltage recovery within 1 second. During this testing there were no recorded voltage oscillations and the voltage change was a smooth step change, which would have no adverse impact on equipment performance. Therefore, performing load reject tests in accordance with SR 3.8.1.10 in any modes would not cause a significant perturbation that would adversely affect the onsite AC electrical system.

4.2.1.3 Protective Trip Relays

During load rejection testing of DGs, non-emergency trip features are in effect to protect the DG from equipment damage due to equipment malfunction or offsite grid perturbations. If an ESF actuation emergency demand occurs with these non-emergency trips in effect, the affected DG will automatically revert to the emergency mode and bypass these trips. No operator action is required. If a LOP occurs during testing, the DG either trips on over current or continues to run, depending upon if the resulting load is in excess of the DG's load rating. If the load is excessive, the DG will trip on over current and the DG breaker will trip automatically on a DG shutdown signal. Upon detection of under voltage on the Class 1E 4.16 kV (PB) bus, load shedding for all vital loads and non-permanently connected loads from the vital bus would occur followed by re-sequencing of the vital loads back onto the affected PB bus. If the load does not exceed the DG's load rating, the DG continues to run and supply the ESF bus. The operators receive indication and alarms in the control room that the preferred power source is lost.

Finally, the proposed test configuration for the full load rejection test is similar to the electrical alignment in the existing monthly run of the EDG per SR 3.8.1.3, which is performed during Mode 1.

4.2.2 Addition of power factor requirement to SR 3.8.1.10 as modified by TSTF-276, Revision 2.

The proposed changes to SRs 3.8.1.10 and 3.8.1.14 to require that these SRs be performed at a power factor of ≤ 0.9 if performed with the emergency diesel generators synchronized to the grid unless grid conditions do not permit are consistent with NRC-approved NUREG-1432, Standard Technical Specifications, Combustion Engineering Plants, and NRC-approved TSTF-276, Revision 2. This requirement ensures that the DG is tested under load conditions that are as close to design basis conditions as possible. A power factor of ≤ 0.9 is representative of the actual inductive loading a DG would see under design basis accident conditions. This power factor should be able to be achieved when performing this SR at power and synchronized with offsite power by transferring house loads from the auxiliary transformer to the startup transformer in order to lower the Class 1E bus voltage. Under certain conditions, however, the proposed change allows the surveillance to be conducted at a power factor other than ≤ 0.9. These conditions occur when grid voltage is high, and the additional field excitation needed to get the power factor to ≤ 0.9 results in voltages on the emergency busses that are too high. This would occur when performing this SR while shutdown and the loads on the startup transformer are too light to lower the voltage sufficiently to achieve a 0.9 power factor. Under these conditions, the power factor should be maintained as close as practicable to 0.9 while still maintaining acceptable voltage limits on the emergency busses. In other circumstances, the grid voltage may be such that the DG excitation levels needed to obtain a power factor of 0.9 may not cause unacceptable voltages on the emergency busses, but the excitation levels are in excess of those recommended for the DG. In such cases, the power factor shall be maintained as close as practicable to 0.9 without exceeding DG excitation limits.

As stated above, a power factor ≤ 0.9 should be able to be achieved when performing this SR at power and synchronized with offsite power by transferring house loads from the auxiliary transformer to the startup transformer in order to lower the Class 1E bus voltage. Transferring house loads from the auxiliary transformer to the startup transformer is routinely performed at power, in accordance with procedure 40OP-9NA03. The circuit breakers supplying the house loads (NAN-S01 and NAN-S02) from the auxiliary and startup transformers are interlocked such that one supply breaker does not open until the alternate supply breaker is closed. This ensures that the bus remains energized during the transfer.

4.3 Changes to SR 3.8.1.14, EDG endurance and margin test

4.3.1 Deletion of mode restriction to SR 3.8.1.14

The historical approach for performance of the endurance and margin test (24-hour load run) required by SR 3.8.1.14 has been to parallel the DG with the offsite power source while the reactor is in Mode 5 or 6, then load the DG to 100% rated load for 22 consecutive hours followed by raising the load for the DG test to an overpower condition (110% of its full load rating) for the final two hours.

Current surveillance tests are performed in Mode 5 or 6, which require only one out of the two DGs to be operable. Thus, current testing does not require the DG being tested to remain operable, even though the performance of this test does not require the DG to be declared inoperable.

The concerns while performing the endurance and margin test in Modes 1 and 2 are the DG being tested is susceptible to grid disturbances and the additional protective trip features would be in place making the DG more vulnerable to a possible trip.

4.3.1.1 Grid Disturbances

A concern with performing the endurance and margin test in Modes 1 and 2, while connected to offsite power (grid), is that the DG is susceptible to grid disturbances. If a fault or power disturbance were to occur while a DG is paralleled to the offsite power system in the test mode of operation, the availability of the DG for subsequent emergency operation could be adversely affected due to the potential for common mode vulnerability. Information Notice (IN) 84-69 and Supplement 1 to IN 84-69 provide discussion on the possibility of a grid disturbance causing loss of the availability of the DG being tested because it is paralleled to the offsite power system and is susceptible to the same grid disturbances the offsite power system sees. This is acceptable because only one DG is required to be operable in Modes 5 and 6, and the other DG will remain operable to meet that requirement during testing.

In the case where a disturbance affects the DG being tested, protective devices (i.e., over current relays, differential relays, reverse power) would protect the DG from equipment damage. These features will ensure that causing the DG output breaker to trip separating the DG from its associated ESF bus protects the DG. Assuming that the DG could be quickly restored from its protective device trip, making the DG available for restart could be done promptly via operator action.

As a common practice at PVNGS, risk management considerations would ensure that this and other SRs would not be scheduled during periods where the potential for grid or bus disturbance increases (storms, grid emergencies, etc.). On-line maintenance/testing scheduling and coordination of work activities at PVNGS is controlled as required by 10 CFR 50.65(a)(4). Performance of the endurance and margin test per SR 3.8.1.14, in Mode 1 or 2 is also justified, in part, by the fact that

PVNGS currently tests its DGs paralleled to offsite power during required monthly surveillance testing, SR 3.8.1.3, while at power. SR 3.8.1.3 is required to be performed for a minimum of 60 minutes and is usually loaded for a four hour duration. SR 3.8.1.14 is identical in setup and alignment to SR 3.8.1.3 and differs only in the required duration and the 2-hour peak loading requirement of 110% of continuous rated load.

While the DG is paralleled to an offsite power source for testing several events that could affect the DG being tested are discussed below.

4.3.1.1.1 Loss of Offsite Power (LOP)

If a LOP occurs during testing, the DG either trips on over current or continues to run, depending upon if the resulting load is in excess of the DG's load rating. If the load is excessive, the DG will trip on over current and the DG breaker will trip automatically on a DG shutdown signal. Upon detection of under voltage on the Class 1E 4.16 kV (PB) bus, load shedding for all vital loads and non-permanently connected loads from the vital bus would occur followed by the DG re-energizing the vital PB bus and re-sequencing of the vital loads back onto the affected PB bus. If the load does not exceed the DG's load rating, the DG continues to run and supply the PB bus. The operators receive indication and alarms in the control room that the preferred power source is lost.

4.3.1.1.2 Loss of Coolant Accident (LOCA) / Auxiliary Feedwater Actuation (AFAS)

During testing, if an actual SIAS/CSAS or AFAS emergency signal occurs while the DG is paralleled to the preferred power supply with the control switch in the REMOTE or LOCAL position, the DG breaker will be automatically tripped by a momentary tripping pulse. The DG will continue running and automatically revert to the emergency (isochronous) mode. All non-critical protective trip devices are bypassed during the emergency mode of operation.

If a non-critical trip occurs during testing, the DG will trip. On a subsequent SIAS/CSAS, AFAS, or LOP, the DG will automatically start and run in the isochronous mode.

The remaining DG that is in standby would operate normally. Therefore, both DGs would remain available to supply their respective 4.16kV vital buses if an actual emergency signal were to occur.

4.3.1.1.3 LOP with LOCA

In the case where a LOCA occurs before a LOP, the DG output breaker will trip open, the DG will revert to the emergency (isochronous) mode while running in standby and the DG output breaker will re-close to the PB bus if a subsequent loss of power (LOP) condition is detected.

In the case where a LOP occurs before the LOCA, the DG will either continue to supply the PB bus and be placed into emergency (isochronous) operation by a subsequent ESF (LOCA) actuation or the DG would trip off on a generator over current, restart on the loss of power (LOP) condition and re-close its output breaker onto the bus in the emergency mode. A subsequent ESF would then only result in additional equipment sequencing onto the DG.

During either of these LOP with LOCA scenarios the remaining DG will be available to respond and mitigate a DBA or provide safe shutdown capability.

4.3.1.2 Trip Relays

During test mode operation of DGs, non-emergency trip features provide additional protection for the DG. These protection features make a DG that is being tested more susceptible to tripping. However, if an emergency demand occurs while the DG is under testing, the DG automatically reverts back to the emergency mode without any operator intervention. Therefore, these additional trip functions are not a significant concern during performance of the endurance and margin tests while in Modes 1 and 2. In addition, the remaining DG will be available to respond and mitigate a DBA or provide safe shutdown capability.

4.3.2 Addition of power factor requirement to SR 3.8.1.14 as modified by TSTF-276, Revision 2.

The proposed changes to SRs 3.8.1.10 and 3.8.1.14 to require that these SRs be performed at a power factor of ≤ 0.9 if performed with the emergency diesel generators synchronized to the grid unless grid conditions do not permit are consistent with NRC-approved NUREG-1432, Standard Technical Specifications, Combustion Engineering Plants, and NRC-approved TSTF-276, Revision 2. This requirement ensures that the DG is tested under load conditions that are as close to design basis conditions as possible. A power factor of ≤ 0.9 is representative of the actual inductive loading a DG would see under design basis accident conditions. This power factor should be able to be achieved when performing this SR at power and synchronized with offsite power by transferring house loads from the auxiliary transformer to the startup transformer in order to lower the Class 1E bus voltage. Under certain conditions, however, the proposed change allows the surveillance to be conducted at a power factor other than ≤ 0.9. These conditions occur when grid voltage is high, and the additional field excitation needed to get the power factor to ≤ 0.9 results in voltages on the emergency busses that are too high. This would occur when performing this SR while shutdown and the loads on the startup transformer are too light to lower the voltage sufficiently to achieve a 0.9 power factor. Under these conditions, the power factor should be maintained as close as practicable to 0.9 while still maintaining acceptable voltage limits on the emergency busses. In other circumstances, the grid voltage may be such that the DG excitation levels needed to obtain a power factor of 0.9 may not cause unacceptable voltages on the emergency busses, but the excitation levels are in excess of those

recommended for the DG. In such cases, the power factor shall be maintained as close as practicable to 0.9 without exceeding DG excitation limits.

As stated above, a power factor ≤ 0.9 should be able to be achieved when performing this SR at power and synchronized with offsite power by transferring house loads from the auxiliary transformer to the startup transformer in order to lower the Class 1E bus voltage. Transferring house loads from the auxiliary transformer to the startup transformer is routinely performed at power, in accordance with procedure 40OP-9NA03. The circuit breakers supplying the house loads (NAN-S01 and NAN-S02) from the auxiliary and startup transformers are interlocked such that one supply breaker does not open until the alternate supply breaker is closed. This ensures that the bus remains energized during the transfer.

The addition of the following compensatory measures to the SR 3.8.1.14 TS Bases will reduce the risk involved with performing this SR in mode 1 or 2:

> *The following compensatory measures shall be implemented prior to the performance of this SR in MODE 1 or 2 with the DG connected to an offsite circuit:*
>
> a. *Weather conditions will be assessed, and the SR will not be scheduled when severe weather conditions and/or unstable grid conditions are predicted or present.*
>
> b. *No discretionary maintenance activities will be scheduled in the APS switchyard or the unit's 13.8 kV power supply lines and transformers which could cause a line outage or challenge offsite power availability to the unit performing this SR.*
>
> c. *All activity, including access, in the Salt River Project (SRP) switchyard shall be closely monitored and controlled. Discretionary maintenance within the switchyard that could challenge offsite power supply availability will be evaluated in accordance with 10 CFR 50.65(a)(4) and managed on a graded approach according to risk significance.*

4.4 Risk assessment for performing the full load rejection test (SR 3.8.1.10) and the endurance and margin test (SR 3.8.1.14) in modes 1 and 2.

Currently when the full load reject and endurance and margin tests are performed they are performed in Modes 5 and 6. When a DG is undergoing the full load rejection test and the endurance and margin test, it is still considered operable and therefore available to respond to accident and LOP events.

Performing these tests in Modes 1, 2, 3, and 4 does not change the potential level of risk during these tests. As in Modes 5 and 6, the DG is available and capable of performing its safety functions. The determination of availability of the DG in test is

consistent with the definition of unavailable in NUMARC 93-01, Revision 3, Appendix B, which states: "SSCs out of service for testing are considered unavailable, unless the test configuration is automatically overridden by a valid starting signal, or the function can be promptly restored either by an operator in the control room or by a dedicated operator stationed locally for that purpose. Restoration actions must be contained in a written procedure, must be uncomplicated (a single action or a few simple actions), and must not require diagnosis or repair...." Per the above discussion, for these tests the DG in test will remain available per these guidelines. As a result, there is no increase in unavailability of the DG and there is a minimal increase in the risk.

5.0 REGULATORY ANALYSIS

5.1 No Significant Hazards Consideration

Arizona Public Service Company (APS) has evaluated whether or not a significant hazards consideration is involved with the proposed amendments by focusing on the three standards set forth in 10 CFR 50.92, "Issuance of Amendment," as discussed below:

1. Does the proposed change involve a significant increase in the probability or consequences of an accident previously evaluated?

Response: No.

The emergency diesel generators (DGs) and their associated emergency loads are accident mitigating features, rather than accident initiating equipment. Each DG is dedicated to a specific vital bus and these buses and DGs are independent of each other. There is no common mode failure provided by the testing changes proposed in this license amendment request (LAR) that would cause multiple bus failures. Therefore, there will be no significant impact on any accident probabilities by the approval of the requested amendment.

The design of plant equipment is not being modified by these proposed changes.

The changes include an increase in the online time the DG will be paralleled to the grid in Mode 1, 2, 3, and 4. The overall time that the DG is paralleled in all modes (outage/non-outage) should remain unchanged. As such, the ability of the DGs to respond to a design basis accident (DBA) can be adversely impacted by the proposed changes. However, the impacts are not considered significant based on the DG under test maintaining its ability to respond to an auto-start signal were one to be received during testing, along with the ability of the remaining DG to mitigate a DBA or provide a safe shutdown, and data that shows that the DG itself will not perturb the electrical system significantly. Furthermore, the proposed amendments for surveillance requirements (SR) 3.8.1.10 and SR 3.8.1.14 share the same electrical configuration alignment to the current monthly 1-hour loaded surveillance.

SR changes that are consistent with Industry/Technical Specification Task Force (TSTF) Standard Technical Specification (STS) change TSTF-283, Revision 3 and NUREG-1432, Revision 2 have been approved by the NRC, and the on-line tests allowed by the TSTF and the NUREG are only to be performed for the purpose of establishing operability of the DG being tested. Performance of these SRs during previously restricted modes will require an assessment to assure plant safety is maintained or enhanced.

The proposed changes to SRs 3.8.1.10 and 3.8.1.14 to require that these SRs be performed at a power factor of ≤ 0.9 if performed with the emergency diesel generators synchronized to the grid unless grid conditions do not permit are consistent with NRC-approved NUREG-1432, Standard Technical Specifications, Combustion Engineering Plants, and NRC-approved TSTF-276, Revision 2. This requirement ensures that the DG is tested under load conditions that are as close to design basis conditions as possible. A power factor of ≤ 0.9 is representative of the actual inductive loading a DG would see under design basis accident conditions. Under certain conditions, however, the proposed change allows the surveillance to be conducted at a power factor other than ≤ 0.9. These conditions occur when grid voltage is high, and the additional field excitation needed to get the power factor to ≤ 0.9 results in voltages on the emergency busses that are too high. Under these conditions, the power factor should be maintained as close as practicable to 0.9 while still maintaining acceptable voltage limits on the emergency busses. In other circumstances, the grid voltage may be such that the DG excitation levels needed to obtain a power factor of 0.9 may not cause unacceptable voltages on the emergency busses, but the excitation levels are in excess of those recommended for the DG. In such cases, the power factor shall be maintained as close as practicable to 0.9 without exceeding DG excitation limits.

As stated above, a power factor ≤ 0.9 should be able to be achieved when performing this SR at power and synchronized with offsite power by transferring house loads from the auxiliary transformer to the startup transformer in order to lower the Class 1E bus voltage. Transferring house loads from the auxiliary transformer to the startup transformer is routinely performed at power, in accordance with procedure 40OP-9NA03. The circuit breakers supplying the house loads (NAN-S01 and NAN-S02) from the auxiliary and startup transformers are interlocked such that one supply breaker does not open until the alternate supply breaker is closed. This ensures that the bus remains energized during the transfer.

Therefore, the proposed change does not involve a significant increase in the probability or consequences of an accident previously evaluated.

2. Does the proposed change create the possibility of a new or different accident from any accident previously evaluated?

Response: No.

The proposed changes would create no new accidents since no changes are being made to the plant that would introduce any new accident causal mechanisms. Equipment will be operated in the same configuration currently allowed by other DG SRs that allow testing in plant Modes 1, 2, 3, and 4. This license amendment request does not impact any plant systems that are accident initiators or adversely impact any accident mitigating systems.

Therefore, the proposed change does not create the possibility of a new or different accident from any accident previously evaluated.

3. Does the proposed change involve a significant reduction in a margin of safety?

Response: No.

The proposed changes do not involve a significant reduction in a margin of safety. The margin of safety is related to the ability of the fission product barriers to perform their design safety functions during and following an accident situation. These barriers include the fuel cladding, the reactor coolant system, and the containment system. The proposed changes to the testing requirements for the plant DGs do not affect the operability requirements for the DGs, as verification of such operability will continue to be performed as required (except during different allowed modes). Continued verification of operability supports the capability of the DGs to perform their required function of providing emergency power to plant equipment that supports or constitutes the fission product barriers. Only one DG is tested at a time and the remaining DG will be available to safely shut down the plant or respond to a DBA, if required. Consequently, the performance of these fission product barriers will not be impacted by implementation of the proposed amendment.

In addition, the proposed changes involve no changes to safety setpoints or limits established or assumed by the accident analysis. On this and the above basis, no safety margins will be impacted.

Therefore, the proposed change does not involve a significant reduction in a margin of safety.

Based on the above evaluation, APS concludes that the proposed amendments present no significant hazards consideration under the standards set forth in 10 CFR 50.92(c), and accordingly, a finding of no significant hazards consideration is justified.

5.2 Applicable Regulatory Requirements

10 CFR 50, Appendix A, GDC 17, "Electric power systems," requirements are summarized below:

> *"Onsite electric power system and an offsite electric power system shall be provided to permit functioning of structures, systems, and components important to safety. The safety function for each system (assuming the other system is not functioning) shall be to provide sufficient capacity and capability to assure that (1) specified acceptable fuel design limits and design conditions of the reactor coolant pressure boundary are not exceeded as a result of anticipated operational occurrences and (2) the core is cooled and containment integrity and other vital functions are maintained in the event of postulated accidents.*
>
> *"The onsite electric power supplies, including the batteries, and the onsite electric distribution system, shall have sufficient independence, redundancy, and testability to perform their safety functions assuming a single failure.*
>
> *"Electric power from.....*
>
> *"Provisions shall be included to minimize the probability of losing electric power from any of the remaining supplies as a result of, or coincident with, the loss of power generated by the nuclear power unit, the loss of power from the transmission network, or the loss of power from the onsite electric power supplies."*

The design of the AC electrical power system provides independence and redundancy to ensure an available source of power to the Engineered Safety Feature (ESF) systems. The onsite Class 1E AC Distribution System for each unit is divided into two load groups so that the loss of any one group does not prevent the minimum safety functions from being performed. Each of these load groups or buses has connections to offsite power sources and a single dedicated DG. Offsite power is supplied to the 525 kV switchyard from the offsite transmission networks. The 525 kV sources are stepped down to 13.8 kV through three Startup Transformers, which are shared between the three PVNGS units. From the 525 kV switchyard there are two sources which are electrically and physically separated circuits that provide AC power at 4.16 kV through ESF service transformers fed by the 13.8kV Startup Transformer sources, to the Class 1E distribution system.

The potential for failure of the endurance and margin test exists principally in the DG, which is under test. The remaining DG will remain operable and in a standby condition during the performance of SR 3.8.1.14 and is not susceptible to a common grid disturbance and a common cause failure.

APS recognizes that the affected train of the emergency power system is not independent of disturbances on the offsite power system and any potential interaction

with the DG. However, the low probability of having a DG in test concurrent with a significant grid disturbance support the conclusion that the proposed changes in this LAR do not involve any significant increase in the likelihood of a vital bus blackout. During the performance of SR 3.8.1.10 and SR 3.8.1.14 the paralleled DG will be considered operable for the majority of the testing period. The remaining DG will also remain operable. Furthermore, testing will not be performed under adverse external plant conditions (storms, high grid emergencies, etc.) per risk management operation procedures.

In conclusion, based on the considerations discussed above, (1) there is reasonable assurance that the health and safety of the public will not be endangered by operation in the proposed manner, (2) such activities will be conducted in compliance with the Commission's regulations, and (3) the issuance of the amendment will not be inimical to the common defense and security or to the health and safety of the public.

6.0 ENVIRONMENTAL CONSIDERATION

APS has evaluated the proposed amendments and determined the proposed amendments do not involve (i) a significant hazards consideration, (ii) a significant change in the types or significant increase in the amounts of any effluent that may be released offsite, or (iii) a significant increase in individual or cumulative occupational radiation exposure. Accordingly, the proposed amendments meet the eligibility criterion for categorical exclusion set forth in 10 CFR 51.22(c)(9). Therefore, pursuant to 10 CFR 51.22(b), no environmental impact statement or environmental assessment need be prepared in connection with the proposed amendments.

Attachment 2A

Proposed Technical Specification Pages (Mark-up)

Pages:
3.8.1-9
3.8.1-13

SURVEILLANCE REQUIREMENTS (continued)

SURVEILLANCE		FREQUENCY
SR 3.8.1.9	----------NOTE---------- This Surveillance shall not normally be performed in MODE 1, 2, 3, or 4. However, this Surveillance may be performed to reestablish OPERABILITY provided an assessment determines the safety of the plant is maintained or enhanced. ---------- Verify each DG rejects a load greater than or equal to its associated single largest post-accident load, and: a. Following load rejection, the frequency is ≤ 64.5 Hz; b. Within 3 seconds following load rejection, the voltage is ≥ 3740 V and ≤ 4580 V; and c. Within 3 seconds following load rejection, the frequency is ≥ 58.8 Hz and ≤ 61.2 Hz.	18 months
SR 3.8.1.10	----------NOTE---------- ~~This Surveillance shall not be performed in MODE 1 or 2.~~ If performed with the DG synchronized with offsite power, it shall be performed at a power factor of ≤ 0.9. However, if grid conditions do not permit, the power factor limit is not required to be met. Under this condition the power factor shall be maintained as close to the limit as practicable. ---------- Verify each DG does not trip, and voltage is maintained ≤ 6200 V during and following a load rejection of ≥ 4950 kW and ≤ 5500 kW.	18 months

(continued)

SURVEILLANCE REQUIREMENTS (continued)

SURVEILLANCE		FREQUENCY
SR 3.8.1.14	----------NOTES---------- 1. Momentary transients outside the load range do not invalidate this test. 2. ~~This Surveillance shall not be performed in MODE 1 or 2.~~ **If performed with the DG synchronized with offsite power, it shall be performed at a power factor of ≤ 0.9. However, if grid conditions do not permit, the power factor limit is not required to be met. Under this condition the power factor shall be maintained as close to the limit as practicable.** 3. All DG starts may be preceded by an engine prelube period followed by a warmup period prior to loading. 4. DG loading may include gradual loading as recommended by the manufacturer. ---------- Verify each DG operates for ≥ 24 hours: a. For ≥ 22 hours loaded ≥ 4950 kW and ≤ 5500 kW; and b. For the remaining hours (≥ 2) of the test loaded ≥ 5775 kW and ≤ 6050 kW.	18 months

(continued)

Attachment 2B

Proposed Technical Specification Pages (Retyped)

Pages:
3.8.1-9
3.8.1-13

SURVEILLANCE REQUIREMENTS (continued)

SURVEILLANCE		FREQUENCY
SR 3.8.1.9	----------NOTE---------- This Surveillance shall not normally be performed in MODE 1, 2, 3, or 4. However, this Surveillance may be performed to reestablish OPERABILITY provided an assessment determines the safety of the plant is maintained or enhanced. ---------- Verify each DG rejects a load greater than or equal to its associated single largest post-accident load, and: a. Following load rejection, the frequency is ≤ 64.5 Hz; b. Within 3 seconds following load rejection, the voltage is ≥ 3740 V and ≤ 4580 V; and c. Within 3 seconds following load rejection, the frequency is ≥ 58.8 Hz and ≤ 61.2 Hz.	18 months
SR 3.8.1.10	----------NOTE---------- If performed with the DG synchronized with offsite power, it shall be performed at a power factor of ≤ 0.9. However, if grid conditions do not permit, the power factor limit is not required to be met. Under this condition the power factor shall be maintained as close to the limit as practicable. ---------- Verify each DG does not trip, and voltage is maintained ≤ 6200 V during and following a load rejection of ≥ 4950 kW and ≤ 5500 kW.	18 months

(continued)

SURVEILLANCE REQUIREMENTS (continued)

SURVEILLANCE		FREQUENCY
SR 3.8.1.14	----------NOTES---------- 1. Momentary transients outside the load range do not invalidate this test. 2. If performed with the DG synchronized with offsite power, it shall be performed at a power factor of ≤ 0.9. However, if grid conditions do not permit, the power factor limit is not required to be met. Under this condition the power factor shall be maintained as close to the limit as practicable. 3. All DG starts may be preceded by an engine prelube period followed by a warmup period prior to loading. 4. DG loading may include gradual loading as recommended by the manufacturer. ----------	
	Verify each DG operates for ≥ 24 hours: a. For ≥ 22 hours loaded ≥ 4950 kW and ≤ 5500 kW; and b. For the remaining hours (≥ 2) of the test loaded ≥ 5775 kW and ≤ 6050 kW.	18 months

(continued)

Changes to Technical Specification Bases Pages

Pages:
B 3.8.1-28 (For information; no changes)
B 3.8.1-29
B 3.8.1-29A (For information; no changes)
B 3.8.1-30*
B 3.8.1-30A*
B 3.8.1-35 (For information; no changes)
B 3.8.1-36
B 3.8.1-36A*
B 3.8.1-36B

* NOTE: Additions to TSTF-276, Revision 2, wording on these pages are underlined.

BASES

SURVEILLANCE REQUIREMENTS

OPERABILITY

SR 3.8.1.8 (continued)

OPERABILITY concerns) provided an assessment determines plant safety is maintained or enhanced. This assessment shall, as a minimum, consider the potential outcomes and transients associated with a failed surveillance, a successful surveillance, and a perturbation of the offsite or onsite system when they are tied together or operated independently for the surveillance; as well as the operator procedures available to cope with these outcomes. These shall be measured against the avoided risk of a plant shutdown and startup to determine that plant safety is maintained or enhanced when the surveillance is performed in MODE 1 or 2. Risk insights or deterministic methods may be used for this assessment.

SR 3.8.1.9

Each DG is provided with an engine overspeed trip to prevent damage to the engine. Recovery from the transient caused by the loss of a large load could cause diesel engine overspeed, which, if excessive, might result in a trip of the engine. This Surveillance demonstrates the DG load response characteristics and capability to reject the largest single load, or equivalent load, without exceeding predetermined voltage and frequency and while maintaining a specified margin to the overspeed trip. Train A Normal Water Chiller (at 842 kW) and Train B AFW pump (at 936 kW) are the bounding loads for the DG A and DG B to reject, respectively. These values were established in reference 14. This Surveillance may be accomplished by:

a. Tripping the DG output breaker with the DG carrying greater than or equal to its associated single largest post-accident load while solely supplying the bus; or

b. Tripping its associated single largest post-accident load with the DG solely supplying the bus.

As required by IEEE-308 (Ref. 11), the load rejection test is acceptable if the increase in diesel speed does not exceed 75% of the difference between synchronous speed and the overspeed trip setpoint, or 15% above synchronous speed, whichever is lower.

(continued)

BASES

SURVEILLANCE REQUIREMENTS (continued)

SR 3.8.1.9 (continued)

The time, voltage, and frequency tolerances specified in this SR are derived from Regulatory Guide 1.9 (Ref. 3) recommendations for response during load sequence intervals. The 3 seconds specified is equal to 60% of a typical 5 second load sequence interval associated with sequencing of the largest load. The voltage and frequency specified are consistent with the design range of the equipment powered by the DG. SR 3.8.1.9.a corresponds to the maximum frequency excursion, while SR 3.8.1.9.b and SR 3.8.1.9.c are the voltage and frequency values the system must meet, within three seconds, following load rejection. The 18 month Frequency is consistent with the recommendation of Regulatory Guide 1.9 (Ref. 3).

This SR is modified by a Note. The reason for the Note is that performing this SR would remove a required offsite circuit from service, perturb the EDS, and challenge safety systems. This SR is performed in emergency mode (not paralleled to the grid) ensuring that the DG is tested under load conditions that are as close to design basis conditions as possible. **This restriction from normally performing the surveillance in Mode 1, 2, 3, or 4 is further amplified to allow the surveillance to be performed for the purpose of reestablishing OPERABILITY (e.g., post work testing following corrective maintenance, corrective modification, deficient or incomplete surveillance testing, and other unanticipated OPERABILITY concerns) provided an assessment determines that plant safety is maintained or enhanced. This assessment shall, as a minimum, consider the potential outcomes and transients associated with a failed surveillance, a successful surveillance, and a perturbation of the offsite or onsite system when they are tied together or operated independently for the surveillance; as well as the operator procedures available to cope with these outcomes. These shall be measured against the avoided risk of a plant shutdown and startup to determine that plant safety is maintained or enhanced when the surveillance is performed in MODE 1, 2, 3, or 4. Risk insights or deterministic methods may be used for this assessment.**

(continued)

BASES

SR 3.8.1.10

This Surveillance demonstrates the DG capability to reject a full load without overspeed tripping or exceeding the predetermined voltage limits. The DG full load rejection may occur because of a system fault or inadvertent breaker tripping. This Surveillance ensures proper engine generator load response under the simulated test conditions. This test simulates the loss of the total connected load that the DG experiences following a full load rejection and verifies that the DG will not trip upon loss of the load. These acceptance criteria provide DG damage protection. While the DG is not expected to experience this transient during an event and continues to be available, this response ensures that the DG is not degraded for future application, including reconnection to the bus if the trip initiator can be corrected or isolated.

(continued)

BASES

SURVEILLANCE REQUIREMENTS

SR 3.8.1.10 (continued)

In order to ensure that the DG is tested under load conditions that are as close to design basis conditions as possible, testing is performed using design basis kW loading and maximum kVAR loading permitted during testing. These loads represent the inductive loading that the DG would experience to the extent practicable and is consistent with the guidance of Regulatory Guide 1.9 (Ref. 3). Consistent with the guidance provided in the Regulatory Guide 1.9 full-load rejection test description, the 4950 - 5500 kW band will demonstrate the DG's capability to reject a load equal to 90 to 100 percent of its continuous rating. Administrative limits have been placed upon the Class 1E 4160 V buses due to high voltage concerns. As a result power factors deviating much from unity are currently not possible when the DG runs parallel to the grid while the plant is shutdown. To the extent practicable, VARs will be provided by the DG during this SR.

The 18 month Frequency is consistent with the recommendation of Regulatory Guide 1.8 (Ref. 3) and is intended to be consistent with expected fuel cycle lengths.

This SR is modified by a Note. ~~The reason for the Note is that during operation with the reactor critical, performance of this SR could cause perturbation to the electrical distribution systems that could challenge continued steady state operation and, as a result, unit safety systems.~~ This Note ensures that the DG is tested under load conditions that are as close to design basis conditions as possible. When synchronized with offsite power, testing should be performed at a lagging power factor of ≤ 0.9. This power factor is representative of the actual inductive loading a DG would see under design basis accident conditions. This power factor should be able to be achieved when performing this SR at power and synchronized with offsite power by transferring house loads from the auxiliary transformer to the startup transformer in order to lower the Class 1E bus voltage. Under certain conditions, however, Note 2 allows the surveillance to be conducted at a power factor other than ≤ 0.9. These conditions occur when grid voltage is high.

(continued)

and the additional field excitation needed to get the power factor to ≤ 0.9 results in voltages on the emergency busses that are too high. This would occur when performing this SR while shutdown and the loads on the startup transformer are too light to lower the voltage sufficiently to achieve a 0.9 power factor. Under these conditions, the power factor should be maintained as close as practicable to 0.9 while still maintaining acceptable voltage limits on the emergency busses. In other circumstances, the grid voltage may be such that the DG excitation levels needed to obtain a power factor of 0.9 may not cause unacceptable voltages on the emergency busses, but the excitation levels are in excess of those recommended for the DG. In such cases, the power factor shall be maintained as close as practicable to 0.9 without exceeding DG excitation limits.

SR 3.8.1.11

As required by Regulatory Guide 1.9 (Ref. 3), paragraph 2.2.4, this Surveillance demonstrates the as designed operation of the standby power sources during loss of the offsite source. This test verifies all actions encountered from the loss of offsite power, including shedding of the nonessential loads and energization of the emergency buses and respective loads from the DG. It further demonstrates the capability of the DG to automatically achieve the required voltage and frequency within the specified time.

(continued)

BASES

SURVEILLANCE REQUIREMENTS (continued)

SR 3.8.1.13

This Surveillance demonstrates that DG and its associated 4.16 KV output breaker noncritical protective functions (e.g., high jacket water temperature) are bypassed on a loss of voltage signal concurrent with an ESF actuation test signal, and critical protective functions (engine overspeed, generator differential current, engine low lube oil pressure, and manual emergency stop trip), trip the DG to avert substantial damage to the DG unit. The noncritical trips are bypassed during DBAs and provide an alarm on an abnormal engine condition. This alarm provides the operator with sufficient time to react appropriately. The DG availability to mitigate the DBA is more critical than protecting the engine against minor problems that are not immediately detrimental to emergency operation of the DG.

The 18 month Frequency is based on engineering judgment, taking into consideration unit conditions required to perform the Surveillance, and is intended to be consistent with expected fuel cycle lengths. Operating experience has shown that these components usually pass the SR when performed at the 18 month Frequency. Therefore, the Frequency was concluded to be acceptable from a reliability standpoint.

SR 3.8.1.14

Regulatory Guide 1.9 (Ref. 3), paragraph 2.2.9, requires demonstration once per 18 months that the DGs can start and run continuously at full load capability for an interval of not less than 24 hours, ≥ 2 hours of which is at a load equivalent to 105 to 110% of the continuous rating of the DG (5775 - 6050 kW) and ≥ 22 hours at a load equivalent to 90 to 100% of the continuous duty rating of the DG (4950 - 5500 kW). The DG starts for this Surveillance can be performed either from normal keep-warm or hot conditions. The provisions for prelubricating and warmup, discussed in SR 3.8.1.2, and for gradual loading, discussed in SR 3.8.1.3, are applicable to this SR (Note 3 and Note 4).

(continued)

BASES

SURVEILLANCE REQUIREMENTS

SR 3.8.1.14 (continued)

In order to ensure that the DG is tested under load conditions that are as close to design conditions as possible, testing is performed using design basis kW loading and maximum kVAR loading permitted during testing. These loads represent the inductive loading that the DG would experience to the extent practicable and is consistent with the intent of Regulatory Guide 1.9 (Ref. 3). Administrative limits have been placed upon the Class 1E 4160 V buses due to high voltage concerns. As a result, power factors deviating much from unity are currently not possible when the DG runs parallel to the grid while the plant is shutdown. To the extent practicable, VARs will be provided by the DG during this SR. The load band is provided to avoid routine overloading of the DG. Routine overloading may result in more frequent teardown inspections in accordance with vendor recommendations in order to maintain DG OPERABILITY.

The following compensatory measures shall be implemented prior to the performance of this SR in MODE 1 or 2 with the DG connected to an offsite circuit:

a. Weather conditions will be assessed, and the SR will not be scheduled when severe weather conditions and/or unstable grid conditions are predicted or present.

b. No discretionary maintenance activities will be scheduled in the APS switchyard or the unit's 13.8 kV power supply lines and transformers which could cause a line outage or challenge offsite power availability to the unit performing this SR.

c. All activity, including access, in the Salt River Project (SRP) switchyard shall be closely monitored and controlled. Discretionary maintenance within the switchyard that could challenge offsite power supply availability will be evaluated in accordance with

(continued)

BASES

10 CFR 50.65(a)(4) and managed on a graded approach according to risk significance.

The 18 month Frequency is consistent with the recommendations of Regulatory Guide 1.9 (Ref. 3), paragraph 2.2.9, takes into consideration unit conditions required to perform the Surveillance, and is intended to be consistent with expected fuel cycle lengths.

This Surveillance is modified by four Notes. Note 1 states that momentary variations due to changing bus loads do not invalidate the test. ~~The reason for Note 2 is that during operation with the reactor critical, performance of this Surveillance could cause perturbations to the electrical distribution systems that could challenge continued steady state operation and, as a result, unit safety systems.~~ Note 2 ensures that the DG is tested under load conditions that are as close to design basis conditions as possible. When synchronized with offsite power, testing should be performed at a lagging power factor of ≤ 0.9. This power factor is representative of the actual inductive loading a DG would see under design basis accident conditions. This power factor should be able to be achieved when performing this SR at power and synchronized with offsite power by transferring house loads from the auxiliary transformer to the startup transformer in order to lower the Class 1E bus voltage. Under certain conditions, however, Note 2 allows the surveillance to be conducted at a power factor other than ≤ 0.9. These conditions occur when grid voltage is high, and the additional field excitation needed to get the power factor to ≤ 0.9 results in voltages on the emergency busses that are too high. This would occur when performing this SR while shutdown, and the loads on the startup transformer are too light to lower the voltage sufficiently to achieve a 0.9 power factor. Under these conditions, the power factor should be maintained as close as practicable to 0.9 while still maintaining acceptable voltage limits on the emergency busses. In other circumstances, the grid voltage may be such that the DG

(continued)

excitation levels needed to obtain a power factor of 0.9 may not cause unacceptable voltages on the emergency busses, but the excitation levels are in excess of those recommended for the DG. In such cases, the power factor shall be maintained as close as practicable to 0.9 without exceeding DG excitation limits. The provisions for prelubricating and warmup, discussed in SR 3.8.1.2, and for gradual loading, discussed in SR 3.8.1.3, are applicable to this SR (Note 3 and Note 4).

SR 3.8.1.15

This Surveillance demonstrates that the diesel engine can restart from a hot condition, such as subsequent to shutdown from normal Surveillances, and achieve the required voltage and frequency within 10 seconds, and subsequently achieves steady state required voltage and frequency ranges. The 10 second time is derived from the requirements of the accident analysis to respond to a design basis large break LOCA. The 18 month Frequency is consistent with the recommendations of Regulatory Guide 1.9 (Ref. 3), paragraph 2.2.10.

(continued)