BWXT Y-12
Protecting America's Future

August 21, 2006

CCN200652782

Attn: Document Control Desk
Director, Spent Fuel Project Office
Office of Nuclear Material Safety and Safeguards
U.S. Nuclear Regulatory Commission
Washington, D.C. 20555-0001

Amendment #2 for the Model ES-3100 Shipping Container, Docket No. 71-9315, USA/9315/B(U)F-96

On behalf of the licensee of the ES-3100 shipping package, BWXT Y-12 respectfully requests an amendment to the current Certificate of Compliance (CoC) of the ES-3100 shipping container. The purpose of this amendment is to request the revision of two equipment specifications for this shipping container. The two specifications being revised are YMN3-801850-A003, Kaolite 1600™ casting and YMN3-801580-A005, 277-4 casting, and are referenced in Sections 5.(a)(3)(v) and 5.(a)(3)(vi) of the CoC.

The ES-3100 manufacturer requested that the design agency for the ES-3100 (BWXT Y-12) make certain revisions to these two equipment specifications to add efficiencies to the manufacturing process and to add assurances that finished products will be within required specifications. The revisions to these specifications do not in any way change the properties of the finished products and do not affect the safe performance of the ES-3100 as reported in the Safety Analysis Report (SAR).

This letter has three attachments. Attachment 1 provides the justification for this request. Attachment 2 is a suggested mark-up of the CoC. Attachment 3 contains the change pages to the SAR, which are essentially the two revised equipment manufacturing specifications (SAR Appendices 1.4.4 and 1.4.5). For the convenience of the reviewers, ten copies of the attachments are included.

NMSS01

CCN200652782

If you have any questions regarding this submittal, please contact me at (865) 241-3854 or Jeff Arbital at (865) 576-8254.

Sincerely yours,

George B. Singleton

George B. Singleton
HEU Disposition Program Manager

GBS:slc

Attachments: As stated

cc: R. J. Ball, DOE, NA-30
M. Bennett, Eagle Research Group, LLC
B. G. Eddy, YSO
M. R. Feldman, UT-Battelle
R. M. George, DOE, NA-261
R. Koenig, Savannah River Site
P. T. Mann, DOE-NA-124
B. A. McKeehan, Nuclear Fuel Services, Inc.
T. Mrazik, Knolls Atomic Power Laboratory
W. H, Rice, YSO
J. M. Shuler, DOE, EM-24
S. A. Thompson, DOE/OST
D. R. Tousley, DOE, NA-261
S. J. Williams, BWXT Lynchburg

ATTACHMENT 1

JUSTIFICATION FOR AMENDMENT 2 REQUEST
ES-3100 SHIPPING PACKAGE
USA/9315/B(U)F-96

UPDATING TWO ES-3100 MANUFACTURING SPECIFICATIONS:
1. KAOLITE 1600™ CASTING
2. 277-4 CASTING

KAOLITE 1600™ CASTING SPECIFICATION YMN3-801580-A003
SAR Appendix 1.4.4, CoC Section 5.(a)(3)(v)
Summary of changes between Revision B and Revision C

The current ES-3100 Safety Analysis Report (Y/LF-717, Rev 0) contains Revision B of the Kaolite 1600™ casting specification. A revision to this specification is being proposed. This revision will not in any way change the material properties if the Kaolite 1600™ or the safety performance of the ES-3100 package.

This equipment specification describes the manufacturing process for casting the Kaolite 1600™ in the ES-3100. Revision B is currently referenced in the CoC [Section 5.(a)(3)(v)]. The amendment request is to include Revision C in the CoC.

The manufacturer of the ES-3100 package began the fabrication process using Revision B of the Kaolite Casting Specification YMN3-801850-A003. On some of the completed drum units, the finished density of the Kaolite 1600™ was slightly above the upper density limit of 25.4 lb/ft^3. The required finished Kaolite 1600™ product must have a density in the range of 19.4 to 25.4 lb/ft^3 to be in compliance with the SAR. This density range is the basis for all performance testing and analyses currently in the SAR. ES-3100 drums with Kaolite 1600™ outside this range are reworked or discarded. By revising this specification, out-of-spec drums can be avoided.

After investigation by the BWXT Y-12 Engineering department, it was determined that Kaolite 1600™ outside of the acceptable range resulted from normal variations in the batches of raw Kaolite 1600™ powder that are provided by the manufacturer Thermal Ceramics Inc. These variations were still within Thermal Ceramics' specifications for its Kaolite 1600™. To resolve this issue, the ES-3100 manufacturer asked Thermal Ceramics to provide Kaolite 1600™ to a tighter tolerance. This was agreed to by Thermal Ceramics, and they assigned a special product code to the Kaolite 1600™ made for the ES-3100 (product code GI80ACCUMD0027). This new product code is a subset of the current Kaolite 1600™ product code.

The other change in this specification was to increase the amount of water used in the wet Kaolite 1600™ mixture. The increase in water is 10%. This was requested by the manufacturer so that the slurry poured more easily and increased the efficiency of the

operation. The increased water in the cast Kaolite mixture required additional baking time to dry the casting.

The density of finished dry Kaolite 1600™ did not change. The "Before Baking" density is emphasized. This assures that only parts with an acceptable Kaolite 1600™ density will be baked, thus maximizing the assurance of acceptable finished parts.

Specific wording changes in the Kaolite 1600™ casting specification in Appendix 1.4.4 of the SAR are as follows:

Section 3.1, opening paragraph:

Replace the paragraph with "The Kaolite 1600™ material referenced with in this specification shall be provided by Thermal Ceramics, Incorporated or an authorized distributor. The material certification documentation (Certificate of Conformance) for the Kaolite 1600™ must be provided by the supplier for each manufacturer's lot of material to a product code of GI80ACCUMD0027."

Section 3.2, second paragraph:

The mix ratio of water to Kaolite 1600™ has been changed from 1.5 pounds of filtered water per pound of Kaolite 1600™ to 1.65 pounds of filtered water per pound of Kaolite 1600™.

Subsection 3.2b:

The total water needed for a 50 pound bag of Kaolite 1600™ has been changed from 75 (±½) lbs. to 82.5 (±½) lbs. Replace the text of this subsection with, "The required mix ratio is 1.65 pounds of filtered water per pound of Kaolite 1600™. For a 50 pound bag of Kaolite 1600™, weigh and record 82.5 (±½) lbs. of filtered water generating an acceptable wet mix density of 56.2±5.8 lb/ft^3."

Subsection 3.3.2:

Add a new subsection between a. and b. The text of the added subsection is, "Weigh and record the Before Baking weight of the cast assembly. If the weight is outside of 330 to 386 lbs range it is recommended not to cure the casting but to clean out and recast the Kaolite. This Before Baking weight is a recommended process control for the finished baked density. The manufacture may continue with a part outside of this weight range but it has a high chance being rejected for not meeting the finished baked density."

Subsection 3.3.4:

Add a new subsection between a. and b. The text of the added subsection is, "Weigh and record the Before Baking weight of the cast assembly. If the weight is outside of

29.0 to 33.8 lbs range it is recommended not to cure the casting but to clean out and recast the Kaolite. This Before Baking weight is a recommended process control for the finished baked density. The manufacture may continue with a part outside of this weight range but it has a high chance being rejected for not meeting the finished baked density."

Section 3.4.2, Item k:

Hold time was changed from 38 +/- 2 hours to 41 +/- 5 hours.

Section 3.5, 4th sentence:

Change the target density from 54.6 lb/ft^3 to 56.2 lb/ft^3.

Subsection 3.5.1, 3rd paragraph, 4th sentence:

Change the target density from 54.6 lb/ft^3 to 56.2 lb/ft^3.

Attachment A, two places:

Change the water weight multiplier from 1.5 to 1.65.

Attachment B:

Add a footnote "f" (there is no footnote "e"):

The footnote text is, "Recommend Before Baking weight is to be 330 to 386 lb range."

Attachment C:

A typo was fixed in footnote b. It changed "800" to "120."

Add a footnote "f" (there is no footnote "e"):

The footnote text is, "Recommend Before Baking weight is to be 29.2 to 34.2 lb range."

Attachment E:

Change the wet mix Target Density from 54.6 lb/ft^3 to 56.2 lb/ft^3.

277-4 CASTING SPECIFICATION YMN3-801580-A005
SAR Appendix 1.4.5, CoC Section 5.(a)(3)(iv)
Summary of changes from Revision C to Revision E

The current ES-3100 Safety Analysis Report (Y/LF-717, Rev 0, change page 4) contains Revision C of the Kaolite 1600™casting specification. Several revisions to this specification are being proposed. This revision will not in any way change the material properties if the neutron absorber or the safety performance of the ES-3100 package. .

This equipment specification describes the manufacturing process for casting the Catalog No. 277-4 neutron absorber in the ES-3100. Revision C is currently referenced in the CoC [Section 5.(a)(3)(vi)]. The amendment request is to include Revision E in the CoC.

The ES-3100 manufacturer requested that the design agency for the ES-3100 (BWXT Y-12) make certain revisions to this equipment specification to add efficiencies to the manufacturing process. Revision D of the specification was created to add the manufacturing efficiencies. The changes were reformatting in nature and removing drawing references and redundant statements. In creating Revision D, the material properties of the finished 277-4 casting was not altered in any way, nor were any quality assurance goals and requirements.

Following the creation of Revision D, a few minor changes where requested by the manufacturer. These have been made and a Revision E was created. Revision D was never issued since the few minor changes where suggested as soon as D was created. The differences between Revision D and Revision E are as follows:

General:

The acceptable cast 277-4 mass limits were changed to account for dimensional tolerances that affect the volume of the 277-4 annulus.

Subsection 3.3.8:

In Item I, the words "inner liner" were replaced with the word "can."

Subsection A.3.1:

This subsection was separated into two sections; A.3.1 and A.3.1.a. The new A.3.1.a was titled, "Net Count Rate Time Determination."

Subsection A.6.3:

This subsection was modified by adding "Define the repeatable accuracy for....." at the beginning of the first sentence.

Data Sheet No. JS-YMN3-801580-A005-5:

This data sheet was expanded to include more procurement approval data requirements.

ATTACHMENT 2

SUGGESTED CHANGES IN USA/9315/B(U)F-96

[1 page]

5.(a) Packaging (continued)

(3) Drawings

The Model No. ES-3100 package is constructed and assembled in accordance with:

(i) BWXT Y-12, L.L.C., Drawing No. M2E801580A037, Sheets 1 through 6, Rev. A, "Consolidated Assembly Drawing."

(ii) BWXT Y-12, L.L.C., Drawing No. M2E801580A026, Rev. C, "Heavy Can Spacer Assembly."

(iii) Equipment Specification JS-YMN3-801580-A001, Rev. E, "ES-3100 Containment Vessel."

(iv) Equipment Specification JS-YMN3-801580-A002, Rev. D, "ES-3100 Drum Assembly."

(v) Equipment Specification JS-YMN3-801580-A003, Rev. ~~B~~ C, "Manufacturing Process Specification for Casting Kaolite 1600™ into the ES-3100 Shipping Package."

(vi) Equipment Specification JS-YMN3-801580-A005, Rev. ~~C~~ E, "Casting Catalog No. 277-4 Neutron Absorber for the ES-3100 Shipping Package."

5.(b) Contents (Type and form of material, maximum quantity of material per package, and Criticality Safety Index (CSI)).

The weight of the radioactive contents, convenience cans, can lift attachments, polyethylene bags, spacers, and other material in the containment vessel shall not exceed 90 lb. The maximum mass of hydrogenous packaging materials in the containment vessel (e.g., polyethylene containers or bagging, silicone rubber pads, etc.) shall not exceed 500 grams. The maximum content decay heat load shall not exceed 0.4 watts.

The concentration limits of uranium and transuranic constituents shall be the following:

Isotope	Maximum Concentration
U-232	0.040 μg/gU[a]
U-233	0.006 g/gU[b]
U-234	0.02 g/gU
U-235	1.00 g/gU
U-236	0.40 g/gU
Transuranics (except Np)	40.0 μg/gU
Np-237	0.003 g/gU

[a] μg/gU = 10^{-6} grams per gram of total uranium
[b] g/gU = grams per gram of total uranium

ATTACHMENT 3

CHANGE PAGES FOR THE ES-3100 SAFETY ANALYSIS REPORT

[Y/LF-717, Rev 0]

GUIDE TO PAGE CHANGES
Y/LF-717, Rev 0, page change # 5

SAR SECTION	PAGE CHANGES
Volume 1, Front section	Replace title page and page xix
Volume 1, Section 1	Replace Appendices 1.4.4 and 1.4.5, on pages 1-57 to 1-116.

SAFETY ANALYSIS REPORT, Y-12 NATIONAL SECURITY COMPLEX, MODEL ES-3100 PACKAGE WITH BULK HEU CONTENTS

Prepared by the
Oak Ridge Y-12 National Security Complex
Oak Ridge, Tennessee 37831
Managed by
BWXT Y-12 L.L.C.
for the
U. S. Department of Energy
under contract DE-AC05-84OR21400

August 21, 2006

REVISION LOG

Date	Revision No.	Description	Pages
02/25/05	0	Original issue	All
08/15/05	0, Page Change 1	Page changes resulting from *Responses to Request for Additional Information* #1, Y/LF-747.	title page, iv, xxiii, 1-4, 1-145, 2-2, 2-3, 2-6, 2-31, 2-32, 2-33, 2-34, 2-57, 2-59, 2-61, 2-107, 2-125, 2-131, 2-171, 2-173, 2-181, 2-183, 2-185, 2-186, 2-189, 2-367, 2-458, 2-675, 8-8, 8-9, 8-31
02/06/06	0, Page Change 2	Page changes resulting from *Responses to Request for Additional Information #2*, Y/LF-761.	All Sections
03/20/06	0, Page Change 3	Page changes resulting from *Responses to Request for Additional Information #3*, Y/LF-764.	1.38, 1.48, Appendix 1.4.1, 2-120, Table 6.4
05/08/06	0, Page Change 4	Added polyethylene bottles and nickel alloy cans as convenience containers for authorized HEU contents.	Various pages in chapters 1, 2, 3 and 4.
08/21/06	0, Page Change 5	Revised equipment specifications for Kaolite and 277-4 neutron absorber.	Appendices 1.4.4 and 1.4.5.

APPENDIX 1.4.4

EQUIPMENT SPECIFICATION, JS-YMN3-801580-A003, *MANUFACTURING PROCESS SPECIFICATION FOR CASTING KAOLITE 1600™ INTO THE ES-3100 SHIPPING PACKAGE*

EQUIPMENT SPECIFICATION APPROVAL/REVISION PAGE

SPECIFICATION NO	REV	ISSUE DATE
JS-YMN3-801580-A003	C	11/24/03
PAGE: i OF ii	REVISION DATE: 6/1/06	
PROCURED BY: BWXT L.L.C.	INSTALLED BY: BWXT L.L.C.	
PROJECT TITLE: ES-3100 SHIPPING PACKAGE	PLANT: Y-12	BUILDING: YAREA-00
JOB TITLE: Production Design Definition	W.O. OR E.S.D.: 7RCPCA08	RECORD NUMBER: 2003-0328

SPECIFICATION FOR: MANUFACTURING PROCESS SPECIFICATON FOR CASTING KAOLITE 1600™ INTO THE ES-3100 SHIPPING PACKAGE

ESD IDENTIFICATION NUMBER:

ENGINEERING AND PLANT APPROVALS

	SIGNATURE	DATE		SIGNATURE	DATE
PREPARED BY	R. D. Aigner	11-25-03	PROJECT ENGINEER	G. A. Byington	11-25-03
DISCIPLINE MANAGER	J. C. Walls	11-25-03	OPERATIONS MANAGER/SYSTEM OWNER		
DESIGN VERIFICATION	R. D. Aigner	11-25-03			

REVISIONS/ENGINEERING AND PLANT APPROVALS

REV. NO.	DESCRIPTION OF REVISION
A	Issue for procurement
B	Removed the reference to the Prototype Procurement Specification document number OO-PP-1210. Change the equipment reference in Section 3.1.3(c) from a "large mortar mixer or plaster mixer with moving vanes or a smooth wall cement mixer with the fixed vanes removed" to "Whiteman Multiquip's WM700S-H8 plaster/mortar mixer, refereed to as WM700". In Section 3.2 changed the method and time that the water and dry mix were added into the mixer based upon the mixer qualification in Section 3.5. Added Section 3.5, added attachments E and F to determine the proper mixing time and the Mixer Qualification Castings. In section 3.3.1 and 3.3.3 added misting procedure. Section 3.3.2(b) added a circular concave of .32±.10 to the Kaolite before it is baked to match drawing M2E801580A002. Section 3.3.4(b) add a circular convex scrape of .09±.06 to the Kaolite before it is baked to match drawing M2E801580A008. Updated the attachments with general revisions. Section 3.4 has been subdivided into 3.4.1 Baking Instruction and 3.4.2 Baking Documentation and added attachment F to this section.
C	Revised patent information in scope. Added recommended "Before Baking" weights for the Body Weldment and Top Plug Weldment based upon a more refined Kaolite 1600™ product code GI80ACCUMD0027 that is produced to the lower side and a smaller range of the manufactures normal tolerance band. This Kaolite 1600™ product code requires using 1.65 times the dry weight for the water weight (instead of 1.5) and generates an acceptable wet mix density of 56.2+/- 5.8 lb/ft^3. This additional water requires between 36 to 46 hours of bake time at 500°F.

	SIGNATURE	DATE		SIGNATURE	DATE
PREPARED BY	G.A. Byington	6/1/06	PROJECT MANAGER	George Swighton	6/1/06
DISCIPLINE MANAGER	C.M. Amonett for W.I. North	6/1/06	CRITICALITY SAFETY	J.F. Clark	6/1/06
DESIGN VERIFICATION	Monty L. Goins	6/1/06	QUALITY ASSURANCE	D.W. Eckert	6/1/06

This document has been has been reviewed by a Y-12 ADC and UNCI RO and has been determined to be UNCLASSIFIED and not UCNI. This review does not constitute clearance for public release

Name: R. D. Aigner Date: 06/01/06

EXEMPT FROM IG-155

TABLE OF CONTENTS

		Page
1	**Scope**	3
2	**Applicable Documents**	3
3	**Kaolite 1600™ Processing Requirements**	3
3.1	**General**	3
3.1.1	Kaolite 1600™ Receiving and Storage Instructions	3
3.1.2	Cleaning Instructions	4
3.1.3	Mixing Water and Mixing Equipment Requirements	4
3.2	**Mixing of Kaolite 1600™**	4
3.3	**Vibration Casting and Curing of Kaolite 1600™ Into Assemblies**	5
3.3.1	Body Weldment Casting Instructions	5
3.3.2	Body Weldment Curing Instructions	6
3.3.3	Top Plug Assembly Casting Instructions	6
3.3.4	Top Plug Assembly Curing Instructions	7
3.4	**Baking of Assemblies Cast and Cured with Kaolite 1600™ mixture**	7
3.4.1	Baking Instructions	7
3.4.2	Baking Documentation	8
3.5	**Mixer Qualification for Kaolite 1600™ Casting Placement**	9
3.5.1	Wet Density Mixing Test	9
3.5.2	Mixer Baked Density Qualification Castings	10
4	**Quality Assurance Requirements**	10
4.1	**General**	10
4.2	**Material and Equipment Certification**	11
4.3	**Nonconformance Control**	11
4.4	**Operator and Witness Qualifications**	11
4.4.1	Kaolite 1600™ Mixing Process Qualifications	12
4.4.2	Kaolite 1600™ Vibration Casting Process Qualifications	12
4.4.3	Kaolite 1600™ Baking Process Qualifications	12

ATTACHMENTS

A	**Kaolite Mixing Control**
B	**Body Weldment**
C	**Top Plug Assembly Vibration Casting Control**
D	**Furnace and Baking Control**
E	**Wet Density Mixer Time Vibration Casting**
F	**Baked Qualification Density Sample Vibration Casting**

1 Scope

This manufacturing process specification describes the quality assurance and technical requirements that shall be met when weighing, mixing, pouring, vibrating, curing, and baking the Kaolite 1600™ for the ES-3100 shipping container Body Weldment and Top Plug Assemblies. The product produced by following this manufacturing process is protected under U.S. Patent 6,299,950. The United States Government has rights in this invention pursuant to Contract No. DE-AC05-84OR21400, between the U.S. Department of Energy and BWXT Y-12 L.L.C.

This specification describes the instructions that shall be followed for these activities. The components (Body Weldment and Top Plug Assembly) will be fabricated to the design requirements specified on the engineering drawings for the components.

Reference to the Company in this specification shall mean the package certificate holder and reference to the Seller shall mean the supplier of the fabricated Body Weldment and Top Plug Assemblies.

2 Applicable Documents

The following documents apply when Casting Kaolite 1600™ Into ES-3100 Shipping Containers.

ES-3100 Drawing Numbers
M2E801580A002, Body Weldment
M2E801580A008, Top Plug Weldment,

Procurement Specification for ES-3100 Confinement Boundary Assembly
JS-YMN3-801580-A002 Equipment Specification for the ES-3100 Drum Assembly

3 Kaolite 1600™ Processing Requirements

3.1 General

The Kaolite 1600™ material referenced with in this specification shall be provided by Thermal Ceramics, Incorporated or an authorized distributor. The material certification documentation (Certificate of Conformance) for the Kaolite 1600™ must be provided by the supplier for each manufacturer's lot of material to a product code of GI80ACCUMD0027.

3.1.1 Kaolite 1600™ Receiving and Storage Instructions

a. Damaged packages of Kaolite 1600™ shall be rejected by the Seller upon receipt. Damaged packages are those that are wet, those that are visually determined to have been wet, and packages that have been torn.

b. Packages of Kaolite 1600™ must be stored unopened in a dry location and protected from damage. Opened unused and partial used Kaolite 1600™ packages are to be discarded at the end of the work shift. The term work shift shall be defined by the Seller and approved by the Company before commencing operations.

3.1.2 Cleaning Instructions

a. Use NO CHLORINE BLEACH for cleaning. Potable water shall be used and if required some mild soap (tri-sodium phosphate) may be added to the water to clean all processing equipment and manufactured components before casting. Before the start of any mixing/blending operation, the mixer shall be clean from all foreign materials or previous mixing residues from the inner surface of the mixer. The mixer shall be flushed thoroughly with potable water at the completion of the final mixing operation of the work shift to remove residues. Mixing, and casting shall be performed within a temperature range of 70 (± 25) °F.

b. Fabricated assemblies must be cleaned and protected prior to the casting operation to prevent the introduction of foreign materials into the assemblies. The assemblies shall be inspected and wiped clean prior to casting to ensure no visible contaminants are present inside the casting cavity. This inspection shall be documented in the checklist.

3.1.3 Mixing Water and Mixing Equipment Requirements

a. Potable water, that has been filtered through a 20-micron filter and has a chlorine content less than 4 mg/L (4 ppm, 0.0004 percent by mass) for chlorine shall be used for the mixing of Kaolite 1600™. If the potable water is higher then 4 ppm, then use an activated charcoal filter or some other means to reduce the amount of chlorine to at or below 4 ppm. Test the water quality for chlorine weekly during casting operations. Unfiltered potable water may be used for the cleaning of equipment used to process Kaolite 1600™.

b. All weighing operations of assemblies and materials shall be conducted on certified scales with a minimum accuracy of ½ lb.

c. This specification has been developed around the Whiteman Multiquip's WM700S-H8 plaster/mortar mixer, refereed to as WM700. This steel-drum machine mixes 7-cubic feet (193 liters) of material with an 8-horsepower Honda engine running at a slow speed. Other models of plaster/mortar mixers may be used if the speeds and mix times are qualified per section 3.5 and approved by the company.

d. A Heavy Duty Drum Vibrator/Packer(like McMaster-Carr, No. 5809K11, or Company approved equal) shall be used to clamp the Body Weldment, M2E-801580-A002 or Top Plug Weldment, M2E-801580-A008 upside down for vibration casting the Kaolite 1600™ into the welded stainless steel forms.

3.2 Mixing of Kaolite 1600™

Mixing shall be performed by operators qualified in accordance with requirements in Section 4.4.

The term batch is defined as a mixture of one bag of Kaolite 1600™ with the appropriate amount of water. The required mix ratio is 1.65 pounds of filtered water per pound of Kaolite 1600™.

The mixing activity shall be recorded on Attachment A, *Kaolite Mixing Control*. Each batch shall be given a mixture control number (MCN) and recorded upon its data Attachment. (A 10-digit control number is recommended consisting of the date and the time format using a 24-hour clock. Example: 1021041515 for October 21, 2004 at 3:15 pm.)

The Kaolite 1600™ mixing shall be performed as follows:

a. Record the weight of the bag of Kaolite 1600™ on the mixing Attachment.

b. The required mix ratio is 1.65 pounds of filtered water per pound of Kaolite 1600™. For a 50 pound bag of Kaolite 1600™, weigh and record 82.5 (± ½) lbs. of filtered water generating an acceptable wet mix density of 56.2±5.8 lb/ft^3.

c. Start the mortar mixer motor and when ready to engage the moving vanes, pour the weighed filtered water, pour all of the 50-pound bag of Kaolite 1600™ over the water. Immediately start the WM700 moving vanes for 3.0 (±0.2) minutes.

3.3 Vibration Casting and Curing of Kaolite 1600™ into Assemblies

3.3.1 Body Weldment Casting Instructions

Casting operations shall be performed by operators and witnesses qualified in accordance with requirements listed in Section 4.4.

Use Attachment B, *Body Weldment Vibration Casting Control*, to record information gathered during this operation.

Complete the casting of the mixture in less than 70 minutes. This timed procedure starts when the first batch is poured into the vibrating component. The casting and vibrating procedure must be completed within 77 minutes from initial pour for each assembly.

Casting operations shall be performed as follows:

a. Weigh the Body Weldment clean and empty. Record the weight.

b. Fill the Body Weldment with potable water that has been filtered through a 20 micron filter and has a chlorine content of ≤ 4 ppm and weigh it. Record the weight.

c. Remove the water from the assembly as much as is practical.

d. Secure the assembly on the vibration table. Set the vibration table dial indicators to approximately 800 lb-force at 450 vibrations per minute (VPM). Assure that the Body Weldment is properly secured to the table and start the vibration table. The Body Weldment must be vibrated continuously throughout the casting operation.

e. The mixture shall then be poured directly into the assembly after mixing through the fill hole provided.

f. Repeat the mixing operation in Section 3.2 and continue pouring until the mixture overflows the fill hole by ½ to ¾ inch.

EXEMPT FROM 10-155

g. Mist the top surface of the mixture with a bottle water sprayer if necessary to get the mixture into a solution after the pouring is completed. Do not add more than 8 ounces of water.

h. Vibrate the filled assembly for 5 to 7 minutes after the casting is completed.

3.3.2 Body Weldment Curing Instructions

A designated area shall be set aside for curing the assemblies. The temperature of the curing area shall be controlled to 70°F (±25°F) and shall prevent the introduction of foreign materials into the mixture.

Curing operations shall be performed as follows:

a. Remove the Body Weldment from the vibration table and place it in the curing area. Let it rest uncovered for 2½ (±½) hours.

b. Weigh and record the Before Baking weight of the cast assembly. If the weight is outside of 330 to 386 lbs range it is recommended not to cure the casting but to clean out and recast the Kaolite. This Before Baking weight is a recommended process control for the finished baked density. The manufacture may continue with a part outside of this weight range but it has a high chance being rejected for not meeting the finished baked density.

c. After resting, scrape the excess mixture from the fill opening until the Kaolite surface has a circular concave of .32±.10 to match drawing M2E801580A002.

d. Weigh the cast assembly, and photograph the fill opening. Record the weight.

e. Cover the fill opening with plastic sheeting and let the assembly set undisturbed in the curing area for at least 24 hours.

3.3.3 Top Plug Assembly Casting Instructions

Use Attachment C, Top Plug Assembly Vibration Casting Control, to record information gathered during this operation.

Complete the casting of the mixture in less than 70 minutes. This timed procedure starts when the first batch is poured into the vibrating component. The casting and vibrating procedure must be completed within 77 minutes from initial pour for each assembly.

Casting operations shall be performed as follows:

a. Weigh the top plug assembly clean and empty. Record the weight.

b. Fill the top plug assembly with potable water that has been filtered through a 20-micron filter and has a chlorine content of ≤ 4 ppm and weigh it. Record the weight.

c. Remove the water from the assembly as much as practical.

d. Place the assembly on the vibration table. Assure that the assembly is properly secured to the table. Set the vibration table dial indicator to approximately 120 lb-force at 450 vibrations per minute and start the vibration table. The top plug assembly must be vibrated continuously throughout the casting operation.

e. The mixture shall then be poured directly into the assembly after mixing through the fill hole provided.

f. Repeat the mixing operation in Section 3.2 and continue pouring until the mixture overflows the fill hole by ½ to ¾ inch.

g. Mist the top surface of the mixture with a bottle water sprayer if necessary to get the mixture into a solution after the pouring is completed. Do not add more than 4 ounces of water.

h. Vibrate the filled assembly for 5 to 10 minutes after the casting is completed.

3.3.4 Top Plug Assembly Curing Instructions

Curing operations shall be performed as follows:

a. Remove the top plug assembly from the vibration table and place it in the curing area. Let it rest uncovered for 2½ (± ½) hours.

b. Weigh and record the Before Baking weight of the cast assembly. If the weight is outside of 29.2 to 34.2 lbs range it is recommended not to cure the casting but to clean out and recast the Kaolite. This Before Baking weight is a recommended process control for the finished baked density. The manufacture may continue with a part outside of this weight range but it has a high chance being rejected for not meeting the finished baked density.

c. After resting, scrape the excess Kaolite mixture from the fill opening until surfaces are a circular convex shape of .09±.06 before it is baked to match drawing M2E801580A008.

d. Weigh the cast assembly, and photograph the fill opening. Record the weight.

e. Cover the fill opening with plastic sheeting and let the assembly set undisturbed in the curing area for at least 24 hours.

3.4 Baking of Assemblies Cast and Cured with Kaolite 1600™ mixture

3.4.1 Baking Instructions

Several assemblies may be baked together during each furnace heating cycle. Once the furnace heating cycle has started, no additional assemblies may be inserted into the furnace. The furnace and temperature control requirements to perform the baking operation are as follows:

a. The furnace shall be a gas-fired or a forced convection fresh air circulating electric furnace.

b. The furnace heat zone shall be certified to ±25°F from the furnace set point temperature at each baking temperature process point.

c. Furnace time and temperature strip charts for each furnace heating cycle shall be provided with each completed Attachment D. Alternatively, an ASCII furnace time and temperature data file may be provided for each completed Attachment D.

3.4.2 Baking Documentation

Use Attachment D, *Furnace and Baking Control*, to record information gathered during this operation. An Attachment D identified by the Baking Control Number (BCN) shall be generated for each set of assemblies subjected to the furnace baking operations. Record the BCN from Attachment D for each assembly baked during this furnace heating cycle utilizing the proper assembly Casting Attachments B, C, and F. Qualified operators as indicated in Section 4.4 shall perform the baking of the cured assemblies. Movement of the cured assemblies before baking shall be minimized. The time and actual furnace exhaust air temperature shall be recorded at least every 15 minutes for baking control during a furnace heating cycle.

The baking furnace heating cycle shall be completed as follows:

a. Place the assemblies into the furnace.

b. Set the initial set point temperature to 200 (±10) °F.

c. Hold the temperature for 4 hours at a 200 (±10) °F steady state.

d. Increase the furnace set point temperature to 275 (±10) °F.

e. Hold the temperature for 1 hour at a 275 (±10) °F steady state.

f. Increase the furnace set point temperature to 350 (±10) °F.

g. Hold the temperature for 1 hour at a 350 (±10) °F steady state.

h. Increase the furnace set point temperature to 425 (±10) °F.

i. Hold the temperature for 1 hour at a 425 (±10) °F steady state.

j. Increase the furnace set point temperature to 500 (±10) °F.

k. Hold the temperature for 41 (±5) hours at a 500 (±10) °F steady state.

l. Remove assemblies and allow cooling in still air until they reach ambient temperature.

m. Weigh the assemblies after the baking process and record the weights upon the appropriate Attachment (Attachment B or C). Calculate the baked density of the cured mixture using the equation at the bottom of Attachment B or C and record.

Acceptance criteria:

An acceptable baking process is defined as the process in which the density of the baked mixture in an assembly is within the acceptance range of 22.4 ±3 lb/ft^3 as defined on Attachments B or C. If the density is less than the allowable value, contact the Company for disposition. If the density is greater than the allowable level, then re-bake the assembly using Section 3.4.5.a through k, with the exception of the final hold time which shall be 5 (±0.5) hours. Remove assemblies and allow cooling in still air until they reach ambient temperature. Recalculate and record the density on the appropriate Attachment. If the density still is greater than the allowable level, contact the Company for disposition.

n. Photograph the surface of the baked mixture (digital images are preferred).

o. Following the acceptable baking process, weld the cover plate onto the assemblies in accordance with the appropriate engineering drawing within 24 hours.

p. Weigh the final assembly and record on the appropriate Attachment (Attachment B or C).

3.5 Mixer Qualification for Kaolite 1600™ Casting Placement

The mixer qualification process shall verify that the mixer speed and mix time are properly set to mix the Kaolite 1600™. The end result of the mixer qualification is the as-baked density of 22.4±1 lb/ft^3 in the Baked Mixer Qualification Samples. This baked density can be estimated by monitoring the wet density. The baked density is approximately 41% of the wet density; therefore, the Target Wet Density is 56.2 lb/ft^3 for an average baked density of 22.4±1 lb/ft^3. The longer the Kaolite 1600™ is mixed the denser it becomes. The mixer qualification process shall verify the mix time required at a fixed and repeatable speed. The operators shall use the mixer to determine a repeatable speed to operate the mixer for all of the tests. Record the speed setting and assure that the speed setting is repeatable. The mixer qualification tests are a two step process: first is a Wet Density Mixer Time Vibration Casting test used to determine the range of mix time versus wet density; second is the mixer Baked Density Qualification Sample Vibration Casting. It is recommended that a 4-gallon or larger metal pail be used for the testing like the 4-1/2 gallon Tin-Plated Steel Pail (McMaster-Carr 4243T16 or equivalent), 9" Top Dia, 19-3/8" Height.

3.5.1 Wet Density Mixing Test

Use Attachment E, *Wet Density Mixer Time Vibration Casting*, to record information gathered during this operation.

Prepare the Kaolite 1600™ and water for mixing per section 3.2 except for the mix time. A digital stop watch shall be used to monitor the running mix time. The mix time shall vary per Form F from 1 to 15 minutes in 1 minute intervals. Use a quick release attachment to affix the two metal pails (at least 4 gallon) to the vibration table. Start the mixer and run it for one minute, start the vibration table and pour the Kaolite 1600™ into the two pails after filling let them vibrate for 2 minutes, stop the vibration table, scrape them flush, and remove the pails and weigh them. Record the weight, dump the Kaolite 1600™ back into the mixer and start the mixer for another minute and repeat the process.

Plot the wet mix density of the two pails versus the mix time in an Excel file. An Excel file generated by the Company can be provided for this task upon request. Curve fit the data

using a third order polynomial curve and show the equation. Plot the target density of 56.2 lb/ft^3 on a chart in Excel along with the wet mix density. Where the curves intersect the target density line is the mixer's target mix time. Consult the Company for verification of this data. Use the Company verified mix time for the Mixer Baked Density Qualification Castings in Section 3.5.2.

3.5.2 Mixer Baked Density Qualification Castings

Use Attachment F, *Baked Qualification Density Sample Vibration Casting*, to record information gathered during this operation.

Prepare the Kaolite 1600™ and water for mixing per section 3.2.1 except for the mix time. A digital stop watch shall be used to obtain the Company verified mix time. Start mixer and run it for the Company verified mix time. Start the vibration table and pour the Kaolite 1600™ into the two pails. After filling, let them vibrate for 5 to 7 minutes then stop the vibration table.

Remove the two pails from the vibration table. Place the filled two pails in the curing area, and let them sit uncovered for 2½ (±½) hours. After sitting 2½ (±½) hours, scrape the excess mixture from the fill opening until surfaces are flush. Cover the fill opening with plastic sheeting or a metal lid and let the assembly sit undisturbed in the curing area for at least 24 hours before weighing. Remove the two pails and weigh the cured qualification samples to an accuracy ±1 pounds. Record the as-cured and after-baking weights and follow the baking instructions in section 3.4.

4. Quality Assurance Requirements

4.1 General

4.1.1 The Seller shall have a quality assurance program that meets the applicable requirements of Title 10 CFR Part 71, Subpart H for packaging and transportation of radioactive material. The quality assurance plan shall be in accordance with the requirements identified in the ES-3100 procurement specification. The Seller shall submit an approved quality assurance program plan that describes the quality assurance policies and practices to be implemented in identifying, controlling and verifying quality of the Kaolite 1600™ processes (weighing, mixing, pouring, vibrating, curing, and baking).

4.1.2 The Seller shall submit a Manufacturing Plan as defined in procurement specification, and shall describe how the Seller will comply with the instructions in this specification. If subcontractors are utilized for any of the processing of the Kaolite 1600™, the Seller shall ensure that the requirements of this specification (including quality assurance requirements) are met by all suppliers and subcontractors. The subcontractor's procedures, approved by the Seller, shall be included in the procedures submitted to the Company for review and approval.

4.1.3 The Seller's quality assurance program plan shall include the requirements for the process controls for the operations, operator and witness' qualifications, and verification records. Operator qualification requirements are identified in Section 4.4.

4.1.4 The Seller shall generate the documentation necessary to show compliance with the approved quality assurance program plan. All records shall be identified based on the assembly serial numbers. The Seller shall maintain quality-related documentation in accordance with requirements in the procurement specification. The Company reserves the right to request any

such documentation and to witness all aspects of the fabrication process in accordance with this specification. The Seller shall ensure that the specified manufacturing and inspection records are generated and supplied to the Company as part of the certification package.

4.1.5 The Seller must ensure all operators are aware of and comply with the quality assurance requirements identified in this specification. The Seller must ensure all operators use and follow written procedures for the respective processes. The Seller shall ensure operators and witnesses are aware of the operational requirements for the common industrial equipment (material handling equipment, mixers, vibration tables, ovens/furnace) used for the processes.

4.2 Material and Equipment Certification

4.2.1 Material certification for the Kaolite 1600™ must be provided by the supplier as defined in Section 8.0 of the procurement specification. Bags of Kaolite 1600™ must be identified with the product name and unique lot number. The material certification will be incorporated into the quality assurance records of the certification package.

4.2.3 All weighting, mixing, casting, curing, and baking processes shall be controlled and performed by qualified personnel (see Section 4.4). Written procedures shall be utilized by the operator at each operation and shall identify process hold points where required by the Company.

4.2.4 All process equipment used for mixing, casting, and baking of the Kaolite 1600™ and water mixture must be the model type identified in this specification, and must be in good working condition. Equipment used for measurements must be certified to traceable NIST standards or similar agency. Variation from specified equipment (vibration table, mixer, and furnace) is not allowed without the written approval of the Company before implementation.

4.3 Nonconformance Control

4.3.1 The Seller shall have an approved procedure for the control of nonconformances, waivers, and deviation requests during the execution of this manufacturing specification.

4.3.2 Nonconforming components shall not be used unless it has been determined by analysis or assessment by the Company that the nonconformance does not impact the physical properties of the material.

4.2.3 The disposition of nonconforming components shall be documented. Any nonconforming component shall be clearly identified and all nonconformance reports shall be traceable to the actual component affected. Copies of all approved nonconformance reports, except for scrapped components shall be supplied by the Seller to the Company as part of the certification package.

4.4 Operator and Witness Qualifications

The Kaolite™ 1600 mixing and vibration casting qualification evaluations shall be sequential. Each operator must mix and cast at least one simulated drum. Mixing and casting operations shall be repeated as necessary to achieve fully cast mock drums. The simulated ES-3100 drums cast during qualification activities shall be baked according to procedure.

4.4.1 Kaolite 1600™ Mixing Process Qualifications

Each operator and witness performing Kaolite 1600™ mixing activities must be qualified to perform this activity. This qualification shall be documented. This qualification shall consist of the following:

a. Location and time.

b. Properly identifying a bag of Kaolite 1600™ the bag of material and associated certification data (such as lot numbers)

c. Inspection of the bag for observable damage (such as water damage)

d. Successfully weighing the bag of Kaolite 1600™ on an industrial scale

e. Successfully calculating the required amount of water to be mixed with the Kaolite 1600™ (1.65 pounds of water per pound of Kaolite 1600™)

f. Properly inspecting the mixing equipment for foreign materials (such as oil, grease, free liquids, trash, or evidence of non-Kaolite 1600™ material affixed to the inner surfaces.)

g. Successfully operating the mixing equipment while mixing a complete bag of Kaolite 1600™.

h. Successfully preparing a uniformly mixed batch of Kaolite 1600™. (Uniformly shall be defined as a thoroughly mixed material with no dry material and no free liquids remaining in the mixer.)

4.4.2 Kaolite 1600™ Vibration Casting Process Qualifications

Each operator and witness performing Kaolite 1600™ casting activities must be qualified by successfully performing a casting activity. This qualification shall consist of the following.

a. Properly inspecting the inner surfaces of an empty simulated ES-3100 drum body for residues (oil, grease, free liquids) and waste material. (A simulated ES-3100 drum body shall consist of a 55-gallon carbon steel open-head drum which has a 16-gallon carbon steel drum secured to the bottom center. The 16-gallon drum may be secured by tack welding or suitable fasteners. The lid of the 55-gallon drum must have an opening 15" in diameter through which the Kaolite 1600™ can be poured into the drum.)

b. Properly securing an empty simulated ES-3100 drum body to the vibration table.

c. Properly adjusting the vibration table controls to the specified values for drum assemblies.

d. Successfully transferring the Kaolite 1600™ from the mixer into the drum while the drum is vibrating.

4.4.3 Kaolite 1600™ Baking Process Qualifications

Each operator and witness performing Kaolite 1600™ baking operations shall review the procedure steps for calculating the as-baked density of the Kaolite 1600™ in the assemblies and perform a sample calculation.

Attachment A	Specification Number JS-YMN3-801580-A003-1		Revision C
EQUIPMENT SPECIFICATION **ES-3100 Shipping Package** **Kaolite Mixing Control**	Issue Date 11/24/03	Revision Date 6/1/06	
	Plant Y-12	Page 1	of 1

Caster's Company Name			Supplier's Company Name		
Mixing Start Date	Time	Air Temp. °F	Thermal Ceramics Kaolite 1600™ Certificate of Conformance		
Kaolite 1600™ Mixing and Vibration Casting Information			Comments	Operator	Witness
50 lb. Bag ID Number					
Bag Wt.					
1.65 × Bag Wt.					
Mixing Control Number (MCN)[a]					
Water Wt. ±0.5 lbs. (1.65 times Kaolite Bag Wt.)					
Mix Finish Time					

[a] A 10-digit control number is recommended for the Mixing Control Number (MCN) consisting of the date and the time format using a 24-hour clock (i.e. 1021041515 is used for October 21, 2004 at 3:15 pm.)

EXEMPT FROM IO-155

Attachment B	Specification Number JS-YMN3-801580-A003-2		Revision C
EQUIPMENT SPECIFICATION **ES-3100 Shipping Package** **Body Weldment**	Issue Date 11/24/03	Revision Date 6/1/06	
	Plant Y-12	Page 1	of 1

Caster's Company Name					Seller's Company Name		
Part Serial Number					Body Weldment Drawing Number M2E801580A002		
Measured Weights ±0.5 lb	Casting Information				Comments	Operator	Witness
	Weight		Date				
Clean and Empty							
Filled with Water [a]							
Before Baking [f]							
After Baking Cycle 5							
After Baking Cycle 5A [d]							
After Welding							
Water Information	Water Weight ±0.5 lb		Water Temp.		Comments	Operator	Witness
Water Conditions [a]	lb		°F				
Casting Start Date	Air Temp. °F	Vibration Settings [b] lbf	VPM				
Operation	MCN [c]		Time		Comments	Operator	Witness
Pour Start							
Pour Start							
Pour Start							
Vibration Start							
Vibration Stop							
Baking Cycle 5	Baking Control Num. [c]		Date	Time	Density [d]	Operator	Witness
Baking Cycle 5A [d]	Baking Control Num. [c]		Date	Time	Density [d]	Operator	Witness

[a] Record the water weight and water temperature within 10 minutes from completion of the weighing process.

[b] Recommended Vibration settings are at 450 VPM and twice the total vibrated weight. The total vibrated weight is the finish cast part and fixtures weight, for a setting of approximately 800 pound-force.

[c] A 10-digit Baking Control Number shall be used to define the date and the time of baking using the format with a 24-hour clock (i.e. 1021041515 is used for October 21, 2004 at 3:15 pm.)

[d] Use the above weights to calculate the Density as shown below. If the density is greater, then 25.4 lb/ft^3 then proceed with the next Baking Cycle. If the density is less then 19.4 lb/ft^3 then contact the Company for disposition.

$$\text{Density} = \frac{(AfterBaking - CleanAndEmpty)}{(WithWater - CleanAndEmpty)} \times 62.3 \text{ lb/ft}^3 \quad @\ 70°\text{F}$$

[f] Recommend Before Baking weight is to be 330 to 386 lb range.

EXEMPT FROM IO-155

Attachment C	Specification Number JS-YMN3-801580-A003-3		Revision C
EQUIPMENT SPECIFICATION **ES-3100 Shipping Package** **Top Plug Assembly Vibration Casting Control**	Issue Date 11/24/03	Revision Date 6/1/06	
	Plant Y-12	Page 1	of 1

Caster's Company Name			Seller's Company Name		
Part Serial Number			Top Plug Assembly Drawing Number M2E801580A008		
Measured Weights ±0.5 lb	Casting Information		Comments	Operator	Witness
	Weight	Date			
Clean and Empty					
Filled with Water[a]					
Before Baking[f]					
After Baking Cycle 5					
After Baking Cycle 5A[d]					
After Welding					
Water Information	Water Weight ±0.5 lb	Water Temp.	Comments	Operator	Witness
Water Conditions[a]	lb	°F			
Casting Start Date	Air Temp. °F / Vibration Settings[b] lbf	VPM			
Operation	MCN	Time	Comments	Operator	Witness
Pour Start					
Pour Start					
Vibration Start					
Vibration Stop					
Baking Cycle 5	Baking Control Num.[c]	Date	Time / Density[d]	Operator	Witness
Baking Cycle 5A[d]	Baking Control Num.[c]	Date	Time / Density[d]	Operator	Witness

[a] Record the water weight and water temperature within 10 minutes from completion of the weighing process.

[b] Recommended Vibration settings are at 450 VPM and twice the total vibrated weight. The total vibrated weight is the finish cast part and fixtures weight, for a setting of approximately 120 pound-force.

[c] A 10-digit Baking Control Number shall be used to define the date and the time of baking using the format with a 24-hour clock (i.e. 1021041515 is used for October 21, 2004 at 3:15 pm.)

[d] Use the above weights to calculate the Density as shown below. If the density is greater than 25.4 lb/ft^3 then proceed with Baking Cycle 1A. If the density is, less then 19.4 lb/ft^3 then contact the Company for disposition.

$$\text{Density} = \frac{(AfterBaking - CleanAndEmpty)}{(WithWater - CleanAndEmpty)} \times 62.3 \text{ lb/ft}^3 \quad @\ 70°\text{F}$$

[f] Recommend Before Baking weight is to be 29.2 to 34.2 lb range.

EXEMPT FROM IO-155

Attachment D	Specification Number JS-YMN3-801580-A003-4		Revision C
EQUIPMENT SPECIFICATION **ES-3100 Shipping Package** **Furnace and Baking Control**	Issue Date 11/24/03	Revision Date 6/1/06	
	Plant Y-12	Page 1	of 1

Baking Company Name				Seller's Company Name			
Baking Control Number [a]				Furnace Serial Number			
Bake Start Date		Air Temp. °F		Computer Data File Name [b]			
Baking Process Control	Furnace Check or NA	Start Time	Start Date	Stop Time	Stop Date	Operator	Witness
Baking Cycle (1) 200°F for 4 hrs.							
Baking Cycle (2) 275°F for 1 hrs.							
Baking Cycle (3) 350°F for 1 hrs.							
Baking Cycle (4) 425°F for 1 hrs.							
Baking Cycle (5) 500°F for 36 to 46 hrs. [c]							
Baking Cycle (1A) 200°F for 4 hrs.							
Baking Cycle (2A) 275°F for 1 hrs.							
Baking Cycle (3A) 350°F for 1 hrs.							
Baking Cycle (4A) 425°F for 1 hrs.							
Baking Cycle (5A) 500°F for 4.5 to 5.5 hrs. [c]							

[a] Record the Baking Control Number in MMDDYYTIME (with time the 24 hour format i.e. 1021041515 is used for October 21, 2004 at 3:15 pm.) on Casting Forms B, C, and F for each part baked under this furnace heating cycle.

[b] The sample baking cycle time and temperature data could be presented both in a digital and graphical form. For example, an Excel file showing the original data and time verses temperature plots shall be acceptable.

[c] Calculate the density as shown on Forms B or C following this furnace heating cycle phase. If the part density is greater than 25.4 lb/ft^3, then proceed with the remaining furnace phases.

EXEMPT FROM IO-155

Attachment E	Specification Number JS-YMN3-801580-A003-5		Revision C
EQUIPMENT SPECIFICATION **ES-3100 Shipping Package** **Wet Density Mixer Time Vibration Casting**	Issue Date 11/24/03	Revision Date 6/1/06	
	Plant Y-12	Page 1	of 1

Caster's Company Name			Seller's Company Name		
Mixer Make and Model					
Wet Mix Density Qualification Number [a]			Mix Control Number [a]		
Measured Weights ±0.5 lb	Casting Information		Comments	Operator	Witness
	Weight [c, b] (lb)	Date			
Clean and Empty					
Filled with Water [b]					
Water Information	Water Weight [c, b] ±0.5 lb	Water Temp.	Comments	Operator	Witness
Water Conditions		°F			
Casting Start Date	Air Temp. °F	Vibration Settings [c] lbf / VPM	Mixer Speed Setting		
Operation	Weight [c, b] (lb)	Time (min)	Wet Density [d] (lb/ft³)	Operator	Witness
Wet Cast [e]		1.0			
Wet Cast [e]		2.0			
Wet Cast [e]		3.0			
Wet Cast [e]		4.0			
Wet Cast [e]		5.0			
Wet Cast [e]		6.0			
Wet Cast [e]		7.0			
Wet Cast [e]		8.0			
Wet Cast [e]		9.0			
Wet Cast [e]		10.0			
Wet Cast [e]		11.0			
Wet Cast [e]		12.0			
Wet Cast [e]		13.0			
Wet Cast [e]		14.0			
Wet Cast [e]		15.0			
Curve fit the Time required to generate the target density and contact the Company for confirmation.			Target Density 56.2 lb/ft³		

[a] Record the Wet Mix Density Qualification Number and the Mix Control Number in MMDDYYTIME (with time the 24 hour format i.e. 1021041515 is used for October 21, 2004 at 3:15 pm.).

[b] Record water weight and water temperature within 10 minutes from completion of the weighing process.

[c] Use both steel pails to calculate the weights and density.

[d] Recommended Vibration settings are at 450 VPM and twice the total vibrated weight. The total vibrated weight is the finish cast part and fixtures weight, for a setting of approximately 120 pound-force.

[e] Use the above weights to calculate the Wet Density as shown below.

$$\text{Wet Density} = \frac{(WetCast - CleanAndEmpty)}{(WithWater - CleanAndEmpty)} \times 62.3 \text{ lb/ft}^3 \quad @\ 70°F$$

EXEMPT FROM IC-155

Attachment F	Specification Number JS-YMN3-801580-A003-6		Revision C
EQUIPMENT SPECIFICATION **ES-3100 Shipping Package** **Baked Qualification Density Sample Vibration Casting**	Issue Date 11/24/03	Revision Date 6/1/06	
	Plant Y-12	Page 1	of 1

Caster's Company Name			Seller's Company Name		
Mixer Make and Model					
Baked Qualification Density Number [a]			Mix Control Number [a]		
Measured Weights ±0.5 lb	Casting Information		Comments	Operator	Witness
	Weight ±0.5 lb	Date			
Clean and Empty					
Filled with Water [c]					
Before Baking					
After Baking Cycle 5					
Water Information	Water Weight ±0.5 lb	Water Temp.	Comments	Operator	Witness
Water Conditions [c]		°F			
Casting Start Date	Air Temp. °F / Vibration Settings [b] lbf	VPM			
Operation	MCN	Time	Comments	Operator	Witness
Pour Start					
Vibration Start					
Vibration Stop					
Baking Cycle 5	Baking Control Num.	Date	Time / Density [d]	Operator	Witness

[a] Record the Baked Qualification Density Number and the Mix Control Number in MMDDYYTIME (with time the 24 hour format i.e. 1021041515 is used for October 21, 2004 at 3:15 pm.).

[b] Recommended Vibration settings are at 450 VPM and twice the total vibrated weight. The total vibrated weight is the finish cast part and fixtures weight, for a setting of approximately 120 pound-force.

[c] Record water weight and water temperature within 10 minutes from completion of the weighing process

[d] Use the above weights to calculate the Qualification Sample Density as shown below. If the density is greater then 23.4 lb/ft^3 or less then 21.4 lb/ft^3 contact the Company for disposition.

$$\text{Qualification Density} = \frac{(AfterBaking - CleanAndEmpty)}{(WithWater - CleanAndEmpty)} \times 62.3 \text{ lb/ft}^3 \quad @\ 70°\text{F}$$

EXEMPT FROM IO-155

APPENDIX 1.4.5

EQUIPMENT SPECIFICATION, JS-YMN3-801580-A005, *CASTING CATALOG NO. 277-4 NEUTRON ABSORBER FOR THE ES-3100 SHIPPING PACKAGE*

EQUIPMENT SPECIFICATION APPROVAL/REVISION PAGE

SPECIFICATION NO	REV	ISSUE DATE
JS-YMN3-801580-A005	E	02-18-05
PAGE	REVISION DATE	
i of ii	6/1/2006	
PROCURED BY	INSTALLED BY	
BWXT Y-12 L.L.C.	BWXT Y-12 L.L.C.	
PROJECT TITLE	PLANT	BUILDING
ES-3100 Shipping Package	Y-12	AREA
JOB TITLE	W.O. DAESC	RECORD NUMBER
Production Design Definition	7RCPCA08	Y2003-0328
SPECIFICATION TITLE		SUCCEEDING SPECIFICATION NUMBER
Casting Catalog No. 277-4 Neutron Absorber For The ES-3100 Shipping Package		NA

APPROVALS

	SIGNATURE	DATE		SIGNATURE	DATE
PREPARED BY	G. A. Byington /s/	2/18/05	PROJECT ENGINEER	G. A. Byington /s/	2/18/05
DESIGN VERIFICATION	M. L. Goins /s/	2/18/05	CRITICALITY SAFETY	D. A. T. J. F. DeClue /s/	2/18/05
PROJECT MANAGER	D. P. Sooter /s/	11 Feb 05			

REVISIONS/APPROVALS

REV. NO.	DESCRIPTION OF REVISION
A	Issued for Procurement.
B	Changed the minimum LOD from 25.3% to 30.1% at three locations on page 13 section 4.7.3 and one location on page 23 Form D.
C	General changes. Went from an off the shelf item to a two part system of boron carbide plus high alumina cement
D	General revision. Reformatted sections and attachments. Deleted references to drawing numbers
E	The mass limits were changed to account for volume tolerances in the 277-4 annulus. Section 3.3.8, Item I, "inner liner" was replaced with "can". A.3.1 was separated into two sections; the second part of A.3.1 became A.3.1.a with the title "Net Count Rate Time Determination". Section A.6.3 was modified by adding "Define the repeatable accuracy for" before the first sentence. JS-YMN3-801580-A005-5 was expanded to include more approval data requirements. A typo was fixed on JS-YMN3-801580-A005-6. Added Rev level to Forms and headers.

	SIGNATURE	DATE		SIGNATURE	DATE
PREPARED BY	G. A. Byington	6/1/06	PROGRAM MANAGER	George Singleton	6/1/06
DESIGN VERIFICATION	M. L. Goins	6/1/06	CRITICALITY SAFETY	J. F. DeClue	6/1/06
DISCIPLINE MANAGER	C. M. Dmowski for W. I. North	6/1/06	QUALITY ASSURANCE	D. V. Eckert	6/1/06

This document has been reviewed by a Y-12 DC and UCNI RO and has been determined to be UNCLASSIFIED and not UCNI. The review does not constitute clearance for public release.

Name [signature] Date: 06/01/06

EXEMPT FROM [illegible]

CONTENTS

1.0 Scope 1

2.0 Applicable Documents 6

3.0 Requirements 7

4.0 Quality Assurance 14

5.0 Preparation For Delivery 15

6.0 Manufacturer's Data 15

ATTACHMENTS

Appendix A Prompt Gamma-ray Neutron Activation Analysis Testing Setup & Tooling 16

FORM A 277-4 Dry Blend Batch Control

FORM B 277-4 Wet Mix Control (Overcast or Special Batch)

FORM C ES-3100 Body Weldment Casting Control

FORM D ES-3100 Neutron Absorber Form Casting Control

FORM E ES-3100 Heavy Can Spacer Assembly Casting Control

FORM F ES-3100 Companion Sample Casting Control and Tests

FORM AA PGNAA Tooling Setup Control

FORM AB PGNAA Standard Setup

FORM AC PGNAA Daily Standard Setup Control

FORM AD PGNAA Measurements

Offer Apprasial Data - Subcontractor, JS-YMN3-801580-A005-1

Approval Data - Subcontractor, JS-YMN3-801580-A005-2

Certified Data - Subcontractor, JS-YMN3-801580-A005-3

Offer Apprasial Data - PGNAA Subcontractor, JS-YMN3-801580-A005-4

Approval Data - PGNAA Subcontractor, JS-YMN3-801580-A005-5

Certified Data - PGNAA Subcontractor, JS-YMN3-801580-A005-6

1.0 Scope

1.1 This specification describes the requirements for the procurement, preparation, casting, and verification of a neutron absorber material into the ES-3100 shipping package. The neutron absorber material shall be cast into ES-3100 Body Weldment (Figure 1), Neutron Absorber Form (Figures 4 and 5), Heavy Can Spacer Assembly (Figure 6), and 10 oz. double frication can(Figures 7 and 8) with tooling, i.e., Neutron Absorber Casting Funnel Assembly (Figure 2), and Body Weldment and Casting Funnel Assembly (Figure 3).

1.2 Definitions

277-0 - Thermo Electron's Catalog No. 277-0, Heat Resistant Shielding "Non-Borated" high alumina cement.

277-4 - A mixture of 277-0 and boron carbide (B_4C) powder to form a neutron absorber material.

Companion Sample Cans - The 10 oz. double friction cans in Figures 7 and 8 used for sampling.

Company - BWXT Y-12 L.L.C.

Dry Batch - A dry mix of batch size of 277-4.

Dry Blend Batch - A thoroughly mixed Dry Batch.

Heavy Can Spacer Assembly - The 10 oz. double friction can in Figure 6.

Overcast – Additional cast material required to achieve the fill requirements.

PGNAA Subcontractor – Independent testing firm that performs the Prompt Gamma-ray Neutron Analysis on the companion sample cans for the Company.

Process Procedures - Dry mixing, wet mixing, casting, sampling, and inspection procedures.

Subcontractor - The manufacturer of the ES-3100 Drum Assembly per JS-YMN3-801580-A001.

Vibration Casting – Vibration during casting to remove the air bubbles.

Wet Mix Batch - A wet mix of Dry Blend Batch and water.

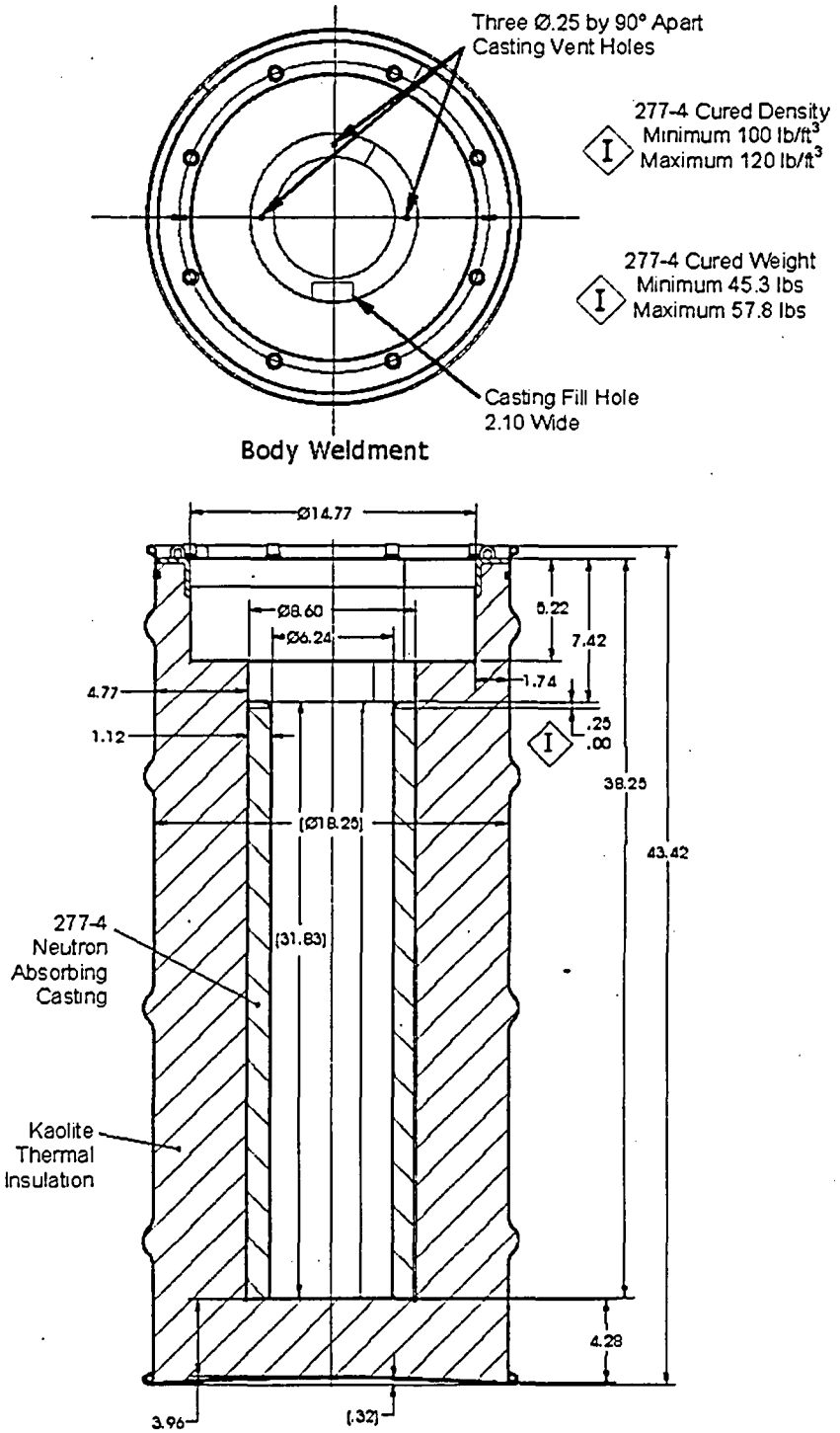

Figure 1 ES-3100 Neutron Absorbing Casting

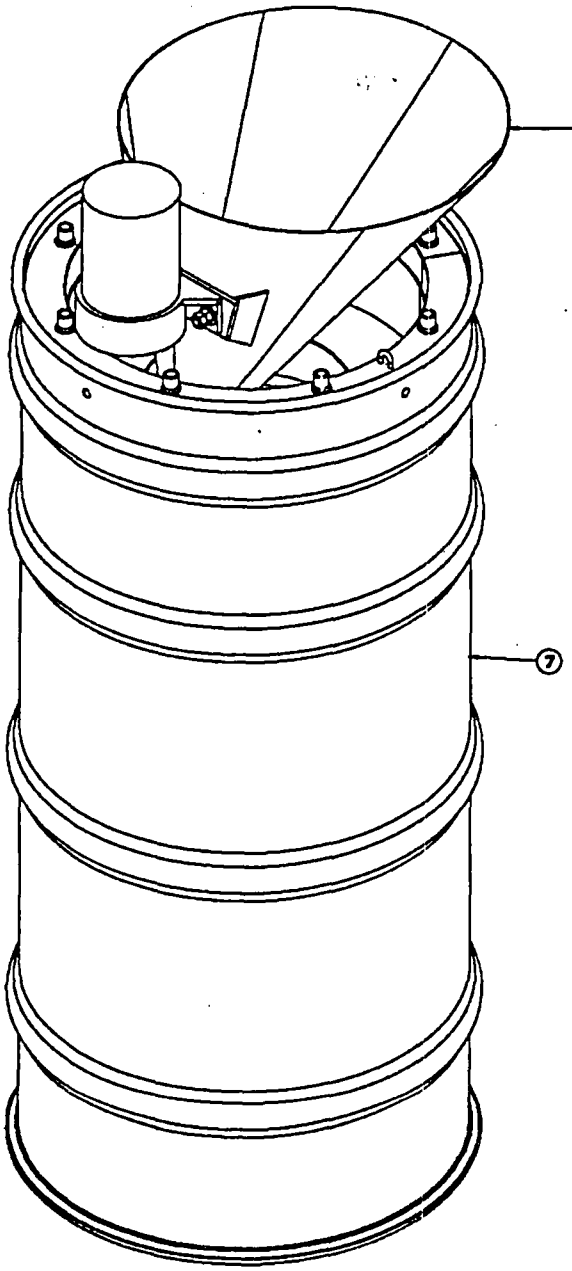

Neutron Absorber Casting Funnel Assembly

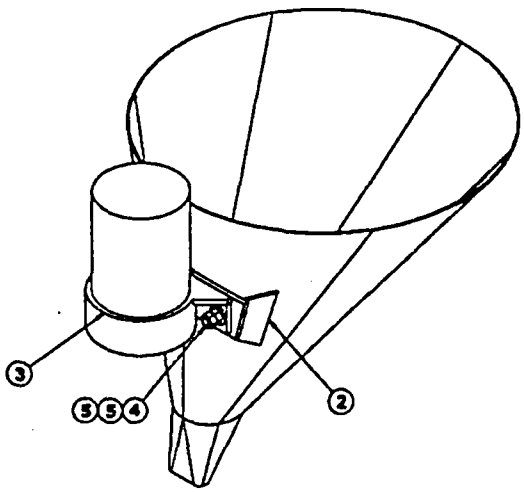

-1 NEUTRON ABSORBER CASTING FUNNEL ASSEMBLY

VIBRATOR POWERED CASTING FUNNEL

Figure 2

-6 BODY WELDMENT AND CASTING FUNNEL ASSEMBLY

Figure 3

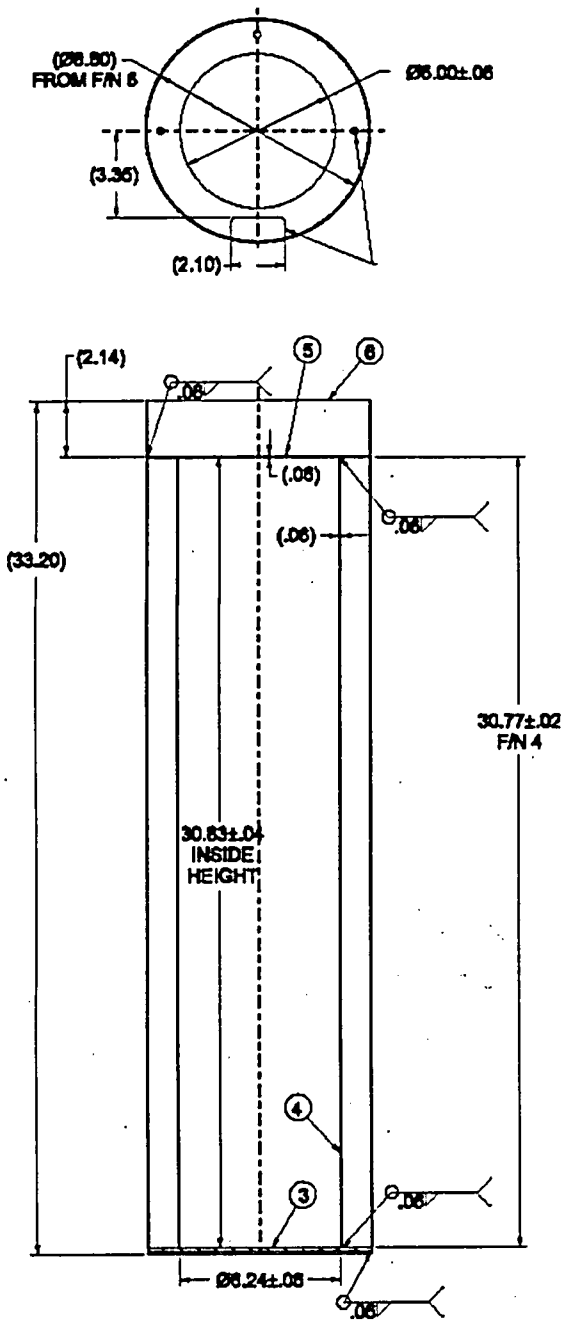

-2 NEUTRON ABSORBER FORM WELDMENT

Figure 4

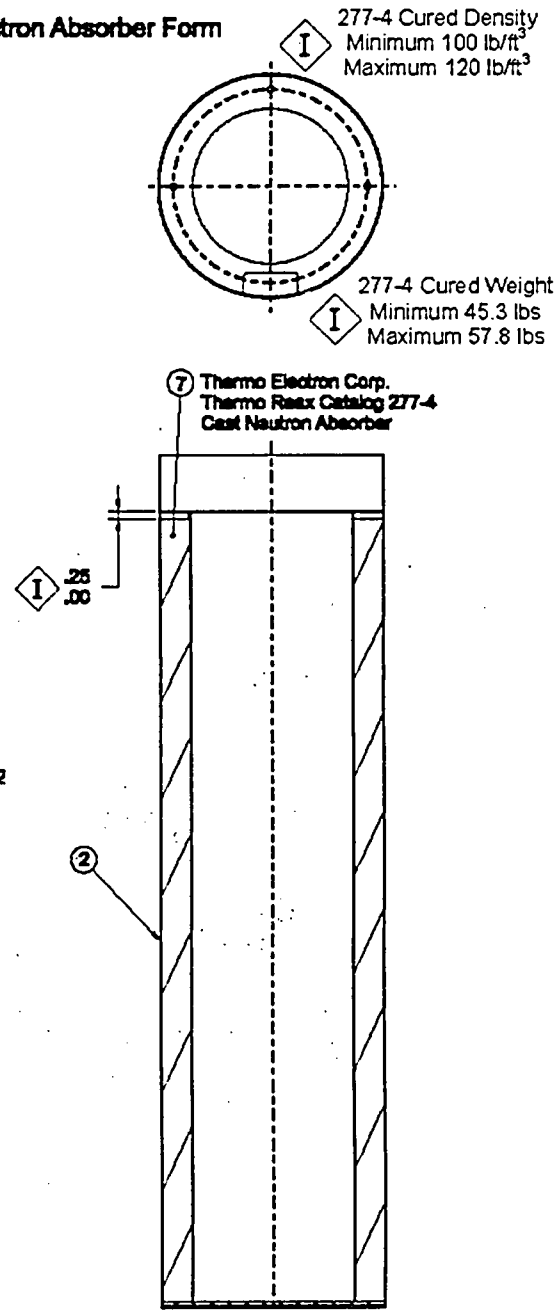

-1 NEUTRON ABSORBER FORM ASSEMBLY

Figure 5

HEAVY CAN SPACER ASSEMBLY

Figure 6

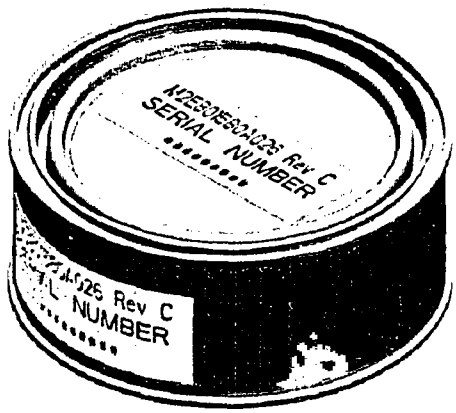

10oz DOUBLE FRICTION CAN
FILLED WITH 277-4

Figure 7

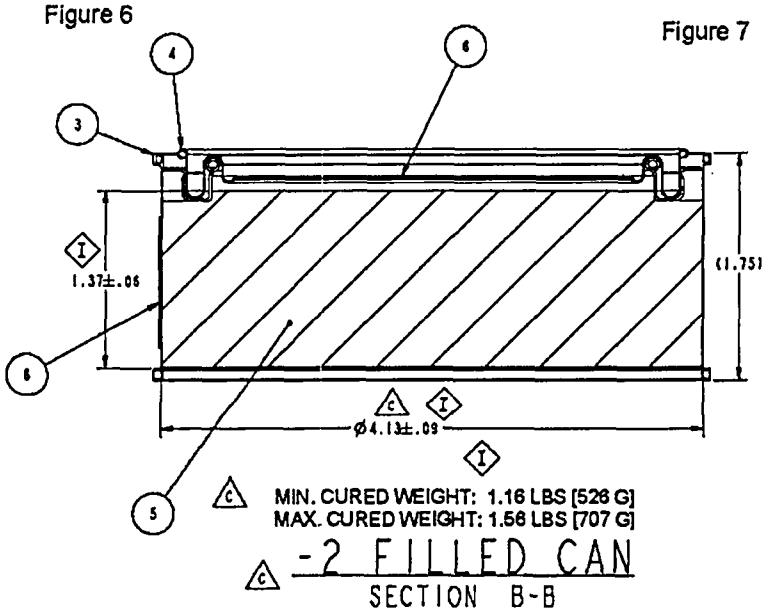

10oz DOUBLE FRICTION CAN
FILLED WITH 277-4

Figure 8

EXEMPT FROM IO-155 (8-02)

2.0 Applicable Documents

2.1 The following documents are a part of this specification. When there is a conflict between the specification and the applicable documents, the Subcontractor shall bring it to the attention of the Company for resolution.

2.2 Standards

ASTM A 380-99	*Standard Practice for Cleaning, Descaling, and Passivation of Stainless Steel Parts, Equipment and Systems*
ASTM C 750-03	*Specification for Nuclear-Grade Boron Carbide Powder*
ASTM C 791-04	*Test Methods for Chemical, Mass Spectrometric, and Spectrochemical Analysis of Nuclear-Grade Boron Carbide*
ASTM E 11-04	*Standard Specification for Wire Cloth and Sieves for Testing Purposes*
10 CFR 71 Subpart H	*Code of Federal Regulations - Energy - Packaging and Transportation of Radioactive Material - Quality Assurance*

2.3 Company Documents

JS-YMN3-801580-A002	*ES-3100 Drum Assembly*
JS-YMN3-801580-A003	*Manufacturing Process Specification for Casting Kaolite ™ Into the ES-3100 Shipping Package*
M2E801580A026	*Heavy Can Spacer Assembly*

2.4 Referenced Documents (Not Provided with Request for Proposal)

DAC-PKG-801624-A001	*Mixing Weights And Elemental Composition of 277-4 Neutron Poison used in the ES-3100*
Ltr. No. COR-NDA-04-93	Canberra Oak Ridge, LLC, January 5, 2005, *Results of Prompt Gamma-ray Neutron Activation Analysis and Neutron Transmission Measurements on Prototype Confinement Vessel Inner Liners and Spacers.*
Ltr. No.: COR-NDA-05-015	Canberra Oak Ridge, LLC November 3, 2005, *Results of Prompt Gamma-ray Neutron Activation Analysis On 20 Slip Fit Spacer Cans.*

3.0 Requirements

3.1 General Requirements

The Subcontractor shall be responsible for supplying all materials, services, facilities, and equipment to meet the requirements of this specification unless otherwise noted. Items needed to meet the requirements of this specification that are not identified in this specification shall be specified by the Subcontractor and submitted as Approval Data.

3.2 Equipment Requirements

3.2.1 Certified Scales

All weighing operations of assemblies and materials shall be conducted on certified scales with a minimum accuracy of ±1% of the required measurement or as specified by the measurement tolerance. Scale certification shall be submitted as Approval Data.

3.2.2 Dry Blending the 277-0 and B_4C

A small parts tumbler shall be used to dry blend the ingredients. The small parts tumbler shall be a Multi-Barrel Small Parts Tumbler Benchtop Base (McMaster-Carr No. 44235A11) with Multi-Barrel Small Parts Tumbler 8 Gallon Barrel, 15-3/4" Dia X 14-3/4" W (McMaster-Carr No. 44235A24) or Company approved equal.

3.2.3 Mortar or Plaster Mixer

A mortar or plaster type mixer with moving vanes to shear the wet mix shall be used. The batch volume is approximately 0.5 ft^3 (15 quarts or 3.8 gallons). Therefore, it is recommended that the mixer volume should be 1.5 to 2 times the mix volume or around 0.75 to 1.0 ft^3 (22.5 to 30 quarts, ~6 to 8 gallons). The 277-4 wet mix is thixotropic when mixed and it is recommended that a heavy duty adjustable vibrator mounted to the mixer for both mixing and pouring is used.

3.2.4 Small Plaster Mixer

A drill-powered mortar or plaster mixer and a 5-gallon plastic bucket may be used on small batches of 277-4 instead of the mortar or plaster type mixer. The 5-gallon plastic bucket shall be placed upon the Heavy Duty Drum Vibrator (see Section 3.2.6).

3.2.5 Vibration Powered Funnel Assembly

The Neutron Absorber Casting Funnel Assembly with a vibration- powered funnel (Figures 2 and 3) shall fill both the Body Weldment (Figure 1) and the Neutron Absorber Form (Figure 4). The Casting Funnel Assembly may be modified as required by the Subcontractor to get the wet mix to flow.

3.2.6 Heavy Duty Drum Vibrator

A Heavy Duty Drum Vibrator/Packer shall be used to hold the Body Weldment (Figure 1) or Neutron Absorber Form (Figure 4) for vibration casting the 277-4 into the stainless steel forms. The Heavy Duty Drum Vibrator/Packer shall be McMaster-Carr No. 5809K11, or Company approved equal.

3.2.7 Bench Vibrator

A bench vibrator shall be used during the mixing of the companion sample cans and Heavy Spacer Can Assemblies. The bench vibrator shall be Tabletop Vibration/Mixing Table 10-in. by 7-in. Platform, 10-lb Capacity Continuous Use (McMaster-Carr No. 5714K61) or Company approved equal.

3.3 277-4 Neutron Absorber

3.3.1 Raw Casting Material Requirements and Inspection

3.3.1.1 277-0

Thermo Electron Corporation Catalog No. 277-0 Heat Resistant Shielding "Non-Borated" shall be procured. The manufacturer model or catalog number and expiration date shall be clearly indicated on the container. A Certificate of Conformance shall be provided with each lot or batch. The Certificate of Conformance shall include the lot or batch number and the expiration date. The 277-0 shall be sealed and stored in a dry place.

3.3.1.2 Type 1 Nuclear-Grade Boron Carbide Powder

B_4C powder shall be procured as Type 1 Nuclear-Grade Boron Carbide Powder per ASTM C 750. 100% of the powder shall pass through a No. 140 Sieve per ASTM E 11. A Certificate of Conformance and a copy of the chemical and elemental analysis purity in accordance with ASTM C 791 shall be provided.

3.3.1.3 Water

The water shall be potable, filtered through a 20-micron filter and an activated charcoal filter, have a chlorine content of less than 4 ppm, and have a temperature of 65±15°F. Unfiltered potable water may be used for the cleaning of equipment used to cast the neutron absorber system.

3.3.2 Dry Blending Process

3.3.2.1 Dry Batch

A dry batch of 277-4 shall be a mixture of 93.6 wt% 277-0 and 6.4 wt% B_4C. It shall be of sufficient quantity to fill one ES-3100 Body Weldment or Neutron Absorber Form, i.e., approximately 0.55 ft^3 poured volume and 50 lbs. of dry 277-4 weight. The batch size may be adjusted as necessary based on experience for the ES-3100 Body Weldment or Neutron Absorber Form. The tolerance for 277-0 and B_4C weighting shall be the following:

277-4 Dry Batch Size	277-0	B_4C
Equal to or greater than 30 lbs.	±.2 lbs.	±.01 lbs.
Less than 30 lbs	±.01 lbs.	±.01 lbs.

The data shall be recorded on Form A.

3.3.2.2 Blended Dry Batch

The dry batch of 277-4 shall be thoroughly blended. The data shall be recorded on Form A.

If the blended dry batch is not used immediately, the blended dry batch shall be sealed and stored in a dry place with a Blended Dry Batch control number attached to the container.

The Blended Dry Batch shall not be used if the 277-0 expiration date has expired.

3.3.3 Wet Mixing

The weight of the dry mix and water shall be to the following weight proportions of 100% dry mix and 27±1% water. The 277-4 is thixotropic when mixed. It is recommended to have a heavy duty adjustable vibrator mounted to the mixer for both mixing and pouring. Place the water in the mixer and add the dry mix into the water. Before casting, mix the dry powder and water for at least 3 minutes and less than 60 minutes. Any material in the mixer after 60 minutes shall be discarded. Mix only in a room with a temperature range of 70±25°F.

The data shall be recorded on the appropriate form, i.e., Form B for overcast, Form C for Body Weldment, Form D for Neutron Absorber Form, and Form E for Heavy Can Spacer Assembly/PGNAA Acceptance Standards.

3.3.4 Body Weldment and Neutron Absorber Form Vibration Casting

3.3.4.1 Vibration Casting Requirements for Body Weldment and Neutron Absorber Form

During the vibration casting of the 277-4, record the Body Weldment (Figure 1) casting data on Form C and the Neutron Absorber Form (Figure 5) casting data on Form D. A stainless steel vibration powered funnel (i.e., Neutron Absorber Funnel Assembly shown in Figure 3) fits inside the 2.10-in. wide slotted fill hole shown in Body Weldment and in Neutron Absorber Form.

a. Weigh and record the data on Form C or on Form D.
b. Weigh and record the water weight and temperature data when filled with water to within .25 in. of the top metal surface.
c. Remove the water.
d. Secure the part on the drum vibrator.
e. Plug the 6.24 in. diameter cavity to keep the wet mix from falling into the liner bottom.
f. Place the Neutron Absorber Funnel Assembly in the slot and secure in place. If required, additional vibrators may be added.
g. Prepare the Wet Mix per Section 3.3.3.
h. Start the drum vibrator.
i. Scoop the wet mix into the Neutron Absorber Funnel Assembly.
j. Turn on the vibrating funnel and adjust the vibration force until the wet mix flows.
k. About half way through filling the wet mix in either the Body Weldment or Neutron Absorber Form, cast two companion samples for Section 3.3.7. Record the companion sample data on Form F and either Form C or Form D.
l. Continue filling the wet mix until the part will take no more.
m. After filling is complete, vibrate the container for 45±15 seconds to remove air bubbles.

3.3.4.2 Overcast Requirements for Body Weldment and Neutron Absorber Form

A few hours after casting, the 277-4 will settle in the vertical direction and leave a layer of watery fluid on the top of the casting. Remove this fluid and overcast the top between 4 and 24 hours from the first casting. After the overcast has cured for between 4 and 24 hours inspect the depth of casting to the top metal surface and verify that it is within 0.25 in. If not within the 0.25 in., cast additional 277-4 material and perform the following:

a. Remove the water.
b. Secure the Body Weldment or Neutron Absorber Form on the drum vibrator.
c. Plug the 6.24 in. diameter cavity to keep the wet mix from falling into the liner bottom.
d. Record the Overcast Wet Mix Control Number (WMCN) on the appropriate casting data form.
e. Prepare the Wet Mix per Section 3.3.3.
f. Start the drum vibrator.
g. Scoop the wet mix into the Body Weldment or Neutron Absorber Form Assembly until the vent hole is filled.

The final shrinkage of the 277-4 shall be within 0.25 in. of the metal surface as shown in Figures 1 and 5.

3.3.4.3 Curing Requirements Body Weldment and Neutron Absorber Form

Cover the newly cast wet component with plastic or metal for 7 days. Do not store the cast 277-4 castings in temperatures below 35°F for the first 30 days after casting.

After 7 days, remove the plastic or metal cover and dehydrated using either or both vacuum and heat to create an acceptable density and weight. If heat is used, the maximum temperature of the inner liner shall not exceed 250°F.

Record the diamond I measurements shown on Figures 1 and 5 on the appropriate casting data forms. The acceptable cured height measurement shall be less than 0.25 inches. The acceptable cured casting weight shall be between 45.3 and 57.8 lbs. Cured casting weights shall be used to calculate the cured density. If the cured casting density is greater than 120 lb/ft^3, continue the dehydration process. If the cured casting density is less than 100 lb/ft^3, the casting shall be unacceptable, the appropriate form shall be completed, and a copy of the form shall be sent to the Company.

3.3.5 Heavy Can Spacer Assembly

The Heavy Can Spacer Assembly shown in Figure 6 shall be the 10-oz. double friction metal can as shown in Figures 7 and 8. The cured casting weight for each can shall be measured and the cured casting density recorded on Form E. A cured cast density of 100 to 120 lb/ft^3 and a cured weight range of 1.16 to 1.56 lbs shall be acceptable. If the cured casting density is outside the acceptable range, a copy of the form shall be sent to the Company.

Two cans from the middle of the lot on Form E, i.e., a maximum lot of 22 cans, shall be selected and identified as companion sample cans. Cans that are not from the middle of the lot on Form may be selected with Company approval.

3.3.6 PGNAA Acceptance Standards

The PGNAA Acceptance Standards shall be made with a Company representative witnessing the manufacturing processes of weighing, blending, wet mixing, and casting. The PGNAA Acceptance Standards shall be the 10-oz. double friction metal can as shown in Figures 7 and 8. The cured casting weight for each can shall be measured and the cured casting density recorded on Form E. A cured casting density of 100 to 120 lb/ft^3 and a cured casting weight of 1.16 to 1.56 lbs shall be acceptable. If the cured casting density is outside the acceptable range, a copy of the form shall be sent to the Company.

One can from the middle of the lot on Form E, i.e., a maximum lot of 22 cans, shall be selected and identified as a companion sample can for Loss On Drying (LOD) testing. The remainder of the lot shall be sent to the PGNAA Subcontractor.

3.3.7 Companion Sample Cans

In addition to the companion sample cans selected in Sections 3.3.5 and 3.3.6, two companion sample cans shall be made half way through the casting process for the Body Weldment and the Neutron Absorber Form per Section 3.3.4.1. Companion sample can data shall be recorded on Test Form F.

a. The cured casting density of all companion sample cans shall be calculated per Section 3.3.9.2 and recorded on Form F. If the cured casting density is outside the acceptable range, a copy of the form shall be sent to the Company. A low cured casting density of a companion sample can shall not be a reason to reject the Body Weldment, Neutron Absorber Form, Heavy Can Spacer Assembly casting lot, or PGNAA Acceptance Standards casting lot.
b. The odd serial number companion sample cans for the Body Weldment, Neutron Absorber Form, Heavy Can Spacer Assembly casting lot, or PGNAA Acceptance Standards casting lot shall be LOD tested to verify the hydrogen content per Section 3.3.9.3.
c. The even serial number companion sample cans for the Body Weldment, Neutron Absorber Form, or Heavy Can Spacer Assembly casting lot shall be PGNAA tested to verify the ^{10}B content per Section 3.3.9.4.

3.3.8 Casting the 10 oz. Double Friction Metal Cans

a. Select a labeled can which has a drawing and serial number per drawing M2E801580A026.
b. Weigh the empty labeled can and lid and record the casting can data on Forms C, D, or E. It is acceptable to weigh ten cans with ten lids for each purchase order of cans and to use the average can and lid weight on each form.
c. Weigh the water and measure the water temperature. Record this data on Form C, D, or E. Fill with water only up to the bottom of the inside rim. The can lid shall be on the scale. It is acceptable to weigh the water weight of the first ten cans with ten lids of the same lot of cans and to use the average water weight for each of the following cans if the measurements are consistent.
d. Remove the water from the cans.
e. Prepare the Wet Mix Batch following Section 3.3.3.
f. Hold the can on the bench vibrator during filling with the 277-4 wet mix. Quickly vibrate and continue to add wet mix to the can lip.
g. Once all of the cans are full of wet mix, return the first can back to the vibrator for at least 3 minute at a high frequency setting. During the 3 minutes of vibration, continue to add 277-4 wet mix until the can stays full. Repeat this process for all the cans in the casting lot.
h. Between 1 to 24 hours after casting, scrape the top of the casting to within 0.19±0.03 from the can rim.
i. Clean the can rim around the edge per Section 3.4.2.

j. Perform an in-process measurement of the scraped casting height to ensure that the casting height parameters are met shown in Figure 8.
k. Cover the casting by placing the properly labeled can lid on the can for 7 days.
l. Remove the can lid and let the can air dry or use either or both vacuum and heat to create an acceptable density and weight. If heat is used, the maximum temperature of the can shall not exceed 250°F.
m. Measure casting height and weigh the can with lid. Record this data on Forms C, D, or E.
n. Record the final Companion Sample Can casting density, weight, or casting height measurements data on Form F.

3.3.9 Verification

All verification shall be completed after the casting is cured.

3.3.9.1 Cured Casting Density Verification

The density of cured casting in the Body Weldment, Neutron Absorber Form, Heavy Can Spacer Assembly, and PGNAA Acceptance Standards shall be determined by weighing the casting container before casting, while filled with water, after casting, and when cured.

Since the density of water is known, a simple relationship between the weight differences shall determine the cured casting density.

$$Density = \left(\frac{Cured - Empty}{WithWater - Empty} \right) \times 62.3 \text{ lb/ft}^3$$

3.3.9.2 Companion Sample Can Cured Casting Density Verification

The density of cured casting in each companion sample can shall be determined by weighing the can before casting, while filled with water, after casting, and when cured.

Since the density of water is known, a simple relationship between the weight differences shall determine the cured casting density.

$$Density = \left(\frac{Cured - Empty}{WithWater - Empty} \right) \times 62.3 \text{ lb/ft}^3$$

3.3.9.3 Companion Sample LOD Verification

The companion sample cans identified in Section 3.3.7.b shall be LOD tested. The acceptable LOD percent range shall be from 28.6% to 31.8%, which can be expressed as a water density between 28.6 and 31.8 lb/ft^3 at the minimum density of 100 lb/ft^3.

a. The lid shall have the serial number permanently transferred by vibro etch or other method.
b. The lid shall have a small vent hole in it. It is recommended that a nail be used to punch a hole 0.12±0.06 in. diameter in the metal lid from the inside surface of the lid.
c. Match the can serial numbers and place the lid on the can.
d. The weight of the can shall be recorded on Form F.
e. The cans shall be placed in an oven at 1500±150°F (800°C) for 4 hours.
f. The weight of the can shall be recorded on Form F with the can temperature not below 100°F.
g. Calculate the LOD% using the equation below and record it on Form F. Due to can oxidizing and gaining weight during the heating cycle, a 0.024 lb correction factor is included in the following LOD% calculation.

$$\text{LOD\%} = \left[1 - \frac{(LODWeight - Empty - 0.024lb)}{(Cured\ \&\ Clean - Empty)}\right] \times 100\%$$

h. Verify that the LOD% is within the acceptable range. If water content is outside the acceptable range, a copy of the form shall be sent to the Company.

3.3.9.4 PGNAA Verification

The companion sample cans identified testing in Section 3.3.7.c shall be sent to the PGNAA Subcontractor. The PGNAA Subcontractor will test to the requirements in Appendix A and record the data on Forms AA to AD. The PGNAA Subcontractor will send copies of the completed Forms AC and AD to the Subcontractor and Company.

The PGNAA testing acceptance results on From AD shall be transferred to Form F.

3.4 Cleaning Requirements

3.4.1 Contact with Chlorides or Fluorides

The stainless steel material shall be protected from contact with chlorides in accordance with ASTM A380, paragraph 8.5, during all operations including packaging. The Material Safety Data Sheet (MSDS) for all cleaning solutions or products used on the ES-3100 shall be submitted as Approval Data to verify that no chlorides or fluorides are present.

3.4.2 Satisfactory Cleanliness

Cleaning procedures for the stainless steel per Section 3.4 of equipment specification JS-YMN3-801580-A002 shall be submitted as Approval Data. Only non-chloride-bearing chemicals shall be used for cleaning (e.g., trisodium phosphate detergent or acetone). Water used in cleaning shall have a maximum chlorine content of 4 parts per million.

After casting but prior to packaging, stainless steel components of the forms and cans shall be cleaned per the approved cleaning procedures. Satisfactory cleanliness shall be determined by visual inspection as can be observed by a person with normal visual acuity (natural or corrected) and without magnification. Light intensity of at least 100 ft-candles shall be provided on the surface to be inspected.

4.0 Quality Assurance

4.1 Quality Assurance Program

The subcontractors shall have in place and maintain a Quality Assurance (QA) Program and inspection system that meets the requirements of 10 CFR 71 Subpart H. If not previously submitted, an uncontrolled copy of the subcontractor's QA Program shall be submitted as Offer Appraisal Data.

4.2 ES-3100 Casting Quality Assurance Requirements

4.2.1 ES-3100 Documentation Package

All records shall be identified based on the ES-3100 serial numbers. The ES-3100 Documentation Package shall be provided as Certified Data with each ES-3100 casting. The ES-3100 Documentation Package shall be complete, legible, indexed, and traceable to the material supplied and include the following:

a. Material measuring, dry blending, wet mixing, casting, sampling, and inspection forms, i.e, Forms A through F.
b. A Certificate of Compliance for each lot of the 277-0 Heat Resistant Shielding "Non-Borated" dry mix documentation with the expiration date identified on each container.
c. A Certificate of Compliances for B_4C powder to Type 1 Nuclear-Grade Boron Carbide Powder per ASTM C 750, chemical and elemental analysis per ASTM C 791, and 100% of the powder passes through a No. 140 Sieve per ASTM E 11.
d. A Certificate of Compliance signed by an officer of the Subcontractor confirming that the cast neutron absorber in ES-3100 shipping package meets the subcontract requirements.

4.2.2 Batch Processes

Batch processes such as mixing, pouring, curing, sampling, inspection, etc., shall be performed in accordance with detailed written procedures. These procedures shall specifically describe the exact manner in which these processes are to be performed. All records shall be traceable to the ES-3100 Shipping Package, Neutron Absorber Form, Heavy Spacer Can Assembly, PGNAA Acceptance Stands or Companion can serial numbers.

4.2.3 Materials Traceability

A manufacturing lot or batch number shall identify material furnished to make up the neutron absorber system. Materials shall be identified by material type; applicable specification and revision number, and be traceable to their lot numbers. Traceability records shall be available for review by the Company's representative.

4.2.4 Procedures

Preparation, installation, sample collection, and inspection processes shall be controlled and performed by qualified personnel. The procedures must incorporate a mechanism to identify process step completion. Procedures shall be submitted as Approval Data. The approved procedures shall be provided as Certified Data prior to the start of casting.

4.2.5 Training and Qualification of Personnel

The Subcontractor shall provide for the training and qualification of personnel to ensure their competence in the use of process procedures and specifications. Records of personnel qualifications shall be made available to the Company upon request. Only those personnel who have been qualified to perform a specific batch process used in the casting of Kaolite per equipment specification JS-YMN3-801580-A003 shall be used to perform work in this process.

4.2.6 The Company reserves the right to request any documentation and to witness any of the processes performed in accordance with this specification.

5.0 Preparation for Delivery

After cleaning of stainless steel surfaces per Section 3.4, aluminum foil duct tape shall be applied over the fill and vent holes in the Body Weldment (Figure 1) and the Neutron Absorber Form (Figure 5).

6.0 Manufacturer's Data

6.1 Offer Appraisal Data shall be submitted with the offer. This data shall become part of the subcontract requirements.

6.2 Approval Data will be reviewed and approved by the Company. Subcontractor shall not proceed with the casting activity until Company approval is given for all the Approval Data. The Approval Data shall be transmitted to the Company by the dates agreed to by the Subcontractor and the Company Subcontractor Administrator.

6.3 Certified Data will be used by the Company as the record for the ES-3100 shipping packages. The Certified Data shall be transmitted as noted.

6.4 A request for Company approved equal shall be submitted as Approval Data. Adequate information shall be provided with the request for Company approved equal so that the Company can determine if the item is equivalent.

ATTACHMENT A -
Prompt Gamma-ray Neutron Activation Analysis Testing Setup & Tooling
(Page 1 of 4)

A.1 Prompt Gamma-ray Neutron Activation Analysis Can Testing

Prompt Gamma-ray Neutron Activation Analysis (PGNAA) of boron performs one of the acceptances of the ES-3100 277-4 casting. Specifically, ^{10}B gives rise to a 478-keV gamma-ray produced by the recoil of the lithium nucleus from the neutrons captured in ^{10}B. The gamma-ray is Doppler broadened by 10–15 keV. The PGNAA shall be performed upon a companion sample can cast made during the drum casting in accordance with JS-YMN3-801580-A005 and Body Weldment (Figure 1), Neutron Absorber Form (Figure 5), Heavy Can Spacer Assembly (Figure 6), and the cast companion samples in the same 10-oz. double friction metal can on (Figures 7 and 8). PGNAA is a relative measurement therefore daily baselines are required to define the acceptance values.

Canberra Industries to perform the PGNAA testing.

Canberra Industries, Inc.
Linda C. Ostrowski
1133-C Oak Ridge Turnpike Suite 260
Oak Ridge, TN 37830-6442
865-241-3963 fax 865-241-3965

A.2 PGNAA Quality Assurances

The equipment and software used in the PGNAA shall be certified to a national standard.

A.3 PGNAA Measurements Setup

A PGNAA measurement setup number shall be required for each unique setup recording the pertinent data of the setup on Form AA. A new setup is required from previous prototypical work. Several setups may be tried to determine the most efficient testing setup. These changes shall be documented using Form AA. Once the setup is defined on Form AA reference the setup number each time it is used. Measure the PGNAA acceptance standards using the defined setup to verify the setup distances are repeatable within ±0.13-in.

A.3.1 Net Count Rate Measurements

Time shall be consistently applied throughout all of the PGNAA testing. For the prototype system setup, a time of at least 15 minutes (900 seconds) for each spectrum measurement was found to be satisfactory. A net count rate (NCR) in counts per second shall be used throughout with a set target standard time limit of around 900 seconds. Record both the count and time in seconds for that count on Form AA and calculate the count rate to three decimal places (i.e., 34.245 counts/sec).

A.3.1.a Net Count Rate Time Determination

The time of the measurement shall be determined by performing the Tooling Setup on Form AA at different times like 300, 600, 900, 1800, and 72000 seconds. Determine the accuracy effect of the total counting time on the counting statistics, based upon at least a 72000 seconds (20 hour) count. The testing time shall be re-evaluated when a significant change in the source system occurs.

A.3.2 Neutron Source

A spontaneous fission neutron source similar to the 1.8-μg ^{252}Cf prototype shall be used to perform the tests. This source was rated at 4.4×10^6 neutrons/sec on November 15, 2004. The neutron source is sealed in a 32.5-mm-long, 9.4-mm-diameter stainless steel cylinder and placed in a collimator.

ATTACHMENT A
(Page 2 of 4)

A.3.3 Collimator and Neutron Source Setup

A collimator similar to the prototype collimator shall be used to hold the source. The prototype collimator was a 3-in. cube of high-density polyethylene covered on five sides with 2 mm of cadmium as a neutron shield with at least 0.5-in. of lead on six sides as a gamma shield. The center of the sixth side of the polyethylene cube has a 9.5-mm hole into which the source was pressed. The sixth side is covered with cadmium except for a 1-in. square in the center. A 1-in. diameter hole in the cadmium at the source location shall be provided in the collimator to generate a better shaped neutron source for the sample can tests. The location of the collimator and source shall be defined in a fixture and shall be inspected to be repeatable to within ±0.13-in. to locate the collimator, can, detector, and other materials, e.g., polyethylene.

Record the setup and the results in the net detector count rate on Form AA. Record the setup source distance (SD) ±0.13-in. from the sample can lid. Move the filled sample can further away from the source, and repeat the process, increasing the distance in increments to identify the setup distance that maximizes the NCR for that source arrangement. Record the setup information on Form AA.

A.3.4 Detector

A detector system similar to the prototype shall be used. The prototype was a Canberra Model BE3825 Broad Energy Germanium (BEGe) detector, which was a gamma-ray detector, in a 2-in. thick lead shield with a Canberra Model 7935SL-7 cryostat and Canberra Model 2002CSL preamplifier to capture the gamma spectrum for the PGNAA measurements. This detector has a side lead shield but no shielding in the front to collimate the field-of-view. An Inspector 2000 along with the Genie2K gamma-ray analysis software package from Canberra was used for distinguishing the ^{10}B peak from the rest of the gamma-ray spectrum. It is recommended that a fixture be made to locate the collimator, can, and detector. Document the method used to determine the Compton boundary end points.

A.3.5 Detector Net Count Rate Determination

Use software equivalent to the Genie2K gamma-ray analysis software package from Canberra for performing the gamma-ray spectrum collection and analysis. The peak fitting routine in Genie2K does not expect a peak as broad as 10–15 keV; therefore, a region-of-interest (ROI) was set around the broad boron neutron activation peak of 478 keV. The data gathered has three components. The gross count is the total count of the gamma-rays detected with an energy that falls within the ROI. The Compton background is the portion of the gross count that is caused by scattered gamma-rays. The NCR is the portion of the total count that is from the boron in a period of time. The NCR is the difference between the gross and the Compton counts.

A.3.6 Detector Location Setup

The setup distance of the prototype detector setup was as close as possible using about 1-in. thick lead as a gamma shield to keep the detector noise signal low. This thickness was applied during the PGNAA documented in Ltr. No.: COR-NDA-05-015; Canberra Oak Ridge, LLC November 3, 2005, *Results of Prompt Gamma-ray Neutron Activation Analysis On 20 Slip Fit Spacer Cans.* Figure A.1 shows the direction this development work was heading. Document and verify that the detector setup distance (DD) from the sample can generates a maximum NCR by adjusting the detector setup distance and repeating this test. It is recommended that a fixture be made to locate the collimator, can, and detector.

ATTACHMENT A
(Page 3 of 4)

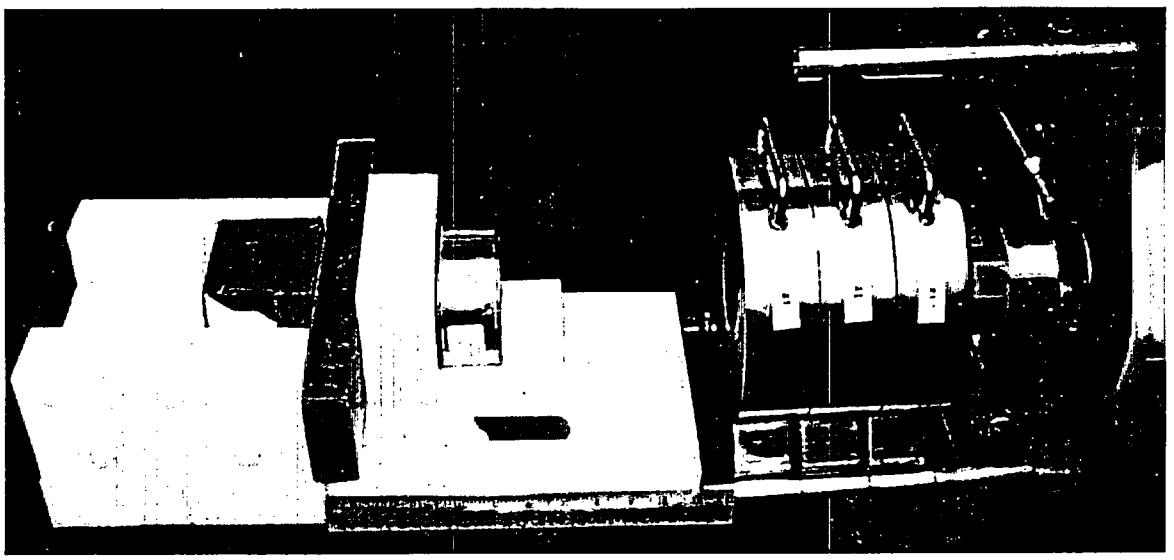

Figure A.1 Preliminary Tooling Generated for PGNAA

A.3.7 Detector Operation Setup

Set the detector setup distance (DD) ±0.13-in. and the setup source distance (SD) ±0.13-in. from the filled sample can. Record the set detector setup distance, setup source distance, 277-4 sample serial number, NCR value, and the day and time of the measurement in the setup form. Repeat this final test measurement in 30 minutes to verify the stability of the detector and this shall become the setup standard test measurement on Form AA. The repeatable measurement tolerances shall be part of the testing fixture certification inspection.

A.3.8 Net Count Rate Baseline Measurements

Once the setup is completed and the fixture dimensions are certified, Form AB shall be used to record the NCR for the twenty acceptance standards using the 10-oz. double friction metal cans. The baseline acceptance 277-4 NCR shall be set daily using five of the twenty acceptance standards using the 10-oz. double friction metal cans and recorded on Form AC. The twenty acceptance standards cans shall be inspected with a Company representative as a witness.

Select five PGNAA acceptance standards from Form AB as the Daily Standard Setup that generate approximately the same average and standard deviation as on Form AB. The baseline acceptance 277-4 NCR shall be set daily using five of the twenty acceptance standards using the 10-oz. double friction metal cans and recorded on Form AC. Verify the Daily Standard cans selection with the Company. The Body Weldment (Drum), Neutron Absorber Form (From), and Heavy Can Spacer Assembly (Lot) acceptance criteria for the ^{10}B interaction is based upon this test. The Minimum acceptable standard NCR shall be set daily using the following formula.

Minimum Acceptable NCR = Can Five NCR Average − 3 × Standard Deviation Can Five NCR

ATTACHMENT A
(Page 4 of 4)

A.4 Net Count Rate Acceptance Measurements

The NCR acceptance measurement shall be made following the Daily Standard Setup using Form AC and calculating a Pass Rate. Record the PGNAA setup number, day and start time of the measurement, the associated Body Weldment, Neutron Absorber Form, Heavy Can Spacer Assembly Lot's serial number, companion sample can serial number, actual net count, acceptable net count, and testing results on the inspection form. For the testing results, if the actual NCR is equal or above the Pass Rate, then record a PASS; if less than, enter FAIL in the test Form AD. It is acceptable to group the test results for several sample cans on one form following one testing setup.

Once a 277-4 sample can NCR failure has occurred verify that the setup has not shifted by rerunning the Daily Standard Setup using Form AC and calculate a new Pass Rate. If the Pass Rate has changed more then 1% than perform a new detector operation setup and NCR baseline measurements and verify the test failure rate by retesting the failed can. If the companion sample can receives two failures in a row, the associated parts shall be rejected from service, the Company Subcontract Administrator notified, and the testing continued.

A.5 *Documentation of the Acceptance or Rejection Measurements*

Documentation of the acceptance or rejection NCR measurements shall be made with the Forms AA through AD plus a detailed description of the active NCR measurement hardware and software that was used.

A.6 Results

A.6.1 Equipment and Software Quality Assurances

The national standard used in the PGNAA (see Section A.2) shall be provided as Certified Data.

A.6.2 Certified Tooling Setup and Repeatable Dimensions

The final tooling setup shall be manufactured and certified that the placement of the source, detector, sample can, and tooling materials are dimensional stable and repeatable to ±0.13-in.

A.6.3 Measurement Time and Repeatable Accuracy

Define the repeatable accuracy for the Nate Rate Count time selection for the production certification inspections. The Nate Rate Count time justification (see Section A.3.1.a) shall be submitted as Approval Data.

A.6.4 Measurement Software and Methodology

For the final setup the measurement software and methodology method used to generate the net counts (see Section A.3.4) shall be documented and provided as Certified Data.

A.6.5 Forms AA through AD

Forms AA, AB, and AC shall be submitted as Approval Data.

After the process is approved, filled-in Forms AC and AD shall be provided as Certified Data to the Company and the casting company.

A.6.6 Can Disposition

After PGNAA testing is completed on a lot of companion sample can lot, the cans shall be returned to the Company. The PGNAA Acceptance Standards cans shall be stored for the life of the subcontract.

Casting Company Name	Certificate of Conformance of the 277-0 dry mix		
Blended Dry Batch Control Number [a]	Record the expiration date of the 277-0 dry mix [b]		
Certificate of Conformance of the B_4C dry mix	277-0 Heat Resistant Shielding Drum ID Number		
Planning	277-4 Weight	Units	Operator
Batch Size		lb	
Operation	Measurement	Units	Operator
277-0 Weight (Target = 277-4 Weight x 93.6 wt%)		lb	
B_4C Weight (Target = 277-4 Weight x 6.4 wt%)		lb	
Dry Blending Time		min.	
Comments			

[a] A 10-digit Blended Dry Batch Control Number shall be used to define the date and the time of mixing the casting batch using the format with a 24-hour clock (i.e. 1021041515 is used for October 21, 2004 at 3:15 pm.)

[b] Record the expiration date of the Blended Dry Batch and confirm that it is still acceptable to be cast following this specification.

EXEMPT FROM IO-155 (8-02)

Casting Company Name		Blended Dry Batch Control Number		
Wet Mix Control Number (WMCN)[a]		Record the expiration date of the Dry Blend Batch		
Water Temperature °F	Air Temperature °F	Measurement	Units	Operator
277-4 Weight			lb	
Water Weight (Target = 277-4 Weight × 27±1 wt%)			lb	
Mix Time			min.	
Mix Finish Time			min.	
Comments				

[a] A 10-digit Wet Mix Control Number (WMCN) shall be used to define the date and the time of mixing the casting batch using the format with a 24-hour clock (i.e. 1021041515 is used for October 21, 2004 at 3:15 pm.)

EXEMPT FROM IO-155 (8-02)

Casting Company Name	Body Weldment Casting Control # [a]
Part Serial Number	Drawing Number M2E801580A002

Measured Weights ±0.5 lb	Casting Information		Comments	Operator
	Weight	Date		
Clean and Empty				
Filled with Water [b]				

Water Information	Water Weight ±0.5 lb	Water Temp. [b]	Comments	Operator
Water Conditions [b]	lb	°F		
Vibration Settings [c]	lbf	VPM		

Wet Mix Control	Blended Dry Batch Control No.		Dry Blend Batch Expiration Date		
(Target Water = 277-4 Weight × 27±1 wt%)	277-4 Weight	lb	Water Weight	lb	
	Air Temperature	°F	Water Temperature	°F	
	Mix Time		Mix Finish Time		
Companion Samples [d]	-1		-2		

	Time	Date	Comments	Operator
Vibration Start				
Vibration Stop				
Overcast WMCN				
After Casting	lb	Date		
After Cured and Clean	lb	Date		

Measurements ⟨I⟩	Height [e] (in)	Pass or Fail Height	Cured Weight (lb)	Pass or Fail Cured Weight [e]	Cured Density [f] (lb/ft³)	Pass or Fail 100–120 (lb/ft³)
Body Weldment						

[a] A 10-digit Body Weldment Casting Control Number shall be used to define the date and the time of mixing the casting batch using the format with a 24-hour clock (i.e., 1021041515 is used for October 21, 2004 at 3:15 pm).

[b] Record the water weight and water temperature within 10 minutes from completion of the weighing process.

[c] Recommended vibration settings are at 450 VPM and three times the total vibrated weight. The total vibrated weight is the finish cast part and fixtures weight, for a setting of approximately 800 pound-force.

[d] Use Form F, for ES-3100 Companion Sample Casting Control and Tests to control the companion sample castings.

[e] The acceptable cured height measurement is less than 0.25 inches. The Body Weldment cured casting weight shall be between 45.3 and 57.8 lbs.

[f] Use the above weights to calculate the density as shown below. $Density = \left(\frac{Cured - Empty}{WithWater - Empty}\right) \times 62.3\ \text{lb/ft}^3$

EXEMPT FROM IO-155 (8-02)

Casting Company Name	Body Weldment Casting Control # [a]
Part Serial Number	Drawing Number M2E801580A034

Measured Weights ±0.5 lb	Casting Information		Comments	Operator
	Weight	Date		
Clean and Empty				
Filled with Water [b]				
Water Information	Water Weight ±0.5 lb	Water Temp. [b]	Comments	Operator
Water Conditions [b]	lb	°F		
Vibration Settings [c]	lbf	VPM		
Wet Mix Control	Blended Dry Batch Control No.		Dry Blend Batch Expiration Date	
(Target Water = 277-4 Weight × 27±1 wt%)	277-4 Weight	lb	Water Weight lb	
	Air Temperature	°F	Water Temperature °F	
	Mix Time		Mix Finish Time	
Companion Samples [d]	-1		-2	
	Time	Date	Comments	Operator
Vibration Start				
Vibration Stop				
Overcast WMCN				
After Casting	lb	Date		
After Cured and Clean	lb	Date		

Measurements ⟨I⟩	Height [e] (in)	Pass or Fail Height	Cured Weight (lb)	Pass or Fail Cured Weight [e]	Cured Density [f] (lb/ft³)	Pass or Fail 100-120 (lb/ft³)
Neutron Absorber Form						

[a] A 10-digit Body Weldment Casting Control Number shall be used to define the date and the time of mixing the casting batch using the format with a 24-hour clock (i.e., 1021041515 is used for October 21, 2004 at 3:15 pm).

[b] Record the water weight and water temperature within 10 minutes from completion of the weighing process.

[c] Recommended vibration settings are at 450 VPM and three times the total vibrated weight. The total vibrated weight is the finish cast part and fixtures weight, for a setting of approximately 800 pound-force.

[d] Use Form F, for ES-3100 Companion Sample Casting Control and Tests to control the companion sample castings.

[e] The acceptable cured height measurement is less than 0.25 inches. The Neutron Absorber Form cured casting weight shall be between 45.3 and 57.8 lbs.

[f] Use the above weights to calculate the density as shown below. $Density = \left(\frac{Cured - Empty}{WithWater - Empty}\right) \times 62.3\ lb/ft^3$

EXEMPT FROM IO-155 (8-02)

Casting Company Name	Can Lot Serial Number [a]	Drawing Number M2E801580A026
Average 10 Can and Lid **Empty** Weight	Temperature of Water Weight (°F)	Average 10 Can and Lid **Water** Weight

Wet Mix Control	Blended Dry Batch Control No.		Dry Blend Batch Expiration Date	
(Target Water = 277-4 Weight × 27±1 wt%)	277-4 Weight	lb	Water Weight	lb
	Air Temperature	°F	Water Temperature	°F
	Mix Time		Mix Finish Time	
Wet Mix Control Number (Overcast), if required				

Can Serial #	After Casting Weight (lb)	Cured Weight (lb)	Pass or Fail Cured Weight [b]	Cured Height (in)	Pass or Fail Cured Height [b]	Cured Density (lb/ft^3)	Pass or Fail Cured Density [c]
Companion Samples [d]			-1				-2

Operator	Comments

[a] A 10-digit Can Lot Serial Number shall be used to define the date and the time of setup using the format with a 24-hour clock (i.e., 1021041515 is used for October 21, 2004 at 3:15 pm).

[b] Heavy Can Spacer Assembly acceptable weight is 1.16 to 1.56 lbs and height 1.37±0.06 as shown in Figure 8.

[c] Use this equation for the; $Density = \left(\frac{Cured - Empty}{WithWater - Empty}\right) \times 62.3$ lb/ft^3. Acceptable 100 to 120(lb/ft^3).

[d] Use Form F, for ES-3100 Companion Sample Casting Control and Tests for Heavy Can Spacer Assembly companion samples..

EXEMPT FROM IO-155 (8-02)

FORM F ES-3100 Companion Sample Casting Control and Tests **Rev E Page 1 of 1**

Casting Company Name	Ave. 10 Can and Lid Empty Weight [a]	Ave. 10 Can and Lid Water Wgt. [a]	Temp. of Water Weight (°F)	Drawing Number M2E801580A026

Serial Numbers		Can Measurement Weights ±0.01 (lb)			For Record Only	Loss On Drying (Odd Serial Numbered Cans)		PGNAA (Even Serial Numbered Cans)	
Part # or Can Lot#	Companion Sample Can [a]	After Casting Weight	Cured Weight	LOD Weight	Cured Density (lb/ft^3)	LOD% Range 28.6 – 31.8	Pass Or Fail	PGNAA (PMN) [c]	Pass Or Fail

Complied by	Comments

a For the same lot of sample cans, it is acceptable to use an average weight of ten can bodies and ten can lids.

b Recommended vibration settings are at 450 VPM and three times the total vibrated weight. The total vibrated weight is the finish cast part and fixtures weight, for a setting of approximately 5 pound-force.

c Record the PGNAA Measurement Number (PMN) from Form AD for each Companion Sample Can tested.

$$Density = \left(\frac{Cured - Empty}{WithWater - Empty}\right) \times 62.3 \text{ lb/ft}^3$$

$$\text{LOD\%} = \left[1 - \frac{(LODWeight - Empty - 0.024)}{(Cured \,\&\, Clean - Empty)}\right] \times 100\%$$

EXEMPT FROM IO-155 (8-02)

FORM AA PGNAA Tooling Setup Control **Rev E Page 1 of 1**

Inspecting Company Name	Casting Company Name
PGNAA Tooling Setup Number [a]	277-4 Baseline Can Serial Number

Setup Distance [b]			Counts			Count Time (sec)	Net Count Rate (Net Counts/Sec)
#	Collimator	Detector	Gross	Compton	Net		

Describe the source and the amount of cadmium, lead and polyethylene surrounding the source for each Setup Number.

Describe the Software used and method to generate the net counts.

Operator

[a] A 10-digit PGNAA Tooling Setup Number shall be used to define the date and the time of setup using the format with a 24-hour clock (i.e., 1021041515 is used for October 21, 2004 at 3:15 pm). A –# will define the setup used for testing.

[b] The 10-oz. double friction metal can lid shall face the source. The setup distances shall be measured from the can lid to the collimator face and from the can lid to the detector front face and must be documented to be repeatable to ±0.13". Also define all thickness of lead and polyethylene surrounding the source measurement to ±0.13".

[c] Use one 277-4 cast 10-oz. double friction metal can per drawing M2E801580A026 as the PGNAA reference to verify the Tooling Setup.

EXEMPT FROM IO-155 (8-02)

FORM AB PGNAA Standard Setup **Rev E Page 1 of 1**

Inspecting Company Name	Casting Company Name
PGNAA Standard Setup [a]	PGNAA Tooling Setup Number (with –#)

	277-4 Standard Can Serial Numbers	Counts			Count Time (sec)	Net Count Rate (Net Counts/Sec)
		Gross	Compton	Net		
1						
2						
3						
4						
5						
6						
7						
8						
9						
10						
11						
12						
13						
14						
15						
16						
17						
18						
19						
20						
	Average Values					

Comments

Operator

a A 10-digit PGNAA Standard Setup Number shall be used to define the date and the time of setup using the format with a 24-hour clock (i.e., 1021041515 is used for October 21, 2004 at 3:15 pm).

b The 10-oz. double friction metal can lid shall face the source following the PGNAA Standard Setup.

EXEMPT FROM IO-155 (8-C2)

FORM AC PGNAA Daily Standard Setup Control **Rev E Page 1 of 1**

Inspecting Company Name	Casting Company Name
PGNAA Daily Standard Setup [a]	PGNAA Tooling Setup Number (with –#)

277-4 Standard Can Serial Numbers [b]		Counts			Count Time (sec)	Net Count Rate (Net Counts/Sec)
		Gross	Compton	Net		
1						
2						
3						
4						
5						
Average Values						
Standard Deviation						
3 × Standard Deviation						
(Pass Rate) Minimum Acceptable Net Count Rate = Average – 3 × Standard Deviation =						

Comments

Operator

[a] A 10-digit PGNAA Daily Standard Setup (DSS) shall be used to define the date and the time of setup using the format with a 24-hour clock (i.e., 1021041515 is used for October 21, 2004 at 3:15 pm).

[b] Select five PGNAA acceptance standards from Form AB as the Daily Standard Setup that generate approximately the same average and standard deviation as on Form AB.

EXEMPT FROM IO-155 (8-02)

FORM AD PGNAA Measurements **Rev E Page 1 of 1**

Inspecting Company Name	Casting Company Name

PGNAA Measurement Number (PMN) [a]	PGNAA Daily Standard Setup Num.	PGNAA Pass Rate (Net Cnt/Sec)

Even Serial Numbers [b]		Counts (Cnt)			Count Time (sec)	Net Cnt Rate (NetCnt/Sec)	Pass or Fail
Drum/Neutron Absorber Form/Lot#	Sample #	Gross	Compton	Net			

Comments

Operator

[a] A 10-digit PGNAA Measurement Number (PMN) shall be used to define the date and the time of setup using the format with a 24-hour clock (i.e., 1021041515 is used for October 21, 2004 at 3:15 pm).

[b] Record the Body Weldment, Neutron Absorber Form, or Heavy Can Spacer Assembly can lot with the Companion Sample Number.

EXEMPT FROM IO-155 (8-02)

EQUIPMENT SPECIFICATION	Specification Number JS-YMN3-801580-A005-1		Revision E
	Issue Date 2/17/2005	Revision Date 6/1/06	
		Page 1 of 1	

MANUFACTURER'S DATA REQUIREMENTS

Item No.	Data Submittal—Purpose and Description	Specification or Reference	Number of Copies	Form[a]	
	OFFER APPRAISAL DATA - Subcontractor				
	The Offerer shall submit the following data with the offer.				
1	Subcontractor's quality assurance program manual	4.1	1	E	

[a]Indicate the following:

A—Full-size prints
B—Full-size reproducibles
C—Microfilm aperture card
D—Manual (booklet, brochure, report, etc.)
E—Other (Specify) Subcontractor's standard form
F—Other (Specify) Specimen

EXEMPT FROM IO-155 (8-02)

EQUIPMENT SPECIFICATION	Specification Number JS-YMN3-801580-A005-2	Revision E
	Issue Date 2/17/2005	Revision Date 6/1/06
		Page 1 of 1

MANUFACTURER'S DATA REQUIREMENTS

Item No.	Data Submittal—Purpose and Description	Specification or Reference	Number of Copies	Form[a]	
	APPROVAL DATA - Subcontractor				
	The Subcontractor shall provide the following data prior to the start of production casting.				
1	Process equipment approval	3.1	1	E	
2	Scale Certifications	3.2.1	1	E	
3	Request for Company approved equal	3.2.2, 3.2.6, 3.2.7, 6.4	1	E	
4	MSDS for cleaning products	3.4.1	1	E	
5	Procedures	4.2.4	1	E	

[a]Indicate the following:

A—Full-size prints
B—Full-size reproducibles
C—Microfilm aperture card
D—Manual (booklet, brochure, report, etc.)
E—Other (Specify) Subcontractor's standard form
F—Other (Specify)
S—Sample of Workmanship

EXEMPT FROM IO-155 (8-02)

EQUIPMENT SPECIFICATION	Specification Number JS-YMN3-801580-A005-3	Revision E
	Issue Date 2/17/2005	Revision Date 6/1/06
		Page 1 of 1

MANUFACTURER'S DATA REQUIREMENTS

Item No.	Data Submittal—Purpose and Description	Specification or Reference	Number of Copies	Form[a]	
	CERTIFIED DATA - Subcontractor				
	Item 1 shall be provided prior to the start of production casting.				
1	Approved procedures	4.2.4	1	E	
	Item 2 shall be provided with each ES-3100 unit.				
2	ES-3100 Documentation Package	4.2.1	1	E	

[a]Indicate the following:

A—Full-size prints
B—Full-size reproducibles
C—Microfilm aperture card
D—Manual (booklet, brochure, report, etc.)
E—Other (Specify) Subcontractor's standard form
F—Other (Specify)
S—Sample of Workmanship

EXEMPT FROM IO-155 (8-02)

EQUIPMENT SPECIFICATION	Specification Number JS-YMN3-801580-A005-4	Revision E
	Issue Date 2/17/2005	Revision Date 6/1/06
		Page 1 of 1

MANUFACTURER'S DATA REQUIREMENTS

Item No.	Data Submittal—Purpose and Description	Specification or Reference	Number of Copies	Form[a]	
	OFFER APPRAISAL DATA – PGNAA Subcontractor				
	The Offerer shall submit the following data with the offer.				
1	Subcontractor's quality assurance program manual	4.1	1	E	

[a]Indicate the following:

A—Full-size prints
B—Full-size reproducibles
C—Microfilm aperture card
D—Manual (booklet, brochure, report, etc.)
E—Other (Specify) Subcontractor's standard form
F—Other (Specify) Specimen

EXEMPT FROM IO-155 (8-C2)

EQUIPMENT SPECIFICATION	Specification Number JS-YMN3-801580-A005-5	Revision E
	Issue Date 2/17/2005	Revision Date 6/1/06
		Page 1 of 1

MANUFACTURER'S DATA REQUIREMENTS

Item No.	Data Submittal—Purpose and Description	Specification or Reference	Number of Copies	Form[a]	
	APPROVAL DATA – PGNAA Subcontractor				
	The Subcontractor shall provide the following data prior to the start of production inspection.				
1	Source, detector, and software must be certified to a national standard.	A.6.1	1	E	
2	Final tooling setup shall be manufactured - Results of final tooling setup dimensional inspection shall be provided showing repeatability to +/- 0.13" - As built drawing of final tooling setup that was manufactured shall be provided showing setup distances and materials of construction	A.6.2	1	E	
3	Results of Net Count Rate Measurements performed on manufactured final tooling setup per section A.3.1.a of specification, based upon at least a 20 hour PGNAA measurement count and time justification.	A.6.3	1	E	
4	Software used to determine net count rate and methodology used to determine net count rate shall be identified and documented	A.6.4	1	E	
5	Completed Forms AA	A.6.5	1	E	
6	Completed Forms AB, and AC	A.6.5	1	E	

[a]Indicate the following:

A—Full-size prints
B—Full-size reproducibles
C—Microfilm aperture card
D—Manual (booklet, brochure, report, etc.)
E—Other (Specify) Subcontractor's standard form
F—Other (Specify)
S—Sample of Workmanship

EXEMPT FROM IO-155 (8-02)

EQUIPMENT SPECIFICATION	Specification Number JS-YMN3-801580-A005-6	Revision E
	Issue Date 2/17/2005	Revision Date 6/1/2006
		Page 1 of 1

MANUFACTURER'S DATA REQUIREMENTS

Item No.	Data Submittal—Purpose and Description	Specification or Reference	Number of Copies	Form[a]	
	CERTIFIED DATA - PGNAA Subcontractor				
	Item 1 and 2 shall be provided prior to the start of production PGNAA inspection.				
1	PGNAA national standard	A.6.1	1	E	
2	PGNAA measurement software and methodology	A.6.4	1	E	
	Item 3 shall be provided after each companion can lot is inspected.				
3	Forms AC and AD	A.6.5	2 (1 copy going to Casting Company)	E	

[a]Indicate the following:

A—Full-size prints
B—Full-size reproducibles
C—Microfilm aperture card
D—Manual (booklet, brochure, report, etc.)
E—Other (Specify) Subcontractor's standard form
F—Other (Specify)
S—Sample of Workmanship

EXEMPT FROM IO-155 (8-02)