GE Nuclear Energy

General Electric Company
1989 Little Orchard Street, San Jose CA 95125

Non-Proprietary Version

GENE-0000-0055-2994-R1-NP
DRF 0000-0051-5975
Class I
June 2006

Addendum to Browns Ferry Nuclear Plant Units 1, 2, and 3 Steam Dryer Stress, Dynamic, and Fatigue Analyses for EPU Conditions

IMPORTANT NOTICE REGARDING THE CONTENTS OF THIS REPORT

Please Read Carefully

NON-PROPRIETARY NOTICE

This is a non-proprietary version of the document GENE-0000-0055-2994-R1-P, which has the proprietary information removed. Portions of the document that have been removed are indicated by an open and closed bracket as shown here [[ ]]..

IMPORTANT NOTICE REGARDING
CONTENTS OF THIS REPORT

Please Read Carefully

The only undertakings of the General Electric Company (GE) respecting information in this document are contained in the contract between Tennessee Valley Authority, Browns Ferry Nuclear Plant and GE, 00001704 Release 00248, effective February 5, 2003, as amended to the date of transmittal of this document, and nothing contained in this document shall be construed as changing the contract. The use of this information by anyone other than Tennessee Valley Authority, Browns Ferry Nuclear Plant, for any purpose other than that for which it is furnished by GE, is not authorized; and with respect to any unauthorized use, GE makes no representation or warranty, express or implied, and assumes no liability as to the completeness, accuracy, or usefulness of the information contained in this document, or that its use may not infringe privately owned rights.

TABLE OF CONTENTS

Section **Page**

ACRONYMS AND ABBREVIATIONS vi

1. Executive Summary 1
2. Dryer Modification Analysis 2
3. Stress Results from Time History Analyses 3
   - *3.1 Weld Factors* 5
   - *3.2 Lower Tie Bar Stress Calculation* 7
   - *3.3 Fatigue Analysis Results* 7
4. Power Ascension Limit Curves Approach 8
5. ASME Code Loads 12
   - *5.1 ASME Code Load Combinations* 13
   - *5.2 ASME Code Load Case Stress Results* 17
6. Conclusions 20
7. References 21

List of Tables

Table 1 Summary of Potential Additional Modification Configuration 2
Table 2 Time History Analysis Results from ANSYS: EPU MOD 5 4
Table 3 Time History Results with Weld factors 6
Table 4 ASME Load Combinations 16
Table 5 ASME Load Combinations Primary Stresses – Normal and Upset 18
Table 6 ASME Load Combinations Primary Stresses – Faulted 19

List of Figures

Figure 1 Browns Ferry Finite Element Model 22
Figure 2 Cover Plate Patches 23
Figure 3 Proposed BFN Steam Dryer Upper Weld Modification 24
Figure 4 Browns Ferry Finite Element Model – Cover plate Patch and Manway Cover Close-up 25
Figure 5 Browns Ferry Finite Element Model – Inner Hood Tie Rod Close-up 26
Figure 6 Stress Intensity at EPU: Cover Plate 27
Figure 7 Stress Intensity at EPU: Manway Cover 28
Figure 8 Stress Intensity at EPU: Outer Hood 29
Figure 9 Stress Intensity at EPU: Outer Hood: close-up 30
Figure 10 Stress Intensity at EPU: Outer Hood Stiffener Weld: close-up 31
Figure 11 Stress Intensity at EPU: Exterior Hood Plates - Outer Banks 32
Figure 12 Stress Intensity at EPU: Exterior Vane Bank End Plates – Outer Banks 33
Figure 13 Stress Intensity at EPU: Hood Top Plates 34
Figure 14 Stress Intensity at EPU: Vane Bank Top Plates 35
Figure 15 Stress Intensity at EPU: Hood Stiffeners – Outer 36
Figure 16 Stress Intensity at EPU: Vane Bank Inner End Plates (2) 37
Figure 17 Stress Intensity at EPU: Closure Plates – Outer Banks 38
Figure 18 Stress Intensity at EPU: Inner Hoods 39
Figure 19 Stress Intensity at EPU: Inner Hoods: Close-up 40
Figure 20 Stress Intensity at EPU: Exterior Hood Plates – Inner Banks 41
Figure 21 Stress Intensity at EPU: Exterior Vane Bank End Plates – Inner Banks 42
Figure 22 Stress Intensity at EPU: Hood Stiffeners – Inner (1) 43
Figure 23 Stress Intensity at EPU: Hood Stiffeners – Inner (2) 44
Figure 24 Stress Intensity at EPU: Vane Bank Inner End Plates (1) 45
Figure 25 Stress Intensity at EPU: Vane Bank Inner End Plates (3) 46
Figure 26 Stress Intensity at EPU: Closure Plates – Inner Banks 47
Figure 27 Stress Intensity at EPU: Steam Dams 48
Figure 28 Stress Intensity at EPU: Steam Dam Gussets 49

Figure 29 Stress Intensity at EPU: Baffle Plate 50
Figure 30 Stress Intensity at EPU: Trough 51
Figure 31 Stress Intensity at EPU: Lower Cover Plate Patch 52
Figure 32 Stress Intensity at EPU: Base Plate 53
Figure 33 Stress Intensity at EPU: Support Ring 54
Figure 34 Stress Intensity at EPU: Skirt 55
Figure 35 Stress Intensity at EPU: Drain Pipes 56
Figure 36 Stress Intensity at EPU: Skirt Bottom Ring 57
Figure 37 Weld Factors 58
Figure 38 Tie Bar Detailed Drawing 59
Figure 39 Tie Bar Detailed Drawing 60
Figure 40 Browns Ferry Power Ascension Curves 61

ACRONYMS AND ABBREVIATIONS

Item	Short Form	Description
1	ACM	Acoustic Circuit Methodology used for predicting pressure loads on the dryer based on pressure measurements taken from main steam line sensors
2	ASME	American Society of Mechanical Engineers
3	BWR	Boiling Water Reactor
4	BFN	Browns Ferry Nuclear Plant, Units 1, 2 and 3
5	CDI	Continuum Dynamics Inc.
6	EPU	Extended Power Uprate
7	FEA	Finite Element Analysis
8	FEM	Finite Element Model
9	FFT	Fast Fourier Transform
10	FIV	Flow Induced Vibration
11	GE	General Electric
12	GENE	General Electric Nuclear Energy
13	Hz	Hertz
14	IGSCC	Intergranular Stress Corrosion Cracking
15	Mlbm/hr	Million pounds mass per hour
16	MS	Main Steam
17	MSL	Main Steam Line
18	MW_t	Megawatt Thermal
19	NA	Not Applicable
20	NRC	Nuclear Regulatory Commission
21	OBE	Operational Basis Earthquake
22	OLTP	Original Licensed Thermal Power
23	Pb	Primary Bending Stress
24	Pm	Primary Membrane Stress
25	psi	Pounds per square inch
26	Ref.	Reference
27	RMS	Root-Mean-Squared
28	RPV	Reactor Pressure Vessel
29	SCF	Stress Concentration Factor
30	SRSS	Square Root Sum of Squares
31	SRV	Safety Relief Valve
32	TVA	Tennessee Valley Authority

1. Executive Summary

This report is a continuation of report GE-NE-0000-0053-7413-R0-P dated May 2006. The purpose of this report is to present the evaluation of the modifications to the Tennessee Valley Authority's Browns Ferry Nuclear Plant (BFN) Units 1, 2, and 3 steam dryers for EPU operations.

Structural analyses of the steam dryer were performed using the three-dimensional finite element model of from the reference above, adding the modification to the model and performing the same time history dynamic analyses, frequency calculations, and stress and fatigue evaluations. In addition, ASME Code based load combinations were also analyzed for the modification using the dryer finite element model. This report summarizes the dynamic, stress and fatigue analyses for the BFN Units 1, 2, and 3 steam dryer at EPU conditions.

The acceptance criterion used in the evaluation to predict fatigue susceptibility of the individual components is the ASME fatigue limit peak stress intensity of 13,600 psi. The load definitions which are based on the SMT methodology are conservative due to the nature of the boundary condition modeling in the test apparatus, component replication, and due to the amplitude scaling used to bound the uncertainties in the SRV resonance frequency range. Due to the conservative nature of the SMT-based pressure loads, the analysis predicted a few locations that are at or near the fatigue stress limit. The 3/8-inch thick outer cover plate and manway cover are attached with ¼-inch fillet welds. These welds are considered undersized and could lead to fatigue initiation at EPU conditions and these welds will be reinforced to [[ ]] as part of the EPU modifications. The results of the evaluation based on the ASME load combinations and associated stress acceptance criteria show acceptable stress margins for all operating conditions: normal, upset and faulted. The analyses show that the outer hood and top hood are also regions of higher stress at EPU conditions. The cover plate high stresses were also addressed [[ ]]. As some of the locations still have high stress areas above the 13,600 psi endurance limit with the conservative load definition, Power Ascension curves will be developed that will allow startup, collection of plant measurements, and additional structural analysis as necessary and maintain stresses below the 13,600 psi endurance limit. This process is similar to the

process that has been recently used during the startup of another plant to 120% EPU.

Additional modifications are being evaluated to further reduce the current high stress locations.

2. Dryer Modification Analysis

In addition to the planned dryer modifications as described in "Browns Ferry Nuclear Plant Units 1, 2, and 3 Steam Dryer Stress, Dynamic, and Fatigue Analyses for EPU Conditions, Section 8.1" (Ref 9) eight potential additional modification configurations were analyzed. The eight configurations analyzed are summarized in Table 1 below.

Table 1 Summary of Potential Additional Modification Configuration

Configuration Description	Mod 1	2	3	4	5	6	7	8
[[	X	X	X	X	X	X	X	X
	X							
		X	X				X	X
	X	X	X					
			X	X				
						X		X
							X	X
]]				X	X	X	X	X

Each model analyzed had peak stresses exceeding the ASME Design Fatigue Curve C stress limit of 13.6 ksi. Given this, the modification configuration represented by model 5, which has the lowest peak stress, was chosen as the primary focus of this report. This model is shown in Figure 1. The selected model 5 modification (MOD 5) consists [[ ]] as shown in Figure 2, and [[ ]] a shown in Figure 3. The [[ ]] are shown in Figure 4. The [[ ]] is shown in Figure 5.

3. Stress Results from Time History Analyses

Maximum stress intensity results from ANSYS Finite Element Analysis (FEA) for all dryer structural components enveloped for three load cases (nominal, +10% and –10% frequency shifts [[ ]]) of the dryer are listed in Table 2 and plotted in Figure 6 through Figure 36. Each component has the load case that produced the highest stress intensity highlighted.

Table 2 Time History Analysis Results from ANSYS: EPU MOD 5

[[

]]

3.1 Weld Factors

The calculation of fatigue alternating stress intensity using the prescribed stress concentration factors in ASME Code Subsection NG is straightforward when the nominal stress is calculated using the standard strength of material formulas. However, when a finite element analysis approach is used, the available stress component information is more detailed than that which would be obtained from the standard strength-of-materials formulas and requires added guidance for determining a peak stress intensity to be used in conjunction with the ASME Code S-N fatigue design curve. Reference 8 provides the basis for calculating the appropriate peak stress factors for use in the S-N evaluation to assess the adequacy of these welds based on the FEA results. Figure 37 summarizes the Reference 8 criteria. For the case of full penetration welds, the recommended Stress Concentration Factor (SCF) value is 1.4. In this case, the finite element stress is directly multiplied by the appropriate SCF to determine the fatigue stress. The recommended SCF is 1.8 for a fillet weld when the FEA maximum stress intensity is used. In addition, some of the welds are undersized (weld leg length is less than the plate thickness) and the stresses are further adjusted based on the undersized weld factor shown below:

Undersized weld factor = throat dimension for full sized weld/ throat dimension for undersized weld

Note that the above discussion of stress concentration effects (SCF's, fatigue factors, weld factors) only applies to the fatigue evaluation. SCF, "fatigue factor," and "weld factor" are used interchangeably. For BFN dryer, the weld quality factor used was 1.0.

Table 3 Time History Results with Weld factors

[[

]]

3.2 Lower Tie Bar Stress Calculation

The 1" by ½" tie-rod is welded by a ¼" fillet weld to the inner-hood of the steam dryer and is shown in Figure 38 and Figure 39. With the weld factor included, the maximum shear stress in the weld is calculated to be [[

]] The MOD5 dryer stresses and nodal forces are lower than the unmodified dryer results, which means they are bounded by the unmodified dryer peak stress values. The allowable fatigue limit for normal stresses is 13,600 psi. The allowable limit for shear stresses is taken as 0.6 of that for normal stresses, [[ ]]. This is consistent with the guidance provided in ASME section III, paragraphs NB-3227.2 and NG 3227.2.

Thus, the tie-rod weld maximum stresses are below the allowable ASME shear stress threshold of [[ ]] resulting in a margin of safety of [[ ]].

3.3 Fatigue Analysis Results

The fatigue analysis results are from a shell finite element model used to assess the acceptability of the steam dryer against the fatigue design criteria. The maximum stresses directly from the ANSYS shell finite element analysis are summarized in Table 2. The stresses with the appropriate weld factors applied are summarized in Table 3. All structural nodes and elements in the steam dryer finite element model are included in one of the model components. The hood top plate is the limiting component. The components with the lowest design margins are highlighted in Table 3.

4. Power Ascension Limit Curves Approach

The power ascension limit curves are defined to ensure that the steam dryer stresses will be maintained below the fatigue endurance limit. Since the steam dryer stresses cannot be directly monitored, a plant parameter that can be related to the dryer stresses and readily monitored is chosen as the basis for the power ascension limit curves. As described in Reference 1, the RPV steam dome and Main Steamlines (MSLs) form a coupled system that determines the pressure loading on the dryer. Therefore, the stresses on the dryer can be inferred by measuring the fluctuating pressure in the MSLs. Because it is practical to install instrumentation on the MSLs for measuring pressure (either pressure transducers or strain gauges), the MSL fluctuating pressure is a practical parameter upon which to base the power ascension limit curves. Monitoring the MSL pressures also facilitates the development of a dryer load definition based on in-plant measurements and updating of the limit curves if necessary.

The pressure load definition for the BFN steam dryer structural analysis was developed based on Scale Model Testing (SMT) (Reference 2). As described in Reference 3, pressure measurements were taken from the MSLs in the SMT and used as input to the CDI acoustic circuit model to develop the load definition used in the structural analysis (Reference 4). The same SMT MSL pressure measurements, converted to the plant scale, are used as the basis for the power ascension limit curves. This ties the power ascension limit curves directly to the structural analysis. The basic approach for developing the limit curves is similar to the reactor protection system instrument setpoint methodology and is described below:

1. The MSL pressure measurements from the SMT that were used to develop the load definition for the structural analysis are also used as the starting point for developing the limit curves. Limit curves will be developed for each MSL pressure measurement location used in developing the dryer load definition (2 per MSL, 8 total).

2. The dryer structural analyses are performed and the limiting stress is determined. If the limiting stress is below the acceptance criterion, the power ascension limit curves are linearly scaled up until the limiting stress is at the acceptance criterion. If the limiting stress is above the acceptance criterion, the power ascension limit curves are linearly scaled down until the limiting stress is at the acceptance criterion. The scaled curves become the "Analytical Limit" curves. When scaling, the amplitude of the limit curve is scaled while maintaining the same frequency content.

3. The "Analytical Limit" curves are then reduced by the end-to-end analysis and measurement uncertainty in order to provide assurance that the dryer stresses will not exceed the fatigue acceptance criterion. These curves become the "Level 1" maximum operating limit curves.

4. A second set of limit curves, the "Level 2" curves, is established at 80% of the Level 1 curves. The Level 2 limit curves provide a threshold for initiating engineering evaluations before reaching a power level where the Level 1 curves are challenged.

At predefined reactor power level steps during EPU power ascension, the MSL pressure measurements will be monitored and compared against the limit curves. The following actions will be taken when a limit curve is exceeded:

When a Level 2 limit curve is reached or exceeded:

- Engineering evaluations are performed to determine if there is sufficient margin to accommodate the increase resulting from the next power level step without exceeding the Level 1 limit curve.
- If there is sufficient margin, the power level may be raised to the next step.

When a Level 1 limit curve is reached or if it is determined that there is insufficient margin to accommodate the next power level step without exceeding the Level 1 curve:

- Power ascension is stopped.
- MSL pressure measurements are taken.
- An evaluation is performed to determine if it is acceptable for the plant to remain at the current power level or if the power should be reduced.
- A new load definition is developed based on the in-plant measurements.
- A new dryer structural analysis is performed.
- Revised power ascension limit curves are developed based on the new structural analysis results

If necessary, this process can be repeated until either the full EPU power level is reached or the dryer structural analysis indicates the remaining margin is insufficient to continue power ascension.

A set of sample power ascension limit curves for one MSL measurement location is shown in Figure 40. The limiting stress intensity from the structural analysis in Table 3 is [[ ]], which is over the acceptance criterion of 13,600 psi. The analytical limit curve is calculated by multiplying the analysis input limit curve amplitude by a factor of 13,600/[[ ]]. The Level 1 limit curve is calculated by reducing the analytical

limit curve by the end-to-end uncertainty. The end-to-end uncertainty addresses:

- Scale model test load definition uncertainties
  - SMT modeling uncertainties (e.g., component simplification, boundary conditions, scaling, fluid properties)
  - Test measurement uncertainties (e.g., sensor accuracy, calibration)
  - Application uncertainties (e.g., plant and model geometric tolerances)
  - Load interpolation (e.g., microphone location, ACM uncertainty)
- Structural analysis uncertainties
  - Finite element modeling uncertainties (e.g., mesh size, time step size)
  - Application and measurement uncertainties (e.g., modeling assumptions, material characteristics, fabrication)
- Power ascension monitoring uncertainties
  - MSL pressure measurement (e.g., sensor accuracy and calibration)
  - Methodology for inferring dryer pressure loads based on MSL pressure measurements

A detailed evaluation of the end-to-end uncertainty will be provided with the final power ascension limit curves. The Level 2 limit curve is simply 80% of the Level 1 curve. Detailed power ascension limit curves for BFN will be develop and described in a separate report.

The power ascension limit curves will be initially applied when the plant enters the EPU power operating range above 3293 MWt (OLTP for BFN Unit 1) and 3458 MWt (CLTP for BFN Units 2 and 3). BFN has accumulated

substantial operating experience, beginning in 1998, at these power levels with no significant dryer structural issues. BNF Unit 1 has approximately six years of full power operation at OLTP. A comparison of the plant, dryer, MSL and SRV configuration for the three units was performed to determine if there were any differences that would affect the dryer loading on each of the units. That comparison shows that the three units are virtually identical and that the stretch power uprate operating experience at Units 2 and 3 would be directly applicable to Unit 1.

Even though the limit curves are reduced from the analysis input curves, it is expected that there will be sufficient margin in the curves to support EPU power ascension. As described in Reference 2, there is a significant amount of conservatism in the SMT load definition, which contributes substantially to the high predicted stress values presented in Table 3. This conservatism is included in the analysis input curves. The load definition conservatism includes a scaling factor of [[ ]] that was applied to provide a bounding load definition in the [[ ]] Hz SRV resonance range. The structural analysis results in Section 4 show that the majority of the stresses result from the SRV resonance load content. The [[ ]] scaling factor includes a worst case average bias error of [[ ]] based on the Quad Cities 2 SMT benchmark (Reference 1). The SRV resonance amplitude observed in Quad Cities 2 was significantly higher than the SRV resonances observed in other plants with instrumented dryers, in part due to the high MSL flow velocities at EPU in Quad Cities. The EPU MSL flow velocities at BFN are comparable with those at the other plants with instrumented dryers and the SRV resonance amplitude at BFN is expected to be much lower than that at Quad Cities. Therefore, it is expected that there will be sufficient margin in the limit curves to support power ascension.

5. ASME Code Loads

The BFN steam dryer was analyzed for the ASME Code load combinations (primary stresses) shown in Table 4. The acceptance criteria used for these evaluations are specified in Table 4 and are the same as those used for safety related components.

5.1 *ASME Code Load Combinations*

Browns Ferry is not a "New Loads" plant; therefore, annulus pressurization and jet reaction loads are not part of the design and licensing basis for the plant and are not considered in these load combinations. The resulting load combinations for each of the service conditions are summarized in Table 4.

The steam dryer structural analyses consider the transient and accident events listed in Browns Ferry UFSAR Tables 14.4-1 and 14.4-2. The transient and accident events that are of particular interest for the evaluation of reactor internal pressure difference (RIPD) loading on vessel internals are events with one or more of the following characteristics: 1) pressurization, 2) depressurization, 3) core coolant flow increase, or 4) moderator temperature decrease. The load combinations for the limiting transient and accident events evaluated are listed in Table 4. The turbine stop valve closure transient (Upset 1 and Upset 2 in Table 4) is the limiting transient event for reverse pressure loading on the dryer. The Upset 3 load case bounds the remaining transient events. The Faulted 1 and Faulted 2 load cases address the main steamline break accident outside containment (the design basis event for the dryer). The Faulted 3 load cases address the remaining loss of coolant accidents. Positive reactivity insertion events (e.g., rod withdrawal error, rod drop accident) do not result in a significant change in the reactor system pressure or steam flow rate and, therefore, are not significant with respect to the RIPD loading on the steam dryer.

Each of the load combination cases is briefly discussed below:

<u>Normal:</u> The deadweight, normal differential pressure, and FIV loads are combined for the normal service condition. [[

]] There is a significant pressure variation across the outer vertical hood. [[

]]

<u>Upset 1:</u> This load combination represents the acoustic wave portion of the turbine stop valve closure transient (TSV1). [[

]] Deadweight and OBE seismic loads are also included.

Upset 2: This load combination represents the flow impingement portion of the turbine stop valve closure transient (TSV2). [[

]] Deadweight and OBE seismic loads are also included.

Upset 3: This load combination bounds the other transient events. [[

]] Deadweight and OBE seismic loads are also included.

Faulted 1A: This load combination is for the main steamline break outside containment accident with the reactor at full power. The faulted differential pressure load (AC1) represents the acoustic rarefaction wave impacting the dryer. [[

]] Deadweight and SSE seismic loads are also included.

Faulted 1B: This load combination is for the main steamline break outside containment accident with the reactor at full power. The faulted differential pressure load (DPf) represents the loading due to the two-phase level swell impacting the dryer. The interlock condition value of DPf ([[ ]]) was used for DPf because the vessel blowdown and level swell are more severe at the interlock condition. [[

]] Deadweight and SSE seismic loads are also included.

Faulted 2A: This load combination is for the main steamline break outside containment accident with the reactor at low power/high core flow (interlock)

conditions. The faulted differential pressure load (AC2) represents the acoustic rarefaction wave impacting the dryer. [[

]] Deadweight loads are also included.

Faulted 2B: This load combination is for the main steamline break outside containment accident with the reactor at low power/high core flow (interlock) conditions. The faulted differential pressure load (DPf) represents the loading due to the two-phase level swell impacting the dryer. [[

]] Deadweight loads are also included.

Faulted 3: This load combination is for pipe breaks other than the main steamline break. [[

]] The normal operating differential pressure load (DPn) was conservatively assumed for the differential pressure load. Deadweight and SSE seismic loads are also included.

Table 4 ASME Load Combinations

Service Condition	Load Combination	Screening Criteria(Note 1)	Fatigue Acceptance Criteria
Normal	DW + DPn + FIVn	Pm ≤ 1.0 Sm (Pm + Pb) ≤ 1.5 Sm	FIVn <13,600 psi Note 3
Upset 1	DW + DPn + [$TSV1^2 + OBE^2$]$^{1/2}$ + FIVn	Pm ≤ 1.0 Sm (Pm + Pb) ≤ 1.5 Sm	FIVn <13,600 psi Notes 2 and 3
Upset 2	DW + DPn + [$TSV2^2 + OBE^2$]$^{1/2}$	Pm ≤ 1.0 Sm (Pm + Pb) ≤ 1.5 Sm	Not Applicable
Upset 3	DW + DPu + OBE + FIVu (Note 4)	Pm ≤ 1.0 Sm (Pm + Pb) ≤ 1.5 Sm	FIVu < 13,600 psi Notes 2 and 3
Faulted 1A	DW + DPn + [SSE^2 + AC1 (Hi-Power)^2]$^{1/2}$ + FIVn	Pm ≤ 2.4 Sm (Pm + Pb) ≤ 3.6 Sm	Not Applicable
Faulted 1B	DW + [$DPf1^2 + SSE^2$]$^{1/2}$	Pm ≤ 2.4 Sm (Pm + Pb) ≤ 3.6 Sm	Not Applicable
Faulted 2A	DW + DPn + AC2 (interlock) + FIVn	Pm ≤ 2.4 Sm (Pm + Pb) ≤ 3.6 Sm	Not Applicable
Faulted 2B	DW + DPf2	Pm ≤ 2.4 Sm (Pm + Pb) ≤ 3.6 Sm	Not Applicable
Faulted 3	DW + DPn + SSE	Pm ≤ 2.4 Sm (Pm + Pb) ≤ 3.6 Sm	Not Applicable

Notes:

1. These criteria are for screening purposes and are not requirements for the dryer components.

2. These transient events are of a short duration; therefore, fatigue is not a critical consideration.

3. The value of 13,600 psi is based on austenitic stainless steel.

4. [[

]]; therefore, this load is not explicitly included in the dryer analysis

5. Upset Condition stress limits are increased by 10% above the limits shown in this table per NG-3223 (a) and NB-3223 (a)(1)

5.2 *ASME Code Load Case Stress Results*

The maximum stresses reported from the ANSYS analysis runs are peak stresses and not general primary membrane or membrane plus bending stresses. These stresses usually occur at discontinuities and contain a significant amount of stress concentration. In order to determine primary stress, ANSYS post-processing runs are made to scan each component of the dryer for stresses an element or two away from the the maximum stress location but still containing some concentration effect. These conservatively calculated primary stress values were then used in the calculation of total stress for the ASME load combination Table 4 calculations. Tables 5 and 6 summarize the primary stresses for the EPU cases for normal, upset, and faulted conditions. All of the stresses for the EPU cases meet the ASME Code stress limits.

Table 5 ASME Load Combinations Primary Stresses – Normal and Upset

[[

]]

Table 6 ASME Load Combinations Primary Stresses – Faulted

[[

]]

6. Conclusions

The stress analysis results at EPU demonstrate that the BFN dryer stresses are generally below the endurance level screening criteria. When conservative stress amplification factors are applied to address local stress intensification, a few dryer components are predicted to be above the design Fatigue Curve C endurance limit and only 4 components are identified to exceed the design Fatigue Curve B endurance limit.

As some of the locations still have high stress areas that are calculated to be above the endurance limit with the conservative load definition, Power Ascension curves will be developed that will allow collection of plant measurements in the EPU power operating range. If necessary, additional structural analyses will be performed and the Power Ascension curves reestablished in order to ensure that the dryer stresses will be maintained below the 13,600 psi endurance limit.

7. References

[1] GENE-0000-0045-9086-01, "General Electric Boiling Water Reactor Steam Dryer Scale Model Test Based Fluctuating Load Definition Methodology – March 2006 Benchmark Report," March 2006.

[2] GENE-0000-0052-3661-01, "Test Report # 1 Browns Ferry Nuclear Plant, Unit 1 Scale Model Test," April 2006.

[3] C.D.I. Report No. 06-11, "Hydrodynamic Loads on Browns Ferry Unit 1 Steam Dryer to 200 Hz," April 2006.

[4] ANSYS Release 8.1 and 9.0, ANSYS Incorporated, 2004.

[5] Purchase Specification, "Standard Requirements for Steam Dryers" 21A3316 Rev. 1.

[6] American Society of Mechanical Engineers (ASME) Boiler and Pressure Vessel Code, Section II, 1989 Edition with no Addenda.

[7] American Society of Mechanical Engineers (ASME) Boiler and Pressure Vessel Code, Section III, 1989 Edition with no Addenda

[8] "Recommended Weld Quality and Stress Concentration Factors for use in the Structural Analysis of the Exelon Replacement Steam Dryer", GENE 0000-0034-6079, February 2005.

[9] GENE-0000-0053-7413-R0-P, Browns Ferry Nuclear Plant Units 1, 2, and 3 Steam Dryer Stress, Dynamic, and Fatigue Analyses for EPU Conditions

Figure 1 Browns Ferry Finite Element Model

[[

]]

Figure 2 Cover Plate Patches

[[

]]

Figure 3 Proposed BFN Steam Dryer Upper Weld Modification

[[

]]

Figure 4 Browns Ferry Finite Element Model – Cover plate Patch and Manway Cover Close-up

[[

]]

Figure 5 Browns Ferry Finite Element Model – Inner Hood Tie Rod Close-up

[[

]]

Figure 6 Stress Intensity at EPU: Cover Plate

[[

]]

Figure 7 Stress Intensity at EPU: Manway Cover

[[

]]

Figure 8 Stress Intensity at EPU: Outer Hood

[[

]]

Figure 9 Stress Intensity at EPU: Outer Hood: close-up

[[

]]

Figure 10 Stress Intensity at EPU: Outer Hood Stiffener Weld: close-up

[[

]]

Figure 11 Stress Intensity at EPU: Exterior Hood Plates - Outer Banks

[[

]]

Figure 12 Stress Intensity at EPU: Exterior Vane Bank End Plates – Outer Banks

[[

]]

Figure 13 Stress Intensity at EPU: Hood Top Plates

[[

]]

Figure 14 Stress Intensity at EPU: Vane Bank Top Plates

[[

]]

Figure 15 Stress Intensity at EPU: Hood Stiffeners – Outer

[[

]]

Figure 16 Stress Intensity at EPU: Vane Bank Inner End Plates (2)

[[

]]

Figure 17 Stress Intensity at EPU: Closure Plates – Outer Banks

[[

]]

Figure 18 Stress Intensity at EPU: Inner Hoods

[[

]]

Figure 19 Stress Intensity at EPU: Inner Hoods: Close-up

[[

]]

Figure 20 Stress Intensity at EPU: Exterior Hood Plates – Inner Banks

[[

]]

Figure 21 Stress Intensity at EPU: Exterior Vane Bank End Plates – Inner Banks

[[

]]

Figure 22 Stress Intensity at EPU: Hood Stiffeners – Inner (1)

[[

]]

Figure 23 Stress Intensity at EPU: Hood Stiffeners – Inner (2)

[[

]]

Figure 24 Stress Intensity at EPU: Vane Bank Inner End Plates (1)

[[

]]

Figure 25 Stress Intensity at EPU: Vane Bank Inner End Plates (3)

[[

]]

Figure 26 Stress Intensity at EPU: Closure Plates – Inner Banks

[[

]]

Figure 27 Stress Intensity at EPU: Steam Dams

[[

]]

Figure 28 Stress Intensity at EPU: Steam Dam Gussets

[[

]]

Figure 29 Stress Intensity at EPU: Baffle Plate

[[

]]

Figure 30 Stress Intensity at EPU: Trough

[[

]]

Figure 31 Stress Intensity at EPU: Lower Cover Plate Patch

[[

]]

Figure 32 Stress Intensity at EPU: Base Plate

[[

]]

Figure 33 Stress Intensity at EPU: Support Ring

[[

]]

Figure 34 Stress Intensity at EPU: Skirt

[[

]]

Figure 35 Stress Intensity at EPU: Drain Pipes

[[

]]

Figure 36 Stress Intensity at EPU: Skirt Bottom Ring

[[

]]

Figure 37 Weld Factors

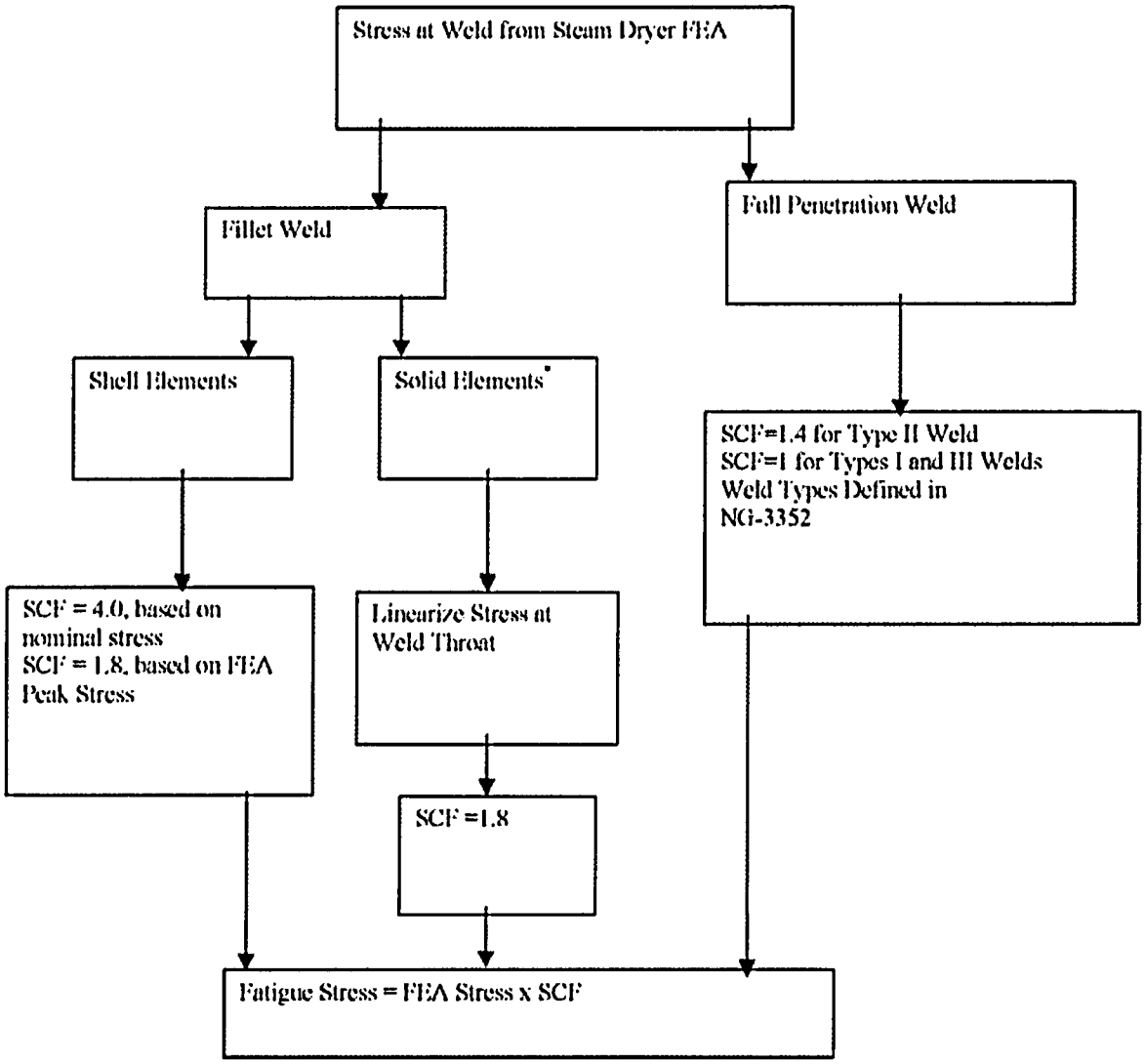

Figure 38 Tie Bar Detailed Drawing

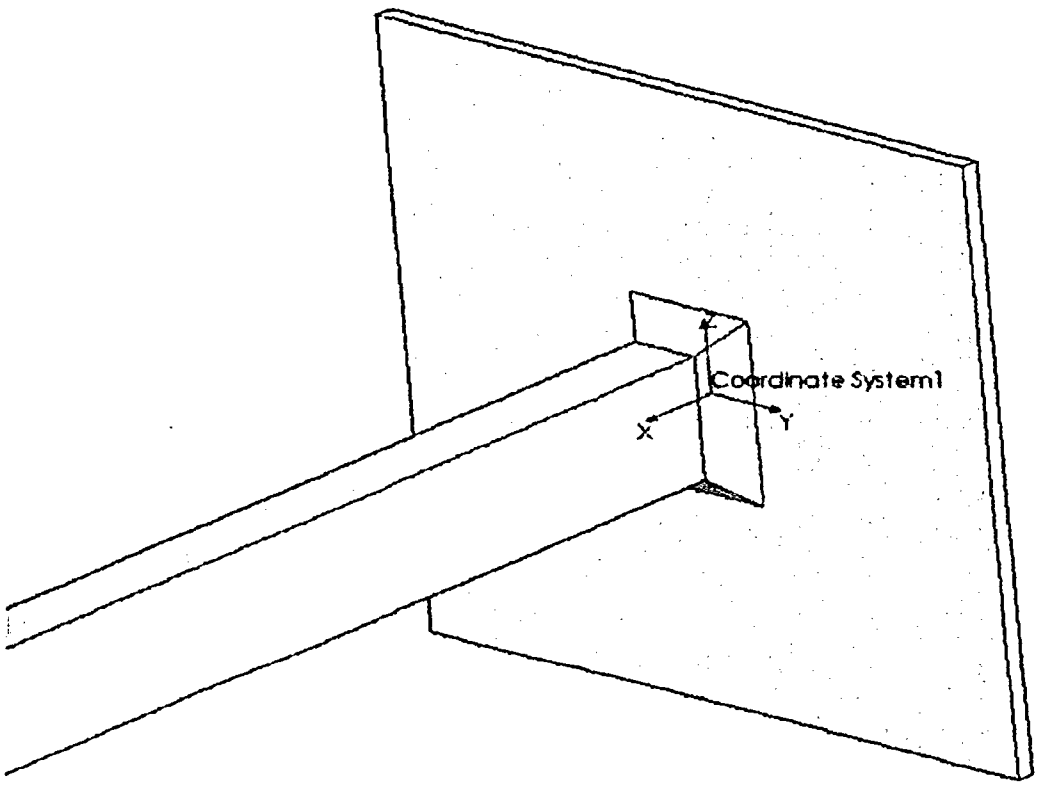

Figure 39 Tie Bar Detailed Drawing

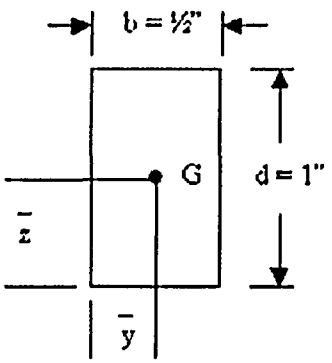

$A = 1.414*H*(b+d)$

$\bar{y} = b/2 = ¼"$

$\bar{z} = d/2 = ½"$

$I_u = (d^2/6)(3b+d)$

Figure 40 Browns Ferry Power Ascension Curves

[[

]]