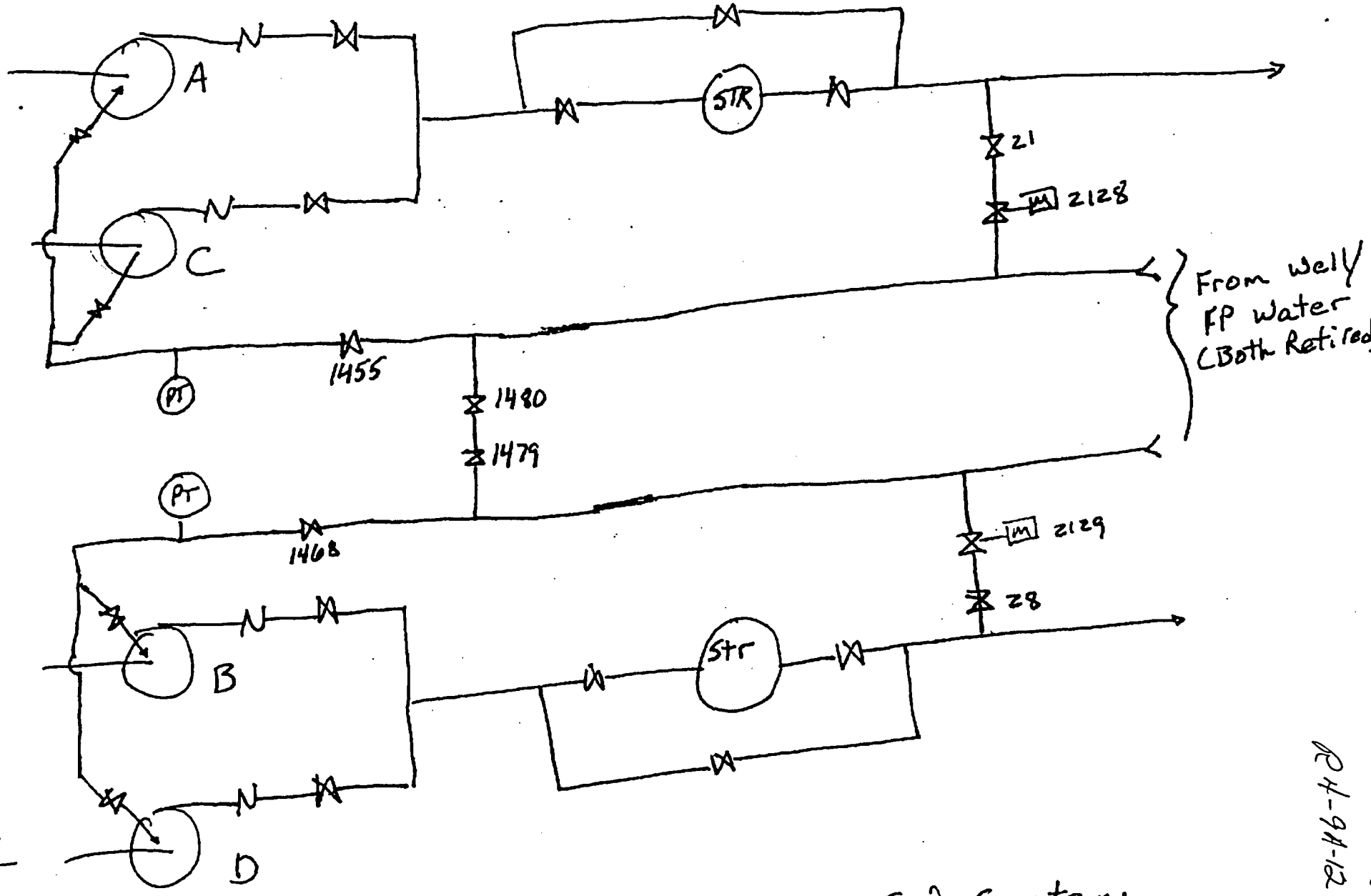

Cooper SW System
By Scott Schwind Rev. 1

Verified By S. Cochrum.

V-12

R4-94-12

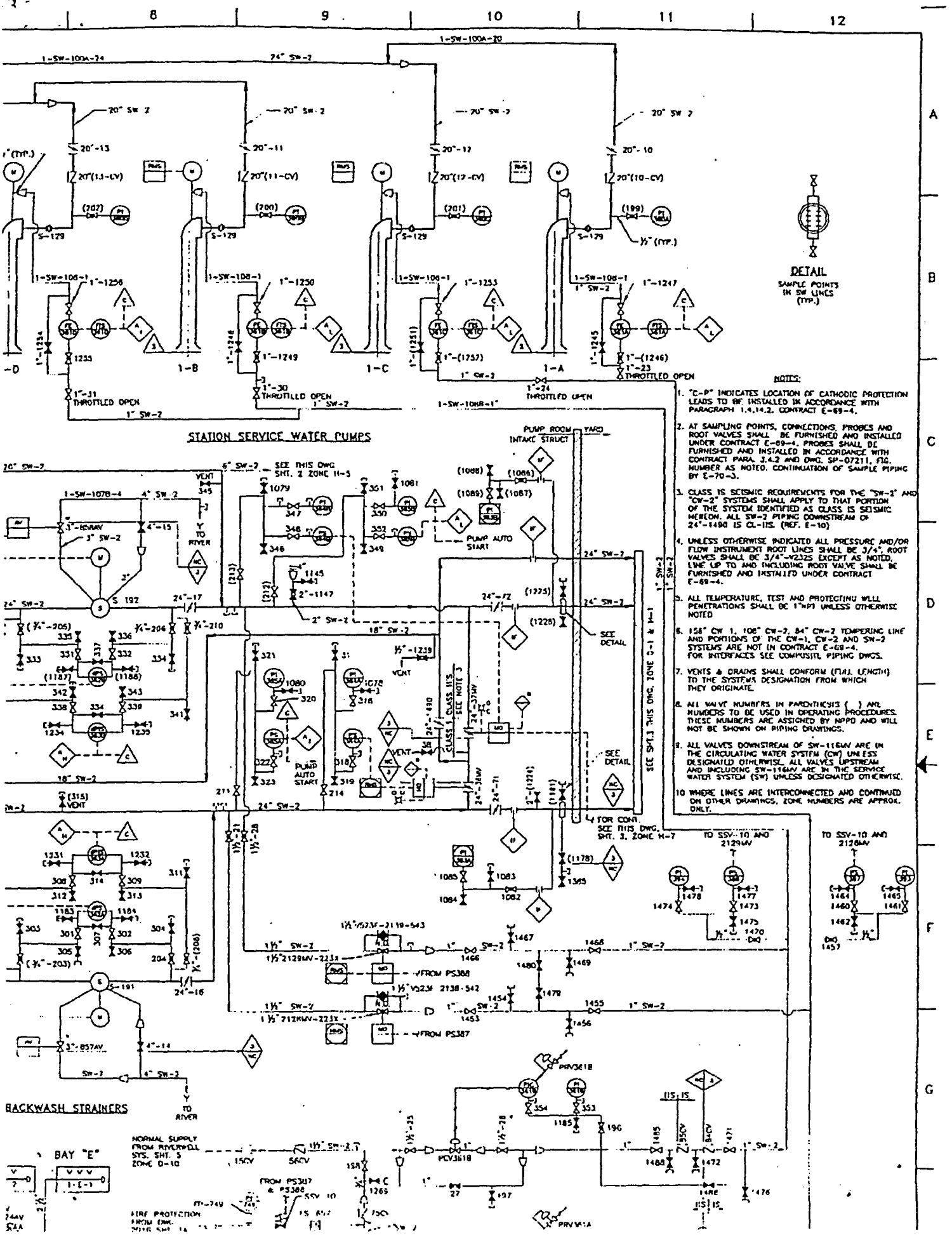
STATION SERVICE WATER PUMPS
BACKWASH STRAINERS
DETAIL
SAMPLE POINTS IN SW LINES (TYP.)
NOTES:
1. "C-P" INDICATES LOCATION OF CATHODIC PROTECTION LEADS TO BE INSTALLED IN ACCORDANCE WITH PARAGRAPH 1.4.14.2, CONTRACT E-69-4.
2. AT SAMPLING POINTS, CONNECTIONS, PROBES AND ROOT VALVES SHALL BE FURNISHED AND INSTALLED UNDER CONTRACT E-69-4. PROBES SHALL BE FURNISHED AND INSTALLED IN ACCORDANCE WITH CONTRACT PARA. 3.4.2 AND DWG. SP-07211, FIG. NUMBER AS NOTED. CONTINUATION OF SAMPLE PIPING BY E-70-3.
3. CLASS IS SEISMIC REQUIREMENTS FOR THE "SW-2" AND "CW-2" SYSTEMS SHALL APPLY TO THAT PORTION OF THE SYSTEM IDENTIFIED AS CLASS IS SEISMIC HEREON. ALL SW-2 PIPING DOWNSTREAM OF 24"-1490 IS CL-IIS. (REF. E-10)
4. UNLESS OTHERWISE INDICATED ALL PRESSURE AND/OR FLOW INSTRUMENT ROOT LINES SHALL BE 3/4". ROOT VALVES SHALL BE 3/4"-V232S EXCEPT AS NOTED. LINE UP TO AND INCLUDING ROOT VALVE SHALL BE FURNISHED AND INSTALLED UNDER CONTRACT E-69-4.
5. ALL TEMPERATURE, TEST AND PROTECTING WELL PENETRATIONS SHALL BE 1"NPT UNLESS OTHERWISE NOTED
6. 158" CW 1, 108" CW-2, 84" CW-2 TEMPERING LINE AND PORTIONS OF THE CW-1, CW-2 AND SW-2 SYSTEMS ARE NOT IN CONTRACT E-69-4. FOR INTERFACES SEE COMPOSITE PIPING DWGS.
7. VENTS & DRAINS SHALL CONFORM (FULL LENGTH) TO THE SYSTEMS DESIGNATION FROM WHICH THEY ORIGINATE.
8. ALL VALVE NUMBERS IN PARENTHESIS ( ) ARE NUMBERS TO BE USED IN OPERATING PROCEDURES. THESE NUMBERS ARE ASSIGNED BY NPPD AND WILL NOT BE SHOWN ON PIPING DRAWINGS.
9. ALL VALVES DOWNSTREAM OF SW-116MV ARE IN THE CIRCULATING WATER SYSTEM (CW) UNLESS DESIGNATED OTHERWISE. ALL VALVES UPSTREAM AND INCLUDING SW-116MV ARE IN THE SERVICE WATER SYSTEM (SW) UNLESS DESIGNATED OTHERWISE.
10 WHERE LINES ARE INTERCONNECTED AND CONTINUED ON OTHER DRAWINGS, ZONE NUMBERS ARE APPROX. ONLY.
PUMP ROOM INTAKE STRUCT
YARD
PUMP AUTO START
SEE DETAIL
FOR CONT. SEE THIS DWG. SHT. 3, ZONE H-7
TO SSV-10 AND 2129MV
TO SSV-10 AND 2128MV
FROM PS388
FROM PS387
NORMAL SUPPLY FROM RIVERWELL SYS. SHT. 5 ZONE D-10
BAY "E"
TO RIVER
THROTTLED OPEN