Pat
Steve
Jim
Conrad
Ralph (last)

NUREG/CR-5791
SAND91-1536

Risk Evaluation for a General Electric BWR, Effects of Fire Protection System Actuation on Safety-Related Equipment

Evaluation of Generic Issue 57

Prepared by
J. Lambright, S. Ross, E. Klamerus, S. Daniel

Sandia National Laboratories
Operated by
Sandia Corporation

Prepared for
U.S. Nuclear Regulatory Commission

AVAILABILITY NOTICE

Availability of Reference Materials Cited in NRC Publications

Most documents cited in NRC publications will be available from one of the following sources:

1. The NRC Public Document Room, 2120 L Street, NW., Lower Level, Washington, DC 20555

2. The Superintendent of Documents, U.S. Government Printing Office, P.O. Box 37082, Washington, DC 20013-7082

3. The National Technical Information Service, Springfield, VA 22161

Although the listing that follows represents the majority of documents cited in NRC publications, it is not intended to be exhaustive.

Referenced documents available for inspection and copying for a fee from the NRC Public Document Room include NRC correspondence and internal NRC memoranda; NRC bulletins, circulars, information notices, inspection and investigation notices; licensee event reports; vendor reports and correspondence; Commission papers; and applicant and licensee documents and correspondence.

The following documents in the NUREG series are available for purchase from the GPO Sales Program: formal NRC staff and contractor reports, NRC-sponsored conference proceedings, international agreement reports, grant publications, and NRC booklets and brochures. Also available are regulatory guides, NRC regulations in the *Code of Federal Regulations*, and *Nuclear Regulatory Commission Issuances*.

Documents available from the National Technical Information Service include NUREG-series reports and technical reports prepared by other Federal agencies and reports prepared by the Atomic Energy Commission, forerunner agency to the Nuclear Regulatory Commission.

Documents available from public and special technical libraries include all open literature items, such as books, journal articles, and transactions. *Federal Register* notices, Federal and State legislation, and congressional reports can usually be obtained from these libraries.

Documents such as theses, dissertations, foreign reports and translations, and non-NRC conference proceedings are available for purchase from the organization sponsoring the publication cited.

Single copies of NRC draft reports are available free, to the extent of supply, upon written request to the Office of Administration, Distribution and Mail Services Section, U.S. Nuclear Regulatory Commission, Washington, DC 20555.

Copies of industry codes and standards used in a substantive manner in the NRC regulatory process are maintained at the NRC Library, 7920 Norfolk Avenue, Bethesda, Maryland, for use by the public. Codes and standards are usually copyrighted and may be purchased from the originating organization or, if they are American National Standards, from the American National Standards Institute, 1430 Broadway, New York, NY 10018.

DISCLAIMER NOTICE

This report was prepared as an account of work sponsored by an agency of the United States Government. Neither the United States Government nor any agency thereof, or any of their employees, makes any warranty, expressed or implied, or assumes any legal liability of responsibility for any third party's use, or the results of such use, of any information, apparatus, product or process disclosed in this report, or represents that its use by such third party would not infringe privately owned rights.

NUREG/CR-5791
SAND91-1536
RG, 1A, 1B

Risk Evaluation for a General Electric BWR, Effects of Fire Protection System Actuation on Safety-Related Equipment

Evaluation of Generic Issue 57

Manuscript Completed: October 1992
Date Published: December 1992

Prepared by
J. Lambright, S. Ross, E. Klamerus*, S. Daniel

Sandia National Laboratories
Albuquerque, NM 87185

Prepared for
Division of Safety Issue Resolution
Office of Nuclear Regulatory Research
U.S. Nuclear Regulatory Commission
Washington, DC 20555
NRC FIN L1334

*Science and Engineering Associates, Inc.
6100 Uptown Blvd. N.E.
Albuquerque, NM 87110

DOCUMENTS IN SERIES

This report is one of a series of reports documenting the technical findings associated with the resolution of Generic Issue 57: Effects of Fire Protection Systems on Safety-Related Equipment.

There are several reports published in association with the resolution of Generic Issue 57. These are:

NUREG/CR-5580, SAND90-1507, Evaluation of Generic Issue 57: Effects of Fire Protection System Actuation on Safety-Related Equipment, Main Report, December 1992.

NUREG/CR-5789, SAND91-1534, Risk Evaluation for a Westinghouse PWR, Effects of Fire Protection System Actuation on Safety-Related Equipment: Evaluation of Generic Issue 57, December 1992.

NUREG/CR-5791, SAND91-1536, Risk Evaluation for a General Electric BWR, Effects of Fire Protection System Actuation on Safety-Related Equipment: Evaluation of Generic Issue 57, December 1992.

NUREG/CR-5790, SAND91-1535, Risk Evaluation for a Babcock & Wilcox Pressurized Water Reactor, Effects of Fire Protection System Actuation on Safety-Related Equipment (Evaluation of Generic Issue 57), September 1992.

NUREG/CR-5906, SAND92-1547, Decision Making Under Uncertainty: An Investigation Into the Application of Formal Decision-Making Methods to Safety Issue Decisions, December 1992.

Letter Report, EGG-NTA-9081, Risk Evaluation of a Westinghouse 4-Loop PWR, Effects of Fire Protection System Actuation on Safety-Related Equipment (Evaluation of Generic Issue 57), Idaho National Engineering Laboratory, December 1991.

Letter Report, Seismic Risk Evaluation for a Pressurized Water Reactor, Effects of Fire Protection System Actuation on Safety-Related Equipment, Sandia National Laboratories, December 1991.

ABSTRACT

Nuclear power plants have experienced actuations of fire protection systems (FPSs) under conditions for which these systems were not intended to actuate. They have also experienced advertent actuations with the presence of a fire. These actuations have often damaged nearby plant equipment.

A review of past occurrences of both types of such events on nuclear power plant safety has been performed. Thirteen different scenarios leading to actuation of fire protection systems due to a variety of causes were identified. These scenarios range from inadvertant actuation caused by human errors to hardware failures and include seismic root causes and seismic/fire interactions. A quantification of these thirteen scenarios, where applicable, was performed on a BWR4/MKI. This report estimates the contribution of FPS actuations to core damage frequency and to risk.

TABLE OF CONTENTS

	Page
RELATED DOCUMENTATION	ii
ABSTRACT	iii
TABLE OF CONTENTS	v
LIST OF FIGURES	viii
LIST OF TABLES	ix
ACKNOWLEDGEMENTS	x
EXCUTIVE SUMMARY	xi
1.0 INTRODUCTION	1-1
1.1 Scope	1-1
1.2 Methodology	1-3
1.3 Organization of the Report	1-3
1.4 References	1-4
2.0 PLANT DESCRIPTION	2-1
2.1 Plant Site and General Characteristics	2-1
2.2 Description of Plant Systems	2-1
2.2.1 Introduction	2-1
2.2.2 High Pressure Coolant Injection (HPCI) System	2-1
2.2.3 Reactor Core Isolation Cooling (RCIC) System	2-2
2.2.4 Control Rod Drive (CRD) System	2-5
2.2.5 Automatic Depressurization System (ADS)	2-7
2.2.6 Low Pressure Core Spray (LPCS) System	2-7
2.2.7 Low Pressure Coolant Injection (LPCI) System	2-9
2.2.8 Residual Heat Removal: Shutdown Cooling (SDC) System	2-12
2.2.9 Residual Heat Removal: Suppression Pool Cooling (SPC) System	2-12
2.2.10 Residual Heat Removal: Containment Spray (CS) System	2-15
2.2.11 Electrical Power System (EPS)	2-17
2.2.12 Emergency Service Water (ESW) System	2-19
2.2.13 High Pressure Service Water (HPSW) System	2-22
2.2.14 Emergency Ventilation System (EVS)	2-25
2.2.15 Instrument Air System (IAS)	2-25
2.2.16 Condensate System (CDS)	2-29
2.2.17 Primary Containment Venting (PCV) System	2-31
2.2.18 Reactor Building Cooling Water (RBCW) System	2-31
2.2.19 Turbine Building Cooling Water (TBCW) System	2-34
2.3 References	2-36

TABLE OF CONTENTS (Continued)

	Page
3.0 ROOT CAUSE ANALYSES	3-1
3.1 Introduction	3-1
3.2 Procedure	3-1
3.2.1 Transient Event Trees	3-13
3.2.2 LOSP Event Tree	3-21
3.2.3 Quantification	3-30
3.3 Results of Quantification	3-31
3.3.1 Root Cause 1--Fire-Induced FPS Actuation Due to Smoke Spread	3-35
3.3.2 Root Cause 2--Fire-Induced FPS Actuation Preventing Recovery	3-36
3.3.3 Root Cause 3--Fire-Induced FPS Actuation Preventing Fire-Fighting Access	3-36
3.3.4 Root Cause 4--FPS Actuation Caused by Human Error	3-36
3.3.5 Root Cause 5--FPS Actuation Caused by Pipe Break	3-36
3.3.6 Root Cause 6--FPS Actuation Caused by Hardware Failures in FPS	3-37
3.3.7 Root Cause 7--Dust-Triggered FPS Actuations in Seismic Events	3-37
3.3.8 Root Cause 8--Relay Chatter FPS Actuations in Seismic Events	3-37
3.3.9 Root Cause 9--FPS Actuations Due to Seismic Failures of FPS	3-38
3.3.10 Root Cause 10--External Plant Fires Causing FPS Actuations	3-38
3.3.11 Root Cause 11--Advertent Actuation of a Suppression System	3-38
3.3.12 Root Cause 12--Seismic/Fire Interaction	3-38
3.3.13 Root Cause 13--FPS Actuation Due to Unknown Causes	3-39
3.4 Summary	3-39
3.5 References	3-41
4.0 SENSITIVITY STUDIES	4-1
4.1 Sensitivity Study 1--Comparison of CDF Utilizing the LLNL and EPRI Seismic Hazard Curves	4-1

TABLE OF CONTENTS (Continued)

		Page
4.2	Sensitivity Study 2--Decrease in Probability of a Fire Given Tipping or Sliding Failure of an Energized Electrical Cabinet	4-1
4.3	Sensitivity Study 3--Decrease in Cable Damage From CO_2	4-7
4.4	Sensitivity Study 4--Decrease in Barrier Failure Probability	4-7
4.5	Sensitivity Study 5--Combination of Studies 1, 2, 3 and 4	4-11
4.5	Summary	4-13
4.6	References	4-14
5.0	OFFSITE DOSE AND RISK ASSESSMENT	5-1
5.1	Offsite Dose Calculations	5-1
5.2	Summary	5-3
5.3	References	5-7
Appendix A		A-1
Appendix B		B-1

LIST OF FIGURES

Figure		Page
2.1	High Pressure Coolant Injection System Schematic	2-3
2.2	Reactor Core Isolation Cooling System Schematic	2-4
2.3	Control Rod Drive System Schematic	2-6
2.4	Automatic and Manual Depressurization System Schematic	2-8
2.5	Low Pressure Core Spray System Schematic	2-10
2.6	Low Pressure Coolant Injection System Schematic	2-11
2.7	Residual Heat Removal System Shutdown Cooling Mode Schematic	2-13
2.8	Suppression Pool Cooling System Schematic	2-14
2.9	Containment Spray System Schematic	2-16
2.10	Electric Power System Schematic	2-18
2.11	Emergency Service Water System Schematic	2-20
2.12	High Pressure Service Water System Schematic	2-24
2.13	Emergency Ventilation System Schematic	2-26
2.14	Instrument Air/Nitrogen System Schematic	2-27
2.15	Condensate System Schematic	2-30
2.16	Primary Containment Venting System Schematic	2-32
2.17	Reactor Building Cooling Water System Schematic	2-33
2.18	Turbine Building Cooling Water System Schematic	2-35
3.1	Plant Layout	3-7
3.2	HPCI Area (Fire Zone 2)	3-8
3.3	Cable Spreading Room (Fire Zone 25)	3-9
3.4	Diesel Generator Building (Fire Zones 43-46, 54)	3-10
3.5	Turbine Building, 116′ Elevation (Fire Zone 50)	3-11
3.6	Transient With PCS Initially Available Event Tree	3-14
3.7	Transient Without PCS Initially Available Event Tree	3-16
3.8	Loss Of Offsite Power Event Tree	3-22
4.1	LLNL Hazard Curves: Mean, Median, 85th, and 15th Percentile Curves	4-5
4.2	EPRI Hazard Curves: Mean, Median, 85th, and 15th Percentile Curves	4-6

LIST OF TABLES

Table		Page
1.1	Causes of Potential FPS Actuation	1-2
3.1	Fire Zones and Designators	3-2
3.2	Fire Protection Systems and Safe Shutdown Equipment by Fire Zone	3-3
3.3	Plant Fire Zone Penetrations and Adjacencies	3-12
3.4	Fire Frequencies Corresponding to Plant Fire Zones	3-31
3.5	Fire Frequencies in Adjacent Zones	3-32
3.6	Core Damage Frequencies for Fire Zone 25 (CSR) (Per Reactor Year)	3-33
3.7	Core Damage Frequencies for Fire Zones 43-46 (Diesel Generator Building) (Per Reactor Year)	3-34
4.1	Summary of Sensitivity Results in Terms of Core Damage Frequency (Per Reactor Year)	4-2
4.2	Core Damage Frequencies for Sensitivity Study 1 - EPRI Seismic Hazard Curves (Per Reactor Year)	4-4
4.3	Core Damage Frequencies for Sensitivity Study 2 - Reduced Probability of a Fire Given Tipping or Sliding Failure of an Energized Electrical Cabinet (Per Reactor Year)	4-8
4.4	Core Damage Frequencies for Sensitivity Study 3 - Reduced Probability of Cable Damage from CO_2 (Per Reactor Year)	4-9
4.5	Core Damage Frequencies for Sensitivity Study 4 - Reduced Probability of Barrier Failure (Per Reactor Year)	4-10
4.6	Core Damage Frequencies for Sensitivity Study 5 - Combination of Sensitivity Studies 1, 2, 3 and 4 (Per Reactor Year)	4-12
5.1	Estimated Containment Failure Modes	5-2
5.2	Upper Bound Source Term	5-3
5.3	CRAC Code Results (Person-REM)	5-4
5.4	Summary of Base Case and Sensitivity Study Results in Terms of Risk (Person-REM)	5-5

ACKNOWLEDGMENTS

The authors would like to thank Mr. Demetrios Basdekas, the NRC Project manager for GI-57, for sponsoring this work.

Also the authors wish to acknowledge the efforts of Ann Shiver of Sandia National Laboratories and Steven P. Harris of EQE Engineering. Ann Shiver ran the Latin hypercube sampling programs. Steven Harris assisted with the seismic analysis and the plant walkdown.

Special thanks also to Jim Lynch, Dena Wood, Rose Flores and Jodie Pollard of Science and Engineering Associates for their support in the preparation of this report.

EXECUTIVE SUMMARY

In recent years, fire protection systems (FPSs) in nuclear power plants have actuated at times and under conditions for which they were not intended to actuate, as well as actuating in the presence of a fire, and have often affected and even damaged adjacent plant equipment. To quantify the risk due to this issue, a study was performed which involved: (a) a review of pertinent Licensee Event Reports of industry experience with FPS actuations, (b) a review of Navy experience with FPS actuations, and (c) a quantification for potential scenarios at three commercial nuclear power plants as well as for a set of generically applicable scenarios. This study was conducted as part of the analysis conducted for resolution of U.S. NRC Generic Issue 57.

In the quantification portion of the study, thirteen different causal mechanisms were identified which could result in fire protection system actuations. A set of criteria was developed for identifying such accident scenarios leading to core damage. These criteria can be applied to probabilistic risk assessment (PRA) vital area analysis for any particular plant in question to identify those accident sequences and cut sets which would lead to core damage (assuming the FPS actuation damages critical equipment in the fire zone affected).

As these scenarios are plant-specific in regard to plant layout and types of fire protection systems present, three plants were selected for the quantification. The criteria developed were applied to two commercial pressurized water reactor (PWRs) and one commercial boiling water reactor (BWR). These plants were selected because each had a detailed PRA and supporting analyses available. This report presents the application of the methodology to a General Electric BWR.

Using the complete set of accident sequences developed in a previous PRA for the plant, a full set of scenarios based on fire protection system actuations was analyzed. For each accident sequence identified, values for the various parameters involved were chosen, and an estimate of the impact on core damage and risk due to FPS actuation was made. Although an effort was made to use parameter estimates from existing data bases where available, some simplifying assumptions were required due to lack of data.

The risk calculations were performed employing a methodology similar to WASH-1400. An uncertainty analysis was performed for the core damage frequency and risk calculations. The results of the quantification found a total mean contribution to annual core damage frequency of 2.3E-5/ry and total dose of 137 person-REM.

1.0 INTRODUCTION

1.1 Scope

Experience in recent years has shown that fire protection systems (FPSs) in nuclear power plants have actuated at times and under conditions for which they were not intended to actuate as well as when intended in the presence of a fire. Since these FPSs are located near the critical equipment they are designed to protect, these actuations have often affected and even caused damage to this adjacent critical plant equipment. On some occasions, the damage has been to safety-related equipment, that is, equipment required to ensure the capability to safely shutdown the plant. On other occasions, the damage has been to equipment required for the normal operation of the plant and the reactor was subsequently shutdown. As a consequence, the actuation of fire protection systems represents a potentially important safety issue requiring further study.

In the recently completed Fire Risk Scoping Study (Ref. 1.1), the inadvertent actuation of fire protection systems in commercial United States nuclear power plants was briefly reviewed. Seventy-one events resulting in submission of a Licensee Event Report (LER) were identified during the period from April 1, 1980 to July 14, 1987. The average frequency of occurrence of these inadvertent actuation events was found to be approximately 10 per year.

The Fire Risk Scoping Study was limited in scope and did not attempt to quantify the attendant contribution to core damage frequency (CDF) resulting from the inadvertent actuation of FPS's, primarily because the impact of inadvertent fire protection system actuations was found to be very plant specific. It was concluded that such events could significantly impact the risk at a specific plant only if multiple safety systems could be affected by the inadvertent fire protection system actuation event.

As a follow-on to the Fire Risk Scoping Study, a preliminary study including a scoping quantification of risk due to inadvertent FPS actuation was performed (Ref. 1.2). This study quantified the core damage frequency and risk at one generic PWR. This analysis indicated that the increase in core damage frequency due to inadvertent FPS actuations could range from 10^{-5} to 10^{-4} per reactor year.

The current study, U.S. NRC Generic Issue 57, of which this report is part, entitled "Effects of Fire Protection System Actuation on Safety-Related Equipment," was begun in 1989. In this study, six main potential causes of inadvertent and advertent actuations of fire protection systems have been identified, as shown on Table 1.1. For the general cases of random and seismic-induced actuations, several potential root causes are also shown.

The objective of this study was to provide a probabilistic basis on which to evaluate the impact on plant core damage frequency and risk of fire protection system actuations. This objective was accomplished by first reviewing past events involving fire protection system actuations. The actuations were then categorized in order to draw some useful conclusions

Table 1.1

Causes of Potential FPS Actuation

A. Random causes of inadvertent actuation

   Human error (Root Cause 4)

   Hardware failure (Root Cause 6)

   Unknown (Root Cause 13)

B. Actuation induced by fire or by steam pipe break in an adjacent area and smoke/steam spread

   Fire in adjacent zone causing FPS actuation (Root Cause 1)

   Fire-induced FPS actuation (due to fire in adjacent zone) preventing random failure recovery action (Root Cause 2)

   Fire-induced FPS actuation (due to fire in adjacent zone) preventing access for manual fire suppression (Root Cause 3)

   FPS actuation caused by steam release (Root Cause 5)

C. Seismic induced inadvertent actuation

   Dust actuating smoke detectors (Root Cause 7)

   Failure of FPS (e.g., failure of wet pipes, sprinkler heads, etc.) (Root Cause 9)

   Actuation caused by FPS control system relay chatter (Root Cause 8)

D. Seismic induced failure of the FPS, diverting suppression agent from an area where a fire is present (Root Cause 12)

E. Fire external to plant (smoke via ventilation system) (Root Cause 10)

F. Fire present where the FPS is located (Root Cause 11)

about the causes and effects of these actuations. A quantification of the impacts of such events, including sensitivity and uncertainty studies, was performed both in terms of reduction in core damage frequency and risk for the scenarios identified. Finally, risk calculations, in terms of person-REM were performed.

1.2 Methodology

Chapter 3 of NUREG/CR-5580 (Ref. 1.3) presented the overall methodology that is used to evaluate the effects of fire protection system (FPS) actuations on nuclear power plant risk. The objective of the analysis presented in this report is to extend the general methodology to one of a representative set of nuclear plants. In this case, the plant selected is a BWR 4/Mark I. Using data from industry experience and parametric values used in prior applicable PRA studies, a quantitative assessment of the incremental contribution to core damage frequency due to FPS actuations is performed.

The analysis of the thirteen root causes introduced in Section 3.2 of Reference 1.3 is being applied on a site-specific basis. The actual site being studied is unimportant and will not be named. As the safety significance of FPS actuations is highly plant-specific and is dependent on system interdependencies derived from plant event tree and fault tree models, it follows that those models available for the specific plant in question must be used in the analysis. In this case, the system models developed as part of the NUREG-1150 study (Ref. 1.4), augmented by site visits, were used as the basis for quantification in this report.

1.3 Organization of the Report

A description of the plant systems and general plant characteristics is provided in Chapter 2. The system descriptions include simplified schematics which depict major system components.

The base case analysis (best estimate) of core damage frequency due to FPS actuations is described in Chapter 3. This analysis addresses all of the root causes presented in Reference 1.3 that apply to this nuclear power plant. This chapter also contains a description of where vital equipment is located throughout the plant, plant fire protection system locations, and an application of the methodology including results in terms of core damage frequency by root cause and by fire zone.

Chapter 4 describes the sensitivity analyses performed and the overall effect on the base case results. These studies are very plant specific, but the issues considered would apply to any "typical" General Electric BWR. In Chapter 5, the "back end" risk calculations (in terms of offsite person-REM exposure) are described.

1.4 References

1.1 J. A. Lambright et al., Fire Risk Scoping Study: Investigation of Nuclear Power Plant Fire Risk Including Previously Unaddressed Issues, NUREG/CR-5088, SAND 88-0177, Sandia National Laboratories, November 1988.

1.2 J. C. Romig, et al., Scoping Study of the Potential Impacts of Inadvertent Fire Suppression System Actuations in Commercial Nuclear Power Plants (Letter Report), Sandia National Laboratories, May 1990.

1.3 J. A. Lambright et al., Evaluation of Generic Issue 57: Effects of Fire Protection System Actuation on Safety-Related Equipment, Main Report, NUREG/CR-5580, SAND91-1507, Sandia National Laboratories, December 1992.

1.4 J. A. Lambright and M. P. Bohn, NUREG/CR-4550, SAND86-2084, Rev. 1/Vol. 4, Part 3, Sandia National Laboratories, December 1990.

2.0 PLANT DESCRIPTION

2.1 Plant Site and General Characteristics

The plant site, general characteristics, and success criteria information for the BWR4/MKI was obtained from Reference 2.1. The twin BWR units at this site are each rated at 1,065 MW. The reactor and generator for both these units were supplied by General Electric Corporation. Bechtel acted as Architect/Engineer/Constructor.

2.2 Description of Plant Systems

2.2.1 Introduction

This section discusses the system descriptions and system models of the major frontline and support systems identified as important to safety as described in the external events analysis (Ref. 2.1). In addition to the event trees discussed, component fault trees also developed by the external events analysts were utilized. Use of the same event trees, fault trees, and accident sequences developed during the external events analysis ensured consistency between this study and the internal and external events analyses performed as part of NUREG-1150.

The following discussions of the systems include:

a. A brief functional description of the system with reference to the one-line diagrams that were developed to indicate which components were included in the model;

b. Safety-related success criteria that were applied to the system;

c. Interfaces and safety actuation provisions between the frontline systems and the support systems.

2.2.2 High Pressure Coolant Injection (HPCI) System

The function of the HPCI system is to provide a makeup coolant source to the reactor vessel during accidents in which system pressure remains high (Event tree nomenclature--U1).

The HPCI system consists of a single train with motor-operated valves and a turbine-driven pump. Suction is taken from either the Condensate Storage Tank (CST) or the suppression pool (or torus). Injection to the reactor vessel is via a feedwater line. The HPCI pump is rated at 5000 gpm flow with a discharge head of 1135 psig. A simplified schematic of the HPCI system is provided by Figure 2.1. Major components modeled in the system fault tree are shown.

The HPCI system is automatically initiated and controlled. Operator intervention is required as follows: (a) to prevent either vessel overfill or continuous system trip/restart cycles, (b) to manually start the system given an auto-start failure, and (c) to set up the system for continuous operation under long-term station blackout conditions. The success criteria for the HPCI system is injection at rated flow to the reactor vessel.

Most of the HPCI system is located in a separate room in the reactor building. Local access to the HPCI system could be affected by either containment venting or containment failure should steam be released to the reactor building area. Room cooling failure is assumed to fail the HPCI pump in ten hours (Ref. 2.1).

Upon system actuation, HPCI injection valves receive a signal to open and HPCI test valves receive a signal to close. The HPCI system is automatically initiated on the receipt of either a high drywell pressure (2 psig) or low reactor water level (490 inches above vessel zero) signal. The low reactor water level sensors are shared with the RCIC system.

2.2.3 Reactor Core Isolation Cooling (RCIC) System

The function of the RCIC system is to provide a makeup coolant source to the reactor vessel during accidents in which system pressure remains high (Event tree nomenclature--U2).

The RCIC system consists of a single train with motor-operated valves and a turbine-driven pump. Suction is taken from either the CST or the suppression pool. Injection to the reactor vessel is via a feedwater line. The RCIC pump is rated at 600 gpm flow with a discharge head of 1135 psig. A simplified schematic of the RCIC system is provided by Figure 2.2. Major components that were modeled in the system fault tree are shown.

The RCIC system is automatically initiated and controlled. Operator intervention is required as follows: (1) to prevent either vessel overfill or continuous system trip/restart cycles, (2) to manually start the system given an auto-start failure, and (3) to set up the system for continuous operation under long-term station blackout conditions. The success criteria for the RCIC system is injection at rated flow to the reactor vessel.

Most of the RCIC system is located in a separate room in the reactor building. Local access to the RCIC system could be affected by either containment venting or containment failure should steam be released to the reactor building area. Room cooling failure is assumed to fail the RCIC pump in ten hours.

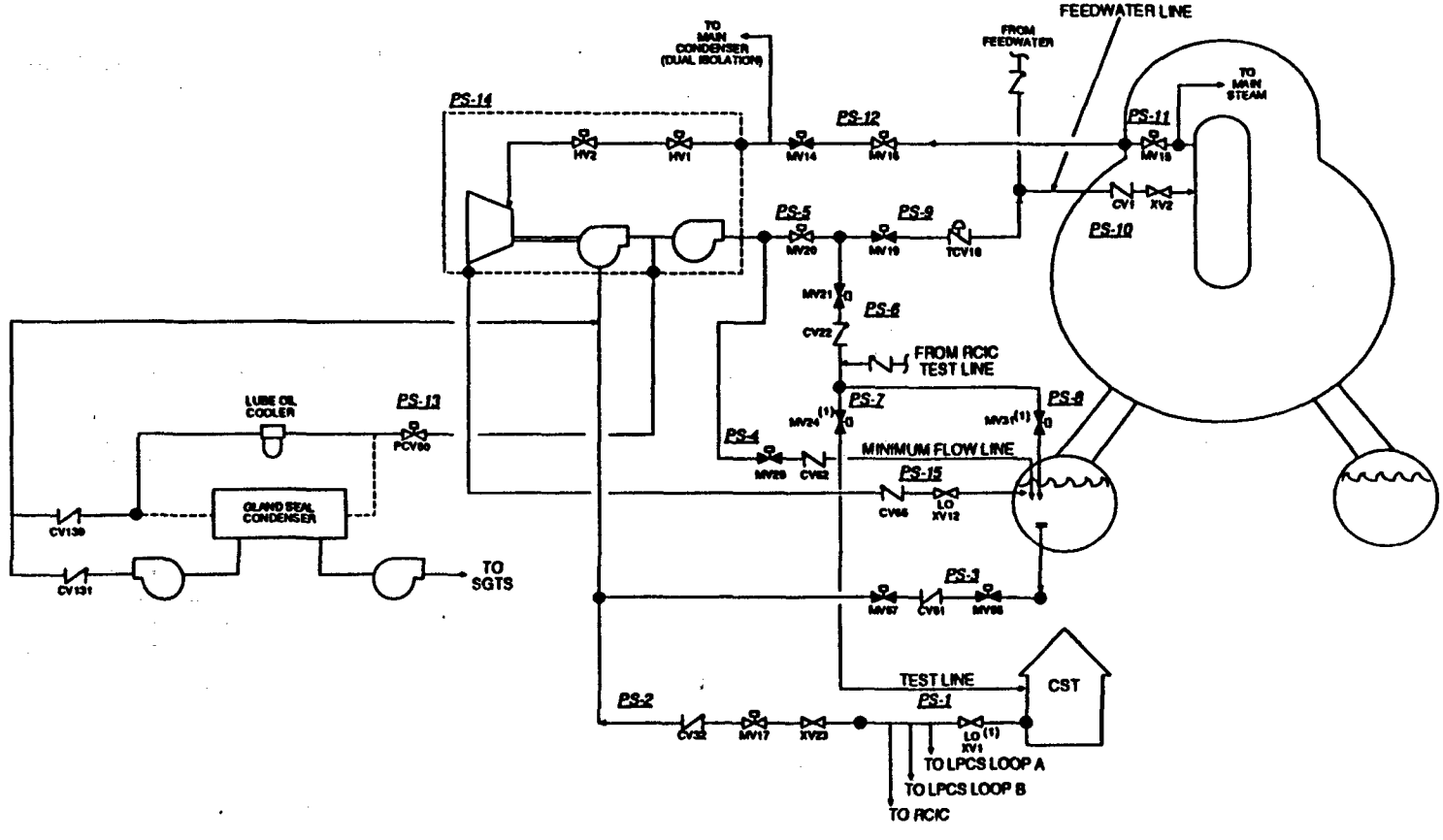

VALVE POSITIONS ARE SHOWN IN THEIR STANDBY MODE
(1) VALVE ALSO SHOWN ON RCIC SCHEMATIC

Figure 2.1. High Pressure Coolant Injection System Schematic

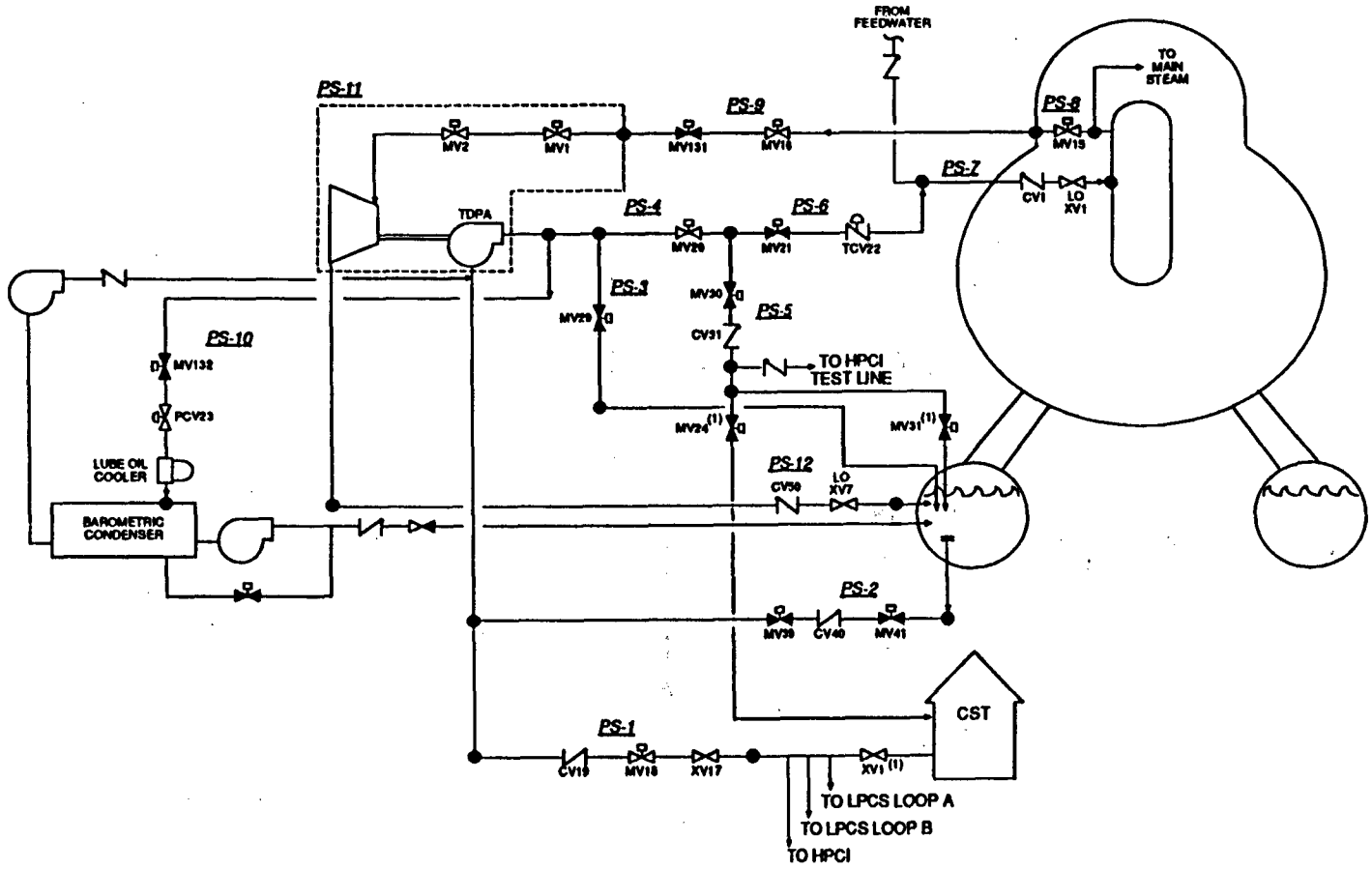

VALVE POSITIONS ARE SHOWN IN THEIR STANDBY MODE
(1) VALVE ALSO LOCATED ON HPCI SCHEMATIC, SEE HPCI SCHEMATIC FOR DEFINITION OF PIPE SEGMENT

Figure 2.2. Reactor Core Isolation Cooling System Schematic

Upon system actuation, RCIC injection valves receive a signal to open and RCIC test valves receive a signal to close. The RCIC system is automatically initiated on the receipt of a low reactor water level signal (490 inches above vessel zero). The low reactor water level sensors are shared with the HPCI system.

2.2.4 Control Rod Drive (CRD) System

The CRD system was modeled as a backup source of high pressure injection (Event tree nomenclature--U3-1, CRD Enhanced Mode-2 pumps required, and U3-2 CRD-1 pump required) the CRD pumps take suction from the condenser hotwell in the Condensate system or the CST. A flow control station is installed downstream of the tap from the Condensate system and ties into the CRD pump suction line before the CRD suction filter. The flow control station will divert 250 gpm from the Condensate system. This will supply the CRD system with the remainder of the water being passed on to the CST. In the event that flow from the Condensate system is interrupted, the CST provides a backup source of water to ensure CRD system operability without operator action being required. A simplified schematic of the CRD system is provided by Figure 2.3.

The CRD pumps, together, can achieve a flow rate of approximately 210 gpm with the reactor fully pressurized and approximately 300 gpm with the reactor depressurized. Two discharge paths are provided for the CRD pumps. One discharge path is through an air-operated valve control station. When instrument air is lost, this path is blocked. With both CRD pumps running and the reactor at nominal pressure, the second discharge path restricts flow, by means of an orifice, to approximately 180 gpm.

Normally one CRD pump is running, with the suction and discharge valves to the standby pump being blocked. Should the operator be required to realign the CRD system as a sole source of early high pressure injection, the standby CRD pump must be placed into operation to achieve sufficient flow to the reactor vessel.

In general, the CRD success criteria (as a sole injection source to the reactor) requires both pumps running and one of the two discharge paths available. If some other injection system has been operating successfully for six or more hours following an initiator, the CRD success criteria changes to one pump running and one of two discharge paths available.

Most of the CRD system is located in the turbine building. Any physical impact of accident conditions on the ability of the CRD system to perform its function would be minimal. Since the system is located in a large open area, room cooling failure is not applicable to the CRD pumps. The CRD pumps receive no automatic initiation signals.

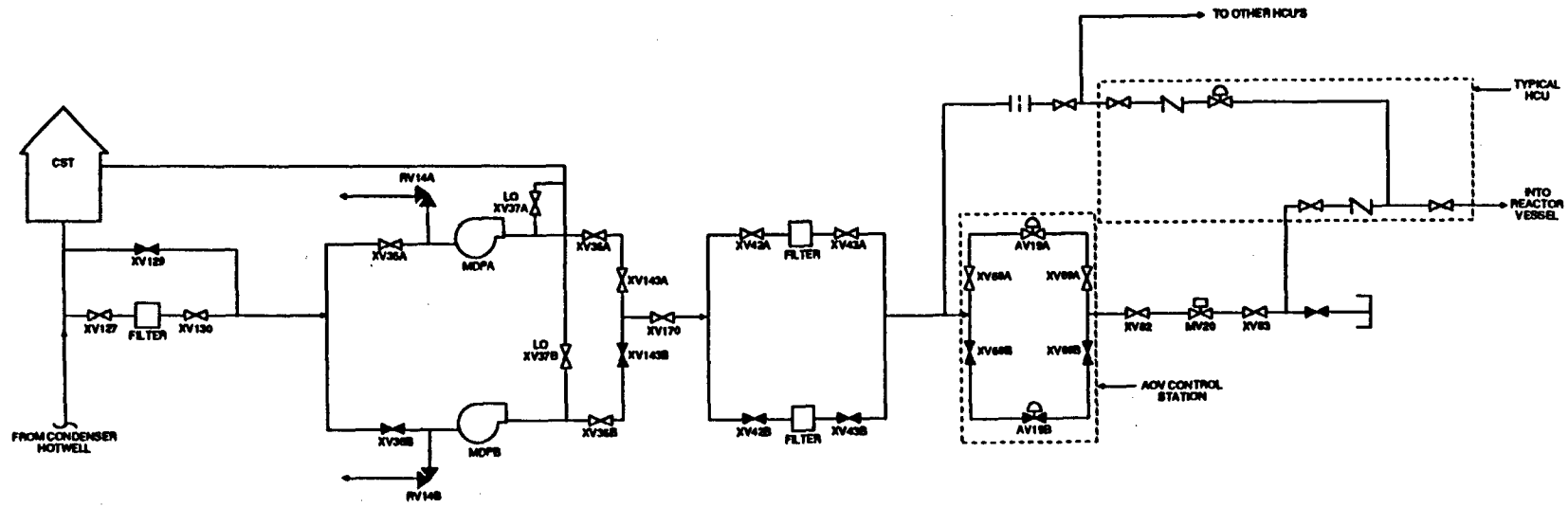

VALVE POSITIONS ARE SHOWN IN THEIR OPERATING MODE

Figure 2.3. Control Rod Drive System Schematic

2.2.5 Automatic Depressurization System (ADS)

The ADS is designed to depressurize the primary system to a pressure at which the low pressure injection systems can inject coolant to the reactor vessel (Event tree nomenclature--X_1, X_2, X_3).

The Automatic Depressurization system describes the automatic or, if required, manual operation of the ADS/SRV system to depressurize the primary system. This allows the low pressure injection systems to be used to cool the core. The Manual Depressurization system describes manual operation of the ADS/SRV system to depressurize the primary system. This allows the SDC mode of the RHR system to be used.

The ADS consists of five relief valves capable of being manually opened. Each valve discharges via a tailpipe line through a downcomer to the suppression pool. Relief valve capacity is approximately 820,000 lb/hr. A simplified schematic of the ADS is provided by Figure 2.4.

The ADS is automatically initiated. The operator may manually initiate the ADS or may depressurize the reactor vessel using the six relief valves that are not connected to ADS logic. The operator can inhibit ADS operation if a spurious ADS signal occurs or if the operator desires to do so (as in an ATWS scenario). The success criterion for the ADS is three of five valves opening to depressurize the reactor.

The ADS valves are located inside the containment. ADS performance is not normally affected by accident conditions since the equipment is qualified for accident conditions and the air/nitrogen supply pressure is judged to be sufficiently high to allow valve operation under most containment conditions. However, should containment pressure be excessively high (~85 psig or greater), the valves could not be kept open since the air/nitrogen supply pressure is limited to ~85 psig.

Automatic ADS initiation occurs upon receipt of a low-low reactor water level signal (with an ~8-minute time delay), a low-low level and high drywell pressure signal, or notice that one LPCI or two LPCS pumps are running.

2.2.6 Low Pressure Core Spray (LPCS) System

The function of the LPCS system is to provide a makeup coolant source to the reactor vessel during accidents in which system pressure is low (Event tree nomenclature--V2). The ADS can be used in conjunction with the LPCS system to attain a low enough system pressure for injection to occur.

The LPCS system is a two-loop system consisting of motor-operated valves and motor driven pumps. There are two 50-percent capacity pumps per loop, with each pump rated at 3125 gpm with a discharge head of 105 Figu

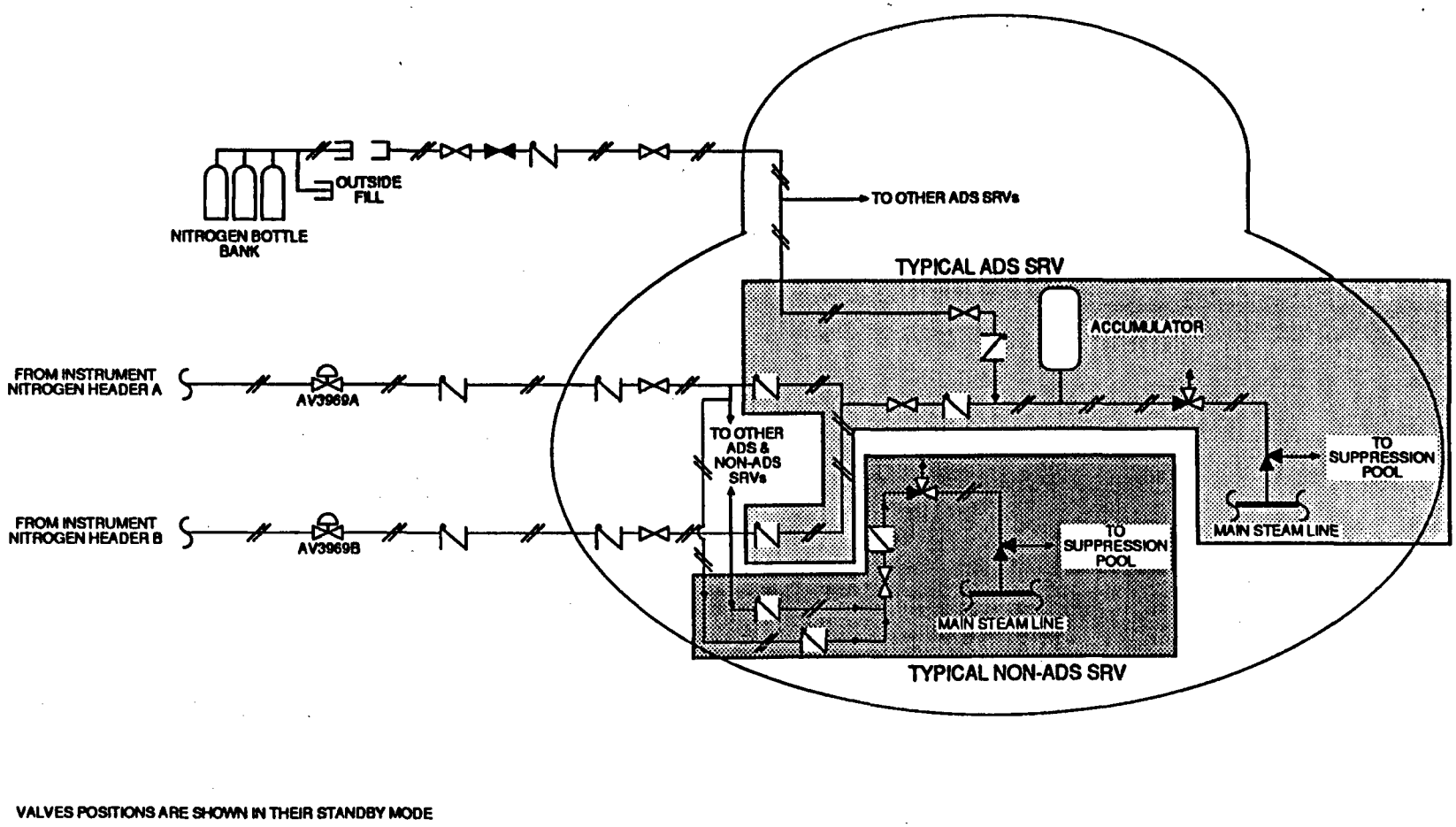

Figure 2.4. Automatic and Manual Depressurization System Schematic

psig. The LPCS system's normal suction source is the suppression pool. Pump suction can be manually realigned to the CST. A simplified schematic of the LPCS system is provided by Figure 2.5. Major components are shown as well as the pipe segment definitions (e.g., PS-27) used in the system fault tree.

The LPCS system is automatically initiated and controlled. Operator intervention is required to manually start the system given an auto-start failure and to stop the system or manually control flow during an ATWS if required. The success criterion for the LPCS system is injection of flow from any two pumps to the reactor vessel.

Most of the LPCS system is located in the reactor building. Local access to the LPCS system could be affected by either containment venting or failure. Room cooling failure is assumed to fail the LPCS pumps in ten hours.

Upon the receipt of a LPCS injection signal, start signals are sent to all LPCS pumps, both injection valves are demanded to open, and the test return valves are demanded to close. The LPCS system is automatically initiated on the receipt of either a low-low reactor water level (378 inches above vessel zero), or high drywell pressure (2 psig) and low reactor pressure (450 psig).

2.2.7 Low Pressure Coolant Injection (LPCI) System

The function of the LPCI system is to provide a makeup coolant source to the reactor vessel during accidents in which system pressure is low (Event tree nomenclature--V3). The ADS can be used in conjunction with the LPCI system to attain a low enough system pressure for injection to occur. The LPCI system is but one mode of the RHR system and, as such, shares components with other modes.

A simplified schematic is shown in Figure 2.6. Major components are shown as well as the pipe segment definitions (e.g., PS-19) used in the system fault tree.

The LPCI system is automatically initiated and controlled. Operator intervention is required to manually start the system given an auto-start failure and to stop the system or control flow during an ATWS if required. The success criterion for the LPCI system is injection of flow from any one pump to the reactor vessel.

Most of the LPCI system is located in the reactor building. Local access to the LPCI system could be affected by either containment venting or failure. Room cooling failure is assumed to fail the LPCI pumps in ten hours.

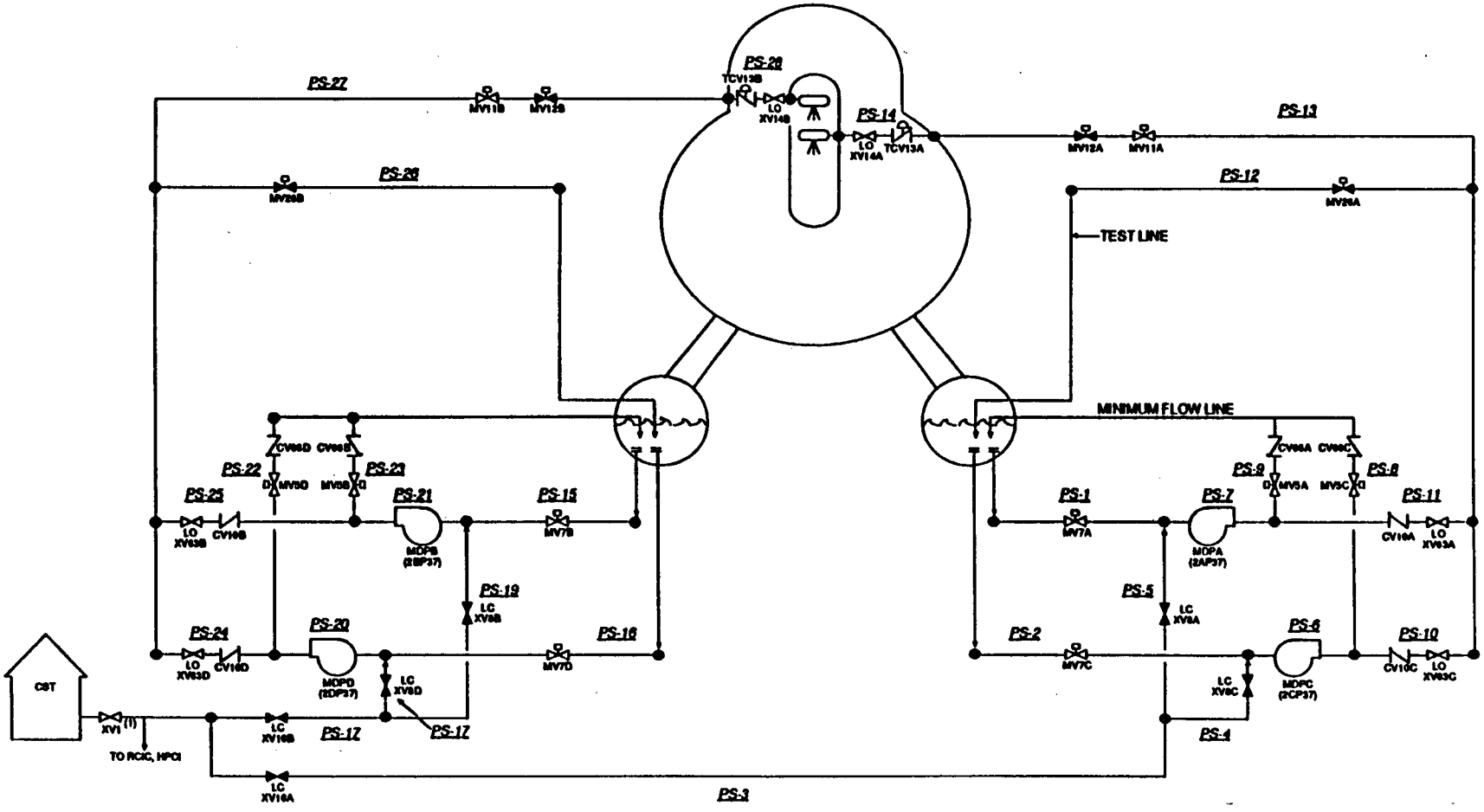

VALVE POSITIONS ARE SHOWN IN THEIR STANDBY POSITION
(1) VALVE ALSO LOCATED ON HPCI SCHEMATIC, SEE HPCI SCHEMATIC FOR DEFINITION OF PIPE SEGMENT

Figure 2.5. Low Pressure Core Spray System Schematic

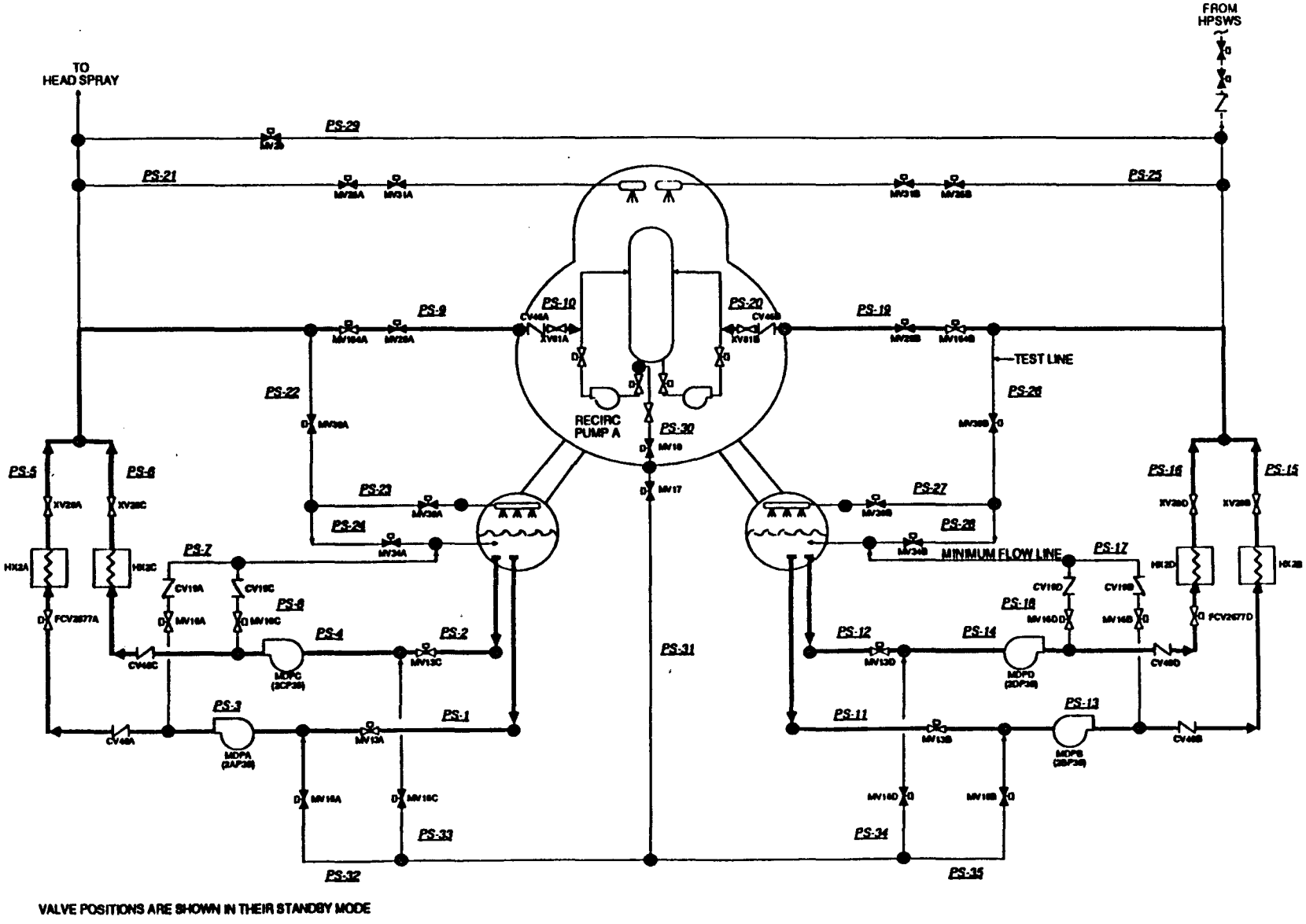

Figure 2.6. Low Pressure Coolant Injection System Schematic

Upon the receipt of a LPCI injection signal, start signals are sent to all pumps, loops A and B injection valves are subsequently demanded to open when reactor pressure is low enough, and the test return valves are demanded to close. The LPCI system is automatically initiated on the receipt of either a low-low reactor water level (378 inches above vessel zero), or high drywell pressure (2 psig) and low reactor pressure (450 psig).

2.2.8 Residual Heat Removal: Shutdown Cooling (SDC) System

The function of the SDC system is to remove decay heat during accidents in which reactor vessel integrity is maintained (Event tree nomenclature--W1). The SDC system is but one mode of the RHR system and, as such, shares components with other modes.

The RHR system is a two-loop system consisting of motor-operated valves and motor-driven pumps. There are two pump/heat exchanger trains per loop, with each pump rated at 10,000 gpm with a discharge head of 20 psig. Cooling water flow to the heat exchanger is required for the SDC mode. The SDC system suction source is one reactor recirculation pump's suction line. A simplified schematic of the SDC (RHR) system is provided by Figure 2.7. Major components are shown as well as the pipe segment definitions (e.g., PS-9) used in the system fault tree. The SDC system is manually initiated and controlled. The success criterion for the SDC system is injection of flow from any one pump/heat exchanger train to the reactor vessel.

Most of the SDC system is located in the reactor building. Local access to the SDC system could be affected by either containment venting or failure. Room cooling failure is assumed to fail the SDC pumps in ten hours.

SDC is initiated after emergency core injection is successful and reactor pressure is low. If an injection signal subsequently occurs, the RHR system will automatically be realigned to the LPCI mode.

2.2.9 Residual Heat Removal: Suppression Pool Cooling (SPC) System

The function of the SPC system is to remove decay heat from the suppression pool during accidents (Event tree nomenclature--W2). The SPC system is but one mode of the RHR system and, as such, shares components with other modes.

The RHR system is a two-loop system consisting of motor-operated valves and motor-driven pumps. There are two pump/heat exchanger trains per loop, with each pump rated at 10,000 gpm with a discharge head of 20 psig. Cooling water flow to the heat exchanger is required for the SPC mode. The SPC suction source is the suppression pool. A simplified schematic of the SPC (RHR) system is provided by Figure 2.8. Major

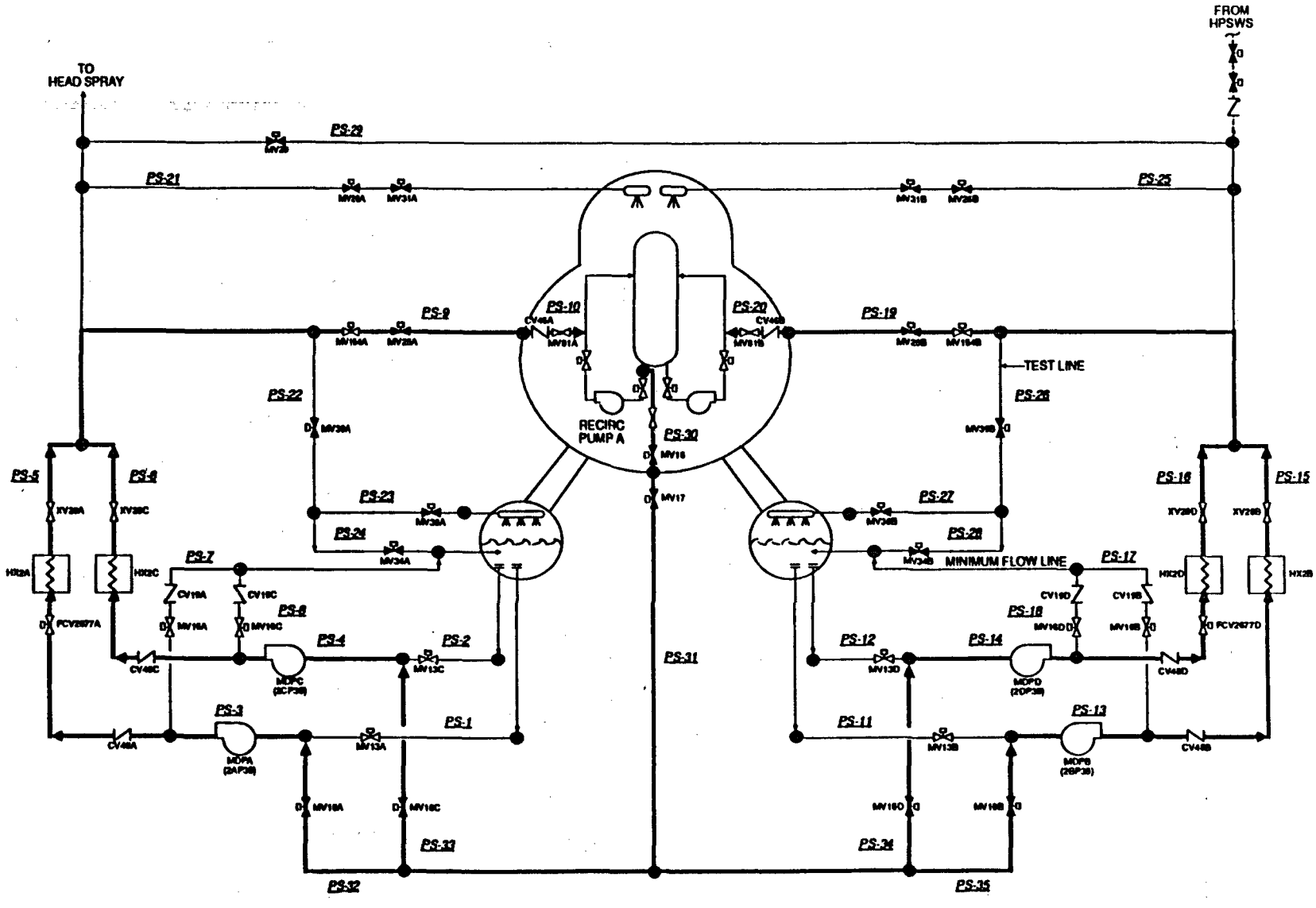

Figure 2.7. Residual Heat Removal System Shutdown Cooling Mode Schematic

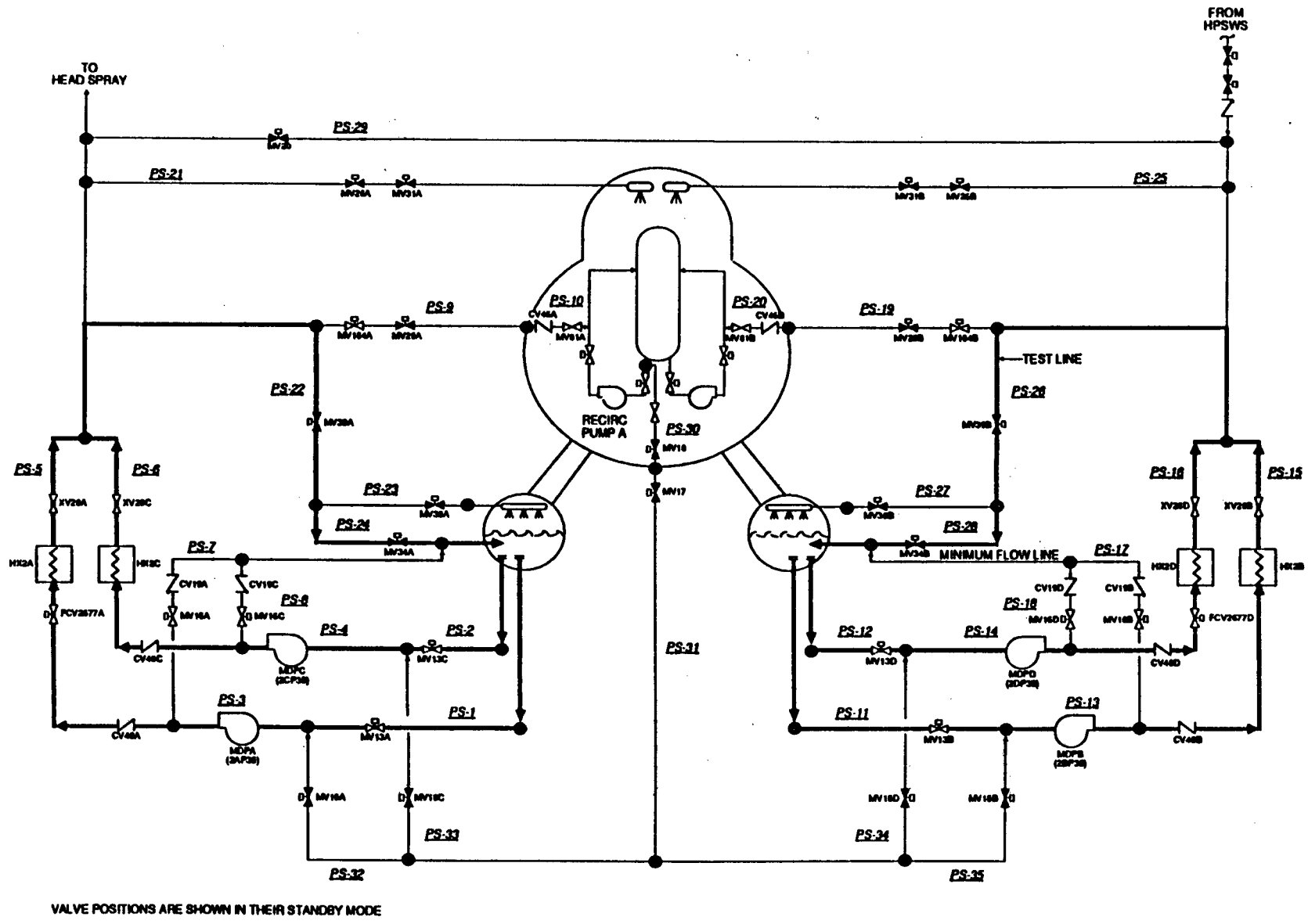

Figure 2.8. Suppression Pool Cooling System Schematic

components are shown as well as the pipe segment definitions (e.g., PS-26) used in the system fault tree. The SPC system is manually initiated and controlled. The success criterion for the SPC system is injection of flow from any one pump/heat exchanger train to the suppression pool.

Most of the SPC system is located in the reactor building. Local access to the SPC system could be affected by either containment venting or failure. Room cooling failure is assumed to fail the RHR pumps in ten hours.

The SPC mode is manually initiated. If an injection signal is generated subsequent to the initiation of the SPC system, the SPC system will automatically realign to the LPCI mode. Besides a time delay, a permissive indicating that the reactor water level is above the shroud (312 inches above vessel zero) must be present prior to aligning to the SPC mode. However, this permissive may be overridden by a switch in the control room.

2.2.10 Residual Heat Removal: Containment Spray (CS) System

The function of the CS system is to suppress pressure in the drywell during accidents (Event tree nomenclature--W3). The CS system is but one mode of the RHR system and, as such, shares components with other modes.

The RHR system is a two-loop system consisting of motor-operated valves and motor-driven pumps. There are two pump/heat exchanger trains per loop, with each pump rated at 10,000 gpm with a discharge head of 20 psig. Cooling water flow to the heat exchanger is required for the CS mode. The CS suction source is the suppression pool. A simplified schematic of the CS (RHR) system is provided by Figure 2.9. Major components are shown as well as the pipe segment definitions (e.g., PS-25) used in the system fault tree. The CS system is manually initiated and controlled. The success criterion for the CS system is injection of flow from any one pump/heat exchanger train to the spray ring.

Most of the CS system is located in the reactor building. Local access to the CS system could be affected by either containment venting or failure. Room cooling failure is assumed to fail the CS pumps in ten hours.

Reactor water level above the shroud (312 inches above vessel zero) and high drywell pressure (2 psig) permissive signals must be present before the CS system can be manually initiated. The water level signal can be overridden.

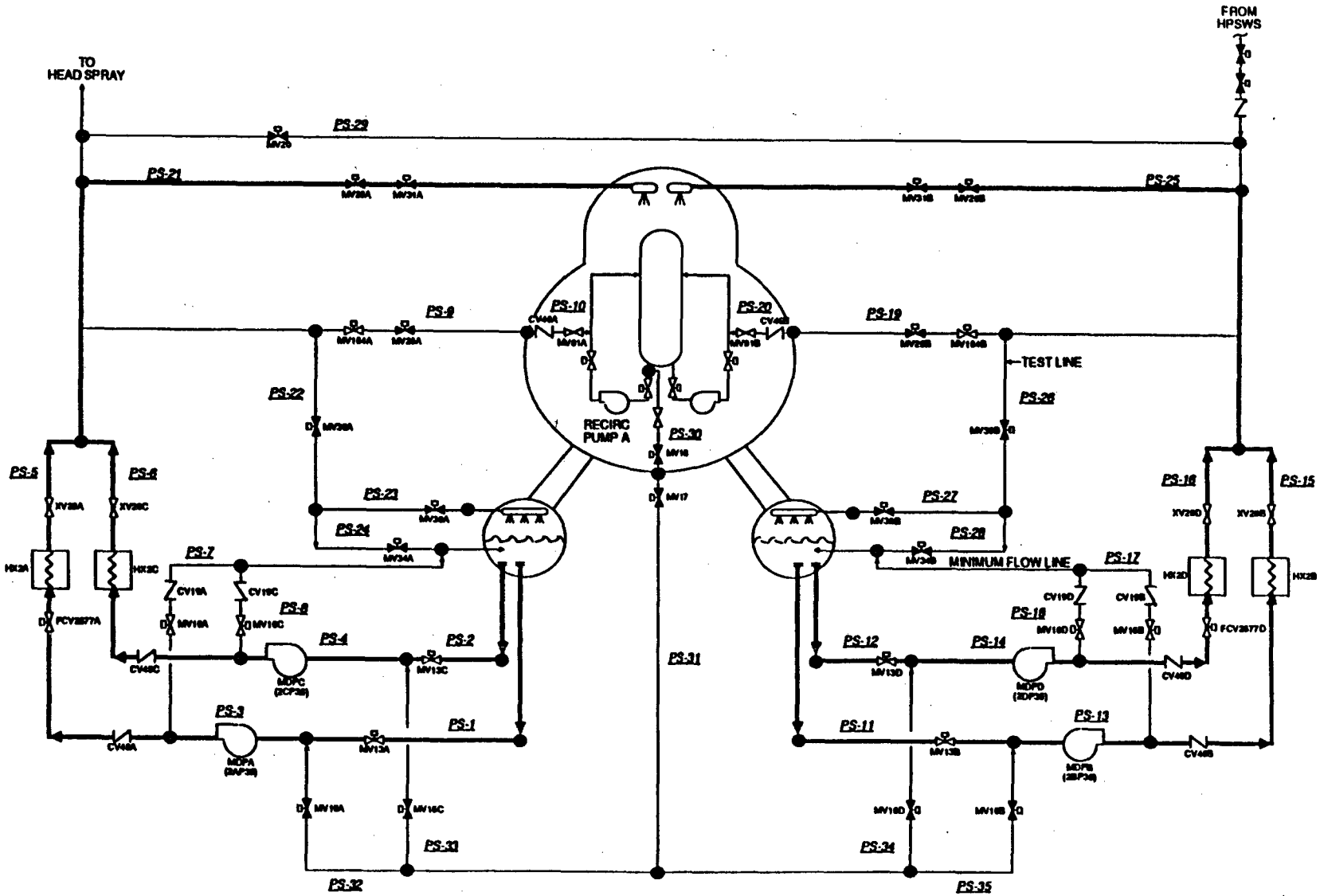

Figure 2.9. Containment Spray System Schematic

2.2.11 Electric Power System (EPS)

The EPS is designed to provide a diversity of dependable power sources which are physically isolated from each other.

This BWR receives power from two separate offsite sources. If both offsite sources are lost, auxiliary power is supplied to both units from four onsite diesel generators shared between the two units. Loads important to plant safety are split and diversified. Station batteries provide control power for specific engineered safeguards and for other required functions when AC power is not available. A simplified schematic of the EPS is provided by Figure 2.10.

Each diesel generator unit consists of a diesel engine, a generator, and the associated auxiliaries mounted on a common base. The continuous rating of the diesel generators is 2600 kW. The engine is rated for a ten percent overload for any two of every 24 hours.

There are two independent 125/250 V DC systems per unit. Each system is comprised of two 125-V batteries, each with its own charger. Each 125-V battery is a lead-calcium type with 58 cells. The chargers are full wave, silicon-controlled rectifiers. The two batteries for each unit are redundant. Loads are diversified between these systems so that each system serves loads which are identical and redundant. Power for larger loads, such as DC motor-driven pumps and valves, is supplied at 250 V from two 125-V sources. Selected batteries from Unit 2 and from Unit 3 are needed to start Diesel Generators 1, 2, 3 and 4, respectively.

Each standby diesel generator automatically starts. The diesel generator may be stopped by the operator after determining that continued operation of the diesel is not required.

Most of the EPS is located in the diesel building and in compartmentalized rooms within the reactor building. Any physical impact of accident conditions on the ability of the EPS to perform its function would be minimal. It is assumed that room cooling is not required for the AC switchgear or DC battery rooms since the heat loads are small and no sizeable heat loads are near these rooms. Diesel generators are assumed to fail in less than 30 minutes without room cooling although it is recognized that diesel performance would degrade before actual failure of the diesel and provide a warning to the operators that a problem existed. Possible recovery actions (by opening doors) could therefore take place. Complete failure of the EPS would cause a station blackout. After a total loss of AC power, DC-driven components could operate until the station batteries are depleted (estimated at about six hours based on plant personnel input).

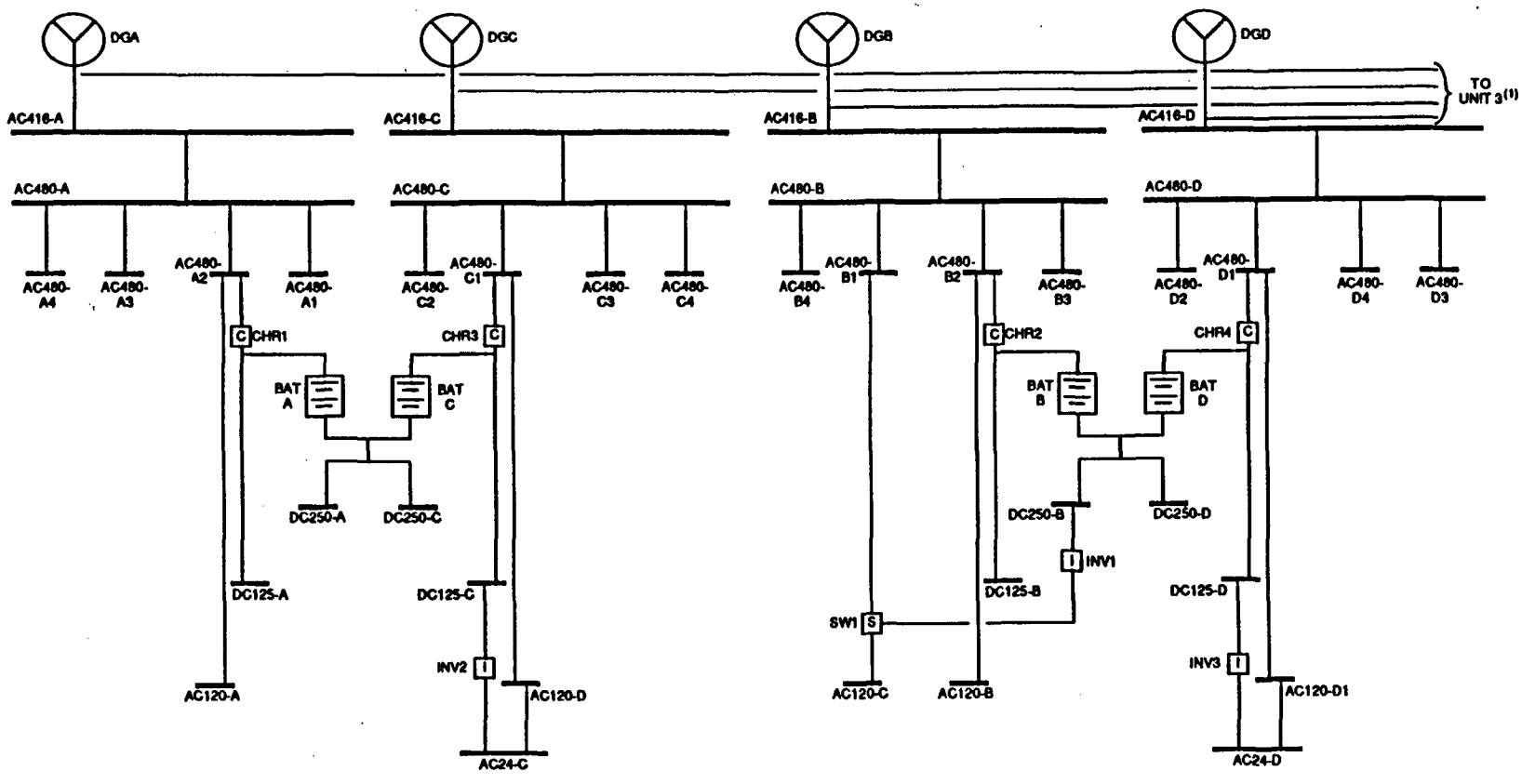

(1) GOES TO UNIT 3 BUSES (DG A, B, C, AND D ARE ARE SHARED BETWEEN UNITS 2 AND 3).

Figure 2.10. Electric Power System Schematic

Each standby diesel generator automatically starts on total loss of offsite power, low reactor water level, or high drywell pressure coincident with low reactor pressure. Two sources of offsite power are available to each 4-kV emergency bus. The failure of one offsite power source results in the automatic transfer to the other offsite source. When the diesel generators are demanded, essential loads are automatically sequenced onto the emergency bus. Nonessential 480 V loads are prevented from being automatically sequenced. Each diesel generator can be started locally, but can be electrically connected to its bus only from the main control room.

2.2.12 Emergency Service Water (ESW) System

The function of the ESW system is to provide a reliable supply of cooling water to selected equipment during a loss of offsite power event.

The ESW system is common to both units. The system has two full capacity pumps installed in parallel. The normal water supply to the suction of the ESW pumps is from a cooling pond. The pump discharge consists of two headers with service loops to the diesel-engine coolers and selected equipment coolers. The modeled components supplied with cooling water are the LPCS pumps and pump room coolers, the RHR pumps and pump room coolers, the HPCI pump room cooler, and the RCIC pump room cooler. Valves in the supply headers provide loop isolation. A common discharge header directs effluent to the cooling pond. A simplified schematic of the ESW system is provided by Figure 2.11. Major components are shown as well as the pipe segment definitions (e.g., PS-8) used in the system fault tree.

The ESW pumps are vertical, single-stage, turbine types with an 8000 gpm capacity. Their normal discharge head is 96 ft and their shutoff head is 132 ft. The cooling for all modeled equipment, with the exception of the diesel generator coolers, is normally provided by the Normal Service Water (NSW) system which operates on offsite AC power only.

Should the preferred flow paths described above be unavailable or the bay level preclude normal flow path operation, the ESW system may also be operated in conjunction with the Emergency Heat Sink (EHS) in a closed or open loop fashion. In the closed loop mode, two ESW booster pumps take return water from various coolers, boost it in pressure, and deliver the water to the emergency cooling tower structure. The booster pumps are horizontal split types, with 8000 gpm flow at a head of 100 psig. One Emergency Cooling Water (ECW) pump then takes suction from the cooling tower structure. It delivers water through a motor-operated

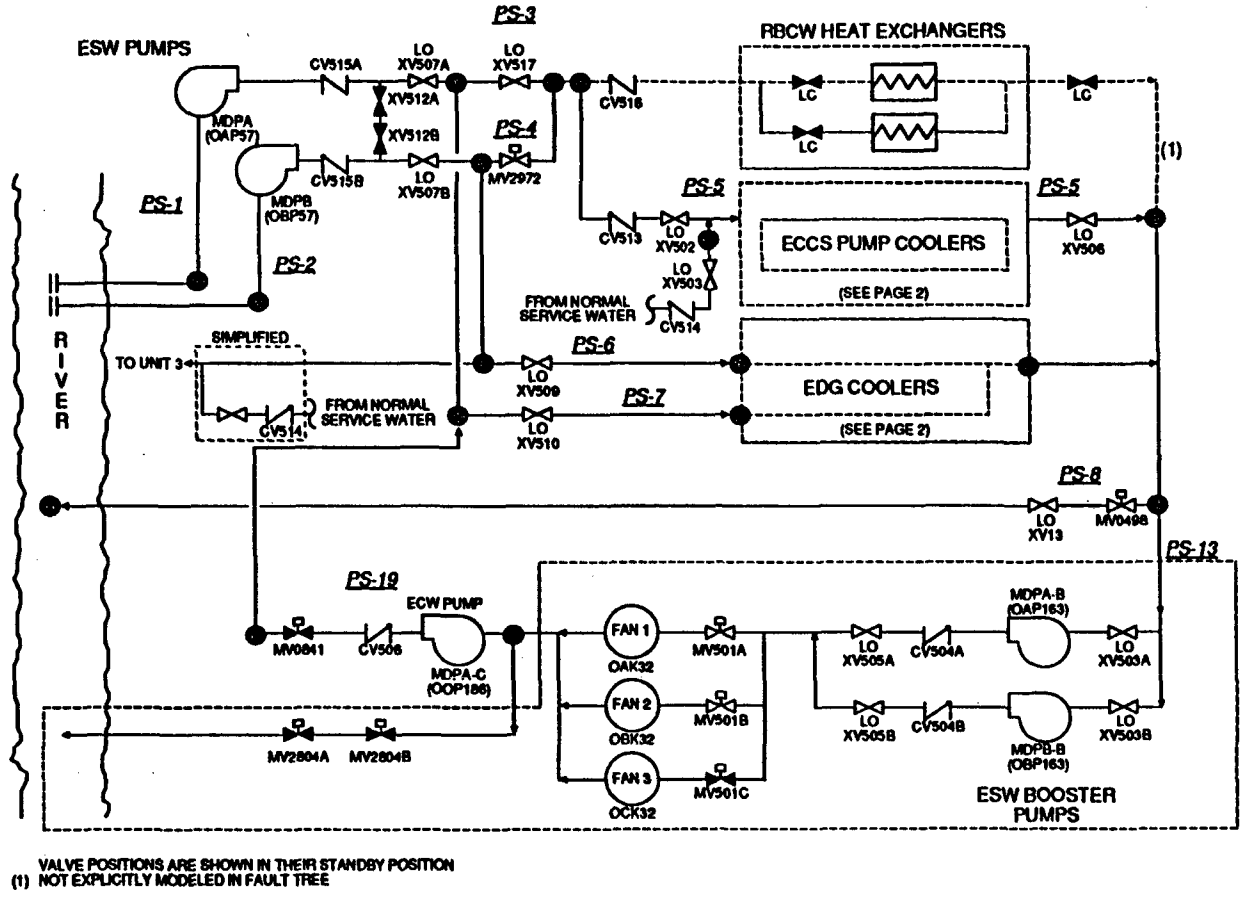

VALVE POSITIONS ARE SHOWN IN THEIR STANDBY POSITION
(1) NOT EXPLICITLY MODELED IN FAULT TREE

Figure 2.11. Emergency Service Water System Schematic

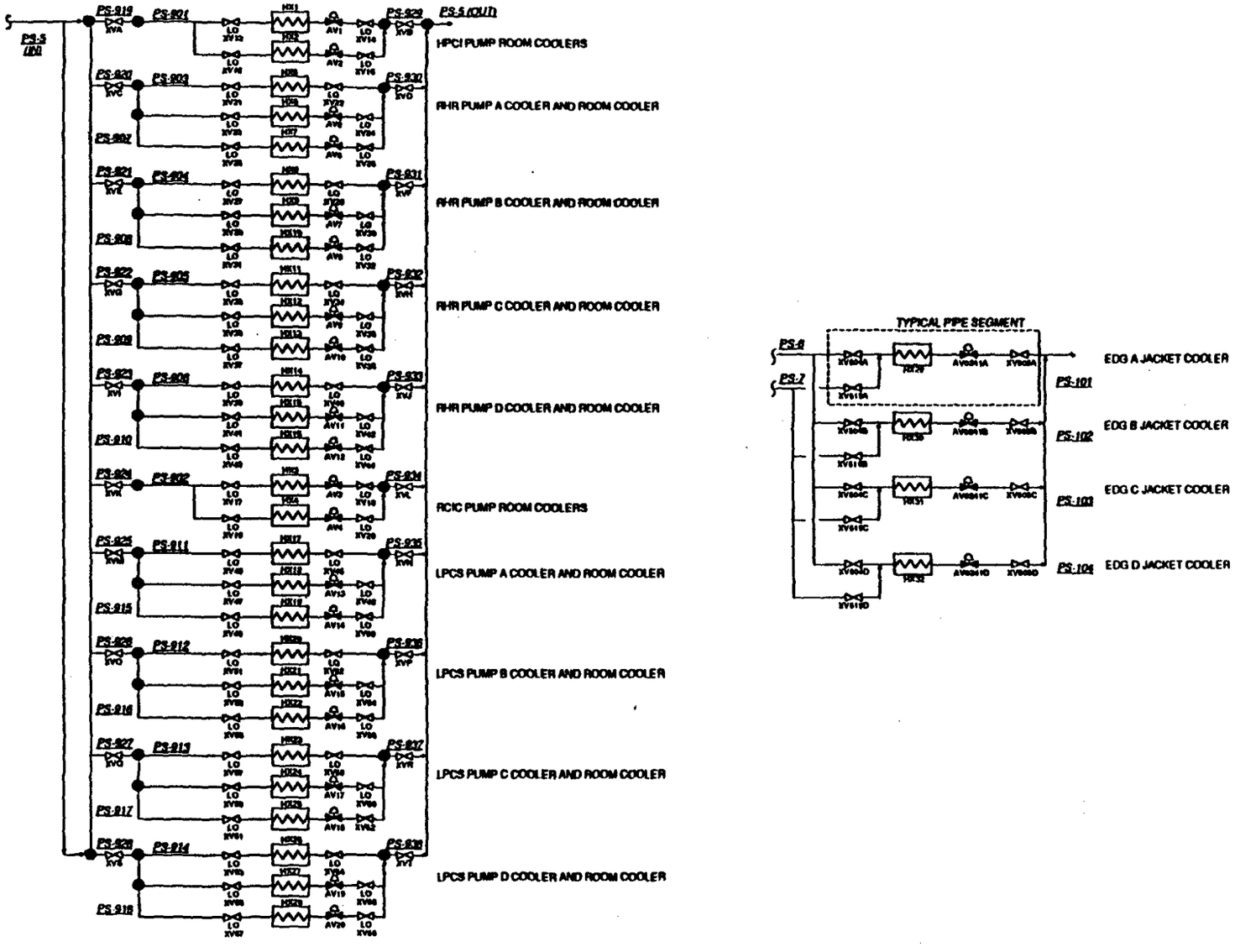

Figure 2.11. Emergency Service Water System Schematic (Concluded)

gate valve to the ESW heat loads. The ECW pump and motor are identical to those of the ESW pumps. The only difference between the ECW pump and the ESW pumps is pump column length. While the booster pumps would normally be used in this mode, they are not required since it has been demonstrated by tests that booster pump failure will not fail the cooling function of the ESW. In the open loop mode, the ECW pump delivers water from the cooling tower structure, thru the ESW loads, and back to the bay. There is sufficient water supply in the cooling tower structure to last four days; hence the open loop mode is considered a success path.

Upon system automatic initiation, the operator checks discharge pressure for the two primary ESW pumps. If discharge pressure appears normal, the operator turns off one ESW pump and the ECW pump (the ECW pump also has an automatic trip in ~45 seconds if the discharge pressure is adequate). At some later time, if the operating ESW pump trips and the standby ESW pump fails to start, the operator must manually start the ECW pump. In the EHS closed loop mode, cooling tower fans must be manually started. The success criterion for the ESW system is either of the ESW pumps or the ECW pump supplying cooling water to system heat loads.

Most of the ESW system is located in pump rooms external to the reactor and turbine buildings. Any physical impact of accident conditions on the ability of the ESW system to perform its function would be minimal. Room cooling failure is assumed not to fail the ESW pumps, ESW booster pumps, and ECW pump.

Failure of the ESW system would quickly fail operating diesel generators and potentially fail the LPCS pumps and RHR pumps. The HPCI pump and RCIC pump would fail by a loss of their room cooling ten hours after a loss of the ESW system if other recovery actions were not taken.

Both ESW pumps and the ECW pump start on a diesel start signal or a LOCA signal (low water level/high drywell pressure). If all three pumps start successfully, the operator will shut off one ESW pump and the ECW pump. If the running ESW pump fails, the other ESW pump will receive an auto start signal on low discharge pressure.

2.2.13 High Pressure Service Water (HPSW) System

The HPSW system is designed to supply cooling water from the ultimate heat sink to the RHR system heat exchangers under post-accident conditions and can provide an additional source of water to the reactor vessel through a cross-tie to the RHR injection lines (Event tree nomenclature--V4).

The HPSW system consists of four 4500 gpm pumps installed in parallel. The pumps are a vertical multi-stage turbine type with a discharge head of 700 ft. Each pump is sized to the design heat removal capacity of one RHR heat exchanger. Normal water supply to the suction of the pumps is from the cooling pond. In the EHS mode of system operation, suction and discharge comes from the emergency cooling towers. The pump discharge is split into two headers with two pumps in each header. The headers are split by a normally closed, motor-operated gate valve. Each header delivers water to two RHR heat exchangers in parallel. The pump discharge head is sufficient to maintain the HPSW system at a higher pressure than the RHR system, thus precluding leakage of radioactivity and permitting operation in conjunction with the emergency cooling towers. As an injection source to the reactor vessel, the HPSW discharge to RHR injection lines is from the pump B/D header. This connects to the RHR header. A simplified schematic of the HPSW system is provided by Figure 2.12. Major components are shown as well as the pipe segment definitions (e.g., PS-10) used in the system fault tree.

The operator is required to initiate the HPSW system. To initiate the system in the RHR cooling mode, the operator must start the appropriate HPSW pump and open the appropriate motor operated discharge valve depending on which RHR heat exchanger(s) is being used. These discharge valves are arranged with one valve downstream of each of the four RHR heat exchangers. To inject water into the reactor vessel via the RHR system, the operator starts B and/or D HPSW pumps and opens M-176 and M-174.

The success criteria for the HPSW system in the RHR cooling mode is one of four pumps supplying flow to the appropriate one of four heat exchangers. This is based upon the RHR system success criteria. As a last effort injection source, either B or D pump must supply flow through the cross-tie and corresponding RHR injection line under depressurized conditions in the reactor vessel. Pump A or C can be used with operation of a cross-tie valve.

Most of the HPSW system is located in pump rooms external to the reactor and turbine buildings. Any physical impact of accident conditions on the ability of the HPSW system to perform its functions would be minimal except for the injection valves (MV-174, 176) which are in the reactor building and could be affected by harsh environments there. Room cooling failure is assumed not to fail the HPSW pumps.

Failure of the HPSW system in the RHR cooling mode would fail the RHR cooling function. Failure of the HPSW system in the injection mode would fail one source of water for reactor makeup and containment spray. The HPSW system is initiated manually, either locally or from the main control room.

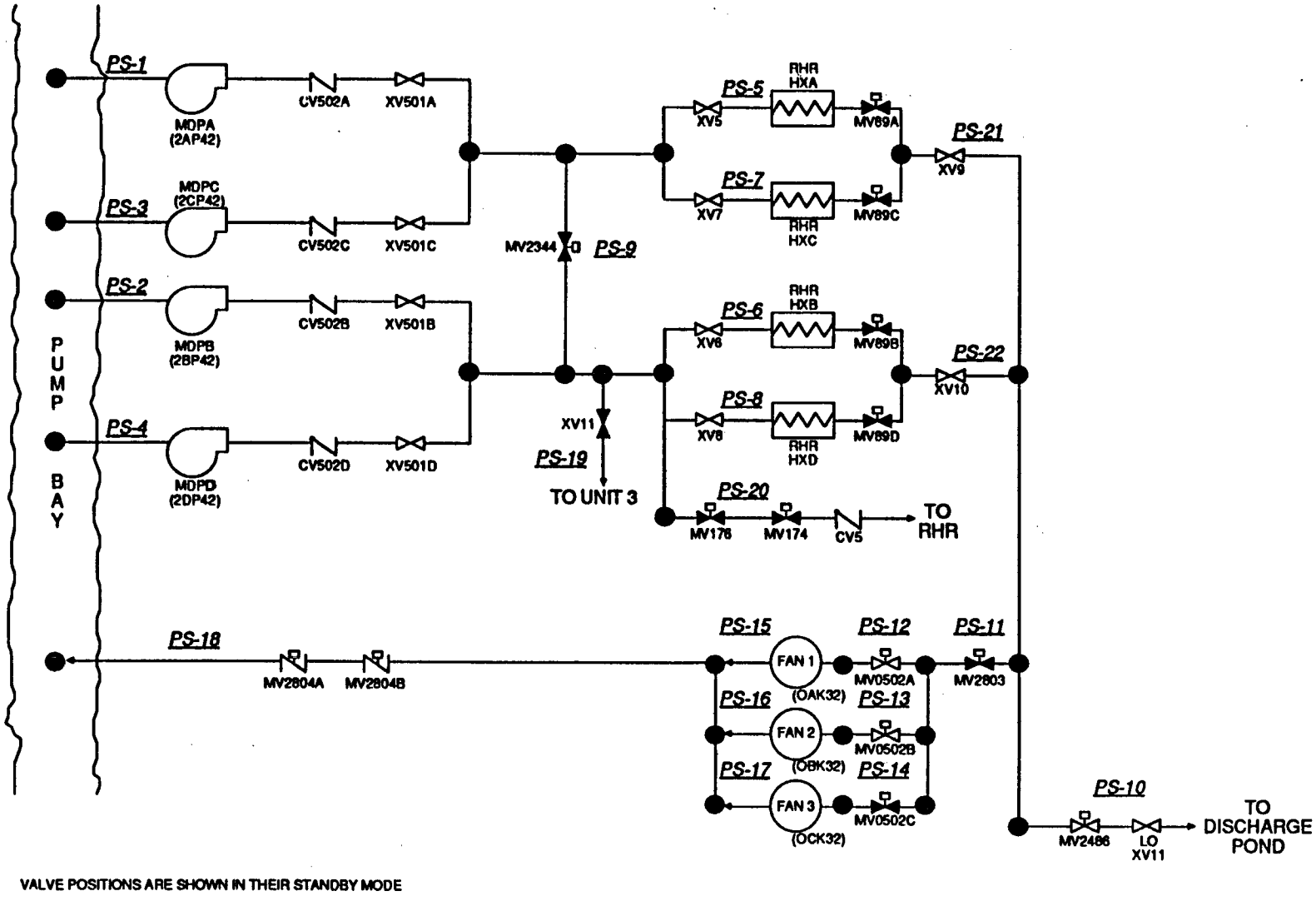

VALVE POSITIONS ARE SHOWN IN THEIR STANDBY MODE

Figure 2.12. High Pressure Service Water System Schematic

2.2.14 Emergency Ventilation System (EVS)

The objective of the EVS is to maintain suitable temperatures in equipment rooms to preclude component failures. The EVS cools the following: (1) standby diesel generator rooms, (2) pump structure service water pump rooms, and (3) pump rooms for the RHR, RCIC, HPCI and LPCS pumps. The pump rooms use small individual fan coolers in each room. A simplified schematic of the rest of the EVS is provided by Figure 2.13. Major components are shown as well as the pipe (duct) segment definitions (e.g., PS-4) used in the system fault tree.

The service water pumps, emergency switchgear, and battery rooms are assumed not to require room cooling. Pump room cooling loss for the RHR, RCIC, HPCI, and LPCS pumps is incorporated into the ESW and individual system models. Therefore, the EVS system model does not include ESW, RHR, RCIC, HPCI, and LPCS pump room cooling.

Each standby diesel generator room is provided with ventilation air supply fans and an exhaust relief damper. Diesel generator room cooling requires operation of one of two supply fans. Any physical impact of accident conditions on the ability of the EVS to perform its function would be minimal. It is assumed that failure of the EVS would fail operating diesel generators in less than 30 minutes (Ref. 2.1).

Diesel Generator Room Fans 7, 9, 11, and 13 outside air supply dampers open on 60°F fan discharge temperature and fail open on a loss of instrument air. Diesel Generator Room Fans 7, 9, 11, and 13 room air supply dampers close on 65°F fan discharge temperature and fail closed on a loss of instrument air. Dampers AV27, AV30, AV33, and AV36 open on Fans 7, 9, 11, and 13, starting signals respectively and fail open on a loss of instrument air. Fans 7, 9, 11, 13 automatically start on a diesel generator actuation signal. Fans 8, 10, 12, and 14 automatically start on an automatic start signal of Fans 7, 9, 11, and 13 respectively. Diesel generator room supply fans trip on a carbon dioxide discharge signal except when a LOCA signal is already present.

2.2.15 Instrument Air System (IAS)

The IAS provides a pneumatic supply to support short-term and long-term operations of safety equipment.

The IAS and Service Air System (SAS) consist of three parallel air compressors supplying a common discharge header via individual air receiver tanks, piping, valves, and instrumentation. A fourth air compressor is tied into the SAS header and is common to both units. Two compressors, one IAS and one SAS, normally supply all compressed air requirements. The other IAS compressor serves in a standby capacity. A simplified schematic of the IAS is provided by Figure 2.14. Shown is

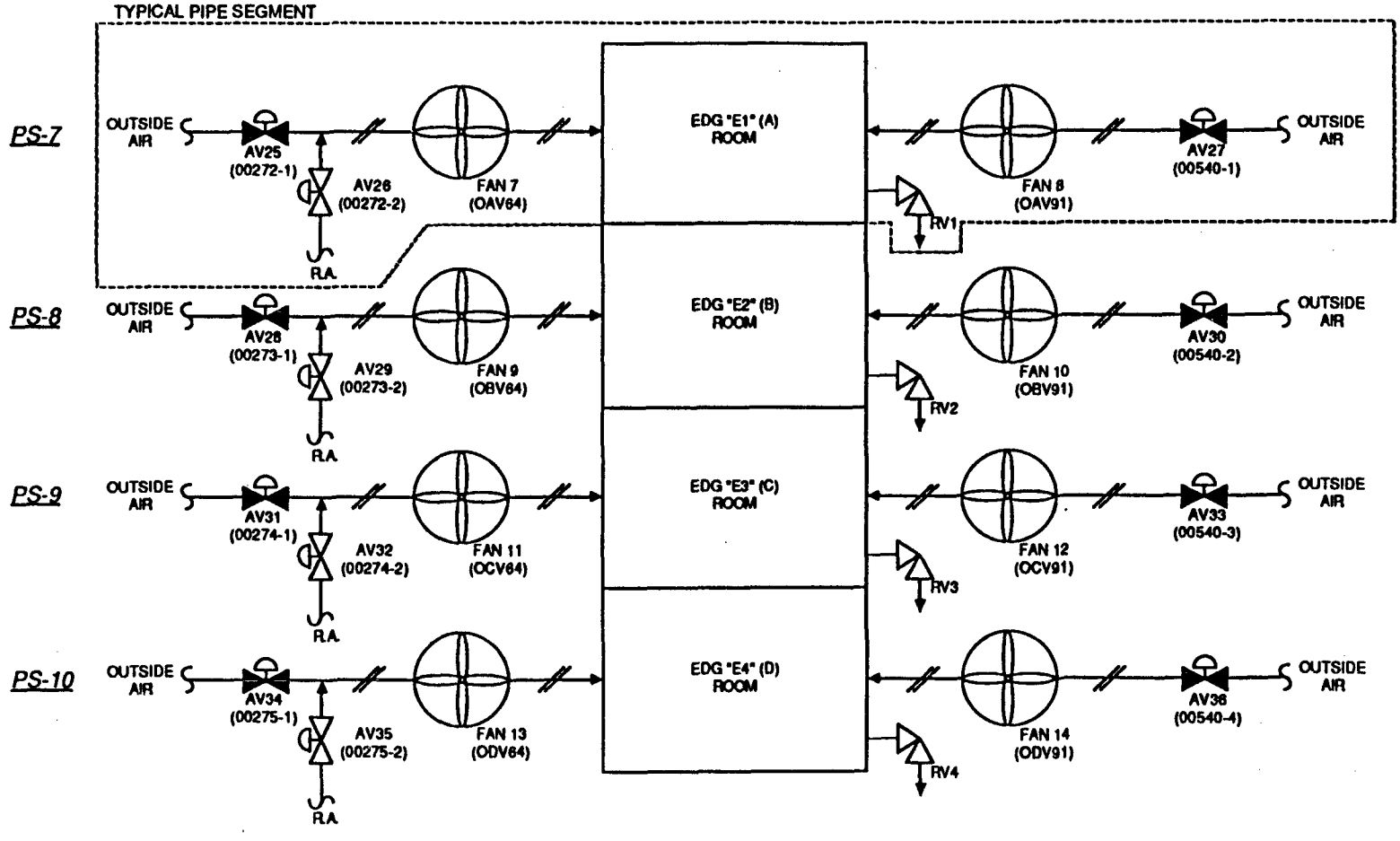

Figure 2.13. Emergency Ventilation System Schematic

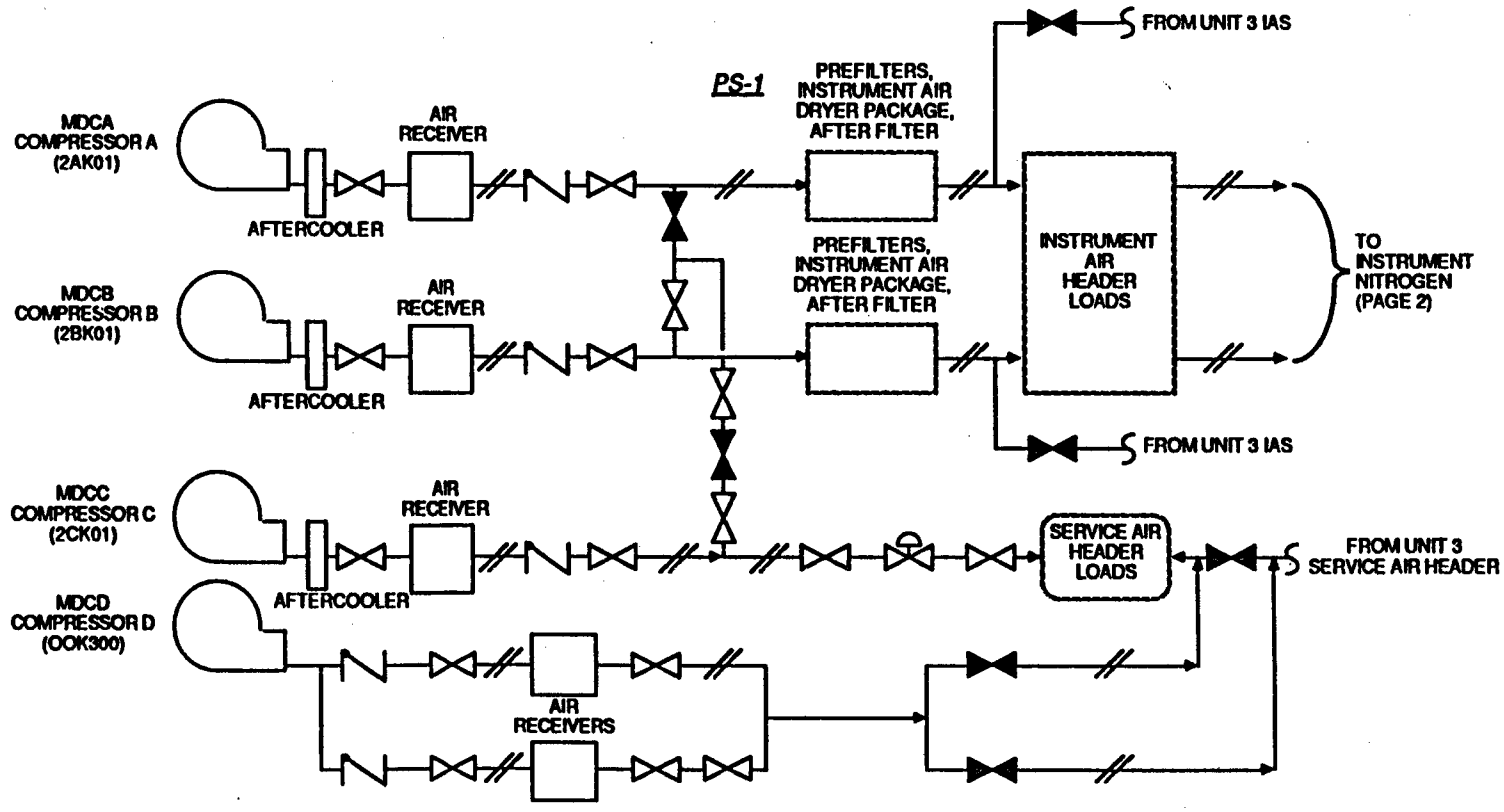

VALVE (DAMPER) POSITIONS ARE SHOWN IN THEIR STANDBY MODE

Figure 2.14. Instrument Air/Nitrogen System Schematic

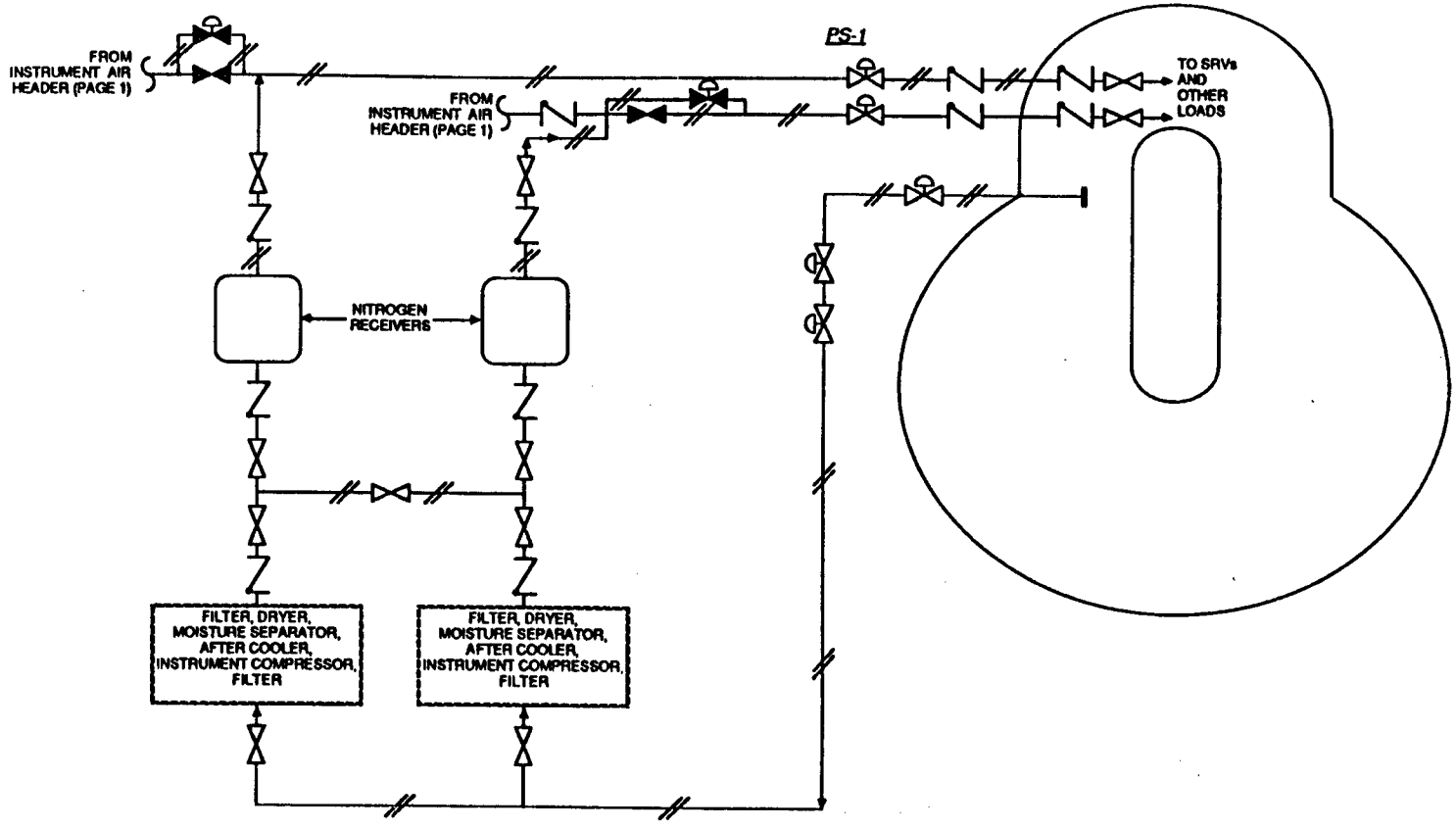

VALVE (DAMPER) POSITIONS ARE SHOWN IN THEIR STANDBY MODE

Figure 2.14. Instrument Air/Nitrogen System Schematic (Concluded)

the tie-in with the Instrument Nitrogen System which is the preferred supply to the MSIVs and ADS/SRVs. In addition to these compressors, the IAS is constantly backed up by two diesel compressors (not shown), and can be served by the Unit 3 IAS/SAS.

Each of the three parallel compressors is a vertical, single-stage, double-acting, non-lubricated, reciprocating compressor rated at 377 SCFM at 100 psig. Each has an aftercooler, moisture separator, and air receiver tank.

The standby SAS compressor consists of a non-lubricated compressor, aftercooler, moisture separator, and two receivers. This compressor is rated at 400 scfm at 100 psig.

The IAS supplies clean, dry, oil-free air to EHV and ESW system air valves, the CRD control system, and containment venting air valves and is a backup to the Instrument Nitrogen System. When offsite power is lost, the air compressors trip. The operator is required to manually restart the air compressors when power is restored. The success criterion for the IAS is any one of the compressors supplying air to system pneumatic loads.

Any physical impact of accident conditions on the ability of the IAS to perform its functions would be minimal. Room cooling failure is assumed not to fail the IAS and SAS compressors (Ref. 2.1). Even if this were to occur, the diesel compressors or Unit 3 compressors could serve the necessary loads.

Failure of the IAS does not directly fail any safety systems because (1) accumulators are on the MSIVs and ADS valves, (2) instrument nitrogen is the preferred source to the MSIVs and ADS valves, and (3) other safety systems "fail-safe" on loss of air or have dedicated air bottles.

2.2.16 Condensate System (CDS)

The function of the CDS system is to take condensate from the main condenser and deliver it to the reactor at an elevated temperature and pressure (Event tree nomenclature--V1).

The CDS system consists of the condenser hotwell, three condensate pumps, feedwater heaters and associated piping, valves, and controls. The condenser hotwell has a working capacity of approximately 100,000 gallons. The condensate pumps provide the required head to overcome the flow and static resistance of the condensate system, and provide excess over the suction pressure requirements of the feedwater pumps. The reactor vessel must be depressurized to approximately 600 psig in order to use condensate as an injection source without the use of the feedwater pumps. Injection to the reactor vessel is via a feedwater line. The CDS pumps have a 10,870 gpm rated flow head. A simplified schematic of the CDS system is provided by Figure 2.15.

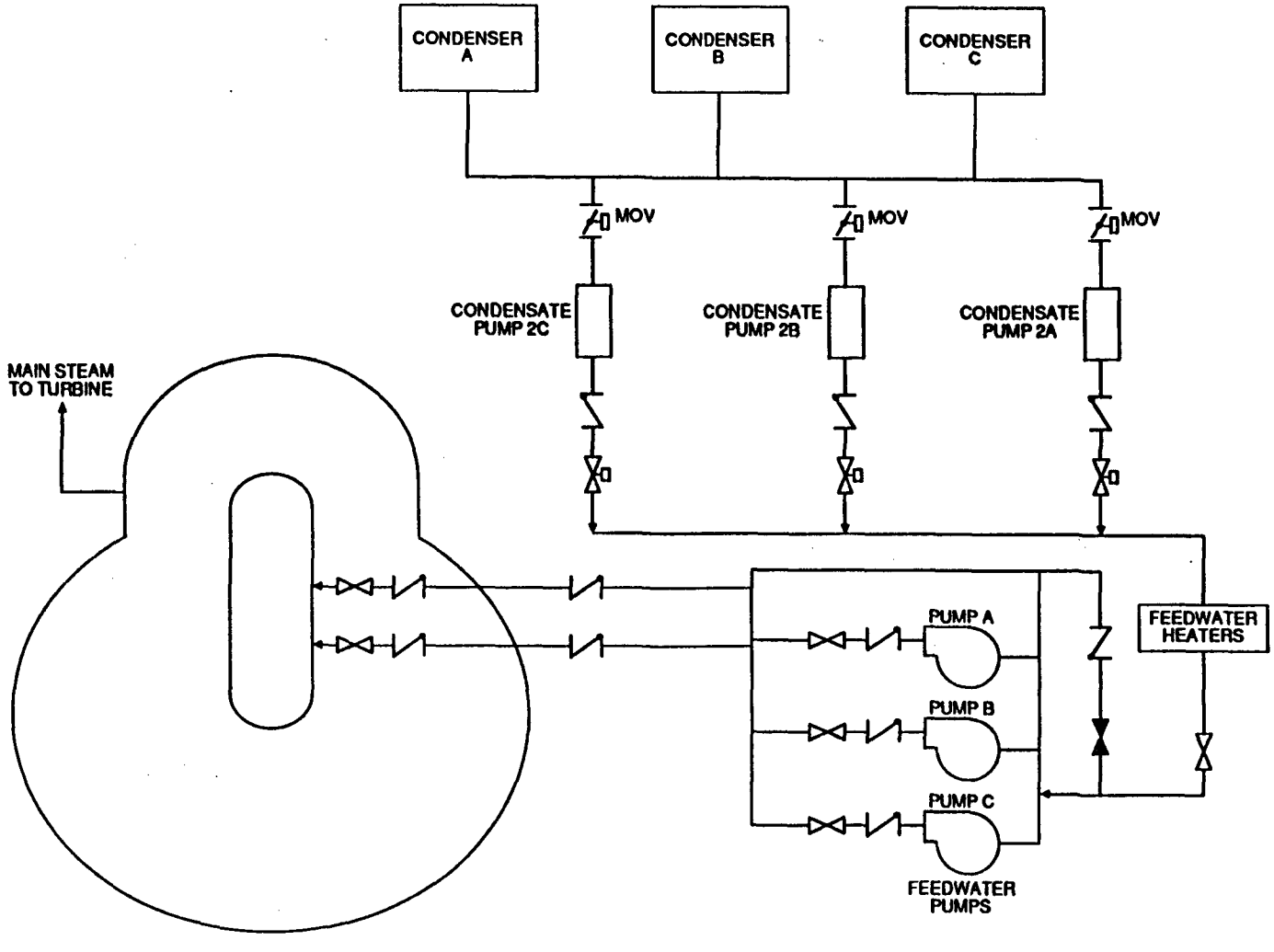

Figure 2.15. Condensate System Schematic

The CDS system is normally running. The success criteria for the CDS system is removal of decay heat (when the reactor has tripped). This can be accomplished with only one pump train operational. Virtually all of the CDS system is located in the turbine building.

2.2.17 Primary Containment Venting (PCV) System

When torus and containment sprays have failed to reduce primary containment pressure, the PCV is used to prevent a primary containment pressure limit from being exceeded (Event tree nomenclature--Y).

The preferred primary containment vent paths include: (a) 2-in torus vent to the Standby Gas Treatment System (SGTS), (b) 6-in Integrated Leak Rate Test (ILRT) line from the torus, (c) 18-in torus vent path, (d) 18-in torus supply path, (e) 2-in drywell vent to the SGTS, (f) two 3-in drywell sump drain lines, (g) 6-in ILRT line from the drywell, (h) 18-in drywell vent path, and (i) 18-in drywell supply path. A simplified schematic of the PCV is provided by Figure 2.16.

For decay heat loads alone, it is expected that the drywell pressure rise will be relatively slow. PCV success in this case is the 6-in vent path (or larger) being operational.

Current venting procedure requires a vent path to be established if containment pressure rises to 100 psig. In the case of an ATWS, or if it can be inferred that the suppression pool is being bypassed, the operator is required to directly establish the 18-in vent paths.

2.2.18 Reactor Building Cooling Water (RBCW) System

The function of the RBCW system is to provide a means of cooling auxiliary plant equipment which is located primarily in the reactor building (e.g. recirculation pumps, sump coolers, radwaste, etc.). The RBCW system is a backup for cooling CRD pumps and IAS compressors and aftercoolers should the TBCW be lost.

The RBCW system is a closed loop system consisting of two full-capacity pumps, two full-capacity heat exchangers, one head tank, one chemical feed tank and associated piping, valves, and controls. The RBCW system is designed for an operating pressure of 140 psig. A simplified schematic of the RBCW system is provided by Figure 2.17.

The operator uses RBCW to cool certain critical loads if the TBCW system is lost. The RBCW system usually has one pump continuously operating. Control and instrumentation is designed for remote system startup from the main control room.

The success criteria for the RBCW system is one pump and one heat exchanger train operating, providing sufficient cooling to the loads.

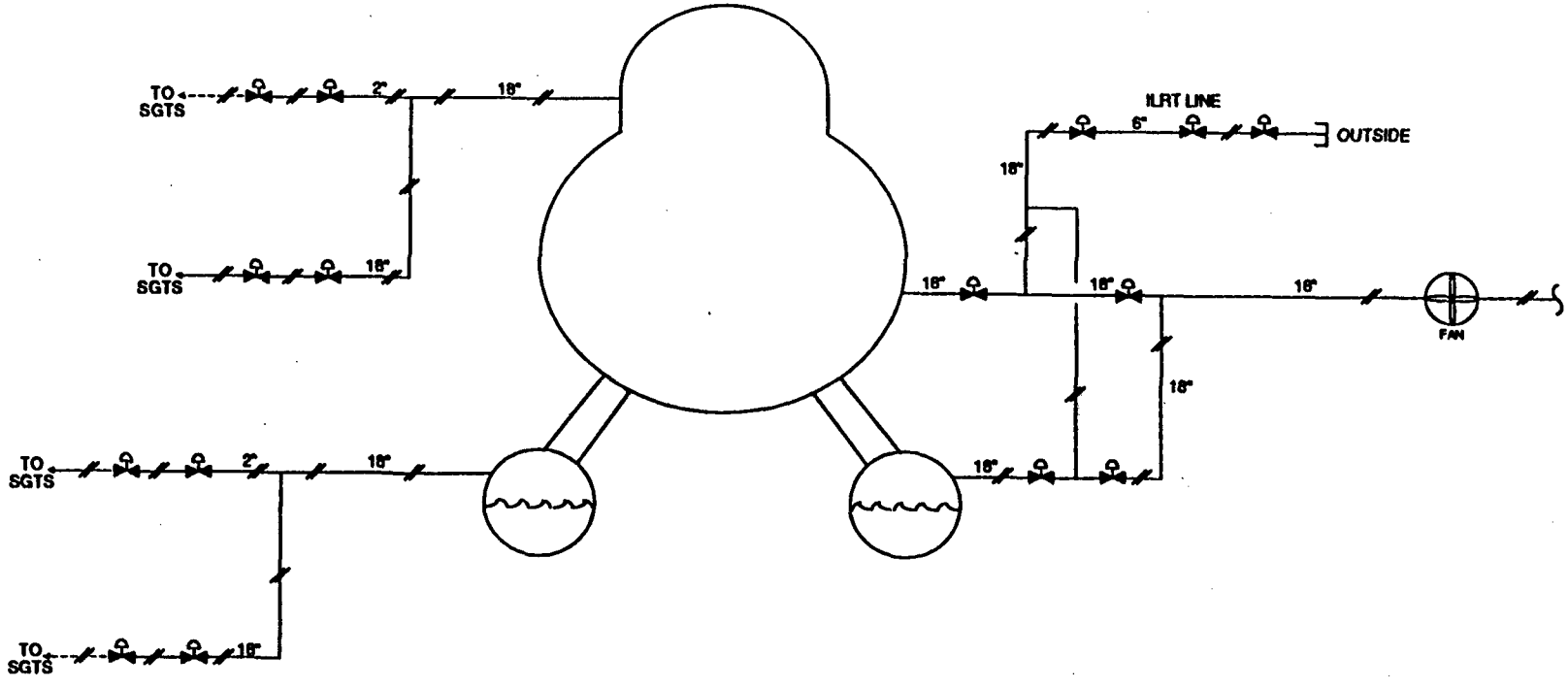

VALVE POSITIONS ARE SHOWN IN THEIR STANDBY MODE

Figure 2.16. Primary Containment Venting System Schematic

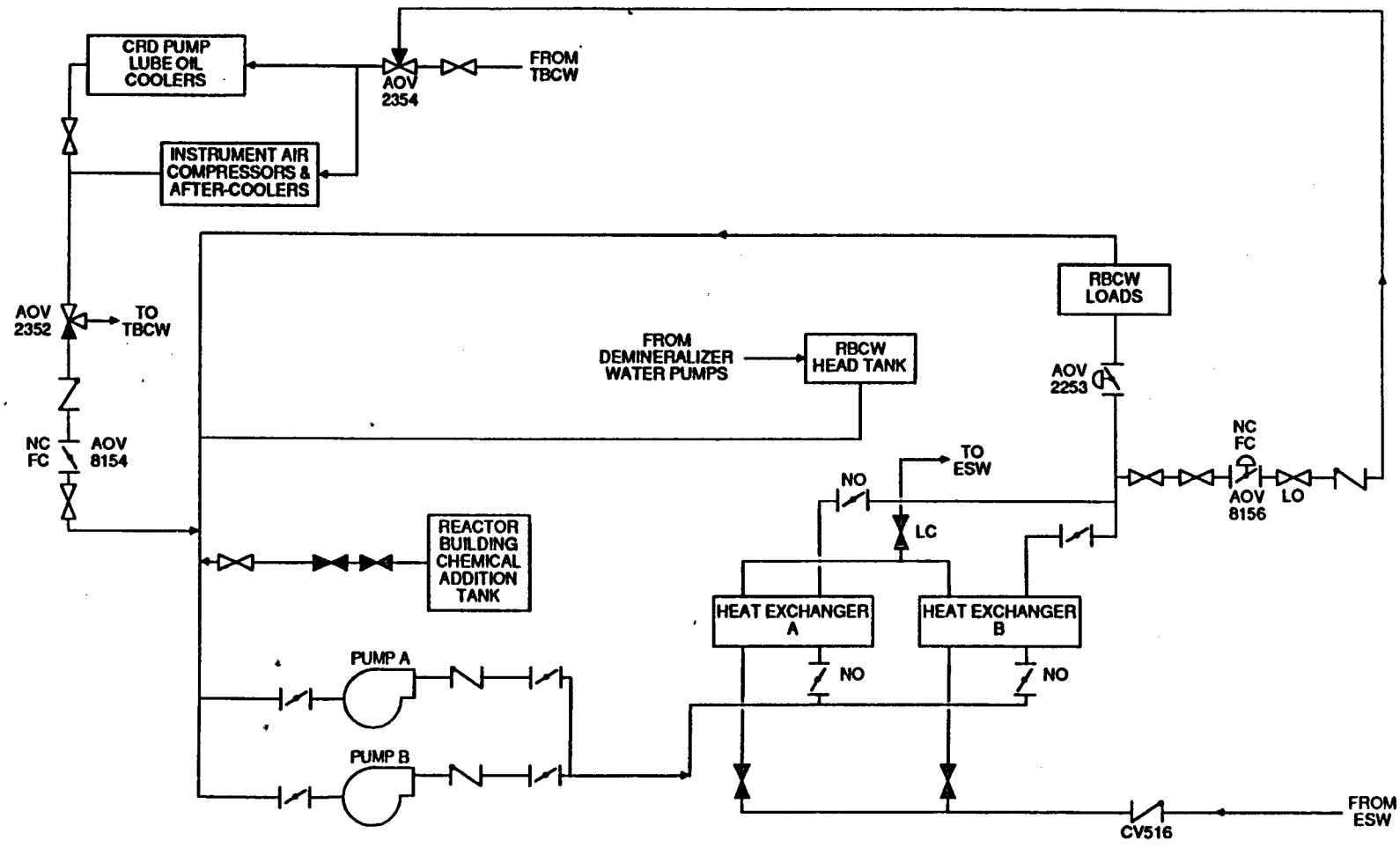

Figure 2.17. Reactor Building Cooling Water System Schematic

The cooling water pumps and heat exchangers are located in the reactor building auxiliary bay. The head tank is located on the reactor building refueling floor. The specific RBCW loads are distributed throughout different areas of the plant.

2.2.19 Turbine Building Cooling Water (TBCW) System

The function of the TBCW system is to provide cooling water to auxiliary plant equipment associated with the power conversion system.

The TBCW system is a closed loop system consisting of two full-capacity pumps, two full-capacity heat exchangers, one head tank, one chemical fuel tank and associated piping, valves and controls. A simplified schematic of the TBCW system is provided by Figure 2.18.

The TBCW system is normally running. One pump is required to supply cooling to all TBCW loads. The success criteria for TBCW is one of two pumps and either of the two heat exchangers operating. This will provide sufficient cooling to the TBCW loads.

The majority of the TBCW system, including the cooling water pumps, heat exchangers and associated piping, valves and controls is located on the turbine building ground floor. The specific TBCW loads are distributed throughout different areas of the plant.

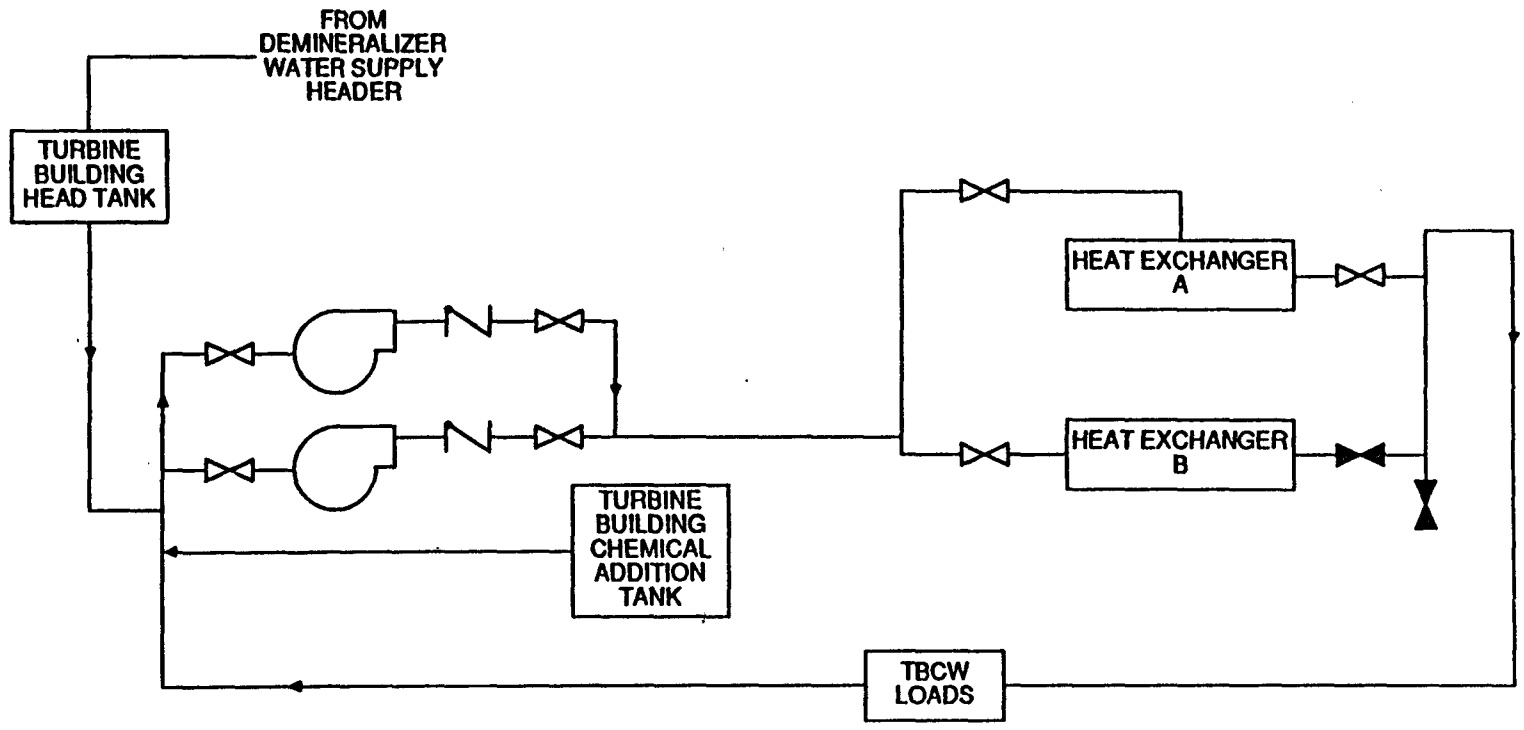

Figure 2.18. Turbine Building Cooling Water System Schematic

2.3 References

2.1 J. A. Lambright and M. P. Bohn, NUREG/CR-4550, SAND86-2084, Rev. 1/Vol. 4, Part 3, Sandia National Laboratories, December 1990.

3.0 ROOT CAUSE ANALYSES

3.1 Introduction

This chapter describes the quantification and resulting contributions to core damage frequency (CDF) for each of the root cause scenarios. For the BWR being studied, a detailed fire PRA and supporting analyses were available as part of the NRC-sponsored NUREG-1150 program (Ref. 3.1). In the NUREG-1150 studies, plant-specific data analysis was performed as part of internal events analysis (Ref. 3.2) and these results are utilized wherever applicable. In this study, detailed analysis of the propagation of smoke within each room was performed taking into account the actual location of critical equipment in the room, and a plant-specific evaluation of the number and type of fire barriers in each zone was made.

For this analysis, the configuration of equipment and fire protection systems (FPS) at the plant were reviewed. The potential root causes of FPS actuations that could lead to core damage were identified. Based on the knowledge of the FPS configuration, a quantification of potential core damage sequences was performed.

3.2 Procedure

The initial phase of the analysis consisted of reviewing the plant configuration. This was accomplished primarily by reviewing the plant 10CFR50 Appendix R submittal (Ref. 3.3). From this submittal, information was obtained on the overall plant layout, the individual plant Fire Zones, the particular types of FPS and fire detectors installed, and the critical equipment required for safe shutdown. This information was used to determine those critical areas of interest for further study. Using this information, a vital area analysis was performed. A listing of all Fire Zones which resulted from the vital area analysis and which also have an automatically actuated fixed fire protection system is given in Table 3.1.

These zones are listed in Table 3.2 along with the type of FPS, type of detectors, FPS actuation scheme, and critical equipment in the Fire Zone. Figure 3.1 gives a general plant layout drawing. Figures 3.2 through 3.5 are simplified illustrations of these critical Fire Zones.

In several instances, the Appendix R information was supplemented by phone calls to plant personnel as well as a detailed plant walkdown. Details on the locations of the equipment were obtained from Reference 3.2.

The Appendix R submittal was also used, along with a plant walkdown, to determine the penetrations into each of the critical Fire Zones. Table 3.3 lists these Fire Zones and the doors and cable penetration that connect them to other Fire Zones.

Table 3.1

Fire Zones and Designators

Fire Zone Number	Fire Zone Name
Fire Zone 2	HPCI Room
Fire Zone 25	Cable Spreading Room
Fire Zone 43	Diesel Generator Building Bay D
Fire Zone 44	Diesel Generator Building Bay C
Fire Zone 45	Diesel Generator Building Bay B
Fire Zone 46	Diesel Generator Building Bay A
Fire Zone 50	Turbine Building

An additional document utilized was the Internal Events PRA for the BWR studied (Ref. 3.2). The internal events report provided additional information on the plant safe shutdown equipment and system models. This report also described safety-significant recovery actions from random failures. These recovery actions were then analyzed for the possibility that FPS actuations could prevent them from being performed (Root Cause 2). Generic fire data (Ref. 3.4) developed to support the NUREG-1150 fire analyses provided frequencies of fires in the different areas, probabilities of Fire Zone barrier failures (smoke and heat spread), and the fire PRA provided estimated times to damage critical equipment from fires in the different zones.

A detailed analysis of the plant ventilation systems was performed. This analysis included a thorough review of system descriptions as well as ventilation drawings. Once this review was completed, a plant walkdown was performed to verify the review and also clear up some questions that resulted from the review process.

It is important to note that it is often necessary to ratio the overall building fire occurrence frequency down to reflect the fact that fires in only a small subset of the building can spread smoke to adjacent areas. This is called "partitioning" and is based upon analyst judgement and insights from sensitivity calculations using a fire growth computer code (CCFM.VENTS) (Ref. 3.5). This partitioning typically reduced most Root Cause 1 scenarios by at least an order of magnitude.

Table 3.2

Fire Protection Systems
and Safe Shutdown Equipment by Fire Zone

Fire Zone	Suppression System	Safe Shutdown Equipment
Fire Zone 2 (HPCI Pump Room Elevation 88'-0")	A signal from any heat detector in the HPCI room will actuate the total flooding CO_2 system in that room to extinguish the fire. The system can also be manually actuated by the fire brigade at the CO_2 storage tanks at the 116' elevation in the turbine building.	HPCI Pump Room Cooling Fan HPCI Vacuum Pump HPCI Auxiliary Lube Oil Pump HPCI Condensate Pump HPCI Turbine HPCI Pump Room Cooler HX HPCI Turbine Control Valve HPCI Turbine Stop Valve
Fire Zone 25 (Cable Spreading Room, Elevation 150'-0")	Automatic CO_2 activated by a signal from two smoke detectors, one from each zone of a "cross zoned" pattern will actuate the total flooding CO_2 system to extinguish the fire. Fire dampers in HVAC openings above the doors into the cable spreading room will close when temperatures exceed 165°F.	Controls, instrumentation, and logic for all the plant's major safety related systems
Fire Zone 43 (Diesel Generator Building Bay D, Elevation 127'-0" & 151'-0")	A correct two-out-of-sixteen heat detection logic will automatically actuate a total flooding CO_2 system. The fire brigade can manually actuate the system at a push button station inside the diesel generator bay or at the master valve station in the southwest corner of the diesel building CO_2 storage tank room.	E4 DG Building Supply Fan Distribution Panel E4 Diesel Generator E4 Oil Transfer Pump Motor Control Center

Table 3.2

Fire Protection Systems
and Safe Shutdown Equipment by Fire Zone (Continued)

Fire Zone	Suppression System	Safe Shutdown Equipment
Fire Zone 44 (Diesel Generator Building Bay C, Elevation 127'-0" & 151' - 0")	A correct two-out-of-sixteen heat detection logic will automatically actuate a total flooding CO_2 system. The fire brigade can manually actuate the system at a push button station inside the diesel generator bay or at the master valve station in the southwest corner of the diesel building CO_2 storage tank room.	E3 DG Building Supply Fan Distribution Panel E3 Diesel Generator E3 Lube Oil Pump E3 Oil Transfer Pump Motor Control Center
Fire Zone 45 (Diesel Generator Building Bay B, Elevation 127'-0" & 151' - 0")	A correct two-out-of-sixteen heat detection logic will automatically actuate a total flooding CO_2 system. The fire brigade can manually actuate the system at a push button station inside the diesel generator bay or at the master valve station in the southwest corner of the diesel building CO_2 storage tank room.	E2 DG Building Supply Fan Distribution Panel E2 Diesel Generator E2 Lube Oil Pump E2 Oil Transfer Pump Motor Control Center
Fire Zone 46 (Diesel Generator Building Bay A, Elevation 127'-0" & 151' - 0")	A correct two-out-of-sixteen heat detection logic will automatically actuate a total flooding CO_2 system. The fire brigade can manually actuate the system at a push button station inside the diesel generator bay or at the master valve station in the southwest corner of the diesel building CO_2 storage tank room.	E4 DG Building Supply Fan Distribution Panel E4 Diesel Generator E4 Lube Oil Pump E4 Oil Transfer Pump Motor Control Center

Table 3.2

Fire Protection Systems
and Safe Shutdown Equipment by Fire Zone (Continued)

Fire Zone	Suppression System	Safe Shutdown Equipment
Fire Zone 50	Heat in the condenser area, or the feedwater heater platforms will cause fusible link sprinkler heads to melt at a temperature of 212°F.	ESW Pumps A and B Cabling CRD Pumps A and B Cabling LPCI Pumps A, B, C and D Cabling LPCS Pumps A, B, C and D Cabling Instrument Air Compressors Cabling
	Heat in any of the main turbine lube oil storage tank and reservoir room will cause fusible link sprinkler heads to melt at a temperature 165°F.	
	Heat near the hydrogen seal oil units will activate a heat detector. A signal from the heat detector will actuate a deluge valve causing water to flow out of open heads above the hydrogen seal oil units. The fire brigade can manually release the deluge valve on elevation 116 feet in the turbine building laydown area.	

Table 3.2

Fire Protection Systems
and Safe Shutdown Equipment by Fire Zone (Concluded)

Fire Zone	Suppression System	Safe Shutdown Equipment
Fire Zone 50	Heat in the generator equipment area on elevation 135 feet will melt fusible link sprinkler heads at a temperature of 165°F. Water in the wet pipe sprinkler system will flow out of the opened heads. Heat generated by a fire in the reactor feed pump turbine lube oil reservoir on elevations 135 feet and 150 feet will melt fusible link sprinkler heads at a temperature of 165°F. Heat in the drummed lube oil storage room will melt fusible link sprinkler heads at a temperature of 165°F. Heat west of the feedwater heater platforms in each unit will melt fusible link sprinkler heads at a temperature of 165°F.	

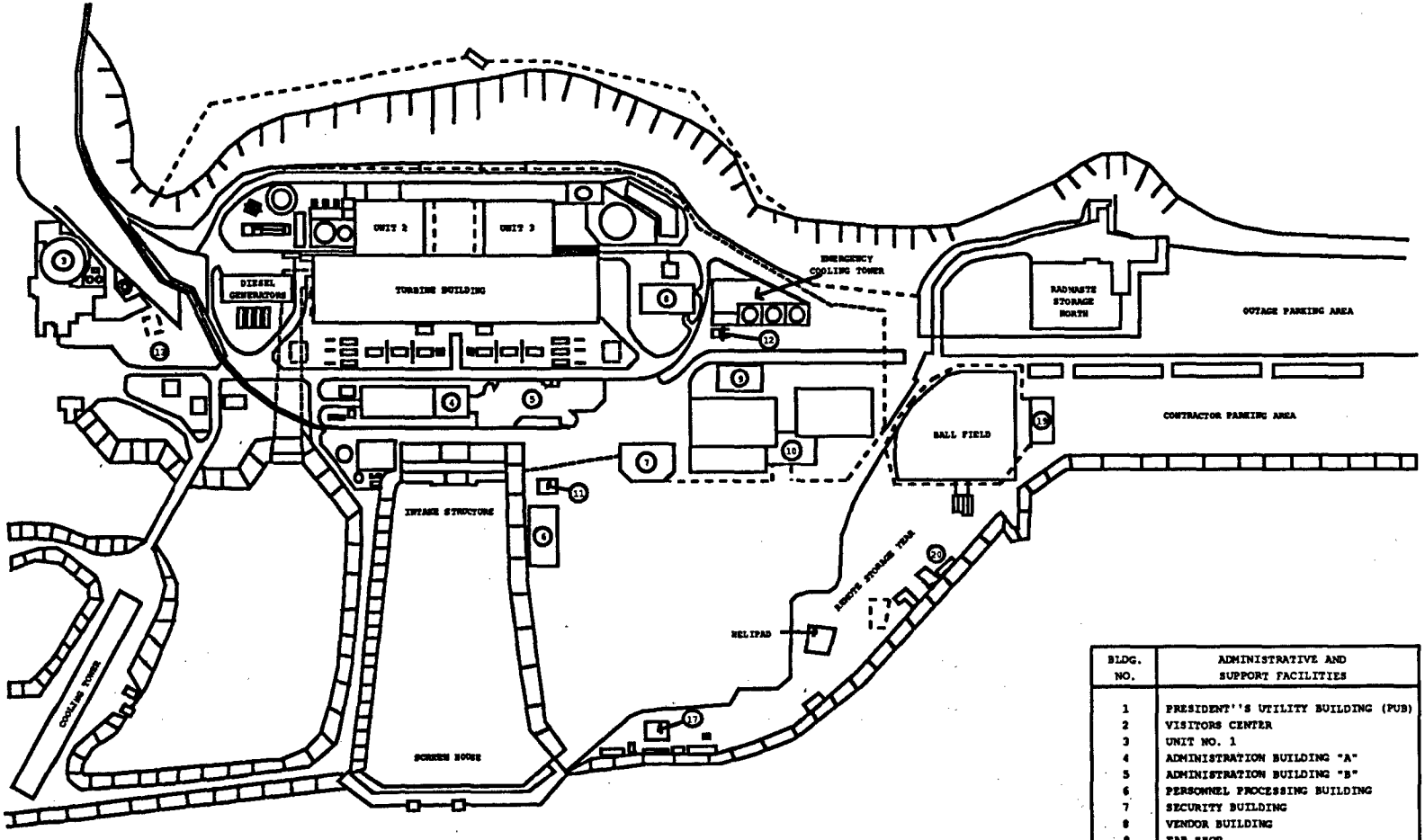

BLDG. NO.	ADMINISTRATIVE AND SUPPORT FACILITIES
1	PRESIDENT''S UTILITY BUILDING (PUB)
2	VISITORS CENTER
3	UNIT NO. 1
4	ADMINISTRATION BUILDING "A"
5	ADMINISTRATION BUILDING "B"
6	PERSONNEL PROCESSING BUILDING
7	SECURITY BUILDING
8	VENDOR BUILDING
9	FAB SHOP
10	BECHTEL BUILDING/WAREHOUSE
11	MEDICAL BUILDING
12	SECONDARY ALARM STATION (SAS)
13	SEWAGE TREATMENT BUILDING
17	SCREEN REPAIR BUILDING
19	PERSONNEL RECREATION BUILDING
20	MISCELLANEOUS OUT BUILDINGS

Figure 3.1 Plant Layout

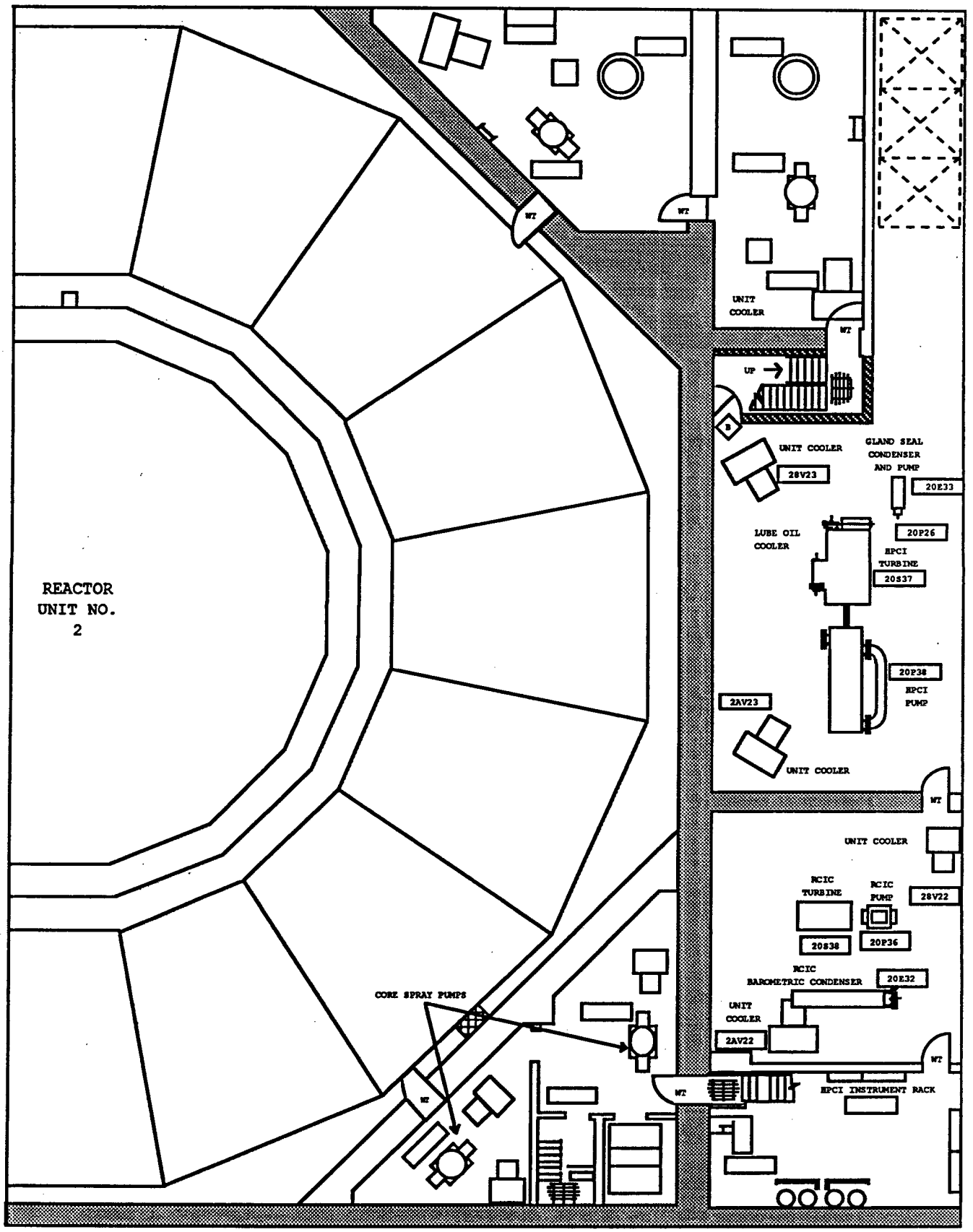

Figure 3.2 HPCI Area (Fire Zone 2)

Class "B" Fire Door (1 1/2 hr)
3 - Hour Wall Fire Barrier
2 - Hour Wall Fire Barrier

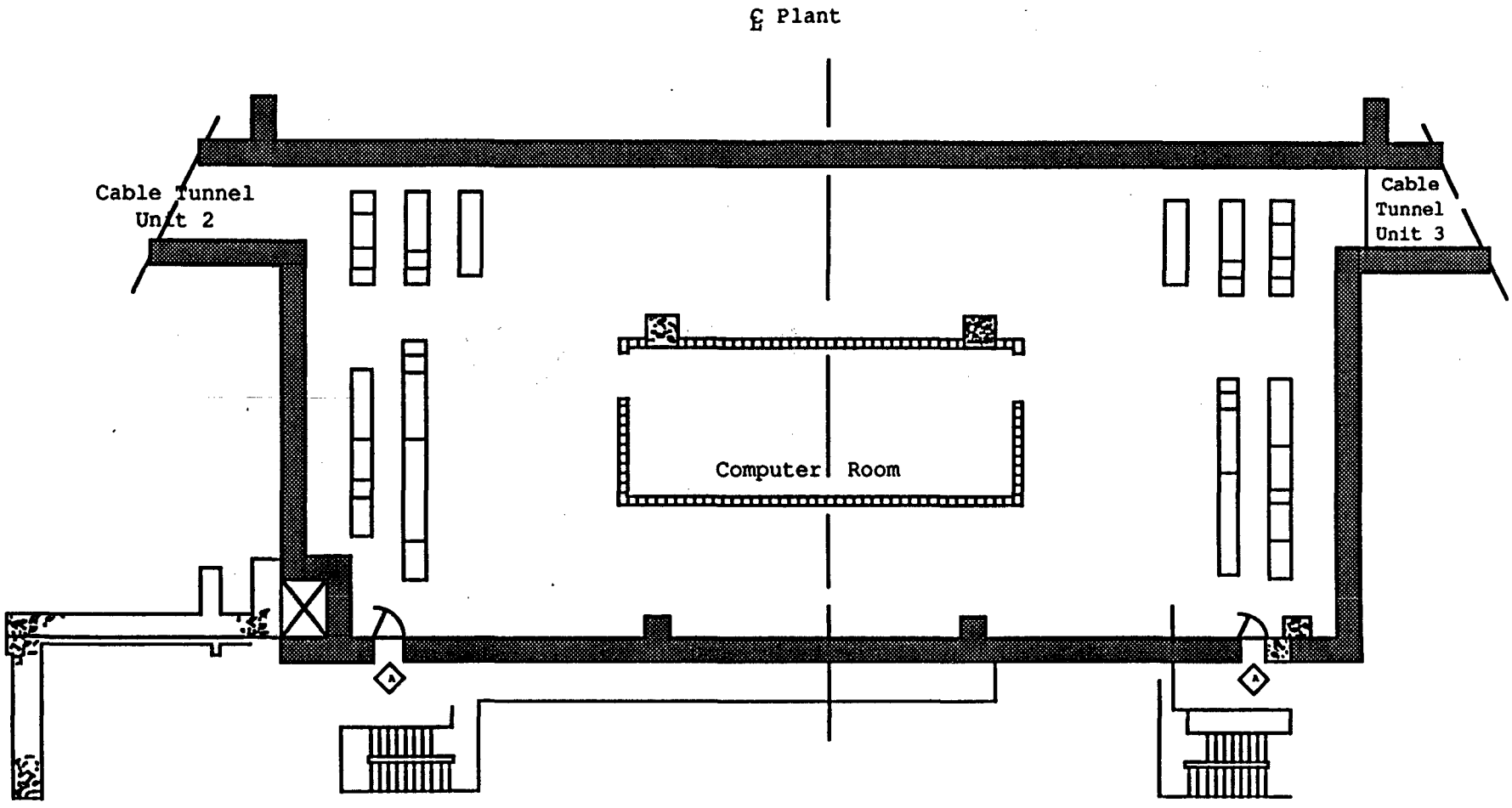

Figure 3.3 Cable Spreading Room (Fire Zone 25)

Class "A" Fire Door (3 hrs.)

3 - Hour Wall Fire Barrier

Note: The ceiling is also a fire barrier.

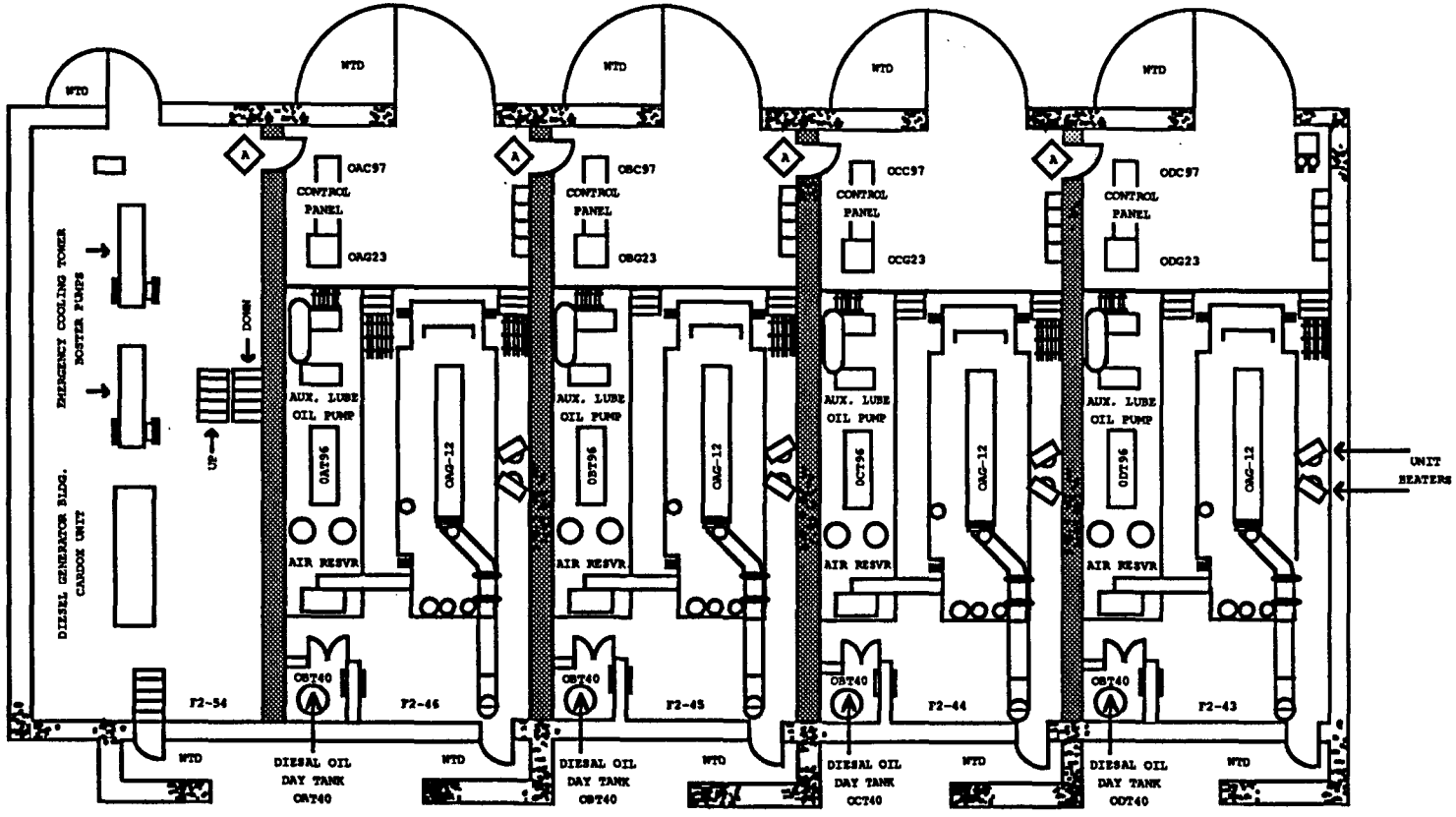

Figure 3.4 Diesel Generator Building (Fire Zones 43 - 46, 54)

Class "A" Fire Door (3 hrs.)

3 - Hour Wall Fire Barrier

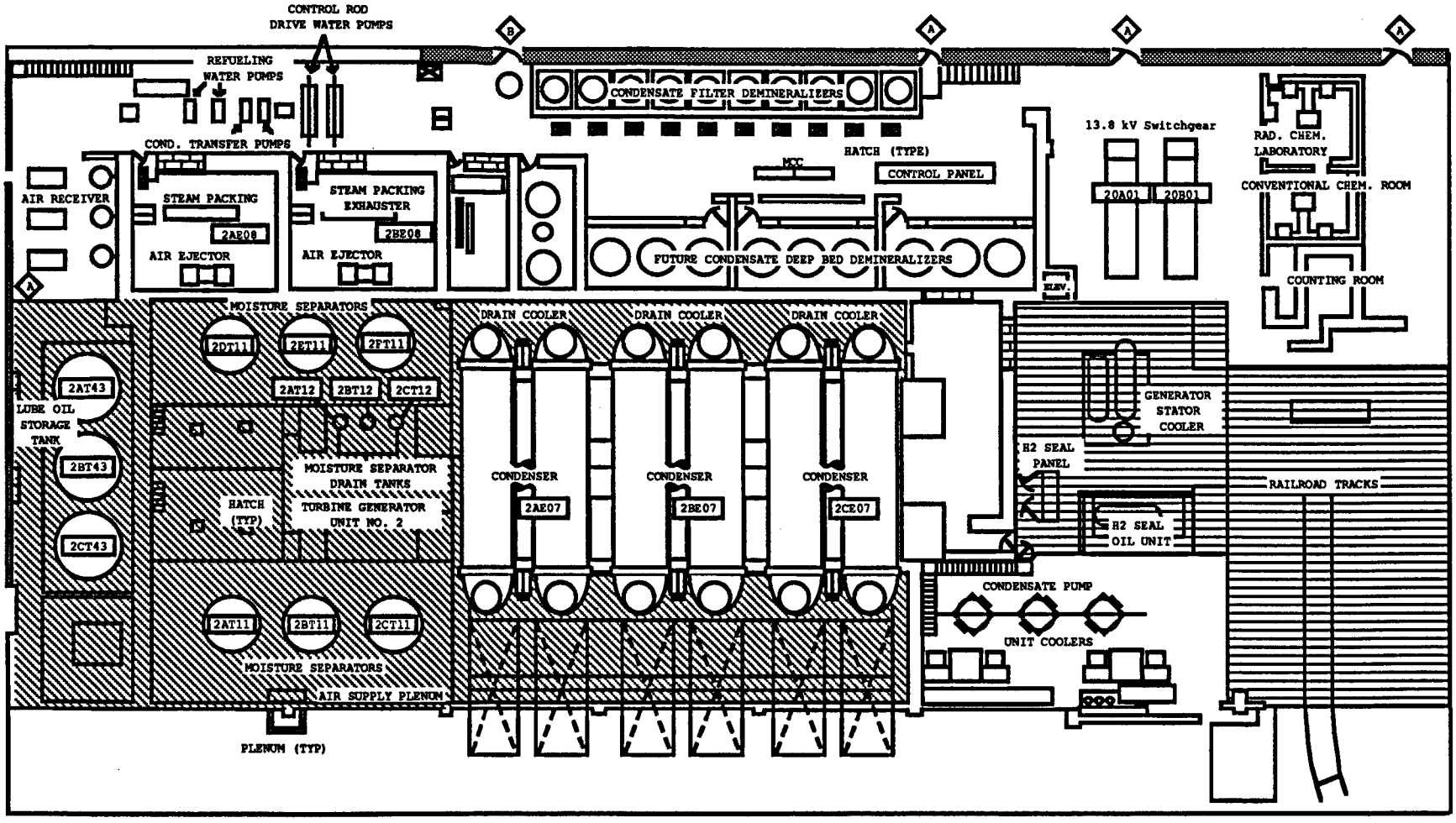

Figure 3.5 Turbine Building 116' Elevation (Fire Zone 50)

Table 3.3

Plant Fire Zone Penetrations
and Adjacencies

Fire Area	Penetration	Connected Areas
FZ-2 (HPCI Area)	Doors	RCIC Area, Stairwell
	Cables	RCIC Area
FZ-25 (Cable Spreading Room)	Doors	2-FZ-50
	Cables	Fire Zones 30-41 (ESGRs & Battery Rooms) Fire Zone 25 (Control Room)
FZ-43 (Diesel Generator Building Bay D)	Doors	2-FZ-44, 2-Outside
	Cables	FZ-44
FZ-44 (Diesel Generator Building Bay C)	Doors	2-FZ-43, 2-FZ-45, 2-Outside
	Cables	FZ-43, FZ-45
FZ-45 (Diesel Generator Building Bay B)	Doors	2-FZ-44, 2-FZ-46, 2-Outside
	Cables	FZ-44, FZ-46
FZ-46 (Diesel Generator Building Bay A)	Doors	2-FZ-45, 2-FZ-54 2-Outside
	Cables	FZ-45, FZ-54
FZ-50 (Turbine Building)	Doors	6-Outside, FZ-5, FZ-9, FZ-25 (CSR), FZ-30, FZ-33, FZ-35, FZ-37, FZ-39, FZ-40
	Cables	FZ-2, FZ-5, FZ-6S, FZ-9, FZ-25 FZ-30, FZ-33, FZ-35, FZ-37, FZ-39, FZ-40

3.2.1 Transient Event Trees

This section contains information on the transient with PCS initially available event tree and the transient without PCS initially available event tree used in the quantification of most non-seismic root cause scenarios. Success criteria considerations are presented along with the event tree and its description.

3.2.1.2 Success Criteria

Transients in which the PCS remains initially available do not represent significant concerns for the plant unless the PCS is subsequently lost while the plant is being shutdown. Should the PCS be lost, the sequence of events then proceeds similar to a transient in which the PCS was unavailable from the start.

3.2.1.3 Event Tree

The T3A transient event tree is depicted by Figures 3.6 and 3.7. The following discussion defines the event tree headings.

The events in the tree include:

- T3A: Initiating event, transient with PCS initially available.
- C: Success or failure of Reactor Protection System (RPS). Success implies automatic scram by the control rods.
- LOSP1: Success or failure to maintain offsite power. The designation LOSP1 is used instead of LOSP for purposes of computational efficiency within the SETS code.
- Q: Continued success or subsequent failure of the PCS. Success implies continued operation of the PCS such that a safe cooldown of the plant is achieved using the PCS.
- M: Success or failure of Reactor Coolant System (RCS) over pressure protection (if required) by automatic operation of the SRVs. Success implies prevention of RCS overpressure so as to avoid damage to the primary system.
- P: Success or failure associated with reclosing of any SRVs which should open in response to reactor vessel pressure rises throughout the sequence. Success implies reclosure of all valves when vessel pressure drops below the closure setpoints. P1, P2 and P3 refer to the failure of one, two or three or more SRVs to reclose, respectively.

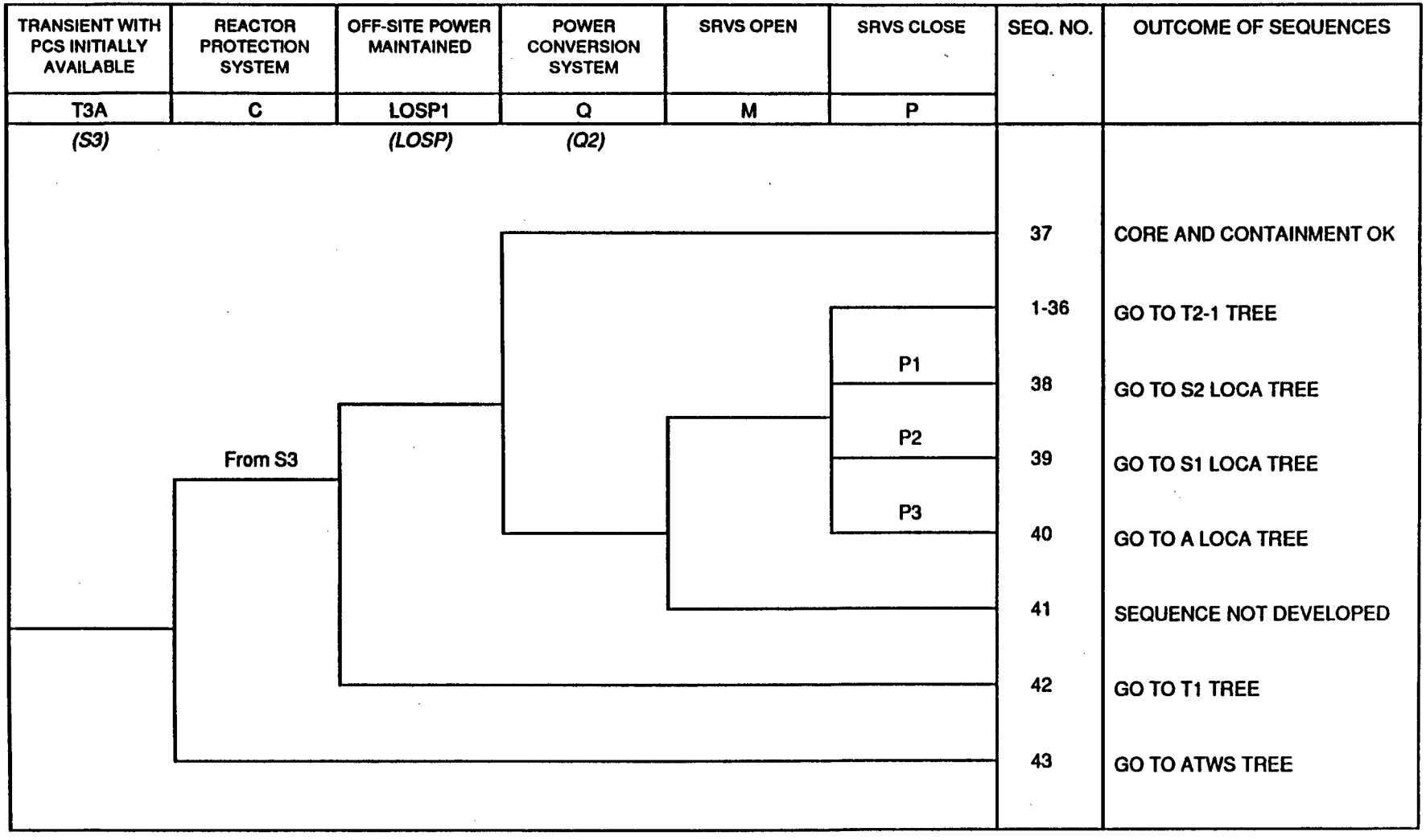

Figure 3.6. Transient with PCS Initially Available Event Tree.

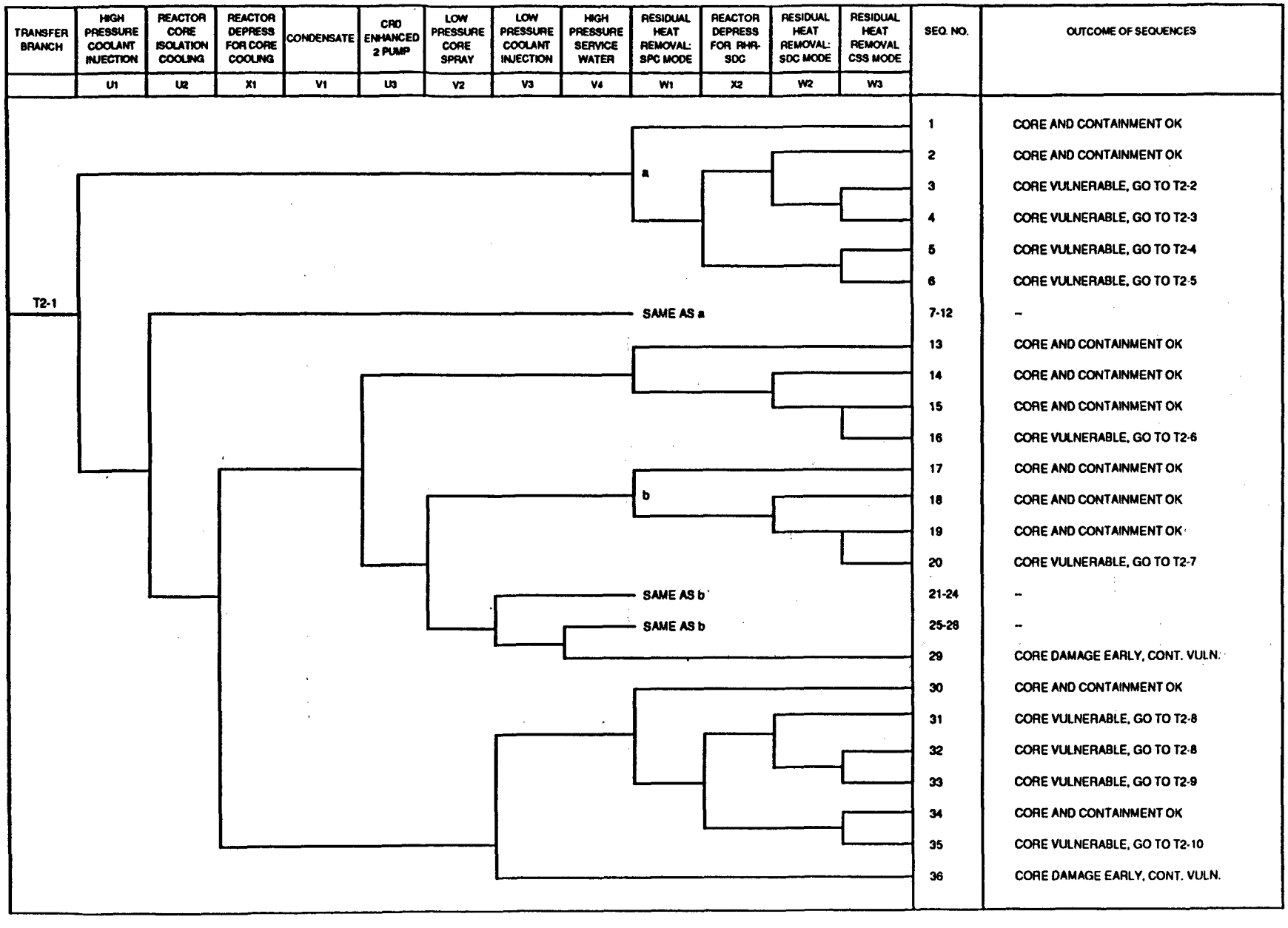

Figure 3.6. Transient with PCS Initially Available Event Tree (Concluded).

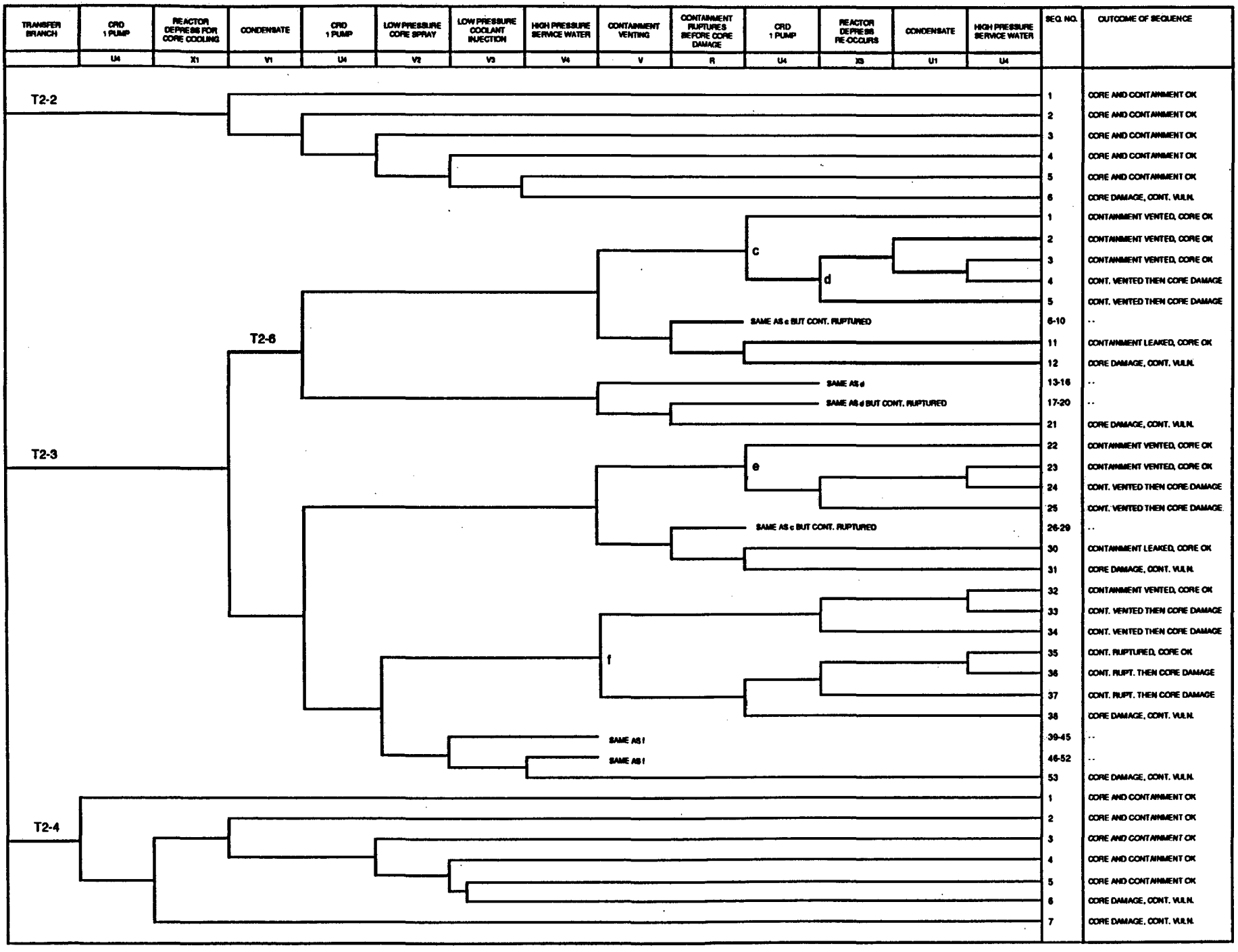

Figure 3.7 Transient Without PCS Initially Available Event Tree

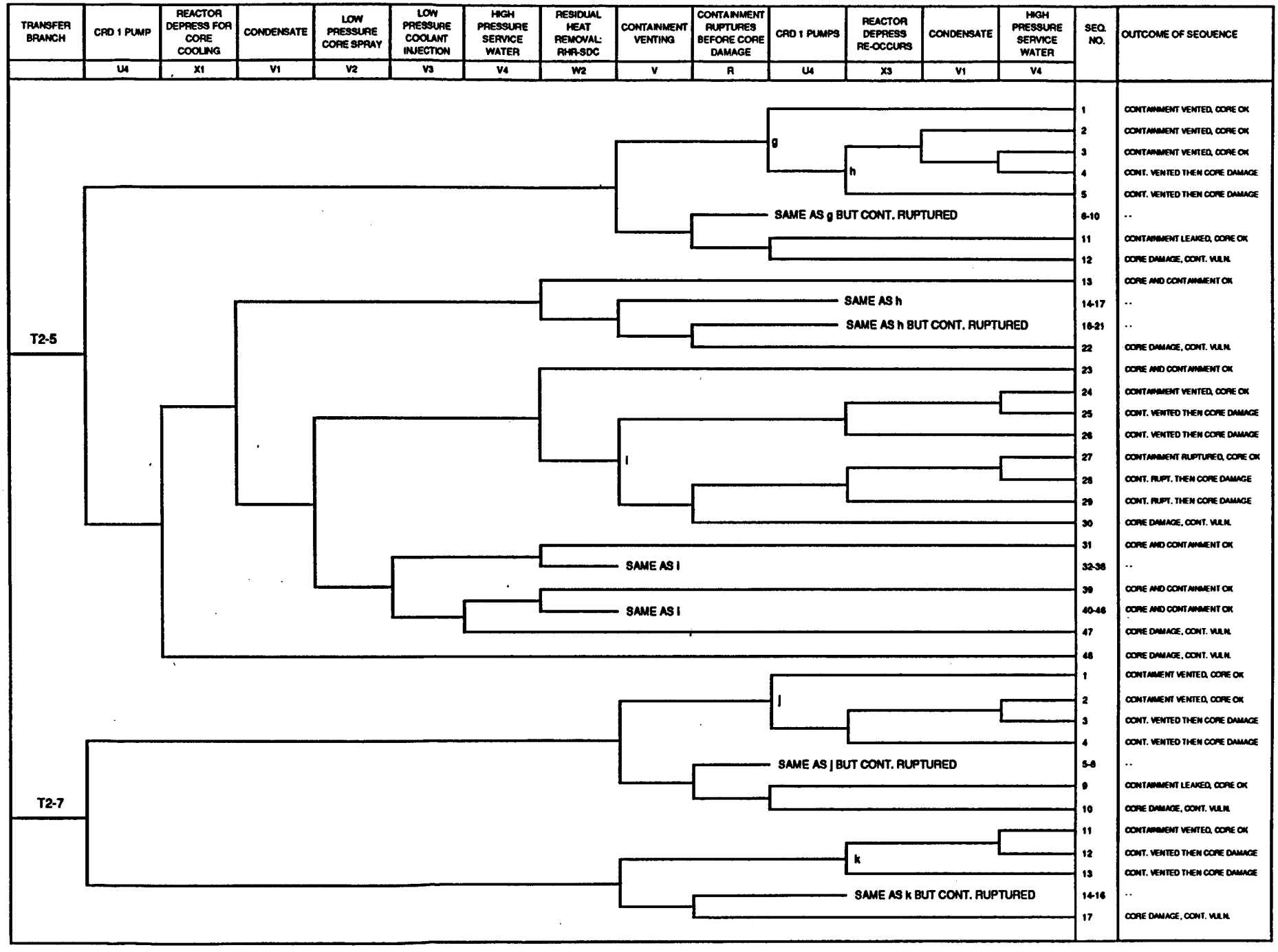

Figure 3.7. Transient Without PCS Initially Available Event Tree (Continued).

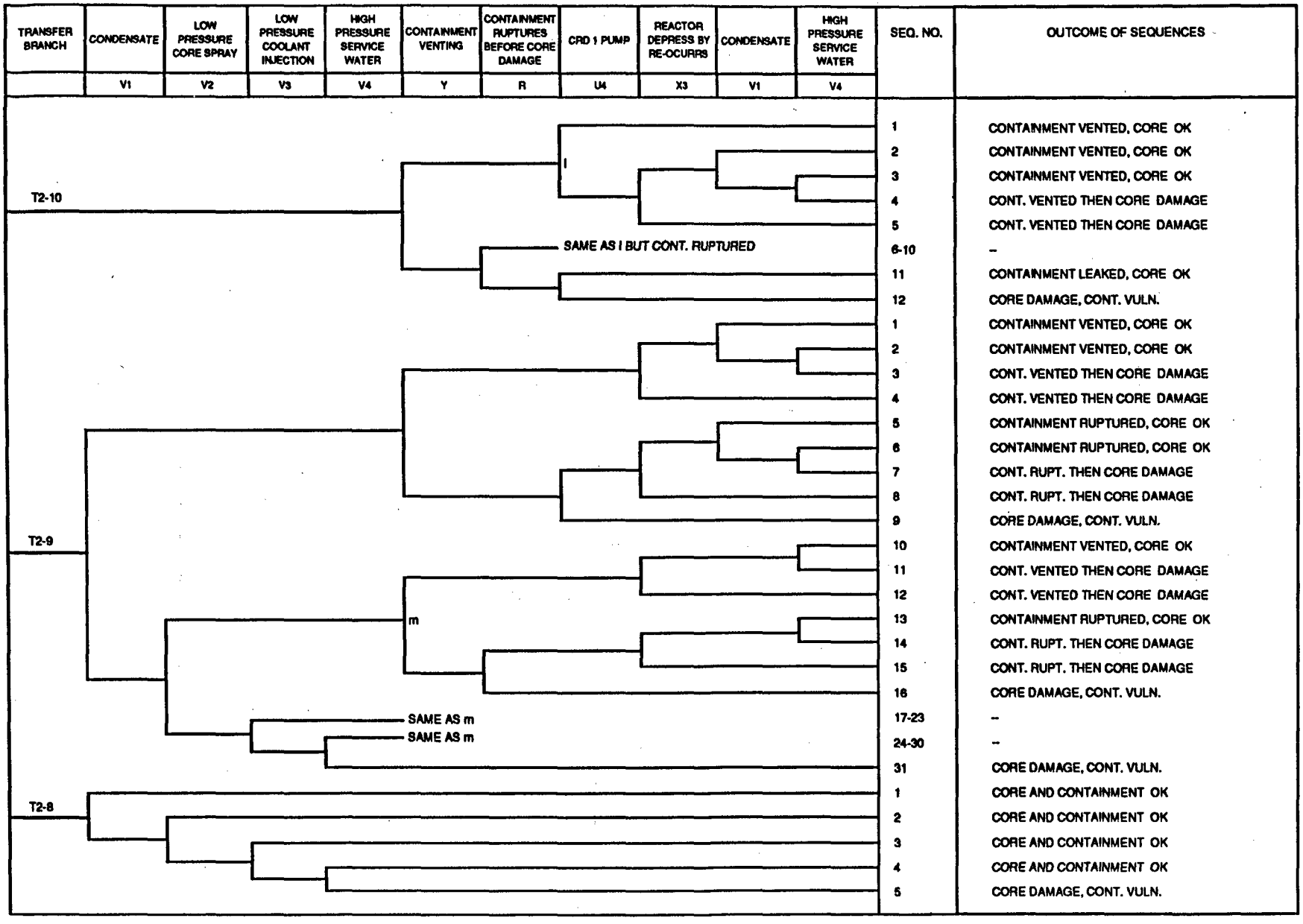

Figure 3.7. Transient Without PCS Initially Available Event Tree (Concluded).

V2: Success or failure of the LPCS system. Success implies operation of any two of the four LPCS pumps through either or both LPCS injection lines.

V3: Success or failure of the LPCI mode of the RHR system. Success implies operation of one of four LPCI pumps through either LPCI injection line to the reactor vessel.

Y: Success or failure of containment venting. Success implies that the six-inch integrated leak test line or larger size line is open so as to prevent containment failure by overpressure. As necessary, water makeup is also eventually supplied to the suppression pool.

V1: Success or failure of the Condensate System. Success implies at least one pump operating with sufficient makeup to the condenser hotwell for a continuing water supply.

V4: Success or failure of the HPSW system in the inject mode to the reactor vessel through a LPCI injection line. Success implies manual operation of this injection source such that one HPSW pump successfully provides coolant to the reactor.

U1: Success or failure of the HPCI system. Success implies operation of the HPCI system for ~1-2 hours until low primary system pressure causes isolation of HPCI either automatically or manually. U1′ refers to the HPCI system without pump room ventilation.

X1: Success or failure of primary system depressurization. Success implies automatic or manual operation of the Automatic Depressurization System (ADS) or manual operation of other SRVs such that three valves or more are opened allowing low pressure injection. An intermediate LOCA may blow the vessel down sufficiently fast to preclude X1 operation.

U2: Success or failure of the RCIC system. Success implies operation of the RCIC pump train so as to maintain sufficient coolant injection.

U4: Success or failure of the CRD system as an injection source. Success implies one pump operation.

R: Success or failure of the containment to withstand overpressurization. Success implies the containment ruptures before core damage.

X3: Success or failure of primary system depressurization. Success implies automatic or manual operation of ADS occurs subsequent to an initial depressurization to allow low pressure coolant injection.

U3: Success or failure of the CRD system as an injection source. Success implies two pump operation.

W1,W2,W3: Success or failure of the RHR system in the SPC, SDC, or CS mode, respectively. Success implies at least one RHR pump operating in any one of the three modes with the appropriate heat exchangers in the loop along with the HPSW system in operation to the ultimate heat sink.

X2: Success or failure of primary system depressurization. Success implies automatic or manual operation of any three of eleven ADS valves to allow the SDC mode of RHR to be initiated.

3.2.1.4 General Transients Caused By Fires or Random Failures

Using the sequences and cut sets obtained from the Transient with PCS Initially Available Event Tree($T3_A$) and Transient Without PCS Initially Available Event Tree, developed as part of Reference 3.2, the sequences leading to core damage were identified. The event trees are shown in Figures 3.6 and 3.7. No LOCA caused directly by a fire or FPS actuation alone was considered to be credible.

An exhaustive screening of all the sequences found in Figures 3.6 and 3.7 was performed to determine their applicability to the vital Fire Zones analyzed. For all Fire Zones, except the cable spreading room, all general transient sequences were screened out due to random failure probabilities. Random failures are safety-related failures which occur independently of either damage which is caused by an FPS actuation or a fire. Random failures associated with the screened sequences were less than 10^{-4}. For the cable spreading room, one sequence was determined to apply for all of the applicable root causes. This sequence ($T3_AQU_1U_2X_1U_3$), which involves the actuation of the FPS in the cable spreading room, is a combination of failures as follows:

- o $T3_A$ A transient with PCS initially available
- o Q The failure of the power conversion system
- o U_1 The failure of the HPCI system
- o U_2 The failure of the RCIC system
- o X_1 The failure to depressurize the primary system via SRVs or the Automatic Depressurization System (ADS)
- o U_3 The failure of the Control Rod Drive (CRD) System (2 pumps mode)

This scenario requires the FPS agent (CO_2) related failure of control power or relay cabinets for PCS, HPCI, RCIC, ADS, and CRD systems.

Although no CO_2 related failures were counted in the data as damaging safety-related equipment, a preoperational CO_2 actuation is known to have damaged safety-related equipment by freezing and icing of relays. Additionally, during this event another potential damage mechanism was discovered. This mechanism is the weight of the CO_2 suppressant on cable runs causing structural collapse. The calculation of the probability of damage to safety-related equipment from CO_2 actuation can be found in Section 3 of Reference 3.6. Credit was given for the independence of the remote shutdown panel from the cable spreading room. Abandonment of the control room is assumed based upon operators being unable to control the safety systems that received damage from CO_2. Thus, according to procedure, the reactor will be manually scrammed and lead to transient $T3_A$. The PCS (Q), RCIC system (U_2) and CRD system (U_3) receive damage to their control system from the CO_2 and are not independent of the cable spreading room. Therefore, all three systems are assumed to fail. The HPCI (U_1) and ADS (X_1) are part of the remote shutdown panel but are failed due to operator error.

3.2.2 LOSP Event Tree

Figure 3.8 displays the event tree for the loss of offsite power initiator used in the quantification of all seismic and one non-seismic root cause. The entire PCS, Feedwater, and Condensate systems are not shown in the tree since loss of offsite power also prevents operation of these systems. Should offsite power be restored, these systems could be used to mitigate the event. The following discussions present the success criteria, define the event tree headings and describe the critical sequences for this study.

The following event tree headings appear on the tree in the approximate chronological order that would be expected following a loss of offsite power. For convenience, the RHR containment cooling choices are shown early in the tree to decrease the size of the event tree. Otherwise, the tendency is to show high and then low pressure injection systems, followed by containment venting, and finally long-term continued core cooling possibilities. In addition, onsite ac power restoration is shown as a specific event so that station blackout sequences can be explicitly depicted.

<u>T1</u>: Initiating event, loss of offsite power.

<u>C</u>: Success or failure of the RPS. Success implies automatic scram by the control rods.

<u>M</u>: Success or failure of Reactor Coolant System (RCS) overpressure protection (if required) by automatic operation of the SRVs. Success implies prevention of RCS overpressure so as to avoid damage to the primary system.

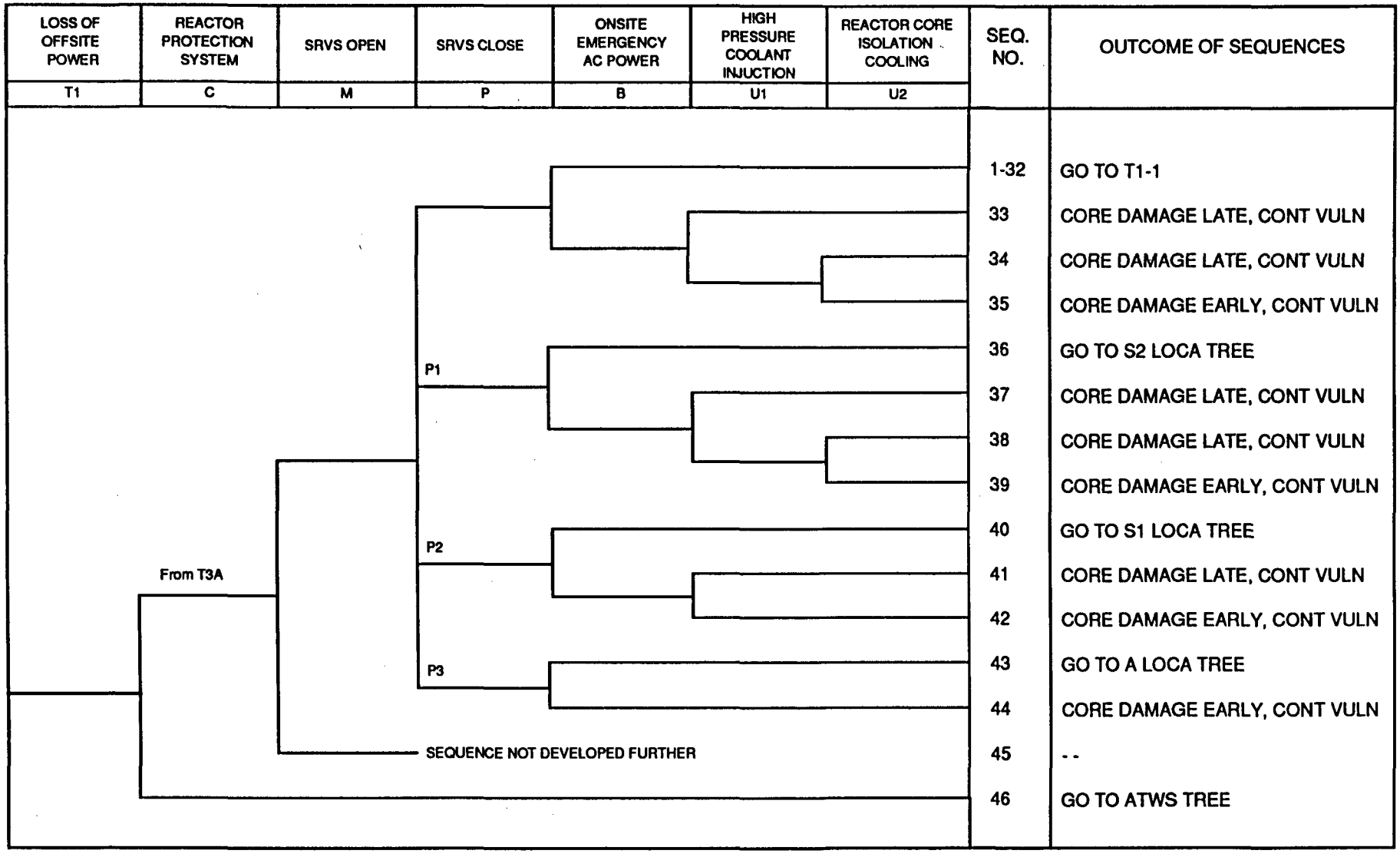

Figure 3.8. Loss of Offsite Power Event Tree.

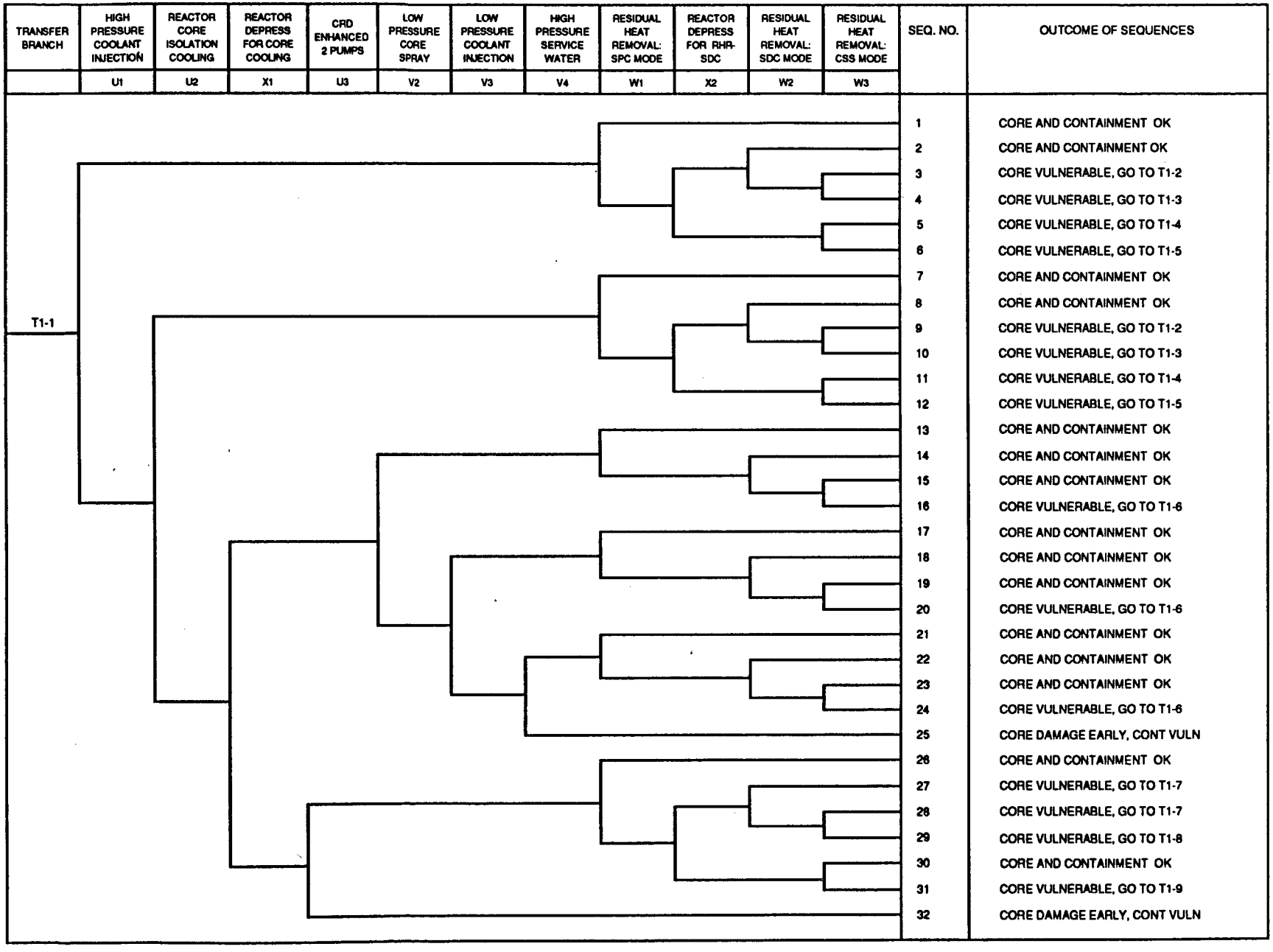

Figure 3.8. Loss of Offsite Power Event Tree (Continued).

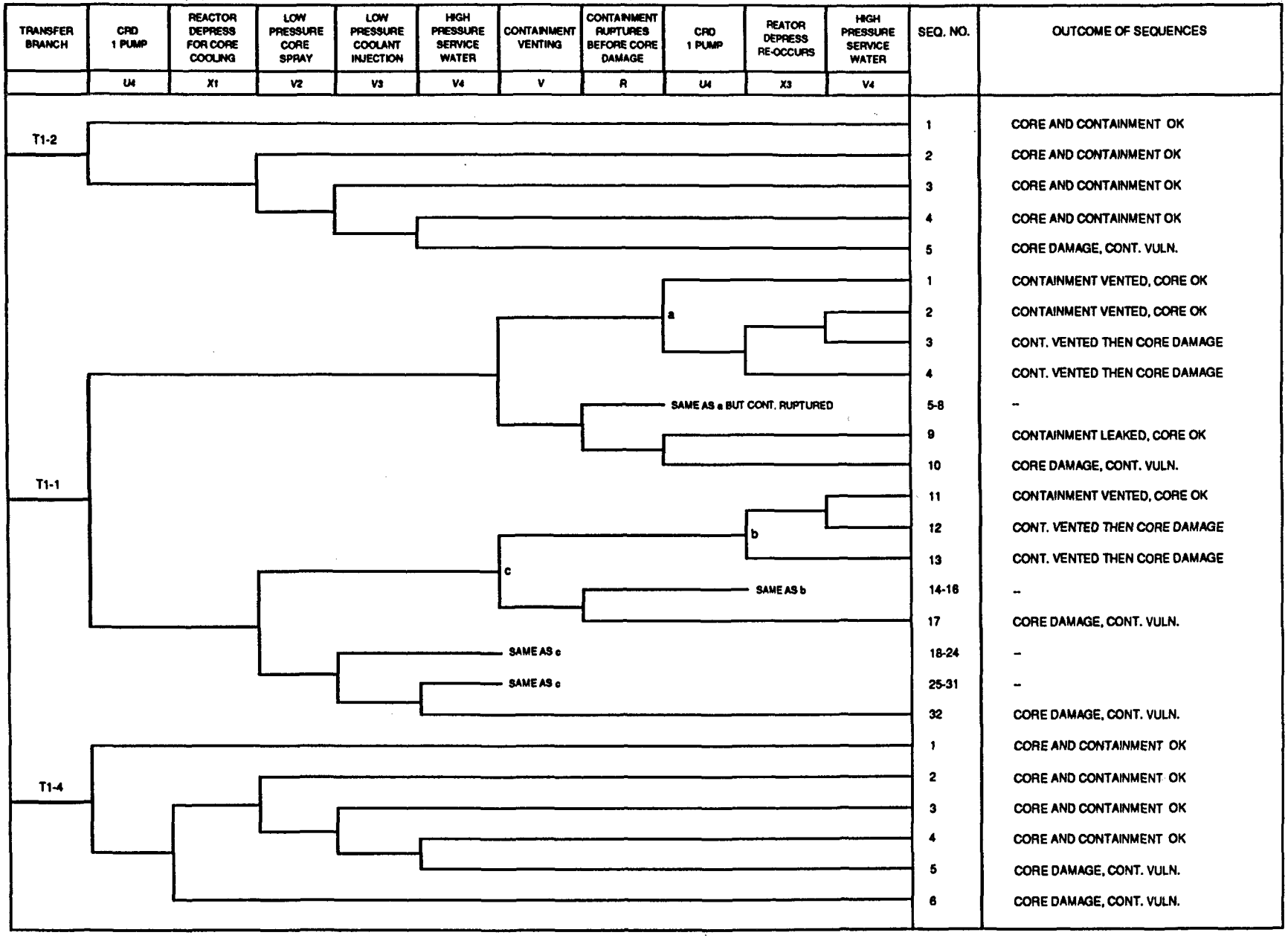

Figure 3.8. Loss of Offsite Power Event Tree (Continued).

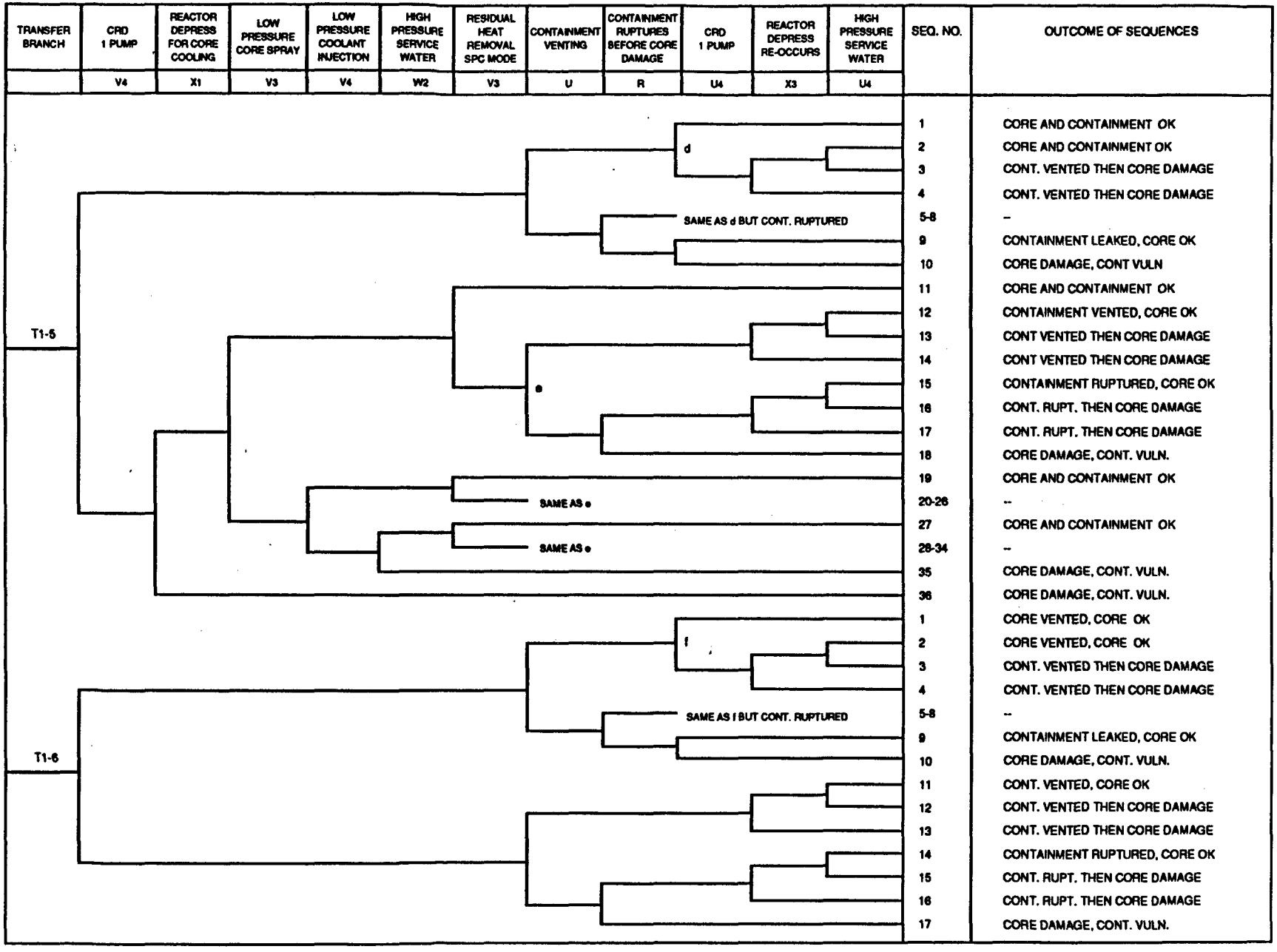

Figure 3.8. Loss of Offsite Power Event Tree (Continued).

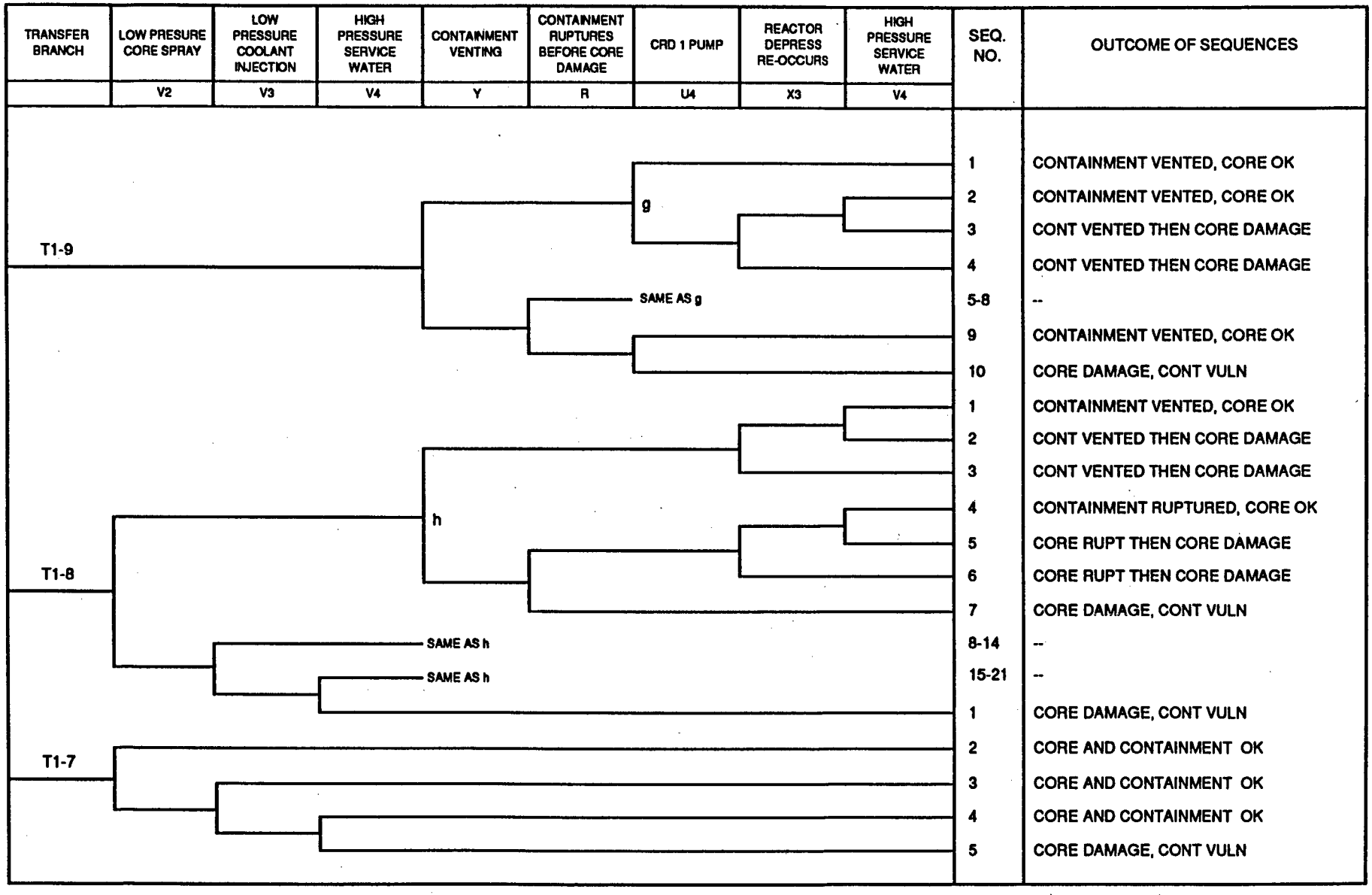

Figure 3.8. Loss of Offsite Power Event Tree (Concluded).

P: Success or failure associated with reclosing of any SRVs which should open in response to reactor vessel pressure rises throughout the sequence. Success implies reclosure of all valves when vessel pressure drops below the closure setpoints. P1, P2 and P3 refer to the failure to reclose one, two and three SRVs, respectively.

B: Success or failure of the onsite AC power system (diesel generators and associated equipment and emergency buses) in response to the loss of offsite power. Success implies operation of at least one emergency AC power division so that AC-powered mitigating systems can be utilized. Failure implies loss of all AC, or station blackout.

U1: Success or failure of the HPCI system. Success implies operation of the HPCI pump train so as to maintain sufficient coolant injection. U1′ refers to the HPCI system without pump room ventilation.

X1: Success or failure of primary system depressurization. Success implies automatic or manual operation of the ADS or manual operation of other SRVs such that three valves or more are opened allowing low pressure injection.

U3: Success or failure of the CRD system as an injection source. Success implies two pump operation.

V2: Success or failure of the LPCS system. Success implies operation of any two of the four LPCS pumps through either or both LPCS injection lines.

V3: Success or failure of the LPCI mode of the RHR system. Success implies operation of one of four LPCI pumps through either LPCI injection line to the reactor vessel.

V4: Success or failure of the HPSW system in the inject mode to the reactor vessel through a LPCI injection line. Success implies manual operation of this injection source such that one HPSW pump successfully provides coolant to the reactor.

W1,W2,W3: Success or failure of the RHR system in the SPC, SDC, or CS mode, respectively. Success implies at least one RHR pump operating in any one of the three modes with the appropriate heat exchanger in the loop along with the HPSW system in operation to the ultimate heat sink.

U2: Success or failure of the RCIC system. Success implies operation of the RCIC pump train so as to maintain sufficient coolant injection. U2′ refers to the RCIC system without pump room ventilation.

X2: Success or failure of primary system depressurization. Success implies automatic or manual operation of any three of eleven ADS valves to allow the SDC mode of RHR to be initiated.

U4: Success or failure of the CRD system as an injection source. Success implies operation in the one pump mode.

Y: Success or failure of containment venting. Success implies that the six-inch integrated leak test line or larger size line is open so as to prevent containment failure by overpressure. As necessary, water makeup is also eventually supplied to the suppression pool.

R: Success or failure of the containment to withstand over-pressurization. Success implies the containment ruptures before core damage.

X3: Success or failure of primary system depressurization. Success implies automatic or manual operation of ADS occurs subsequent to initial depressurization to allow low pressure coolant injection.

3.2.2.1 Success Criteria

Two criteria specific to the loss of offsite power initiator are described below:

a. For scenarios in which core cooling has been provided for a period of approximately six to eight hours or more, one CRD pump operation is considered adequate for continued success of core cooling. This is based on the low decay heat levels reached by that time with no significant breach of the primary system. While the CRD failure model explicitly treats only the two pump criteria for success, single pump operation was treated as success during these long-term scenarios by eliminating (by hand) failures of the CRD system which would fail only one pump.

b. For scenarios in which core cooling is successful up to the time of containment venting or containment failure, one CRD pump or depressurization with one HPSW pump operation is considered to be adequate to continue successful core cooling.

3.2.2.2 LOSP Transient Root Cause Scenarios

This section contains information on all seismic and one non-seismic root cause scenario. Insights gained from the Loma Prieta earthquake (Ref. 3.5, Appendix C) were utilized wherever applicable.

A plant walkdown was conducted to determine plant specific fragilities for all FPSs. During this walkdown, it was found that mechanical

failure of an FPS (Root Cause 9) could be eliminated from further consideration. Specifically, the plant walkdown revealed that critical plant safety equipment was protected by either water or CO_2 FPSs. Equipment in most areas of the turbine building protected by wet pipe water FPSs are balance of plant and therefore are lost due to the LOSP Event itself and need not be considered further for this analysis. In the one turbine building area where safety-related cabling is located (switchgear area, 116′ elevation), sufficient random failures of other safety related systems had to occur such that all sequences were screened. In the case of the CO_2 systems, the piping is not charged and the only plausible mechanical failure mechanism for agent release is seismically-induced repositioning of a CO_2 admission valve. The probability for mechanical repositioning is below the screening cutoff value (10^{-4}). Therefore, Root Cause 9 for the CO_2 systems was eliminated from further consideration.

A comprehensive screening on the sequences in the LOSP event tree, Figure 3.8, was performed. The screening revealed that two sequences were applicable to this analysis. The first sequence is $T1_A BU_1 U_2$. For this sequence, a loss of offsite power occurs which generates a reactor scram condition and the RPS successfully inserts the rods into the core (C). The SRVs properly cycle to control reactor pressure (M, P) and onsite emergency power fails to be established (B). HPCI or RCIC is initiated (U_1, U_2) for coolant injection until it fails in either a harsh environment or due to battery depletion, and core damage occurs late (approximately ten hours) in a vulnerable containment. This sequence is applicable to the diesel generator rooms.

The second sequence involves all seismic and one non-seismic root cause for the cable spreading room. This sequence, $T1_A \bar{B} U_1 U_2 X_1 U_3$, involves the success of on-site AC power, but the failure of HPCI, RCIC, ADS, and CRD systems.

The screening analysis also revealed that all of the seismic sequences could be screened out for both the turbine building and the HPCI room. In the case of the turbine building, Root Cause 7 was screened out since none of the areas in the turbine building contained an automatically actuated FPS triggered by dust-sensitive detectors. Root Cause 8 was eliminated for the turbine building since there were no areas containing a FPS actuated by relays. Root Cause 9 was eliminated as described above. Finally, Root Cause 12 was screened out for the turbine building, since in the only area which contained safety-related cabling, the LOSP power event de-energized any potential seismically induced fire sources.

For the HPCI room, Root Cause 7 was eliminated because the FPS is an automatically actuated CO_2 system triggered by heat detectors and is not susceptible to dust-triggered actuations. For Root Cause 8, an examination of the relays in the FPS for the HPCI room revealed that mercury relays whose function is to annunciate the actuation also isolate HPCI room cooling. After the plant visit the mercury relays

were removed from service. The relay which is responsible for the CO_2 actuation in the HPCI room is a Potter-Brumfield type and was found to have a median fragility capacity of 4.0 g. The low probability of relay chatter for these relays combined with the additional random failures necessary to lead to core damage screened this root cause from consideration. Root Cause 9 was eliminated as previously described. Root Cause 12 was able to be screened out for the HPCI room since there was no potential fire source which would not also fail the HPCI pump directly.

3.2.3 Quantification

3.2.3.1 Quantification of Random and Fire-Induced Actuation Scenarios

The occurrence of a random FPS actuation or an actuation in the presence of a fire in a nuclear power plant can result in a plant transient caused either by the operator manually tripping the plant or the plant automatically tripping as a result of the actuation itself. The purpose of this study is to quantify the impact on risk of inadvertent and advertent actuations of the FPS. The values chosen for the various parameters utilized in the calculation of the core damage frequency are best estimate values based on historical data. When little data existed best estimate probability assignments were made based on plant walkdowns and engineering judgement. The specific equations utilized in the calculation of the core damage frequency contribution from each root cause can be found in Section 3 of Reference 3.6. Table 3.4 summarizes the fire frequencies used for each Fire Zone. The fire frequencies were taken from Reference 3.4. Table 3.5 presents fire frequencies of areas adjacent to the Fire Zones which appeared in the vital area analysis. Note that it is often necessary to ratio the overall building fire occurrence frequency down to reflect the fact that fires in only a small subset of the building can cause the postulated smoke spread to adjacent areas. This is called "partitioning" and is based on both analyst judgement and insights from sensitivity calculations using a fire growth computer code (CCFM.VENTS). For this study, partitioning of the fire frequencies for the larger Fire Zones was performed wherever applicable. For example, in the turbine building this reduced the fire frequency by an order of magnitude for all areas.

3.2.3.2 Quantification of Seismically Induced FPS Actuations

A site-specific seismic analysis was performed on the FPSs for the plant analyzed in this report. When a seismic event occurs, a loss of offsite power is highly likely due to the failure of ceramic insulators in the switchyard. Thus, the seismic sequences which must be considered are those where offsite power is assumed to be lost. Once the vital area analysis has been performed for the LOSP sequences, one can quantify them in a similar fashion as was done for the random and fire induced FPS actuation scenarios. The one significant difference is that the accident sequences evaluated are conditional on the plant site seismic curve (a function of peak ground acceleration) and as such must

Table 3.4

Fire Frequencies Corresponding to Plant Fire Zones

Fire Zone	Fire Frequency (per reactor year)
HPCI Room (Fire Zone 2)	1.8E-3
Cable Spreading Room (Fire Zone 25)	2.7E-3
Control Room (Fire Zone 25)	4.4E-3
Emergency Switchgear Rooms (Fire Zones 32-39)	3.0E-3
Emergency Diesel Generator Bays (Fire Zones 43-46)	2.3E-2
Turbine Building (Fire Zone 50)	3.2E-2

be integrated over the seismic hazard curve. For the seismic sequences considered in this analysis, the damage is a result of seismic events above the the safe shutdown earthquake (SSE). For the base case analysis of the seismic sequences the Lawrence Livermore National Laboratory (LLNL) hazard curves were utilized (Ref. 3.7). In Chapter 4, a sensitivity study is performed comparing the CDF contribution from the seismic root causes utilizing the LLNL and the Electric Power Research Institute (EPRI) hazard curves (Ref. 3.8).

3.3 Results of Quantification

The results of the quantification for the fire and random failure-induced root causes and seismically induced FPS actuations for the cable spreading room are presented in Table 3.6. Table 3.7 presents the results for seismically induced FPS actuations for the diesel generator rooms. These results are mean values of their associated distribution.

Table 3.5

Fire Frequencies in Adjacent Zones

	Fire Zone of Interest			
	FZ-2		FZ-25	
Adjacent Zones	FZ-2	1.8E-3	FZ-50	3.2E-3*
	FZ-50	3.2E-3*	FZ-30-41	3.0E-3
	Fire Zone of Interest			
	FZ-43		FZ-44	
Adjacent Zones	FZ-44	2.3E-2	FZ-44	2.3E-2
			FZ-45	2.3E-2
	Fire Zone of Interest			
	FZ-45		FZ-46	
Adjacent Zones	FZ-44	2.3E-2	FZ-45	2.3E-2
	FZ-46	2.3E-2	FZ-54	6.4E-2

	Fire Zone of Interest	
	FZ-50	
Adjacent Zones	FZ-2	1.8E-3
	FZ-9-18	3.2E-2

* Partitioning of the Fire Frequency was performed for this Fire Zone

Table 3.6

Core Damage Frequencies for Fire Zone 25 (CSR)
(Per Reactor Year)

Root Cause	Sequence 1	Sequence 2	Sequence 3	Total
1	---	5.7E-7	---	
2	---	---	---	
3	---	---	---	
4	3.3E-7	---	---	
5	2.3E-8	---	---	
6	5.4E-7	---	---	
7	---	3.3E-7	---	
8	---	---	---	
9	---	---	---	
10	6.9E-7	---	---	
11	5.7E-7	---	---	
12	---	8.6E-6	---	
13	4.4E-7	---	---	
Totals	2.6E-6	9.5E-6	---	1.2E-5

Sequence 1 - $T3_A QU_1U_2X_1U_3$

Sequence 2 - $T1_A\bar{B}U_1U_2X_1U_3$

Sequence 3 - $T1_A BU_1U_2$

Table 3.7

Core Damage Frequencies for Fire Zones
43-46 (Diesel Generator Building)
(Per Reactor Year)

Root Cause	Sequence			Total
	1	2	3	
1	---	---	---	
2	---	---	---	
3	---	---	---	
4	---	---	---	
5	---	---	---	
6	---	---	---	
7	---	---	---	
8	---	---	1.1E-5	
9	---	---	---	
10	---	---	---	
11	---	---	---	
12	---	---	---	
13	---	---	---	
Totals	---	---	1.1E-5	1.1E-5

Sequence 1 - $T3_A QU_1 U_2 X_1 U_3$

Sequence 2 - $T1_A \bar{B} U_1 U_2 X_1 U_3$

Sequence 3 - $T1_A B U_1 U_2$

Credit for operator recovery was given where allowable for all non-seismic root causes. These recovery values were assigned consistently with those probabilities in the internal events analysis except when the recovery actions had to take place in the presence of a fire or FPS actuation. In these cases, Reference 3.9 was used for guidance.

The Root Cause 8 scenario leads to the actuation of the CO_2 system(s) in the diesel generator bay(s) due to relay chatter in a seismic event which prevents the diesel generators from starting (except in the event of a LOCA) and isolates diesel generator room cooling. Operator recovery of the diesel generators was allowed since ten hours were available until battery depletion during a station blackout. The specific recovery actions that need to be performed are venting of the diesel generator bay(s) and manually resetting the diesel generators to allow them to start. Recovery action probability for this scenario was assigned based upon Reference 3.9 and the internal events analysis.

Also, manual recovery from the seismically qualified remote shutdown panel was allowed during a seismic event in which failures of equipment and cabling in the cable spreading room occurred.

Appendix A presents the uncertainty calculations as well as each cut set for the seismic and non-seismic root causes. Additionally, each basic event probability value is given. The details concerning the development of these probability assignments can be found in Section 3 of Reference 3.5.

3.3.1 Root Cause 1--Fire-Induced FPS Actuation Due to Smoke Spread

An incremental increase in core damage frequency of 5.7E-7/ry was estimated for this root cause. All of this contribution was due to a non-seismic LOSP sequence ($T1_A\bar{B}U_1U_2X_1U_3$). This sequence is a result of a fire in an ESGR room, which causes a LOSP, and then smoke from the fire penetrating failed fire barriers due the formation of a hot gas layer. This smoke actuates the CO_2 FPS in the cable spreading room and results in the loss of HPCI, RCIC, ADS, and CRD systems.

Also, the potential for smoke spread due to fires in other adjacent zones was thoroughly examined during the plant walkdown. This walkdown revealed that the potential for fires and smoke spread from areas (other than the ESGRs) adjacent to the cable spreading room was negligible. This was due in the case of the turbine building adjacency to it being a large area with neglible potential for hot gas layer formation. Thus, a driving force for smoke spread and barrier penetration was not present.

Credit was given for operator recovery from the remote shutdown panel. The operator error required for this scenario to lead to core damage is the failure to establish HPCI or depressurize the plant with the ADS (to allow for low pressure injection sources) from the remote shutdown panel.

3.3.2 Root Cause 2--Fire-Induced FPS Actuation Preventing Recovery

For this root cause, all cut sets could be screened either because the random failures were not recoverable or there was no connectivity between the zone where the FPS action occurred and the zone where the recovery action took place. Therefore, this root cause was found not be applicable.

The criteria for allowing credit for recovery for random failures was applied consistently with the internal events analysis (Ref. 3.2). For instance, if recovery was not allowed for a mechanical failure of a check valve, it was also not considered here. Most random failures were eliminated based on this criteria. Additionally, if random failure recovery was allowed by the internal events analysis, a determination was made in which Fire Zone(s) the recovery action(s) occurred. For the recoverable random failures, it was found that none occurred in Fire Zones where FPS actuation would either hinder the action or prevent access to the zone.

3.3.3 Root Cause 3--Fire-Induced FPS Actuation Preventing Fire-Fighting Access

This root cause was found not to be applicable. It was found that none of the critical fire zones were accessible through only one other Fire Zone.

3.3.4 Root Cause 4--FPS Actuation Caused by Human Error

Here, an incremental increase in core damage frequency of 3.3E-7/ry was found. The dominant contributor was transient Sequence 1 ($T3_A U_1 U_2 X_1 U_3$). This sequence results in the failure of HPCI, RCIC, ADS, and CRD systems due to FPS actuation in the cable spreading room. As was the case for Root Cause 1, credit was given for operator recovery from the remote shutdown panel.

3.3.5 Root Cause 5--FPS Actuation Caused by Pipe Break

The incremental increase in core damage frequency for this root cause was found to be 2.3E-8/ry. For this root cause three possible scenarios were examined. The first was a release of steam into the turbine building resulting in moisture intrusion into the controller (located in the turbine building outside the cable spreading room) for the FPS in the cable spreading room. The second was a large release of steam into the turbine building, penetration of the steam through the fire barrier(s), and actuation of the FPS via the smoke detectors in the

cable spreading room. The probability for barrier failure was assumed to be 0.1. The third scenario is a steam pipe break in the cable spreading room. The first and second scenarios were screened from further consideration after a plant walkdown. No steam piping was found within 100 feet of the fire barrier or the actuation controller in the turbine building. The third scenario is the most credible of the three. Approximately 60 feet of low pressure steam heating piping with a diameter of approximately 4 inches was found in the cable spreading room. When the steam pipe break frequency as well as probability of damage estimates and credit for operator recovery are considered, it was found that this root cause scenario had a minor contribution to the total core damage frequency.

3.3.6 Root Cause 6--FPS Actuation Caused by Hardware Failures in FPS

The incremental increase in core damage frequency for this root cause was found to be 5.4E-7/ry. It again arises due to inadvertent FPS actuations in the cable spreading room giving rise to Sequence 1 as described above. Credit was given for operator recovery from the remote shutdown panel.

3.3.7 Root Cause 7--Dust-Triggered FPS Actuations in Seismic Events

The incremental increase in core damage frequency for this root cause was found to be 3.3E-7/ry. This arises due to dust-triggered FPS actuation for the cable spreading room in a seismic event resulting in the seismic sequence (Sequence 2) $T1_A\bar{B}U_1U_2X_1U_3$. This sequence is a success of on-site AC power, failure of HPCI system, failure of the RCIC system, failure of ADS, and failure of CRD as an injection source. Given a seismic event, the FPS in the cable spreading room is assumed to have an actuation probability of 1.0 due to Root Cause 7. Credit was given for operator recovery from the remote shutdown panel.

3.3.8 Root Cause 8--Relay Chatter FPS Actuations in Seismic Events

The incremental increase in core damage frequency for this root cause was found to be 1.1E-5/ry. This arises due to relay chatter in the FPS controller for three of the Diesel Generator bays during a seismic event, resulting in sequence $T1_ABU_1U_2$ (Sequence 3). This sequence includes station blackout due to a seismically induced LOSP and lockout of the diesel generators due to actuation of the CO_2 FPS. Loss of HPCI and RCIC due to either depletion of station batteries or environmental conditions leads to core damage. Credit was given for operator recovery of the diesel generators before battery depletion occurred in approximately ten hours.

Pin-type relays of unknown origin are used to actuate the CO_2 FPS in the Diesel Generator bays. Because their origin is unknown, it was necessary to use a standard conservative fragility of 1.9 times the SSE

or 0.23 g, for a median capacity. If more information concerning these relays was available, it is anticipated that their capacity would increase.

3.3.9 Root Cause 9--FPS Actuations Due To Seismic Failures of FPS

This root cause was found not to be applicable. This result was based on a seismic fragility evaluation and a comprehensive plant walkdown. See Section 3.2.2.2 for more details.

3.3.10 Root Cause 10--External Plant Fires Causing FPS Actuations

The incremental increase in core damage frequency for this root cause was found to be 6.9E-7/ry. It arises due to inadvertent FPS actuation in the cable spreading room, giving rise to Sequence 1 as described above. This inadvertent actuation is caused primarily by a large adjacent building fire near the reactor building ventilation intake and smoke spread through the ventilation system into the CSR. Credit was given for operator recovery from the remote shutdown panel.

3.3.11 Root Cause 11--Advertent Actuation of a Suppression System

For this scenario to occur, actuation of the FPS has to be in the same fire zone as the fire. Critical damage must occur either as a combination of fire-related effects and FPS agent release or due to FPS agent release alone. The cable spreading room is the contributing Fire Zone for this root case and leads to transient Sequence 1. This sequence contributes 5.7E-7/ry to the core damage frequency. As was the case for other root causes involving the cable spreading room credit for operator recovery from the remote shutdown panel was allowed.

3.3.12 Root Cause 12--Seismic/Fire Interaction

This root cause was found to contribute 8.6E-6/ry to core damage frequency. The cable spreading room is the contributing fire zone for this root cause and leads to LOSP sequence $T1_A\bar{B}U_1U_2X_1U_3$ (Sequence 2). This sequence involves a fire in the cable spreading room as a result of tipping or sliding of an energized cabinet, and diversion of suppressant intended for the fire in the cable spreading room into the turbine building.

Tipping or sliding of an energized cabinet during an earthquake has a high likelihood of starting a fire. Some of the electrical cabinets in the cable spreading room are nonsafety-related and will probably not be energized during a seismic event (due to the high likelihood of LOSP). Safety-related cabinets that would remain energized appeared to be anchored, but it is unknown how much anchorage there was since a thorough inspection which would include looking inside these cabinets could not be performed. Therefore, a median capacity of 2.0 g was assumed to be the value at which sliding or tipping occurs.

When considering diversion of FPS suppressant, the system supplying CO_2 to the HPCI room, computer room and cable spreading rooms was determined to be most vulnerable at the CO_2 tank. The CO_2 tank, located in the turbine building, was not anchored down and the battery racks, which supply dedicated DC power to the system, were not supported at their ends. It was determined that during an earthquake the end batteries would fall from the racks cutting off the DC power supply to the CO_2 system. This fragility was estimated to have a median capacity of 0.3 g. Additionally, the probability of the tank slipping enough to rupture the outlet pipe was analyzed and a median capacity of 0.41 g was computed. Diversion of CO_2 will result if one or both of these systems fail.

As was the case for other root causes involving the cable spreading room, credit for operator recovery from the remote shutdown panel was allowed.

3.3.13 Root Cause 13--FPS Actuation Due to Unknown Causes

The incremental increase in core damage frequency for this root cause was found to be 4.4E-7/ry. It again arises due to inadvertent actuations in the cable spreading room giving rise to Sequence 1. Credit was given for operator recovery from the remote shutdown panel.

3.4 Summary

As described above, of the thirteen root cause scenarios postulated to lead to core damage resulting from actuation of the fire protection systems, three were found either not to be applicable to the plant or could be screened based on the probability of random failures (FPS actuation preventing manual fire-fighting, operator recovery of random failures and seismically induced FPS mechanical failure).

The ten remaining root cause scenarios led to an increase in core damage frequency with the following distribution:

Mean	2.3E-5
Median	1.2E-5
5th%	1.3E-6
95th%	8.5E-5.

The dominant contributors to this total were Root Causes 8, 12, and 10 which are relay-chatter induced FPS actuation, seismic/fire interaction, and external plant fire causing FPS actuation. These scenarios contributed approximately 88 percent to the total.

Advertent actuation of an FPS (Root Cause 11) contributed 5.7E-7/ry. All of the non-seismic root causes combined contributed approximately 14 percent to the overall core damage frequency.

It must be noted that this was an analysis of a representative BWR. Other plants of the same type might have core damage frequency contributions from root causes which were found to not be applicable in this study. Also, these results are highly dependent on plant-specific equipment and cable locations.

3.5 References

3.1 J. A. Lambright and M. P. Bohn, NUREG/CR-4550, SAND86-2084, Rev. 1/Vol.4, Part 3, Sandia National Laboratories, January 1991.

3.2 A. M. Kolaczkowski, et al., NUREG/CR-4550, SAND86-1309, Rev. 1/Vol. 4, Part 1, Sandia National Laboratories, August 1989.

3.3 Units 2 and 3 Fire Protection Program for Plants Under Study.

3.4 Wheelis, W.T., User's Guide for a Personal-Computer-Based Nuclear Power Plant Fire Data Base, NUREG/CR-4586, SAND86-0300, Sandia National Laboratories, August 1986.

3.5 L. T. Cooper and G. P. Forney, The Consolidated Compartment Fire Model (CCFM) Computer Code Application CCFM.VENTS: Part 1: Physical Basis, NISTIR-4342, U.S. Department of Commerce, July 1990.

3.6 J. A. Lambright, et al., Evaluation of Generic Issue 57: Effects of Fire Protection System Actuation on Safety-Related Equipment, Main Report, NUREG/CR-5580, SAND91-1507, Sandia National Laboratories, December 1992.

3.7 D. L. Bernrauter et al., Seismic Hazard Characterization of 69 Nuclear Power Plant Sites East of the Rocky Mountains, NUREG/CR-5250, UCID-21517, Lawrence Livermore National Laboratory, October 1988.

3.8 Electric Power Research Institute, Seismic Hazard Methodology for the Central and Eastern United States, EPRI NP-4726, Vols. 1-10, July 1968.

3.9 A. D. Swain, Handbook of Human Reliability Analysis with Emphasis on Nuclear Power Plant Applications, NUREG/CR-1278, August 1983.

4.0 SENSITIVITY STUDIES

The results in Chapter 3 represent a base case analysis that uses the parameter values presented in Reference 4.1. As discussed there, several of the parameter value estimates are thought to be more uncertain than other estimates. In particular, the values taken for the probability of a fire given tipping or sliding failure of an energized motor control center or bus, the probability of equipment damage from the FPS actuation and the probability of barrier failure are best estimate values, but with less data for justification of assignment. This section describes sensitivity studies in which three of the more uncertain estimates are varied (i.e., the probability of a fire given tipping or sliding failure of an energized electrical cabinet, the probability of FPS damage to cables, and the probability of barrier failure). Additionally, in this section a sensitivity study is presented comparing the CDF contribution from the seismic root causes utilizing the LLNL and the EPRI hazard curves. Table 4.1 summarizes the results of these studies and also presents a fifth sensitivity study; a combination of all four sensitivity studies. Descriptions of each sensitivity study are presented below.

Calculations for sensitivity studies of core damage frequency and risk are accomplished by the use of the top event matrix analysis code TEMAC (Ref. 4.2) and the latin hypercube sampling code (Ref. 4.3).

4.1 Sensitivity Study 1--Comparison of CDF Utilizing the LLNL and EPRI Seismic Hazard Curves

At this time, both sets of hazard curves are viewed by the USNRC as being equally credible. As such, calculations of the seismic core damage frequencies can be made for both sets of hazard curves and the results viewed as a measure of methodological uncertainty in the hazard curve development process.

In the base case analysis, the LLNL seismic hazard curves were utilized to calculate the CDF contribution for each of the applicable seismic root causes (7, 8, and 12) to be consistent with the NUREG-1150 studies. As a point of comparison, the CDF contribution from the seismic root causes were also calculated using the EPRI seismic hazard curves. All other values were kept the same as in the base case study. The results are presented in Table 4.2. Figures 4.1 and 4.2 present the LLNL hazard curves and the EPRI hazard curves, respectively.

4.2 Sensitivity Study 2--Decrease in the Probability of a Fire Given Tipping or Sliding Failure of an Energized Electrical Cabinet

For the base case analysis, the probability of a fire given the tipping or sliding failure of an electrical cabinet was assigned a value of 0.5. This value was based on engineering judgement and takes into account industrial earthquake experiences of a similar nature. However, the actual probability may be less than the base case value.

Table 4.1

Summary of Sensitivity Results in Terms of Core Damage Frequency (Per Reactor Year)**

Root Cause	Base Case	Study 1 EPRI Hazard Curves	Study 2 Decrease in Probability of a Seismic Fire
1.	5.7E-7	N/A*	N/A
2.	Not applicable for plant under consideration.		
3.	Not applicable for plant under consideration.		
4.	3.3E-7	N/A	N/A
5.	2.3E-8	N/A	N/A
6.	5.4E-7	N/A	N/A
7.	3.3E-7	4.0E-8	N/A
8.	1.1E-5	1.2E-6	N/A
9.	Not applicable for plant under consideration.		
10.	6.9E-7	N/A	N/A
11.	5.7E-7	N/A	N/A
12.	8.6E-6	8.3E-7	1.7E-6
13.	4.4E-7	N/A	N/A
Total	2.3E-5	5.2E-6	1.6E-5

* All entries listed as N/A were not requantified from the base case. Therefore, the total for each sensitivity study can be obtained by using the base case frequency for these entries.

** All entries in this table represent mean values of uncertainty analysis results given in Appendix A.

Table 4.1 (Concluded)

Summary of Sensitivity Results
in Terms of Core Damage Frequency (Per Reactor Year)**

Root Cause	Base Case	Study 3 Reduced CO_2 Damage to Cable	Study 4 Barrier Failure = .01	Study 5 All Combined
1.	5.7E-7	1.1E-7	5.7E-8	1.1E-8
2.	Not applicable for plant under consideration.			
3.	Not applicable for plant under consideration.			
4.	3.3E-7	6.6E-8	N/A	6.6E-8
5.	2.3E-8	<1.0E-8	<1.0E-8	<1.0E-8
6.	5.4E-7	1.1E-7	N/A	1.1E-7
7.	3.3E-7	6.6E-8	N/A	<1.0E-8
8.	1.1E-5	N/A*	N/A	1.2E-6
9.	Not applicable for plant under consideration.			
10.	6.9E-7	1.4E-7	N/A	1.4E-7
11.	5.7E-7	1.1E-7	N/A	1.1E-7
12.	8.6E-6	N/A	N/A	1.7E-7
13.	4.4E-7	8.8E-8	N/A	8.8E-8
Total	2.3E-5	2.0E-5	2.3E-5	1.9E-6

* All entries listed as N/A were not requantified from the base case. Therefore, the total for each sensitivity study can be obtained by using the base case frequency for these entries.

** All entries in this table represent mean values of uncertainty analysis results given in Appendix A.

Table 4.2

Core Damage Frequencies for Sensitivity Study 1
EPRI Seismic Hazard Curves (Per Reactor Year)*

Root Cause	Sequence 1	Sequence 2	Sequence 3	Total
1	---	---	---	
2	---	---	---	
3	---	---	---	
4	---	---	---	
5	---	---	---	
6	---	---	---	
7	---	4.0E-8	---	
8	---	---	1.2E-6	
9	---	---	---	
10	---	---	---	
11	---	---	---	
12	---	8.3E-7	---	
13	---	---	---	
Totals	---	8.7E-7	1.2E-6	2.1E-6

Sequence 1 - $T3_A QU_1U_2X_1U_3$

Sequence 2 - $T1_A\bar{B}U_1U_2X_1U_3$

Sequence 3 - $T1_A BU_1U_2$

* All entries in this table are mean values.

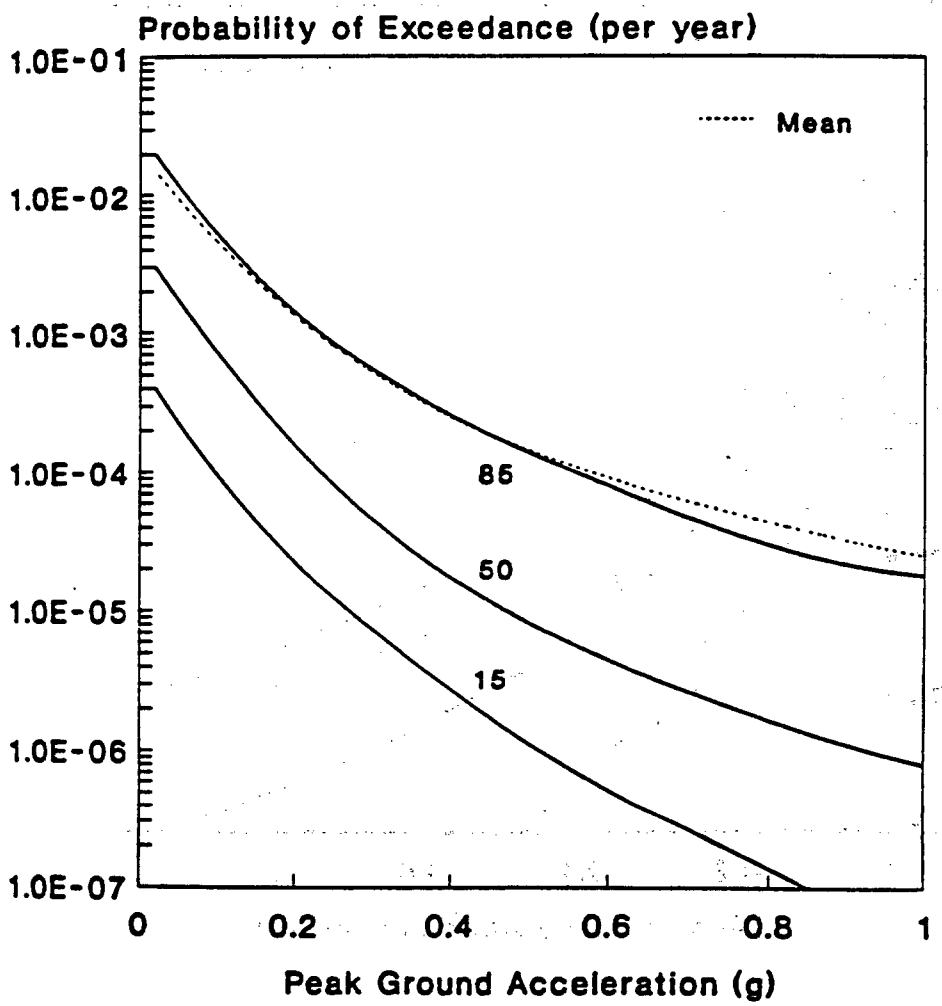

Figure 4.1. LLNL Hazard Curves: Mean, Median 85th and 15th Percentile Curves

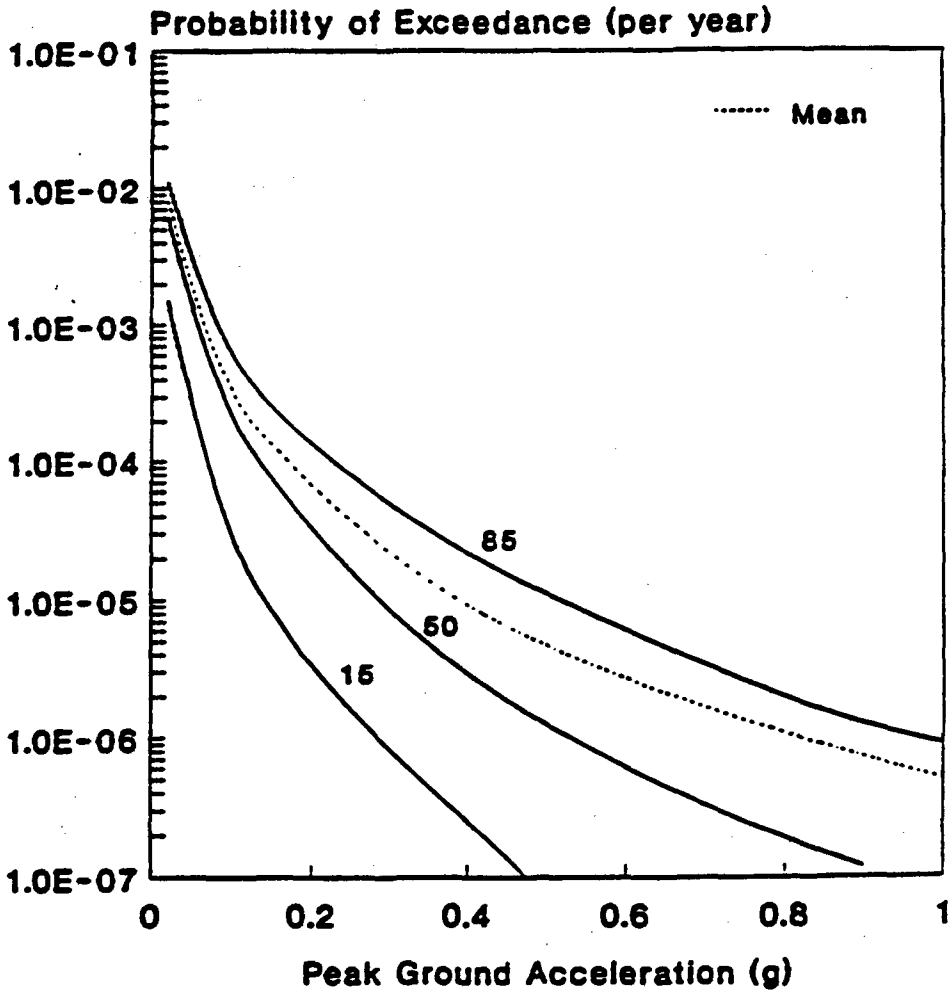

Figure 4.2. EPRI Hazard Curves: Mean, Median 85th and 15th Percentile Curves

Consequently, for this sensitivity study, the probability of a fire given the tipping or sliding failure of an energized electrical cabinet was reduced by a factor of 5. All other numerical values were kept the same as in the base case. The accident sequence cut sets were requantified to determine a new value of the incremental increase in core damage frequency. Since this study involves seismic/fire interaction, the only root cause affected is Root Cause 12. The requantified contribution to the core damage frequency is presented in Table 4.3.

4.3 Sensitivity Study 3--Decrease in Cable Damage From CO_2

In the base case analysis, any FPS actuation was assumed to damage cables with equal probability. Cable damage is assumed to occur due to inadequate seals for the cables and the possibility of erroneous signals being generated in cables exposed to an overdump of CO_2 or water intrusion. The probability of FPS damage to cables was treated as a sensitivity issue. In this sensitivity study, the median probability of FPS damage to cables was lowered from 3.0E-3 to 6.0E-4.

For the plant under study, this reduced probability only affects the cable spreading room. The reason is that all of the other Fire Zones contain (primarily) active electromechanical equipment for which the probability of damage was kept as-is for the fire suppressant agent specific values developed as described in Chapter 3 of Reference 4.1. The cable spreading room (Fire Zone 25) contains mostly cables with some relay panels. Consequently, this sensitivity study was calculated assuming a probability of cable damage from FPS actuation of 6.0E-4 for Fire Zone 25, with all other zones remaining the same as in the base case. The requantified incremental increases in core damage frequency are presented in Table 4.4.

4.4 Sensitivity Study 4--Decrease in Barrier Failure Probability

For the base case quantification, the probability of failure of the barriers between two Fire Zones was taken to be 0.1. The probability of barrier failure to smoke for the ESGR ceiling may be less than the generic barrier failure probability. Therefore, for this fourth sensitivity study, the barrier failure probability between zones was taken to be 0.01.

The requantified incremental increases in core damage frequency are presented in Table 4.5. Since Root Causes 4, 6, 7, 8, 10, 11, 12, and 13 do not depend on barrier failures, their values do not change in this case. For Root Cause 1, the value decreases an order of magnitude. This result is due to all of the cut sets for this root cause requiring the failure of one barrier between two zones.

Table 4.3

Core Damage Frequencies for Sensitivity Study 2-Reduced Probability of a Fire Given Tipping or Sliding Failure of an Energized Electrical Cabinet (Per Reactor Year)*

Root Cause	Sequence 1	Sequence 2	Sequence 3	Total
1	---	---	---	
2	---	---	---	
3	---	---	---	
4	---	---	---	
5	---	---	---	
6	---	---	---	
7	---	---	---	
8	---	---	---	
9	---	---	---	
10	---	---	---	
11	---	---	---	
12	---	1.7E-6	---	
13	---	---	---	
Totals	---	1.7E-6	---	1.7E-6

Sequence 1 - $T3_A QU_1 U_2 X_1 U_3$

Sequence 2 - $T1_A \bar{B} U_1 U_2 X_1 U_3$

Sequence 3 - $T1_A BU_1 U_2$

* All entries in this table are mean values.

Table 4.4

Core Damage Frequencies for Sensitivity Study 3-Reduced Probability of Cable Damage from CO_2 (Per Reactor Year)*

Root Cause	Sequence 1	Sequence 2	Sequence 3	Total
1	---	1.1E-7	---	
2	---	---	---	
3	---	---	---	
4	6.6E-8	---	---	
5	<1.0E-8	---	---	
6	1.1E-7	---	---	
7	---	6.6E-8	---	
8	---	---	---	
9	---	---	---	
10	1.4E-7	---	---	
11	1.1E-7	---	---	
12	---	---	---	
13	8.8E-8	---	---	
Totals	5.1E-7	1.8E-7	---	6.9E-7

Sequence 1 - $T3_A QU_1U_2X_1U_3$

Sequence 2 - $T1_A \bar{B}U_1U_2X_1U_3$

Sequence 3 - $T1_A BU_1U_2$

* All entries in this table are mean values.

Table 4.5

Core Damage Frequencies for Sensitivity Study 4-Reduced Probability of Barrier Failure (Per Reactor Year)*

Root Cause	Sequence 1	Sequence 2	Sequence 3	Total
1	---	5.7E-8	---	
2	---	---	---	
3	---	---	---	
4	---	---	---	
5	<1.0E-8	---	---	
6	---	---	---	
7	---	---	---	
8	---	---	---	
9	---	---	---	
10	---	---	---	
11	---	---	---	
12	---	---	---	
13	---	---	---	
Totals	<1.0E-8	5.7E-8	---	5.7E-8

Sequence 1 - $T3_A QU_1 U_2 X_1 U_3$

Sequence 2 - $T1_A \bar{B} U_1 U_2 X_1 U_3$

Sequence 3 - $T1_A B U_1 U_2$

* All entries in this table are mean values.

4.5 Sensitivity Study 5--Combination of Studies 1, 2, 3 and 4

For this final sensitivity study, the changes mentioned in the four previous studies were incorporated simultaneously. Specifically, the EPRI seismic hazard curves were used in place of the LLNL curves to obtain the CDF contribution for each of the seismic root causes, the probability of a fire given tipping or sliding failure of an energized cabinet was taken to 0.1, the mean probability of CO_2 FPS damage in Fire Zone 25 was taken to be 6.0E-4, and the probability of barrier failure was assumed to be 0.01.

The accident sequence cut sets were then requantified with all other values being kept the same as in the base case. Hence, this sensitivity study represents the most optimistic analysis--and the most optimistic results--in this report.

The resulting increments in core damage frequency are summarized in Table 4.6. For Root Cause 1, the total increment has decreased from 5.7E-7/ry in the base case to 1.1E-8/ry. Accident Sequence 2 and Fire Zone 25 remain the major contributor, as in the base case for this root cause.

The total increment for Root Cause 4 decreases from 3.3E-7/ry in the base case to 6.6E-8/ry here. Sequence 1 and the cable spreading room remain the dominant contributors.

For Root Cause 6, the total increment decreases from 5.4E-7/ry to 1.1E-7/ry. Sequence 1 and the cable spreading room remain the dominant contributors for this root cause.

For Root Case 10, core damage frequency decreased from 6.9E-7/ry to 1.4E-7/ry. Sequence 1 involving the cable spreading room is the most dominant contributor.

For Root Cause 11, core damage frequency decreased from 5.7E-7/ry to 1.1E-7/ry with Sequence 1 still being the dominant contributor.

The total increment for Root Cause 13 contribution to core damage frequency decreased from 4.4E-7/ry to 8.8E-8/ry. Sequence 1 and the cable spreading room are the dominant contributors for this root cause.

The core damage frequency contribution from seismic Root Cause 8, which involves relay chatter in the Diesel Generator rooms, decreased from 1.1E-5/ry to 1.2E-6/ry. The reduction in core damage frequency of almost an order of magnitude is a result of utilizing the EPRI hazard curves to calculate the CDF.

For seismic Root Cause 7 which involves FPS actuation from dust in a seismic event, the reduction in damage to cable by FPS agent combined with utilizing the EPRI hazard curves to calculate the CDF reduced core damage frequency from 3.3E-7/ry to <1.0E-8/ry.

Table 4.6

Core Damage Frequencies for Sensitivity Study 5 - Combination of Sensitivity Studies 1, 2, 3 and 4 (Per Reactor Year)*

Root Cause	Sequence 1	Sequence 2	Sequence 3	Total
1	---	1.1E-8	---	
2	---	---	---	
3	---	---	---	
4	6.6E-8	---	---	
5	<1.0E-8	---	---	
6	1.1E-7	---	---	
7	---	<1.0E-8	---	
8	---	---	1.2E-6	
9	---	---	---	
10	1.4E-7	---	---	
11	1.1E-7	---	---	
12	---	---	1.7E-7	
13	8.8E-8	---	---	
Totals	5.1E-7	1.1E-8	1.4E-6	1.9E-6

Sequence 1 - $T3_A QU_1U_2X_1U_3$

Sequence 2 - $T1_A\bar{B}U_1U_2X_1U_3$

Sequence 3 - $T1_A BU_1U_2$

* All entries in this table are mean values.

For Root Cause 12, which is seismic/fire interaction in the cable spreading room, the reduction in the probability of fire given tipping or sliding failure of an energized cabinet combined with utilizing the EPRI hazard curves to calculate the CDF reduced core damage frequency from 8.6E-6/ry to 1.7E-7/ry.

The net result of this most optimistic analysis is to decrease the increments in total core damage frequency by more than an order of magnitude. However, Root Causes 8, 12, and 10 remain the dominant root causes.

4.5 Summary

The requantified contributions to core damage frequency are summarized in Table 4.1. The results of these sensitivity studies show that the most dominant effect was utilizing the EPRI hazard curves for the calculation of the core damage frequency for Root Causes 7, 8, and 12. This reduced the core damage frequency for each of these root causes by approximately an order of magnitude. The reduction of the probability of a fire given tipping or sliding of an energized cabinet had the second most dominant effect on the CDF. However, this reduction only affected Root Cause 12.

The impact of reducing the probability of barrier failure was an order of magnitude for Root Cause 1, but did not impact any other root causes. By reducing probability of CO_2 agent damage to cabling, a factor of five decrease occurred for Root Causes 1, 4, 6, 7, 10, 11, and 13. Additional data for the uncertain parameters varied in these studies will be required to understand the true incremental increase in core damage frequency due to FPS actuations.

4.6 References

4.1 J. A. Lambright, et al., Evaluation of Generic Issue 57: Effects of Fire Protection System Actuation on Safety-Related Equipment, Main Report, NUREG/CR-5580, SAND91-1507, December 1992.

4.2 R. L. Iman, et al., A User's Guide for the Top Event Matrix Analysis Code (TEMAC), NUREG/CR-4598, SAND86-0960, Sandia National Laboratories, August 1986.

4.3 R. L. Iman, et al., A Fortran 77 Program and User's Guide for the Generation of Latin Hypercube and Random Samples for Use with Computer Models, NUREG/CR-3624, SAND83-2365, Sandia National Laboratories, June 1984.

5.0 OFFSITE DOSE AND RISK ASSESSMENT

This chapter will provide the derivation of the offsite dose calculations for this analysis and present the risk calculations for each of the applicable root causes. Appendix B presents the uncertainty calculations for risk as well as for each cut set for the seismic and non-seismic root causes.

5.1 Offsite Dose Calculations

To convert the calculated core damage frequencies to offsite dose, the methodology outlined in Reference 5.1 for a BWR4/Mark I was utilized. This section details the specific application of this methodology.

There are two containment functions that are important during accidents: containment overpressure protection (COP) and post accident radioactivity removal (PARR). Successful COP is defined as successful blowdown of steam from the reactor vessel to the suppression pool (or in some cases, the main condenser). Successful long-term COP requires that heat then be removed from the suppression pool via the Residual Heat Removal system. PARR also involves the suppression pool and is dependent on successful COP. If the suppression pool water inventory is maintained and cooled during a core meltdown then a large fraction of the fission products released from the core should be retained in the pool. Knowing the status of COP and PARR during a severe accident is the starting point for estimating containment failure modes and accident releases. Table 5.1 provides a listing and description of the containment failure modes for each of three accident sequence types. The seismic root causes for this analysis were grouped into accident sequence type 1 and the transient sequences associated with the non-seismic root causes were grouped into accident sequence type 2.

Using the estimates of fission product release, the potential consequences that could result from an accident were calculated. The calculations were performed using the CRAC code (Ref. 5.2). The primary CRAC code result is the radiation dose in person-rem received by the population around the plant after an accident integrated out to a distance of fifty miles. It was assumed for these calculations a remaining plant operational lifetime of 20 years.

Three different sets of CRAC results were calculated. The first calculation uses the release fractions presented in Table 5.2 and is called the "upper bound" calculation. For the second calculation, all of the release fractions except for the noble gases were uniformly reduced by a factor of seventy percent (0.3 times the upper bound). This is called the "central" calculation. For the final "lower bound" calculation, all of the upper bound release fractions except noble gases were uniformly reduced by ninety percent (0.1 times the upper bound values). These additional calculations were performed to illustrate the

Table 5.1

Estimated Containment Failure Modes

Accident Sequence Type	Containment Failure Mode Probability	Release Category
1. LOCAs with loss of coolant injection systems and station blackout accidents	α = 1.0E-2	PB-1
	β = 1.0E-2	PB-2
	γ' = 1.8E-1	PB-2
	γ = 7.3E-1	PB-3
	δ = 1.0E-2	PB-4
2. Transients with loss of coolant injection systems	α = 1.0E-2	PB-1
	γ' = 2.0E-1	PB-2
	γ = 7.8E-1	PB-3
	δ = 1.0E-2	PB-4
3. LOCAs and transients with successful injection but no containment heat removal or suppression pool bypass	α = 1.0E-2	PB-1
	γ' = 2.0E-1	PB-2
	γ = 7.9E-1	PB-3

α = Containment failure from a steam explosion in the reactor vessel

β = Containment failure from a steam explosion in the containment

γ' = Containment failure from overpressure with release direct to the atmosphere

γ = Containment failure from overpressure with release thru the reactor building

δ = Containment isolation failure

Table 5.2

Upper Bound Source Term

RELEASE CATEGORY	FISSION PRODUCT RELEASE FRACTION						
	Xe	I	Cs	Te	Sa	Ru	La
PB-1	1.0	3.0E-1	6.0E-1	4.0E-1	7.0E-2	3.0E-1	4.0E-3
PB-2	1.0	5.0E-1	6.0E-1	4.0E-1	7.0E-2	4.0E-2	6.0E-3
PB-3	1.0	9.0E-2	2.0E-1	1.0E-1	3.0E-2	1.0E-2	2.0E-3
PB-4	1.0	4.4E-4	6.2E-3	1.6E-2	5.1E-4	9.8E-4	1.9E-4

potential sensitivity of the results to variations in the source term. This selection of source terms should not, however, be interpreted as an endorsement of any particular set. The "real" source term may be larger or smaller. The results of the three CRAC code calculations are given in Table 5.3.

Table 5.4 provides the results in terms of risk (person-REM) for the base case as well as the sensitivity studies described in Chapter 4 of this report. The base case total is 137 person-REM. Two of the seismic root causes (8 and 12) represent approximately 85 percent of this total. The leading contributor is Root Cause 8 (relay chatter) at 46 percent.

5.2 Summary

The results of these sensitivity studies show that the most dominant effect was utilizing the EPRI seismic hazard curves for the calculation of the core damage frequency for Root Causes 7, 8, and 12. This reduced the risk for each of these root causes by approximately an order of magnitude. The reduction of the probability of a fire given tipping or sliding of an energized cabinet had the second most dominant effect on reducing the risk.

The impact of reducing the probability of barrier failure was an order of magnitude for Root Cause 1, but did not impact any other of the root causes. By reducing probability of CO_2 agent damage to cabling, a factor of five decrease occurred for Root Causes 1, 4, 6, 7, 10, 11, and 13.

Table 5.3

CRAC Code Results
(Person-REM)

Fission Product Category	Upper Bound Estimate	Central Estimate	Lower Release Estimate
PB-1	4.3E+05	3.8E+05	2.3E+05
PB-2	6.2E+05	4.7E+05	2.8E+05
PB-3	5.0E+05	2.9E+05	1.8E+05
PB-4	9.2E+04	5.8E+04	3.2E+04

Table 5.4

Summary of Base Case and Sensitivity Study Results in Terms of Risk (Person-REM)

Root Cause	Base Case	Study 1 EPRI Hazard Curve	Study 2 Decrease in Probability of a Seismic Fire
1.	3.2	N/A	N/A
2.	Not applicable for the plant under consideration.		
3.	Not applicable for the plant under consideration.		
4.	1.9	N/A	N/A
5.	0.1	N/A	N/A
6.	3.5	N/A	N/A
7.	2.0	0.2	N/A
8.	63.2	6.9	N/A
9.	Not applicable for the plant under consideration.		
10.	4.3	N/A	N/A
11.	3.3	N/A	N/A
12.	53.2	5.1	10.5
13.	2.6	N/A	N/A
Total	137.0	30.8	94.3

*N/A reflects no modification from the base case.

**All values listed in table are mean values.

Table 5.4 (Concluded)

Summary of Base Case and Sensitivity Study Results in Terms of Risk (Person-REM)

Root Cause	Base Case	Study 3 Reduced FPS Damage to Cable	Study 4 Barrier Failure-0.01	Study 5 All Combined
1.	3.2	0.6	0.3	0.1
2.	Not applicable for the plant under consideration.			
3.	Not applicable for the plant under consideration.			
4.	1.9	0.4	N/A*	0.4
5.	0.1	<0.1	<0.1	<0.1
6.	3.5	0.7	N/A	0.7
7.	2.0	0.4	N/A	<0.1
8.	63.2	N/A	N/A	6.9
9.	Not applicable for the plant under consideration.			
10.	4.3	0.9	N/A	0.9
11.	3.3	0.6	N/A	0.6
12.	53.2	N/A	N/A	1.1
13.	2.6	0.5	N/A	0.5
Total	137.0	120.5	120.2	11.2

*N/A reflects no modification from the base case.

**All values listed in table are mean values.

5.3 References

5.1 S.W. Hatch, et al., Shutdown Decay Heat Removal Analysis of a General Electric BWR4/Mark I, Sandia National Laboratories, NUREG/CR-4767, SAND86-2419, July 1987.

5.2 L. T. Ritchie et al., Calculations of Reactor Accident Consequences Version 2-CRAC2: Computer Code, NUREG/CR-2552, SAND82-0342, Sandia National Laboratories, April 1984.

APPENDIX A

Uncertainty Analysis
Core Damage Frequency

Definition of Terms

L-OPC	- frequency of operator error failures of CO_2 system
PDAMC	- probability of cable damage due to CO_2
L-CSR	- frequency of fire in the cable spreading room
L-EF	- probability of a external fire
L-RAC	- frequency of hardware failures of CO_2 system
L-UNC	- frequency of unknown failures of CO_2 system
FS1	- that percentage of fires which are in the "large" category
L-SGR	- frequency of fire, emergency switchgear room
L-PB	- frequency of steam pipe break in the cable spreading room
QITG	- probability of failure to manually suppress the fire before automatic detection occurs, cable spreading room
Q2TG	- probability of failure to manually suppress fire, cable spreading room, seismic event
QB-AUTO	- probability that the automatic $C0_2$ suppression system will not suppress the fire, cable spreading room
PBAR	- probability of barrier failure
PACT	- probability of manual actuation of FPS
FA2	- area ratio for a small fire, cable spreading room
FA1	- area ratio for a large fire, cable spreading room
FS2	- that percentage of fires which are in the "small" category
NRP	- probability of non-recovery from the remote shutdown panel during a seismic event
DGACTNR9HR	- probability of non-recovery of one of the diesel generators

Definition of Terms (Concluded)

QR	- probability of non-recovery from the remote shutdown panel
A	- Root Cause 7, cable spreading room
B	- Root Cause 8, diesel generator rooms
C	- Root Cause 12, cable spreading room

Top Event Matrix Analysis Code

The following printouts represent the output of the Top Event Matrix Analysis Code (TEMAC) used to quantify the uncertainty analyses for Core Damage Frequency and for Risk. TEMAC accomplishes this quantification using parameter value samples generated by the Latin Hypercube Sampling code (LHS). LHS is a constrained Monte Carlo technique which forces all parts of a distribution to be sampled. For the composite, and for each Root Cause, the following information is provided:

- Top event frequency distribution.
- Risk increases and reductions by base events sorted by risk reduction.
- Risk reduction by base event.
- Risk increase by base event.
- Cutset frequencies.
- Cutsets contributing to the Root Cause.

Definitions of key terms in the TEMAC printouts are:

• Risk reduction - For each basic event, the probability of occurrence of that event is set to zero and the reduction in core damage frequency or risk is calculated.

• Risk increase - For each basic event, the probability of occurrence of that event is set to 1.0 and the increase in core damage frequency or risk is calculated.

• Uncertainty importance - For each basic event, its distribution is eliminated from the overall uncertainty calculation by setting the event to its mean value. The percent decrease in the logarithm of the overall uncertainty is then calculated.

Composite Uncertainty Analysis

Core Damage Frequency

COMPOSITE RUN UPDATED FOR 9-11 CHANGE

TOP EVENT COMPOSITE CONTAINS 20 EVENTS IN 10 CUT SETS

THE FREQUENCY OF TOP EVENT COMPOSITE IS 3.90E-05

DESCRIPTIVE STATISTICS FOR THE FREQUENCY OF TOP EVENT COMPOSITE

N	1000
MEAN	2.30E-05
STD DEV	3.13E-05
LOWER 5%	1.34E-06
LOWER 25%	4.79E-06
MEDIAN	1.16E-05
UPPER 25%	2.71E-05
UPPER 5%	8.53E-05

90% UNCERTAINTY INTERVAL FOR TOP EVENT FREQUENCY (INNERMOST BRACKETS DENOTE INTERQUARTILE RANGE, ASTERISK DENOTES MEDIAN, N DENOTES NOMINAL VALUE AND M DENOTES MEAN)

```
5% =   1.34E-06                          ***LOG SCALE***                          95% =   8.53E-05
I-----------------------------[----------------------*----------------M---]--------N-------------------I
```

NOMENCLATURE:

PD = PARTIAL DERIVATIVE

TEF = FREQUENCY OF THE TOP EVENT

EV(J) = PROBABILITY OF EVENT J FOR BASE EVENTS
= FREQUENCY OF EVENT J FOR INITIATING EVENTS

MEASURES:

1. FOR BASE EVENTS AND INITIATING EVENTS:

   RISK REDUCTION = PD x EV(J)
   = TEF - TEF(EVALUATED WITH EV(J) = 0)

2. FOR BASE EVENTS ONLY:

   RISK INCREASE = PD - RISK REDUCTION
   = PD x (1 - EV(J))
   = TEF(EVALUATED WITH EV(J) = 1) - TEF

COMPOSITE RUN UPDATED FOR 9-11 CHANGE

RISK REDUCTIONS RISK INCREASES BY BASE EVENT AND SORTED BY RISK REDUCTION

BASE EVENT	OCCUR	PROB	(RANK)	RISK REDUCTION	(RANK)	RISK INCREASE	(RANK)
A	1	2.13E-06	(20.0)	9.11E-02	(1.0)	1.36E-07	(18.0)
C	1	5.73E-05	(19.0)	8.97E-02	(2.0)	3.90E-06	(6.5)
B	1	9.18E-04	(17.0)	5.27E-03	(3.0)	1.30E-05	(1.5)
DGACTNR9HR	1	2.00E-02	(10.0)	2.46E-03	(4.0)	1.30E-05	(1.5)
PDAMC	7	3.00E-03	(11.5)	1.72E-03	(5.0)	9.01E-06	(3.5)
L-EF	1	3.00E-03	(11.5)	4.63E-04	(8.0)	1.93E-06	(13.0)
L-UNC	1	1.80E-03	(15.0)	4.63E-04	(8.0)	8.71E-07	(16.0)
L-PB	1	1.00E-04	(18.0)	4.63E-04	(8.0)	1.29E-08	(19.0)
L-OPC	1	1.40E-03	(16.0)	4.63E-04	(8.0)	2.41E-06	(8.0)
L-RAC	1	2.30E-03	(14.0)	4.63E-04	(8.0)	3.13E-07	(17.0)
L-CSR	1	2.70E-03	(13.0)	4.24E-04	(11.0)	2.06E-06	(10.5)
QR	7	6.40E-02	(8.0)	1.02E-04	(12.0)	9.01E-06	(3.5)
NRP	2	3.20E-01	(6.0)	4.43E-05	(13.0)	4.04E-06	(5.0)
L-SGR	1	2.40E-02	(9.0)	3.41E-05	(14.0)	1.40E-06	(14.5)
PBAR	1	1.00E-01	(7.0)	1.91E-05	(15.0)	1.40E-06	(14.5)
Q2TG	1	9.50E-01	(4.5)	3.96E-06	(16.0)	3.90E-06	(6.5)
Q1TG	1	9.60E-01	(2.5)	2.17E-06	(17.0)	2.06E-06	(10.5)
QB-AUTO	1	9.50E-01	(4.5)	2.11E-06	(18.0)	2.06E-06	(10.5)
FA2	1	9.60E-01	(2.5)	2.09E-06	(19.0)	2.06E-06	(10.5)
PACT	1	1.00E+00	(1.0)	1.92E-08	(20.0)	0.00E+00	(20.0)

COMPOSITE RUN UPDATED FOR 9-11 CHANGE

RISK REDUCTION BY BASE EVENT (WITH ASSOCIATED UNCERTAINTY INTERVALS)

BASE EVENT	OCCUR	PROB	(RANK)	RISK REDUCTION	(RANK)	LOWER 5%	UPPER 5%
A	1	2.13E-06	(20.0)	9.11E-02	(1.0)	1.89E-09	1.62E-06
C	1	5.73E-05	(19.0)	8.97E-02	(2.0)	1.94E-08	4.68E-05
B	1	9.18E-04	(17.0)	5.27E-03	(3.0)	6.75E-08	5.05E-05
DGACTNR9HR	1	2.00E-02	(10.0)	2.46E-03	(4.0)	6.75E-08	5.05E-05
PDAMC	7	3.00E-03	(11.5)	1.72E-03	(5.0)	1.10E-07	1.24E-05
L-EF	1	3.00E-03	(11.5)	4.63E-04	(8.0)	1.36E-08	2.94E-06
L-UNC	1	1.80E-03	(15.0)	4.63E-04	(8.0)	8.43E-09	1.80E-06
L-PB	1	1.00E-04	(18.0)	4.63E-04	(8.0)	4.25E-10	9.55E-08
L-OPC	1	1.40E-03	(16.0)	4.63E-04	(8.0)	6.23E-09	1.27E-06
L-RAC	1	2.30E-03	(14.0)	4.63E-04	(8.0)	1.00E-08	2.49E-06
L-CSR	1	2.70E-03	(13.0)	4.24E-04	(11.0)	1.64E-08	2.03E-06
QR	7	6.40E-02	(8.0)	1.02E-04	(12.0)	1.10E-07	1.24E-05
NRP	2	3.20E-01	(6.0)	4.43E-05	(13.0)	4.28E-08	4.68E-05
L-SGR	1	2.40E-02	(9.0)	3.41E-05	(14.0)	8.14E-09	2.41E-06
PBAR	1	1.00E-01	(7.0)	1.91E-05	(15.0)	8.14E-09	2.41E-06
Q2TG	1	9.50E-01	(4.5)	3.96E-06	(16.0)	1.94E-08	4.68E-05
Q1TG	1	9.60E-01	(2.5)	2.17E-06	(17.0)	1.64E-08	2.03E-06
QB-AUTO	1	9.50E-01	(4.5)	2.11E-06	(18.0)	1.64E-08	2.03E-06
FA2	1	9.60E-01	(2.5)	2.09E-06	(19.0)	1.64E-08	2.03E-06
PACT	1	1.00E+00	(1.0)	1.92E-08	(20.0)		

COMPOSITE RUN UPDATED FOR 9-11 CHANGE

RISK INCREASE BY BASE EVENT (WITH ASSOCIATED UNCERTAINTY INTERVALS)

BASE EVENT	OCCUR	PROB	(RANK)	RISK INCREASE	(RANK)	LOWER 5%	UPPER 5%
B	1	9.18E-04	(17.0)	1.30E-05	(1.5)	2.93E-03	5.60E-02
DGACTNR9HR	1	2.00E-02	(10.0)	1.30E-05	(1.5)	6.83E-06	2.72E-03
QR	7	6.40E-02	(8.0)	9.01E-06	(3.5)	3.96E-06	1.36E-04
PDAMC	7	3.00E-03	(11.5)	9.01E-06	(3.5)	9.94E-05	2.46E-03
NRP	2	3.20E-01	(6.0)	4.04E-06	(5.0)	1.55E-07	1.19E-04
C	1	5.73E-05	(19.0)	3.90E-06	(6.5)	4.63E-02	7.57E-01
Q2TG	1	9.50E-01	(4.5)	3.90E-06	(6.5)	7.12E-10	1.96E-06
L-OPC	1	1.40E-03	(16.0)	2.41E-06	(8.0)	1.04E-05	9.15E-04
L-CSR	1	2.70E-03	(13.0)	2.06E-06	(10.5)	8.84E-06	8.10E-04
FA2	1	9.60E-01	(2.5)	2.06E-06	(10.5)	4.11E-10	9.55E-08
QB-AUTO	1	9.50E-01	(4.5)	2.06E-06	(10.5)	5.11E-10	1.29E-07
Q1TG	1	9.60E-01	(2.5)	2.06E-06	(10.5)	4.15E-10	9.65E-08
L-EF	1	3.00E-03	(11.5)	1.93E-06	(13.0)	1.04E-05	9.16E-04
L-SGR	1	2.40E-02	(9.0)	1.40E-06	(14.5)	4.63E-07	1.00E-04
PBAR	1	1.00E-01	(7.0)	1.40E-06	(14.5)	1.41E-07	1.95E-05
L-UNC	1	1.80E-03	(15.0)	8.71E-07	(16.0)	1.04E-05	9.16E-04
L-RAC	1	2.30E-03	(14.0)	3.13E-07	(17.0)	1.04E-05	9.15E-04
A	1	2.13E-06	(20.0)	1.36E-07	(18.0)	4.90E-02	8.07E-01
L-PB	1	1.00E-04	(18.0)	1.29E-08	(19.0)	1.04E-05	9.18E-04
PACT	1	1.00E+00	(1.0)	0.00E+00	(20.0)		

COMPOSITE RUN UPDATED FOR 9-11 CHANGE

UNCERTAINTY IMPORTANCE BY BASE EVENT

BASE EVENT	OCCUR	PROB	(RANK)	% REDUCTION IN THE UNCERTAINTY OF LOG RISK	(RANK)	Y.05/TE.05*	Y.95/TE.95*
B	1	9.18E-04	(17.0)	31.9	(1.0)	4.60	0.96
C	1	5.73E-05	(19.0)	27.0	(2.0)	4.53	0.91
DGACTNR9HR	1	2.00E-02	(10.0)	7.6	(3.0)	1.23	0.88
PDAMC	7	3.00E-03	(11.5)	4.8	(4.0)	1.27	0.99
NRP	2	3.20E-01	(6.0)	4.4	(5.0)	1.06	0.92
QR	7	6.40E-02	(8.0)	4.3	(6.0)	1.37	0.99
L-RAC	1	2.30E-03	(14.0)	1.1	(7.0)	1.02	1.00
L-EF	1	3.00E-03	(11.5)	0.9	(8.0)	0.99	1.00
L-OPC	1	1.40E-03	(16.0)	0.7	(9.0)	1.02	0.99
QB-AUTO	1	9.50E-01	(4.5)	0.7	(10.0)	1.02	1.00
L-SGR	1	2.40E-02	(9.0)	0.5	(11.0)	1.00	1.00
A	1	2.13E-06	(20.0)	0.4	(12.0)	1.22	1.00
Q1TG	1	9.60E-01	(2.5)	0.4	(13.0)	1.02	1.00
L-CSR	1	2.70E-03	(13.0)	0.3	(14.0)	0.97	1.00
PBAR	1	1.00E-01	(7.0)	0.0	(17.0)		
L-UNC	1	1.80E-03	(15.0)	0.0	(17.0)		
FA2	1	9.60E-01	(2.5)	0.0	(17.0)		
Q2TG	1	9.50E-01	(4.5)	0.0	(17.0)		
L-PB	1	1.00E-04	(18.0)	0.0	(17.0)		
PACT	1	1.00E+00	(1.0)				

COMPOSITE RUN UPDATED FOR 9-11 CHANGE

BASE EVENTS RANKED BY VARIOUS METHODS (RANK 1 = MOST IMPORTANT) AND SORTED BY RISK REDUCTION

BASE EVENT	RISK REDUCTION	RISK INCREASE	UNCERTAINTY IMPORTANCE
A	1.0	18.0	12.0
C	2.0	6.5	2.0
B	3.0	1.5	1.0
DGACTNR9HR	4.0	1.5	3.0
PDAMC	5.0	3.5	4.0
L-EF	8.0	13.0	8.0
L-UNC	8.0	16.0	17.0
L-PB	8.0	19.0	17.0
L-OPC	8.0	8.0	9.0
L-RAC	8.0	17.0	7.0
L-CSR	11.0	10.5	14.0
QR	12.0	3.5	6.0
NRP	13.0	5.0	5.0
L-SGR	14.0	14.5	11.0
PBAR	15.0	14.5	17.0
Q2TG	16.0	6.5	17.0
Q1TG	17.0	10.5	13.0
QB-AUTO	18.0	10.5	10.0
FA2	19.0	10.5	17.0
PACT	20.0	20.0	20.0

COMPOSITE RUN UPDATED FOR 9-11 CHANGE

MATRIX OF TOP-DOWN CORRELATION COEFFICIENTS

	RISK RED	RISK INCR
RISK INCR	0.2585	
UNC IMP	0.5378**	0.8013**

** SIGNIFICANT AT APPROXIMATELY THE .01 LEVEL

THE TOP-DOWN CORRELATION COEFFICIENTS ARE USED TO DETERMINE THE LEVEL OF AGREEMENT AMONG ALL PAIRS OF RANKINGS IN THE PREVIOUS TABLE. THE TOP-DOWN CORRELATION COEFFICIENT GIVES MORE WEIGHT TO THE SMALLEST RANKS. NOTE THAT THE SMALLEST RANKS ARE ASSIGNED TO THE MOST IMPORTANT BASE EVENTS. MORE DETAIL ON THIS STATISTIC CAN BE FOUND IN THE IMAN AND CONOVER (1985) REFERENCE IN THE USER'S GUIDE THAT ACCOMPANIES THIS CODE.

COMPOSITE RUN UPDATED FOR 9-11 CHANGE

CUT SET FREQUENCIES AND NORMALIZED CUT SET FREQUENCIES (WITH ASSOCIATED UNCERTAINTY INTERVALS)

CUT SET	ORDER	CUT SET FREQUENCY	(RANK)	LOWER 5%	UPPER 5%	NORMALIZED FREQUENCY	CUMULATIVE NORMALIZED FREQUENCY	LOWER 5%	UPPER 5%
6	2	3.13E-05	(1.0)	6.75E-08	5.05E-05	0.8032	0.8032	0.0072	0.9585
7	3	2.13E-05	(2.0)	1.94E-08	4.68E-05	0.5463	1.3495	0.0019	0.9386
2	3	2.68E-06	(3.0)	6.23E-09	1.27E-06	0.0686	1.4181	0.0004	0.1198
9	6	2.52E-06	(4.0)	1.64E-08	2.03E-06	0.0645	1.4826	0.0008	0.2006
8	3	2.51E-06	(5.0)	1.36E-08	2.94E-06	0.0643	1.5469	0.0007	0.2569
1	4	1.87E-06	(6.0)	8.14E-09	2.41E-06	0.0478	1.5947	0.0005	0.2169
10	3	1.22E-06	(7.0)	8.43E-09	1.80E-06	0.0312	1.6259	0.0005	0.1543
5	2	8.18E-07	(8.0)	1.89E-09	1.62E-06	0.0210	1.6468	0.0001	0.1864
4	3	7.55E-07	(9.0)	1.00E-08	2.49E-06	0.0193	1.6662	0.0005	0.1822
3	4	3.21E-08	(10.0)	4.25E-10	9.55E-08	0.0008	1.6670	0.0000	0.0095

COMPOSITE RUN UPDATED FOR 9-11 CHANGE

CUT SET NUMBERS, CUT SET ORDERS, CUT SET FREQUENCIES,
CUMULATIVE NORMALIZED CUT SET FREQUENCIES AND CUT SETS
FOR TOP EVENT COMPOSITE WITH TOP EVENT FREQUENCY 3.90E-05

(THE FIRST COLUMN OF NUMBERS IS THE LINE NUMBERS FOR THE FILE TEMACSETS.DNF)

2	6	2	3.13E-05	0.80317	B	*	DGACTNR9HR	*				
3	7	3	2.13E-05	1.34948	C	*	NRP	*	Q2TG	*		
4	2	3	2.68E-06	1.41807	L-OPC	*	PDAMC	*	QR	*		
5	9	6	2.52E-06	1.48256	FA2	*	L-CSR	*	PDAMC	*	Q1TG	*
6					QB-AUTO	*	QR	*				
7	8	3	2.51E-06	1.54689	L-EF	*	PDAMC	*	QR	*		
8	1	4	1.87E-06	1.59469	L-SGR	*	PBAR	*	PDAMC	*	QR	*
9	10	3	1.22E-06	1.62586	L-UNC	*	PDAMC	*	QR	*		
10	5	2	8.18E-07	1.64681	A	*	NRP	*				
11	4	3	7.55E-07	1.66616	L-RAC	*	PDAMC	*	QR	*		
12	3	4	3.21E-08	1.66698	L-PB	*	PACT	*	PDAMC	*	QR	.

Root Cause 1

ROOT CAUSE 1 RUN

TOP EVENT ROOT-CAUSE-1 CONTAINS 4 EVENTS IN 1 CUT SETS

THE FREQUENCY OF TOP EVENT ROOT-CAUSE-1 IS 4.61E-07

DESCRIPTIVE STATISTICS FOR THE FREQUENCY OF TOP EVENT ROOT-CAUSE-1

N	1000
MEAN	5.71E-07
STD DEV	1.43E-06
LOWER 5%	8.14E-09
LOWER 25%	4.28E-08
MEDIAN	1.45E-07
UPPER 25%	4.60E-07
UPPER 5%	2.41E-06

90% UNCERTAINTY INTERVAL FOR TOP EVENT FREQUENCY (INNERMOST BRACKETS DENOTE INTERQUARTILE RANGE, ASTERISK DENOTES MEDIAN, N DENOTES NOMINAL VALUE AND M DENOTES MEAN)

```
5% =   8.14E-09                          ***LOG SCALE***                          95% =   2.41E-06
I----------------------------[---------------------*--------------------N--M-------------------------I
```

NOMENCLATURE:

PD = PARTIAL DERIVATIVE

TEF = FREQUENCY OF THE TOP EVENT

EV(J) = PROBABILITY OF EVENT J FOR BASE EVENTS
= FREQUENCY OF EVENT J FOR INITIATING EVENTS

MEASURES:

1. FOR BASE EVENTS AND INITIATING EVENTS:

RISK REDUCTION = PD x EV(J)
= TEF - TEF(EVALUATED WITH EV(J) = 0)

2. FOR BASE EVENTS ONLY:

RISK INCREASE = PD - RISK REDUCTION
= PD x (1 - EV(J))
= TEF(EVALUATED WITH EV(J) = 1) - TEF

ROOT CAUSE 1 RUN

RISK REDUCTIONS RISK INCREASES BY BASE EVENT AND SORTED BY RISK REDUCTION

BASE EVENT	OCCUR	PROB	(RANK)	RISK REDUCTION	(RANK)	RISK INCREASE	(RANK)
PDAMC	1	3.00E-03	(4.0)	2.68E-04	(1.0)	1.40E-06	(2.5)
L-SGR	1	2.40E-02	(3.0)	3.41E-05	(2.0)	1.40E-06	(2.5)
PBAR	1	1.00E-01	(1.0)	1.91E-05	(3.0)	1.40E-06	(2.5)
QR	1	6.40E-02	(2.0)	1.59E-05	(4.0)	1.40E-06	(2.5)

ROOT CAUSE 1 RUN

RISK REDUCTION BY BASE EVENT (WITH ASSOCIATED UNCERTAINTY INTERVALS)

BASE EVENT	OCCUR	PROB	(RANK)	RISK REDUCTION	(RANK)	LOWER 5%	UPPER 5%
PDAMC	1	3.00E-03	(4.0)	2.68E-04	(1.0)	8.14E-09	2.41E-06
L-SGR	1	2.40E-02	(3.0)	3.41E-05	(2.0)	8.14E-09	2.41E-06
PBAR	1	1.00E-01	(1.0)	1.91E-05	(3.0)	8.14E-09	2.41E-06
QR	1	6.40E-02	(2.0)	1.59E-05	(4.0)	8.14E-09	2.41E-06

ROOT CAUSE 1 RUN

RISK INCREASE BY BASE EVENT (WITH ASSOCIATED UNCERTAINTY INTERVALS)

BASE EVENT	OCCUR	PROB	(RANK)	RISK INCREASE	(RANK)	LOWER 5%	UPPER 5%
QR	1	6.40E-02	(2.0)	1.40E-06	(2.5)	2.28E-07	3.18E-05
PDAMC	1	3.00E-03	(4.0)	1.40E-06	(2.5)	5.08E-08	5.81E-04
L-SGR	1	2.40E-02	(3.0)	1.40E-06	(2.5)	4.63E-07	1.00E-04
PBAR	1	1.00E-01	(1.0)	1.40E-06	(2.5)	1.41E-07	1.95E-05

ROOT CAUSE 1 RUN

UNCERTAINTY IMPORTANCE BY BASE EVENT

BASE EVENT	OCCUR	PROB	(RANK)	% REDUCTION IN THE UNCERTAINTY OF LOG RISK	(RANK)	Y.05/TE.05*	Y.95/TE.95*
PDAMC	1	3.00E-03	(4.0)	33.8	(1.0)	1.88	0.73
QR	1	6.40E-02	(2.0)	26.2	(2.0)	1.94	0.94
PBAR	1	1.00E-01	(1.0)	25.6	(3.0)	1.89	0.93
L-SGR	1	2.40E-02	(3.0)	14.4	(4.0)	1.40	1.04

ROOT CAUSE 1 RUN

BASE EVENTS RANKED BY VARIOUS METHODS (RANK 1 = MOST IMPORTANT) AND SORTED BY RISK REDUCTION

BASE EVENT	RISK REDUCTION	RISK INCREASE	UNCERTAINTY IMPORTANCE
PDAMC	1.0	2.5	1.0
L-SGR	2.0	2.5	4.0
PBAR	3.0	2.5	3.0
QR	4.0	2.5	2.0

ROOT CAUSE 1 RUN

MATRIX OF TOP-DOWN CORRELATION COEFFICIENTS

RISK INCR	0.0007	
UNC IMP	0.6377	0.0007
	RISK RED	RISK INCR

THERE ARE NO TOP-DOWN CORRELATIONS THAT ARE SIGNIFICANT AT THE .05 LEVEL OR LESS

THE TOP-DOWN CORRELATION COEFFICIENTS ARE USED TO DETERMINE THE LEVEL OF AGREEMENT AMONG ALL PAIRS OF RANKINGS IN THE PREVIOUS TABLE. THE TOP-DOWN CORRELATION COEFFICIENT GIVES MORE WEIGHT TO THE SMALLEST RANKS. NOTE THAT THE SMALLEST RANKS ARE ASSIGNED TO THE MOST IMPORTANT BASE EVENTS. MORE DETAIL ON THIS STATISTIC CAN BE FOUND IN THE IMAN AND CONOVER (1985) REFERENCE IN THE USER'S GUIDE THAT ACCOMPANIES THIS CODE.

ROOT CAUSE 1 RUN

CUT SET FREQUENCIES AND NORMALIZED CUT SET FREQUENCIES (WITH ASSOCIATED UNCERTAINTY INTERVALS)

CUT SET	ORDER	CUT SET FREQUENCY	(RANK)	LOWER 5%	UPPER 5%	NORMALIZED FREQUENCY	CUMULATIVE NORMALIZED FREQUENCY	LOWER 5%	UPPER 5%
1	4	1.87E-06	(1.0)	8.14E-09	2.41E-06	4.0488	4.0488	1.0000	1.0000

ROOT CAUSE 1 RUN

CUT SET NUMBERS, CUT SET ORDERS, CUT SET FREQUENCIES,
CUMULATIVE NORMALIZED CUT SET FREQUENCIES AND CUT SETS
FOR TOP EVENT ROOT-CAUSE-1 WITH TOP EVENT FREQUENCY 4.61E-07

(THE FIRST COLUMN OF NUMBERS IS THE LINE NUMBERS FOR THE FILE TEMACSETS.DNF)

2	1	4	1.87E-06	4.04877	L-SGR	*	PBAR	*	PDAMC	*	QR

Root Cause

ROOT CAUSE 4 RUN

TOP EVENT ROOT-CAUSE-4 CONTAINS 3 EVENTS IN 1 CUT SETS

THE FREQUENCY OF TOP EVENT ROOT-CAUSE-4 IS 2.69E-07

DESCRIPTIVE STATISTICS FOR THE FREQUENCY OF TOP EVENT ROOT-CAUSE-4

N	1000
MEAN	3.28E-07
STD DEV	6.55E-07
LOWER 5%	6.23E-09
LOWER 25%	3.46E-08
MEDIAN	1.06E-07
UPPER 25%	3.33E-07
UPPER 5%	1.27E-06

90% UNCERTAINTY INTERVAL FOR TOP EVENT FREQUENCY (INNERMOST BRACKETS DENOTE INTERQUARTILE RANGE, ASTERISK DENOTES MEDIAN, N DENOTES NOMINAL VALUE AND M DENOTES MEAN)

```
5% =   6.23E-09                          ***LOG SCALE***                          95% =   1.27E-06
I-------------------------------[---------------------*-------------------N--M]-------------------------I
```

NOMENCLATURE:

PD = PARTIAL DERIVATIVE

TEF = FREQUENCY OF THE TOP EVENT

EV(J) = PROBABILITY OF EVENT J FOR BASE EVENTS
= FREQUENCY OF EVENT J FOR INITIATING EVENTS

MEASURES:

1. FOR BASE EVENTS AND INITIATING EVENTS:

RISK REDUCTION = PD x EV(J)
= TEF - TEF(EVALUATED WITH EV(J) = 0)

2. FOR BASE EVENTS ONLY:

RISK INCREASE = PD - RISK REDUCTION
= PD x (1 - EV(J))
= TEF(EVALUATED WITH EV(J) = 1) - TEF

ROOT CAUSE 4 RUN

RISK REDUCTIONS RISK INCREASES BY BASE EVENT AND SORTED BY RISK REDUCTION

BASE EVENT	OCCUR	PROB	(RANK)	RISK REDUCTION	(RANK)	RISK INCREASE	(RANK)
L-OPC	1	1.40E-03	(3.0)	4.63E-04	(1.0)	2.41E-06	(2.0)
PDAMC	1	3.00E-03	(2.0)	4.59E-04	(2.0)	2.41E-06	(2.0)
QR	1	6.40E-02	(1.0)	2.72E-05	(3.0)	2.41E-06	(2.0)

ROOT CAUSE 4 RUN

RISK REDUCTION BY BASE EVENT (WITH ASSOCIATED UNCERTAINTY INTERVALS)

BASE EVENT	OCCUR	PROB	(RANK)	RISK REDUCTION	(RANK)	LOWER 5%	UPPER 5%
L-OPC	1	1.40E-03	(3.0)	4.63E-04	(1.0)	6.23E-09	1.27E-06
PDAMC	1	3.00E-03	(2.0)	4.59E-04	(2.0)	6.23E-09	1.27E-06
QR	1	6.40E-02	(1.0)	2.72E-05	(3.0)	6.23E-09	1.27E-06

ROOT CAUSE 4 RUN

RISK INCREASE BY BASE EVENT (WITH ASSOCIATED UNCERTAINTY INTERVALS)

BASE EVENT	OCCUR	PROB	(RANK)	RISK INCREASE	(RANK)	LOWER 5%	UPPER 5%
PDAMC	1	3.00E-03	(2.0)	2.41E-06	(2.0)	5.15E-08	3.33E-04
QR	1	6.40E-02	(1.0)	2.41E-06	(2.0)	2.13E-07	1.68E-05
L-OPC	1	1.40E-03	(3.0)	2.41E-06	(2.0)	1.04E-05	9.15E-04

ROOT CAUSE 4 RUN

CUT SET FREQUENCIES (WITH ASSOCIATED UNCERTAINTY INTERVALS)

CUT SET	ORDER	CUT SET FREQUENCY	(RANK)	LOWER 5%	UPPER 5%
1	3	2.68E-06	(1.0)	6.23E-09	1.27E-06

ROOT CAUSE 4 RUN

CUT SET NUMBERS, CUT SET ORDERS, CUT SET FREQUENCIES,
CUMULATIVE NORMALIZED CUT SET FREQUENCIES AND CUT SETS
FOR TOP EVENT ROOT-CAUSE-4 WITH TOP EVENT FREQUENCY 2.69E-07

(THE FIRST COLUMN OF NUMBERS IS THE LINE NUMBERS FOR THE FILE TEMACSETS.DNF)

2	1	3	2.68E-06	0.00000	L-OPC	*	PDAMC	* QR

Root Cause 5

ROOT CAUSE 5 RUN

TOP EVENT ROOT-CAUSE-5 CONTAINS 4 EVENTS IN 1 CUT SETS

THE FREQUENCY OF TOP EVENT ROOT-CAUSE-5 IS 1.92E-08

DESCRIPTIVE STATISTICS FOR THE FREQUENCY OF TOP EVENT ROOT-CAUSE-5

N	1000
MEAN	2.31E-08
STD DEV	4.51E-08
LOWER 5%	4.25E-10
LOWER 25%	2.30E-09
MEDIAN	7.54E-09
UPPER 25%	2.43E-08
UPPER 5%	9.55E-08

90% UNCERTAINTY INTERVAL FOR TOP EVENT FREQUENCY (INNERMOST BRACKETS DENOTE INTERQUARTILE RANGE, ASTERISK DENOTES MEDIAN, N DENOTES NOMINAL VALUE AND M DENOTES MEAN)

```
5% =   4.25E-10                          ***LOG SCALE***                          95% =   9.55E-08
I-------------------------------[----------------------*-----------------N--M-]-------------------------I
```

NOMENCLATURE:

PD = PARTIAL DERIVATIVE

TEF = FREQUENCY OF THE TOP EVENT

EV(J) = PROBABILITY OF EVENT J FOR BASE EVENTS
= FREQUENCY OF EVENT J FOR INITIATING EVENTS

MEASURES:

1. FOR BASE EVENTS AND INITIATING EVENTS:

RISK REDUCTION = PD x EV(J)
= TEF - TEF(EVALUATED WITH EV(J) = 0)

2. FOR BASE EVENTS ONLY:

RISK INCREASE = PD - RISK REDUCTION
= PD x (1 - EV(J))
= TEF(EVALUATED WITH EV(J) = 1) - TEF

ROOT CAUSE 5 RUN

RISK REDUCTIONS RISK INCREASES BY BASE EVENT AND SORTED BY RISK REDUCTION

BASE EVENT	OCCUR	PROB	(RANK)	RISK REDUCTION	(RANK)	RISK INCREASE	(RANK)
L-PB	1	1.00E-04	(4.0)	4.63E-04	(1.0)	1.29E-08	(2.0)
PDAMC	1	3.00E-03	(3.0)	2.45E-06	(2.0)	1.29E-08	(2.0)
QR	1	6.40E-02	(2.0)	1.46E-07	(3.0)	1.29E-08	(2.0)
PACT	1	1.00E+00	(1.0)	1.92E-08	(4.0)	0.00E+00	(4.0)

ROOT CAUSE 5 RUN

RISK REDUCTION BY BASE EVENT (WITH ASSOCIATED UNCERTAINTY INTERVALS)

BASE EVENT	OCCUR	PROB	(RANK)	RISK REDUCTION	(RANK)	LOWER 5%	UPPER 5%
L-PB	1	1.00E-04	(4.0)	4.63E-04	(1.0)	4.25E-10	9.55E-08
PDAMC	1	3.00E-03	(3.0)	2.45E-06	(2.0)	4.25E-10	9.55E-08
QR	1	6.40E-02	(2.0)	1.46E-07	(3.0)	4.25E-10	9.55E-08
PACT	1	1.00E+00	(1.0)	1.92E-08	(4.0)		

ROOT CAUSE 5 RUN

RISK INCREASE BY BASE EVENT (WITH ASSOCIATED UNCERTAINTY INTERVALS)

BASE EVENT	OCCUR	PROB	(RANK)	RISK INCREASE	(RANK)	LOWER 5%	UPPER 5%
L-PB	1	1.00E-04	(4.0)	1.29E-08	(2.0)	1.04E-05	9.18E-04
PDAWC	1	3.00E-03	(3.0)	1.29E-08	(2.0)	3.89E-07	2.40E-05
QR	1	6.40E-02	(2.0)	1.29E-08	(2.0)	1.50E-08	1.25E-06
PACT	1	1.00E+00	(1.0)	0.00E+00	(4.0)		

ROOT CAUSE 5 RUN

UNCERTAINTY IMPORTANCE BY BASE EVENT

BASE EVENT	OCCUR	PROB	(RANK)	% REDUCTION IN THE UNCERTAINTY OF LOG RISK	(RANK)	Y.05/TE.05*	Y.95/TE.95*
PDAMC	1	3.00E-03	(3.0)	40.3	(1.0)	2.75	0.76
L-PB	1	1.00E-04	(4.0)	30.2	(2.0)	2.46	0.96
QR	1	6.40E-02	(2.0)	29.8	(3.0)	2.37	0.90
PACT	1	1.00E+00	(1.0)				

ROOT CAUSE 5 RUN

BASE EVENTS RANKED BY VARIOUS METHODS (RANK 1 = MOST IMPORTANT) AND SORTED BY RISK REDUCTION

BASE EVENT	RISK REDUCTION	RISK INCREASE	UNCERTAINTY IMPORTANCE
L-PB	1.0	2.0	2.0
PDAMC	2.0	2.0	1.0
QR	3.0	2.0	3.0
PACT	4.0	4.0	4.0

ROOT CAUSE 5 RUN

MATRIX OF TOP-DOWN CORRELATION COEFFICIENTS

RISK INCR	0.6255	
UNC IMP	0.4783	0.6255
	RISK RED	RISK INCR

THERE ARE NO TOP-DOWN CORRELATIONS THAT ARE SIGNIFICANT AT THE .05 LEVEL OR LESS

THE TOP-DOWN CORRELATION COEFFICIENTS ARE USED TO DETERMINE THE LEVEL OF AGREEMENT AMONG ALL PAIRS OF RANKINGS IN THE PREVIOUS TABLE. THE TOP-DOWN CORRELATION COEFFICIENT GIVES MORE WEIGHT TO THE SMALLEST RANKS. NOTE THAT THE SMALLEST RANKS ARE ASSIGNED TO THE MOST IMPORTANT BASE EVENTS. MORE DETAIL ON THIS STATISTIC CAN BE FOUND IN THE IMAN AND CONOVER (1985) REFERENCE IN THE USER'S GUIDE THAT ACCOMPANIES THIS CODE.

ROOT CAUSE 5 RUN

CUT SET FREQUENCIES AND NORMALIZED CUT SET FREQUENCIES (WITH ASSOCIATED UNCERTAINTY INTERVALS)

CUT SET	ORDER	CUT SET FREQUENCY	(RANK)	LOWER 5%	UPPER 5%	NORMALIZED FREQUENCY	CUMULATIVE NORMALIZED FREQUENCY	LOWER 5%	UPPER 5%
1	4	3.21E-08	(1.0)	4.25E-10	9.55E-08	1.0702	1.0702	1.0000	1.0000

ROOT CAUSE 5 RUN

CUT SET NUMBERS, CUT SET ORDERS, CUT SET FREQUENCIES,
CUMULATIVE NORMALIZED CUT SET FREQUENCIES AND CUT SETS
FOR TOP EVENT ROOT-CAUSE-5 WITH TOP EVENT FREQUENCY 1.02E-08

(THE FIRST COLUMN OF NUMBERS IS THE LINE NUMBERS FOR THE FILE TEMACSETS.DNF)

2	1	4	3.21E-08	1.67025	L-PB	*	PACT	*	PDAMC	*	QR

Root Cause 6

ROOT CAUSE 6 RUN

TOP EVENT ROOT-CAUSE-6 CONTAINS 3 EVENTS IN 1 CUT SETS

THE FREQUENCY OF TOP EVENT ROOT-CAUSE-6 IS 4.42E-07

DESCRIPTIVE STATISTICS FOR THE FREQUENCY OF TOP EVENT ROOT-CAUSE-6

N	1000
MEAN	5.36E-07
STD DEV	1.00E-06
LOWER 5%	1.00E-08
LOWER 25%	5.32E-08
MEDIAN	1.74E-07
UPPER 25%	5.21E-07
UPPER 5%	2.49E-06

90% UNCERTAINTY INTERVAL FOR TOP EVENT FREQUENCY (INNERMOST BRACKETS DENOTE INTERQUARTILE RANGE, ASTERISK DENOTES MEDIAN, N DENOTES NOMINAL VALUE AND M DENOTES MEAN)

```
5% =   1.00E-08                          ***LOG SCALE***                          95% =   2.49E-06
I-----------------------------[----------------------*----------------N---M---------------------------I
```

NOMENCLATURE:

PD = PARTIAL DERIVATIVE

TEF = FREQUENCY OF THE TOP EVENT

EV(J) = PROBABILITY OF EVENT J FOR BASE EVENTS
= FREQUENCY OF EVENT J FOR INITIATING EVENTS

MEASURES:

1. FOR BASE EVENTS AND INITIATING EVENTS:

RISK REDUCTION = PD x EV(J)
= TEF - TEF(EVALUATED WITH EV(J) = 0)

2. FOR BASE EVENTS ONLY:

RISK INCREASE = PD - RISK REDUCTION
= PD x (1 - EV(J))
= TEF(EVALUATED WITH EV(J) = 1) - TEF

ROOT CAUSE 6 RUN

RISK REDUCTIONS RISK INCREASES BY BASE EVENT AND SORTED BY RISK REDUCTION

BASE EVENT	OCCUR	PROB	(RANK)	RISK REDUCTION	(RANK)	RISK INCREASE	(RANK)
L-RAC	1	2.30E-03	(3.0)	4.63E-04	(1.0)	3.13E-07	(2.0)
PDAWC	1	3.00E-03	(2.0)	5.98E-05	(2.0)	3.13E-07	(2.0)
QR	1	6.40E-02	(1.0)	3.55E-06	(3.0)	3.13E-07	(2.0)

ROOT CAUSE 6 RUN

RISK REDUCTION BY BASE EVENT (WITH ASSOCIATED UNCERTAINTY INTERVALS)

BASE EVENT	OCCUR	PROB	(RANK)	RISK REDUCTION	(RANK)	LOWER 5%	UPPER 5%
L-RAC	1	2.30E-03	(3.0)	4.63E-04	(1.0)	1.00E-08	2.49E-06
PDAMC	1	3.00E-03	(2.0)	5.98E-05	(2.0)	1.00E-08	2.49E-06
QR	1	6.40E-02	(1.0)	3.55E-06	(3.0)	1.00E-08	2.49E-06

ROOT CAUSE 6 RUN

RISK INCREASE BY BASE EVENT (WITH ASSOCIATED UNCERTAINTY INTERVALS)

BASE EVENT	OCCUR	PROB	(RANK)	RISK INCREASE	(RANK)	LOWER 5%	UPPER 5%
PDAMC	1	3.00E-03	(2.0)	3.13E-07	(2.0)	8.63E-06	5.55E-04
QR	1	6.40E-02	(1.0)	3.13E-07	(2.0)	3.20E-07	2.92E-05
L-RAC	1	2.30E-03	(3.0)	3.13E-07	(2.0)	1.04E-05	9.15E-04

ROOT CAUSE 6 RUN

CUT SET FREQUENCIES (WITH ASSOCIATED UNCERTAINTY INTERVALS)

CUT SET	ORDER	CUT SET FREQUENCY	(RANK)	LOWER 5%	UPPER 5%
1	3	7.55E-07	(1.0)	1.00E-08	2.49E-06

ROOT CAUSE 6 RUN

CUT SET NUMBERS, CUT SET ORDERS, CUT SET FREQUENCIES,
CUMULATIVE NORMALIZED CUT SET FREQUENCIES AND CUT SETS
FOR TOP EVENT ROOT-CAUSE-6 WITH TOP EVENT FREQUENCY 4.42E-07

(THE FIRST COLUMN OF NUMBERS IS THE LINE NUMBERS FOR THE FILE TEMACSETS.DNF)

2	1	3	7.55E-07	0.00000	L-RAC	*	PDAMC	*	QR

Root Cause 7

ROOT CAUSE 7 RUN UPDATED 8-22-91

TOP EVENT ROOT-CAUSE-7 CONTAINS 2 EVENTS IN 1 CUT SETS

THE FREQUENCY OF TOP EVENT ROOT-CAUSE-7 IS 6.82E-07

DESCRIPTIVE STATISTICS FOR THE FREQUENCY OF TOP EVENT ROOT-CAUSE-7

N	1000
MEAN	3.25E-07
STD DEV	7.02E-07
LOWER 5%	1.89E-09
LOWER 25%	1.15E-08
MEDIAN	6.15E-08
UPPER 25%	2.91E-07
UPPER 5%	1.62E-06

90% UNCERTAINTY INTERVAL FOR TOP EVENT FREQUENCY (INNERMOST BRACKETS DENOTE INTERQUARTILE RANGE, ASTERISK DENOTES MEDIAN, N DENOTES NOMINAL VALUE AND M DENOTES MEAN)

```
5% =   1.89E-09                          ***LOG SCALE***                          95% =   1.62E-06
I-------------------------[-------------------------*-----------------------]M-----------N-----------I
```

NOMENCLATURE:

PD = PARTIAL DERIVATIVE

TEF = FREQUENCY OF THE TOP EVENT

EV(J) = PROBABILITY OF EVENT J FOR BASE EVENTS
= FREQUENCY OF EVENT J FOR INITIATING EVENTS

MEASURES:

1. FOR BASE EVENTS AND INITIATING EVENTS:

RISK REDUCTION = PD x EV(J)
= TEF - TEF(EVALUATED WITH EV(J) = 0)

2. FOR BASE EVENTS ONLY:

RISK INCREASE = PD - RISK REDUCTION
= PD x (1 - EV(J))
= TEF(EVALUATED WITH EV(J) = 1) - TEF

ROOT CAUSE 7 RUN UPDATED 8-22-91

RISK REDUCTIONS RISK INCREASES BY BASE EVENT AND SORTED BY RISK REDUCTION

BASE EVENT	OCCUR	PROB	(RANK)	RISK REDUCTION	(RANK)	RISK INCREASE	(RANK)
A	1	2.13E-06	(2.0)	9.11E-02	(1.0)	1.36E-07	(1.5)
NRP	1	3.20E-01	(1.0)	1.49E-06	(2.0)	1.36E-07	(1.5)

ROOT CAUSE 7 RUN UPDATED 8-22-91

RISK REDUCTION BY BASE EVENT (WITH ASSOCIATED UNCERTAINTY INTERVALS)

BASE EVENT	OCCUR	PROB	(RANK)	RISK REDUCTION	(RANK)	LOWER 5%	UPPER 5%
A	1	2.13E-06	(2.0)	9.11E-02	(1.0)	1.89E-09	1.62E-06
NRP	1	3.20E-01	(1.0)	1.49E-06	(2.0)	1.89E-09	1.62E-06

ROOT CAUSE 7 RUN UPDATED 8-22-91

RISK INCREASE BY BASE EVENT (WITH ASSOCIATED UNCERTAINTY INTERVALS)

BASE EVENT	OCCUR	PROB	(RANK)	RISK INCREASE	(RANK)	LOWER 5%	UPPER 5%
NRP	1	3.20E-01	(1.0)	1.36E-07	(1.5)	5.17E-09	3.09E-06
A	1	2.13E-06	(2.0)	1.36E-07	(1.5)	4.90E-02	8.07E-01

ROOT CAUSE 7 RUN UPDATED 8-22-91

CUT SET FREQUENCIES (WITH ASSOCIATED UNCERTAINTY INTERVALS)

CUT SET	ORDER	CUT SET FREQUENCY	(RANK)	LOWER 5%	UPPER 5%
1	2	8.18E-07	(1.0)	1.89E-09	1.62E-06

ROOT CAUSE 7 RUN UPDATED 8-22-91

CUT SET NUMBERS, CUT SET ORDERS, CUT SET FREQUENCIES,
CUMULATIVE NORMALIZED CUT SET FREQUENCIES AND CUT SETS
FOR TOP EVENT ROOT-CAUSE-7 WITH TOP EVENT FREQUENCY 6.82E-07

(THE FIRST COLUMN OF NUMBERS IS THE LINE NUMBERS FOR THE FILE TEMACSETS.DNF)

2	1	2	8.18E-07	0.00000	A	* NRP

Root Cause 8

ROOT CAUSE 8 RUN

TOP EVENT ROOT-CAUSE-8 CONTAINS 2 EVENTS IN 1 CUT SETS

THE FREQUENCY OF TOP EVENT ROOT-CAUSE-8 IS 1.84E-05

DESCRIPTIVE STATISTICS FOR THE FREQUENCY OF TOP EVENT ROOT-CAUSE-8

N	1000
MEAN	1.10E-05
STD DEV	2.35E-05
LOWER 5%	6.75E-08
LOWER 25%	4.36E-07
MEDIAN	2.32E-06
UPPER 25%	1.05E-05
UPPER 5%	5.05E-05

90% UNCERTAINTY INTERVAL FOR TOP EVENT FREQUENCY (INNERMOST BRACKETS DENOTE INTERQUARTILE RANGE, ASTERISK DENOTES MEDIAN, N DENOTES NOMINAL VALUE AND M DENOTES MEAN)

```
5% =   6.75E-08                          ***LOG SCALE***                          95% =   5.05E-05
I---------------------------[-------------------------*----------------------]M-------N---------------I
```

NOMENCLATURE:

PD = PARTIAL DERIVATIVE

TEF = FREQUENCY OF THE TOP EVENT

EV(J) = PROBABILITY OF EVENT J FOR BASE EVENTS
= FREQUENCY OF EVENT J FOR INITIATING EVENTS

MEASURES:

1. FOR BASE EVENTS AND INITIATING EVENTS:

RISK REDUCTION = PD x EV(J)
= TEF - TEF(EVALUATED WITH EV(J) = 0)

2. FOR BASE EVENTS ONLY:

RISK INCREASE = PD - RISK REDUCTION
= PD x (1 - EV(J))
= TEF(EVALUATED WITH EV(J) = 1) - TEF

ROOT CAUSE 8 RUN

RISK REDUCTIONS RISK INCREASES BY BASE EVENT AND SORTED BY RISK REDUCTION

BASE EVENT	OCCUR	PROB	(RANK)	RISK REDUCTION	(RANK)	RISK INCREASE	(RANK)
B	1	9.18E-04	(2.0)	5.27E-03	(1.0)	1.30E-05	(1.5)
DGACTNR9HR	1	2.00E-02	(1.0)	2.46E-03	(2.0)	1.30E-05	(1.5)

ROOT CAUSE 8 RUN

RISK REDUCTION BY BASE EVENT (WITH ASSOCIATED UNCERTAINTY INTERVALS)

BASE EVENT	OCCUR	PROB	(RANK)	RISK REDUCTION	(RANK)	LOWER 5%	UPPER 5%
B	1	9.18E-04	(2.0)	5.27E-03	(1.0)	6.75E-08	5.05E-05
DGACTNR9HR	1	2.00E-02	(1.0)	2.46E-03	(2.0)	6.75E-08	5.05E-05

ROOT CAUSE 8 RUN

RISK INCREASE BY BASE EVENT (WITH ASSOCIATED UNCERTAINTY INTERVALS)

BASE EVENT	OCCUR	PROB	(RANK)	RISK INCREASE	(RANK)	LOWER 5%	UPPER 5%
DGACTNR9HR	1	2.00E-02	(1.0)	1.30E-05	(1.5)	6.83E-06	2.72E-03
B	1	9.18E-04	(2.0)	1.30E-05	(1.5)	2.93E-03	5.60E-02

ROOT CAUSE 8 RUN

CUT SET FREQUENCIES (WITH ASSOCIATED UNCERTAINTY INTERVALS)

CUT SET	ORDER	CUT SET FREQUENCY	(RANK)	LOWER 5%	UPPER 5%
1	2	3.13E-05	(1.0)	6.75E-08	5.05E-05

ROOT CAUSE 8 RUN

CUT SET NUMBERS, CUT SET ORDERS, CUT SET FREQUENCIES,
CUMULATIVE NORMALIZED CUT SET FREQUENCIES AND CUT SETS
FOR TOP EVENT ROOT-CAUSE-8 WITH TOP EVENT FREQUENCY 1.84E-05

(THE FIRST COLUMN OF NUMBERS IS THE LINE NUMBERS FOR THE FILE TEMACSETS.DNF)

2	1	2	3.13E-05	0.00000	B	*	DGACTNR9HR

Root Cause 10

ROOT CAUSE 10 RUN

TOP EVENT ROOT-CAUSE-10 CONTAINS 3 EVENTS IN 1 CUT SETS

THE FREQUENCY OF TOP EVENT ROOT-CAUSE-10 IS 5.70E-07

DESCRIPTIVE STATISTICS FOR THE FREQUENCY OF TOP EVENT ROOT-CAUSE-10

N	1000
MEAN	6.91E-07
STD DEV	1.29E-06
LOWER 5%	1.36E-08
LOWER 25%	7.12E-08
MEDIAN	2.30E-07
UPPER 25%	7.09E-07
UPPER 5%	2.94E-06

90% UNCERTAINTY INTERVAL FOR TOP EVENT FREQUENCY (INNERMOST BRACKETS DENOTE INTERQUARTILE RANGE, ASTERISK DENOTES MEDIAN, N DENOTES NOMINAL VALUE AND M DENOTES MEAN)

```
5% =   1.36E-08                          ***LOG SCALE***                          95% =   2.94E-06
I-------------------------------[----------------------*----------------N--M]---------------------------I
```

NOMENCLATURE:

PD = PARTIAL DERIVATIVE

TEF = FREQUENCY OF THE TOP EVENT

EV(J) = PROBABILITY OF EVENT J FOR BASE EVENTS
= FREQUENCY OF EVENT J FOR INITIATING EVENTS

MEASURES:

1. FOR BASE EVENTS AND INITIATING EVENTS:

RISK REDUCTION = PD x EV(J)
= TEF - TEF(EVALUATED WITH EV(J) = 0)

2. FOR BASE EVENTS ONLY:

RISK INCREASE = PD - RISK REDUCTION
= PD x (1 - EV(J))
= TEF(EVALUATED WITH EV(J) = 1) - TEF

ROOT CAUSE 10 RUN

RISK REDUCTIONS RISK INCREASES BY BASE EVENT AND SORTED BY RISK REDUCTION

BASE EVENT	OCCUR	PROB	(RANK)	RISK REDUCTION	(RANK)	RISK INCREASE	(RANK)
L-EF	1	3.00E-03	(2.5)	4.63E-04	(1.0)	1.93E-06	(2.0)
PDAMC	1	3.00E-03	(2.5)	3.69E-04	(2.0)	1.93E-06	(2.0)
QR	1	6.40E-02	(1.0)	2.19E-05	(3.0)	1.93E-06	(2.0)

ROOT CAUSE 10 RUN

RISK REDUCTION BY BASE EVENT (WITH ASSOCIATED UNCERTAINTY INTERVALS)

BASE EVENT	OCCUR	PROB	(RANK)	RISK REDUCTION	(RANK)	LOWER 5%	UPPER 5%
L-EF	1	3.00E-03	(2.5)	4.63E-04	(1.0)	1.36E-08	2.94E-06
PDAMC	1	3.00E-03	(2.5)	3.69E-04	(2.0)	1.36E-08	2.94E-06
QR	1	6.40E-02	(1.0)	2.19E-05	(3.0)	1.36E-08	2.94E-06

ROOT CAUSE 10 RUN

RISK INCREASE BY BASE EVENT (WITH ASSOCIATED UNCERTAINTY INTERVALS)

BASE EVENT	OCCUR	PROB	(RANK)	RISK INCREASE	(RANK)	LOWER 5%	UPPER 5%
PDAMC	1	3.00E-03	(2.5)	1.93E-06	(2.0)	1.12E-05	6.87E-04
QR	1	6.40E-02	(1.0)	1.93E-06	(2.0)	4.05E-07	3.94E-05
L-EF	1	3.00E-03	(2.5)	1.93E-06	(2.0)	1.04E-05	9.16E-04

ROOT CAUSE 10 RUN

CUT SET FREQUENCIES (WITH ASSOCIATED UNCERTAINTY INTERVALS)

CUT SET	ORDER	CUT SET FREQUENCY	(RANK)	LOWER 5%	UPPER 5%
1	3	2.51E-06	(1.0)	1.36E-08	2.94E-06

ROOT CAUSE 10 RUN

CUT SET NUMBERS, CUT SET ORDERS, CUT SET FREQUENCIES,
CUMULATIVE NORMALIZED CUT SET FREQUENCIES AND CUT SETS
FOR TOP EVENT ROOT-CAUSE-10 WITH TOP EVENT FREQUENCY 5.76E-07

(THE FIRST COLUMN OF NUMBERS IS THE LINE NUMBERS FOR THE FILE TEMACSETS.DNF)

2	1	3	2.51E-08	0.00000	L-EF	*	PDAMC	*	QR

Root Cause 11

ROOT CAUSE 11 RUN

TOP EVENT ROOT-CAUSE-11 CONTAINS 6 EVENTS IN 1 CUT SETS

THE FREQUENCY OF TOP EVENT ROOT-CAUSE-11 IS 4.54E-07

DESCRIPTIVE STATISTICS FOR THE FREQUENCY OF TOP EVENT ROOT-CAUSE-11

N	1000
MEAN	5.72E-07
STD DEV	1.18E-06
LOWER 5%	1.64E-08
LOWER 25%	6.90E-08
MEDIAN	2.08E-07
UPPER 25%	5.94E-07
UPPER 5%	2.03E-06

90% UNCERTAINTY INTERVAL FOR TOP EVENT FREQUENCY (INNERMOST BRACKETS DENOTE INTERQUARTILE RANGE, ASTERISK DENOTES MEDIAN, N DENOTES NOMINAL VALUE AND M DENOTES MEAN)

```
5% =   1.64E-08                          ***LOG SCALE***                          95% =   2.03E-06
I-----------------------------[-----------------------*----------------N---M]--------------------------I
```

NOMENCLATURE:

PD = PARTIAL DERIVATIVE

TEF = FREQUENCY OF THE TOP EVENT

EV(J) = PROBABILITY OF EVENT J FOR BASE EVENTS
= FREQUENCY OF EVENT J FOR INITIATING EVENTS

MEASURES:

1. FOR BASE EVENTS AND INITIATING EVENTS:

RISK REDUCTION = PD x EV(J)
= TEF - TEF(EVALUATED WITH EV(J) = 0)

2. FOR BASE EVENTS ONLY:

RISK INCREASE = PD - RISK REDUCTION
= PD x (1 - EV(J))
= TEF(EVALUATED WITH EV(J) = 1) - TEF

ROOT CAUSE 11 RUN

RISK REDUCTIONS RISK INCREASES BY BASE EVENT AND SORTED BY RISK REDUCTION

BASE EVENT	OCCUR	PROB	(RANK)	RISK REDUCTION	(RANK)	RISK INCREASE	(RANK)
L-CSR	1	2.70E-03	(6.0)	4.24E-04	(1.0)	2.06E-06	(3.5)
PDAMC	1	3.00E-03	(5.0)	3.93E-04	(2.0)	2.06E-06	(3.5)
QR	1	6.40E-02	(4.0)	2.33E-05	(3.0)	2.06E-06	(3.5)
Q1TG	1	9.60E-01	(1.5)	2.17E-06	(4.0)	2.06E-06	(3.5)
QB-AUTO	1	9.50E-01	(3.0)	2.11E-06	(5.0)	2.06E-06	(3.5)
FA2	1	9.60E-01	(1.5)	2.09E-06	(6.0)	2.06E-06	(3.5)

ROOT CAUSE 11 RUN

RISK REDUCTION BY BASE EVENT (WITH ASSOCIATED UNCERTAINTY INTERVALS)

BASE EVENT	OCCUR	PROB	(RANK)	RISK REDUCTION	(RANK)	LOWER 5%	UPPER 5%
L-CSR	1	2.70E-03	(6.0)	4.24E-04	(1.0)	1.64E-08	2.03E-06
PDAMC	1	3.00E-03	(5.0)	3.93E-04	(2.0)	1.64E-08	2.03E-06
QR	1	6.40E-02	(4.0)	2.33E-05	(3.0)	1.64E-08	2.03E-06
Q1TG	1	9.60E-01	(1.5)	2.17E-06	(4.0)	1.64E-08	2.03E-06
QB-AUTO	1	9.50E-01	(3.0)	2.11E-06	(5.0)	1.64E-08	2.03E-06
FA2	1	9.60E-01	(1.5)	2.09E-06	(6.0)	1.64E-08	2.03E-06

ROOT CAUSE 11 RUN

RISK INCREASE BY BASE EVENT (WITH ASSOCIATED UNCERTAINTY INTERVALS)

BASE EVENT	OCCUR	PROB	(RANK)	RISK INCREASE	(RANK)	LOWER 5%	UPPER 5%
PDAMC	1	3.00E-03	(5.0)	2.06E-06	(3.5)	1.34E-05	4.97E-04
QR	1	6.40E-02	(4.0)	2.06E-06	(3.5)	4.94E-07	2.79E-05
Q1TG	1	9.60E-01	(1.5)	2.06E-06	(3.5)	4.15E-10	9.65E-08
QB-AUTO	1	9.50E-01	(3.0)	2.06E-06	(3.5)	5.11E-10	1.29E-07
L-CSR	1	2.70E-03	(6.0)	2.06E-06	(3.5)	8.84E-06	8.10E-04
FA2	1	9.60E-01	(1.5)	2.06E-06	(3.5)	4.11E-10	9.55E-08

ROOT CAUSE 11 RUN

UNCERTAINTY IMPORTANCE BY BASE EVENT

BASE EVENT	OCCUR	PROB	(RANK)	% REDUCTION IN THE UNCERTAINTY OF LOG RISK	(RANK)	Y.05/TE.05*	Y.95/TE.95*
PDAMC	1	3.00E-03	(5.0)	46.0	(1.0)	2.47	0.74
QR	1	6.40E-02	(4.0)	34.8	(2.0)	2.09	0.92
L-CSR	1	2.70E-03	(6.0)	19.1	(3.0)	1.46	1.08
QB-AUTO	1	9.50E-01	(3.0)	0.4	(4.0)	1.01	0.99
Q1TG	1	9.60E-01	(1.5)	0.1	(5.0)	1.01	1.02
FA2	1	9.60E-01	(1.5)	0.0	(6.0)		

ROOT CAUSE 11 RUN

BASE EVENTS RANKED BY VARIOUS METHODS (RANK 1 = MOST IMPORTANT) AND SORTED BY RISK REDUCTION

BASE EVENT	RISK REDUCTION	RISK INCREASE	UNCERTAINTY IMPORTANCE
L-CSR	1.0	3.5	3.0
PDAMC	2.0	3.5	1.0
QR	3.0	3.5	2.0
Q1TG	4.0	3.5	5.0
QB-AUTO	5.0	3.5	4.0
FA2	6.0	3.5	6.0

ROOT CAUSE 11 RUN

MATRIX OF TOP-DOWN CORRELATION COEFFICIENTS

RISK INCR	0.0004	
UNC IMP	0.4894	0.0004
	RISK RED	RISK INCR

THERE ARE NO TOP-DOWN CORRELATIONS THAT ARE SIGNIFICANT AT THE .05 LEVEL OR LESS

THE TOP-DOWN CORRELATION COEFFICIENTS ARE USED TO DETERMINE THE LEVEL OF AGREEMENT AMONG ALL PAIRS OF RANKINGS IN THE PREVIOUS TABLE. THE TOP-DOWN CORRELATION COEFFICIENT GIVES MORE WEIGHT TO THE SMALLEST RANKS. NOTE THAT THE SMALLEST RANKS ARE ASSIGNED TO THE MOST IMPORTANT BASE EVENTS. MORE DETAIL ON THIS STATISTIC CAN BE FOUND IN THE IMAN AND CONOVER (1985) REFERENCE IN THE USER'S GUIDE THAT ACCOMPANIES THIS CODE.

ROOT CAUSE 11 RUN

CUT SET FREQUENCIES AND NORMALIZED CUT SET FREQUENCIES (WITH ASSOCIATED UNCERTAINTY INTERVALS)

CUT SET	ORDER	CUT SET FREQUENCY	(RANK)	LOWER 5%	UPPER 5%	NORMALIZED FREQUENCY	CUMULATIVE NORMALIZED FREQUENCY	LOWER 5%	UPPER 5%
1	6	2.52E-06	(1.0)	1.64E-08	2.03E-06	5.5452	5.5452	1.0000	1.0000

ROOT CAUSE 11 RUN

CUT SET NUMBERS, CUT SET ORDERS, CUT SET FREQUENCIES,
CUMULATIVE NORMALIZED CUT SET FREQUENCIES AND CUT SETS
FOR TOP EVENT ROOT-CAUSE-11 WITH TOP EVENT FREQUENCY 4.54E-07

(THE FIRST COLUMN OF NUMBERS IS THE LINE NUMBERS FOR THE FILE TEMACSETS.DNF)

2	1	6	2.52E-06	5.5452Ø	FA2	*	L-CSR	*	PDAMC	*	Q1TG	*
3					QB-AUTO	*	QR	.				

Root Cause 12

ROOT CAUSE 12 DISTRIBUTION UPDATED 9-4-91 AND RUN 9-11-91

TOP EVENT ROOT-CAUSE-12 CONTAINS 3 EVENTS IN 1 CUT SETS

THE FREQUENCY OF TOP EVENT ROOT-CAUSE-12 IS 1.74E-05

DESCRIPTIVE STATISTICS FOR THE FREQUENCY OF TOP EVENT ROOT-CAUSE-12

N	1000
MEAN	8.56E-06
STD DEV	2.02E-05
LOWER 5%	1.94E-08
LOWER 25%	1.65E-07
MEDIAN	9.34E-07
UPPER 25%	6.06E-06
UPPER 5%	4.68E-05

90% UNCERTAINTY INTERVAL FOR TOP EVENT FREQUENCY (INNERMOST BRACKETS DENOTE INTERQUARTILE RANGE, ASTERISK DENOTES MEDIAN, N DENOTES NOMINAL VALUE AND M DENOTES MEAN)

```
5% =   1.94E-08                          ***LOG SCALE***                          95% =   4.68E-05
I--------------------------[----------------------*----------------------]---M---------N------------I
```

NOMENCLATURE:

PD = PARTIAL DERIVATIVE

TEF = FREQUENCY OF THE TOP EVENT

EV(J) = PROBABILITY OF EVENT J FOR BASE EVENTS
= FREQUENCY OF EVENT J FOR INITIATING EVENTS

MEASURES:

1. FOR BASE EVENTS AND INITIATING EVENTS:

RISK REDUCTION = PD x EV(J)
= TEF - TEF(EVALUATED WITH EV(J) = 0)

2. FOR BASE EVENTS ONLY:

RISK INCREASE = PD - RISK REDUCTION
= PD x (1 - EV(J))
= TEF(EVALUATED WITH EV(J) = 1) - TEF

ROOT CAUSE 12 DISTRIBUTION UPDATED 9-4-91 AND RUN 9-11-91

RISK REDUCTIONS RISK INCREASES BY BASE EVENT AND SORTED BY RISK REDUCTION

BASE EVENT	OCCUR	PROB	(RANK)	RISK REDUCTION	(RANK)	RISK INCREASE	(RANK)
C	1	5.73E-05	(3.0)	8.97E-02	(1.0)	3.90E-06	(2.0)
NRP	1	3.20E-01	(2.0)	4.28E-05	(2.0)	3.90E-06	(2.0)
Q2TG	1	9.50E-01	(1.0)	3.96E-06	(3.0)	3.90E-06	(2.0)

ROOT CAUSE 12 DISTRIBUTION UPDATED 9-4-91 AND RUN 9-11-91

RISK REDUCTION BY BASE EVENT (WITH ASSOCIATED UNCERTAINTY INTERVALS)

BASE EVENT	OCCUR	PROB	(RANK)	RISK REDUCTION	(RANK)	LOWER 5%	UPPER 5%
C	1	5.73E-05	(3.0)	8.97E-02	(1.0)	1.94E-08	4.68E-05
NRP	1	3.20E-01	(2.0)	4.28E-05	(2.0)	1.94E-08	4.68E-05
Q2TG	1	9.50E-01	(1.0)	3.96E-06	(3.0)	1.94E-08	4.68E-05

ROOT CAUSE 12 DISTRIBUTION UPDATED 9-4-91 AND RUN 9-11-91

RISK INCREASE BY BASE EVENT (WITH ASSOCIATED UNCERTAINTY INTERVALS)

BASE EVENT	OCCUR	PROB	(RANK)	RISK INCREASE	(RANK)	LOWER 5%	UPPER 5%
NRP	1	3.20E-01	(2.0)	3.90E-06	(2.0)	6.49E-08	1.19E-04
Q2TG	1	9.50E-01	(1.0)	3.90E-06	(2.0)	7.12E-10	1.96E-06
C	1	5.73E-05	(3.0)	3.90E-06	(2.0)	4.63E-02	7.57E-01

ROOT CAUSE 12 DISTRIBUTION UPDATED 9-4-91 AND RUN 9-11-91

CUT SET FREQUENCIES (WITH ASSOCIATED UNCERTAINTY INTERVALS)

CUT SET	ORDER	CUT SET FREQUENCY	(RANK)	LOWER 5%	UPPER 5%
1	3	2.13E-05	(1.0)	1.94E-08	4.68E-05

ROOT CAUSE 12 DISTRIBUTION UPDATED 9-4-91 AND RUN 9-11-91

CUT SET NUMBERS, CUT SET ORDERS, CUT SET FREQUENCIES,
CUMULATIVE NORMALIZED CUT SET FREQUENCIES AND CUT SETS
FOR TOP EVENT ROOT-CAUSE-12 WITH TOP EVENT FREQUENCY 1.74E-05

(THE FIRST COLUMN OF NUMBERS IS THE LINE NUMBERS FOR THE FILE TEMACSETS.DNF)

2	1	3	2.13E-05	0.00000	C	*	NRP	*	Q2TG	.

Root Cause 13

ROOT CAUSE 13 RUN

TOP EVENT ROOT-CAUSE-13 CONTAINS 3 EVENTS IN 1 CUT SETS

THE FREQUENCY OF TOP EVENT ROOT-CAUSE-13 IS 3.46E-07

DESCRIPTIVE STATISTICS FOR THE FREQUENCY OF TOP EVENT ROOT-CAUSE-13

N	1000
MEAN	4.40E-07
STD DEV	1.04E-06
LOWER 5%	8.43E-09
LOWER 25%	4.31E-08
MEDIAN	1.25E-07
UPPER 25%	4.21E-07
UPPER 5%	1.80E-06

90% UNCERTAINTY INTERVAL FOR TOP EVENT FREQUENCY (INNERMOST BRACKETS DENOTE INTERQUARTILE RANGE, ASTERISK DENOTES MEDIAN, N DENOTES NOMINAL VALUE AND M DENOTES MEAN)

```
5% =   8.43E-09                          ***LOG SCALE***                          95% =   1.80E-06
I-----------------------------[-------------------*-------------------N---M---------------------------I
```

NOMENCLATURE:

PD = PARTIAL DERIVATIVE

TEF = FREQUENCY OF THE TOP EVENT

EV(J) = PROBABILITY OF EVENT J FOR BASE EVENTS
= FREQUENCY OF EVENT J FOR INITIATING EVENTS

MEASURES:

1. FOR BASE EVENTS AND INITIATING EVENTS:

RISK REDUCTION = PD x EV(J)
= TEF - TEF(EVALUATED WITH EV(J) = 0)

2. FOR BASE EVENTS ONLY:

RISK INCREASE = PD - RISK REDUCTION
= PD x (1 - EV(J))
= TEF(EVALUATED WITH EV(J) = 1) - TEF

ROOT CAUSE 13 RUN

RISK REDUCTIONS RISK INCREASES BY BASE EVENT AND SORTED BY RISK REDUCTION

BASE EVENT	OCCUR	PROB	(RANK)	RISK REDUCTION	(RANK)	RISK INCREASE	(RANK)
L-UNC	1	1.80E-03	(3.0)	4.63E-04	(1.0)	8.71E-07	(2.0)
PDAMC	1	3.00E-03	(2.0)	1.66E-04	(2.0)	8.71E-07	(2.0)
QR	1	6.40E-02	(1.0)	9.85E-06	(3.0)	8.71E-07	(2.0)

ROOT CAUSE 13 RUN

RISK REDUCTION BY BASE EVENT (WITH ASSOCIATED UNCERTAINTY INTERVALS)

BASE EVENT	OCCUR	PROB	(RANK)	RISK REDUCTION	(RANK)	LOWER 5%	UPPER 5%
L-UNC	1	1.80E-03	(3.0)	4.63E-04	(1.0)	8.43E-09	1.80E-06
PDAMC	1	3.00E-03	(2.0)	1.66E-04	(2.0)	8.43E-09	1.80E-06
QR	1	6.40E-02	(1.0)	9.85E-06	(3.0)	8.43E-09	1.80E-06

ROOT CAUSE 13 RUN

RISK INCREASE BY BASE EVENT (WITH ASSOCIATED UNCERTAINTY INTERVALS)

BASE EVENT	OCCUR	PROB	(RANK)	RISK INCREASE	(RANK)	LOWER 5%	UPPER 5%
PDAMC	1	3.00E-03	(2.0)	8.71E-07	(2.0)	6.42E-06	3.94E-04
QR	1	6.40E-02	(1.0)	8.71E-07	(2.0)	2.54E-07	2.14E-05
L-UNC	1	1.80E-03	(3.0)	8.71E-07	(2.0)	1.04E-05	9.16E-04

ROOT CAUSE 13 RUN

CUT SET FREQUENCIES (WITH ASSOCIATED UNCERTAINTY INTERVALS)

CUT SET	ORDER	CUT SET FREQUENCY	(RANK)	LOWER 5%	UPPER 5%
1	3	1.22E-06	(1.0)	8.43E-09	1.80E-06

ROOT CAUSE 13 RUN

CUT SET NUMBERS, CUT SET ORDERS, CUT SET FREQUENCIES,
CUMULATIVE NORMALIZED CUT SET FREQUENCIES AND CUT SETS
FOR TOP EVENT ROOT-CAUSE-13 WITH TOP EVENT FREQUENCY 3.46E-07

(THE FIRST COLUMN OF NUMBERS IS THE LINE NUMBERS FOR THE FILE TEMACSETS.DNF)

2	1	3	1.22E-06	0.00000	L-UNC	*	PDAWC	* QR

APPENDIX B

Uncertainty Analysis
(Risk)

Composite Uncertainty Analysis

RISK UNCERTAINTY COMPOSITE RUN UPDATED 9-11-91

TOP EVENT ALL-RSK-UNC CONTAINS 24 EVENTS IN 41 CUT SETS

THE FREQUENCY OF TOP EVENT ALL-RSK-UNC IS 1.45E+02

DESCRIPTIVE STATISTICS FOR THE FREQUENCY OF TOP EVENT ALL-RSK-UNC

N	1000
MEAN	1.37E+02
STD DEV	1.28E+02
LOWER 5%	1.76E+01
LOWER 25%	3.82E+01
MEDIAN	7.68E+01
UPPER 25%	2.23E+02
UPPER 5%	3.83E+02

90% UNCERTAINTY INTERVAL FOR TOP EVENT FREQUENCY (INNERMOST BRACKETS DENOTE INTERQUARTILE RANGE, ASTERISK DENOTES MEDIAN, N DENOTES NOMINAL VALUE AND M DENOTES MEAN)

```
5% =   1.76E+01                          ***LOG SCALE***                          95% =   3.83E+02
I-----------------------[----------------------*-----------------M-N-------------]----------------I
```

NOMENCLATURE:

PD = PARTIAL DERIVATIVE

TEF = FREQUENCY OF THE TOP EVENT

EV(J) = PROBABILITY OF EVENT J FOR BASE EVENTS
= FREQUENCY OF EVENT J FOR INITIATING EVENTS

MEASURES:

1. FOR BASE EVENTS AND INITIATING EVENTS:

   RISK REDUCTION = PD x EV(J)
   = TEF - TEF(EVALUATED WITH EV(J) = 0)

2. FOR BASE EVENTS ONLY:

   RISK INCREASE = PD - RISK REDUCTION
   = PD x (1 - EV(J))
   = TEF(EVALUATED WITH EV(J) = 1) - TEF

RISK UNCERTAINTY COMPOSITE RUN UPDATED 9-11-91

RISK REDUCTIONS RISK INCREASES BY BASE EVENT AND SORTED BY RISK REDUCTION

BASE EVENT	OCCUR	PROB	(RANK)	RISK REDUCTION	(RANK)	RISK INCREASE	(RANK)
CDF13	4	4.40E-07	(16.0)	6.27E+06	(5.0)	2.30E+00	(12.0)
CDF4	4	3.28E-07	(17.0)	6.27E+06	(5.0)	5.97E-01	(17.0)
CDF11	4	5.72E-07	(13.0)	6.27E+06	(5.0)	4.25E-01	(18.0)
CDF12	4	8.56E-06	(11.0)	6.27E+06	(5.0)	1.52E+00	(14.0)
CDF5	4	2.31E-08	(19.0)	6.27E+06	(5.0)	1.11E-02	(19.0)
CDF7	4	3.25E-07	(18.0)	6.27E+06	(5.0)	6.88E-01	(16.0)
CDF10	4	6.91E-07	(12.0)	6.27E+06	(5.0)	1.79E+00	(13.0)
CDF6	4	5.36E-07	(15.0)	6.27E+06	(5.0)	3.10E+00	(11.0)
CDF1	4	5.71E-07	(14.0)	6.27E+06	(5.0)	9.44E-01	(15.0)
CDF8	5	1.10E-05	(10.0)	5.91E+06	(10.0)	1.33E+01	(9.0)
FM3	9	7.80E-01	(1.0)	5.45E+01	(11.0)	1.54E+01	(7.0)
FM8	1	7.30E-01	(2.0)	4.66E+01	(12.0)	1.72E+01	(6.0)
FM2	9	2.00E-01	(3.0)	2.26E+01	(13.0)	9.06E+01	(3.0)
FM7	1	1.80E-01	(4.0)	1.86E+01	(14.0)	8.48E+01	(4.0)
FM6	1	1.00E-02	(7.0)	1.03E+00	(15.0)	1.02E+02	(1.0)
FM1	9	1.00E-02	(7.0)	9.16E-01	(16.0)	9.06E+01	(2.0)
FM5	1	1.00E-02	(7.0)	8.36E-01	(17.0)	8.28E+01	(5.0)
FM4	9	1.00E-02	(7.0)	1.40E-01	(18.0)	1.38E+01	(8.0)
FM9	1	1.00E-02	(7.0)	1.28E-01	(19.0)	1.26E+01	(10.0)

RISK REDUCTIONS BY INITIATING EVENT AND SORTED BY RISK REDUCTION

INIT EVENT	OCCUR	FREQ	(RANK)	RISK REDUCTION	(RANK)
IE-20	41	2.00E+01	(5.0)	1.45E+02	(1.0)
IE-3	10	2.90E+05	(3.0)	6.11E-05	(2.0)
IE-2	11	4.70E+05	(1.0)	1.58E-05	(3.0)
IE-4	10	5.80E+04	(4.0)	8.12E-07	(4.5)
IE-1	10	3.80E+05	(2.0)	8.12E-07	(4.5)

RISK UNCERTAINTY COMPOSITE RUN UPDATED 9-11-91

RISK REDUCTION BY BASE EVENT (WITH ASSOCIATED UNCERTAINTY INTERVALS)

BASE EVENT	OCCUR	PROB	(RANK)	RISK REDUCTION	(RANK)	LOWER 5%	UPPER 5%
CDF13	4	4.40E-07	(16.0)	6.27E+06	(5.0)	1.04E-01	1.06E+01
CDF4	4	3.28E-07	(17.0)	6.27E+06	(5.0)	8.18E-02	7.52E+00
CDF11	4	5.72E-07	(13.0)	6.27E+06	(5.0)	1.88E-01	1.19E+01
CDF12	4	8.56E-06	(11.0)	6.27E+06	(5.0)	3.39E-01	2.65E+02
CDF5	4	2.31E-08	(19.0)	6.27E+06	(5.0)	5.52E-03	5.79E-01
CDF7	4	3.25E-07	(18.0)	6.27E+06	(5.0)	2.53E-02	9.23E+00
CDF10	4	6.91E-07	(12.0)	6.27E+06	(5.0)	1.70E-01	1.78E+01
CDF6	4	5.36E-07	(15.0)	6.27E+06	(5.0)	1.25E-01	1.41E+01
CDF1	4	5.71E-07	(14.0)	6.27E+06	(5.0)	1.01E-01	1.36E+01
CDF8	5	1.10E-05	(10.0)	5.91E+06	(10.0)	8.96E-01	2.73E+02
FM3	9	7.80E-01	(1.0)	5.45E+01	(11.0)		
FM8	1	7.30E-01	(2.0)	4.66E+01	(12.0)		
FM2	9	2.00E-01	(3.0)	2.26E+01	(13.0)		
FM7	1	1.80E-01	(4.0)	1.86E+01	(14.0)		
FM6	1	1.00E-02	(7.0)	1.03E+00	(15.0)		
FM1	9	1.00E-02	(7.0)	9.16E-01	(16.0)		
FM5	1	1.00E-02	(7.0)	8.36E-01	(17.0)		
FM4	9	1.00E-02	(7.0)	1.40E-01	(18.0)		
FM9	1	1.00E-02	(7.0)	1.28E-01	(19.0)		

RISK REDUCTION BY INITIATING EVENT (WITH ASSOCIATED UNCERTAINTY INTERVALS)

INIT EVENT	OCCUR	FREQ	(RANK)	RISK REDUCTION	(RANK)	LOWER 5%	UPPER 5%
IE-20	41	2.00E+01	(5.0)	1.45E+02	(1.0)		
IE-3	10	2.90E+05	(3.0)	6.11E-05	(2.0)	1.26E+01	2.91E+02
IE-2	11	4.70E+05	(1.0)	1.58E-05	(3.0)	4.57E+00	1.04E+02
IE-4	10	5.80E+04	(4.0)	8.12E-07	(4.5)	3.10E-02	7.04E-01
IE-1	10	3.80E+05	(2.0)	8.12E-07	(4.5)	1.71E-01	3.83E+00

RISK UNCERTAINTY COMPOSITE RUN UPDATED 9-11-91

RISK INCREASE BY BASE EVENT (WITH ASSOCIATED UNCERTAINTY INTERVALS)

BASE EVENT	OCCUR	PROB	(RANK)	RISK INCREASE	(RANK)	LOWER 5%	UPPER 5%
FM6	1	1.00E-02	(7.0)	1.02E+02	(1.0)		
FM1	9	1.00E-02	(7.0)	9.06E+01	(2.0)		
FM2	9	2.00E-01	(3.0)	9.06E+01	(3.0)		
FM7	1	1.80E-01	(4.0)	8.48E+01	(4.0)		
FM5	1	1.00E-02	(7.0)	8.28E+01	(5.0)		
FM8	1	7.30E-01	(2.0)	1.72E+01	(6.0)		
FM3	9	7.80E-01	(1.0)	1.54E+01	(7.0)		
FM4	9	1.00E-02	(7.0)	1.38E+01	(8.0)		
CDF8	5	1.10E-05	(10.0)	1.33E+01	(9.0)	5.02E+06	8.25E+06
FM9	1	1.00E-02	(7.0)	1.26E+01	(10.0)		
CDF6	4	5.36E-07	(15.0)	3.10E+00	(11.0)	5.33E+06	8.78E+06
CDF13	4	4.40E-07	(16.0)	2.30E+00	(12.0)	5.33E+06	8.78E+06
CDF10	4	6.91E-07	(12.0)	1.79E+00	(13.0)	5.33E+06	8.78E+06
CDF12	4	8.56E-06	(11.0)	1.52E+00	(14.0)	5.33E+06	8.78E+06
CDF1	4	5.71E-07	(14.0)	9.44E-01	(15.0)	5.33E+06	8.78E+06
CDF7	4	3.25E-07	(18.0)	6.88E-01	(16.0)	5.33E+06	8.78E+06
CDF4	4	3.28E-07	(17.0)	5.97E-01	(17.0)	5.33E+06	8.78E+06
CDF11	4	5.72E-07	(13.0)	4.25E-01	(18.0)	5.33E+06	8.78E+06
CDF5	4	2.31E-08	(19.0)	1.11E-02	(19.0)	5.33E+06	8.78E+06

RISK UNCERTAINTY COMPOSITE RUN UPDATED 9-11-91

BASE EVENTS RANKED BY VARIOUS METHODS (RANK 1 = MOST IMPORTANT) AND SORTED BY RISK REDUCTION

BASE EVENT	RISK REDUCTION	RISK INCREASE
CDF13	5.0	12.0
CDF4	5.0	17.0
CDF11	5.0	18.0
CDF12	5.0	14.0
CDF5	5.0	19.0
CDF7	5.0	16.0
CDF10	5.0	13.0
CDF6	5.0	11.0
CDF1	5.0	15.0
CDF8	10.0	9.0
FM3	11.0	7.0
FM8	12.0	6.0
FM2	13.0	3.0
FM7	14.0	4.0
FM6	15.0	1.0
FM1	16.0	2.0
FM5	17.0	5.0
FM4	18.0	8.0
FM9	19.0	10.0

RISK UNCERTAINTY COMPOSITE RUN UPDATED 9-11-91

MATRIX OF TOP-DOWN CORRELATION COEFFICIENTS

RISK INCR -0.7233

RISK RED
THERE ARE NO TOP-DOWN CORRELATIONS THAT ARE SIGNIFICANT AT
THE .05 LEVEL OR LESS

THE TOP-DOWN CORRELATION COEFFICIENTS ARE USED
TO DETERMINE THE LEVEL OF AGREEMENT AMONG ALL
PAIRS OF RANKINGS IN THE PREVIOUS TABLE. THE
TOP-DOWN CORRELATION COEFFICIENT GIVES MORE
WEIGHT TO THE SMALLEST RANKS. NOTE THAT THE
SMALLEST RANKS ARE ASSIGNED TO THE MOST IMPORTANT
BASE EVENTS. MORE DETAIL ON THIS STATISTIC CAN
BE FOUND IN THE IMAN AND CONOVER (1985) REFERENCE
IN THE USER'S GUIDE THAT ACCOMPANIES THIS CODE.

RISK UNCERTAINTY COMPOSITE RUN UPDATED 9-11-91

CUT SET FREQUENCIES AND NORMALIZED CUT SET FREQUENCIES (WITH ASSOCIATED UNCERTAINTY INTERVALS)

CUT SET	ORDER	CUT SET FREQUENCY	(RANK)	LOWER 5%	UPPER 5%	NORMALIZED FREQUENCY	CUMULATIVE NORMALIZED FREQUENCY	LOWER 5%	UPPER 5%
24	4	5.46E+01	(1.0)	6.58E-01	2.00E+02	0.3753	0.3753	0.0084	0.6701
36	4	3.96E+01	(2.0)	2.36E-01	1.95E+02	0.2727	0.6480	0.0026	0.6458
23	4	2.35E+01	(3.0)	2.20E-01	6.95E+01	0.1613	0.8094	0.0027	0.2554
35	4	1.67E+01	(4.0)	8.66E-02	6.92E+01	0.1147	0.9240	0.0009	0.2457
15	4	4.30E+00	(5.0)	8.78E-02	1.03E+01	0.0296	0.9536	0.0006	0.1862
28	4	4.21E+00	(6.0)	1.20E-01	1.28E+01	0.0290	0.9826	0.0009	0.2135
40	4	3.38E+00	(7.0)	7.57E-02	7.50E+00	0.0233	1.0059	0.0005	0.1358
3	4	3.15E+00	(8.0)	7.37E-02	9.84E+00	0.0217	1.0276	0.0005	0.1774
32	4	2.85E+00	(9.0)	1.32E-01	8.55E+00	0.0196	1.0472	0.0007	0.1757
14	4	2.19E+00	(10.0)	3.27E-02	3.83E+00	0.0151	1.0622	0.0002	0.0673
27	4	1.98E+00	(11.0)	4.42E-02	4.58E+00	0.0136	1.0759	0.0003	0.0751
19	4	1.89E+00	(12.0)	1.74E-02	6.83E+00	0.0130	1.0889	0.0001	0.1153
7	4	1.85E+00	(13.0)	5.88E-02	5.41E+00	0.0127	1.1016	0.0004	0.1135
39	4	1.70E+00	(14.0)	2.79E-02	2.77E+00	0.0117	1.1133	0.0002	0.0528
2	4	1.43E+00	(15.0)	2.70E-02	3.67E+00	0.0099	1.1231	0.0002	0.0677
22	4	1.30E+00	(16.0)	1.22E-02	3.86E+00	0.0090	1.1321	0.0001	0.0142
31	4	1.24E+00	(17.0)	4.97E-02	3.21E+00	0.0085	1.1406	0.0003	0.0683
21	4	9.84E-01	(18.0)	9.52E-03	2.96E+00	0.0068	1.1474	0.0001	0.0107
18	4	8.74E-01	(19.0)	6.84E-03	2.47E+00	0.0060	1.1534	0.0000	0.0466
6	4	8.45E-01	(20.0)	2.17E-02	1.92E+00	0.0058	1.1592	0.0001	0.0413
34	4	6.66E-01	(21.0)	3.33E-03	2.65E+00	0.0046	1.1638	0.0000	0.0095
25	4	1.55E-01	(22.0)	1.72E-03	5.14E-01	0.0011	1.1649	0.0000	0.0019
11	4	1.11E-01	(23.0)	3.94E-03	4.20E-01	0.0008	1.1656	0.0000	0.0076
37	4	1.02E-01	(24.0)	5.43E-04	4.49E-01	0.0007	1.1663	0.0000	0.0017
13	4	7.32E-02	(25.0)	1.28E-03	1.39E-01	0.0005	1.1668	0.0000	0.0026
26	4	7.13E-02	(26.0)	1.70E-03	1.73E-01	0.0005	1.1673	0.0000	0.0028
38	4	5.75E-02	(27.0)	1.05E-03	1.07E-01	0.0004	1.1677	0.0000	0.0020
1	4	5.33E-02	(28.0)	9.75E-04	1.36E-01	0.0004	1.1681	0.0000	0.0026
30	4	4.79E-02	(29.0)	1.82E-03	1.20E-01	0.0003	1.1684	0.0000	0.0026
10	4	4.77E-02	(30.0)	1.46E-03	1.49E-01	0.0003	1.1687	0.0000	0.0030
17	4	3.19E-02	(31.0)	2.51E-04	9.19E-02	0.0002	1.1690	0.0000	0.0017
5	4	3.12E-02	(32.0)	8.01E-04	7.60E-02	0.0002	1.1692	0.0000	0.0016
16	4	1.23E-02	(33.0)	2.08E-04	2.53E-02	0.0001	1.1693	0.0000	0.0004
29	4	1.16E-02	(34.0)	3.04E-04	3.18E-02	0.0001	1.1693	0.0000	0.0005
41	4	9.64E-03	(35.0)	1.81E-04	1.84E-02	0.0001	1.1694	0.0000	0.0004
4	4	8.49E-03	(36.0)	1.80E-04	2.48E-02	0.0001	1.1695	0.0000	0.0005
33	4	7.47E-03	(37.0)	3.11E-04	2.13E-02	0.0001	1.1695	0.0000	0.0004
20	4	5.13E-03	(38.0)	4.63E-05	1.63E-02	0.0000	1.1695	0.0000	0.0003
8	4	4.98E-03	(39.0)	1.36E-04	1.32E-02	0.0000	1.1696	0.0000	0.0003
9	4	1.87E-03	(40.0)	5.39E-05	5.62E-03	0.0000	1.1696	0.0000	0.0001
12	4	2.90E-04	(41.0)	9.78E-06	1.01E-03	0.0000	1.1696	0.0000	0.0000

RISK UNCERTAINTY COMPOSITE RUN UPDATED 9-11-91

CUT SET NUMBERS, CUT SET ORDERS, CUT SET FREQUENCIES,
CUMULATIVE NORMALIZED CUT SET FREQUENCIES AND CUT SETS
FOR TOP EVENT ALL-RSK-UNC WITH TOP EVENT FREQUENCY 1.45E+02

(THE FIRST COLUMN OF NUMBERS IS THE LINE NUMBERS FOR THE FILE TEMACSETS.DNF)

2	24	4	5.46E+01	0.37534	CDF8	*	FM8	*	IE-20	*	IE-3	+
3	36	4	3.96E+01	0.64802	CDF12	*	FM3	*	IE-20	*	IE-3	+
4	23	4	2.35E+01	0.80936	CDF8	*	FM7	*	IE-20	*	IE-2	+
5	35	4	1.67E+01	0.92403	CDF12	*	FM2	*	IE-20	*	IE-2	+
6	15	4	4.30E+00	0.95364	CDF6	*	FM3	*	IE-20	*	IE-3	+
7	28	4	4.21E+00	0.98262	CDF10	*	FM3	*	IE-20	*	IE-3	+
8	40	4	3.38E+00	1.00588	CDF13	*	FM3	*	IE-20	*	IE-3	+
9	3	4	3.15E+00	1.02758	CDF1	*	FM3	*	IE-20	*	IE-3	+
10	32	4	2.85E+00	1.04715	CDF11	*	FM3	*	IE-20	*	IE-3	+
11	14	4	2.19E+00	1.06223	CDF6	*	FM2	*	IE-20	*	IE-2	+
12	27	4	1.98E+00	1.07588	CDF10	*	FM2	*	IE-20	*	IE-2	+
13	19	4	1.89E+00	1.08886	CDF7	*	FM3	*	IE-20	*	IE-3	+
14	7	4	1.85E+00	1.10155	CDF4	*	FM3	*	IE-20	*	IE-3	+
15	39	4	1.70E+00	1.11327	CDF13	*	FM2	*	IE-20	*	IE-2	+
16	2	4	1.43E+00	1.12314	CDF1	*	FM2	*	IE-20	*	IE-2	+
17	22	4	1.30E+00	1.13210	CDF8	*	FM6	*	IE-20	*	IE-2	+
18	31	4	1.24E+00	1.14061	CDF11	*	FM2	*	IE-20	*	IE-2	+
19	21	4	9.84E-01	1.14738	CDF8	*	FM5	*	IE-20	*	IE-1	+
20	18	4	8.74E-01	1.15339	CDF7	*	FM2	*	IE-20	*	IE-2	+
21	6	4	8.45E-01	1.15920	CDF4	*	FM2	*	IE-20	*	IE-2	+
22	34	4	6.66E-01	1.16378	CDF12	*	FM1	*	IE-20	*	IE-1	+
23	25	4	1.55E-01	1.16485	CDF8	*	FM9	*	IE-20	*	IE-4	+
24	11	4	1.11E-01	1.16562	CDF5	*	FM3	*	IE-20	*	IE-3	+
25	37	4	1.02E-01	1.16632	CDF12	*	FM4	*	IE-20	*	IE-4	+
26	13	4	7.32E-02	1.16682	CDF6	*	FM1	*	IE-20	*	IE-1	+
27	26	4	7.13E-02	1.16731	CDF10	*	FM1	*	IE-20	*	IE-1	+
28	38	4	5.75E-02	1.16771	CDF13	*	FM1	*	IE-20	*	IE-1	+
29	1	4	5.33E-02	1.16808	CDF1	*	FM1	*	IE-20	*	IE-1	+
30	30	4	4.79E-02	1.16841	CDF11	*	FM1	*	IE-20	*	IE-1	+
31	10	4	4.77E-02	1.16873	CDF5	*	FM2	*	IE-20	*	IE-2	+
32	17	4	3.19E-02	1.16895	CDF7	*	FM1	*	IE-20	*	IE-1	+
33	5	4	3.12E-02	1.16917	CDF4	*	FM1	*	IE-20	*	IE-1	+
34	16	4	1.23E-02	1.16925	CDF6	*	FM4	*	IE-20	*	IE-4	+
35	29	4	1.16E-02	1.16933	CDF10	*	FM4	*	IE-20	*	IE-4	+
36	41	4	9.64E-03	1.16940	CDF13	*	FM4	*	IE-20	*	IE-4	+
37	4	4	8.49E-03	1.16946	CDF1	*	FM4	*	IE-20	*	IE-4	+
38	33	4	7.47E-03	1.16951	CDF11	*	FM4	*	IE-20	*	IE-4	+
39	20	4	5.13E-03	1.16954	CDF7	*	FM4	*	IE-20	*	IE-4	+
40	8	4	4.98E-03	1.16958	CDF4	*	FM4	*	IE-20	*	IE-4	+
41	9	4	1.87E-03	1.16959	CDF5	*	FM1	*	IE-20	*	IE-1	+
42	12	4	2.90E-04	1.16959	CDF5	*	FM4	*	IE-20	*	IE-4	.

Root Cause 1

RISK UNCERTAINTY ROOT CAUSE 1 RUN

TOP EVENT RC1-RSK-UNC CONTAINS 10 EVENTS IN 4 CUT SETS

THE FREQUENCY OF TOP EVENT RC1-RSK-UNC IS 3.71E+00

DESCRIPTIVE STATISTICS FOR THE FREQUENCY OF TOP EVENT RC1-RSK-UNC

N	1000
MEAN	3.21E+00
STD DEV	4.46E+00
LOWER 5%	1.00E-01
LOWER 25%	3.13E-01
MEDIAN	1.00E+00
UPPER 25%	3.62E+00
UPPER 5%	1.36E+01

90% UNCERTAINTY INTERVAL FOR TOP EVENT FREQUENCY (INNERMOST BRACKETS DENOTE INTERQUARTILE RANGE, ASTERISK DENOTES MEDIAN, N DENOTES NOMINAL VALUE AND M DENOTES MEAN)

```
5% =   1.00E-01                          ***LOG SCALE***                          95% =   1.36E+01
I-----------------------[-----------------------*-----------------------M--N---------------------------I
```

NOMENCLATURE:

PD = PARTIAL DERIVATIVE

TEF = FREQUENCY OF THE TOP EVENT

EV(J) = PROBABILITY OF EVENT J FOR BASE EVENTS
= FREQUENCY OF EVENT J FOR INITIATING EVENTS

MEASURES:

1. FOR BASE EVENTS AND INITIATING EVENTS:

   RISK REDUCTION = PD x EV(J)
   = TEF - TEF(EVALUATED WITH EV(J) = 0)

2. FOR BASE EVENTS ONLY:

   RISK INCREASE = PD - RISK REDUCTION
   = PD x (1 - EV(J))
   = TEF(EVALUATED WITH EV(J) = 1) - TEF

RISK UNCERTAINTY ROOT CAUSE 1 RUN

RISK REDUCTIONS RISK INCREASES BY BASE EVENT AND SORTED BY RISK REDUCTION

BASE EVENT	OCCUR	PROB	(RANK)	RISK REDUCTION	(RANK)	RISK INCREASE	(RANK)
CDF1	4	5.71E-07	(5.0)	6.27E+06	(1.0)	9.44E-01	(3.0)
FW3	1	7.80E-01	(1.0)	2.58E+00	(2.0)	7.29E-01	(4.0)
FW2	1	2.00E-01	(2.0)	1.07E+00	(3.0)	4.29E+00	(2.0)
FW1	1	1.00E-02	(3.5)	4.34E-02	(4.0)	4.30E+00	(1.0)
FW4	1	1.00E-02	(3.5)	6.62E-03	(5.0)	6.56E-01	(5.0)

RISK REDUCTIONS BY INITIATING EVENT AND SORTED BY RISK REDUCTION

INIT EVENT	OCCUR	FREQ	(RANK)	RISK REDUCTION	(RANK)
IE-20	4	2.00E+01	(5.0)	3.71E+00	(1.0)
IE-3	1	2.90E+05	(3.0)	2.35E-06	(2.0)
IE-2	1	4.70E+05	(1.0)	6.02E-07	(3.0)
IE-4	1	5.80E+04	(4.0)	3.01E-08	(4.5)
IE-1	1	3.80E+05	(2.0)	3.01E-08	(4.5)

RISK UNCERTAINTY ROOT CAUSE 1 RUN

RISK REDUCTION BY BASE EVENT (WITH ASSOCIATED UNCERTAINTY INTERVALS)

BASE EVENT	OCCUR	PROB	(RANK)	RISK REDUCTION	(RANK)	LOWER 5%	UPPER 5%
CDF1	4	5.71E-07	(5.0)	6.27E+06	(1.0)	1.01E-01	1.36E+01
FM3	1	7.80E-01	(1.0)	2.58E+00	(2.0)		
FM2	1	2.00E-01	(2.0)	1.07E+00	(3.0)		
FM1	1	1.00E-02	(3.5)	4.34E-02	(4.0)		
FM4	1	1.00E-02	(3.5)	6.62E-03	(5.0)		

RISK REDUCTION BY INITIATING EVENT (WITH ASSOCIATED UNCERTAINTY INTERVALS)

INIT EVENT	OCCUR	FREQ	(RANK)	RISK REDUCTION	(RANK)	LOWER 5%	UPPER 5%
IE-20	4	2.00E+01	(5.0)	3.71E+00	(1.0)		
IE-3	1	2.90E+05	(3.0)	2.35E-06	(2.0)	7.37E-02	9.84E+00
IE-2	1	4.70E+05	(1.0)	6.02E-07	(3.0)	2.70E-02	3.67E+00
IE-4	1	5.80E+04	(4.0)	3.01E-08	(4.5)	1.80E-04	2.48E-02
IE-1	1	3.80E+05	(2.0)	3.01E-08	(4.5)	9.75E-04	1.36E-01

RISK UNCERTAINTY ROOT CAUSE 1 RUN

RISK INCREASE BY BASE EVENT (WITH ASSOCIATED UNCERTAINTY INTERVALS)

BASE EVENT	OCCUR	PROB	(RANK)	RISK INCREASE	(RANK)	LOWER 5%	UPPER 5%
FM1	1	1.00E-02	(3.5)	4.30E+00	(1.0)		
FM2	1	2.00E-01	(2.0)	4.29E+00	(2.0)		
CDF1	4	5.71E-07	(5.0)	9.44E-01	(3.0)	5.33E+06	8.78E+06
FM3	1	7.80E-01	(1.0)	7.29E-01	(4.0)		
FM4	1	1.00E-02	(3.5)	6.56E-01	(5.0)		

RISK UNCERTAINTY ROOT CAUSE 1 RUN

BASE EVENTS RANKED BY VARIOUS METHODS (RANK 1 = MOST IMPORTANT) AND SORTED BY RISK REDUCTION

BASE EVENT	RISK REDUCTION	RISK INCREASE
CDF1	1.0	3.0
FM3	2.0	4.0
FM2	3.0	2.0
FM1	4.0	1.0
FM4	5.0	5.0

RISK UNCERTAINTY ROOT CAUSE 1 RUN

MATRIX OF TOP-DOWN CORRELATION COEFFICIENTS

RISK INCR -0.2065

RISK RED
THERE ARE NO TOP-DOWN CORRELATIONS THAT ARE SIGNIFICANT AT
THE .05 LEVEL OR LESS

THE TOP-DOWN CORRELATION COEFFICIENTS ARE USED
TO DETERMINE THE LEVEL OF AGREEMENT AMONG ALL
PAIRS OF RANKINGS IN THE PREVIOUS TABLE. THE
TOP-DOWN CORRELATION COEFFICIENT GIVES MORE
WEIGHT TO THE SMALLEST RANKS. NOTE THAT THE
SMALLEST RANKS ARE ASSIGNED TO THE MOST IMPORTANT
BASE EVENTS. MORE DETAIL ON THIS STATISTIC CAN
BE FOUND IN THE IMAN AND CONOVER (1985) REFERENCE
IN THE USER'S GUIDE THAT ACCOMPANIES THIS CODE.

RISK UNCERTAINTY ROOT CAUSE 1 RUN

CUT SET FREQUENCIES AND NORMALIZED CUT SET FREQUENCIES (WITH ASSOCIATED UNCERTAINTY INTERVALS)

CUT SET	ORDER	CUT SET FREQUENCY	(RANK)	LOWER 5%	UPPER 5%	NORMALIZED FREQUENCY	CUMULATIVE NORMALIZED FREQUENCY	LOWER 5%	UPPER 5%
3	4	3.15E+00	(1.0)	7.37E-02	9.84E+00	0.8512	0.8512	0.6309	0.8002
2	4	1.43E+00	(2.0)	2.70E-02	3.67E+00	0.3868	1.2380	0.1894	0.3563
1	4	5.33E-02	(3.0)	9.75E-04	1.36E-01	0.0144	1.2523	0.0071	0.0138
4	4	8.49E-03	(4.0)	1.80E-04	2.48E-02	0.0023	1.2546	0.0011	0.0026

RISK UNCERTAINTY ROOT CAUSE 1 RUN

CUT SET NUMBERS, CUT SET ORDERS, CUT SET FREQUENCIES,
CUMULATIVE NORMALIZED CUT SET FREQUENCIES AND CUT SETS
FOR TOP EVENT RC1-RSK-UNC WITH TOP EVENT FREQUENCY 3.71E+00

(THE FIRST COLUMN OF NUMBERS IS THE LINE NUMBERS FOR THE FILE TEMACSETS.DNF)

2	3	4	3.16E+00	0.85115	CDF1	*	FM3	*	IE-20	*	IE-3	*
3	2	4	1.43E+00	1.23797	CDF1	*	FM2	*	IE-20	*	IE-2	*
4	1	4	5.33E-02	1.26235	CDF1	*	FM1	*	IE-20	*	IE-1	*
5	4	4	8.49E-03	1.25464	CDF1	*	FM4	*	IE-20	*	IE-4	*

Root Cause 4

RISK UNCERTAINTY ROOT CAUSE 4 RUN

TOP EVENT RC4-RSK-UNC CONTAINS 10 EVENTS IN 4 CUT SETS

THE FREQUENCY OF TOP EVENT RC4-RSK-UNC IS 2.13E+00

DESCRIPTIVE STATISTICS FOR THE FREQUENCY OF TOP EVENT RC4-RSK-UNC

N	1000
MEAN	1.92E+00
STD DEV	2.39E+00
LOWER 5%	8.11E-02
LOWER 25%	2.56E-01
MEDIAN	7.72E-01
UPPER 25%	2.40E+00
UPPER 5%	7.52E+00

90% UNCERTAINTY INTERVAL FOR TOP EVENT FREQUENCY (INNERMOST BRACKETS DENOTE INTERQUARTILE RANGE, ASTERISK DENOTES MEDIAN, N DENOTES NOMINAL VALUE AND M DENOTES MEAN)

```
5% =   8.11E-02                          ***LOG SCALE***                          95% =   7.52E+00
I-----------------------[-----------------------*-------------------M--N--]-----------------------I
```

NOMENCLATURE:

PD = PARTIAL DERIVATIVE

TEF = FREQUENCY OF THE TOP EVENT

EV(J) = PROBABILITY OF EVENT J FOR BASE EVENTS
= FREQUENCY OF EVENT J FOR INITIATING EVENTS

MEASURES:

1. FOR BASE EVENTS AND INITIATING EVENTS:

   RISK REDUCTION = PD x EV(J)
   = TEF - TEF(EVALUATED WITH EV(J) = 0)

2. FOR BASE EVENTS ONLY:

   RISK INCREASE = PD - RISK REDUCTION
   = PD x (1 - EV(J))
   = TEF(EVALUATED WITH EV(J) = 1) - TEF

RISK UNCERTAINTY ROOT CAUSE 4 RUN

RISK REDUCTIONS RISK INCREASES BY BASE EVENT AND SORTED BY RISK REDUCTION

BASE EVENT	OCCUR	PROB	(RANK)	RISK REDUCTION	(RANK)	RISK INCREASE	(RANK)
CDF4	4	3.28E-07	(5.0)	6.27E+06	(1.0)	5.97E-01	(3.0)
FM3	1	7.80E-01	(1.0)	1.48E+00	(2.0)	4.19E-01	(4.0)
FM2	1	2.00E-01	(2.0)	6.17E-01	(3.0)	2.47E+00	(2.0)
FM1	1	1.00E-02	(3.5)	2.49E-02	(4.0)	2.47E+00	(1.0)
FM4	1	1.00E-02	(3.5)	3.80E-03	(5.0)	3.77E-01	(5.0)

RISK REDUCTIONS BY INITIATING EVENT AND SORTED BY RISK REDUCTION

INIT EVENT	OCCUR	FREQ	(RANK)	RISK REDUCTION	(RANK)
IE-20	4	2.00E+01	(5.0)	2.13E+00	(1.0)
IE-3	1	2.90E+05	(3.0)	1.48E-06	(2.0)
IE-2	1	4.70E+05	(1.0)	3.81E-07	(3.0)
IE-4	1	5.80E+04	(4.0)	1.90E-08	(4.5)
IE-1	1	3.80E+05	(2.0)	1.90E-08	(4.5)

RISK UNCERTAINTY ROOT CAUSE 4 RUN

RISK REDUCTION BY BASE EVENT (WITH ASSOCIATED UNCERTAINTY INTERVALS)

BASE EVENT	OCCUR	PROB	(RANK)	RISK REDUCTION	(RANK)	LOWER 5%	UPPER 5%
CDF4	4	3.28E-07	(5.0)	6.27E+00	(1.0)	8.18E-02	7.52E+00
FM3	1	7.80E-01	(1.0)	1.48E+00	(2.0)		
FM2	1	2.00E-01	(2.0)	6.17E-01	(3.0)		
FM1	1	1.00E-02	(3.5)	2.49E-02	(4.0)		
FM4	1	1.00E-02	(3.5)	3.80E-03	(5.0)		

RISK REDUCTION BY INITIATING EVENT (WITH ASSOCIATED UNCERTAINTY INTERVALS)

INIT EVENT	OCCUR	FREQ	(RANK)	RISK REDUCTION	(RANK)	LOWER 5%	UPPER 5%
IE-20	4	2.00E+01	(5.0)	2.13E+00	(1.0)		
IE-3	1	2.90E+05	(3.0)	1.48E-06	(2.0)	5.88E-02	5.41E+00
IE-2	1	4.70E+05	(1.0)	3.81E-07	(3.0)	2.17E-02	1.92E+00
IE-4	1	5.80E+04	(4.0)	1.90E-08	(4.5)	1.36E-04	1.32E-02
IE-1	1	3.80E+05	(2.0)	1.90E-08	(4.5)	8.01E-04	7.60E-02

RISK UNCERTAINTY ROOT CAUSE 4 RUN

RISK INCREASE BY BASE EVENT (WITH ASSOCIATED UNCERTAINTY INTERVALS)

BASE EVENT	OCCUR	PROB	(RANK)	RISK INCREASE	(RANK)	LOWER 5%	UPPER 5%
FM1	1	1.00E-02	(3.5)	2.47E+00	(1.0)		
FM2	1	2.00E-01	(2.0)	2.47E+00	(2.0)		
CDF4	4	3.20E-07	(5.0)	5.97E-01	(3.0)	5.33E+06	8.78E+06
FM3	1	7.80E-01	(1.0)	4.19E-01	(4.0)		
FM4	1	1.00E-02	(3.5)	3.77E-01	(5.0)		

RISK UNCERTAINTY ROOT CAUSE 4 RUN

BASE EVENTS RANKED BY VARIOUS METHODS (RANK 1 = MOST IMPORTANT) AND SORTED BY RISK REDUCTION

BASE EVENT	RISK REDUCTION	RISK INCREASE
CDF4	1.0	3.0
FM3	2.0	4.0
FM2	3.0	2.0
FM1	4.0	1.0
FM4	5.0	5.0

RISK UNCERTAINTY ROOT CAUSE 4 RUN

MATRIX OF TOP-DOWN CORRELATION COEFFICIENTS

RISK INCR -0.2065

RISK RED

THERE ARE NO TOP-DOWN CORRELATIONS THAT ARE SIGNIFICANT AT THE .05 LEVEL OR LESS

THE TOP-DOWN CORRELATION COEFFICIENTS ARE USED TO DETERMINE THE LEVEL OF AGREEMENT AMONG ALL PAIRS OF RANKINGS IN THE PREVIOUS TABLE. THE TOP-DOWN CORRELATION COEFFICIENT GIVES MORE WEIGHT TO THE SMALLEST RANKS. NOTE THAT THE SMALLEST RANKS ARE ASSIGNED TO THE MOST IMPORTANT BASE EVENTS. MORE DETAIL ON THIS STATISTIC CAN BE FOUND IN THE IMAN AND CONOVER (1985) REFERENCE IN THE USER'S GUIDE THAT ACCOMPANIES THIS CODE.

RISK UNCERTAINTY ROOT CAUSE 4 RUN

CUT SET FREQUENCIES AND NORMALIZED CUT SET FREQUENCIES (WITH ASSOCIATED UNCERTAINTY INTERVALS)

CUT SET	ORDER	CUT SET FREQUENCY	(RANK)	LOWER 5%	UPPER 5%	NORMALIZED FREQUENCY	CUMULATIVE NORMALIZED FREQUENCY	LOWER 5%	UPPER 5%
3	4	1.85E+00	(1.0)	5.88E-02	5.41E+00	0.8668	0.8668	0.6309	0.8002
2	4	8.45E-01	(2.0)	2.17E-02	1.92E+00	0.3967	1.2634	0.1894	0.3563
1	4	3.12E-02	(3.0)	8.01E-04	7.60E-02	0.0146	1.2781	0.0071	0.0138
4	4	4.98E-03	(4.0)	1.36E-04	1.32E-02	0.0023	1.2804	0.0011	0.0026

RISK UNCERTAINTY ROOT CAUSE 4 RUN

CUT SET NUMBERS, CUT SET ORDERS, CUT SET FREQUENCIES,
CUMULATIVE NORMALIZED CUT SET FREQUENCIES AND CUT SETS
FOR TOP EVENT RC4-RSK-UNC WITH TOP EVENT FREQUENCY 2.13E+00

(THE FIRST COLUMN OF NUMBERS IS THE LINE NUMBERS FOR THE FILE TEMACSETS.DNF)

2	3	4	1.85E+00	0.86676	CDF4	*	FM3	*	IE-20	*	IE-3	*
3	2	4	8.45E-01	1.26341	CDF4	*	FM2	*	IE-20	*	IE-2	*
4	1	4	3.12E-02	1.27805	CDF4	*	FM1	*	IE-20	*	IE-1	*
5	4	4	4.98E-03	1.28039	CDF4	*	FM4	*	IE-20	*	IE-4	.

Root Cause 5

RISK UNCERTAINTY ROOT CAUSE 5 RUN

TOP EVENT RC5-RSK-UNC CONTAINS 10 EVENTS IN 4 CUT SETS

THE FREQUENCY OF TOP EVENT RC5-RSK-UNC IS 1.50E-01

DESCRIPTIVE STATISTICS FOR THE FREQUENCY OF TOP EVENT RC5-RSK-UNC

N	1000
MEAN	1.43E-01
STD DEV	1.84E-01
LOWER 5%	5.48E-03
LOWER 25%	1.68E-02
MEDIAN	5.42E-02
UPPER 25%	1.79E-01
UPPER 5%	5.79E-01

90% UNCERTAINTY INTERVAL FOR TOP EVENT FREQUENCY (INNERMOST BRACKETS DENOTE INTERQUARTILE RANGE, ASTERISK DENOTES MEDIAN, N DENOTES NOMINAL VALUE AND M DENOTES MEAN)

```
5% =   5.48E-03                          ***LOG SCALE***                          95% =   5.79E-01
I-----------------------[-----------------------*--------------------M-N---]-----------------------I
```

NOMENCLATURE:

PD = PARTIAL DERIVATIVE

TEF = FREQUENCY OF THE TOP EVENT

EV(J) = PROBABILITY OF EVENT J FOR BASE EVENTS
= FREQUENCY OF EVENT J FOR INITIATING EVENTS

MEASURES:

1. FOR BASE EVENTS AND INITIATING EVENTS:

   RISK REDUCTION = PD x EV(J)
   = TEF - TEF(EVALUATED WITH EV(J) = 0)

2. FOR BASE EVENTS ONLY:

   RISK INCREASE = PD - RISK REDUCTION
   = PD x (1 - EV(J))
   = TEF(EVALUATED WITH EV(J) = 1) - TEF

RISK UNCERTAINTY ROOT CAUSE 5 RUN

RISK REDUCTIONS RISK INCREASES BY BASE EVENT AND SORTED BY RISK REDUCTION

BASE EVENT	OCCUR	PROB	(RANK)	RISK REDUCTION	(RANK)	RISK INCREASE	(RANK)
CDF5	4	2.31E-08	(5.0)	6.27E+06	(1.0)	1.11E-02	(5.0)
FM3	1	7.80E-01	(1.0)	1.05E-01	(2.0)	2.95E-02	(3.0)
FM2	1	2.00E-01	(2.0)	4.34E-02	(3.0)	1.74E-01	(2.0)
FM1	1	1.00E-02	(3.5)	1.76E-03	(4.0)	1.74E-01	(1.0)
FM4	1	1.00E-02	(3.5)	2.68E-04	(5.0)	2.65E-02	(4.0)

RISK REDUCTIONS BY INITIATING EVENT AND SORTED BY RISK REDUCTION

INIT EVENT	OCCUR	FREQ	(RANK)	RISK REDUCTION	(RANK)
IE-20	4	2.00E+01	(5.0)	1.50E-01	(1.0)
IE-3	1	2.90E+05	(3.0)	2.77E-08	(2.0)
IE-2	1	4.70E+05	(1.0)	7.10E-09	(3.0)
IE-4	1	5.80E+04	(4.0)	3.55E-10	(4.5)
IE-1	1	3.80E+05	(2.0)	3.55E-10	(4.5)

RISK UNCERTAINTY ROOT CAUSE 6 RUN

RISK REDUCTION BY BASE EVENT (WITH ASSOCIATED UNCERTAINTY INTERVALS)

BASE EVENT	OCCUR	PROB	(RANK)	RISK REDUCTION	(RANK)	LOWER 5%	UPPER 5%
CDF5	4	2.31E-08	(5.0)	6.27E+06	(1.0)	5.52E-03	5.79E-01
FM3	1	7.80E-01	(1.0)	1.05E-01	(2.0)		
FM2	1	2.00E-01	(2.0)	4.34E-02	(3.0)		
FM1	1	1.00E-02	(3.5)	1.76E-03	(4.0)		
FM4	1	1.00E-02	(3.5)	2.68E-04	(5.0)		

RISK REDUCTION BY INITIATING EVENT (WITH ASSOCIATED UNCERTAINTY INTERVALS)

INIT EVENT	OCCUR	FREQ	(RANK)	RISK REDUCTION	(RANK)	LOWER 5%	UPPER 5%
IE-20	4	2.00E+01	(5.0)	1.50E-01	(1.0)		
IE-3	1	2.90E+05	(3.0)	2.77E-08	(2.0)	3.94E-03	4.20E-01
IE-2	1	4.70E+05	(1.0)	7.10E-09	(3.0)	1.46E-03	1.49E-01
IE-4	1	5.80E+04	(4.0)	3.55E-10	(4.5)	9.78E-06	1.01E-03
IE-1	1	3.80E+05	(2.0)	3.55E-10	(4.5)	5.39E-05	5.62E-03

RISK UNCERTAINTY ROOT CAUSE 5 RUN

RISK INCREASE BY BASE EVENT (WITH ASSOCIATED UNCERTAINTY INTERVALS)

BASE EVENT	OCCUR	PROB	(RANK)	RISK INCREASE	(RANK)	LOWER 5%	UPPER 5%
FM1	1	1.00E-02	(3.5)	1.74E-01	(1.0)		
FM2	1	2.00E-01	(2.0)	1.74E-01	(2.0)		
FM3	1	7.80E-01	(1.0)	2.95E-02	(3.0)		
FM4	1	1.00E-02	(3.5)	2.65E-02	(4.0)		
CDF5	4	2.31E-08	(5.0)	1.11E-02	(5.0)	5.33E+06	8.78E+06

RISK UNCERTAINTY ROOT CAUSE 5 RUN

BASE EVENTS RANKED BY VARIOUS METHODS (RANK 1 = MOST IMPORTANT) AND SORTED BY RISK REDUCTION

BASE EVENT	RISK REDUCTION	RISK INCREASE
CDF5	1.0	5.0
FM3	2.0	3.0
FM2	3.0	2.0
FM1	4.0	1.0
FM4	5.0	4.0

RISK UNCERTAINTY ROOT CAUSE 6 RUN

MATRIX OF TOP-DOWN CORRELATION COEFFICIENTS

RISK INCR -0.5210

RISK RED

THERE ARE NO TOP-DOWN CORRELATIONS THAT ARE SIGNIFICANT AT THE .05 LEVEL OR LESS

THE TOP-DOWN CORRELATION COEFFICIENTS ARE USED TO DETERMINE THE LEVEL OF AGREEMENT AMONG ALL PAIRS OF RANKINGS IN THE PREVIOUS TABLE. THE TOP-DOWN CORRELATION COEFFICIENT GIVES MORE WEIGHT TO THE SMALLEST RANKS. NOTE THAT THE SMALLEST RANKS ARE ASSIGNED TO THE MOST IMPORTANT BASE EVENTS. MORE DETAIL ON THIS STATISTIC CAN BE FOUND IN THE IMAN AND CONOVER (1985) REFERENCE IN THE USER'S GUIDE THAT ACCOMPANIES THIS CODE.

RISK UNCERTAINTY ROOT CAUSE 6 RUN

CUT SET FREQUENCIES AND NORMALIZED CUT SET FREQUENCIES (WITH ASSOCIATED UNCERTAINTY INTERVALS)

CUT SET	ORDER	CUT SET FREQUENCY	(RANK)	LOWER 5%	UPPER 5%	NORMALIZED FREQUENCY	CUMULATIVE NORMALIZED FREQUENCY	LOWER 5%	UPPER 5%
3	4	1.11E-01	(1.0)	3.94E-03	4.20E-01	0.7419	0.7419	0.0309	0.8002
2	4	4.77E-02	(2.0)	1.46E-03	1.49E-01	0.3180	1.0599	0.1894	0.3563
1	4	1.87E-03	(3.0)	5.39E-05	5.62E-03	0.0125	1.0724	0.0071	0.0138
4	4	2.90E-04	(4.0)	9.78E-06	1.01E-03	0.0019	1.0743	0.0011	0.0026

RISK UNCERTAINTY ROOT CAUSE 5 RUN

CUT SET NUMBERS, CUT SET ORDERS, CUT SET FREQUENCIES,
CUMULATIVE NORMALIZED CUT SET FREQUENCIES AND CUT SETS
FOR TOP EVENT RC5-RSK-UNC WITH TOP EVENT FREQUENCY 1.50E-01

(THE FIRST COLUMN OF NUMBERS IS THE LINE NUMBERS FOR THE FILE TEMACSETS.DNF)

2	3	4	1.11E-01	0.74191	CDF5	*	FM3	*	IE-20	*	IE-3	*
3	2	4	4.77E-02	1.05988	CDF5	*	FM2	*	IE-20	*	IE-2	*
4	1	4	1.07E-03	1.07236	CDF5	*	FM1	*	IE-20	*	IE-1	*
5	4	4	2.90E-04	1.07430	CDF5	*	FM4	*	IE-20	*	IE-4	.

Root Cause 6

RISK UNCERTAINTY ROOT CAUSE 6 RUN

TOP EVENT RC6-RSK-UNC CONTAINS 10 EVENTS IN 4 CUT SETS

THE FREQUENCY OF TOP EVENT RC6-RSK-UNC IS 3.48E+00

DESCRIPTIVE STATISTICS FOR THE FREQUENCY OF TOP EVENT RC6-RSK-UNC

N	1000
MEAN	3.45E+00
STD DEV	4.62E+00
LOWER 5%	1.23E-01
LOWER 25%	3.91E-01
MEDIAN	1.28E+00
UPPER 25%	4.03E+00
UPPER 5%	1.41E+01

90% UNCERTAINTY INTERVAL FOR TOP EVENT FREQUENCY (INNERMOST BRACKETS DENOTE INTERQUARTILE RANGE, ASTERISK DENOTES MEDIAN, N DENOTES NOMINAL VALUE AND M DENOTES MEAN)

```
5% =   1.23E-01                          ***LOG SCALE***                          95% =   1.41E+01
I-----------------------[-----------------------*--------------------M---]-------------------------I
```

NOMENCLATURE:

PD = PARTIAL DERIVATIVE

TEF = FREQUENCY OF THE TOP EVENT

EV(J) = PROBABILITY OF EVENT J FOR BASE EVENTS
= FREQUENCY OF EVENT J FOR INITIATING EVENTS

MEASURES:

1. FOR BASE EVENTS AND INITIATING EVENTS:

   RISK REDUCTION = PD x EV(J)
   = TEF - TEF(EVALUATED WITH EV(J) = 0)

2. FOR BASE EVENTS ONLY:

   RISK INCREASE = PD - RISK REDUCTION
   = PD x (1 - EV(J))
   = TEF(EVALUATED WITH EV(J) = 1) - TEF

RISK UNCERTAINTY ROOT CAUSE 6 RUN

RISK REDUCTIONS RISK INCREASES BY BASE EVENT AND SORTED BY RISK REDUCTION

BASE EVENT	OCCUR	PROB	(RANK)	RISK REDUCTION	(RANK)	RISK INCREASE	(RANK)
CDF6	4	5.36E-07	(5.0)	6.27E+06	(1.0)	3.10E+00	(3.0)
FW3	1	7.80E-01	(1.0)	2.42E+00	(2.0)	6.84E-01	(4.0)
FW2	1	2.00E-01	(2.0)	1.01E+00	(3.0)	4.03E+00	(2.0)
FW1	1	1.00E-02	(3.5)	4.07E-02	(4.0)	4.03E+00	(1.0)
FW4	1	1.00E-02	(3.5)	6.22E-03	(5.0)	6.16E-01	(5.0)

RISK REDUCTIONS BY INITIATING EVENT AND SORTED BY RISK REDUCTION

INIT EVENT	OCCUR	FREQ	(RANK)	RISK REDUCTION	(RANK)
IE-20	4	2.00E+01	(5.0)	3.48E+00	(1.0)
IE-3	1	2.90E+05	(3.0)	7.71E-06	(2.0)
IE-2	1	4.70E+05	(1.0)	1.98E-06	(3.0)
IE-4	1	5.80E+04	(4.0)	9.89E-08	(4.5)
IE-1	1	3.80E+05	(2.0)	9.89E-08	(4.5)

RISK UNCERTAINTY ROOT CAUSE 6 RUN

RISK REDUCTION BY BASE EVENT (WITH ASSOCIATED UNCERTAINTY INTERVALS)

BASE EVENT	OCCUR	PROB	(RANK)	RISK REDUCTION	(RANK)	LOWER 5%	UPPER 5%
CDF6	4	5.36E-07	(5.0)	6.27E+06	(1.0)	1.25E-01	1.41E+01
FM3	1	7.80E-01	(1.0)	2.42E+00	(2.0)		
FM2	1	2.00E-01	(2.0)	1.01E+00	(3.0)		
FM1	1	1.00E-02	(3.5)	4.07E-02	(4.0)		
FM4	1	1.00E-02	(3.5)	6.22E-03	(5.0)		

RISK REDUCTION BY INITIATING EVENT (WITH ASSOCIATED UNCERTAINTY INTERVALS)

INIT EVENT	OCCUR	FREQ	(RANK)	RISK REDUCTION	(RANK)	LOWER 5%	UPPER 5%
IE-20	4	2.00E+01	(5.0)	3.48E+00	(1.0)		
IE-3	1	2.90E+05	(3.0)	7.71E-06	(2.0)	8.78E-02	1.03E+01
IE-2	1	4.70E+05	(1.0)	1.98E-06	(3.0)	3.27E-02	3.83E+00
IE-4	1	5.80E+04	(4.0)	9.89E-08	(4.5)	2.08E-04	2.53E-02
IE-1	1	3.80E+05	(2.0)	9.89E-08	(4.5)	1.28E-03	1.39E-01

RISK UNCERTAINTY ROOT CAUSE 6 RUN

RISK INCREASE BY BASE EVENT (WITH ASSOCIATED UNCERTAINTY INTERVALS)

BASE EVENT	OCCUR	PROB	(RANK)	RISK INCREASE	(RANK)	LOWER 5%	UPPER 5%
FM1	1	1.00E-02	(3.5)	4.03E+00	(1.0)		
FM2	1	2.00E-01	(2.0)	4.03E+00	(2.0)		
CDF6	4	5.36E-07	(5.0)	3.10E+00	(3.0)	5.33E+06	8.78E+06
FM3	1	7.80E-01	(1.0)	6.84E-01	(4.0)		
FM4	1	1.00E-02	(3.5)	6.16E-01	(5.0)		

RISK UNCERTAINTY ROOT CAUSE 6 RUN

BASE EVENTS RANKED BY VARIOUS METHODS (RANK 1 = MOST IMPORTANT) AND SORTED BY RISK REDUCTION

BASE EVENT	RISK REDUCTION	RISK INCREASE
CDF6	1.0	3.0
FM3	2.0	4.0
FM2	3.0	2.0
FM1	4.0	1.0
FM4	5.0	5.0

RISK UNCERTAINTY ROOT CAUSE 6 RUN

MATRIX OF TOP-DOWN CORRELATION COEFFICIENTS

RISK INCR -0.2065

RISK RED
THERE ARE NO TOP-DOWN CORRELATIONS THAT ARE SIGNIFICANT AT THE .05 LEVEL OR LESS

THE TOP-DOWN CORRELATION COEFFICIENTS ARE USED TO DETERMINE THE LEVEL OF AGREEMENT AMONG ALL PAIRS OF RANKINGS IN THE PREVIOUS TABLE. THE TOP-DOWN CORRELATION COEFFICIENT GIVES MORE WEIGHT TO THE SMALLEST RANKS. NOTE THAT THE SMALLEST RANKS ARE ASSIGNED TO THE MOST IMPORTANT BASE EVENTS. MORE DETAIL ON THIS STATISTIC CAN BE FOUND IN THE IMAN AND CONOVER (1986) REFERENCE IN THE USER'S GUIDE THAT ACCOMPANIES THIS CODE.

RISK UNCERTAINTY ROOT CAUSE 6 RUN

CUT SET FREQUENCIES AND NORMALIZED CUT SET FREQUENCIES (WITH ASSOCIATED UNCERTAINTY INTERVALS)

CUT SET	ORDER	CUT SET FREQUENCY	(RANK)	LOWER 5%	UPPER 5%	NORMALIZED FREQUENCY	CUMULATIVE NORMALIZED FREQUENCY	LOWER 5%	UPPER 5%
3	4	4.30E+00	(1.0)	8.78E-02	1.03E+01	1.2369	1.2369	0.6309	0.8002
2	4	2.19E+00	(2.0)	3.27E-02	3.83E+00	0.6299	1.8669	0.1894	0.3563
1	4	7.32E-02	(3.0)	1.28E-03	1.39E-01	0.0210	1.8879	0.0071	0.0138
4	4	1.23E-02	(4.0)	2.08E-04	2.53E-02	0.0035	1.8915	0.0011	0.0026

RISK UNCERTAINTY ROOT CAUSE 6 RUN

CUT SET NUMBERS, CUT SET ORDERS, CUT SET FREQUENCIES,
CUMULATIVE NORMALIZED CUT SET FREQUENCIES AND CUT SETS
FOR TOP EVENT RC6-RSK-UNC WITH TOP EVENT FREQUENCY 3.48E+00

(THE FIRST COLUMN OF NUMBERS IS THE LINE NUMBERS FOR THE FILE TEMACSETS.DNF)

2	3	4	4.30E+00	1.23693	CDF6	*	FW3	*	IE-20	*	IE-3	*
3	2	4	2.19E+00	1.86687	CDF6	*	FW2	*	IE-20	*	IE-2	*
4	1	4	7.32E-02	1.88791	CDF6	*	FW1	*	IE-20	*	IE-1	*
5	4	4	1.23E-02	1.89146	CDF6	*	FW4	*	IE-20	*	IE-4	.

Root Cause 7

RISK UNCERTAINTY ROOT CAUSE 7 RUN UPDATED 8-23-91

TOP EVENT RC7-RSK-UNC CONTAINS 10 EVENTS IN 4 CUT SETS

THE FREQUENCY OF TOP EVENT RC7-RSK-UNC IS 2.11E+00

DESCRIPTIVE STATISTICS FOR THE FREQUENCY OF TOP EVENT RC7-RSK-UNC

N	1000
MEAN	2.04E+00
STD DEV	3.05E+00
LOWER 5%	2.53E-02
LOWER 25%	8.64E-02
MEDIAN	4.59E-01
UPPER 25%	2.35E+00
UPPER 5%	9.23E+00

90% UNCERTAINTY INTERVAL FOR TOP EVENT FREQUENCY (INNERMOST BRACKETS DENOTE INTERQUARTILE RANGE, ASTERISK DENOTES MEDIAN, N DENOTES NOMINAL VALUE AND M DENOTES MEAN)

```
5% =   2.53E-02                          ***LOG SCALE***                          95% =   9.23E+00
I--------------------[----------------------------*-------------------------MN-]----------------------I
```

NOMENCLATURE:

PD = PARTIAL DERIVATIVE

TEF = FREQUENCY OF THE TOP EVENT

EV(J) = PROBABILITY OF EVENT J FOR BASE EVENTS
= FREQUENCY OF EVENT J FOR INITIATING EVENTS

MEASURES:

1. FOR BASE EVENTS AND INITIATING EVENTS:

RISK REDUCTION = PD x EV(J)
= TEF - TEF(EVALUATED WITH EV(J) = 0)

2. FOR BASE EVENTS ONLY:

RISK INCREASE = PD - RISK REDUCTION
= PD x (1 - EV(J))
= TEF(EVALUATED WITH EV(J) = 1) - TEF

RISK UNCERTAINTY ROOT CAUSE 7 RUN UPDATED 8-23-91

RISK REDUCTIONS RISK INCREASES BY BASE EVENT AND SORTED BY RISK REDUCTION

BASE EVENT	OCCUR	PROB	(RANK)	RISK REDUCTION	(RANK)	RISK INCREASE	(RANK)
CDF7	4	3.25E-07	(5.0)	6.27E+06	(1.0)	6.88E-01	(3.0)
FM3	1	7.80E-01	(1.0)	1.47E+00	(2.0)	4.15E-01	(4.0)
FM2	1	2.00E-01	(2.0)	6.11E-01	(3.0)	2.44E+00	(2.0)
FM1	1	1.00E-02	(3.5)	2.47E-02	(4.0)	2.45E+00	(1.0)
FM4	1	1.00E-02	(3.5)	3.77E-03	(5.0)	3.73E-01	(5.0)

RISK REDUCTIONS BY INITIATING EVENT AND SORTED BY RISK REDUCTION

INIT EVENT	OCCUR	FREQ	(RANK)	RISK REDUCTION	(RANK)
IE-20	4	2.00E+01	(5.0)	2.11E+00	(1.0)
IE-3	1	2.90E+05	(3.0)	1.71E-06	(2.0)
IE-2	1	4.70E+05	(1.0)	4.39E-07	(3.0)
IE-4	1	5.80E+04	(4.0)	2.19E-08	(4.5)
IE-1	1	3.80E+05	(2.0)	2.19E-08	(4.5)

RISK UNCERTAINTY ROOT CAUSE 7 RUN UPDATED 8-23-91

RISK REDUCTION BY BASE EVENT (WITH ASSOCIATED UNCERTAINTY INTERVALS)

BASE EVENT	OCCUR	PROB	(RANK)	RISK REDUCTION	(RANK)	LOWER 5%	UPPER 5%
CDF7	4	3.25E-07	(5.0)	6.27E+06	(1.0)	2.53E-02	9.23E+00
FM3	1	7.80E-01	(1.0)	1.47E+00	(2.0)		
FM2	1	2.00E-01	(2.0)	6.11E-01	(3.0)		
FM1	1	1.00E-02	(3.5)	2.47E-02	(4.0)		
FM4	1	1.00E-02	(3.5)	3.77E-03	(5.0)		

RISK REDUCTION BY INITIATING EVENT (WITH ASSOCIATED UNCERTAINTY INTERVALS)

INIT EVENT	OCCUR	FREQ	(RANK)	RISK REDUCTION	(RANK)	LOWER 5%	UPPER 5%
IE-20	4	2.00E+01	(5.0)	2.11E+00	(1.0)		
IE-3	1	2.90E+05	(3.0)	1.71E-06	(2.0)	1.74E-02	6.83E+00
IE-2	1	4.70E+05	(1.0)	4.39E-07	(3.0)	6.84E-03	2.47E+00
IE-4	1	5.00E+04	(4.0)	2.19E-08	(4.5)	4.63E-05	1.63E-02
IE-1	1	3.00E+05	(2.0)	2.19E-08	(4.5)	2.51E-04	9.19E-02

RISK UNCERTAINTY ROOT CAUSE 7 RUN UPDATED 8-23-91

RISK INCREASE BY BASE EVENT (WITH ASSOCIATED UNCERTAINTY INTERVALS)

BASE EVENT	OCCUR	PROB	(RANK)	RISK INCREASE	(RANK)	LOWER 5%	UPPER 5%
FM1	1	1.00E-02	(3.5)	2.45E+00	(1.0)		
FM2	1	2.00E-01	(2.0)	2.44E+00	(2.0)		
CDF7	4	3.25E-07	(5.0)	6.88E-01	(3.0)	5.33E+06	8.78E+06
FM3	1	7.80E-01	(1.0)	4.15E-01	(4.0)		
FM4	1	1.00E-02	(3.5)	3.73E-01	(5.0)		

RISK UNCERTAINTY ROOT CAUSE 7 RUN UPDATED 8-23-91

BASE EVENTS RANKED BY VARIOUS METHODS (RANK 1 = MOST IMPORTANT) AND SORTED BY RISK REDUCTION

BASE EVENT	RISK REDUCTION	RISK INCREASE
CDF7	1.0	3.0
FM3	2.0	4.0
FM2	3.0	2.0
FM1	4.0	1.0
FM4	5.0	5.0

RISK UNCERTAINTY ROOT CAUSE 7 RUN UPDATED 8-23-91

MATRIX OF TOP-DOWN CORRELATION COEFFICIENTS

RISK INCR -0.2065

RISK RED

THERE ARE NO TOP-DOWN CORRELATIONS THAT ARE SIGNIFICANT AT THE .05 LEVEL OR LESS

THE TOP-DOWN CORRELATION COEFFICIENTS ARE USED TO DETERMINE THE LEVEL OF AGREEMENT AMONG ALL PAIRS OF RANKINGS IN THE PREVIOUS TABLE. THE TOP-DOWN CORRELATION COEFFICIENT GIVES MORE WEIGHT TO THE SMALLEST RANKS. NOTE THAT THE SMALLEST RANKS ARE ASSIGNED TO THE MOST IMPORTANT BASE EVENTS. MORE DETAIL ON THIS STATISTIC CAN BE FOUND IN THE IMAN AND CONOVER (1985) REFERENCE IN THE USER'S GUIDE THAT ACCOMPANIES THIS CODE.

RISK UNCERTAINTY ROOT CAUSE 7 RUN UPDATED 8-28-91

CUT SET FREQUENCIES AND NORMALIZED CUT SET FREQUENCIES (WITH ASSOCIATED UNCERTAINTY INTERVALS)

CUT SET	ORDER	CUT SET FREQUENCY	(RANK)	LOWER 5%	UPPER 5%	NORMALIZED FREQUENCY	CUMULATIVE NORMALIZED FREQUENCY	LOWER 5%	UPPER 5%
3	4	1.89E+00	(1.0)	1.74E-02	6.83E+00	0.8944	0.8944	0.6309	0.8002
2	4	8.74E-01	(2.0)	6.84E-03	2.47E+00	0.4141	1.3085	0.1894	0.3563
1	4	3.19E-02	(3.0)	2.51E-04	9.19E-02	0.0151	1.3237	0.0071	0.0138
4	4	5.13E-03	(4.0)	4.03E-05	1.03E-02	0.0024	1.3261	0.0011	0.0026

RISK UNCERTAINTY ROOT CAUSE 7 RUN UPDATED 8-23-91

CUT SET NUMBERS, CUT SET ORDERS, CUT SET FREQUENCIES,
CUMULATIVE NORMALIZED CUT SET FREQUENCIES AND CUT SETS
FOR TOP EVENT RC7-RSK-UNC WITH TOP EVENT FREQUENCY 2.11E+00

(THE FIRST COLUMN OF NUMBERS IS THE LINE NUMBERS FOR THE FILE TEMACSETS.DNF)

2	3	4	1.89E+00	0.89445	CDF7	*	FM3	*	IE-20	*	IE-3	*
3	2	4	8.74E-01	1.30855	CDF7	*	FM2	*	IE-20	*	IE-2	*
4	1	4	3.19E-02	1.32367	CDF7	*	FM1	*	IE-20	*	IE-1	*
5	4	4	5.13E-03	1.32610	CDF7	*	FM4	*	IE-20	*	IE-4	.

Root Cause 8

RISK UNCERTAINTY ROOT CAUSE 8 RUN

TOP EVENT RC8-RSK-UNC CONTAINS 11 EVENTS IN 5 CUT SETS

THE FREQUENCY OF TOP EVENT RC8-RSK-UNC IS 6.72E+01

DESCRIPTIVE STATISTICS FOR THE FREQUENCY OF TOP EVENT RC8-RSK-UNC

N	1000
MEAN	6.32E+01
STD DEV	9.07E+01
LOWER 5%	8.91E-01
LOWER 25%	2.98E+00
MEDIAN	1.58E+01
UPPER 25%	7.27E+01
UPPER 5%	2.73E+02

90% UNCERTAINTY INTERVAL FOR TOP EVENT FREQUENCY (INNERMOST BRACKETS DENOTE INTERQUARTILE RANGE, ASTERISK DENOTES MEDIAN, N DENOTES NOMINAL VALUE AND M DENOTES MEAN)

```
5% =   8.91E-01                          ***LOG SCALE***                          95% =   2.73E+02
I-------------------[-----------------------------*-----------------------M-N]----------------------I
```

NOMENCLATURE:

PD = PARTIAL DERIVATIVE

TEF = FREQUENCY OF THE TOP EVENT

EV(J) = PROBABILITY OF EVENT J FOR BASE EVENTS
= FREQUENCY OF EVENT J FOR INITIATING EVENTS

MEASURES:

1. FOR BASE EVENTS AND INITIATING EVENTS:

   RISK REDUCTION = PD x EV(J)
   = TEF - TEF(EVALUATED WITH EV(J) = 0)

2. FOR BASE EVENTS ONLY:

   RISK INCREASE = PD - RISK REDUCTION
   = PD x (1 - EV(J))
   = TEF(EVALUATED WITH EV(J) = 1) - TEF

RISK UNCERTAINTY ROOT CAUSE 8 RUN

RISK REDUCTIONS RISK INCREASES BY BASE EVENT AND SORTED BY RISK REDUCTION

BASE EVENT	OCCUR	PROB	(RANK)	RISK REDUCTION	(RANK)	RISK INCREASE	(RANK)
CDF8	5	1.10E-05	(6.0)	5.91E+06	(1.0)	1.33E+01	(5.0)
FM8	1	7.30E-01	(1.0)	4.66E+01	(2.0)	1.72E+01	(4.0)
FM7	1	1.80E-01	(2.0)	1.86E+01	(3.0)	8.48E+01	(2.0)
FM6	1	1.00E-02	(4.0)	1.03E+00	(4.0)	1.02E+02	(1.0)
FM5	1	1.00E-02	(4.0)	8.36E-01	(5.0)	8.28E+01	(3.0)
FM9	1	1.00E-02	(4.0)	1.28E-01	(6.0)	1.26E+01	(6.0)

RISK REDUCTIONS BY INITIATING EVENT AND SORTED BY RISK REDUCTION

INIT EVENT	OCCUR	FREQ	(RANK)	RISK REDUCTION	(RANK)
IE-20	5	2.00E+01	(5.0)	6.72E+01	(1.0)
IE-3	1	2.90E+05	(3.0)	3.28E-05	(2.0)
IE-2	2	4.70E+05	(1.0)	8.54E-06	(3.0)
IE-4	1	5.80E+04	(4.0)	4.49E-07	(4.5)
IE-1	1	3.80E+05	(2.0)	4.49E-07	(4.5)

RISK UNCERTAINTY ROOT CAUSE 8 RUN

RISK REDUCTION BY BASE EVENT (WITH ASSOCIATED UNCERTAINTY INTERVALS)

BASE EVENT	OCCUR	PROB	(RANK)	RISK REDUCTION	(RANK)	LOWER 5%	UPPER 5%
CDF8	5	1.10E-05	(6.0)	5.91E+06	(1.0)	8.96E-01	2.73E+02
FM8	1	7.30E-01	(1.0)	4.66E+01	(2.0)		
FM7	1	1.80E-01	(2.0)	1.86E+01	(3.0)		
FM6	1	1.00E-02	(4.0)	1.03E+00	(4.0)		
FM5	1	1.00E-02	(4.0)	8.36E-01	(5.0)		
FM9	1	1.00E-02	(4.0)	1.28E-01	(6.0)		

RISK REDUCTION BY INITIATING EVENT (WITH ASSOCIATED UNCERTAINTY INTERVALS)

INIT EVENT	OCCUR	FREQ	(RANK)	RISK REDUCTION	(RANK)	LOWER 5%	UPPER 5%
IE-20	5	2.00E+01	(5.0)	6.72E+01	(1.0)		
IE-3	1	2.90E+05	(3.0)	3.28E-05	(2.0)	6.58E-01	2.00E+02
IE-2	2	4.70E+05	(1.0)	8.54E-06	(3.0)	2.33E-01	7.33E+01
IE-4	1	5.80E+04	(4.0)	4.49E-07	(4.5)	1.72E-03	5.14E-01
IE-1	1	3.80E+05	(2.0)	4.49E-07	(4.5)	9.52E-03	2.96E+00

RISK UNCERTAINTY ROOT CAUSE 8 RUN

RISK INCREASE BY BASE EVENT (WITH ASSOCIATED UNCERTAINTY INTERVALS)

BASE EVENT	OCCUR	PROB	(RANK)	RISK INCREASE	(RANK)	LOWER 5%	UPPER 5%
FM6	1	1.00E-02	(4.0)	1.02E+02	(1.0)		
FM7	1	1.80E-01	(2.0)	8.48E+01	(2.0)		
FM5	1	1.00E-02	(4.0)	8.28E+01	(3.0)		
FM8	1	7.30E-01	(1.0)	1.72E+01	(4.0)		
CDF8	5	1.10E-05	(6.0)	1.33E+01	(5.0)	5.02E+06	8.25E+06
FM9	1	1.00E-02	(4.0)	1.26E+01	(6.0)		

RISK UNCERTAINTY ROOT CAUSE 8 RUN

BASE EVENTS RANKED BY VARIOUS METHODS (RANK 1 = MOST IMPORTANT) AND SORTED BY RISK REDUCTION

BASE EVENT	RISK REDUCTION	RISK INCREASE
CDF8	1.0	5.0
FM8	2.0	4.0
FM7	3.0	2.0
FM6	4.0	1.0
FM5	5.0	3.0
FM9	6.0	6.0

RISK UNCERTAINTY ROOT CAUSE 8 RUN

MATRIX OF TOP-DOWN CORRELATION COEFFICIENTS

RISK INCR -0.2656

RISK RED

THERE ARE NO TOP-DOWN CORRELATIONS THAT ARE SIGNIFICANT AT THE .05 LEVEL OR LESS

THE TOP-DOWN CORRELATION COEFFICIENTS ARE USED TO DETERMINE THE LEVEL OF AGREEMENT AMONG ALL PAIRS OF RANKINGS IN THE PREVIOUS TABLE. THE TOP-DOWN CORRELATION COEFFICIENT GIVES MORE WEIGHT TO THE SMALLEST RANKS. NOTE THAT THE SMALLEST RANKS ARE ASSIGNED TO THE MOST IMPORTANT BASE EVENTS. MORE DETAIL ON THIS STATISTIC CAN BE FOUND IN THE IMAN AND CONOVER (1985) REFERENCE IN THE USER'S GUIDE THAT ACCOMPANIES THIS CODE.

RISK UNCERTAINTY ROOT CAUSE 8 RUN

CUT SET FREQUENCIES AND NORMALIZED CUT SET FREQUENCIES (WITH ASSOCIATED UNCERTAINTY INTERVALS)

CUT SET	ORDER	CUT SET FREQUENCY	(RANK)	LOWER 5%	UPPER 5%	NORMALIZED FREQUENCY	CUMULATIVE NORMALIZED FREQUENCY	LOWER 5%	UPPER 5%
4	4	5.46E+01	(1.0)	6.58E-01	2.00E+02	0.8122	0.8122	0.6270	0.7974
3	4	2.35E+01	(2.0)	2.20E-01	6.95E+01	0.3491	1.1613	0.1815	0.3405
2	4	1.30E+00	(3.0)	1.22E-02	3.86E+00	0.0194	1.1807	0.0101	0.0189
1	4	9.84E-01	(4.0)	9.52E-03	2.96E+00	0.0146	1.1954	0.0076	0.0147
5	4	1.55E-01	(5.0)	1.72E-03	5.14E-01	0.0023	1.1977	0.0012	0.0028

RISK UNCERTAINTY ROOT CAUSE 8 RUN

CUT SET NUMBERS, CUT SET ORDERS, CUT SET FREQUENCIES,
CUMULATIVE NORMALIZED CUT SET FREQUENCIES AND CUT SETS
FOR TOP EVENT RC8-RSK-UNC WITH TOP EVENT FREQUENCY 6.72E+01

(THE FIRST COLUMN OF NUMBERS IS THE LINE NUMBERS FOR THE FILE TEMPCSETS.DNF)

2	4	4	5.46E+01	0.81221	CDF8	*	FM8	*	IE-20	*	IE-3	*
3	3	4	2.35E+01	1.16135	CDF8	*	FM7	*	IE-20	*	IE-2	*
4	2	4	1.30E+00	1.18075	CDF8	*	FM6	*	IE-20	*	IE-2	*
5	1	4	9.84E-01	1.19539	CDF8	*	FM5	*	IE-20	*	IE-1	*
6	5	4	1.55E-01	1.19770	CDF8	*	FM9	*	IE-20	*	IE-4	.

Root Cause 10

RISK UNCERTAINTY ROOT CAUSE 10 RUN

TOP EVENT RC10-RSK-UNC CONTAINS 10 EVENTS IN 4 CUT SETS

THE FREQUENCY OF TOP EVENT RC10-RSK-UNC IS 4.49E+00

DESCRIPTIVE STATISTICS FOR THE FREQUENCY OF TOP EVENT RC10-RSK-UNC

N	1000
MEAN	4.33E+00
STD DEV	5.61E+00
LOWER 5%	1.68E-01
LOWER 25%	5.12E-01
MEDIAN	1.65E+00
UPPER 25%	5.18E+00
UPPER 5%	1.78E+01

90% UNCERTAINTY INTERVAL FOR TOP EVENT FREQUENCY (INNERMOST BRACKETS DENOTE INTERQUARTILE RANGE, ASTERISK DENOTES MEDIAN, N DENOTES NOMINAL VALUE AND M DENOTES MEAN)

```
5% =   1.68E-01                          ***LOG SCALE***                          95% =   1.78E+01
I----------------------[-------------------------*-------------------MN---]-------------------------I
```

NOMENCLATURE:

PD = PARTIAL DERIVATIVE

TEF = FREQUENCY OF THE TOP EVENT

EV(J) = PROBABILITY OF EVENT J FOR BASE EVENTS
= FREQUENCY OF EVENT J FOR INITIATING EVENTS

MEASURES:

1. FOR BASE EVENTS AND INITIATING EVENTS:

   RISK REDUCTION = PD x EV(J)
   = TEF - TEF(EVALUATED WITH EV(J) = 0)

2. FOR BASE EVENTS ONLY:

   RISK INCREASE = PD - RISK REDUCTION
   = PD x (1 - EV(J))
   = TEF(EVALUATED WITH EV(J) = 1) - TEF

RISK UNCERTAINTY ROOT CAUSE 10 RUN

RISK REDUCTIONS RISK INCREASES BY BASE EVENT AND SORTED BY RISK REDUCTION

BASE EVENT	OCCUR	PROB	(RANK)	RISK REDUCTION	(RANK)	RISK INCREASE	(RANK)
CDF10	4	6.91E-07	(5.0)	6.27E+06	(1.0)	1.79E+00	(3.0)
FM3	1	7.80E-01	(1.0)	3.13E+00	(2.0)	8.82E-01	(4.0)
FM2	1	2.00E-01	(2.0)	1.30E+00	(3.0)	5.20E+00	(2.0)
FM1	1	1.00E-02	(3.5)	5.25E-02	(4.0)	5.20E+00	(1.0)
FM4	1	1.00E-02	(3.5)	8.02E-03	(5.0)	7.94E-01	(5.0)

RISK REDUCTIONS BY INITIATING EVENT AND SORTED BY RISK REDUCTION

INIT EVENT	OCCUR	FREQ	(RANK)	RISK REDUCTION	(RANK)
IE-20	4	2.00E+01	(5.0)	4.49E+00	(1.0)
IE-3	1	2.90E+05	(3.0)	4.46E-06	(2.0)
IE-2	1	4.70E+05	(1.0)	1.14E-06	(3.0)
IE-4	1	5.80E+04	(4.0)	5.72E-08	(4.5)
IE-1	1	3.80E+05	(2.0)	5.72E-08	(4.5)

RISK UNCERTAINTY ROOT CAUSE 10 RUN

RISK REDUCTION BY BASE EVENT (WITH ASSOCIATED UNCERTAINTY INTERVALS)

BASE EVENT	OCCUR	PROB	(RANK)	RISK REDUCTION	(RANK)	LOWER 5%	UPPER 5%
CDF10	4	6.91E-07	(5.0)	6.27E+06	(1.0)	1.70E-01	1.78E+01
FM3	1	7.80E-01	(1.0)	3.13E+00	(2.0)		
FM2	1	2.00E-01	(2.0)	1.30E+00	(3.0)		
FM1	1	1.00E-02	(3.5)	5.25E-02	(4.0)		
FM4	1	1.00E-02	(3.5)	8.02E-03	(5.0)		

RISK REDUCTION BY INITIATING EVENT (WITH ASSOCIATED UNCERTAINTY INTERVALS)

INIT EVENT	OCCUR	FREQ	(RANK)	RISK REDUCTION	(RANK)	LOWER 5%	UPPER 5%
IE-20	4	2.00E+01	(5.0)	4.49E+00	(1.0)		
IE-3	1	2.90E+05	(3.0)	4.46E-06	(2.0)	1.20E-01	1.28E+01
IE-2	1	4.70E+05	(1.0)	1.14E-06	(3.0)	4.42E-02	4.58E+00
IE-4	1	5.80E+04	(4.0)	5.72E-08	(4.5)	3.04E-04	3.18E-02
IE-1	1	3.80E+05	(2.0)	5.72E-08	(4.5)	1.70E-03	1.73E-01

RISK UNCERTAINTY ROOT CAUSE 10 RUN

RISK INCREASE BY BASE EVENT (WITH ASSOCIATED UNCERTAINTY INTERVALS)

BASE EVENT	OCCUR	PROB	(RANK)	RISK INCREASE	(RANK)	LOWER 5%	UPPER 5%
FM1	1	1.00E-02	(3.5)	5.20E+00	(1.0)		
FM2	1	2.00E-01	(2.0)	5.20E+00	(2.0)		
CDF10	4	6.91E-07	(5.0)	1.79E+00	(3.0)	5.33E+06	8.78E+06
FM3	1	7.80E-01	(1.0)	8.82E-01	(4.0)		
FM4	1	1.00E-02	(3.5)	7.94E-01	(5.0)		

RISK UNCERTAINTY ROOT CAUSE 10 RUN

BASE EVENTS RANKED BY VARIOUS METHODS (RANK 1 = MOST IMPORTANT) AND SORTED BY RISK REDUCTION

BASE EVENT	RISK REDUCTION	RISK INCREASE
CDF10	1.0	3.0
FM3	2.0	4.0
FM2	3.0	2.0
FM1	4.0	1.0
FM4	5.0	5.0

RISK UNCERTAINTY ROOT CAUSE 10 RUN

MATRIX OF TOP-DOWN CORRELATION COEFFICIENTS

RISK INCR -0.2065

RISK RED

THERE ARE NO TOP-DOWN CORRELATIONS THAT ARE SIGNIFICANT AT THE .05 LEVEL OR LESS

THE TOP-DOWN CORRELATION COEFFICIENTS ARE USED TO DETERMINE THE LEVEL OF AGREEMENT AMONG ALL PAIRS OF RANKINGS IN THE PREVIOUS TABLE. THE TOP-DOWN CORRELATION COEFFICIENT GIVES MORE WEIGHT TO THE SMALLEST RANKS. NOTE THAT THE SMALLEST RANKS ARE ASSIGNED TO THE MOST IMPORTANT BASE EVENTS. MORE DETAIL ON THIS STATISTIC CAN BE FOUND IN THE IMAN AND CONOVER (1985) REFERENCE IN THE USER'S GUIDE THAT ACCOMPANIES THIS CODE.

RISK UNCERTAINTY ROOT CAUSE 10 RUN

CUT SET FREQUENCIES AND NORMALIZED CUT SET FREQUENCIES (WITH ASSOCIATED UNCERTAINTY INTERVALS)

CUT SET	ORDER	CUT SET FREQUENCY	(RANK)	LOWER 5%	UPPER 5%	NORMALIZED FREQUENCY	CUMULATIVE NORMALIZED FREQUENCY	LOWER 5%	UPPER 5%
3	4	4.21E+00	(1.0)	1.20E-01	1.28E+01	0.9393	0.9393	0.6309	0.8002
2	4	1.98E+00	(2.0)	4.42E-02	4.58E+00	0.4424	1.3816	0.1894	0.3563
1	4	7.13E-02	(3.0)	1.70E-03	1.73E-01	0.0159	1.3975	0.0071	0.0138
4	4	1.16E-02	(4.0)	3.04E-04	3.18E-02	0.0026	1.4001	0.0011	0.0026

RISK UNCERTAINTY ROOT CAUSE 10 RUN

CUT SET NUMBERS, CUT SET ORDERS, CUT SET FREQUENCIES,
CUMULATIVE NORMALIZED CUT SET FREQUENCIES AND CUT SETS
FOR TOP EVENT RC10-RSK-UNC WITH TOP EVENT FREQUENCY 4.49E+00

(THE FIRST COLUMN OF NUMBERS IS THE LINE NUMBERS FOR THE FILE TEMACSETS.DNF)

2	3	4	4.21E+00	0.93928	CDF10	*	FW3	*	IE-20	*	IE-3	*
3	2	4	1.98E+00	1.38164	CDF10	*	FW2	*	IE-20	*	IE-2	*
4	1	4	7.13E-02	1.39754	CDF10	*	FW1	*	IE-20	*	IE-1	*
5	4	4	1.16E-02	1.40012	CDF10	*	FW4	*	IE-20	*	IE-4	.

Root Cause 11

RISK UNCERTAINTY ROOT CAUSE 11 RUN

TOP EVENT RC11-RSK-UNC CONTAINS 10 EVENTS IN 4 CUT SETS

THE FREQUENCY OF TOP EVENT RC11-RSK-UNC IS 3.71E+00

DESCRIPTIVE STATISTICS FOR THE FREQUENCY OF TOP EVENT RC11-RSK-UNC

N	1000
MEAN	3.28E+00
STD DEV	3.84E+00
LOWER 5%	1.87E-01
LOWER 25%	4.86E-01
MEDIAN	1.51E+00
UPPER 25%	4.27E+00
UPPER 5%	1.19E+01

90% UNCERTAINTY INTERVAL FOR TOP EVENT FREQUENCY (INNERMOST BRACKETS DENOTE INTERQUARTILE RANGE, ASTERISK DENOTES MEDIAN, N DENOTES NOMINAL VALUE AND M DENOTES MEAN)

```
5% =   1.87E-01                          ***LOG SCALE***                          95% =   1.19E+01
I----------------------[---------------------------*-----------------M---N--]-------------------------I
```

NOMENCLATURE:

PD = PARTIAL DERIVATIVE

TEF = FREQUENCY OF THE TOP EVENT

EV(J) = PROBABILITY OF EVENT J FOR BASE EVENTS
= FREQUENCY OF EVENT J FOR INITIATING EVENTS

MEASURES:

1. FOR BASE EVENTS AND INITIATING EVENTS:

RISK REDUCTION = PD x EV(J)
= TEF - TEF(EVALUATED WITH EV(J) = 0)

2. FOR BASE EVENTS ONLY:

RISK INCREASE = PD - RISK REDUCTION
= PD x (1 - EV(J))
= TEF(EVALUATED WITH EV(J) = 1) - TEF

RISK UNCERTAINTY ROOT CAUSE 11 RUN

RISK REDUCTIONS RISK INCREASES BY BASE EVENT AND SORTED BY RISK REDUCTION

BASE EVENT	OCCUR	PROB	(RANK)	RISK REDUCTION	(RANK)	RISK INCREASE	(RANK)
CDF11	4	5.72E-07	(5.0)	6.27E+06	(1.0)	4.25E-01	(5.0)
FM3	1	7.80E-01	(1.0)	2.59E+00	(2.0)	7.30E-01	(3.0)
FM2	1	2.00E-01	(2.0)	1.08E+00	(3.0)	4.30E+00	(2.0)
FM1	1	1.00E-02	(3.5)	4.35E-02	(4.0)	4.30E+00	(1.0)
FM4	1	1.00E-02	(3.5)	6.64E-03	(5.0)	6.57E-01	(4.0)

RISK REDUCTIONS BY INITIATING EVENT AND SORTED BY RISK REDUCTION

INIT EVENT	OCCUR	FREQ	(RANK)	RISK REDUCTION	(RANK)
IE-20	4	2.00E+01	(5.0)	3.71E+00	(1.0)
IE-3	1	2.90E+05	(3.0)	1.06E-06	(2.0)
IE-2	1	4.70E+05	(1.0)	2.71E-07	(3.0)
IE-4	1	5.80E+04	(4.0)	1.36E-08	(4.5)
IE-1	1	3.80E+05	(2.0)	1.36E-08	(4.5)

RISK UNCERTAINTY ROOT CAUSE 11 RUN

RISK REDUCTION BY BASE EVENT (WITH ASSOCIATED UNCERTAINTY INTERVALS)

BASE EVENT	OCCUR	PROB	(RANK)	RISK REDUCTION	(RANK)	LOWER 5%	UPPER 5%
CDF11	4	5.72E-07	(5.0)	6.27E+06	(1.0)	1.88E-01	1.19E+01
FM3	1	7.80E-01	(1.0)	2.59E+00	(2.0)		
FM2	1	2.00E-01	(2.0)	1.08E+00	(3.0)		
FM1	1	1.00E-02	(3.5)	4.35E-02	(4.0)		
FM4	1	1.00E-02	(3.5)	6.84E-03	(5.0)		

RISK REDUCTION BY INITIATING EVENT (WITH ASSOCIATED UNCERTAINTY INTERVALS)

INIT EVENT	OCCUR	FREQ	(RANK)	RISK REDUCTION	(RANK)	LOWER 5%	UPPER 5%
IE-20	4	2.00E+01	(5.0)	3.71E+00	(1.0)		
IE-3	1	2.90E+05	(3.0)	1.06E-06	(2.0)	1.32E-01	8.55E+00
IE-2	1	4.70E+05	(1.0)	2.71E-07	(3.0)	4.97E-02	3.21E+00
IE-4	1	5.80E+04	(4.0)	1.36E-08	(4.5)	3.11E-04	2.13E-02
IE-1	1	3.80E+05	(2.0)	1.36E-08	(4.5)	1.82E-03	1.20E-01

RISK UNCERTAINTY ROOT CAUSE 11 RUN

RISK INCREASE BY BASE EVENT (WITH ASSOCIATED UNCERTAINTY INTERVALS)

BASE EVENT	OCCUR	PROB	(RANK)	RISK INCREASE	(RANK)	LOWER 5%	UPPER 5%
FM1	1	1.00E-02	(3.5)	4.30E+00	(1.0)		
FM2	1	2.00E-01	(2.0)	4.30E+00	(2.0)		
FM3	1	7.80E-01	(1.0)	7.30E-01	(3.0)		
FM4	1	1.00E-02	(3.5)	6.57E-01	(4.0)		
CDF11	4	5.72E-07	(5.0)	4.25E-01	(5.0)	5.33E+06	8.78E+06

RISK UNCERTAINTY ROOT CAUSE 11 RUN

BASE EVENTS RANKED BY VARIOUS METHODS (RANK 1 = MOST IMPORTANT) AND SORTED BY RISK REDUCTION

BASE EVENT	RISK REDUCTION	RISK INCREASE
CDF11	1.0	5.0
FM3	2.0	3.0
FM2	3.0	2.0
FM1	4.0	1.0
FM4	5.0	4.0

RISK UNCERTAINTY ROOT CAUSE 11 RUN

MATRIX OF TOP-DOWN CORRELATION COEFFICIENTS

RISK INCR -0.5210

RISK RED

THERE ARE NO TOP-DOWN CORRELATIONS THAT ARE SIGNIFICANT AT THE .05 LEVEL OR LESS

THE TOP-DOWN CORRELATION COEFFICIENTS ARE USED TO DETERMINE THE LEVEL OF AGREEMENT AMONG ALL PAIRS OF RANKINGS IN THE PREVIOUS TABLE. THE TOP-DOWN CORRELATION COEFFICIENT GIVES MORE WEIGHT TO THE SMALLEST RANKS. NOTE THAT THE SMALLEST RANKS ARE ASSIGNED TO THE MOST IMPORTANT BASE EVENTS. MORE DETAIL ON THIS STATISTIC CAN BE FOUND IN THE IMAN AND CONOVER (1985) REFERENCE IN THE USER'S GUIDE THAT ACCOMPANIES THIS CODE.

RISK UNCERTAINTY ROOT CAUSE 11 RUN

CUT SET FREQUENCIES AND NORMALIZED CUT SET FREQUENCIES (WITH ASSOCIATED UNCERTAINTY INTERVALS)

CUT SET	ORDER	CUT SET FREQUENCY	(RANK)	LOWER 5%	UPPER 5%	NORMALIZED FREQUENCY	CUMULATIVE NORMALIZED FREQUENCY	LOWER 5%	UPPER 5%
3	4	2.85E+00	(1.0)	1.32E-01	8.55E+00	0.7663	0.7663	0.6309	0.8002
2	4	1.24E+00	(2.0)	4.97E-02	3.21E+00	0.3333	1.0996	0.1894	0.3563
1	4	4.79E-02	(3.0)	1.82E-03	1.20E-01	0.0129	1.1125	0.0071	0.0138
4	4	7.47E-03	(4.0)	3.11E-04	2.13E-02	0.0020	1.1145	0.0011	0.0026

RISK UNCERTAINTY ROOT CAUSE 11 RUN

CUT SET NUMBERS, CUT SET ORDERS, CUT SET FREQUENCIES,
CUMULATIVE NORMALIZED CUT SET FREQUENCIES AND CUT SETS
FOR TOP EVENT RC11-RSK-UNC WITH TOP EVENT FREQUENCY 3.71E+00

(THE FIRST COLUMN OF NUMBERS IS THE LINE NUMBERS FOR THE FILE TEMACSETS.DNF)

2	3	4	2.85E+00	0.76626	CDF11	*	FM3	*	IE-20	*	IE-3	+
3	2	4	1.24E+00	1.09957	CDF11	*	FM2	*	IE-20	*	IE-2	+
4	1	4	4.79E-02	1.11248	CDF11	*	FM1	*	IE-20	*	IE-1	+
5	4	4	7.47E-03	1.11449	CDF11	*	FM4	*	IE-20	*	IE-4	.

Root Cause 12

RISK UNCERTAINTY ROOT CAUSE 12 RUN - UPDATED 9-11-91

TOP EVENT RC12-RSK-UNC CONTAINS 10 EVENTS IN 4 CUT SETS

THE FREQUENCY OF TOP EVENT RC12-RSK-UNC IS 5.56E+01

DESCRIPTIVE STATISTICS FOR THE FREQUENCY OF TOP EVENT RC12-RSK-UNC

N	1000
MEAN	5.32E+01
STD DEV	8.82E+01
LOWER 5%	3.32E-01
LOWER 25%	1.24E+00
MEDIAN	7.20E+00
UPPER 25%	4.53E+01
UPPER 5%	2.65E+02

90% UNCERTAINTY INTERVAL FOR TOP EVENT FREQUENCY (INNERMOST BRACKETS DENOTE INTERQUARTILE RANGE, ASTERISK DENOTES MEDIAN, N DENOTES NOMINAL VALUE AND M DENOTES MEAN)

```
5% =   3.32E-01                          ***LOG SCALE***                          95% =   2.65E+02
I-------------------[---------------------------*---------------------------]-MN----------------------I
```

NOMENCLATURE:

PD = PARTIAL DERIVATIVE

TEF = FREQUENCY OF THE TOP EVENT

EV(J) = PROBABILITY OF EVENT J FOR BASE EVENTS
= FREQUENCY OF EVENT J FOR INITIATING EVENTS

MEASURES:

1. FOR BASE EVENTS AND INITIATING EVENTS:

   RISK REDUCTION = PD x EV(J)
   = TEF - TEF(EVALUATED WITH EV(J) = 0)

2. FOR BASE EVENTS ONLY:

   RISK INCREASE = PD - RISK REDUCTION
   = PD x (1 - EV(J))
   = TEF(EVALUATED WITH EV(J) = 1) - TEF

RISK UNCERTAINTY ROOT CAUSE 12 RUN - UPDATED 9-11-91

RISK REDUCTIONS RISK INCREASES BY BASE EVENT AND SORTED BY RISK REDUCTION

BASE EVENT	OCCUR	PROB	(RANK)	RISK REDUCTION	(RANK)	RISK INCREASE	(RANK)
CDF12	4	8.56E-06	(5.0)	6.27E+06	(1.0)	1.52E+00	(5.0)
FM3	1	7.80E-01	(1.0)	3.87E+01	(2.0)	1.09E+01	(3.0)
FM2	1	2.00E-01	(2.0)	1.61E+01	(3.0)	6.44E+01	(2.0)
FM1	1	1.00E-02	(3.5)	6.51E-01	(4.0)	6.44E+01	(1.0)
FM4	1	1.00E-02	(3.5)	9.93E-02	(5.0)	9.83E+00	(4.0)

RISK REDUCTIONS BY INITIATING EVENT AND SORTED BY RISK REDUCTION

INIT EVENT	OCCUR	FREQ	(RANK)	RISK REDUCTION	(RANK)
IE-20	4	2.00E+01	(5.0)	5.56E+01	(1.0)
IE-3	1	2.90E+05	(3.0)	3.77E-06	(2.0)
IE-2	1	4.70E+05	(1.0)	9.66E-07	(3.0)
IE-4	1	5.80E+04	(4.0)	4.83E-08	(4.5)
IE-1	1	3.80E+05	(2.0)	4.83E-08	(4.5)

RISK UNCERTAINTY ROOT CAUSE 12 RUN - UPDATED 9-11-91

RISK REDUCTION BY BASE EVENT (WITH ASSOCIATED UNCERTAINTY INTERVALS)

BASE EVENT	OCCUR	PROB	(RANK)	RISK REDUCTION	(RANK)	LOWER 5%	UPPER 5%
CDF12	4	8.56E-06	(5.0)	6.27E+06	(1.0)	3.39E-01	2.65E+02
FM3	1	7.80E-01	(1.0)	3.87E+01	(2.0)		
FM2	1	2.00E-01	(2.0)	1.61E+01	(3.0)		
FM1	1	1.00E-02	(3.5)	6.51E-01	(4.0)		
FM4	1	1.00E-02	(3.5)	9.93E-02	(5.0)		

RISK REDUCTION BY INITIATING EVENT (WITH ASSOCIATED UNCERTAINTY INTERVALS)

INIT EVENT	OCCUR	FREQ	(RANK)	RISK REDUCTION	(RANK)	LOWER 5%	UPPER 5%
IE-20	4	2.00E+01	(5.0)	5.56E+01	(1.0)		
IE-3	1	2.90E+05	(3.0)	3.77E-06	(2.0)	2.36E-01	1.95E+02
IE-2	1	4.70E+05	(1.0)	9.66E-07	(3.0)	8.66E-02	6.92E+01
IE-4	1	5.80E+04	(4.0)	4.83E-08	(4.5)	5.43E-04	4.49E-01
IE-1	1	3.80E+05	(2.0)	4.83E-08	(4.5)	3.33E-03	2.65E+00

RISK UNCERTAINTY ROOT CAUSE 12 RUN - UPDATED 9-11-91

RISK INCREASE BY BASE EVENT (WITH ASSOCIATED UNCERTAINTY INTERVALS)

BASE EVENT	OCCUR	PROB	(RANK)	RISK INCREASE	(RANK)	LOWER 5%	UPPER 5%
FM1	1	1.00E-02	(3.5)	6.44E+01	(1.0)		
FM2	1	2.00E-01	(2.0)	6.44E+01	(2.0)		
FM3	1	7.80E-01	(1.0)	1.09E+01	(3.0)		
FM4	1	1.00E-02	(3.5)	9.83E+00	(4.0)		
CDF12	4	8.56E-06	(5.0)	1.52E+00	(5.0)	5.33E+06	8.78E+06

RISK UNCERTAINTY ROOT CAUSE 12 RUN - UPDATED 9-11-91

BASE EVENTS RANKED BY VARIOUS METHODS (RANK 1 = MOST IMPORTANT) AND SORTED BY RISK REDUCTION

BASE EVENT	RISK REDUCTION	RISK INCREASE
CDF12	1.0	5.0
FM3	2.0	3.0
FM2	3.0	2.0
FM1	4.0	1.0
FM4	5.0	4.0

RISK UNCERTAINTY ROOT CAUSE 12 RUN - UPDATED 9-11-91

MATRIX OF TOP-DOWN CORRELATION COEFFICIENTS

RISK INCR -0.5210

RISK RED

THERE ARE NO TOP-DOWN CORRELATIONS THAT ARE SIGNIFICANT AT THE .05 LEVEL OR LESS

THE TOP-DOWN CORRELATION COEFFICIENTS ARE USED TO DETERMINE THE LEVEL OF AGREEMENT AMONG ALL PAIRS OF RANKINGS IN THE PREVIOUS TABLE. THE TOP-DOWN CORRELATION COEFFICIENT GIVES MORE WEIGHT TO THE SMALLEST RANKS. NOTE THAT THE SMALLEST RANKS ARE ASSIGNED TO THE MOST IMPORTANT BASE EVENTS. MORE DETAIL ON THIS STATISTIC CAN BE FOUND IN THE IMAN AND CONOVER (1985) REFERENCE IN THE USER'S GUIDE THAT ACCOMPANIES THIS CODE.

RISK UNCERTAINTY ROOT CAUSE 12 RUN - UPDATED 9-11-91

CUT SET FREQUENCIES AND NORMALIZED CUT SET FREQUENCIES (WITH ASSOCIATED UNCERTAINTY INTERVALS)

CUT SET	ORDER	CUT SET FREQUENCY	(RANK)	LOWER 5%	UPPER 5%	NORMALIZED FREQUENCY	CUMULATIVE NORMALIZED FREQUENCY	LOWER 5%	UPPER 5%
3	4	3.96E+01	(1.0)	2.36E-01	1.95E+02	0.7134	0.7134	0.6309	0.8002
2	4	1.67E+01	(2.0)	8.66E-02	6.92E+01	0.3000	1.0134	0.1894	0.3563
1	4	6.66E-01	(3.0)	3.33E-03	2.65E+00	0.0120	1.0254	0.0071	0.0138
4	4	1.02E-01	(4.0)	5.43E-04	4.49E-01	0.0018	1.0273	0.0011	0.0026

RISK UNCERTAINTY ROOT CAUSE 12 RUN - UPDATED 9-11-91

CUT SET NUMBERS, CUT SET ORDERS, CUT SET FREQUENCIES,
CUMULATIVE NORMALIZED CUT SET FREQUENCIES AND CUT SETS
FOR TOP EVENT RC12-RSK-UNC WITH TOP EVENT FREQUENCY 5.56E+01

(THE FIRST COLUMN OF NUMBERS IS THE LINE NUMBERS FOR THE FILE TEMACSETS.DNF)

2	3	4	3.96E+01	0.71342	CDF12	*	FM3	*	IE-20	*	IE-3	*
3	2	4	1.67E+01	1.01343	CDF12	*	FM2	*	IE-20	*	IE-2	*
4	1	4	6.66E-01	1.02542	CDF12	*	FM1	*	IE-20	*	IE-1	*
5	4	4	1.02E-01	1.02726	CDF12	*	FM4	*	IE-20	*	IE-4	.

Root Cause 13

RISK UNCERTAINTY ROOT CAUSE 13 RUN

TOP EVENT RC13-RSK-UNC CONTAINS 10 EVENTS IN 4 CUT SETS

THE FREQUENCY OF TOP EVENT RC13-RSK-UNC IS 2.86E+00

DESCRIPTIVE STATISTICS FOR THE FREQUENCY OF TOP EVENT RC13-RSK-UNC

N	1000
MEAN	2.59E+00
STD DEV	3.38E+00
LOWER 5%	1.04E-01
LOWER 25%	2.94E-01
MEDIAN	9.03E-01
UPPER 25%	3.23E+00
UPPER 5%	1.06E+01

90% UNCERTAINTY INTERVAL FOR TOP EVENT FREQUENCY (INNERMOST BRACKETS DENOTE INTERQUARTILE RANGE, ASTERISK DENOTES MEDIAN, N DENOTES NOMINAL VALUE AND M DENOTES MEAN)

```
5% =   1.04E-01                          ***LOG SCALE***                          95% =   1.06E+01
I----------------------[-------------------------*----------------------M--N-]-------------------------I
```

NOMENCLATURE:

PD = PARTIAL DERIVATIVE

TEF = FREQUENCY OF THE TOP EVENT

EV(J) = PROBABILITY OF EVENT J FOR BASE EVENTS
= FREQUENCY OF EVENT J FOR INITIATING EVENTS

MEASURES:

1. FOR BASE EVENTS AND INITIATING EVENTS:

   RISK REDUCTION = PD x EV(J)
   = TEF - TEF(EVALUATED WITH EV(J) = 0)

2. FOR BASE EVENTS ONLY:

   RISK INCREASE = PD - RISK REDUCTION
   = PD x (1 - EV(J))
   = TEF(EVALUATED WITH EV(J) = 1) - TEF

RISK UNCERTAINTY ROOT CAUSE 13 RUN

RISK REDUCTIONS RISK INCREASES BY BASE EVENT AND SORTED BY RISK REDUCTION

BASE EVENT	OCCUR	PROB	(RANK)	RISK REDUCTION	(RANK)	RISK INCREASE	(RANK)
CDF13	4	4.40E-07	(5.0)	6.27E+06	(1.0)	2.30E+00	(3.0)
FM3	1	7.80E-01	(1.0)	1.99E+00	(2.0)	5.61E-01	(4.0)
FM2	1	2.00E-01	(2.0)	8.27E-01	(3.0)	3.31E+00	(2.0)
FM1	1	1.00E-02	(3.5)	3.34E-02	(4.0)	3.31E+00	(1.0)
FM4	1	1.00E-02	(3.5)	5.10E-03	(5.0)	5.05E-01	(5.0)

RISK REDUCTIONS BY INITIATING EVENT AND SORTED BY RISK REDUCTION

INIT EVENT	OCCUR	FREQ	(RANK)	RISK REDUCTION	(RANK)
IE-20	4	2.00E+01	(5.0)	2.86E+00	(1.0)
IE-3	1	2.90E+05	(3.0)	5.71E-06	(2.0)
IE-2	1	4.70E+05	(1.0)	1.46E-06	(3.0)
IE-4	1	5.80E+04	(4.0)	7.32E-08	(4.5)
IE-1	1	3.80E+05	(2.0)	7.32E-08	(4.5)

RISK UNCERTAINTY ROOT CAUSE 13 RUN

RISK REDUCTION BY BASE EVENT (WITH ASSOCIATED UNCERTAINTY INTERVALS)

BASE EVENT	OCCUR	PROB	(RANK)	RISK REDUCTION	(RANK)	LOWER 5%	UPPER 5%
CDF13	4	4.40E-07	(5.0)	6.27E+06	(1.0)	1.04E-01	1.06E+01
FM3	1	7.80E-01	(1.0)	1.99E+00	(2.0)		
FM2	1	2.00E-01	(2.0)	8.27E-01	(3.0)		
FM1	1	1.00E-02	(3.5)	3.34E-02	(4.0)		
FM4	1	1.00E-02	(3.5)	5.10E-03	(5.0)		

RISK REDUCTION BY INITIATING EVENT (WITH ASSOCIATED UNCERTAINTY INTERVALS)

INIT EVENT	OCCUR	FREQ	(RANK)	RISK REDUCTION	(RANK)	LOWER 5%	UPPER 5%
IE-20	4	2.00E+01	(5.0)	2.86E+00	(1.0)		
IE-3	1	2.90E+05	(3.0)	5.71E-06	(2.0)	7.57E-02	7.50E+00
IE-2	1	4.70E+05	(1.0)	1.46E-06	(3.0)	2.79E-02	2.77E+00
IE-4	1	5.80E+04	(4.0)	7.32E-08	(4.5)	1.81E-04	1.84E-02
IE-1	1	3.80E+05	(2.0)	7.32E-08	(4.5)	1.05E-03	1.07E-01

RISK UNCERTAINTY ROOT CAUSE 13 RUN

RISK INCREASE BY BASE EVENT (WITH ASSOCIATED UNCERTAINTY INTERVALS)

BASE EVENT	OCCUR	PROB	(RANK)	RISK INCREASE	(RANK)	LOWER 5%	UPPER 5%
FM1	1	1.00E-02	(3.5)	3.31E+00	(1.0)		
FM2	1	2.00E-01	(2.0)	3.31E+00	(2.0)		
CDF13	4	4.40E-07	(5.0)	2.30E+00	(3.0)	5.33E+06	8.78E+06
FM3	1	7.80E-01	(1.0)	5.61E-01	(4.0)		
FM4	1	1.00E-02	(3.5)	5.05E-01	(5.0)		

RISK UNCERTAINTY ROOT CAUSE 13 RUN

BASE EVENTS RANKED BY VARIOUS METHODS (RANK 1 = MOST IMPORTANT) AND SORTED BY RISK REDUCTION

BASE EVENT	RISK REDUCTION	RISK INCREASE
CDF13	1.0	3.0
FM3	2.0	4.0
FM2	3.0	2.0
FM1	4.0	1.0
FM4	5.0	5.0

RISK UNCERTAINTY ROOT CAUSE 13 RUN

MATRIX OF TOP-DOWN CORRELATION COEFFICIENTS

RISK INCR -0.2065

RISK RED

THERE ARE NO TOP-DOWN CORRELATIONS THAT ARE SIGNIFICANT AT THE .05 LEVEL OR LESS

THE TOP-DOWN CORRELATION COEFFICIENTS ARE USED TO DETERMINE THE LEVEL OF AGREEMENT AMONG ALL PAIRS OF RANKINGS IN THE PREVIOUS TABLE. THE TOP-DOWN CORRELATION COEFFICIENT GIVES MORE WEIGHT TO THE SMALLEST RANKS. NOTE THAT THE SMALLEST RANKS ARE ASSIGNED TO THE MOST IMPORTANT BASE EVENTS. MORE DETAIL ON THIS STATISTIC CAN BE FOUND IN THE IMAN AND CONOVER (1985) REFERENCE IN THE USER'S GUIDE THAT ACCOMPANIES THIS CODE.

RISK UNCERTAINTY ROOT CAUSE 13 RUN

CUT SET FREQUENCIES AND NORMALIZED CUT SET FREQUENCIES (WITH ASSOCIATED UNCERTAINTY INTERVALS)

CUT SET	ORDER	CUT SET FREQUENCY	(RANK)	LOWER 5%	UPPER 5%	NORMALIZED FREQUENCY	CUMULATIVE NORMALIZED FREQUENCY	LOWER 5%	UPPER 5%
3	4	3.38E+00	(1.0)	7.57E-02	7.50E+00	1.1840	1.1840	0.6309	0.8002
2	4	1.70E+00	(2.0)	2.79E-02	2.77E+00	0.5966	1.7805	0.1894	0.3563
1	4	5.75E-02	(3.0)	1.05E-03	1.07E-01	0.0201	1.8006	0.0071	0.0138
4	4	9.64E-03	(4.0)	1.81E-04	1.84E-02	0.0034	1.8040	0.0011	0.0026

RISK UNCERTAINTY ROOT CAUSE 13 RUN

CUT SET NUMBERS, CUT SET ORDERS, CUT SET FREQUENCIES,
CUMULATIVE NORMALIZED CUT SET FREQUENCIES AND CUT SETS
FOR TOP EVENT RC13-RSK-UNC WITH TOP EVENT FREQUENCY 2.86E+00

(THE FIRST COLUMN OF NUMBERS IS THE LINE NUMBERS FOR THE FILE TEMACSETS.DNF)

2	3	4	3.38E+00	1.18396	CDF13	*	FM3	*	IE-20	*	IE-3	*
3	2	4	1.70E+00	1.78052	CDF13	*	FM2	*	IE-20	*	IE-2	*
4	1	4	5.75E-02	1.80065	CDF13	*	FM1	*	IE-20	*	IE-1	*
5	4	4	9.64E-03	1.80402	CDF13	*	FM4	*	IE-20	*	IE-4	.

DISTRIBUTION:

U. S. Nuclear Regulatory Commission
Attn: Demetrios L. Basdekas
Office of Nuclear Regulatory Research
Washington, DC 20555
(25 Copies)

Brookhaven National Laboratories
Attn: John Boccio
Bld. 130
Upton, NY 11793

Professional Loss Control
Attn: Kenneth Dungan
Michael Mowrer
PO Box 446
Oak Ridge, TN 37830
(2 Copies)

Electric Power Research Institute
Attn: Jean-Pierre Sursock
Nuclear Power Division
3412 Hillview Ave.
Palo Alto, CA 94303

American Nuclear Insurers
Attn: D. Sherman, Library
Exchange Building, Suite 245
270 Farmington Ave.
Farmington, CT 06032

Underwriters Laboratories
Attn: Leon Przybyla
333 Pfingston Rd.
Northbrook, IL 60062

Patton Fire Suppression Systems
Attn: Richard Patton
5316 Roseville Rd., Suite P
North Highlands, CA 95660

Factory Mutual Research Corporation
Attn: Jeff Newman
1151 Boston-Providence Hwy.
Norwood, MA 02062

Grinnell Fire Protection Co.
Attn: Joe Priest
10 Dorrance St.
Providence, RI 02903

Edison Electric Institute
Attn: Jim Evans
111 19th St., NW
Washington, DC 20036-3691

EQE Engineering
Attn: Steven P. Harris
San Francisco Regional Office
595 Market Street, 18th Floor
San Francisco, CA 94105

Ogden Environmental Resources
Attn: Doug Brousseau
7301A Indian School Rd. N. E.
Albuquerque, NM 87110

Virginia Power
Attn: L. T. Warnick, P. E.
5000 Dominion Boulevard
Glen Allen, VA 23060

Science & Engineering Associates
6100 Uptown Blvd. N. E.
Albuquerque, NM 87110
(4 Copies)

Philadelphia Electric Company
Attn: Gregory A. Krueger, P. E.
Chesterbrook Blvd., 62B-3
Wayne, PA 19087-5691

Arkansas Power and Light
Attn: Ron Rospoli
1312 North Nashville St.
Russelville, AR 72801

Internal SNL:
6400 N. R. Ortiz
6405 D. A. Dahlgren
6411 D. D. Carlson
6412 A. L. Camp
6412 S. L. Daniel
6413 F. T. Harper
6449 M. P. Bohn
6449 J. A. Lambright (10)
6449 E. W. Klamerus
7141 Technical Library (5)
7151 Technical Publications
8523-2 Central Technical Files

NRC FORM 335 (2-89) NRCM 1102, 3201, 3202

U.S. NUCLEAR REGULATORY COMMISSION

BIBLIOGRAPHIC DATA SHEET

(See instructions on the reverse)

1. REPORT NUMBER (Assigned by NRC, Add Vol., Supp., Rev., and Addendum Numbers, if any.)
NUREG/CR-5791
SAND91-1536

2. TITLE AND SUBTITLE

Risk Evaluation for a General Electric BWR, Effects of Fire Protection System Actuation on Safety-Related Equipment

Evaluation of Generic Issue 57

3. DATE REPORT PUBLISHED

MONTH	YEAR
December	1992

4. FIN OR GRANT NUMBER
L1334

5. AUTHOR(S)

J. Lambright, S. Ross, E. Klamerus*, S. Daniel

6. TYPE OF REPORT
Technical

7. PERIOD COVERED *(Inclusive Dates)*

8. PERFORMING ORGANIZATION – NAME AND ADDRESS *(If NRC, provide Division, Office or Region, U.S. Nuclear Regulatory Commission, and mailing address; if contractor, provide name and mailing address.)*

Sandia National Laboratories
Albuquerque, NM 87185

*Science and Engineering Associates, Inc.
6100 Uptown Blvd. N.E.
Albuquerque, NM 87110

9. SPONSORING ORGANIZATION – NAME AND ADDRESS *(If NRC, type "Same as above"; if contractor, provide NRC Division, Office or Region, U.S. Nuclear Regulatory Commission, and mailing address.)*
Division of Safety Issue Resolution
Office of Nuclear Regulatory Research
U.S. Nuclear Regulatory Commission
Washington, DC 20555

10. SUPPLEMENTARY NOTES

11. ABSTRACT *(200 words or less)*

Nuclear power plants have experienced actuations of fire protection systems (FPS) under conditions for which these systems were not intended to actuate, and also have experienced actuations with the presence of a fire. These actuations have often damaged nearby plant equipment. A review of past occurrences of both types of such events on nuclear power plant safety, and a cost-benefit analysis of potential corrective measures has been performed.

Thirteen different scenarios leading to actuation of fire protection systems due to a variety of causes were identified. A quantification of these thirteen scenarios, where applicable, was performed on a BWR4/MKI. This report estimates the contribution of FPS actuations to core damage frequency, proposes physical modifications to reduce the risk from the dominant contributors, and estimates the values and impacts of the proposed modifications.

12. KEY WORDS/DESCRIPTORS *(List words or phrases that will assist researchers in locating the report.)*

Probabilistic Risk Assessment, Risk, nuclear power plant, fire, fire protection system, frequency, boiling water reactor, BWR, cost/benefit, licensee event report, LER

13. AVAILABILITY STATEMENT
Unlimited

14. SECURITY CLASSIFICATION
(This Page)
Unclassified
(This Report)
Unclassified

15. NUMBER OF PAGES

16. PRICE

Printed on recycled paper

Federal Recycling Program

UNITED STATES
NUCLEAR REGULATORY COMMISSION
WASHINGTON, D.C. 20555-0001

OFFICIAL BUSINESS
PENALTY FOR PRIVATE USE, $300

SPECIAL FOURTH-CLASS RATE
POSTAGE AND FEES PAID
USNRC
PERMIT NO. G-67

[redacted]