NUREG/CR-5088
SAND88-0177

Fire Risk Scoping Study: Investigation of Nuclear Power Plant Fire Risk, Including Previously Unaddressed Issues

Prepared by J.A. Lam[illegible] [illegible]owlen,
V.F. Nico[illegible] [illegible]ohn

Sandia National Labo[illegible]es

Prepared for
U.S. Nuclear Regulatory
Commission

NOTICE

This report was prepared as an account of work sponsored by an agency of the United States Government. Neither the United States Government nor any agency thereof, or any of their employees, makes any warranty, expressed or implied, or assumes any legal liability of responsibility for any third party's use, or the results of such use, of any information, apparatus, product or process disclosed in this report, or represents that its use by such third party would not infringe privately owned rights.

NOTICE

Availability of Reference Materials Cited in NRC Publications

Most documents cited in NRC publications will be available from one of the following sources:

1. The NRC Public Document Room, 1717 H Street, N.W.
   Washington, DC 20555
2. The Superintendent of Documents, U.S. Government Printing Office, Post Office Box 37082, Washington, DC 20013-7082
3. The National Technical Information Service, Springfield, VA 22161

Although the listing that follows represents the majority of documents cited in NRC publications, it is not intended to be exhaustive.

Referenced documents available for inspection and copying for a fee from the NRC Public Document Room include NRC correspondence and internal NRC memoranda; NRC Office of Inspection and Enforcement bulletins, circulars, information notices, inspection and investigation notices; Licensee Event Reports; vendor reports and correspondence; Commission papers; and applicant and licensee documents and correspondence.

The following documents in the NUREG series are available for purchase from the GPO Sales Program: formal NRC staff and contractor reports, NRC-sponsored conference proceedings, and NRC booklets and brochures. Also available are Regulatory Guides, NRC regulations in the *Code of Federal Regulations*, and *Nuclear Regulatory Commission Issuances*.

Documents available from the National Technical Information Service include NUREG series reports and technical reports prepared by other federal agencies and reports prepared by the Atomic Energy Commission, forerunner agency to the Nuclear Regulatory Commission.

Documents available from public and special technical libraries include all open literature items, such as books, journal and periodical articles, and transactions. *Federal Register* notices, federal and state legislation, and congressional reports can usually be obtained from these libraries.

Documents such as theses, dissertations, foreign reports and translations, and non-NRC conference proceedings are available for purchase from the organization sponsoring the publication cited.

Single copies of NRC draft reports are available free, to the extent of supply, upon written request to the Division of Information Support Services, Distribution Section, U.S. Nuclear Regulatory Commission, Washington, DC 20555.

Copies of industry codes and standards used in a substantive manner in the NRC regulatory process are maintained at the NRC Library, 7920 Norfolk Avenue, Bethesda, Maryland, and are available there for reference use by the public. Codes and standards are usually copyrighted and may be purchased from the originating organization or, if they are American National Standards, from the American National Standards Institute, 1430 Broadway, New York, NY 10018.

NUREG/CR-5088
SAND88-0177
RP

Fire Risk Scoping Study: Investigation of Nuclear Power Plant Fire Risk, Including Previously Unaddressed Issues

Manuscript Completed: December 1988
Date Published: January 1989

Prepared by
J.A. Lambright, S.P. Nowlen,
V.F. Nicolette, M.P. Bohn

Sandia National Laboratories
Albuquerque, NM 87185

Prepared for
Division of Regulatory Applications
Office of Nuclear Regulatory Research
U.S. Nuclear Regulatory Commission
Washington, DC 20555
NRC FIN A1825

ABSTRACT

An investigation of nuclear power plant fire risk issues raised as a result of the USNRC sponsored Fire Protection Research Program at Sandia National Laboratories has been performed. The specific objectives of this study were (1) to review and requantify fire risk scenarios from four fire probabilistic risk assessments (PRAs) in light of updated data bases made available as a result of USNRC sponsored Fire Protection Research Program and updated computer fire modeling capabilities, (2) to identify potentially significant fire risk issues that have not been previously addressed in a fire risk context and to quantify the potential impact of those identified fire risk issues where possible, and (3) to review current fire regulations and plant implementation practices for relevance to the identified unaddressed fire risk issues.

In performance of the fire risk scenario requantifications several important insights were gained. It was found that utilization of a more extensive operational experience base resulted in both fire occurrence frequencies and fire duration times (i.e., time required for fire suppression) increasing significantly over those assumed in the original works. Additionally, some thermal damage threshold limits assumed in the original works were identified as being nonconservative based on more recent experimental data. Finally, application of the COMPBRN III fire growth model resulted in calculation of considerably longer fire damage times than those calculated in the original works using COMPBRN I.

Six new fire risk issues were identified which had not previously been addressed in a fire risk context. These six issues are (1) control systems interactions, (2) seismic/fire interactions, (3) manual fire fighting effectiveness (including smoke control), (4) total environment equipment survival (including the spurious operation of fire suppression systems), (5) the adequacy of fire barrier qualification methods, and (6) the adequacy of analytical tools for fire. In most cases quantification of a risk impact was hampered by a lack of experimental data for the associated phenomena, and/or a lack of sufficient plant specific data upon which to base risk estimates. However, order of magnitude estimates were made to show the relative importance of the risk issues. The issues of manual fire fighting effectiveness and control systems interactions were identified as those issues with the most significant potential impact. Each of these two issues was perceived as a relatively generic issue applicable to many U.S. reactor sites, and as having the potential to raise the perceived fire induced core damage frequency for a given analysis by an order of magnitude. Also considered of a high priority are the resolution of identified shortcomings in the available analytical tool for fire risk assessment.

CONTENTS

	Page
ABSTRACT	iii/iv
LIST OF FIGURES	ix
LIST OF TABLES	xi
ACKNOWLEDGEMENTS	xiii
EXECUTIVE SUMMARY	1
1.0 INTRODUCTION	7
1.1 Fire Protection Research Program Background	7
1.2 Purposes and Objectives of the Fire Risk Scoping Study	8
1.3 Overall Approach to the Fire Risk Scoping Study	8
2.0 REVIEW OF PAST FIRE RISK SCENARIOS	10
2.1 Objectives of Scenario Review	10
2.2 Scenario Review Approach and Limitations	10
2.3 Summary of Scenario Review Findings	11
3.0 IDENTIFICATION OF UNADDRESSED FIRE RISK ISSUES	16
3.1 Approach to Issue Identification	16
3.2 Results of Issue Identification	16
3.2.1 Results of Experience Base Review	16
3.2.2 Results of Expert Opinion Polling	16
3.2.3 Insights from Requantification Task	19
3.3 Summary of Issue Identification Task Results	19
4.0 RISK SIGNIFICANCE OF CONTROL SYSTEMS INTERACTIONS	21
4.1 Background Discussions	21
4.2 Approach to Quantification	22
4.3 Quantification Results	24
4.3.1 Results of the NUS Review	24
4.3.2 Results of Analysis of Control Systems Interactions at LaSalle	25

CONTENTS
(Continued)

		Page
5.0	RISK SIGNIFICANCE OF MANUAL FIRE FIGHTING EFFECTIVENESS	31
5.1	Background Discussions	31
5.2	Approach to Quantification	32
5.3	Quantification Results	36
5.3.1	Findings of the PLC Review	36
5.3.2	Results of the Response Time Bounding Analysis	37
5.3.3	Results of the Misdirected Suppression Effort Analysis	37
6.0	RISK SIGNIFICANCE OF TOTAL ENVIRONMENT EQUIPMENT SURVIVAL	42
6.1	Background Discussions	42
6.2	Approach to Issue Examination	42
6.3	Results of Issue Examination	43
6.3.1	Potential Damaging Effects of Fire Suppression Systems	43
6.3.2	The Potential Impact of Other Aspects of a Fire Environment	56
7.0	RISK SIGNIFICANCE OF SEISMIC/FIRE INTERACTIONS	60
7.1	Background Discussions	60
7.2	Evaluation of Risk of Seismic/Fire Interactions	61
7.3	Recommendations for Seismic/Fire Interactions	62
8.0	RISK SIGNIFICANCE OF ADEQUACY OF FIRE BARRIERS	65
8.1	Background Discussions	65
8.2	Approach to Issue Examination	67
8.3	Issue Examination Results	67
9.0	RISK SIGNIFICANCE OF THE ADEQUACY OF ANALYTICAL FIRE TOOLS	71
9.1	Background Discussions	71
9.2	Approach to Quantification	71
9.3	Quantification Results	72
10.0	IMPACT OF CURRENT REGULATIONS ON IDENTIFIED ISSUES	76

CONTENTS
(Concluded)

	Page
11.0 CONCLUSIONS AND RECOMMENDATIONS	79
11.1 Overview of Presentation Format	79
11.2 Summary of Study Findings	79
11.2.1 Review of Past Fire Risk Scenarios	79
11.2.2 Control Systems Interactions	80
11.2.3 Manual Fire Fighting Effectiveness	81
11.2.4 Total Environment Equipment Survival	82
11.2.5 Seismic/Fire Interactions	83
11.2.6 Barrier Qualification Standards	84
11.2.7 Analytical Tools for Fire Analysis	84
11.3 Limitations to the Analyses Presented	85
11.4 Recommendations for Follow-On Efforts	86
LIST OF REFERENCES	93

APPENDIX A: RESULTS OF TASKS 1 AND 2 OF THE FIRE RISK SCOPING STUDY

APPENDIX B: LETTER REPORT FROM NUS CORPORATION ON CONTROL SYSTEMS INTERACTIONS

APPENDIX C: LETTER REPORT FROM PROFESSIONAL LOSS CONTROL ON STAFFING, EQUIPPING, AND TRAINING OF U.S. NUCLEAR POWER PLANT FIRE BRIGADES

APPENDIX D: ADEQUACY OF ANALYTICAL TOOLS USED FOR FIRE MODELING

APPENDIX E: SUMMARY OF SPURIOUS SUPPRESSION SYSTEM ACTUATION INCIDENTS IDENTIFIED IN LER REVIEW COVERING APRIL 1, 1980 THROUGH JULY 14, 1987

APPENDIX F: RESPONSE TO PEER REVIEW COMMENTS

LIST OF FIGURES

Figure		Page
6.1	Spurious Suppression Events by Calendar Year	45
6.2	Spurious Suppression Events by Cause	46

LIST OF TABLES

Table		Page
2.1	Summary of Past Fire Scenario Requantifications, Including the Impact of Appendix R Modifications Made Subsequent to the Original PRA Analyses	12
3.1	Inspection and Enforcement Information Notices Relevant to the Original List of Unaddressed Fire Risk Issues	17
3.2	List of Organizations Visited During Polling of Expert Opinions	18
4.1	System Failures Required for the Quantified Transient Sequences	26
4.2	LaSalle Remote Shutdown Panel Components	28
4.3	LaSalle Remote Shutdown Panel Instrumentation	30
4.4	LaSalle Control System Interactions (Panel 2PM01J)	30
5.1	LaSalle Cable Spreading Room	33
5.2	LaSalle Essential Switchgear Room	34
5.3	LaSalle Reactor Building Large Area	35
5.4	Effect of Fire Brigade Response and Extinguishment Time on Core Melt Frequency	38
5.5	Limerick Fire Area Core Damage Frequency (yr^{-1})	39
5.6	Components Susceptible to Water Fire Suppression Damage	40
6.1	Systems Affected by Spurious Suppression Events	48
6.2	Comparison of Spurious Suppression Induced Loss of Offsite Power (LOSP) and Station Transient Incidents to Typically Assumed Frequencies Due to All Sources	54
8.1	Double Area Combinations at LaSalle Remaining Following Screening Process	68
11.1	Summary of Perceived Issues Impact on Plant Fire Risk Assessments	87

ACKNOWLEDGMENTS

Paul Guymer and Kevin Elliot of the NUS Corporation and Wayne Holmes of Professional Loss Control have contributed significantly to the completion of this effort. Paul Guymer contributed greatly to the analysis of the control systems interactions issue and was responsible for the preparation of the appendix presented herein associated with that subject. Wayne Holmes contributed to the analysis of the effectiveness of manual fire fighting issue and was responsible for the preparation of the appendix presented herein related to this subject. The authors gratefully acknowledge these contributions to the successful completion of this effort. The authors also acknowledge the contribution of Sharon Daniel of Sandia for her help in the execution of the SETS code for evaluation of identified fault scenarios.

We also extend particular thanks to Dr. John Flack of the USNRC Division of Regulatory Applications. As the USNRC Program Monitor for this effort John provided us with extensive and valuable support. Through his efforts much of the information utilized in this study was extracted from the USNRC operating experience. His insightful reviews of our analyses often led us into new and technically rewarding directions. John has also continued to support our efforts to present the results of this work to the nuclear research and nuclear operations communities.

EXECUTIVE SUMMARY

Nuclear power plant fire protection research was initiated at Sandia National Laboratories in February of 1975. The program which is the primary subject of this report, known as the Fire Risk Scoping Study, was a direct outgrowth of this earlier USNRC sponsored Fire Protection Research Program. Based on the findings and insights of various individual fire research activities certain fire risk issues not previously addressed in the fire probabilistic risk assessment (PRA) context were identified. These issues represented aspects of the fire hazard which were perceived to be potentially significant contributors to fire-induced core damage frequency estimates, and had been identified subsequent to the performance of existing plant fire risk assessments. The Fire Risk Scoping Study was established in order to provide an initial assessment of the potential impact of these identified unaddressed issues and to identify areas in need of further investigation.

Execution of this effort was accomplished through five tasks as described below:

Task 1 - Assess Uncertainties in Four Previous Fire PRAs
Task 2 - Requantify Fire Scenarios from Past PRAs
Task 3 - Identify Potential Fire Risk Issues
Task 4 - Assess the Risk Significance of Potential Issues
Task 5 - Evaluate the Completeness of Appendix R Rules in Light of the Identified Unaddressed Fire Risk Issues

Under Tasks 1 and 2 a reevaluation of specific scenarios from the Oconee, Seabrook, Limerick, and Indian Point Unit #2 fire PRAs was performed. The intended objectives of this review were to (1) incorporate information made available as a result of the USNRC sponsored Fire Protection Research Program into past fire risk scenarios, (2) identify the sources of uncertainty in the analyses, (3) determine whether or not the overall perspective of fire risk had been significantly altered as a result of a greater understanding of the fire problem, and (4) determine the effects of the implementation of Appendix R to 10CFR50 fire regulations on these fire core damage frequency estimates. In the requantification process, fire areas were reevaluated based on the scope of issues, considered in the original analyses. Therefore, these tasks were constrained to the PRA methodology of the original analyses.

In general the following observations resulted from the PRA reevaluations:

1. Fire-induced core damage frequency for all four plants increased even though for certain fire scenarios there was a net decrease. For all four plants reviewed fire continues to represent a dominant risk contributor.

2. Most initiating event frequencies were increased based on a much more complete data base available on fire occurrences in nuclear power plants. Under currently applied risk assessment methodologies this increase in initiating event frequency alone results in a direct increase in overall fire-induced core damage frequency given that all other factors remain constant.

3. Use of the latest version of the COMPBRN fire model, COMPBRN III, for the prediction of fire growth and fire damage resulted in mixed effects. Several instances of nonphysical, nonconservative code predictions were noted in the application of COMPBRN III. Some of these inconsistencies appear to be common to all versions of the code. Based on these observations the adequacy of analytical tools for fire was identified as an issue to be considered under Task 4 of the study.

4. Use of an expanded data base on historical fire suppression times for nuclear power plants resulted in a suppression probability distribution with lower probabilities of suppression within a given time than that assumed in the original risk assessments. Under current methodologies this, again, results in an increase in fire-initiated core damage frequency given that all other factors remain constant.

5. Updated information on the ignition and damage thresholds of cable insulations in some cases resulted in lower thermal damage limits. In some cases no change in damage limits was required. A decrease in the assumed thermal damage limits would, in general, be expected to lead to increased fire core damage frequency estimates.

6. Plant modifications made as a result of Appendix R requirements reduced core damage frequency at Indian Point and Limerick for the requantified fire areas by factors of ten and three, respectively. For Seabrook the identified Appendix R plant modifications did not affect the requantified fire core damage scenarios. The Oconee PRA had already incorporated Appendix R modifications and no modifications subsequent to its performance were identified. Hence, no Appendix R impact was identified for either Seabrook or Oconee.

In the evaluation of analysis uncertainty five principal sources of uncertainty were identified:

1. Estimation of Location Specific Fire Frequencies and Sizes
2. Estimation of Detection and Suppression Times
3. Estimation of Component Damage Thresholds
4. Modeling of Fire Growth and Equipment Damage Behavior
5. Screening of Induced Off-Normal Plant States (i.e., LOCAs versus Transients)

The variations in judgemental methodologies used to establish such factors prevented consistent comparison of core damage frequency estimates between analyses. Standardized methodologies for the evaluation of these factors would allow for a consistent basis for comparison of core damage frequency of various plant designs as well as Appendix R implementation practices.

The bulk of efforts conducted under this study involved an initial investigation of certain fire risk issues not previously addressed in a PRA context. At the outset of the program six unaddressed issues had been identified as a result of the USNRC sponsored Fire Protection Research Program (FIN A-1010). This listing of issues was utilized as a departure point for issue identification. The opinions on these identified issues, or any other such issues, of a variety of experts in the fields of fire safety, nuclear power plant design, and nuclear regulation were solicited. A limited review of the nuclear power plant operating experience base was also performed in an effort to identify any other outstanding unaddressed fire risk issues. As a result of this issue identification task the list of unaddressed issues was modified somewhat. The final list of unaddressed fire risk issues as they were analyzed for this study was comprised of the following six issues:

1. Control Systems Interactions
2. Seismic/Fire Interactions
3. Manual Fire Fighting Effectiveness (including Smoke Control)
4. Total Environment Equipment Survival (including Spurious Operation of Suppression Systems)
5. Adequacy of Fire Barriers
6. Adequacy of Analytical Tools for Fire

Each of these six issues was investigated within a limited scope. As a result of these investigations the identified issues were ranked as to their potential significance. In considering the potential significance of each of the issues two aspects were considered. The first consideration was the potential impact of a given issue on plant fire induced core damage frequency if vulnerabilities can be identified. The second consideration was the likelihood that any given plant might, in fact, display the type of vulnerabilities identified. In using these criteria the issues of control systems interactions and manual fire fighting effectiveness were identified as potentially the most significant of the unaddressed issues. The issue of the adequacy of fire analysis tools is also judged to be an issue with a very significant potential impact on the current perception of fire risk. Summarized below are the principal results and conclusions, as well as recommended follow-on efforts for each area of investigation undertaken.

With respect to control systems interactions:

1. Risk significant control systems interactions scenarios involving a combination of fire induced failures and random

equipment failures have been identified. Such interactions will not be identified by deterministic analyses such as those employed for Appendix R reviews. PRA methodologies should be expanded in scope to include identification of such scenarios.

2. The independence of remote shutdown control systems is quite difficult to prove.

3. The level of indication and control provided on a remote panel can significantly effect scenario quantification. A review of current practices in this regard is recommended.

With respect to manual fire fighting effectiveness:

1. Variations in the assumed responsiveness of fire fighting teams of as little as 20 minutes were observed to result in order of magnitude changes in the perceived level of risk associated with specific scenarios.

2. Practices with respect to the staffing, equipping, and training of fire brigades varies significantly from plant to plant. Current regulations require only minimal training for fire brigade members. A further review of plant practices, and the investigation of the probable linkage between plant practices and brigade effectiveness should be undertaken. These investigations should include the testing of fire brigade effectiveness under both simulated and actual fire conditions.

3. Certain fire scenarios have been identified in which critical damage times are so short that even a well prepared fire response team will be unable to prevent damage. Scenario assessment tools and methodologies should be refined and adapted for use in the evaluation of fire detection and suppression system adequacy for specific plant scenarios.

With respect to the adequacy of fire analytical tools:

1. Uncertainties in the analytical tools for fire modeling were found to contribute significantly to the overall assessment uncertainty. Currently available fire models applicable to nuclear power plant risk analyses were found to be inadequate, and were found to not reflect the general state of the art in fire modeling. Further, variations in modeling methodologies were demonstrated to greatly impact final core damage frequency estimates.

2. This issue is quite generic to fire risk assessment methodologies, and hence, can potentially impact the overall perception of fire risk on an industry wide basis.

3. It is recommended that an effort be initiated to assemble, based primarily on the current state of the art, and to validate a physically consistent fire simulation model for use in nuclear power plant risk analyses.

4. The validation of any fire model to be used in the analysis of nuclear power plant risk scenarios will be dependant on the availability of enclosure fire test data. Therefore, it is recommended that the processing of room fire test data already available as a result of the USNRC Fire Protection Research Program be undertaken.

5. The testing undertaken as a part of the USNRC Fire Protection Research Program was terminated prior to the investigation of potential room-to-room fire and smoke spread issues. Thus no basis for the evaluation of such effects in a power plant risk analysis exists. It is recommended that the testing be re-initiated and that these room-to-room issues be investigated.

6. Certain of the correlations utilized in the development of fire simulation models have not been adequately validated. It is recommended that limited scope, intermediate scale testing be undertaken to provide validation data for such critical correlations as cable fire growth phenomena and fire induced cable damage.

With respect to the issue of fire barrier adequacy:

1. No generic vulnerability of qualified fire barrier elements has been demonstrated.

2. Should barrier reliability be on the order of 99% or higher then no significant impact on core damage estimates is anticipated. However, should barrier reliability be on the order of 90% then an order of magnitude increase in perceived core damage frequency can be anticipated.

3. It is recommended that an effort be undertaken to assess the actual performance reliability of U.S. fire barrier elements. If, and only if, such a review demonstrates a reliability of less than on the order of 99%, then further testing of barrier elements under realistic fire exposure conditions may be warranted.

With respect to the issue of seismic/fire interactions:

1. Several potential plant vulnerabilities were identified. However, it was also concluded that these vulnerabilities could be easily corrected on a plant specific basis. It is recommended that an effort be undertaken to define and document the potential vulnerabilities of concern to nuclear

power plants. This information could then be utilized on a plant specific basis to identify and resolve such vulnerabilities through a well focused walkdown.

With respect to the issue of total environment equipment survival:

1. As a result of a limited experience-based review of spurious fire suppression system actuation events it was concluded that while such incidents could represent significant core damage frequency contributors on a plant specific basis, the adverse impact of such events could be largely eliminated through plant specific reviews of fire protection system design and implementation practices. It is recommended that a more extensive review of the experience base in this regards be undertaken in order that potential vulnerabilities are identified, and that plants may be provided with specific guidance on plant review objectives.

2. Consideration of the damaging effects of such factors as smoke, low level heat, and water sprays was limited in that virtually no data on equipment vulnerability to such environmental effects is available. Some evidence of equipment vulnerabilities was identified, though no specific quantification was possible. It is recommended that studies be undertaken to assess the damaging effects of smoke on high voltage equipment, and of gaseous suppression systems on control circuitry. (This recommendation is based on limited experience available from non-nuclear fire losses.)

1.0 INTRODUCTION

1.1 Fire Protection Research Program Background

Nuclear power plant fire protection research was initiated at Sandia National Laboratories in February of 1975. Since that time Sandia has been involved in the performance of tests and analyses to assess the technical adequacy of particular fire safety regulations for nuclear power plants, and in the performance of tests addressing particular concerns with respect to the quantification of fire phenomena. Fire research activities have also included significant involvement in probabilistic risk assessments (PRAs) for fire in a nuclear plant. The program which is the primary subject of this report, known as the Fire Risk Scoping Study, was a direct outgrowth of this earlier USNRC sponsored Fire Protection Research Program.

Based on the findings and insights of various individual fire research activities, certain fire risk issues not previously addressed in the fire PRA context were identified. These issues represented aspects of the fire hazard which were perceived to be potentially significant contributors to the overall plant risk and yet had been identified subsequent to the performance of a number of plant fire risk evaluations.

For example, as a result of various individual experimental fire research efforts it was demonstrated that most of the cable insulation materials, which represent the dominant source of combustible fuels in a nuclear power plant, generate optically thick, corrosive, toxic smoke in great quantities when burned (References 1, 2). Such smoke was identified as having the potential for hampering manual fire fighting activities, and for inducing equipment damage in and of itself. Large scale enclosure fire tests (Reference 2) further demonstrated that smoke purging ventilation schemes as currently implemented in nuclear power plants will be ineffective in maintaining a smoke-free environment. Based in large part on these insights the issues of manual fire fighting effectiveness, total environment equipment survival, and smoke control were originally identified.

In a similar manner a list of six unaddressed fire risk issues was developed. The Fire Risk Scoping Study was performed primarily in order to provide a solid foundation upon which to base further research in these and other potential areas of nuclear power plant fire safety.

1.2 Purposes and Objectives of the Fire Risk Scoping Study

Based on an initial listing of unaddressed fire risk issues the program described herein was initiated. The objectives of this program, known as the Fire Risk Scoping Study, were to (1) review and requantify certain fire risk scenarios from past PRAs in light of updated information made available as a result of the USNRC sponsored Fire Protection Research Program and updated fire modeling techniques,

(2) to formulate a complete list of fire risk issues which have not been addressed in fire PRAs and to assess the risk significance of each of the identified unaddressed issues, and (3) to assess the completeness of 10CFR50 and its associated Appendix R rules in light of the identified unaddressed fire risk issues.

It is intended that several needs will be served through the performance of these tasks. First, and most importantly, the program is intended to identify outstanding issues of fire risk, and to focus attention on those fire risk issues with the most significant potential impact on plant risk. The program will also determine to what degree the perspective on fire risk has changed as a result of a more complete understanding of fire phenomena fostered in part by the Fire Protection Research Program. The major sources of uncertainty in four fire PRAs are also identified. It is also intended that by assessing the impact of current regulation on each of the outstanding fire risk issues one will gain insights into the adequacy of certain aspects of fire safety regulations.

It should be noted that recently raised concerns over the potential impact of explosions caused by leaking or broken flammable gas lines are not addressed in this work. The potential impact of an explosion and the quantification of the risk significance of such potential incidents goes well beyond the scope of a fire analysis, and beyond the scope of this study.

1.3 Overall Approach to the Fire Risk Scoping Study

The Fire Risk Scoping Study, described herein, was divided into five specific tasks:

Task 1 - Assess Uncertainties in Four Previous Fire PRAs
Task 2 - Requantify Fire Scenarios from Past PRAs
Task 3 - Identify Potential Fire Risk Issues
Task 4 - Assess the Risk Significance of Potential Issues
Task 5 - Evaluate the Completeness of Appendix R Rules

Under Tasks 1 and 2 specific scenarios from four past fire PRAs were requantified using updated data bases and modeling techniques. Changes made to the plants of interest in response to implementation of Appendix R to 10CFR50 were also considered in the requantification of these past scenarios. This was intended to provide an updating of the perception of fire risk and an identification of the principal sources of uncertainty in fire risk estimates. This review was intentionally limited in scope. The results are described in Section 2, and in more detail in Appendix A of this report.

Task 3 primarily provided an opportunity for the list of fire risk issues formulated by Sandia and perceived as remaining unaddressed in the fire PRA context to be critiqued by experts in the fields of fire safety and nuclear power. The details of this task are presented in Section 3 of this report. As a result of this task a modified list of

six unaddressed fire risk issues considered by most of those polled to be potentially significant risk contributors was developed. Under Task 4 the potential risk significance of each of these six issues was, where possible, quantitatively assessed. Considerable difficulty was experienced in the quantification of certain of the outstanding issues due to a crippling lack of data upon which to base an analysis. The quantification results are presented in Sections 4 through 9 of this report.

The final task, Task 5, was intended to provide an assessment of the degree to which current regulations, principally in the form of Appendix R to 10CFR50 and its support documents, address the unaddressed fire risk issues raised in this study. This task was performed through an examination of the relevant documents for reference to the issues at hand. The results of this task are presented in Section 10.

2.0 REVIEW OF PAST FIRE RISK SCENARIOS

2.1 Objectives of Scenario Review

This section of the report presents an overview of Tasks 1 and 2. For a complete description of the work associated with these two tasks refer to Appendix A. Under Tasks 1 and 2 a reevaluation of specific scenarios from past fire PRAs was performed. The intended objectives of this review were to (1) incorporate information made available as a result of the USNRC sponsored Fire Protection Research Program into past fire-initiated core damage scenarios, (2) identify the remaining sources of uncertainty in the analyses, (3) determine whether or not the overall perspective of fire risk had been significantly altered as a result of a greater understanding of the fire problem, and (4) determine the effects of the implementation of Appendix R to 10CFR50 fire regulations on core damage frequency estimates.

2.2 Scenario Review Approach and Limitations

In the performance of Tasks 1 and 2 thirteen fire areas from four past PRAs were reexamined. The PRAs and fire areas are:

Plant	Area
Limerick	CRD Hydraulic Equipment Room 13 kV Switchgear Room Safeguards Access Area General Equipment Area
Indian Point Unit 2	Switchgear Room Electrical Tunnel Cable Spreading Room
Oconee	Cable Shaft Electrical Equipment Room
Seabrook	Control Room Primary Component Cooling Water Pump Area Turbine Building Cable Spreading Room

The analyses of the Seabrook, Indian Point, and Oconee plants were originally performed by Pickard, Lowe, and Garrick (PL&G). The analysis of the Limerick plant was performed by the Nuclear Utility Services (NUS) Corporation.

In the requantification process certain limitations were placed on the level of analysis. First, the fire areas were reevaluated based on the scope of issues considered in the original analyses. That is to say, no new damage mechanisms, damage scenarios, fault sequences, nor equipment failures beyond those originally considered were introduced.

In particular the unaddressed issues identified in Task 3 were not incorporated into the analyses of Tasks 1 and 2. Secondly, reevaluation was performed using, as closely as possible, the same analysis techniques as those used in the original work.

2.3 Summary of Scenario Review Findings

In the requantification process information regarding four aspects of the analytical method was updated based primarily on the results of the Sandia Fire Protection Research Program. The exception to this was the use of the UCLA generated COMPBRN code in its most recently released form, COMPBRN III. By contrast, all four PRAs were based on the COMPBRN I version. These four areas were:

1. Fire Occurrence Frequency
2. Modeling of Fire Growth and Fire Damage
3. Fire Suppression Probability Distribution
4. Fire-Induced Cable Damage Thresholds

The details of this information updating are presented in Appendix A. The results of the requantifications, including the impact of plant Appendix R modifications made subsequent to the original analyses, are summarized in Table 2.1. In general the following observations were made regarding the effects of the updating on the fire initiated core damage frequency estimates:

1. Most initiating event frequencies (based on the raw number of events and operating years considered) were increased due to the more complete data base on fire occurrences in nuclear power plants (Reference 1). This increase in initiating event frequency alone resulted in a direct increase in overall fire initiated core damage frequency given that all other factors remained constant.

2. Use of the latest version of the COMPBRN fire model, COMPBRN III, for the prediction of fire growth and fire damage resulted in mixed effects. All four of the PRAs had utilized the original version of the COMPBRN code. Several instances of nonphysical, nonconservative code calculations were noted in the application of COMPBRN III as well as in the results from the original PRAs. Some of these inconsistencies appeared to be common to all versions of the code. A bounding type analysis to assess the impact of these inconsistencies on the core damage estimates was deferred to Task 4 and is discussed in Section 9 of this report.

3. A greatly expanded data base on historical fire suppression times for nuclear power plants resulted in lower probabilities of successful suppression within a given time than that assumed in the original works. A single, new suppression distribution was constructed and used for

requantification of all four PRAs. This distribution was mainly composed of manual suppression and detection events. In the case of the Limerick PRA, significantly lower probabilities for suppression were calculated while for the three PL&G PRAs, values did not vary to as great a degree. This again resulted in an increase in the overall fire initiated core damage frequency given that all other factors remained constant.

4. Updated information on the ignition and damage thresholds of cable insulations resulted in lower ignition and thermal damage limits for the three PL&G PRAs. For the Limerick/NUS PRA no change in damage limits was required, however, lower ignition thresholds were used. For the PL&G PRAs this in general would be expected to lead to increased core damage estimates.

In the examination of the effects of implementation of Appendix R to 10CFR50 on fire-initiated core damage frequency, plant modifications at Indian Point Unit 2, Seabrook, and Limerick were considered. For Oconee no plant modifications made subsequent to the original PRA

Table 2.1

Summary of Past Fire Scenario Requantifications, Including the Impact of Appendix R Modifications Made Subsequent to the Original PRA Analyses.

PRA	Origninal Estimate	Requantified Estimate	With Appendix R Modifications
Limerick[a]	2.3E-5	1.6E-4	5.9E-5
Indian Point[b]	6.5E-5	2.0E-4	8.8E-6
Oconee[a]	1.3E-5	2.0E-5	Already Included
Seabrook[b]	2.1E-5	4.6E-5	Already Included

a) Point Estimate b) Mean Value Estimate

(post-Appendix R) were identified. In the case of Seabrook no plant modifications in the four requantified fire areas were identified. However, one scenario in the PCC pump area was deleted based on a reevaluation of assumed cable routings which showed that both trains of power for the service water air handling system were not located in this area. Appendix R modifications reduced core damage frequency at Indian Point and Limerick by factors of ten and three, respectively. With a more detailed analysis not constrained by the scope of the Limerick PRA, core damage frequency would decrease by approximately another factor of three due to installation of automatic sprinkler systems.

In the evaluation of analysis uncertainty five principal sources of uncertainty were identified. These five sources were:

1. Estimation of Location Specific Fire Frequencies and Sizes
2. Estimation of Detection and Suppression Times
3. Estimation of Component Damage Thresholds
4. Modeling of Fire Growth and Equipment Damage Behavior
5. Screening of Induced Off-Normal Plant States (i.e., LOCAs versus transients)

In the case of fire frequency and size estimates a generic fire data base for U.S. light water reactors has been used in the requantification process as well as in the four PRAs. The data base used here in the requantification analyses was, however, much more complete. Any such data base tends to be somewhat incomplete in that all desired information (exact location, ignition source, detection method, detection time, suppression method, suppression time, extent of damage, etc.) was not consistently reported. It was necessary to assume (due to a lack of a sufficient amount of plant specific fire occurrences) that the available generic fire data base was applicable to a particular plant of interest. This assumption is consistent with each of the original analyses. Using this generic data base the analyst must then subdivide, or partition, fire occurrences from large buildings to specific fire zones within a building. The strategy employed in this partitioning process varied between analysts, and hence, introduced a degree of uncertainty into plant fire zone specific fire frequencies. This uncertainty was quite difficult to quantify. One was also left with the problem of estimating the likelihood that a source fire will be of a particular size.

A similar problem was encountered in the estimation of fire detection and suppression times. As with the case above the same generic data base has been used (Reference 4). For the suppression and detection data the bulk of fire incidents have been manually detected and suppressed. A significantly greater amount of events have been incorporated in the requantification process (69 events compared to 18 in the four PRAs) This update reduced the uncertainty in the core damage frequency estimates.

With respect to the estimation of component damage thresholds, two factors contribute to the uncertainty. The first is in the identification of damage mechanisms. This factor is to be considered as a part of Task 4 under the issue of Total Environment Equipment Survival. The second factor is the lack of quantitative data on the survival of equipment in fire environments. In general one is limited to relatively generic information on the thermal damage thresholds of cables. Other equipment and other damage mechanisms have not been quantitatively investigated.

Another source of uncertainty dealt with the analytical tools used to model fire growth. In the four PRAs the original version of the COMPBRN fire simulation computer code (COMPBRN I) was employed for calculating fire damage times. This version of the code was originally believed to be very conservative due to the neglect of heat losses from any of the thermal targets. In COMPBRN I a thermal target can receive energy but cannot dissipate energy and thus increases continually in temperature until ignition is reached. Therefore, for simulations involving COMPBRN I, even a weak flame located a large distance from a combustible target would eventually cause the target to ignite. For the Limerick PRA this resulted in very large area ratios, or zones of influence, for potential fire-induced damage which had a direct influence on the partitioning of fires to the zone of influence within an enclosure. To account for the conservative nature of COMPBRN I, an error factor was used in three of the four PRAs (Limerick was the exception) to modify the code calculations by increasing the mean time required to fail critical equipment by a factor of two.

The final source of uncertainty identified deals with the screening methodology of induced off-normal plant status (i.e., LOCAs vs. transients). The Limerick PRA initially screened all LOCA events from consideration while for the PL&G PRAs the dominant contributor to fire-induced core damage frequency was transient induced LOCAs. These transient induced LOCAs occurred either through stuck-open relief valves or failure of reactor coolant pump seals.

For the requantification of fire damage times for Task 2, the latest version of COMPBRN (COMPBRN III) was employed. Before using COMPBRN III to requantify fire damage times, the COMPBRN III hot gas layer model under forced ventilation conditions was validated against experimental data. The poor performance of the model led to identification and correction of an error and nonconservative assumption that had been made by the code developers. COMPBRN III, with this modified hot gas layer model, was then evaluated for its sensitivity to input parameters. The code was found to be relatively insensitive to reasonable variations in the input parameters, with the exception of equipment damage and ignition temperatures, and the constants associated with a fuel's mass burning rate. The code was then used to requantify the critical scenarios for the four PRAs. There were significant differences in the COMPBRN III calculated results compared to the COMPBRN I results.

During the sensitivity study and subsequent requantification of fire damage times, several examples of nonphysical behavior were exhibited by COMPBRN III. Fuel targets directly above the flames were cooler than fuel targets further away from the flames. To ignite a combustible fuel target such as cable insulation, it was sometimes necessary to move the initial fire out from underneath the fuel target of interest. On several occasions, it was observed that a small fire was more damaging to critical equipment than a much larger fire. Combustible cable insulation was sometimes immersed in flames for up to 10 minutes without ignition of the cable insulation occurring. Additionally, the heat conduction algorithm exhibited numerical instabilities on several occasions resulting in premature termination of the simulation.

Because of the above observed problems with COMPBRN III, the COMPBRN III results should be viewed with some degree of suspicion. The cumulative effects of these modeling uncertainties undoubtedly resulted in a large overall uncertainty in the COMPBRN calculations. For these reasons the adequacy of the COMPBRN code in particular, and in the analytical tools available for fire analysis in general was identified as an issue with a potentially significant impact on fire-initiated core damage estimates. This impact is investigated further in Section 9 and Appendix D.

3.0 IDENTIFICATION OF UNADDRESSED FIRE RISK ISSUES

3.1 Approach to Issue Identification

One of the tasks of the Fire Risk Scoping Study was to identify those fire risk issues which have not previously been addressed quantitatively in fire PRAs for nuclear power plants. The planned approach taken in the performance of this task was twofold. First, the experience base of nuclear power plant operation in the form of Inspection and Enforcement (I&E) Information Notices (INs) and Information Bulletins (IBs), and in the form of Licensee Event Reports (LERs) was reviewed for incidents which would not fall under the scope of previously addressed fire risk issues and scenarios. Secondly, a polling of the expert opinions of a wide variety of fire phenomenology researchers, fire protection engineers, architect and engineering designers, vendor engineers, and regulatory overseers was conducted. Additional insights were also gained from Tasks 1 and 2 of the study involving the requantification of specific scenarios from previous fire PRAs.

3.2 Results of Issue Identification

3.2.1 Results of Experience Base Review

In reviewing the operational experience base for nuclear power plants no new issues were raised. The experience base does provide support for each of the identified unaddressed issues, with the exception of the Seismic/ Fire Interactions issue. A listing of the I&E INs and IBs relevant to each of the identified issues is presented in Table 3.1. The lack of evidence of potential seismic/fire interactions is attributed to the lack of significant seismic events at U.S. light water reactors (LWRs).

3.2.2 Results of Expert Opinion Polling

The polling of expert opinions was accomplished by contacting an individual within each of the various organizations. A meeting between Sandia representatives and any individuals within the visited organization with an interest in the study was requested. It was left to each organization to determine the individuals from their organization who were perceived to be appropriate to the subject. Relevant information regarding the study itself and the unaddressed fire risk issues initially identified by Sandia was then forwarded. At the meetings an open ended informal discussion of the identified issues, the study's objectives, and the perception of fire risk for nuclear power plants in general was conducted. A listing of the organizations visited in the course of this effort is presented in Table 3.2.

In general the organizations contacted were quite cooperative. A great deal of interest in the identified issues was expressed by nearly every group polled. This undertaking proved to be a quite fruitful venture with many bits of information collected, and ideas for addressing the issues expressed. As a result of the meetings the general consensus expressed was that each of the identified issues was worthy of consideration as a risk issue. Individuals and organizations would often differ on their assessment of the potential impact of the various identified issues, though virtually all agreed that a quantitative look at each of the issues was appropriate.

As a result of the meetings one group in particular expressed concern over an issue which had not been identified. That is the issue of the

Table 3.1

Inspection and Enforcement Information Notices Relevant to the Original List of Unaddressed Fire Risk Issues

Issue	Relevant Documents
Control Systems Interactions	87-50, 87-35, 87-14, 87-09, 86-04, 85-89, 85-85, 85-09, 84-80, 80-06, 79-27
Manual Fire Fighting Effectiveness	86-76, 86-55, 86-35, 86-27, 83-36
Smoke Control	87-09, 86-76, 83-69, 80-06
Total Environment Equipment Survival	87-14, 86-39, 86-04, 85-89, 85-85, 84-57, 84-01, 83-41, 80-15
Spurious Operation of Suppression Systems	87-14, 85-85, 84-57, 83-41

adequacy of U.S. fire barrier qualification methodologies. This issue was raised based on differences between U.S. and European methods for the qualification of fire barriers. The differences are centered on the way differential pressures are applied during fire exposure testing. Sandia had in past years performed tests of penetration seal systems which demonstrated a concern for just this issue (References 5, 6, 8). Thus, it was not initially considered an unaddressed issue. However, in retrospect it is considered an appropriate addition to the list of unaddressed fire risk issues as no follow-up efforts have been undertaken and this information has not been incorporated into current fire PRAs. The details of the differences in qualification procedures and the issue in general are presented in Section 8.

Table 3.2

List of Organizations Visited During Polling of Expert Opinions

General Fire Research Organizations:
- Factory Mutual Research Corporation (FMRC)
- Illinois Institute of Technology Research Institute (IITRI)
- Notre Dame University

Utility Representative and Nuclear Insurance Groups:
- American Nuclear Insurers (ANI)
- Electrical Power Research Institute (EPRI)

Fire Protection Engineering, Architect and Engineering Firms
- FirePro
- Professional Loss Control (PLC)
- Gage Babcock
- Bechtel Corporation

Risk Analysis Groups:
- Nuclear Services Corporation (NUS)
- Pickard, Lowe, and Garrick (PL&G)

Regulatory/Advisory Groups
- Advisory Committee on Reactor Safeguards (ACRS)
- Office of Nuclear Regulatory Research

3.2.3 Insights from the Requantification Task

One additional issue was also identified as a result of work on Tasks 1 and 2. From the review and requantification of specific scenarios from past PRAs, the adequacy of current fire modeling techniques was brought into question. In the U.S. the COMPBRN fire code, developed at UCLA, has been the code of choice in nearly all nuclear power plant fire PRAs. This results from the observation that it is the only available code which was specifically intended for use in this context and which is readily applicable to the unique situations of nuclear power plant fire scenarios.

In the requantification task, Task 2, the latest version of this code, COMPBRN III, was utilized. This version was considered to be an improvement over the original version in that many of the conservatisms of the original code were eliminated. However in applying this version of the code a number of situations were noted in which unrealistic, nonphysical predictions resulted. In performing an initial analysis of the code itself it was found that many phenomena common to fires which had been modeled in the original version had been "turned off" in the latest version. Also certain heat transfer mechanisms common to fire had not been addressed. This resulted in clearly nonconservative predictions for many fairly simple and straightforward situations. Thus, the adequacy of this code in particular, and of analytical fire tools in general was listed as a risk issue with a potentially significant influence on fire risk estimates. The details of the code review, the identified nonphysical behavior observed, and the modifications to the code made as a part of this study are presented in Section 9 and in Appendix D of this report. These sections also present an evaluation of the potential impact of code predictions on the fire core damage frequency estimates and on estimated uncertainty.

3.3 Summary of Issue Identification Task Results

In initiating this task a list of six unaddressed issues which were identified based on the results of the USNRC sponsored Fire Protection Research Program (FPRP, FIN A-1010) was utilized as the starting point for issue identification. This list was comprised of the following six issues:

Control Systems Interactions
Seismic/Fire Interactions
Manual Fire Fighting Effectiveness
Effectiveness of Smoke Control
Total Environment Equipment Survival
Spurious Operation of Suppression Systems

In order to quantitatively assess the potential impact of these issues on risk estimates a slight reorganization of the issues from this preliminary list was considered appropriate. The issue of smoke control effectiveness was considered primarily as an aspect of the

issue of manual fire fighting effectiveness, and secondly as an aspect of the total environment equipment survival issue. Similarly, the issue of spurious operation of suppression systems was addressed as an aspect of equipment damageability under the total environment equipment survival issue.

Thus the final list of unaddressed fire risk issues which were addressed in Tasks 4 and 5 is:

1. Control Systems Interactions
2. Seismic/Fire Interactions
3. Manual Fire Fighting Effectiveness (including Smoke Control)
4. Total Environment Equipment Survival (including Spurious Operation of Suppression Systems)
5. Adequacy of Fire Barriers
6. Adequacy of Analytical Tools for Fire

Each of these issues is described in the sections which follow. These descriptions will include a discussion of the background of each issue and the basis for concern, the approach taken to quantification of the potential risk impact of each issue, and the results of the quantification process.

4.0 RISK SIGNIFICANCE OF CONTROL SYSTEMS INTERACTIONS

4.1 Background Discussions

Concern over the issue of control systems interactions is based in large part on a review of current standards, a survey of industrial practices, and a detailed analysis of control systems at several U.S. nuclear power plants. This earlier informal work was performed under the USNRC sponsored Fire Protection Research Program in conjunction with the Risk Methodologies Intergration and Evaluation Program (RMIEP). In this study (Reference 9) current practices for the fire protection of control rooms, remote shutdown areas, control transfer areas, and local control areas were evaluated. Based on this evaluation a number of cases where potential control systems vulnerabilities exist were identified.

In the performance of this work, a number of pessimistic assumptions about the rate of fire growth in a control cabinet, and the severity of the cabinet environment during a fire were made. A subsequent series of tests performed by Sandia (References 3, 4) later revealed that these pessimistic assumptions were well founded. Based on these analyses specific cases were cited in which, should a power supply to certain control circuits be lost prior to the transfer of control from the control room to remote shutdown areas, its associated component(s)/system(s) would be rendered inoperable, even from the remote area, until repairs were performed. It was also noted that should the control system components themselves be damaged, for example relays, then repairs may be necessary in order to restore operability.

As a second part of this earlier study, sequences of events and failures based on a control cabinet fire were identified using PRA type system logic techniques. In applying these techniques fire-induced direct failures, indirect failures, and initiating events (assuming worst-case failure combinations) were considered. The analysis was limited to fire involvement of a single control cabinet at a time, excluding multiple cabinet failure scenarios. None the less, examples were identified in which system failures could be caused by fire in a single control cabinet. These failures included inadvertent actuation, and the shutdown or failure to start of component(s)/system(s).

Based on the findings of this study, control systems interactions were included on the original list of unaddressed fire risk issues formulated by Sandia. In performing Task 3, the identification of unaddressed issues, support for the validity of this issue was expressed through two sources. First, in reviewing the experience base of nuclear power plant operation a number of incidents involving the interaction of control systems were identified which could easily be postulated to result from fire activities, either through direct involvement in the fire or through suppression efforts. The relevant documents describing these incidents have been identified in Table 3.1. Secondly, in the polling of expert opinions, almost unanimous support for the validity of this particular issue was expressed.

4.2 Approach to Quantification

The approach to quantification of this fire risk issue was twofold. NUS Corporation assessed the independence of the remote shutdown panel from the control room. Appendix B is based on an NUS informal report detailing this review. The basis for the NUS review was as follows:

1. Perform a screening analysis to identify types of potential interaction which would prevent control of shutdown equipment from both the remote shutdown panel and the main control room.

2. Identify methods which have been employed to prevent or mitigate such interactions.

3. Assess the potential effect on core damage frequency if any of the plants reviewed have previously completed fire PRAs.

The second approach to quantification of the control system interactions fire risk issue utilized the U.S. NRC sponsored Risk Methods Integration and Evaluation Program (RMIEP) system models of the LaSalle County Nuclear Power Plant, Unit 2. These system models included the impact of spurious control function actuations to the most undesired state for a given accident sequence. In this fashion a multiple-spurious actuation or loss of control function analysis can be performed for the most critical control cabinets within the control room by the following procedure:

1. Identify the control and actuation functions in the control room.

2. Map those functions to control room panels to determine which panels are most critical to safe shutdown.

3. Assess the probability of fire spread to adjacent panels.

4. Quantify fire-induced transient sequences utilizing the SETS computer code.

5. Allow for recovery of random failures not directly related to the fire if such actions take place outside of the control room.

6. Allow for operator recovery actions from the remote shutdown panel.

7. Identify either single or multiple spurious actuations or loss of control functions which could render inoperable a component or system controlled from the remote shutdown panel.

As part of the RMIEP program International Energy Associates Limited (IEAL) performed a qualitative analysis of multiple-spurious actuations at the LaSalle nuclear power plant (Reference 9). The analysis was performed in a two-step process. First, a verification of electrical independence between the remote shutdown panel and the control room was performed. It was concluded that when control is transferred to the remote shutdown panel, the control room circuits are physically isolated. (A new control power supply and fuses are brought in line when transfer is accomplished.) The second part of the analysis was to determine the effects of spurious operations caused by a fire in a control room cabinet. Multiple spurious actuations were addressed in a qualitative fashion. Several factors not considered were:

1. The time required for failure to be of concern for any of the scenarios.

2. Recovery actions.

3. Random failure of "other" equipment.

4. The likelihood of fire in the control room at the panel of interest.

Fourteen scenarios were identified by IEAL which provided guidance in the quantitative assessment performed by the aforementioned seven step procedure. Utilizing the conclusion of electrical independence led to the assumption that all control and indication functions at the remote shutdown panel would remain operational unless other spurious actuations or loss of control functions occurred.

In quantifying the probability for recovery from the remote shutdown panel 30 minutes were deducted from the recovery time for operator actions that would normally be taken in the control room. This allows for time to transfer control from the control room, man the remote shutdown station, and for the additional confusion and stress caused by the fire. No operator recovery was allowed from the control room itself for the following reasons:

1. No fire detectors are located in close proximity to the most critical control cabinets identified in the screening procedure, so it was assumed that a fire would not be automatically detected in its smoldering stage.

2. The area behind the control cabinets is occupied infrequently.

3. The control room ventilation system is such that no smoke would be expected to be introduced into the control room proper from a fire in the panels of concern.

Therefore, a fire was conservatively assumed to be out of control before either automatic or operator detection occurred. It is also assumed that such a fire would quickly obscure the view within the cabinet area due to the buildup of a dense smoke layer. These assumptions were consistent with the observed rate of fire development in the Sandia cabinet fire tests.

4.3 Quantification Results

4.3.1 Results of the NUS Review

As a result of the NUS review of remote shutdown independence from control room circuits three general types of interaction were identified:

1. Loss of control power for the operated device as a result of a blown fuse before transferring to remote shutdown locations.

2. Spurious actuation of components either leading to LOCAs or component damage prior to taking control from the remote shutdown panel.

3. Total loss of component function due to redundant control equipment failure.

Interactions 1 and 2 (above) were considered to be the most significant and their impact on fire scenarios developed in the Limerick, Indian Point, and Seabrook studies was assessed. Two cases were considered, one in which all shutdown methods were assumed to fail and one in which one shutdown method was assumed to remain operable. A shutdown method was defined in this context as a minimum set of systems and components and their associated support systems required to maintain core water inventory and core cooling.

These analyses were sensitivity studies as detailed design information was not available for any of the plants. If no shutdown method remained available due to a fire occurrence the effect of interaction may be substantial, even in comparison to all other internal and external event initiators, ranging from an increase in core damage frequency of 1.2E-5/yr to 1.4E-4/yr. Even if one assumed that one shutdown method remained operable the increase in core damage frequency can be substantial, and in one case represented an increase of 1.1E-5/yr.

The results of the NUS study indicated that current fire protection criteria applied to U.S. nuclear reactor plants require an extensive search for both simple and complex interactions between remote shutdown systems and the control room. Uncertainties still exist in that detailed analyses of specific hardware and human interactions have not been performed. A comparison between primary reliance on preventative control logic and manual actions is one area of potential risk significance which requires further examination.

4.3.2 Results of Analysis of Control Systems Interactions at LaSalle

To quantify the effect of single or multiple spurious actuations due to a control room cabinet fire at LaSalle, the first step identified the control and actuation functions in the control room. Every component identified on any fault tree (developed as part of the internal events analysis) was traced on electrical drawings to see if any of its control or actuation functions were in the control room. This process also identified which cabinet (in the control room) the control or actuation functions mapped into. A plant visit was conducted to verify these findings.

Cabinets critical to safe shutdown were determined by identifying those components/systems that reduce either reactor heat removal capability or coolant inventory to the reactor vessel. Since the scope of this study precluded analyzing every control room cabinet, a determination was made as to which cabinets contained the most safe shutdown functions. The two most critical cabinets identified by this process were the Emergency Core Cooling System Panel (2H13P601) and the Electrical Distribution Panel (2PM01J).

Both panels have an open back and top. From Sandia cabinet fire tests (References 2, 3) it was concluded that panels with open backs and solid tops have a negligible probability of fire spread to adjacent cabinets. However, control panels at LaSalle also have an open top with cable runs about twelve feet above the floor. This configuration of cabinet was not investigated in the Sandia tests. So there is a possibility of fire spread to adjacent cabinets through the top of the panel and the cable runs above. Since both of these cabinets were end panels and no cable runs continued past them, it was assumed that cabling from adjacent panels was not directly above either of them. Fire spread to adjacent panels was eliminated from consideration in order to simplify the analysis to a manageable level consistent with the objectives of this effort.

As an initial screening step both panels were assumed to be totally consumed by the fire with controls going to the most undesired state. Two transient sequences, one in which all high pressure systems and automatic depressurization fail (Sequence 4), and one in which all high pressure systems fail, depressurization succeeds, and all low pressure systems fail were quantified (Sequence 8). The system failures required for both of these transient sequences are given in Table 4.1. A screening value of 1.0E-4 was used for random failures (failures not associated with the fire itself). All components within the panel where the fire was initiated were assumed to fail in the most undesired state.

Upon inspection it was found that the ECCS panel was divided into four subpanels by steel partitions approximately one-eighth inch thick with no penetrations. The electrical distribution panel was divided into two subpanels in similar fashion. Therefore, the computer quantification was performed assuming that a fire would be contained

Table 4.1

System Failures Required for the Quantified Transient Sequences

Sequence 4	Main Feedwater (MFW) Reactor Core Isolation Cooling (RCIC) High Pressure Core Spray (HPCS) Automatic Depressurization (ADS)
Sequence 8	MFW RCIC HPCS Condensate (CDS) Low Pressure Core Spray (LPCS) Residual Heat Removal (RHR)

within any one of these six subpanels. With this division into subpanels accomplished, the two transient sequences described above were solved for their component failure cutsets. Only one subsection of the electrical distribution panel had any remaining cut sets with random failures above 1.0E-4. The failure combinations always included a random failure of the high pressure core spray system with fire related failures. No recovery of these random failures was allowed based on the internal event analysis recovery procedure.

The frequency of control room fires was derived from the Sandia fire data base (Reference 4). Partitioning of this frequency to the remaining subpanel of interest was accomplished through an area ratio of cabinets within the control room. All control room fires in the data base were electrical panel fires that did not spread to adjacent panels. The resultant subpanel fire initiating event frequency based on an area ratio of 5 percent is 2.2E-4/yr.

Further analysis of the electrical distribution panel and the emergency core cooling system panel was performed. The computer screening procedure now assumed that a fire could spread to all subsections within either of the two panels. The same two transient sequences were quantified. In all cases random failures were still necessary to lead to core damage. For the electrical distribution panel random failure of the high pressure core spray system was required, while for the emergency core cooling system panel random failure of the main feedwater system was required.

The next step of the procedure identified either single or multiple spurious actuations or loss of control functions which would render component(s)/system(s) controlled from the remote shutdown panel inoperable. A list of components and instrumentation on the LaSalle remote shutdown panel is given in Tables 4.2 and 4.3, respectively. Three interactions were identified with systems controlled on the remote shutdown panel. One interaction was identified which would fail the main feedwater system and the condensate system which was not controlled on the remote shutdown panel. These interactions are listed in Table 4.4.

Recovery was allowed for interactions two and three since RCIC inboard steam isolation valve indication is provided on the remote shutdown panel. This recovery action assumed electrical independence of the remote shutdown panel from the control room. With recovery from the remote shutdown panel applied to all cut sets where allowable a core damage frequency of 8.1E-6/yr for one subsection of the electrical distribution panel was derived. This compares to an expected overall core damage frequency for all internal event initiators of approximately 2.0E-5/yr to 4.0E-5/yr. This analysis was conservative in the sense that all single or multiple combinations of failures within the panel were assumed to occur with a probability of one, given a fire. However, there were instances in the data base where multiple spurious actuations have occurred. There has been insufficient testing of components in fire conditions to accurately determine this type of failure probability.

From the computer results obtained without subdivision of the electrical distribution and emergency core cooling panels, it is possible that many more interactions could exist. These interactions could be representative of control rooms where panels exist with less subdivision of safety mitigating functions than at LaSalle. This could result in a substantial increase in core damage frequency.

If RCIC steam inboard isolation valve indication was not provided on the LaSalle remote shutdown panel, core damage frequency per year would increase by approximately one order in magnitude. This illustrates the importance of enough indication and control functions on the remote shutdown panel. A more detailed look on a plant by plant basis for subtle interactions between the control room and remote shutdown stations is warranted based on this result and the findings of the NUS Corporation letter report.

Table 4.2

LaSalle Remote Shutdown Panel Components

Component	Description
2E12-F003B	RHR Heat Exchanger Outlet MOV
2E12-F004B	RHR Suppression Pool Pump Suction MOV
2E12-F006A	RHR Shutdown Cooling Pump Suction MOV
2E12-F006B	RHR Shutdown Cooling Pump Suction MOV
2E12-F008	RHR Outboard Shutdown Isolation MOV
2E12-F009	RHR Inboard Shutdown Isolation MOV
2E12-F011B	RHR Condensate Discharge to Suppression Pool MOV
2E12-F016B	RHR Containment Spray Isolation MOV
2E12-F024B	RHR Testline MOV
2E12-F026B	RHR Condensate Discharge to RCIC Pump MOV
2E12-F027B	RHR Suppression Pool Spray Isolation MOV
2E12-F042B	RHR LPCI Injection MOV
2E12-F047B	RHR HX Sheel Side Inlet MOV
2E12-F048B	RHR HX Bypass MOV
2E12-F049B	RHR Discharge to Radwaste MOV
2E12-F052B	RHR Steam Line Isolation MOV
2E12-F053B	RHR Shutdown Cooling Injection MOV
2E12-F068B	RHR Containment HX Cooling Water Outlet MOV
2E51-F008	RCIC Outboard Steam Line Isolation MOV
2E51-F010	RCIC Pump Suction from Condensate Storage MOV
2E51-F013	RCIC Pump Discharge to Reactor MOV
2E51-F019	RCIC Minimum Flow to Suppression Pool MOV
2E51-F022	RCIC Test Bypass to CST MOV

Table 4.2

LaSalle Remote Shutdown Panel Components (Concluded)

Component	Description
2E51-F045	RCIC Steam to Turbine MOV
2E51-F046	RCIC Turbine Cooling Water MOV
2E51-F059	RCIC Test Bypass to CST MOV
2E51-F063	RCIC Steam Line Inboard Isolation MOV
2E51-F068	RCIC Turbine Exhaust to Suppression Pool MOV
2E51-F069	RCIC Vacuum Pump Discharge to Suppression Pool MOV
2E51-F080	RCIC Vacuum Breaker Isolation MOV
2E51-F086	RCIC Vacuum Breaker Isolation MOV
2E52-F031	RCIC Suction from Suppression Pool MOV
2B21-F013H	ADS Safety Relief Valve "H"
2B21-F013K	ADS Safety Relief Valve "K"
2B21-F013P	ADS Safety Relief Valve "P"
2E12-C002B	RHR Pump "2B"
2E12-C300C	RHR Service Water Pump "2C"
2E12-C300D	RHR Service Water Pump "2D"
- - - - - -	RCIC Turbine Trip Throttle MOV
- - - - - -	RCIC Turbine Flow Controller
- - - - - -	RCIC Turbine Trip Set
- - - - - -	RCIC Vacuum Pump
- - - - - -	RCIC Condenser Vacuum Tank Condensate Pump
2B33-F023A	Recirculating Pump "A" Suction MOV
- - - - - -	RBCCW Pump 1A
OWS02PA	Service Water Jockey Pump
1WS113	Strainer Outlet MOV

Table 4.3

LaSalle Remote Shutdown Panel Instrumentation

A. Reactor Vessel Indication
- Reactor water level: wide range level -150 to +60 in.
- Reactor pressure: wide range pressure 0 to 1,500 psig

B. Primary Containment Instrumentation
- Suppression pool level: ±14 in.
- Suppression pool temperature: 0-225°F
- Suppression chamber temperature: 0-275°F
- Drywell pressure: ±5 psig
- Drywell temperature: 50-350°F

C. RCIC Indication
- Turbine speed: 0-6000 RPM
- RCIC flow: 0-700 gpm

D. RHR
- Heat exchanger B service water temperature: 0-225°F
- Heat exchanger B service water flow: 0-800 gpm
- RHR flow: 0-10,000 gpm
- Heat exchanger B conductivity: 0-10 mho/cm

Table 4.4

LaSalle Control System Interactions (Panel 2PM01J)

Interaction	System(s) Affected
1. Undervoltage protection relays	RHR, LPCS
2. Loss of RCIC room cooling, inboard steam isolation valve closes	RCIC
3. RCIC isolation logic momentary power failure (sneak circuit)	RCIC
4. Loss of power to a nonsafety bus	MFW, CDS

5.0 RISK SIGNIFICANCE OF MANUAL FIRE FIGHTING EFFECTIVENESS

5.1 Background Discussions

The variability of fire brigade effectiveness at U.S. nuclear reactor plants was identified as a potentially important fire risk issue as a result of both the Fire Protection Research Program, and as a result of the Task 3 issues identification work. Regulations specify that fire teams include personnel familiar with plant operations. Four training sessions per year are required, only one of which must be a hands-on drill.

In the analysis of fire brigade response it has been argued that data on the responsiveness of fire teams in non-nuclear situations can be applied to the nuclear situations as well. However, there are significant differences in the situations one can expect to encounter in a nuclear plant as compared to those in conventional situations. For example, traditional fire response strategies rely on direct indications of the location of fire source such as hot doors, smoke, and flames. For well ventilated buildings with windows to the outside and easy access to all locations these traditional methods are quite effective. However, in a nuclear power plant one is dealing with a series of interconnected rooms totally isolated from the outside with relatively poor ventilation in many cases and which are often choked with pumps, valves, cable trays, control cabinets, piping, and other equipment.

Further, in traditional situations one typically deals with fires involving such fuels as wood, cellulosic materials, and some plastic. In a power plant the primary fuel source for most areas is either lubricating oils and/or cable insulations, both of which represent the most prolific smoke generating fuels. Experimentation has shown that when burning such fuels in typical nuclear power plant enclosures under typical high end ventilation rates, a thick layer of smoke will obscure the entire enclosure within approximately 10 minutes (Reference 3). In actual experiences of nuclear power plant fires, fire fighters have often reported an inability to even see the fire, and hence, uncertainty as to where to direct their suppression efforts. This was in fact the case at Browns Ferry in 1975 where the fire burned out of control for nearly 7 hours.

The uncertainty as to where to direct suppression efforts also raises another aspect of the manual fire fighting issue. That is the potential that misdirected suppression efforts may actually result in damage to equipment not directly involved in the fire. Most equipment outside of containment is not, in general, designed to survive wetting. Nor is most equipment designed to withstand the impact of the hose stream. In practice many power plants have redundant trains of equipment located within the same area. Combining such arrangements with the possibility that a fire team will be unable to locate the source of a fire increases the likelihood that the fire team will inadvertently spray the wrong equipment, quite possibly

causing that equipment to fail. Here again, as in the control systems interactions issue, such failures could involve spurious operation when not desired, and spurious shutdown or the inability to start needed systems.

5.2 Approach to Quantification

To bound the effect on core damage frequency of variability in fire brigade effectiveness a three-part approach was used. First, a review of current industry practices with respect to manual fire brigades was performed. This review was intended only to investigate the variability which exists in fire brigade training and staffing at U.S. LWR reactors. Second, information developed as part of Sandia's Risk Methods Integration and Evaluation Program (RMIEP) on the response of fire fighters to specific areas of the LaSalle plant was utilized to bound the effects of fire brigade variability on core damage frequency of the four original PRAs. Third, an analysis of the potential impact of misdirected fire suppression efforts was also performed.

Under the first approach Professional Loss Control (PLC) was contracted to perform a review of current practices with regards to the staffing, training, and equiping of nuclear power plant fire brigades. The details of this review are provided in Appendix C. A summary of the review findings is provided below.

Under the second approach, with the LaSalle nuclear plant as the model, a walkdown by FIREPRO Inc. fire protection engineers established bounds on the time to detection, suppression application, and successful suppression of a fire for all critical plant areas (Reference 10). The time to detection phase is arbitrarily defined by the time from established burning (a flame approximately 10 inches) to detection. The intermediate phase, detection to application of suppression, is further broken down into the following phases: response to equipment cage, suit-up, response to scene, set-up at the scene and scene search.

This information was then applied to the previously reviewed fire-initiated core damage scenarios. Consistent with the FIREPRO approach, the thirteen plant areas of the four requantified risk assessments of Task 1 and 2 were grouped by size of the area, equipment contained in the area, type of available suppression equipment, and type of fire detection. These areas were partitioned into the following five groups:

1. Oconee (Cable Shaft), Indian Point #2 (Electric Tunnel, Cable Spreading Room), Seabrook (Cable Spreading Room)

2. Seabrook (Control Room)

3. Seabrook (Turbine Building)

4. Limerick (13 kV Switchgear Room), Oconee (Electrical Equipment Room), Indian Point #2 (Switchgear Room)

5. Seabrook (PCC Pump Area), Limerick (Safeguards Access Area, CRD Hydraulic Equipment Area, General Equipment Area)

(Only the analyses of Groups 1, 4, and 5 specifically considered the effect of manual suppression efforts on the mitigation of critical damage. In the Seabrook control room fire scenarios, it was judged that a fire would consume an area of interest without allowing for successful suppression before the critical damage was sustained. The Seabrook turbine building scenario was never developed to the point of core damage and no modeling of fire propagation or suppression efforts was performed. Therefore, only a comparison of Groups 1, 4, and 5 with areas at LaSalle was performed. Group 1 corresponded with the LaSalle cable spreading room, while Groups 4 and 5 corresponded to the LaSalle essential switchgear room and large areas of the reactor building, respectively. Tables 5.1 through 5.3 give more details of

Table 5.1

LaSalle Cable Spreading Room

Automatic Detection - Smoke detection

Manual Detection - Low probability

Manual Suppression Equipment Available - Standpipe with preconnected 1-1/2 inch hose, multipurpose fire extinguisher CO_2 hose station

Automatic Suppression - Automatic sprinklers

	Min.	Max.	Avg.
Time to Detection (Minutes)	0-3	5-10	3-5
Time to Suppression Application			
Response to Cage	1	4	2
Suit-Up Without SCBA	0.5	2	1
Response to Scene	1	3	2
Set-Up at Scene	0.5	2.5	1
Scene Search	1	5	2
Subtotal	4	16.5	8
Time to Suppression or Substantial Control	2	10	5
Total	6-9	31.5-36.5	16-18

the LaSalle fire areas as well as the minimum, average, and maximum fire brigade response, detection, and suppression times. While it is realized that the LaSalle fire areas are not identical to areas at the other plants, enough similarity does exist for a bounding analysis view of core damage frequency. The minimum and maximum times are representative of what might be expected of the most and least effective fire brigades, respectively. The average time would represent a typical fire brigade.

Under the third approach an attempt was made to assess the effect on core damage frequency of a fire brigade damaging equipment not directly involved in the fire itself for the thirteen fire areas of Tasks 1 and 2. The following three step method was used:

Table 5.2

LaSalle Essential Switchgear Room

Automatic Detection - Smoke detection

Manual Detection - Very low probability

Manual Suppression Equipment Available - Multipurpose fire extinguisher

Automatic Suppression - None

	Min.	Max.	Avg.
Time to Detection (Minutes)	0-3	5-10	3-5
Time to Suppression Application			
Response to Cage	1	4	2
Suit-Up Without SCBA	0.5	2	1
Response to Scene	1	3	2
Set-Up at Scene	0.5	2.5	1
Scene Search	1	5	2
Subtotal	4	16.5	8
Time to Suppression or Substantial Control	2	10	5
Total	6-9	31.5-36.5	16-18

1. For existing fire scenarios assume components susceptible to spray, flooding, or temperature within an area are failed by suppression efforts.

2. Requantify any of the Task 1 and 2 PRAs where sufficient information exists on fire area specifics.

3. If any areas turn out to be probabilistically important, estimate the probability of spraying the wrong equipment and combine this with fragility information to determine the conditional probability of suppression-induced failure.

In attempting to assess the potential impact of misdirected suppression efforts it was found that only the Limerick PRA contained

Table 5.3

LaSalle Reactor Building Large Area

Automatic Detection - Smoke detection

Manual Detection - Very low probability

Manual Suppression Equipment Available - Standpipe with preconnected 1-1/2 inch hose, multipurpose fire extinguishers

Automatic Suppression - None

	Min.	Max.	Avg.
Time to Detection (Minutes)	0-3	5-10	3-5
Time to Suppression Application			
Response to Cage	1	4	2
Suit-Up Without SCBA	0.5	2	1
Response to Scene	3	5	4
Set-Up at Scene	0.5	2.5	1
Scene Search	1	8	3
Subtotal	6	21.5	11
Time to Suppression or Substantial Control	2	20	5
Total	8-11	51.5-56.5	21-26

sufficient information to proceed past Step 2 as described above. The screening method used in the original PRA assumed that for Limerick's four requantified fire areas all methods of safe shutdown would be failed if a fire failed all components in the fire area. Thus all four fire areas would lead directly to core damage. Using Step 1 of the analysis technique it was assumed that all safe shutdown methods in the four fire areas could be failed by a combination of fire effects and suppression efforts. To determine whether or not failing equipment by suppression efforts could be probabilistically significant the following method was used:

1. Compare the screening value of core damage frequency from the original PRA for a fire area to its final estimated value.

2. Determine the method(s) of fire suppression available in the area.

3. Determine access routes to the area.

4. Assess the probability of accurate, location specific detection of a fire within the fire area.

5. Assess the potential for smoke buildup and visible obscuration of the fire.

6. Determine what method would be used to discover fire location.

5.3 Quantification Results

5.3.1 Findings of the PLC Review

As a result of the PLC review of industry practices with respect to the staffing, equipping, and training of fire brigades it was found that most nuclear power plants maintain a fire brigade comprised of employees normally assigned to other duties but who respond to fire emergencies as a secondary responsibility. However, some facilities have dedicated fire departments in which fire fighters are assigned full-time to fire related duties. There is a large variation in staffing ranging from 30 to 218 members. In contrast to what one might assume, those plants maintaining a dedicated fire department fell at the low end of this staffing range. All brigades were found to be well equipped with personal protection and fire fighting equipment. Eight facilities reported having a fire truck available for brigade use.

Training on live fires was mostly off-site at city, county, or state facilities with a duration slightly greater than one working day per year. Over two-thirds of the sites have all fire brigade members receiving fire brigade leader training. However, several plants reported that their fire brigade leader is simply appointed due to

other supervisory duties. Most plants reported that hands-on drills are usually at full-speed with full gear, though the number of such drills conducted varied from only one per year, per shift, to several per year. The number of drills performed per year was always at the least consistent with the regulations. Several plants reportedly provide training well beyond that required.

While all plants reported nominal compliance with Appendix R fire regulations for the provision of a fire fighting team, this review demonstrated a wide variability in industry practices. The guidelines in Appendix R provide for maintenance of a minimally trained fire response team. Based on this review it would appear that those plants which provide for more extensive training than the minimum requirements can be expected to be more fully prepared for the challenges represented by fires than those plants which only meet the minimum requirements of Appendix R. For one plant it appeared that virtually every control room operator, plant security guard, health physicist, and maintenance worker was secondarily a member of the fire team. In such situations one can not expect that a plant will provide adequate training to as many as 218 people. It would appear more desirable to provide a smaller but sufficient core group with much more extensive training than to have a large group with little real fire fighting experience upon which to draw.

5.3.2 Results of the Response Time Bounding Analysis

A comparison between the original PRA core damage frequency for the eleven fire areas identified in Section 5.2 and its value when minimum, average, and maximum response and extinguishment times are used is given in Table 5.4. As can be seen from Table 5.4 variability in fire brigade effectiveness can result in factors of approximately three to fifty variations in core damage frequency. For the areas considered the fire initiated core damage frequency contribution was as high as 1.0E-4 for one fire area alone. The typical variation observed due to assumed variability in fire brigade response time is at least one order of magnitude. This indicates the importance from a risk perspective of levels of staffing, equipping, and training of fire brigades at U.S. nuclear power plants.

5.3.3 Results of the Misdirected Suppression Effort Analysis

To assess the possible effects of misdirected suppression efforts for Limerick's fire areas, a comparison is made between the screening value for core melt frequency from the original PRA and the final estimated value given in Table 5.5. The screening value represents an upper bound to the potential impact of misdirected fire suppression efforts for the area of concern. The reduction factor is the result of fire suppression within either 10 minutes or an hour and separation between components and cabling that serves different shutdown methods. Four fire areas (2, 44, 45, and 47) were identified for further analysis due to the large magnitude of their respective reduction factors.

Table 5.4

Effect of Fire Brigade Response and Extinguishment Time on Core Damage Frequency

	Core Damage Frequency (yr^{-1})			
	Response and Extinguishment Time			Original PRA Value
Plant Area	Minimum	Average	Maximum	
Seabrook				
Cable Spreading Room	8.0E-7	4.9E-6	8.9E-6	4.1E-6 (mean)
PCC Pump Area	1.4E-5	6.2E-5	1.0E-4	7.2E-5 (mean)
Oconee				
Cable-Shaft	5.3E-6	1.1E-5	1.4E-5	1.0E-5 (point est)
Electrical Equipment Room	5.4E-9	1.5E-8	2.0E-8	1.6E-8 (point est)
Indian Point #2				
Cable Spreading Room	1.1E-7	1.2E-6	2.5E-6	1.9E-6 (mean)
Electrical Tunnel	9.3E-6	4.7E-5	7.6E-5	5.0E-5 (mean)
Switchgear Room	2.2E-6	3.0E-5	6.5E-5	5.6E-5 (mean)
Limerick				
13 kv Switchgear Room	6.0E-7	4.7E-6	2.8E-5	6.2E-6 (point est)
Safeguards Access Area	1.4E-6	8.5E-6	3.8E-5	6.0E-6 (point est)
CRD Hydraulic Equipment Area	5.0E-7	8.3E-6	2.1E-5	6.4E-6 (point est)
General Equipment Area	3.9E-7	3.6E-6	1.5E-5	1.9E-6 (point est)

Table 5.5

Limerick Fire Area Core Damage Frequency (yr^{-1})

Fire Area	Screening Value	Computed Value	Reduction Factor
(2) 13 kv Switchgear	2.5E-3	6.2E-6	403
(20) Static Inverter	2.8E-5	1.0E-7	280
(22) Cable-Spreading Room	1.2E-5	2.5E-7	48
(24) Control Room	1.2E-5	2.6E-7	46
(25) Auxiliary Equipment Area	3.5E-3	3.6E-7	583
(44) Safeguard Access Area	3.8E-3	6.0E-6	633
(45) CRD Hydraulic Equipment Area	2.5E-3	6.4E-6	390
(47) General Equipment Area	2.8E-3	1.9E-6	1,473

Note: Fire areas 2, 25, 44, 45, 47 contain cable raceways and components that serve all shutdown methods. The screening analysis assumed that fire led directly to core damage.

The next step of the procedure was identification of fire suppression equipment for the fire areas. In the case of fire areas 44, 45, and 47 the primary means of suppression is manually operated water hoses. Since the 13 kV switchgear room (fire area 2) contains only carbon dioxide hose reels and portable carbon dioxide extinguishers, it was screened from further analysis based on a lack of evidence upon which to base component susceptibility evaluations.

A determination of the generic types of components susceptible to fire suppression effects, in these cases water spray, was made prior to a detailed examination of the three remaining fire areas based on operational experience as illustrated by Table 5.6. All three of these fire areas were identified as containing equipment within these generic categories. No areas were screened from further analysis on the basis that no equipment within the area was vulnerable.

A plant visit was conducted to obtain an accurate assessment of the probability of the fire brigade spraying the wrong components. All three of the remaining fire areas contain many components susceptible

to spray damage. These areas are very similar in that they are large areas (approximately 10,000 ft^2) with a mix of about 40 smoke and heat detectors. Each area has three entrances with manual water hose reel just outside every entrance. There is an alarm panel in the control room which would direct the fire brigade to the general area, however, there is not a panel outside the fire area which would indicate a more specific location for the fire. It was initially felt that based on the Sandia large scale enclosure tests (Reference 3) within ten minutes of a fire's ignition that smoke would descend towards the floor to the point where vision would be drastically hindered in most typical nuclear plant enclosures. However, in the case of these three fire areas each contained a 200 ft^2 open equipment hatchway which would mitigate the effects of smoke buildup. Therefore, these three fire areas were screened from further analysis on the basis that fire fighters would most likely be able to identify the source of the fire through its generation of a smoke plume.

Since this was a look at but one plant, it is felt that this methodology could be applied to take a look at other plants where there might be a risk significant problem. Such instances would involve a concentration of susceptible equipment, the potential for smoke buildup, and a lack of indication of location specific fire detection beyond identification of the room.

Two major areas of uncertainty still remain. The first is that it is difficult to make an accurate assessment of the probability that a fire brigade will spray the wrong equipment with their vision severely

Table 5.6

Components Susceptible to Water Fire Suppression Damage

1. Transformers
2. Switchgear
3. Batteries
4. Motor-Control Centers
5. Pump Motors
6. Motor-Operated Valves
7. Air Compressors
8. Instrument Racks:
   - Low Voltage Power Supplies
   - Switches
   - Relays
   - Recorders

impaired due to smoke. Second, no testing has been done to accurately determine the effects on susceptible equipment of misapplied water hose streams. Based on the observation that final core damage estimates are reduced from screening values by three orders of magnitude as a result of the assumed effectiveness of fire suppression efforts, both manual and automatic, as demonstrated by Table 5.5, this issue could have a significant impact on fire area core damage frequency.

6.0 RISK SIGNIFICANCE OF TOTAL ENVIRONMENT EQUIPMENT SURVIVAL

6.1 Background Discussions

Two of the first steps to be completed in the analysis of fire risk are the identification of the equipment required for the safe shutdown of the plant and the identification of the potential failure mechanisms, failure modes, and failure thresholds of that equipment. These steps must be followed by an analysis of postulated event sequence scenarios. In the case of fire risk this typically involves the application of a computer fire simulation code for the prediction of fire growth rates and fire induced thermal damage. This fire code will attempt to predict the time dependent severity of the fire environment and couple that to the process of equipment involvement to produce a prediction of time to failure of that equipment. The issue raised here questions the degree to which analyses performed under current PRA methodologies address equipment damageability issues.

Total environment equipment survival refers to the damageability of plant equipment to indirect, or secondary, fire involvement through various aspects of the environments created by fires, fire suppression, and the spurious operation of fire suppression systems. Such secondary aspects in the case of actual fire occurrences include the effects of low level thermal exposures, smoke, and in particular the interactions between smoke, moisture, and the corrosive compounds generated during a fire. In consideration of fire suppression and the spurious operation of suppression systems one is concerned with high humidity, water sprays, and flooding when water suppression systems are involved, and extremely low temperatures, high thermal gradients, high pressure differentials, and high static charge levels when gaseous flooding systems are involved.

In practice, for PRA fire scenarios the equipment most often identified as of concern is electrical cabling. This, in part, results from the observation that cabling is the safety related equipment most often identified for which separation of redundant trains is not maintained. For these scenarios the failure mechanism most often examined is thermal degradation of insulation integrity, and the failure mode is most often open circuit or short to ground. The procedures used in this analysis step and the availability of thermal damage and thermal ignition data for use in these analyses are discussed in greater detail in Section 9 of this work. The issue of completeness is raised in that other potentially damageable equipment is not quantitatively analyzed, and that failure mechanisms other than direct thermal damage are not typically considered. There are also questions as to the appropriate application of test data in the modeling process.

6.2 Approach to Issue Examination

The response of plant equipment to such environmental insults is a very poorly understood phenomenon. Virtually no quantitative data

exists on the response of equipment to other than purely thermal environments. Further, virtually no analytical tools are available which are capable of predicting the characteristics of these secondary environmental factors, let alone how equipment will interact with such factors. This lack of understanding of equipment response coupled to a lack of analytical tools prevent quantification of secondary damage impacts on plant risk in any meaningful way.

In an attempt to provide some guidance as to the potential impact of this issue on core damage frequency estimates an analysis based primarily on operating experience was performed. The experience base for nuclear power plants was reviewed for relevant equipment damage incidents. The significance of these incidents in relation to fire risk assessments is described below. Due to a lack of quantitative data this evaluation is necessarily rather qualitative. However, ample incidents exist to demonstrate a concern for at least some aspects of this issue.

6.3 Results of Issue Examination

6.3.1 Potential Damaging Effects of Fire Suppression Systems

The issue of the potential damaging effects of fire suppression systems is really comprised of two related topics; (1) the application of fire suppression systems during actual fires, and (2) the spurious operation of fire suppression systems when there is no fire. The first aspect of this issue is also discussed as a part of the issue of manual fire fighting effectiveness. This section will deal primarily with the potential for inducing damage due to the spurious operation of fire suppression systems. This discussion of spurious suppression events will also provide insights into the potential damaging aspects of the misapplication of suppression agents during fire events as well due to the similar nature of the damage mechanism considered.

In many ways spurious operation incidents represent less severe exposure conditions than suppression activity during an actual fire. All the damage mechanisms identified during spurious operations will be present during application to fires, with actual fires including the additional insults of heat, smoke, and hose stream impact. Thus, while these spurious operation incidents serve well to illustrate the potential impact of fire suppression activity they will in fact be incomplete in that not all potential mechanisms for damage will be observed. In particular, concerns with respect to the interactions of smoke deposition with fire suppression will not be a factor in spurious operation incidents. This observation is with the exception of the spurious operation of gaseous suppression systems as with these systems with no thermal input from a fire extremely low room temperatures can be expected.

In addressing the issue of equipment damage induced by the spurious operation of fire suppression systems one is dependent on the operational experience base for guidance as no publicly available

experimental data on the effects of suppression environments on plant equipment exists. In reviewing the experience base of nuclear power plant operations one will find that for actual fires the reports are typically such that little or no information on secondary equipment damage is given beyond identification of the affected safety systems. However, numerous references to the spurious operation of fire suppression systems can be found, and these spurious operation incident reports are typically more complete in reporting the adverse effects on plant equipment and operability.

A review of the Licensee Event Report (LER) data base yielded a total of 71 spurious suppression actuation events which resulted in the submission of a LER. These 71 events all represent events during which an inadvertent, unplanned actuation of a fire suppression system actually took place. Additional incidents were identified which were associated with the planned test actuation of suppression systems or involved the actuation of a fire detection system only. These additional incidents are not included in the count of 71 spurious suppression events. The earliest spurious suppression event to be considered here occurred on April 1, 1980. The most recent event considered occurred on July 14, 1987. Other events are known to have taken place in earlier years though consideration here was limited to more recent events, in particular, events since adoption of Appendix R fire regulations. Thus, this search included LERs covering approximately 7 calendar years of reactor operation. A number of insights can be gained from an analysis of this data base.

Figure 6.1 identifies the root cause of the spurious operations for the 71 events reviewed. Note that the largest single identified cause of spurious suppression system operation is improper maintenance and test procedures. Maintenance and testing errors account for 16, or 23 percent, of the reported incidents. The second most common cause of spurious operations is workers who accidentally set off a fire protection system. These incidents account for 12, or 17 percent, of all incidents. Other common causes include leaks in water system plumbing (13 percent) and steam leaks or high humidity environments (11 percent). In all, personnel factors account for approximately 40 percent of the incidents, and fire protection system malfunctions account for approximately 18 percent of the incidents. Approximately 15 percent of the incidents resulted from other factors associated with plant operation such as welding activity, steam leaks, dust, and overheating equipment. Of the remaining incidents approximately 7 percent are associated with factors external to the plant such as storms and external fires, while approximately 20 percent of the incidents have no identified cause.

Figure 6.2 illustrates the number of incidents occurring per calendar year. Note that the reports for 1980 and for 1987 are incomplete. For the years 1981 through 1986 spurious fire suppression actuations occurred at a fairly regular rate. The average rate of spurious actuation was approximately 10.7 incidents per calender year. The peak year for reported incidents was 1982 with 15 reported events.

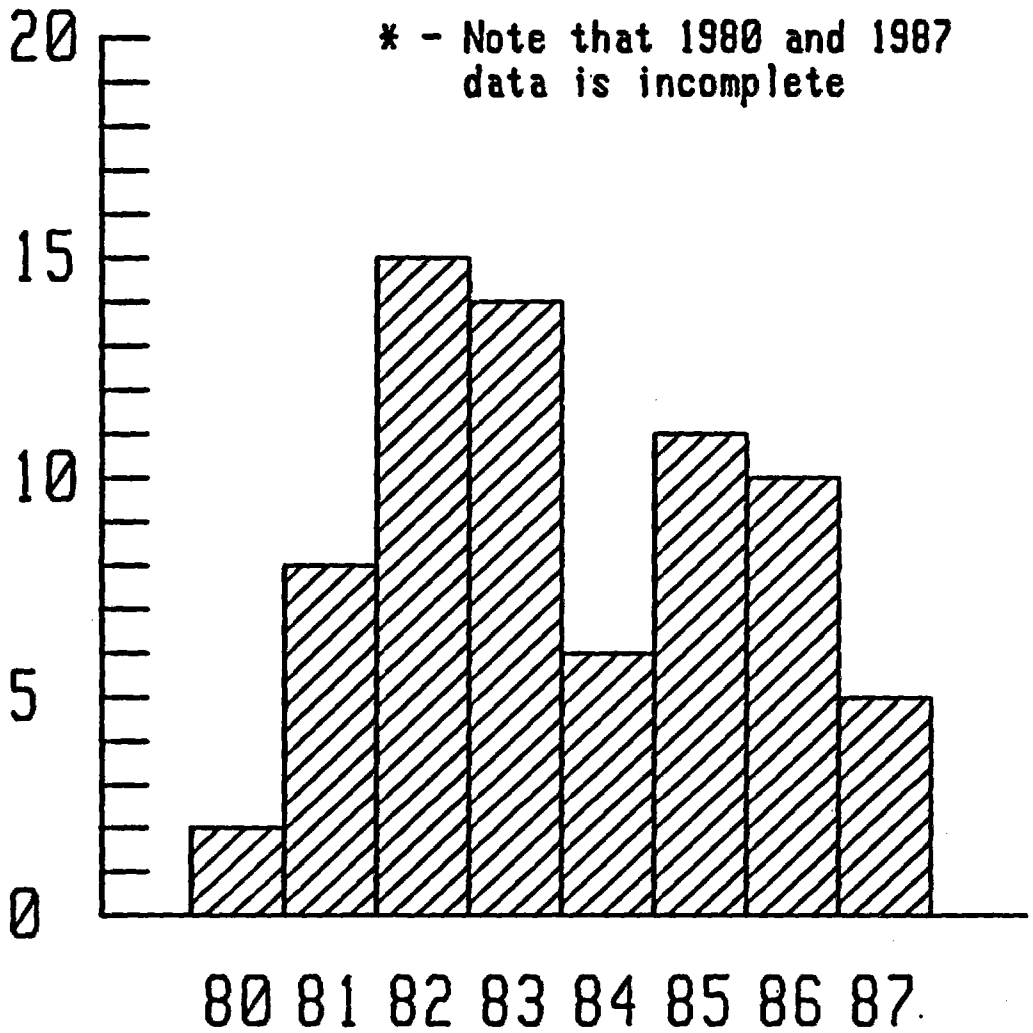

Figure 6.1. Spurious Suppression Events by Calendar Year

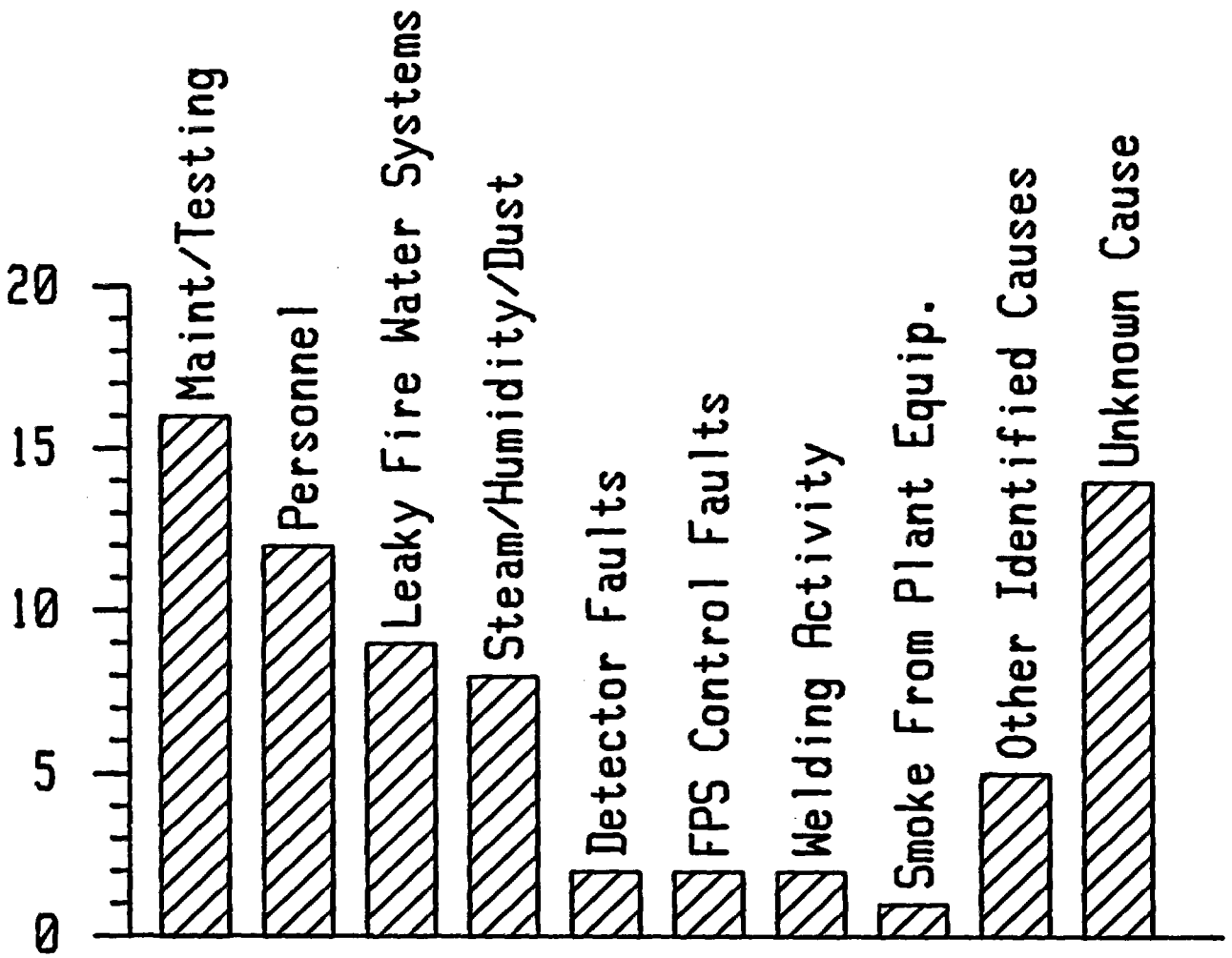

Figure 6.2. Spurious Suppression Events by Cause

The minimum number of reports for a single year was 1984 with six reported events (excluding the incomplete report years of 1980 and 1987).

These incidents can also be segregated as to the type of plant involved. Twenty-nine, or 41 percent, of the incidents occurred in BWRs while 42, or 59 percent, of the incidents occurred in PWRs. Utilizing the operational year of experience information available from the Sandia fire data base (Reference 4) the frequency of incidents per reactor year can be estimated. All incidents occurring between April 1, 1980, and June 30, 1985 were considered. This subset of the full data set was used as the total reactor years logged was calculated using the Sandia fire data base including outage times. June 30, 1985 is the limit of dates considered by the fire data base and for which the years of operating experience are known. None of the events within the bounds of the above dates were screened from consideration as they were all considered events which could easily have occurred during operation even though some occurred during outages. On this basis the estimated frequencies of occurrence of spurious suppression events per plant year (py) are 0.14/py and 0.13/py for BWRs and PWRs respectively.

Of the 71 incidents identified the majority, 68 percent, involved the actuation or leaking of a sprinkler, deluge, or water curtain system, with an additional 8 percent associated with the rupture of fire water plumbing systems. The remainder of the incidents involved Halon systems (12 percent), and carbon dioxide systems (12 percent). Appendix E provides a listing of the incident dates, plant name, and a brief summary of each incident for the 71 identified events.

In examining the consequences of spurious suppression system actuations a range of effects from virtually no effects to induced plant scrams have been observed. The most commonly affected systems are ventilation charcoal filters and the fire protection systems themselves. In many cases the inadvertent actuation of a suppression system has resulted in the unavailability of fire detection and/or fire suppression in extended regions of the plant. This is particularly true for gaseous suppression systems in which spurious actuations have often resulted in the depletion of the plants complete suppression gas inventory. Several incidents, not necessarily involving actuation of a suppression system, were identified in which false detector signals were generated which would then mask any incoming real signals. Table 6.1 details the affected systems reported in the 71 incidents identified.

While many of these incidents resulted in little or no damage to safety related equipment, several were identified in which significant degradation of plant operability resulted. Eight of these incidents are described in more detail below. These incidents serve to illustrate the potential damaging impact such incidents may represent.

Table 6.1

Systems Affected by Spurious Suppression Events

System(s)	Number of Incidents
BWRs:	
No Systems Reportedly Affected	9
HPCI Inoperable	4
Core Spray Inoperable	2
Startup Transformers Tripped, Nonvital Busses Tripped, Turbine Trip	1
Startup Transformers Tripped, 4160 V Busses Lost (A,B), Recirculation Pumps Lost (A,B)	1
Turbine Tripped	1
ESF Actuated	1
SBGT System Wetted	6
Others	1
PWRs:	
No Systems Reportedly Affected	30
CRD Malfunction, RPS Motor/Gen Trip	1
SUT Trip, LOOP	1
Main Transformer Trip, Generator Lockout, Turbine Trip	1
Access Control Failed Closed, Internal Communications Degraded	1
Plant Computer Trip	1
Hydrogen Recombiner Failed	1
Main Feedwater Pump Trip	1
LPSI Inoperable	1
All CRD Power Lost, SUT Trip	1

Spurious Suppression Event #1:

Plant: Browns Ferry Unit 1 Event Date: 5/3/86

Event Description:

During plant shutdown a spurious operation of the deluge system for the high drywell area occurred (cause unknown). Some days

later water from the deluge actuation penetrated two pressure switches resulting in electrical shorting. As a result of this short all eight emergency diesels started, two emergency equipment cooling water pumps started, and core spray and residual heat removal logic states were initiated. This resulted in core spray injection valves opening which allowed charging water from the condensate storage tanks to flood the reactor cavity. A total of 30,000 gallons of water was spilled into the reactor building from the open reactor cavity.

Spurious Suppression Event #2:

Plant: Hatch Unit 1 Event Date: 6/27/85

Event Description:

While operating at 64 percent power during plant startup a worker inadvertently actuated the deluge spray over the "1C" start up transformer. The water spray caused a
short to ground in this transformer resulting in a loss of the "A" and "B" 4160 volt busses. This in turn resulted in a loss of power to both the "A" and "B" reactor recirculation pumps and a subsequent scram of the reactor.

Spurious Suppression Event #3:

Plant: Fitzpatrick Event Date: 12/23/86

Event Description:

While operating at 82 percent power a rupture in the plumbing for a water curtain system occurred. Water spray from the rupture wetted two rows of breaker cubicles resulting in the failure of a main steam line valve loss of power monitor. In addition, water spray flowed through a deck grating onto a battery motor control center (BMCC). While no component damage to the BMCC resulted, the BMCC was quickly de-energized by operators causing the inoperability of high pressure coolant injection and three primary containment isolation valves placing the plant in a limiting condition of operation.

Spurious Suppression Event #4:

Plant: Ginna Event Date: 11/14/81

Event Description:

During normal operations at 100 percent power plant personnel inadvertently actuated fire suppression systems in several plant areas. One system actuated was a deluge system over the control rod drive control cabinets. A small amount of water intrusion into the control rod drive switchgear cabinet resulted in the

misalignment to full withdrawal of two control rods which could not be corrected by operators. One RPS motor generator set was also tripped. Operators manually tripped the reactor.

Spurious Suppression Event #5:

Plant: Palisades Event Date: 7/14/87

Event Description:

While operating at 91 percent power the deluge system protecting the main transformers was inadvertently actuated by plant personnel performing fire detection system maintenance. Wind carried water spray to the "1-2" start up transformer causing an electrical fault on that transformer. This fault resulted in the tripping of the "1-1", "1-2", and "1-3" start up transformers and a total loss of offsite power. Power was also lost to the cooling tower pumps providing the flow for the secondary heat sink. The reactor was manually tripped.

Spurious Suppression Event #6:

Plant: River Bend 1 Event Date: 1/7/86

Event Description:

While operating at 3 percent power during plant startup a construction employee inadvertently actuated a water curtain. Water from the actuation entered two motor control centers (MCCs) in the immediate vicinity. Water also flowed through an unsealed floor penetration into a load center on the level below. A short in the wetted load center caused a transformer feeding the load center to "burn up" in turn resulting in the loss of power to two additional load centers and an eventual reactor trip.

Spurious Suppression Event #7:

Plant: Callaway 1 Event Date: 2/22/85

Event Description:

While operating at 1 percent power during plant startup water leakage into a manual deluge system pull station for the start up transformer caused a short which actuated interlock logic for the start up transformer and fire protection system. This interlock tripped off the start up transformer causing an auto-start and loading of an emergency diesel generator. Power was lost to the motor generator sets which supply power to the control rod drive mechanism thus preventing operators from controlling rod movement. A manual reactor scram was initiated.

Spurious Suppression Event #8:

Plant: Surry Event Date: 12/9/86

Event Description:

While operating at 100 percent power a break occurred in a main feedwater return line. Damage to several sprinkler heads and penetration of water into a control panel caused the actuation of the turbine building deluge system. The deluge system in turn caused the failure of a turbine building access control card reader rendering that system inoperable throughout the plant. Water from the deluge system and steam break also caused the actuation of a Halon fire suppression system and a carbon dioxide suppression system. The Halon actuation resulted in the freezing of a radio repeater and the degradation of local plant communication capability. Actuation of the carbon dioxide system caused extremely low temperatures and the generation of approximately two feet of "snow" in the affected cable spreading area one level above the control room. Carbon dioxide and Halon were also reported to have been introduced into the control room through open doorways and through the control room ventilation system.

There is one additional event not included in the count of 71 events considered above which serves to illustrate additional potential concerns. This incident involved a preoperational test of a carbon dioxide fire suppression system in the cable spreading/relay room at the Three Mile Island plant. During the test the control room operators reported observation of several instrument readings which behaved erratically. This behavior persisted for several hours following the test. In addition, those in the vicinity of the test indicated concern over the buildup of ice on the cable trays in the area and for the potential collapse of those trays. The erratic signals were subsequently attributed to the bridging of low voltage relay contacts caused by the buildup of ice from condensation of ambient humidity. Tests performed by the utility confirmed these conclusions, though this test data is not publicly available. It was estimated that the temperature of the room during the test dipped to -60°F. As a result of the incident this fire suppression system was permanently deactivated.

Another situation recently identified illustrates another aspect of the spurious suppression question which could have a potential safety impact. At the Sequoyah plant a potential interaction was identified which could result in the loss of the diesel generators upon actuation of the fire protection system. In this case the diesel generator rooms are protected by carbon dioxide fire suppression systems. In order to assure maintenance of adequate gas inventory during actuation, the ventilation system for the rooms is isolated and all air flow ducts are damper sealed on actuation of the fire protection system. However, the diesel generators are cooled by the room air,

not external air. Initial calculations indicated that diesel failure due to overheating could occur within as little as 20 minutes if ventilation to the room is not maintained. This situation is further aggravated by the presence of mercury switches in the fire protection control system. Such switches are highly vulnerable to seismic actuation.

These nine events serve to illustrate the vulnerability of plant equipment to the types of environments created by the spurious operation, or indeed the proper application, of fire suppression agents. Historically, the most severe events, as well as the most common, are those associated with water fire suppression systems causing the electrical faulting of various components. The actuation of carbon dioxide systems has also created problems due to the large volumes of suppressant required and the resulting low temperatures and high pressures created. The actuation of Halon systems has resulted in local problems associated with the freezing of components and shut-down of protected systems through safety interlocks.

Those components shown to be vulnerable to such environments include transformers, power supplies, load centers, switchgear, motors, relays, pressure transmitters, and general control circuitry. However, there exists no publicly available experimental data on the vulnerability of these or other components to suppression environments. Nor do analytical tools capable of predicting the environmental impact of such events currently exist. Thus, current methodologies are inadequate for the treatment of this issue.

This problem appears to be rooted, at least in part, in the application and installation practices observed in the implementation of fire protection regulations. While these regulations specifically state that vulnerable equipment should be protected from inadvertent actuations of suppression systems the historical evidence indicates that this ideal has not been met in practice. For many of the incidents involving water the adverse impacts on plant equipment are attributed to inadequate sealing of cabinet or floor penetrations, inadequate provisions for the draining of fire water, failure to consider existing water drainage paths such as floor gratings, or inadequate analyses to identify vulnerable equipment. For several of the incidents involving gaseous systems, particularly carbon dioxide systems, the adverse impacts on plant equipment are attributed to either design errors or to inappropriate siting of discharge nozzles. While such factors do not account for all incidents many of the adverse impacts could have been avoided had appropriate steps been take to identify and protect vulnerable equipment. However, with so little concrete information available upon which to base such analyses it is not surprising that such factors were missed in the design and installation.

In summary, spurious operations of suppression systems have been responsible for the degradation of safety systems including diesel generators, high pressure coolant injection systems, vital ventilation

systems, hydrogen recombiners, main and start up transformers, reactor core isolation cooling systems, core spray, primary recirculation pumps, emergency equipment cooling water systems, vital areas access control systems, plant computers, and control rod drive mechanisms. In one case a threat to the mechanical integrity of cable trays resulted, while in others overpressurization of enclosures has resulted in the degradation of vital barriers. Other incidents have resulted in the spurious operation of numerous systems including diesel generators, emergency equipment cooling water pumps, core spray logic, and analog transmitter trip system relief valves. Fire water pipe breaks have also resulted in the flooding of various plant areas. In one incident a spurious suppression system actuation during a refueling outage resulted in the spilling of over 30,000 gallons of contaminated water within a reactor building.

In at least 12 of the 71 cases identified here spurious suppression events have forced an automatic trip, manual scram, or normal shutdown of the reactor itself. In at least five additional cases off-normal plant events such as large pipe breaks have initiated fire suppression systems which in turn hampered operator response to the root conditions. Based on this initial review of the experience base approximately one in four of the spurious suppression events considered either induced or resulted from such plant transients. Such incidents are particularly significant as any time that a plant enters a transient situation a finite probability of core damage is introduced. The random failure of equipment to operate on demand, coupled to the degradation of such systems as offsite power, HPCI, core spray, or recirculation pumps could represent a significant challenge to plant operability. A similar observation is also valid for incidents inducing a loss of offsite power.

An indication of the potential risk significance of these transient and loss of offsite power events resulting from spurious suppression actuations can be gained through a comparison of the generic initiating event frequency data for for such incidents to those demonstrated here for spurious suppression events. Table 6.2 compares these initiating event frequencies for both BWRs and PWRs.

As can be seen the spurious suppression induced transient and loss of offsite power frequencies are from one to two orders of magnitude less likely than these transients as a whole. For these incidents to represent a significant contributor to plant risk they must involve the degradation of one or more safety systems. It has been demomstrated here that approximately one in four of the spurious suppression events identified resulted in the degradation of one or more safety system as has been shown in Table 6.1. Thus, these incidents do represent potential risk contributors. In order to obtain more specific estimate of the risk significance a much greater level of plant specific information than that available to this study must be considered.

Table 6.2

Comparison of Spurious Suppression Induced Loss of Offsite Power (LOSP) and Station Transient Incidents to Typically Assumed Frequencies Due to All Sources

	BWR*		PWR*	
Incident	Total	Suppression	Total	Suppression
LOSP	7.9E-2	4.6E-3	7.7E-2	3.4E-3
Transient	3.3	2.3E-2	7.3	2.0E-2

*Incidents per reactor year

A quantitative analysis of the impact of spurious suppression system actuation events would require a number of very plant specific steps to be performed. First, one would have to identify those components within a given area which are potentially vulnerable to degradation as a result of suppression activity. Again, such information is currently available only through historical incident reports. Second, one would need to define the area of influence of the suppression systems considered. Such an analysis must also consider the interactions between individual suppression systems as the historical base provides several incidents where more than one suppression system has been spuriously actuated simultaneously. This analysis would also need to consider the existence of water drainage paths such as stairwells, open floor gratings, unsealed or cracked floor penetrations, and ventilation duct work as several incidents have involved such flow paths. The impact of the postulated damage must then be traced through a full systems impact analysis with the related probabilistic events accounted for, just as in a fire analysis.

Finally, one must consider other plant conditions, such as piping breaks and seismic events, where the actuation of fire suppression systems is likely. This is shown again by the experience base which contains a number of incidents where steam or dust have been identified as the causes of fire suppression system actuation. As stated above five of the 71 events identified here resulted from independent off-normal plant events such as line breaks and caused complications to the response to those off-normal events.

Such analyses have not previously been performed, and imply a commitment of effort similar to that required for a normal fire analysis. For the PRAs reviewed as a part of this study, and presumably all other PRAs, insufficient information is provided to make such an analysis meaningful. The scope of the current study does not extend to the performance of such an extensive analysis as would be required given the availability of information upon which to base that analysis. Certain insights can be gained from the review of historical incidents which has been performed here.

One should first recognize that those areas within a nuclear plant which are protected by fire suppression systems are generally those housing safety related equipment, and often, redundant trains of such equipment. This is consistent with the provisions of Appendix R fire regulations. Thus, the spurious operation of suppression systems will typically involve the exposure of safety related equipment. Based on the historical evidence many of these safety related components will be vulnerable to damage from such incidents, with the actual level of damage sustained dependent on plant specific aspects of the situation.

The initial examination of the experience base performed here indicates that spurious suppression events appear to be occurring at a rate similar to that of actual fires (approximately ten events per year). When one considers that those areas which are protected by fixed suppression systems are those typically containing safety related equipment, this tends to imply that the spurious suppression events themselves may represent a significant contributor to the residual level of risk currently perceived for power plant fire issues. Such evaluations will be entirely plant specific and no generic conclusions as to risk contribution can be made.

This of course must be tempered by the observation that implementation of current fire regulations through the installation of a broad range of fire protection features, including fire suppression systems, has greatly reduced the perceived level of risk associated with fires. Typical estimates imply that fire risk has been reduced by approximately one order of magnitude through implementation of Appendix R.

Fire protection systems can be utilized with minimal adverse impact if adequate knowledge is incorporated into the design and installation at the outset. Many of the observed problems can be attributed to improper design considerations, inadequate understanding of the potential impact of such systems on their neighboring systems, and improper maintenance procedures. By recognizing this potential one can incorporate such knowledge into the design and implementation of fire suppression systems and protect critical equipment from the damaging potential. Unfortunately, there is little concrete evidence beyond the available experience base upon which to base such evaluations. Thus it is to be expected that such incidents as those described above will continue to occur, and will continue to adversely impact plant safety systems.

6.3.2 The Potential Impact of Other Aspects of a Fire Environment

The discussion above centered on the potential adverse impact of fire suppression systems on the operability of plant equipment. This is only one of several factors of a fire environment which could adversely impact the operability of plant equipment. Other potentially damaging factors beyond direct involvement in the fire include low level thermal exposure, deposition of smoke particulate, fire induced corrosion, and the interactions between corrosive products, smoke particulate, and moisture.

The potential impact of such factors on the risk due to fire at a nuclear plant can not at this time be quantified in a PRA context. This results primarily from three observations. First, there exists to date virtually no quantitative data on the vulnerability of plant equipment to such environmental insults. Second, the historical experience base as represented by nuclear power plant fire incident reports does not provide sufficient detail to identify the mechanisms of fire damage observed during actual fires, nor in many cases the actual equipment damaged beyond identification of the affected systems. Third, current fire modeling techniques do not, to any extent, model the environmental impacts to plant equipment from factors other than direct thermal heating and ignition. There does, however, exist a certain amount of qualitative evidence to justify a potential for concern over certain of these environmental factors.

One such factor is short term damage due to the deposition of fire generated smoke on plant equipment. The short term damage potential of smoke can take two forms; the degradation of mechanical movement, and the degradation of electrical functionality. Experimentation has shown (Reference 11) that when, in particular, PVC insulated cables are burned the resulting smoke becomes heavily laden with water soluble chlorides. Once deposited on equipment this chloride will tend to scavenge water, which will be readily available in most fire situations due to suppression activity. This would result in the creation of a highly acidic solution which could easily induce short term degradation of electrical integrity. Experimentation has also shown that electrical equipment which is dependent on precise mechanical movement is vulnerable to the inhibition of that movement due to the deposition of soot. Such equipment would include strip chart recorders and other similarly configured equipment.

There is also an extensive experience base within the non-nuclear community relative to the issue of longer term corrosion damage due to smoke deposition. In the nuclear industry such problems may be hidden through the routine replacement of equipment whose function has been degraded without specific identification of the cause, nor correlation to past fires. It may also be countered through a conservative approach to replacement of equipment following a fire should that equipment appear in any way affected. Thus, the issue of corrosion is considered of secondary importance to the analysis of the immediate impact of a fire on plant operability.

While the available data is to a large extent qualitative, it is sufficient to indicate a need to further understand the adverse effects of smoke. This is particularly true for the power plant situations where the fires which do occur are noted for there profuse generation of smoke. This is also supported by observations of large scale enclosure fire tests (Reference 4) which demonstrated that smoke purging ventilation schemes as implemented in U.S. nuclear power plants will be largely ineffective in removing smoke from a fire enclosure and that heavy deposition of smoke particulate on surfaces within the enclosure should be expected.

A second area in which a greater understanding is needed is in the area of thermal damage. Currently one is limited to available data on the thermal damageability of certain types of cable insulation. This data base is by no means complete, even when considering only cables. For many cable types no data is available. Further, a wide range of plant equipment including pumps, motors, switchgear, motor control centers, switches, relays, power supplies, and integrated circuits have not been tested to fire environments. Thus virtually no basis for analysis of the fire risk to such equipment exists. This is reflected in current PRAs in which virtually all equipment damage scenarios center on the damaging of cable insulation or the assumed failure of certain other equipment due to direct fire involvement with no quantitative analysis of other potential damage mechanisms performed.

Even within the area of cable thermal damage the available data base has, in certain cases, been misinterpreted and used inappropriately. In particular, the Electrical Power Research Institute (EPRI) sponsored a series of tests on the damageability of cable insulation in a heat flux environment. The data from these tests has in some cases been utilized in an inappropriate and nonconservative manner. In the analysis of the test data the investigators found that the inverse of time to thermal damage was linearly dependent on the heat flux level incident on the cables. This linear dependence was expressed as an intercept flux level value (a flux greater than zero representing the flux intercept of the linear curve), called the critical heat flux, and a slope value, referred to as the heat flux sensitivity.

What many users of this data fail to realize is that this linear relationship holds true only for relatively high heat flux levels where incident heat flux is sufficient to overwhelm reradiation by the sample. At lower heat flux levels this relationship breaks down. Many users of this data have interpreted the "critical heat flux" value to represent the minimum heat flux required for thermal damage. This is clearly an inappropriate use of this data as experimentation by the same investigators has demonstrated that thermal damage can occur at flux levels lower than these "critical" values, but that this damage does not obey the linear relationship described above. Thus, the interpretation of these "critical" values as the minimum flux required for damage is clearly nonconservative in that flux levels

levels assumed nondamaging are in fact potentially damaging. This issue is discussed further as a part of the analysis of the adequacy of analytical tools for fire issue presented in Appendix D of this report.

There are also potential problems related to the exposure of equipment, and in particular solid state control circuitry, to relatively low level thermal environments. Such factors may be of concern as a result of the isolation of ventilation and loss of cooling as a result of fire, or as a result of the transport of heat and smoke to areas not directly involved in a fire either within the same enclosure or to remote enclosures through open or failed barriers or the ventilation system prior to isolation. Here again the fire occurrence data base does not provide concrete evidence of such interactions. There have however been instances not directly associated with fires in which such low level thermal damage has been observed.

Consider for example an event which occurred at Palo Verde Unit 1 on December 16, 1985. While operating at 52 percent power a cooling fan in the Engineered Safety Feature (ESF) train A control cabinet failed. The resulting heatup of this control cabinet resulted in the spurious actuation of several ESF signals. These spurious signals included auto-start of the train A emergency diesel generator in the test mode, operation of the ESF load sequencer, a train A load shed signal, fuel building essential ventilation actuation signal, a containment purge initiation actuation signal, and control room essential filtration actuation. The load shed signal could not be cleared by operators and prevented the automatic or manual loading of electrical loads onto the generator. This resulted in a loss of power to all train A systems on the train A 4160V bus.

A second incident of a similar nature occurred at the McGuire plant on June 4, 1984. While operating at 100 percent power with one of two control room chillers out for maintenance the second chiller tripped on low oil level resulting in a complete loss of cooling to the control room. Forty-three minutes later numerous spurious alarms on high reactor coolant loop average temperature and pressurizer level were received in the control room. These spurious signals were traced to printed circuit boards in a Westinghouse PCS 7300 control cabinet. Operators opened the doors to this cabinet and provided a fan blowing directly into the cabinet. However, normal function was not regained until room cooling was reestablished. Operators estimate that the control room reached a peak temperature of only 90°F during the event with instrument rack temperatures estimated at a peak of approximately 143°F.. The applicability of this incident is somewhat suspect as the plant had experienced thermal problems with this cabinet in the past indicating a particular vulnerability of these components. However, it does serve to illustrate the potential for such damage to occur.

Other potential problems of a similar nature have been identified in the past. In at least one case a potential problem with the diesel

generators has been identified. In this case the diesel generators obtained their combustion air from ducting to the outside but cooling air was taken from the diesel room itself. In the event of a fire in either the diesel room or in the adjacent space from which ventilation was supplied, fire dampers would close shutting off diesel room cooling. It was estimated that if started the diesels would fail within 24 minutes due to overheat.

These situations illustrate the potential interaction which could take place in a low level thermal environment such as might be induced by a fire in a large area. This may be of particular concern in the analysis of control room fires due to the concentration of solid state circuits within that area. Current PRA methodologies do allow for the identification of such interactions, though little concrete evidence upon which to base the analyses is available.

The problem encountered in attempting to quantify secondary fire environmental effects is quite similar to that encountered in attempting to quantify the impact of spurious suppression systems actuation on fire risk estimates. That is, little or no quantitative data on the vulnerability of plant equipment to adverse environments induced by fire is available. In one sense the adverse impact of spurious suppression events is more clearly understood as the historical data base of spurious suppression event reports is fairly detailed as to the identification of affected equipment and damage mechanisms. Actual fire reports lack this level of detail so that the fire damage experience data available does not provide guidance on aspects of a fire environment other than direct involvement. Without such data it is beyond one's capability to meaningfully quantify the impact of these secondary aspects of a fire on plant equipment operability. Further, as in the case of suppression effects modeling, severe limitations exist on current capabilities to model these "secondary" environmental insults and the response of plant equipment to those insults. Thus, until a more thorough understanding of the phenomena involved is available this will remain an unaddressed issue for fire risk analyses.

7.0 RISK SIGNIFICANCE OF SEISMIC/FIRE INTERACTIONS

7.1 Background Discussions

In contrast to conventional applications where one tends to associate earthquakes with the occurrence of fires, in nuclear power plant risk analyses the issue of seismic/fire interactions has been largely dismissed. While it is true that nuclear power plants do not contain large unsupported gas pipelines, electrical distribution networks, and open flames often associated with earthquake induced urban fires, and that Category I safety systems are qualified to seismic events, the possibility of seismically-induced fires still exist. One must also consider the possibility of seismically induced spurious suppression system actuation, and the potential degradation of suppression capability.

There are a number of potential interactions that one can envision that could cause an interaction between earthquakes and fire. For example, earthquakes could cause fire initiators by pulling cables loose due to vibration or shifting of cabinets. Flammable liquids could be spilled. Oil spilling from a day tank is another potential fuel source.

Gases can be released from the hydrogen system, and there is always no shortage of sparks that could ignite flammable gases. If nothing else, there will always be broken light bulbs that will provide whatever sparks needed. Given that gas has been released, there are sources of sparks.

In addition, consider, for example, that most areas of a power plant will house both Category I and non-safety systems. While Category I equipment is protected from non-safety equipment which may fall during a seismic event, the non-safety systems generally have not been designed to withstand seismic events. As a result it is possible that a seismic event will initiate a fire in a non-safety system. This fire may then involve the safety systems in the area through suppression activity, smoke generation, physical spread of flames, and high temperatures.

A second aspect closely related to that just described is the potential unavailability of suppression systems following a seismic event. Under current regulation only fire water standpipes are required to be qualified to seismic events. This leaves the internal distribution system as a whole and the external water supply system potentially vulnerable. Also, no requirements exist for the seismic qualification of gaseous suppression systems. These gaseous systems will be particularly vulnerable to the failure of the associated control systems which may not be adequately secured.

One must also recognize the potential for spurious operation of suppression and detection systems to occur during a seismic event. In

addition to the potential problems associated with induced damage due to such spurious operations, these operations could in some cases result in the unavailability of suppression to other plant areas. An example of this type of failure, though not as a result of a seismic event, occurred recently at Surry. As a result of a feedwater line break, in addition to other spurious operations, a carbon dioxide fire suppression system control panel component failure resulted in dumping the plant's total carbon dioxide inventory into a single enclosure. Thus, carbon dioxide suppression capability throughout the plant was unavailable. As fire suppression system control circuits are not generally qualified to seismic events it is not difficult to postulate similar failures during a seismic event.

Finally, the post-earthquake environment can hamper fire recognition and fire fighting effectiveness. In general, we expect many spurious fire alarms which would require operator attention in the control room. Aftershocks, loss of off-site power and using only emergency lighting will hamper any manual fire fighting. So in the environment after an earthquake it will be difficult to trace down the numerous fire alarms and manually suppress fires.

7.2 Evaluation of Risk of Seismic/Fire Interactions

We did not attempt to quantify this issue because we could not quantify the frequency of fires given an earthquake. There is no data that exist on fires at nuclear power plants following an earthquake because only three power plants have experienced earthquakes. These quakes were all small, and no fires resulted. The plants were the Fukushima plant, the Humbolt Bay plant and the Perry plant. Humbolt Bay was permanently shut down at the time. Perry was temporarily down at the time. The Fukushima plant in Japan was operating, but did not even trip. So there are no data on seismically induced fires in nuclear power plants, and hence there is no way to assess the seismically-induced fire initiating frequency.

There are, however, limited data on how fire suppression systems perform. This primarily came out of a study by Brookhaven National Laboratories (BNL) which reviewed four major earthquakes and the fire suppression systems' performance following and during those earthquakes at non-nuclear facilities (Reference 14). The four earthquakes that they studied, were the San Francisco, Alaska, San Fernando and the Point Mugu earthquakes. In Alaska and San Fernando in particular, because of the building damage associated with them, there was quite a bit of observed damage to fire suppression systems. However, the only systems that they have any fire damage information on were water sprinkler systems.

In general, for automatic water sprinkler systems, it was concluded that if installed in accordance with nationally recognized standards, such systems did not suffer significant impairment unless there was major structural collapse. However, instances were found where the

waterlines were inadequately laterally supported so that sprinkler heads could easily be damaged by impact with adjacent pipes. The inertial loads themselves did not cause failure, but rather the impact.

In general, fire mains withstood earthquake forces reasonably well. Several cases in which breakage of cast iron fire mains and pulling apart of slip joints or fiberglass joints were identified. Thus it was concluded, and we would concur, that cast iron fire mains have a high probability of failure following a major earthquake.

Lastly, the BNL study found temporary impairments to fire alarm service due to the actuation of many transmitters simultaneously. This tended to show up in all the earthquakes studied. If extrapolated to a nuclear power plant, it would be expected that many inadvertent detection, and possibly suppression, system actuations would occur following a large earthquake. Indications of such spurious actuations in the control room would complicate operator response.

7.3 Recommendations for Seismic/Fire Interactions

Realistic assessments of the possibility of electrical cabinets shaking, vibrating, and causing shorts and fires cannot be made. The types of interactions that would be expected were identified. It is concluded that these interactions would be easier to identify and fix than to quantify. To eliminate such interactions, it is recommended that each plant perform a walkdown looking for a number of different mechanisms that have been observed or which would be expected to be important. A preliminary but reasonably complete list is as follows.

1. One should look for CO_2 or Halon tanks that were unanchored. The concern is that they could slide and the pipes that lead to the distribution systems would break and dump the whole CO_2 or Halon inventory in that room, and all the problems that have been identified with that situation would occur for that room.

2. One should look at the actuation systems, that is, for the CO_2, Halon or water systems, and try to identify whether or not there was any possible problem with vibration and relay chatter and locking circuits. Some of the fire system manufacturers now are starting to seismically qualify their equipment. But, in the past, this has not been required. It would be fairly simple to review these actuation circuits to identify locking circuits, because you will get relay chatter during an earthquake.

3. In general, if there is an area that has only a smoke alarm, (that is, an ionization or photoelectric type alarm) one would want to identify those areas and might perhaps want to

add either a heat or flame detector back-up system to prevent getting spurious alarms. This would minimize the number of spurious alarms caused by dust actuating smoke detectors.

This is done now for certain plant areas, for example, in diesel generator rooms or other rooms with rotating motors. The problem there is that oil falls down on hot cooling fins, and generates smoke which sometimes trips the fire alarm. In those areas, there will often be one of these other types of back-up detectors. A plant could review their various areas and decide where they wanted to have some back-ups so they would not get spurious alarms in the control room.

4. A plant ought to look at its fire pumps to see whether or not they have either weak mounts or vibration mounts. Vibration mounts are notoriously weak during seismic events. The fix is very easy. One weld stops on each end to limit the amount of motion so they do not vibrate out of their mounts. Many of these vibration mounts essentially allow the motor pump to just walk right off to the side and leave the mounting.

5. Cast iron fire mains should be identified or other seismically weak water sources that the fire system depends on such as sprinkler heads through drop ceilings. Due to the motion of the ceilings, sprinkler heads are often damaged by seismic events. So one would want to identify that situation and make sure that the suspended ceiling itself could not damage the sprinkler heads. That happened frequently in the four earthquakes that were reviewed.

6. A plant should review all electrical cabinets to make sure that, (a) they had proper anchorage (but presumably that is being taken care of as part of Generic Issue A-46) and (b) to verify that there is enough slack in the cables entering the cabinets so that the cabinet could vibrate and not pull wires loose and hence generate sources of sparks or fires.

7. A plant should search for any unanchored oxygen bottles or hydrogen bottles to make sure that those could not fall over. If a typical high pressure tank falls and breaks its neck, one has a missile problem, and also a very flammable gas mixture available. A similar potential exists when local storage of Halon or CO_2 is utilized.

8. Lastly, a plant should review all sprinkler systems to make sure there is no interaction possible between the sprinkler heads and adjacent pipes.

9. All plant fire suppression and detection control circuits should be reviewed for the existence of mercury switches. All such switches should be removed from these systems and replaced with alternate, seismically insensitive switches.

This is a preliminary list of interactions that have been identified based on a review of past experience. It is expected that others have yet to be identified. Further review would provide a more complete list of potential interactions. Such a listing could be used by plants in the performance of a walkdown to identify these interactions. In this manner, it is concluded most of the risk associated with seismic/fire interactions could be eliminated by performing such a review and implementing the review recommendations on a plant by plant basis.

8.0 RISK SIGNIFICANCE OF THE ADEQUACY OF FIRE BARRIERS

8.1 Background Discussions

In the U. S. when the fire endurance of a fire barrier element such as a wall, door, or penetration seal is tested, the qualification standards do not specify a differential pressure to be maintained across the barrier during fire exposure testing. In practice it is quite typical for the testing organization to maintain a slightly negative pressure on the fire side of the barrier in order that combustion products can be efficiently removed to air handling systems. In actual enclosure fire conditions it is quite likely that a positive pressure would develop on the fire side of the barrier due to the generation of heat which results in an expansion of the air in the enclosure. Concern has been expressed, and experimental evidence supports this concern, that under actual fire conditions a barrier which passes U. S. standard qualification tests may fail sooner than such qualification tests may indicate.

Only the U. S. and Canada, of all industrialized nations, endorse such neutral or negative pressure testing of fire barrier elements. In contrast, international standards (ISO-3008 for fire doors for example) specify that a differential pressure of 12 Pa is to be maintained on the upper two thirds of the fire exposure side of the barrier element during exposure testing. Similar requirements are incorporated in various other foreign national standards. A proposal to endorse a standard consistent with the ISO barrier standard was recently raised before the American Society for Testing and Materials (ASTM) committee responsible for the ASTM barrier standard (ASTM 152), though this proposal was not adopted.

This issue has in fact been raised as a part of the USNRC sponsored Fire Protection Research Program at Sandia. Between 1979 and 1981 Sandia sponsored a series of experimental investigations into the effects of a positive differential pressure on the survival of certain cable penetration seal systems (References 4, 5, 6). These tests demonstrated that for certain of the penetration seal systems tested, an increased pressure on the exposure side of on the order of 12 Pa was sufficient to result in premature failure of the barrier element. These tests were limited in that only a small selection of cable penetration seal systems was tested, and in that those seals tested were of generic types not specifically verified to be in fact installed in nuclear power plants. No doorway, ventilation dampers, or wall constructions were tested. Extrapolation of this test data to specific barrier elements is not feasible. However, these tests did demonstrate a basis for concern, though no follow up efforts have been undertaken.

In a similar effort in September of 1983 the University of California at Berkeley (UCB) performed tests on six fire doors qualified to U. S. standards as either 20- or 90-minute fire barriers (Reference 7). Ninety-minute rated steel doors were observed to fail the ISO-3008

standard test in approximately nine minutes. This represents an order of magnitude reduction in fire endurance. A part of this reduction is attributed to more maximum heat flux criteria included in the ISO-3008 standard and not included in the U. S. standard.

The potential impact of premature barrier failure on fire risk estimates could be quite significant. This results from the common assumption that a fire barrier will prevent the spread of fire and combustion products for a time at least equal to the fire rating. These fire ratings are typically such that the probability of suppression success within that time frame is quite high. Thus, area to area fire spread is judged quite unlikely. Should barriers fail in shorter time periods than qualifications may indicate passive separation methods may be rendered ineffective and area interactions become much more likely. In U. S. power plants the passive separation of redundant safety equipment is considered the preferable protection strategy.

The most likely concern in this regard is cable wall penetration seal systems not associated with containment boundaries. (Containment boundary systems are governed by entirely different regulations and are not considered vulnerable to this form of failure.) Such systems will have flammable materials in immediate proximity to both sides of the barrier system, and hence, will represent the most likely conduit for the spread of fire through the fire barrier. In fact, it was a cracked cable penetration seal which allowed the spread of fire through a three hour fire barrier out of the cable spreading room and into a cable tunnel of the Browns Ferry power plant in 1975. This fire in the cable tunnel was not recognized promptly by the individuals responsible for starting the fire. These individuals attacked the fire on their side of the barrier while the fire on the other side grew uncontrolled. This delay in response to the cable tunnel allowed for the buildup of a thick cloud of toxic smoke prior to response by the fire brigade. The fire burned for over seven hours before finally being extinguished. In this case the cable penetration seal had not received its final outer coating treatment and hence had flammable material exposed to the environment. This incident is raised not to demonstrate the existence of penetration vulnerabilities but rather to illustrate the potential impact of such incidents should such vulnerabilities exist.

Unfortunately the data available on the performance of fire barrier elements under realistic fire conditions is quite poor. For the USNRC sponsored tests mentioned above the seal systems were quite limited in variety, only a very few tests were conducted, and the test results can not be extrapolated to other seal systems. No plant specific follow-on efforts were funded. For the UCB tests the data is the proprietary property of the sponsoring organization and only anecdotal information is publicly available.

Based on this data base it is not possible to either identify vulnerable barrier elements, nor characterize the level of degradation

to be expected. It can be stated that, as a minimum, barrier elements which contain cracks which would allow the passage of hot gases are vulnerable to the rapid degradation of their fire resistance under pressure exposure conditions. The USNRC sponsored tests also found at least one instance where a penetration seal under positive pressure developed such cracks during testing and failed in a manner not observed in neutral or negative pressure tests.

8.2 Approach to Issue Examination

This particular topic is one in which the severe lack of data hinders one's ability to quantitatively analyze specific plant scenarios. An ideal approach would involve the identification of specific barrier elements of concern, the testing of those barrier elements under realistic fire exposures including a pressure differential, and the application of the endurance data to the PRA scenario. Such an undertaking was beyond the scope of this effort.

Unfortunately, information available from the four fire PRAs reviewed under Tasks 1 and 2 of this effort is insufficient to provide for the incorporation of such area interactions. These interactions are screened from consideration very early in the analysis process due to the assumed endurance of the fire barriers, and hence, no fault scenarios covering the interaction of such areas are developed. The failure of barriers was considered beyond the scope of the analyses performed for these four, and indeed most, fire PRAs. It is also beyond the scope of the present work to perform such extensive analyses as would be required to identify and quantify such fault scenarios.

The information available from the analysis of the LaSalle station as a result of the ongoing RMIEP study will be utilized in an attempt to illustrate the potential for concern. This fire analysis, being performed by Sandia, is the only known fire PRA for a U. S. plant which has in any way attempted to quantitatively address the possibility of such interactions. The fire analyses for the NUREG-1150 plants will consider such interactions, though this work is in its preliminary stages. Preliminary results from the NUREG-1150 analyses are presented to illustrate the potential for concern here as well.

8.3 Issue Examination Results

The LaSalle fire risk assessment has identified all power, control, and actuation cable locations for all safety related frontline and support systems. One of the questions in a comprehensive fire analysis is "are there combinations of fire zones separated by three hour rated fire barriers which could lead to core damage directly or in combination with additional random failures?" Twenty such area combinations involving two areas each were identified as potentially significant risk contributors following an extensive screening process. These area combinations are detailed in Table 8.1.

Table 8.1

Double Area Combinations at LaSalle Remaining Following Screening Process

1. Turbine Building, RHRSW Pump Room
2. Turbine Building, HPCS Diesel Generator and Fuel Tank Room
3. Turbine Building, Auxiliary Offsite Area
4. Turbine Building, Cable Spreading Room
5. Turbine Building, Auxiliary Building
6. Turbine Building, Division 1 Essential Switchgear Room
7. Turbine Building, Division 2 Essential Switchgear Room
8. Turbine Building, Ventilation Equipment Floor and Cable Area
9. Turbine Building, Electrical Equipment Room
10. Division 1 Essential Switchgear Room, RHRSW Pump Room
11. Division 2 Essential Switchgear Room, Auxiliary EquipmentRoom
12. Division 2 Essential Switchgear Room, Electrical Equipment Room
13. Division 2 Essential Switchgear Room, Auxiliary Building
14. Division 2 Essential Switchgear Room, Division 1 Essential Switchgear Room
15. Cable Spreading Room, Auxiliary Equipment Room
16. Cable Spreading Room, Electrical Equipment Room
17. Auxiliary Building, Auxiliary Equipment Room
18. Electrical Equipment Room, Auxiliary Building Office Area
19. RPS Electrical Equipment Room, Ventilation Equipment Floor and Cable Area
20. Balance of Plant Cable Area, Auxiliary Equipment Room

The RMIEP screening procedure utilized the following criteria:

1. Fire initiating event frequency for a given area assumed to be 1.0E-3.

2. Barrier failure probability assumed 0.1.

3. Manual nonsuppression probability assumed 0.1.

4. All random failures that can be recovered from the control room have recovery values applied.

Based on these criteria any cut sets with a probability of less than 1.0E-8 were eliminated. Therefore, the 20 remaining area combinations represent cut sets with probability values of 1.0E-3 or greater for random failures. In fact many of the area pairs would require no additional random failures beyond equipment within the two areas.

While these screening values can be questioned, this process points out the potential for the importance of barrier failure to risk estimates. The LaSalle fire analysis is not yet complete, but it can be anticipated that some of the combinations of adjacent fire zones will remain. However, at present plans call for further analysis of barrier failure interactions to be based on a limited data base on historical reporting of inadequate barrier elements identified during NRC inspections. As the incidence of such barrier inadequacies is relatively low, area interactions due to barrier inadequacy in this context may not be significant. This analysis does not consider the potential for a fire inducing premature failure of barrier elements as a factor in the screening due to the lack of sufficient supporting data.

The preliminary results of the NUREG-1150 analyses indicate that a similar number, approximately 20, area adjacency pairs will be identified for each plant in which damage to equipment in both areas could lead directly to core damage. The typically assumed fire event frequency for a given area is 5.0E-3. For screening purposes it will be assumed that only 1/10 of a given area is of critical interest to pair interaction, and a 1-in.-10 chance of critical damage to occur on both sides of the barrier if it is penetrated. The final factor to be considered is the probability of barrier failure. If one assumes a 90 percent barrier reliability then the core damage frequency contribution from each area pair in this results in a total screening contribution of 1.0E-4. If barrier reliability is increased to 99 percent then total core damage frequency contribution is reduced by an order of magnitude to a screening value of 1.0E-5. These results would indicate that for such situations the overall reliability of the barrier systems must be on the order of 99 percent or better.

These analyses are purely speculative in that no attempt was made to determine the actual vulnerability of installed barrier elements for a given situation. It is anticipated that a more detailed fire analysis

would re-introduce area interactions which were initially dismissed due to the presence of a "rated" fire barrier. This could result in a significant risk impact due to the postulated involvement of redundant trains of equipment. However, a significantly greater level of understanding will be required before such analyses are possible.

9.0 RISK SIGNIFICANCE OF THE ADEQUACY OF ANALYTICAL FIRE TOOLS

9.1 Background Discussions

In the analysis of fire risk one must at some point predict the development of postulated fires in the area of interest. This prediction forms the basis for the estimated time to fire induced damage of redundant equipment trains and thus determines the timing of scenario events. In the U. S. nuclear power applications the tool of choice in the generation of such predictions has been the COMPBRN computer simulation code developed at UCLA (References 12, 13). This computer model was originally developed for specifically this application, and incorporates fire growth algorithms which model the spread of fire through grouped cable trays. This capability is unique to the COMPBRN code. In the development of the code, the algorithms used to model the various phenomena were purposely chosen to form an overall structure which maintained simplicity of application. The code is relatively small in terms of memory requirements and computer time usage. The inputs are generally simple to understand.

In maintaining this level of simplicity certain assumptions were made. Some of the more complicated fire phenomena were not modeled. Others were modeled in quite simplistic ways. The code itself has undergone a series of modifications. The original version of the code had been considered to be overly conservative in its predictions. Important fire phenomena such as heat transfer to enclosure surfaces, hot layer effects, and thermal target energy losses were not modeled at all. The most recent version of the code, COMPBRN III, incorporated these and other model refinements.

9.2 Approach to Quantification

In order to quantify the impact of COMPBRN on fire-initiated core damage estimates the latest version of the code, COMPBRN III, is assessed for its internal consistency, validity of applied physics, and degree of conservatism. The impact of uncertainty in the COMPBRN III predictions on the conditional frequency of fire damage is also assessed.

Experiences with the application of COMPBRN III under Tasks 1 and 2 of this study have indicated that errors in coding, internal inconsistencies, nonphysical submodels, and nonconservatisms exist within the code. As a part of the quantification task these identified problems in COMPBRN III are remedied where possible. The resulting modified version of the code is then used to requantify the scenarios considered under Tasks 1 and 2 of this study. The results are then compared to both the original PRA scenario quantifications, which were generated using the original version of the code, COMPBRN I, and to those obtained using the unmodified COMPBRN III code.

It was not the intent of this work to develop a new code nor to try and find fault with COMPBRN III, but to identify sources of

uncertainty in fire PRA methodology and to requantify the fire initiated core damage estimates of the four PRAs of interest. The modifications to COMPBRN III are made to remedy observed nonphysical behavior of the code and to obtain more reasonable fire damage predictions.

9.3 Quantification Results

The results of the quantification of the risk significance of uncertainty in the analytical tools used to model fire growth and safety equipment damage are summarized below. Details of the analysis can be found in Appendix D.

The following errors and nonphysical behaviors were observed in COMPBRN III. Modifications were made to eliminate them where possible.

1. An error exists in the forced ventilation hot gas layer model which results in predicted hot gas layer temperatures 20°C below the initial ambient room temperature. Once this error is corrected, an assumption in the formulation of the governing equation results in nonconservative estimates (too low) of the hot gas layer temperature. This assumption was changed to yield a more realistic calculation consistent with existing large scale enclosure fire test data.

2. COMPBRN III does not allow for radiative heat transfer directly above a flame. This is one reason why cable trays directly overhead of a fire are cooler than trays which are off to one side. They are limited to a temperature equal to the plume temperature at that elevation. It is also part of the reason that a pilot fire must be placed off to one side to ignite a cable tray, instead of directly under the tray. COMPBRN III was modified to allow flames to radiate directly overhead.

3. The calculation of viewfactors has two errors built into it. One of these resulted in overprediction of the heat radiated to targets off to one side, and contributed to the observed nonphysical behavior wherein a cable tray directly above the fire was cooler than a cable tray off to one side. Both errors were corrected and resulted in a much more physical calculation of radiative heat transfer.

4. Objects in the flames receive only convective heat transfer. Since roughly 90 percent of the heat transfer in a flame is radiative heat transfer, COMPBRN III grossly underpredicts the heat transfer rate to objects in a flame. This explains the observed behavior wherein cable insulation can remain engulfed in flames for 10 minutes or more without igniting.

The code was modified to allow for radiative heat transfer (as well as convective) to objects in a flame.

5. The conduction algorithm has problems with instability and nonconvergence. These problems are manifest when an object is located in a flame or when the thermal response of a barrier is modeled. The end result of these instability problems is premature termination of the code calculations. Modifications were made to remedy these problems by allowing the conduction algorithm to subcycle in smaller time steps when instabilities would otherwise occur.

6. The calculation of radiative heat transfer from a flame to an adjacent target is inconsistent with other radiation heat transfer calculations in the code. This results in a substantial overprediction of radiative heat transfer to adjacent targets from a flame. Modifications were made to make this calculation more consistent with the radiation heat transfer calculations in the rest of the code.

7. The effect of an external heat flux (e.g., flame feedback) on the mass burning rate of a burning target is not allowed for. Thus, the code underpredicts the mass burning rates of burning targets. Modifications were made to allow for radiative and convective feedback to a burning target.

Some of these corrections were needed due to errors in the coding. Others were due to nonconservative and/or inconsistent assumptions which had been made. And in some cases, corrections were necessary because the developers of the latest version of the code had apparently unknowingly turned off capabilities which existed in previous versions of the code.

The code as modified herein is believed to represent a significant improvement over the unmodified version of COMPBRN III. However, areas of concern still remain and will be discussed below.

The above modifications to COMPBRN III significantly affect the code calculations of fire damage times. In comparing the results of the modified version of COMPBRN III to the results of the unmodified version of COMPBRN III, it can be seen that the errors and inconsistencies in the unmodified version of COMPBRN III generally lead to <u>nonconservative</u> calculations of fire damage times as discussed in Appendix D.

A comparison between the original version of COMPBRN (COMPBRN I) and the modified version of COMPBRN III can also be made to some extent. In many cases COMPBRN I calculations are overly conservative, which is in agreement with general opinion. However, in the remainder of cases the calculated fire damage times are comparable indicating that COMPBRN I may not always be overly conservative. The main difference

in the results of COMPBRN I and the modified version of COMPBRN III is that the latter predicts that it is very difficult to ignite a cable tray that is not engulfed by flames, contrary to COMPBRN I. But the modified version of COMPBRN III also predicts that cable trays engulfed by flames ignite as quickly as COMPBRN I predicts or even more so.

It is interesting to note the effect of the fire growth model on the postulated fire sizes and the assumed area over which a fire can damage critical equipment. In fire PRAs to date small fires (0.3 m (1 ft) in diameter) have been postulated because COMPBRN I predicts that such a fire will eventually ignite cable trays which are elevated high above the floor. However, since the modified version of COMPBRN III requires that the flames engulf a cable tray to ignite it, significantly larger fires must be postulated. For the scenarios studied, 0.6 m (2 ft) diameter fires were the smallest postulated and usually a 0.91 m (3 ft) diameter fire had to be postulated to cause damage to critical equipment.

Fire PRAs to date have assumed very large areas over which a fire can damage critical equipment based on COMPBRN I results. The ratio of critical fire area to total room area is sometimes on the order of 50 percent. The modified version of COMPBRN III on the other hand requires that the postulated fire be located much closer to the critical cable trays (within 0.6 to 0.91 m (2 to 3 ft)) for the cases studied, except for small rooms where a hot gas layer becomes important. The result is that area ratios may be significantly reduced (to about 5 to 10 percent). It can thus be seen how the fire growth model can significantly impact some of the assumptions made in fire PRAs.

Note that all of the cases considered here involved the exposure of cables which were qualified to the IEEE-383 flame spread test. These cables are considered a significant improvement over the older cables not so qualified. For situations involving non-rated cables much larger areas of influence can be expected.

The predicted critical damage times of COMPBRN I, COMPBRN III as publicly available, and the modified version of COMPBRN III generated as a part of this study have been compared. The details of this work are presented in Appendix D. The results of this comparison demonstrated that the fire damage time calculations are highly dependent on the version of COMPBRN used. In practice the fire damage times are coupled with data on fire suppression experience to obtain a conditional probability of fire suppression before critical equipment (cable trays) is damaged. It is shown in Appendix D that the conditional probability of fire suppression before damage occurs can differ by a factor of 20 depending on which version of COMPBRN is used. Under current methodologies this translates directly to a factor of 20 increase in core damage frequency.

A similar degree of uncertainty surrounds the various models, correlations, and input parameters to COMPBRN. The most significant uncertainties remaining in the models, correlations, and input parameters of COMPBRN include the flame height correlation, mass burning rate correlation, cable thermal properties, the thermal communication matrix, and the ignition and damage thresholds. In general the shape or distribution of the experimental or model uncertainty associated with each is unknown, thus prohibiting strict quantification of the overall uncertainty. In Appendix D, the influence of experimental uncertainty on one of the many correlations in COMPBRN is investigated. It is shown that the level of uncertainty in the probability of fire suppression before damage occurs is at least as large as the level of uncertainty between the different versions of COMPBRN (a factor of 20 difference in the conditional probability of fire suppression before damage occurs).

Regarding the input parameters to COMPBRN III, there is a considerable lack of knowledge concerning electrical cable (a common combustible whose survival is critical) ignition and damage thresholds. The input to COMPBRN III requires both an ignition and damage temperature. As discussed in Appendix D, there is no data on cable surface temperatures at the threshold of ignition or damage. While some data does exist on environmental temperatures which produce ignition or failure after a certain length of time, this data is only for a few types of cable. It is not even clear if temperature is the best parameter to correlate with cable ignition or failure. As mentioned in Section 6, some researchers have suggested that there is a critical heat flux and critical energy flux below which a cable will not ignite or fail. COMPBRN III was modified to include a critical heat flux and energy flux criterion for determining cable ignition and damage in addition to a surface temperature criterion. Although a significant amount of data of this type does exist, it is shown in Appendix D that in certain cases the data has been misinterpreted leading to incorrect and nonconservative conclusions regarding cable ignition and damage thresholds currently accepted as fact by industry.

To summarize, there is a high level of uncertainty in the fire model outputs as well as inputs. These uncertainties can have a large impact on fire core damage frequencies.

10.0 IMPACT OF CURRENT REGULATIONS ON IDENTIFIED ISSUES

In the analyses presented herein, estimates of the effects of the identified unaddressed issues on the fire core damage estimates have been made. These analyses have been based on information and data for currently operating nuclear power plants which have met the Appendix R guidelines. Thus the analyses have quantified the effects of the identified unaddressed issues on the residual probability of core damage due to fires after accounting for the application of Appendix R guidelines. A brief review of the regulations and the manner in which Appendix R deals with each of the identified issues follows.

The protection of a commercial nuclear power plant from the adverse impact of fires is, in the U.S., governed by the Code of Federal Regulations Section 10.50 (10CFR50) and its associated Appendix R. These documents represent the set of rules which must be followed in fire protection design measures and the implementation of a fire protection plan. In addition to this set of regulations a number of supporting NRC generated documents are identified in the regulations. These documents are, in fact, most often used in the development and evaluation of fire protection implementation, with the ultimate legal guidance being Appendix R. These documents include the Standard Review Plan Section 9.5.1, Branch Technical Position (BTP) CMEB 9.5-1, Generic Letter 86-10, "Supplementary Guidance on Information Needed for Fire Protection Evaluation," "Sample Technical Specifications," "Nuclear Plant Fire Protection Functional Responsibilities, Administrative Control and Quality Assurance," and "Manpower Requirements for Operating Reactors." In turn the BTP endorses a number of regulatory guidelines (RG) and national fire standards which cover specific aspects of particular fire suppression and fire detection systems. The review performed here includes consideration of both Appendix R itself, and the Standard Review Plan Section 9.5.1 along with its associated Branch Technical Position (BTP) CMEB 9.5-1 (formerly BTP ASB 9.5-1).

In the consideration of control systems interactions, Appendix R stipulates that the criterial for the design of fire protection plans will be such that:

- One train of equipment necessary to achieve hot shutdown from either the control room or emergency control station(s) must be maintained free of fire damage by a single fire including an exposure fire.

- Both trains of equipment necessary to achieve cold shutdown may be damaged by a single fire, including an exposure fire, but damage must be limited so that at least one train can be repaired or made operable within 72 hours using onsite capability.

- Both trains of equipment necessary for mitigation of consequences following design basis accidents may be damaged by a single exposure fire.

In addition, the rules provide for the incorporation of "alternate and dedicated shutdown capability" which "shall be able to achieve and maintain subcritical reactivity conditions in the reactor, maintain reactor coolant inventory, achieve and maintain hot standby conditions for a PWR (hot shutdown for a BWR) and achieve cold shutdown within 72 hours and maintain cold shutdown thereafter." This shutdown capability for specific fire areas "shall be independent of the specific area(s)." Further, "the safe shutdown equipment and systems for each fire area shall be known to be isolated from associated nonsafety circuits in the fire area so that hot shorts, open circuits, or shorts to ground in the associated circuits will not prevent operation of the safe shutdown equipment." This is also reflected, with some expansion, in the Standard Review Plan and the BTP 9.5-1.

These requirements stipulate that certain equipment be protected from the effects of any single fire, and that a remote capability to independently control necessary equipment be provided. Consideration of interaction with other systems, safety or non-safety, within the area of consideration is specifically required. Thus, the regulations are quite stringent in a deterministic sense. However, when the effects of high probability random system failures are considered in conjunction with fire induced failures, scenarios with a significant risk contribution may not be eliminated even when the regulations are satisfied.

In the consideration of manual fire fighting, Appendix R requires a plant fire brigade. However, it is noted that these guidelines allow for the availability of a fire response team which may have received minimal training, potentially with no experience facing real (training) fires. The BTP 9.5-1 provides additional guidance in that it recommends that NFPA Standard 27-1975, "Private Fire Brigades," be followed in the organization, training, and equipping of manual response teams. BTP 9.5-1 also suggests that local fire departments be involved in training efforts, and that they be involved in training for radiological and plant specific hazards in the event that local support may be required. In this way the BTP goes well beyond the specifications of Appendix R and represents a more desirable set of standards. The BTP does not, however, carry the force of regulations as does Appendix R itself. The actual Appendix R regulations provide for only a minimally prepared fire response team. Such minimally prepared fire fighters may not be adequately responsive to insure safe operations in certain critical situations were the rapid and effective suppression of fires will be required to prevent the degradation of critical safety functions.

In consideration of the total environment survivability issue the one aspect of that issue which is addressed by regulation is the spurious operation of suppression systems. The regulations require that fixed, and in some cases automatic actuating, fire suppression systems must be installed in certain situations. The regulations also specifically state as a part of General Design Criterion (GDC) 3 to 10CFR50 that "structures, systems and components important to safety shall be

designed and located to minimize .... the frequency and effects of fires and explosions" and that "firefighting systems shall be designed to assure that their rupture or inadvertent operation does not significantly impair the safety capability of these structures, systems, and components." As demonstrated by the review of operating experience, although GDC-3 has been implemented, numerous incidents in which the spurious actuation of a fire suppression system directly resulted in the degradation of important safety systems were identified. No further specific guidance is provided in BTP 9.5-1. Thus, while the rules are quite stringent, the operating experience has demonstrated that potential vulnerabilities of this type have not been entirely eliminated.

The issue of seismic fire interactions is not generally addressed by the Appendix R regulations. For example, Appendix R states that "shutdown systems installed to ensure postfire shutdown capability need not be designed to meet seismic Category I criteria, single failure criteria, or other design basis accident criteria except where required for other reasons." Nor are there any requirements for the seismic qualification of most fire protection features other than fire supply mains where they penetrate the plant foundation or walls, and internal water risers. The BTP does provide some additional guidance in that it is recommended that "in areas of high seismic activity, the staff will consider on a case-by-case basis the need to design the fire detection and suppression systems to be functional following the SSE." This does not address the concerns for the potential initiation of fires due to seismic events, and in fact, the BTP section on Fire Hazards Analysis specifically states that "fires need not be postulated to be simultaneous with nonfire-related failures in safety systems, plant accidents, or the most severe natural phenomena." Thus, a plant which conforms to the regulatins may not have eliminated potential seismic fire vulnerabilities.

With respect to the issue of fire barrier adequacy, it is stated in Appendix R that fire barriers including penetration seals and fire doors "shall be qualified by tests that are comparable to tests used to rate fire barriers." The applicable national fire standard endorsed in the BTP is ASTM-119. It is the adequacy of this and other similar U.S. national fire standards which had been questioned. This remains an issue which is unresolved as the actual performance of fire barriers in the U.S. has not been assessed.

The final issue, the adequacy of analytical tools used in fire analysis is not at present a regulatory issue because there are no regulations or guidelines based on risk.

11.0 CONCLUSIONS AND RECOMMENDATIONS

11.1 Overview of Presentation Format

The sections below provide summaries of work performed, results obtained, and recommendations for follow-on efforts. The presentation of work performance and study findings is presented in Section 11.2 on a task by task basis. Also provided are the principal conclusions generated for each investigation area. Section 11.3 provides a brief discussion of the limitations to the work performed in this study. As this study was, by definition, a scoping study, these limitations are quite important and should be noted. In the final section, Section 11.4, recommendations for follow-on efforts in each area are presented. These recommendations are presented as either very high, high, or low priority items. Here again, the presentation is made on a task by task basis.

11.2 Summary of Study Findings

11.2.1 Review of Past Fire Risk Scenarios

The first tasks undertaken in this study involved the review and requantification of specific fire scenarios from four previously published fire PRAs for U.S. nuclear power plants. In the requantification process updated information in four areas relevant to the analyses was utilized. These four areas of information updating were (1) fire initiation frequencies, (2) fire suppression probabilities, (3) cable damage thresholds, and (4) fire modeling capabilities. The review and requantification efforts also considered the impact on risk estimates of plant Appendix R modifications made subsequent to the performance of the original PRA. A summary of the requantification results has been presented in Table 2.1.

As a result of the requantification, the final estimates of fire induced core damage frequencies remained a significant contributor to the overall core damage frequency even considering all other internal and external event initiators for the plants considered. Prior to consideration of subsequent plant Appendix R modifications all four plants' core damage frequencies increased as a result of information updating. Consideration of plant Appendix R modifications resulted in core damage frequency reductions of approximately a factor of three to ten. Thus, even considering these plant modifications, fire continues to represent a significant core damage contributor for the plants reviewed. Those areas which contributed significantly to the core damage frequency typically involved cabling "choke points," such as the control room, cable spreading room, and switchgear room.

The review also found that for the fire risk analyses considered, there are five principal factors which contribute to uncertainty in the fire initiated core damage frequency estimates:

1) the estimation of fire occurrence frequencies and sizes,
2) the estimation of detection and suppression times,
3) the estimation of component damage thresholds,
4) the modeling of fire growth and equipment damage behavior, and
5) the methodology for screening of induced off-normal plant states (i.e., transients versus LOCAs).

Each PRA analysis methodology employs somewhat different criteria in each of these areas. Under current fire PRA methods, in the final analysis it is these five factors which dominate the overall estimate uncertainty. Other sources of uncertainty identified are those associated with the unaddressed issues involving the completeness of the analyses and the adequacy of the fire modeling techniques employed.

11.2.2 Control Systems Interactions

In the consideration of the potential impact of control systems interactions on fire core damage frequency estimates a sensitivity study was performed (see Appendix B) using the Indian Point, Limerick, and Seabrook PRAs. As a second approach to this issue a comprehensive assessment of the LaSalle control room was performed.

The results of the sensitivity study illustrate the potential impact of this issue. If all shutdown methods are assumed lost due to fire a substantial increase in core damage frequency occurs, even with respect to the total contribution from all other internal and external event initiators. The increase in core damage frequency ranged from 1.2E-5 to 1.4E-4 per year for these cases. If one shutdown method is assumed to remain operable, there may still be a significant impact on core damage frequency ranging from no increase to an increase of 1.1E-5/yr.

The LaSalle analysis found one subsection of the electrical distribution panel which yielded a sequence with a core damage frequency of 8.1E-6/yr. This compares to a total core damage frequency from all internal event contributors of approximately 1.0E-5/yr. This particular sequence involved the random failure of the high pressure core spray system (HPCS) in addition to direct fire induced failures. This illustrates the potentially large contribution to core damage frequency of control systems interactions even when additional random failures (i.e., failures not related to the fire) are required.

Of the unaddressed issues investigated, control systems interactions is considered to represent one of the most significant issues identified. The analyses presented here have demonstrated that the potential contribution to core damage risk estimates can be quite significant based on the LaSalle analysis. While not actually demonstrated, it is expected that similar interactions could be

identified at most operating reactors. Thus, the interactions issue is one in which a significant, generic impact on the perception of fire risk is expected. The interactions identified involved fire induced failures coupled with random equipment failures. Deterministic evaluations employed in the performance of Appendix R control systems independance reviews will not identify such scenarios. The identification of scenarios such as those considered here requires that one employ detailed probabilistic modeling of control systems.

11.2.3 Manual Fire Fighting Effectiveness

As an initial approach to this issue, a review of current utility practices was performed (see Appendix C) to identify the levels of staffing, equipping, and training of fire brigades at U.S. nuclear power plants. Secondly, to assess the impact of variations in brigade responsiveness on the frequency of core damage, a bounding analysis reexamined eleven of the thirteen areas initially considered in the performance of the past fire risk scenario requantifications.

In the examination of plant fire response team practice wide variations in the level of training and staffing were noted. The regulations governing manual fire fighting were found to provide for only a minimally trained fire response team, potentially with no experience facing actual fires, or smoke filled rooms. The level of training received by fire fighting personnel was in all cases found to satisfy the requirements of Appendix R. However, several utilities were identified which provided significantly more training than that required. It is assumed that the observed variability in staffing procedures, and in the level of training received by fire brigade members will result in a variability in the responsiveness to fire events as well, though no quantitative linking of the two was attempted.

The bounding analysis performed on 11 of the fire areas considered as a part of the scenario requantifications established a minimum, average, and maximum fire response and suppression time for each area. For one fire area an increase in core damage frequency of one order of magnitude resulted from an increase in suppression time of only 20 minutes. If prompt response and extinguishment of a fire cannot be guaranteed (within a 15 to 30 minute time from ignition), this analysis has demonstrated that for certain critical risk scenarios subsequent manual extinguishment will do little to mitigate core damage scenarios.

The issue of the effectiveness of existing fire response teams is considered to represent one of the most significant of the unaddressed issues identified. As with control systems interactions, a significant potential impact on core damage estimates has been demonstrated. It is also expected that a relatively generic plant to plant vulnerability exists. For those plants employing only the minimum required level of brigade training considerable uncertainty in

the effectiveness of such teams is anticipated. For those plants employing more rigorous training, a higher level of effectiveness can be expected. Other factors which must also be considered include the presence of fire brigade members with a good working knowledge of plant systems and equipment locations. However, even for those plants with what would be judged a well prepared fire response team, certain scenarios can often be identified in which the expected times to critical damage given a fire are so short that no manual fire team could reasonably be expected to respond in time. In such cases the incorporation of reliable automatic suppression systems may be required.

The methodologies employed in the analyses presented here could well be used on an individual plant by plant basis to assess critical areas. This would provide the fire protection system designers with a basis for the selection of detection and suppression systems to be employed in particular areas. It would also provide the fire response teams with valuable guidance as to the responsiveness required in various plant areas. Such information could then be used to prepare fire response plans and to provide guidance on the locating of fire fighting equipment in acceptable proximity to anticipated critical areas.

11.2.4 Total Environment Equipment Survival

Two aspects of the total environment equipment survival issue were examined independently. The first considered the potential damaging impact of such factors as smoke deposition, high humidity, wetting, intense cooling, and high induced static charges on plant equipment. These are all factors which can be anticipated during actual fire incidents. The second aspect of the equipment survival issue considered the potential adverse impact of the spurious operation of suppression systems on plant operability.

In the consideration of damaging environmental factors, data upon which to base equipment vulnerability estimates was insufficient. Those factors identified as of primary concern, based on limited testing and experience, are the effects of smoke, and smoke in combination with water, particularly on high voltage equipment. The impact of such environmental factors is potentially of concern as these factors will not be mitigated by passive spatial separation measures employed in many plants. A second potential concern which may require consideration is that associated with the use of gaseous suppression systems for the protection of control cabinets. USNRC-Sponsored testing has demonstrated the potential severity of control panel fires (references 1,2). The use of in-cabinet gaseous fire suppression systems has been proposed as a possible solution to this fire potential. The use of such systems can introduce high thermal gradients and high static charges during use which may result in degradation of control components. This cabinet fire suppression approach has not been investigated.

In the examination of the effects of spurious suppression system actuation events a review of past operating experience for U.S. nuclear power plants was performed. Seventy-one incidents were identified involving the spurious operation of suppression systems between April 1, 1980 and July 14, 1987. The frequency of spurious suppression events resulting in, or resulting from transients and/or loss of offsite power incidents is approximately 1 to 2 orders of magnitude lower than those typically assumed for all other sources of transients and loss of offsite power incidents. Thus, general spurious suppression incidents are bounded by typical transient event and loss of offsite power event analyses. In order for spurious suppression incidents to represent a significant contributor to core damage frequency the degradation of more than one safety system will be necessary. Identification of situations with the potential for such multiple system involvement is anticipated, though on a plant specific rather than generic basis.

One other observation was that many of the spurious suppression events involved manually actuated fire suppression systems. Thus, a vulnerability to actuation of all fixed fire suppression systems, automatic or manually actuated, was observed.

The use of fixed fire suppression systems is generally considered a desirable approach to fire protection. However, the potential damaging impact of such systems on plant operability should clearly be considered in the design and installation of suppression systems. Improper design, installation, and maintenance practices are identified as the primary factors contributing to the severity of many of the recorded incidents. Thus, these are the primary factors to be considered in the minimizing of the associated hazards. Fire suppression systems can be utilized such that minimal hazards result. However, the review of past experience indicates that, in at least some cases, such factors have not been adequately considered.

The issue of equipment survival in the total fire environment which includes smoke, high humidity, water sprays, and suppression effects in combination with heat is considered to represent a potentially significant issue, though of a lesser order of significance than the issues of manual fire fighting effectiveness, control systems interactions, and the adequacy of analytical fire tools. Very little is known about the impact on plant equipment of factors other than pure thermal exposure. In the case of spurious suppression incidents, plant specific considerations will dominate, and the types of vulnerabilities observed could be resolved with relative ease.

11.2.5 Seismic/Fire Interactions

In reviewing the knowledge base regarding the potential for seismic/fire interactions one study, performed by Brookhaven National Laboratories (BNL), was identified in which non-nuclear experience in this regard has been reviewed. This study identified certain

potential vulnerabilities relevant to the nuclear industry. These vulnerabilities included the potential loss of fire suppression capability, and the potential actuation of multiple spurious alarms which would complicate operator responses. No attempt was made to specifically quantify the impact of such vulnerabilities on core damage frequency estimates.

It would appear that this is an issue which is more easily corrected than quantified. A series of simple steps was outlined which if implemented on a plant specific basis would significantly reduce the potential impact of such considerations. These steps would provide for the identification and rectifying of vulnerabilities. Thus, the issue of seismic/fire interactions is considered an issue best addressed on a plant specific basis, rather than as an issue of significant generic concern.

11.2.6 Adequacy of Fire Barrier Qualification Standards

In examination of the effects of the potential premature failure of barrier elements on fire core damage frequency estimates two screening analyses were performed. These screening analyses considered the number of area combinations there may be at a nuclear plant which can lead directly to core damage. The ongoing analysis of the LaSalle plant was used to illustrate that for this one plant 20 area pairs were identified, even after an extensive screening analysis, in which barrier failures could lead to core damage. The current work under the NUREG-1150 plant analyses was also utilized. For one particular plant at least 20 area pairs housing enough equipment to lead directly to core damage if barriers are compromised have been identified.

If the penetration seals between these areas are vulnerable to premature fire induced failure then a significant core damage contribution will result. Based on the number of area combinations observed, and on generic estimates of the failure of barrier elements due to non-fire related factors (e.g. maintenance activity, aging degradation, improper installation) it would appear that a barrier reliability of on the order of 99% would essentially eliminate the significance of this issue. However, if barrier reliability is on the order of 90% or less, then a significant increase in core damage estimates at most plants could result. These results stem from the observation that the separation of safety equipment by passive fire barriers is a common practice, so that the compromising of these barriers can result in significant core damage frequency contributions. What remains to be demonstrated is the actual reliability of U.S. fire barrier elements in actual fire conditions. No comprehensive study of barrier reliability has yet been performed.

This issue is considered of a potential significance which merits further investigation. It is anticipated that a comprehensive review of U.S. fire barrier performance would be sufficient to assess the

actual significance of barrier reliability in a risk perspective. Without such a review this issue will remain unresolved.

11.2.7 Adequacy of the Tools for Fire Analysis

The COMPBRN fire simulation model has been utilized for the evaluation of fire phenomena in all of the fire PRAs reviewed. The latest version of the code (COMPBRN III) was reviewed for its consistency and physics. The sensitivity of code output to code inputs (in particular, the damage and ignition thresholds) was also assessed. It was clearly demonstrated that the latest version of the COMPBRN code still contains errors and inconsistencies. The modifications to COMPBRN III which were generated and implemented as a part of this study resulted in code predictions considered much more credible than those generated using COMPBRN III in its publicly released form. Significant changes in the code included consideration of fire plume heat transfer mechanisms and more realistic modeling of heat transfer processes to thermal targets. Several problems were identified which could not be resolved within the scope of this effort.

A comparison of the various versions of the COMPBRN code, including the modified version generated as a part of this effort, demonstrated that for the scenarios considered in the requantification efforts, differences in the predicted times to fire damage resulted in probabilities of fire suppression prior to equipment damage which vary by a factor of as much as 20. Under current methodologies this variability would be reflected almost directly in the variability of ultimate core damage frequency for the given scenario considered. For any one particular version of the COMPBRN code a similar level of uncertainty, a factor of 20, is observed within the code itself due to uncertainty in the correlations used to form the code and due to uncertainties in the input parameters utilized.

The issue of fire analysis tool adequacy is considered to represent a very significant risk issue. As current risk analyses are heavily dependant on the predictions generated by these tools, uncertainty and inconsistencies in code predictions translate into uncertainties in ultimate risk estimates. Thus, the availability of a well validated, physically consistent fire simulation model would place fire risk analyses on a much firmer foundation. While this is not an issue conducive to regulatory action, nor an issue which may be addressed by individual plants, it is an issue which could significantly impact the analysis of particular risk scenarios, as well as the overall perception of fire risk.

These same analysis tools, if properly validated, could also provide valuable insights to plant operators through the evaluation of specific plant scenarios. The adequacy of fire response planning and fire protection measures could be evaluated in part on the basis of equipment damage timing factors generated by fire simulations models.

11.3 Limitations to the Analyses Presented

The analyses presented here were all based on PRAs which were previously completed by various organizations, or which are currently under way at Sandia. Consideration of scenarios as a part of this study was dependent on the availability of information from these other PRA analyses. For the requantification efforts, the estimated core damage frequency estimates should be viewed as improved best estimate values. For the unaddressed issues assessments, excepting the LaSalle control room analysis, those estimates generated should not be considered final bottom line core damage frequency estimates. Rather, the analyses presented are intended to demonstrate the potential impact of various factors on core damage frequency estimates.

In the case of the analyses of the unaddressed fire issues, much of the analysis involved bounding calculations. Certain of the scenarios considered, such as the analysis of the control panels for the LaSalle reactor, are considered to accurately reflect the actual plant conditions. Others, such as the analysis of fire brigade response time variations and the potential impact of premature barrier failures, are intended to demonstrate the potential impact such issues may have rather than as identification of specific cases of risk contributors.

In each case operational experience, available data, previously identified scenarios, and plant tours were utilized to the extent possible in an effort to meet this goal. In general it has been concluded that each of the identified issues, with the exception of the analytical tools issue, will require extensive plant specific analyses in order to accurately quantify case specific impacts. These analyses will require consideration of factors which have typically not been considered in the analysis of past fire core damage scenarios. Two of the issues, seismic/fire interactions and the spurious suppression actuation aspect of the total environment survival issue, were identified as issues which may be more easily resolved than quantified. However, in general a need for further understanding of each of the issues has been demonstrated. Prioritization of these needs has been presented in terms of the potential significance of each issue to any given analysis, and in terms of the level to which each issue is perceived to represent a generic issue for the industry as a whole.

11.4 Recommendations for Follow-On Efforts

Table 11.1 summarizes the findings of this study with respect to the significance of each of the unaddressed issues investigated. It is on the basis of this percieved issue impact that the following recommendations are made, and prioritized. The issues of control systems interactions, manual fire fighting, and the adequacy of fire analysis tools are presented as those with the highest priority for

investigation. Also considered of the highest priority is the standardization of certain fire PRA analysis methodologies, described below, identified as the principal sources of both uncertainty and analysis to analysis variability by the requantification efforts. This will be particularly critical should the scope of the Individual Plant Examinations (IPEs) be defined such that fire is to be considered as an initiating event.

Table 11.1

Summary of Perceived Issues Impact on Plant Fire Risk Assessments

Issue:	Potential CM Impact*:	Applicable:	Comments:
Control Systems Interactions	O(10)	Generic	Difficult to Quantify
Manual Fire Fighting Effectiveness	O(10)	Generic	
Adequacy of Fire Analysis Tools	O(10)	Generic	Not Plant Issue PRA Issue
Total Environment Equipment Survival:			
Fire Effects	Unknown	Generic	Not Quantified, Inadequate Info.
Spurious Suppression	Small-O(10)	Plant Specific	Not Quantified, Easily Resolved
Barrier Adequacy	Small-O(10)	Generic	Vulnerability Not Demonstrated
Seismic/Fire Interactions	Small	Generic	Easily Resolved by Plants

* O(10), Order of 10, implies an potential impact of an order of magnitude on fire risk estimates.

Note: Impact of issues in not anticipated to display multiplicitive behavior, rather, Impact expected to be additive.

The two issues with the most significant potential impact on fire core damage frequency for the U.S. nuclear industry as a whole are the issues of manual fire fighting effectiveness and control systems interactions. Execution of efforts associated with these two issues are considered as high priority items. The following are recommended approaches to both the quantification and reduction of the core damage frequencies associated with these two issues.

In the consideration of control systems interactions the degree of control and indication provided at remote shutdown areas was identified as a factor contributing significantly to the perceived adequacy of those systems. It was also found that verifying the independence of remote shutdown systems from the control room was quite difficult. For the scenario reviewed in detail analyses which were much more detailed than those typically employed in a PRA identified a dominant contributing scenario involving control systems interactions.

- It is recommended that the work performed here be utilized as the basis for development of a standardized method and guidelines for the analysis of remote shutdown systems independence. Once developed, the method and guidelines should be applied to several plants, especially older plants, to evaluate likely sources of control system interactions. The method and guidelines could then be applied by industry on a plant specific basis for verification of actual independence.

- It is also recommended that a study be undertaken to review current remote shutdown implementation practices in an attempt to assess the adequacy of those practices. This review should consider not only the traditional analysis of electrical independence, but the potential for failure of components and systems which may result in loss of safety functions even if electrical independence is assured. The question of how widespread control system interaction problems are needs to be addressed. Such a study could benefit from a review of both domestic and foreign practices in this regard.

As a result of examination of the effectiveness of manual fire fighting issue wide plant to plant variation in fire brigade staffing and training practices was demonstrated. However, information was insufficient to formulate a direct correlation between training and effectiveness. For certain critical scenarios predicted times to damage were so short that even a well trained fire brigade would not be expected to respond in time.

- It is recommended that a further analysis of plant fire brigade practices be undertaken. It would be the goal of such a task to establish a direct link between brigade effectiveness and brigade training and staffing practices.

- It is recommended that efforts be undertaken to assess the responsiveness of actual fire brigades to real fire situations through fire testing. Such assessments could help to provide an indication of the anticipated times to fire brigade response, and an assessment of the effects of training on that responsiveness. Such evaluations would also indicate the degree to which personnel knowledgeable of plant systems and equipment participating on fire brigades decrease the likelihood that critical non-involved equipment might damaged due to fire fighting efforts.

- It is also recommended that intermediate scale testing of cable tray installations be undertaken in order that the predictions of fire damage times might be verified. With predictions of very short damage times for certain critical installations, a basis may be demonstrated for the installation of automatic fire suppression systems in such cases. However, the correlations utilized in the prediction of fire induced damage are insufficiently validated.

Also perceived as a high priority are certain issues identified as generic to the estimation of fire core damage frequency. These are issues related to the adequacy of the analytical tools for fire and to the standardization of certain PRA methodologies. Each of the following approaches is intended to provide for the reduction of certain of the primary sources of uncertainty and analysis method variabilities. The resolution of these issues will be particularly critical should the scope of the currently proposed Individual Plant Examinations (IPE) be defined so as to include fire as an initiating event.

As a result of the Fire Protection Research Program a series of 25 large scale enclosure fire tests was performed with the specific goal of providing validation data for fire simulation models. The data processing routines needed to render this data in a usable format have been developed, though the processing of the test data has not been performed.

- It is recommended that an effort to process and make available this data set be undertaken. The availability of this data would make it possible to validate the various fire codes which are available. Such validation would identify the shortcomings and limitations of the various codes, as well as quantify the associated uncertainty in many respects.

- It is also recommended that the original matrix of tests developed for execution of these large scale enclosure tests be completed. Only the first phase of enclosure testing, in which the impact of fire on a single large enclosure was investigated, was completed. Subsequent phases of the test program had been planned to investigate potential room-to-room fire and smoke spread issues.

In virtually all aspects of this study the Sandia generated fire occurrence data base was used extensively. Interest in this data base has also been expressed by many independent sources. As it currently exists only fire events through June 30, 1985, are accounted for.

- It is recommended that an effort to update and maintain the fire occurrence data base be established. This effort would involve a further review of past events, the identification of more recent events, and a continuing effort to identify and incorporate fire events as they occur.

In the analysis of the sources of uncertainty in fire core damage frequency there are five areas which appear to dominate the overall uncertainty. These are (1) the estimation of fire occurrence frequencies and sizes, (2) the estimation of detection and suppression times, (3) the estimation of component damage thresholds, (4) the modeling of fire growth and equipment damage behavior, and (5) the screening of induced off-normal plant states for significance of contribution.

- It is recommended that an effort be undertaken to document standardized methodologies for use in each of these five areas. Such standardized methods would greatly reduce the analysis-to-analysis variabilities in fire core damage frequency estimates. Such standardization would also provide for a more consistent basis of comparison of analysis results. The standardized methods should then be applied to the four PRAs considered under Tasks 1 and 2 of this study in order to be able to compare core damage frequency of various plant designs as well as Appendix R implementation practices on a consistent basis.

- The data base the response of equipment to fire environments was identified as quite limited. Additional information on equipment thermal damageability limits, the effects of smoke on high voltage equipment, and the effects of suppression of control circuitry is needed.

The COMPBRN fire code has been the code of choice for use in the evaluation of nuclear power plant fire scenarios as it is the only available fire model which specifically considers the unique needs of a nuclear power plant fire PRA. A number of significant shortcomings in this code were identified as a part of this effort. It was also observed that the state of the art in fire simulation modeling as a whole has not been adequately implemented for use in the analysis of nuclear power plant fire scenarios.

- It is recommended that an effort be undertaken to assemble, based primarily on the current state of the art, and validate a fire simulation model which is internally consistent and physically credible. This effort could include implementation of an

improved zone model as well as a more complex control volume model for fire applications.

- It is also recommended that the adaptation of at least one of the currently available fire field model, such as the Notre Dame Fire Model, be supported in order that a tool be made available for assessing fire scenarios beyond the capabilities of a zone or control volume model.

- In conjunction with the development of a fire simulation code it would also be required that validation testing for certain of the correlations utilized in the formulation of such codes be performed. Correlations for the prediction of cable tray flame spread rates, flame heights, the damaging and ignition of cables, and for the mass burning rates of cable fires are currently inadequately validated. This is primarily due to a lack of validation data. Experimentation at an intermediate scale would help to both reduce uncertainty in the code predictions and quantify the level of uncertainty remaining within the various codes. (Note that this recommendation is related to the issue of manual fire fighting in that the prediction of critical cable damage times is one of the correlations requiring validation.)

The remaining identified issues are considered of lesser importance, and hence of a lower priority. For the issue of barrier adequacy no generic vulnerability has been demonstrated, though should such a vulnerability exist then a significant risk impact is anticipated. For the issue of total environment equipment survival a lack of experimental data prevented quantification. For seismic/fire interactions, a number of potential vulnerabilities were identified, though it is anticipated that these vulnerabilities would be more easily corrected than quantified. The following recommendations are for limited scope investigations intended to provide an assessment of the effects of certain factors identified as critical to an understanding of the risk impact of each issue, and yet for which very little is known.

One aspect of the issue of total environment equipment survival was the issue of the spurious operation of suppression systems. This aspect was in general shown to be a relatively insignificant contributor to fire core damage frequency. However, it was identified as a potential plant specific contributor to significant fire core damage frequency given that certain plant specific factors could contribute to the potential severity of such spurious suppression events. It was also concluded that this particular issue will be simpler to resolve than to quantify. The following are recommended approaches to the resolution of this issue.

- In the consideration of the impact of spurious suppression system actuations on plant safety it was found that an extensive experience base exists. The review of this experience base

performed here was a preliminary review only. It is recommended that a more extensive review of this experience base be performed in an attempt to provide a more solid basis for the evaluation of plant specific suppression system impact potential. It is anticipated that the outcome of this study could include a data base of operational experiences similar to the Sandia generated fire occurrence data base. Such a data base would provide guidance on the development of inspection guidelines for equipment vulnerabilities to be looked for in plant specific reviews of suppression implementation practices.

- It is recommended that plant specific reviews of fire suppression system implementation practices be undertaken, by the plants, in order to insure that the guidelines in GDC 3 requiring the protection of plant equipment from the adverse impact of suppression systems have been appropriately implemented. Such a review of plant implementation could effectively reduce the contribution to fire core damage frequency.

The second aspect of the total environment equipment survival issue was related to the potential damaging effects of the total fire environment which will include such factors as smoke, humidity, water sprays, and other suppression efects in combination with elevated temperatures. The data base on the failure of plant equipment in fire environments is lacking in several respects. The available information on the vulnerability of cables to thermal exposure is incomplete and in some cases inconsistent. The data base for other types of equipment and other damage mechanisms is virtually nonexistent. While this lack of data prevented the quantification of the potential impact on fire core damage frequency, this aspect of the issue could result in significant contributions should equipment be found to be vulnerable to such damage mechanisms.

- It is recommended that an effort to expand the data base on the thermal response of cables (i.e., damage and ignition thresholds) be undertaken. Experimentation should involve a wide range of cable types under both low- and high-level exposure conditions. The study should also explore the potential for developing standardized damage and ignition criteria to reflect the results obtained for incorporation into fire modeling efforts.

- As there is no basis upon which to assess the vulnerability of plant equipment to the the total fire environment, it is recommended that an effort to establish such bases be undertaken. The testing of representative plant equipment under realistic fire conditions would provide the needed information. This evaluation should include consideration of the effects of suppression environments as well.

- In the cabinet fire testing performed under the USNRC fire protection research program very intense, fast growing cabinet

fires were observed. One response to this potential which has been suggested is the implementation of in-cabinet fast response gaseous suppression capability. The use of such systems may introduce potential control component damage through the intense local cooling and induced high static charges associated with their actuation. It is recommended that an assessment of the vulnerability of control components to such effects be undertaken. Also, further testing of additional cabinet types is necessary to assess the probability as well as damaging effects of fire propagation between cabinets.

The potential for seismic events to cause the spurious operation of fire suppression systems, result in multiple spurious fire alarms, and cause the failure of fire suppression systems has been demonstrated through an examination of non-nuclear seismic experience performed by BNL. It was concluded that in this instance it will be simpler to resolve the issue than to quantify the issue.

- It is recommended that a limited study be undertaken in order to develop guidelines for identifying and resolving potential seismic/ fire vulnerabilities. These guidelines could then be used by utilities on a plant specific basis to minimize the potential impact of such interactions. Relatively simple seismic protection measures could insure that seismic/fire interactions do not contribute to a significant increase in the fire initiated core damage frequency.

The adequacy of fire barrier qualifications was demonstrated to have a potentially significant impact on fire initiated core damage frequency estimates if, in fact, fire barrier elements are vulnerable to premature failure under realistic fire exposure conditions. The actual vulnerability of barrier elements to premature fire induced failures has been questioned by several sources.

- It is recommended that a review of U.S. fire experience in both the nuclear and non-nuclear community be undertaken in an effort to assess the general reliability of U.S. qualified barrier elements under real fire exposure conditions. If, and only if, a reliability on the order of 99 percent can not be demonstrated then it may be necessary to perform further evaluations of fire barrier elements as installed in nuclear power plants. Such further evaluations could involve both the inspection of installed barrier elements and the testing of barrier elements identified as displaying potential vulnerabilities.

LIST OF REFERENCES

1. Chavez, J. C., An Experimental Investigation of Internally Ignited Fires in Nuclear Power Plant Cabinets, Part I - Cabinet Effects Tests, SAND86-0336, NUREG/CR-4527/1 of 2, April 1987.

2. Chavez, J. C., Nowlen, S. P., An Experimental Investigation of Internally Ignited Fires in Nuclear Power Plant Cabinets, Part II-Room Effects Tests, SAND86-0336, NUREG/CR-4527/2 of 2, Sandia, To be Published 1988.

3. Nowlen, S. P., Enclosure Fire Environment Characterization Testing for the Base Line Validation of computer Fire Simulation Codes, SAND86-1296, NUREG/CR-4681, Sandia, March 1987.

4. Wheelis, W. T., Users Guide for a Personal-Computer-Based Nuclear Power Pland Fire Data Base, SAND86-0300, NUREG/CR-4586, Sandia, June 1986.

5. Investigation of Fire Stop Test Parameters: Final Report, SAND81-7144, NUREG/CR-2321, Sept 1981.

6. Tests and Criteria for the Fire Protection of Cable Penetrations, SAND81-7160, NUREG/CR-2377, Oct. 1981.

7. Fisher, F. L., et al., "ISO 3008 Fire Tests of Labelled U.S. Fire Door Assemblies," University of California, Berkeley, November 1983, ES-7791.

8. SRI Final Report on Project no. 03-6746-200, March 26, 1982.

9. "Multiple-Spurious Actuation Analysis of the LaSalle County Nuclear Power Plant, Unit 2," IEAL, September 1985.

10. DiMascio, M., "RMIEP Fire Risk Analysis LaSalle County Power Plant Letter Report," FirePro Inc., August 1987.

11. Jacobus, M.J., Screening Tests of Representative Nuclear Power Plant Components Exposed to Secondary Fire Environments, SAND86-0394, NUREG/CR-4596, Sandia, June 1986.

12. Siu, N. O., COMPBRN - A Computer Code for Modeling Compartment Fires, UCLA-ENG-8257, NUREG/CR-3239, UCLA, May 1983.

13. Ho, U., Siu, N. O., Apostolakis, G., COMPBRN III - A Computer Code for Modeling Compartment Fires, UCLA-ENG-8524, UCLA, November 1985.

14. Cohn, B. M., Hall, R. E., Performance of Fire Protection Systems Under Post Earthquake Conditions, BNL-NUREG 25101, Brookhaven National Laboratory, October 1978.

APPENDIX A

RESULTS OF TASKS 1 AND 2 OF THE FIRE RISK SCOPING STUDY

ABSTRACT

This appendix presents the results of Tasks 1 and 2 of the Fire Risk Scoping Study. Under these two tasks specific scenarios from four previous fire risk assessments (Limerick, Indian Point Unit 2, Oconee, and Seabrook) were reviewed and requantified. The requantification work presented here includes the use of updated data bases and fire modeling techniques.

Changes made to Indian Point Unit 2, Limerick, and Seabrook subsequent to the original risk assessment in response to implementation of 10CFR50 Appendix R have also been included in the requantification. For Oconee no Appendix R changes made subsequent to the performance of the original risk assessment were identified.

Also presented in this document is a quantification of analysis uncertainties for each scenario examined. This quantification is accompanied by a discussion which identifies the primary contributors to this uncertainty.

CONTENTS

		Page
1.0	INTRODUCTION	A-1
2.0	TECHNIQUES USED IN THE FOUR ORIGINAL PRAS FOR QUANTIFICATION	A-2
2.1	Introduction	A-2
2.2	Limerick Methodology	A-2
2.3	Oconee, Indian Point 2, and Seabrook Methodology	A-6
3.0	DISCUSSION OF UNCERTAINTIES IN FIRE RISK ASSESSMENTS	A-8
3.1	Introduction	A-8
3.2	Uncertainties in Fire Occurrence Frequency and Fire Size Estimates	A-9
3.3	Modeling of Fire Detection and Suppression	A-13
3.4	Cable and Component Damageability Thresholds	A-14
3.5	Modeling of Fire Environment Response	A-16
4.0	REQUANTIFICATION OF FIRE SCENARIOS FOR FOUR SUBJECT PRAS	A-18
4.1	Summary of New Data and Models	A-18
4.1.1	Initiating Event Frequencies	A-19
4.1.2	Fire Propagation Modeling	A-21
4.1.3	Fire Damage Thresholds	A-25
4.1.4	Fire Suppression Analysis	A-25
4.2	Summary of Scenario Requantification	A-26
4.3	Effects of Appendix R Rule Implementation	A-30
4.3.1	Indian Point Plant Modifications	A-30
4.3.2	Seabrook Plant Modifications	A-31
4.3.3	Limerick Plant Modifications	A-31
4.3.3.1	13 kV Switchgear Room - Fire Area 2	A-31
4.3.3.2	Safeguard Access Area - Fire Area 44	A-33
4.3.3.3	CRD Hydraulic Equipment Area - Fire Area 45	A-36
4.3.3.4	General Access Area - Fire Area 47	A-38
5.0	QUANTIFICATION OF ANALYSIS UNCERTAINTIES	A-40
5.1	Summary of New Data and Model Uncertainties	A-40
5.1.1	Initiating Event Frequencies	A-40
5.1.2	Fire Propagation Modeling	A-42
5.1.3	Fire Damage Thresholds	A-45
5.1.4	Fire Suppression Analysis	A-45

CONTENTS
(Concluded)

		Page
5.2	Summary of Scenario Requantification	A-45
5.2.1	Limerick Fire Scenarios	A-45
5.2.2	Indian Point 2 Fire Scenarios	A-46
5.2.3	Oconee Fire Scenarios	A-50
5.2.4	Seabrook Fire Scenarios	A-50
6.0	SUMMARY	A-54
6.1	Comparison of Fire Risk Assessment With Other Internal and External Event Analyses	A-54
6.2	Conclusions and Recommendations	A-61
6.2.1	Major Sources of Uncertainty in Fire Risk Estimates	A-61
6.2.2	Assessment of Information Updating on Core Damage Frequency Estimates	A-63
7.0	REFERENCES	A-65
	APPENDIX A1: DETAILS OF THE REQUANTIFICATION ANALYSES	A-67
A1.1	Limerick Fire scenarios	A-68
A1.2	Indian Point Fire Scenarios	A-71
A1.3	Oconee Fire Scenarios	A-78
A1.4	Seabrook Fire Scenarios	A-79
	APPENDIX A2: COMPARISON OF COMPBRN I AND COMPBRN III	A-86
	APPENDIX A3: DATA TABLES	A-92

1.0 INTRODUCTION

This appendix presents the findings of Tasks 1 and 2 involving the review and requantification of four previously completed Probabilistic Risk Assessments (PRAs). The four plant PRAs and the specific physical plant areas which were reviewed and requantified are:

Limerick	CRD Hydraulic Equipment Room 13 kV Switchgear Room Safeguards Access Area General Equipment Area
Indian Point Unit 2	Switchgear Room Electrical Tunnel Cable Spreading Room
Oconee	Cable Shaft Electrical Equipment Room
Seabrook	Control Room Primary Component Cooling Water (PCC) Area Turbine Building Cable Spreading Room

The objectives in performing these first two tasks were to identify the major sources of uncertainty in the fire PRA estimates for these older PRAs and to assess the effects of updated data bases, modeling techniques and test data on both the core damage frequency estimates and on uncertainties. It is also intended that this requantification identify the impact of Appendix R rule implementation on the final core damage frequency estimates for the subject plants.

Note that the requantification was performed within the scope of addressed issues of the original PRAs. This effort did not address as a part of Tasks 1 and 2 any fire risk issues not addressed in the original PRAs. Under these tasks the methodology employed in the original analyses for each plant was followed as closely as possible so that direct comparisons between the original and requantified results are possible.

Included in this appendix are a description of the techniques used in each of the subject PRAs, a discussion of the sources of uncertainty in the risk estimates, the results of the requantification for each of the scenarios considered, quantification of analysis uncertainties, and a comparison of the techniques and assumptions used in fire risk assessments to those used in certain other internal and external events. The requantification of the Seabrook, Limerick, and Indian Point Unit 2 plants includes consideration of plant changes made after performance of the original risk assessment as a result of implementation of 10CFR50 Appendix R.

2.0 TECHNIQUES USED IN THE FOUR ORIGINAL PRAS FOR QUANTIFICATION

2.1 Introduction

As part of Task 1 the techniques used in the four identified fire PRAs were reviewed. These techniques are discussed below. The Oconee, Indian Point, and Seabrook fire PRAs have all been performed by Pickard, Lowe, and Garrick, (PL&G) Inc. (References 1 through 3). As an illustration of the PL&G methodology, the quantification of the electrical equipment room fire area at Oconee is described. The Limerick fire risk assessment performed by NUS Corporation is also discussed (Reference 4).

2.2 Limerick Methodology

The Limerick PRA utilized a fire event tree approach as shown in Figure 2.2-1. While this particular figure concerns a fire in a cable raceway in a particular fire zone, similar event trees are constructed for each fire zone and each ignition source. The tree represents the relationship between three stages of fire growth and shows how fire frequencies, fire-growth probabilities, and mitigating-system unavailabilities were combined. The tree can be divided into three separate sections, each corresponding to a particular fire-growth stage. Each section consists of two events (A and B, C and D, or E and F). The end points of the event tree are estimates of the core damage frequency associated with each fire-growth stage.

The first event in each pair (A, C, or E) is the frequency of the fire developing to the particular fire-growth stage and the second (B, D, or F) is the probability, given the corresponding fire-growth stage, of the remaining undamaged shutdown systems randomly failing. Note that under the Limerick methodology if any remote shutdown equipment was located within the fire area a 1.0 probability of event F was assumed.

Event A represents the probability that a fire will ignite and continue to burn long enough to damage a single train of safety equipment. The following potential initiating fire events were identified for each fire zone:

1. Self-ignited cable raceway fires (due to electrical overload, cable damage, etc.).

2. Self-ignited fires in power-distribution panels (due to electrical overload, cable damage, etc.).

3. Transient-combustible fires (fires involving noninstalled combustibles, such as paper and trash solvents, or oil).

Evaluation of the frequency of the above fire initiators was based on historical experience of fires at U.S. light water reactor (LWR) plants. Partitioning of this historical fire frequency data was

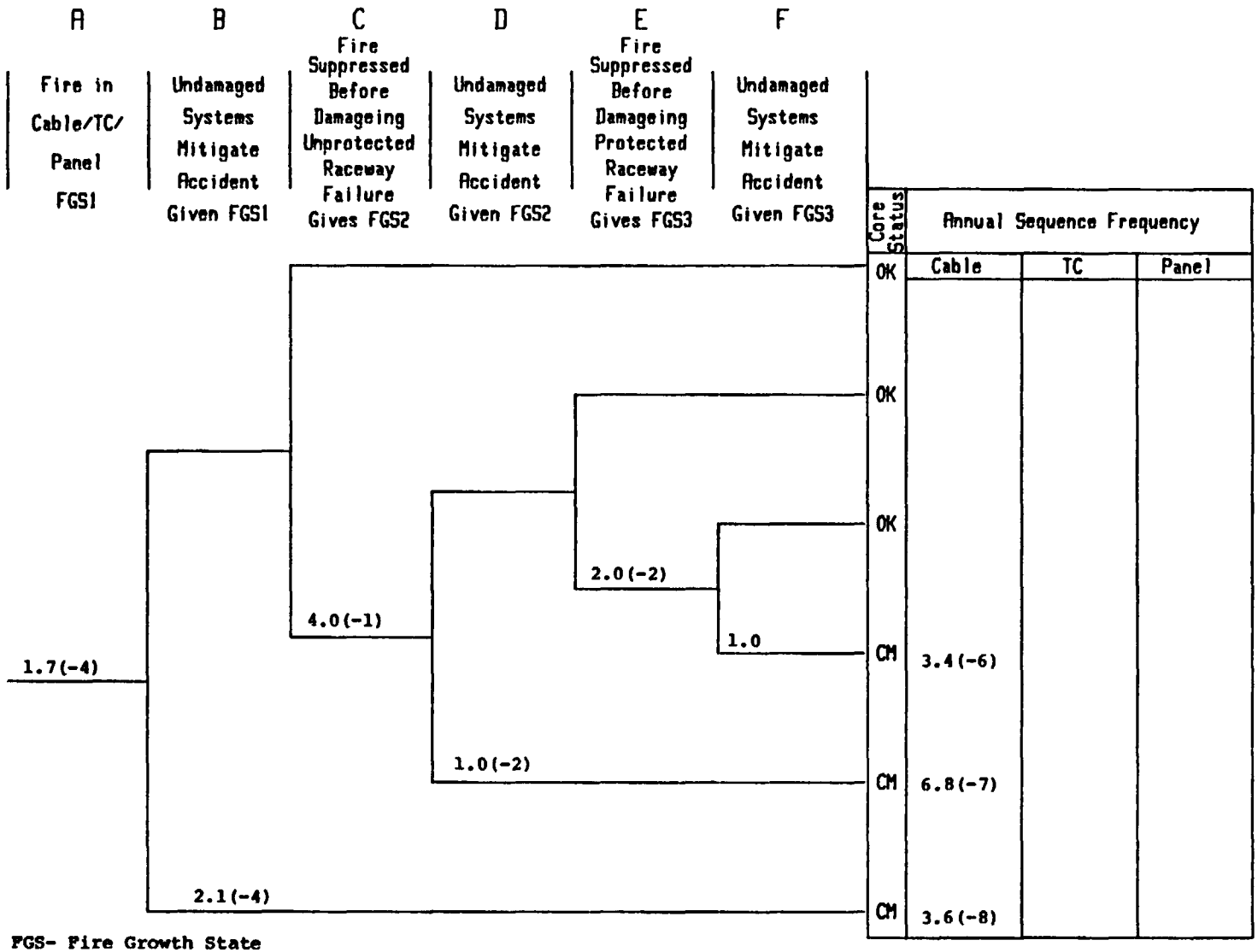

FGS- Fire Growth State

TC- Transient Combustible

Note- Because of the evaluation of Event E, the probability of Event C is not included in the evaluation of the sequence frequency.

Total Scenario Annual Frequency = 4.1(-6)

Figure 2.2-1. Fire Growth Event Tree for Self-Ignited Cable-Raceway Fires in Fire Zone 44

required in order to estimate fire zone specific fire ignition frequencies.

Based on the results of COMPBRN I fire simulations, oil fires were found to be the only type of transient combustible fire which could cause cable damage. One oil fire was assumed since there were no occurrences in the data base. Partitioning was accomplished by equally weighting the frequency to each fire zone where safety-related equipment was located. Partitioning of cable-raceway fires to fire zones was accomplished by a weight ratio of cable insulation in a particular zone to the plant in general. Zone specific electrical panel fire frequency was determined by assuming an estimated average of 40 panels per plant to determine a fire frequency per panel year. Then the number of panels in the particular fire zone was multiplied by the frequency of fires per panel-year.

Event B determined the conditional probability of core damage given fire-growth damage to components of a single train in the immediate vicinity of the ignition source. Thus, if an electrical distribution panel or a cable raceway is damaged from either a self-igniting fire or a fire started by the ignition of transient combustible material, then the fire was assumed to disable all shutdown components served by the particular panel or cable raceway in which the fire starts. Event B then combines these assumed failures with additional random component failures which lead to core damage. Random component failure probabilities were quantified as part of the internal events analysis.

Event C is the conditional probability of the fire progressing to the second stage of fire growth. This second fire-growth stage represents fire or fire damage spreading to redundant unprotected safety equipment, in this case cable raceways located at a distance equal to the minimum-separation criteria which was at that time governed by Regulatory Guide 1.75 (5 feet vertically or 3 feet horizontally) from the initial fire. The deterministic computer fire-growth model COMPBRN (Reference 14) was used to determine the time required for these nearby systems to be affected by the fire in the absence of suppression efforts. A probabilistic fire-suppression model was used to convert the calculated fire-growth time into a probability of the fire growing to this second stage. The fire suppression model shown in Figure 2.2-2 was constructed by engineering judgment based on a limited amount of fire duration data presented by Fleming et al. (Reference 6).

Given this second stage of fire growth, one of the following two alternative assumptions concerning the status of accident mitigating systems was made:

1. When all the raceways that are associated with both shutdown methods are protected by a ceramic fiber blanket, then all equipment associated with that shutdown method is assumed to be operable.

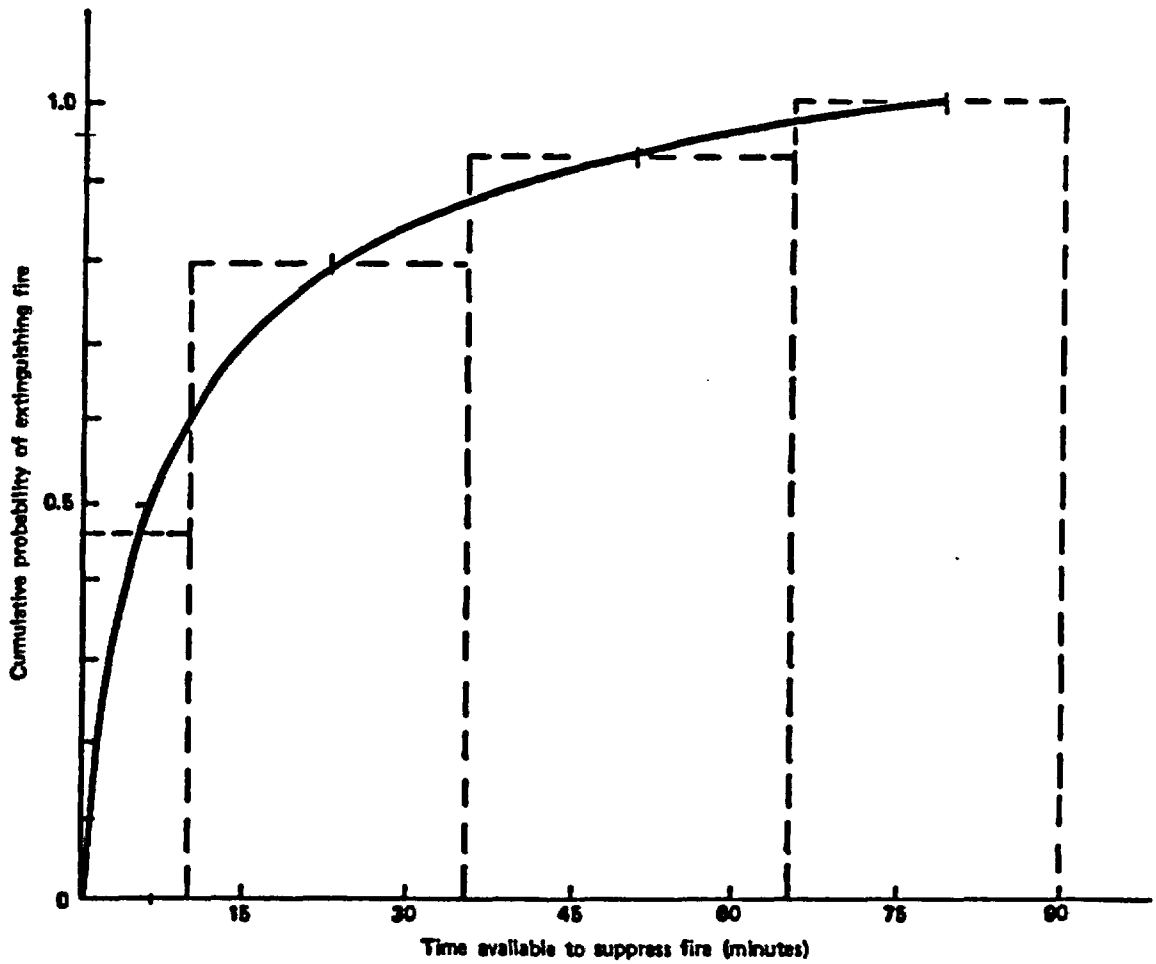

Figure 2.2-2. Fire-Suppression Model

2. When cable raceways associated with only one shutdown method are protected by a ceramic fiber blanket where they are separated from a redundant shutdown method by less than 20 feet, then equipment associated with only one of the two mutually redundant shutdown methods is assumed to be operable.

Event D determines the conditional frequency of core damage given fire-growth stage 2 (Event C). This event was quantified in a similar fashion to Event B and considers random equipment failures. Again, the quantification of these events was taken primarily from the internal events analysis.

Event E, like Event C, also used a deterministic fire-growth model to determine damage times and a probabilistic fire-suppression model to determine the likelihood of the fire remaining unsuppressed for that length of time. This event determined the conditional probability of the fire progressing to the third fire-growth stage. The third stage represents a fire of sufficient severity and duration to damage mutually redundant shutdown methods, in this case cable raceways specifically identified as being segregated by a large horizontal separation (more than 20 feet) or protected by fire barriers. Event F determines the conditional frequency of core damage given that the fire grows to stage three (Event E). This stage represents the failure of all shutdown methods identified in Appendix R. However, for some fire scenarios, shutdown of the plant from the remote shutdown panel is possible. Event F provides for this potential in the analysis.

2.3 Oconee, Indian Point 2, and Seabrook Methodology

As an example of the PL&G approach utilized in the risk assessments for Indian Point, Seabrook, and Oconee, the analysis of the Oconee electrical equipment room will be described. For this scenario the critical equipment is located along the west wall. The frequency of core melt given a large sustained fire near the west wall of the Oconee electrical equipment room is quantified by:

$$\phi_{CM} = \lambda_{AUX} f_{ER} f_{s,ER} Q_{ER}(\tau_G)\, Q_{(random)} \quad (1)$$

where

λ_{AUX} = frequency of auxiliary-building fires

f_{ER} = fraction of fires in the electrical equipment room

$f_{s,ER}$ = fraction of fires that are large and near cable trays

$Q_{ER}(\tau_G)$ = probability that the fire grows and is not suppressed

$Q_{(random)}$ = additional random failures

In this scenario, in addition to fire-induced equipment failures, random failures of unaffected equipment is required for core damage to occur.

A Bayesian analysis of fire frequencies was used. Nuclear industry data were used to derive the parameters of an assumed prior distribution for auxiliary-building fires. Plant specific data were used to derive the posterior distribution λAUX. A "two-stage" Bayesian updating procedure (Reference 5) was applied using the computer code ELNOR. In the first updating stage the number of auxiliary-building fires and operating years of U.S. nuclear power plants up to July 1981 were used to obtain a joint distribution for the parameters of a lognormal family of distributions.

The resulting lognormal distributions depict the variability of fire frequencies among the plants. The mean distribution from the joint median and σ distribution was chosen as the prior for the second updating stage. The evidence for the second updating stage was that no auxiliary-building fires affecting a safety-related component had occurred at Oconee up to the time of the risk assessment.

The fraction of auxiliary-building fires that would occur in the equipment room, f_{ER}, was estimated (method not given) using the following information:

1. There were more than 20 areas in this building that have potential for a fire.

2. There were no pumps or motor-operated valves in the equipment room.

3. A significant fraction of fires in auxiliary buildings in the data base involved components related to the electrical circuitry (e.g., breakers, relays, coils, and motor-control centers).

Based on these observations, a mean value for f_{ER} was estimated. This value was based primarily on engineering judgment.

Similarly, the conditional frequency of large cable fires ($f_{s,ER}$) near the critical area was also determined by engineering judgment. Some of the justifications given were:

1. A significant fraction (about one-tenth) of the cable-insulation fires reported by Fleming et al. (Reference 6) were estimated to be large fires.

2. The critical floor area constituted a small fraction (about one-tenth) of the total floor area of the electrical equipment room.

3. One of the two incidents (the Brown's Ferry fire) in the data base for the prior involved a very large fire that was initially fueled by large quantities of very flammable material and occurred in a critical area.

The probability that the fire grows and is not suppressed given a large exposure fire under the cable trays was given by:

$$Q_{ER}(\tau_G) = \exp(-\tau_G/\tau_S)$$

where

τ_G = time required for fire growth

τ_S = time required for fire suppression

The fire-growth time τ_G was determined by COMPBRN calculations and a knowledge of the code input and model uncertainties. The distribution for τ_S was based on two sources of information: (1) the fire detection and suppression capabilities available in the fire zone and (2) the fire-suppression data given by Fleming (ibid.)

Once the probability of a large damaging fire was obtained, the PL&G methodology combined this with random failures of systems and/or components, and failure of operator recovery in an event tree format to obtain the final scenario core damage frequency estimate.

3.0 DISCUSSION OF UNCERTAINTIES IN FIRE RISK ASSESSMENTS

3.1 Introduction

In the estimation of core damage frequency due to fires in nuclear power plants there are a number of analysis areas that contribute to uncertainty, including areas associated with both data and methodology. The goals of this effort with regards to uncertainty are to identify the major sources of uncertainty in the fire core damage frequency estimates, to demonstrate how the results of NRC sponsored fire protection research efforts have contributed to the reduction of these uncertainties, and to quantify these uncertainties given the current state of knowledge. This section provides a nonquantitative discussion of the sources of uncertainty in the analysis.

The major sources of uncertainty identified which will be discussed in this section are (a) fire occurrence frequency and size estimates, (b) modeling of fire detection and suppression times, (c) estimation of cable and component damageability limits, and (d) modeling of fire development and environmental response.

Improvements in the state of knowledge in each of these areas have been made subsequent to the performance of each of the four subject PRAs. These improvements have been incorporated into the requantification efforts described here. In general these

improvements have reduced the level of uncertainty in these analyses and have resulted in changes in the core damage frequency estimates. Results of fire protection research sponsored by the NRC have contributed to each of these areas as described both in the sections to follow and in the conclusions presented at the close of this appendix.

3.2 Uncertainties in Fire Occurrence Frequency and Fire Size Estimates

Historically, reportable fires have occurred about once every 6 reactor-years in operating power plants. Most of these fires have been small, quickly extinguished, and insignificant in their consequences. This data base includes fires reported both under NRC guidelines and those reported as a part of insurance claims. Typically, there are two kinds of information needed to quantify fire occurrence frequencies: (1) the number of fire incidents that have occurred in specific compartments during commercial operation, and (2) the number of compartment years the nuclear industry has accumulated.

The choice of different classes of compartments is dictated by the data available and by how typical a given compartment is. The latter point is important because of the wide variety in power plant layouts. Six generic areas are typically identified in cataloging fire occurrences in nuclear power plants. These are: (1) the control room, (2) cable spreading room, (3) diesel generator room, (4) reactor building, (5) turbine building, and (6) auxiliary building. In most plants, the first three areas are single compartments while the last three are typically large buildings. The frequencies of fires for the Indian Point, Oconee, and Seabrook fire PRAs, as in the case of the Limerick fire PRA, were derived from the experience of all U.S. nuclear power plants. The extent to which they reflect conditions at any of these plants is not entirely certain. For example, it is debatable whether fires like the 1975 Brown's Ferry cable fire incident should be included in the data base because modifications have been implemented as a result of that fire. Limerick did not include the Brown's Ferry fire while the other three PRAs did.

Another difference in initiating event assumptions between methodologies is that at Limerick (performed by NUS) it was concluded that LOCAs have a negligible probability of occurrence while they appear as dominant core damage sequences at Seabrook, Oconee, and Indian Point (performed by PL&G). PL&G assumed that only transient oil fires can damage cabling and cause initiating events and that the contribution due to self-induced cable-tray fires and electrical panel fires was small. In the NUS methodology once critical locations (at Limerick) were identified, initiating event probabilities were calculated for self-ignited cable-raceway fires, self-ignited fires in power distribution panels, and transient combustible fires (fires involving noninstalled combustibles, such as paper, solvents, or oil). Once again this contrast in methodologies leads to uncertainty in the conclusions derived in either methodology.

Uncertainty in estimates of ignition frequencies in the NUS methodology arises due to the data base, the partitioning method, the weighting factors, and the choice of initiators used. It is typical in a fire PRA to use nuclear industry-wide experience as a data base for plant specific applications due to the scarcity of plant specific fire events. As was mentioned previously, the extent to which these fire events reflect conditions at Limerick is not entirely certain, and therefore is one source of uncertainty in the analysis.

Under the NUS methodology three cable-raceway fires were identified in the data base used for the original Limerick PRA. This number of occurrences was then divided by the number of reactor plant years of experience. Finally, a fivefold reduction of frequency was applied based upon assumed superiority of Limerick cabling as compared with the plants where the cable-raceway fires occurred. Partitioning to individual fire zones was accomplished by weighting according to the fraction of total plant cabling.

The fivefold reduction in frequency is an arbitrary judgment and represents a nonconservatism in the analysis. Certainly, some amount of reduction might be warranted, however, any factor assigned could be debated. Therefore, a conservative bound of no reduction of frequency seems prudent. Partitioning by a cable weighting method gives the analyst a readily available tool to divide cable-initiated fire frequency. However, this does not discriminate between high and low voltage cabling nor between qualified (to IEEE-383 fire propagation standards) and unqualified cabling.

Similarly, for power distribution panel fires, five events were identified. This event base was partitioned to individual zones by assuming a total of 40 safety related panels per plant, and then identifying the number of safety-related panels per zone. Assuming 40 electrical panels per plant and that fires only occur in panels that affect safety-related components was arbitrary and another source of uncertainty.

Transient oil fires had no occurrences in the original NUS data base, therefore, to be conservative one fire was assumed. Trash-can and solvent fires were assumed to be 10 times more likely than oil fires even though there were also no occurrences in their data base. In partitioning the fires to specific fire zones it was assumed that all safety related zones had equal probabilities of occurrence. Partitioning oil fires equally among all fire zones where safety-related components were located did not take into account where transient combustibles were located within the plant.

A potentially important nonconservatism in analysis of the fire data base as a whole was that only self-ignited cable fires, electrical panel fires, and transient combustible fires were included. This ignores all other fire sources as potential contributors to core damage scenarios. In Sandia fire data base the three aforementioned

fire initiation sources only account for about 10 percent of all fires.

PL&G used a Bayesian updating approach to calculate initiating event frequencies for fires. Under this approach PL&G assumed a noninformative prior distribution. Different noninformative prior distributions were used in the Seabrook and Indian Point #2 PRAs. This difference yielded larger uncertainty on fire area core damage frequencies for the Seabrook study. The first updating stage was based on nuclear industry-wide fire event data. The second updating stage was based on plant specific information of fire occurrences. By this method PL&G claimed that even without fire occurrences at a given plant, plant specific initiating event frequencies can be estimated. It is not clear that this analysis technique reduces the uncertainty in initiating event frequencies. The uncertainty in the PL&G methodology was also dominated by the partitioning factors previously described in Section 2.3. These factors were major contributors to uncertainty bands of as much as five orders of magnitude between the 5th and 95th percentiles of lognormally distributed sequence frequencies. This large uncertainty derives from the fact that these factors are based largely on judgment and are not amenable to strict quantification.

Given that one has estimated the frequency of fires occurring in the particular fire zone of interest, one must then estimate the size of those fires which do occur. This estimate will directly affect the time required to propagate fire and fire damage.

Under the NUS methodology employed in the Limerick fire PRA, transient combustible pilot fuel sources were divided into three categories:

1. Trash-can fire: 2 pounds of paper, 1 foot in diameter.

2. Solvent-can fire: 1 quart, 0.5 foot in diameter.

3. Oil fire: 1 gallon, 1 foot in diameter.

The deterministic fire-growth code COMPBRN (Reference 14) was then used to model the ignition of nearby cable insulation once the above pilot fuels had been ignited. Self-ignited cable raceway fires were also analyzed at Limerick. These fires were modeled assuming a small amount of pilot fuel (typically 100 g of oil) was ignited in a cable tray. COMPBRN was used to model the spread of the fire to nearby cable trays. Note that in all cases the original COMPBRN I code was used.

Under the PL&G approach utilized for the Indian Point 2, Oconee, and Seabrook fire PRAs three sizes of pilot fires are considered: small, medium, and large. Small fires (0.42 MJ) are similar to the Limerick cable raceway fires where the total heat output of a small amount of pilot fuel is ignited in a cable tray. Medium fires are assumed to be 1 foot in diameter oil fires fueled by 0.6 to 2.8 gallons of oil. The

total energy output of medium fires is approximately 4.2 MJ. Large fires are assumed to be 2 feet diameter oil pools having a total energy output of approximately 42 MJ. At Seabrook, it is deemed that all three sizes of pilot fires are almost equally likely, that is:

Fire (MJ)	Pilot Probability
0.42	0.33
4.20	0.34
42.0	0.33

Indian Point 2 shifted the probability distribution to 0.10, 0.45, and 0.45 (for small, medium, and large fires, respectively). These pilot fires were assumed to ignite cable insulation in the area of interest. The size of the resultant fire was determined by how much cable insulation ignites as predicted by COMPBRN.

In requantifying the pilot fuel sources assumed in the above PRAs, use was made of a survey of transient fuel sources reported in nuclear power plant Inspection and Enforcement reports (Reference 7). This study indicated that paper, trash, oil, and solvents are typically found in nuclear power plants in similar quantities to those assumed in the PRAs. Experiments with paper, trash, and solvent fires (Reference 8) resulted in heat releases of 10 to 200 MJ, which are representative of the medium and large fires discussed above, but which are considerably larger (five times) at the upper end than the largest of the PRA assumed heat releases. These findings were also confirmed in a review of the literature on combustible materials (Reference 9).

The PL&G methodology employs two factors to model the probability that a pilot fire will be in the proper geometric location, and will be severe enough to result in damage. The values selected for these factors by PL&G are highly subjective. In general, the fire sizes used in the requantification are larger than those used in the original PRAs. Thus, the severity factor would tend to decrease for the requantified estimates (larger fires are less frequent). The geometry factor is relatively insensitive to the increase in fire size. Since these factors were based on subjective judgment, the same values used by PL&G are employed in the requantification. This may be a conservative assumption regarding the severity factor. However, without knowing the basis upon which the original values were selected the arbitrary reduction of these values cannot be justified. This approach also allows a direct comparison of the effects of fire propagation and suppression times in the requantification to those of the PL&G analyses.

The uncertainty in the estimation of fire sizes arises from the subjective choice of frequencies for the given fire sizes and the geometry and severity factors. Given a particular fire source, sufficient information exists to predict the intensity and duration of the pilot fuel fire with reasonable confidence. It is in these subjective factors, which are based entirely on judgment, that the

uncertainty arises. It is also this type of uncertainty that is most difficult to reduce. Much more extensive detail in incident reports on the intensity and duration of actual fires would be required to place these subjective values on a more firm footing.

3.3 Modeling of Fire Detection and Suppression

The modeling of the combined fire detection and suppression time is a critical element in the prediction of fire damage probabilities. Under current techniques fire suppression is taken to represent the interruption of incipient cable or component damage. Thus, the time to fire suppression also defines the time frame in which equipment damage must occur. The uncertainties associated with modeling of fire suppression are a result primarily of the nature of the data base used to develop the time to suppression probability histograms.

While many nuclear power plant fires have occurred, the information available on the actual time to fire suppression is often very limited or unavailable. This often arises from uncertainty in the time a fire developed before detection, and in uncertain estimates of the time factors from the individuals involved at the scene of the fire. In many of the fire reports available in NRC and nuclear insurance industry data bases suppression times are not reported at all. Equipment damage and the effects of the fire on plant operability are the primary thrust of the incident reports and fire duration is not normally considered an important element in this assessment. It is also difficult to determine the methods by which detection and suppression occurred in many cases (e.g., manual versus automatic systems).

The suppression distribution used in requantification was developed based on updating of the work done by the original authors of each of the PRAs. The data bases used in the original studies were updated using suppression time information available in the fire occurrence data base developed recently by Wheelis (Reference 10). This updating is discussed in more detail in Section 4.1.

Another aspect of use of a suppression distribution which contributes to the uncertainty arises from the fact that no more than two suppression probability curves are used for all plant areas in any of the four PRAs. This method does not allow consideration of the actual detection and suppression systems available in the area. A more accurate approach would be to utilize separate curves for various types of mitigation schemes; for example, automatic detection and automatic suppression versus automatic detection and manual suppression. Efforts to develop such curves are underway as a part of other programs at Sandia National Laboratories. As this information was not available at the time of this review, only a single generic suppression probability curve approach was utilized here.

A second source of uncertainty arises from the assumption that once the fire is suppressed the scenario is, in effect, ended. This

assumption implies a further assumption that longer term low level thermal exposure damage, and potential damage induced by the suppression activities themselves are not significant contributors to core damage. This issue is one of completeness and goes beyond the scope of Tasks 1 and 2 reported here.

3.4 Cable and Component Damageability Thresholds

For each of the four subject PRAs the effect of high temperatures on equipment is the only fire-induced failure mechanism considered. Other potential failure mechanisms include the effects of smoke, other fire products such as chlorides, suppression activities, and longer term low level thermal damage. Again, these other failure mechanisms go beyond the scope of Tasks 1 and 2 reported here.

With respect to temperature damage thresholds, a degree of uncertainty is introduced through the assumed values due to the limitations on the available data. For each of the PRAs, the dominant contributors to core damage frequency were events involving fire induced failures of cables, so this discussion will be limited to cable failure parameters. In the modeling of equipment response, two primary factors are important. The first factor is a pair of parameters representing the temperature at which the fuel will ignite, both spontaneously and by piloted ignition. Piloted ignition of cabling occurs when a flame source impinges on the cabling. Spontaneous ignition is ignition in the absence of an external pilot flame. These parameters will determine to a large extent the rate at which the fire develops, and hence, the time to critical component damage. The second factor is the temperature at which cable (or component) failure occurs.

The cable (fuel) ignition temperatures, both spontaneous and piloted ignition, are required as inputs to the COMPBRN code. In the Indian Point 2, Oconee, the Seabrook PRAs values of piloted ignition temperature were assumed to fall in the range of 779 to 793 K and spontaneous ignition temperatures were assumed to range from 819 to 833 K. In the Limerick PRA the spontaneous ignition temperature was assumed to be 850 K, with a piloted ignition temperature of 800 K. These temperatures are essentially consistent with ignition temperatures reported by Factory Mutual Research Corporation (FMRC) as a result of tests sponsored by the Electrical Power Research Institute (EPRI) (Reference 11). These temperatures were, however, based on an indirect measure of the surface temperature at time of ignition for small scale cable samples. In a series of cable thermal exposure tests conducted at SNL spontaneous cable ignition was observed in oven tests where temperatures of 723 to 773 K were used (Reference 12). These temperatures are approximately 50 K below those estimated in the FMRC report for quite similar cable types (i.e., three conductor PVC and PE/PVC cables). These lower spontaneous ignition temperatures based on the SNL tests were used in the requantification of the scenarios. The piloted ignition temperatures were taken to be 50 K

lower than these spontaneous ignition temperatures, and thus ranges from 673 to 723 K.

In predicting the time to cable damage, input of the damage threshold temperature is required. In the Indian Point 2, Oconee, and Seabrook analyses it was assumed that damage occurred at the time of cable ignition. In the Limerick PRA it was recognized that cable damage can occur well below ignition temperatures. The Limerick PRA assumed a damage threshold temperature of 573 K. This damage temperature is consistent with the threshold of consistent, short-term failures for un-qualified cables observed in SNL thermal exposure cable damage tests. For the scenario requantifications a damage temperature of 623 K was used. This temperature is the threshold for short-term failures observed for qualified cables in the SNL tests.

The uncertainty associated with these factors arises from the fact that different cables possess different ignition and damage temperatures. Even for cables with insulation/jacket materials which are basically the same, the amount of fire retardant additives can greatly influence ignition temperatures. The values for these parameters used in the requantification analyses represent conservative estimates (i.e., lower bound values). The uncertainty associated with the selection of these values is quite difficult to reduce because very limited data are available for different cable types, and in practice cable trays are loaded with a variety of cable sizes and generic types, often produced by different manufacturers. Each of these parameters will affect the growth and development of a cable tray fire, and hence, the time to damage of the particular cables of concern.

Additional uncertainty is introduced in that many potential damage mechanisms are not considered at all in the PRAs. For example, in the modeling of fire suppression times the suppression of the fire is always assumed to be accompanied by the interruption of incipient cable and component damage. When one considers the damageability of equipment in fire environments, the traditional approach, and that used in this study, is to consider thermal damage thresholds only. This approach assumes that if a cable or component reaches a predefined temperature limit, then it is assumed to "fail." For cables this failure is typically assumed to involve an open circuit or short circuit to ground. This may not be an accurate reflection of real behavior in that it does not address the issues of long-term low level thermal damage, damage caused by adverse effects of the suppression systems themselves, and the interruption of cable or component damage in intermediate states of hot shorting.

Testing of suppression systems by SNL (Reference 13) has demonstrated that, when properly installed, automatic gaseous fire suppression systems are quite effective at suppressing fires, even in cable trays, provided concentration of suppression agents is maintained at sufficient levels for a long enough period of time. However, for fires in which room temperatures become significantly elevated, these

gaseous suppression systems do not reduce room temperatures as quickly as do water-based suppression systems. This introduces the possibility of causing damage to equipment through long-term, though low level thermal exposures. This may be a rather minor concern given the importance of timing and the probability of operator actions overcoming fire damage increasing with time. However, this uncertainty should be recognized.

The potential adverse effects of suppression environments on equipment involve wetting of components, deposition of smoke particulate (potentially heavily loaded with chlorides and other damaging compounds), exposure to very severe cold temperatures (due to gaseous suppression systems), and the exposure of equipment to physical impact from manual fire team hose streams. Each of these factors could contribute to loss of safety components or systems as they would imply that fire suppression does not necessarily interrupt incipient fire damage and could, in fact, induce damage in equipment not otherwise directly threatened by the fire itself.

Another factor not addressed under current methodologies is failure in an intermediate state rather than total failure. This is particularly important in the analysis of cables where cable failure modes may pass through a state of conductor to conductor hot shorts to a final state of cold shorts to ground or open circuits. It is traditionally assumed that while a cable may pass through these intermediate states of hot short they will, in fact, ultimately fail to open circuits. From an operability standpoint, this is the most benign failure state as it is most easily overcome. For example, should the cable damage be interrupted in an intermediate state of hot short spurious equipment operations could occur. Such spurious operations could render related control systems inoperable and could require on the spot trouble shooting to overcome. A more thorough systems analysis than that traditionally performed for the purposes of fire risk assessment will be required to assess the effects of such intermediate damage on plant operations.

3.5 Modeling of Fire Environment Response

In all four of the PRAs being requantified, the first version of the deterministic computer code COMPBRN (Reference 14) was used to model the growth of fires in cable trays. Various other individually tailored codes were used to perform conduction analyses on protective cable wrappings (fire barriers) and to estimate control cabinet temperatures as a result of fires. The COMPBRN results were used directly in conjunction with a fire detection and suppression histogram to predict the probability that a fire would damage safety-related cables. Therefore, only the COMPBRN fire-growth model will be discussed in this report.

COMPBRN is a deterministic fire hazards computer code designed at UCLA for use in the probabilistic assessment of fire propagation. COMPBRN employs a number of submodels and correlations obtained from the fire

research literature. Model complexity was purposely kept to a low level as the authors felt that the (then current) state-of-the-art in the modeling of fires was so fraught with uncertainty that complication of the model for the sake of more "accurate" estimates was not warranted. The main output from the code is the time necessary to damage a particular cable tray given that a fire has started nearby.

The uncertainties associated with COMPBRN can be classified as parameter uncertainties and modeling uncertainties. The state-of-knowledge uncertainties in both of these areas are generally believed to greatly outweigh any statistical uncertainty associated with the random fluctuations of fire phenomena.

Parameter uncertainties were addressed in the Indian Point 2, Oconee, and Seabrook PRAs by varying the heat of combustion, specific burning rate, and spontaneous ignition temperatures of cable insulation over a range of values for each of the three pilot fuel sizes. The latin hypercube sampling technique was used to generate the input vectors containing these parameters. A response surface was then constructed to reflect the influence of these parameters on the computed fire-growth time. From this surface, a distribution of propagation times due to parameter uncertainties was generated.

Since the Limerick fire PRA dealt only with point estimates, best estimates were used for the COMPBRN input parameters. The resulting damage time was then assumed to represent a suitable average of propagation times. The uncertainty in the cable insulation parameters was not believed to be great relative to modeling uncertainties in COMPBRN since one type of cable is used extensively in Limerick.

The values of heat of combustion and specific burning rate assumed in the four PRAs were in appropriate ranges based on a review of the literature (Reference 9). The values used for the spontaneous ignition temperatures were somewhat optimistic based on ignition temperature observed in subsequent testing (Reference 12) as described above in Section 3.4.

The modeling uncertainties in the Indian Point 2, Oconee, and Seabrook fire PRAs (they were not dealt with at all in the Limerick PRA) were quantified using a correction factor (ϕ) to modify the fire-growth time distribution predicted by COMPBRN. This correction factor is assumed to have the following lognormal distribution:

$$\mu\phi = 0.582$$
$$\sigma\phi = 0.489$$

mean	= 2.0
median	= 1.8
95th percentile	= 4.0
5th percentile	= 0.8

The distribution for the modeling correction factor is based mainly on

the comparison of COMPBRN predictions for horizontal flame spread along a single cable tray to the results of an experiment. Application of the correction factor is meant to quantify the uncertainty and reduce the perceived conservatism of the COMPBRN calculations. As the correction factor was based on only very limited data, its validity must be questioned.

The first version of COMPBRN (used in all four PRAs) was regarded as overly conservative mainly because it did not allow for any heat losses from a target fuel element (Reference 15). The fuel elements (e.g., cable trays) were conservatively assumed to remain at the initial temperature for the calculation of net heat exchange. Thus, given enough time, even a very small heat source would eventually ignite cable insulation in the same room regardless of separation. The latest version of the code, COMPBRN III, accounts for heat losses from target fuel elements by using their surface temperature in the calculations. It also incorporates modifications in the calculation of the hot gas layer temperature and height, forced ventilation effects, and thermal radiation viewfactors.

One final point regarding uncertainties in the COMPBRN calculations centers around available cable layout information. In reviewing the original COMPBRN analyses of the four plants, only Seabrook and Limerick identify which cable trays contain safety-related cabling. In the Seabrook analyses, a pilot fire is ignited directly underneath or on top of one safety division of cabling. The time for the fire to propagate to the cable tray containing the other safety-related division is then calculated using COMPBRN. This is done for each scenario of importance. For Limerick the minimum distance between safety-related divisions (0.9 m horizontally and 1.5 m vertically) is modeled in the COMPBRN calculations. The time resulting from this one (presumably worst case) calculation is then applied to every relevant scenario.

The Indian Point 2 and Oconee fire PRAs are less precise. The critical cable trays are not identified. In both analyses, all the nearby cable trays (sometimes ten to 15 trays) are assumed to have to ignite before both safety divisions are considered to be lost. This assumption can obviously lead to nonconservative (longer than actual) propagation times for these plants. The numbers shown for these two plants (from the requantification) also assume that all cable trays must ignite to lose the second division.

4.0 REQUANTIFICATION OF FIRE SCENARIOS FOR FOUR SUBJECT PRAS

4.1 Summary of New Data and Models

Requantification was performed on 13 different plant locations for the four fire PRAs without taking into consideration any backfits made under Appendix R guidelines after completion of the PRA. The effects of plant updates will be assessed in Section 4.4.3.

Four major areas of the analyses were requantified. These areas were (a) initiating event frequencies, (b) fire propagation, (c) fire damage thresholds, and (d) fire suppression distribution.

4.1.1 Initiating Event Frequencies

Initiating event frequencies for all four PRAs where requantified using the data base developed by Wheelis (Reference 10). In utilizing this expanded data base only those events similar to those considered in the original analyses were included in the updated initiating event frequencies. A comparison of initiating event frequencies with associated uncertainty distributions to those in the original PRAs for Limerick, Indian Point 2, Oconee, and Seabrook is given in Table 5.1-1. One difficulty encountered in utilization of the data base (Reference 10) was incomplete information on description of the fire events. In the case of self-ignited cable fires three events were identified in which it could not be determined whether or not the involved cable had been certified as IEEE-383 low flame spread cables. In these three cases it was decided to err on the conservative side, i.e., assume the involvement of IEEE-383 cables subject to future verification.

Point estimate values for fire frequency were quantified by dividing the number of occurrences by the number of plant operating years or specific area operating years. Table 4.1-1 shows the estimated number of operating years for important plant locations through the end of June 1985. Operating years were approximated by the time from initial criticality to the end of June 1985 for all U.S. LWR reactors. Consistency was ensured by including all fire events even though they may have occurred during refueling or cold shutdown if that event could have legitimately taken place when the plant was at power. This approach is consistent with that utilized in each of the original analyses for which such documentation was available (i.e. Limerick and Seabrook).

In the PL&G methodology partitioning of initiating event frequencies from a building (e.g., auxiliary building) to a fire location was accomplished utilizing ratioing factors. Since these ratioing factors were based on engineering judgment and it was not clear that a better judgment could be obtained using the updated data base developed by Wheelis (Reference 10), no requantification of these partitioning factors was attempted. Also, human error and system failure probabilities were not requantified.

Events B, D, and F in the Limerick event tree methodology are probabilities of undamaged systems mitigating the accident given a stage of fire growth. For events B and D the values had been determined in the internal events portion of the PRA. For event F the probability was based entirely on the presence or absence of remote shutdown equipment in the fire area (i.e. 0.0 or 1.0). No attempt at requantification was made for these probabilities.

Table 4.1-2

Operating Experience (Yrs.) as of June 30, 1985

Location	BWR	PWR	Total
Cable Spreading Room	278.8	468.5	747.30
Control Room	257.6	423.4	681.0
Turbine Building	250.3	403.9	654.2
Auxiliary Building	268.1	405.1	673.2
Reactor Building	328.0	519.5	847.5

Specific details of the requantification process for each of the 13 areas are given in Appendix A1.

4.1.2 Fire Propagation Modeling

The fire propagation times from the COMPBRN III calculations and from the original PRAs are given in Table 4.1-2 based on a best estimate set of parameters given in Table 4.1-3. Details of the calculations are given in Appendix A2. Comparing the requantified propagation times (COMPBRN III) to the original PRA times (COMPBRN I) for Indian Point 2, the cable spreading room and electrical tunnel aisle fire scenario calculations produced very similar propagation times. Note that the three numbers shown under the COMPBRN I heading represent the 5th, 50th, and 95th percentiles, respectively. This distribution has been adjusted by the correction factor discussed above. The COMPBRN I results were all taken directly from the original fire PRAs. For the Indian Point 2 switchgear room and electrical tunnel cable tray fire, the COMPBRN III predicted propagation times are much shorter than the COMPBRN I times, generally below the 10th percentile of the original predictions.

The Oconee auxiliary building electrical equipment room propagation times predicted using COMPBRN III were very similar to the mean times reported in the original PRA. For the cable shaft area, however, COMPBRN III predicts a propagation time of 15 minutes as compared to the 6.7 minutes given in the original PRA.

The Seabrook PCC pump area calculations required a 0.9 m diameter oil pilot fire to ignite the cable insulation. COMPBRN III predicted propagation time of 4 minutes.

The Seabrook cable spreading room results are very similar for a medium fire. It is interesting to compare the results of the large fire calculations. Using COMPBRN III, a propagation time of 8 minutes was calculated which is physically consistent with the 14 minutes required by the medium fire. However, the original PRA numbers show a medium propagation time of 43.2 minutes for the large fire which is physically inconsistent with the 14.4 minute median calculated for the medium fire. This point demonstrates the sensitivity and sometimes nonphysical results of the code.

For Limerick, a number of COMPBRN III calculations were made assuming a pilot fuel ignites in one of the lower cable trays. Although this cable tray would ignite immediately, the cable tray representing the second safety division of cables (1.5 m above the burning tray) was never ignited or damaged. In the original PRA, COMPBRN I had predicted damage within 10 minutes. The no damage prediction of COMPBRN III may be a result of the way in which COMPBRN III handles heat transfer to objects directly above a fire source. For such

Table 4.1-2

COMPBRN I Vs. COMPBRN III Fire Propagation Times

	COMPBRN I[1,2] (Minutes)	COMPBRN III (Minutes)
Indian Point 2		
Switchgear Room	9.6,21.5,48,24.2[3]	8
Electrical Tunnel		
Aisle Fire	9.6,15.2,24.0,15.8	14
Tray Fire	2.0,9.5,37.0,14.4	3
Cable Spreading Room	12.3,21.2,33.0,22.6	25[4]
Oconee		
Cable Shaft	6.7	15
Auxiliary Building		
Aisle Fire	9.3	9
Tray Fire	5.4	7
Seabrook		
PCC Pump Area	7.2,16.1,36.0,18.1	4
Cable Spreading Room[5]		
Medium Fire	6.3,14.4,32.0,16.1	14
Large Fire	19.0,43.2,96.1,48.4	8
Limerick		
All Locations	10	No damage

Notes:

1. COMPBRN I results (excluding Limerick) are based on assumed cable damage temperature equal to the spontaneous ignition temperature (819 to 833 K). COMPBRN I results for Limerick are based on an assumed cable damage temperature 573 K.

   COMPBRN III results are based on an assumed cable damage temperature of 623 K for all plants.

2. COMPBRN I times shown for all plants except Limerick reflect multiplication by an error factor to reduce conservatism and quantify uncertainty.

Table 4.1-2

COMPBRN I Vs. COMPBRN III Fire Propagation Times (Concluded)

3. Where one number is given, it represents a mean or point estimate. Where four numbers are given, they represent the 5th, 50th, and 95th percentile, and mean, respectively.

4. Required a 1.2 m diameter pilot fire.

5. For COMPBRN I runs, medium and large fires are 0.3 m and 0.6 m in diameter, respectively. For COMPBRN III medium and large fires are 0.6 m and 0.9 m in diameter, respectively.

Table 4.1-3

Best Estimate Input Parameters for COMPBRN III Calculations

T_{damage} = 623 K

T_{spig} = 673 K

T_{pilot} = 673 K

m''_o = 0.0022 kg/m^2-s

H_f = 2.67E7 J/kg

Reflectivity of cable = 0.1

γ = 0.5

ρ_{cable} = 1715 kg/m^3

c_p = 1045 J/kg-K

k = 0.92 W/m-K

FABSRP = 1.4

$C_s^{\cdot}$ = 1.86E-7

Porosity = 3.14

FLCF = 44 W/m^2-K

HROOM = 10 W/m^2-K

Cable Mass = Variable

Number of Elements Per Supermodule = 5 (when possible)

Fuel Element Size = 0.3 m x 0.3 m (when possible)

DELT = 60 seconds

$T_{initial}$ = 298 K

---

objects no radiative heat exchange occurs. Indeed for COMPBRN III a more severe exposure results if the fire is moved out from under a target object. Thus, the COMPBRN III prediction of no damage in the second tray is considered to be nonrealistic. For this scenario, the original time to damage of 10 minutes predicted by COMPBRN I has been used.

4.1.3 Fire Damage Thresholds

Cable damage threshold temperatures used in the requantification analyses were based on tests performed by SNL (Reference 12). The damage threshold assumed was 623 K. This temperature is within 50 K of that assumed by NUS in the original analysis of the Limerick plant (573 K) but is considerably lower than that assumed by PL&G in the other three PRAs. Under the PL&G approach damage was assumed to occur at the time of ignition at a temperature of 779 to 833 K.

4.1.4 Fire Suppression Analysis

A detailed review of fire occurrences was performed in order to obtain information on fire suppression times. A total of 69 fire events were identified in which the fire suppression time was reported. These events include the 18 events reported by Fleming et al (Reference 6) and used in all four PRAs reviewed in this study. Most of the events identified involved manual detection and suppression of the fire with suppression times ranging from 2 minutes to 7 1/2 hours. A limited number of events involved automatic detection and automatic suppression systems with suppression times ranging from several minutes to 1 3/4 hours.

Preliminary analysis of the 69 fire suppression times indicated that they were lognormally distributed with a mean suppression time of 42 minutes and an error factor of 6.5. The data and distribution is presented in a cumulative format in Figure 4.1-1. Note that the solid curve on this figure represents a "best fit" lognormal distribution based on a least-squares curve fitting procedure. The parameters of this "best-fit" curve are described by a mean suppression time of 42 minutes, a median of 20 minutes, with the 5th percentile at 3 minutes and the 95th percentile at 150 minutes. In the requantification of the fire PRAs, the distribution presented in Figure 4.1-1 was used without modification for all the scenarios. Further analysis of this data according to means of detection and suppression goes beyond the scope of this study.

A comparison of the mean suppression times used in the original PRA and the initial requantification is provided in Table 4.1-4. The mean value of 42 minutes used in the requantification of the Oconee, Indian Point Unit 2, and Seabrook PRAs agrees well with the mean value used for scenarios involving large aisle fires. However, this value is substantially longer than the mean suppression times used in sequences including cable tray fires. Since the suppression time distribution shown in Figure 4.1-1 is substantially different than the distribution

used in the Limerick PRA (see Figure 2.2-2), the suppression times do not always coincide especially for short fire durations. For example, the probability of not suppressing a fire in 10 minutes is 0.4 using the original Limerick distribution and 0.73 using the distribution shown in Figure 4.1-1. Thus, probabilities of successfully suppressing a fire within a given time have generally been significantly reduced based on the expanded data base.

4.2 Summary of Scenario Requantification

Specific details of scenario requantification are given in Appendix A1. Sequence frequencies for Limerick, Indian Point, Oconee, and Seabrook as well as distributions are quantified and described in Section 5.2.

For the requantified total core damage frequency of the fire zones at Limerick, the point estimate went up in all cases. This is due to an increase of point estimate values in two areas.

First, point estimate values of the initiating frequencies for cable and electrical panel fires increased. Three cable-raceway fires were identified in the SNL data base which may have occurred in IEEE-383 rated cables and were therefore included in the data base. The three cable fires identified in the Limerick data base were all in nonrated cabling and therefore were discarded from consideration. The Limerick PRA identified five electric panel fires while the SNL data base identified 38 events including the five events originally identified in the Limerick PRA. This led to a factor of eight increase in electric panel fire initiating event frequency.

The second factor causing the increase in core damage frequency was in the nonsuppression probabilities for 10 minutes and 1 hour. With the expanded data base including all fires of less than 5 minutes duration as well as the Brown's Ferry fire, the probabilities of nonsuppression in 10 minutes and 1 hour (which were originally 0.4 and 0.04), increased to 0.73 and 0.14, respectively. In informal discussions with NUS Corporation, it was learned that Brookhaven National Laboratory (BNL) had independently requantified the 1 hour nonsuppression probability, deriving a value of 0.1, which provided additional support for the revised values used in the requantification.

In the Indian Point and Seabrook PRAs, the requantified mean values were, in most instances, less than a factor of two different from the original PRA mean values. However, a more detailed look at the fire severity factor may be warranted because fire size estimates had to be increased to cause damage using the COMPBRN III code as compared to COMPBRN I. This should have the effect of lowering the requantified mean values. However, as these factors are quite subjective in nature and no solid basis for selection of the original values is provided, requantification of these factors was not considered to be

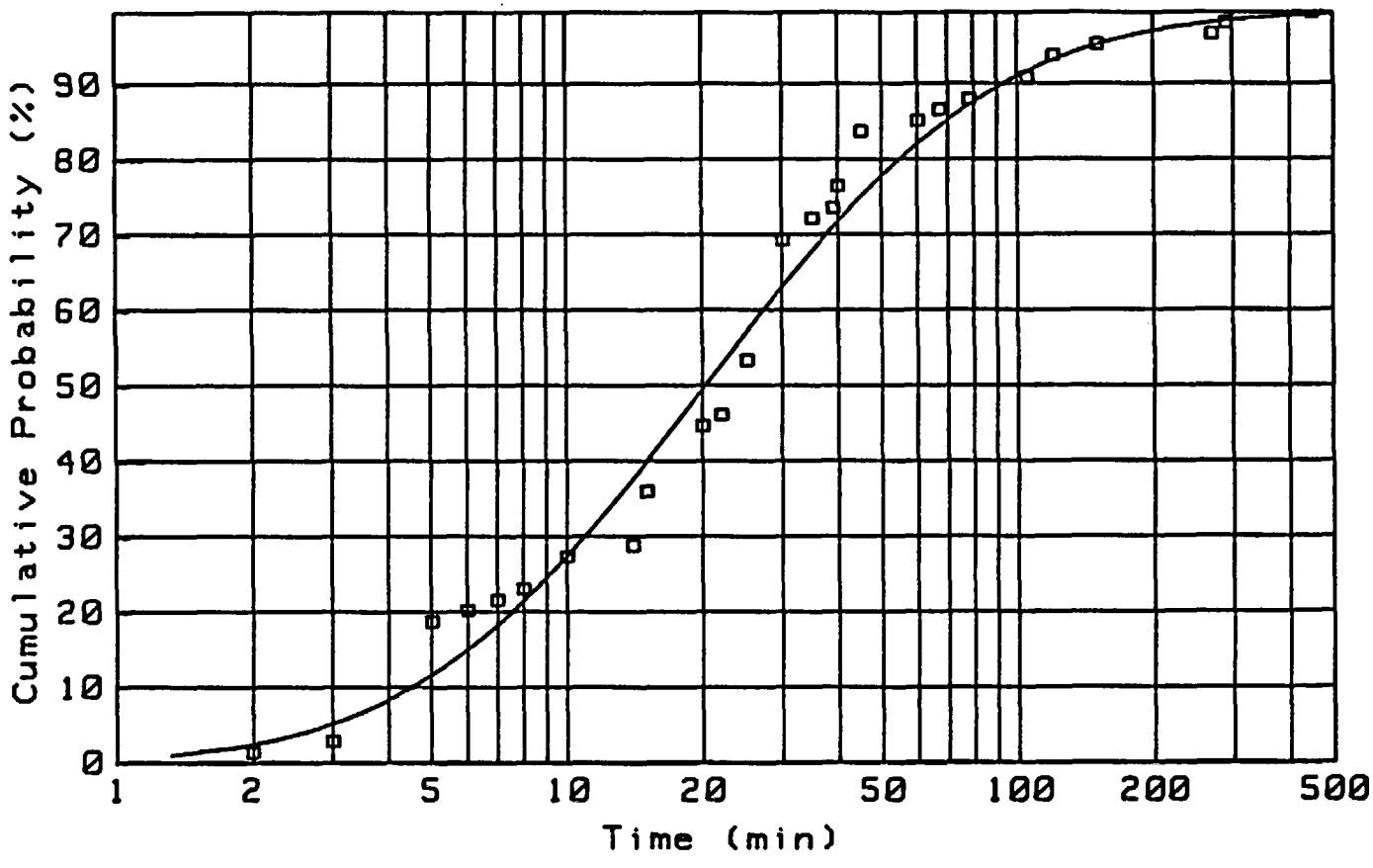

Figure 4.1-1 Fire Suppression Time Cumulative Distribution

Table 4.1-4

Comparison of Fire Suppression Times

Plant/Scenario	Mean Suppression Times (Minutes) Original PRA	Fire Risk Scoping Study
Indian Point 2		
Switchgear Room	39.0	42.0
Electrical Tunnel		
Aisle Fire	(1)	42.0
Tray Fire	18.5	42.0
Cable Spreading Room	39.0	42.0
Oconee		
Cable Shaft	19.0 (2)	42.0
Auxiliary Building		
Aisle Fire	19.0 (2)	42.0
Tray Fire	19.0 (2)	42.0
Seabrook		
PCC Pump Area	39.0	42.0
Cable Spreading Room		
Medium Fire	18.5	42.0
Large Fire	18.5	42.0
Limerick(3)		

Notes:

1. The fire was assumed to result in damage before it could be suppressed in the original PRA. In the requantification effort, credit for suppression was taken.

2. The Oconee PRA presented the suppression time histogram used in the calculations, but did not report the mean. The value shown is an approximate mean ascertained from the available information.

3. Limerick fire suppression times could not be reproduced from information provided in the original analysis.

justifiable, particularly in light of the problems encountered in the use of the COMPBRN code. Such a requantification must be based on similar judgmental reasoning as were the original values in order to have meaning relative to this effort.

One difference in quantification occurred as PL&G assumed point estimate values, for initiating event frequencies represented median values whereas in this report that type of data is considered to represent the mean value. As was the case in the Limerick PRA, values obtained for nonsuppression probability for the three PL&G PRAs were lower than the requantified values. This modification generally caused less than a factor of two increase in sequence frequencies.

4.3 Effects of Appendix R Rule Implementation

All four plants analyzed in this study have been modified in order to meet the criteria of 10CFR50 Appendix R. No Appendix R related plant modifications have been identified for Oconee after performance of the original PRA.

4.3.1 Indian Point Plant Modifications

The dominant fire scenarios in the Indian Point risk assessment involve loss of the component cooling system (CCS) and normal charging system with loss of all mitigating systems because of power cable failures resulting from fires in the switchgear room or electrical tunnel. The loss of CCS and the normal charging system result in a reactor coolant pump seal failure (a small LOCA) and the subsequent loss of mitigating systems result in core damage.

In order to reduce the frequency of a reactor coolant seal LOCA, redundant power cables for one CCS pump and one charging pump were provided as a backfit by the utility from the alternate shutdown system which utilizes the Indian Point Unit 1 switchgear. This switchgear must be activated locally. These power cables do not pass through either the switchgear room or electrical tunnel and thus bypass the single point vulnerability. Transfer switches allow the operator to transfer the pumps from the normal power supply to the alternate shutdown system.

The conditional probability of failing to align a CCS pump to the alternate shutdown system prior to reactor coolant pump seal failure can be written as:

$$Q_{S1} = Q_{HE,S1} + Q_{SW} + Q_{CCS}$$

where

$Q_{HE,S1}$ = failure of the operators to reactivate the CCS pump within 1/2 hour

Q_{SW} = failure of the transfer switch

Q_{CCS} = failure of the CCS pump.

No attempt was made in this study to reevaluate these probabilities. Using the mean values reported in (Reference 19), the mean value for Q_{S1} is 4.6×10^{-2}.

The frequency of plant damage states resulting from seal LOCAs initiated by switchgear room or electrical tunnel fires can be obtained by multiplying the values given in Section 4.2 by the conditional probability Q_{S1}. The results are presented in Table 4.3-1 along with results from IPPSS supplement (Reference 19).

Even though a seal LOCA can be prevented by the modification, a transient event will still occur. Safe shutdown of the plant in this situation requires operation of the turbine-driven or a motor-driven auxiliary feedwater pump. The turbine-driven pump can be started and operated independently of the switchgear room or the electrical tunnel. A motor-driven auxiliary feedwater pump can also be powered from the alternate shutdown panel. The conditional frequency of core melt in these locations was thus assumed to be the product of the probability of a fire initiated transient and the unavailability of the auxiliary feedwater system. The mean unavailability as reported in (Reference 19) is 1.6×10^{-4}. The frequency of plant damage states due to transients initiated by fires in the switchgear room or electrical tunnel can be obtained by multiplying the requantified frequencies given in Section 4.2 by this value. The results are given in Table 4.3-1.

4.3.2 Seabrook Plant Modifications

No Appendix R modifications that affected the four requantified fire areas were identified. However, the medium fire scenario in the PCC pump area is not possible based on new information. Both trains of the service water air handling system are not lost.

4.3.3 Limerick Plant Modifications

4.3.3.1 13 kV Switchgear Room - Fire Area 2

This area contains cables serving equipment associated with all four shutdown methods, A, B, C, and D (Table 4.3-2). In the design previously analyzed, cables associated with all safety related equipment were routed in rigid steel conduit. Cables associated with shutdown methods A and B equipment were protected by a 1-inch-thick ceramic fiber blanket rated as a 1/2 hour fire barrier. Subsequent analysis performed as part of the PRA demonstrated that the steel conduit and fire blanket combination give a 1 hour fire protection.

In the present design all safety-related cables will remain in conduit but only cables associated with shutdown method B equipment will be protected by a fire blanket which will be a 3 hour rated fire barrier.

Table 4.3-1

Comparison of Indian Point Unit 2, Plant Damage State Frequencies Before and After Modifications

	Mean Frequency (yr^{-1})			
	Fire Risk Scoping Study		IPPSS Amendment 1	
Location/Plant Damage State	Before Modification	After Modification	Before Modification	After Modification
Switchgear Room				
SE	1.03E-4	4.74E-6	5.6E-5	2.6E-6
TE	NA[1]	1.65E-8	NA	9.0E-9
Electrical Tunnel				
SLF	4.94E-5	2.27E-6	--	--
SEF	2.07E-7	9.52E-9	2.4E-5[2]	1.1E-6[2]
SE	4.05E-5	1.86E-6	5.6E-5	2.6E-6
TE	NA	6.48E-9	NA	9.0E-9
TEF	NA	1.88E-8	NA	9.2E-9

Notes:

1. NA - Not applicable since fire scenario before modification always results in a reactor coolant pump seal LOCA.

2. Plant damage states SLF and SEF were combined into SEF in IPPSS Amendment 1.

Referring to the fire-growth event tree for fire area 2 (Figure 4.3-1) probabilities of events D and E will be affected. Event D represents the random failure of reactor and shutdown equipment that is served by protected cable raceways (and is thus not damaged at the second fire-growth stage). The probability of this event will increase since only shutdown method B equipment will be undamaged at this stage whereas previously, equipment associated with both shutdown methods A and B was undamaged. The core damage sequence, ACD, which is a combination of fire damage and random equipment failure is increased. Event E represents the probability that the fire is not suppressed before protected cable raceways are damaged. Since the cable raceway fire blankets have been substantially upgraded, from a 1/2 hour to a 3-hour fire rating, the probability of Event E is significantly reduced with the assessed Appendix R modifications. The core damage frequency is reduced from 5.9E-5 to 4.0E-6.

4.3.3.2 Safeguard Access Area - Fire Area 44

Cable raceways and motor control centers serving equipment associated with all four shutdown methods, A, B, C, and D are located in this area.

The fire protection design, as assessed in the SARA study, relied on the separation of cables and components serving shutdown methods C and D on the east and west sides of the fire area, respectively. Where cables associated with shutdown method C equipment were separated from cables associated with shutdown method D by less than 20 feet, the minority division raceways were in steel conduits and were protected by a 1-inch-thick ceramic blanket having a 1/2 hour fire rating. This occurred in the southwest and northeast corners of the fire area.

In the present design reliance is placed on maintaining shutdown method A or D undamaged. Areas containing raceways associated with the two shutdown methods are, in fact, separated by 20 foot wide combustible free zones located in the NE and SW corners of the area and created by enclosing raceways which pass through the zones in 1 hour rated barriers. The zones are also protected by a manually initiated fire suppression system of the water curtain type.

One exception to the general separation method exists in the eastern portion of the fire area which contains cable raceways associated with both shutdown method A and D. Here cable raceways associated with shutdown method A are enclosed in a 1 hour rated fire barrier and located within the coverage zone of an automatic preaction sprinkler system.

Table 4.3-2

Systems of Components Associated
With Limerick Shutdown Methods

Shutdown Method	System or Component
Method A	RCIC ADS RHR train A RHR-SW train A ESWS train A Standby diesels A and C
Method B	HPCI ADS RHR train B RHR-SW train B ESWS train B Standby diesels B and D
Method C	ADS RHR trains A and C RHR-SW train A ESWS train A Standby diesels A and C
Method D	ADS RHR trains B and D RHR-SW train B ESWS train B Standby diesels B and D

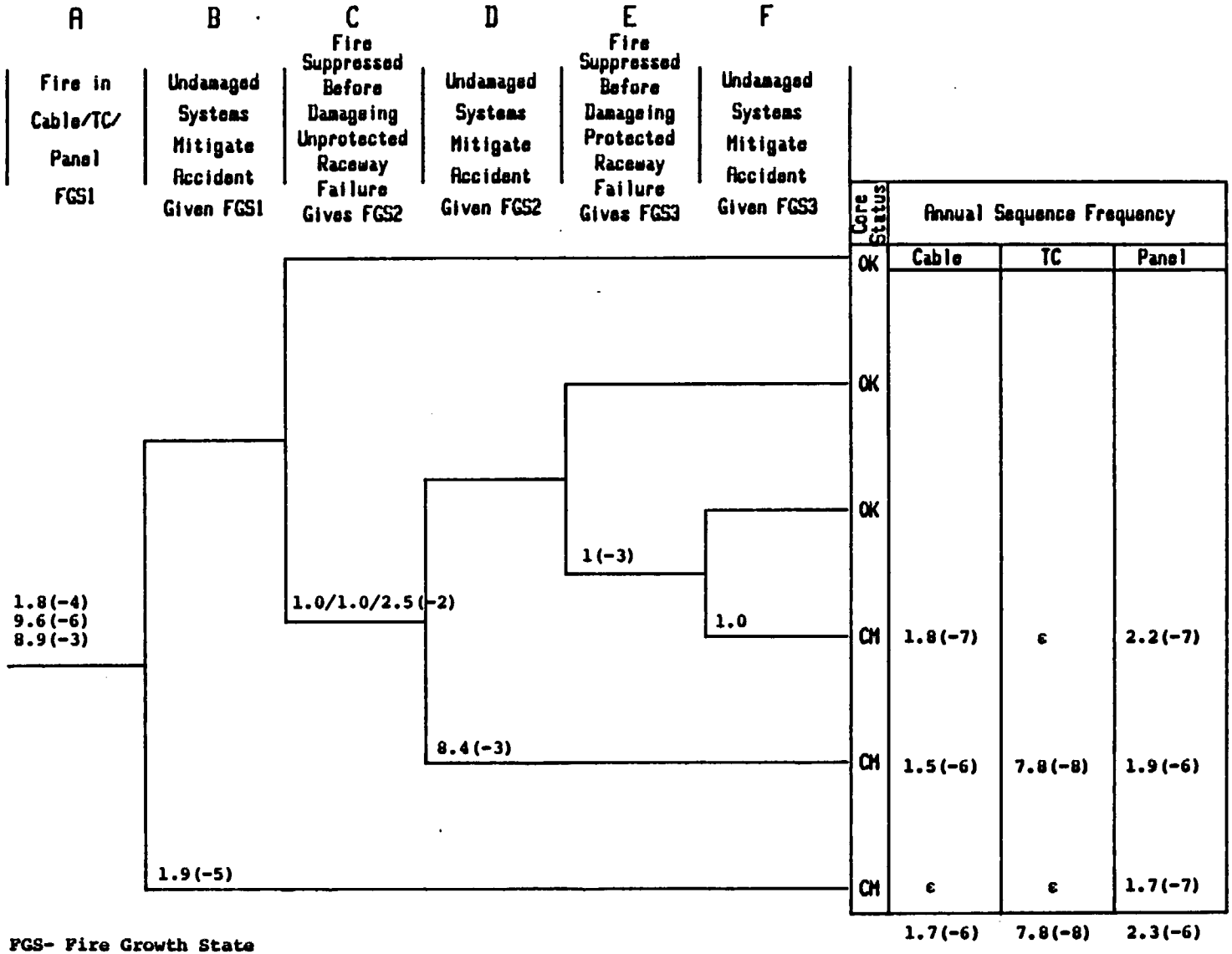

FGS- Fire Growth State

TC- Transient Combustible

Total overall core melt frequency = 4.0(-6) per year

Figure 4.3-1. Fire-Growth Event Tree for Fire Area 2

Given this new configuration the following fire-growth stages are as follows (Figure 4.3-2):

Event A - Fire Frequency
(as before)

Event B - Undamaged Systems Mitigate Accident Given Fire-Growth State 1
(as before)

Event C - Fire Suppressed Before Damaging Unprotected Raceways
(as before)

Event D - Undamaged Systems Mitigate Accident Given Fire-Growth Stage 2

If the fire occurs in the eastern portion of the fire zone the systems associated with shutdown method A will remain undamaged.

If the fire occurs in the western portion of the fire zone the systems associated with shutdown method D will remain undamaged.

Event E - Fire suppression before it damages protected cable raceways

The postulated scenario for this event to occur is that the fire originates in the southeastern quadrant of the fire area which contains cable raceways associated with shutdown method A. Both automatic and manual methods suppression systems fail to extinguish the fire within 1 hour resulting in damage to the protected shutdown method A raceways (as well as all other shutdown methods damaged earlier).

4.3.3.3 CRD Hydraulic Equipment Area - Fire Area 45

This area contains cable and components associated with all four shutdown methods. The fire protection design as assessed in the SARA study relied on separation of cables and components associated with shutdown methods A and B on opposite sides of the fire area. Where cables associated with shutdown method A were located within a 20 ft of the cables associated with method B which occurred in the northeast quadrant, then the shutdown method B cables were wrapped in a 1/2 hour rated barrier.

In the present design reliance is still placed on maintaining either shutdown method A or B undamaged. However, raceways associated with these methods are now separated by a combustible free zone which is covered by a manually initiated fixed water curtain suppression system. Where this separation cannot be maintained, which occurs in

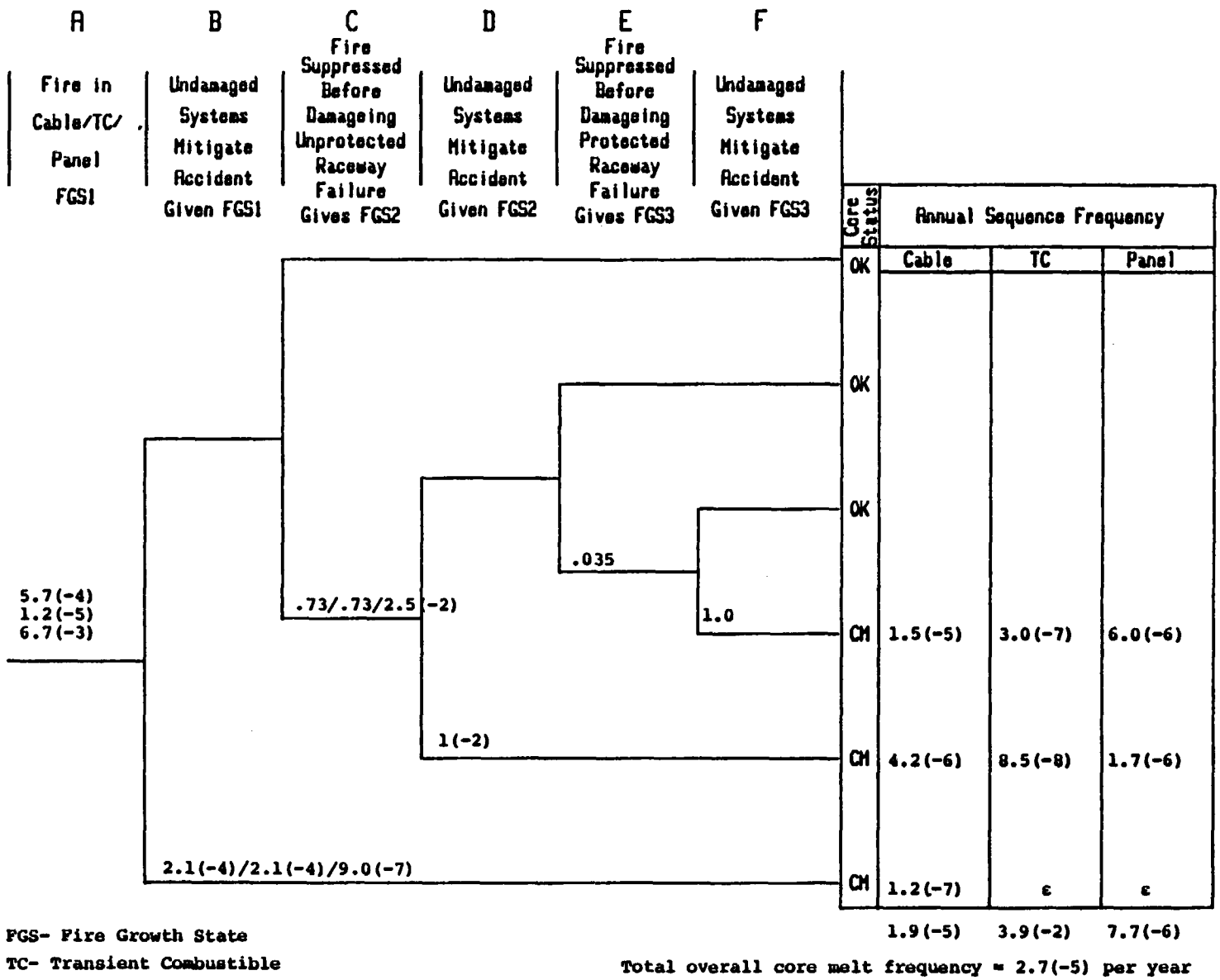

Figure 4.3-2. Fire-Growth Event Tree for Fire Area 44

the northeast quadrant, raceways associated with shutdown method A are enclosed within a 1 hour or 3 hour fire barrier. In the former case, i.e., 1 hour barriers, the raceways are also protected by an automatic preaction sprinkler system.

Given this new configuration the following fire-growth stages are as follows (Figure 4.3-3):

Event A - Frequency of fires (as before)

Event B - Undamaged systems mitigate accident given fire-growth stage (as before)

Event C - Fire suppressed before damaging protected cable raceways (as before)

Event D - Undamaged systems mitigate accident given fire-growth state 2 (as before)

Event E - Fire suppression before it damages protected cable raceways

The scenario for this event is that the fire occurs in northeast quadrant of fire area which contains cable raceways associated with shutdown method A protected by 1 hour barrier. Both automatic and manual methods of fire suppression fail to extinguish fire within 1 hour resulting in damage to shutdown method A raceways as well as all others.

4.3.3.4 General Access Area - Fire Area 47

The fire protection design for this area that was assessed in the SARA study was similar to fire area 45.

In the present design the area is divided into two zones separated by a combustible free zone. On the western side there are only components associated with shutdown method A but there is a single conduit associated with shutdown method B which is wrapped in a 3 hour rated fire barrier. On the eastern side, there are components associated with shutdown B. However, a number of shutdown method A raceways are located on the eastern side all of which are protected by a 1-hour rated fire barrier and an automatic preaction sprinkler system.

Excluding raceways enclosed by fire barriers, the horizontal separation between raceways associated with shutdown methods A and B is 96 feet.

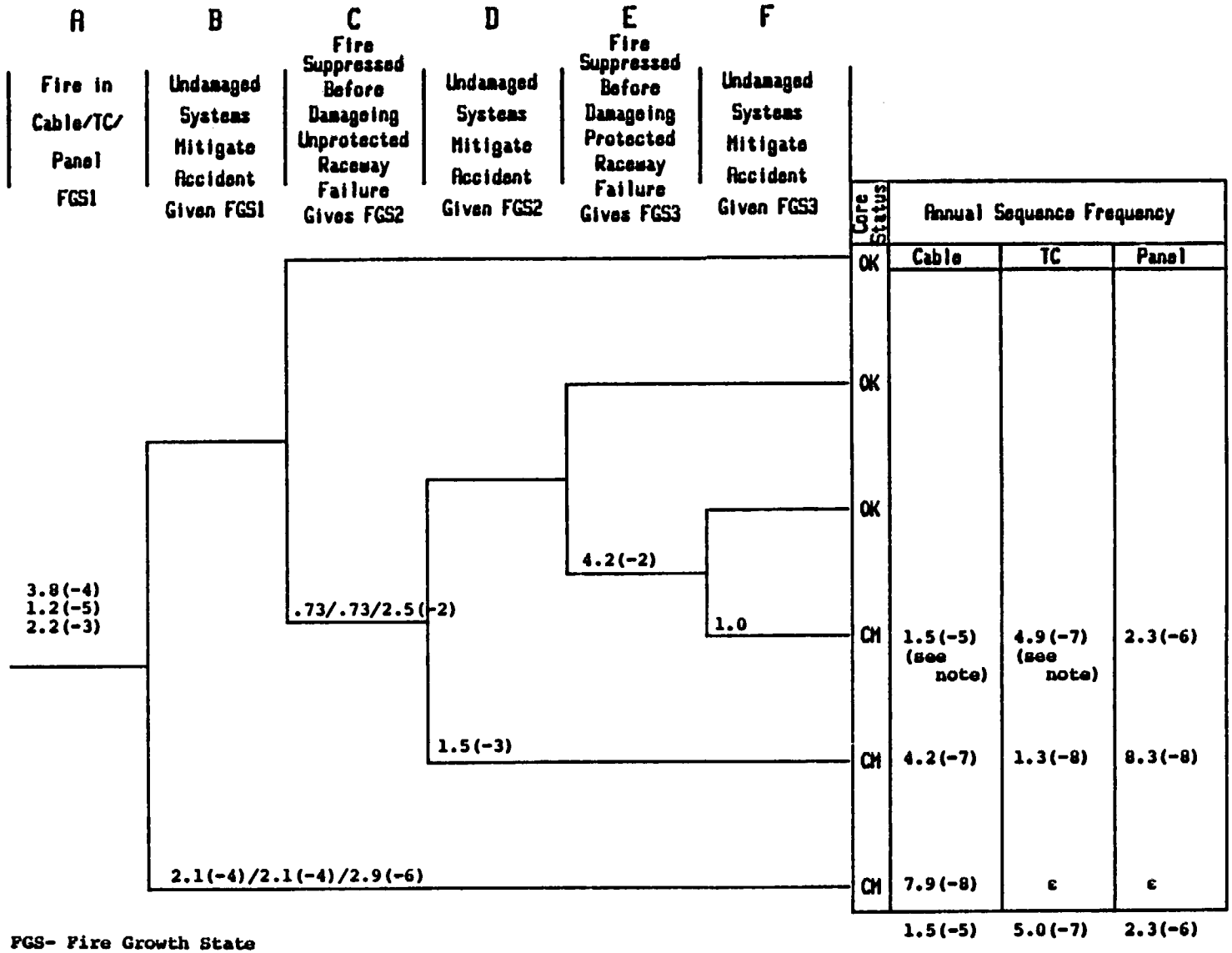

FGS- Fire Growth State

TC- Transient Combustible

Note- Because of the evaluation of Event E, the probability of Event C is not included in the evaluation of the sequence frequency.

Total overall core melt frequency = 1.8(-5) per year

Figure 4.3-3. Fire-Growth Event Tree for Fire Area 45

Given the present configuration the following fire-growth stage are requantified as follows (Figure 4.3-4):

Events A, B, C and D are unchanged as in the case of fire area 45.

Event E Fire not suppressed before damaging protected raceways.

Given the physical separation of redundant cable and components in this area, there is really only one scenario of possible significance here, which is identical to the scenario described earlier for fire area 45.

5.0 QUANTIFICATION OF ANALYSIS UNCERTAINTIES

A quantification of the sequence frequency uncertainty for the requantified fire scenarios is presented in this section. Two of the original PRAs (Indian Point 2 and Seabrook) performed an uncertainty analyses. The Limerick and Oconee PRAs provided only point estimates. The probability distributions for the requantified parameters were calculated and used to determine the uncertainty associated with the frequency of the fire scenarios reviewed. A summary of uncertainty associated with the requantified parameters is presented in Section 5.1. The resulting fire scenario frequency distributions are presented in Section 5.2.

5.1 Summary of New Data and Model Uncertainties

Four major parameters of the fire scenarios were requantified: (a) initiating event frequencies, (b) fire propagation, (c) fire damage thresholds, and (d) fire suppression distribution. The uncertainty associated with each of these parameters is discussed subsequently.

5.1.1 Initiating Event Frequencies

The method used to calculate initiating event uncertainties utilizes frequentist statistics where the point estimate is treated as the mean and the chi-square distribution is used to calculate the 90 percent confidence interval. This method generally compares well to the Bayesian method used by PLG in two of the PRAs reviewed since the prior distributions were chosen to represent a vague prior knowledge, thus allowing the statistical evidence to dominate the posterior distributions.

To illustrate the method used, the frequency distribution for auxiliary building fires will be obtained. The maximum likelihood estimate or the assumed mean is the ratio of the number of auxiliary building fires (43) to the years of auxiliary building operation

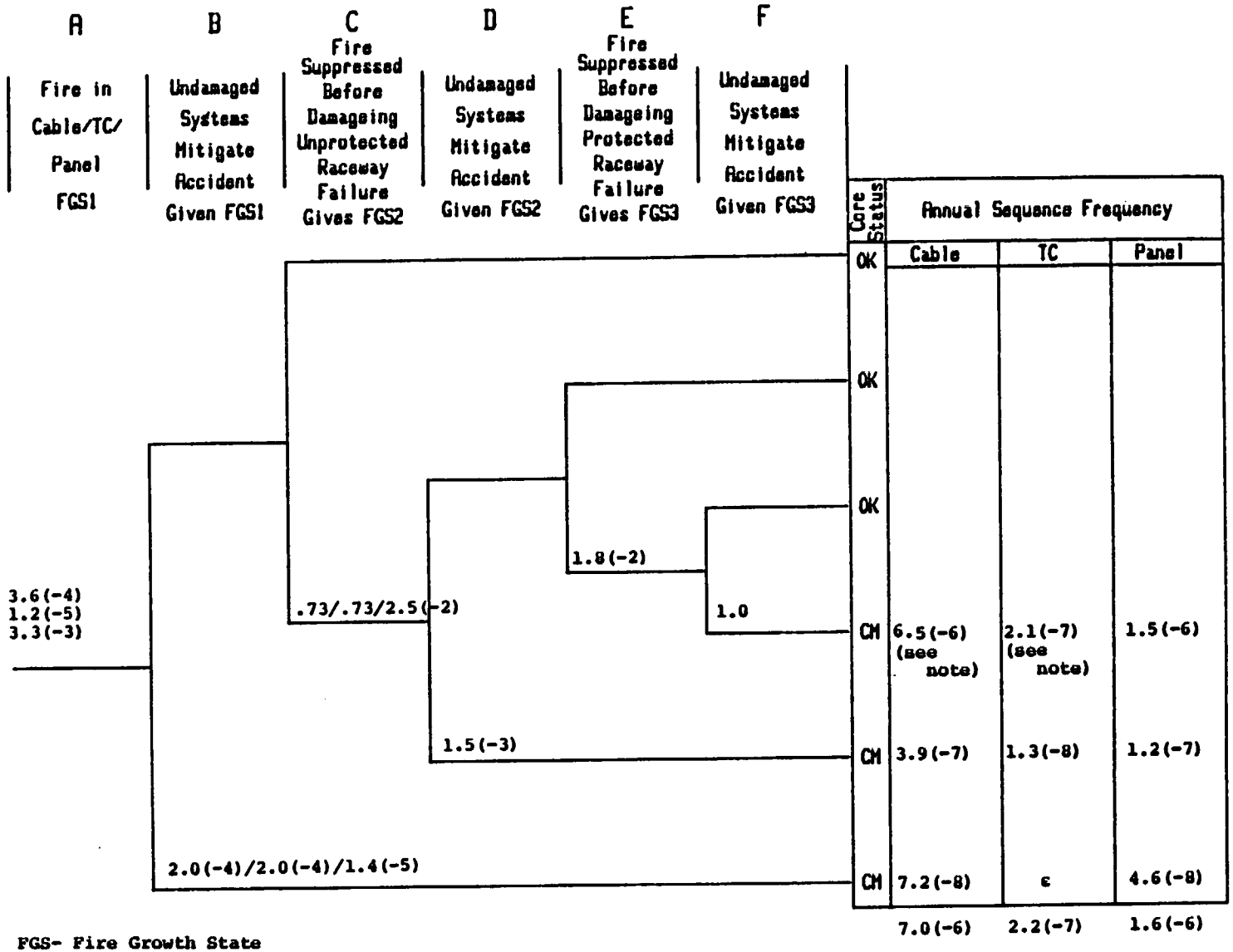

FGS- Fire Growth State

TC- Transient Combustible

Note- Because of the evaluation of Event E, the probability of Event C is not included in the evaluation of the sequence frequency.

Total overall core melt frequency = 8.8(-6) per year

Figure 4.3-4. Fire-Growth Event Tree for Fire Area 47

(673.2 yrs) or 6.4E-2/yr. The classical 90 percent confidence interval for the frequency λ is given by:

$$\frac{X^2_{0.05}(2r)}{2T} < \lambda < \frac{X^2_{0.95}(2r + 2)}{2T}$$

where r = 43, T = 673.2, and $X^2_{0.05}$ (2r) is the 5th percentile of a chi-square distribution with 2r degrees of freedom. For this example

$$\frac{X^2_{0.05}(86)}{2(673.2)} = \frac{66.5}{2(673.2)} = 4.9E\text{-}2$$

and

$$\frac{X^2_{0.95}(88)}{2(673.2)} = \frac{109.9}{2(673.2)} = 8.2E\text{-}2$$

For calculational purposes, the mean and 90 percent confidence intervals were assumed to define a lognormal distribution. A summary of initiating event frequency distributions used in this requantification effort is presented in Table 5.1-1. The distributions and point estimates used in the original PRAs are provided for comparison purposes. Generally the differences in the frequency are attributable to the differences in the statistical evidence used in each study. However, major differences at the low end of the distribution (i.e., the 5th percentile) are evident between the Seabrook distributions and those calculated in this study. These differences are associated with the differences in the methods used in calculating the frequency (i.e., Bayesian vs. frequentist). Specifically, the prior distribution selected in the Seabrook study resulted in low values of the 5th percentile.

5.1.2 Fire Propagation Modeling

There are two sources of uncertainty in the COMPBRN code used to model fire propagation in the four PRAs: parameter uncertainties and modeling uncertainties. For this requantification effort no effort was made to bound either uncertainty.

The parameter uncertainty is believed negligible compared to the modeling uncertainty. In fact, in most of the original PRA scenarios, the fire propagation time was insensitive to parameter values and the parameter uncertainty was ignored. One exception to this was the ignition/damage thresholds to which the code calculations were somewhat sensitive.

Table 5.1-1

Comparison of Initiating Event Frequency Distributions

Location/ Initiator		Fire Risk Scoping Study	Limerick	Indian Point 2	Seabrook	Oconee
Control Room	5th Percentile	1.0E-3			1.3E-7	
	Median	3.3E-3	NC	NC	3.2E-4	NC
	Mean	4.4E-3			4.9E-3	
	95th Percentile	1.1E-2			1.5E-2	
Cable Spreading Room	5th Percentile	3.4E-4		1.4E-3	7.0E-7	
	Median	1.7E-3	NC	6.2E-3	7.0E-4	NC
	Mean	2.7E-3		7.2E-3	6.7E-3	
	95th Percentile	8.4E-3		1.7E-2	2.2E-2	
Auxiliary Building	5th Percentile	4.9E-2		1.5E-2	5.6E-3	
	Median	6.3E-2	NC	3.3E-2	3.5E-2	NC
	Mean	6.4E-2		3.4E-2	4.8E-2	
	95th Percentile	8.1E-2		5.3E-2	1.3E-1	
Turbine Building	5th Percentile	2.1E-2			1.0E-4	
	Median	3.1E-2	NC	NC	1.0E-2	NC
	Mean	3.2E-2			1.6E-2	
	95th Percentile	4.5E-2			7.0E-2	
Cable	5th Percentile	9.4E-4				
	Median	2.8E-3		NC	NC	NC
	Mean	3.5E-3	1.1E-3			
	95th Percentile	8.5E-3				

Table 5.1-1

Comparison of Initiating Event Frequency Distributions (Concluded)

Location/ Initiator		Fire Risk Scoping Study	Limerick	Indian Point 2	Seabrook	Oconee
Panel	5th Percentile	3.3E-2		NC	NC	NC
	Median	4.4E-2				
	Mean	4.5E-2	8.9E-3			
	95th Percentile	5.8E-2				
Oil	5th Percentile	3.2E-5				
	Median	5.2E-4		NC	NC	NC
	Mean	1.2E-3	1.7E-3			
	95th Percentile	3.9E-3				

The modeling uncertainty for COMPBRN I used in the PL&G PRAs was accounted for by multiplying the propagation time presented by the code by an error factor distribution. This distribution was lognormal with a mean of two and a range factor of 2.25. This distribution was subjectively obtained based on limited comparison of COMPBRN I predictions of cable tray burning tests. COMPBRN I generally predicted more rapid propagation than actually occurred, because heat losses from the cables were not modeled.

Since limited validation of the COMPBRN III code used in this study was performed, there is very little basis for bounding the modeling uncertainty. However, it is known that this version of COMPBRN includes modeling of heat losses. This implies that the conservatism evident in the original version of the code should not be evident in COMPBRN III. Thus, the mean error factor should be less than the value of 2.0 used in the original studies. Based on this observation, the propagation times predicted by COMPBRN III were assumed to be lognormal means. The range factor of the associated distribution was assumed to be 3.0 to reflect our uncertainty in both the modeling and parameters.

5.1.3 Fire Damage Thresholds

Cable damage thresholds is a required input for the COMPBRN III calculations. No effort was made to form an uncertainty distribution for this parameter and propagate it through COMPBRN III. Instead, the effect of the uncertainty of this parameter was included in the parameter uncertainty discussed above.

5.1.4 Fire Suppression Analysis

The distribution for fire suppression time was presented previously in Section 4.1.4.

5.2 Summary of Scenario Requantification

The quantification of uncertainty of the fire scenarios analyzed in this study is presented in this section. In two of the original PRAs (Indian Point 2 and Seabrook), an uncertainty analysis was performed. The uncertainty distributions for parameters not changed in this study were taken from the original PRAs. These parameters include random failures, human errors, and initiating event partitioning factors. For the other two plants (Oconee and Limerick) no uncertainty analysis was performed in the original PRA. Calculation of uncertainty distributions in this study required that uncertainty bounds be assumed for many parameters. These assumptions are discussed in the following sections.

5.2.1 Limerick Fire Scenarios

Calculation of the Limerick uncertainty distributions for each fire scenario required uncertainty distributions for initiating events,

partitioning factors, fire propagation probabilities, and random failures. The uncertainty distributions for initiating events and fire propagation as calculated by COMPBRN were discussed in Section 5.1. The partitioning factors were treated as fixed constants since they are ratios of fixed parameters such as weight of cabling, floor area, and number of electrical panels. Random failure uncertainty distributions were obtained by assuming the point estimate value published in the original PRA were means of lognormal distributions with range factors of 5.

Some of the fire propagation probabilities used in the Limerick PRA were not related to COMPBRN runs but to fire barrier ratings. For example, in one scenario, the fire propagation time was set equal to the fire barrier of 1 hour and the associated propagation probability was obtained from the suppression curve. For this study, the fire barrier rating was assumed to be the 5th percentile in a fire propagation time distribution and the 95th percentile was assumed to be twice the rating. This propagation time distribution was also assumed to be lognormally distributed.

The results of the Limerick fire sequence uncertainty analysis are shown in Table 5.2-1 along with the point estimates from the original PRA. As indicated, the calculated distributions are relatively tight with the ratio of the 5th and 95th percentiles following in the range of one-to-two orders of magnitude. This tightness of the distributions is due to the small range factors of the initiating event frequencies, the treatment of the partitioning factors as constants, and the small spread in the fire propagation probabilities.

In all of the self-ignited cable and transient combustible fire scenarios, the uncertainty is dominated by the initiating event frequency. For the self-ignited electrical panel fires, the uncertainty is dominated by the probability of propagating from the panel where the fire originated.

5.2.2 Indian Point 2 Fire Scenarios

Calculation of the Indian Point 2 fire scenario uncertainty distributions required uncertainty distributions for initiating event frequencies, partitioning factors, fire propagation probabilities, and random failures. The uncertainty distributions for the requantified initiating event frequency, fire propagation time, and suppression time, were discussed previously in Section 5.1. The uncertainty distributions for the remaining unchanged parameters were obtained from the original PRA.

The results of the Indian Point 2 fire sequence uncertainty analysis are shown in Table 5.2-2 along with the results from the original PRA. With the exception of the cable spreading room fires, the requantified mean values are greater primarily due to a larger initiating event frequency and differences in the fire propagation probability. The requantified mean values for the cable spreading room fire scenarios

Table 5.2-1

Limerick Sequence Frequency Distributions (yr^{-1})

Location/Sequence	PRA Point Estimate		Quantified Distribution
13 kV Switchgear Room			
Cable	2.4E-6	5th Percentile	4.8E-6
		Median	1.7E-5
		Mean	1.9E-5
		95th Percentile	4.9E-5
Electrical Panel	3.2E-6	5th Percentile	9.9E-7
		Median	1.6E-5
		Mean	2.3E-5
		95th Percentile	9.2E-5
Oil	5.9E-7	5th Percentile	4.5E-8
		Median	4.2E-7
		Mean	9.0E-7
		95th Percentile	4.4E-6
Safeguards Access Area			
Cable	4.1E-6	5th Percentile	1.1E-5
		Median	3.0E-5
		Mean	3.2E-5
		95th Percentile	7.9E-5
Electrical Panel	1.5E-6	5th Percentile	1.4E-6
		Median	1.4E-5
		Mean	3.1E-5
		95th Percentile	1.5E-4
Oil	4.1E-7	5th Percentile	2.9E-8
		Median	2.8E-7
		Mean	6.1E-7
		95th Percentile	1.9E-6
CRD Hydraulic			

Table 5.2-1

Limerick Sequence Frequency Distributions (yr^{-1}) (Concluded)

Location/Sequence	PRA Point Estimate		Quantified Distribution
Equipment Area			
Cable	4.7E-6	5th Percentile	5.3E-6
		Median	1.9E-5
		Mean	2.5E-5
		95th Percentile	8.0E-5
Electrical Panel	1.0E-6	5th Percentile	1.1E-7
		Median	2.1E-6
		Mean	1.9E-6
		95th Percentile	6.8E-6
Oil	6.6E-7	5th Percentile	4.4E-8
		Median	3.0E-7
		Mean	7.7E-7
		95th Percentile	2.6E-6
General Equipment Area			
Cable	1.2E-6	5th Percentile	2.5E-6
		Median	9.1E-6
		Mean	9.5E-6
		95th Percentile	2.4E-5
Electrical Panel	5.2E-7	5th Percentile	1.1E-7
		Median	1.5E-6
		Mean	2.3E-6
		95th Percentile	8.9E-6
Oil	1.8E-7	5th Percentile	1.4E-8
		Median	1.5E-7
		Mean	2.8E-7
		95th Percentile	1.3E-6

Table 5.2-2

Indian Point 2 Sequence Frequency Distributions (yr^{-1})

Location/Damage State		PRA Distribution	Requantified Distribution
Switchgear Room	5th Percentile	1.8E-8	2.8E-7
	Median	5.4E-6	1.3E-5
	Mean	5.6E-5	1.4E-4
	95th Percentile	1.3E-4	7.8E-4
Electrical Tunnel			
SLF	5th Percentile	2.1E-8	2.3E-6
	Median	3.7E-6	2.0E-5
	Mean	2.4E-5	1.1E-4
	95th Percentile	6.7E-5	4.3E-4
SEF	5th Percentile	2.4E-10	2.7E-8
	Median	3.7E-8	1.7E-7
	Mean	1.0E-7	5.9E-7
	95th Percentile	3.2E-7	1.6E-6
SE	5th Percentile	1.9E-8	1.2E-7
	Median	6.1E-6	5.9E-6
	Mean	5.6E-5	6.9E-5
	95th Percentile	1.2E-4	4.1E-4
Cable Spreading Room			
TEFC	5th Percentile	1.9E-10	2.5E-10
	Median	6.0E-8	5.6E-8
	Mean	1.6E-6	8.5E-7
	95th Percentile	4.0E-6	3.6E-6
TE	5th Percentile	<1.0E-10	3.2E-11
	Median	7.2E-9	7.3E-9
	Mean	3.0E-7	1.1E-7
	95th Percentile	5.9E-7	4.7E-7

are less than those calculated in the original PRA again primarily due to a decrease in the initiating event frequency and propagation probability.

The dominant factors contributing to the uncertainty in the Indian Point 2 fire scenarios were the initiating event partitioning factors. These factors were subjectively determined and have large uncertainties. Human errors in performing recovery actions also contributed significantly to the uncertainty.

5.2.3 Oconee Fire Scenarios

In addition to the uncertainty distributions for initiating event frequencies and fire propagation probabilities discussed previously in Section 5.1, distributions for partitioning factors and random failures were required. Since the Oconee PRA did not provide such distributions, distributions were assumed.

For the initiating event frequency partitioning factors, the point estimate value reported in the original PRA was assumed to be the mean of a lognormal distribution with range factors ranging between 3 and 10. These values were selected based on a review of the partitioning factor distributions used in the Indian Point 2 and Seabrook PRAs. For the random failure events, the point estimate values reported in the PRA were also assumed to be means of lognormal distributions with range factors of 2 or 3.

The results of the Oconee fire sequence uncertainty analysis are shown in Table 5.2-3 along with the point estimates provided in the original PRA. A comparison of the point estimate value and the distribution mean show good agreement with the mean value higher due to the increased initiating event frequency calculated in this study. Again, the uncertainty is highly dominated by the uncertainty in the initiating event frequency partitioning factors.

5.2.4 Seabrook Fire Scenarios

The quantification of the Seabrook fire scenario uncertainty was performed using the distributions for initiating event frequencies, fire propagation times, and suppression time probabilities presented in Section 5.1. In addition distributions for initiating event partitioning factors and human error probabilities obtained from the original PRA and unchanged in this study were used. Finally, distributions for the random failure of two systems included in some fire scenarios were assumed since the distributions were not published in the original fire PRA. The values reported in the PRA for these systems were assumed to be the means of lognormal distributions with range factors of 3.

The results of the Seabrook fire scenario uncertainty analysis are compared to the original PRA results in Table 5.2-4. The requantified mean values for the cable spreading room scenarios are lower then the

Table 5.2-3

Oconee Sequence Frequency Distributions (yr^{-1})

Location/Sequence	PRA Point Estimate		Requantified Distribution
Electrical Equipment Room			
#1	7.1E-9	5th Percentile	1.6E-10
		Median	3.2E-9
		Mean	1.7E-8
		95th Percentile	5.9E-8
#2	8.5E-9	5th Percentile	1.4E-10
		Median	2.4E-9
		Mean	2.0E-8
		95th Percentile	1.2E-7
Cable Shaft			
#1	1.2E-6	5th Percentile	8.0E-9
		Median	2.9E-7
		Mean	2.8E-6
		95th Percentile	1.3E-5
#2	5.3E-6	5th Percentile	7.5E-8
		Median	2.4E-6
		Mean	1.0E-5
		95th Percentile	4.9E-5
#3	3.6E-6	5th Percentile	3.2E-8
		Median	2.0E-6
		Mean	6.2E-6
		95th Percentile	2.5E-5

Table 5.2-4

Seabrook Sequence Frequency Distributions (yr^{-1})

Location/Sequence		PRA Distribution	Requantified Distribution
Cable Spreading Room			
#2	5th Percentile	9.3E-11	1.7E-8
	Median	6.7E-8	6.7E-7
	Mean	3.6E-6	2.2E-6
	95th Percentile	1.6E-5	1.2E-5
#4	5th Percentile	1.0E-10	3.6E-10
	Median	5.3E-9	4.3E-8
	Mean	3.9E-7	1.0E-7
	95th Percentile	4.8E-6	2.7E-7
#6	5th Percentile	3.2E-12	4.0E-10
	Median	1.5E-9	1.1E-8
	Mean	8.4E-8	4.2E-8
	95th Percentile	1.2E-6	2.2E-7
#8	5th Percentile	6.8E-13	1.6E-10
	Median	6.3E-10	7.4E-9
	Mean	4.5E-8	3.1E-8
	95th Percentile	1.5E-7	1.8E-7
Control Room			
Zone C	5th Percentile	1.6E-10	4.2E-7
	Median	1.6E-7	3.9E-6
	Mean	9.0E-6	6.9E-6
	95th Percentile	3.0E-5	2.5E-5
Zone G	5th Percentile	2.3E-11	2.1E-8
	Median	2.4E-8	2.7E-7
	Mean	2.1E-6	1.4E-6
	95th Percentile	4.8E-6	5.0E-6
Zone H	Same as Zone G		
PCC Pump Area			
#1[1]	5th Percentile	4.1E-7	2.0E-6
	Median	1.2E-5	2.8E-5
	Mean	6.8E-5	1.1E-4
	95th Percentile	3.1E-4	3.3E-4

Table 5.2-4

Seabrook Sequence Frequency Distributions (yr^{-1}) (Concluded)

Location/Sequence		PRA Distribution	Requantified Distribution
#2	5th Percentile	1.6E-9	5.3E-7
	Median	1.9E-7	7.4E-6
	Mean	4.2E-6	2.9E-5
	95th Percentile	1.6E-5	8.7E-5
Turbine Building[2]	5th Percentile	4.1E-6	2.9E-4
	Median	2.6E-4	1.0E-3
	Mean	6.0E-4	1.2E-3
	95th Percentile	2.3E-3	2.9E-3

Note:

1. Not a core damage sequence. This sequence does not represent a loss of service water unless the additional random failure of the cooling tower is included.

2. Not a core damage sequence. This sequence represents a fire in a critical area of the turbine building, loss of offsite power, and some other fire-related equipment failures.

original PRA values because of a lower initiating event frequency. The range of requantified distributions are also narrower particularly on the low end primarily due to difference in methods used to calculate the initiating event frequency discussed in Section 5.1.1.

The requantified control room distributions are also narrower and the mean values are smaller again because of the differences in the initiating event frequency distributions. The PCC pump area and turbine building scenarios requantified means are higher than the original PRA values basically due to the initiating event frequency.

6.0 SUMMARY

Uncertainties are sometimes thought to be greater in fire risk assessments than in other external and internal event analyses. A brief comparison of uncertainties will be discussed in Section 6.1 in light of the uncertainties identified in the four PRAs reviewed. An assessment of information needed for updating risk estimates issues will be assessed in Section 6.2.

6.1 Comparison of Fire Risk Assessment With Other Internal and External Event Analyses

Comparison of relative uncertainties between different external event risk analyses or between external event risk and internal event risk analysis has not been done in a comprehensive fashion. However, considerable insight may be gained by looking at the sources of uncertainties in these analyses. In this section we will examine the uncertainties in fire risk analysis as compared with the corresponding uncertainties for earthquakes and floods. These external events have shown to be the most important of the external event contributors in past PRAs. As a vehicle for comparing the sources of uncertainties, we can examine the steps that are used in performing an external event PRA.

In general an external event risk analysis is performed using the following steps:

1. Define initiating events (causes and frequencies).

2. Model systems with fault trees and event trees.

3. Compute responses resulting from the cause.

4. Estimate susceptibility of components to responses.

5. Evaluate cut sets and accident sequences including correlation.

6. Perform uncertainty analysis on dominant accident sequences.

For each step we will compare and contrast the fire risk methodology and data with that of earthquake and floods. The effect of the relative uncertainties depends both on the relative magnitude of the uncertainties themselves and on the manner in which the model or data affects the final risk estimate. Table 6.1-1 summarizes the basic steps in the analysis and the associated phenomena and parameters.

The first step in any external event risk assessment is determination of the event frequency, that is, the frequency per year of the occurrence of fires, earthquakes, or floods. Both large earthquakes and large floods are very rare events although small earthquakes or floods may be common in certain locations. Thus, there is considerable uncertainty in estimating the frequencies (or return periods) of such large events. Uncertainty bands of plus or minus an order of magnitude are to be expected at the design flood or earthquake level while uncertainties on the order of plus or minus two orders of magnitude can be expected at three to four times the design basis event. By contrast, reportable fires have occurred with the frequency of between 0.1 and 0.166 per year at U.S. commercial nuclear power plants as determined from the LER data base and from fire reports to nuclear insurers. Thus, fire frequencies are known with a much greater level of confidence than are earthquake or flood frequencies.

However, as described earlier in the report, the fire frequencies are known only for major buildings or major areas, for example, the auxiliary building or the control room. Thus, the overall fire frequencies must be partitioned down to the compartment level. The basis for this partitioning is expert judgment using estimated cable content, transient combustible content, or floor area as the basis for the estimate. Such judgment of necessity involves considerable uncertainty and this uncertainty is often a dominant contributor to the overall uncertainty in the fire core damage frequency point estimate. Uncertainty in partitioning models usually involves error factors on the order of 2 to 20. This uncertainty directly affects the final risk outcome. Thus, in comparing fire risk to earthquake or flood risk, it is seen that the uncertainty due to the event occurrence frequency is a factor of 2 to 20 for fire as compared to factors of 10 to 100 for floods or earthquakes. Further, it has been observed in many past external event PRAs that the uncertainty due to the initiating event frequency is about one half to two thirds of the total uncertainty and so is a dominant contributor to the overall uncertainty bands.

The second major step is modeling the plant safety systems and incorporating any secondary impacts due to the external events onto the fault trees. The fault trees and event trees used in the internal events analysis may, in general, be used directly. Secondary failures are added to the tree structure as deemed appropriate by the analyst. By secondary failure it is meant, for example, failure of a component due to failure of an adjacent block wall or roof panel in the case of an earthquake. For flooding, secondary failures may be induced by

Table 6.1-1

Parameters in Risk Analyses of Earthquakes, Fire and Floods

	Earthquake	Fire	Flood
Initiating Events	Earthquakes of various PGA values	Range of fires in plant	Pipe Breaks, leakage, tank failures
Fault Trees Event Trees	All can use internal event trees with some modification.		
Responses	Spectral acceleration or moment	Local temperature, time/flux, etc.	Water level
Fragilities	P_{FAIL} ACCEL	P_{FAIL} TEMP	$P_F = 1$ IF Submerged
Sequence Cut Set Evaluation	All can use some cut set evaluation, but correlation may be important.		
Uncertainty Analysis	All can use some algorithm.		

spray. For fire, secondary failures can be induced by smoke damage, inadvertent sprinkler operation or hose spray during manual fire fighting action. Clearly, expert judgment based on a plant visit is required in specifying these secondary failures and uncertainty is involved. It is judged that the amount of uncertainty associated with inclusion of these secondary failures is about the same for fire, flood and earthquake. The relative importance is largely plant specific and depends upon the total contribution of the secondary failure to the total core damage frequency estimate.

The third step involves estimating the response, i.e., the local spectral acceleration for earthquakes, the flooding water level for flood events and the local temperature or heat flux for fire environments. It is this step which is significantly different for external events than for internal events analysis, for a calculational model (often a computer code) is generally used. For earthquakes, a suite of codes involving ground models, structural dynamic models and a soil-structure interaction code are utilized. Structural models vary from the simple beam element models used in design to complex three dimensional fully coupled models. Codes can be either three dimensional or two dimensional and can utilize either finite element model solution techniques or substructure model solution techniques. For fires, a fire-growth and propagation code such as COMPBRN, the Harvard fire-growth code etc., are used to predict temperatures at various points of interest (for example, cable trays) in a compartment based on phenomenological models of fire growth, plume spread, etc. Determination of flood levels is the simplest case, for hydraulic models utilizing source flow rates and potential drainage paths can be utilized.

In comparison, the earthquake and fire response calculations may be considered to involve comparable uncertainty in prediction of responses while the flood level calculations involve significantly less uncertainty and may often be modeled deterministically without significant loss. For earthquakes, uncertainties in spectral acceleration are associated with error factors on the order of 2 to 3. These uncertainties, however, do not directly affect the bottom line core damage frequency estimates, for the responses must be convolved with the fragility model (as described) to obtain failure probabilities and associated uncertainties as described below. Similarly, for fire the temperatures are convolved with the fire growth and suppression times so that again, the uncertainties in the fire responses do not directly affect the bottom line core damage frequency estimates.

The estimate of the susceptibility of components to the responses caused by the various external events, usually described in a fragility curve, is one part of the analysis procedure which can often involve significant uncertainty. As with the response determination step, the flood case involves the least amount of uncertainty, for components are usually assumed to fail when submerged. By contrast, if the effects of spray are being included, then there is a larger

amount of uncertainty associated with the probability of failure. For earthquakes, the failure of equipment may be functional (shaft binding, bearing, seizure, etc.) or structural (anchorage failure, tank buckling, etc.). Functional failure modes must usually be determined by test while analytical approaches are used to calculate structural failure modes. Only limited test data are available and significant modeling uncertainty exists for analytically determined failure levels. Hence, in general, significant uncertainties exist in the seismic fragility estimates. Similarly, for fires, only limited experimental data exist and functional failures at temperatures above the qualification temperature cannot be predicted analytically. Thus, there is a considerable uncertainty in the fire fragility limits, although a reasonable upper limit can be taken as the cable auto-ignition or piloted ignition temperatures. Thus, as with the response calculation step, there is considerable and comparable uncertainty in specification of both fire and earthquake fragilities while there is significantly less uncertainty in flood failure estimates.

Taken together, the convolution of the response and fragility provides the estimate of the probability of failure of the components involved and also a measure of the uncertainty in that estimate. As mentioned earlier, the component failure probabilities contribute (usually significantly) less than 50 percent of the total uncertainty in the bottom line core damage frequency estimate. For fire and earthquakes, the uncertainty due to responses and fragilities are significant but not dominant and the relative contributions are comparable. By contrast, there is relatively less uncertainty in the flood component failure probabilities.

The final step in determination of the accident sequence probabilities is the computation of each cut set probability including the effects of correlation. Without correlation it is only required that one compute the product of the individual component failure probabilities. With correlation, however, the component failures are not independent. Correlation between component failures is induced by the common cause nature of the basic events themselves and results in component failures which are not independent. If the components are simultaneously exposed to the external event, the likelihood of simultaneous failures brought about by the common cause fire or where ground shaking or flooding is much enhanced. Consideration of correlation involves estimating or calculating both the correlation between the responses and between the fragilities. Responses due to floods and fires may be assumed to be fully correlated and any uncertainty is due only to errors in the code or modeling process. By contrast, responses in the earthquake ground shaking environment may have correlation varying from zero to full correlation depending on the location of the components and the natural frequency of the components themselves. Further, considerable uncertainty exists in the seismic response correlation due to uncertainties in the structural response behavior.

Correlation in fragilities may be taken as unity for electromechanical components in fire or flooding environments, while for the seismic environment, correlation must be determined (in principal) by pair-wise tests. Little uncertainty is associated with the fragility correlations for fire and flood while large uncertainty is associated with estimates of the seismic fragility correlation. Taken together, there is little correlation uncertainty associated with component failures due to fire or flood while the uncertainty in seismic probabilities of failure due to correlation have significant uncertainty and may affect the bottom line core damage frequency estimates by up to an order of magnitude. (Note that correlation also affects the union of cut sets which forms the accident sequence but the effect of correlation on the union of events is much less than on the intersection of events, that is, in the evaluation of the cut set probabilities themselves.)

Table 6.1-2 summarizes the relative uncertainties associated with each step in the risk analysis of earthquakes, fires and floods. It is difficult to draw general conclusions as to the relative overall level of uncertainty between fire, earthquake and flooding due to the necessarily plant-specific nature of these analyses. However, certain general observations may be made.

1. For analyses in which the uncertainties in the initiating events are dominant, one would expect greater uncertainty in earthquake and flood analyses than in fire analyses.

2. In the absence of secondary failures, the uncertainty associated with the event trees and fault trees should be the same for fire, flood and earthquake. However, significant uncertainty can result from the engineering judgment needed to incorporate such secondary failures - and this uncertainty is quite site-specific.

3. Uncertainties in responses and fragilities are relatively smaller than those for the initiating events (for fire, earthquake and flood) and, in contrast to the initiating events, may be reduced by fragility tests or use of more accurate or more detailed response models.

4. The contribution of correlation to the overall uncertainty is small for fire and flood, but may be significant for earthquakes, depending on the nature of the dominant cut sets.

It should be noted that recovery actions are usually not incorporated in seismic and flood analyses, due to the assumption that physical damage to the affects components has occurred, and that no short-term mechanical repair is possible. By contrast, recovery in the sense of fire suppression activities is incorporated directly into a fire PRA, and this can include significant uncertainty. However, this uncertainty is also directly amenable to reduction by means of

Table 6.1-2

Relative Uncertainties at Each Step in Fire, Flood and Earthquake Risk Assessments

	Earthquake	Fire	Flood
Initiating Events	Large	Medium	Large
Event Trees Fault Trees	Small	Small	Small
Responses	Medium	Medium	Small
Fragilities	Medium	Medium	Small
Cut Set and Accident Sequence Evaluation (including correlation)	Medium	Medium	Small

improved fire brigade training, more fire sensors and more reliable automatic fire suppression systems. Similarly, uncertainties associated with partitioning of fire initiating frequencies may be reduced by tighter plant fire safety practices and fire watch routines. Thus, of these three external events, the fire area presents the most promising area for reduction of both point estimate core damage frequency and its associated uncertainty.

6.2 Conclusions and Recommendations

6.2.1 Major Sources of Uncertainty in Fire Risk Estimates

For those issues addressed by current PRA methodology the major sources which contribute to the uncertainty in the estimates of plant fire induced core damage frequency are (a) estimation of fire occurrence frequencies and size, (b) estimation of detection and suppression times, (c) estimation of cable and component damage thresholds, and (d) the modeling of fire development and environment response.

With regards to the estimation of the frequency and size of fires encountered in nuclear power plants, one is dependent on the information provided by reports from the individual utilities to the NRC and to the utility insurers. The use of this information presents a number of issues which contribute to uncertainties in the resulting estimates. These uncertainties derive from completeness aspects of incident reporting. One of these completeness questions is the number of fires which go unreported because they do not result in any adverse plant effects and hence do not fall under either NRC or insurance reporting guidelines. The reporting of all fires, large or small, would be helpful in more accurately defining the frequency of fires and the portion of fire occurrences which can be considered significant from a plant safety viewpoint. The second completeness question in this context is the issue of the level of detail provided on reportable fires. Often it is difficult to determine from the reports such factors as ignition source, fuel involvement, extent of fire growth, actual location of the fire, etc. The reporting of such factors would result in more accurate fire occurrence and size estimates.

One faces the same problem in estimating the time required to detect and suppress fires. These factors are often not reported in fire occurrence reports. The estimation of time to fire suppression plays a key roll in the determination of core damage frequency for a given scenario. Again completeness of reporting reduces the accuracy of these estimates.

As the experience based on power plant fires is expanded the accuracy of these estimates improves. However, there will always remain a certain level of uncertainty due to the differences between plant layouts, plant equipment, plant age, etc. These factors are difficult to account for in any quantitative way and often involve the

incorporation of factors based solely on "engineering judgment." A requirement for more thorough reporting of fire events in greater detail would be quite helpful in this regard.

In the estimation of cable and component damage thresholds one is primarily dependent on test data available for thermal testing of equipment. With regards to cable insulation, which was in each case considered here the type of equipment of primary concern, one has essentially two sources of information on damageability. One source is a series of tests sponsored by EPRI at FMRC (Reference 11). The second source is tests conducted by SNL under the sponsorship of the NRC. In both cases only a limited number of cable types have been investigated. This limitation introduces the majority of the uncertainty associated with thermal damage limits as different cable types, and even cables of the same type supplied by different manufacturers will display different damage thresholds. However, due to the limitations on the available data one is forced to use data for a cable type which may or may not be similar to that in existence at the plant. More extensive testing of different cable types would clearly help to reduce this uncertainty. Indeed the ideal would be to perform tests on samples of the actual cables, or components, of concern in a given situation. One must also recognize that electrical failure may occur well before a component actually burns.

This would not resolve the larger issue of potential damage induced by factors other than simple heating. These factors include such things as smoke damage and damage induced by suppression activities (wetting, hose stream impact, very cold temperatures for gaseous suppression, etc.). This issue is beyond the scope of Tasks 1 and 2 and is to be addressed under Tasks 3 and 4 as part of the unaddressed issues efforts.

Finally, one must come to grips with the modeling of fire development and the response of an enclosure environment to fire conditions. The fire model used almost exclusively in fire PRAs to date is the COMPBRN code. This code was developed originally at UCLA and the most current version available is COMPBRN III. All four of the subject PRAs utilized COMPBRN I in their analyses. Improvements made in the code since that time include the handling of heat losses to the enclosure surfaces, the modeling of hot layer effects, the modeling of forced ventilation, and a more realistic model of the response of thermal targets to the environment.

In using this latest version of the code as a part of the current effort a number of problems with the physical modeling within the code surfaced. A number of anomalous results were obtained which contradicted both common sense and physical data as outlined in Appendix A2. Clearly, this code could be greatly improved through more realistic physical modeling and through the application of recent enclosure fire test data for validation (Reference 16). When originally developed, the code was intended to be a quick and simple code for fire analysis. In application, the output of the code

simulations plays an important role in determining the core damage frequency results. There is clearly a great deal of uncertainty associated with these simulations as evidenced by some of the changes to fire damage predicted using version III as compared to those from version I.

As a result of the NRC Fire Protection Research Program at SNL a body of test data has recently been made available which was specifically intended to serve as validation data for this and other fire simulation codes (Reference 16). The use of this data for identifying needed model changes and validation of overall code capability would clearly result in improved reliability in the code output. As a part of the current efforts a number of fairly simple potential model improvements to the COMPBRN code were identified. As the COMPBRN code is specifically geared toward the analysis of nuclear power plant type fire situations, and no other codes available provide both the simplicity of operation and applicability to the unique circumstances of nuclear power plant fires, an investment in the refinement of this code would clearly be worthwhile.

6.2.2 Assessment of Information Updating on Core Damage Frequency Estimates

The Sandia fire data base (Reference 10) contains fire event data from 1965 through June 1985. In all cases the data bases from the four PRAs were checked to insure that all pertinent entries were incorporated into the updated information. Appendix A3 presents the fire data used in the requantification effort. The overall effect on requantification was that most initiating event frequencies were increased. If there was any question about a data entry, the choice was always to take the conservative approach and include the event subject to later verification.

The latest version of the COMPBRN code (COMPBRN III) was used to requantify fire propagation times. Comparison of the COMPBRN III results with the propagation times given in the original PRAs indicates the COMPBRN III propagation times can be considerably lower than the times reported in the original PRAs. However, our experience with COMPBRN III indicates there are a number of inadequacies in the code, including convergence problems, nonphysical behavior, and computational inconsistencies. Therefore, the results of the COMPBRN calculations should be viewed as tentative at this point.

All four fire PRAs reviewed used the same limited fire suppression data base (18 events) to construct subjective distributions for fire suppression times. These subjective distributions reportedly take into account the type of detection and suppression available in each location. In this study, a significantly larger data base of 69 applicable events was used to construct a fire suppression time distribution based solely on the data and without the need for any subjective input. Since these events were felt to span the spectrum of detection and suppression times and methods, this suppression time

distribution was used in requantifying all the fire scenarios. Longer suppression times were predicted in the requantification of all the fire scenarios using this data base. A further refinement of this data into types of detection and suppression available appears promising and will be pursued in the future as a part of other efforts at SNL.

The effects of Appendix R modifications have been examined for Indian Point Unit 2, Seabrook, and Limerick. For Oconee no plant modifications made after the performance of the original PRA was identified.

The Indian Point Unit 2 Appendix R modifications of importance are redundant power cables from an alternate source of power to a component cooling pump and high pressure injection pump. In case of a fire in the switchgear room or electrical tunnel, the operator can locally switch to this alternate power supply and prevent loss of cooling to the reactor coolant pump seals. The potential for a pump seal LOCA was thus substantially reduced. The net effect of this modification is to reduce the potential mean fire-induced core damage frequency by approximately an order of magnitude. Seabrook had no Appendix R modifications to requantified fire areas, but the medium fire scenario in the PCC pump area was eliminated due to a closer examination of cable routing in the area. The identified Appendix R modifications at Limerick had the combined effect of reducing fire initiated core damage frequency by a factor of three. No additional credit was given for newly installed automatic suppression systems since a detailed plant walkdown and reanalysis was not performed. However, the effect of these automatic suppression systems would be to further reduce fire initiated core damage frequency at Limerick.

7.0 REFERENCES

1. Indian Point Probabilistic Safety Study, Section 7.3, Power Authority of the State of New York and Consolidated Edison Company of New York, Inc., March 1982.

2. Oconee PRA - A Probabilistic Risk Assessment of Oconee Unit 3, Section 9.3, NSAC-60, Nuclear Safety Analysis Center, June 1984.

3. Seabrook Station Probabilistic Safety Assessment, Section 9.4, Public Service Company of New Hampshire and Yankee Atomic Electric Company, December 1983.

4. Severe Accident Risk Assessment Limerick Generating Station, Chapter 4, Main Report, Philadelphia Electric Company, Report #4161, April 1983.

5. Kaplan, S., On a Two-Stage Bayesian Procedure for Determining Failure Rates from Experimental Data, PLG-0191, Pickard, Lowe and Garrick, Inc. 1981.

6. Fleming, K. et al., A Methodology for Risk Assessment of Major Fires and Its Application to an HTGR Plant, GA-A15402, General Atomic Company, 1979.

7. Wheelis, W. T., "Transient Combustible Fuel Sources Found at Nuclear Power Plants: Data," Letter Report to the USNRC, Sandia National Laboratories, June 29, 1984.

8. Nowlen, S. P., Heat and Mass Release Rates for Some Transient Fuel Source Fires: A Test Report, NUREG/CR-4680, SAND86-0312, Sandia National Laboratories, Oct 1986.

9. Nowlen, S. P., Quantitative Data on the Fire Behavior of Combustible Materials Found in Nuclear Power Plant: A Literature Review, NUREG/CR-4679, SAND-0311, Sandia National Laboratories, Feb 1987.

10. Wheelis, W. T., Users Guide for a Personal Computer-Based Nuclear Power Plant Fire Data Base, NUREG/CR-4586, SAND86-0300, Sandia National Laboratories, Aug 1986.

11. Tewarson, A. et al., Categorization of Cable Flammability Part 1, EPRI NP-1200, Factory Mutual Research Corp., Oct 1979.

12. Chavez, J., "Steady State Environment Cable Damage Testing," Letter Report to the USNRC, Sandia National Laboratories, July 14, 1984.

13. Chavez, J., Evaluation of Suppression Methods for Electrical Cable Fires, NUREG/CR-3656, SAND83-2664, Sandia National Laboratories, Oct 1986.

14. Siu, N. O., COMPBRN - A Computer Code for Modeling Compartment Fires, NUREG/CR-3239, May 1983.

15. Ruger, C. et al., Evaluation of Current Methodology Employed in Probabilistic Risk Assessment (PRA) of Fire Events at Nuclear Power Plants, NUREG/CR-4229, BNL, May 1985.

16. Nowlen, S. P., Enclosure Environment Characterization Testing for the Base Line Validation of Computer Fire Simulation Codes, NUREG/CR-4684, SAND86-1296, March 1987.

17. "Seabrook Fire Assessment Review," Draft.

18. "Quantitative Information on Revised Fire Analysis for Limerick Generating Station - Supplement 2 to LGS SARA," NUS Corporation, November 1983.

19. Indian Point Probabilistic Safety Study Amendment I, Section 7.3.1A, Power Authority of the State of New York and Consolidated Edison Company of New York, Inc., January 1983.

APPENDIX A1

DETAILS OF THE REQUANTIFICATION ANALYSES

A1.1 LIMERICK

A1.1.1 Initiating Event Frequencies

A1.1.1.1 Cable-Raceway Fires

The SNL data base covering 853.3 reactor years identifies three cable-raceway fires that may or may not involve IEEE383 rated cables. In the interest of conservatism these events will be included pending verification. Therefore, the initiating event frequency is:

$$3/853.3 = 3.5E\text{-}3/yr \quad .$$

Cable-raceway fires were partitioned by a cable weighting ratio as was done in the original PRA. The results of this partitioning are shown in Table A1-1.

A1.1.1.2 Electric Panel Fires

The Sandia data base identifies 38 electric panel fires. Therefore the initiating event frequency is:

$$38/853.3 = 4.5E\text{-}2/yr \quad .$$

If it is assumed, as in the PRA, that there are 40 panels per plant, then the frequency per panel-year is:

$$4.5E\text{-}2/40 = 1.1E\text{-}3/yr \quad .$$

The number of electrical panels and associated fire frequency for each of the four locations is shown in Table A1-2.

A1.1.1.3 Transient Oil Fires

The Sandia data base identifies no transient oil fires. As in the PRA one oil fire will be assumed. Therefore, the initiating event frequency is:

$$1/853.3 = 1.2E\text{-}3/yr \quad .$$

Partitioning is done by equally dividing the initiating event frequency among the fire zones containing safety related equipment. Fifty zones are identified in the PRA, the initiating event frequency is:

Table A1-1

Limerick Cable-Raceway Fire Frequencies

	Fire Area	Cable Weighting Ratio	Initiating Event Frequency (/yr.)
(2)	13 kV Switchgear Room	0.05	1.8E-4
(44)	Safeguards Access Area	0.17	5.7E-4
(45)	CRD Hydraulic Equip. Area	0.11	3.8E-4
(47)	General Equip. Area	0.10	3.6E-4

Table A1-2

Limerick Electrical Panel Fire Frequencies

	Fire Area	Number of Panels	Initiating Event Frequency (/yr.)
(2)	13 kV Switchgear Room	8	8.9E-3
(44)	Safeguards Access Area	6	6.7E-3
(45)	CRD Hydraulic Equip. Area	2	2.2E-3
(47)	General Equip. Area	3	3.3E-3

Table A1-3

Limerick Transient Oil Fire Frequencies

	Fire Area	Critical Location (%)	Initiating Event Frequency (/yr.)
(2)	13 kV Switchgear Room	0.4	9.6E-6
(44)	Safeguards Access Area	0.5	1.2E-5
(45)	CRD Hydraulic Equip.	0.5	1.2E-5
(47)	General Equip. Area	0.5	1.2E-5

$1.2E-3/50 = 2.4E-5/yr$

Limerick identifies critical area percentages within each fire zone as shown in Table A1-3 to ratio this transient oil fire frequency.

The 13 kV switchgear room, safeguards access area, CRD hydraulic equipment area, and general equipment area quantification are illustrated in Figures A1-1 through A1-4 respectively.

A1.2 INDIAN POINT UNIT 2

A1.2.1 Switchgear Room (Fire Zone 14)

$$\phi SE,14 = \lambda AUX\ f_{SWG}\ f_{SL}\ Q\ (r_G)$$

where

λAUX = the frequency of fires in primary auxiliary building control (PAB), building (CB), and fan house (FH) = 6.4E-2

f_{SWG} = the fraction of PAB,CB, and FH fires that may occur in the switchgear room = 0.29

f_{SL} = the conditional frequency of large exposure fire underneath the cable trays running east/west given a fire in the switchgear room = 1.3E-2

$Q(r_G)$ = the fraction of large switchgear room fires that would damage the cables in trays running east/west = 0.83

$\phi SE,14 = 2.0E-4$

A1.2.2 Electrical Tunnel (Fire Zone 1A, PAB side)

This zone has three containment event tree entry states.

A1.2.2.1 Entry State SLF

$$\phi SLF,1A = \lambda AUX f_T f_R Q(r_V) Q_{LH}$$

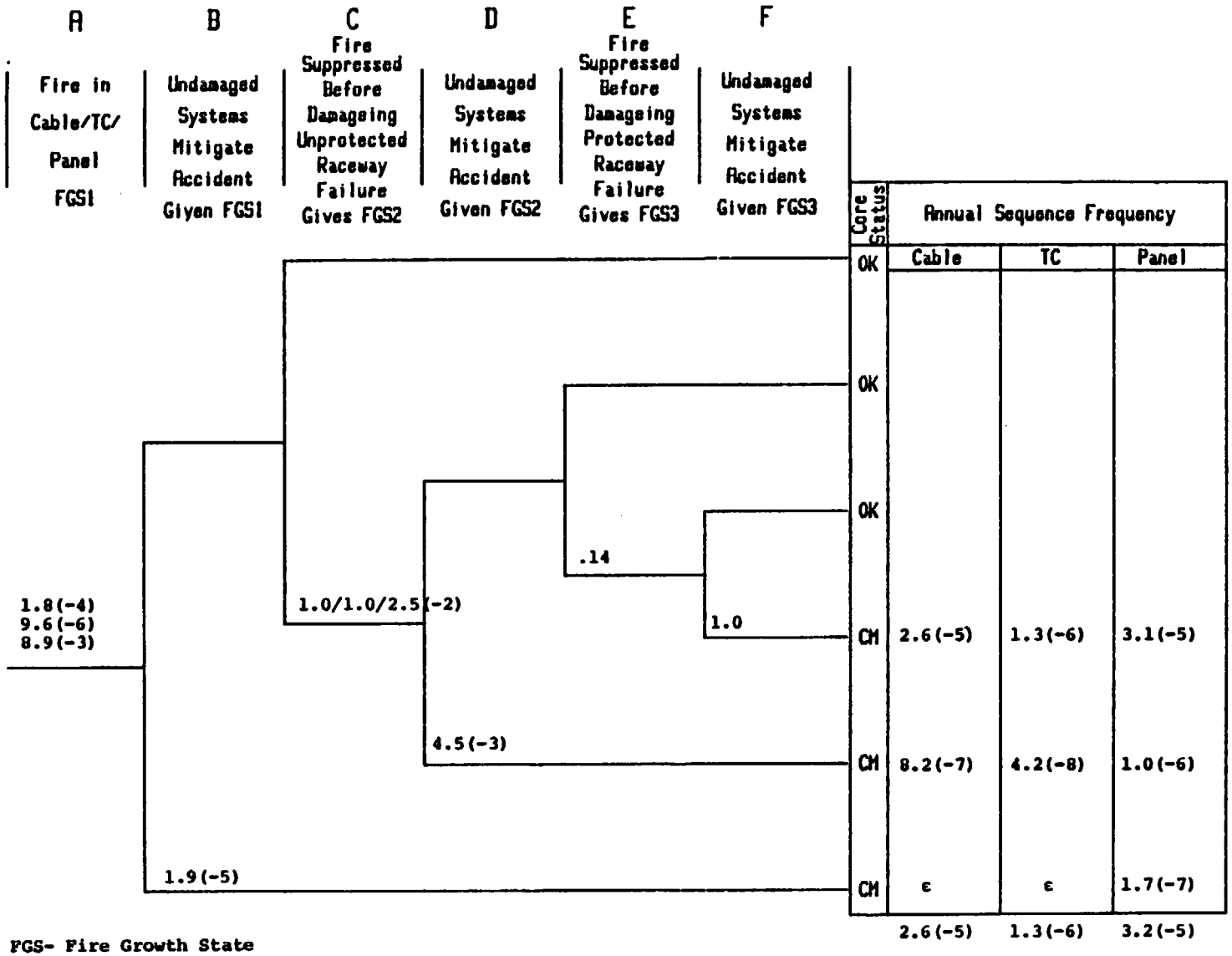

Figure A1-1. Fire-Growth Event Tree For Fire Area 2

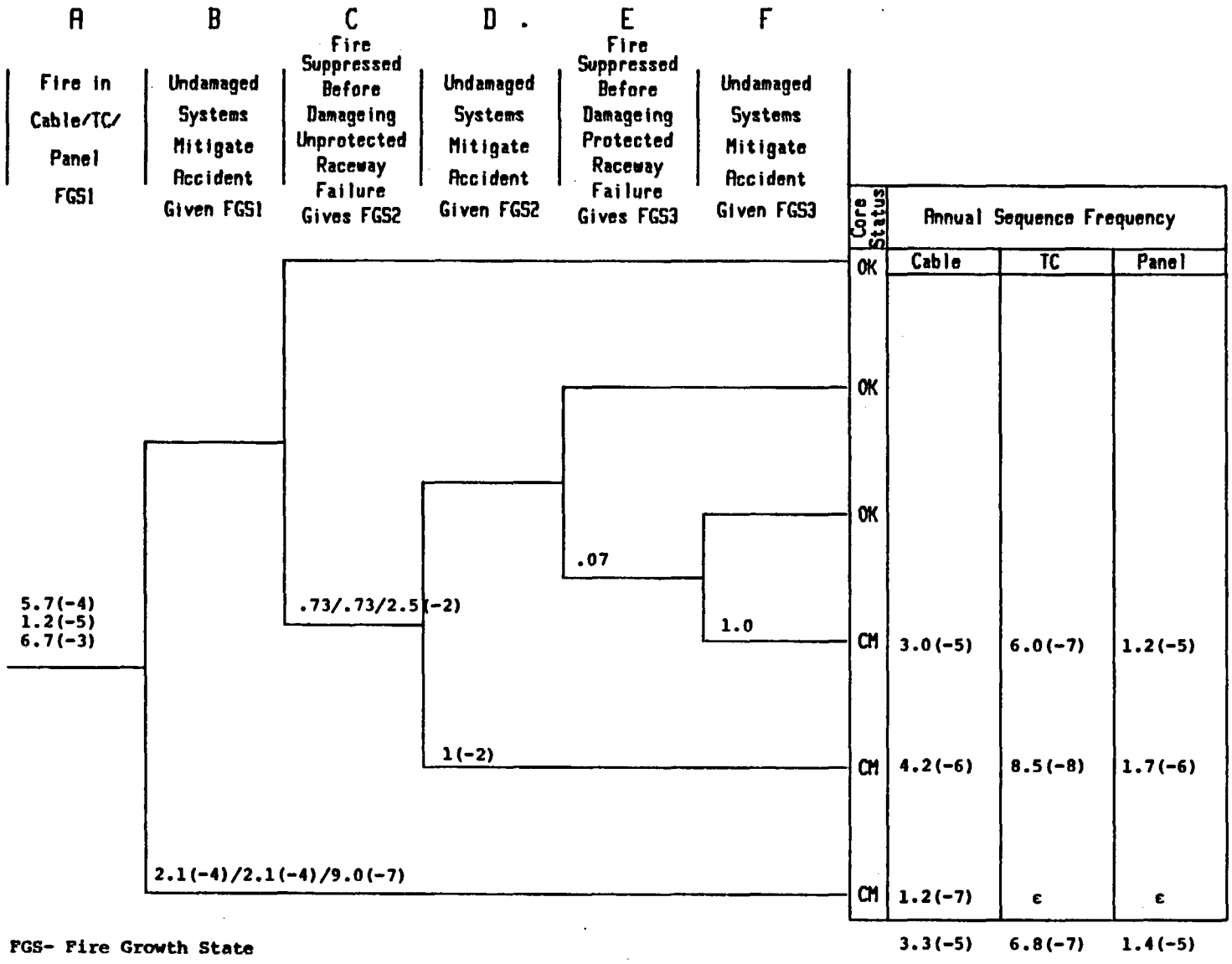

Figure A1-2. Fire-Growth Event Tree For Fire Area 44

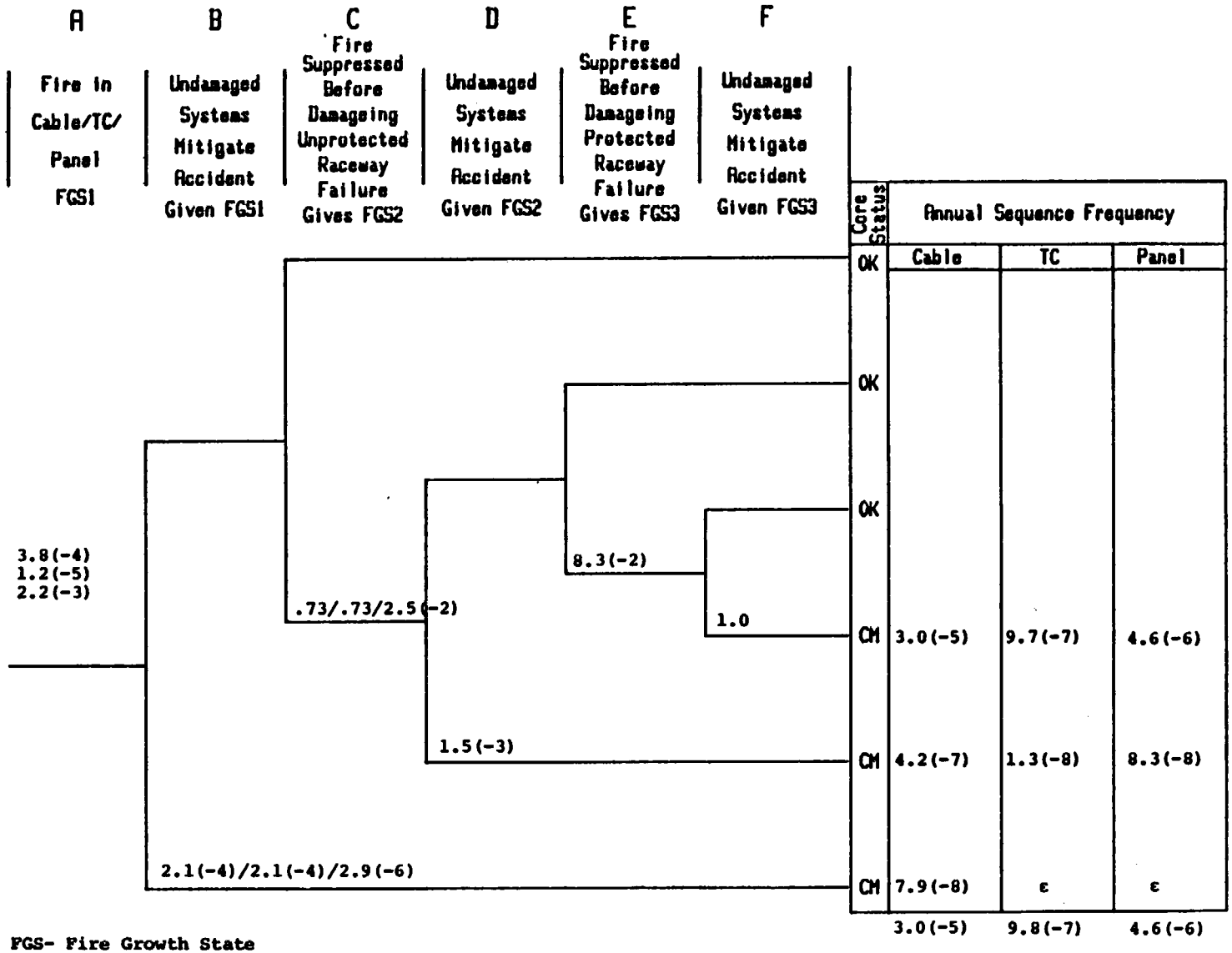

FGS- Fire Growth State

TC- Transient Combustible

Total overall core melt frequency = 3.5(-5) per year

Figure A1-3. Fire-Growth Event Tree For Fire Area 45

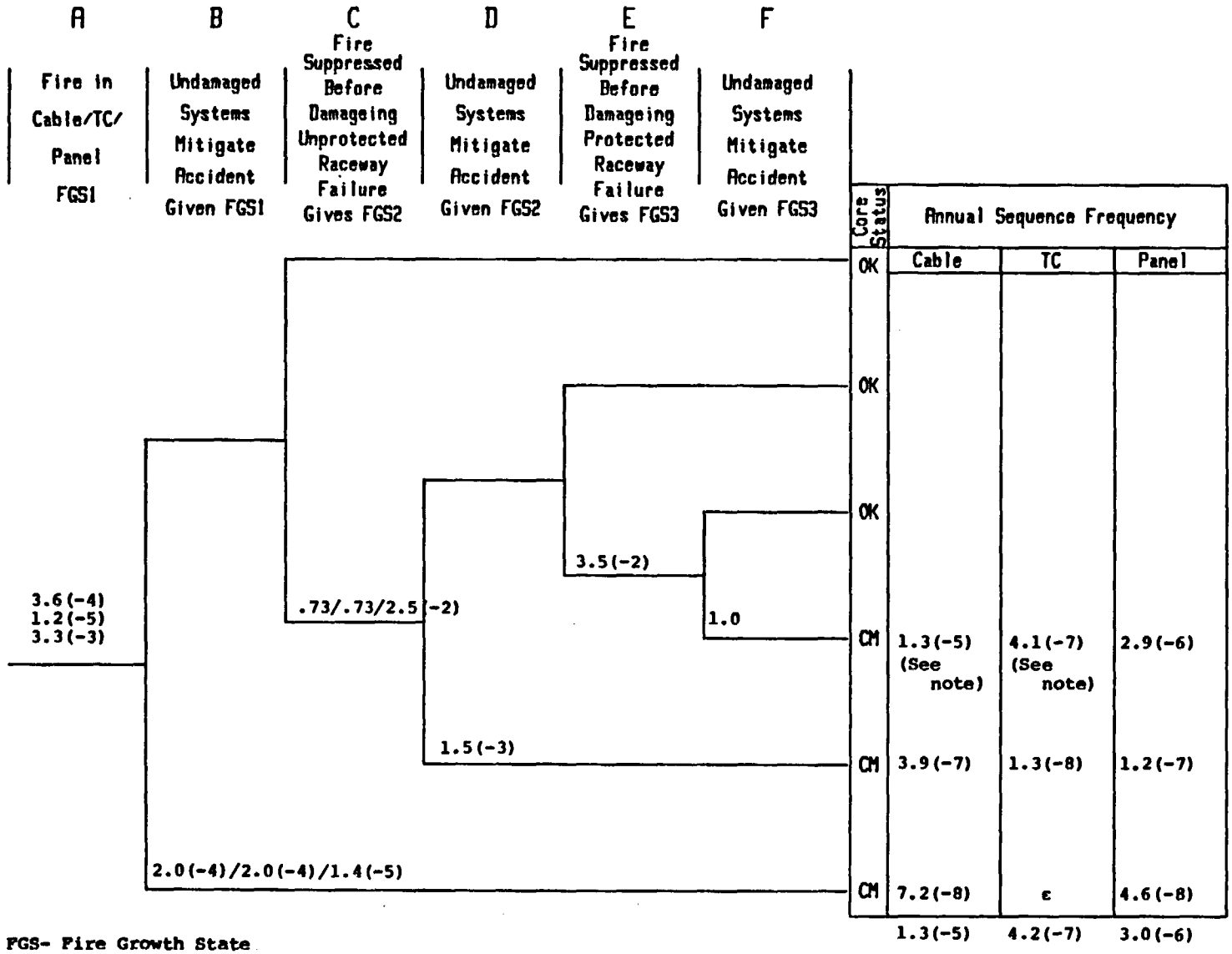

FGS- Fire Growth State

TC- Transient Combustible

Note- Because of the evaluation of Event E, the probability of Event C is not included in the evaluation of the sequence frequency.

Total overall core melt frequency = 1.8(-5) per year

Figure A1-4. Fire-Growth Event Tree For Fire Area 47

where

λAUX = as in A1.2.2.1

f_T = fraction of PAB,CB, and FH fires that occur in the electrical tunnel in PAB = 6.5E-2

f_R = fraction of electrical tunnel fires that occur in the right stack of trays = 0.5

$Q(\tau_V)$ = conditional frequency of fire propagation = 0.93

Q_{LH} = frequency of failure of the recirculation system given the loss of MCC buses 26A and 26B due to the fire = 0.05

$\phi SLF,1A$ = 9.7E-5

A1.2.2.2 Entry State SEF

$$\phi SEF,1A = \lambda AUX f_T f_R Q(\tau_V)\ (Q_{AFWS}+Q_{HPIS})$$

where λAUX, f_T, f_R, $Q(\tau_V)$ as in A1.2.2.1

Q_{HPIS} = frequency of failure of the HPIS independent from the fire = 1.9E-4

Q_{AFWS} = frequency of failure of the AFWS independent from the fire = 1.9E-5

$\phi SEF,1A$ = 4.0E-7

A1.2.2.3 Entry State SE

$$\phi SE,1A = \lambda AUX\ f_T\ f_A\ Q(\tau_A)$$

where λAUX, f_T as in A1.2.2.1

f_A = fraction of electrical tunnel fires that are large and in the aisle portion = 2.7E-2

$Q(\tau_A)$ = conditional frequency of fire propagation = 0.72

$\phi SE,1A$ = 7.9E-5

A1.2.3 Cable Spreading Room

$$\phi CM,CSR = \lambda CSR\ f_{ES}\ Q(\tau_G)Q_s$$

where

λCSR = frequency of fires in the cable spreading room = 2.7E-3

f_{ES} = fraction cable spreading room fires that are large and near the center of the northern wall = 2.6E-2

$Q(\tau_G)$ = 0.55

Q_s = probability of failure to activate the auxiliary feedwater system = 2.5E-2

$\phi CM,CSR$ = 9.6E-7

A1.3 OCONEE

A1.3.1 Electrical Equipment Room

$$\phi CM = \lambda AUX\ f_{ER} f_{S,ER}\ Q_{ER}\ (\tau_G)\ ((Q_{EFWS} \times Q_{SAFETY}) + (Q_{EFWS} \times Q_{SSF}))$$

where

λAUX = frequency of auxiliary building fires = 6.4E-2

f_{ER} = fraction of fires in the equipment room = 0.16

$f_{S,ER}$ = fraction of fires that are large and near trays = 2.6E-2

$Q_{ER}(\tau_G)$ = probability that the fire grows and is not suppressed = 0.81

Q_{EFWS} = EFWS failure probability = 1.2E-3

Q_{SAFETY} = probability of a safety relief valve failing to reclose after a loss of all feedwater = 0.1

Q_{SSF} = probability of failure to initiate SSF system cooling within 1 hr of the loss of all cooling = 0.13

ϕCM = 5.9E-8

A1.3.2 Cable Shaft Area

frequency (initiating event) = $\lambda AUX\ f_{ER}\ f_{S,CS}\ Q_{CS}(\tau_G)$

where λAUX, f_{ER} as in A1.3.1

$f_{S,CS}$ = fraction of fires that are large and in the cable shaft = 2.6E-2

$Q_{CS}(\tau_G)$ = probability that a fire grows and is not suppressed = 0.70

frequency (initiating event) = 1.9E-4

The frequency of the three core damage sequences is quantified in Figure A1-5.

A1.4 SEABROOK

A1.4.1 Cable Spreading Room

The quantification of core damage sequences for the cable spreading room is illustrated in Figure A1-6.

A1.4.1.1 Sequence 2

The equation for the center branch of the event tree which leads to result states 1 and 2 is:

$$Q_{PCC,CSR} = f_{CSR5,G}\ f_{CSR5,S} Q_5(\tau_G) + f_{CSR6,G}\ f_{CSR,S}\ Q_6(\tau_G)$$

where

$f_{CSR5,G}$ = geometric factor for medium fire = 6.5E-2

$f_{CSR5,S}$ = severity factor for medium fire = 9.1E-2

$f_{CSR6,G}$ = geometric factor for large fire = 9.7E-2

$f_{CSR6,S}$ = severity factor for large fire = 2.7E-2

$Q_5(\tau_G)$ = conditional frequency of medium fire propagation = 0.72

$Q_6(\tau_G)$ = conditional frequency of large fire propagation = 0.83

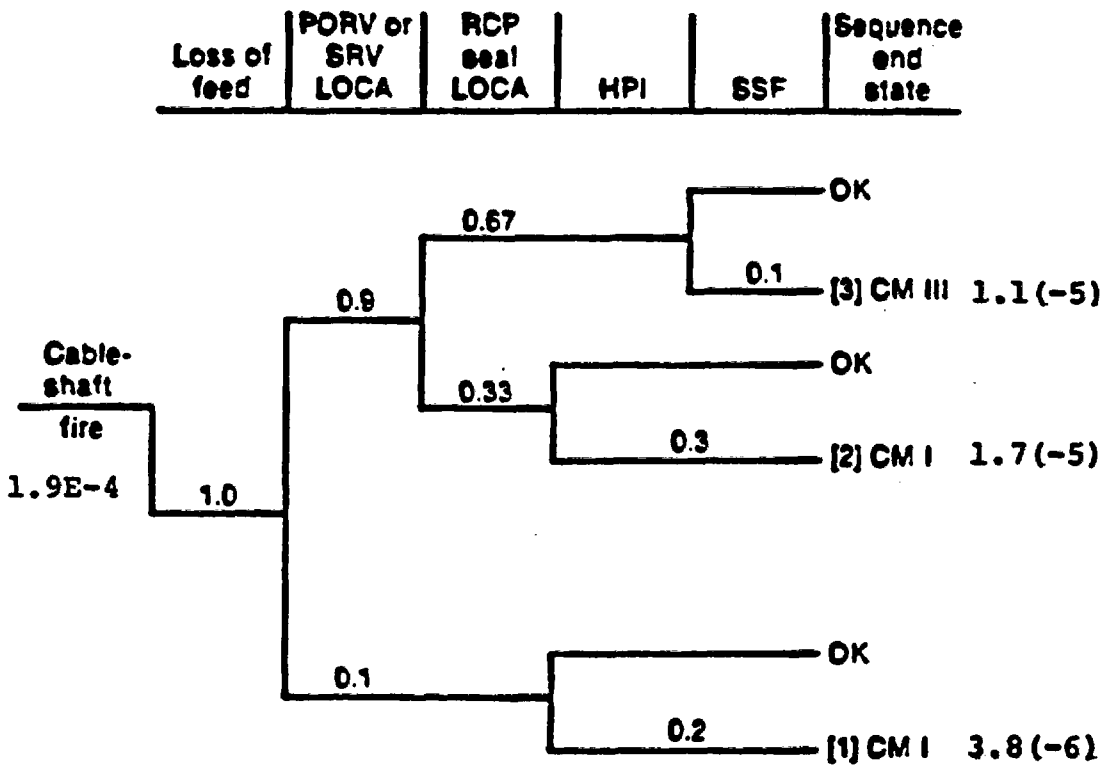

Figure A1-5 Cable-Shaft Fire Event Tree

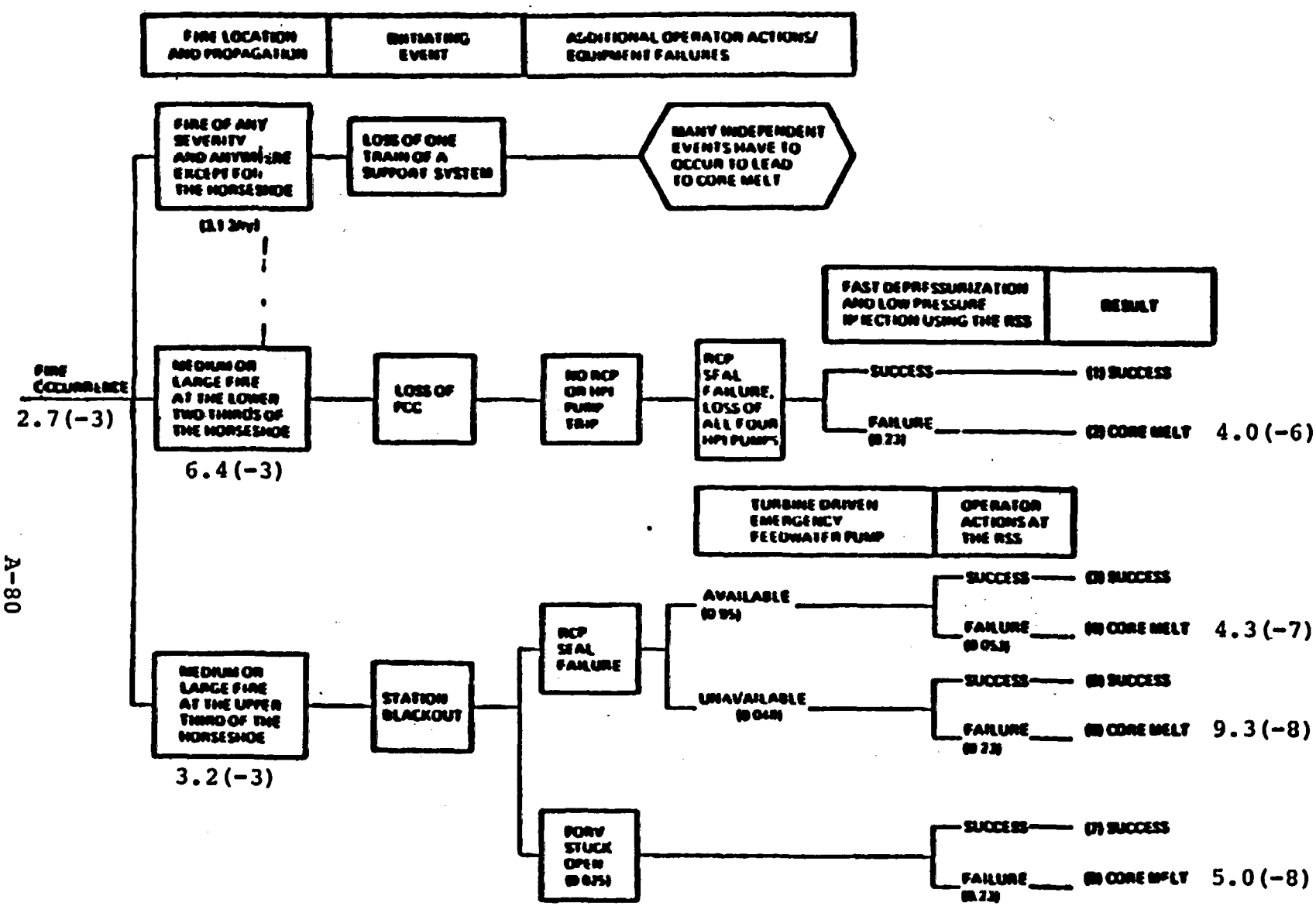

Figure A1-6 A Graphic Representation of the Different Scenarios of Cable Spreading Room Fire

Therefore

$$Q_{PCC,CSR} = 6.4E\text{-}3 \quad .$$

Core melt frequency for Sequence 2 can now be calculated by:

$$\phi_{CSR,2} = \lambda_{CSR}\, Q_{PCC,CSR}\, f_{HE,2}$$

where

λ_{CSR} = initiating event frequency for fires in the cable spreading room = 2.7E-3

$Q_{PCC,SCR}$ = fires leading to a loss of the PCC system = 6.4E-3

$f_{HE,2}$ = failure probability of operators to mitigate the consequences of Sequence 2 at the remote shutdown panel = 0.23.

Therefore

$$\phi_{CSR,2} = 4.0E\text{-}6 \quad .$$

A1.4.1.2 Sequence 4

Quantification of Sequence 4 is the equation

$$\phi_{CSR,4} = \lambda_{CSR} Q_{EP,CSR}\, f_{HE,4}\, (1-Q_{TDEFP})(1-Q_{S1,PORV})$$

where λ_{CSR} is as in Sequence 2

$f_{HE,4}$ = allows the operators 7 hours to restore lost equipment from the remote shutdown panel = 5.3E-2

$Q_{EP,CSR}$ = loss of electric power leading to station blackout given a fire in the cable spreading room = 3.2E-3

Q_{TDEFP} = unavailability of the turbine-driven emergency feedwater pump = 4.8E-2

$Q_{S1,PORV}$ = stuck open PORV = 2.5E-2

Therefore

$$\phi CSR,4 = 4.3E\text{-}7 \quad .$$

A1.4.1.3 Sequence 6

The sixth sequence is quantified by equation

$$\phi CSR,6 = \lambda CSR\ Q_{EP,CSR}\ Q_{TDEFP}\ f_{HE,2}\ (1\text{-}Q_{S1,\ PORV})$$

where all terms have been previously defined.

$$Q_{CSR,6} = 9.3E\text{-}8$$

A1.4.1.4 Sequence 8

The equation for Sequence 8 is

$$\phi CSR,8 = \lambda CSR\ Q_{EP,CSR}\ Q_{S1,PORV}\ f_{HE,2}$$

where all terms have been previously defined.

$$\phi CSR,8 = 5.0E\text{-}8$$

A1.4.2 Control Room

The control room analysis identifies three areas of the main control board (designated Zones C, G, and F) as the dominant contributors to core damage frequency.

A1.4.2.1 Zone C

The equation for Zone C is

$$\phi CR7 = \lambda CR\ f_{CR7,G}\ f_{HE,2}$$

where

λCR = initiating event frequency of fires in the control room = 4.4E-3

$f_{HE,2}$ = same factor as identified in A1.4.1.1 = 0.23

$f_{CR7,G}$ = geometric factor for fires in Zone C = 8.1E-3

$\phi CR7$ = 8.2E-6

A1.4.2.2 Zone G

The equation of Zone G is

$$\phi CR,G = \lambda CR \; f_{CR7,G} \; f_{HE,4}$$

where all factors have been previously identified.

$$\phi CR,G = 1.9E-6$$

A1.4.2.3 Zone H

$$\phi CR,H = \phi CR,G = 1.9E-6$$

A1.4.3 <u>PCC Pump Area</u>

Two fire scenarios are postulated for the northeast corner of the fire zone. These scenarios are described by the following equation

$$\phi P2C,1 = \lambda AUX \; f_{P2C,G1} \; [f_{P1A,S} \; Q_2(\tau_G) + f_{P2C,S2} \; Q_3(\tau_G)]$$

where

λAUX = frequency of fires in the auxiliary building = 6.4E-2

f_{P2C} = the fraction of auxiliary building fires that occur in the PCC pump area = 0.16

$f_{P2C,G1}$ = the fraction of fires that occur in the northeast corner of the fire zone = 0.13

$f_{P1A,S}$ = severity factor for smaller fires at the critical location = 0.13

$f_{P2C,S2}$ = severity factor for larger fires at the critical location = 2.6E-2

$Q_2(\tau_G)$ = conditional frequency of small fire propagation = 0.72

$Q_3(\tau_G)$ = conditional frequency of large fire propagation = 0.83

$\phi_{P2C,1}$ = 1.5E-4

A1.4.4 Turbine Building

The frequency of turbine building fires leading to a loss of offsite power and a failure of air compressors and the startup feed pump is quantified as follows

$$\phi_{TB} = \lambda_{TB} \, f_{TB,GS}$$

where

λ_{TB} = initiating event frequency of turbine building fires = 3.2E-2

$f_{TB,GS}$ = frequency of very large fires on the ground floor of the turbine building or of fires in the relay room = 3.9E-2

ϕ_{TB} = 1.3E-3

APPENDIX A2

COMPARISON OF COMPBRN I AND COMPBRN III

Before using COMPBRN III to requantify the fire scenarios for the four plants, a benchmarking calculation was performed to check the new hot gas layer model and forced ventilation model. Data obtained in large-scale SNL fire tests (Reference 16) representative of nuclear power plant geometries was used for the comparison. A poor performance of the hot gas layer model in COMPBRN III compared to the SNL test data was observed. This poor performance was traced back to an error in subroutine CGAS of the code, where a temperature multiplier has been omitted. With this error corrected, the code still significantly underpredicted test data for hot gas layer temperatures. This underprediction was traced to the way COMPBRN III handles hot gas layers in forced ventilation environments without doorways. Under forced ventilation conditions COMPBRN III automatically assumes that the hot gas layer immediately fills the room from ceiling to floor. The heat losses from the hot gas layer are therefore based on the area of the ceiling plus the area of the walls. This is nonconservative except for late in the fire development when the hot gas layer does fill up the room. Before performing the requantification, the code was modified such that the heat losses were based on the area of the ceiling alone. This provides a more conservative estimate of hot gas layer temperature in the calculations and an estimate that was more consistent with the test data. The predictions of the code as originally received, with the correction to CGAS, and with the reduced heat transfer area are superimposed on the test data in Figure A2-1.

Once these modifications were made, the requantification of the fire scenarios using COMPBRN III was begun. First, a sensitivity study was performed using the Indian Point 2 switchgear room. The following parameters were varied in the sensitivity study:

Parameter	Range
Radiative Fraction	0.4 - 0.5
Cable Reflectivity	0.01 - 0.3
Combustion Efficiency	0.7 - 0.9
Cable Mass Per Tray	4 - 40 kg
Spontaneous Ignition Temp.	673 - 819 K
Piloted Ignition Temp.	673 - 779 K
Damage Temperature	623 - 779 K
Pilot Fire Diameter	0.3 - 0.9 M
Pilot Fire Location	where appropriate
Ceiling	yes or no
Forced Ventilation	0-1 air change/hour

Based on the sensitivity analysis conducted with COMPBRN III, the code was found to be relatively insensitive to most of the cable physical properties. The one exception to this was the cable spontaneous ignition temperature, on which the fire growth times were primarily dependent. Variation of the cable physical properties yielded a distribution of propagation times which reflected the influence of each parameter on fire propagation time.

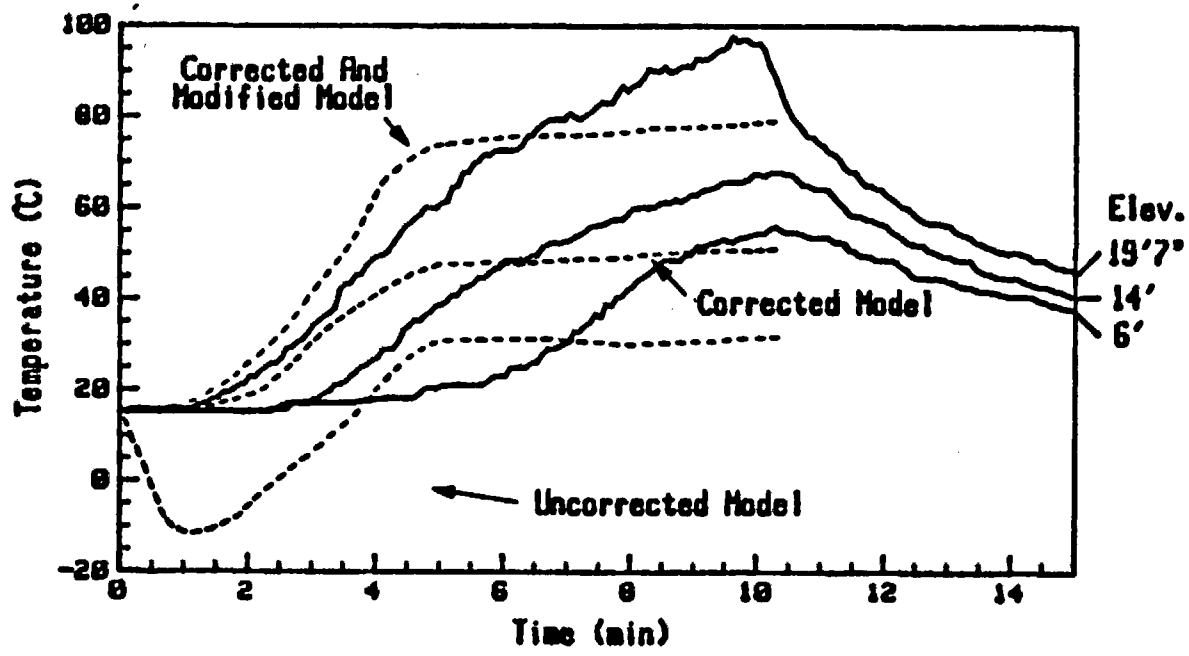

Figure A2-1. Solid Curves - Data From Base Line Validation Test 4 Broken Curves - COMPBRN III Predictions

During the sensitivity study and subsequent requantification calculations, certain code predictions contrary to the physics of the situation were observed. Some of the reasons for these results are as follows:

1. Radiative heat transport to objects directly above the flame is not modeled at all.

2. Only the midpoint of each fuel element is significant in the calculations.

3. Radiative viewfactors do not reflect the influence of elevation above the flame.

As a consequence of 1 and 2 a fuel element directly above the flame would be cooler than fuel elements adjacent to it which were not as close to the flame. Since the fuel element directly above the flame receives only convective heating from the fire plume (at least until adjacent fuel elements ignite), its maximum temperature is limited to the plume temperature at the elevation (typically 350 to 500 K). Meanwhile the adjacent fuel elements heat up and ignite (700 to 800 K) long before the fuel element directly over the flame does. In some cases, the fuel element directly over the flame does not ever ignite, even though fuel elements along side of it but farther from the flame do ignite. This makes the latest version of the code very sensitive to the pilot fuel location relative to the cable trays. To ignite a particular cable fuel element, it is sometimes necessary to move the fire out from directly underneath the element. This effect was also present in the first version of COMPBRN used for the four fire PRAs.

In the original version of COMPBRN, the flame is modeled as a cylinder, and viewfactors are calculated from the sides of the cylinder to objects which are not directly overhead. The COMPBRN III manual (Reference 20) states that the present viewfactor subroutine is a corrected version of the viewfactor subroutine given in the original COMPBRN code. No mention of exactly what the error was or what its effect would have been is made. In COMPBRN III, the flame is modeled as a truncated cone for the purposes of calculating radiative viewfactors. Neither version of the code calculates radiative heat transfer from a flame to a target directly above it.

As a consequence of 1 and 2 given above, it was also observed that a small fire could be more damaging than a large fire. In several instances during the requantification, large oil fires (0.9 m in diameter) would not ignite trays directly above them since the entire cable tray would have been directly above the flame and thus no radiative heat transfer to the tray would be modeled. The tray would reach the plume temperature at that elevation (350 to 500 K) but would get no hotter. In contrast to this, a smaller fire (0.6 m in diameter would ignite some of the farther portions of the cable tray since their midpoints were far enough away from the flame for radiation

transport to them to be modeled. This effect can also be seen in the original quantification of the Seabrook cable spreading room fire scenario where a "medium" fire (0.3 m in diameter) results in a median propagation time of 14.4 minutes, whereas a "large" fire (0.6 m in diameter) requires a median time of 43.2 minutes to propagate.

In some instances in the requantification, COMPBRN III predicted cable trays to be immersed in the flames from a slightly lower cable tray (which had already ignited) for periods of up to 10 minutes without ignition occurring. Perhaps this is a result of 1 above, and the low value of flame zone convective heat transfer coefficient (22 w/m^2K) used in the analysis. (This value was also used in the original quantification of the four PRAs.)

It is clear from the above experiences using COMPBRN III and our knowledge that similar models exist in the original version of COMPBRN that there is considerable uncertainty in the COMPBRN code. Additionally, the amount of assumed conservatism in the original version of the code may not be as large as previously believed. Discussions with others who have used the code have confirmed that the above inadequacies do exist, as well as several other problems which may only be inherent to COMPBRN III. These other problems appear to be related to the heat conduction subroutine (DIFFUS) which is not used very much in the original version of COMPBRN (since only ceiling and wall temperatures are calculated with it) but which is used extensively in COMPBRN III to calculate fire barrier and fuel element temperatures in addition to wall and ceiling temperatures.

The observed problems with the heat conduction subroutine in COMPBRN III include the following. In several cases, the code terminated execution and would not converge to a temperature solution for a barrier that was in close proximity to a flame. In some situations ignition of fuel elements was not permitted until the spontaneous ignition temperature was reached even though the element was very near or immersed in a flame. In one situation, a cable tray fire self-extinguished and would not spread along the tray horizontally. The self-extinguishment was apparently caused by the depletion of fuel in the interior (burning) elements. It was also noted in one calculation that subroutine DIFFUS predicted the same temperature increase for two fuel elements identical in size and properties even though one had almost twice the net heat flux of the other.

The results of the calculations were also very sensitive to the non-communication matrix inputs. This matrix supposedly allows the user to determine which fuel elements cannot see other fuel elements and, therefore, cannot exchange energy. In one calculation which examined the effect of the hot gas layer on the propagation times, several horizontal running cable trays were modeled, one vertically above the other. Since the middle trays were somewhat prevented from seeing the ceiling due to the presence of the top tray, the noncommunication matrix was input to prevent exchange between the ceiling and the middle trays. Since this calculation was for a situation where there

was forced ventilation and no doorway, COMPBRN III assumes that the hot gas layer extends from ceiling to floor (as discussed previously). Therefore, all cable trays should have been immersed in the hot gas layer during this calculation. For yet to be determined reasons, COMPBRN III kept the middle trays (which could not see the ceiling but should have been immersed in the hot gas layer) at their initial temperature (298 K) throughout the calculation rather than allowing them to exchange energy with the hot gas layer (500 K).

As a result of the above mentioned problems it was in some cases impossible to get answers which made physical sense using COMPBRN III. For some important scenarios ignition of cable insulation never occurred (e.g., Limerick), while in others a few cables would ignite but would be unable to ignite another cable tray 0.5 m above it that was immersed in the flames from the lower tray. For every scenario of interest, five to 20 COMPBRN III calculations were performed to examine the effects of various assumptions and inputs on the results. In most cases, the pilot oil fires were 0.6-or-0.9-m-diameter pools. A 0.3-m-diameter oil pool fire, which was the size of fire cable of causing damage in the four PRAs, was found to be incapable of igniting any cable trays in the scenarios considered.

To summarize, the fire environment calculations of the four original PRAs as well as the requantification calculations exhibit a great deal of uncertainty. The models used in the COMPBRN code are not always correct, and not always conservative. Additional uncertainty exists in the Indian Point 2 and Oconee fire PRAs because all nearby cable trays were assumed to have to fail in order to lose the second safety-related division of cables.

APPENDIX A3

DATA TABLES

Table A3-1

Control Room Fires

Plant Name	Date of Occurrence	Plant Status	Fire Type	Remarks
Unknown	7/4/78	Power Operation	Diode	Zener diode failed in an RPS circuit.
Three Mile Island 2	7/12/79	Cold Shutdown	Circuit Board	Overheated resistor caused fire in a radiation monitoring readout panel. Extinguished immediately.
Hatch 1*	3/12/83	Power Operation (94%)	Relay	Low reactor water level RPS relay burned causing a 1/2 scram (failed safe). Extinguished by operators.
Hatch 1*	3/30/83	Power Operation (34%)	Relay	Scram discharge volume high level RPS relay burned causing a 1/2 scram (failed safe). Extinguished by operators. Same type of relay as in previous event.

*Counted as one event for quantification of fire frequency.

Table A3-2

Cable Fires

Plant Name	Date of Occurrence	Plant Status	Fire Location	Remarks
San Onofre 1*	2/7/68	Power Operation	Auxiliary Building	Thermally overloaded 480 V cable caught fire - 55 cables damaged.
San Onofre 1*	3/9/68	Power Operation	Auxiliary Building	Thermally overloaded cables in switchgear room.
Quad Cities 2*	7/16/72	Power Operation (80%)	Reactor Building	Cable ignited due to defective splice - two trays involved.
Oyster Creek 1	5/77	Refueling	Turbine Building	Aluminum to copper bus terminal connectors did not meet specs. Loose connectors caused high resistance.
Browns Ferry 1	1/21/80	Power Operation	Turbine Building	Small smoldering fire in a cable tray beneath the turbine building operating floor.
Beaver Valley 1	1/27/82	Cold Shutdown	Auxiliary Building	Power cable insulation breakdown in switchgear area.

*Not included in frequency computation due to nonrated (IEEE-383) cabling.

Table A3-3

Cable Spreading Room Fires

Plant Name	Date of Occurrence	Plant Status	Fire Type	Remarks
Browns Ferry 1 & 2	3/22/75	Power Operation (100%)	Cable Fire	Spread from cable spreading room to reactor building in Unit 1 and affected Unit 2.
Peach Bottom 3	4/18/77	Power Operation (25%)	Relay Fire	Fire in PCIS logic and RHR valve relay.

Table A3-4

Auxiliary Building Fires

Plant Name	Date of Occurrence	Plant Status	Fire Type	Remarks
San Onofre 1	2/7/68	Power Operation	Cable	Thermally overloaded 480 V cables caught fire - 55 cables damaged.
San Onofre 1	3/9/68	Power Operation	Cable	Thermally overloaded cables in switchgear room.
Palisades	6/25/71	Cold shutdown	Air Dryer Filter	Low flow of air through air dryer resulted in temperature buildup and ignition of filter.
LaCrosse	7/15/72	Power Operation	Circula-tion pump	Oil on pump lagging ignited by hot pump casing.
Turkey Point 3	12/16/72	Power Operation	Battery Charger	Battery charger overheated and a small fire occurred in the transformer winding insulation.
Robinson 2	4/19/74	Power Operation	Expansion Joint	Cigarette or welding slag from construction workers ignited combustible expansion joint material.
Robinson 2	4/19/74	Power Operation	Expansion Joint	Same type of event as previous event - occurred one week apart.

Table A3-4

Auxiliary Building Fires (Continued)

Plant Name	Date of Occurrence	Plant Status	Fire Type	Remarks
Turkey Point 3	5/75	Power Operation (100%)	Battery Charger	Transformer overheated igniting insulation. Similar to previous event on 12/14/72.
Millstone 2	3/24/76	Hot Shutdown	Motor Control Center	Fire resulted from arcing of a supply lead. Extinguished by deenergizing MCC.
Dresden 2	4/76	Cold Shutdown	Circuit Breaker	ECCS Jockey Pump Control feed breaker caught fire from a burned-out contacter coil.
Fitzpatrick	6/11/76	Power Operation (93%)	Circuit Breaker	Overload in HPCI valve circuit breaker. Extinguished by deenergizing breaker.
Millstone 2	11/15/76	Hot Shutdown	Relay-MCC	Relay fire in motor control center.
Pilgrim 1	3/77	Hot Shutdown	Circuit Breaker	Circuit breaker under-voltage coil burnt due to high floating charge on station battery.

Table A3-4

Auxiliary Building Fires (Continued)

Plant Name	Date of Occurrence	Plant Status	Fire Type	Remarks
Fitzpatrick	4/4/77	Power Operation (88%)	Circuit Breaker	Coil failed by fire in HPCI test valve breaker and extinguished by deenergizing. Similar to 7/28/75 event.
Arnold	5/7/77	Refueling Outage	Circuit Breaker	Breaker relay failed, burning open and starting phase burner material above it on fire.
Salem 1	6/30/77	Power Operation	Relay-Cabinet	Fire detection instrumentation panel fire due to relay failure.
Unknown	4/13/78	Power Operation	Circuit Breaker-MCC	Failure breaker contact due to improper maintenance - occurred in motor control center.
Robinson 2	7/16/78	Power Operation	Battery	Resistance heating of terminal connection ignited plastic tops of two cells of a battery.
Unknown	7/27/78	Power Operation	Battery Terminal	Defective terminal or connections not secured.

Table A3-4

Auxiliary Building Fires (Continued)

Plant Name	Date of Occurrence	Plant Status	Fire Type	Remarks
Arkansas Nuclear One Unit 1	8/16/78	Cold Shutdown	Pump Motor	LPSI pump motor on fire (being used for shutdown cooling) due to incorrect installation of motor bearings resulting in shorting of rotor with the stator.
Salem 1	1/79	Power Operation (95%)	Trans-former	Moisture in the windings resulted in a short and subsequent fire.
Palisades	4/4/79	Power Operation (100%)	Battery	Battery burst due to internal explosion of hydrogen ignited by a test lead being used to measure voltage.
San Onofre 1	11/27/79	Power Operation (100%)	Switch-gear	Rodents shorted two phases of a 480 V bus in the switchgear room.
Hatch 2	4/80	Cold Shutdown	Cable	A loose connection resulted in a wire of an RPS motor generator set breaker burning.
Unknown BWR	4/15/80	Power Operation	Bus	Fire involving supply bus occurred in switchgear room.

Table A3-4

Auxiliary Building Fires (Continued)

Plant Name	Date of Occurrence	Plant Status	Fire Type	Remarks
Surry 1	6/3/80	Power Operation (100%)	Trans-former	A filtering capacitor in a vital bus transformer caught fire damaging the transformer.
Unknown PWR	7/6/80	Power Operation	Circuit Breaker	Circuit breaker caught fire when it failed to close properly because contacts were out of adjustment.
Unknown PWR	10/2/80	Power Operation	Valve Motor	Air sample inlet valve motor issued smoke. Power was removed from motor.
Trojan	12/31/80	Power Operation (100%)	Circuit Breaker	Breaker stab misaligned causing ignition of plastic dust collector by arcing.
Palisades	1/24/81	Power Operation (98%)	Pump Motor	Component cooling water pump motor caught fire due to bearing failure from loss of lubricating oil.
San Onofre 1	7/17/81	Cold Shutdown	Gas Decay Tank	Explosion of H_2 in recombiner.

Table A3-4

Auxiliary Building Fires (Continued)

Plant Name	Date of Occurrence	Plant Status	Fire Type	Remarks
Indian Point 2	8/10/81	Power Operation (100%)	Pump Motor	Short circuit within SI pump caused fire and an overload trip of its supply breaker.
North Anna 1	11/11/81	Power Operation	Pump	Main feedwater pump fire.
Hatch 1	11/23/81	Cold Shutdown	Relay	Insulation breakdown caused fire in a reactor low-low RPS relay.
Point Beach 1	10/15/82	Power Operation (78%)	Circuit Breaker	Supply breaker for MG set caught fire.
Salen 1	11/9/82	Cold Shutdown	Relay	Relay failure resulted in a fire in a fire detection instrumentation panel. Fire detectors for switchgear rooms, battery room, and DG area were rendered inoperable.
Brunswick 1	11/27/82	Power Operation (68%)	Battery Charger	Resistor on charger amplifier board opened causing a voltage increase and capacitor failure.

Table A3-4

Auxiliary Building (Continued)

Plant Name	Date of Occurrence	Plant Status	Fire Type	Remarks
Oconee 2	2/3/83	Power Operation (100%)	Pump Motor	Loss of lubrication oil resulted in high bearing temperature and smoke.
Brunswick 1	4/26/83	Refueling	Trans-former	Following a loss of off-site power, a fire occurred in a transformer between emergency buses.
Oconee 3	5/25/83	Power Operation (100%)	Cable and Conduit	Welding operation started a fire in conduit surrounding a cable (letdown valve).
Salem 2	6/20/83	Cold Shutdown	Trans-former	Transformer breaker tripped on overcurrent and was reclosed. Fire occurred immediately thereafter.
Surry 1	9/9/83	Power Operation (100%)	Control Panel	Water entered a control room ventilation chiller control panel shorting motor starter contacters.

Table A3-4

Auxiliary Building (Concluded)

Plant Name	Date of Occurrence	Plant Status	Fire Type	Remarks
Yankee Rowe	8/2/84	Power Operation (100%)	Circuit Breaker	High resistance in the main disconnecting contacts of the center phase of the breaker caused an arc to propagate to outside phases.

Table A3-5

Cabinet Related Fires

Plant Name	Date of Occurrence	Plant Status	Fire Location	Remarks
Turkey Point 3	12/16/72	Power Operation	Auxiliary Building	Battery charger overheated due to short resulting in a small fire in the transformer insulation.
Haddam Neck	5/13/74	Power Operation	Diesel Generator Room	DG field excitation transformers caught fire due to improper grounding during DG test.
Kewaunee	4/75	Power Operation	Turbine Building	A bus fault resulted in a fire and damage to approximately 30 ft. of insulation and corresponding duct.
Turkey Point 3	5/75	Power Operation	Auxiliary Building	Battery charger transformer overheated causing insulation to smoke. Similar to previous event on 12/16/72.
Millstone 2	3/24/76	Hot Shutdown	Auxiliary Building	Fire resulted from arcing of a supply lead in an MCC. Extinguished by deenergizing MCC.

Table A3-5

Cabinet Related Fires (Continued)

Plant Name	Date of Occurrence	Plant Status	Fire Location	Remarks
Dresden 2	4/76	Cold Shutdown	Auxiliary Building	Thermal fatigue and aging caused coil in ECCS jockey pump control feed breaker to burn out.
Millstone 2	11/15/76	Hot Shutdown	Auxiliary Building	Fire occurred in MCC serving ESF equipment due to wrong connector.
Fitzpatrick	6/11/76	Power Operation (93%)	Auxiliary Building	Overload in HPCI valve circuit breaker initiated fire. Extinguished by deenergizing breaker.
Pilgrim 1	3/77	Hot Shutdown	Auxiliary Building	HPCI valve circuit breaker undervoltage coil burnt due to high floating charge on station battery.
Fitzpatrick	4/4/77	Power Operation (88%)	Auxiliary Building	HPCI valve circuit breaker coil failed by fire. Extinguished by deenergizing.
Peach Bottom 3	4/18/77	Power Operation (25%)	Cable Spreading Room	Fire in PCIS logic and RHR valve relay.

Table A3-5

Cabinet Related Fires (Continued)

Plant Name	Date of Occurrence	Plant Status	Fire Location	Remarks
Arnold	5/7/77	Refueling Outage	Auxiliary Building	Breaker relay failed and burned igniting phase burner material.
Peach Bottom 2	7/77	Cold Shutdown	Reactor Building	Fire damaged relays in SRM detector drive relay cabinet.
Peach Bottom 3	9/77	Power Operation (100%)	Turbine Building	Fire involving three relays in FW pump relay cabinet.
Fitzpatrick	2/10/78	Power Operation (79%)	Reactor Building	Supply breaker for RCIC valve electrically overloaded burning coils and wires.
Unknown BWR	4/13/78	Power Operation	Auxiliary Building	Breaker contact misalignment resulted in fire including a controller in an MCC.
Davis Besse 1	5/8/78	Cold Shutdown	Fire Pump House	Defective contacts caused a fire involving the fire pump starter during weekly surveillance.
Unknown PWR	7/4/78	Power Operation	Control Room	Zener diode failed in an RPS circuit.

Table A3-5

Cabinet Related Fires (Continued)

Plant Name	Date of Occurrence	Plant Status	Fire Location	Remarks
Pilgrim 1	8/78	Power Operation (100%)	Diesel Generator Room	DG control cabinet fire involving diodes during DG test run.
San Onofre 1	1/27/79	Power Operation (100%)	Auxiliary Building	Rodents shorted two phases of a 480V bus in the switchgear room.
Three Mile Island 2	7/79	Cold Shutdown	Control Room	Overheated resistor caused fire in a radiation monitoring readout panel. Extinguished immediately.
Unknown PWR	7/24/79	Power Operation	Diesel Generator Room	Fire in a DG exciter control cabinet occurred during a test.
Brunswick 1	4/80	Power Operation (15%)	Diesel Generator Room	DG air start switch relay burned.
Hatch 2	4/80	Cold Shutdown	Auxiliary Building	A loose connection resulted in a wire burning at an RPS motor generator set breaker.

Table A3-5

Cabinet Related Fires (Continued)

Plant Name	Date of Occurrence	Plant Status	Fire Location	Remarks
Unknown BWR	4/15/80	Power Operation	Auxiliary Building	Fire involving supply bus occurred in the switchgear room.
Unknown PWR	7/6/80	Power Operation	Auxiliary Building	Misaligned contacts in breaker resulted in fire in switchgear room.
Trojan	12/31/80	Power Operation (100%)	Auxiliary Building	SW booster pump circuit breaker contacts misaligned resulting in arcing igniting plastic dust collector.
Quad Cities 2	5/15/81	Power Operation (94%)	Diesel Generator Room	Ground fault in control power circuit burned wires which, in turn, shorted and closed breaker connecting DG to emergency bus.
Unknown PWR	11/7/81	Power Operation	Reactor Building	Wire harness inside a H_2 analyzer cabinet shorted out.
Hatch 1	11/23/81	Cold Shutdown	Auxiliary Building	Insulation breakdown caused in a reactor low-low level RPS relay.

Table A3-5

Cabinet Related Fires (Continued)

Plant Name	Date of Occurrence	Plant Status	Fire Location	Remarks
Point Beach 1	10/15/81	Power Operation (78%)	Auxiliary Building	Supply breaker for MG set caught fire.
Salem 1	11/9/82	Cold Shutdown	Auxiliary Building	Relay failure resulted in a fire detection instrumentation panel fire
Burnswick 1	11/27/82	Power Operation (68%)	Auxiliary Building	Resistor on a battery charger amplifier board opened causing a voltage increase and capacitor failure.
Sequoyah 1	12/14/82	Cold Shutdown	Diesel Generator Room	Control cable degradation resulted in a phase-to-phase fault and fire in DG exciter panel during surveillance test.
Hatch 1*	3/12/83	Power Operation (94%)	Control Room	Low reactor water level RPS relay burned causing a 1/2 scram. Extinguished by operator.

*Counted as one event along with Hatch 1 event on 3/30/83 for quantification of fire frequency

Table A3-5

Cabinet Related Fires (Concluded)

Plant Name	Date of Occurrence	Plant Status	Fire Location	Remarks
Humboldt Bay 3	3/16/83	Cold Shutdown	Radwaste Building	Fire in radwaste pump circuit breaker caused by control power transformer fault and failure of fuse to open (wrong rating).
Hatch 1*	3/30/83	Power Operation (34%)	Control Room	Scram discharge volume high level RPS relay burned a 1/2 scram. Extinguished by operator.
Surry 1	9/9/83	Power Operation (100%)	Auxiliary Building	Water entered a control room ventilation chiller control panel shorting motor starter contractors.
Yankee Row	8/2/84	Power Operation (100%)	Auxiliary Building	Bus supply breaker fire due to high resistance in the breaker contacts.

*Counted as one event along with Hatch 1 event on 3/12/83 for quantification of fire frequency.

Table A3-6

Turbine Building Fires

Plant Name	Date of Occurrence	Plant Status	Fire Type	Remarks
Nine Mile Point	9/13/72	Power Operation	Oil, Insulation	Leak in oil supply line soaked insulation and ignited when it came in contact with hot pipe.
Yankee Rowe	6/15/73	Power Operation	Oil, Insulation	A fire started in oil soaked insulation around the high pressure turbine bearing case.
Unknown PWR	8/15/73	Power Operation	Unknown	Fire in turbine area-unknown cause.
Unknown PWR	9/20/74	Power Operation	Ping Pong Balls	Cigarette ignited box of ping pong balls - Automatic deluge system initiated.
Kewaunee	4/15/75	Power Operation	Bus	Bus fault resulted in cable insulation damage.
Unknown PWR	6/27/75	Power Operation	Oil	Leaking oil from a turbine oil purifier ignited when it contacted purifier heaters. Cables above the fire charred.
Haddam Neck	9/75	Power Operation	Oil, Insulation	Oil soaked insulation fire on gland steam lines under high pressure turbine.

Table A3-6

Turbine Building Fires (Continued)

Plant Name	Date of Occurrence	Plant Status	Fire Type	Remarks
Unknown PWR	4/3/77	Power Operation	Hydrogen	Leaking hydrogen at the generator ignited. Purged with CO_2 by shift personnel.
Saint Lucie 1	4/3/77	Power Operation	Hydrogen	Hydrogen leaked from turbine and ignited. Generator inerted with CO_2.
Oyster Creek 1	5/77	Refueling	Cable Insulation	Aluminum to copper bus terminal connecters resulted in high resistance and burned cable insulation.
Peach Bottom 3	9/77	Power Operation	Relays	Three relays in feedwater pump relay cabinet ignited. Since flame retardant cables were used in cabinet, fire did not propagate.
Unknown PWR	7/5/78	Power Operation	Auxiliary Boiler	Class B fire including the auxiliary boiler.
Cook 2	11/13/78	Power Operation	Hydrogen	Hydrogen fire under generator. Purged with CO_2.

Table A3-6

Turbine Building Fires (Concluded)

Plant Name	Date of Occurrence	Plant Status	Fire Type	Remarks
Browns Ferry 1	1/21/80	Power Operation	Cable Insulation	Fire in cable tray beneath the turbine building operating floor.
Cook 2	12/15/80	Power Operation	Electrical	Fire in generator pilot exciter.
Unknown BWR	7/24/81	Power Operation	Pump	Condensate booster pump binding overheated and caught fire.
Sequoyah 1	1/19/82	Cold Shutdown	Trans-former	Neutral ground transformer exploded activating deluge system.
Unknown PWR	2/4/82	Power Operation	Hydrogen	Hydrogen leaked from a bad seal into the generator.
Rancho Seco	3/19/84	Power Operation	Hydrogen	Hydrogen explosion occurred following loss of H_2 side seal oil pump.
Indian Point 2	10/22/84	Power Operation	Insulation	Fire in insulation at the governor end of the high pressure turbine.
Arnold	11/4/84	Power Operation	Trans-former	Transformer fire in yard propagated to the turbine building.

APPENDIX B

LETTER REPORT FROM NUS CORPORATION ON CONTROL SYSTEM INTERACTIONS

CONTENTS

		Page
1.0	INTRODUCTION	B-1
2.0	ASSESSMENT OF INDEPENDENCE OF REMOTE SHUTDOWN PANEL FROM MAIN CONTROL ROOM	B-7
	2.1 Applicable Regulatory Criteria	B-7
	2.2 Design Features of Concern	B-8
	2.3 Failure Modes and Interactions Identified by Previous Studies	B-9
	2.4 Interactions Not Addressed by Previous Study	B-14
	2.5 Mitigation of the Postulated Interactions and Failures	B-14
3.0	QUANTIFICATION OF THE POTENTIAL IMPACT OF INTERACTIONS BETWEEN MAIN CONTROL ROOM AND REMOTE SHUTDOWN PANEL/STATION	B-20
	3.1 Indian Point Station	B-20
	3.1.1 Cable Spreading Room	B-20
	3.1.2 Control Room	B-21
	3.2 Limerick	B-22
	3.2.1 Cable Spreading Room	B-22
	3.2.2 Control Room	B-23
	3.3 Seabrook	B-24
	3.3.1 Cable Spreading Room	B-24
	3.3.2 Control Room	B-26
4.0	REFERENCES	B-27

1.0 INTRODUCTION

In compliance with the SNL request (Reference 1) a review of data and experience gained by NUS in performing pre and post Appendix R safe shutdown studies, together with the SNL report, "Safety Significance of Fires" (Reference 2) has been undertaken. The specific aim of this review was to identify the types of potential interaction which would prevent control of shutdown equipment from both the remote shutdown panel or local stations and the main control room, as well as to identify the methods which have been employed to prevent or mitigate such interactions. Based on the conclusions of this review NUS has then examined four probabilistic safety studies (Zion, Indian Point, Limerick and Seabrook) to determine the extent to which the occurrence of these interactions has already been analyzed. A bounding analysis was then performed to quantitatively evaluate the possible (worst case) significance of those interactions which may have been neglected. It should, however, be emphasized that this last step has, of necessity, been done in a very simplistic and conservative manner since currently we do not have access to the necessary detailed design information on any of the US plants for which probabilistic studies have been performed.

Chapter 2 contains a discussion on types of interaction and methods of prevention and mitigation. In summary three types of interaction were identified in the SNL Study (Reference 2):

1. Loss of control power for the operated device as a result of blown fuse before transferring to remote shutdown locations.

2. Spurious actuation of components due to a hot short, leading to LOCAs or component damage prior to taking control from RSP.

3. Total loss of component function due to fire induced redundant control equipment failure.

While these fall within the envelope of NUS experience in performing safe shutdown studies it is believed that U.S. plants, in complying with Appendix R or equivalent criteria, have generally been required to consider these types of failure and provide appropriate protective measures. In particular the NRC has required that the following types of failure be protected against in order to ensure that <u>at least one method of hot shutdown</u> is maintained damage free (i.e., no "repairs" required in order to operate).

1. Multiple hot shorts leading to interfacing LOCAs. If such an event can be postulated due to a fire in an area then one isolation valve will generally be locked closed or an alternative method employed to deactivate one of the two isolation valves.

2. Loss of control power at the remote shutdown panel due to hot shorts/blown fuses. This is usually prevented by the use of break

before make isolation of remote shutdown circuits and/or utilization of properly coordinated fuses.

3. Spurious actuation of components leading to loss of function, such as that which might occur from dead heading of pumps (running a pump with its associated discharge valve shut) or valve misalignment. Such failures would either be prevented by hardware fixes, e.g., providing flow bypasses which automatically open, or mitigated by establishing post fire shutdown procedures.

In general it may be concluded that, within NUS' experience, the NRC have interpreted and enforced Appendix R or equivalent criteria such that interactions which prevent control of equipment from both the control room and remote shutdown panel or local stations should only occur in one of the following possible situations.

1. Control of alternative systems, sufficient to shutdown the plant, remains undamaged by postulated fire somewhere outside the control room.

2. Installed protective hardware fails to prevent the interaction, e.g.,

    a. Fuse coordination incorrectly designed or installed.
    b. Interlocks fail to function.

3. Operators fail to follow post fire shutdown procedures (a representative procedure has been provided to SNL) e.g., failure to realign and deenergize spuriously actuated components.

4. If compliance with 10CFR50, Appendix R, Section III.G has been established by using the option of "soft separation (between redundant trains) automatic fire detection and automatic fixed fire suppression," loss of both redundant safe-shutdown means may be experienced as the result of detection/suppression system failure (concurrent with a fire). A postulated transient combustible fire which would bridge the 20' separation zone under these conditions could result in total loss of the specified safe-shutdown function.

5. Passive/active fire barrier failures leading to multiple failures not considered within the bounds of the Appendix R criteria, e.g.,

    - 3 hr barrier
    - 1 hr barrier and sprinklers
    - alternative accepted by NRC

In other words, interactions are possible between the main control room and remote shutdown panel, but additional failures, unrelated to the fire, must occur before all shutdown methods are disabled (providing the fire is confined within the fire barriers prescribed by the Appendix R criteria).

Table 1.1 indicates the extent to which various types of interaction have been addressed in four PRA studies. It should be noted that this summary is somewhat subjective since PRA studies often do not contain details (or even mention) all the scenarios which have been considered but rejected as insignificant. In summary:

1. None of the studies appears to have addressed loss of control power before transfer.

2. None of the studies appears to have addressed damage to the transfer switch as leading to loss of control of associated equipment from both the main control room and remote shutdown panel (other PRA studies performed by NUS have looked at this issue and found it to be insignificant due to the low probability of the fire and limited equipment loss).

3. Only one study (Seabrook) appears to have addressed spurious actuation of components leading to damage.

4. All studies except Limerick addressed spurious opening of valves leading to LOCAs, although none were found to be important. (Although this was not addressed explicitly in Limerick, an earlier study performed by NUS on a similar plant considered spurious opening of single and multiple SRVs and found them to be of negligible importance.)

5. Spurious opening of high pressure/low pressure interface valves was addressed in all studies and found to insignificant.

On the basis of the above, NUS considered that two types of Interactions 1 and 3 (above), are probably more significant than the others and their impact on the fire scenarios developed in three of the studies (Limerick, Indian Point and Seabrook) has been examined. As mentioned earlier, this analysis, described in Chapter 3, was very simplistic due to limited information available concerning both the details of the original studies and the detailed plant design. The analysis was performed for two possible cases. Case (i) assumed that there was no protection against interactions of Types 1 and 3 and they would occur given the appropriate control cabling configuration which could be damaged as a result of a fire scenario. Case (ii) assumed that, where there was the possibility of an interaction occurring, it would occur to the extent that at least one method of shutdown remained operable. The latter is consistent with the conclusions of the review described earlier. For Case (i) the assumption is thought to be very conservative. For Case (ii) the assumption has both conservative and nonconservative aspects, in that the interaction is assumed to occur, but no consideration has been given to the failure of preventative hardware or operator actions required to keep at least one shutdown method operable.

The results of the probabilistic analysis, presented in Table 1.2, indicate that, for plant designs which comply with requirements of Appendix R (i.e., Case ii) there <u>may</u> still be a significant impact on the fire induced core

Table 1.1

MCR/RSP Interactions Consideration in Previous Fire PRAs

Type Of	Zion	Indian Point	Limerick	Seabrook
1. Loss of control power before transfer	Not addressed	Not addressed	Not addressed	Not addressed
2. Damage to transfer switch or associated relays	Not addressed	Not addressed	Not addressed but found to be insignificant in previous study of similar plant	Not addressed
3. Spurious actuation leading to component damage	Not addressed	Not addressed	Not addressed	Addresses explicitly for loss of PCC and start of HPI
4. Spurious opening of valves leading to interfacing LOCA	Addressed for RHR valves. Would require spurious hot shorts in two trays of different divisions. Valves may not open against dP	Addressed for RHR valves. Circuit breakers locked out - valve actuators undersized	As for Zion	Addressed. Valve actuators undersized
5. Spurious opening of relief valves leading to LOCA	Addressed: valves are fail closed and thus would close when hot short because open circuit or circuit deenergized by operator	As for Zion	Not addressed	Spuriously opened PORV addressed

Table 1.2

Evaluation of the Potential Impact of MCR/RSP Interactions of Three Plants

Plant Scenario Description	CDF Due to Original Fire Scenario/yr	CDF Due to Scenario With Assumed Interactions/yr	Overall Original CDF Due to Fires/yr
Indian Point			
1. Fire in CSR northern wall.	1.9×10^{-6}	(i) 7.6×10^{-5} (ii) 3.3×10^{-6}	2.0×10^{-4} (Before Appendix R modifications.)
2. Fire in control room.	5.7×10^{-7}	(i) 2.3×10^{-5} (ii) 9.9×10^{-7}	
Seabrook			
1. Fire in CSR leading to loss PCC.	3.6×10^{-6}	(i) 1.6×10^{-5} (ii) 3.6×10^{-6}	2.5×10^{-5} (Appendix R status unknown.)
2. Fire in control room leading to loss of PCC.	9.1×10^{-6}	(i) 4.0×10^{-5} (ii) 9.1×10^{-6}	
Limerick			
1. Fire in CSR spreading to protected cables.	2.0×10^{-7}	(i) 1.4×10^{-4} (ii) 1.1×10^{-5}	4.4×10^{-5} (Before Appendix R modifications.)
2. Fire in control room requiring evacuation.	6.3×10^{-8}	(i) 4.5×10^{-5} (ii) 3.6×10^{-6}	

Note: Case (i) All equipment that can be lost due to possible interaction is lost.
(ii) All equipment is lost with the exception of one method of hot shutdown.

damage frequency due to interactions (increase ranged from zero to 1.1×10^{-5} for any given scenario in our sample). However, the observed impact on the overall plant core damage frequency was relatively small. For plants which do not comply with Appendix R or possibly have achieved compliance in a manner which does not guarantee, with a high degree of reliability, that at least one shutdown system is available, the effect of interaction may be substantial (increase in core damage frequency ranged from 1.2×10^{-5} to 1.4×10^{-4}/yr for any given scenario in our sample), even with respect to total contribution from all other initiators. It should be noted again that these analyses are only sensitivity studies and are not based on a study of the actual plant designs. In addition the evaluated increases are very much influenced by the conservatism built into the original analysis in that the more conservative the original analysis, the smaller the evaluated risk factor increase due to any postulated interaction.

In conclusion, this study indicates that the current fire protection criteria applied to U.S. plants require an extensive search for both simple and complex interactions between remote shutdown locations and the main control room. Furthermore protective measures, either in the form of hardware fixes or operating procedures, are required to prevent such interactions occurring or mitigate them following the fire incident, to ensure that at least one method of hot shutdown remains free of damage. Limited quantitative analysis performed here tends to indicate that the worst case impact of the possible interactions identified can cause a significant increase in overall core damage frequency, but where preventative and/or mitigating features required by current licensing criteria are implemented in a reliable fashion the impact of interactions is relatively small (in terms of overall CDF). The strategy for establishing regulatory compliance varies considerably from one plant to another and surprisingly is often independent of plant vintage but more a result of A/E design and utility compliance philosophy. The approach selected can significantly affect the cost of achieving compliance; in general the operator-intensive post fire shutdown approach can result in a significantly lower remote shutdown hardware cost but requires the development of detailed diagnostic shutdown procedures and justification of operator availability.

While this study has attempted to draw some useful generic conclusions regarding potential interactions, methods of protection and possible core damage frequency impact, uncertainties still exist in that detailed analyses of specific hardware and human interactions was not within the scope. Consequently it is recommended that future investigations in this area should examine the design and procedural details of plants which have existing probabilistic fire studies to determine the reliability of a range of remote shutdown compliance strategies, between the two extremes of primary reliance on preventative control logic to reliance mainly on manual action.

2.0 ASSESSMENT OF INDEPENDENCE OF REMOTE SHUTDOWN PANEL FROM MAIN CONTROL ROOM

2.1 Applicable Regulatory Criteria

The potential for interaction between controls and instrumentation located in the main control room and controls and instrumentation located on remote shutdown panels has been recognized as a plant safety concern, and a number of NRC criteria and guidelines either directly or indirectly address this concern. These criteria may be categorized as follows:

- o Criteria requiring the provision of remote shutdown capability (independent of the main control room) to cope with a forced control room evacuation, whether the result of postulated toxic gas infiltration, or a postulated fire in the control room complex.

- o Criteria requiring independence (separation and electrical isolation) between redundant safety-related control, instrumentation, and power trains.

- o Criteria requiring the capability to achieve and maintain safe, stable shutdown conditions following a fire in any area of the plant.

The most significant criteria applicable to the issue of control system independence within the framework of a postulated fire include:

A. Fire Protection - Separation and Redundancy Criteria

- 10CFR50, Appendix A; General Design Criteria 3, 19, 22, 23, and 24.
- 10CFR50, Appendix R, Section III.G.
- Branch Technical Position 9.5-1, Appendix A.
- NUREG-0800, Section 9.5.1.
- NRC Generic Letter 81-12, 83-33, and 85-09 86-10.

B. Safeguards/Protection System Separation, Isolation, and Redundancy Criteria

- IEEE 279
- IEEE 384
- IEEE 420
- Regulatory Guide 1.53
- Regulatory Guide 1.75

The structure and objectives of the above criteria are such that it is possible to establish compliance with the criteria of Category (B) without adequately enveloping the objectives of the Category (A) requirements. For example, the separation distances specified in IEEE 384 for separation of redundant safety train wiring are adequate for the failures postulated

within a given raceway or enclosure, but are not adequate to address the effects of a fire occurring external to the cabinet or enclosure.

2.2 Design Features of Concern

Independence of the remote shutdown panel from the main control room controls and instrumentation is largely dependent upon the method of implementation of several control system design features which are generically applied in establishing a local-remote shutdown capability. These features include:

- Control transfer devices (switches and/or relays).
- Instrumentation isolation devices or dedicated instrumentation.
- Control power source protective fusing (an acceptable means of establishing circuit isolation, within the context of 10CFR50, Appendix R).
- Remote shutdown panel location and routing of cables thereto.
- Transfer switch location(s) and routing of cables thereto.
- Use of existing redundant equipment channels for post-fire safe shutdown versus use of a dedicated equipment channel post fire.

The electrical design methodology applied varies depending upon a number of factors, including:

- The type of plant (PWR, BWR); generic structural, equipment location and cable routing features peculiar to each plant type require different approaches.
- The age of the plant; substantially enhanced safety train separation seen in plants which became operational in the late 1970s/early 1980s usually allows for additional flexibility in establishing independence of the remote shutdown panel.
- The licensee's plant operating philosophy and strategy for establishing compliance with the applicable regulatory requirements (e.g., 10CFR50, Appendix R) on a cost-effective basis; post-fire shutdown approaches can be formulated to be largely dependent upon centralized controls and instrumentation, or can rely primarily upon many manual actions to be performed by the operators, in accordance with specific post-fire shutdown procedures. The approach selected can significantly affect the cost of establishing compliance; in general, the operator-intensive shutdown approach can result in a significantly lower installed remote shutdown hardware cost, but requires the development of comparatively more detailed diagnostic-type shutdown procedures and justification of

operator availability and feasibility of performing the required operational steps in the compressed time frame of post-fire recovery.

- The Architect/Engineer responsible for the remote shutdown system design; approaches implemented have varied somewhat dependent upon the control and instrumentation system design philosophy adopted by various A/Es.

Within a given plant, the remote shutdown capability is typically implemented using one (or more) of the approaches schematically depicted on Figures 2.1 through 2.3. The figures illustrate in simplified form configurations employed in plants for which NUS has performed remote shutdown system analysis, licensing, or design work. It should be recognized that each of the various approaches has areas of vulnerability when the location of the devices and the cable routing thereto is considered.

2.3 Failure Modes and Interactions Identified by Previous Study

The study performed by EBASCO and summarized in Reference 2 was directed primarily at the analysis of fires occurring at individual control panels, assessing the combustible loading at specific panels and in control room areas, and assessing the effects on safety system operation of individual component failures which could be expected as the result of control panel fires. The study focused on three failure modes:

1. The loss of control power for the operated device as the result of blown fuses.

2. The spurious actuation of one or more safety-related or safe-shutdown related components as the result of fire-induced cable faults or component failures; this may include the spurious starting and running of pumps as well as the spurious repositioning of valves.

3. Total loss of system function as the result of fire-induced redundant component failure or electrical distribution system (power source) failure.

These failure modes are consistent with those applied in NUS' evaluations of fire effects on safe-shutdown capability, although in NUS' studies, the failures are imposed on a larger scale, being based upon a "geographically-oriented" analysis, which considers the total destruction (in most cases) of all equipment, including cables, within a given fire area or zone. These effects are then overlaid on a safe-shutdown systems analysis, which has considered:

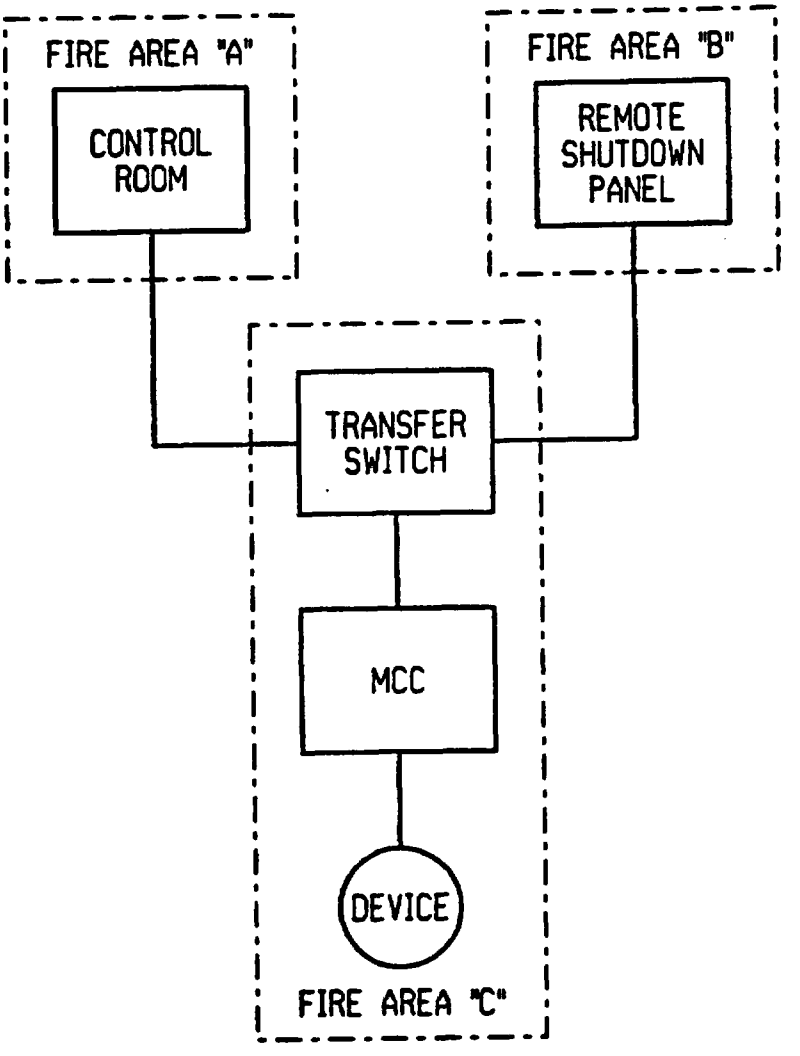

Figure 2.1. Transfer Switch in Independent Enclosure

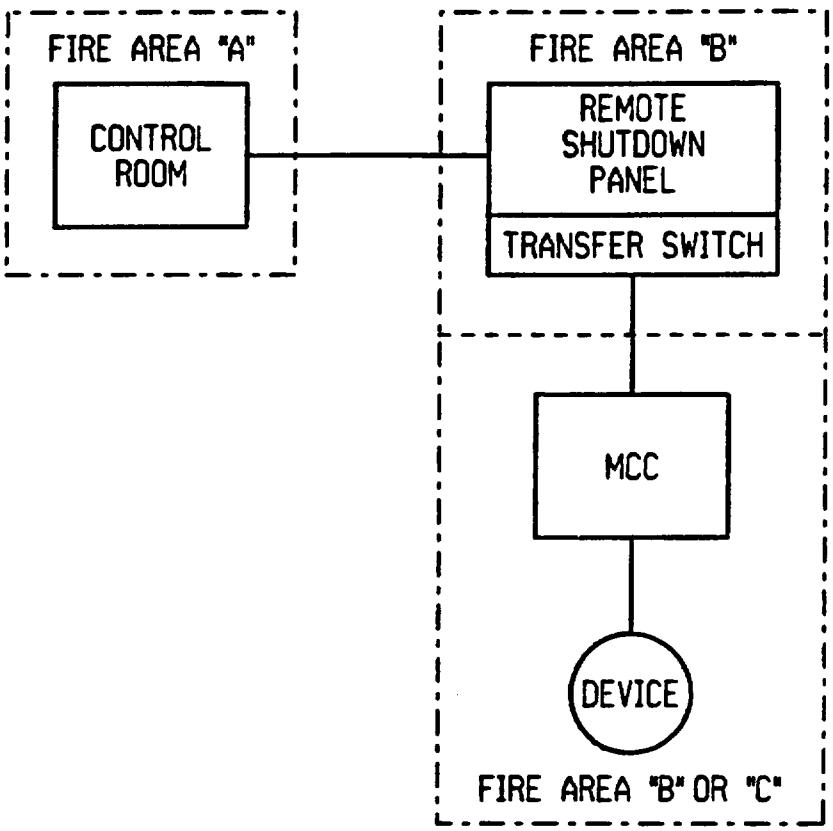

Figure 2.2. Transfer Switch Integral to RSP

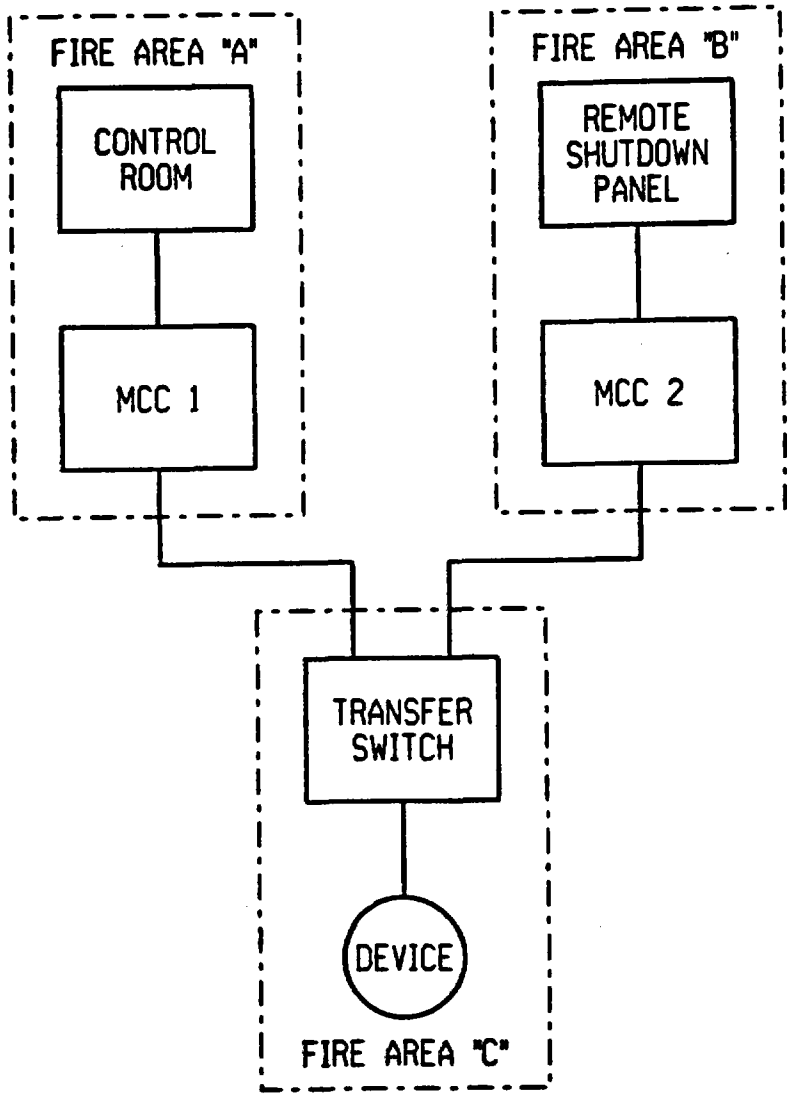

Figure 2.3. Redundant/Independent Power Sources

- All systems and components required (as a minimum equipment set) to achieve and maintain safe-shutdown conditions. The system-level assessment includes the addressing of all possible failure modes and effects (including single and multiple spurious actuations) of each of the components within the defined systems or subsystems.

- All power distribution equipment required to operate the above equipment and the effects of loss of any of this equipment.

- All support systems (HVAC, cooling water) required for operation of the above components, and an assessment of the short-term and long-term effects of the loss of any of these functions.

- An evaluation of the entire reactor coolant system pressure boundary, as well as an evaluation of all high-to-low pressure interfaces throughout the safe-shutdown systems, to identify those points requiring special attention to mitigating actions or features to <u>prevent</u> spurious actuations, rather than simply <u>recovering</u> from these events (i.e., prevention of potential LOCA conditions).

- A detailed evaluation of the electrical schematics and control logic associated with the components of concern in conjunction with a detailed cable routing assessment. It is typically noted that some existing design features are effective in preventing or minimizing the effects of spurious component actuations; for example, typical pump start circuitry will incorporate the following permissive interlocks:

  - Suction pressure switch
  - Discharge valve position switch
  - Suction valve position switch

  In addition, piping configurations for pumps subject to damage under conditions of deadhead or restricted flow operation frequently incorporate a "miniflow bypass" loop which provides protection against pump overheating/damage under conditions of restricted downstream flow.

- An evaluation of all manual (local) operations required to support post-fire safe shutdown, including the location of the specific components, the access routes thereto, the communications available for these areas, and the need for fixed emergency lighting units to support access and operation. In addition, the required procedural steps are overlaid on a plant-wide scale, to determine whether the required operational timeline can be satisfied by the existing complement of operators, considering the number of operations, the complexity of each operation, and the need to perform diagnostics before selecting a course of action in accordance with a defined post-fire shutdown procedure.

It should be recognized, however, that the available options for establishing adequate train separation (as defined by 10CFR50, Appendix R, Section III.G) include options which presume that total destruction of all equipment within a given fire area will not occur as the result of a single fire (e.g., Section III.G.2.b permits redundant safe-shutdown trains in the same fire area, with a minimum 20 foot horizontal separation, automatic detection, and automatic fixed fire suppression).

2.4 Interactions Not Addressed by Previous Study

The identified failures as described in Section 2.3 are consistent with results seen at other plants analyzed. However, several areas are not addressed to the extent normally expected in a safe-shutdown/separation/interaction analysis which complies with requirements of the NRC in implementing Appendix R.

- The interaction of post-fire shutdown operating procedures with the postulated failures, to establish recovery from spurious actuations, as well as to restore control, whether by manual means or by alignment of alternative power (e.g., electric, pneumatic) or cooling systems. Where applicable, the method of establishing recovery should be evaluated in conjunction with the assessment of the postulated failures.

- The postulation of multiple high-impedance faults on the safe-shutdown power sources, selectively postulated such that the magnitude of each fault is just below the trip setting of the associated circuit breaker or fuse. The postulated failure is that cumulative fault current of the multiple faults is sufficient to defeat the protective device coordination provided for the power source, resulting in the tripping of the feeder breaker or fuse serving the entire bus or distribution panel, with the associated loss of the entire power source. The postulation of these conditions is consistent with current NRC practice, and has been addressed at each of the plants for which NUS has provided relevant support services.

- The evaluation of specific effects (analyzed on a fire area/zone basis) of fires at the remote shutdown panel, the transfer switch location(s), and all fire areas/zones through which cables are routed to and from these devices. This approach is consistent with the analytical process outlined in Section 2.3.

2.5 Mitigation of the Postulated Interactions and Failures

A number of approaches are utilized to circumvent the postulated failures and interactions identified earlier; they include hardware and administrative measures, and combinations of both. In some cases, these measures are implemented directly (pre-fire), although in most cases they

are applied post-fire. The typical mitigation measures utilized at plants analyzed by NUS are discussed below. A summary of typical applications is provided on Table 2.1.

1. Prevention of potential LOCA conditions as the result of spurious valve actuations at the reactor coolant pressure boundary.

   - Place one isolation valve in a normally locked-closed status during normal plant operation. Physical locking of the valve actuator prevents spurious actuation signals from opening the valve. This approach is normally suitable only for those components not requiring operation until cooldown and cold shutdown phases of operation, in that reopening the valve may involve access to containment, with an associated time delay which may be prohibitive for hot-shutdown operation.

   - Disconnect power source to the valve during normal plant operation; this is accomplished by (1) removing control power fuses, (2) tripping the incoming circuit breaker to the affected MCC compartment, or (3) racking out the affected circuit breaker at the switchgear. In some cases, restoration of power may be considered a "repair," and thus this approach may not be suitable for those components which may require operation during the hot-shutdown operating phase.

2. Prevention of overpressurization of low-pressure systems as the result of spurious valve actuations at the high-low pressure interface.

   Mitigating measures as applied in Item 1 are also appropriate for protection of other high-low pressure interfaces.

3. Prevention of loss of control power at remote shutdown panel as the result of hot shorts/fuses blown prior to control transfer.

   Ensuring the availability of control power at the remote shutdown panel typically involves hardware protection in the form of isolation switches which allow "break before make" isolation of the remote shutdown circuits and/or the utilization of properly coordinated control power fuses on each of the control cable conductors. The coordinated fuses are sacrificial components in that they are designed to blow/interrupt power to/from the control power source prior to the loss of the primary control power fuse(s). Note that replacement of the primary control power fuses, while apparently a reasonable alternative, is considered a "repair" in most cases by the NRC and is not permitted as a mitigating measure during hot shutdown without special exemption.

Table 2.1

Summary of Potential Interactions and Preventive Measures Found in NUS Appendix R Experience

Plant No. Type Vintage	1 PWR 1971	1 BWR 1975	3 PWR 1987	4 PWR 1972
Type of Interaction				
Spurious component actuations leading to opening of LP/HP interface.	No (2,3)	No (2,3)	No (2,3)	No (2,7)
Spurious actuations leading to failure of components controlled from RSP/ local panel.	No (4)	No (4)	No (4)	No (4)
Spurious actuations leading to primary PORVs/SG SD valves opening.	Yes (2,3)	N/A	Yes (2,3)	No (7,8)
Loss of control power to remotely operated devices due to blown fuses.	No (5)	No (5)	No (5)	No (5)
Loss of common components (e.g., transfer switches, relays, cables, etc.).	No (6)	No (6)	No (6)	No (6)

Notes Applicable to Table 2.1

1. In the notation shown above, "No (x)" indicates the potential for the listed interaction has been precluded by implementation of the measure referenced in Notes 2-8 on the following page. A response of "Yes (x)" indicates the interaction may occur under fire conditions, but the referenced measure (x) provides for mitigation of or recovery from the event.

2. Spurious actuation prevented by deenergizing power to component pre-fire (if acceptable from a plant safety standpoint), or component deenergized post-fire by tripping circuit breakers, thus allowing recovery from spurious actuation.

3. Spurious actuation prevented by locking valve motor actuator in the closed position (where acceptable from a plant safety standpoint).

4. Components controlled from the remote shutdown panel are specific to the required post-fire safe shutdown equipment complement. Other components outside this safe shutdown system configuration may be subject to spurious actuations and subsequent failures, but are not significant from a safety/safe-shutdown standpoint (although their failure would result in potential economic loss). All spurious actuations and potential equipment failures that could affect the required safe-shutdown functions are analyzed, dispositioned, and hardware or administrative corrective measures are implemented.

5. Properly coordinated instrument-type/fast acting fuses are installed in series with the primary control power fuses. These coordinated fuses are sacrificial and will interrupt any credible postulated fault current before the primary control power fuses are affected.

6. Adequate separation (per 10CFR50, Appendix R, Section III.G) is provided to ensure that redundant components associated with the safe-shutdown equipment configuration are not simultaneously affected by the same fire. Measures implemented include:

   - Separation by 3-hour rated fire barriers (Plants 1, 2, 3, 4).

   - Separation by using 1-hour rated fire barriers augmented by fire detection and fixed suppression systems (Predominately Plant 3, some usage at Plants 1, 2, and 4).

   - Single components will not be utilized for multiple functions to avoid a possible loss of redundant safety system function.

7. Spurious actuation prevented by analysis demonstrating that adequate electrical protection is provided (e.g., between pressurizer PORVs and associated block valves), post-fire operator manual action would (remotely) move hi-low pressure boundary valves into the desired position.

8. Spurious actuation addressed and found acceptable; spurious opening of a single steam dump valve will blow down and eventually dry out a steam generator. This failure was addressed and considered acceptable in the safe-shutdown scenario; the remaining functional equipment is adequate to achieve and maintain safe shutdown conditions.

   - Analyze cable routing and device locations for multiple series valves in the postulated flowpath from the RCS pressure boundary, and establish that multiple, selective hot shorts to DC control power cables would be required to initiate spurious opening of all valves simultaneously.

4. <u>Prevention of loss of control and indication at main control panels as the result of fire at remote shutdown panel(s) or transfer switches.</u>

   - Provide dedicated instrument channels for the remote shutdown, which have no interface with control room instrumentation other than the possible exception of common process taps.

   - Provide fire area separation (control cabinets, controls, instruments, cables) between redundant channels of remote shutdown controls (if available) such that a fire at a remote shutdown panel will at most impact one train of control room controls and instruments. Alternatively, provide appropriately-rated fire barriers or protective wraps in conjunction with automatic fire detection equipment and a fixed suppression system in the area containing the redundant remote shutdown panels. This approach is compliant with 10CFR50, Appendix R, Section III.G; however, exemptions have been granted to this provision on the basis of low fixed and transient combustible loading combined with the absence of credible ignition sources, separation between components, adequacy of post-fire shutdown procedures, and other factors.

5. <u>General recovery from spurious actuations resulting from fire-induced component or cable failures.</u>

   - Primary reliance is placed on thorough, diagnostic-type post-fire shutdown procedures and adequate training of operators in the use of these procedures. It is to be noted that, it is essential that all spurious actuations of significance be identified and considered simultaneously, where credible as the result of device locations and cable routing. Post-fire shutdown procedures, in conjunction with pre-fire (normal plant operation) plant configuration measures, must be structured to address recovery from these events. This approach has been followed at all plants with which NUS has been associated on the post-fire shutdown issue, and is also a topic of discussion during typical NRC compliance reviews and audits.

   - Selectively deenergize power panels or circuit breakers (for air-operated valves or other components which fail to the desired "safe" state on loss of power). These steps are taken only in accordance with shutdown procedures, and only after establishing that the deenergization is in fact required as a result of the location and nature of the fire.

   - Selectively vent the instrument or service air supply from the actuating cylinder of the valves to be allowed to fail to a "safe" state.

- At motor-operated valves, engage the handwheel with the actuator mechanism and manually reposition the valve to the desired state. This may be accompanied by deenergization of the associated MCC or compartment thereof to preclude further spurious actions.

- At select switchgear/electrical distribution panels, trip breakers and/or disconnect switches to preclude or terminate the spurious starting of both safe-shutdown and nonsafe-shutdown devices. The analyses performed for determination of 10CFR50, Appendix R compliance are required to presume the loss of offsite power as an initial condition. However, analyses are typically structured to take no credit for the availability of offsite power, but to consider the potential spurious actuation effects of the spontaneous restoration of this power source. The necessary steps are addressed in the post-fire shutdown procedures.

3.0 QUANTIFICATION OF THE POTENTIAL IMPACT OF INTERACTIONS BETWEEN MAIN CONTROL ROOM AND REMOTE SHUTDOWN PANEL/STATION

3.1 Indian Point Station (Reference 3)

3.1.1 Cable Spreading Room

1. Characteristics of the area

   - o CSR contains control cables associated with all three auxiliary feed water pumps. However, the turbine driven pump will start automatically at the minimum speed in the event of loss of control power and can be controlled locally.

   - o Power cables associated with the motor driven AFW pumps are not routed in the CSR. Pumps can be controlled locally.

   - o Power and control cables for charging pumps, safety injection pumps, component cooling water, containment fan coolers, pressurizer relief valves, secondary atmospheric dump valves and RHR pumps are all routed in the area. However, all power cables are located at the eastern end of the room only.

2. Impact on scenarios potentially affected by interactions

   - o Cable Spreading Room

     Scenario is:

     - Fire at center of north wall
     - Reactor trip
     - Damage to all AFW pump controls, containment spray pump controls, fan cooler controls (no mention about presence or not of component cooling water controls).

   The frequency of core damage is expressed as

$$\phi CM, CSR = \lambda CSR \times fes \times Q\ (t_G) Qs$$

$$= 1.9 \times 10^{-6}/yr \text{ (mean value)}$$

where

λCSR = frequency of fires in CSR

fes = fraction of CSR fires that are large and near the center wall

$Q(t_G)$ = conditional frequency of fire growth

Q_s = frequency of failure to actuate AFW system

The study also alludes to the possibility of safe shutdown via primary feed and bleed, although no credit appears to have been given.

The frequency of failure to actuate the auxiliary feed water in the original study is dominated by human error.

Mean probability of failure to bring turbine driven pump (TDP) up to speed	$= 4.4 \times 10^{-2}$
Mean probability of failure to bring TDP up to speed and failure to initiate motor driven AFW pumps	$= 2.5 \times 10^{-2}$

For sensitivity case (i) it is assumed that all safe shutdown equipment served by cables which affected by the fire scenario is lost. Thus, in this case it is assumed that all auxiliary feed water pumps are lost irrecoverably. This is postulated to occur as a result of pumps starting against a closed discharge valve and valves in the recirculation lines failing to open or control circuit fuses blowing prior to taking local control.

Thus for case (i) $Q_s = 1.0$ and the mean frequency of core damage due to the scenario would be

$$1.9 \times 10^{-6}/2.5 \times 10^{-2} = 7.6 \times 10^{-5}/yr$$

For sensitivity Case (ii) it is assumed that at least one method of shutdown remains available in accordance with the Appendix R criteria. In this case the mean core damage frequency, assuming the turbine driven pump remained undamaged and the motor driven feedwater pump is lost irrecoverably, would be

$$1.9 \times 10^{-6} \times \frac{4.4 \times 10^{-2}}{2.5 \times 10^{-2}} = 3.3 \times 10^{-6}/yr$$

3.1.2 Control Room

The core damage frequency due to fires is assessed as 30 percent of the value derived for the cable spreading room due to higher human occupancy (IPSS Table 7.3.1A-12). Thus assuming the same factor is applicable for cases where interaction occurs, the corresponding core damage frequencies for Cases (i) and (ii) are as follows

Case (i) $= 7.6 \times 10^{-5} \times 0.3 = 2.3 \times 10^{-5}$/yr
Case (ii) $= 3.3 \times 10^{-6} \times 0.3 = 9.9 \times 10^{-7}$/yr

3.2 Limerick (Reference 4)

3.2.1 Cable Spreading Room

1. Characteristics of the area

The cable spreading room contains cables associated with the control of all four divisions of safety related as well as balance of plant equipment. However, cables required to control and power equipment from the remote shutdown panel are not routed in this area. This equipment includes

RCIC
Main Stream Relief Valves
Train A of RHR System
Train A of RHR Service Water
Train A of Emergency Service Water
Instrumentation for monitoring the reactor pressure vessel, and containment

2. Impact on scenarios potentially affected by interactions

The scenario is:

Self-ignited cable or transient combustible fire grows from single division of power cables within the raceway to all cables in the raceway and subsequently damages additional protected cable raceways in the area (1/2 hr rated ceramic fiber blanket). The initiating event is assumed to be an MSIV closure transient and all shutdown systems are failed except those controlled from the remote shutdown panel. The associated cables do not pass through the CSR - Full credit is given for availability of the systems controlled from the RSP.

The frequency of core damage from this scenario is expressed as

$$\phi CDF_{CSR} = F(A) \times P(C) \times P(E) \times P(F)$$

$$= (9.5 \times 10^{-4})(1.0)(0.15)(1.4 \times 10^{-3})$$

$$= 2.0 \times 10^{-7}/yr$$

where

F(A) = the frequency of self-ignited cable and transient combustible fires in the area

P(C) = the probability of failing to prevent fire spreading to unprotected cable raceways

P(E) = the probability of failing to prevent the fire spreading to protected cable raceways

P(F) = the conditional probability of core damage due to random failure of systems controlled from the RSP

For sensitivity Case (i) it is assumed that, given the fire scenario occurs, all systems would be disabled including those controlled from the remote shutdown panel. As before this is postulated to occur due to spurious pump starts with failure of injection and recirculation valves to open or loss of control power before transferring to the RSP.

The mean core damage frequency for Case (i) would therefore be

$$= F(A) \times P(C) \times P(E) \times P(F)$$
$$= (9.5 \times 10^{-4}) \times (1.0) \times (0.15) \times (1.0)$$
$$= 1.4 \times 10^{-4}/yr$$

For Case (ii) we assume one method of hot shutdown remains controllable from this RSP in accordance with Appendix R. Assuming that this system is RCIC, the conditional probability of core damage $P(E) = 8 \times 10^{-2}$. Thus for Case (ii) the mean frequency of core damage would be

$$= F(A) \times P(C) \times P(E) \times P(F)$$
$$= 9.5 \times 10^{-4} \times 1.0 \times 0.15 \times 8 \times 10^{-2}$$
$$= 1.1 \times 10^{-5}/yr$$

where P(F) is the approximate random failure probability for RCIC.

3.2.2 Control Room

1. <u>Characteristics of the area</u>

Contains cabinets and control boards associated with all safety related and balance of plant equipment. Control and power for safety related equipment served by the RSP is independent of this area.

2. Impact on scenarios potentially affected by interactions

The scenario is:

Fire starts in a control cabinet and is not suppressed before spreading beyond confinement of the cabinet causing operators to evacuate the control room. The fire-induced initiating event is assumed to be a MSIV closure transient and all safe shutdown equipment is lost except that controlled from the RSP.

The frequency of core damage due to the fire scenario is given by

$$\begin{aligned} \phi CDF_{CR} &= F(A) \times F(C) \times F(D) \\ &= (1.8 \times 10^{-3})\ (2.5 \times 10^{-2})\ (1.4 \times 10^{-3}) \\ &= 6.3 \times 10^{-8}/yr. \end{aligned}$$

where

F(A) = the frequency of control room fires

F(C) = the probability of failing to suppress the fire before spreading beyond the cabinet confinement

F(D) = the conditional probability of core damage given the fire scenario

Using similar arguments to those developed for the cable spreading room the probability of core damage for sensitivity Cases (i) and (ii) are as follows

For Case (i) = $4.5 \times 10^{-5}/yr$
For Case (ii) = $3.6 \times 10^{-6}/yr$

3.3 Seabrook (Reference 5)

3.3.1 Cable Spreading Room

1. Characteristics of the area

Control and instrumentation for most of the plant systems and equipment pass through the cable spreading room. Two remote shutdown panels are provided, one for Train A and the other for Train B. The panels are located in their corresponding switchgear rooms.

2. Impact on scenarios potentially affected by interactions

The scenario is:

Fire causes loss of the PCC with failure to turn off RCPs resulting in RCP seal failure within 4 hrs or stuck open PORV with loss of PCC.

- In addition to either of the above, an S signal causes all four high pressure injection (HPI) pumps and two RHR pumps to start. The HPI pumps are assumed to fail within a few minutes due to lack of cooling. The motor driven auxiliary feed water pumps are also assumed to be failed due to the fire. No credit is given for the operator preventing a LOCA by turning off the RCPs. Some credit is however given to the operators using the remote shutdown panel to rapidly depressurize and using the low pressure injection pumps to provide make-up.

The frequency of core damage due the scenario resulting from loss of the PCC and subsequent RCP seal failure appears to dominate and is given by

$$\begin{aligned}\phi_{CSR,2} &= \lambda_{CSR}\, Q_{PCC,CSR}\, f_{HE,2} \\ &= (6.7 \times 10^{-3})(2.4 \times 10^{-3})(0.23) \\ &= 3.6 \times 10^{-6}\end{aligned}$$

where

λ_{CSR} = the frequency of fires in the cable spreading room

$Q_{PCC,CSR}$ = the probability of loss of PCC given a fire in the CSR

$f_{HE,2}$ = the conditional probability of core damage given the fire scenario

For sensitivity Case (i) it is assumed that the low pressure injection system is also failed due to the fire scenario for reasons similar to those postulated earlier. In this case $f_{HE,2}$ would be equal to one and the frequency of core damage due to the scenario would increase to

$$3.6 \times 10^{-6} \times 1/0.23 = 1.6 \times 10^{-5}/yr$$

For sensitivity Case (ii) it is assumed that one method of shutdown remains operable which in fact corresponds to the situation analyzed in the original study. Therefore core damage frequency for Case (ii) is identical to that evaluated in the Seabrook PSS, i.e., $3.6 \times 10^{-6}/yr$.

3.3.2 Control Room

1. <u>Characteristics of the Area</u>

   Like the cable spreading room, the control room contains equipment and cables associated with all safety related and balance of plant equipment.

2. <u>Impact on scenarios potentially affected by interactions</u>

   The dominant scenario is very similar to that described earlier for the cable spreading room.

   A fire in Zone C damages equipment in the main control board leading to loss of the PCC, failure to stop the RCP pumps and subsequent failure of the RCP seals.

   The frequency of core damage due to the scenario is given by

$$\phi CR,C = \lambda CR\ f_{CR7,G}\ f_{HE,2}$$

$$= (4.9 \times 10^{-3})\ (8.1 \times 10^{-3})\ (0.23)$$

$$= 9.1 \times 10^{-6}$$

   Using similar arguments to those developed for the cable spreading room the frequency of core damage for sensitivity Cases (i) and (ii) are:

   For Case (i) $= 3.9 \times 10^{-5}$/yr
   Case (ii) $= 9.1 \times 10^{-6}$/yr

4.0 REFERENCES

1. Lambright, J. A., Sandia National Laboratories, Personal Communication to Guymer, October 5, 1987.

2. Berry, D. L., "Safety Significance of Fires," SAND 86-0834C, Sandia National Laboratories.

3. Indian Point Probabilistic Safety Study, Power Authority of the State of New York, Inc., Consolidated Edison Company of New York Inc., 1982.

4. Severe Accident Risk Assessment for Limerick Generating Station, Philadelphia Electric Company, April 1983.

5. Seabrook Station Probabilistic Safety Assessment, Public Service Company of New Hampshire and Yankee Atomic Electric Company, December 1983.

APPENDIX C

LETTER REPORT FROM PROFESSIONAL LOSS CONTROL ON STAFFING, EQUIPPING, AND TRAINING OF U.S. NUCLEAR POWER PLANT FIRE BRIGADES

CONTENTS

	Page
1.0 SUMMARY	C-1
2.0 ANALYSIS OF SURVEY RESPONSES	C-3
2.1 Background	C-3
2.2 Brigade Staffing	C-3
2.3 Brigade Equipment	C-4
2.4 Brigade Training	C-5
3.0 CONCLUSIONS	C-7
APPENDIX C1 SURVEY RESPONSES	C-17
APPENDIX C2 SURVEY RESPONSES FOR PRESSURIZED WATER REACTORS	C-28
APPENDIX C3 SURVEY RESPONSES FOR BAILING WATER REACTORS	C-34
APPENDIX C4 SURVEY RESPONSES FOR UNITS LESS THAN 700 MWe	C-40
APPENDIX C5 SURVEY RESPONSES FOR UNITS LARGER THAN 700 MWe	C-46
APPENDIX C6 SURVEY RESPONSES FOR SINGLE UNIT SITES	C-52
APPENDIX C7 SURVEY RESPONSES FOR MULTIPLE UNIT SITES	C-58

1.0 SUMMARY

The purpose of this appendix is to detail the review of levels of staffing, equipping, and training of fire brigades at U.S. nuclear power plants. The major source of information for this appendix was a survey to which 31 fire protection and training personnel at nuclear power plant sites responded. The representative sample included 45 units ranging in size from 63 to 1,180 mWe including PWRs, BWRs, and single and multiple unit sites.

Most facilities reported maintaining a fire brigade comprised of employees normally assigned to other duties but who respond to fire emergencies as a secondary responsibility. However, two facilities reported having dedicated fire departments in which fire fighters are assigned full-time to fire-related duties.

The mean number of employees reported to be trained as fire brigade members at each facility was 78 persons. However, there was a large variation reported in the number of trained personnel ranging from as few as 30 to as many as 218 employees. The smallest number of trained employees were reported at facilities which maintain a dedicated fire department.

The reported brigade assignment was five or more persons per shift, mostly made up of plant operators. The Fire Brigade Leader, usually reported as a licensed operator, most frequently reported to the Shift Supervisor or Shift Engineer.

All brigades were reported to be well equipped with both personal protection and fire fighting equipment. Although only two facilities reported having a dedicated fire department, eight facilities reported having a fire truck available for brigade use.

All plants report meeting the minimum requirements for fire brigade training in Appendix R. However, a wide variation was reported in the duration of classroom training. While the median duration of classroom training was 26 hours, the range extends from 6 to 400 hours.

Annual live fire training was generally reported as being conducted off-site at city, county, or state facilities with a duration slightly in excess of one working day.

Those in charge of fire brigade training are most frequently required to carry some form of state certification. At the extremes, several respondents indicated there were no minimum qualifications required whereas two indicated that a college degree was required as a minimum. Seventy percent of the respondents reported using outside consultants, in part, to train brigades.

Over two-thirds reported that all brigade members receive fire brigade leader training. However, three reported that the fire brigade leader is simply appointed due to other supervisory duties at the plant.

Most reported that drills are usually conducted at full-speed and with full gear including SCBA and that the SCBA is actually used at least some of the time for drills.

2.0 ANALYSIS OF SURVEY RESPONSES

2.1 Background

The purpose of this appendix is to review the levels of staffing, equipping, and training of fire brigades at U.S. nuclear power plants. This appendix compares fire-fighting programs at various nuclear power facilities to evaluate the levels preparedness to manually respond to fires.

In obtaining data for this appendix, a review was made of reports of annual and triennial audits of fire protection programs as specified in the Standard Technical Specifications and in the U.S.N.R.C. Generic Letter 82-21. Personal interviews were conducted with qualified fire protection engineers experienced in the inspection and audit of nuclear power plants. The major source of information for this appendix was a fire brigade survey which was sent to fire protection and training specialists at various nuclear power plants located throughout the United States. The 31 responses received presented a representative sample of the total population of U.S. nuclear power plants. The sample included 45 units, nearly equally distributed between pressurized water reactors and boiling water reactors. The size of the units ranged from 63 to 1,180 mWe.

A copy of the original survey, as submitted to the fire protection and training specialists, is provided in Table 1. A compilation of the responses received is provided in Appendix C1. A further grouping of the survey results was performed by sorting the responses by type of reactor, size of the facility, and single vs. multiple unit sites. Appendix C2 presents the survey responses for pressurized water reactors, Appendix C3 is for boiling water reactors, Appendix C4 is for units smaller than 700 mWe, Appendix C5 is for units larger than 700 mWe, Appendix C6 is for single units sites, and Appendix C7 is for multiple unit sites.

A summary of the survey results follows. The responses have been compared to 10CFR50, Appendix R as well as compared to other responses within the survey.

2.2 Brigade Staffing

Most of the respondents reported that the power plant maintained a single fire brigade although three facilities indicated that they maintained two brigades, one primary and one back-up. One facility reported maintaining five separate brigades, one for each of five sections.

In most cases, the facilities maintained a "fire brigade" which in the U.S. usage of the term indicates the use of employees normally assigned to other duties but who respond to fire emergencies as a secondary duty. However, two of the survey respondents reported that their facility maintained a dedicated "fire department" in which the fire fighters are assigned full-time to fire-related duties.

The survey revealed a large variation in the size of fire brigades at nuclear power facilities. The number of employees trained to respond as fire fighters ranged from as few as 30 to as many as 218 persons. The mean size of a power plant fire brigade was 78 members. The smallest two brigades of 30 and 32 members each were the two dedicated fire departments which were located at multiple unit sites. The largest brigade, 218 members, was located at a single unit, boiling water reactor site. On average, brigades at BWRs tend to be larger than at PWRs with a mean size of 92 members compared to 70 members of PWRs. As may be expected, large units tend to maintain slightly larger membership in their brigades with a mean size of 81 members for units greater than 700 mWe and a mean size of 70 members for smaller units. Contrary to what might be expected, the mean size of brigade at multiple unit sites is smaller than at single unit sites: 66 members vs. 86 members. The shift in mean size is due to a skewing of the distribution of data created by the two dedicated fire departments at multiple unit sites which have relatively small memberships of 30 and 32 persons. However, even disregarding the dedicated fire departments, the mean fire brigade size at multiple unit sites is 73 persons, less than the overall mean of 78.

Most uniformly, respondents indicated that a five person minimum brigade is maintained of each shift. The uniformity of the response may be as a result of a predisposition to provide a response which conforms with the minimum requirement of Appendix R. Upon personal inquiry, many of the respondents confided that although the authorized response to the question on shift brigade size is five persons, a brigade size of from seven to ten persons is maintained on each shift. Based on this information, it may not be accurate to conclude that the average shift brigade includes five persons but rather may be somewhat larger.

Predominantly, fire brigades are constituted mostly by plant operators. Other departments identified as providing fire brigade members included plant fire departments, health physics, security, engineering, maintenance, and chemistry. Although training departments are often associated with fire fighting programs at nuclear power plants, only two individuals who are trainers were identified as fire brigade members among all the plants surveyed.

Not surprisingly, the title most often assigned to the leader of the fire brigade is "Fire Brigade Leader." In a majority of cases, the fire brigade leader is also identified as being a licensed operator as per Appendix R. In 18 of the 31 cases reported, the supervisor over the Fire Brigade Leader was identified as the Shift Supervisor. In six cases, the supervisor over the Fire Brigade Leader held the title of Watch Engineer or Shift Engineer. Other titles identified as supervisor of the brigade included Senior Fire Protection or Senior Fire Fighting Supervisor (four cases), Shift Foreman, Plant Manager, Senior Watch Supervisor, and Supervisor of Safety.

2.3 Brigade Equipment

According to the responses to this survey, nuclear power plant fire brigades are well equipped for fire fighting service. Personal gear

provided included helmets, coats, and gloves in all cases. Eighteen of 31 were provided with hip boots, while another 12 brigades provided short boots and pants for the members. Eleven also provide hoods for member use. Eleven of the brigades were equipped with personal alert safety systems for members.

All brigades had 1-1/2 inch hose connections available with various type nozzles. All but one brigade had axes available and all but two have dry chemical and carbon dioxide portable extinguishers available. Twenty-nine of the brigades were provided with smoke ejectors and 26 had foam available. Only 22 of the brigades reported having pressurized water extinguishers available. Hose carts were provided for 19 the of brigades. Even though only two sites reported having a dedicated fire department, eight sites reported having an on-site fire trucks for fire brigade use. Other equipment identified included pike poles, salvage covers, forcible entry tools, Halon and AFFF portable extinguishers, rope, hose and fittings, bolt cutters, sprinkler wedges, infrared heat sensing guns, and CO_2 hose reels.

2.4 Brigade Training

Minimum training requirements are delineated in Appendix R and based upon audit experience as well as the survey results; the minimum requirements are generally met or exceeded. However, there exists a fair degree of variance in the level of training duration of fire brigades at nuclear power plants.

Initial classroom training is provided on-site in all cases reported. There is a wide range in the duration of initial brigade training. Hours of classroom training range from as few as 6 hours to as many as 400 hours. For the case where 400 classroom hours was reported, it was also reported that 240 hours or equivalent must be completed prior to assignment to the brigade. The large range and single high value in the data for duration of classroom training skews the distribution such that the mean duration of training is 42 hours but the median duration is 26 hours. Elimination of the highest figure from the distribution results in a more consistent measure of central tendency such that the mean and median duration of classroom training are 29 hours and 24 hours, respectively.

The average frequency of classroom training for fire brigade members is five sessions per shift per year with a range of from one to 20 classroom drills per shift per year reported. The length of classroom sessions was from 0.1 to 8 hours with a mean duration of 5.2 hours.

Live fire training was most often conducted off-site but 11 sites reported that live training was provided on-site, in part. Off-site facilities used most often included city fire training facilities (eight cases). In six cases, county fire training facilities were mentioned and in five cases state facilities were reported to be used. One site reported using a corporate fire training facility and one reported using a facility provided by a private university.

Each brigade generally receives live fire training once per year. The live training was reported to last from 1 hour up to 28 hours. The mean duration of annual live fire training is 9.4 hours.

The person identified as being responsible for instructing the fire brigade most often carried a title of instructor or trainer. The qualifications for fire brigade instructors varied from site to site. Several responded that there were no existing minimum qualifications required. Nine of the respondents cited experience requirements. Fifteen of those responding stated a minimum requirement for a state certificate as an instructor or fire fighter. Two indicated that a college degree was required; one of which required a B.S. degree in engineering, fire science, or safety. Seven of the respondents indicated that they supplemented their staff with outside fire service instructors for live fire fighting exercises.

Twenty-two of the 31 respondents indicated that they utilize outside consultants to provide at least part of their fire brigade training. Nine of the respondents mentioned using state instructors while another five mentioned using Professional Loss Control, Inc. for training. Eight other sources were mentioned including a local fire equipment company, TVA, Ansul, Fire Instructions Consultants, Energy Support Services, Inc., and NUTECH.

Nine of the plants responded that fire brigade leaders are not required to undergo any specific training for appointment as leader. However, 21 reported that regular brigade members undergo brigade leader training. Three indicated that the brigade leader is simply appointed due to other full-time supervisory duties at the plant.

It was reported that the plants perform from four to 60 fire drills per year. The number of brigade members which respond to each drill range from five to 11 persons. Twenty-eight facilities indicated that brigade members usually respond in full gear including SCBA for drills. Of those responding in SCBA, 21 reported actually breathing through the apparatus at least some of the time for drills. Similarly, nearly all the respondents indicated that drills are usually conducted at "full-speed."

3.0 CONCLUSIONS

1. Most facilities reported maintaining a fire brigade with members normally assigned to duties not related to fire protection. However, two of the facilities responding to the survey reported maintaining a dedicated fire department.

2. The size of fire brigades varies widely. While the mean number of trained fire brigade members was 78 persons, the number of trained brigade members at each facility ranged from 30 to 218 persons.

3. The fire brigades are reported to be well equipped with personal safety and fire fighting equipment. Although only two facilities reported having a dedicated fire department, eight facilities reported have a fire truck available for fire brigade use.

4. All plants report meeting the minimum requirements for fire brigade training in Appendix R. While the mean duration of fire brigade classroom training was 26 hours, there was reported a wide variation in the length of classroom training. The reported range extended from as few as 6 hours to as many as 400 hours.

5. Minimum brigade assignment per shift was reported to be five members. Actual fire response may exceed five persons but the actual number which may be expected to respond is unconfirmed by this study.

6. A majority of the facilities responding reported that, as a minimum, those assigned to fire brigade training are required to carry some form of state certification. Some reported that there were no minimum qualifications required whereas two indicated that a college degree was required as a minimum.

7. Seventy percent of the respondents reported using outside consultants, in part, to train brigades.

8. Over two-thirds reported that all brigade members receive leader training. However, three reported that the brigade leader is simply appointed due to other supervisory duties at the plant.

Table 1

Fire Brigade Survey

1. Name of plant (not to be used)? _____

2. Number of brigades?
   - a. ☐ One brigade
   - b. ☐ Two, one primary with one assisting support group
   - c. ☐ Other _____

3. How many certified members on your brigade(s)? _____

4. How many brigade members are assigned to each shift? _____

5. From what department(s) do your brigade members come from and how many from each? _____
   - a. ☐ Plant Fire b. No. ____
   - c. ☐ Operators d. No. ____
   - e. ☐ Health Physic f. No. ____
   - g. ☐ Security h. No. ____
   - i. ☐ Training j. No. ____
   - k. ☐ Engineering l. No. ____
   - m. ☐ Maintenance n. No. ____

6. What is/are the title(s) of your brigade leader(s)?
   - a. ☐ Shift Supervisor
   - b. ☐ Shift Superintendent
   - c. ☐ Plant Fire Chief
   - d. ☐ Plant Fire Marshal
   - e. ☐ Other _____

7. What is the title of the brigade leader's supervisor? _____

Table 1

Fire Brigade Survey (Continued)

8. How many drills do you conduct a year?
   a. Total _____
   b. Backshift _____
   c. Unannounced _____

9. How many brigade members respond to each drill?
   (average) _____

10. Do brigade members dress out in full gear for each drill?
    a. ☐ Yes b. ☐ No

11. Does this include SCBA?
    a. ☐ Yes b. ☐ No

12. If SCBA is worn, is its use real or is it simulated (mask on, breathing air from a tank)?
    a. ☐ Used b. ☐ Simulated

13. What gear does your brigade wear?
    a. ☐ Helmet
    b. ☐ Coat
    c. ☐ Pants
    d. ☐ Hip boots
    e. ☐ Short boots
    f. ☐ Gloves
    g. ☐ Hoods
    h. ☐ P.A.S.S. device
    i. ☐ Handlight

14. What equipment is available to the brigade?
    a. ☐ 1-1/2" hose with nozzle
    b. ☐ Nozzle type _____
    c. ☐ Axe
    d. ☐ Pry bar
    e. ☐ Other hand tools _____
    f. ☐ Dry chemical extinguishers

Table 1

Fire Brigade Survey (Continued)

14. Concluded

g. ☐ ABC h. ☐ Handheld

i. ☐ Wheeled units

j. ☐ BC k. ☐ Handheld

l. ☐ Wheeled units

m. ☐ CO_2 n. ☐ Handheld

o. ☐ Wheeled units

p. ☐ Pressurized water extinguishers

q. ☐ Hose carts

r. ☐ Smoke fans

s. ☐ Flex. duct

t. ☐ Foam and appurtenances

u. ☐ On-site fire truck

v. ☐ Other _____

15. Does your plant have a live fire training ground?

a. ☐ Yes b. ☐ No

16. If so, what does it contain?

a. ☐ Hose house

b. ☐ Hydrant

c. ☐ Smokehouse

d. ☐ Flammable liquid pit

e. ☐ Propane gas tree

f. ☐ Other _____

17. What training is required before someone is assigned to your brigade initially?

a. ☐ Classroom, hours _____

b. ☐ On-site

Table 1

Fire Brigade Survey (Continued)

17. Concluded

c. ☐ Off-site

d. ☐ Live fire, hours _____

e. ☐ On-site

f. ☐ Off-site where? _____

18. What subject areas are covered for initial brigade assignment?

a. ☐ Fire chemistry b. hrs. ____

c. ☐ Portable extinguishers d. hrs. ____

e. ☐ Hose lines f. hrs. ____

g. ☐ Strategy and and tactics h. hrs. ____

i. ☐ Foam use j. hrs. ____

k. ☐ Protective equipment use l. hrs. ____

m. ☐ SCBA use n. hrs. ____

o. ☐ Pre-plans p. hrs. ____

q. ☐ Other _____ r. hrs. ____

19. What exercises are conducted during live fire training before assignment to the brigade?

a. ☐ Advance hose lines

b. ☐ Extinguish fire with portable extinguishers

c. ☐ Dry chemical

d. ☐ CO_2

e. ☐ Water

f. ☐ Extinguish fire with wheeled units

Table 1

Fire Brigade Survey (Continued)

19. Concluded

g. ☐ Extinguish fire with handlines

h. ☐ Extinguish flammable liquid pool fires

i. ☐ With foam

j. ☐ Extinguish propane tree fire

k. ☐ Search and rescue in smoke/fire environment

l. ☐ Blacked out mask

m. ☐ Real smoke condition, SCBA on

n. ☐ Locate fire and extinguish interior fire in actual smoke/fire environment

20. Is training conducted in accordance with

a. ☐ NFPA 600

b. ☐ NFPA 1403

21. Is a training manual provided to each brigade member?

a. ☐ Yes b. ☐ No

22. Is testing required for appointment to the brigade?

a. ☐ Yes b. ☐ No

<u>For Continuing Training on the Two Year Recertification Cycle</u>:

23. What classroom subjects are covered? (Hours are total over 2-year period for this question only.)

a. ☐ Fire chemistry b. hrs. ____

c. ☐ Portable extinguishers d. hrs. ____

e. ☐ Hose lines f. hrs. ____

Table 1

Fire Brigade Survey (Continued)

23. Concluded

f. ☐ Strategy and tactics h. hrs. ____

i. ☐ Foam use j. hrs. ____

k. ☐ Protective equipment use l. hrs. ____

m. ☐ SCBA use n. hrs. ____

o. ☐ Pre-plans p. hrs. ____

q. ☐ Other _____ r. hrs. ____

24. How long is the typical classroom session? hrs. _____

25. How many classroom drills are conducted each year for each shift? _____

26. How many hands-on on-site drills are conducted each year for each shift? _____

27. How many live fire drills are conducted each year for the brigade? _____

28. How long is a live fire drill? hrs. _____

29. Where are the live fire drills conducted?

a. ☐ On-site

b. ☐ Off-site

c. ☐ Location _____

30. What exercises are conducted during typical live fire drill?

a. ☐ Advance hose lines

b. ☐ Extinguish fire with portable extinguishers

c. ☐ Dry chemical

d. ☐ CO_2

e. ☐ Water

Table 1

Fire Brigade Survey (Continued)

30. Concluded

f. ☐ Extinguish fire with wheeled units

g. ☐ Extinguish fire with handlines

h. ☐ Extinguish flammable liquid pool fires

i. ☐ With foam

j. ☐ Extinguish propane tree fire

k. ☐ Search and rescue in smoke/ fire environment

l. ☐ Blacked out mask

m. ☐ Real smoke condi tion, SCBA on

n. ☐ Locate fire and extinguish in actual smoke/fire environment

31. Who instructs the brigade?

a. Classroom _____ (Title)

b. Qualifications (required by utility)

_____

_____

c. Drills _____ (Title)

d. Qualifications (required by utility)

_____

e. Live fire training _____ (Title)

Table 1

Fire Brigade Survey (Continued)

31. Concluded

f. Qualifications (required by utility) _____

32. Is any of this training provided by outside consultants? a. ☐ Yes b. ☐ No

33. If so, who? _____

34. Are drills performance graded? a. ☐ Yes b. ☐ No

35. Is live fire training performance graded? a. ☐ Yes b. ☐ No

36. Has your brigade training (or any aspect of it) ever had a fire protection audit finding against it? a. ☐ Yes b. ☐ No

37. Are drills conducted in "real" time (at full speed)? a. ☐ Yes b. ☐ No

38. If not, is it accurate to say that drills are slowed down for "walk through" purposes? a. ☐ Yes b. ☐ No

Brigade Leader Training

39. Is a brigade leader required to undergo any specific training for appointment to that position? a. ☐ Yes b. ☐ No

40. If not, does the brigade leader simply take additional brigade training? a. ☐ Yes b. ☐ No

41. If not, is the brigade leader simply appointed due to the other full-time supervisory duties at the plant? a. ☐ Yes b. ☐ No

42. Do regular brigade members undergo brigade leader training? a. ☐ Yes b. ☐ No

43. What topic areas are covered under brigade leader training?

a. ☐ The Combustion Process b. Annual hours _____

c. ☐ Fire Hazards and Fire Protection d. Annual hours _____

Table 1

Fire Brigade Survey (Concluded)

e.	☐ Fire Behavior and Development	f.	Annual hours _____
g.	☐ Fire Protection Systems	h.	Annual hours _____
	i. ☐ Detection	j.	Annual hours _____
	k. ☐ Water Suppression	l.	Annual hours _____
	m. ☐ Special Extinguishing	n.	Annual hours _____
o.	☐ Building Construction	p.	Annual hours _____
q.	☐ Operational Decision Making	r.	Annual hours _____
s.	☐ Fundamentals of Fire Suppression	t.	Annual hours _____
u.	☐ Strategic Concepts and Tactics	v.	Annual hours _____
w.	☐ Preplanning	x.	Annual hours _____
y.	☐ Evaluating Fire Fighting Resources	z.	Annual hours _____
aa.	☐ Analysis of Hazards During Pre-fire Planning	bb.	Annual hours _____
cc.	☐ The Fire Brigade and Disaster Plan	dd.	Annual hours _____
ee.	☐ Role of the Brigade Leader	ff.	Annual hours _____
gg.	☐ Developing Leadership Abilities	hh.	Annual hours _____
ii.	☐ Leadership in Action	jj.	Annual hours _____
kk.	☐ Leadership Styles	ll.	Annual hours _____
mm.	☐ Case Studies	nn.	Annual hours _____
oo.	☐ Stressors	pp.	Annual hours _____
qq.	☐ Simulations	rr.	Annual hours _____

APPENDIX C.1

SURVEY RESPONSES

FIRE BRIGADE SURVEY

Questions	Utilities																														
	A	B	C	D	E	F	G	H	I	J	K	L	M	N	O	P	Q	R	S	T	U	V	W	X	Y	Z	AA	AB	AC	AD	AE
2a.		X		X	X	X	X		X	X	X		X	X	X			X	X	X	X	X		X		X	X	X	X	X	X
2b.	X		X					X				X					X						X								
2c.																5									F.D.						
3.	43	110	120	77	105	85	108	76	65	70	70	82	65	100	96	50	104	218	65	32	45	44	140	40	30	72	47	46	85	70	68
4.	5/5	5	5	9	5	5	5	10	5	5	8	5	5	5	5	8	5	5	5	6	8	5	8	5	6	5	5	5	5	5	5
5a.									2							5		3		32		10			30						
5c.	25	70	75	8	60%	X	3	59	3	X	70	2	3	1	50%	50	74	60	50		45	34	80	24		72	47	3	44	3	36
5e.							1					1		1				20					30					1			20
5g.												1	2	1	50%			70	15				30	16				1	41	2	12
5i.																		2													
5k.			X									1																			
5m.	15	25	X		40%		1										20	45													
6a.			X							X	X			X	X																X
6b.																															
6c.																		X													
6d.																															
6e.	SRD	RO		SFSu	FBCf	S.Fo	FBL	S.Fo	WaSu			S.E.	EO			FST	FBL	R.O.	FBL	ASE	SRO	FBL	ASS	FBL	FPSu	S.F.	SaOp	ED	FBL	FBL	
7.	S.F.	S.S.	P.M.	SWSu	SFPS	S.E.	S.S.	S.E.	WaE	S.S.	S.S.	S.S.	S.S.	S.S.	S.S.	SuSa	S.S.	S.S.	S.S.	S.E.	SOS	FFSr	S.S.	S.S.	SrFP	S.E.	S.S.	S.S.	NWE	S.S.	S.S.
8a.	16	21	11	24	25	24	26	20	50	60	24		4	24	26	26	30	24	30	30	24	24	20		30	24	20		40	60	26
8b.	2	21	3	6	10	20	6	16	6	6	6		1		6	5	5	20	6	24	6	6	20	1	5	24	5	5	5	55	16
8c.	15	21	7	6	5	12	6	16	6	6	6		1		26	5	5	6	6	6	6	6	6		5	6	5	5	5	1	3
9.	10	7	6	7	8	6	7	8	5	5	6	8	5	8	6	6	7	5	5	11	8	5	12	5	6	7	7	5	5	5	7
10a.	X	X	X	X	X			X	X	X	X	X	X	X	X	X	X	X	X	X	X	X	X	X	X	X	X	X	X		X
10b.						X	X			X																				X	
11a.	X	X		X	X	X			X	X	X	X	X	X	X	X	X	X	X	X	X	X	X	X	X	X	X	X	X	X	X
11b.			X				X	X						X					X												
12a.	X	X			X				X				X		X		X	X	X	X	X	X	X	X	X	X	X	X	X	X	X
12b.	X			X		X	X	X		X	X	X		X		X		X	X					X	X				X		

FIRE BRIGADE SURVEY

Questions	Utilities																														
	A	B	C	D	E	F	G	H	I	J	K	L	M	N	O	P	Q	R	S	T	U	V	W	X	Y	Z	AA	AB	AC	AD	AE
13a.	X	X	X	X	X	X	X	X	X	X	X	X	X	X	X	X	X	X	X	X	X	X	X	X	X	X	X	X	X	X	X
13b.	X	X	X	X	X	X	X	X	X	X	X	X	X	X	X	X	X	X	X	X	X	X	X	X	X	X	X	X	X	X	X
13c.	X	X			X		X										X		X	X	X			X	X		X	X			
13d.		X	X	X		X		X	X		X	X	X	X	X	X		X				X	X			X			X		X
13e.	X	X			X		X			X							X		X		X			X	X		X	X			
13f.	X	X	X	X	X	X	X	X	X	X	X	X	X	X	X	X	X	X	X	X	X	X	X	X	X	X	X	X	X	X	X
13g.		X					X	X							X	X	X	X		X		X		X	X		X				
13h.	X				X				X								X					X	X		X	X	X				
13i.		X			X	X	X	X	X				X	X	X		X		X	X		X	X	X	X		X	X	X		X
14a.	X	X	X	X	X	X	X	X	X	X	X	X	X	X	X	X	X	X	X	X	X	X	X	X	X	X	X	X	X	X	X
14b.	COMB	ELEC							ADJ	VARI	FOG		ADJ	FOG				ELEC	PLAS	TFT	COMB		FOG	ELEC		ELEC	Tjet	ELEC	FOG	ELEC	
14c.		X	X	X	X	X	X	X	X	X	X		X	X	X	X	X	X	X	X	X	X	X	X	X	X	X	X	X	X	X
14d.		X	X	X	X	X	X	X	X	X	X	X	X	X	X	X	X	X	X	X	X	X	X	X	X	X	X		X		X
14e.	VARI	VARI	VARI		PIKE	X	X		X	X	X		VARI		SPNR		X	VARI	SPNR	X	SPNR	HALA	PIKE		VARI	VARI		ROPE	HALA	X	
14f.	X	X	X	X	X			X	X	X	X	X	X	X	X	X	X	X	X	X	X	X	X	X	X	X	X	X	X	X	X
14g.	X	X	X		X	X			X		X	X	X	X	X	X	X	X	X	X	X	X	X	X	X	X	X	X	X	X	X
14h.	X	X	X		X	X			X		X	X	X	X	X	X	X	X	X	X	X	X	X	X	X	X	X	X	X	X	X
14i.		X	X		X	X			X		X		X			X	X	X	X	X	X				X	X	X	X	X	X	X
14j.	X	X					X	X	X	X	X			X	X	X	X	X	X	X	X	X		X	X		X	X		X	
14k.	X	X					X	X	X	X	X		X	X	X	X	X	X	X		X	X		X	X		X	X		X	
14l.							X	X	X	X	X			X	X	X				X	X	X		X	X		X	X		X	
14m.	X	X	X	X	X	X	X	X	X	X	X		X	X	X	X	X	X	X	X	X	X	X		X	X	X	X	X	X	X
14n.	X	X	X	X	X	X	X	X	X	X	X		X	X	X	X	X	X	X		X	X	X		X	X	X	X	X	X	X
14o.	X								X		X		X		X	X				X	X						X	X	X		X
14p.	X	X		X	X	X	X	X	X	X	X				X	X		X		X	X	X		X	X	X	X			X	X
14q.	X	X			X		X	X	X	X			X		X		X	X	X	X	X				X	X	X			X	X
14r.		X	X	X	X	X	X	X	X	X	X	X	X		X	X	X	X	X	X	X	X	X	X	X	X	X	X	X	X	X
14s.		X	X	X	X	X	X	X	X	X	X	X	X		X	X	X	X	X	X	X	X	X	X	X	X	X	X	X	X	X
14t.	X	X	X	X	X	X	X	X	X	X	X		X		X	X	X	X	X	X		X	X	X	X	X	X		X		X
14u.								X									X		X	X			X	X	X				X		
14v.	CO2				VARI		VARI		VARI	VARI			HALN		VARI		PIKE					VARI	CVRS			VARI					
15a.			X				X	X								X	X	X		X		X	X			X		X		X	
15b.	X	X		X	X	X			X	X	X	X	X	X	X	X			X		CNTY		UNIV	X	X		X		CNTY		X

FIRE BRIGADE SURVEY

Questions	Utilities																															
	A	B	C	D	E	F	G	H	I	J	K	L	M	N	O	P	Q	R	S	T	U	V	W	X	Y	Z	AA	AB	AC	AD	AE
16a.							X	X									X	X			X	X	X			X		X			
16b.			X				X	X				X					X	X		X	X		X			X		X		X	
16c.			X				X	X				X					X	X			X	X				X		X		X	
16d.			X				X	X				X				X	X	X		X	X	X	X			X		X		X	
16e.			X				X					X					X				X	X	X			X		STGE		X	
16f.			XFMR				X	X				TWR					TANK	TWR		BLDG	MAZE	TWR									
17a.	X	20	40	40	24	40	24	30	28	10	X	16	X	40	32	32	8	40	12	20	40	40	24	24	400	20	75	6	56	14	16
17b.	X		X	X	X	X	X	X	X		X	X	X	X	X	X	X	X	X	X	X	X	X	X	X	X	X	X	X	X	X
17c.		X				X		X		X	X														X		X		X		
17d.		20	24	8	16	X	16	20	10	6	X	24	X	8	8	8	8	16	44	20	24	40	8	16	12	20	8	2	24	7	8
17e.			X				X	X					X				X	X	X						X	X		X		X	
17f.		8	ST	CNTY	ST	CTY			X	CORP	CNTY	ST	X	ST	CNTY	CNTY		CTY		CORP	CNTY	X	UNIV	CTY	CNTY		CTY		CNTY	CTY	
18a.	X	X	1	4	2	X	3	2	2	1	X	X	X	X	X	X	1	X	2	3	X	4	2	2	8	X	X	1	2	X	X
18c.	X	X	1	4	2	X	4	2	2	1.5	X	X	X	X	X	X	1	X	1	6	X	4	1	1	16	X	X	1	2	X	X
18e.	X	X	6	2	4	X	4	3	2	.5	X	X	X	X	X	X	1	X	1	8	X	4	1	1	16	X	X	2	4	X	X
18g.	X	X	1	2	1	X	3	2.5	2	1	X	X	X	X	X	X	1	X	1	10	X	4	2	2	48	X		1.5	4	X	X
18i.	X	X	X	2	2		2	.5	1	1	X		X	X	X	X	1	X	.5	3	X	2	1.5	0.25	16	X	X		4	X	X
18k.	X	X	1	2	1	X	4	1	1		X	X	X	X	X	X	1	X	1	2	X	4	1.5	2	16	X	X	1	2	X	X
18m.	1hr.	X	6	8	4	X	4	4.5	4	1	X	X	X	X	X	X	1	X	1.5	3.5	X	16	3		16	X	X	1	4	X	X
18o.		X	1	4	1	X	2	1	2		X		X	X	X	X	1	X	1		X	4	2		64	X	X	.5	2	X	X
18q.			23	12	7		8	14	10	3	X	X		X	X	X		HZMT	3				5		200	HZMT	X	.5	56	HZMT	TOUR
19a.		X	X	X	X	X	X	X	X	X	X	X	X	X	X	X	X	X	X	X	X	X	X	X	X	X	X	X	X	X	X
19b.		X	X	X	X	X	X	X	X	X	X	X	X	X	X	X	X	X	X	X	X	X	X	X	X	X	X		X	X	X
19c.		X	X	X	X	X	X	X	X	X	X	X	X	X	X	X	X	X	X	X	X	X	X	X	X	X	X		X	X	X
19d.			X	X	X	X	X	X	X	X	X	X	X	X	X	X	X	X		X	X	X	X		X	X	X		X	X	X
19e.				X			X	X	X	X	X	X		X	X	X		X		X		X		X	X	X	X			X	X
19f.					X		X	X			X				X	X			X	X		X		X	X	X	X			X	
19g.		X	X	X	X	X	X	X	X	X	X	X	X		X	X	X	X	X	X	X	X	X	X	X	X	X	X	X	X	X
19h.		X	X	X	X	X	X	X	X	X	X	X	X	X	X	X	X	X	X	X	X	X	X	X	X	X	X	X	X	X	X
19i.		X	X	X	X		X	X		X	X	X	X	X	X	X	X	X	X	X	X	X	X		X	X	X		X		X
19j.		X	X	X	X	X	X			X	X	X	X	X	X		X			X	X	X	X		X	X	X	X	X	X	
19k.		X	X	X	X	X	X	X	X	X	X	X	X	X	X	X	X	X	X	X	X	X	X	X	X	X	X	X	X	X	X
19l.					X			X								X					X	X	X			X	X				X

FIRE BRIGADE SURVEY

Questions	Utilities																														
	A	B	C	D	E	F	G	H	I	J	K	L	M	N	O	P	Q	R	S	T	U	V	W	X	Y	Z	AA	AB	AC	AD	AE
19m.		X	X	X	X	X	X	X	X	X	X	X	X	X	X	X	X	X	X	X	X	X	X	X	X	X	X	X	X	X	X
19n.		X	X	X	X	X		X	X	X	X	X	X		X	X	X	X		X	X	X	X	X	X	X	X	X	X		
20a.					27									X		X	X	27	27	1001	X	27		27	27	27			27		1001
20b.			X			X	X	X							X		X	X				X									X
21a.	X	X			X		X	X	X			X	X	X	X		X		X	X	X	X		X		X	X		X		
21b.			X	X		X				X	X					X		X					X		X			X		X	
22a.		X	X		X		X	X	X		X		X	X	X	X	X	X	X	X	X	X	X	X	X	X	X		X	X	X
22b.	X			X		X				X		X																X			
23a.	.5hr.	X	X	4	2	X	X	X	2		X	X	X	X	X	X	1	X	X	1	X	2	1	X	8	X	X		2	X	X
23c.	2hr.	X	X	4	2	X	X	X	2		X	X	X	X	X	X	1	X	X	2	X	2	2	X	8	X	X	X	2	X	X
23e.	2hr.	X	X	2	4	X	X	X	2	1	X	X	X	X	X	X	1	X	X	1	X	2	2	X	16	X	X	X	4	X	X
23g.	1hr.	X	X	2	1	X	X	X	2		X	X	X	X	X	X	1	X	X	2	X	2	1	X	24	X	X	X	4	X	X
23i.		X	X	2	2	X	X	X	1	1	X		X	X	X	X	1	X	X	1	X	2	1	X	8	X	X		4		X
23k.	X	X	X	2	1	X	X	X	1		X	X	X	X	X	X	1	X	X	2	X	2	.5	X	16	X	X	X	2	X	X
23m.	1hr.	X	X	16	4	X	X	X	4	1	X	X	X	X	X	X	1	X	X	2	X	2	6	X	8	X	X	X	4	X	X
23o.	1hr.	X	X	4	1	X	X	X	2				X	X	X	X	1	X	X	8	X	2	2	X	32	X	X	X	2	X	X
23q.		ELEC	X	12	7	X	X	X	10	1			RAD	X	X	X	RAD	X	X		X		5	X	84	X	X	X	56		X
24.	1hr.	1	4	4	4	4	8	4	2	8	5	2	4	4		3	1	4	4	2	8	3	2	4	8	VARI	4	3	4		2
25.	4	5	4	4	4	4	1	4	4	1	2		2	4		20	8	VARI	4	5	4	4	4	4		4	10	1	20		4
26.	4	4	11	4	25	12	2	4	9	60	6		2	2	26	2	6	4	5	5	4	4	4	5	4	4	4	1	20	12	4
27.	1	10	1		1	1	4	2	1	1	1	1	1	12	1	1	1	1		1	1	1	1	1	1	1	1	1		1	1
28.	4	1	24		8	8	3	2	10	2	16	24	8	1	16	8	8	16		8	28	24	10	4	6	VARI		3.5		4	1.5
29a.			X				X	X						X				X		X			X			X				X	
29b.	X	X	X		X	X			X	X	X	X	X		X	X	X	X			X	X	XX	X	X		X		X		X
29c.	CTY	ST	ST		ST	CTY			CTY	CORP	CNTY	ST	CTY		CNTY	CNTY	ST	CTY			CNTY		UNIV	CTY	CNTY		CTY		CNTY	CTY	

FIRE BRIGADE SURVEY

Questions	Utilities																														
	A	B	C	D	E	F	G	H	I	J	K	L	M	N	O	P	Q	R	S	T	U	V	W	X	Y	Z	AA	AB	AC	AD	AE
30a.	X	X	X		X	X	X	X	X	X	X	X	X	X	X	X	X	X		X	X	X	X	X	X	X	X	X	X	X	X
30b.	X	X	X		X	X	X	X	X	X	X	X	X	X	X	X	X	X		X	X	X	X	X	X	X	X		X	X	X
30c.	X	X	X		X	X	X	X	X	X	X	X	X	X	X	X	X	X		X	X	X	X	X	X	X	X		X	X	X
30d.	X		X		X	X	X	X	X	X	X	X	X	X	X	X	X	X				X	X		X	X	X		X		X
30e.	X						X	X	X	X	X			X	X	X		X				X			X	X	X			X	X
30f.			X		X	X	X	X	X		X		X		X	X	X	X				X		X	X	X				X	
30g.		X	X		X	X	X	X	X	X	X	X	X	X	X	X	X	X		X	X	X	X	X	X	X	X	X	X	X	X
30h.	X	X	X		X	X	X	X	X	X	X	X	X	X	X	X	X	X		X	X	X	X	X	X	X	X	X	X	X	X
30i.	X	X	X		X	X	X	X		X	X	X	X		X	X	X	X		X	X	X	X	X	X	X	X		X		X
30j.	X	X	X		X	X	X		X	X	X	X	X		X		X				X	X	X		X	X	X	X	X	X	X
30k.	X	X	X		X	X	X	X	X	X	X	X	X	X	X	X	X	X		X	X	X	X	X	X	X	X	X	X	X	X
30l.					X			X								X				X	X		X			X	X		X		
30m.	X	X	X		X	X	X	X	X	X	X	X	X	X	X	X	X	X		X	X	X	X	X	X	X	X	X		X	X
30n.	X	X	X		X	X		X	X	X	X	X	X		X	X	X	X		X	X	X	X	X	X	X	X	X	X		X
31a.	TCo	FPCo	TSp	FBIn	ETIn	TIn	FPTr	FBIn	TIn	FSIn	TSp	TIn	TIn	FPIn	FPTS	FPSp	FM	FC	CORP	FTI	CORP	FFI	FPI	TSpc	FPSu	FBIn	FBIn	FBIn	NuTS	FBIn	FPCo
31b.	NONE	ST	ST	EXP	ST	ST	ST	ST	ST	ST	ST	NONE	ST	DEGR		EXP	EXP	B.S.	NONE	1041	ST	ST	EXP	EXP	EXP	ST	EXP		EXP	ST	ST
31c.	FM	SFPT	TSp	FBIn	Chf	FM	FPCo	FBIn	TIn	FPAs	FSSp	TIn	TIn	SaCo	FPTS	FPSp	FM	FC	CORP	FTI	FPSp	FFI	FPSu	FPE	FPSu	STFF	FPCo	FBIn	NuTS	D.S.	SFPCo
31d.	EXP	ST	ST	EXP	ST	ST	A.S.	ST	ST	NONE	EXP	NONE	ST			EXDP	EXP	B.S.	NONE	1041	B.S.	ST	EXP	EXP	EXP	EXP	EXP		EXP		ST
31e.	FD		TSp	FD	ETIn	TIn	FPTr	FBIn	FD	FSIn	FD	FD	TIn	FD	FPSu	FPSp	FM	FC		FTI	FPSp	FFI	FPI	CTY	FPSu	FBIn	FBIn	FBIn	ST	FBIn	FPCo
31f.			ST	ST	ST	ST	ST	ST	ST	ST	ST	ST	ST	ST	ST	EXP	EXP	B.S		1041	B.S.	ST	EXP	EXP	EXP	ST	EXP			ST	ST
32a.	X	X			X			X	X		X	X	X	X		X	X	X	X		X	X	X	X	X		X	X	X		X
32b.			X	X		X	X			X					X					X						X				X	
33.	PLC	ST			TVA	FECo	X	PLC	PLC		ANSL	FIC	ST	ST		PLC	ST	St.	PLC		ESSI	ST	UNIV	NUTC			ST	CNTY	ST		ST
34a.		X	X	X	X		X	X	X	X	X	X	X	X		X	X		X	X	X	X	X	X	X	X	X	X	X	X	X
34b.	X					X									X			X													
35a.			X	X	X		X	X	X		X		X	X	X			X			X	X	X	X		X	X	X	X	X	X
35b.	X	X				X				X		X				X	X			X					X						
36a.	X	X	X	X	X		X			X	X	X	X		X	X			X				X		X		X		X		
36b.						X		X	X					X			X	X		X	X	X		X		X		X		X	X
37a.	X	X	X	X	X	X	X	X	X	X	X	X	X		X	X	X	X	X	X	X	X	X	X	X	X	X	X		X	X
37b.														X											X			X	X		

FIRE BRIGADE SURVEY

Questions	Utilities																														
	A	B	C	D	E	F	G	H	I	J	K	L	M	N	O	P	Q	R	S	T	U	V	W	X	Y	Z	AA	AB	AC	AD	AE
38a.						X	X		X	X									X						X			X			
38b.														X															X		
39a.		X	X		X		X	X	X	X	X	X	X	X	X	X				X	X	X	X			X		X	X	X	X
39b.	X			X		X											X	X	X					X	X		X				
40a.	X			X		X											X	X	X						X						
40b.																								X							
41a.	X																X							X							
42b.																									X						
42a.	X	X		X			X	X		X	X		X			X	X	X	X	X	X		X		X	X	X	X		X	X
42b.			X		X	X			X			X		X	X							X		X					X		
43a.	X	1			2	X		1	X	1		X	X	X	X	X		X		X					8	X				X	X
43c.	X	1			2	X		1	X	1		X	X	X	X	X		X		X					16	X		1		X	X
43e.		1			2	X		1	X	1		X	X	X	X	X		X		X					8	X				X	X
43g.		1		2	4	X		3	X			X	X	X	X	X	X	X		X					80	X				X	X
43i.		X			1	X		1	X			X	X	X	X	X		X		X					20	X				X	X
43k.		X		X	2.5	X		1	X			X	X	X	X	X		X		X					30	X				X	X
43m.		X		X	.5	X		1	X			X	X	X	X	X		X		X					30	X				X	X
43o.					X	X	1		X							X	X	X							8	X				X	X
43q.				1	5	X	1		X			8	X	X		X	X	X	X	X			0.25			X		2	X	X	X
43s.	X	1			3	X		2	X			X	X	X	X	X		X		X					8	X				X	X
43u.	X	1		2	4	X	1	2	X	1		X	X	X	X	X	X	X	X	X			0.25			X		2	X	X	X
43w.		1		1	2	X	2	2	X	1		8	X	X		X		X	X	X					64	X		X		X	X
43y.	X	1			2	X		1	X				X	X	X	X	X	X	X						8	X		1		X	X
43aa.		1			1	X		2	X			X	X	X		X				X					24	X		2		X	X
43cc.		1			1	X	1	2	X			X	X		X	X		X		X						X					X
43ee.		1			X	X	1	1	X	1		8		X	X	X	X	X	X	X			0.25			X		1		X	X
43gg.		1		1		X			X					X		X	X	X	X				0.25			X		1			X
43ii.		1		1		X			X		X			X		X		X								X		1		X	X
43kk.		1		1		X			X		X			X	X	X			X							X		2		X	X
43mm.					2	X	1		X			8		X	X	X	X	X	X	X						X		1	X	X	X
43oo.						X			X					X		X															
43qq.		1			2	X	2	3	X			8	X	X	X	X	X	X	X	X						X			X	X	X

ATTACHMENT C.2

SURVEY RESPONSES FOR PRESSURIZED WATER REACTORS

FIRE BRIGADE SURVEY - PRESSURIZED WATER REACTORS

Questions	Utilities														
	B	D	E	G	K	M	P	Q	S	T	V	X	Z	AA	AE
2a.	X	X	X	X	X	X			X	X	X	X	X	X	X
2b.								X							
2c.							5								
3.	110	77	105	108	70	65	50	104	65	32	44	40	72	47	68
4.	5	9	5	5	8	5	8	5	5	6	5	5	5	5	5
5a.							5			32	10				
5c.	70	8	60%	3	70	3	50	74	50		34	24	72	47	36
5e.				1											20
5g.						2			15			16			12
5i.															
5k.															
5m.	25		40%	1				20							
6a.					X										X
6b.															
6c.															
6d.															
6e.	RO	SFSu	FBCf	FBL		EO	FST	FBL	FBL	ASE	FBL	FBL	S.F.	SaOp	
7.	S.S.	SWSu	SFPS	S.S.	S.S.	S.S.	SuSa	S.S.	S.S.	S.E.	FFSr	S.S.	S.E.	S.S.	S.S.
8a.	21	24	25	26	24	4	26	30	30	30	24		24	20	26
8b.	21	6	10	6	6	1	5	5	6	24	6	1	24	5	16
8c.	21	6	5	6	6	1	5	5	6	6	6		6	5	3
9.	7	7	8	7	6	5	6	7	5	11	5	5	7	7	7

FIRE BRIGADE SURVEY - PRESSURIZED WATER REACTORS

Questions	Utilities														
	B	D	E	G	K	M	P	Q	S	T	V	X	Z	AA	AE
10a.	X	X	X		X	X	X	X	X	X	X	X	X	X	X
10b.				X											
11a.	X	X	X		X	X	X	X	X	X	X	X	X	X	X
11b.				X					X						
12a.	X		X			X		X	X	X	X	X	X	X	X
12b.		X		X	X		X		X			X			
13a.	X	X	X	X	X	X	X	X	X	X	X	X	X	X	X
13b.	X	X	X	X	X	X	X	X	X	X	X	X	X	X	X
13c.	X		X	X				X	X	X		X		X	
13d.	X	X			X	X	X				X		X		X
13e.	X		X	X				X	X			X		X	
13f.	X	X	X	X	X	X	X	X	X	X	X	X	X	X	X
13g.	X			X			X	X		X	X	X		X	
13h.			X					X			X		X	X	
13i.	X		X	X		X		X	X	X	X	X		X	X
14a.	X	X	X	X	X	X	X	X	X	X	X	X	X	X	X
14b.	ELEC				FOG	ADJ			PLAS	TFT		ELEC	ELEC	Tjet	
14c.	X	X	X	X	X	X	X	X	X	X	X	X	X	X	X
14d.	X	X	X	X	X	X	X	X	X	X	X	X	X	X	X
14e.	VARI		PIKE	X	X	VARI		X	SPNR	X	HALA		VARI		X
14f.	X	X	X		X	X	X	X	X	X	X	X	X	X	X
14g.	X		X		X	X	X	X	X	X	X	X	X	X	X
14h.	X		X		X	X	X	X	X	X	X	X	X	X	X
14i.	X		X		X	X	X	X	X	X			X	X	X
14j.	X			X	X		X	X	X	X	X	X		X	
14k.	X			X	X	X	X	X	X		X	X		X	

FIRE BRIGADE SURVEY - PRESSURIZED WATER REACTORS

Questions	Utilities														
	B	D	E	G	K	M	P	Q	S	T	V	X	Z	AA	AE
14l.				X	X		X			X	X	X		X	
14m.	X	X	X	X	X	X	X	X	X	X	X		X	X	X
14n.	X	X	X	X	X	X	X	X	X		X		X	X	X
14o.					X	X	X			X				X	X
14p.	X	X	X	X	X		X			X	X	X	X	X	X
14q.	X		X	X		X		X	X	X			X	X	X
14r.	X	X	X	X	X	X	X	X	X	X	X	X	X	X	X
14s.	X	X	X	X	X	X	X	X	X	X	X	X	X	X	X
14t.	X	X	X	X	X	X	X	X	X	X	X	X	X	X	X
14u.								X	X	X		X			
14v.			VARI	VARI		HALN		PIKE			VARI		VARI		
15a.				X			X	X		X	X		X		
15b.	X	X	X		X	X	X		X			X		X	X
16a.				X				X			X				
16b.				X				X		X			X		
16c.				X				X			X		X		
16d.				X			X	X		X	X		X		
16e.				X				X			X		X		
16f.				X				TANK		BLDG	TWR		X		
17a.	20	40	24	24	X	X	32	8	12	20	40	24	20	75	16
17b.		X	X	X	X	X	X	X	X	X	X	X	X	X	X
17c.	X				X									X	
17d.	20	8	16	16	X	X	8	8	44	20	40	16	20	8	8
17e.				X		X		X	X				X		
17f.	8	CNTY	ST		CNTY	X	CNTY			CORP	X	CTY		CTY	CTY

FIRE BRIGADE SURVEY - PRESSURIZED WATER REACTORS

Questions	Utilities														
	B	D	E	G	K	M	P	Q	S	T	V	X	Z	AA	AE
18a.	X	4	2	3	X	X	X	1	2	3	4	2	X	X	X
18c.	X	4	2	4	X	X	X	1	1	6	4	1	X	X	X
18e.	X	2	4	4	X	X	X	1	1	8	4	1	X	X	X
18g.	X	2	1	3	X	X	X	1	1	10	4	2	X		X
18i.	X	2	2	2	X	X	X	1	.5	3	2	0.25	X	X	X
18k.	X	2	1	4	X	X	X	1	1	2	4	2	X	X	X
18m.	X	8	4	4	X	X	X	1	1.5	3.5	16		X	X	X
18o.	X	4	1	2	X	X	X	1	1		4		X	X	X
18q.		12	7	8	X		X		3				HZMT	X	TOUR
19a.	X	X	X	X	X	X	X	X	X	X	X	X	X	X	X
19b.	X	X	X	X	X	X	X	X	X	X	X	X	X	X	X
19c.	X	X	X	X	X	X	X	X	X	X	X	X	X	X	X
19d.		X	X	X	X	X	X	X		X	X		X	X	X
19e.		X		X	X		X			X	X	X	X	X	X
19f.			X	X	X		X		X	X	X	X	X	X	
19g.	X	X	X	X	X	X	X	X	X	X	X	X	X	X	X
19h.	X	X	X	X	X	X	X	X	X	X	X	X	X	X	X
19i.	X	X	X	X	X	X	X	X	X	X	X		X	X	X
19j.	X	X	X	X	X	X		X		X	X		X	X	
19k.	X	X	X	X	X	X	X	X	X	X	X	X	X	X	X
19l.			X				X				X		X	X	X
19m.	X	X	X	X	X	X	X	X	X	X	X	X	X	X	X
19n.	X	X	X		X	X	X	X		X	X	X	X	X	
20a.			27				X	X	27	1001	27	27	27		1001
20b.				X				X			X				
															X
21a.	X		X	X		X		X	X	X	X	X	X	X	
21b.		X			X		X								

FIRE BRIGADE SURVEY - PRESSURIZED WATER REACTORS

Questions	Utilities														
	B	D	E	G	K	M	P	Q	S	T	V	X	Z	AA	AE
22a.	X		X	X	X	X	X	X	X	X	X	X	X	X	X
22b.		X													
23a.	X	4	2	X	X	X	X	1	X	1	2	X	X	X	X
23c.	X	4	2	X	X	X	X	1	X	2	2	X	X	X	X
23e.	X	2	4	X	X	X	X	1	X	1	2	X	X	X	X
23g.	X	2	1	X	X	X	X	1	X	2	2	X	X	X	X
23i.	X	2	2	X	X	X	X	1	X	1	2	X	X	X	X
23k.	X	2	1	X	X	X	X	1	X	2	2	X	X	X	X
23m.	X	16	4	X	X	X	X	1	X	2	2	X	X	X	X
23o.	X	4	1	X		X	X	1	X	8	2	X	X	X	X
23q.	ELEC	12	7	X		RAD	X	RAD	X			X	X	X	X
24.	1	4	4	8	5	4	3	1	4	2	3	4	VARI	4	2
25.	5	4	4	1	2	2	20	8	4	5	4	4	4	10	4
26.	4	4	25	2	6	2	2	6	5	5	4	5	4	4	4
27.	10		1	4	1	1	1	1		1	1	1	1	1	1
28.	1		8	3	16	8	8	8		8	24	4	VARI		1.5
29a.				X						X			X		
29b.	X		X		X	X	X	X			X	X		X	X
29c.	ST		ST		CNTY	CTY	CNTY	ST				CTY		CTY	CTY

FIRE BRIGADE SURVEY - PRESSURIZED WATER REACTORS

Questions	Utilities														
	B	D	E	G	K	M	P	Q	S	T	V	X	Z	AA	AE
30a.	X		X	X	X	X	X	X		X	X	X	X	X	X
30b.	X		X	X	X	X	X	X		X	X	X	X	X	X
30c.	X		X	X	X	X	X	X		X	X	X	X	X	X
30d.			X	X	X	X	X	X			X		X	X	X
30e.				X	X		X				X		X	X	X
30f.			X	X	X	X	X	X			X	X	X		
30g.	X		X	X	X	X	X	X		X	X	X	X	X	X
30h.	X		X	X	X	X	X	X		X	X	X	X	X	X
30i.	X		X	X	X	X	X	X		X	X	X	X	X	X
30j.	X		X	X	X	X		X			X		X	X	X
30k.	X		X	X	X	X	X	X		X	X	X	X	X	X
30l.			X				X			X			X	X	
30m.	X		X	X	X	X	X	X			X	X	X	X	X
30n.	X		X		X	X	X	X		X	X	X	X	X	X
31a.	FPCo	FBIn	ETIn	FPTr	TSp	TIn	FPSp	FM	CORP	FTI	FFI	TSpc	FBIn	FBIn	FPCo
31b.	ST	EXP	ST	ST	ST	ST	EXP	EXP	NONE	1041	ST	EXP	ST	EXP	ST
31c.	SFPT	FBIn	Chf	FPCo	FSSp	TIn	FPSp	FM	CORP	FTI	FFI	FPE	STFF	FPCo	FPCo
31d.	ST	EXP	ST	A.S.	EXP	ST	EXDP	EXP	NONE	1041	ST	EXP	EXP	EXP	ST
31e.		FD	ETIn	FPTr	FD	TIn	FPSp	FM		FTI	FFI	CTY	FBIn	FBIn	FPCo
31f.		ST	ST	ST	ST	ST	EXP	EXP		1041	ST	EXP	ST	EXP	ST
32a.	X		X		X	X	X	X	X		X	X		X	X
32b.		X		X						X			X		
33.	ST		TVA	X	ANSL	ST	PLC	ST	PLC		ST	NUTC		ST	ST
34a.	X	X	X	X	X	X	X	X	X	X	X	X	X	X	X
34b.															

FIRE BRIGADE SURVEY - PRESSURIZED WATER REACTORS

Questions	Utilities														
	B	D	E	G	K	M	P	Q	S	T	V	X	Z	AA	AE
35a.		X	X	X	X	X					X	X	X	X	X
35b.	X						X	X		X					
36a.	X	X	X	X	X	X	X		X					X	
36b.								X		X	X	X	X		X
37a.	X	X	X	X	X	X	X	X	X	X	X	X	X	X	X
37b.															
38a.				X					X						
38b.															
39a.	X		X	X	X	X	X			X	X		X		X
39b.		X						X	X			X		X	
40a.		X						X	X						
40b.												X			
41a.								X				X			
41b.															
42a.	X	X		X	X	X	X	X	X	X			X	X	X
42b.			X								X	X			
43a.	1		2			X	X			X			X		X
43c.	1		2			X	X			X			X		X
43e.	1		2			X	X			X			X		X
43g.	1	2	4			X	X	X		X			X		X
43i.	X		1			X	X			X			X		X
43k.	X	X	2.5			X	X			X			X		X

FIRE BRIGADE SURVEY - PRESSURIZED WATER REACTORS

Questions	Utilities														
	B	D	E	G	K	M	P	Q	S	T	V	X	Z	AA	AE
43m.	X	X	.5			X	X		X	X			X		X
43o.			X	1			X	X					X		X
43q.		1	5	1		X	X	X	X	X			X		X
43s.	1		3			X	X			X			X		X
43u.	1	2	4	1		X	X	X	X	X			X		X
43w.	1	1	2	2		X	X		X	X			X		X
43y.	1		2			X	X	X	X				X		X
43aa.	1		1			X	X			X			X		X
43cc.	1		1	1		X	X			X			X		X
43ee.	1		X	1			X	X	X	X			X		X
43gg.	1	1					X	X	X				X		X
43ii.	1	1			X		X						X		X
43kk.	1	1			X		X		X				X		X
43mm.			2	1			X	X	X	X			X		X
43oo.							X								
43qq.	1		2	2		X	X	X	X	X			X		X

APPENDIX C.3

SURVEY RESPONSES FOR BOILING WATER REACTORS

FIRE BRIGADE SURVEY - BOILING WATER REACTORS

Questions	Utilities													
	A	C	F	H	I	J	L	N	O	R	U	W	AC	AD
2a.			X		X	X		X	X	X	X		X	X
2b.	X	X		X			X					X		
2c.														
3.	43	120	85	76	65	70	82	100	96	218	45	140	85	70
4.	5/5	5	5	10	5	5	5	5	5	5	8	8	5	5
5a.					2					3				
5c.	25	75	X	59	3	X	2	1	50%	60	45	80	44	3
5e.							1	1		20		30		
5g.							1	1	50%	70		30	41	2
5i.										2				
5k.		X					1							
5m.	15	X								45				
6a.		X				X		X	X					
6b.														
6c.										X				
6d.														
6e.	SRO		S.Fo	S.Fo	WaSu		S.E.			R.O.	SRO	ASS	FBL	FBL
7.	S.F.	P.M.	S.E.	S.E.	WaE	S.S.	S.S.	S.S.	S.S.	S.S.	SOS	S.S.	NWE	S.S.
8a.	16	11	24	20	50	60		24	26	24	24	20	40	60
8b.	2	3	20	16	6	6			6	20	6	20	5	55
8c.	15	7	12	16	6	6			26	6	6	6	5	1
9.	10	6	6	8	5	5	8	8	6	5	8	12	5	5

FIRE BRIGADE SURVEY - BOILING WATER REACTORS

Questions	Utilities													
	A	C	F	H	I	J	L	N	O	R	U	W	AC	AD
10a.	X	X		X	X	X	X	X	X	X	X	X	X	
10b.			X			X								X
11a.	X		X		X	X	X	X	X	X	X	X	X	X
11b.		X		X				X						
12a.	X				X				X	X	X	X	X	X
12b.	X		X	X		X	X	X		X			X	
13a.	X	X	X	X	X	X	X	X	X	X	X	X	X	X
13b.	X	X	X	X	X	X	X	X	X	X	X	X	X	X
13c.	X										X			
13d.		X	X	X	X		X	X	X	X		X	X	
13e.	X					X					X			
13f.	X	X	X	X	X	X	X	X	X	X	X	X	X	X
13g.				X					X	X				
13h.	X				X							X		
13i.			X	X	X			X	X			X	X	
14a.	X	X	X	X	X	X	X	X	X	X	X	X	X	X
14b.	COMB				ADJ	VARI		FOG		ELEC	COMB	FOG	FOG	ELEC
14c.		X	X	X	X	X		X	X	X	X	X	X	X
14d.		X	X	X	X	X	X	X	X	X	X	X	X	
14e.	VARI	VARI	X		X	X			SPNR	VARI	SPNR	PIKE	HALA	
14f.	X	X		X	X	X	X	X	X	X	X	X	X	X
14g.	X	X	X		X		X	X	X	X	X	X	X	X
14h.	X	X	X		X		X	X	X	X	X	X	X	X
14i.		X	X		X					X	X		X	X
14j.	X			X	X	X		X	X	X	X			X
14k.	X			X	X	X		X	X	X	X			X

FIRE BRIGADE SURVEY - BOILING WATER REACTORS

Questions	Utilities													
	A	C	F	H	I	J	L	N	O	R	U	W	AC	AD
141.				X	X	X		X	X		X			X
14m.	X	X	X	X	X	X		X	X	X	X	X	X	X
14n.	X	X	X	X	X	X		X	X	X	X	X	X	X
14o.	X				X				X		X		X	
14p.	X		X	X	X	X			X	X	X			X
14q.	X			X	X	X			X	X	X			X
14r.		X	X	X	X	X	X		X	X	X	X	X	X
14s.		X	X	X	X	X	X		X	X	X	X	X	X
14t.	X	X	X	X	X	X			X	X		X	X	
14u.				X								X	X	
14v.	CO2				VARI	VARI			VARI			CVRS		
15a.		X		X						X		X		X
15b.	X		X		X	X	X	X	X		CNTY	UNIV	CNTY	
16a.				X						X	X	X		
16b.		X		X			X			X	X	X		
16c.		X		X			X			X	X			X
16d.		X		X			X			X	X	X		X
16e.		X					X				X	X		X
16f.		XFMR		X			TWR			TWR	MAZE			X
17a.	X	40	40	30	28	10	16	40	32	40	40	24	56	14
17b.	X	X	X	X	X		X	X	X	X	X	X	X	X
17c.			X	X		X							X	
17d.		24	X	20	10	6	24	8	8	16	24	8	24	7
17e.		X		X						X				X
17f.		ST	CTY		X	CORP	ST	ST	CNTY	CTY	CNTY	UNIV	CNTY	
18a.	X	1	X	2	2	1	X	X	X	X	X	2	2	X

FIRE BRIGADE SURVEY - BOILING WATER REACTORS

Questions	Utilities													
	A	C	F	H	I	J	L	N	O	R	U	W	AC	AD
18c.	X	1	X	2	2	1.5	X	X	X	X	X	1	2	X
18e.	X	6	X	3	2	.5	X	X	X	X	X	1	4	X
18g.	X	1	X	2.5	2	1	X	X	X	X	X	2	4	X
18i.	X	X		.5	1	1		X	X	X	X	1.5	4	X
18k.	X	1	X	1	1		X	X	X	X	X	1.5	2	X
18m.	1hr.	6	X	4.5	4	1	X	X	X	X	X	3	4	X
18o.		1	X	1	2			X	X	X	X	2	2	X
18q.		23		14	10	3	X	X	X	HZMT		5	56	HZMT
19a.		X	X	X	X	X	X	X	X	X	X	X	X	X
19b.		X	X	X	X	X	X	X	X	X	X	X	X	X
19c.		X	X	X	X	X	X	X	X	X	X	X	X	X
19d.		X	X	X	X	X	X	X	X	X	X	X	X	X
19e.				X	X	X	X	X	X	X				X
19f.				X					X					X
19g.		X	X	X	X	X	X		X	X	X	X	X	X
19h.		X	X	X	X	X	X	X	X	X	X	X	X	X
19i.		X		X		X	X	X	X	X	X	X	X	
19j.		X	X		X	X	X	X	X		X	X	X	X
19k.		X	X	X	X	X	X	X	X	X	X	X	X	X
19l.				X							X	X		
19m.		X	X	X	X	X	X	X	X	X	X	X	X	X
19n.		X	X	X	X	X	X		X	X	X	X	X	
20a.								X		27	X		27	
20b.		X	X	X					X	X				
21a.	X			X	X		X	X	X		X		X	
21b.		X	X			X				X		X		X

FIRE BRIGADE SURVEY - BOILING WATER REACTORS

Questions	Utilities													
	A	C	F	H	I	J	L	N	O	R	U	W	AC	AD
22a.		X		X	X			X	X	X	X	X	X	X
22b.	X		X			X	X							
23a.	.5hr.	X	X	X	2		X	X	X	X	X	1	2	X
23c.	2hr.	X	X	X	2		X	X	X	X	X	2	2	X
23e.	2hr.	X	X	X	2	1	X	X	X	X	X	2	4	X
23g.	1hr.	X	X	X	2		X	X	X	X	X	1	4	X
23i.		X	X	X	1	1		X	X	X	X	1	4	
23k.	X	X	X	X	1		X	X	X	X	X	.5	2	X
23m.	1hr.	X	X	X	4	1	X	X	X	X	X	6	4	X
23o.	1hr.	X	X	X	2			X	X	X	X	2	2	X
23q.		X	X	X	10	1		X	X	X	X	5	56	
24a.	1hr.	4	4	4	2	8	2	4		4	8	2	4	
25.	4	4	4	4	4	1		4		VARI	4	4	20	
26.	4	11	12	4	9	60		2	26	4	4	4	20	12
27.	1	1	1	2	1	1	1	12	1	1	1	1		1
28.	4	24	8	2	10	2	24	1	16	16	28	10		4
29a.		X		X				X		X		X		X
29b.	X	X	X		X	X	X		X	X	X	XX	X	
29c.	CTY	ST	CTY		CTY	CORP	ST		CNTY	CTY	CNTY	UNIV	CNTY	
30a.	X	X	X	X	X	X	X	X	X	X	X	X	X	X
30b.	X	X	X	X	X	X	X	X	X	X	X	X	X	X
30c.	X	X	X	X	X	X	X	X	X	X	X	X	X	X

FIRE BRIGADE SURVEY - BOILING WATER REACTORS

Questions	Utilities													
	A	C	F	H	I	J	L	N	O	R	U	W	AC	AD
30d.	X	X	X	X	X	X	X	X	X	X		X	X	
30e.	X			X	X	X		X	X	X				X
30f.		X	X	X	X				X	X				X
30g.		X	X	X	X	X	X	X	X	X	X	X	X	X
30h.	X	X	X	X	X	X	X	X	X	X	X	X	X	X
30i.	X	X	X	X		X	X		X	X	X	X	X	
30j.	X	X	X		X	X	X		X		X	X	X	X
30k.	X	X	X	X	X	X	X	X	X	X	X	X	X	X
30l.				X							X	X	X	
30m.	X	X	X	X	X	X	X	X	X	X	X	X		X
30n.	X	X	X	X	X	X	X		X	X	X	X	X	
31a.	TCo	TSp	TIn	FBIn	TIn	FSIn	TIn	FPIn	FPTS	FC	CORP	FPI	NuTS	FBIn
31b.	NONE	ST	ST	ST	ST	ST	NONE	DEGR		B.S.	ST	EXP	EXP	ST
31c.	FM	TSp	FM	FBIn	TIn	FPAs	TIn	SaCo	FPTS	FC	FPSp	FPSu	NuTS	O.S.S.
31d.	EXP	ST	ST	ST	ST	NONE	NONE			B.S.	B.S.	EXP	EXP	
31e.	FD	TSp	TIn	FBIn	FD	FSIn	FD	FD	FPSu	FC	FPSp	FPI	ST	FBIn
31f.		ST	ST	ST	ST	ST	ST	ST	ST	B.S.	B.S.	EXP		ST
32a.	X			X	X		X	X		X	X	X	X	
32b.		X	X			X			X					X
33.	PLC		FECo	PLC	PLC		FIC	ST		St.	ESSI	UNIV	ST	
34a.		X		X	X	X	X	X			X	X	X	X
34b.	X		X						X	X				
35a.		X		X	X			X	X	X	X	X	X	X
35b.	X		X			X	X							

FIRE BRIGADE SURVEY - BOILING WATER REACTORS

Questions	Utilities													
	A	C	F	H	I	J	L	N	O	R	U	W	AC	AD
36a.	X	X				X	X		X			X	X	
36b.			X	X	X			X		X	X			X
37a.	X	X	X	X	X	X	X		X	X	X	X		X
37b.								X					X	
38a.			X		X	X								
38b.								X					X	
39a.		X		X	X	X	X	X	X		X	X	X	X
39b.	X		X							X				
40a.	X		X							X				
40b.														
41a.	X													
41b.														
42a.	X			X		X				X	X	X		X
42b.		X	X		X		X	X	X				X	
43a.	X		X	1	X	1	X	X	X	X				X
43c.	X		X	1	X	1	X	X	X	X				X
43e.			X	1	X	1	X	X	X	X				X
43g.			X	3	X		X	X	X	X				X
43i.			X	1	X		X	X	X	X				X
43k.			X	1	X		X	X	X	X				X
43m.			X	1	X		X	X	X	X				X
43o.			X		X					X				X
43q.			X		X		8	X		X		0.25	X	X

FIRE BRIGADE SURVEY - BOILING WATER REACTORS

Questions	Utilities													
	A	C	F	H	I	J	L	N	O	R	U	W	AC	AD
43s.	X		X	2	X		X	X	X	X				X
43u.	X		X	2	X	1	X	X	X	X		0.25	X	X
43w.			X	2	X	1	8	X		X				X
43y.	X		X	1	X			X	X	X				X
43aa.			X	2	X		X	X						X
43cc.			X	2	X		X		X	X				
43ee.			X	1	X	1	8	X	X	X		0.25		X
43gg.			X		X			X		X		0.25		
43ii.			X		X			X		X				X
43kk.			X		X			X	X					X
43mm.			X		X		8	X	X	X			X	X
43oo.			X		X									
43qq.			X	3	X		8	X	X	X			X	X

APPENDIX C.4

SURVEY RESPONSES FOR UNITS LESS THAN 700 mWe

FIRE BRIGADE SURVEY "SMALLER THAN 700 MW"

Questions	Utilities						
	A	K	L	M	N	AB	AC
2b.	X		X				
2c.							
3.	43	70	82	65	100	46	85
4.	5/5	8	5	5	5	5	5
5a.							
5c.	25	70	2	3	1	3	44
5e.			1		1	1	
5g.			1	2	1	1	41
5i.							
5k.			1				
5m.	15						
6a.		X			X		
6b.							
6c.							
6d.							
6e.	SRO		S.E.	EO		EO	FBL
7.	S.F.	S.S.	S.S.	S.S.	S.S.	S.S.	NWE
8a.	16	24		4	24		40
8b.	2	6		1		5	5
8c.	15	6		1		5	5
9.	10	6	8	5	8	5	5
10a.	X	X	X	X	X	X	X
10b.							
11a.	X	X	X	X	X	X	X
11b.					X		
12a.	X			X		X	X
12b.	X	X	X		X		X
13a.	X	X	X	X	X	X	X
13b.	X	X	X	X	X	X	X
13c.	X					X	
13d.		X	X	X	X		X
13e.	X					X	
13f.	X	X	X	X	X	X	X

FIRE BRIGADE SURVEY "SMALLER THAN 700 MW"

Questions	Utilities						
	A	K	L	M	N	AB	AC
13g.							
13h.	X						
13i.				X	X	X	X
14a.	X	X	X	X	X	X	X
14b.	COMB	FOG		ADJ	FOG	ELEC	FOG
14c.		X		X	X	X	X
14d.		X	X	X	X		X
14e.	VARI	X		VARI		ROPE	HALA
14f.	X	X	X	X	X	X	X
14g.	X	X	X	X	X	X	X
14h.	X	X	X	X	X	X	X
14i.		X		X		X	X
14j.	X	X			X	X	
14k.	X	X		X	X	X	
14l.		X			X	X	
14m.	X	X		X	X	X	X
14n.	X	X		X	X	X	X
14o.	X	X		X		X	X
14p.	X	X					
14q.	X			X			
14r.		X	X	X		X	X
14s.		X	X	X		X	X
14t.	X	X		X			X
14u.							
14v.	CO2			HALN			
15a.						X	
15b.	X	X	X	X	X		CNTY
16a.							
16b.			X			X	
16c.			X			X	
16d.			X			X	
16e.			X			X	
16f.			TWR			STGE	
17a.	X	X	16	X	40	6	56
17b.	X	X	X	X	X	X	X
17c.		X					X
17d.		X	24	X	8	2	24
17e.				X		X	
17f.		CNTY	ST	X	ST		CNTY

FIRE BRIGADE SURVEY "SMALLER THAN 700 MW"

Questions	Utilities						
	A	K	L	M	N	AB	AC
18a.	X	X	X	X	X	1	2
18c.	X	X	X	X	X	1	2
18e.	X	X	X	X	X	2	4
18g.	X	X	X	X	X	1.5	4
18i.	X	X		X	X		4
18k.	X	X	X	X	X	1	2
18m.	1hr.	X	X	X	X	1	4
18o.		X		X	X	.5	2
18q.		X	X		X	.5	56
19a.		X	X	X	X	X	X
19b.		X	X	X	X		X
19c.		X	X	X	X		X
19d.		X	X	X	X		X
19e.		X	X		X		
19f.		X					
19g.		X	X	X		X	X
19h.		X	X	X	X	X	X
19i.		X	X	X	X		X
19j.		X	X	X	X	X	X
19k.		X	X	X	X	X	X
19l.							
19m.		X	X	X	X	X	X
19n.		X	X	X		X	X
20a.					X		27
20b.							
21a.	X		X	X	X		X
21b.		X				X	
22a.		X		X	X		X
22b.	X		X			X	
23a.	.5hr.	X	X	X	X		2
23c.	2hr.	X	X	X	X	X	2
23e.	2hr.	X	X	X	X	X	4
23g.	1hr.	X	X	X	X	X	4
23i.		X		X	X		4
23k.	X	X	X	X	X	X	2
23m.	1hr.	X	X	X	X	X	4
23o.	1hr.			X	X	X	2
23q.				RAD	X	X	56

FIRE BRIGADE SURVEY "SMALLER THAN 700 MW"

Questions	Utilities						
	A	K	L	M	N	AB	AC
24.	1hr.	5	2	4	4	3	4
25.	4	2		2	4	1	20
26.	4	6		2	2	1	20
27.	1	1	1	1	12	1	
28.	4	16	24	8	1	3.5	
29a.					X		
29b.	X	X	X	X			X
29c.	CTY	CNTY	ST	CTY			CNTY
30a.	X	X	X	X	X	X	X
30b.	X	X	X	X	X		X
30c.	X	X	X	X	X		X
30d.	X	X	X	X	X		X
30e.	X	X			X		
30f.		X		X			
30g.		X	X	X	X	X	X
30h.	X	X	X	X	X	X	X
30i.	X	X	X	X			X
30j.	X	X	X	X		X	X
30k.	X	X	X	X	X	X	X
30l.							X
30m.	X	X	X	X	X	X	
30n.	X	X	X	X		X	X
31a.	TCo	TSp	TIn	TIn	FPIn	FBIn	NuTS
31b.	NONE	ST	NONE	ST	DEGR		EXP
31c.	FM	FSSp	TIn	TIn	SaCo	FBIn	NuTS
31d.	EXP	EXP	NONE	ST			EXP
31e.	FD	FD	FD	TIn	FD	FBIn	ST
31f.		ST	ST	ST	ST		
32a.	X	X	X	X	X	X	X
32b.							
33.	PLC	ANSL	FIC	ST	ST	CNTY	ST
34a.		X	X	X	X	X	X
34b.	X						

FIRE BRIGADE SURVEY "SMALLER THAN 700 MW"

Questions	Utilities						
	A	K	L	M	N	AB	AC
35a.		X		X	X	X	X
35b.	X		X				
36a.	X	X	X	X			X
36b.					X	X	
37a.	X	X	X	X		X	
37b.					X	X	X
38a.						X	
38b.					X		X
39a.		X	X	X	X	X	X
39b.	X						
40a.	X						
40b.							
41a.	X						
41b.							
42a.	X	X		X		X	
42b.			X		X		X
43a.	X		X	X	X		
43c.	X		X	X	X	1	
43e.			X	X	X		
43g.			X	X	X		
43i.			X	X	X		
43k.			X	X	X		
43m.			X	X	X		
43o.							
43q.			8	X	X	2	X
43s.	X		X	X	X		
43u.	X		X	X	X	2	X
43w.			8	X	X	X	
43y.	X			X	X	1	
43aa.			X	X	X	2	
43cc.			X	X			
43ee.			8		X	1	
43gg.					X	1	
43ii.		X			X	1	
43kk.		X			X	2	

FIRE BRIGADE SURVEY "SMALLER THAN 700 MW"

Questions	Utilities						
	A	K	L	M	N	AB	AC
43mm.			8		X	1	X
43oo.							
43qq.			8	X	X		X

APPENDIX C.5

SURVEY RESPONSES FOR UNITS LARGER THAN 700 mWe

FIRE BRIGADE SURVEY "LARGER THAN 700 MW"

Questions	Utilities																							
	B	C	D	E	F	G	H	I	J	O	P	Q	R	S	T	U	V	W	X	Y	Z	AA	AD	AE
2a.	X		X	X	X	X		X	X	X			X	X	X	X	X		X		X	X	X	X
2b.		X					X					X						X						
2c.											5									F.D.				
3.	110	120	77	105	85	108	76	65	70	96	50	104	218	65	32	45	44	140	40	30	72	47	70	68
4.	5	5	9	5	5	5	10	5	5	5	8	5	5	5	6	8	5	8	5	6	5	5	5	5
5a.								2			5		3		32		10			30				
5c.	70	75	8	60%	X	3	59	3	X	50%	50	74	60	50		45	34	80	24		72	47	3	36
5e.						1							20					30						20
5g.										50%			70	15				30	16				2	12
5i.													2											
5k.		X																						
5m.	25	X		40%		1						20	45											
6a.		X							X	X														X
6b.																								
6c.													X											
6d.																								
6e.	RO		SFSu	FBCf	S.Fo	FBL	S.Fo	WaSu			FST	FBL	R.O.	FBL	ASE	SRO	FBL	ASS	FBL	FPSu	S.F.	SaOp	FBL	
7.	S.S.	P.M.	SWSu	SFPS	S.E.	S.S.	S.E.	WaE	S.S.	S.S.	SuSa	S.S.	S.S.	S.S.	S.E.	SOS	FFSr	S.S.	S.S.	SrFP	S.E.	S.S.	S.S.	S.S.
8a.	21	11	24	25	24	26	20	50	60	26	26	30	24	30	30	24	24	20		30	24	20	60	26
8b.	21	3	6	10	20	6	16	6	6	6	5	5	20	6	24	6	6	20	1	5	24	5	55	16
8c.	21	7	6	5	12	6	16	6	6	26	5	5	6	6	6	6	6	6		5	6	5	1	3
9.	7	6	7	8	6	7	8	5	5	6	6	7	5	5	11	8	5	12	5	6	7	7	5	7
10a.	X	X	X	X			X	X	X	X	X	X	X	X	X	X	X	X	X	X	X	X		X
10b.					X	X			X														X	
11a.	X		X	X	X			X	X	X	X	X	X	X	X	X	X	X	X	X	X	X	X	X
11b.		X				X	X							X										
12a.	X			X				X		X		X	X	X	X	X	X	X	X	X	X	X	X	X
12b.			X		X	X	X		X		X		X	X					X	X				
13a.	X	X	X	X	X	X	X	X	X	X	X	X	X	X	X	X	X	X	X	X	X	X	X	X
13b.	X	X	X	X	X	X	X	X	X	X	X	X	X	X	X	X	X	X	X	X	X	X	X	X
13c.	X			X		X						X		X	X	X			X	X		X		
13d.	X	X	X		X		X	X		X	X		X				X	X			X			X

FIRE BRIGADE SURVEY "LARGER THAN 700 MW"

Questions	Utilities																							
	B	C	D	E	F	G	H	I	J	O	P	Q	R	S	T	U	V	W	X	Y	Z	AA	AD	AE
13e.	X			X		X			X			X		X		X			X	X		X		
13f.	X	X	X	X	X	X	X	X	X	X	X	X	X	X	X	X	X	X	X	X	X	X	X	X
13g.	X					X	X			X	X	X	X		X		X		X	X		X		
13h.				X				X				X					X	X		X	X	X		
13i.	X			X	X	X	X	X		X		X		X	X		X	X	X	X		X		X
14a.	X	X	X	X	X	X	X	X	X	X	X	X	X	X	X	X	X	X	X	X	X	X	X	X
14b.	ELEC							ADJ	VARI				ELEC	PLAS	TFT	COMB		FOG	ELEC		ELEC	Tjet	ELEC	
14c.	X	X	X	X	X	X	X	X	X	X	X	X	X	X	X	X	X	X	X	X	X	X	X	X
14d.	X	X	X	X	X	X	X	X	X	X	X	X	X	X	X	X	X	X	X	X	X	X	X	X
14e.	VARI	VARI		PIKE	X	X		X	X	SPNR		X	VARI	SPNR	X	SPNR	HALA	PIKE		VARI	VARI			X
14f.	X	X	X	X			X	X	X	X	X	X	X	X	X	X	X	X	X	X	X	X	X	X
14g.	X	X		X	X			X		X	X	X	X	X	X	X	X	X	X	X	X	X	X	X
14h.	X	X		X	X			X		X	X	X	X	X	X	X	X	X	X	X	X	X	X	X
14i.	X	X		X	X			X			X	X	X	X	X	X				X	X	X	X	X
14j.	X					X	X	X	X	X	X	X	X	X	X	X	X		X	X		X	X	
14k.	X					X	X	X	X	X	X	X	X	X		X	X		X	X		X	X	
14l.						X	X	X	X	X	X				X	X	X		X	X		X	X	
14m.	X	X	X	X	X	X	X	X	X	X	X	X	X	X	X	X	X	X		X	X	X	X	X
14n.	X	X	X	X	X	X	X	X	X	X	X	X	X	X		X	X	X		X	X	X	X	X
14o.								X		X	X				X	X						X		X
14p.	X		X	X	X	X	X	X	X	X	X		X		X	X	X		X	X	X	X	X	X
14q.	X			X		X	X	X	X	X		X	X	X	X	X				X	X	X	X	X
14r.	X	X	X	X	X	X	X	X	X	X	X	X	X	X	X	X	X	X	X	X	X	X	X	X
14s.	X	X	X	X	X	X	X	X	X	X	X	X	X	X	X	X	X	X	X	X	X	X	X	X
14t.	X	X	X	X	X	X	X	X	X	X	X	X	X	X	X		X	X	X	X	X	X		X
14u.							X					X		X	X			X	X	X				
14v.				VARI		VARI		VARI	VARI	VARI		PIKE					VARI	CVRS			VARI			
15a.		X				X	X				X	X	X		X		X	X			X		X	
15b.	X		X	X	X			X	X	X	X			X		CNTY		UNIV	X	X		X		X
16a.						X	X					X	X			X	X	X						
16b.		X				X	X					X	X		X	X		X			X			
16c.		X				X	X					X	X			X	X				X		X	
16d.		X				X	X				X	X	X		X	X	X	X			X		X	
16e.		X				X						X				X	X	X			X		X	
16f.		XFMR				X	X					TANK	TWR		BLDG	MAZE	TWR				X		X	
17a.	20	40	40	24	40	24	30	28	10	32	32	8	40	12	20	40	40	24	24	400	20	75	14	16
17b.		X	X	X	X	X	X	X		X	X	X	X	X	X	X	X	X	X	X	X	X	X	X
17c.	X				X		X		X											X		X		
17d.	20	24	8	16	X	16	20	10	6	8	8	8	16	44	20	24	40	8	16	12	20	8	7	8

FIRE BRIGADE SURVEY "LARGER THAN 700 MW"

Questions	Utilities																							
	B	C	D	E	F	G	H	I	J	O	P	Q	R	S	T	U	V	W	X	Y	Z	AA	AD	AE
17e.		X				X	X					X	X	X						X	X		X	
17f.	8	ST	CNTY	ST	CTY			X	CORP	CNTY	CNTY		CTY		CORP	CNTY	X	UNIV	CTY	CNTY		CTY		CTY
18a.	X	1	4	2	X	3	2	2	1	X	X	1	X	2	3	X	4	2	2	8	X	X	X	X
18c.	X	1	4	2	X	4	2	2	1.5	X	X	1	X	1	6	X	4	1	1	16	X	X	X	X
18e.	X	6	2	4	X	4	3	2	.5	X	X	1	X	1	8	X	4	1	1	16	X	X	X	X
18g.	X	1	2	1	X	3	2.5	2	1	X	X	1	X	1	10	X	4	2	2	48	X		X	X
18i.	X	X	2	2		2	.5	1	1	X	X	1	X	.5	3	X	2	1.5	0.25	16	X	X	X	X
18k.	X	1	2	1	X	4	1	1		X	X	1	X	1	2	X	4	1.5	2	16	X	X	X	X
18m.	X	6	8	4	X	4	4.5	4	1	X	X	1	X	1.5	3.5	X	16	3		16	X	X	X	X
18o.	X	1	4	1	X	2	1	2		X	X	1	X	1		X	4	2		64	X	X	X	X
18q.		23	12	7		8	14	10	3	X	X		HZMT	3				5		200	HZMT	X	HZMT	TOUR
19a.	X	X	X	X	X	X	X	X	X	X	X	X	X	X	X	X	X	X	X	X	X	X	X	X
19b.	X	X	X	X	X	X	X	X	X	X	X	X	X	X	X	X	X	X	X	X	X	X	X	X
19c.	X	X	X	X	X	X	X	X	X	X	X	X	X	X	X	X	X	X	X	X	X	X	X	X
19d.		X	X	X	X	X	X	X	X	X	X	X	X		X	X	X	X		X	X	X	X	X
19e.			X			X	X	X	X	X	X		X		X		X		X	X	X	X	X	X
19f.				X		X	X			X	X			X	X		X		X	X	X	X	X	
19g.	X	X	X	X	X	X	X	X	X	X	X	X	X	X	X	X	X	X	X	X	X	X	X	X
19h.	X	X	X	X	X	X	X	X	X	X	X	X	X	X	X	X	X	X	X	X	X	X	X	X
19i.	X	X	X	X		X	X		X	X	X	X	X	X	X	X	X	X		X	X	X		X
19j.	X	X	X	X	X	X		X	X	X		X			X	X	X	X		X	X	X	X	
19k.	X	X	X	X	X	X	X	X	X	X	X	X	X	X	X	X	X	X	X	X	X	X	X	X
19l.				X			X				X					X	X	X			X	X		X
19m.	X	X	X	X	X	X	X	X	X	X	X	X	X	X	X	X	X	X	X	X	X	X	X	X
19n.	X	X	X	X	X		X	X	X	X	X	X	X		X	X	X	X	X	X	X	X		
20a.				27							X	X	27	27	1001	X	27		27	27	27			1001
20b.		X			X	X	X			X		X	X				X							
																								X
21a.	X			X		X	X	X		X		X		X	X	X	X		X		X	X		
21b.		X	X		X				X		X		X					X		X			X	
22a.	X	X		X		X	X	X		X	X	X	X	X	X	X	X	X	X	X	X	X	X	X
22b.			X		X				X															
23a.	X	X	4	2	X	X	X	2		X	X	1	X	X	1	X	2	1	X	8	X	X	X	X
23c.	X	X	4	2	X	X	X	2		X	X	1	X	X	2	X	2	2	X	8	X	X	X	X
23e.	X	X	2	4	X	X	X	2	1	X	X	1	X	X	1	X	2	2	X	16	X	X	X	X
23g.	X	X	2	1	X	X	X	2		X	X	1	X	X	2	X	2	1	X	24	X	X	X	X
23i.	X	X	2	2	X	X	X	1	1	X	X	1	X	X	1	X	2	1	X	8	X	X		X
23k.	X	X	2	1	X	X	X	1		X	X	1	X	X	2	X	2	.5	X	16	X	X	X	X

FIRE BRIGADE SURVEY "LARGER THAN 700 MW"

Questions	Utilities																							
	B	C	D	E	F	G	H	I	J	O	P	Q	R	S	T	U	V	W	X	Y	Z	AA	AD	AE
23m.	X	X	16	4	X	X	X	4	1	X	X	1	X	X	2	X	2	6	X	8	X	X	X	X
23o.	X	X	4	1	X	X	X	2		X	X	1	X	X	8	X	2	2	X	32	X	X	X	X
23q.	ELEC	X	12	7	X	X	X	10	1	X	X	RAD	X	X		X		5	X	84	X	X		X
24.	1	4	4	4	4	8	4	2	8		3	1	4	4	2	8	3	2	4	8	VARI	4		2
25.	5	4	4	4	4	1	4	4	1		20	8	VARI	4	5	4	4	4	4		4	10		4
26.	4	11	4	25	12	2	4	9	60	26	2	6	4	5	5	4	4	4	5	4	4	4	12	4
27.	10	1		1	1	4	2	1	1	1	1	1	1		1	1	1	1	1	1	1	1	1	1
28.	1	24		8	8	3	2	10	2	16	8	8	16		8	28	24	10	4	6	VARI		4	1.5
29a.		X				X	X						X		X			X			X		X	
29b.	X	X		X	X			X	X	X	X	X	X			X	X	XX	X	X		X		X
29c.	ST	ST		ST	CTY			CTY	CORP	CNTY	CNTY	ST	CTY			CNTY		UNIV	CTY	CNTY		CTY		CTY
30a.	X	X		X	X	X	X	X	X	X	X	X	X		X	X	X	X	X	X	X	X	X	X
30b.	X	X		X	X	X	X	X	X	X	X	X	X		X	X	X	X	X	X	X	X	X	X
30c.	X	X		X	X	X	X	X	X	X	X	X	X		X	X	X	X	X	X	X	X	X	X
30d.		X		X	X	X	X	X	X	X	X	X	X				X	X		X	X	X		X
30e.						X	X	X	X	X	X		X				X			X	X	X	X	X
30f.		X		X	X	X	X	X		X	X	X	X				X		X	X	X		X	
30g.	X	X		X	X	X	X	X	X	X	X	X	X		X	X	X	X	X	X	X	X	X	X
30h.	X	X		X	X	X	X	X	X	X	X	X	X		X	X	X	X	X	X	X	X	X	X
30i.	X	X		X	X	X	X		X	X	X	X	X		X	X	X	X	X	X	X	X		X
30j.	X	X		X	X	X		X	X	X		X				X	X	X		X	X	X	X	X
30k.	X	X		X	X	X	X	X	X	X	X	X	X		X	X	X	X	X	X	X	X	X	X
30l.				X			X				X				X	X		X			X	X		
30m.	X	X		X	X	X	X	X	X	X	X	X	X			X	X	X	X	X	X	X	X	X
30n.	X	X		X	X		X	X	X	X	X	X	X		X	X	X	X	X	X	X	X		X
31a.	FPCo	TSp	FBIn	ETIn	TIn	FPTr	FBIn	TIn	FSIn	FPTS	FPSp	FM	FC	CORP	FTI	CORP	FFI	FPI	TSpc	FPSu	FBIn	FBIn	FBIn	FPCo
31b.	ST	ST	EXP	ST	ST	ST	ST	ST	ST		EXP	EXP	B.S.	NONE	1041	ST	ST	EXP	EXP	EXP	ST	EXP	ST	ST
31c.	SFPT	TSp	FBIn	Chf	FM	FPCo	FBIn	TIn	FPAs	FPTS	FPSp	FM	FC	CORP	FTI	FPSp	FFi	FPSu	FPE	FPSu	STFF	FPCo	O.S.	SFPCo
31d.	ST	ST	EXP	ST	ST	A.S.	ST	ST	NONE		EXDP	EXP	B.S.	NONE	1041	B.S.	ST	EXP	EXP	EXP	EXP	EXP		ST
31e.		TSp	FD	ETIn	TIn	FPTr	FBIn	FD	FSIn	FPSu	FPSp	FM	FC		FTI	FPSp	FFI	FPI	CTY	FPSu	FBIn	FBIn	FBIn	FPCo
31f.		ST	ST	ST	ST	ST	ST	ST	ST	ST	EXP	EXP	B.S.		1041	B.S.	ST	EXP	EXP	EXP	ST	EXP	ST	ST
32a.	X			X			X	X			X	X	X	X		X	X	X	X	X		X		X
32b.		X	X		X	X			X	X					X						X		X	

FIRE BRIGADE SURVEY "LARGER THAN 700 MW"

Questions	Utilities																							
	B	C	D	E	F	G	H	I	J	O	P	Q	R	S	T	U	V	W	X	Y	Z	AA	AD	AE
33.	ST			TVA	FECo	X	PLC	PLC			PLC	ST	St.	PLC		ESSI	ST	UNIV	NUTC			ST		ST
34a.	X	X	X	X		X	X	X	X		X	X		X	X	X	X	X	X	X	X	X	X	X
34b.					X					X			X											
35a.		X	X	X		X	X	X		X			X			X	X	X	X		X	X	X	X
35b.	X				X				X		X	X			X					X				
36a.	X	X	X	X		X			X	X	X			X				X		X		X		
36b.					X		X	X				X	X		X	X	X		X		X		X	X
37a.	X	X	X	X	X	X	X	X	X	X	X	X	X	X	X	X	X	X	X	X	X	X	X	X
37b.																				X				
38a.					X	X		X	X					X						X				
38b.																								
39a.	X	X		X		X	X	X	X	X	X				X	X	X	X			X		X	X
39b.			X		X							X	X	X					X	X		X		
40a.			X		X							X	X	X						X				
40b.																			X					
41a.												X							X					
41b.																				X				
42a.	X		X			X	X		X		X	X	X	X	X	X		X		X	X	X	X	X
42b.		X		X	X			X		X							X		X					
43a.	1			2	X		1	X	1	X	X		X		X					8	X		X	X
43c.	1			2	X		1	X	1	X	X		X		X					16	X		X	X
43e.	1			2	X		1	X	1	X	X		X		X					8	X		X	X
43g.	1		2	4	X		3	X		X	X	X	X		X					80	X		X	X
43i.	X			1	X		1	X		X	X		X		X					20	X		X	X
43k.	X		X	2.5	X		1	X		X	X		X		X					30	X		X	X
43m.	X		X	.5	X		1	X		X	X		X	X	X					30	X		X	X
43o.				X	X	1		X			X	X	X							8	X		X	X
43q.			1	5	X	1		X			X	X	X	X	X			0.25			X		X	X
43s.	1			3	X		2	X		X	X		X		X					8	X		X	X
43u.	1		2	4	X	1	2	X	1	X	X	X	X	X	X			0.25			X		X	X
43w.	1		1	2	X	2	2	X	1		X		X	X	X					64	X		X	X
43y.	1			2	X		1	X		X	X	X	X	X						8	X		X	X

FIRE BRIGADE SURVEY "LARGER THAN 700 MW"

Questions	Utilities																							
	B	C	D	E	F	G	H	I	J	O	P	Q	R	S	T	U	V	W	X	Y	Z	AA	AD	AE
43aa.	1			1	X		2	X			X				X					24	X		X	X
43cc.	1			1	X	1	2	X		X	X		X		X						X		X	X
43ee.	1			X	X	1	1	X	1	X	X	X	X	X	X			0.25			X			X
43gg.	1		1		X			X			X	X	X	X				0.25			X			X
43ii.	1		1		X			X			X		X								X		X	X
43kk.	1		1		X			X		X	X			X							X		X	X
43mm.				2	X	1		X		X	X	X	X	X	X						X		X	X
43oo.					X			X			X													
43qq.	1			2	X	2	3	X		X	X	X	X	X	X						X		X	X
																				16				
																				32				

APPENDIX C.6

SURVEY RESPONSES FOR SINGLE UNIT SITES

FIRE BRIGADE SURVEY "SINGLE UNIT SITES"

Questions	Utilities																		
	A	B	D	E	G	I	L	M	N	O	R	S	V	W	AA	AB	AC	AD	AE
2a.		X	X	X	X	X		X	X	X	X	X	X		X	X	X	X	X
2b.	X						X							X					
2c.																			
3.	43	110	77	105	108	65	82	65	100	96	218	65	44	140	47	46	85	70	68
4.	5/5	5	9	5	5	5	5	5	5	5	5	5	5	8	5	5	5	5	5
5a.						2					3		10						
5c.	25	70	8	60%	3	3	2	3	1	50%	60	50	34	80	47	3	44	3	36
5e.					1		1		1		20			30		1			20
5g.							1	2	1	50%	70	15		30		1	41	2	12
5i.											2								
5k.							1												
5m.	15	25		40%	1						45								
6a.									X	X									X
6b.																			
6c.											X								
6d.																			
6e.	SRO	RO	SFSu	FBCf	FBL	WaSu	S.E.	EO			R.O.	FBL	FBL	ASS	SaOp	EO	FBL	FBL	
7.	S.F.	S.S.	SWSu	SFPS	S.S.	WaE	S.S.	S.S.	S.S.	S.S.	S.S.	S.S.	FFSr	S.S.	S.S.	S.S.	NWE	S.S.	S.S.
8a.	16	21	24	25	26	50		4	24	26	24	30	24	20	20		40	60	26
8b.	2	21	6	10	6	6		1		6	20	6	6	20	5	5	5	55	16
8c.	15	21	6	5	6	6		1		26	6	6	6	6	5	5	5	1	3
9.	10	7	7	8	7	5	8	5	8	6	5	5	5	12	7	5	5	5	7

FIRE BRIGADE SURVEY "SINGLE UNIT SITES"

Questions	Utilities																		
	A	B	D	E	G	I	L	M	N	O	R	S	V	W	AA	AB	AC	AD	AE
10a.	X	X	X	X		X	X	X	X	X	X	X	X	X	X	X	X		X
10b.					X													X	
11a.	X	X	X	X		X	X	X	X	X	X	X	X	X	X	X	X	X	X
11b.					X				X			X							
12a.	X	X		X		X		X		X	X	X	X	X	X	X	X	X	X
12b.	X		X		X		X		X		X	X					X		
13a.	X	X	X	X	X	X	X	X	X	X	X	X	X	X	X	X	X	X	X
13b.	X	X	X	X	X	X	X	X	X	X	X	X	X	X	X	X	X	X	X
13c.	X	X		X	X							X			X	X			
13d.		X	X			X	X	X	X	X	X		X	X			X		X
13e.	X	X		X	X							X			X	X			
13f.	X	X	X	X	X	X	X	X	X	X	X	X	X	X	X	X	X	X	X
13g.		X			X					X	X		X		X				
13h.	X			X		X							X	X	X				
13i.		X		X	X	X		X	X	X		X	X	X	X	X	X		X
14a.	X	X	X	X	X	X	X	X	X	X	X	X	X	X	X	X	X	X	X
14b.	COMB	ELEC				ADJ		ADJ	FOG		ELEC	PLAS		FOG	Tjet	ELEC	FOG	ELEC	
14c.		X	X	X	X	X		X	X	X	X	X	X	X	X	X	X	X	X
14d.		X	X	X	X	X	X	X	X	X	X	X	X	X	X		X		X
14e.	VARI	VARI		PIKE	X	X		VARI		SPNR	VARI	SPNR	HALA	PIKE		ROPE	HALA		X
14f.	X	X	X	X		X	X	X	X	X	X	X	X	X	X	X	X	X	X
14g.	X	X		X		X	X	X	X	X	X	X	X	X	X	X	X	X	X
14h.	X	X		X		X	X	X	X	X	X	X	X	X	X	X	X	X	X
14i.		X		X		X		X			X	X			X	X	X	X	X
14j.	X	X			X	X			X	X	X	X	X		X	X		X	
14k.	X	X			X	X		X	X	X	X	X	X		X	X		X	
14l.					X	X			X	X			X		X	X		X	

FIRE BRIGADE SURVEY "SINGLE UNIT SITES"

Questions	Utilities																		
	A	B	D	E	G	I	L	M	N	O	R	S	V	W	AA	AB	AC	AD	AE
14m.	X	X	X	X	X	X		X	X	X	X	X	X	X	X	X	X	X	X
14n.	X	X	X	X	X	X		X	X	X	X	X	X	X	X	X	X	X	X
14o.	X					X		X		X					X	X	X		X
14p.	X	X	X	X	X	X				X	X		X		X			X	X
14q.	X	X		X	X	X		X		X	X	X			X			X	X
14r.		X	X	X	X	X	X	X		X	X	X	X	X	X	X	X	X	X
14s.		X	X	X	X	X	X	X		X	X	X	X	X	X	X	X	X	X
14t.	X	X	X	X	X	X		X		X	X	X	X	X	X		X		X
14u.												X		X			X		
14v.	CO2			VARI	VARI	VARI		HALN		VARI			VARI	CVRS					
15a.					X						X		X	X		X		X	
15b.	X	X	X	X		X	X	X	X	X		X		UNIV	X		CNTY		X
16a.					X						X		X	X					
16b.					X		X				X			X		X			
16c.					X		X				X		X			X		X	
16d.					X		X				X		X	X		X		X	
16e.					X		X						X	X		X		X	
16f.					X		TWR				TWR		TWR			STGE		X	
17a.	X	20	40	24	24	28	16	X	40	32	40	12	40	24	75	6	56	14	16
17b.	X		X	X	X	X	X	X	X	X	X	X	X	X	X	X	X	X	X
17c.		X													X		X		
17d.		20	8	16	16	10	24	X	8	8	16	44	40	8	8	2	24	7	8
17e.					X			X			X	X				X		X	
17f.		8	CNTY	ST		X	ST	X	ST	CNTY	CTY		X	UNIV	CTY		CNTY		CTY
18a.	X	X	4	2	3	2	X	X	X	X	X	2	4	2	X	1	2	X	X
18c.	X	X	4	2	4	2	X	X	X	X	X	1	4	1	X	1	2	X	X

FIRE BRIGADE SURVEY "SINGLE UNIT SITES"

Questions	Utilities																		
	A	B	D	E	G	I	L	M	N	O	R	S	V	W	AA	AB	AC	AD	AE
18e.	X	X	2	4	4	2	X	X	X	X	X	1	4	1	X	2	4	X	X
18g.	X	X	2	1	3	2	X	X	X	X	X	1	4	2		1.5	4	X	X
18i.	X	X	2	2	2	1		X	X	X	X	.5	2	1.5	X		4	X	X
18k.	X	X	2	1	4	1	X	X	X	X	X	1	4	1.5	X	1	2	X	X
18m.	1hr.	X	8	4	4	4	X	X	X	X	X	1.5	16	3	X	1	4	X	X
18o.		X	4	1	2	2		X	X	X	X	1	4	2	X	.5	2	X	X
18q.			12	7	8	10	X		X	X	HZMT	3		5	X	.5	56	HZMT	TOUR
19a.		X	X	X	X	X	X	X	X	X	X	X	X	X	X	X	X	X	X
19b.		X	X	X	X	X	X	X	X	X	X	X	X	X	X		X	X	X
19c.		X	X	X	X	X	X	X	X	X	X	X	X	X	X		X	X	X
19d.			X	X	X	X	X	X	X	X	X		X	X	X		X	X	X
19e.			X		X	X	X		X	X	X		X		X			X	X
19f.				X	X					X		X	X		X			X	
19g.		X	X	X	X	X	X	X		X	X	X	X	X	X	X	X	X	X
19h.		X	X	X	X	X	X	X	X	X	X	X	X	X	X	X	X	X	X
19i.		X	X	X	X		X	X	X	X	X	X	X	X	X		X		X
19j.		X	X	X	X	X	X	X	X	X			X	X	X	X	X	X	
19k.		X	X	X	X	X	X	X	X	X	X	X	X	X	X	X	X	X	X
19l.				X									X	X	X				X
19m.		X	X	X	X	X	X	X	X	X	X	X	X	X	X	X	X	X	X
19n.		X	X	X		X	X	X		X	X		X	X	X	X	X		
20a.				27					X		27	27	27				27		1001
20b.					X					X	X		X						X
21a.	X	X		X	X	X	X	X	X	X		X	X		X		X		
21b.			X								X			X		X		X	

FIRE BRIGADE SURVEY "SINGLE UNIT SITES"

Questions	Utilities																		
	A	B	D	E	G	I	L	M	N	O	R	S	V	W	AA	AB	AC	AD	AE
22a.		X		X	X	X		X	X	X	X	X	X	X	X		X	X	X
22b.	X		X				X									X			
23a.	.5hr.	X	4	2	X	2	X	X	X	X	X	X	2	1	X		2	X	X
23c.	2hr.	X	4	2	X	2	X	X	X	X	X	X	2	2	X	X	2	X	X
23e.	2hr.	X	2	4	X	2	X	X	X	X	X	X	2	2	X	X	4	X	X
23g.	1hr.	X	2	1	X	2	X	X	X	X	X	X	2	1	X	X	4	X	X
23i.		X	2	2	X	1		X	X	X	X	X	2	1	X		4		X
23k.	X	X	2	1	X	1	X	X	X	X	X	X	2	.5	X	X	2	X	X
23m.	1hr.	X	16	4	X	4	X	X	X	X	X	X	2	6	X	X	4	X	X
23o.	1hr.	X	4	1	X	2		X	X	X	X	X	2	2	X	X	2	X	X
23q.		ELEC	12	7	X	10		RAD	X	X	X	X		5	X	X	56		X
24.	1hr.	1	4	4	8	2	2	4	4		4	4	3	2	4	3	4		2
25.	4	5	4	4	1	4		2	4		VARI	4	4	4	10	1	20		4
26.	4	4	4	25	2	9		2	2	26	4	5	4	4	4	1	20	12	4
27.	1	10		1	4	1	1	1	12	1	1		1	1	1	1		1	1
28.	4	1		8	3	10	24	8	1	16	16		24	10		3.5		4	1.5
29a.					X				X		X			X				X	
29b.	X	X		X		X	X	X		X	X		X	XX	X		X		X
29c.	CTY	ST		ST		CTY	ST	CTY		CNTY	CTY			UNIV	CTY		CNTY		CTY
30a.	X	X		X	X	X	X	X	X	X	X		X	X	X	X	X	X	X
30b.	X	X		X	X	X	X	X	X	X	X		X	X	X		X	X	X
30c.	X	X		X	X	X	X	X	X	X	X		X	X	X		X	X	X

FIRE BRIGADE SURVEY "SINGLE UNIT SITES"

Questions	Utilities																		
	A	B	D	E	G	I	L	M	N	O	R	S	V	W	AA	AB	AC	AD	AE
30d.	X			X	X	X	X	X	X	X	X		X	X	X		X		X
30e.	X				X	X			X	X	X		X		X			X	X
30f.				X	X	X		X		X	X		X					X	
30g.		X		X	X	X	X	X	X	X	X		X	X	X	X	X	X	X
30h.	X	X		X	X	X	X	X	X	X	X		X	X	X	X	X	X	X
30i.	X	X		X	X		X	X		X	X		X	X	X		X		X
30j.	X	X		X	X	X	X	X		X			X	X	X	X	X	X	X
30k.	X	X		X	X	X	X	X	X	X	X		X	X	X	X	X	X	X
30l.				X										X	X		X		
30m.	X	X		X	X	X	X	X	X	X	X		X	X	X	X		X	X
30n.	X	X		X		X	X	X		X	X		X	X	X	X	X		X
31a.	TCo	FPCo	FBIn	ETIn	FPTn	TIn	TIn	TIn	EPIn	FPTS	FC	CORP	FFI	FPI	FBIn	FBIn	NuTS	FBIn	FPCo
31b.	NONE	ST	EXP	ST	ST	ST	NONE	ST	DEGR		B.S.	NONE	ST	EXP	EXP		EXP	ST	ST
31c.	FM	SEPT	FBIn	Chf	FPCo	TIn	TIn	TIn	SaCo	FPTS	FC	CORP	FFI	FPSu	FPCo	FBIn	NuTS	O.S.	SFPCo
31d.	EXP	ST	EXP	ST	A.S.	ST	NONE	ST			B.S.	NONE	ST	EXP	EXP		EXP		ST
31e.	FD		FD	ETIn	FPTr	FD	FD	TIn	FD	FPSu	FC		FFI	EPI	FPI	FBIn	ST	FBIn	FPCo
31f.			ST	ST	ST	ST	ST	ST	ST	ST	B.S.		ST	EXP	EXP			ST	ST
32a.	X	X		X		X	X	X	X		X	X	X	X	X	X	X		X
32b.			X		X					X								X	
33.	PLC	ST		TVA	X	PLC	FIC	ST	ST		St.	PLC	ST	UNIV	ST	CNTY	ST		ST
34a.		X	X	X	X	X	X	X	X			X	X	X	X	X	X	X	X
34b.	X									X	X								
35a.			X	X	X	X		X	X	X	X		X	X	X	X	X	X	X
35b.	X	X					X												

FIRE BRIGADE SURVEY "SINGLE UNIT SITES"

Questions	Utilities																		
	A	B	D	E	G	I	L	M	N	O	R	S	V	W	AA	AB	AC	AD	AE
36a.	X	X	X	X	X		X	X		X		X		X	X		X		
36b.						X			X		X		X			X		X	X
37a.	X	X	X	X	X	X	X	X		X	X	X	X	X	X	X		X	X
37b.									X							X	X		
38a.					X	X						X				X			
38b.									X								X		
39a.		X		X	X	X	X	X	X	X			X	X		X	X	X	X
39b.	X		X								X	X			X				
40a.	X		X								X	X							
40b.																			
41a.	X																		
41b.																			
42a.	X	X	X		X			X			X	X		X	X	X		X	X
42b.				X		X	X		X	X			X				X		
43a.	X	1		2		X	X	X	X	X	X							X	X
43c.	X	1		2		X	X	X	X	X	X					1		X	X
43e.		1		2		X	X	X	X	X	X							X	X
43g.		1	2	4		X	X	X	X	X	X							X	X
43i.		X		1		X	X	X	X	X	X							X	X
43k.		X	X	2.5		X	X	X	X	X	X							X	X
43m.		X	X	.5		X	X	X	X	X	X	X						X	X
43o.				X	1	X					X							X	X
43q.			1	5	1	X	8	X	X		X	X		0.25		2	X	X	X

FIRE BRIGADE SURVEY "SINGLE UNIT SITES"

Questions	Utilities																		
	A	B	D	E	G	I	L	M	N	O	R	S	V	W	AA	AB	AC	AD	AE
43s.	X	1		3		X	X	X	X	X	X							X	X
43u.	X	1	2	4	1	X	8	X	X	X	X	X		0.25		2	X	X	X
43w.		1	1	2	2	X	8	X	X		X	X				X		X	X
43y.	X	1		2		X		X	X	X	X	X				1		X	X
43aa.		1		1		X	X	X	X							2		X	X
43cc.		1		1	1	X	X	X		X	X								X
43ee.		1		X	1	X	8		X	X	X	X		0.25		1		X	X
43gg.		1	1			X			X		X	X		0.25		1			X
43ii.		1	1			X			X		X					1		X	X
43kk.		1	1			X			X	X		X				2		X	X
43mm.				2	1	X	8		X	X	X	X				1	X	X	X
43oo.						X													
43qq.		1		2	2	X	8	X	X	X	X	X					X	X	X

APPENDIX C.7

SURVEY RESPONSES FOR MULTIPLE UNIT SITES

FIRE BRIGADE SURVEY "MULTIPLE-UNIT SITE"

Questions	Utilities											
	C	F	H	J	K	P	Q	T	U	X	Y	X
2a.		X		X	X			X	X	X		X
2b.	X		X				X					
2c.						5					F.D.	
3.	120	85	76	70	70	50	104	32	45	40	30	72
4.	5	5	10	5	8	8	5	6	8	5	6	5
5a.						5		32			30	
5c.	75	X	59	X	70	50	74		45	24		72
5e.												
5g.										16		
5i.												
5k.	X											
5m.	X						20					
6a.	X			X	X							
6b.												
6c.												
6d.												
6e.		S.Fo	S.Fo			FST	FBL	ASE	SRO	FBL	FPSu	S.F.
7.	P.M.	S.E.	S.E.	S.S.	S.S.	SuSa	S.S.	S.E.	SOS	S.S.	SrFP	S.E.
8a.	11	24	20	60	24	26	30	30	24		30	24
8b.	3	20	16	6	6	5	5	24	6	1	5	24
8c.	7	12	16	6	6	5	5	6	6		5	6
9.	6	6	8	5	6	6	7	11	8	5	6	7
10a.	X		X	X	X	X	X	X	X	X	X	X
10b.		X		X								
11a.		X		X	X	X	X	X	X	X	X	X
11b.	X		X									
12a.							X	X	X	X	X	X
12b.		X	X	X	X	X				X	X	
13a.	X	X	X	X	X	X	X	X	X	X	X	X
13b.	X	X	X	X	X	X	X	X	X	X	X	X
13c.							X	X	X	X	X	
13d.	X	X	X		X	X						X

FIRE BRIGADE SURVEY "MULTIPLE-UNIT SITE"

Questions	Utilities											
	C	F	H	J	K	P	Q	T	U	X	Y	X
13e.				X			X		X	X	X	
13f.	X	X	X	X	X	X	X	X	X	X	X	X
13g.			X			X	X	X		X	X	
13h.							X				X	X
13i.		X	X				X	X		X	X	
14a.	X	X	X	X	X	X	X	X	X	X	X	X
14b.				VARI	FOG			TFT	COMB	ELEC		ELEC
14c.	X	X	X	X	X	X	X	X	X	X	X	X
14d.	X	X	X	X	X	X	X	X	X	X	X	X
14e.	VARI	X		X	X		X	X	SPNR		VARI	VARI
14f.	X		X	X	X	X	X	X	X	X	X	X
14g.	X	X			X	X	X	X	X	X	X	X
14h.	X	X			X	X	X	X	X	X	X	X
14i.	X	X			X	X	X	X	X		X	X
14j.			X	X	X	X	X	X	X	X	X	
14k.			X	X	X	X	X		X	X	X	
14l.			X	X	X	X		X	X	X	X	
14m.	X	X	X	X	X	X	X	X	X		X	X
14n.	X	X	X	X	X	X	X		X		X	X
14o.					X	X		X	X			
14p.		X	X	X	X	X		X	X	X	X	X
14q.			X	X			X	X	X		X	X
14r.	X	X	X	X	X	X	X	X	X	X	X	X
14s.	X	X	X	X	X	X	X	X	X	X	X	X
14t.	X	X	X	X	X	X	X	X		X	X	X
14u.			X				X	X		X	X	
14v.				VARI			PIKE					VARI
15a.	X		X			X	X	X				X
15b.		X		X	X	X			CNTY	X	X	
16a.			X				X		X			
16b.	X		X				X	X	X			X
16c.	X		X				X		X			X
16d.	X		X			X	X	X	X			X
16e.	X						X		X			X
16f.	XFMR		X				TANK	BLDG	MAZE			X
17a.	40	40	30	10	X	32	8	20	40	24	400	20
17b.	X	X	X		X	X	X	X	X	X	X	X
17c.		X	X	X	X						X	
17d.	24	X	20	6	X	8	8	20	24	16	12	20

FIRE BRIGADE SURVEY "MULTIPLE-UNIT SITE"

Questions	Utilities											
	C	F	H	J	K	P	Q	T	U	X	Y	X
17e.	X		X				X				X	X
17f.	ST	CTY		CORP	CNTY	CNTY		CORP	CNTY	CTY	CNTY	
18a.	1	X	2	1	X	X	1	3	X	2	8	X
18c.	1	X	2	1.5	X	X	1	6	X	1	16	X
18e.	6	X	3	.5	X	X	1	8	X	1	16	X
18g.	1	X	2.5	1	X	X	1	10	X	2	48	X
18i.	X		.5	1	X	X	1	3	X	0.25	16	X
18k.	1	X	1		X	X	1	2	X	2	16	X
18m.	6	X	4.5	1	X	X	1	3.5	X		16	X
18o.	1	X	1		X	X	1		X		64	X
18q.	23		14	3	X	X					200	HZMT
19a.	X	X	X	X	X	X	X	X	X	X	X	X
19b.	X	X	X	X	X	X	X	X	X	X	X	X
19c.	X	X	X	X	X	X	X	X	X	X	X	X
19d.	X	X	X	X	X	X	X	X	X		X	X
19e.			X	X	X	X		X		X	X	X
19f.			X		X	X		X		X	X	X
19g.	X	X	X	X	X	X	X	X	X	X	X	X
19h.	X	X	X	X	X	X	X	X	X	X	X	X
19i.	X		X	X	X	X	X	X	X		X	X
19j.	X	X		X	X		X	X	X		X	X
19k.	X	X	X	X	X	X	X	X	X	X	X	X
19l.			X			X			X			X
19m.	X	X	X	X	X	X	X	X	X	X	X	X
19n.	X	X	X	X	X	X	X	X	X	X	X	X
20a.						X	X	1001	X	27	27	27
20b.	X	X	X				X					
21a.			X				X	X	X	X		X
21b.	X	X		X	X	X					X	
22a.	X		X		X	X	X	X	X	X	X	X
22b.		X		X								
23a.	X	X	X		X	X	1	1	X	X	8	X
23c.	X	X	X		X	X	1	2	X	X	8	X
23e.	X	X	X	1	X	X	1	1	X	X	16	X
23g.	X	X	X		X	X	1	2	X	X	24	X
23i.	X	X	X	1	X	X	1	1	X	X	8	X
23k.	X	X	X		X	X	1	2	X	X	16	X
23m.	X	X	X	1	X	X	1	2	X	X	8	X

FIRE BRIGADE SURVEY "MULTIPLE-UNIT SITE"

Questions	Utilities											
	C	F	H	J	K	P	Q	T	U	X	Y	X
23o.	X	X	X		X	X	1	8	X	X	32	X
23q.	X	X	X	1		X	RAD		X	X	84	X
24.	4	4	4	8	5	3	1	2	8	4	8	VARI
25.	4	4	4	1	2	20	8	5	4	4		4
26.	11	12	4	60	6	2	6	5	4	5	4	4
27.	1	1	2	1	1	1	1	1	1	1	1	1
28.	24	8	2	2	16	8	8	8	28	4	6	VARI
29a.	X		X					X				X
29b.	X	X		X	X	X	X		X	X	X	
29c.	ST	CTY		CORP	CNTY	CNTY	ST		CNTY	CTY	CNTY	
30a.	X	X	X	X	X	X	X	X	X	X	X	X
30b.	X	X	X	X	X	X	X	X	X	X	X	X
30c.	X	X	X	X	X	X	X	X	X	X	X	X
30d.	X	X	X	X	X	X	X				X	X
30e.			X	X	X	X					X	X
30f.	X	X	X		X	X	X			X	X	X
30g.	X	X	X	X	X	X	X	X	X	X	X	X
30h.	X	X	X	X	X	X	X	X	X	X	X	X
30i.	X	X	X	X	X	X	X	X	X	X	X	X
30j.	X	X		X	X		X		X		X	X
30k.	X	X	X	X	X	X	X	X	X	X	X	X
30l.			X			X		X	X			X
30m.	X	X	X	X	X	X	X		X	X	X	X
30n.	X	X	X	X	X	X	X	X	X	X	X	X
31a.	TSp	TIn	FBIn	FSIn	TSp	FPSp	FM	FTI	CORP	TSpc	FPSu	FBIn
31b.	ST	ST	ST	ST	ST	EXP	EXP	1041	ST	EXP	EXP	ST
31c.	TSp	FM	FBIn	FPAs	FSSp	FPSp	FM	FTI	FPSp	FPE	FPSu	STFF
31d.	ST	ST	ST	NONE	EXP	EXDP	EXP	1041	B.S.	EXP	EXP	EXP
31e.	TSp	TIn	FBIn	FSIn	FD	FPSp	FM	FTI	FPSp	CTY	FPSu	FBIn
31f.	ST	ST	ST	ST	ST	EXP	EXP	1041	B.S.	EXP	EXP	ST
32a.			X		X	X	X		X	X	X	
32b.	X	X		X				X				X
33.		FECo	PLC		ANSL	PLC	ST		ESSI	NUTC		

FIRE BRIGADE SURVEY "MULTIPLE-UNIT SITE"

Questions	Utilities											
	C	F	H	J	K	P	Q	T	U	X	Y	X
34a.	X		X	X	X	X	X	X	X	X	X	X
34b.		X										
35a.	X		X		X				X	X		X
35b.		X		X		X	X	X			X	
36a.	X			X	X	X					X	
36b.		X	X				X	X	X	X		X
37a.	X	X	X	X	X	X	X	X	X	X	X	X
37b.											X	
38a.		X		X							X	
38b.												
39a.	X		X	X	X	X		X	X			X
39b.		X					X			X	X	
40a.		X					X				X	
40b.										X		
41a.							X			X		
41b.											X	
42a.			X	X	X	X	X	X	X		X	X
42b.	X	X								X		
43a.		X	1	1		X		X			8	X
43c.		X	1	1		X		X			16	X
43e.		X	1	1		X		X			8	X
43g.		X	3			X	X	X			80	X
43i.		X	1			X		X			20	X
43k.		X	1			X		X			30	X
43m.		X	1			X		X			30	X
43o.		X				X	X				8	X
43q.		X				X	X	X				X
43s.		X	2			X		X			8	X
43u.		X	2	1		X	X	X				X
43w.		X	2	1		X		X			64	X
43y.		X	1			X	X				8	X
43aa.		X	2			X		X			24	X
43cc.		X	2			X		X				X
43ee.		X	1	1		X	X	X				X
43gg.		X				X	X					X

FIRE BRIGADE SURVEY "MULTIPLE-UNIT SITE"

Questions	Utilities											
	C	F	H	J	K	P	Q	T	U	X	Y	X
43ii.		X			X	X						X
43kk.		X			X	X						X
43mm.		X				X	X	X				X
43oo.		X				X						
43qq.		X	3			X	X	X				X

APPENDIX D

ADEQUACY OF ANALYTICAL TOOLS USED FOR FIRE MODELING

CONTENTS

	Page
D.1 THE COMPBRN CODE	D-1
D.2 COMPBRN III MODIFICATIONS	D-2
D.3 IGNITION AND DAMAGE THRESHOLDS	D-17
D.4 COMPBRN CALCULATIONS	D-27
D.5 UNCERTAINTY	D-32
APPENDIX D REFERENCES	D-36

D.1 THE COMPBRN CODE

Fire propagation models are usually employed in fire PRAs to quantify the amount of time required for a fire to damage equipment essential to safe shutdown of the plant, given that a fire has been initiated. The damage time obtained using the fire propagation model is then used in conjunction with experiential information on fire suppression to obtain the probability that a given fire will cause damage which leads to core melt before the fire can be suppressed.

In most fire PRAs to date, the fire propagation code COMPBRN (Reference 1) has been used to predict damage times. COMPBRN is a zone model, breaking the fire environment into three zones: flame/plume, hot gas layer, and ambient. Simple fire and heat transfer models and correlations from the literature are employed to predict the thermal environment as a function of time. The thermal response of various targets in the fire scenario is modeled to predict the amount of time required for a fire to damage or ignite critical equipment. The critical equipment is generally taken to be a cable tray necessary for safe shutdown of the plant, although other critical components such as pumps may be modeled.

The original version of COMPBRN, now referred to as COMPBRN I, has been used to calculate damage times in the majority of fire PRAs to date. However, the code calculations are thought to be ultraconservative due to the neglect of heat losses from the targets. A critical assessment of the code detailing this and other problems has been performed (Reference 2). In response to these problems with COMPBRN I, two later versions of the code were developed: COMPBRN II and COMPBRN III (Reference 3). Neither of the later versions of the code has been extensively validated or compared to data, but presumably represent various degrees of improvement.

For the purposes of this study, the latest version of the code, COMPBRN III, was selected for requantifying the fire damage times originally calculated using COMPBRN I. The goal of this effort was to show the effects of improvements in the fire propagation model on the overall risk due to fires. However, initial attempts to use COMPBRN III in the requantification of fire damage times resulted in the identification of problems with and nonphysical behavior of the code.

As a result of the observed problems and nonphysical behavior of the code, some modifications were made to COMPBRN III which made the code predictions more reasonable on a physical basis. These modifications are discussed in the next section. It was not the intent of this work to develop a new code or to try and find fault with COMPBRN III, but to identify sources of uncertainty in fire PRA methodology and to requantify the fire risk estimates of the four PRAs of interest. It should be noted that the modifications to COMPBRN III were made to remedy observed nonphysical behavior of the code and to obtain more reasonable fire damage predictions for the requantification of fire risk.

D.2 COMPBRN III MODIFICATIONS

In an initial checkout of COMPBRN III, the performance of the hot gas layer model in forced ventilation environments was assessed. The experimental data used for comparison (Reference 4) is representative of fires in forced ventilation conditions in nuclear power plants. As shown in Figure 1, the COMPBRN III code predicts an initial drop of approximately 20°C in the hot gas layer temperature (20°C below the initial ambient temperature) followed by an increase to a hot gas layer temperature of 16°C above the initial temperature. Obviously, the decrease in hot gas layer temperature is not to be expected on a physical basis. This behavior was traced to an error in the forced ventilation portion of the subroutine CGAS where a temperature multiplier (RTEMP) had been omitted. This mistake was corrected and the hot gas layer model performed significantly better (Figure 1, "corrected model") but still underestimated the experimental data. This underprediction is due to the fact that COMPBRN III assumes that under forced ventilation conditions with no doors the hot gas layer extends from the ceiling down to the floor (the steady-state solution). As a result, the area used to calculate heat transfer losses from the hot gas layer is the area of the ceiling plus the area of the walls. Since, in a developing fire, the hot gas layer does not immediately descend to the floor, this method of estimating the area for heat losses from the hot gas layer is nonconservative. A better method (in terms of obtaining a more conservative estimate of hot gas layer temperature) is to base hot gas layer heat losses on the ceiling area only. The results of using the ceiling area only for estimating hot gas layer heat losses are also shown in Figure 1. This method appears to give a good (and conservative) estimate of hot gas layer temperature.

In the simulation of nuclear power plant cable tray fires, COMPBRN III often predicts that the portion of a cable tray directly above a fire is substantially cooler than those portions of a cable tray which are not directly above the fire. Thus, contrary to intuition, it is sometimes necessary to position a pilot fire (representative of transient combustibles) out from underneath the cable tray of interest in order to cause that cable tray to ignite. One reason for this behavior is that radiation transport directly above a flame is not modeled in COMPBRN III. Objects which are not directly above a flame receive flame radiation, while objects directly overhead receive only plume convection and are thus limited to a maximum temperature equal to the plume temperature at that elevation (400 to 500 K). The large radiative heat fluxes associated with luminous flames and correspondingly high flame temperatures (1,000 to 1,500 K) result in portions of a cable tray which are not directly above a flame becoming significantly hotter than the portion of the cable tray directly overhead of the fire. Note that while this discussion has centered on cable tray behavior, the same holds true for any object above the flame. It is very important for the COMPBRN III user to understand the effect this lack of radiation transport directly above a flame can have on the predicted propagation time. This effect can lead to COMPBRN III predictions that a very large pilot fire whose diameter equals the length of the tray overhead is less damaging than a smaller pilot fire whose

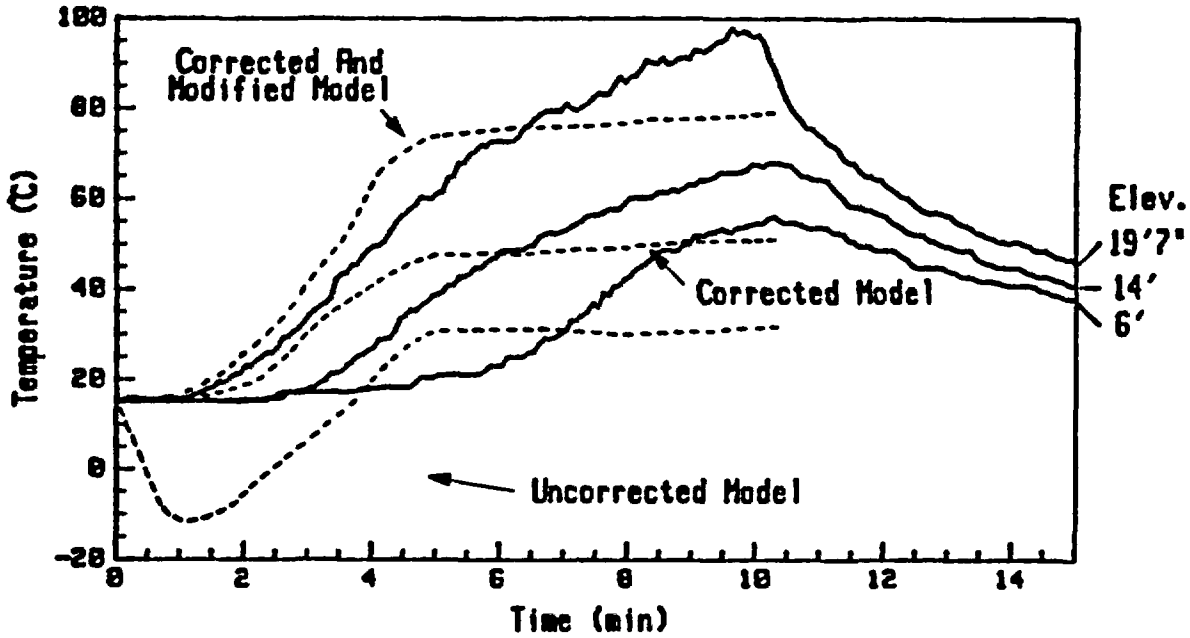

Solid Curves - Data from Base Line Validation Test 4

Broken Curves - COMPBRN III Predictions

Figure 1. Comparison of COMPBRN III Hot Gas Layer Model Predictions to SNL Data (Reference 4)

diameter is substantially less than the length of the cable tray or object overhead. The latter case may be predicted by COMPBRN III to be more severe because radiation transport from the flames to the cable tray above will be modeled, whereas it won't be modeled in the former case. This lack of radiation transport directly above the flame can be seen clearly in some COMPBRN I results. For one cable spreading room fire scenario (Reference 5), COMPBRN I predicted a median propagation time of 14.4 minutes for a 0.3-m-diameter pilot fire, and a median propagation time of 43.2 minutes for the same scenario with a 0.6-m-diameter pilot fire.

To allow for radiation transport directly above the flame, two changes are necessary to COMPBRN III. First, in subroutine IGNIT the emissivity of any object in the plume (i.e., directly above the flame) must not be set to zero as is done in COMPBRN III. This will allow for the absorption of incoming flame radiation by the target element directly above the flame. Second, subroutine TRANSF must be modified to include not only plume convection for objects directly above the flame but also flame radiation. Since COMPBRN III treats flames as cylindrical in shape, and target elements which are not directly overhead as disks for the purposes of estimating radiation viewfactors, the most consistent way of modifying the code is to assume that the radiation viewfactor from a flame to an object directly overhead can be calculated treating the top of the flame and the bottom of the object as two parallel coaxial disks. This viewfactor is readily obtained from most heat transfer texts (Reference 6).

It should be noted that the modifications discussed above to include radiation heat transfer directly above the flame will not completely remedy the problem. Having made these changes to COMPBRN III, it was surprising to find that in some instances cable tray elements which are not directly over a flame are still calculated to be hotter than those directly above the flame (but not nearly as much as without the above modifications). This result can be traced back to the manner in which COMPBRN III calculates radiative viewfactors for objects which are not directly above the flame. In COMPBRN III, this viewfactor is calculated assuming the lateral surface of the flame is that of a cylinder and assuming the target can be represented as a disk either parallel or perpendicular to the floor. Closed-form solutions for the viewfactors from the lateral surface of a cylinder to a differential element parallel or perpendicular to the ground exist for the case where the differential element lies in the plane which includes the top of the cylinder (Reference 7). However, in general, the target will not be in the plane which includes the top of the cylinder (i.e., it will not be at the same elevation as the top of the flame). Thus, it is generally necessary to calculate the viewfactor from a composite surface to the target, and add or subtract from it depending on whether the target is above or below the flame height.

Consider the situation shown in Figure 2 where the target is above the top of the flame. The viewfactor from the flame (Surface 1) to the target (Surface 2), or F_{1-2}, cannot be found from the closed-form solution since the target is not at the same elevation as the top of the flame. However, it can be calculated assuming a composite surface (1 and 3 together)

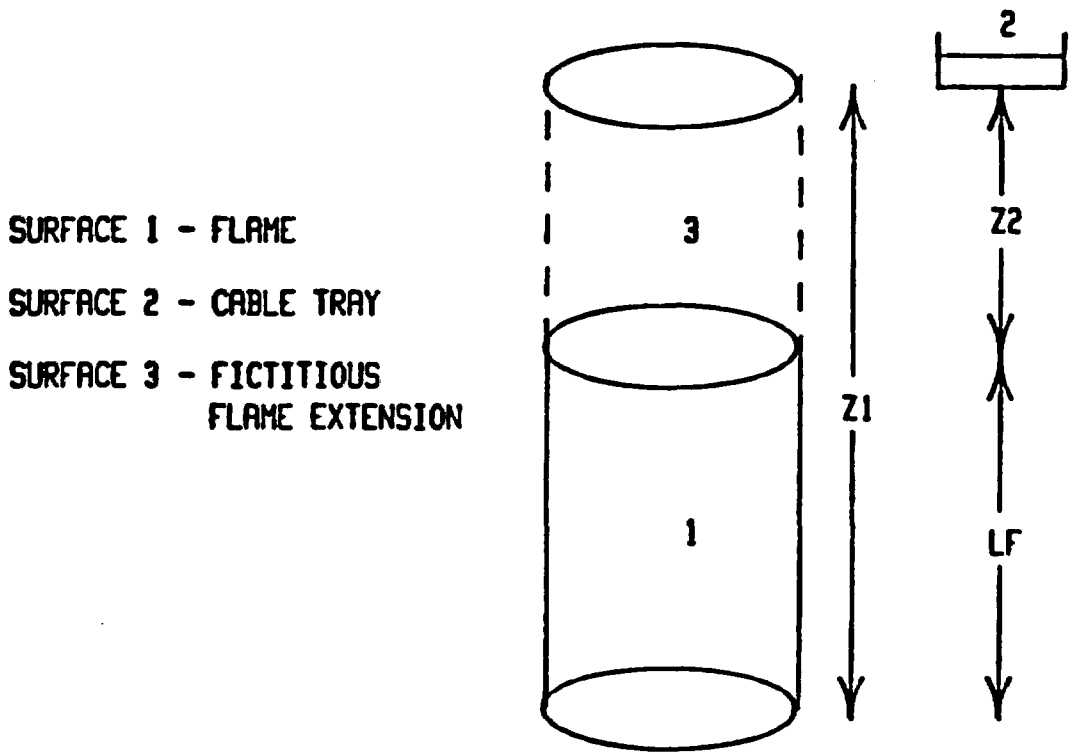

Figure 2. Typical Geometry for COMPBRN III Composite Viewfactor Calculation

exists. Using the rules for calculating composite surface viewfactors, one can write

$$A_{13}\ F_{13-2} = A_1\ F_{1-2} + A_3\ F_{3-2} \tag{1}$$

where A_{13} is the lateral surface area of Surfaces 1 and 3 added together, F_{13-2} is the viewfactor from the composite surface (1 and 3) to the target (Surface 2), and so forth. This expression can be solved for the viewfactor from the flame to the target (F_{1-2}) to yield:

$$F_{1-2} = \left(\frac{A_{13}}{A_1}\right) F_{13-2} - \left(\frac{A_3}{A_1}\right) F_{3-2} \tag{2}$$

In terms of the lengths shown in Figure 3, this can be reduced to

$$F_{1-2} = \left(\frac{Z1}{LF}\right) F_{13-2} - \left(\frac{Z2}{LF}\right) F_{3-2} \tag{3}$$

This is exactly the formula used in COMPBRN III to calculate the composite surface viewfactor. There are, however, two problems with this formulation. First, the viewfactors calculated by functions CYLPAR and CYLPER are from a differential surface to the surface of a cylinder. Thus, they return F_{2-13} and F_{2-3}, not F_{13-2} and F_{3-2}. In COMPBRN III it is F_{2-13} and F_{2-3} that are used in Equation (3) above. Using reciprocity, Equation (2) can be written as

$$F_{1-2} = \left(\frac{A_2}{A_1}\right) F_{2-13} - \left(\frac{A_2}{A_1}\right) F_{2-3} \tag{4}$$

It is only in this form that the viewfactors calculated in subroutines CYLPAR and CYLPER can be properly used.

The second problem with the above formulation is that the desired viewfactor is in reality not F_{1-2}, but F_{2-1}. That is, the desired viewfactor is the one from the target (differential surface) to the flame. For estimating radiative heat transfer between two surfaces given the radiative output from Surface 1,

$$q_{rad} = F_{1-2}\ q_1''\ A_1 \tag{5}$$

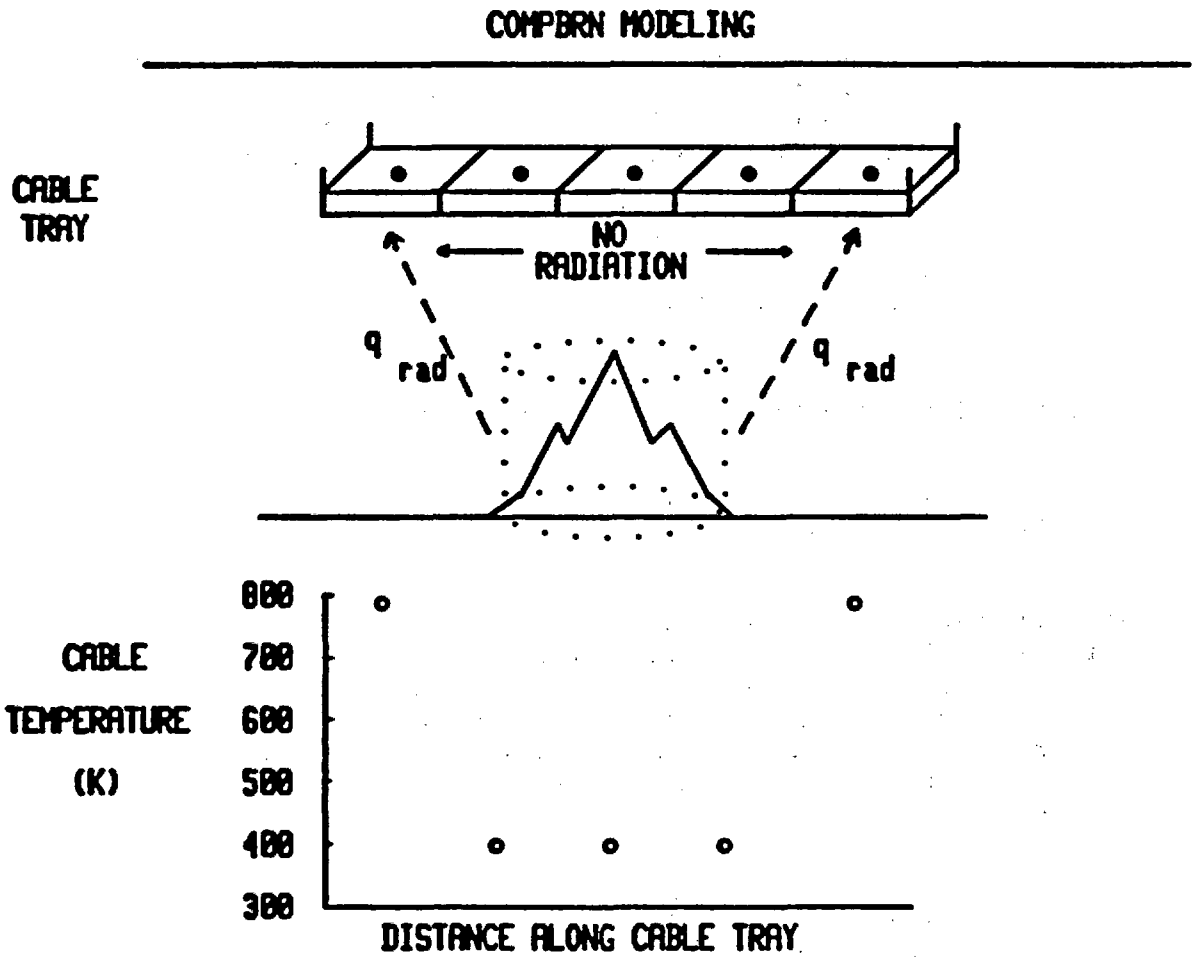

Figure 3. Unmodified COMPBRN III Flame Radiation Model and Corresponding Cable Surface Temperature Response

which using reciprocity can be written as

$$q_{rad} = F_{2-1}\, q_1''\, A_2 \tag{6}$$

The incident heat flux to Surface 2 (which is used in the heat conduction algorithm) is then

$$q'' = \frac{q_{rad}}{A_2} = F_{2-1}\, q_1'' \tag{7}$$

Thus, F_{2-1} is the desired viewfactor for the proper modeling of the problem, not F_{1-2}. This modification in subroutine TRANSF leads to significant reductions in the calculated not-directly- overhead viewfactors and, with the other modifications suggested, enables COMPBRN III to predict that the hottest location in the room is usually directly above the fire. Note that there are, however, situations (involving tall flames of small diameter) when the viewfactor from the lateral side of the flames to a target actually is greater than the viewfactor from the flat disk representing the top of the flames to a target.

The reduction in not-directly-overhead viewfactors can have a significant impact on COMPBRN III predictions. An example of this is the Seabrook primary component cooling pump area where the lowest cable trays are 4.6 m (15 ft) above the floor. COMPBRN III predicts that a 0.91 m (3 ft) diameter oil fire will damage the lowest trays in 6 minutes. The damage occurs near the ends of the cable tray, not to the portion directly above the fire. But, if the above corrections are made to the viewfactor calculation, the reduced not-directly-overhead viewfactors result in radiative heat fluxes which are too low to cause damage to the tray. And the inclusion of radiation from the top portion of the flame to the target is not enough to overcome this substantial reduction in the lateral surface-to-target viewfactor. As a result of this modification, the modified version of COMPBRN III will now predict that a 0.91 m (3 ft) diameter oil fire is incapable of damaging the cable trays which are 4.6 m (15 ft) off the floor in the Seabrook primary component cooling pump area scenario. These results indicate that the modified version of COMPBRN III predicts that it is difficult to damage or ignite cables (with the thermal and damage properties of those found at Seabrook) which are not directly in the flame.

COMPBRN III models fuel targets as discrete points (Figure 3) and can therefore lead to discontinuous behavior. For example, if the center of a particular fuel target is located above the flame and 1 cm inside the flame radius, the radiation heat transfer would be zero as calculated by an unmodified version of COMPBRN III. But if the target were at the same elevation but 1 cm outside the flame radius, very large radiative fluxes would be predicted by COMPBRN III because of the incorrect viewfactor

calculation as discussed above. The modifications suggested above lead to considerable reduction in this sensitivity to target location, but one more minor addition to the code can reduce this sensitivity further.

Consider the previous example of a target located above the flame and either 1 cm inside the flame radius or 1 cm outside the flame radius. Employing the above suggested modifications, in the first case (target is 1 cm inside the flame radius) the radiation viewfactor is calculated assuming the top of the flame and the bottom of the target can be modeled as coaxial parallel disks. In the case of the target being 1 cm outside the flame radius (at the same elevation), the viewfactor is calculated assuming the side of the flame and bottom of the target can be modeled as the lateral surface of a cylinder and a differential area respectively. For this latter case, the viewfactor from the target to the lateral surface of the flame is nearly zero. Unless the elevation difference between the top of the flame and the target is large, the viewfactor in the first case (target 1 cm inside flame radius) will be much larger than the viewfactor for the second case. Thus, the results can still show a significant sensitivity to target location.

To greatly reduce this sensitivity of radiation viewfactors to target location, one addition is necessary to subroutine TRANSF of COMPBRN III. For the case where the target is above the flame and outside the flame radius, the radiative viewfactor is taken to be the sum of two viewfactors:

$$F_{2-1} = F_{2-1,\ top} + F_{2-1,\ side} \tag{8}$$

where $F_{2-1,\ top}$ is the viewfactor between the bottom of the target and the top of the flame and $F_{2-1,\ side}$ is the viewfactor from the bottom of the target to the side of the flame (modeled as discussed above). The viewfactor $F_{2-1,\ top}$ is assumed to be the viewfactor from a differential element (either parallel to or perpendicular to the plane of the top of the flame) to a disk (the top of the flame). These viewfactors are found in (Reference 6). With this additional modification to subroutine TRANSF, COMPBRN III calculates more realistic viewfactors to targets above a flame and does not exhibit as much nonphysical sensitivity to target location as the original version of COMPBRN III.

Another problem occurs in COMPBRN III when an object is located directly in a flame. Since COMPBRN III sets the target emissivity to zero for any object directly above (and in this case within) the flame, only convective heat transfer between the flame and target is allowed to occur. While the convective heat transfer rate in the flame is at most on the order of 25 kW/m^2, the total convective plus radiative heat fluxes in the flame are typically on the order of 250 kW/m^2. Thus, COMPBRN III predicts that an object in a flame heats up much less quickly than it should based on the total heat transfer rate. Since in most nuclear power plant fire simulations a limited amount of pilot fuel is assumed to exist, and this amount of fuel can only burn for a limited time, the difference

between ignoring radiative heat transfer in the flame and allowing for it can be extremely important. Figure 4 shows how different the results can be. The lower temperature curve is based on a COMPBRN III calculation with only convective heat transfer in the flame. The pilot fire dies out before the target (cable tray) can be damaged or ignited. However, when COMPBRN III is modified to include radiative as well as convective heat transfer in the flame, the target ignites within the first minute of the simulation as indicated by the higher temperature curve in Figure 4. The modification is accomplished by removing the setting of the target emissivity to zero in subroutine IGNIT. The target element now receives radiation and convection from the surroundings which are taken to be at the flame temperature. This is slightly conservative (10 percent) because the flame temperature is calculated in COMPBRN III assuming the total flame output is radiative.

The result of allowing for radiative heat transfer within the flame can be seen in the difference in damage times predicted by the original and modified versions of COMPBRN III for the Oconee cable shaft and auxiliary building scenarios. The original version of COMPBRN III predicts that the lowest cable trays ignite but eventually burn out before the uppermost trays are damaged in the cable shaft simulation. Thus, no damage to the critical trays is predicted. However, once flame radiation is accounted for, the uppermost trays damage within 8 minutes. In the auxiliary building aisle fire simulation (0.61 m (2 ft) diameter fire), the original version of COMPBRN III predicts a damage time of 24 minutes. The modified version of COMPBRN III predicts a damage time of only 3 minutes for this case. Similar results were obtained for the electrical (self-) ignition simulation. Thus, the modified version of COMPBRN III predicts that cables (such as those found at Oconee) will ignite readily when engulfed by a flame.

An interesting observation arose from comparing these numbers. For cable trays which are very close together, the modified version of COMPBRN III predicts that the cable trays will ignite at the rate of one cable tray per time step provided that they are close enough to be engulfed by the flames from the tray below. Consider the case where the lowest cable tray is engulfed by flames from a fire on the floor. The high heat fluxes (now that radiation in the flame is allowed for) and 1 minute time step result in a large enough deposition of energy to ignite the lowermost tray. Now if the next lowest tray is close enough to the lowest tray to be engulfed in its flames, this tray will ignite during the next time step. This process then continues for this reason at the rate of one tray per time step. If the time step is decreased to 10 seconds the same behavior is observed. At time steps of 1 second, the slow thermal response of the cable insulation necessitates several time steps to ignite a cable in the flames from another. Thus, the calculations are highly dependent on time step size. At first glance, it may appear that the smaller time step results in more accurate predictions. This is the case with most numerical solution procedures. However, it is not clear that this is true for this situation as discussed below.

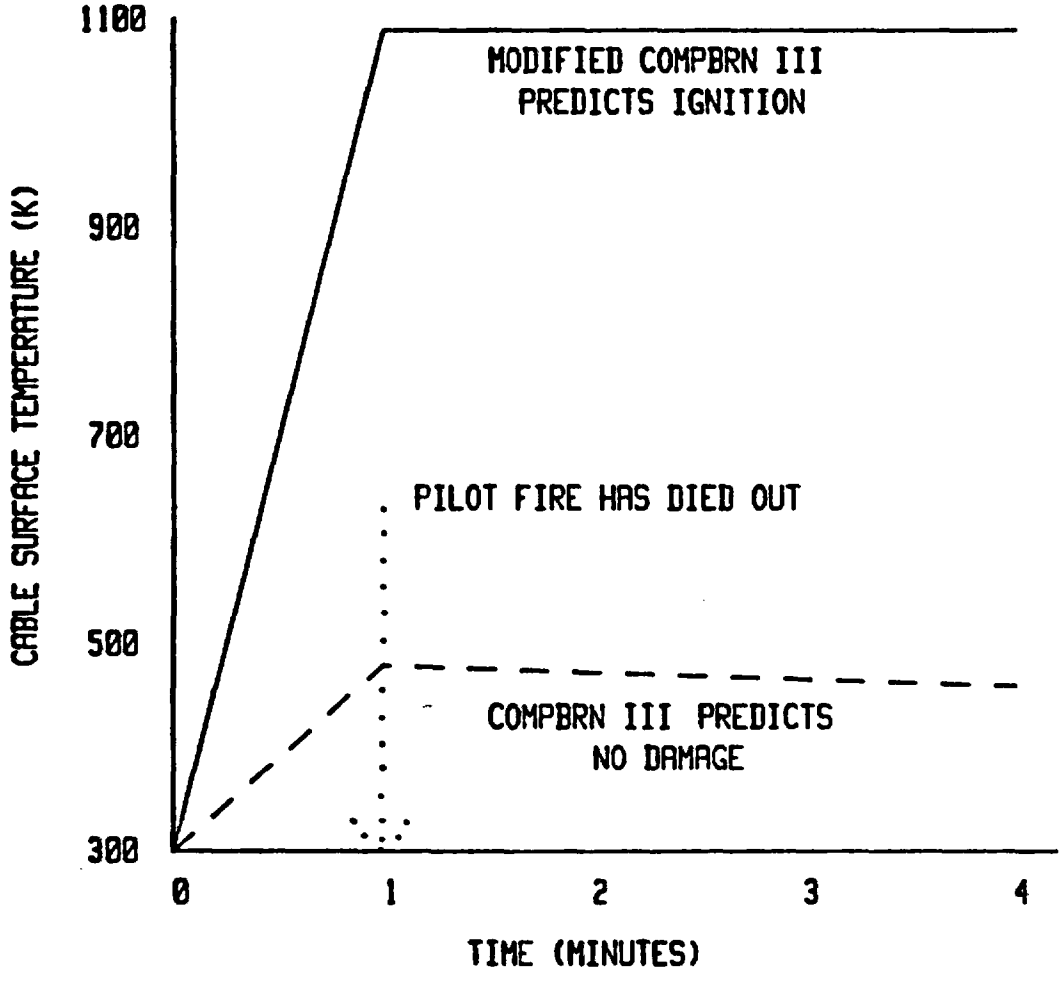

Figure 4. Effect of Including Flame Radiation to Cable Within Flame

Strictly speaking, COMPBRN III is not a transient fire model. COMPBRN III is actually composed of many steady-state models and correlations. Thus, it is at best a quasi-transient model. For example, the heat and mass release rates and flame heights are based on steady-state models and correlations. It is, therefore, incorrect to assume that within one time step following ignition, the heat release rate and flame height are of the order of their steady-state values, when that time step is as small as 1 second. Perhaps it was for this reason that the developers of COMPBRN recommended a time step of 1 minute. Based on the above observations, it is recommended that users of COMPBRN use 1 minute time steps to avoid such nonphysical behavior.

Once COMPBRN III has been modified to include radiative heat transfer to objects within the flame, another problem becomes immediately apparent: the high heat fluxes to an object within the flame lead to instabilities and nonconvergence in the conduction subroutine DIFFUS. Similar behavior (nonconvergence) has been observed when barriers were modeled in the calculations.

The cause of this behavior is the relatively large time step of 1 minute recommended by the COMPBRN developers. The Crank-Nicolson algorithm employed in COMPBRN III becomes unstable at time steps as large as 1 minute when high heat fluxes (or very small grid spacings) are encountered. In these situations, COMPBRN III will terminate the simulation prematurely. This situation can be readily dealt with by allowing subroutine DIFFUS to subcycle in 1 second (or smaller if necessary) intervals in those instances where it would otherwise become unstable. Subcycling in subroutine DIFFUS is necessary to obtain the temperature response of the target shown in Figure 4 when radiative as well as convective heat fluxes to targets within the flame are allowed for.

Another potential source of error for the COMPBRN III user has been identified. COMPBRN has been used, in practice, almost exclusively to model cable tray fires in nuclear power plants. These fires are usually assumed to initiate due to a transient combustible source or as a result of self-ignition of the cable insulation due to electrical shorting. In the self-ignited simulations, a small amount of pilot fuel is assumed to exist on top of one portion (or fuel element) of a cable tray. The fuel elements into which a cable tray is divided are typically 0.3 m (1 ft) in length as recommended by the COMPBRN developers. The resulting pilot fire has a base area equal to 0.09 to 0.2 m^2 (1 to 2 ft^2). If the pilot fire is fueled by a highly combustible fuel such as heptane, pilot flame heights can be quite large (3 to 4 m or 10 to 13 ft) based on the large base area. Since COMPBRN uses 1 minute time steps, the pilot fire has to burn for at least 1 minute, regardless of how small the pilot fuel mass is. These large flame heights for the pilot fire coupled with the recommended COMPBRN time step of 1 minute can result in substantial damage to neighboring cable trays induced by the pilot fire within the first time step as can be seen in Figure 4. To avoid this unintentional damage caused by the pilot fire, the COMPBRN user should specify cable insulation (lower heat release rates and thus lower flame heights and heat fluxes) as the pilot fire fuel for the

self-ignited simulations. This will help isolate the effects of the pilot fire to the fuel element of interest, which more closely simulates the actual situation in a self-ignited cable fire.

Once the above modifications had been made to COMPBRN III, it was noticed that very large radiative fluxes from a burning element to an adjacent (nonburning) element were being predicted by COMPBRN III. These radiative fluxes were typically a large percentage (50 to 60 percent) of the flame total heat flux output. The reason for these large radiative fluxes from burning to adjacent nonburning elements can be found in subroutine TRANSF: the viewfactor for these situations is implicitly assumed to be unity. Thus, the radiative heat flux to these elements is simply the radiative fraction (50 to 60 percent) multiplied by the flame total heat flux output.

While this method is clearly conservative, it would appear to be overly conservative and somewhat inconsistent with the other radiation heat transfer calculations in COMPBRN III. The calculation of radiation exchange between a flame and an adjacent fuel element can be made more consistent by multiplying the above heat flux by an appropriate viewfactor. In this case, the function CYLPAR can be used to calculate the viewfactor from the differential area (target) to the lateral surface of a cylinder (flame). This modification results in more reasonable and consistent radiative heat fluxes from a flame to an adjacent (nonburning) element.

The above modifications lead to another observation regarding radiative heat transfer in COMPBRN III. Once a fuel element ignites, it is assumed that no more external radiative heat flux can impinge on the fuel base from adjacent burning elements. The code will always assume QEXT (external heat flux) is zero for a burning fuel element. The heat release rate of a flame is directly proportional to the mass burning rate (via the heat of combustion), and COMPBRN III calculates the mass burning rate (per unit area) as

$$m'' = m_o'' + C_s \, QEXT \tag{9}$$

where m_o'' and C_s are constants for the particular type of fuel, and QEXT is the external heat flux. Note that m_o'' accounts for self-feedback from the flame to its base. For certain types of cable insulation, m_o'' can be negative indicating that it will extinguish unless a sufficient external heat flux is present.

For a situation where only one fuel element is burning (assume the pilot fire has died out), there is no problem with assuming the external heat flux in Equation (9) is zero. However, once more than one fuel element begins to burn, assuming QEXT equals zero in Equation (9) will prevent any radiative feedback to the fuel. For adjacent fuel cells which are burning, COMPBRN III sets QEXT equal to zero, thereby eliminating any radiative feedback between adjacent flames. This is a nonconservative assumption and results in the prediction of lower heat release rates and possibly

premature self-extinguishment of the fire. Modifications to subroutine TRANSF can be easily made to permit radiative exchange between adjacent flames and thus account for radiative feedback.

Radiative feedback to a burning element can also be important when a burning cable tray is engulfed by flames from a lower cable tray or from the pilot fire. In the Limerick simulation using COMPBRN III, the lowermost cable tray (which was in the flames from the pilot fire) ignited but did not damage a second tray located 1.5 m (5 ft) above it. When COMPBRN III had been modified to allow for radiative feedback to a burning element from an engulfing flame, the flames from the lowermost cable tray increased in height and intensity and caused the uppermost tray to ignite within minutes. Thus, the effect of radiative feedback can be very significant and must be properly accounted for to obtain realistic results.

One final concern with COMPBRN III surrounds the use of damage and ignition temperature thresholds. While the concept of a damage and ignition temperature threshold is okay, there is some concern about the ability of COMPBRN III to properly model the transient temperature response of a cable tray. In COMPBRN III, a cable tray containing cables is typically modeled as a solid slab of material with the thermal properties of the cable insulation or jacket material. Such a slab can be on the order of 0.1 m (4 inches) thick. While the one-dimensional heat conduction algorithm is independent of cable tray mass, it does directly depend on the thickness of the slab. It is difficult to accept that the thermal response of the top (or bottom) layer of cables in a cable tray with perhaps five cables below (or above) it can be accurately determined by modeling the cables as a solid slab of cable insulation or jacket material. In fact, for a 0.1 m (4 inch) thick slab, the finite difference grid spacing is of the order of a typical cable diameter. Clearly this is not an accurate (nor conservative) method for estimating the transient surface temperature of a single cable which is a poor thermal conductor. Since the temperature response of the cable insulation is directly related to the time to damage (or ignite) the cable, the damage and ignition times predicted by COMPBRN III are directly affected.

One method for resolving this concern is to decrease the slab thickness to that of a typical cable radius, about 0.005 m (0.2 to 0.25 in). Note that subroutine DIFFUS must be modified to subcycle as discussed previously or a numerical instability will result. This allows for a much more accurate prediction of the cable transient thermal response at the surface of the cable. Since cable surface temperature is presently used for determining cable ignition and damage, it should be modeled as accurately as possible.

Another possible method for improving this deficiency is to base damage and ignition criteria on something other than surface temperature. Experimental studies (References 8, 9, 10) have shown that cable damage and ignition can be directly related to the external heat flux and external energy flux incident upon a cable. In general, these studies indicate that there is a minimum (or critical) heat flux below which damage or ignition of cable insulation will not occur. Additionally, this heat flux must be

present for a sufficient time to heat the insulation to the point of damage or ignition. The product of this heat flux and the length of time necessary to cause damage or ignition yields the minimum (or critical) energy below which damage or ignition of cable insulation will not occur.

Subroutine IGNIT in COMPBRN III can be modified to use a critical energy and critical heat flux criterion to determine damage and ignition. The threshold energy and heat flux for cable damage, piloted ignition, and spontaneous ignition can be input parameters to the code. Experimental data exists (References 8, 9, 10) for determining the critical energy and heat flux for a variety of cables. Some data also exists (Reference 10) on the effects of various flame-retardant coatings which are sometimes applied to cables. The effect of using a different damage/ignition criterion (other than surface temperature) can be seen in the simulations of the Indian Point 2 electrical tunnel aisle fires. Using a damage and ignition temperature of 673 K, the modified COMPBRN III predicts no damage to the critical cable tray. However, employing a critical heat flux for damage of 7.2 kW/m^2, a critical heat flux for piloted ignition of 12 kW/m^2, a critical energy flux for damage of 5.56 MJ/m^2, and a critical energy flux for piloted ignition of 0.51 MJ/m^2, the modified COMPBRN III predicts critical cables will be damaged in 13 minutes.

There are, however, two questionable aspects of using this critical energy/critical heat flux criterion. First, while the criterion was developed based on an external radiative heat flux, there are situations when convective heat fluxes are also significant and must be accounted for. But to model any convective heat flux, the surface temperature of the object must be known. Thus, the thermal response model for the cable again becomes important and must be accurate. The second questionable aspect of this critical energy/critical heat flux criterion regards the interpretation of the data used to define the minimum heat flux which can cause damage or ignition. This is discussed more fully in Section D.3.

Even with the above modifications to COMPBRN III, there still remain some unresolved concerns. For calculations involving barriers, some oscillation in surface temperature (of the barriers) was observed. This could be resolved by forcing subroutine DIFFUS to subcycle with smaller time steps for calculations involving barriers.

Another concern is that COMPBRN III predicts low flame temperatures (800 to 900 K) for certain types of cable insulation. The flame temperatures are calculated by dividing the flame heat release rate by the flame surface area, and then equating this heat flux to σT^4. Since most qualified cable insulation does not burn well (low heat release rates) unless externally heated, low flame temperatures are predicted. In most cases, these low flame temperatures are not important because the radiative heat transfer from the flame to targets is calculated by multiplying the heat release rate by a radiative fraction and then by a viewfactor. However, in situations where a cable tray is engulfed by flames from another cable tray, the heat transfer rate is calculated (both radiation and convection) based on the surrounding temperature (in this case, the flame temperature).

If the ignition temperature of the cable insulation is assumed to be 850 K (near the upper limit of cable ignition temperatures), a flame which engulfs the cable tray and is calculated to be at a flame temperature of 800 K will not be capable of igniting the cable in the tray regardless of the length of time it remains in contact with the cable tray. This is clearly not the correct way to model this situation.

One remaining concern with COMPBRN III is the user-defined communication matrix. This matrix allows the user to specify which fuel targets can communicate with (or transfer heat to) other targets. The input to this matrix can, therefore, greatly affect the code predictions. Unfortunately, there are several inadequacies in the present formulation of the communication matrix. For example, the communication matrix does not distinguish between radiation and convection heat transfer. Consider three horizontal cable trays, one vertically above the other, separated by 0.3 m (1 ft) vertically. Each tray is 0.6 m (2 ft) wide. Assume there is a 0.6 m (2 ft) diameter pool fire burning on the floor under the lowest tray. Since the middle and top tray are effectively blocked by the bottom tray from receiving any thermal radiation from the pool fire, the COMPBRN user might be inclined to structure the communication matrix such that no communication is allowed between the pool fire and the middle and top cable trays. However, because the present formulation of the communication matrix does not distinguish between radiation and convection heat transfer, the middle and top trays would also not be allowed to receive any convective heat transfer from the hot plume above the flame (in which they are immersed). This is clearly not correct nor is it conservative.

A similar problem occurs when a hot gas layer is present. Consider the previous example but with the three cable trays close to the ceiling. If the COMPBRN user attempts to prevent the lowest and middle trays from exchanging thermal radiation with the ceiling (due to their being shielded by the top tray), any convective heat transfer with the hot gas layer (in which the trays may be immersed) is also prevented.

Another inadequacy of the communication matrix is that no partial shielding of cable trays is allowed. Consider the three cable trays of the previous example located near the floor, this time with a pool fire off to the side. If the pool fire is large enough, the flames may be several meters above the top cable tray. The bottom tray will see the portion of the flames below (roughly) the height of the middle tray, and the top tray will see the portion of the flames above (roughly) the height of the middle tray. The middle tray itself sees a small portion of the flames, depending on the distance between cable trays and the distance away from the pool fire. All three trays see less than a full view of the flames, but each sees at least some. The present structure of the communication matrix does not allow one to account for the partial shielding of the trays which actually occurs in a case such as this.

In conclusion, the above suggestions for modifying COMPBRN III can rid the code of some of the inconsistencies and errors which previously resulted in nonphysical and sometimes nonconservative behavior. The direct effects of

several of these modifications can be seen in comparing the COMPBRN III predictions to those using a modified version incorporating the above suggested modifications. This comparison indicates that the COMPBRN III results will generally be nonconservative compared to the modified COMPBRN III predictions. A comparison of the modified COMPBRN III predictions to those using COMPBRN I is presented in a later section.

It is hoped that the above discussions have made clear the need for discretion on the part of the COMPBRN III user. The choices made by the user regarding such things as pilot fuels, time step size, and the communication matrix can greatly influence the code results.

It is also hoped that the above discussions have pointed out the need for thorough benchmarking of any fire code against data representative of nuclear power plant fires and geometries. The unchecked error in the COMPBRN III hot gas layer model for forced ventilation attests to this need, as do the other errors in the code.

Finally, one general observation concerning the development of the different versions of COMPBRN. Although a thorough study of the original version of COMPBRN (COMPBRN I) was not within the scope of this work, it was necessary to refer back to it on several occasions. It is interesting to note that some of the problems with COMPBRN III identified herein were not present in COMPBRN I, and appear to have resulted from modifications made to the original version. The setting of target emissivity equal to zero in subroutine IGNIT and the neglect of external heat fluxes to burning targets are two examples of incorrect modifications made to COMPBRN I which resulted in quite different predictions by COMPBRN III. This points out the need for good continuity in the development, maintenance, and modification of any computer fire model.

D.3 IGNITION AND DAMAGE THRESHOLDS

In assessing the effects of fire on safety equipment, it is important to know the thresholds at which safety equipment ignites or damages. Most fire PRAs to date have been mainly concerned with electrical cables in particular. This is because the cables provide power and control to safety equipment and are generally considered less rugged than the equipment itself (this is, of course, not the case when solid state electronics are involved). Therefore, if a fire damages the power or control capability to a piece of safety equipment, the equipment itself is assumed to have failed. Also, cable ignition is of interest because cable insulation can be an important source of combustible fuel in nuclear power plants.

In most fire PRAs to date, the COMPBRN I code has been used to calculate fire growth times. One of the required inputs to the code is the ignition temperature of the various fuel targets modeled. The latest version of the code also requires damage temperatures as input parameters. Thus, the ignition and damage thresholds of safety equipment are tied in closely with the fire growth model.

It is interesting to note that most fire PRAs have only considered surface temperature to be the factor determining equipment survival. Other combustion effects such as smoke, soot, and corrosive gases have been ignored, as discussed in the main body of this report. Even considering thermal effects alone it is not clear that surface temperature is the only or best indicator of equipment damage or ignition. Thus, there appears to be considerable uncertainty in the ignition and damage thresholds used in fire PRAs. A closer look at the thermal thresholds follows.

There are two main sources of cable insulation ignition and damage temperature data. The first of these is Sandia test data (Reference 11) on qualified and unqualified electrical cable. In the Sandia tests, an oven was preheated to the desired temperature at which time the cable sample was inserted into the oven. Cable ignition and failure were recorded as functions of oven temperature and time. Failure was determined using low current or low insulation resistance criteria. The qualified cable tested had a cross-linked polyethylene (XPE) jacket and insulation.

The results of the Sandia tests indicate that some qualified cables will fail in temperature environments as low as 350°C. The average electrical failure times at 350°C (with 95 percent confidence bounds) were 13.2 ± 6.9 minutes for the qualified cables. At higher oven temperatures, failure times were shorter as expected. At 550°C, the qualified cable samples failed at 3.3 ± 1.0 minutes. Qualified cable ignition was observed at oven temperatures as low as 500°C. At oven temperatures of 550°C, qualified cables ignited as soon as they were inserted into the oven. It should be noted that the above temperatures are environment temperatures and are not necessarily equal to the cable surface temperature at the time of failure or ignition. Also, only one type of qualified cable was tested by Sandia and these results may not be applicable to other formulations of cable jacket and insulation.

The second source of cable insulation ignition and damage temperature data is the Factory Mutual Research Corporation (FMRC). FMRC has conducted tests for the Electric Power Research Institute (EPRI) (References 8, 9). In the FMRC test apparatus, a cable sample is exposed to an external radiant heat flux. The time to cable failure or piloted or spontaneous ignition is recorded as a function of incident heat flux. Several different types of insulation and jacket materials were tested, including teflon, XPE/flame retardant XPE, XPE/chlorosulfonated PE, polyethylene-polypropylene/chlorosulfonated PE, and XPE/neoprene.

Damage and ignition temperatures were estimated using the equation,

$$T = (q_o/\sigma)^{1/4} \tag{10}$$

where q_o is the critical heat flux (W) below which damage or ignition would not occur, σ is the Stefan-Boltzmann constant (5.67×10^{-8} $W/M^2 \cdot K$), and T is the damage or ignition temperature (K).

Based on the FMRC tests (Reference 8), qualified cable piloted ignition surface temperature estimates ranged from 789 to 933 K with the exception of a glass braid/asbestos silicone cable which ignited at 705 K. The lower range of the data agrees well with the minimum Sandia measured environment temperature which will result in ignition of qualified cable. It must be emphasized that these are estimates of the cable surface temperature based on the minimum incident heat flux which will cause ignition.

Other than the above data, there is little information on electrical cable ignition temperature. Thus, the data base is quite limited both in the amount of data and in the types of cables to which it applies. It should be noted that different additives can greatly influence the flammability of cables compared to cables with the same insulation and jacket materials but without additives. Caution must be exercised in applying any of the above data to different cables or cables which may have a slightly different formulation.

Cable ignition and damage can also be viewed as a function of incident heat flux and incident energy flux rather than as a function of surface or environment temperature. This approach has been strongly endorsed by FMRC whose radiant heat flux apparatus is ideally suited for such measurements. By performing experiments with various constant heat fluxes, the minimum heat flux which will result in cable damage or ignition can be determined. This is referred to as the critical heat flux. The time necessary to result in damage or ignition is directly proportional to the incident energy flux via the incident radiative heat flux. As shown in Figure 5, the experimental data is often plotted as the inverse of time to damage or ignition versus incident heat flux. A straight line is usually fit to the data with the extrapolation to the X-intercept being the critical heat flux (minimum external heat flux which will cause ignition or damage). The slope of this straight line is then equal to the inverse of the incident energy flux necessary to cause ignition or damage. The basis for assuming that all the data should lie along a straight line is never explained or justified. The authors (Reference 8) simply state that "the inverse of time to piloted ignition is a linear function of external heat flux for all the cable samples examined in this study." The basic assumption appears to be that the incident energy flux necessary to cause ignition or damage is constant for all incident heat fluxes of interest.

It was using this method that Tewarson, Lee, and Pion (Reference 8) backed out estimates of the cable surface temperature necessary for piloted ignition discussed above. The data indicates that critical heat fluxes necessary to cause piloted ignition of qualified cable range from 22 to 43 kW/m^2 with the exception of the glass braid/asbestos silicone cable (14 kW/m^2). Incident energy fluxes necessary to cause piloted ignition range from 778 to 8,696 kJ/m^2 for all qualified cables. Based on this data, the authors conclude that none of the cable samples (with the exception of the silicone cable) is expected to ignite at incident heat fluxes as large as 20 kW/m^2. Data for one cable is reproduced in Figure 5 and appears to indicate that the method and conclusions are well founded. However, this is the only set of external heat flux versus inverse time to ignition data

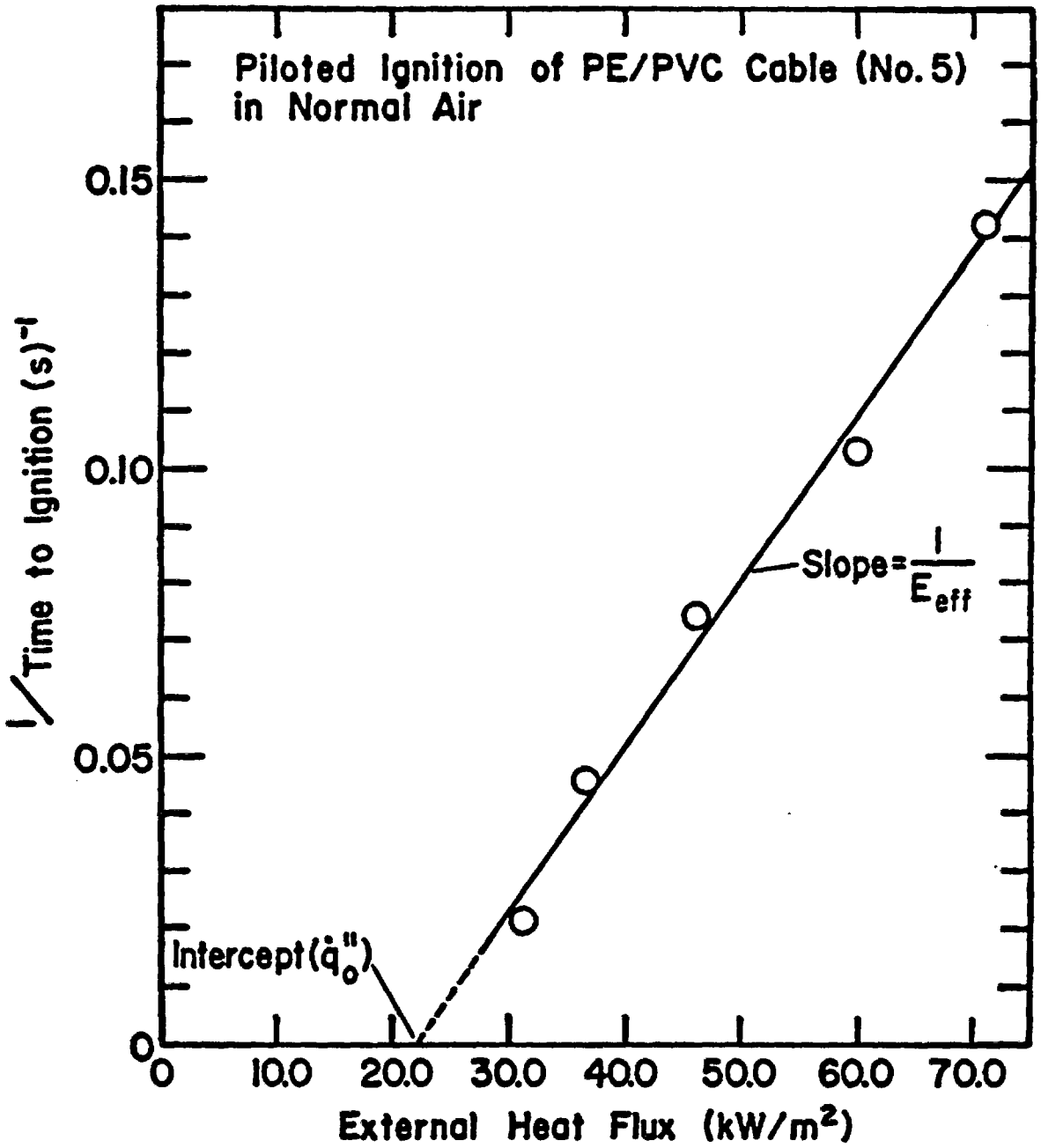

Figure 5. Piloted Ignition Critical Heat Flux Data From (Reference 8)
(Note: No data below 32 kW/m^2.)

presented in (Reference 8). Also, the lowest incident heat flux used in the experiment was apparently 32 kW/m^2, indicating the amount of extrapolation needed to obtain the critical heat flux (in this case 22 kW/m^2).

A later study undertaken by Lee (Reference 9) for EPRI investigated the critical heat flux and energy flux required to degrade electrical cable insulation as well as to ignite (both piloted and spontaneous) the cable or cause electrical failure. The same methodology and test apparatus as employed in (Reference 8) were used. Eight of the 14 cable samples studied were the same cables as used in (Reference 8).

The experimental results (again using the straight line fit to the data) indicate that the critical heat flux to obtain piloted ignition of virtually all the cable samples studied equals 22 $\pm$ 5 kW/m^2. This result agrees reasonably well with the previous results (Reference 8). The piloted ignition data for the various cable samples is presented on one plot. For the externally applied heat fluxes used, the data can be fit quite well with a straight line again indicating that the method and results are well founded. In all but one test, the lowest external heat flux applied experimentally was about 32 kW/m^2, indicating the level of extrapolation needed to obtain the critical heat flux (critical heat fluxes ranged from 18 to 27 kW/m^2 in general).

Based on the data presented in (Reference 8) and (Reference 9) for piloted ignition critical heat flux, one would conclude that the method used by FMRC to determine critical heat flux is valid, as are their results. While some extrapolation is necessary to obtain the critical heat flux for piloted ignition, the data can be fit quite well with a straight line lending confidence to the method. References to the FMRC results have been used by industry (Reference 12) and cited in the open literature (References 2, 13, 14). Thus, the critical heat flux concept and methodology appear to be well accepted.

Unfortunately, there are genuine reasons to doubt the validity of the method and the results. In fact, both the method and the results appear to be incorrect in light of further data taken by Lee. In the same study (Reference 9), results are presented for the spontaneous (or auto-) ignition of the cable samples. The actual data is given in (Reference 9) for only one cable sample. Since this cable happens to be of particular interest, the data is reproduced in Figure 6. The cable specimen is XPE/neoprene. Both piloted and spontaneous ignition data are presented. As expected, the spontaneous ignition data points lie below the piloted ignition data points for the same external heat flux, indicating that spontaneous ignition requires a longer time for it to occur. Also, the slope of the spontaneous ignition data is smaller than the piloted ignition data, indicating that a larger energy flux must be applied for spontaneous ignition to occur. The four data points for spontaneous ignition of this cable are again fit nicely by a straight line. And once again, the lowest applied external heat flux in the test was about 32 kW/m^2. However, this

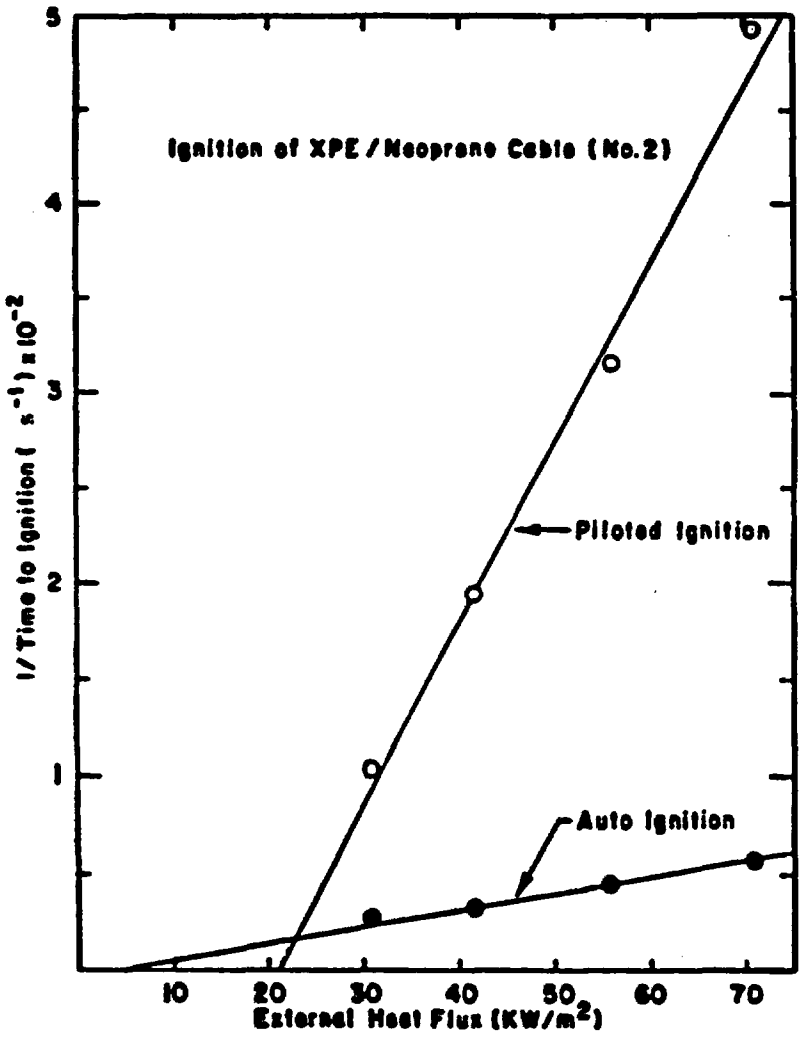

Figure 6. Auto and Piloted Ignition Data From (Reference 9) With Extrapolated Critical Heat Fluxes (Note: Auto ignition critical heat flux of 4 kW/m^2.)

time the extrapolation of the straight line down to the abcissa results in a critical heat flux for spontaneous ignition of 4 kW/m^2, as reported by Lee. Obviously, a significant extrapolation has been made. As Figure 6 indicates, the critical heat flux for piloted ignition was determined to be 21 kW/m^2 for this cable sample.

On a physical basis, it is difficult to believe that the same piece of cable insulation will ignite under piloted conditions of 21 kW/m^2, but will require only 4 kW/m^2 to ignite it when no pilot flame is present to pilot the escaping combustible gases. Lee attempts to rationalize these results (Reference 9) stating that "These lower values of the minimum flux requirement for nonpiloted ignition situation could have been a result of exothermic reactions occurring on sample surfaces upon prolonged heating." It is especially difficult to accept this nonphysical conclusion in light of the fact that there is no data below 32 kW/m^2 on which to base this conclusion.

Lee also investigated the electrical failure of the same cables in his study (Reference 9). The table presenting these results indicates that the critical heat flux needed to cause electrical failure could not be determined for two of the cable samples. Examining the data for these two cable samples one finds that a straight line fit to the data for both samples when extrapolated down to lower heat fluxes (36 kW/m^2 was the minimum applied external heat flux for these tests) will intercept the ordinate before it crosses the abcissa (Figure 7). The nonphysical conclusion that one is led to is that a zero external heat flux will eventually fail these two cable samples. Obviously, the FMRC method has for some reason broken down at this point.

Fortunately, Lee investigates one more parameter in his study which can help one understand what is really going on: insulation/jacket degradation. Lee quantified insulation/jacket degradation using the amount of insulation/jacket material vaporized as a function of time in the preignition phase. Using the same cable samples and method, Lee interprets his results as follows: "the critical flux for insulation/jacket degradation of all cable samples tested are around 20 $\pm$ 4 kW/m^2 ..." However, upon reviewing the actual data (Figure 8), one is led to believe differently.

In the insulation/jacket degradation tests, Lee uses external heat fluxes considerably lower than the ones applied in the other tests. The results are very enlightening. At the higher heat fluxes (greater than about 30 kW/m^2), the data can be fit fairly well with a straight line as done in the previous tests.

However, at the lower heat fluxes, the data begins to deviate significantly from a linear behavior as shown in Figure 8. In obtaining his critical heat flux for thermal degradation result of 20 $\pm$ 4 kW/m^2, Lee has only included the data from the higher external heat flux tests. The lower external heat flux data is ignored. In fact, for one of the cases shown in Figure 8, Lee extrapolates a critical heat flux for thermal degradation of

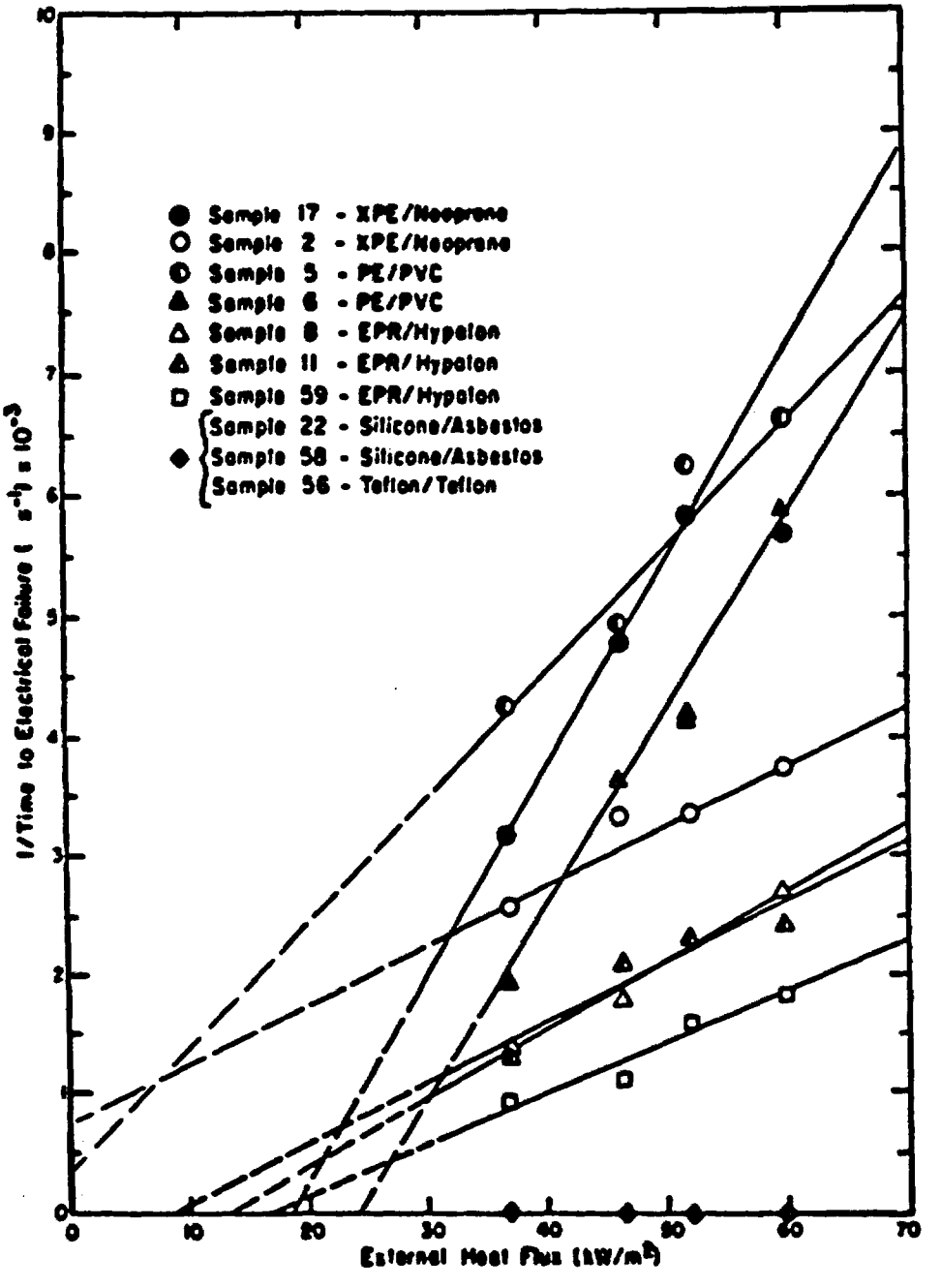

Figure 7. Electrical Failure Data From (Reference 9) With Extrapolated Critical Heat Fluxes (Note: Samples Number 2 and Number 5 extrapolations intercept y axis.)

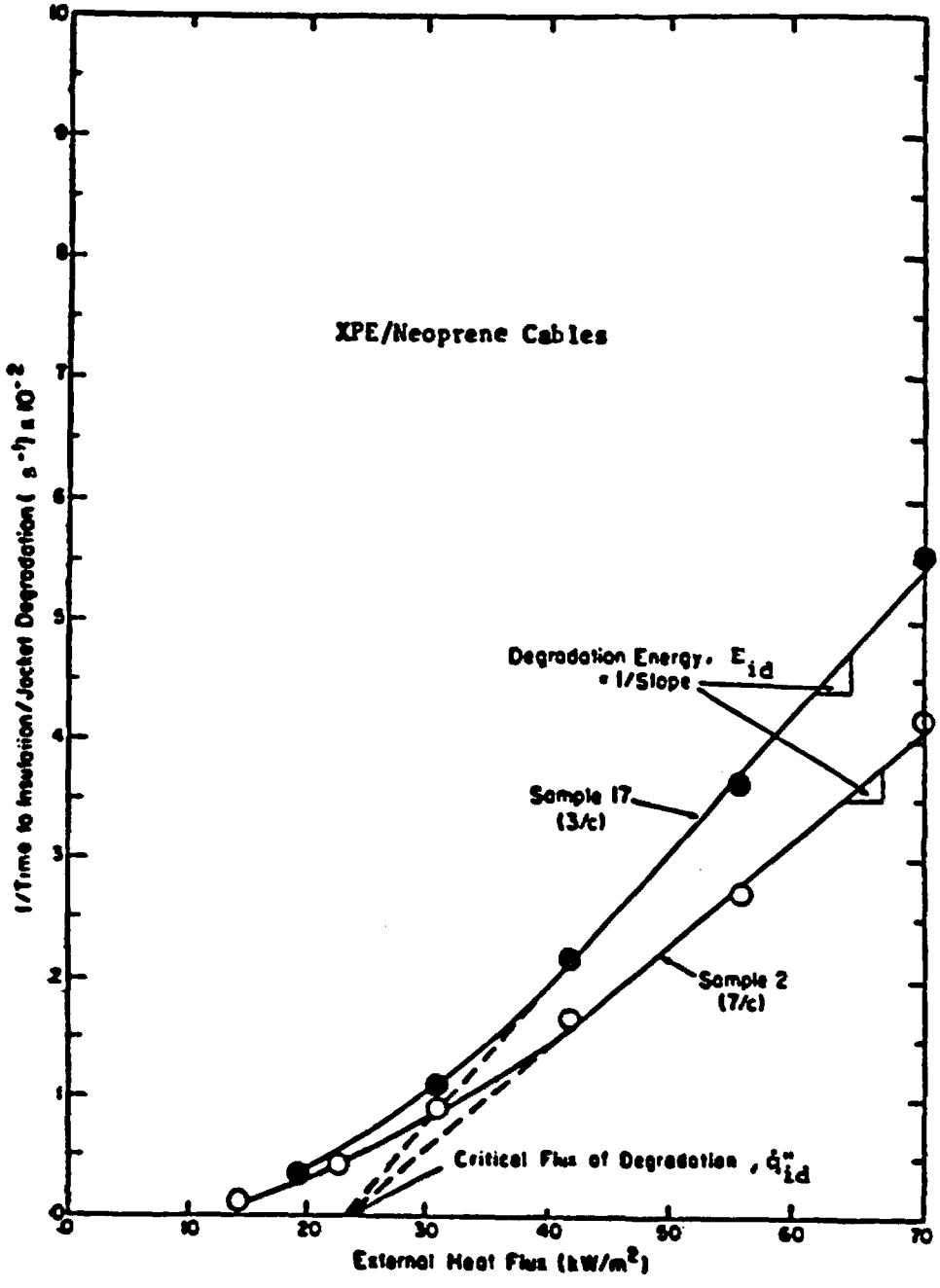

Figure 8. Thermal Degradation Data From (Reference 9) With Extrapolated Critical Heat Fluxes (Note: Extrapolated critical heat flux is inconsistent with low heat flux data.)

24 kW/m^2, when the data indicates that degradation has begun occurring at 14 kW/m^2. This data is inconsistent with Lee's (Reference 9) definition of critical heat flux: "the minimum heat flux below which the damage process will not occur." A review of the data from the other cable samples indicates that in several cases damage is occurring between 8 kW/m^2 and 20 kW/m^2 of applied heat flux. The result is that the method of extrapolating back to the critical heat flux from the high heat flux data is both incorrect and nonconservative for this case.

It is now easy to interpret the nonphysical electrical failure and spontaneous ignition conclusions: there is no data at the lower applied heat flux levels to justify the extrapolation back to a critical heat flux. A few data points at the lower applied heat flux levels would go a long way toward providing information about the true critical heat flux levels.

It may be argued that ignition and perhaps electrical failure are threshold phenomena and would be expected to behave differently than insulation/jacket degradation at the lower heat fluxes. Thus, one could conclude that the critical heat flux method employed by FMRC should yield conservative results for the ignition and electrical failure phenomena. However, at best the behavior of cable samples at the lower heat flux levels is unknown for ignition and electrical failure phenomena in view of the lack of data. Also, a method which yields overly conservative results is of virtually no use. What good is a method that predicts a cable sample could spontaneously ignite at heat fluxes as low as 4 kW/m^2 when the lowest experimentally observed spontaneous ignition was at 32 kW/m^2? Or what good is a method which predicts that zero heat flux will result in electrical failure of a cable?

If one looks back at the piloted ignition critical heat flux results of (Reference 8), similar doubts arise. Recall that for the one sample of data presented in (Reference 8) (Figure 5), the lowest applied heat flux was 32 kW/m^2. While the FMRC method again correlates the high heat flux data very well, there is serious question surrounding extrapolation to lower heat fluxes. Again, there is no data at the lower heat fluxes to justify the assumption of straight line behavior in this region. The low heat flux data for insulation/jacket degradation and the nonphysical conclusions which one arrives at by application of the same method to the spontaneous ignition and electrical failure data lead one to question the piloted ignition critical heat fluxes extrapolated from the data. It is particularly disturbing that these values of critical heat flux are finding acceptance in industry and the open literature (References 2, 12 to 14).

To summarize this rather lengthy discussion, it is clear that the current state of knowledge regarding electrical cable ignition and damage thresholds is inadequate. Considering only thermal effects on safety equipment such as electrical cable, it is not even clear what parameters are best for correlating cable damage or ignition: should one use surface temperature, environment temperature, length of time at a given temperature, or a critical heat flux and energy flux criterion for assessing cable damage or ignition? Regardless of which criterion is

selected, there is a tremendous lack of data considering the wide variety of cable insulations, jackets, and flame retardant additives installed in nuclear power plants. Some of the data that does exist has been extrapolated to heat fluxes well below the experimental heat fluxes, resulting in incorrect conclusions regarding critical heat fluxes. Considerable research is necessary to reduce the large uncertainty associated with our present level of understanding of electrical cable ignition and damage thresholds.

D.4 COMPBRN CALCULATIONS

For the four PRAs of interest, those scenarios which employed the original version of COMPBRN to quantify fire damage times were requantified using both the modified and unmodified versions of COMPBRN III. While every effort was made to keep the input decks to the COMPBRN III calculations similar to the COMPBRN I input decks used in the original quantification of the scenarios, there were some important differences. Whereas the COMPBRN I calculations indicated that a 0.3 to 0.6 m (1 to 2 ft) diameter pool fire was capable of damaging safety equipment, COMPBRN III (both versions) required larger fires on the order of 0.6 to 0.9 m diameter (2 to 3 ft) to damage the same equipment. Therefore, larger pool fires of diameter 0.6 to 0.9 m (2 to 3 ft) were used in the COMPBRN III calculations. Similarly, larger masses of transient combustible fuel were necessary for these larger diameter fires. The COMPBRN III pool fires were fueled with 3.8 to 38 l (1 to 10 gal) of oil, whereas COMPBRN I pool fires were fueled with 1.9 to 11.4 l (0.5 to 3 gal) of oil.

Another difference in the input decks reflected possible variations of the fire scenarios. For example, some scenarios neglected self-ignited cable tray fires and only considered transient combustible fires. In the requantification self-ignited cable tray fires were also considered for these scenarios where appropriate. Note that for scenarios in which the lowest cable trays were 3 m (10 ft) or higher from the floor (indicating a negligible probability of transient combustibles being present in the tray), and these trays did not contain any power cables (indicating a negligible probability of self-ignition), no self-ignited scenarios were simulated.

Different cable damage and ignition criteria have been employed in the requantification using COMPBRN III. The COMPBRN I results are based on cable ignition temperatures in the range 773 to 850 K (damage alone was not considered) with the exception of Limerick. The Limerick fire damage time calculated using COMPBRN I assumed a cable damage temperature of 573 K. In the requantification cable damage and ignition temperatures were assumed to be 673 K. Additionally, some of the calculations with the modified COMPBRN III employed cable damage and ignition criteria based on external heat flux and incident energy. These criteria are discussed further in Section D.3.

There were, on occasion, several other differences between the COMPBRN I and COMPBRN III input decks. These differences included variations in the communication matrix, the pilot fuel for self-ignited fires, and the

thickness of the cable insulation modeled. The reasons for these differences are made clear in Section D.2. Some COMPBRN III simulations also included hot gas layer effects, since COMPBRN III has such a capability.

A listing of the input parameters used for the requantification is presented in Table 1. These estimates represent a "best guess" at the actual values of the parameters. An attempt was made to keep the estimates conservative yet realistic.

In comparing the modified COMPBRN III results to the original COMPBRN I results shown in Table 2, it must first be pointed out that the modified COMPBRN III results reflect a "best guess" using the parameter data of Table 1 and the somewhat different cable ignition and damage criteria discussed previously. The COMPBRN I numbers shown for comparison (with the exception of Limerick) reflect the mean of the predicted distribution. This distribution was calculated in the original PRAs by multiplying the COMPBRN I result by a lognormal error factor with the following characteristics:

μ = 0.582
σ = 0.489
Mean = 2.0
Median = 1.8
E.95 = 4.0 (95th percentile)
E.05 = 0.8 (5th percentile)

Note that this error factor distribution attempts to account for the assumed conservative behavior of COMPBRN I.

Some interesting observations can be made concerning a comparison of the COMPBRN I results to the modified COMPBRN III results of Table 2. In 5 out of the 11 scenarios which can be directly compared, the modified COMPBRN III code predicts no damage will occur to critical safety equipment to such an extent as to prevent safe shutdown. For these same five cases, COMPBRN I predicted damage times of 9 to 24 minutes. Thus, it appears as though the COMPBRN I results are very conservative by comparison with the modified COMPBRN III results for these five cases. However, for the remaining six scenarios, the modified COMPBRN III damage times are about the same as or shorter than the COMPBRN I damage times. Thus, the COMPBRN I damage times are not always conservative by comparison to the modified COMPBRN III damage times. This is an important observation as the COMPBRN I code has sometimes been viewed as always ultra-conservative.

The reasons for these differences in behavior have to do with the neglect of heat losses in COMPBRN I and the modifications made to the COMPBRN III code discussed in Section D.2. Basically, the modified COMPBRN III code predicts that it is more difficult to ignite a cable tray that is not engulfed by flames than COMPBRN I calculations would indicate. The

Table 1

COMPBRN III Input Parameters

Cable Insulation

Density = 1715 kg/m^3
Specific Heat = 1045 J/kg-K
Thermal Conductivity = 0.092 W/m-K
Heat of Combustion = 26.7 kJ/g
Combustion Efficiency = 0.8
Critical Temperature
    Piloted Ignition = 673 K
    Spontaneous Ignition = 673 K
    Damage = 623 K
Critical Heat Flux
    Piloted Ignition = 12 kW/m^2
    Spontaneous Ignition = 12 kW/m^2
    Damage = 7.2 kW/m^2
Critical Energy Flux
    Piloted Ignition = 0.64 MJ/m^2
    Spontaneous Ignition = 7.2 MJ/m^2
    Damage = 5.6 MJ/m^2
Surface Controlled Burning Rate = 0.0022 kg/m^2-s
Burning Rate Radiation Augmentation = 0.186 E-6 $kg/J\text{-}m^2$
Radiative Fraction = 0.4-0.5
Smoke Attenuation Factor = 1.4 m^{-1}
Reflectivity = 0.1-0.3

Oil

Density = 800 kg/m^3
Specific Heat = 2090 J/kg-K
Heat of Combustion = 42 kJ/g
Combustion efficiency = 0.9
Surface Controlled Burning Rate = 0.061 kg/m^2-s
Radiative Fraction = 0.5
Mass (Initial) = 4.9-48.9 kg
Mass (Burned) = 3.4-34.2 kg (1-10 gal)

Note: Cable properties for Limerick differed from those above due to extensive use of EPR/Hypalon cable.

Table 2

COMPBRN Fire Damage Times (minutes)

Scenario	Postulated Pool Fire Diameter (m)	COMPBRN I*	COMPBRN III	Modified COMPBRN III
Indian Point 2				
Switchgear Room	0.30	24.2	∞	∞
	0.91	NA	14	10
Electrical Tunnel				
Aisle Fire	0.61	15.8	∞	13
Tray Fire**	--	14.4	12	3-6
Cable Spreading Room [c]	0.30	22.6	∞	∞
	0.91	NA	50	7
Oconee				
Cable Shaft	0.30	6.7	∞	8
Auxiliary Bldg				
Aisle Fire	0.30	9.3	∞	∞
	0.61	NA	24	3
Tray Fire	--	5.4	28	3
Seabrook				
PCC Pump area				
Aisle Fire	0.61	18.1	∞	∞
	0.91	NA	6	∞
Tray Fire	--	NA	16	3
Cable Spreading Room	0.30	16.1	35	7
	0.61	48.4	35	6
Limerick				
All Locations				
Aisle Fire	0.61	10	∞	3
Tray Fire	--	10	∞	∞

*-Mean Time multiplied by error factor, with the exception of Limerick. Taken from utility PRA.
**-Tray fires represent self-ignited cable tray fires.
NA-Not analyzed in utility PRA.

modified COMPBRN III code also predicts that cable trays which are engulfed by flames ignite as rapidly or even faster than COMPBRN I predicts. Thus, the observation that in some cases the modified COMPBRN III damage times are longer than the COMPBRN I predictions, and that in other cases they are about the same, is not so surprising. It is directly related to whether or not the lowest cable tray in the scenario is located in or outside of the flames from the pilot fire.

It is also interesting to compare the unmodified version of COMPBRN III results with the modified version of COMPBRN III results. In virtually every case the modified COMPBRN III code predicts shorter damage times indicating that the unmodified COMPBRN III code is generally nonconservative by comparison. In three cases for which the unmodified COMPBRN III code predicted no damage would occur to critical cable trays, the modified version of COMPBRN III predicted damage would occur in 3, 8, and 13 minutes for these same scenarios. There was, however, one scenario for which the modified version of COMPBRN III predicted no damage would occur, but the unmodified version of COMPBRN III predicted damage in 6 minutes. For this scenario and the other three described above, the difference in each of these COMPBRN III predictions can be directly traced to the correction of errors and inconsistencies as well as modeling differences in COMPBRN III as discussed in Section D.2.

An important point to be made from the above observations is that the quantification of fire damage times can vary greatly depending on the version of COMPBRN that is used. The effects which these different predictions in fire damage times could have on the final fire risk numbers can be significant as discussed below. It is, therefore, important to have available for use in fire PRAs an accurate and fast-running fire propagation computer code which has been extensively validated against data representative of nuclear power plant fire environments.

Once the fire damage times have been estimated using the modified version of COMPBRN III they can be used in conjunction with data on suppression of fires in nuclear power plants to obtain the probability that a given fire will damage critical safety equipment before the fire can be suppressed. Here it is of interest to show the effect of different fire damage times on the fire risk. Consider the Limerick self-ignited cable tray fire scenario. COMPBRN I predicted a fire lasting 10 minutes would damage the critical cable trays. The modified version of COMPBRN III predicted no damage would occur (∞ time required). Making use of the fire suppression data presented in Appendix A, one can see that 27 percent of all fires in nuclear power plants have been suppressed within 10 minutes, and of course all fires have been suppressed eventually (∞ time required for damage). Thus, the effect of the different fire damage times on the probability of suppression before fire damage occurs differs by the ratio 1.0/0.27 which equals a factor of 3.7. As a worst case, consider the Limerick transient combustible fire damage time predictions, for which the unmodified version of COMPBRN III predicts no damage while the modified version predicts damage within 3 minutes. Again using the suppression information from Appendix A, the effect of the different fire damage times on the

probability of suppression before fire damage occurs differs by the ratio 1.0/0.05 which equals a factor of 20. Obviously, the importance of having a good fire propagation model to predict accurate fire damage times cannot be overlooked.

It is sometimes more appropriate to consider nonsuppression frequencies rather than suppression probabilities. Nonsuppression frequencies are often modeled using an exponential distribution given by

$$f = \exp(-t_d/t_s) \tag{11}$$

where f is the conditional frequency that a fire is not extinguished by time t_d, given a fire, t_d is the predicted time required to damage critical equipment, and t_s is a mean suppression time. From Appendix A, t_s is equal to 42 minutes. Substituting 10 minutes and ∞ into the above equation, the two conditional frequencies of fire damage before suppression are equal to 0.79 and zero, respectively. Substituting 3 minutes into Equation (11), the conditional frequency is 0.93. Thus, for the worst case seen in the requantification calculations using three versions of COMPBRN, the fire propagation model by itself can change the conditional damage frequency from zero to 0.93 depending on which model is employed for the calculation. The importance of having a good fire propagation model to predict accurate fire damage times is again demonstrated.

D.5 UNCERTAINTY

The uncertainty in the analytical tools is a result of parameter uncertainty, modeling uncertainty, and statistical uncertainty. Parameter uncertainty results from lack of knowledge about the various parameters which must be input to the fire growth model. These parameters include the burning efficiency, flame radiative fraction, ignition temperature, etc. Modeling uncertainty results from lack of knowledge concerning the various models and correlations used to describe fire growth, as well as uncertainty concerning the numerical implementation of such models and correlations. The statistical uncertainty is believed to be small in comparison with the other two types of uncertainty and, therefore, will be neglected in this discussion.

The overall uncertainty in the analytical tools used to model fire growth is quite large. The uncertainty of each input parameter and each model and correlation combine to yield an overall uncertainty. While quantification of the overall uncertainty is beyond the scope of this work, a lower bound on the amount of uncertainty in the fire growth code can be estimated by considering the uncertainty in one of the most important correlations in the modified version of COMPBRN III: the flame height correlation.

The flame height correlation given by Thomas (Reference 15) is employed in the various versions of COMPBRN. As shown in (Reference 16), there can be a $\pm$ 50 percent variation in actual flame height compared to the correlation

flame height. The effect of this uncertainty in flame height was examined using the modified version of COMPBRN III to model the following scenario. A 0.6 m (2 ft) diameter oil fire was assumed to exist underneath two cable trays separated vertically by 1.5 m (5 ft). The lowest tray was 2.44 m (8 ft) above the floor. For a 0.6 m diameter oil fire, COMPBRN predicts the flame height is about 2.44 m. Thus, COMPBRN predicts that the lowest cable tray will be just touching the flame. If the flame height correlation is modified by a factor less than 1.0, COMPBRN will predict that the lowest cable tray is not in the flames. If the flame height correlation is multiplied by a factor greater than 1.0, the lowest cable tray will be in the flames.

Since the flame height correlation is accurate to within ± 50 percent, the flame height can be multiplied by a factor between 0.5 and 1.5 depending on the COMPBRN user's choice. Calculations were made using the modified version of COMPBRN III while multiplying the flame height correlation by a factor between 0.5 and 1.5 and keeping all other parameters fixed. There was a wide variation in the predicted fire damage times (time to damage the highest cable tray). For flame heights multiplied by 1.0 or greater, damage to the highest cable tray occurred within 3 minutes. For flame heights multiplied by less than 1.0, damage to the highest cable tray never occurred. Thus, the uncertainty in this one correlation can have a dramatic influence on the fire growth times.

Coupling this result with the suppression histogram information from Appendix A, the probability of extinguishing the fire within 3 minutes is five percent. The probability of extinguishing the fire eventually (an infinite amount of time) is 100 percent. Thus, the probability of suppression before damage occurs differs by a factor of 20 based on the uncertainty associated with the flame height correlation. Using the exponential nonsuppression frequency model discussed in Section D.4, the conditional frequency of fire damage ranges from 0.93 for the 3 minute damage time to zero for the no-damage case. Again, the uncertainty associated with the flame height correlation has a significant impact.

It must be noted that there are other models and correlations as well as parameters in the COMPBRN codes which also have large uncertainties associated with them. While some of these have an experimental uncertainty limit associated with them (e.g. ± 30 percent), very little is known about the shape of the uncertainty distribution. This makes rigorous quantification of the overall uncertainty in the fire damage times impossible. The cumulative influence of all these uncertainties could only broaden the range of fire damage times which COMPBRN calculates. Thus, the above discussion should only be viewed as an indication of the amount of uncertainty in the COMPBRN code and the effects this uncertainty can have on the calculated fire damage times.

In addition to the flame height correlation, there are relatively large and significant uncertainties associated with several other models, correlations, and parameters. COMPBRN models the mass burning rate as a linear function of the external heat flux. It is not readily apparent that

this simplified model can be applied to cable insulation. Data seems to indicate that this may not be accurate (Reference 7). Also, the exact value of mass burning rate can differ widely between cable types. Accurate knowledge of this quantity is important because the mass burning rate is a critical factor in calculating flame heat fluxes and thus fire damage times.

To accurately determine fire damage times, the cable thermal response must be properly modeled. While the modified version of COMPBRN III employs an improved thermal response model, it still may not accurately describe the thermal response of a cable. Cables contain several materials, some of which are susceptible to melting at high temperatures. Additionally, cable thermal properties show a wide variation which is highly dependent on the specific cable formulation. Since the cable thermal response is closely linked to whether or not damage occurs, any uncertainty in cable properties or the thermal response model can have a significant effect on fire damage times.

There is also a considerable amount of uncertainty in the ignition and damage thresholds. These thresholds can greatly affect the fire damage time calculations because they define at what point a cable ignites or damages. While surface temperature is one parameter use to determine damage or ignition of cable insulation, incident heat flux and absorbed energy can also be used as discussed in Section D.2. No matter which criterion is used, there appears to be considerable uncertainty as to the actual value of surface temperature or incident heat flux which will result in cable damage or ignition (as discussed in Section D.3).

One final area of uncertainty which can significantly affect the fire damage time calculations is the communication matrix employed in COMPBRN. The structure of this matrix can lead to incorrect modeling assumptions as discussed in Section D.2. Thus, the COMPBRN user is sometimes forced to choose between two thermal exchange models, neither one of which properly models the actual situation.

There are several suggestions for reducing the uncertainty in the analytical tools. Improved modeling can significantly reduce the modeling uncertainties. In particular, a better cable thermal response model would provide more accurate calculations of cable temperatures. The communication matrix can also be altered to provide a more realistic model of the thermal exchange between flame and targets. In some cases, models which are more appropriate for burning cable insulation could be included in the code, rather than the more generic models presently employed.

Better correlations and more experimental data would also reduce the uncertainty in calculated fire damage times. The need for experimental research is especially evident in developing a better flame height correlation, more appropriate mass burning rates, better cable thermal property data, and more accurate ignition and damage criteria. Without improved knowledge in these areas the calculations of a code such as COMPBRN will always be clouded by large uncertainties. While there will

always be some uncertainty in a code which employs a large number of correlations and models, it is believed that the level of uncertainty in the COMPBRN code could be significantly reduced below its present level with properly directed research.

There is one final comment regarding the importance of reducing the uncertainty in the analytical tools. In previous PRAs, the first version of COMPBRN was employed. As discussed previously, this version of the code produced very conservative fire damage times (in general). Thus, even a small 0.3 m (1 ft) diameter oil fire was capable of damaging cable trays 4.6 m (15 ft) above the floor. As a result, a 0.3 m (1 ft) diameter oil fire was considered to be a medium or large sized fire in those PRAs, contrary to intuition. Using the modified version of COMPBRN III, 0.6 m and 0.9 m diameter fires (2 to 3 ft) were required to damage cable trays.

Similarly, because of the conservative nature of COMPBRN I, a 0.3 m (1 ft) diameter fire could inflict damage to cable trays that were not very close to the flames (3 to 4.5 m away). Consequently, in determining the area ratio over which a fire could cause damage, large area ratios (as high as 50 percent for large rooms) were calculated. Using the modified version of COMPBRN III, fires must be within about 0.9 m (3 ft) in most cases to result in damage to a cable tray. Thus, the COMPBRN results can influence the area ratio significantly.

Also, in reviewing the four fire PRAs used as the basis for Tasks 1 and 2 of this study, three of the four PRAs equated cable damage with cable ignition (Limerick was the exception). While cable insulation ignition temperatures range from 773 to 823 K in the three PRAs, cable insulation has been shown to damage as low as 573 to 623 K. Thus, the three PRAs have assumed unrealistically high damage thresholds. This is most likely a result of the conservative nature of COMPBRN I.

The point to be made from the above discussions is that in reviewing fire PRAs to date, it is evident that the fire growth code calculations were a significant driving force in the PRAs. As a result of the COMPBRN I calculations, very small fires were postulated and very large area ratios were assumed. Additionally, unrealistically high damage thresholds were sometimes assumed due to the conservative nature of COMPBRN I. It is not clear to what extent the fire growth code calculations may have influenced other assumptions made in fire PRAs. However, it is clearly evident that the fire growth code employed in fire PRAs has driven certain important assumptions and, therefore, needs to be made as realistic as possible in its fire damage time calculations. This can only be accomplished by research properly directed toward improved analytical and numerical modeling and toward reducing and defining the uncertainty in the various correlations within the fire-growth code.

APPENDIX D REFERENCES

1. Siu, N. O., COMPBRN - A Computer Code for Modeling Compartment Fires, University of California, UCLA-ENG-8257, NUREG/CR-3239, May 1983.

2. Ruger, C., Boccio, J. L., and Azarm, M. A., Evaluation of Current Methodology Employed in Probabilistic Risk Assessment (PRA) of Fire Events at Nuclear Power Plants, Brookhaven National Laboratory, NUREG/CR-4229, May 1985.

3. Ho, V., Siu, N. O., Apostolakis, G., "COMPBRN III - A Computer Code for Modeling Compartment Fires," University of California, UCLA-ENG-8524, November 1985.

4. Nowlen, S. P., Enclosure Environment Characterization Testing for the Base Line Validation of Computer Fire Simulation Codes, Sandia National Laboratories, SAND 86-1296, NUREG/CR-4681, March 1987.

5. Seabrook Station Probabilistic Safety Assessment, Section 9.4, Public Service Company of New Hampshire and Yankee Atomic Electric Company, December 1983.

6. Incropera, F. P., DeWitt, D. P., Fundamentals of Heat Transfer, John Wiley & Sons, Inc., 1981.

7. Siegel, R., Howell, J. R., Thermal Radiation Heat Transfer, McGraw-Hill Book Co., Hemisphere Publishing Corp., 2nd edition, 1981.

8. Tewarson, A., Lee, J. L., and Pion, R. F., "Categorization of Cable Flammability, Part I: Laboratory Evaluation of Cable Flammability Parameters," EPRI NP-1200, Electric Power Research Institute, Palo Alto, CA, October 1979.

9. Lee, J. L., "A Study of Damageability of Electrical Cables in Simulated Fire Environments," EPRI NP-1767, Electric Power Research Institute, Palo Alto, CA, March 1981.

10. Khan, M. M., Tewarson, A. "Progress Report: Small Scale Testing of Flame-Retardant Coated Cables," FMRC J. I. OG3R9.RC, March 1982.

11. Chavez, J. M., "Steady-State Environment Cable Damage Testing," Letter Report to USNRC, Sandia National Laboratories, July 14, 1984.

12. "Quantitative Information on Revised Fire Analysis for Limerick Generating Station," - Supplement 2 to Limerick Generating Station, Severe Accident Risk Assessment, NUS Corporation, November 1983.

13. King, D. B., Nicolette, V. F., Dandini, V. J., and Spletzer, B. L., Safety-Related Equipment Survival In Hydrogen Burns in Large Dry Pressurized Water Reactor Containment Buildings, Sandia National Laboratories, SAND86-2280, NUREG/CR-4763, October 1987.

14. Berlad, A. L., Jaung, R., and Pratt, W. T., "Electric Cable Insulation Pyrolysis and Ignition Resulting From Potential Hydrogen Burn Scenarios for Nuclear Containment Buildings," 2nd International Conference on Hydrogen and Light Water Reactor Safety, Albuquerque, NM, October 1982.

15. Thomas, P. H., "The Size of Flames From Natural Fires," Tenth (International) Symposium on Combustion, 844-859, 1963.

16. Siu, N.O., Probabilistic Models for the Behavior of Compartment Fires, University of California, NUREG/CR-2269, August 1981.

APPENDIX E

SUMMARY OF SPURIOUS SUPPRESSION SYSTEM ACTUATION INCIDENTS IDENTIFIED IN LER REVIEW COVERING APRIL 1, 1980 THROUGH JULY 14, 1987

Summary of Spurious Suppression System
Actuation Incidents Identified in LER Review Covering
April 1, 1980 Through July 14, 1987

Plant	Date	Plant Mode	Incident Summary
Oyster Creek	9/30/80	99% Power	Maintenance actuates deluge over core spray booster pumps.
	2/18/82	0% Power	Smoke from overheated bearing actuates deluge causing failure of AC switch in core spray system and DC switch in RPS.
	6/12/85	100% Power	Pressure regulator failure induces plant scram and subsequent steam leak sets off deluge in reactor building causing breaker trip on cleanup system isolation valve; valve failed to open on demand.
Dresden 2	12/23/81	100% Power	Spurious operation of deluge in HPCI room due to humidity and dust contaminates HPCI oil rendering system inoperable; coincidentally auto depressurization also found inoperable due to broken wire.
	4/9/87	0% Power	Contract employee sets off Halon system in Auxiliary Electrical Equipment Room.
Dresden 3	10/30/81	Start-up	Steam leak sets off deluge in HPCI room; normal plant shutdown results.
Ginna	11/14/81	Start-up	Plant personnel set off deluge over CRD control cabinets; two rods misaligned to full withdrawal could not be reinserted by operators; also causes trip of RPS motor/generator set; plant scrammed.

Summary of Spurious Suppression System
Actuation Incidents Identified in LER Review Covering
April 1, 1980 Through July 14, 1987 (Continued)

Plant	Date	Plant Mode	Incident Summary
Palisades	5/22/87	40% Power	Personnel close improper valve causing steam rupture and initiation of plant scram; steam sets off deluge in turbine building.
	7/14/87	91% Power	Maintenance sets off deluge over startup transformer causing trip of all 3 unit SUTs and loss of offsite power; reactor scrammed.
Browns Ferry 1	5/3/86	Refueling	Sprinklers in drywell spuriously actuate; 8 days later water penetration into 2 pressure switches actuates ESF including start of all 8 diesel generators, start of 2 emergency equipment cooling water pumps, core spray and RHR logic initiation, opening of core spray injection valves; 30,000 gallons of water spilled from open reactor cavity into reactor building.
Browns Ferry 2	1/14/82	Unknown	Employee sets off sprinklers wetting smoke detectors and generating false detector signal which would then mask any real detector signals.
Robinson 2	9/11/85	Mode 1	Storm causes actuation of deluge over main transformer with spray into control cabinet causing false generator lockout signal and turbine trip; reactor scrammed.

Summary of Spurious Suppression System
Actuation Incidents Identified in LER Review Covering
April 1, 1980 Through July 14, 1987 (Continued)

Plant	Date	Plant Mode	Incident Summary
Salem 1	11/9/82	Refueling	"Several" deluge systems in plant spuriously operate; charcoal filters for control room and fuel handling auxiliary building wetted.
Peach Bottom 2	9/17/82	Unknown	Spurious operation of deluge in recombiner building causes overflow of contaminated water sump and release of very small quantity of contaminated water to storm drains.
	6/29/84	0% Power	During testing of fire pumps, overpressurization causes pipe break and flooding in turbine building.
Surry	12/9/86	Mode 1	Main feedwater line break caused actuation of turbine building deluge which in turn caused inoperability of plant access control system (failed closed), actuation of Halon system in switchgear area, and actuation of carbon dioxide in cable spreading area; carbon dioxide discharge also froze a radio repeater degrading internal communications; carbon dioxide and Halon reported entering control room causing visibility and breathing problems.
Pilgrim 1	2/25/83	Unknown	Leaking sprinkler heads found to have degraded SGTS filters.

Summary of Spurious Suppression System
Actuation Incidents Identified in LER Review Covering
April 1, 1980 Through July 14, 1987 (Continued)

Plant	Date	Plant Mode	Incident Summary
Cooper	4/19/84	70% Power	Hydrant in yard sheared by employee in lift truck starting fire pumps on low pressure; when hydrant isolated water hammer opens deluge valve for SGTS wetting filters for both trains.
Crystal River 3	4/1/80	0% Power	Workers set off deluge wetting auxiliary building filters.
Rancho Seco	6/25/87	0% Power	Several spurious operations of carbon dioxide system in NSE building occur following test of system.
Cook 1	1/18/83	100% Power	Spurious operation of cardox system in cable vault requires isolation of cardox for both units while locating local isolation valve.
	12/19/85	90% Power	Maintenance activity sets off auxiliary building cardox system.
Cook 2	11/9/82	Unknown	Fire detector fault initiates cardox discharge in cable vault.
	1/18/83	Mode 1	Fire detector fault initiates cardox discharge in cable vault.
	9/8/85	Unknown	Leaking sprinkler head found to have degraded charcoal absorbers.

Summary of Spurious Suppression System
Actuation Incidents Identified in LER Review Covering
April 1, 1980 Through July 14, 1987 (Continued)

Plant	Date	Plant Mode	Incident Summary
TMI 2	6/1/82	Unknown	Lightning storm sets off U-V fire detector in air intake tunnel (AIT) initiating Halon discharge; Halon unavailable for 11 days following incident.
	6/29/82		Same.
	3/3/83		Same.
	2/16/83	Unknown	Freezing breaks fire water line and floods AIT.
	5/6/83	Unknown	Welding activity sets off AIT Halon discharge; Halon unavailable for 14 days following event.
Hatch 1	11/?/82	Refueling	Spurious actuation of a deluge system occurred.
	5/15/85	75% Power	Spurious operation of deluge in control room HVAC system; water backs up through duct work and spills on analog transmitter trip system panel causing inoperability of HPCI and lifting of LLS safety relief valve; plant scrammed.
	6/27/85	64% Power	Worker sets off deluge over "1C" SUT causing transformer trip, loss of A and B 4160V busses, and loss of power to A and B recirculation pumps; plant scrammed.
	3/11/86	Unknown	SGTS filters found degraded by sprinkler actuation.

Summary of Spurious Suppression System
Actuation Incidents Identified in LER Review Covering
April 1, 1980 Through July 14, 1987 (Continued)

Plant	Date	Plant Mode	Incident Summary
Shoreham	9/8/86	0% Power	Maintenance causes actuation of cardox in switchgear room; control room temporarily abandoned.
Arnold	3/2/82	Unknown	SGTS filters found degraded by sprinkler actuation.
	3/16/83		Same.
	11/23/84	81% Power	Leak in sensing regulator causes actuation of deluge over SUTs, and in turn trip of SUTs, loss of non-vital busses, turbine trip, and reactor scram.
	10/15/86	94% Power	Maintenance activity sets off deluge degrading control building standby filters.
Fitzpatrick	5/25/86	100% Power	Maintenance activity causes water leak and wetting of MCC; HPCI steam supply valve and main steam line drain valve rendered inoperable; HPCI out of service.
	12/23/86	82% Power	Crack in fire curtain pipe wets battery MCC and two rows of breaker cubicles; resistor fault in breaker to main steam line drain valve loss of power monitor fails, HPCI and PCIS inoperable (PCIS failed closed).
Millstone 2	10/9/82	Mode 1	Workers set off Halon to computer room tripping plant computer.

Summary of Spurious Suppression System
Actuation Incidents Identified in LER Review Covering
April 1, 1980 Through July 14, 1987 (Continued)

Plant	Date	Plant Mode	Incident Summary
Millstone 3	7/6/87	100% Power	Maintenance activity actuates cardox discharge into CRD/MCC area.
Trojan	7/28/81	Unknown	Welding activity sets off deluge causing short in control power transformer for recombiner.
	3/9/85	100% Power	Line break sets off deluge in turbine building causing damage to unspecified secondary plant equipment.
Farley 1	6/10/81	Unknown	Maintenance activity activates deluge system for cooling tower.
	7/21/81		Same.
	10/28/81		Same although cause unknown.
	3/10/82		Same.
Limerick	4/10/85	3% Power	Plant workers trip emergency HVAC for auxiliary room; resulting spike in room pressure sets off heat detector initiating Halon discharge.
San Onofre 2	2/14/82	0% Power	Maintenance activity sets off deluge degrading one train of control room ventilation filters.
	3/3/82	Unknown	Maintenance activity sets off deluge for cable riser shaft resulting in degradation of fire barriers.
	6/2/82	Unknown	A manually actuated water spray and sprinkler system was spuriously actuated due to an unknown cause.

Summary of Spurious Suppression System
Actuation Incidents Identified in LER Review Covering
April 1, 1980 Through July 14, 1987 (Continued)

Plant	Date	Plant Mode	Incident Summary
San Onofre 2	10/17/83	Mode 1	Deluge for cable riser shaft actuated for undetermined reason.
	6/16/84	100% Power	Maintenance activity causes overpressure of fire main and break in line in turn causing flooding of unit 1 4kV switchgear room through telecommunications duct.
San Onofre 3	2/22/83	Mode 5	Deluge over diesel generators spuriously actuated.
	2/24/83	Mode 5	Deluge for cable tunnel spuriously actuated causing failure of area fire detectors.
	3/31/83	Mode 5	Deluge for control building cable riser spuriously actuated.
	4/4/83	Mode 5	Deluge for rad-waste building cable gallery spuriously actuated.
	7/28/83	Mode 4	Worker spuriously actuates deluge for Zone 68.
McGuire	7/6/81	Unknown	Maintenance activity causes Halon discharge in area of auxiliary feedwater pumps.
Waterford 3	10/28/85	100% Power	Steam leak initiates deluge over B main feedwater pump causing trip of pump and scram of reactor.
Susquehanna	10/18/82	Unknown	Workers actuate deluge degrading charcoal absorbers.
Summer 1	8/16/83	Mode 1	Maintenance activity actuates deluge wetting auxiliary building charcoal filters.

Summary of Spurious Suppression System
Actuation Incidents Identified in LER Review Covering
April 1, 1980 Through July 14, 1987 (Concluded)

Plant	Date	Plant Mode	Incident Summary
WPPSS 2	3/21/84	1% Power	SGTS filters found degraded by leaking sprinkler head.
	9/1/84	65% Power	Turbine Building steam leak actuates deluge for turbine building and 2 system in the diesel generator building; fire pump started and run without cooling water.
Grand Gulf	7/13/82	Mode 1 (?)	Faulty relay in control system sets off cardox for cable penetration room; overpressurization of room caused failure of fire door.
River Bend 1	1/7/86	3% Power	Worker actuates water curtain wetting 2 MCCs; water flowed through a floor grate causing failure of load center and subsequent fire in transformer and loss of power to 2 additional load centers; reactor scrammed.
	5/19/86	73% Power	Deluge spuriously actuates in turbine building; 7.5 hours later water penetration into signal cable causes turbine trip and reactor scram.
Callaway 1	2/22/85	1% Power	Water leakage into a fire pull stations causes trip of FPS/SUT interlock resulting in loss of power to CRD motor generator sets and loss of CRD control; reactor scrammed.
Palo Verde 1	6/19/86	100% Power	Deluge spuriously actuated requiring removal from service of one train of LPSI.

APPENDIX F

RESPONSE TO PEER REVIEW COMMENTS

CONTENTS

APPENDIX F-1		F-1
F-1.1	Comments of Mike Kaminski, Wisconson Electric Power	F-2
F-1.2	Sandia Response	F-7
APPENDIX F-2		F-11
F-2.1	Comments of Brian Dolan, Duke Power Company	F-12
F-2.2	Sandia Response	F-15
APPENDIX F-3		F-19
F-3.1	Comments of John-Piere Sursock, Electric Power Research Institute	F-20
F-3.2	Sandia Response	F-25
APPENDIX F-4		F-30
F-4.1	Comments of Franklin Garrett, Arizona Public Service Company	F-31
F-4.2	Sandia Response	F-38
APPENDIX F-5		F-53
F-7.1	Comments of the Edison Electric Institute Fire Protection Committee	F-54
F-7.2	Sandia Response	F-58

APPENDIX F-1

COMMENTS OF MIKE KAMINSKI, WISCONSIN ELECTRIC POWER

Wisconsin Electric
POWER COMPANY

231 W. Michigan, PO Box 2046, Milwaukee, WI 53201 (414) 221-2345

February 22, 1988

Mr. Steven P. Nowlen
Adverse Environment Safety Assessment Division 16447
Sandia National Laboratories
Albequerque, NM 87185

Dear Mr. Nowlen:

The purpose of this letter is to provide comments to the "FIRE RISK SCOPING STUDY: CURRENT PERCEPTION OF UNADDRESSED FIRE RISK ISSUES" which we received from you for review. The study identifies six issues which have been identified for proposed future study. These are:

1. Control System Interactions
2. Seismic/Fire Interactions
3. Manual Fire Fighting Effectiveness
4. Total Environment Equipment Survival (including Spurious Operation of Suppession Systems)
5. Adequacy of Fire Barriers
6. Adequacy of Analytical Tools for Fire

The comments provided below include general comments on the overall draft report and comments specific to the discussion of each of the identified issues.

General

A general assumption of the report is that each of the identified issues can only contribute to an increase in the perceived level of risk. On page 3 the report states that "extensive plant specific analyses will be required to assess the actual level of impact for a given plant." This is an important concept which should be considered prior to concluding that the perceived level of risk will increase. Many of the "problem" areas identified in discussion of the six issues are related to questionable design and operation of fire protection features. At specific plants analyses may demonstrate that proper design has addressed any potential adverse impacts while decreasing the risk of damage due to fire and therefore the overall level of risk will be decreased. In addition, plant analyses may reveal that fire protection features have been installed for purposes of good industrial practice which can benefit the overall level of fire protection provided. The report limits itself by assuming that only the

FILE COPY

requirements of 10 CFR 50 and its associated Appendix R have been implemented.

The study identifies the six issues based largely on previous fire testing. In general, the correlation of fire test data to real world situations is often difficult and places some limits on conclusions which can be drawn solely from test results. In order to obtain a more accurate assessment of performance it would be beneficial to perform an in-depth study of actual industrial fire experience prior to reaching conclusions. This actual experience is a better indicator of the true performance of fire protection features and can provide a more accurate assessment of the performance of those features when installed to meet the requirements developed from test results. For example, in real fire situations, what has been the actual performance of fire barrier designs which are properly installed to meet accepted test requirements?

On page 9 the study concludes that there has been a direct increase in overall fire risk because more event frequencies have been reported for nucler power plants. Has a real increase in the number of events occurred or is it simply that more complete reporting is now being performed? In addition a more detailed analysis of the data should be performed to determine if any of the events are really a threat to plant safety. Again, it is questionable whether the limited fire experience at nuclear plants is sufficient to draw conclusions. Most fire hazards at nuclear plants, e.g. fuels, lube oils, welding and cutting, are similar to other industiral occupancies and a more complete analysis would include general industrial experience.

The identification of issues and their perceived risks was compiled with the input of consultants, architect-engineer groups, nuclear insurers, research and other groups. It would appear that nuclear plant fire protection and engineering input was overlooked in identifying the issues. After 12 years of addressing nuclear plant fire protection issues in detail in response to regulation, it would seem that the group most experienced in nuclear power plant fire protection would be the staffs of the plants themselves, yet this group was not included in the polling of "expert opinions."

<u>Control System Interactions</u>

The risks identified in this area are based on the conclusion that a fire is out of control prior to detection in a constantly manned control room. If the assumptions listed on page 21 such as no detectors near control cabinets and ventilation systems which

FILE COPY

prevent smoke from being noticed in the control room are made, it may be possible to draw this conclusion. However it is not felt that these are reasonable assumptions on a general basis. Again plant specific analyses are necessary. Proper design would include detectors in or near the control cabinets so that a fire would be detected at an early stage. This is indeed the design employed at our plant.

Risk Significance of Manual Fire Fighting Effectiveness

The discussion on this item draws a number of conclusions and proposes scenarios which are mostly opinions of the author. The difficulties of fire fighting in a nuclear plant are not unlike other large industrial plants which have many interior spaces. For example high rise buildings can pose significantly more difficult fire fighting problems. In addition office and residential type occupancies often have larger quantities of combustibles than a nuclear plant, many of which are man made materials which can generate significant quantities of smoke and toxic particles. Also nuclear plants typically have more fire detection and suppression systems in areas which contain fire hazards. Fire fighting efforts include working in conjunction with fire suppression systems. In any case, proper smoke tower training for fire brigade members can address the type of problems which may be encountered. It would also seem unfair to compare the fire fighting expertise of the Brown Ferry personnel in 1975 to the expertise of fire brigades at present. Significant improvements in training, techniques and equipment have been made at nuclear plants since the time of that fire.

The discussion also raises questions about the potential damage which may be caused by misdirected manual fire fighting efforts. Later it proposes that dedicated fire fighters are a better choice than fire fighting trained operators. We disagree with this proposal and feel that operators, with appropriate fire fighting training are less likely to misdirect fire fighting efforts and better equipped to fight a fire in a nuclear plant due to their intimate knowledge and familiarity with plant systems and equipment. There is also a conclusion that a dedicated fire brigade will have more real fire fighting experience. We disagree with this conclusion. Once a brigade is in place the only real fire fighting experience they will have will be in fighting fires on site and either a dedicated brigade or operators trained in fire fighting will face the same minimal number of actual fires on site.

On page 33 the discussion regarding misdirected manual suppression efforts states that local alarm panels are not located outside the

FILE COPY

fire area which may have a fire. At our plant, such panels are indeed provided.

On page 29 the report states that according to regulation "four training sessions per year are required, only one of which must be a hands-on drill." In actuality, Appendix R to 10 CFR Part 50 requires that classroom training be provided biennially, and hands-on training annually. In addition quarterly brigade meetings are to be held as well as additional, separate quarterly hands-on drills.

Risk Significance of Total Environment Equipment Survival

The discussion under this item is directed at the potential for damage caused by the operation of a fire suppression system in the event of a fire or by a "spurious" or "inadvertant" operation of a suppression system. With respect to real fire situations, loss experience has demonstrated that properly designed systems will result in significantly less damage than that which would be caused by the fire if no suppression action were available.

There is detailed discussion of a number of "spurious" suppression system actuation events which have caused damage to equipment. If the events are analyzed it can be seen that in most cases the damage was caused by a poor design or misapplication of a fire suppression system. Smoke detector actuated deluge systems or CO_2 systems supplied from CO_2 storage tanks greatly oversized to protect the area are invitations to cause damage due to operation of the suppression system. Proper design of fire suppression systems, as with the design of any other building system will contemplate the potential effects of actuation of the system. If properly designed, potential damage to other equipment can be minimized. One should not conclude that because a poorly designed system operated and caused damage that this is representative of the probability of damage being caused by the operation of <u>any</u> fire suppression system. Properly designed systems will address the effects of operation, and the probability of damage caused by the operation of a properly designed system will be significantly smaller than for systems which did not contemplate actuation effects in the design.

Risk Significance of Seismic/Fire Interactions

There does not appear to be sufficient data to support this proposal as a <u>significant</u> risk.

FILE COPY

Risk Significance of Adequacy of Fire Barriers

The discussion seems to be overly concerned that European fire tests may incorporate more conservatism because positive pressures are maintained in the furnace during the test. While this single parameter may be more conservative it does not demonstrate that it is necessary to achieve desired performance under actual fire conditions. The United States fire endurance qualification tests have been shown to be sufficiently conservative by the performance of properly installed barrier elements in actual fire events. When properly installed and maintained, fire barrier elements which meet United States qualification test requirements have demonstrated excellent performance under actual fire conditions. In addition, other parameters, such as the time-temperature curve and hose stream test are more conservative than some of the European tests. The limitations in correlating fire test parameters to actual fire conditions is evidenced by the recent proposal by ASTM to eliminate the hose stream test from its fire test requirements as it is not readily applicable to actual fire conditions. The measure of acceptability is in correlating any test standard to performance under actual fire conditions and by this measure, United States standards have proven to be satisfactory.

Risk Significance of the Adequacy of Analytical Fire Tools

In general, we agree with the conclusions that limitations exist in the application of computer modeling techniques to the prediction of actual fire conditions.

We hope these comments are helpful to you in preparing your report. We appreciate the opportunity to offer the comments and if you wish to discuss any items further, please contact us.

Sincerely,

Michael S. Kaminski

Michael S. Kaminski
Fire Protection Officer

crw

cc: T. J. Cassidy
R. G. Chase
C. W. Fay
P. W. Glessner
D. M. Lawler
R. A. Newton
J. J. Zach

FILE COPY

APPENDIX F-1.2

The following are the Sandia responses to the comments made regarding the Fire Risk Scoping Study Final Report forwarded by Mike Kaminski of Wisconsin Electric Power Company in a letter dated February 22, 1988.

With respect to the general comments:

The comment is made that the report assumes that all of the unaddressed issues can only contribute to an increase in the perceived level of risk. This statement is a reflection of the fact that consideration of risk issues not previously considered will not result in a decrease in risk estimates. It was not intended to imply that each issue will invariably increase the estimated level of risk at all plants. It is stated that the contributions will be plant specific and that some plants may not in fact display the vulnerabilities identified. This point has been clarified in the report.

It is pointed out that the use of experience based information would be more accurate than to base results on test data. We generally agree with this statement and have, where possible within the scope of this effort, utilized such information. However, there are difficulties with such approaches. First, the experience base for fire related incidents is poorly documented. Secondly, that documentation which does exist is generally very qualitative, and hence, difficult to apply in a quantitative analysis. Third, such experience based reviews have not been performed for many of the fire issues considered here and generally require a significant commitment of time and effort in order to properly document and verify the review results placing them beyond the scope of this study. Where such experience based reviews would be helpful in resolving the identified issues we will indeed recommend that they be undertaken. However, pending the outcome of such studies tentative conclusions need to be drawn in order to more appropriately direct future efforts.

The conclusion on page 9 of the report that the increase in the frequency of fire events over those assumed in the PRAs reviewed contributes directly to an increase in the perceived level of risk is consistent with current risk assessment methodologies. As to why the event frequency has increased, we would attribute this to a more complete data base of incidents rather than either actual increased frequencies or more complete reporting. In fact the regulations for the reporting of fires have in recent years been relaxed. The data base utilized in the requantification analyses include approximately twice as

many fire incidents over a period of approximately one-half again as many operating years as those considered in the original analyses. Events considered during requantification were in all cases similar to those considered in the original analyses. The use of non-nuclear industry experience has generally been criticized due to the unique circumstances of a nuclear power plant.

With respect to the fact that no utilities were solicited in the polling of expert opinions, it was our intention to include the utility perspective primarily through the solicitation of EPRI and INPO comments. We did in fact meet with the EPRI researchers, though INPO refused our request for a meeting. We excluded the EEI group from the initial solicitation in order to preserve EEI as peer reviewers of the final report with no preconceived bias having been formed as a result of the initial solicitations. We will concede to your observation, but feel that the extensive use of utility representatives in the review of the final report will provide the needed input.

With respect to the issue of Control Systems Interactions:

The assumptions on the rate of fire growth in a control cabinet are based on the Sandia Cabinet Fire Tests (NUREG/CR-4527). For the situation considered at LaSalle the configurations of detection and ventilation utilized in the study were based on a plant visit and reflect the actual conditions. We are aware of other plants with similar configurations, though certainly not all plants contain such configurations. We commend your use of in cabinet detectors and agree that this will help significantly in the early detection of cabinet fires for your facility. It is not our experience that the use of in cabinet detectors has been implemented on an industry wide basis.

With respect to the manual fire fighting issue:

We disagree with your supposition that nuclear power plant fire fighting is not unlike fire fighting for other large industrial plants which have many interior spaces, nor would we agree that experiences with high rise buildings apply. In a nuclear power plant much more extensive compartmentalization is employed due to the need to segregate critical safety systems and components. A second significant difference is that a nuclear plant also does not have large external window spaces nor doors, nor can one chop through the roof. Each of these features is employed in the fighting of industrial fires to vent smoke and allow for manual access. These options are not available in a nuclear plant. One other critical feature is that in general applications, fire fighters are concerned only with

suppressing the fire. The secondary damage caused by fire fighting efforts is generally not of concern. For a nuclear plant the preservation of critical safety functions is the primary concern, with suppression of the fire being the first step in assuring minimal equipment damage. We do agree that training fire fighters using smoke towers or the equivalent would greatly help to assure proper manual response reliability. However, no such training is required, and based on our survey of nuclear industry practices, is it provided in all cases. Many utilities do provide such training, and again, we applaud their forethought.

With respect to the use of a dedicated brigade versus control operators trained as fire fighters, our position will be clarified. We did not intend to advocate that all utilities go to a dedicated brigade as such. The actual conclusion is that adequate training is really the key to providing reliable fire fighting capability. In our review, one aspect of the dedicated brigades which we observed was that the leader was typically an individual with previous experience in fire fighting. This appeared to be an attractive feature of such brigades. We agree that the use of personnel familiar with the plant and plant operations is also a vital concern. The conclusions in this regard have been clarified.

With respect to the location of fire panels, the particular concern of the study was a situation involving a very large plant area with limited accessibility. Thus we had a potential concern that in such a large area with very limited accessibility to certain locations, without local indication providing a general idea of the fire location within the area, fire response could be delayed and possibly misdirected. This was based on a review of the plant itself. Again, plant implementation practices vary widely and no doubt many plants will provide such indication.

With respect to the requirements for brigade training provided in Appendix R, we do not agree with your interpretation of the regulations. The regulations in fact allow certain training sessions to be combined. In our experience, the regulations have been interpreted such that the minimum requirement is for only four brigade training sessions per year.

With respect to the total environment damage issue:

We agree that providing the means for the suppression of fires is needed and that such provisions should not be eliminated merely due to the potential adverse impact of spurious suppression events. We also agree that most of the

adverse impact of spurious suppression events can be attributed to design and installation problems. It is stated on page 50 that "the suppression of a power plant fire will always be a desirable goal" and that "many of the observed problems can be attributed to improper design considerations, inadequate understanding of the potential impact of such systems on neighboring systems, and to improper maintenance procedures." We also stated that consideration of the unique nature of the power plant situation in the design of suppression systems should resolve most of the potential concerns. These sections have been reviewed to insure that these points are sufficiently emphasized.

With respect to the seismic/fire issue:

We agree that there is insufficient data to demonstrate a concern for this issue. However, credible vulnerabilities can be postulated. It is our overall assessment that this is an issue which could easily be resolved through simple plant procedures to identify and correct any such vulnerabilities.

With respect to the barrier adequacy issue:

We are not aware of any formal review of barrier performance under actual fire conditions which has demonstrated the adequacy of U. S. barrier elements. We agree that should such a review demonstrate the reliability of barrier elements to, in our estimate, 99% reliability then the issue will no longer be of particular concern. It has been suggested that as a first step the NRC undertake to demonstrate such a reliability based on U. S. fire experience.

APPENDIX F-2

COMMENTS OF BRIAN DOLAN, DUKE POWER COMPANY

DUKE POWER COMPANY
P. O. BOX 33189
GENERAL OFFICES
422 SOUTH CHURCH STREET
CHARLOTTE, N. C. 28242
TELEPHONE: AREA 704
373-4011

February 24, 1988

Mr. John H. Flack
US Nuclear Regulatory Commission
5650 Nicholson Lane
Rockville, Maryland 20852

Subject: Fire Risk Scoping Study: Current Perception of Unaddressed Fire Risk Issues (NUREG/CR-5088) Draft Report

Dear Mr. Flack:

Thank you for the opportunity to review and comment on the subject report. The report clearly indicates the large uncertainties that exist in PRA fire risk methodologies. The following high-level comments are provided:

1. The report generates some high core melt frequencies using bounding assumptions for the issues considered. Given the large uncertainties in the various areas of the methodologies, one should be careful to keep the large numbers generated in the sensitivity studies in perspective. All assumptions and uncertainties associated with these numbers should be clearly highlighted so that these numbers are not misinterpreted by looking at their face value alone.

2. Given the large uncertainties that still remain in fire risk methodology, careful consideration should be given to (1) whether additional research will reduce these uncertainties and (2) the expected benefits to be gained by reducing these uncertainties, particularly in comparison to the associated costs. Specifically, given the sparse data, it may not be possible to further reduce the uncertainties associated with issues such as partioning of fire events to local areas and propagation probabilities of fires given an event. The incremental benefits to be gained over the existing Appendix R requirements should be carefully considered along with the costs of additional fire research.

More specific comments are attached. Please call me at 704/373-2937 if you have any questions.

Sincerely,

T. F. Wyke, Chief Engineer
Mechanical & Nuclear Division

By: B. J. Dolan
Supervising Design Engineer

BJD/acb
Attachment
cc w/attachment: K. S. Canady
P. M. Abraham
J. R. Hendricks
H. D. Brandes
R. C. Bucy
S. P. Nowlen (Sandia National Laboratory)
M. Kaminski (Wisconsin Electric Power Co.)
W. H. Rasin (NUMARC)
J. E. Evans (Edison Electric Institute)

Specific Comments/Questions on Fire Risk Scoping Study

1. The suppression curve developed for events in the database effectively considers all suppression events to be similar with respect to size of fire, type of fire, and detection and suppression means available. The application of suppression data in such a manner does not account for the fire-specific and plant-specific considerations that affect the fire suppression probability. Given the poor quality of existing data, the expected rate of accumulation of additional data, the difficulties encountered in modeling the associated phenomena, and the plant-to-plant differences in materials, geometry, ventilation, etc., it is questionable whether it is possible (let alone cost effective) to reduce the uncertainties through additional research.

2. Input to the report was sought from a wide variety of experienced personnel. However, it appears that little input was received from utility and vendor personnel. These organizations have accumulated a large deterministic and probabilistic experience base. Consideration should be given to seeking input from these organizations before embarking on additional research programs.

3. It is not clear how the plant-specific data gathered on firefighting (e.g., number of personnel, structure of organization, qualifications of personnel, hours of training, etc.) relate to firefighting effectiveness. Firefighting effectiveness is a function of other factors (e.g., detection and suppression means available, capabilities of fire brigade, etc.). Conclusions should not be drawn on the face value of this data.

4. Section 1.1, Paragraph 3, states in part that "smoke purging ventilation schemes, as currently implemented, will be ineffective in maintaining a smoke free environment." More specific information should be provided to support this conclusion.

5. Page 21, Section 4.2, Paragraph 3 (Reasons 1.3), states that no recovery time was allowed for the following reasons: (1) No detectors close to control cabinets; (2) Ventilation system is such that no smoke is expected in the control room from fire in panels of concern. Duke experience is that control room operators very quickly sense electrical fires in panels (i.e., see smoke or smell products of combustion).

6. Page 29, Section 5.1, Paragraph 4, states that smoke may obscure fire so that fire fighters may spray the wrong equipment. Duke fire brigades are trained to "find the fire before spraying." The only exception is when the area (room) is thermally involved, in which case, equipment would be degraded. Response of the organization is intended to arrive at a fire before this happens.

7. Page 41, Section 6.1, Paragraph 3, states that separation of safety related cabling is not maintained. Appendix R, III.G.2 and the Standard Review Plan require that safe shutdown cables be separated/protected from a common fire.

8. Page 66, Section 8.1, states that fire barrier qualification tests should be conducted with a positive pressure in the furnace. It is difficult to envision a compartment in a Nuclear Power Plant with sufficient combustible material and correct forced ventilation rate to simulate the burning rate and intensity of a furnace type fire. Thus, it seems the existing criteria is conservative enough.

9. Page 78, Section 10.1.2, Paragraph 3, states that plants maintaining a dedicated fire brigade are expected to more effectively respond to fires. This statement is significant and requires further explanation. The fire brigade organization consisting of station operations personnel has a clear advantage over dedicated fire fighters in understanding the importance of specific equipment and the interaction of fire degradation and unit operation/shutdown.

10. Page 4 of the Executive Summary states that the control systems interaction "ideal has not been met in that control systems interactions were identified which rendered safe shutdown systems inoperable . . . Remote shutdown areas are specifically excluded from requirements for seismic qualification unless other factors prevail." It should be noted that fire piping, sprinklers, valves, and other hardware was qualified per NFPA based on experience, not rigorous seismic analysis. The SGUG database provides good data on piping survival during large scale earthquakes. In some cases, nuclear grade "N-stamp" components are not permissible per NFPA requirements. Where necessary, fire protection systems have been seismically restrained and provided with a backup source from safety related service water systems.

11. Page 65 provides a weak basis for concluding that seismic/fire interaction deserves further study. Several isolated cases of unanalyzed fire initiators are implied but no credible mechanism is suggested for consequences on overall plant safety.

12. Pages 52 and 53 discuss the McGuire loss of control room chiller. This event is a component life/HVAC issue which has been resolved through addition of forced air cooling fans powered from the cabinet power supply.

13. Page A-31, Section 4.3, states that "No Appendix R related plant modifications are believed to have been made at Oconee after performance of the original PRA." Some further work has included de-energizing an additional valve EMO and rerouting cable to a valve to eliminate identified fire induced interactions affecting Appendix R shutdown.

14. Page B-9, Section 2.1 (top of page): Regardless of minimal separation per IEEE-384, Appendix R requires fire wrap separation by 20 feet free of combustibles with sprinklers and detectors or fire barrier to achieve separation for Appendix R fires.

15. Page B-10, (bottom of page): Spurious actuation of extra pumps was evaluated and determined to typically not be a problem. Spurious valve movement was analyzed per Appendix R and prevented where necessary.

APPENDIX F-2.2

The following represent the Sandia response to the comments of Brian Dolan of Duke Power Company documented in a letter dated February 24, 1988.

General Comments:

Comment 1:

The report has throughout clearly stated the limitations of the analyses performed. It should be clear that these analyses are generally bounding analyses rather than case specific analyses based on plant specific conditions. While certain plant situations have been used to illustrate a given point without consideration of specific plant features, this type of analysis is consistently identified as such and the assumptions utilized listed.

Comment 2:

The potential benefits of a research program are always considered in the preparation of a research proposal. As fire is consistently reported to be a principal contributor to overall plant risk the development of a greater understanding of the phenomena involved, and more accurate tools with which to identify and analyze potential scenarios seems a generally prudent undertaking. Risk assessment methodologies have proven instrumental in the identification and resolution of potential plant safety vulnerabilities based on the response of specific plants to the findings of such analyses.

Specific Comments and Questions:

Comment 1:

The suppression probability curve developed does in fact not distinguish between various types of suppression and detection systems. This methodology is consistent with the procedures utilized in the original PRA analyses. This problem is identified as a continuing source of uncertainty in the analyses. The only efforts recommended in this area are a further expansion of the fire occurrence data base in order that a fuller representation of fire events be made available. This is a modest undertaking with the potential for reducing these uncertainties in future analyses. The potential shortcomings of all such experience based analyses are not disputed.

Comment 2:

See response to similar comment in Appendix F-1 above. It is the expressed purpose of involving utility personnel in this peer review process to obtain the input into future research needs which is identified in this comment as desirable.

Comment 3:

No conclusions were drawn as to the effectiveness of fire fighting based on the survey of industry practices. This survey was intended only to illustrate the wide variability in fire fighting practices which exist within the industry. This point has been clarified in the text.

Comment 4:

The test program upon which this statement is based has been referenced. The reports documenting these findings are publicly available and should be consulted for the specific details of the tests performed and the test results.

Comment 5:

For the situation considered in this study the ventilation system is such that the control cabinets are used as return air plenums. Thus it is not to be expected that personnel would be alerted to the existence of a fire in a time short enough to allow for suppression of the fire using hand held fire extinguishers. Thus no credit is given for prompt fire suppression in this case. Other control room ventilation configurations would not be subject to these conditions, though for the case considered the assumed conditions are felt to accurately represent plant conditions.

Comment 6:

It is the very issue of the degree of training received by a plant fire brigade which has been questioned. The analysis assumed that a minimally trained fire brigade may respond inappropriately by spraying uninvolved equipment. We recognize that Duke Power provides fire fighters with far more training than that required by Appendix R and commend there forethought.

Comment 7:

In many plant situations cable separations cannot be maintained or achieved. In such situations exemptions from the Appendix R guidelines are routinely requested and have often been granted. The situation considered was one such case.

Comment 8:

Many small highly fuel loaded enclosures exist within most power plants. Further, referenced tests showed that even a relatively small fire in a very large room can induced significant pressure gradients under normal ventilation conditions. While the fire intensity in the standard barrier qualification test is indeed a conservative exposure, the lack of a pressure specification is a non-conservatism of yet undetermined significance. Should fire barriers be vulnerable to premature failure under positive pressure, a condition not yet demonstrated, then significant risk impact could result.

Comment 9:

Comments regarding the advantages of the use of control personnel on the fire response teams are well taken. It was not the intention of the report to discount such considerations. The text of the report has been clarified to reflect this comment.

Comment 10:

The section of the report dealing with the issues of seismic/fire interactions had not been completed as of the time this comment was made. It was concluded that this particular issue is in fact a simple issue to resolve. The only efforts proposed as a result of this study in this area is the documentation of potential interactions which should be reviewed on a plant specific basis. In all the identified interactions simple corrective measures can be identified.

Comment 11:

See the response to comment 10 above.

Comment 12:

The situation raised is a potential consideration for other control components than those involved in the McGuire incident. The recent control panel fires involving annunciator relay panels is a good example. It is considered worthy of mention in that other systems may experience similar life related vulnerabilities.

Comment 13:

This comment is recognized though it is not possible at this time to reevaluate the scenarios for the purposes of this report.

Comment 14:

Exemptions to the Appendix R guidelines are often requested and granted. Thus, a full range of protective measures from those specified in the obsolete Reg Guide 1.75 through Appendix R measures and beyond can be identified.

Comment 15:

The concern raised is not with respect to the impact of a pump starting on the plant systems, but rather on the pump itself. A pump which spuriously starts with a closed inlet valve may fail due to cavitation. This same pump may later be required as a part of the safe shutdown procedures. The analyses referenced were performed by a nuclear plant designer based on actual existing plant designs.

APPENDIX F-3

COMMENTS OF JOHN-PIERE SURSOCK, ELECTRIC POWER RESEARCH INSTITUTE

EPRI
Electric Power
Research Institute

March 1, 1988

Mr. John Flack
U.S. Nuclear Regulatory Commission
Washington, DC 20555

Dear John:

Thank you for inviting me to participate as member of the Fire Risk Scoping Study Review Panel. I was impressed with the quality of the presentation and with knowledge of the participants.

As you know, I received the draft report fairly late, so I could not review it in as much depth as I would have liked. My general impression is that the authors have done an excellent job of assembling data and material for the study. The discussion and results, however, remain very qualitative. Words such as "significant", "large", "small", abound in the text but are not clearly defined. I do recognize however, the extreme difficulty of being more specific due to the scarcity of data.

Specific comments now follow; they focus on the shortcomings of the study and by no means reflect my overall impression that the report, in general, is of very good quality:

1. <u>Review of Fire Risks Scenarios.</u>
(Section 2 and Appendix A).

The first conclusion in this section is that "most initiating event frequencies were increased, based on a much more complete database" (Wheelis data). The more complete discussion in Appendix A (page 20), however, states that "the lack of descriptive information" in the data base causes an uncertainty regarding "the applicability of a given event"; and "it was decided to err on the conservative side, i.e., include a questionable (sic) event subject to future verification". The problem with this approach is that there is practically no limit to "questionable" events and I am not surprised to see some increase in initiating event frequencies. The authors should state the fraction of "questionable" events thus introduced in the data base and utilized in re-estimating the frequencies. Furthermore, the statement in the main text remains very qualitative (no numbers given). A reader, unwilling to read the 110 pages of Appendix A, would have no indication whether the conclusion refers to a major and dramatic change in initiating frequencies or a relatively insignificant one (i.e., within the data uncertainty). Furthermore, inspection of the relevant data (Table 5.1.1) in Appendix A reveals that in most cases

JPS/cb/3425ST88

3412 Hillview Avenue, Post Office Box 10412, Palo Alto, CA 94303 Telephone (415) 855-2000
Washington Office: 1019 Nineteenth Street, NW, Suite 1000, Washington, DC 20036 (202) 872-9222

there is no such increase in frequencies and in fact, in certain cases (e.g., auxiliary building, turbine building) the mean frequency drops! It is hard to find, in that table, something statistically significant, especially given the usage of "questionable" events.

Concerning the evaluation of uncertainties, I found the discussion rather qualitative. Some attempts have been made to compare quantitatively fire to earthquake and floods, (Appendix A), but where numbers appear in the text they are not supported by reference to other documents or data. For example (page A-58): "It is judged that the amount of uncertainty associated with inclusion of these secondary failures is about the same for fire, flood and earthquake". The result of the discussion is table 6.1.2, which provides the relative uncertainties due to these 3 external events, in terms of "large", "medium" and "small". I do not see how this can be used meaningfully.

Again, I realize the extreme complexity of the issue and the frustrating lack of data. Perhaps this is the best that can be done.

The issue of "large release" (i.e., early containment failure) is not addressed in this section at all. It is well-known that in most cases, fires contribute heavily to overall core damage frequency (CDF) but have little effect on radioactive release risk. This is an important distinction. The conclusion should state either that the reanalysis of the four PRAs did not alter this conclusion or that the question was simply not addressed as part of this reanalysis.

2. Identification of Unaddressed Fire Risk Issues.
(Sections 3-9).

Control Systems Interactions.
(Section 4 and Appendix B).

A. A cursory look at Table 1.2 of Appendix B does not seem to support the conclusion that this issue is more serious than originally anticipated in the three PRAs. Comparison of the original fire scenario CDF, due to MCR/RSP interactions, against the new CDF (assuming Appendix R features fully implemented, case ii) shows that there are no significant changes in CDF except for Limerick.

B. The discussion of the Lasalle findings is very interesting and important but cannot be generalized.

JPS/ch/3425ST88

C. One has to assume, in PRAs, that the regulations are implemented, otherwise, there are no "rules-of-the-game" any more. If Appendix R is not fully implemented at a given plant, the issue should be brought up in the appropriate forum.. Cautions could be issued to warn the analyst about the level of detail required in reviewing wiring diagrams and their implementation but again, one cannot arbitrarily assume that regulations are not implemented and evaluate a CDF based on this assumption!.

Fire Fighting Effectiveness.
(Section 5 and Appendix C).

A. I was confused (and straightened out at the meeting) over the relation between the PLC review (Section 5.3.1) and the "Results of the Response Time Boundary Analysis (Section 5.3.2) since both appear under the heading of Section 5.3, "Quantification Results". I understand now that there is no relation between these two subsections. Perhaps this could be made clearer by separating into two sections.

B. I think the discussion would benefit from a more quantitative discussion of uncertainties on CDF. Several detection or suppression times are quoted but how does this translate into CDF uncertainty? (Table 5.4 provides the elements of an answer.)

C. The description of the screening method used in Subsection 5.3.3 is not clear.

D. The assumption that "within ten minutes of fire's ignition that smoke would descent towards the floor to the point where vision would be drastically hindered in most nuclear plant enclosures", immediately broke down once tested on the Lasalle plant. Is this an indication of the uncertainty of the models? I think that it would be very beneficial to evaluate enclosures at other plants (i.e., obtain more data) from this standpoint. The result, as stated in the report and the presentation, has a significant impact on fire suppression time, and on misdirected suppression effort.

Total Environmental Equipment Survival.
(Section 6).

This section contains interesting quantitative information on spurious fires.

Because of lack of data, the discussion becomes more qualitative, however, when the report addresses the effects of fire suppressants on safety and electrical equipment. EPRI is now undertaking an effort to improve our knowledge in this area (RP2969). This project will help quantify some of the uncertainty discussed here.

JPS/cb/3425ST88

Also note that, the end of paragraph 4, on page 48 refers to a Table 6.3, which does not appear in the report.

Seismic/Fire Interactions.
(Section 7).

I fully agree with the approach proposed at the meeting (i.e., limit the discussion to a set of recommendations). The impact of this issue on CDF seems too small to warrant a more detailed analysis.

Adequacy of Fire Barriers.
(Section 8).

The issue seems important but the screening used to attempt quantification is a bit too soft. FMore verification is needed. Further comparison between the U.S./Canada standards and the international standards would be beneficial. It may be possible to get additional information from leading foreign organizations.

EPRI is now undertaking a compilation of fire barrier tests performed by/for nuclear utilities.

Adequacy of Analytical Tools.
(Section 9).

Both versions of COMPBRN discussed in Section 9 appear thoroughly inadequate. A better tool is clearly needed if one wishes to remove the conservatism of the earlier PRAs.

Summary.
(Section 10).

A. The statement a) in the first paragraph: "For most identified issues, extensive plant-specific analyses will be required to assess the actual level of impact for a given plant" (emphasis mine), and similar statements in the executive summary are too strong and clearly premature for two reasons:

- This scoping study has not established very convincingly (quantitatively) the impact of these issues on PRAs (particularly radioactive release risk).

- The data base to perform these analyses, as abundantly shown in the report, is not available

B. A natural follow-on to this study is to establish a list of issues along with their estimated impact on CDF and their associated uncertainties. One could then use this information to determine R&D priorities both for further analyses and for experimental work.

JPS/cb/3425ST88

C. At this point, there appear to be three areas where additional work is needed:

- The analytical tools (COMPBRN)
- The fire barrier failures (standards)
- The effects of fire suppressants on electrical equipment

All others issues would need more quantitative evaluation and more solid argumentation before a convincing cost/benefit ratio emerges.

3. <u>Conclusions</u>

My comments above focused on whatever shortcomings I perceived in the report. That taken as a whole, however, this study is really very informative. It set out to accomplish an almost impossible task and met the challenges with a high degree of success.

The authors have pulled together, and digested for us, a significant volume of information from a vast number of sources. The shortcomings are due to the lack of information generally available at this time.

Sincerely,

J.P. Sursock
Program Manager
Nuclear Power Division

Enclosure

JPS/cb/3425ST88

APPENDIX F-3.2

The following represent the Sandia response to the comments of John-Piere Sursock of the Electric Power Research Institute documented in a letter dated March 1, 1988.

Comment 1, First Paragraph:

In the requantification analyses a specific attempt was made to include only those additional fire occurrences that were similar to those included in the fire data bases of the original analyses. The comment made in Appendix A as to the inclusion of questionable events subject to future verification applies to only three cable fire incidents associated with only the Limerick PRA. In each of these three incidents it could not be determined whether the fire occurred in IEEE-383 rated cables. As the status of the cables involved was not determined it was decided to include these incidents in the data base pending the potential identification of these cable as non-rated. In all cases only events similar to those considered in the original analyses were included in the updated data base. Even under this constraint significant increases in the raw "x/y" fire occurrence frequencies were generally observed.

The conclusion that fire frequencies had increased for most areas was based on an examination of the raw number of events and operating years data utilized in the original analyses versus those in the updated data base. In Table 5.1.1 of Appendix A the distributions and frequencies presented for the original analyses include modification to the raw "x/y" values, and hence are not directly comparable. In the Seabrook analysis the mean values, and presumably the distributions, were modified in an uncertain fashion. Indian Point 2 and Oconee modified their respective mean/point estimate values using plant specific data in a Baysian two-stage updating procedure. The basis for the conclusion that risk would increase "given that all other factors remained constant" is consistent with examination of the raw "x/y" values. This point has been clarified in the text of the report.

Comment 1, Second and Third Paragraphs:

The analysis of uncertainties performed in the requantification analyses presented are in fact, under the methodologies utilized in the original PRAs and hence in the requantification, dominated by the uncertainties associated with the factors of engineering judgement incorporated. This does yield a rather qualitative result as assigning an

uncertainty to one's judgement is in fact quite qualitative. The point which was to be made was that in requantifiing the uncertainties these judgemental uncertainties were not reevaluated and the changes in uncertainty are a result of changes in the data bases, etc. only. As to the comparison to the uncertainties of other types of analyses, seismic and flood, these are based on the experience of the authors in the performance of such analyses. No hard references were identified and this is why the statement is presented as a judgement rather than as a hard fact.

Comment 1, Fourth Paragraph:

The issue of back end calculations of releases was not specifically addressed as a part of this study. We do not however agree with the assessment that fire is a small contributor to offsite releases. A detailed review of the scenarios considered has indicated that these same scenarios will often impact on containment systems as well, and hence can in fact lead to offsite releases. This review found that these releases were generally longer term releases (i.e. 6 to 8 hours) which resulted in significant longer term deaths. In fact in the case of the Indian Point 2 analysis fire was the dominant contributor to this type of release. This perception of fire as a core damage contributor but not a release contributor appears to be a popularly held belief which has not in fact been demonstrated to be valid.

Comment 2, Control Systems Interactions, A:

While it is true that for two of the three plants examined the resulting assumed control interactions did not significantly increase overall core damage frequency due to the domination of overall risk by other scenarios, it is important to note that the assumed interactions resulted in an order of magnitude change in the perceived importance of the particular scenarios considered. These scenarios went from being relatively unimportant to being quite important. It is the current perception that the greatest utility of risk analyses is in the identification of potentially significant vulnerabilities and in the subsequent resolution of those vulnerabilities. Thus, the change in importance of a given scenario due to an issue not previously considered is of great importance to the ultimate resolution of plant vulnerabilities.

Comment 2, Control Systems Interactions, B:

This is a correct statement. The analysis of any given plant will not be generally applicable. The analysis does however illustrate that even for a relatively new plant

designed to the specifications of Appendix R significant core damage contribution can result from control interactions. While this particular vulnerability may not be encountered elsewhere, the analysis demonstrates that the potential for such interactions should not be ignored in risk analyses.

Comment 2, Control Systems Interactions, C:

It is not clear to what this comment refers. In the analysis performed by NUS the assumptions made were clearly identified as bounding assumptions. The case specific analyses of the LaSalle plant did in fact assume electrical independence of the remote shutdown panel from the control room as specified in Appendix R. There are, however, cases in which the provision of Appendix R are not met. In many such cases, particularly involving cable tray separation, exemptions to the regulations have been requested and granted. Thus one can not assume that Appendix R is met in all cases. The requantification analyses performed in no case assumed, without evidence, that Appendix R guidelines were not met.

Comment 2, Fire Fighting Effectiveness, A:

The text of the report has been clarified to indicate that the review of plant fire team practices was used only to illustrate the variability in plant practices and not as the basis for judging response times.

Comment 2, Fire Fighting Effectiveness, B:

As overall uncertainties are currently dominated by the uncertainty in judgemental factors the refinement of uncertainties in a particular area such as fire suppression would be of limited use. It is of course desirable to reduce uncertainties were possible and this effort has focused on the reduction of uncertainty rather than on the quantification of uncertainty.

Comment 2, Fire Fighting Effectiveness, C:

In the text of the draft document certain portions of section 5.3 were placed improperly. The correction of this misprint should resolve the question.

Comment 2, Fire Fighting Effectiveness, D:

The statement of the assumed time to obscuration by smoke in an enclosure fire situation is based on a series of 25 large-scale enclosure fire tests performed as a part of the NRC Fire Protection Research Program. These tests were

performed in a very large enclosure under varying conditions of fire and ventilation. In all cases less than 10 minutes was required to fully engulf the room in a dense smoke layer. The comment of this assumption breaking down in the case of LaSalle is not fully understood. It may perhaps be related to the assessment of LaSalle's fire brigade as being quite well trained and quite responsive to fire situations. The adequate training of a fire brigade is identified as the key to resolution of this issue.

Comment 2, Total Environment Equipment Survival:

With respect to total environment survival issues, it is true that very little data exists so that the discussion is necessarily qualitative.

Comment 2, Seismic/Fire Interactions:

The section of the report dealing with seismic fire interactions had not been completed at the time of the review. The approach outlined in the referenced meeting was in fact followed and the impact on core damage frequencies is considered quite small and easily resolved.

Comment 2, Adequacy of Fire Barriers:

The discussion of barrier failures is, in fact, based on what are considered reasonable bounding analyses. The use of such bounding analyses is a necessary shortcoming in that no data on barrier failures during actual fire incidents has been collected. It was beyond the scope of this study to perform such extensive reviews of fire experience as would be required to establish such an experience base. Foreign fire researchers were contacted in conjunction with this effort and it was found that, as reported in the study, the only difference from US and Canadian standards is the pressure specifications of the international standards. In failure criteria the ISO standards do specify a heat flux criteria for fire doors, though not for penetration seals, the principal source of concern.

Comment 2, Adequacy of Analytical Tools:

No response appears needed.

Comment 2, Summary A:

The statement that extensive analyses will be required to assess the actual impact is considered accurate. In this study a number of bounding calculations were performed. In some cases specific scenarios were considered, though these analyses typically involved quite extensive work. If one

wants to know the actual impact on a given plant then that plant will have to be analyzed as the results presented here are not considered to be suitable for generalization. The analyses were merely intended to provide an assessment of the potential for impact of the identified issues.

Comment 2, Summary B:

The recommendations for further work presented in the final draft report have utilized this approach to identification of the research needs.

Comment 2, Summary C:

We do not agree that only the three areas identified in the comment require additional work. We do feel that in certain cases, in particular seismic/fire and spurious suppression, the burden of understanding and resolution lie with the utilities while others, such as manual fire fighting, are regulatory issues and still others are appropriate to investigation through research.

Comment 3:

Thank you.

APPENDIX F-4

COMMENTS OF FRANKLIN GARRETT, ARIZONA PUBLIC SERVICE COMPANY

Arizona Public Service Company
P.O. BOX 53999 • PHOENIX, ARIZONA 85072-3999

March 3, 1988

Mr. Edward A. Sawyer, Chairman
EEI Fire Protection Committee
c/o Yankee Atomic Elecric Company
1671 Worcester Road
Framingham, MA 01701

RE: Review of The Sandia Fire Risk Scoping Study

Dear Mr. Sawyer:

We have performed a more detailed review of the Sandia Fire Risk Scoping Study attached to your letter dated February 16, 1988. Our initial comments were transmitted to Mike Kaminski as requested.

The attached are APS's comments resulting from an interdisciplinary review. Copies are being sent to John Flack and Emanuel Licitra of the NRC for their consideration prior to the ACRS meeting scheduled for March 7, 1988.

Sincerely,

Franklin D. Garrett, P.E.
Sr. Fire Protection Engineer
Risk Management Services

FDG/ces

Attachment

cc: A. C. Rogers
M. F. Hodge
C. R. Stevens
C. W. Belford
N. L. Cocanour
J. A. Brackney
J. E. Flack (NRC)
E. A. Licitra (NRC)
M. S. Kaminski (Wisconsin Electric)

FG03031/2

APS COMMENTS CONCERNING THE SANDIA FIRE RISK SCOPING STUDY

1.0 GENERAL

The report makes several generalizations regarding the fire protection features of the nuclear industry. Unfortunately a pessimistic viewpoint is taken which is misleading. We are concerned that this report will be misinterpreted and result in unnecessary backfits without a sound technical basis. Additional fire protection regulations should not be imposed on operating plants, based on the susceptibility of specific plants unique scenarios, without verifying that these scenarios have generic applicability to operating reactors.

2.0 GENERAL

The Sandia Study appears to assume that all fires which occur within an identified fire area of the plant occur at the worst possible location within the fire area. In contrast, industry studies which have been performed indicate that if the fires are randomly distributed within the fire area under consideration (based on combustible loading within the fire area) that the frequency of core damage is decreased by a factor of between 5 and 10. Neglecting this factor is a significant conservatism within the Sandia approach.

3. EXECUTIVE SUMMARY (PAGE 4)

A statement is made that there are no seismic requirements for fire protection systems and that remote shutdown areas are excluded from seismic qualification. While it is true that there are no seismic requirements specifically for fire protection, it is a requirement that all equipment that may be a missile source in Seismic Category I areas be supported to meet Category IX requirements. Since sprinkler piping is typically arranged with cantilevers, the only way to insure that the piping will not become a missile during an SSE is to support it in such a way that it is prevented from breaking.

4. SECTION 2.3 (PAGE 10)

A statement is made that high uncertainty factors are associated with "engineering judgement" used in fire protection engineering decisions. These "engineering judgement" decisions are necessary due to the fact that fire protection is not an exact science. This fact is supported by Sandia's statements made regarding the COMPBRN III Code. For this reason the NRC requires utilities to maintain a qualified fire protection engineer on staff to review activities affecting safety. This requirement gives greater assurance that "engineering judgement" decisions are made by a knowledgeable and experienced individual.

FG03031/2

5. SECTION 3.2 (PAGE 13)

The sources used to obtain "expert opinions" does not include the most qualified individuals which are the utility fire protection engineers. After reviewing the sources listed in Table 3.2 it is apparent that organizations that would financially benefit from creating new fire protection regulatory issues were consulted, thus resulting in a biased polling of "experts".

6. SECTION 4.2 (PAGE 19)

The Sandia study appears to take very limited credit for manual operator actions within the plant given that remote shutdown capability is impaired by fire damage. More detailed consideration of operator recovery actions may significantly reduce the fire risk as calculated within the Sandia report.

7. SECTION 4.2 (PAGE 21)

Assumption is made that a control room fire is "out of control" before being detected. Two items used as a basis for this assumption are that no detectors are in "close proximity" to the control cabinets and that no smoke is introduced into the control room by the ventilation system. It is not clear if these are "typical" configurations or a postulated "worst case". A plant comparison should be made by Sandia to determine if these are valid assumptions. Also, a control cabinet fire would most likely lead to a loss of control power or other spurious actions, that would cause the operator to investigate the problem. Therefore, the assumption that a control room fire would be "out of control" before being detected appears to be too conservative.

Table A3-1 (page A-93) lists the fire events used as data for basing this assumption. Of the four control room fires listed, three were extinguished by operators with no details given for the fourth. The information provided in the database indicates that the assumption that fires would be "out of control" prior to detection is erroneous.

8. SECTION 4.3.1 (PAGES 21 AND 22)

The statements concerning the results of the NUS review do not appear to correspond to the actual NUS review documentation contained in Appendix B. For example, Section 4.3.1 states that "As a result of the NUS review ... three types of interactions were identified ... ". the NUS review attributes the identification of these interactions to a Sandia study of "Safety Significance of Fires" (ref. page B-1). On page 22, it is stated that scenarios 1 and 2 of the three items listed on pages 21 and 22 were examined. In the NUS review, however, it states, on page B-3, that items 1 and 3 of the five listed on page B-1 were reviewed. Additionally, paragraphs two and three on page 22 appear to have been taken our of context from paragraphs two and three on page B-5. The NUS review states, in part, "for plant designs which comply with ... Appendix R... there <u>may</u> still be a significant impact on ... core damage frequency... However, the observed impact on the

overall plant core damage frequency was relatively small." From the paragraph on page 22, it appears that there is little difference in core melt frequency between having no shutdown paths available (1.2E-3/yr) and having one shutdown path available (1.1E-3/yr). These discrepancies need to be resolved in order to accurately report the results of the NUS review.

This section also assumes the spurious actuation studies performed are not complete. At Palo Verde an extensive review was done that assumed all components would fail in the undesired state. All operator actions were evaluated for feasibility with respect to time and function and access and egress paths verified.

9. SECTION 5.1 (PAGE 29)

Palo Verde utilizes a full time fire department with a complement of experienced professional fire fighters. They are trained not to apply hose streams or extinguishers unless it is on the fire source. Professional fire fighters are experienced in combating confined space fires with minimal to no visibility. Paragraph 2 implies that manual fire fighting will be hampered by the fire fighters inability to locate the fire. While the statement made is correct, it is not complete since the plants normally have zoned detection systems that would lead the fire brigade to the proper area and limit the search.

With respect to safe shutdown, this scenario is generally applicable only to fire zones where redundant trains are separated using the 20 Foot Rule of 10 CFR50 Appendix R Section III.B. Otherwise separation will be by walls or rated barriers which are qualified by hose stream tests. At Palo Verde the 20 Foot Rule is used only where great separation distances exist.

10. SECTION 5.1 (PAGE 29)

An inconsistency exists regarding ventilation factors. Paragraph 2 on page 29 implies that nuclear power plants have "relatively poor" ventilation while paragraph 3 states that high end ventilation rates are typical.

In addition, the last paragraph discusses having redundant trains within the "same area". It is not clear if this is referring to a "fire" area (which could be a very large area) or a "floor" area. Additionally, a distinction should be made between plants complying with Appendix R and other plants. The problem identified here would not apply to plants complying with Appendix R due to the separation requirements.

11. SECTION 5.2 (PAGE 30)

The assumption that fire detection will not occur until 10 inches of flame exists has no basis. Our experience with ionization smoke detectors used at Palo Verde is that they are too sensitive. Ionization detectors have proven to be effective in detecting smoldering fires which generate the dark smoke that is assumed to occur in this report.

12. SECTION 6.1 (PAGE 41)

The third paragraph states that cable separation of redundant trains is not maintained. Regulations exist that require separation of redundant trains (Appendix R and Regulatory Guide 1.75). The basis for this statement should be explained.

13. SECTION 6.3.1 (PAGE 47)

The statement that room temperature dips to below -60°F during CO_2 discharge is misleading. Tests conducted at Watts Bar demonstrated that the air temperature dipped but the temperature of physical components in the room dropped very little. Safe shutdown circuits were monitored during the test and no abnormalities were found. Pre-operational testing of the CO_2 system at Palo Verde also demonstrated that the temperature of components experienced minimal change.

The second paragraph states that halon systems have caused localized freezing of components. This condition can result from improper design where the nozzles are incorrectly located. Typical room temperature changes due to halon system discharge are insignificant due to the small amount of agent released relative to room size. This comment should be qualified so that it is clear as to the actual cause of localized freezing occurrences identified.

The discussion that spurious operation of fire protection systems is a "new issue" appears to be inappropriate. Regulations currently exist (10 CFR50, Appendix A, GDC 3) which require fire protection systems to be designed such that rupture or inadvertent operation does not impair the function of plant components. NRC information notices on this subject have also been released. In addition, only suppression systems protecting redundant safe shutdown components separated by the 20 Foot Rule of Appendix R have significance to this issue.

14. SECTION 6.3.1 (PAGE 50)

The statement that the utility industry is "hiding their heads in the sand" due to inadvertent actuations is unfounded and offensive. At Palo Verde, air monitored pre-action, Halon and CO_2 systems are used for fire suppression systems in safety-related areas. They are seismically designed and evaluated for operational impact.

FG03031/2

15. TABLE 6.1 (PAGE 62)

The reference to a spurious actuation of a deluge system protecting the LPSI pumps is not correct. The LPSI Pump Rooms are protected by air supervised pre-action systems. This statement indicates that inaccurate data was used in the Sandia study.

The actual occurrence, which resulted in the issuance of an LER, was associated with the failure to establish an hourly firewatch when the pre-action system was taken out of service. No water was ever released from the pre-action system and the LPSI pump was not taken out of service due to fire protection system reasons. Sandia's misrepresentation of the event at Palo Verde raises questions concerning the validity of the database used for generating their assumptions.

16. SECTION 7.1 (PAGE 64)

The statement that "seismic/fire interactions has largely been dismissed" is not accurate with respect to Palo Verde. Our fire protection systems are Seismic Category 9 qualified and will maintain pressure boundary following an earthquake.

The fourth paragraph describes the Surry feedwater line break and resulting spurious actuations. The statement is made that since fire system control circuits are not seismically qualified, similar failures could occur during a seismic event. This analogy is not clear. The spurious actuations at Surry were caused by water in the panels. If the panels had been seismically qualified, water could still enter the panels unless they were weather-tight enclosures. The conclusion is correct that similar failures could occur during a seismic event, but not for the reason stated.

17. SECTION 8.1 (PAGE 66)

The accepted method used to test fire-rated assemblies has repeatedly proven effective in actual fires. With the addition of a hose stream test the accepted method of evaluating fire performance is conservative. We do not know of research indicating a significant occurrence of fire-rated barriers failing to operate as intended. If this were the case, the regulatory and insurance organizations would have forced fire test method changes long ago.

FG03031/2

18. SECTION 8.1 (PAGE 67)

The reference to the Browns Ferry Fire is not factual and is misleading. It is stated that "the fire spread through a 3-hour fire-rated seal". In fact, the seal was made of polyurethane foam and in no way was a fire-rated configuration. Also, the single statement that the fire burned for seven hours prior to extinguishment leaves the impression that it could not be extinguished. The reason for the delay in extinguishment was Managements' directive to prevent the use of water as an extinguishing agent. The following paragraph is from the final report of the Preliminary Investigating Committee dated May 7, 1975 (page 23).

> "The SE and two other operations workers entered the area of the fire to utilize water to fight the fire. The SE took the hose and climbed within four feet of the fire with assistance of the other two men. He sprayed water on the fire in the south cable trays for approximately 10 seconds, which extinguished the fire. The fire hose was left stuck in a position so that it continued to apply water to the south cable trays.

This paragraph of the Brown's Ferry Fire Report contradicts Sandia's assumptions in Section 5.0 regarding smoke control and fire fighter effectiveness. Basically the fire brigade entered the reactor building seven hours into a confined space cable fire and extinguished the fire in approximately ten seconds from a distance of four feet.

19. SECTION 10.2 (PAGE 82)

The last paragraph of Section 10.2 describes the lack of available data to adequately perform the required analysis. This does not correlate with the rest of the report that describes these items as problems. Does this mean that since there is insufficient data as to the existence of a problem it should be assumed that one exists?

20. SECTION 10.3 (PAGE 85)

The top paragraph on page 85 states that the possibility exists for non-seismically qualified fire suppression systems to actuate during seismic events due to large amounts of dust in the air. The relationship between seismic qualification and dust is not clear since seismic qualification does not ensure the enclosures are dust-tight. Also, it is not clear where the source of large amounts of dust exists. The dust that is typically associated with seismic events is due to falling equipment, walls, etc. If this large of an event was to occur, the actuation of fire suppression systems seems a trivial matter.

APPENDIX F-4.2

The following represent the Sandia response to the comments of Mr. Garrett of Arizona Public Service Company as documented in a letter dated February 22, 1988.

Comment 1: Polling Group Biased

With respect to the fact that no utilities were solicited in the polling of expert opinions, it was our intention to include the utility perspective primarily through the solicitation of EPRI and INPO comments. We did in fact meet with the EPRI researchers, though INPO refused our request for a meeting. We excluded the EEI group from the initial solicitation in order to preserve EEI as peer reviewers of the final report with no preconceived bias having been formed as a result of the initial solicitations. We will concede to your observation, but feel that the extensive use of utility representatives in the review of the final report will provide the needed input.

Comment 2: Cabinet Fire Growth

The analysis was not intended to reflect the conditions at Palo Verde. The assumed configurations are accurate for the case reviewed. Each plant will have unique design features, all of which can not be considered in any single study.

Comment 3: State of Spurious Suppression Impact Reviews

The review of the recent experiences of spurious suppression events demonstrated that these incidents continue to occur and continue to adversely impact plant safety systems. Thus, for the industry as a whole it would appear that consideration of such events is incomplete. The considerations given by a specific plant will naturally vary.

Comment 4: Misapplied Suppression

Appropriate training of fire fighters coupled with a knowledge of plant systems is identified as the solution to the problem of misapplied manual suppression efforts. It is also pointed out that several utilities have, in fact, implemented such training well in excess of that required by regulation. It is pointed out that such utilities can expect much more reliable and effective manual fire response.

Comment 5: Fire Detection Time Assumptions

The detection of a fire requires some finite time. In the study referenced, for the purposes of assessing the time for such detection, a simple criteria of a 10 inch flame was assumed. Note that for typical scenarios this criteria resulted in minimum detections times of 0-2 minutes for manned areas and 0-5 minutes for unmanned areas. The worst case estimate for an unmanned area with only limited smoke detector coverage was a 15 minute detection time. While one can always criticize such assumptions, it is necessary for quantitative analyses to provide some physical basis upon which to establish such estimates. The 10 inch flame criteria may in some real cases be conservative, particularly with a smoldering fire with no flame. However, for the types of fires assumed in the referenced study the time to such flames is quite minimal.

Comment 6: LPSI Actuation

The event description was based on an LER summary submitted by Palo Verde which states that the LPSI room sprinklers were isolated "due to spurious tripping of the deluge valve while decontaminating the pump room." This clearly indicates that a spurious operation of the deluge system occurred. If this is not an accurate reflection of the actual circumstances we would be happy to correct the discussion of that particular incident. The other incidents described are similarly based on LER summaries. The data base will be inaccurate only if the LERs are inaccurate or misleading.

Comment 7: Air Temperatures

The statement that air temperatures dipped to -60F has been clarified to indicate that these are only air temperatures. Component response to such environments will be dependant on many factors unique to each situation. We are not aware of the Watts Bar Testing. If information on these tests is available we would certainly be interested in utilizing it. We are aware that after the TMI incident referenced, utility testing did confirm that the build-up of ice on control relays resulted in degradation of their function. This was attributed as the cause of the abnormal control signals received in the control room during the Cardox system tests.

Comment 8: "Sand"

No offense was intended, and we apologize for any offense given. The words have been removed. As to the seismic qualification of Palo Verde fire systems, we would be interested in what was actually done to qualify such

systems. In particular it would be of interest to know if anything unique was undertaken such as delay circuits to overcome potential relay chatter problems. Our recommendations on the seismic fire issue are that plant initiated reviews to identify and resolve potential vulnerabilities be undertaken. The guidance of those with experience in the qualification of fire protection systems would help others to identify their own potential concerns.

Comment 9: Seismic/Fire Considerations

The statement made in the report that "seismic/fire interactions have largely been dismissed" was with respect to consideration of fire issues in analyses of plant risk (PRAs). We are aware that certain utilities, particularly those in the seismically active regions of the west, have considered such interactions. This point has been clarified in the report.

Comment 10: Barrier Qualification

The time temperature curve used in the qualification of fire barrier elements is indeed conservative. However, the lack of pressure specifications is not conservative with respect to actual expected conditions. The overall conservatism of the standard tests has not been adequately demonstrated through a documented review of fire experiences to date. Such a demonstration of conservatism would indeed render this issue effectively resolved.

Comment 11: Browns Ferry Fire

The statement made in the report is that "it was a cracked cable penetration seal which allowed the spread of fire through a three hour fire barrier into the cable spreading room of the Browns Ferry power plant." The only inaccuracy in this statement is that the fire spread out of, not into, the cable spreading room. The wall through which the fire spread was, in fact, a three hour fire barrier and a part of the secondary containment. It is true that the seal itself was not fully qualified in that the flame retardant coating on the outer surfaces had not yet been applied. However, once this coating was in place the seal system would have been considered a qualified fire barrier. This has been clarified in the report. The point made was that a cracked penetration can allow for the spread of fire to adjacent areas as demonstrated by this incident. This penetration seal was not of the quality one would expect of newer seal systems, but the incident does demonstrate that if such propagation is possible, severe consequences can result. The likelihood that such propagation is possible is yet to be demonstrated as discussed above.

Comment 12: Review Time

Final comments of the Edison Electric Institute were issued on April 15, 1988. Thus a period of at least two months from the issue of the first draft of the study report was available for comments. All comments received through June 7, 1988 have been addressed in this Appendix.

Comment 13: General

In any study of this kind it is necessary to make generalizations and assumptions which may later be found to have been conservative. Some of the analyses were, by definition, bounding analyses as the intention was to demonstrate the potential impact the identified issues would have on a typical plant risk analysis. Plant specific information was utilized where available, though extensive plant specific analyses were not in all cases possible within the scope of this effort. The limitations to the analyses performed are clearly called out within the body of the report.

APPENDIX F-5

COMMENTS OF THE EDISON ELECTRIC INSTITUTE FIRE PROTECTION COMMITTEE

EDISON ELECTRIC INSTITUTE The association of electric companies

1111 19th Street, N.W.
Washington, D.C. 20036-3691
Tel: (202) 778-6400

April 15, 1988

Mr. John Flack
Office of Nuclear Regulatory Research
U.S. Nuclear Regulatory Commission
Washington, D.C. 20555

Dear Mr. Flack:

As discussed at the recent ACR's Auxiliary Systems Presentation of your Fire Risk Scoping Study, members of the Edison Electric Institute Fire Protection Committee have reviewed the copy of SAND88-0177 "Fire Risk Scoping Study: Current Perception of Unaddressed Fire Risk Issues." It should be noted that Arizona Public Service Company, Wisconsin Electric Power Company, Duke Power Company and the Electric Power Research Institute have previously submitted comments under separate cover to either Sandia Labs or you. This review recognizes that those comments have been submitted and they have not been specifically repeated in this review. For completeness, a copy of each of those letters is attached. The comments provided below include general comments on the overall draft report and comments specific to the discussion of each of the six identified issues. They are a compilation of the comments provided by members of the EEI Fire Protection Committee. This committee consists of fire protection specialists from approximately 60 utilities. The majority of utilities with nuclear facilities are represented on the committee. This represents a vast pool of knowledge on utility fire protection in general and, specifically, nuclear fire protection.

General

- The report leaves the general impression that the present status of fire protection at Nuclear Power Plants is indeterminate with the result that the level of risk is increased. This perception is considered inaccurate. The very nature of nuclear safety and the regulatory environment in which nuclear plants operate has resulted in the implementation and installation of extensive fire protection features which continue to be examined in depth in ways unknown outside of the nuclear industry. Such examination provides beneficial feedback to improve levels of safety. This report uses generalized assumptions which are not substantiated by actual field conditions or a significant data base to conclude that the identified issues can only contribute to an increased level of risk. We are concerned that the report will be

misinterpreted and feel that it should more clearly emphasize that uncertainties remain with the application of PRA methodology to fire risk assessment rather than with the overall level of the fire protection which is currently provided as a result of compliance with regulatory requirements.

- The report identifies six unaddressed issues in fire protection. In proper context, it must be understood that these issues are unaddressed by the selected method of risk evaluation and do not represent unaddressed risk issues for nuclear plants. The unaddressed issues represent an increased risk above the assumed basis for the risk evaluation method only, and therefore, this document is a report on the inadequacy of current risk assessment and research methodology for fire. There is no basis presented to indicate that regulatory requirements or implemented levels of fire protection are inadequate.

Risk Significance of Control System Interactions

- Many of the risk factors which SANDIA implies as having a negative impact on safety can be easily addressed using conservative methods and prudent fire protection. For example,

  a) Damage to Control Room circuits can be bypassed using break-before-make transfer switches which switch in new fuses.

  b) Seismic caused fires will not occur in seismic design oil piping. Turbine-generator fires caused by seismic events will not damage safety-related equipment when a seismically designed fire wall is provided between the turbine-generator and the safety-related equipment.

  c) The complexity of spurious signals in the Control Room can be reduced to a simpler problem by identifying all components required to shutdown, all components required to support shutdown, all components whose spurious action will divert flow from required flow paths, and all components whose spurious action could result in a loss of reactor inventory. If these items and their circuits are properly analyzed and installed, spurious action of any other equipment will not prevent shutdown.

- The discussion of Section 4.0 cannot be generally evaluated, since specific plant designs vary significantly. The requirements for separation and freedom from fire induced LOCA's, for example, are clearly stated in existing regulations, have been specifically addressed by each plant, evaluated by plant specific Safety Evaluation Reports, and inspected for compliance.

Risk Significance of Manual Fire Fighting Effectiveness

- Sandia has completed a very in-depth survey of nuclear fire brigades and the survey shows a very diverse approach to fire brigade organization. However, a survey cannot determine brigade effectiveness. Effectiveness can only be determined by review utilizing personnel knowledgable in industrial fire brigades. The number of brigade members is an administrative decision which can be applied to regular employees as well as dedicated personnel. With their plant and equipment knowledge, Operators make excellent brigade members. The overall number of brigade members and the makeup of the brigade (dedicated vs. plant personnel) are not significantly relevant to brigade effectiveness. Organizational structure and level of training must be evaluated on a plant specific basis to determine overall brigade effectiveness. In addition, we disagree with the reports interpretation of the minimal training requirements necessary to comply with the regulations. The described level of training is not considered to meet the regulatory requirement.

Risk Significance of Total Environment Equipment Survival

- Proper selection and design of fire suppression systems will maximize the effectiveness of the systems during real fire situations and minimize suppressant damage. With respect to real fire situations which this report recognizes as a real hazard, loss experience has demonstrated that properly designed systems will result in significantly less damage than that which would be caused by the fire if no suppression action were available.

- The report provides a breakdown on root causes of the spurious operations. These root causes could be summarized as providing suppression systems which were designed and installed in a manner which makes the system vulnerable to inadvertent personnel actions or non-fire related plant events.

- Of the eight inadvertent incidents cited which involved signficant degradation of plant operability, six appear to involve deluge systems. Because these systems are open head systems, a thorough analysis is needed to determine if a deluge system is the best method for suppression. Once the proper suppression method is selected, adequate design, followed by a good maintenance program is required to insure reliability.

Risk Significance of Seismic/Fire Interactions

This portion of the report is not yet available for comment.

Risk Significance of Adequacy of Fire Barriers

- Fire tests provide a relative measure of barrier performance, not a direct correlation to their ability during a real fire under installed conditions. The severity of the existing test fire exposure is conservative relative to installed conditions. The present test methods have been in effect for many years resulting in construction of many actual fire barriers which have also been subjected to actual fires. Therefore, the actual fire performance of fire barriers tested to ASTM methods, provides a statistical basis for continued use of ASTM testing methods.

Risk Significance of the Adequacy of Analytical Fire Tools

- The report notes the purpose of this study is not to find fault with COMPBRN III. However, the entire report is based on the failure of COMPBRN III to agree with available data or the lack of sufficient data to support COMPBRN III.

The members of the EEI Fire Protection Committee hope these comments are helpful to Sandia in preparing the report. We appreciate the opportunity to offer the comments and are available to discuss any items further. Additionally, the committee could provide a small working group to provide assistance if a need arises.

Sincerely,

Gary N Miller

for Michael S. Kaminski
Fire Protection Officer
Wisconsin Electric
Power Company

Enclosures
cc: Mr. Steven Nowlen
Mr. Carlyle Michelson
Mr. Alex Marion
EEI FPC Nuclear Task Force

APPENDIX F-5.2

The following represent the Sandia response to the comments of the Edison Electric Institute Fire Protection Committee as documented in a letter dated April 15, 1988.

General Comment 1:

It is acknowledged that the nuclear industry has generally implemented extensive fire protective features which have enhanced the level of safety of operating reactors. The study does, however, raise questions regarding the extent to which certain issues of fire safety have been addressed and the potential impact on residual risk associated with each of these safety issues. The issues of manual fire fighting practices and the degree of training provided by utilities, the degree to which control interactions have been eliminated from plant systems, the effects of misapplied suppression on plant equipment, the degree to which plant equipment is vulnerable to smoke or suppression induced damage which is not eliminated by passive separation methods, the degree to which plants have identified and resolved seismic/fire vulnerabilities, and the actual performance characteristics of fire barrier elements all remain as issues not only for risk analysts but for plant operators as well. As demonstrated by the experience base reviews performed each of these issues, with a few exceptions, continues to pop up from time to time in the LERs. The conclusions of these experience base reviews was that not all of these issues has been resolved for all operating plants. The purpose of this study was to provide a risk basis upon which further investigations could be prioritized.

General Comment 2:

Of the issues identified two in particular are identified as potential regulatory issues, those of seismic/fire interactions and manual fire fighting effectiveness. Of these two that of manual fire fighting is identified as potentially significant while seismic/fire issues are considered low contributors to risk which can easily be resolved. However, in the area of fire fighting the regulations require only a minimally trained fire team be provided. We are aware that many utilities have gone well beyond the regulations in providing for manual fire teams well prepared to face an actual fire. However, other utilities follow only the letter of the regulations. As to the remaining issues, we agree that the regulations generally cover all contingencies. However, plant implementation appears to vary considerably and the study is

intended to identify the issues not previously considered in a risk analysis and to assess their potential significance. As risk analyses are being used as the basis for the identification and resolution of plant vulnerabilities it is important that potentially significant issues not be overlooked. We feel that the question of whether or not these issues have been addressed by the utilities must be asked on a case by case basis due to the variability in plant practices.

Comment 1 on Control Systems Interactions:

The comment is acknowledged as accurate. The questions raised in the study are to what degree are current analyses looking for such factors and, by implication, to what degree is the industry as a whole implementing such measures. For a risk analysis to be of use to a utility it is important that vulnerabilities be identified and it is then up to the utility to implement measures such as those outlined.

Comment 2 on Control Systems Interactions:

Here again the question is one not of the adequacy of regulation, but rather the degree to which the implementation has resolved the issues. As demonstrated by the specific case study of the LaSalle reactor, remaining interactions can produce significant risk contributors.

Comment on Manual Fire Fighting Effectiveness:

The comments on the evaluation of brigade effectiveness are all acknowledged as accurate. The review of plant practices was in no way utilized in the evaluation of brigade effectiveness. The brigade response times referred to in the case of LaSalle were in fact generated using a procedure similar to that outlined in the comment. A professional group of nuclear plant fire protection consultants performed on-site evaluations of the expected brigade responsiveness based on an evaluation of fire brigade training, records of timed fire drills, and walk-downs of the plant itself. Based on the plant practices review, however, it is apparent that certain utilities have interpreted the regulations in the same fashion as Sandia (i.e. the minimum requirement of four training sessions per year with one hands-on session included). One can not expect an individual who has merely watched three training films and held a fire extinguisher in his hands once to effectively fight a fire of the magnitude of those occasionally encountered in nuclear plants.

Comment 1 on Total Environment Equipment Survival

It is agreed that properly applied suppression is the most effective means of preventing fire induced damage given that a fire does occur. The questions raised, based on a fairly extensive experience base, are with respect to the caveats of proper selection, design, and installation. These are the issues which are clearly identified in the report as the culprits in spurious suppression events.

Comment 2 on Total Environment Equipment Survival

The comment is acknowledged as correct in general. However, as demonstrated by the experience review plants continue to have spurious suppression problems. This indicates a failure on the part of at least some utilities to implement the type of measures outlined in the comment.

Comment 3 on Total Environment Equipment Survival

This comment is similar to the two above in that implementation and design are identified as the root causes of adverse suppression effects.

Comment on Fire Barriers

The statistical basis for reliable performance of fire barriers based on past experience has not to our knowledge been demonstrated through any quantitative reviews. It is such a review which is recommended as the approach to resolution of this issue.

Comment on Analytical Fire Tools

We disagree that the <u>entire</u> report is based on the failure of COMPBRN III to agree with experimental data. It is true that the principal focus of the analytical tools investigations centered on the COMPBRN code, though only because COMPBRN has been the code of choice in nuclear power plant fire analyses. Other considerations in this section dealt with the misapplication of experimental data observed in certain past analyses. The statement that we did not set out to find fault with the COMPBRN code is accurate. The analyses reflect the general state of the art with respect to the modeling of nuclear power plant fires. The study concludes that the state of the art in general fire modeling is more advanced than that currently applied to nuclear plant situations.

DISTRIBUTION:

U. S. Nuclear Regulatory Commission
Attn: John Flack
Office of Nuclear Regulatory Research
Washington, DC 20555
(25 Copies)

U. S. Nuclear Regulatory Commission
Attn: William Farmer
Office of Nuclear Regulatory Research
Washington, DC 20555

U. S. Department of Energy
Attn: Andrew J. Pryor
Albuquerque Operations Office
PO Box 5400
Albuquerque, NM 87115

U. S. Department of Energy
Attn: Carl A. Caves
Walter W. Maybee
Mail Stop EG-34
Washington, DC 20545

U. S. Department of Energy
Attn: Justin T. Zamirowski
9800 S. Cass Ave.
Argonne, IL 60439

U. S. Department of the Navy
David M. Taylor Naval Ship
Research and Development Center
Attn: M. Allen Matteson
Mail Code 1740.2
Bethesda, MD 20084-5000

U. S. Department of the Navy
Attn: David Satterfield
National Center #4, Room 311
Naval Sea System Command (56Y52)
Washington, DC 20362

Lawrence Livermore National Laboratory
Attn: Harry Hasegawa
Mail Stop L-442
PO Box 5505
Livermore, CA 94550

Brookhaven National Laboratories
Attn: John Boccio
Bld. 130
Upton, NY 11793

Westinghouse Electric Corp.
Bettis Atomic Power Laboratory
Attn: Craig Markus, ZAP 34N
PO Box 79
West Mifflin, PA 15122-0079

Impell Corporation
Attn: Collin A. Lewis
John E. Echternacht
350 Lennon Ln.
Walnut Creek, CA 94598

Impell Corporation
Attn: Stanley J. Chingo
300 Tri-State International
Suite 300
Lincolnshire, IL 60015

Professional Loss Control
Attn: Kenneth Dungan
PO Box 446
Oak Ridge, TN 37830

Electric Power Research Institute
Attn: Jean-Pierre Sursock
Nuclear Power Division
3412 Hillview Ave.
Palo Alto, CA 94303

American Nuclear Insurers
Attn: D. Sherman, Library
Exchange Building, Suite 245
270 Farmington Ave.
Farmington, CT 06032

Underwriters Laboratories
Attn: Leon Przybyla
333 Pfingston Rd.
Northbrook, IL 60062

Patton Fire Suppression Systems
Attn: Richard Patton
5316 Roseville Rd., Suite P
North Highlands, CA 95660

Factory Mutual Research Corporation
Attn: Jeff Newman
1151 Boston-Providence Hwy.
Norwood, MA 02062

American Electric Power Service Corp.
Attn: Jack Grier
Mechanical Engineering Division
19th Floor
PO Box 16631
Columbus, OH 43216

Grinnell Fire Protection Co.
Attn: Joe Priest
10 Dorrance St.
Providence, RI 02903

Edison Electric Institute
Attn: Jim Evans
111 19th St., NW
Washington, DC 20036-3691

Wisconsin Electric Power Co.
Attn: Michael S. Kaminski
Fire Protection Officer, A-543
333 W. Everett St.
Milwaukee, WI 53203

Arkansas Power and Light
Attn: Ron Rospoli
1312 North Nashville St.
Russelville, AR 72801

Gesamthoshschule Kassel
Attn: Ulrich Heinze Schneider
Universitat das Landes Hessen
FB 14, Postfach 101380
3500 Kassel
Federal Republic of Germany

Koning und Heunisch
Attn: Dietmar Hosser
Lezter Hasenpfach 21
6000 Frankfurt/Main 70
Federal Republic of Germany

Geselschaft fur Reaktorsicherheit
Attn: Mr. Liemersdorf
Scwertnergasse 1
D-5000 Koln 1
Federal Republic of Germany

Centre Scientifique et
Technique du Batiment
Attn: Xavier Bodart
Station de Recherche
84 Avenue Jean-Jaures-Champs-sur-Marne
77428 Marne-La-Vallee Cedex 2
France

Societe Bertin & Cie
Attn: Serge Galant
BP No. 3
78373 Plaisir Cedex
France

Electricite De France
Attn: Jean Pierre Berthet
Thermal Production Headquarters
EDF-DSRE-6, Rue Ampere
BP 114
93203 Saint Denis Cedex 1
France

HM Nuclear Installations Inspectorate
Attn: Paul A. Woodhouse
St. Peters House
Stanley Precinct
Balliol Road
Bootle
Merseyside L20 3LZ
England

NUPEC
Attn: Kenji Takumi
No. 2 Akiyama Building
6-2, 3-Chome, Toranomon
Minatoku, Tokyo 105, Japan

Internal SNL:
3141 S. A. Landenberger (5)
3151 W. I. Klein
6400 D. J. McCloskey
6410 N. R. Ortiz
6420 J. V. Walker
6440 D. A. Dahlgren
6450 T. R. Schmidt
6442 W. A. von Riesemann
6447 M. P. Bohn
6447 S. P. Nowlen (25)
6447 V. F. Nicolette
6447 J. A. Lambright
6448 D. L. Berry
8524 J. A. Wackerly

NRC FORM 335 (2-84) NRCM 1102, 3201, 3202

U.S. NUCLEAR REGULATORY COMMISSION

BIBLIOGRAPHIC DATA SHEET

SEE INSTRUCTIONS ON THE REVERSE

1. REPORT NUMBER (Assigned by TIDC, add Vol. No., if any)

NUREG/CR-5088
SAND88-0177

2. TITLE AND SUBTITLE

Fire Risk Scoping Study: Investigation of Nuclear Power Plant Fire Risk, Including Previously Unaddressed Issues

3. LEAVE BLANK

4. DATE REPORT COMPLETED

MONTH	YEAR
June	1988

5. AUTHOR(S)

J. A. Lambright, S. P. Nowlen,
V. F. Nicolette, M. P. Bohn

6. DATE REPORT ISSUED

MONTH	YEAR
January	1989

7. PERFORMING ORGANIZATION NAME AND MAILING ADDRESS (Include Zip Code)

Sandia National Laboratories
P.O. Box 5800
Albuquerque, NM 87185

8. PROJECT/TASK/WORK UNIT NUMBER

9. FIN OR GRANT NUMBER

FIN A1825

10. SPONSORING ORGANIZATION NAME AND MAILING ADDRESS (Include Zip Code)

Division of Regulatory Applications
Office of Nuclear Regulatory Research
U.S. Nuclear Regulatory Research
Washington, DC 20555

11a. TYPE OF REPORT

Technical

b. PERIOD COVERED (Inclusive dates)

12. SUPPLEMENTARY NOTES

13. ABSTRACT (200 words or less)

An investigation of nuclear power plant fire risk issues raised as a result of the USNRC sponsored Fire Protection Research Program at Sandia National Laboratories has been performed. The specific objectives of this study were (1) to review and requantify fire risk scenarios from four fire probabilistic risk assessments (PRAs) in light of updated data bases made available as a result of USNRC sponsored Fire Protection Research Program and updated computer fire modeling capabilities, (2) to identify potentially significant fire risk issues that have not been previously addressed in a fire risk context and to quantify the potential impact of those identified fire risk issues where possible, and (3) to review current fire regulations and plant implementation practices for relevance to the identified unaddressed fire risk issues. Six new fire risk issues were identified which had not previously been addressed in a fire risk context. These six issues are (1) control systems interactions, (2) seismic/fire interactions, (3) manual fire fighting effectiveness (including smoke control), (4) total environment equipment survival (including the spurious operation of fire suppression systems), (5) the adequacy of fire barrier qualification methods, and (6) the adequacy of analytical tools for fire.

14. DOCUMENT ANALYSIS – a. KEYWORDS/DESCRIPTORS

fire
fire risk
nuclear power plant fire safety

b. IDENTIFIERS/OPEN-ENDED TERMS

15. AVAILABILITY STATEMENT

Unlimited

16. SECURITY CLASSIFICATION

(This page)
Unclassified

(This report)
Unclassified

17. NUMBER OF PAGES

18. PRICE

*U.S. GOVERNMENT PRINTING OFFICE: 1989-241-590:80302

UNITED STATES
NUCLEAR REGULATORY COMMISSION
WASHINGTON, D.C. 20555

OFFICIAL BUSINESS
PENALTY FOR PRIVATE USE, $300

SPECIAL FOURTH-CLASS RATE
POSTAGE & FEES PAID
USNRC

PERMIT No. G-67

[redacted]