FPL Energy
Seabrook Station

FPL Energy Seabrook Station
P.O. Box 300
Seabrook, NH 03874
(603) 773-7000

August 7, 2006

SBK-L-06059
Docket No. 50-443

U. S. Nuclear Regulatory Commission
Attn: Document Control Desk
Washington, DC 20555-0001

Seabrook Station
License Amendment Request 06-03
"Application for Amendment to the Technical Specifications
for Miscellaneous Changes"

FPL Energy Seabrook, LLC (FPL Energy Seabrook) has enclosed herein License Amendment Request (LAR) 06-03. License Amendment Request 06-03 is submitted pursuant to the requirements of 10 CFR 50.90 and 10 CFR 50.4.

This LAR proposes a change to the Seabrook Station Technical Specifications (TS) to correct a joint owner name in the operating license, remove an additional condition that is no longer required from Appendix C to the Facility Operating License, and remove the Bases sections from the TS Index. Additionally, this LAR removes two manual valves from TS Table 3.3.9, Remote Shutdown System, and adds the requirement that only one charging pump is permitted to be aligned for injection into the reactor coolant system in Modes 4, 5, and 6 to TS 3.4.9.3. The LAR proposes to remove a one-hour reporting requirement for portable makeup pump system storage from TS 3.7.4, correct an error in TS 4.7.4.3 related to service water pumphouse water level and delete a footnote from TS 3.7.6.2 that was applicable to Cycle 7 only. The proposed change also deletes the TS 6.6 reporting requirement for a safety limit violation as the reporting requirements are redundant to existing regulations and clarifies TS 6.7.6, Radioactive Effluent Controls Program, for performance of dose projections. Attachment 1 provides a mark-up of the technical specification (TS) pages showing the proposed changes and Attachment 2 contains the referenced drawings. The retyped TS pages will be provided at a later date upon request from the NRC.

As discussed in the enclosed LAR, the proposed change does not involve a significant hazard consideration pursuant to 10 CFR 50.92. A copy of this letter and the enclosed LAR has been forwarded to the New Hampshire State Liaison Officer pursuant to 10 CFR 50.91(b). FPL Energy Seabrook has determined that LAR 06-03 meets the criteria of 10 CFR 51.22(c)(9) for a categorical exclusion from the requirements for an Environmental Impact Statement. The Station Operation Review Committee and the Company Nuclear Review Board have reviewed this LAR.

A001

FPL Energy Seabrook requests NRC Staff review and approval of LAR 06-03 with issuance of a license amendment by July 31, 2007 and implementation of the amendment within 90 days.

Should you have any questions regarding this letter, please contact Mr. James M. Peschel, Regulatory Programs Manager, at (603) 773-7194.

Very truly yours,

FPL Energy Seabrook, LLC.

Gene St. Pierre
Site Vice President

Enclosures:
Notarized Affidavit
Licensee's Evaluation of the Proposed Change

Attachments:
1. Proposed Technical Specification Change (mark-up)
2. Referenced Drawings

cc: S. J. Collins, NRC Region I Administrator
E. Miller, NRC Project Manager, Project Directorate I-2
G.T. Dentel, NRC Senior Resident Inspector

Mr. Bruce G. Cheney, ENP, Director, Division of Emergency Services
N.H. Department of Safety
Division of Emergency Services, Communications, and Management
Bureau of Emergency Management
33 Hazen Drive
Concord, NH 03305

FPL Energy
Seabrook Station

AFFIDAVIT

SEABROOK STATION UNIT 1

Facility Operating License NPF-86
Docket No. 50-443

License Amendment Request 06-03
"Application for Amendment to the Technical Specification for Miscellaneous Changes"

The following information is enclosed in support of this License Amendment Request:

- **Enclosure - Licensee's Evaluation of the Proposed Change**
- **Attachment 1 - Proposed Technical Specification Change (mark-up)**
- **Attachment 2 - Referenced Drawings**

I, Gene F. St. Pierre, Site Vice President of FPL Energy Seabrook, LLC hereby affirm that the information and statements contained within this License Amendment Request are based on facts and circumstances which are true and accurate to the best of my knowledge and belief.

Sworn and Subscribed
before me this
7th day of August, 2006

Michael D. O'Keefe
Notary Public

Gene St. Pierre
Gene St. Pierre
Site Vice President

MICHAEL D. O'KEEFE
MY COMMISSION EXPIRES FEB. 5, 2008
NOTARY PUBLIC
NEW HAMPSHIRE

LICENSEE'S EVALUATION

Subject: License Amendment Request 06-03, Application for Amendment to the Technical Specifications for Miscellaneous Changes

1.0 DESCRIPTION

This proposed amendment will revise the Seabrook Station Operating License to correct a joint owner name, remove an additional condition that is no longer required from Appendix C, and remove the Bases sections from the Technical Specification Index. The proposed amendment will remove two manual valves from TS Table 3.3.9, Remote Shutdown System, and add a requirement for the alignment of only one charging pump to TS 3.4.9.3. Additionally, the proposed amendment will remove a one-hour reporting requirement from TS 3.7.4, correct an error in TS 4.7.4.3 related to service water pumphouse water level and delete a footnote from TS 3.7.6.2. The proposed amendment also deletes TS 6.6 reporting requirements for a safety limit violation, and revises TS 6.7.6, Radioactive Effluent Controls Program, to provide clarification for the performance of dose projections.

2.0 PROPOSED CHANGE

Page Number	Change
License Page 1	Change "Taunton Municipal Light Plant" to "Taunton Municipal Lighting Plant" in page footnote.
License Page 7	J. Additional Conditions, replace "94" with the issued amendment number.
License – Appendix C	Delete license condition for Amendment 94.
Index page x, xi, and xii	Delete from 3/4.0 APPLICABILITY through 3/4.12.3. Add "Refer to Bases Section Index." Move remaining entries to new pages.
3/4 3-47	TRANSFER SWITCHES/CONTROL CIRCUITS Delete /127 from item 1. Delete /128 from item 2.
3/4 4-34a	Add action f) With more than one charging pump capable of injecting into the RCS, immediately initiate action to restore a maximum of one charging pump capable of injecting into the RCS.
New page 3/4 4-35a	Add Surveillance Requirement 4.4.9.3.5 and footnotes *** and **** for charging pump alignment.
3/4 7-13	Remove from action e. "or continue operation and notify the NRC within the following 1 hour in accordance with the requirements of 10 CFR 50.72 of actions to ensure an adequate supply of makeup water for the service water cooling tower for a minimum of 30 days" and replace with "or, within the next 96 hours, implement actions to ensure an adequate supply of makeup water for the service water cooling tower for a minimum of 30 days."
3/4 7-13A	In Surveillance Requirement 4.7.4.3, replace 5'0" (-36'-0" Mean Sea Level) with 25.1' (-15.9' Mean Sea Level).

Page Number	Change
3/4 7-18a	In MODES 5 and 6 action a., delete * and remove associated footnote.
6-4	Replace 6.6, SAFETY LIMIT VIOLATION with (THIS SPECIFICATION NUMBER IS NOT USED). Delete following text.
6-8	g.5), remove "and projected" from first sentence. Add "Determination of projected dose contribution from radioactive effluents in accordance with the methodology in the ODCM at least every 31 days.

3.0 BACKGROUND

License Amendment 28 (Reference 7.1), issued January 7, 1994, revised the Facility Operating License to reflect the transfer of the Vermont Electric Generation and Transmission Cooperative, Inc.'s ownership interest to North Atlantic Energy Corporation. In the proposed form of license amendment submitted to the NRC, the name of a Joint Owner of Seabrook Station was misspelled. This LAR corrects the name of Taunton Muncipal Light Plant to Taunton Municipal Lighting Plant in the footnote on page 1 of the Facility Operating License.

Amendment 94 (Reference 7.2), issued October 3, 2003 added an additional condition to Facility Operating License, Appendix C, Additional Conditions, requiring FPLE Seabrook, LLC to maintain a program in effect to control the administration of potassium iodide (KI) to Control Room personnel during core alterations when the Primary Containment Equipment Hatch is open. The program was to remain in effect until the current licensing basis for unfiltered in-leakage was revised. License Amendment 100, issued February 24, 2005, for Alternative Source Term (Reference 7.3) revised the licensing basis for unfiltered in-leakage. Therefore, the license condition is no longer required and is being deleted.

The bases section of the Technical Specification (TS) Index does not reflect the current bases index. The index for the bases section of the TS is changed through the Bases Change process and is inconsistent with the TS Index. This LAR removes the bases section from the TS Index and refers users to the Bases Section Index.

Table 3.3-9, Remote Shutdown System, is a listing of components requiring operable remote safe shutdown controls. Emergency Feedwater Pump Steam Supply valves MS-V-127 and MS-V-128 are manually operated valves and therefore cannot be operated remotely. This LAR removes these valves from the table.

Amendment 93 (Reference 7.4), issued October 3, 2003 relocated TS 3.1.2.1 through 3.1.2.6 to the Technical Requirements Manual. Prior to Amendment 93, the TS included a stipulation that only one centrifugal charging pump (CCP) was permitted to be aligned for injection into the reactor coolant system (RCS). The basis for relocating TS 3.1.2.1 through 3.1.2.6 was that these

TS address maintaining shutdown margin using the boration function, and this function does not meet any criteria of 10 CFR 50.36 for inclusion in the TS. The basis for maintaining one CCP inoperable in Modes 4, 5, and 6 is not, however, to support maintaining shutdown margin. This limitation on CCP capability is to ensure that a pressure increase as a result of a mass addition into a water-solid RCS is within the relieving capacity of the cold overpressure protection system. This LAR adds the charging pump limitation to TS 3.4.9.3. Additionally, this LAR adds a note allowing two pumps to be made capable of injecting under administrative control for up to 1 hour during pump-swap operations. Technical Specification Task Force Improved Standard Technical Specifications Change Traveler (TSTF) 285-A, Rev. 1 (Reference 7.5) approved this 1-hour allowance.

TS 3.7.4 provides the actions required for an inoperable Service Water System/Ultimate Heat Sink. Action e. requires the portable tower makeup pump system be restored to its required condition within 72 hours if the system is not stored in its design operational readiness state. Action e. also contains a requirement to notify the NRC within one hour in accordance with the requirements of 10 CFR 50.72 (Reference 7.6) if the portable tower makeup pump system is not restored to its design operational readiness state within 72 hours. This condition does not meet the immediate reporting requirements of 10 CFR 50.72; therefore, this LAR removes the one-hour reporting requirement from the TS action statement. In addition, the revised action requires implementing actions, within the next 96 hours, that ensure an adequate supply of makeup water for the service water cooling tower for a minimum of 30 days.

Amendment 32 (Reference 7.7), issued October 4, 1994 revised TS 3.7.4, Service Water System/Ultimate Heat Sink. TS Surveillance Requirement 4.7.4.3 calls for the service water pumphouse water level to be verified at or above 5'0" (-36'-0" Mean Sea Level) at least once per 24 hours. It was later identified that the minimum level of 5 feet is not correct. The service water calculation 4.3.08.72F (Reference 7.8) assumes a minimum level of -15.9 feet Mean Sea Level. The correct minimum level for the TS, based on the calculation, is 25.1' (-15.9' Mean Sea Level). This LAR corrects the service water pumphouse level.

Amendment 62 (Reference 7.9), issued September 17, 1999 increased the TS 3.7.6.2 allowed outage time for the Control Room Air Conditioning subsystem from 30 days to 60 days, on a one-time basis, to allow adequate time to replace portions of the existing system. This one-time extension was applicable to cycle 7 only. This LAR removes the one-time extension.

TS 6.6, Safety Limit Violation, provides for a one-hour report and submittal of a safety limit violation report within 14 days in the event a safety limit is violated. 10 CFR 50.36 (Reference 7.11) contains the requirements for shutdown, reporting, and resuming operations in the event of a safety limit violation. 10 CFR 50.36 directs licensees to notify the Commission as required by 10 CFR 50.72 (Reference 7.6) and submit a Licensee Event Report as required by 10 CFR 50.73 (Reference 7.10). The Nuclear Regulatory Commission's requirements for immediate notification with written follow-up requirements (Licensee Event Reports) of events at operating nuclear power reactors are stated in 10 CFR 50.72 and 10 CFR 50.73. Thus, the requirements of TS 6.6 are adequately governed by the requirements of 10 CFR 50.36, 10 CFR 50.72 and 10 CFR 50.73. Additionally, Technical Specification Task Force Improved Standard Technical

Specifications Change Traveler (TSTF) 5-A, Rev. 1 (Reference 7.12), approved by the NRC on June 11, 1996, allows the deletion of requirements from the Technical Specifications that are duplicative or contained in other regulations.

TS 6.7.6g.5) provides the requirements of the Radioactive Effluent Controls Program for the determination of cumulative and projected dose contributions from radioactive effluents. As written, this requirement is confusing as to the requirements for determination of projected dose. Currently, the TS requires the determination of cumulative and projected dose contributions from radioactive effluents for the current calendar quarter and current calendar year at least every 31 days. Industry/TSTF Standard Technical Specification Change Traveler (TSTF) 308-A, Rev. 1 (Reference 7.13) contains revised wording provided by the NRC staff to clarify the intent of this TS. Revising the wording to indicate that projected dose contribution be performed every 31 days better describes the actual intent of dose projections.

4.0 TECHNICAL ANALYSIS

Correction of Joint Owner Name

The page 1 footnote of the Facility Operating License lists a Seabrook Station Joint Owner as Taunton Municipal Light Plant. The correct name of this joint owner is Taunton Municipal Lighting Plant. This change corrects a typographical error.

Deletion of Additional Condition

An additional condition to Facility Operating License, Appendix C, Additional Conditions, was added with Amendment 94 to require FPLE Seabrook, LLC to maintain a program in effect to control the administration of potassium iodide (KI) to Control Room personnel during core alterations when the Primary Containment Equipment Hatch is open. The program was to remain in effect until the current licensing basis for unfiltered in-leakage was revised. License Amendment 100, issued February 24, 2005, for Alternative Source Term revised the licensing basis for unfiltered in-leakage, therefore the additional condition is no longer required.

Removal of Bases Section from Technical Specification Index

Page x, xi, and xii of the Technical Specification Index contain the indexing information for the Section 3.0/4.0 Bases. The TS Index does not accurately reflect the current bases as the bases and its index are changed through the Seabrook Station Bases Change process. This process is described in TS 6.7.6j. The proposed change deletes the bases section from the TS Index and refers users to the index located in the Bases Section. This is an administrative change to remove the inconsistency between the two indexes.

Removal of Manual Valves from Table 3.3-9, Remote Shutdown System

Table 3.3-9, Remote Shutdown System, is a listing of components requiring operable remote safe shutdown controls. TS surveillance requirement 4.3.3.5.1 requires that each remote shutdown monitoring instrumentation channel in Table 3.3-9 be demonstrated operable by performance of a channel check every 31 days and a channel calibration every 18 months. Additionally, surveillance requirement 4.3.3.5.2 requires that each Remote Shutdown System transfer switch, power and control circuit, listed in Table 3.3-9, including the actuated components, are demonstrated operable at least once per 18 months. Emergency Feedwater Pump Steam Supply valves MS-V-127 and MS-V-128 were originally employed as 10 CFR 50, Appendix A, GDC 57 containment isolation valves for the Emergency Feedwater (EFW) pump turbine steam supply valves and are listed in Table 3.3-9. To enhance plant reliability, a design change (DCR 90-032) was implemented in 1991 to replace the pneumatic actuator installed on these valves with a gear operated manual actuator. Additionally, the design change upgraded the downstream branch header remote/manual isolation valves MS-V-393 and MS-V-394 for use as the GDC 57 containment isolation valves. MS-V-393 and MS-V-394 replaced MS-V-127 and MS-V-128 as the GDC 57 containment isolation valves. MS-V-127 and MS-V-128 are now used as manual isolation valves and no longer contain the "controls" required to be verified operable by the surveillance requirement. These valves are locked open (refer to Drawing 1-MS-B20582 in Attachment 3) with remote position indicators located on the back of the main control board in the Control Room. The limit switch on each valve is verified operable in accordance with surveillance requirement 4.3.3.5.2 by unlocking and closing the valve and verifying the remote position indicator changes with the change in valve position. The valve is then opened and locked and the remote position indicator verified. GDC 19 requires "Equipment at appropriate locations outside the control room shall be provided (1) with a design capability for prompt hot shutdown of the reactor, including necessary instrumentation and controls to maintain the unit in a safe condition during hot shutdown, and..." MSV-127 and MS-V-128 are manually operated, locked open valves, and actuation of these valves is not necessary to maintain the plant in a safe shutdown condition under accident conditions. Consequently, MS-V-127 and MS-V-128 do not meet the criteria of GDC 19 or 10 CFR 50.36 for inclusion in the TS and are eliminated from TS Table 3.3-9 with this change.

Addition of Charging Pump Limitation to Technical Specification 3.4.9.3

Prior to Amendment 93 to the Facility Operating License, the Technical Specifications included a stipulation that only one centrifugal charging pump (CCP) was permitted to be aligned for injection into the reactor coolant system (RCS). This TS requirement was relocated to the Technical Requirements Manual upon implementation of Amendment 93, issued October 3, 2003. The basis for relocating TS 3.1.2.1 through 3.1.2.6 was that these TS address maintaining shutdown margin using the boration function, and this function does not meet any criteria of 10 CFR 50.36 for inclusion in the TS.

The basis for maintaining one CCP inoperable in Modes 4, 5, and 6 is not only to support maintaining shutdown margin. The limitation on CCP capability is also to ensure that a pressure increase as a result of a mass addition into a water-solid RCS is within the relieving capacity of

the cold overpressure protection system. Either pressure operated relief valve (PORV) or either residual heat removal (RHR) suction relief valve has adequate relieving capability to protect the RCS from over-pressurization when the transient is limited to either: (1) the start of an idle RCP with the secondary water temperature of the steam generator less than or equal to 50°F above the RCS cold leg temperatures, or (2) the start of a centrifugal charging pump and its injection into a water-solid RCS. The limitation that permits only one CCP to be aligned for RCS injection ensures the overpressure protection system can fulfill its function in the event of a single failure. If one of the two required relief devices fails, the remaining relief valve can relieve the overpressure condition resulting from operation of one CCP in a water-solid condition.

Additionally, UFSAR Section 7.4.5.2 (Reference 7.14) states that one charging pump is disabled as part of the standard operating procedure for any shutdown to avoid low temperature over pressurization (LTOP) of the reactor vessel.

This proposed amendment revises TS 3.4.9.3, Overpressure Protection Systems, to limit CCP capability for injecting into the RCS. The overpressure protection system satisfies Criterion 2 of 10 CFR 50.36(c)(2)(ii), and the operating restriction on CCPs ensures the system is capable of providing adequate relieving capacity. A limitation on CCP operation is also included in Improved Standard TS 3.4.12, Low Temperature Overpressure Protection. The proposed amendment also adds a note to allow that an additional pump may be capable of injecting under administrative control for up to 1 hour during pump swap operations. This 1-hour allowance was approved by the NRC on May 12, 1999 in Technical Specification Task Force Improved Standard Technical Specification Change Traveler (TSTF) 285-1, Rev. 1. TSTF-285-A, Rev. 1 states that one hour is reasonable considering the small likelihood of an event during this brief period and the other administrative controls available (e.g., operator action to stop any pump that inadvertently starts).

Removal of One-hour Reporting Requirement from TS 3.7.4

TS 3.7.4, Service Water Ultimate Heat Sink, Limiting Condition for Operation c. requires a portable cooling tower makeup system stored in its design operational readiness state. Action e of the TS currently states "With the portable tower makeup pump system not stored in its design operational readiness state, restore the portable tower makeup pump system to its required condition within 72 hours or continue operation and notify the NRC within the following 1 hour in accordance with the requirements of 10 CFR 50.72 of actions to ensure an adequate supply of makeup water for the service water cooling tower for a minimum of 30 days." The immediate notification requirements of 10 CFR 50.72 do not apply to this type of condition. One-hour reports are required for the declaration of an emergency or for a deviation from the plant's Technical Specifications authorized pursuant to 10 CFR 50.54(x). Neither of these conditions would apply to the storage of a portable cooling tower makeup pump system. Consequently, this proposed amendment deletes the erroneous one-hour reporting requirement from the action statement.

UFSAR Section 9.2.5.3 c (Reference 7.14) describes the portable cooling tower makeup pump system as consisting of a diesel-driven pump, 3000 feet of flexible hose and associated couplings. The system is stored in a seismic location and is maintained in its design operational readiness state as required for Service Water System operability. Additionally, the action allows 72-hours to restore the system to its required condition, which is a reasonable amount of time for restoration. If the portable tower makeup pump system is not restored to its design operational readiness state within 72 hours, the revised action requires implementing measures, within the next 96 hours, to ensure that an adequate supply of makeup water is available for the service water cooling tower for a minimum of 30 days. The cooling tower design includes sufficient water in the cooling tower basin for seven days of operation during accident conditions. Consequently, the time limits of the action ensure a source of makeup water is available to the cooling tower within seven days.

Correction of TS Surveillance Requirement 4.7.4.3 Water Level

TS Surveillance Requirement 4.7.4.3 calls for the service water pumphouse water level to be verified at or above 5'0" (-36'-0" Mean Sea Level) at least once per 24 hours. This level is not adequate to support service water pump operation and is therefore not correct. The inadequate level stated in the surveillance was identified in 1997 and administrative controls put in place to verify adequate pumphouse water level. The Control Room TS log has operators verify, daily on the Operations TS Logs, that the service water pumphouse level is greater than 25 feet.

Calculation 4.3.08.72F, Attachment 1, indicates (page 133) that the minimum service water pumphouse level to support service water system operation is (-)15.9' Mean Sea Level (MSL). Calculation 4.3.08.36F indicates (Appendix A, page 4) that the 0' indication for this instrument is (-)41' MSL. The required indicated level is therefore 41' (*i.e.* MSL) - 15.9' = 25.1'. The proposed change corrects the minimum pumphouse level error.

The Service Water (SW) system provides cooling water for the plant's primary and secondary heat loads. The major heat loads are the Primary Component Cooling Water (PCCW) heat exchangers and the Diesel Generator Water Jacket (DGWJ) heat exchangers. The secondary heat loads are the Secondary Component Cooling Water (SCCW) heat exchangers (main and auxiliary) and the Condenser Water Box Priming Pump (CWBPP). The SW system has two sources of cooling water supply: the SW pumphouse (normal) and the service water cooling tower (alternate). The ocean via the intake tunnel is the normal water source. The cooling tower is the alternate source of shutdown cooling in the very unlikely event that the intake and discharge tunnels are blocked due to a seismic event. The water level in the SW pumphouse varies as a result of ocean tidal activity and the number of service water pumps operating. The pumphouse level is measured by level indicator 1-SW-LT-8260 (refer to Drawing 1-SW-B20794 in Attachment 3) located in the pumphouse. The indicator has a range of 0 – 64 ft H2O and is read from the main control board. The level is also monitored by computer point A1538 from level indicator 1-SW-LT-8260. A graph showing the pumphouse water levels for 2005 is included in Attachment 3. The minimum level in 2005 was 26.33 feet and the maximum level was 48.57 feet. As the North Atlantic tides are consistent from year to year, it is unlikely that the water level was ever below the required 25.1 feet level.

Removal of One-Time AOT Extension from TS 3.7.6.2

In September 1999, the Commission granted a one-time extension to the allowed outage time (AOT) for TS 3.7.6.2 to allow adequate time to replace portions of the existing Control Room Air Conditioning subsystem. Amendment 62 increased the TS 3.7.6.2 allowed outage time for the Control Room Air Conditioning subsystem from 30 days to 60 days. This one-time extension was applicable to cycle 7 only and can be removed from the Technical Specification.

Deletion of TS 6.6, Safety Limit Violation

TS 6.6, Safety Limit Violation, provides for a one-hour report and submittal of a safety limit violation report within 14 days in the event a safety limit is violated. Technical Specification Task Force Improved Standard Technical Specifications Change Traveler (TSTF) 5-A, Rev. 1 allows the deletion of requirements from the TS that are duplicative or contained in other regulations or required to comply with regulations (10 CFR 50.36). The NRC approved the TSTF on June 11, 1996. 10 CFR 50.36 contains the requirements for shutdown, reporting, and resuming operations in the event of a safety limit violation. 10 CFR 50.36 directs licensees to notify the Commission as required by 10 CFR 50.72 and submit a Licensee Event Report as required by 10 CFR 50.73. The Nuclear Regulatory Commission's requirements for immediate notification with written follow-up requirements (Licensee Event Reports) of events at operating nuclear power reactors are stated in 10 CFR 50.72 and 10 CFR 50.73. The requirements of TS 6.6 are adequately governed by the requirements of 10 CFR 50.36, 10 CFR 50.72 and 10 CFR 50.73. Additionally, the Improved Technical Specifications do not contain a reporting requirement for Safety Limit Violations. The notification requirements contained in TS 6.6 are redundant to 10 CFR 50.36, 10 CFR 50.72 and 10 CFR 50.73 and are not required by the Improved Technical Specifications. As such, TS 6.6 is not required.

Clarification of TS 6.7.6 g. 5)

TS 6.7.6 g., Radioactive Effluent Controls Program, item 5, provides the requirements for the determination of cumulative and projected dose contributions. As currently written both cumulative and projected dose contributions from radioactive effluents are required for the current quarter and current calendar year in accordance with the methodology and parameters in the ODCM at least every 31 days. Industry/TSTF Standard Technical Specification Change Traveler TSTF-308-A, Rev. 1, approved by the NRC on July 6, 2000 provides wording to clarify that projected dose contributions from radioactive effluents are determined at least every 31 days. The TSTF removes the requirement to determine projected dose contributions for the current calendar quarter and current calendar year. Cumulative dose contributions are still determined for the current calendar quarter and current calendar year every 31 days. The proposed amendment changes the wording of TS 6.7.6 g 5) to adopt the wording approved in the TSTF.

5.0 REGULATORY SAFETY ANALYSIS

5.1 No Significant Hazards Consideration

1. *The proposed changes do not involve a significant increase in the probability or consequences of an accident previously evaluated.*

   The probability or consequences of accidents previously evaluated in the UFSAR are unaffected by this proposed change. There is no change to any equipment response or accident mitigation scenario, and this change results in no additional challenges to fission product barrier integrity. The proposed change does not alter the design, configuration, operation, or function of any plant system, structure, or component. As a result, the outcomes of previously evaluated accidents are unaffected. The proposed change corrects errors, removes an outdated license condition, removes an inconsistency between indexes and deletes unnecessary reporting requirements. Therefore, the proposed change does not involve a significant increase in the probability or consequences of an accident previously evaluated.

2. *The proposed changes do not create the possibility of a new or different kind of accident from any previously evaluated.*

   No new accident scenarios, failure mechanisms, or limiting single failures are introduced as a result of the proposed change. The proposed change does not challenge the performance or integrity of any safety-related system. The proposed change neither installs or removes any plant equipment, nor alters the design, physical configuration, or mode of operation of any plant structure, system, or component. No physical changes are being made to the plant, so no new accident causal mechanisms are being introduced. The proposed change corrects errors, removes an outdated license condition, removes an inconsistency between indexes and deletes unnecessary reporting requirements. Therefore, the proposed change does not create the possibility of a new or different kind of accident from any previously evaluated.

3. *The proposed changes do not involve a significant reduction in the margin of safety.*

   The margin of safety associated with the acceptance criteria of any accident is unchanged. The proposed change will have no affect on the availability, operability, or performance of the safety-related systems and components. The proposed change does not alter the design, configuration, operation, or function of any plant system, structure, or component. The ability of any operable structure, system, or component to perform its designated safety function is unaffected by this change. The proposed change corrects errors, removes an outdated license condition, removes an inconsistency between indexes and deletes unnecessary reporting requirements. Therefore, the margin of safety as defined in the TS is not reduced and the proposed change does not involve a significant reduction in a margin of safety.

Based on the above, FPL Energy Seabrook concludes that the proposed amendment presents no significant hazards consideration under the standards set forth in 10 CFR 50.92 (c), and accordingly, a finding of "no significant hazards consideration" is justified.

5.2 Applicable Regulatory Requirements / Criteria

5.2.1 Regulations

Removal of Manual Valves from Table 3.3-9, Remote Shutdown System

The regulatory basis for TS 3.3.3.5, "Remote Shutdown System," is to ensure that sufficient capability is available to permit safe shutdown of the facility from locations outside of the control room. This capability is required in the event control room habitability is lost and is consistent with General Design Criterion (GDC) 19 of Appendix A to 10 CFR Part 50.

10 CFR Part 50, Appendix A, GDC 19, "Control Room," requires that equipment at appropriate locations outside the control room shall be provided (1) with a design capability for prompt hot shutdown of the reactor, including necessary instrumentation and controls to maintain the unit in a safe condition during hot shutdown, and (2) with a potential capability for subsequent cold shutdown of the reactor through the use of suitable procedures.

10 CFR Part 50, Appendix A, GDC 57, "Closed system isolation valves," requires each line that penetrates primary reactor containment and is neither part of the reactor coolant pressure boundary nor connected directly to the containment atmosphere shall have at least one containment isolation valve which shall be either automatic, or locked closed, or capable of remote manual operation. This valve shall be outside containment and located as close to the containment as practical. A simple check valve may not be used as the automatic isolation valve.

Addition of Charging Pump Limitation to Technical Specification 3.4.9.3

The regulatory basis for TS 3.4.9.3, "Overpressure Protection Systems," is to ensure that the RCS will be protected from pressure transients which could exceed the limits of Appendix G to 10 CFR Part 50 when one or more of the RCS cold legs are less than or equal to 290°F.

10 CFR 50, Appendix G, 2., "Pressure-Temperature Limits and Minimum Temperature Requirements," provides pressure-temperature limits and minimum temperature requirements for the reactor vessel defined by the operating condition (i.e., hydrostatic pressure and leak tests, or normal operation including anticipated operational occurrences), the vessel pressure, whether or not fuel is in the vessel, and whether the core is critical. The appropriate requirements on both the

pressure-temperature limits and the minimum permissible temperature must be met for all conditions.

The design bases for the Reactor Coolant Inventory and Pressure Control discusses "the safety injection pumps and one charging pump are disabled as part of the standard operating procedure for any shutdown to avoid low temperature over pressurization (LTOP) of the reactor vessel."

Correction of TS Surveillance Requirement 4.7.4.3 Water Level

The regulatory basis for TS 3.7.4, "Service Water/Ultimate Heat Sink," is to ensure that sufficient cooling capacity is available for continued operation of safety-related equipment during normal and accident conditions.

10 CFR Part 50, GDC 44, "Cooling Water," requires a system to transfer heat from structures, systems, and components important to safety, to an ultimate heat sink shall be provided. The system safety function shall be to transfer the combined heat load of these structures, systems, and components under normal operating and accident conditions.

Removal of One-hour Reporting Requirement from TS 3.7.4

The design bases for the Service Water System includes, in addition to the Service Water Pumping System, a portable tower makeup pump maintained on site. It is capable of providing makeup water to the tower basin (without temperature limitation) from the nearby Browns River or Hampton Harbor with several locations accessible by road. It consists of 3000 feet of 5-inch ID rubber-lined polyester flexible hose in 30-100 foot lengths, associated hose couplings and a portable diesel-driven pump that is self-priming within 15 feet of water level, and is designed to deliver a minimum of 200 gpm from the water source to the tower basin.

10 CFR 50.72, "Immediate Notification Requirements for Operating Nuclear Power Reactors," provides the requirements for the submittal of one-hour, four-hour and eight-hour reports to the NRC Operations Center via the Emergency Notification System.

10 CFR 50.73, "Licensee Event Report System," provides the requirements for the submittal of a Licensee Event Report (LER) for events described in the paragraph within 60 days after discovery of the event.

10 CFR 50.36, "Technical Specifications," provides the requirement for licensees to maintain technical specifications and the requirements for technical specification contents.

5.2.2 Analysis

The regulatory requirements related to the content of TSs are set forth in 10 CFR 50.36, "Technical Specifications." The regulation requires that TSs include items in five specific categories, including (1) safety limits, limiting safety system settings, and limiting control settings; (2) limiting conditions for operation (LCOs); (3) surveillance requirements; (4) design features; and (5) administrative controls. However, the regulation does not specify the particular requirements to be included in a plant's TSs. Addressing administrative controls, 10 CFR 50.36 states that they are "the provisions relating to organization and management, procedures, record keeping, review and audit, and reporting necessary to assure operation of the facility in a safe manner." The specific content of the administrative controls section of the TS is, therefore, related to those programs and reports that the NRC deems essential for the safe operation of the facility, which are not adequately covered by regulations or other regulatory requirements.

This LAR proposes eliminating the one-hour reporting requirement in TS 3.7.4 associated with the cooling tower portable makeup pump, which provides for reporting pursuant to the requirements of 10 CFR 50.72. Information needed by the NRC is adequately addressed by the reporting requirements in 10 CFR 50.73, "Licensee Event Reports." Similarly, this proposed change eliminates TS 6.6, which directs reporting in the event of a safety limit violation is also eliminated with this proposed change. The notification requirements contained in TS 6.6 are redundant to 10 CFR 50.36, 10 CFR 50.72 and 10 CFR 50.73 and need not be duplicated in the TS.

TS Table 3.3-9 lists the instruments and control circuits that must be operable if conditions require that the Remote Shutdown System be placed in operation. Emergency feedwater steam supply valves, MS-V127 and V128, were modified by removing the remote valve operators and configuring the valves as locked open manual valves. Consequently, the valves no longer contain "controls" that require monitoring under the TS or the criteria of GDC 19 for the Remote Shutdown System.

This proposed amendment revises TS 3.4.9.3, Overpressure Protection Systems, to limit CCP capability for injecting into the RCS. The low temperature over pressurization system ensures that the RCS will be protected from pressure transients which could exceed the limits of Appendix G to 10 CFR Part 50 when one or more of the RCS cold legs are less than or equal to 290°F in the event of the start of a centrifugal charging pump and its injection into a water-solid RCS. To ensure mass and heat input transients more severe than those assumed cannot occur, the proposed change adds a stipulation that all but one centrifugal charging pump must be made inoperable while in Mode 4. This change ensures compliance with the pressure-temperature limits and minimum temperature requirements in Appendix G to Part 50—Fracture Toughness Requirements.

5.2.3 Conclusion

In conclusion, based on the considerations discussed previously, (1) there is reasonable assurance that the health and safety of the public will not be endangered by operation in the proposed manner, (2) such activities will be conducted in compliance with the Commission's regulations, and (3) the issuance of the amendment will not be inimical to the common defense and security or to the health and safety of the public.

6.0 ENVIRONMENTAL CONSIDERATION

The proposed amendment does not involve (i) a significant hazards consideration, (ii) a significant change in the types or significant increase in the amounts of any effluent that may be released offsite, or (iii) a significant increase in individual or cumulative occupational radiation exposure. Accordingly, the proposed amendment meets the eligibility criterion for categorical exclusion set forth in 10 CFR 51.22 (c) (9). Therefore, pursuant to 10 CFR 51.22(b), no environmental impact statement of environmental assessment need be prepared in connection with the proposed amendment.

7.0 REFERENCES

1. Amendment No. 28, Transfer of Ownership Share of Vermont Electric Generation and Transmission Cooperative, Inc. to North Atlantic Energy Corporation (TAC M87313)
2. Amendment No. 94, Seabrook Station Unit No. 1 – Issuance of Amendment Re: Changes to Technical Specifications Associated with Containment Building Penetrations (TAC No. MB6611)
3. Amendment No. 100, Seabrook Station Unit No. 1 – Issuance of Amendment Re: Alternative Source Term (TAC No. MC1097)
4. Amendment No. 93, Seabrook Station Unit No. 1 – Issuance of Amendment Re: Relocation of Technical Specifications Associated with Boration Sources and Chemistry, and Revision of Selected Technical Specifications Associated with the Reactor Coolant System (TAC No. MB6614)
5. Technical Specification Task Force Improved Standard Technical Specifications Change Traveler (TSTF) 285-1, Rev. 1
6. 10 CFR 50.72, Immediate Notification Requirements for Operating Nuclear Power Reactors
7. Amendment No. 32 to Facility Operating License NPF-86: Primary Component Cooling Water System – License Amendment Request 93-01 and Service Water/Ultimate Heat

Sink Operability Requirements – License Amendment Request 93-01 (TAC No. M85491 and M85750)

8. Calculation 4.3.08.72F, SW System – Steady State Analysis

9. Amendment No. 62, Seabrook Station Unit No. 1 – Issuance of Amendment Re: Control Room Air Conditioning Allowed Outage Time Extension (TAC No. MA5937)

10. 10 CFR 50.73, Licensee Event Report System

11. 10 CFR 50.36, Technical Specifications

12. Technical Specification Task Force Improved Standard Technical Specifications Change Traveler (TSTR) 5-A, Rev. 1

13. Industry/TSTF Standard Technical Specification Change Traveler (TSTF) 308-A, Rev. 1

14. Updated Final Safety Analysis Report (UFSAR) Sections 7.4.5.2 and 9.2.5.3

Attachment 1

Proposed Technical Specification Change (mark-up)

Refer to the attached markup of the proposed change to the Technical Specifications. The attached markup reflects the currently issued revision of the Technical Specifications. At the time of submittal, the Technical Specifications were revised through Amendment 106. Pending Technical Specifications or Technical Specification changes issued subsequent to this submittal are not reflected in the enclosed markup.

Listed below are the license amendment requests that are awaiting NRC approval and may impact the currently issued version of the Technical Specifications.

LAR	Title	FPL Energy Seabrook SBK Letter No.	Date of Submittal
05-10	Removal of Monthly Operating Report	SBK-L-05225	12/19/05
06-02	Steam Generator Tube Integrity	SBK-L-06064	
06-04	Mode Change Limitations Using the Consolidated Line Item Improvement Process	SBK-L-06065	

The following Technical Specifications are included in the attached markup:

Technical Specification	Title	Page
	Facility Operating License	1 and 7
	Appendix C	1
	INDEX	x, xi, xii, xiii, xiv, xv
Table 3.3-9	Remote Shutdown System	3/4 3-47
3.4.9.3	Overpressure Protection Systems	3/4 4-34a
4.4.9.3.5	Overpressure Protection Systems	3/4 4-35
		3/4 4-35a
3.7.4	Service Water/Ultimate Heat Sink	3/4 7-13
4.7.4.3	Service Water/Ultimate Heat Sink	3/4 7-13A
3.7.6.2	Air Conditioning	3/4 7-18a
6.6	Safety Limit Violation	6-4
6.7.6	Radioactive Effluents Control Program	6-8

FPL ENERGY SEABROOK, LLC, ET AL.*

DOCKET NO. 50-443

SEABROOK STATION, UNIT NO. 1

FACILITY OPERATING LICENSE

License No. NPF-86

1. The Nuclear Regulatory Commission (the Commission) has found that:

   A. The application for a license complies with the standards and requirements of the Atomic Energy Act of 1954, as amended (the Act), and the Commission's regulations set forth in 10 CFR Chapter I; and all required notifications to other agencies or bodies have been duly made;

   B. Construction of the Seabrook Station, Unit No. 1 (the facility) has been substantially completed in conformity with Construction Permit No. CPPR-135 and the application, as amended, the provisions of the Act, and the regulations of the Commission;

   C. The facility will operate in conformity with the application, as amended, the provisions of the Act, and the regulations of the Commission (except as exempted from compliance in Section 2.D below);

   D. There is reasonable assurance: (i) that the activities authorized by this operating license can be conducted without endangering the health and safety of the public, and (ii) that such activities will be conducted in compliance with the Commission's regulations set forth in 10 CFR Chapter I (except as exempted from compliance in Section 2.D below);

   E. FPL Energy Seabrook, LLC, is technically qualified to engage in the activities authorized by this license in accordance with the Commission's regulations set forth in 10 CFR Chapter I;

   F. The licensees have satisfied the applicable provisions of 10 CFR 140, "Financial Protection Requirements and Indemnity Agreements," of the Commission's regulations;

---

*FPL Energy Seabrook, LLC, is authorized to act as agent for the: Hudson Light & Power Department, Massachusetts Municipal Wholesale Electric Company, and Taunton Municipal ~~Light~~ Lighting Plant and has exclusive responsibility and control over the physical construction, operation and maintenance of the facility.

J. Additional Conditions

The Additional Conditions contained in Appendix C, as revised through Amendment No. ~~94,~~ are hereby incorporated into this license. FPL Energy Seabrook, LLC, shall operate the facility in accordance with the Additional Conditions.

K. Inadvertent Actuation of the Emergency Core Cooling System (ECCS)

Prior to startup from refueling outage 11, FPL Energy Seabrook commits to either upgrade the controls for the pressurizer power operated relief valves (PORV) to safety-grade status and confirm the safety-grade status and water-qualified capability of the PORVs, PORV block valves and associated piping or to provide a reanalysis of the inadvertent safety injection event, using NRC approved methodologies, that concludes that the pressurizer does not become water solid within the minimum allowable time for operators to terminate the event.

3. This license is effective as of the date of issuance and shall expire at midnight on October 17, 2026.

FOR THE NUCLEAR REGULATORY COMMISSION

(Original signed by:
Thomas E. Murley)

Thomas E. Murley, Director
Office of Nuclear Reactor Regulation

Attachments/Appendices:
1. Appendix A - Technical Specifications (NUREG-1386)
2. Appendix B - Environmental Protection Plan
3. Appendix C - Additional Conditions

Date of Issuance: March 15, 1990

APPENDIX C

ADDITIONAL CONDITIONS
OPERATING LICENSE NO. NPF-86

FPL Energy Seabrook, LLC, shall comply with the following conditions on the schedules noted below:

Amendment Number	Additional Condition	Implementation Date
50	NAESCO is authorized to relocate certain technical specification requirements to licensee-controlled documents. Implementation of this amendment shall include the relocation of these technical specification requirements to the appropriate documents, as described in the licensee's application dated October 17, 1996, and evaluated in the staff's Safety Evaluation attached to this amendment.	The amendment shall be implemented within 60 days from March 12, 1997
~~94~~	~~FPL Seabrook, LLC must maintain a program in effect to control the administration of potassium iodide (KI) to Control Room personnel during core alterations when the Primary Containment Equipment Hatch is open. This program will remain in effect until the current licensing basis for unfiltered inleakage is revised.~~	~~The amendment shall be implemented within 60 days from October 3, 2003~~

INDEX

LIMITING CONDITIONS FOR OPERATION AND SURVEILLANCE REQUIREMENTS

3.0/4.0 BASES

Refer to Bases Section Index

INDEX

BASES

BASES

5.0 DESIGN FEATURES

Move to page X

INDEX

5.0 DESIGN FEATURES

move to page X

6.0 ADMINISTRATIVE CONTROLS

move to page xi

INDEX

6.0 ADMINISTRATIVE CONTROLS

move to page xi

move to page xii

INDEX

6.0 ADMINISTRATIVE CONTROLS

Move to page xii

TABLE 3.3-9

REMOTE SHUTDOWN SYSTEM

INSTRUMENT	LOCATION	TOTAL NO. OF CHANNELS	MINIMUM CHANNELS OPERABLE
1. Intermediate Range Neutron Flux	CP-108 A and B	2	1
2. Source Range Neutron Flux	CP-108 A and B	2	1
3. Reactor Coolant Temperature - Wide Range for Loops 1 and 4			
a. T_c	CP-108 A and B	2	2
b. T_H	CP-108 A and B	2	2
4. Pressurizer Pressure	CP-108 A and B	2	2
5. Pressurizer Level	CP-108 A and B	2	2
6. Steam Generator Pressure	CP-108 A and B	1/stm. gen.	1/stm. gen.
7. Steam Generator Water Level	CP-108 A and B	1/stm. gen.	1/stm. gen.
8. Steam Generator-Emergency Feedwater Flow Rate	CP-108 A and B	1/stm. gen.	1/stm. gen.
9. Boric Acid Tank Level	CP-108 A and B	1/tank	1/tank

TRANSFER SWITCHES/CONTROL CIRCUITS		LOCATION
1. Emergency Feedwater Pump Steam Supply Valves MS-V-393	127	CP-108 A
2. Emergency Feedwater Pump Steam Supply Valves MS-V-394	128	CP-108 B
3. Emergency Feedwater Pump Steam Supply Valves MS-V-395		CP-108 A and B
4. Emergency Feedwater Pump FW-P-37B		Bus 6 SWGR
5. Emergency Feedwater Recirculation Valve FW-V-346		CP-108 A
6. Emergency Feedwater Recirculation Valve FW-V-347		CP-108 B
7. SG A EFW Control Valve FW-FV-4214 A		CP-108 A
8. SG A EFW Control Valve FW-FV-4214 B		CP-108 B
9. SG B EFW Control Valve FW-FV-4224 A		CP-108 A
10. SG B EFW Control Valve FW-FV-4224 B		CP-108 B
11. SG C EFW Control Valve FW-FV-4234 A		CP-108 A
12. SG C EFW Control Valve FW-FV-4234 B		CP-108 B
13. SG D EFW Control Valve FW-FV-4244 A		CP-108 A
14. SG D EFW Control Valve FW-FV-4244 B		CP-108 B
15. SG A Atmospheric Relief Valve MS-PV-3001		CP-108 A
16. SG B Atmospheric Relief Valve MS-PV-3002		CP-108 B
17. SG C Atmospheric Relief Valve MS-PV-3003		CP-108 A

3.4.9.3

ACTION: (Continued)

b) In MODE 5 and MODE 6 with all Safety Injection pumps inoperable and with one of the two required overpressure protection devices inoperable, restore two overpressure protection devices to OPERABLE status within 24 hours or within the next 8 hours

(a) depressurize the RCS and

(b) vent the RCS through at least a 1.58-square-inch vent.

c) In MODE 4, MODE 5 and MODE 6 with all Safety Injection pumps inoperable and with both of the two required overpressure protection devices inoperable, within the next 8 hours

(a) depressurize the RCS and

(b) vent the RCS through at least a 1.58-square-inch vent.

d) In the event the PORVs, or the RHR suction relief valves, or the RCS vent(s) are used to mitigate an RCS pressure transient, a Special Report shall be prepared and submitted to the Commission pursuant to Specification 6.8.2 within 30 days. The report shall describe the circumstances initiating the transient, the effect of the PORVs, or the RHR suction relief valves, or RCS vent(s) on the transient, and any corrective action necessary to prevent recurrence.

e) In MODE 5 and MODE 6 with all Safety Injection pumps except one inoperable and with the RCS vent area less than 18 square inches or RCS water level not in a reduced inventory condition, immediately restore all Safety Injection pumps to inoperable status.

f) With more than one charging pump capable of injecting into the RCS, immediately initiate action to restore a maximum of one charging pump capable of injecting into the RCS

SURVEILLANCE REQUIREMENTS

4.4.9.3.1 Each PORV shall be demonstrated OPERABLE when the PORV(s) are being used for overpressure protection by:

a. Performance of an ANALOG CHANNEL OPERATIONAL TEST on the PORV actuation channel, but excluding valve operation, at least once per 31 days thereafter when the PORV is required OPERABLE; and

b. Performance of a CHANNEL CALIBRATION on the PORV actuation channel at least once per 18 months; and

c. Verifying the PORV isolation valve is open at least once per 72 hours.

4.4.9.3.2 Each RHR suction relief valve shall be demonstrated OPERABLE when the RHR suction relief valve(s) are being used for overpressure protection as follows:

a. For RHR suction relief valve RC-V89 by verifying at least once per 72 hours that RHR suction isolation valves RC-V87 and RC-V88 are open.

b. For RHR suction relief valve RC-V24 by verifying at least once per 72 hours that RHR suction isolation valves RC-V22 and RC-V23 are open.

c. Testing pursuant to Specification 4.0.5.

4.4.9.3.3 The RCS vent(s) shall be verified to be open at least once per 12 hours** when the vent(s) is being used for overpressure protection.

4.4.9.3.4 The reactor vessel water level shall be verified to be lower than 36 inches below the reactor vessel flange at least once per 12 hours when the reduced inventory condition is being used for overpressure protection.

INSERT 1

**Except when the vent pathway is provided with a valve(s) or device(s) that is locked, sealed, or otherwise secured in the open position, then verify this valve(s) or device(s) open at least once per 31 days.

INSERT 1

REACTOR COOLANT SYSTEM

PRESSURE/TEMPERATURE LIMITS

OVERPRESSURE PROTECTION SYSTEMS

SURVEILLANCE REQUIREMENTS

4.4.9.3.5 All charging pumps, excluding one OPERABLE pump, shall be demonstrated inoperable*** by verifying that the motor circuit breakers are secured in the open position**** at least once per 31 days, except when the reactor vessel head closure bolts are fully detensioned or the vessel head is removed.

*** An additional pump may be made capable of injecting under administrative control for up to 1 hour during pump-swap operation, except during RCS water-solid conditions. Additionally, an inoperable pump may be energized for testing provided the discharge of the pump has been isolated from the RCS by a closed isolation valve with power removed from the valve operator, or by a manual isolation valve secured in the closed position.

**** An alternate method to assure pump inoperability may be used by placing the control room pump-control switch in the Pull-to-Lock position and isolating the discharge flow path of the pump from the RCS by a least one closed isolation valve. Use of the alternative method requires inoperability verification at least once every 12 hours.

3/4.7.4 SERVICE WATER SYSTEM/ULTIMATE HEAT SINK

LIMITING CONDITION FOR OPERATION

3.7.4 The Service Water System shall be OPERABLE with:

a. An OPERABLE service water pumphouse and two service water loops with one OPERABLE service water pump in each loop,

b. An OPERABLE mechanical draft cooling tower and two cooling tower service water loops with one OPERABLE cooling tower service water pump in each loop, and

c. A portable cooling tower makeup system stored in its design operational readiness state.

APPLICABILITY: MODES 1, 2, 3, and 4.

ACTION:

a. With one service water loop inoperable, return the loop to OPERABLE status within 72 hours, or be in at least HOT STANDBY within 6 hours and in COLD SHUTDOWN within the following 30 hours.

b. With one cooling tower service water loop or one cooling tower cell inoperable, return the affected loop or cell to OPERABLE status within 7 days, or be in at least HOT STANDBY within 6 hours and in COLD SHUTDOWN within the following 30 hours.

c. With two cooling tower service water loops or the mechanical draft cooling tower inoperable, return at least one loop and the mechanical draft cooling tower to OPERABLE status within 72 hours, or be in at least HOT STANDBY within 6 hours and in COLD SHUTDOWN within the following 30 hours.

d. With two loops (except as described in c) or the service water pumphouse inoperable, return at least one of the affected loops and the service water pumphouse to OPERABLE status within 24 hours, or be in at least HOT STANDBY within 6 hours and in COLD SHUTDOWN within the following 30 hours.

e. With the portable tower makeup pump system not stored in its design operational readiness state, restore the portable tower makeup pump system to its required condition within 72 hours, or continue operation and notify the NRC within the following 1 hour in accordance with the requirements of 10 CFR 50.72 of actions to ensure an adequate supply of makeup water for the service water cooling tower for a minimum of 30 days.

; or, within the next 96 hours, implement

3/4.7.4 SERVICE WATER SYSTEM/ULTIMATE HEAT SINK

SURVEILLANCE REQUIREMENTS

4.7.4.1 Each service water loop shall be demonstrated OPERABLE:

a. At least once per 31 days by verifying that each valve (manual, power-operated, or automatic) servicing safety related equipment that is not locked, sealed, or otherwise secured in position is in its correct position; and

b. At least once per 18 months during shutdown, by verifying that each automatic valve servicing safety-related equipment actuates to its correct position on its associated Engineered Safety Feature actuation test signal.

4.7.4.2 Each service water cooling tower loop shall be demonstrated OPERABLE:

a. At least once per 31 days by verifying that each valve (manual, power-operated, or automatic) servicing safety related equipment that is not locked, sealed, or otherwise secured in position is in its correct position; and

b. At least once per 18 months during shutdown, by verifying that:

1) Each automatic valve servicing safety-related equipment actuates to its correct position on its associated Engineered Safety Feature actuation test signal,

2) Each automatic valve in the flowpath actuates to its correct position on a Tower Actuation (TA) test signal and

3) Each service water cooling tower pump starts automatically on a TA signal.

4.7.4.3 The service water pumphouse shall be demonstrated OPERABLE at least once per 24 hours by verifying the water level to be at or above ~~5'-0"~~ 25.1' (~~-36'-0"~~ -15.9' Mean Sea Level).

4.7.4.4 The mechanical draft cooling tower shall be demonstrated OPERABLE:

a. At least once per 24 hours by verifying the water in the mechanical draft cooling tower basin to be at a level of greater than or equal to 42.15* feet.

b. At least once per week by verifying that the water in the cooling tower basin to be at a bulk average temperature of less than or equal to 70°F.

---

*With the cooling tower in operation with valves aligned for tunnel heat treatment, the tower basin level shall be maintained at greater than or equal to 40.55 feet.

PLANT SYSTEMS

3/4.7.6 CONTROL ROOM SUBSYSTEMS

AIR CONDITIONING

LIMITING CONDITION FOR OPERATION

3.7.6.2 Two independent Control Room Air Conditioning Subsystems shall be OPERABLE.

APPLICABILITY: All MODES

ACTION:

MODES 1, 2, 3 and 4:

With one Control Room Air Conditioning Subsystem inoperable, restore the inoperable system to OPERABLE status within 30* days or be in at least HOT STANDBY within the next 6 hours and in COLD SHUTDOWN within the following 30 hours.

MODES 5 and 6:

a. With one Control Room Air Conditioning Subsystem inoperable, restore the inoperable system to OPERABLE status within 30* days or initiate and maintain operation of the remaining OPERABLE Control Room Air Conditioning Subsystem or immediately suspend all operations involving CORE ALTERATION.

b. With both Control Room Air Conditioning Subsystems inoperable, or with the OPERABLE Control Room Air Conditioning Subsystem unable to maintain temperature below the limiting equipment qualification temperature in the control room area, suspend all operations involving CORE ALTERATIONS.

SURVEILLANCE REQUIREMENTS

4.7.6.2 Each Control Room Air Conditioning Subsystem shall be demonstrated OPERABLE at least once per 92 days by verifying the ability to maintain temperature in the control room area below the limiting equipment qualification temperature for 24 hours.

~~* For cycle 7, the allowable outage time may be extended to 60 days, on a one-time basis, for each train to implement modifications to the Control Room Air Conditioning Subsystems. The provisions of Specifications 3.0.4 and 4.0.4 are not applicable during the implementation of modifications to the Air Conditioning Subsystems.~~

6.2.3 (THIS SPECIFICATION NUMBER IS NOT USED)

6.2.4 SHIFT TECHNICAL ADVISOR

6.2.4.1 The Shift Technical Advisor shall provide advisory technical support to the Control Room Commander in the areas of thermal hydraulics, reactor engineering, and plant analysis with regard to the safe operation of the station.

6.3 (THIS SPECIFICATION NUMBER IS NOT USED)

6.4 (THIS SPECIFICATION NUMBER IS NOT USED)

6.5 REPORTABLE EVENT ACTION

The following actions shall be taken for REPORTABLE EVENTS:

a. The Commission shall be notified and a report submitted pursuant to the requirements of Section 50.73 to 10 CFR Part 50, and

b. Each REPORTABLE EVENT shall be reviewed by the SORC and the results of this review shall be submitted to the Company Nuclear Review Board (CNRB) and the Site Vice President.

6.6 ~~SAFETY LIMIT VIOLATION~~ (THIS SPECIFICATION NUMBER IS NOT USED)

~~The following actions shall be taken in the event a Safety Limit is violated:~~

~~a. The NRC Operations Center shall be notified by telephone as soon as possible and in all cases within 1 hour. The Site Vice President and the CNRB shall be notified within 24 hours;~~

~~b. A Safety Limit Violation Report shall be prepared. The report shall be reviewed by the SORC. This report shall describe: (1) applicable circumstances preceding the violation, (2) effects of the violation upon facility components, systems, or structures, and (3) corrective action taken to prevent recurrence;~~

~~c. The Safety Limit Violation Report shall be submitted to the Commission, the CNRB, and the Site Vice President within 14 days of the violation; and~~

~~d. Operation of the station shall not be resumed until authorized by the Commission.~~

PROCEDURES AND PROGRAMS

6.7.6 (Continued)

g. Radioactive Effluent Controls Program

A program shall be provided conforming with 10 CFR 50.36a for the control of radioactive effluents and for maintaining the doses to MEMBERS OF THE PUBLIC from radioactive effluents as low as reasonably achievable. The program (1) shall be contained in the ODCM, (2) shall be implemented by operating procedures, and (3) shall include remedial actions to be taken whenever the program limits are exceeded. The program shall include the following elements:

1) Limitations on the operability of radioactive liquid and gaseous monitoring instrumentation including surveillance tests and setpoint determination in accordance with the methodology in the ODCM,

2) Limitations on the concentrations of radioactive material released in liquid effluents to UNRESTRICTED AREAS, conforming to ten times the concentration values in Appendix B, Table 2, Column 2, to 10 CFR 20.1001-20.2402,

3) Monitoring, sampling, and analysis of radioactive liquid and gaseous effluents in accordance with 10 CFR 20.1302 and with the methodology and parameters in the ODCM,

4) Limitations on the annual and quarterly doses or dose commitment to a MEMBER OF THE PUBLIC from radioactive materials in liquid effluents released from the unit to UNRESTRICTED AREAS conforming to Appendix I to 10 CFR Part 50,

5) Determination of cumulative ~~and projected~~ dose contributions from radioactive effluents for the current calendar quarter and current calendar year in accordance with the methodology and parameters in the ODCM at least every 31 days. Determination of projected dose contribution from radioactive effluents in accordance with the methodology in the ODCM at least every 31 days,

6) Limitations on the operability and use of the liquid and gaseous effluent treatment systems to ensure that the appropriate portions of these systems are used to reduce releases of radioactivity when the projected doses in a 31-day period would exceed 2 percent of the guidelines for the annual dose or dose commitment conforming to Appendix I to 10 CFR Part 50,

Attachment 2

Referenced Drawings and Service Water Pumphouse Level Graph

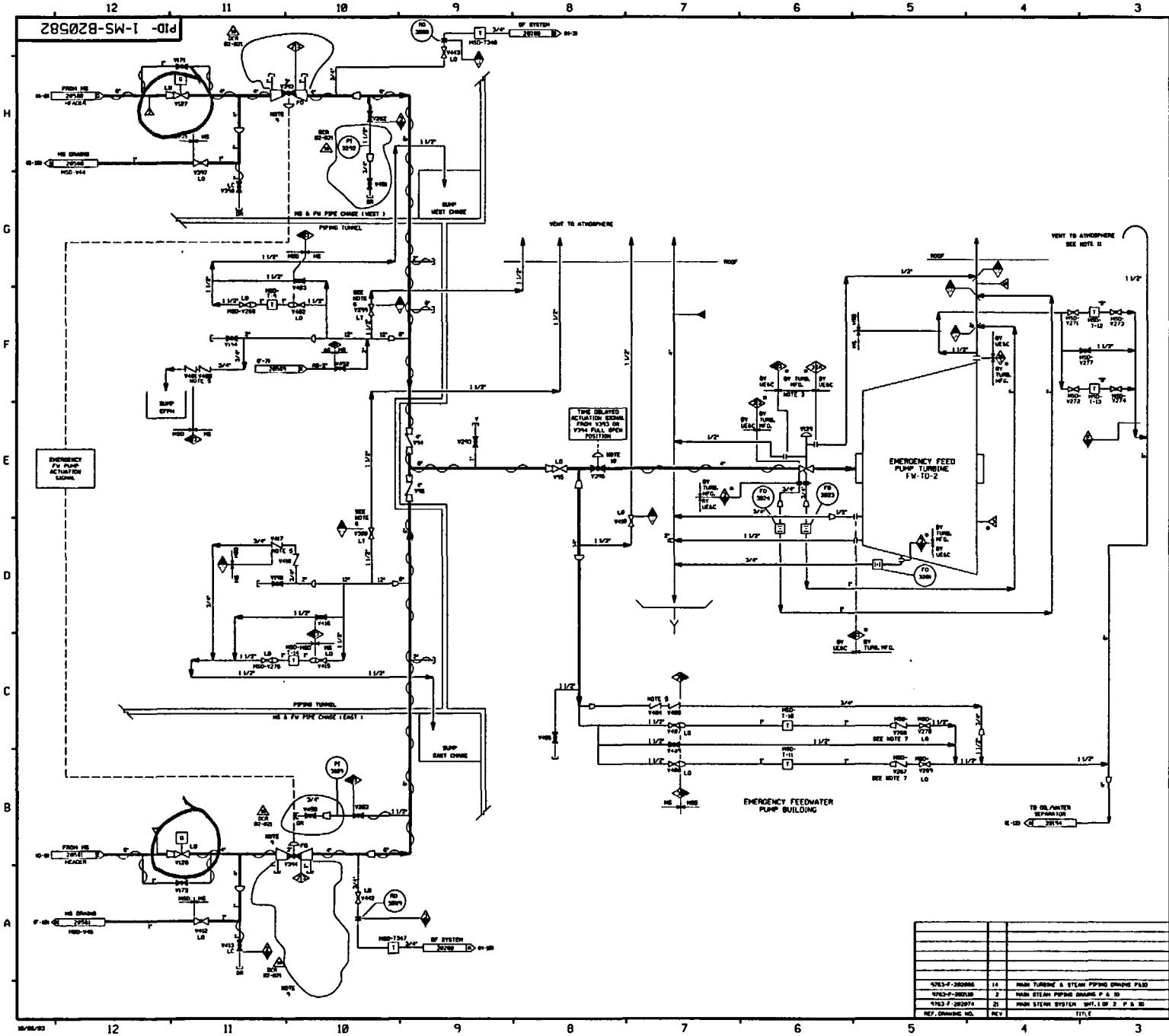

FOR P&ID REFERENCE DRAWINGS, SYMBOLS AND ABBREVIATIONS REFER TO DRAWINGS P&ID - LEGEND 1 AND P&ID - LEGEND 2

NOTES:

1. WORK THIS DRAWING WITH DRAWINGS 20579, 20580, 20581 & 20583 THROUGH 20587.
2. ALL LINES, EQUIPMENT, COMPONENTS AND INSTRUMENTS HAVE SYSTEM PREFIX "MS", UNLESS NOTED OTHERWISE.
3. VENTS, DRAINS AND TEST CONNECTION CODE BREAKS ARE AT THE DOWNSTREAM END OF THE OUTER ISOLATION VALVE PER I-MMT-MS01, UNLESS NOTED OTHERWISE.
4. DELETED
5. CHECK VALVES V417, V418, V484, V485, V486, & V488 ARE TO BE INSTALLED OPPOSITE FROM DIRECTION OF FLOW IN VERTICAL RUN OF PIPE SUCH THAT THEY HANG OPEN AND ALLOW DRAINING WHEN SYSTEM IS DEPRESSURIZED, THUS ENSURING CONDENSATE DRAINAGE & PREVENTING WATER HAMMER.
6. VALVES V299 & V389 ARE THROTTLED ½ OPEN FROM FULL CLOSED POSITION.
7. THE INTERNALS FROM VALVES V287 & V288 HAVE BEEN REMOVED.
8. ⚠ INDICATES ANS SAFETY CLASS 3, NOT ASME CODE CLASS 3. MANUFACTURE'S STANDARDS
9. FOR INSTRUMENT AIR DETAILS SEE PID IN-B20647.
10. FOR INSTRUMENT AIR DETAILS SEE PID IN-B20644.
11. EFP TURBINE VENT & DRAIN LINES ARE CONTAINED IN A HEATED ENCLOSURE PER HVCD ED-B88.

PORTIONS OF THIS DRAWING ARE

NUCLEAR SAFETY RELATED

REV	DATE	DSGN	CHKD	CE	DESCRIPTION
18	10/7/02	BCS	PMW	WJP	INCORP. DCR 00-421 DCN 00
17	4/18/02	JH	BCS	MAF	INCORP. HMOD 02-0000 DCN 00
16	08/22/02	JH	MPV	BCS	INCORP. CR 00-05172 REV 00
15	5/14/02	MPV	JH	MAF	INCORP. DCR 01-017 DCN 00
14	11/22/00	BCS	MPV	BJH	REINCORP. HMOD 98-599 DCN-00
13	6/3/98	BCS	MPV	RRG	INCORP. HMOD 98-599 DCN-00
12	6/3/98	BCS	MPV	VWS	REINCORP. HMOD 96-000 DCN 02
11	8/18/97	MPV	BCS	VWS	INCORP. HMOD 96-558 DCN 02
10	6/30/97	DWS	MPV	BAH	INCORP DCN 970004 DCN-00
9	11/7/96	MPV	BCS	CRH	INCORP. DCR 96-43 CAB
8	08/24/92	BCL	MRB	MSG	INCORP HMOD 92-582 CAB, 02
7	4/20/92	MRB	BCL	RRG	INCORP. HMOD 91-515 CAB
6	10/9/91	DPH	JH	RMH	INCORP. DCR 90-30 CAB REVISED NOTE 3 ADDED CONT COORD UNLISTED NOMI CLASS BREAK PER NOTE 3
5	8/4/90	MRB	JH	DRH	INCORPORATED HMOD 90-530 CAB
4	2/3/90	MRB	MPL	RRC	REVISE DCR 89-41 CAB REVISED NOTE 3
3	8/5/87	WRJ	DB	RRC	IDENT SUMP LOCATIONS, ADDED SYSTEM & CLASS BREAKS, INCORP'D DCR 87-212
2	9/22/86	WRJ	MAF	RRC	REVISED BLDG. BOUNDARY, ADDED CONTINUATION REF'S, REV. VAR. DATE, ELV. INCORP. ECA 86/0020918. REV'D PER LATEST VEAC P&ID.
1	7/2/86	DPO II	BCL	RRC	REVISED PER ECA 86/1137128 AND 86/1137128A
0	2/6/86	TAK	DWS	WFD	ISSUED FOR OPERATIONS

REF. DRAWING NO.	REV	TITLE
4763-F-202086	14	MAIN TURBINE & STEAM PIPING DRAWING P&ID
4763-F-202138	3	MAIN STEAM PIPING DRAWING P & ID
4763-F-202074	21	MAIN STEAM SYSTEM SHT. 1 OF 2 P & ID

FPL ENERGY Seabrook Station

MAIN STEAM SYSTEM
EMERGENCY FEEDWATER
PUMP SUPPLY
DETAIL

PID- 1-MS-B20582

PID- 1-SW-B20794

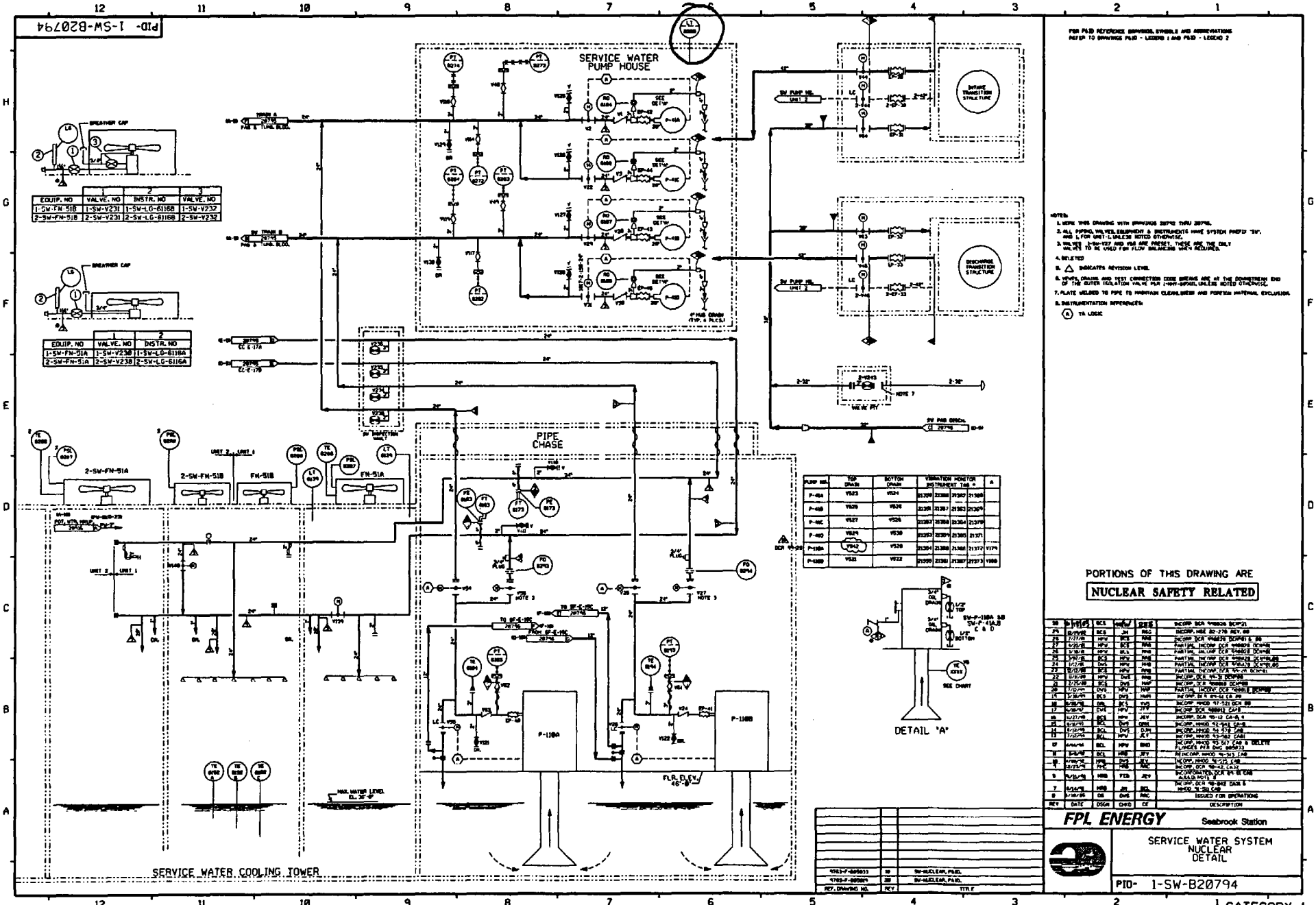

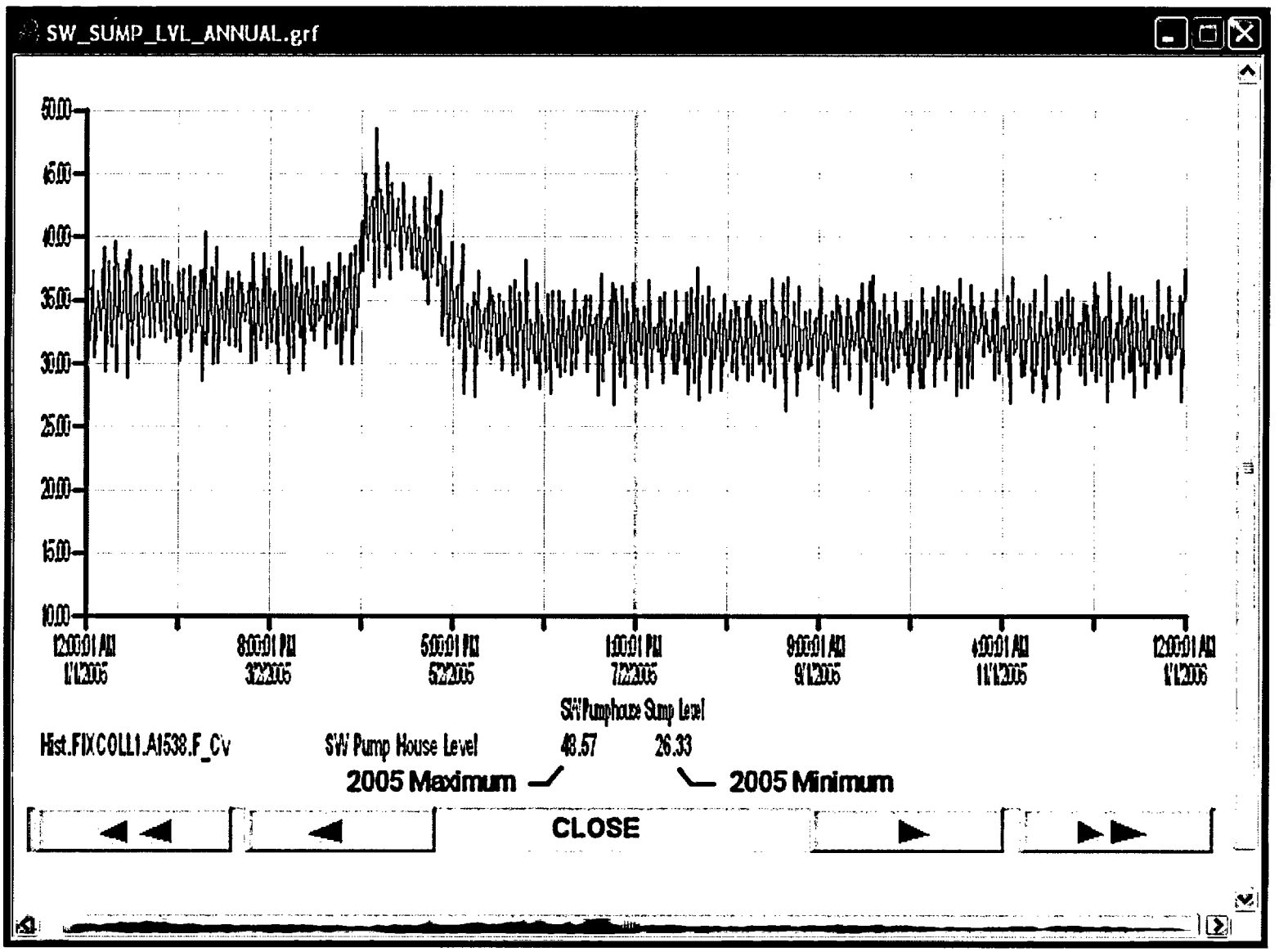
SW_SUMP_LVL_ANNUAL.grf
50.00
45.00
40.00
35.00
30.00
25.00
20.00
15.00
10.00
12:00:01 AM 1/1/2005
8:00:01 PM 3/22/2005
5:00:01 PM 5/22/2005
1:00:01 PM 7/22/2005
9:00:01 AM 9/1/2005
4:00:01 AM 11/1/2005
12:00:01 AM 1/1/2006
SW Pumphouse Sump Level
Hist.FIXCOLL1.AI538.F_Cv
SW Pump House Level
48.57
26.33
2005 Maximum
2005 Minimum
CLOSE