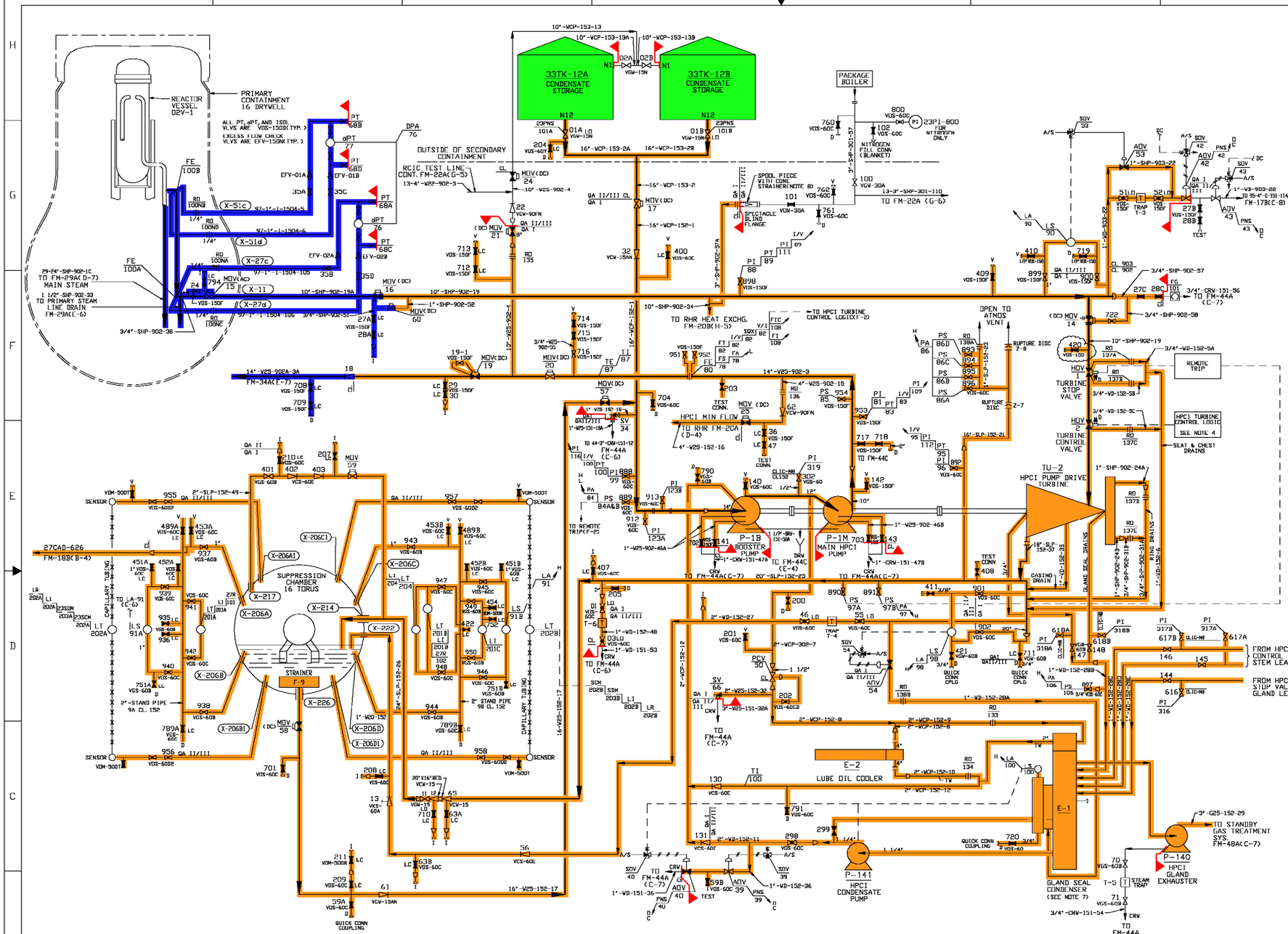
REACTOR VESSEL 02V-1
PRIMARY CONTAINMENT 16 DRYWELL
33TK-12A CONDENSATE STORAGE
33TK-12B CONDENSATE STORAGE
PACKAGE BOILER
OUTSIDE OF SECONDARY CONTAINMENT
SUPPRESSION CHAMBER 16 TORUS
STRAINER F-9
P-1B BOOSTER PUMP
P-1M MAIN HPCI PUMP
TU-2 HPCI PUMP DRIVE TURBINE
E-1
E-2
LUBE OIL COOLER
P-141 HPCI CONDENSATE PUMP
P-140 HPCI GLAND EXHAUSTER
GLAND SEAL CONDENSER (SEE NOTE 7)
TURBINE STOP VALVE
TURBINE CONTROL VALVE
REMOTE TRIP
HPCI TURBINE CONTROL LOGIC SEE NOTE 4
SEAT & CHEST DRAINS
TO STANDBY GAS TREATMENT SYS. FM-48A(C-7)
FROM HPCI TURB. CONTROL VALVE STEM LEAKOFF
FROM HPCI TURB. STOP VALVE GLAND LEAKOFF
TO HPCI TURBINE CONTROL LOGIC(F-2)
TO RHR HEAT EXCHG. FM-20B(H-5)
TO RHR FM-20A (D-4)
TO REMOTE TRIP(F-2)
TO FM-22A (G-6)
TO FM-44A (C-7)
TO FM-44C (E-4)
TO FM-44A(C-7)
TO FM-44A (C-6)
TO FM-44A (C-7)
TO FM-44A (C-7)
TO FM-44A (C-7