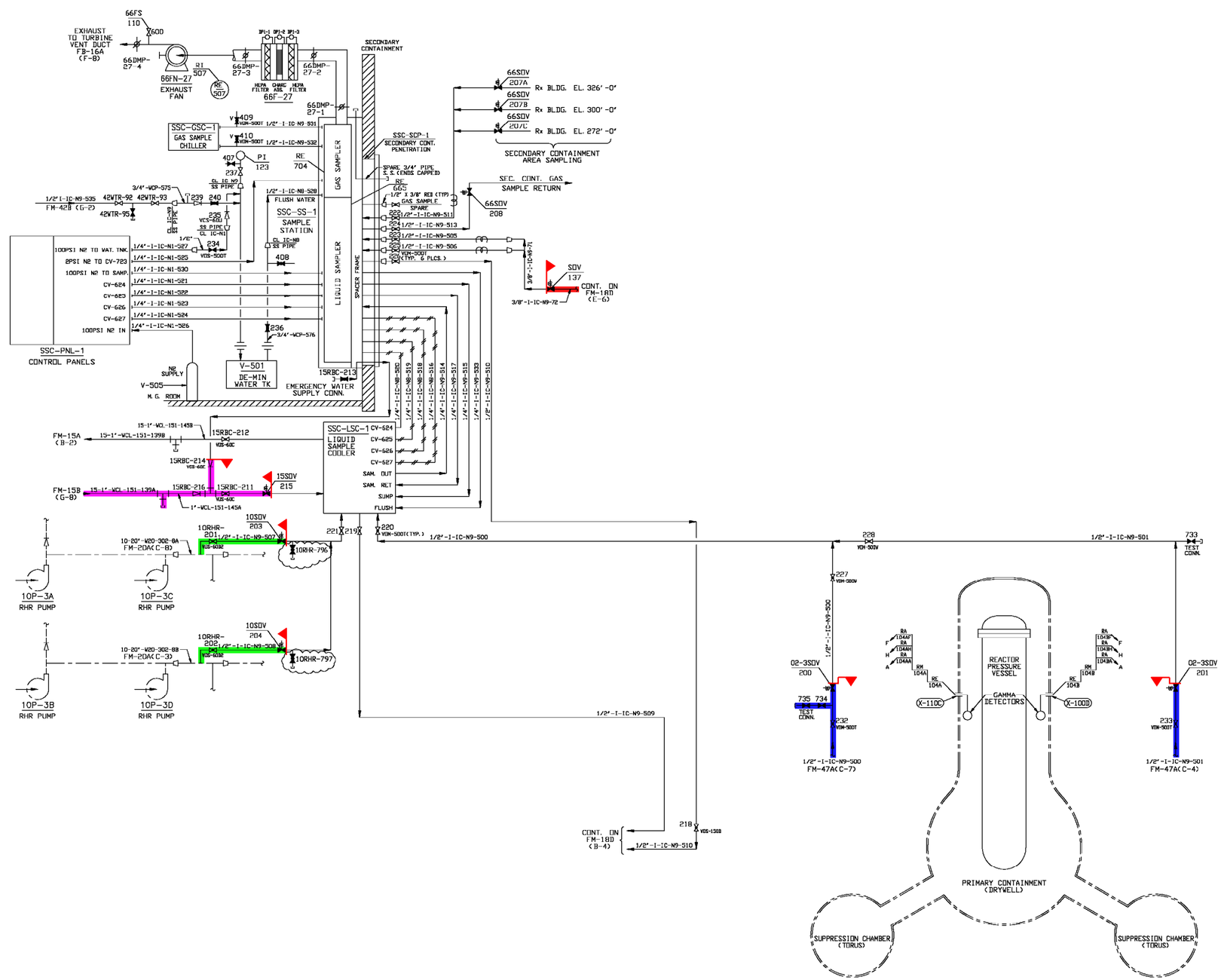

NOTES

1. ALL MANUAL VALVES PREFIXED CAD UNLESS OTHERWISE NOTED.
2. ALL COMPONENT MARK NUMBERS PREFIXED 27 UNLESS OTHERWISE NOTED.
3. FOR DIAGRAMS OF 27SSC-GSC-1, 27SSC-SS-1, AND 27SSC-LSC-1, SEE DRAWINGS 6.3-1, 2, & 3.

REFERENCES

1. FLOW DIAGRAM SYMBOLS FM-14A.
2. DRYWELL INERTING CAD & PURGE FM-18A & 18E.

SYSTEM INTENDED FUNCTION BOUNDARY

COMPONENTS SUBJECT TO AMR

- RESIDUAL HEAT REMOVAL SYSTEM AMM-02
- PRIMARY CONTAINMENT ATMOSPHERE CONTROL AND DILUTION SYSTEM AMM-08
- SERVICE WATER SYSTEMS AMM-11
- REACTOR COOLANT SYSTEM PRESSURE BOUNDARY AMM-33

REV	DATE	DESCRIPTION	DWN	CHK	RE	VFY	APP
19	5/8/01	AS BUILT PER DCR-01-115	KMB	JB	-	MM	SKK
18	6/5/00	AS BUILT PER DCR-00-121	RVB	KMB	-	KM	SKK
17	2/2/99	AS BUILT PER DCR-98-464	RVB	KMB	-	KM	SKK
16	3/7/97	AS BUILT PER DCR-97-036	KMB/RVB	KF	-	-/DCH	-
15	7/26/96	AS BUILT PER DCR-96-196	RVB/KMB	PJB	-	-/TRM	-
14	5/16/95	AS BUILT PER DCR-95-273	JB/JS	SKK	-	-/JML	-
13	5/15/95	AS BUILT PER DCR-95-216	JB/JMC	JAG	-	-/HG	-

REVISIONS

THE ORIGINAL TRACING FOR THIS DRAWING WAS PREPARED BY: STONE & WEBSTER CORP.

A RECORD OF THE ORIGINAL DOCUMENT WITH APPROVAL INITIALS/SIGNATURES AND THE P.E. SEAL, AND SUBSEQUENT REVISIONS THEREOF WITH APPROVAL INITIALS/SIGNATURES, IS MAINTAINED IN THE FILES OF THE NEW YORK POWER AUTHORITY.

THIS DOCUMENT WAS ELECTRONICALLY STORED AT REVISION 3

QA CAT. I, II/III

NUCLEAR SAFETY RELATED

DWN | CHK'D | DES SUPV | DISCIPLINE ENG | DISCIPLINE MGR. | PROJ APPROVAL | DATE

JAMES A. FITZPATRICK
NUCLEAR POWER PLANT

FLOW DIAGRAM
NUREG 0578 IMPLEMENTATION
& POST ACCIDENT SAMPLING
SYSTEM 27

Entergy Nuclear Northeast

SCALE NONE
DWG NO FM-18C
REV 19
SHEET OF
REF: ISI-FM-18C

NO.	DATE	DESCRIPTION	BY	ENG	CHK	APP
0	3-3-06					

REVISIONS

LRA-FM-18C-0

CAD FILE LRA-FM-18C_19.DGN
MASTER FILE FM-18C_19.CAL