Entergy

Entergy Nuclear Operations, Inc.
Pilgrim Station
600 Rocky Hill Road
Plymouth, MA 02360

Stephen J. Bethay
Director, Nuclear Assessment

July 5, 2006

U.S. Nuclear Regulatory Commission
Attn: Document Control Desk
Washington, DC 20555-0001

SUBJECT: Entergy Nuclear Operations, Inc.
Pilgrim Nuclear Power Station
Docket No.: 50-293
License No.: DPR-35

License Renewal Application Amendment 4:
Response to Request for Additional Information
Regarding Severe Accident Mitigation Alternatives for
Pilgrim Nuclear Power Station (TAC NO. MC9676)

REFERENCES:

1. Entergy letter, License Renewal Application, dated January 25, 2006 (2.06.003)
2. NRC letter, Request for Additional Information, dated May 22, 2006

LETTER NUMBER: 2.06.058

Dear Sir or Madam:

In Reference 1, Entergy applied for the renewal of the Pilgrim Station operating license. The application included Appendix E, Applicant's Environmental Report. In Reference 2, the NRC requested additional information regarding severe accident mitigation alternatives (SAMAs) submitted in Reference 1 (Appendix E).

The attachment to this letter provides the additional information requested in Reference 2.

By this letter Entergy also notes a typographical error in Section E.1.5.2.9 (page E.1-66) of Attachment E.1, Evaluation of PSA Model, of the Environmental Report submitted in Reference 1. Specifically, "Twelve release categories ..." should state "Nineteen release categories ..."

This letter contains no new commitments.

Please contact Mr. Bryan Ford, at 508-830-8403, if you have any questions regarding this subject.

I declare under the penalty of perjury that the foregoing is true and correct. Executed on the 5th day of July 2006.

Sincerely,

Stephen J. Bethay

DWE/dm
Attachment: Response to Request for Additional Information Regarding SAMAs

A001
A119

cc: with Attachment

Mr. Alicia Williamson
Project Manager
U.S. Nuclear Regulatory Commission
Office 0-11F1
11555 Rockville Pike
Rockville, MD 20852

Mr. Joseph Rogers
Commonwealth of Massachusetts
Assistant Attorney General
Division Chief, Utilities Division
1 Ashburton Place
Boston, MA 02108

cc: without Attachment

Mr. James Shea
U.S. Nuclear Regulatory Commission
Office O-8B-1
One White Flint North
11555 Rockville Pike
Rockville, MD 20852

Mr. Robert Walker, Director
Massachusetts Department of Public Health
Radiation Control Program
Schrafft Center, Suite 1M2A
529 Main Street
Charlestown, MA 02129

Mr. Jack Strosnider, Director
Office of Nuclear Material and Safeguards
U.S. Nuclear Regulatory Commission
Washington, DC 20555-00001

Ms. Cristine McCombs, Director
Massachusetts Emergency Management Agency
400 Worchester Road
Framingham, MA 01702

Mr. Samuel J. Collins, Administrator
Region I
U.S. Nuclear Regulatory Commission
475 Allendale Road
King of Prussia, PA 19406

Mr. James E. Dyer, Director
Office of Nuclear Reactor Regulation
U.S. Nuclear Regulatory Commission
Washington, DC 20555-00001

NRC Resident Inspector
Pilgrim Nuclear Power Station
600 Rocky Hill Road
Plymouth, MA 02360

ATTACHMENT A to Letter 2.06.058

Response to Request for Additional Information Regarding SAMAs

REQUEST FOR ADDITIONAL INFORMATION

REGARDING THE ANALYSIS OF SEVERE ACCIDENT MITIGATION ALTERNATIVES (SAMAs)

FOR THE PILGRIM NUCLEAR POWER STATION (PNPS)

DOCKET NO. 50-293

Table of Contents

Figures

Tables

NRC RAI 1

The SAMA analysis is said to be based on the most recent version of the PNPS Probabilistic Safety Analysis (PSA) (Revision 1 April 2003). Provide the following information regarding these PSA models:

a. The PNPS individual plant examination (IPE) evaluated total and partial loss of offsite power events. The current PSA model includes only a single loss of offsite power (LOOP) event. Characterize this LOOP event relative to the IPE events.

b. It is stated that the PSA represents the plant operating configuration and design changes as of September 30, 2001. Identify any changes to the plant (physical and procedural modifications) since September 2001 that could have a significant impact on the results of the PSA. Provide a qualitative assessment of their impact on the PSA and their potential impact on the results of the SAMA evaluation.

c. The Boiling Water Reactor Owners Group (BWROG) peer review in 2000 apparently reviewed the original 1992 IPE instead of the 1995 revision. Explain why the 1995 revision was not peer reviewed.

d. The environmental report (ER) states that all major issues and observations from the BWROG peer review have been addressed and incorporated in the current PSA. Describe the "non-major" issues that have not been incorporated and their potential impact on the results of the SAMA evaluation. Discuss the overall conclusion of the BWROG peer review relative to the use of the Pilgrim PSA.

e. The description of the revisions of the peer reviewed 1992 IPE to produce the current 2003 PSA indicates that almost all of the elements of IPE were completely revised. Provide more detail on the steps taken to ensure the technical adequacy of the current Level 1 and Level 2 PSA, including the review criteria used, a summary of the results of the peer review described in paragraphs 2 and 4 of ER Section E.1.4.1, and an identification of any open items from this review and their potential impact on the conclusions of the SAMA analysis.

f. The ER appears to provide a listing of the major plant and PSA model changes since the 1995 IPE Update. However, it is not clear whether these changes include differences between the 1992 IPE and 1995 IPE update. Provide a listing of the changes between the 1992 and 1995 models and between the 1995 and 2003 models. Indicate which changes were the major contributors to the reduction in core damage frequency (CDF).

Response to RAI 1a

a. The IPE submittal modeled two frequencies for loss of offsite power. One was the entire loss of 345kV and 23kV together. The other was the partial loss of 345kV with 23kV available. This partial loss was derived as a fraction of the losses of 345kV and 23kV.

   The 2003 PSA model used one single frequency for loss of offsite power from the 345kV ring bus. Loss of the 23kV feed from the Manomet Station to the shutdown transformer was modeled as a split fraction (i.e. conditional probability) of this frequency. It was conservatively assumed that 50% of the losses of offsite power resulted in a complete loss of all incoming AC power, despite the independence of the 23kV line.

Response to RAI 1b

b. There have been no plant changes that could have a significant impact on the results of the SAMA analysis since the model freeze date of September 2001. Plant changes since the freeze date with potential minor impact on the PSA results are discussed below.

- A new 100% capacity self contained diesel driven rotary screw IAS compressor, K-117, replaced the function of the smaller reciprocating compressors, K-104A, K-104B, and K-104C which have been placed in wet layup. This plant modification results in no appreciable change in CDF.

- Plant procedure 5.3.26, "RCIC operation without DC power," provides operational guidance to locally control RCIC operation following a catastrophic event in which both AC and DC power become unavailable and a reactor pressure vessel injection system is required to restore and maintain reactor water level. The impact of this procedural change will be evaluated during the next PSA update, but would reduce the CDF impact of AC and DC power failures. Since they impact the same sequences, SAMAs related to AC and DC power failures may have a slightly reduced benefit if this change was in the model used for the SAMA analysis. Therefore, the conclusions of the SAMA analysis are conservative with relation to modeling of this change.

- Operator action to manually initiate HPCI/RCIC for sequences that involve auto initiation signal failure has been proceduralized. Since CDF is dominated by loss of containment decay heat removal sequences, and manual start of HPCI/RCIC does not impact these sequences, this change has no appreciable change on CDF.

Since these changes have minor potential impact on CDF, the conclusions of the SAMA analysis would be unchanged if they were included in the model used for the SAMA analysis.

Response to RAI 1c

c. The Boiling Water Reactor Owners Group (BWROG) peer review in 2000 reviewed the original 1992 IPE as well as the minor changes incorporated in the 1995 revision. Thus, the 1995 revision was included in the BWROG Peer review.

Response to RAI 1d

d. The BWROG Peer Review concluded the Pilgrim IPE can be effectively used to support applications when significant issues are addressed. All issues identified by the BWROG peer review have been incorporated into the 2003 PSA model. In addition, an independent assessment team from Entergy South concluded that the 2003 model met the pertinent aspects of NEI-00-02, "Probabilistic Risk Assessment Peer Review Process Guidance." Therefore, this model is appropriate for use in the SAMA analysis.

Response to RAI 1e

e. Several steps were taken to assure the technical adequacy of the 2003 PSA model. Individual work packages (event tree, fault tree, human reliability analysis (HRA), data, etc.) and internal flooding analysis were circulated to each PSA member for independent peer

review. The accident sequence packages, system work packages, HRA, and internal flooding analyses were also assigned to the appropriate plant personnel for review. For example, event trees, system analyses, and fault tree models were forwarded to the applicable plant systems engineers and the HRA was assigned to individuals from the plant Operations Training department for review. Prior to issuance, the 2003 PSA model was reviewed externally through the use of an independent team of consultants.

The independent team of consultants concluded that the PRA revision had been performed in a logical, reasonable, and thorough manner and that although certain changes were recommended, none of these changes would require a major revision of the analysis or the results obtained. Recommended changes were examined with the review team and appropriate changes were made to the analysis and the report. Implementation of the remaining changes would not impact the conclusions of the SAMA analysis.

Subsequent to issuance of the 2003 PSA model, an independent team of PSA analysts from Entergy South reviewed the model against NEI-00-02 "Probabilistic Risk Assessment Peer Review Process Guidance." The team concluded that the 2003 PSA model addressed the appropriate elements. Additionally, they found that the update process was implemented in a manner that properly documents the model and supporting analysis. The update and maintenance process of the PSA model are conducted in accordance with the provisions of NEI-00-02. Therefore, the 2003 PSA model is appropriate for use in the SAMA analysis.

Response to RAI 1f

f. In 1995, the original IPE model was changed in response to the NRC Request for Additional Information (RAI) received in April 1995. Overall CDF was reduced from 5.85E-5/yr to 2.84E-5/yr. The reduction in CDF was due to removal of HPCI room cooling dependency, revised ADS success criteria, and improved HPCI/RCIC performance.

   The 2003 PSA model is based upon all procedures and plant design as of September 30, 2001, and plant data as of December 31, 2001. The results yield a measurably lower CDF (point estimate CDF = 6.41E-6/reactor year) than the 1995 PSA model update (point estimate CDF = 2.84E-5/yr). The improved results since the 1995 model are due to improved plant performance, replacement of switchyard breakers, more realistic success criteria based on MAAP runs, and more sophisticated data handling. Major changes are summarized in ER Section E.1.4.2.

NRC RAI 2

Provide the following information relative to the Level 2 analysis:

a. In ER Section E.1.2.2.1 it is stated that "The Level 1 and plant system information is passed through to the [containment event tree] (CET) evaluation in discrete [plant damage state] (PDS)." ER Table E.1-4 identifies seven PDS groups and ER Table E.1-8 identifies 48 more detailed PDSs. It is noted that for certain PDSs, the frequency in the Table E.1-4 does not equal the sum of the frequencies for like-PDSs in Table E.1-8. Provide a description of the mapping of Level 1 results into the various containment end states/release categories, and the relevance of the PDS as input to the CET. Address whether the PDSs uniquely define failed equipment for the CET analysis or whether this is done by inputting the cutsets. Also, discuss whether the sequences that make up a PDS are combined and entered into the CET as a frequency, or whether the cutsets that make up each group of core damage sequences are entered into the CET, and the relevance of the two inconsistent sets of frequency values in Tables E.1-4 and E.1-8.

b. ER Table E.1-7 defines 7 release categories and Table E.1-10 provides the frequency of these categories. Source term characteristics are, however, defined for 19 collapsed accident progression bins (CAPBs) in Tables E.1-9 and E.1-11. There appears to be some disconnect between the release categories and the CAPBs. For example, CAPB-15 is indicated to involve late containment failure (Table E.1-9) and a high CsI release fraction of 27 percent (Table E.1-11), yet Table E.1-10 indicates the frequency of Late High release is 0.0. Also, none of the so-called late containment failure CAPBs have release start times greater than 24 hours (8.64E+04 seconds) which is Entergy's definition of late. Describe the use of the release categories and how they are related to the CAPBs.

c. With regard to source terms, provide the following information:

   i. Briefly describe the approach used to determine the source terms for each release category. Clarify whether new MAAP analyses were performed as part of the development of the current model and how the MAAP cases were selected to represent each release category (i.e., based on the frequency dominant sequence in each category or on a conservative, bounding sequence).

   ii. ER Section E.1.2.2.6 indicates that the source terms were grouped into a much smaller number of source term groups with frequency-weighted mean source terms for each group. Clarify whether the source terms prior to this grouping process correspond to the accident sequence-CET endpoints, and the smaller number of source term groups correspond to the CAPBs. Discuss the development of a frequency-weighted mean source term for each group.

d. ER Section E.1.2.2.6 indicates that the accident progression bins for each of the 48 PDS were sorted into the CAPBs based on a number of attributes. Not included in the list are the CET fission product removal and reactor building nodes identified in Table E.1-5 or containment venting. These would appear to impact the release fractions. Please explain.

e. Only about 3 percent of the CDF leads to early containment failure, with the majority of the releases occurring late (after 24 hours following event initiation). Explain this relatively small percentage in terms of the early containment failure modes associated with Mark I containments, including liner melt-through by molten core debris and containment venting.

Clarify how sequences involving containment venting (from the suppression chamber or the drywell) are assigned using the release categories of ER Table E.1-10.

Response to RAI 2a

a. Specific plant damage state (PDS) binning used a two-stage process. First, eleven questions were developed to properly describe the state of the reactor, containment and core cooling systems as the accident proceeds to core damage. These questions are:

(1) What is the initiating event?
(2) Is the containment bypassed?
(3) Is offsite power available?
(4) Is onsite power available?
(5) Are high-pressure systems (HPCI, RCIC, CRD, or SLC) available?
(6) Are low-pressure systems (LPCI, core spray, condensate, firewater) available?
(7) What is the status of reactor pressure?
(8) Is RHR available for decay heat removal?
(9) Are drywell sprays available for ex-vessel injection?
(10) Is the containment vented before core damage?
(11) When does core damage occur?

While the total number of PDSs would be very large if all combinations of answers to the above questions represented unique PDSs, some combinations are illogical and thus are eliminated. Other combinations can be eliminated because they will not result in different accident progressions and therefore, different containment failure and source term characteristics.

The binning criteria, based on the above questions were reduced to the following PDS plant-specific attributes:

- Type of initiating event (question 1)
- Containment bypass (question 2)
- Availability of AC power (questions 3 and 4)
- RCS pressure during the accident sequence and at vessel breach (question 7)
- Time to core damage (question 11)
- The provision of high-pressure vessel make-up during the course of the accident (question 5)
- The provision of low-pressure vessel make-up during the course of the accident (question 6)
- The ability to remove heat from the containment atmosphere (questions 8, 9, and 10)

The refined criteria reflect important distinctions between initiating events, (i.e., transient versus LOCAs) system functional attributes (i.e., the availability of containment heat removal), and system operation (i.e., high or low RCS pressure).

Based on these criteria, a Level 1-to-Level 2 interface event tree was developed. Figure RAI.2-1 depicts the selected PDS binning attributes. This event tree also serves as the template for sorting individual Level 1 sequences into the appropriate plant damage states. Each sequence is characterized by a set of conditions which define a unique plant damage state.

The PDSs, based on Level 1 sequences uniquely define the status of the reactor (high pressure or low), containment (intact or bypass), and core cooling systems (is high-pressure injection from HPIC/RCIC failed or is low pressure injection from LPCI, core spray, etc. available) at the time of core damage.

The PDS frequency is represented by the total frequency of those Level 1 sequences that satisfy the PDS binning criteria shown in Figure RAI.2-1. For example, from the updated PSA, sequence A-3 is a large LOCA sequence that results in core damage due to failure of low-pressure injection systems LPCI and core spray. This sequence satisfies PDS-7 attributes: LOCA initiator, low vessel pressure, early core damage, and the availability of alternate low-pressure injection systems (firewater), containment decay heat removal (torus cooling, etc.) and torus venting.

The input to the containment event tree (CET) is the PDS frequency and different flag settings based on the PDS definition as depicted in Figure RAI.2-1. Hence, the CET outcome represents the unique accident progression for that PDS.

The enclosed Table RAI.2-1 presents the binning scheme used to generate the plant damage state groups provided in Table E.1-4 of the ER. As stated in Section E.1.2.2.5, the Level 1-to-Level 2 binning process defined 48 PDSs. However, to facilitate the description of the Level 2 analysis, the PDSs were re-examined to determine if PDSs that reflect similar reactor and containment states could be combined or "rebinned". The method used was to reclassify the PDS initiating events into general initiator groups (LOCAs, transients, SBO, vessel rupture, ATWS, ISLOCA and transient with loss of containment decay heat removal [TW]). PDSs that exhibit similar reactor coolant system and containment states were then combined if the initiating events belonged to the same initiator group. Table RAI.2-1 lists the association of the general initiator groups. By rebinning, the number of PDSs was reduced from 48 to 7. However, it must be stressed that all 48 PDSs were addressed in the containment event tree; this plant damage state group rebinning is for presentation or descriptive purposes only.

In addition, upon reviewing the contents of Table E.1-8, for PDS-5 the correct value should have been 5.59×10^{-10}/ry instead of 0.0. As a result, Table RAI.2-2 is issued as an update of Table E.1-8.

Response to RAI 2b

b. The following information replaces the discussion in Sections E.1.2.2.2 through E.1.2.2.4, Table E.1-6, Table E.1-7, and the "Nomenclature" portion of Table E.1-10 of the ER. (The discussion for another plant was inadvertently placed in the ER.)

The release category magnitude bin assignment used in the SAMA evaluation is based on cesium iodine (CsI) and tellurium (Te) release fractions alone. The CsI release fraction indicates the fraction of in-vessel radionuclides escaping to the environment. The tellurium release fraction indicates the fraction of products of core-concrete interactions that escape. Noble gas releases are considered essentially complete given containment failure. Table RAI.2-3 indicates the scheme used to make this assignment. Based on this release magnitude bin assignment, no late high release category results.

The CET is used as the starting point to bin different accident progressions endstates into specific release categories. Each CET end state represents a particular release event or a

recovered, degraded core state that may be characterized according to its potential for fission product releases to the atmosphere, its timing of release initiation relative to time of incipient core damage, and its release duration.

Table RAI.2-4 summarizes the possible containment event tree release endstates for the spectrum of core melt accident sequences and the associated collapsed accident progression bin (CAPB). This table defines the various containment event tree release modes in terms of the occurrence of core damage, the occurrence of vessel breach, primary system pressure at vessel breach, the location of containment failure, the timing of containment failure and the occurrence of core-concrete interactions.

Release timings for the CAPBs were assigned by analogy with the source terms reported for Peach Bottom, Unit 2, NUREG/CR-4551 Volume 4, Revision 1, Part 2. The information contain on Page B.2-1 of NUREG/CR-4551 were judged, based on the descriptions, to be similar in character to the CAPB release modes. Hence, the assigned release timings for early release CAPBs are based on the following:

- 3.6 hours or 12960 seconds (Fast ATWS , Fast SBO, LOCA: failure near VB)
- 6.1 hours or 21960 seconds (Fast TC, Fast SBO, LOCA: late failure)
- 7.5 hours or 27000 seconds (Slow SBO: failure near VB)

Similarly the assigned release timings for late release CAPBs are based on either 10 hours/36000 seconds (Slow SBO, late failure) or 13 hours/46800 seconds (Very Slow SBO; late failure).

Response to RAI 2c

c.

i. The magnitude of the source term release resulting from CET accident progression was estimated using a source term algorithm. This algorithm is a set of algebraic expressions that calculate release of each radionuclide group to the environment based on the release from fuel debris and removal mechanisms active in the severe accident progression.

The basic parametric equation used in calculating the source term magnitude is:

$$R_{env(i)} = R_{IV(i)} + R_{CCI(i)} + R_{REV(i)}$$

Where:

The first term $R_{IV\,(i)}$ represent the releases to the environment due to core melt in-vessel.

The second term $R_{CCI\,(i)}$ represents ex-vessel releases from core-concrete interactions that is released to the environment.

The third term $R_{REV\,(i)}$ represents releases to the environment due to revolatilization release from the primary coolant system after vessel breach (I, CS and TE only)

The above individual releases to the environment are a function of the individual fraction of the available material in a given fission product group that evolves from the core

debris and becomes available for release to the environment, divided by the deposition mechanisms that act on this material to limit its ultimate release to the environment.

The use of the above source term algorithm and MAAP calculations generates the source term estimates used in characterizing the severity of the containment event tree endstates. The source term estimates in turn are used in the MACCS2 consequence analysis. MAAP is an industry recognized thermal hydraulics code used to evaluate design basis and beyond design basis accidents. MAAP (Version 4.04) and MAAP parameter file (pnps4-sa.par) have been used in this evaluation. The parameter file contains plant specific parameters representing the primary system and containment.

The 2003 PSA model documents MAAP calculations which are representative deterministic thermal hydraulic calculations that portray dominant CET scenarios.

ii. The CAPBs source terms described in Section E.1.2.2.6 of the ER and used in the consequence analysis are generated by sorting all of the CET accident progression bins for each plant damage state (see Table RAI.2-2) on attributes of the accident progression. These collapsed bins are composed essentially of six characteristics: the occurrence of core damage, the occurrence of vessel breach, primary system pressure at vessel breach, the location of containment failure, the timing of containment failure and the occurrence of core-concrete interactions.

The CAPBs source terms are represented by frequency weighted mean source terms. This process entailed the following steps:

1. Determine the mean frequency of each CAPB by summing the individual mean PDSs accident progressions CET endpoint frequencies contained in the particular CAPB.
2. Determine the CAPB individual conditional probability for each CET accident progression by dividing the result from Step 1 into the individual PDSs frequencies.
3. Multiply each PDS accident progression CET endpoint source terms, release timing, release energy and release elevation by the value determine in Step 2.
4. Sum the individual results of Step 3 to arrive at the total final values contained in Table E.1-11 of the ER.

Response to RAI 2d

d. The impact of fission product removal (i.e., drywell sprays), reactor building fission product retention and torus pool scrubbing (which indirectly includes torus venting) is accounted for when estimating the source terms associated with a particular CET endstate.

Response to RAI 2e

e. Transients with loss of long-term containment decay heat removal (TW sequences) dominate the internal CDF, representing 91.5% of the total CDF. TW sequences entail loss of the torus cooling and drywell spray modes of RHR. The loss of containment heat removal results in elevated containment pressures and eventual containment failure. Containment release results from either direct torus venting or steam overpressurization failure. Because TW sequences result in late containment failure, early containment failure, as a percentage of CDF is correspondingly low. Early containment failures are dominated by SBO and

ATWS sequences with the dominant containment failure modes being drywell liner melt-through, drywell/torus overpressurization at vessel breach and reactor pedestal overpressurization at vessel breach. These results are consistent with results for other MARK I containments.

For sequences involving containment venting and subsequent core damage (PDSs 1, 5, 12, 18, 40 and 43), the impact of containment venting on the release category is considered directly in the Level 2 fault tree developed for fission product removal. For these plant damage states, the occurrence of successful venting, given a TW event, results in flag 'FLAG-VENT-OK' being set to true. As a result, the likelihood for successful fission product removal increases. Hence, CET accident progressions that involve successful fission product removal results in lower release category when compared to CET accident progressions in which no fission product removal occurs.

Figure RAI.2-1 Level I-to-Level II Interface Logic Tree

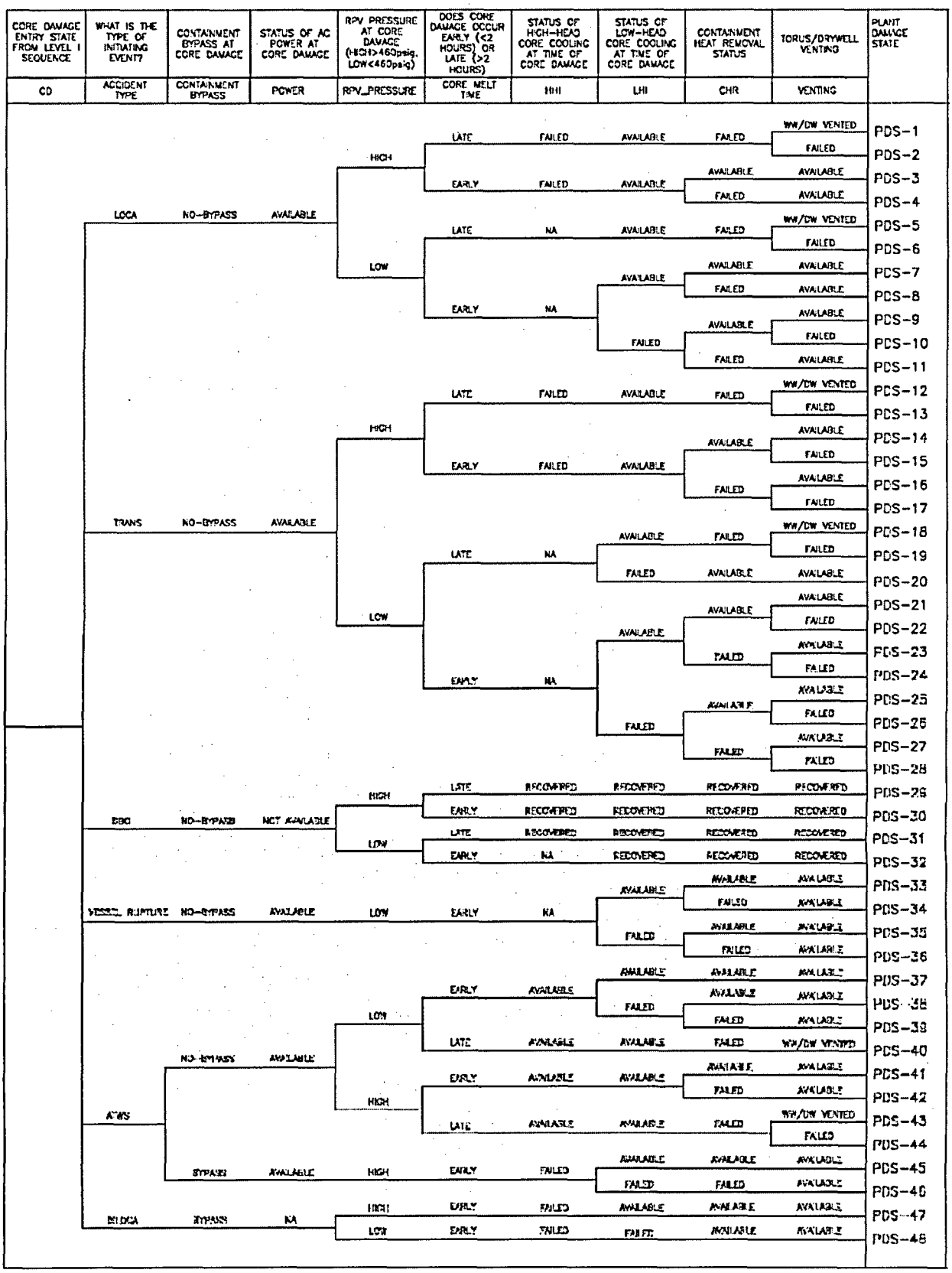

Table RAI.2-1 "Rebinned" Plant Damage States

PDS Group	Plant Damage States	Point Estimate	% of Total Core Damage Frequency
Loss of Coolant Accidents	3, 4, 7, 8, 9, 10, 11 and 37	1.16×10^{-7}	1.80
Transients	14, 15, 16, 17, 20, 21, 22, 23, 24, 25, 26, 27, 28, 38, 39, 41, 42	2.43×10^{-7}	3.79
Station Blackout	29, 30, 31 and 32	1.48×10^{-7}	2.31
Vessel Rupture	33, 34, 35 and 36	4.00×10^{-9}	0.06
Anticipated Transients without Scram	45 and 46	3.39×10^{-8}	0.53
Loss of Containment Heat Removal ('TW')	1,2,5,6,12,13,18,19,40,43 and 44	5.86×10^{-6}	91.45
Inter-System LOCA	47 and 48	4.00×10^{-9}	0.06

Table RAI.2-2 Summary of PNPS Core Damage Accident Sequences Plant Damage States

PDS	Description	Point Estimate	% OF CDF
PDS-1	Long-term LOCA with loss of high-pressure core makeup from HPCI and RCIC, loss of containment heat removal, and failure to depressurize the primary system for low-pressure core makeup. Core damage results at high primary system pressure. Late injection from low-pressure systems (core spray, LPCI, and firewater) is available, provided primary system depressurization occurs. The containment is vented and intact.	0.00E+00	0.0
PDS-2	Long-term LOCA with loss of both high-pressure core makeup (HPCI and RCIC) and containment heat removal. Core damage results at high primary system pressure. Because containment venting fails, containment failure occurs long-term. Late injection is available from low-pressure systems (core spray, LPCI, and fire water) provided they survive containment failure.	1.05E-11	<0.001
PDS-3	Short-term LOCA with loss of high-pressure core makeup and failure to depressurize the primary system for low-pressure core makeup. Core damage occurs at high primary system pressure. Late injection from core spray, LPCI, and firewater is available, provided primary system depressurization occurs. Containment heat removal is available.	8.68E-08	1.35
PDS-4	Short-term LOCA with loss of high-pressure core makeup, loss of containment heat removal, and failure to depressurize the primary system for low-pressure core makeup. Core damage occurs at high primary system pressure. Late injection from core spray, LPCI, and firewater is available, provided primary system depressurization occurs. Unlike PDS-3, containment heat removal is unavailable.	0.00E+00	0.0
PDS-5	Long-term LOCA with loss of high-pressure core makeup and containment heat removal. Core damage occurs at low primary system. Late injection is available from low-pressure systems (core spray, LPCI, and fire water). The containment is vented and intact.	5.59E-10[1]	0.01
PDS-6	Long-term large LOCA. High-pressure core makeup from HPCI and RCIC are unavailable due to the large LOCA. Because containment venting fails, containment failure occurs long-term. Late injection is available from low-pressure systems (core spray, LPCI, and fire water) provided they survive containment failure. Core damage occurs at low primary system pressure.	0.00E+00	0.0
PDS-7	Short-term large LOCA with loss of core cooling. Core damage results at low primary system pressure. Late injection from firewater cross tie and containment heat	1.12E-09	0.02

[1]The revised value replaces the original ER value of 0.0 which was inadvertently submitted.

Table RAI.2-2 Summary of PNPS Core Damage Accident Sequences Plant Damage States

	removal is available.		
PDS-8	Short-term large LOCA with loss of core cooling. Core damage results at low primary system pressure. Late injection from firewater cross tie is available. However, unlike PDS-7, containment heat removal is unavailable.	4.43E-09	0.07
PDS-9	Short-term LOCA with loss of high and low-pressure core cooling. Because the primary system is depressurized, core damage results at low primary system pressure. Late injection from SSW system, containment venting, and containment heat removal are available.	3.64E-09	0.06
PDS-10	Short-term LOCA with loss of high and low-pressure core cooling. Because the primary system is depressurized, core damage results at low primary system pressure. Late injection from SSW system and containment heat removal is available. However, unlike PDS-9, containment venting is not available.	0.00E+00	0.0
PDS-11	Short-term LOCA with loss of high and low-pressure core cooling. Core damage results at low primary system pressure. Late injection from SSW system is available. However, unlike PDS-9, containment venting and containment heat removal are unavailable.	0.00E+00	0.0
PDS-12	Transient with a loss of long-term decay heat removal. Core damage results at high primary system pressure. Late in-vessel and ex-vessel injection is available. The containment is vented and remains intact at the time of core damage.	2.37E-08	0.37
PDS-13	Transient with a loss of long-term decay heat removal. Core damage results at high primary system pressure. Late in-vessel and ex-vessel injection is available. Unlike PDS-12 containment venting fails.	3.75E-06	58.5
PDS-14	Short-term transient with failure to depressurize the primary system. Core damage results at high primary system pressure. Late in-vessel and ex-vessel injection is available. Containment heat removal from RHR is available.	1.52E-07	2.37
PDS-15	Short-term transient with failure to depressurize the primary system. Core damage results at high primary system pressure. Late in-vessel and ex-vessel injection is available. Containment heat removal from RHR is available. However, containment venting is not available.	5.07E-08	0.79
PDS-16	Short-term transient with failure to depressurize the primary system. Core damage results at high primary system pressure. Late in-vessel and ex-vessel injection is available. Containment heat removal from RHR is not available, but containment venting is available.	4.89E-09	0.08
PDS-17	Short-term transient with failure to depressurize the primary system. Core damage results at high primary system pressure. Late in-vessel and ex-vessel injection is available. Neither containment heat removal from RHR nor containment	2.53E-09	0.04

Table RAI.2-2 Summary of PNPS Core Damage Accident Sequences Plant Damage States

	venting is available.		
PDS-18	Transient with a loss of long-term decay heat removal. Core damage results at low primary system pressure. Late in-vessel and ex-vessel injection is available. The containment is vented and remains intact at the time of core damage.	1.56E-06	24.40
PDS-19	Transient with a loss of long-term decay heat removal. Core damage results at low primary system pressure. Late in-vessel and ex-vessel injection is available. Unlike PDS-18 containment venting fails.	5.24E-07	8.18
PDS-20	Long-term transients with loss of core cooling. Core damage results at low primary system pressure. No late injection, but containment heat removal is available.	6.78E-11	<0.001
PDS-21	Short-term transients (IORV) with loss of core cooling. Core damage results at low primary system pressure. Late injection and containment heat removal are available.	8.18E-09	0.13
PDS-22	Short-term transients with loss of core cooling. Core damage results at low primary system pressure. Late injection and containment heat removal are available. However, containment venting is not available.	1.08E-09	0.02
PDS-23	Short-term transients with loss of core cooling. Core damage results at low primary system pressure. Late injection and containment venting are available, but containment heat removal is not available.	0.00E+00	0.00
PDS-24	Similar to PDS-23, except that containment venting is not available.	4.98E-09	0.08
PDS-25	Short-term transients with loss of core cooling. Core damage results at low primary system pressure. No late injection, but containment heat removal and containment venting are available.	2.57E-09	0.04
PDS-26	Similar to PDS-25, except that containment venting is not available.	1.24E-08	0.19
PDS-27	Short-term transients with loss of core cooling. Core damage results at low primary system pressure. Late injection and containment heat removal are not available. However, containment venting is available	4.40E-11	<0.001
PDS-28	Short-term transients with loss of core cooling. Core damage results at low primary system pressure. Late injection, containment heat removal and containment venting are not available.	1.10E-09	0.02
PDS-29	Long-term SBO involving loss of injection at high primary system pressure from battery depletion. All accident-mitigating functions are recoverable when AC power is restored.	1.41E-07	2.20
PDS-30	Short-term SBO sequence involving a loss of high-pressure injection at high primary system pressure from loss of all AC power and DC power or failure of SRVs. All accident-	0.00E+00	0.00

Table RAI.2-2 Summary of PNPS Core Damage Accident Sequences Plant Damage States

	mitigating functions are recoverable when offsite power is restored.		
PDS-31	Long-term SBO sequence involving a loss of high-pressure injection due to one stuck-open safety relief valve or long-term failure of HPCI/RCIC and subsequent failure to depressurize the primary system. Core damage results at low primary system pressure. All accident-mitigating functions are recoverable when offsite power is restored.	2.60E-09	0.04
PDS-32	Short-term SBO sequence involving a loss of high-pressure injection due to two stuck-open safety relief valves or failure of HPCI/RCIC and one stuck-open safety relief valve. Core damage results at low primary system pressure. All accident-mitigating functions are recoverable when offsite power is restored.	4.00E-09	0.06
PDS-33	Short-term large reactor vessel rupture. The resulting loss of coolant is beyond the makeup capability of ECCS. Core damage occurs in the short term at low primary system pressure. Vessel injection and all forms of containment heat removal (RHR and containment venting) are available. The containment is not bypassed and AC power is available.	4.00E-09	0.06
PDS-34	Similar to PDS-33, except that containment heat removal from RHR fails.	0.00E+00	0.00
PDS-35	Short-term large reactor vessel rupture. The resulting loss of coolant is beyond the makeup capability of ECCS. Core damage occurs in the short term at low primary system pressure. Vessel injection is unavailable. However, all forms of containment heat removal (RHR and containment venting) are available. The containment is not bypassed and AC power is available.	0.00E+00	0.00
PDS-36	Similar to PDS-35, except that containment heat removal from RHR fails.	0.00E+00	0.00
PDS-37	Short-term ATWS with failure of SRVs/SVs to open to reduce primary system pressure. The ensuing primary system over pressurization leads to a LOCA beyond core cooling capabilities. Late injection and containment heat removal are available.	1.95E-08	0.30
PDS-38	Short-term ATWS that leads to early core damage at low primary system pressure following successful reactivity control. Late injection is not available. However, containment heat removal is available.	0.00E+00	0.00
PDS-39	Similar to PDS-38 except that containment heat removal from the RHR system is not available.	2.32E-09	0.04
PDS-40	Long-term ATWS that leads to late core damage at low primary system pressure following successful reactivity control. Late injection is available; containment heat removal from the RHR is not available. The containment is vented.	0.00E+00	0.00

Table RAI.2-2 Summary of PNPS Core Damage Accident Sequences Plant Damage States

PDS-41	Short-term ATWS that leads to early core damage at high primary system pressure following successful reactivity control. Late injection and containment heat removal are available.	1.34E-11	<0.001
PDS-42	Similar to PDS-41 except that containment heat removal from the RHR system is not available.	0.00E+00	0.00
PDS-43	Long-term ATWS that leads to late core damage at high primary system pressure following successful reactivity control. Late injection is available; containment heat removal from the RHR is not available. The containment is vented.	0.00E+00	0.00
PDS-44	Long-term ATWS that leads to late core damage at high primary system pressure following successful reactivity control. Late injection is available. However, containment heat removal from the RHR system and containment venting are not available.	0.00E+00	0.00
PDS-45	Short-term ATWS that leads to containment failure and early core damage at high primary system pressure because of inadequate reactor water level following a loss of reactivity control. Late injection and containment venting are available.	3.39E-08	0.53
PDS-46	Short-term ATWS that leads to containment failure and early core damage at high primary system pressure because of inadequate reactor water level following successful reactivity control. No late injection; however, containment venting is available.	0.00E+00	0.00
PDS-47	Unisolated LOCA outside containment with early core melt at high RPV pressure.	3.22E-09	0.05
PDS-48	Unisolated LOCA outside containment with early core melt at low RPV pressure.	7.73E-10	0.01

Table RAI.2-3 Grouping of Source Term Magnitude

Cesium Iodine (CsI) Release Fraction	Tellurium (Te) Release Fraction		
	10^{-4} to 0.001	0.001 to 0.01	0.01 to 0.1
10^{-4} to 0.01	Low	Medium	High
0.01 to 0.1	Low	Medium	High
0.1 to 1.0	Low	Medium	High

Table RAI.2-4 Description of PNPS CET Release Modes

Accident Progression Bin (CET endstate)	CET Release Mode Description	CET Release Category	CAPB	CAPB Description
APB-1	Recovered in-vessel, no containment failure	NCF	CAPB-1	[CD, No VB, No CF, No CCI]
APB-2	Reactor pressure vessel (RPV) at low pressure, recovered in-vessel, late containment failure, in-vessel fission product release goes to torus	Late Low	CAPB-12	[CD, VB, Late CF, WW, RPV pressure <200 psig at VB, No CCI]
APB-3	RPV at low pressure, recovered in-vessel, late containment failure, in-vessel fission product release mitigated in drywell	Late Low	CAPB-14	[CD, VB, Late CF, DW, RPV pressure <200 psig at VB, No CCI]
APB-4	RPV at low pressure, recovered in-vessel, late containment failure, in-vessel fission product release unmitigated	Late Low	CAPB-14	[CD, VB, Late CF, DW, RPV pressure <200 psig at VB, No CCI]
APB-4A	RPV at low pressure, no CCI, early containment failure, ex-vessel fission product release not mitigated	Early Low	CAPB-9	[CD, VB, Early CF, DW, RPV pressure <200 psig at VB, No CCI]
APB-5	Recovered in-vessel, no containment failure	NCF	CAPB-2	[CD, VB, No CF, No CCI]
APB-6	RPV at low pressure, recovered ex-vessel, late containment failure, in-vessel fission product release goes to torus	Late Low	CAPB-12	[CD, VB, Late CF, WW, RPV pressure <200 psig at VB, No CCI]
APB-7	RPV at low pressure, recovered ex-vessel, late containment failure, in-vessel fission product release mitigated in drywell	Late Low	CAPB-14	[CD, VB, Late CF, DW, RPV pressure <200 psig at VB, No CCI]
APB-8	RPV at low pressure, recovered ex-vessel, late containment failure, in-vessel fission product release mitigated by the reactor building	Late Low	CAPB-14	[CD, VB, Late CF, DW, RPV pressure <200 psig at VB, No CCI]
APB-9	RPV at low pressure, no CCI, late containment failure, in-vessel fission product release is unmitigated	Late Low	CAPB-14	[CD, VB, Late CF, DW, RPV pressure <200 psig at VB, No CCI]
APB-10	Core Concrete Interactions (CCI) occurs, no containment failure	NCF	CAPB-3	[CD, VB, No CF, CCI)
APB-11	RPV at low pressure, CCI occurs, late containment failure, in-vessel release goes to torus	Late Low	CAPB-13	[CD, VB, Late CF, WW, RPV pressure <200 psig at VB, CCI]
APB-12	RPV at low pressure, CCI occurs, late containment failure, in-vessel release mitigated in containment	Late Low	CAPB-15	[CD, VB, Late CF, DW, RPV pressure <200 psig at VB, CCI]

Table RAI.2-4 Description of PNPS CET Release Modes

Accident Progression Bin (CET endstate)	CET Release Mode Description	CET Release Category	CAPB	CAPB Description
APB-13	RPV at low pressure, CCI occurs, late containment failure, in-vessel fission product release mitigated by reactor building	Late Low	CAPB-15	[CD, VB, Late CF, DW, RPV pressure <200 psig at VB, CCI]
APB-14	RPV at low pressure, CCI occurs, late containment failure, in-vessel fission product release not mitigated	Late Medium	CAPB-15	[CD, VB, Late CF, DW, RPV pressure <200 psig at VB, CCI]
APB-15	RPV at low pressure, no CCI, early containment failure, in- and ex-vessel fission product release mitigated by torus	Early Low	CAPB-5	[CD, VB, Early CF, WW, RPV pressure <200 psig at VB, No CCI]
APB-16	RPV at low pressure, no CCI, early containment failure, in- and ex-vessel fission product release mitigated by drywell sprays	Early Low	CAPB-9	[CD, VB, Early CF, DW, RPV pressure <200 psig at VB, No CCI]
APB-17	RPV at low pressure, no CCI, early containment failure, in- and ex-vessel fission product release mitigated by reactor building	Early Low	CAPB-9	[CD, VB, Early CF, DW, RPV pressure <200 psig at VB, No CCI]
APB-18	RPV at low pressure, no CCI, early containment failure, in-vessel fission product release to torus, ex-vessel and late fission product release not mitigated	Early Low	CAPB-9	[CD, VB, Early CF, DW, RPV pressure <200 psig at VB, No CCI]
APB-19	RPV at low pressure, CCI occurs, early containment failure, in- and ex-vessel product release mitigated by torus	Early Medium	CAPB-7	[CD, VB, Early CF, WW, RPV pressure <200 psig at VB, CCI]
APB-20	RPV at low pressure, CCI occurs, early containment failure, in- and ex-vessel product release mitigated by drywell sprays	Early Medium	CAPB-11	[CD, VB, Early CF, DW, RPV pressure <200 psig at VB, CCI]
APB-21	RPV at low pressure, CCI occurs, early containment failure, in- and ex-vessel product release mitigated by reactor building	Early Medium	CAPB-11	[CD, VB, Early CF, DW, RPV pressure <200 psig at VB, CCI]
APB-22	RPV at low pressure, CCI occurs, early containment failure, in-vessel fission product release to torus, ex-vessel and late fission product release not mitigated	Early High	CAPB-11	[CD, VB, Early CF, DW, RPV pressure <200 psig at VB, CCI]
APB-23	RPV at low pressure, no CCI, early containment failure, ex-vessel fission product release mitigated by drywell	Early Low	CAPB-9	[CD, VB, Early CF, DW, RPV pressure <200 psig at VB, No CCI]

Table RAI.2-4 Description of PNPS CET Release Modes

Accident Progression Bin (CET endstate)	CET Release Mode Description	CET Release Category	CAPB	CAPB Description
	sprays			
APB-24	RPV at low pressure, no CCI, early containment failure, ex-vessel fission product release mitigated by reactor building	Early Low	CAPB-9	[CD, VB, Early CF, DW, RPV pressure <200 psig at VB, No CCI]
APB-25	RPV at low pressure, no CCI, early containment failure, ex-vessel fission product release not mitigated	Early Low	CAPB-9	[CD, VB, Early CF, DW, RPV pressure <200 psig at VB, No CCI]
APB-26	RPV at low pressure, CCI occurs, early containment failure, ex-vessel product release mitigated by drywell sprays	Early Medium	CAPB-11	[CD, VB, Early CF, DW, RPV pressure <200 psig at VB, CCI]
APB-27	RPV at low pressure, CCI occurs, early containment failure, ex-vessel product release mitigated by reactor building	Early Medium	CAPB-11	[CD, VB, Early CF, DW, RPV pressure <200 psig at VB, CCI]
APB-28	RPV at low pressure, CCI occurs, early containment failure, ex-vessel product release not mitigated	Early High	CAPB-11	[CD, VB, Early CF, DW, RPV pressure <200 psig at VB, CCI]
APB-29	Recovered in-vessel, no containment failure	NCF	CAPB-2	[CD, VB, No CF, No CCI]
APB-30	RPV at low pressure, no CCI, late containment failure, in-vessel and late fission product release goes to torus	Late Low	CAPB-12	[CD, VB, Late CF, WW, RPV pressure <200 psig at VB, No CCI]
APB-31	RPV at low pressure, no CCI, late containment failure, in-vessel and late fission product release mitigated by drywell sprays	Late Low	CAPB-14	[CD, VB, Late CF, DW, RPV pressure <200 psig at VB, No CCI]
APB-32	RPV at low pressure, no CCI, late containment failure, in-vessel and late fission product release mitigated by reactor building	Late Low	CAPB-14	[CD, VB, Late CF, DW, RPV pressure <200 psig at VB, No CCI]
APB-33	RPV at low pressure, no CCI, late containment failure, in-vessel and late fission product release mitigated by reactor building	Late Low	CAPB-14	[CD, VB, Late CF, DW, RPV pressure <200 psig at VB, No CCI]
APB-34	Core Concrete Interactions (CCI) occurs, no containment failure	NCF	CAPB-3	[CD, VB, No CF, CCI)
APB-35	RPV at low pressure, CCI occurs, late containment failure, in-vessel and late fission product release mitigated by torus	Late Low	CAPB-13	[CD, VB, Late CF, WW, RPV pressure <200 psig at VB, CCI]

Table RAI.2-4 Description of PNPS CET Release Modes

Accident Progression Bin (CET endstate)	CET Release Mode Description	CET Release Category	CAPB	CAPB Description
APB-36	RPV at low pressure, CCI occurs, late containment failure, in-vessel and late fission product release mitigated by drywell sprays	Late Low	CAPB-15	[CD, VB, Late CF, DW, RPV pressure <200 psig at VB, CCI]
APB-37	RPV at low pressure, CCI occurs, late containment failure, in-vessel and late fission product release mitigated by reactor building	Late Low	CAPB-15	[CD, VB, Late CF, DW, RPV pressure <200 psig at VB, CCI]
APB-38	RPV at low pressure, CCI occurs, late containment failure, in-vessel and late fission product release not mitigated	Late Medium	CAPB-15	[CD, VB, Late CF, DW, RPV pressure <200 psig at VB, CCI]
APB-39	RPV at low pressure, RPV injection not recovered, no CCI, early containment failure, in- and ex-vessel fission product release mitigated by torus	Early Low	CAPB-5	[CD, VB, Early CF, WW, RPV pressure <200 psig at VB, No CCI]
APB-40	RPV at low pressure, RPV injection not recovered, no CCI, early containment failure, in- and ex-vessel fission product release mitigated by drywell sprays	Early Low	CAPB-9	[CD, VB, Early CF, DW, RPV pressure <200 psig at VB, No CCI]
APB-41	RPV at low pressure, RPV injection not recovered, no CCI, early containment failure, in- and ex-vessel fission product release mitigated by reactor building	Early Low	CAPB-9	[CD, VB, Early CF, DW, RPV pressure <200 psig at VB, No CCI]
APB-42	RPV at low pressure, RPV injection not recovered, no CCI, early containment failure, in-vessel fission product release to torus, ex-vessel and late fission product release not mitigated	Early Low	CAPB-9	[CD, VB, Early CF, DW, RPV pressure <200 psig at VB, No CCI]
APB-43	RPV at low pressure, RPV injection not recovered, CCI occurs, early containment failure, in- and ex-vessel fission product release mitigate by torus	Early Medium	CAPB-7	[CD, VB, Early CF, WW, RPV pressure <200 psig at VB, CCI]
APB-44	RPV at low pressure, RPV injection not recovered, CCI occurs, early containment failure, in- and ex-vessel fission product release mitigate by drywell sprays	Early Medium	CAPB-11	[CD, VB, Early CF, DW, RPV pressure <200 psig at VB, CCI]
APB-45	RPV at low pressure, RPV injection not recovered, CCI occurs, early containment failure, in- and ex-vessel fission product release mitigate by reactor building	Early Medium	CAPB-11	[CD, VB, Early CF, DW, RPV pressure <200 psig at VB, CCI]

Table RAI.2-4 Description of PNPS CET Release Modes

Accident Progression Bin (CET endstate)	CET Release Mode Description	CET Release Category	CAPB	CAPB Description
APB-46	RPV at low pressure, RPV injection not recovered, CCI occurs, early containment failure, in-vessel fission product release to torus, ex-vessel and late fission product release not mitigated	Early High	CAPB-11	[CD, VB, Early CF, DW, RPV pressure <200 psig at VB, CCI]
APB-47	RPV at low pressure, RPV injection not recovered, no CCI, early containment failure, ex-vessel fission product release mitigated by drywell sprays	Early Low	CAPB-9	[CD, VB, Early CF, DW, RPV pressure <200 psig at VB, No CCI]
APB-48	RPV at low pressure, RPV injection not recovered, no CCI, early containment failure, ex-vessel fission product release mitigated by reactor building	Early Low	CAPB-9	[CD, VB, Early CF, DW, RPV pressure <200 psig at VB, No CCI]
APB-49	RPV at low pressure, RPV injection not recovered, no CCI, early containment failure, ex-vessel fission product release not mitigated	Early Low	CAPB-9	[CD, VB, Early CF, DW, RPV pressure <200 psig at VB, No CCI]
APB-50	RPV at low pressure, RPV injection not recovered, CCI occurs, early containment failure, ex-vessel fission product release mitigated by drywell sprays	Early Medium	CAPB-11	[CD, VB, Early CF, DW, RPV pressure <200 psig at VB, CCI]
APB-51	RPV at low pressure, RPV injection not recovered, CCI occurs, early containment failure, ex-vessel fission product release mitigated by reactor building	Early Medium	CAPB-11	[CD, VB, Early CF, DW, RPV pressure <200 psig at VB, CCI]
APB-52	RPV at low pressure, RPV injection not recovered, CCI occurs, early containment failure, ex-vessel fission product release not mitigated	Early High	CAPB-11	[CD, VB, Early CF, DW, RPV pressure <200 psig at VB, CCI]
APB-53	Recovered in-vessel, no containment failure	NCF	CAPB-2	[CD, VB, No CF, No CCI]
APB-54	RPV at high pressure, no CCI, late containment failure, in-vessel and late fission product release mitigated by torus	Late Low	CAPB-12	[CD, VB, Late CF, WW, RPV pressure <200 psig at VB, No CCI]
APB-55	RPV at high pressure, no CCI, late containment failure, in-vessel and late fission product release mitigated by drywell sprays	Late Low	CAPB-14	[CD, VB, Late CF, DW, RPV pressure <200 psig at VB, No CCI]
APB-56	RPV at high pressure, no CCI, late containment failure, in-vessel and late fission product release mitigated by	Late Low	CAPB-14	[CD, VB, Late CF, DW, RPV pressure <200 psig at VB, No CCI]

Table RAI.2-4 Description of PNPS CET Release Modes

Accident Progression Bin (CET endstate)	CET Release Mode Description	CET Release Category	CAPB	CAPB Description
	reactor building			
APB-57	RPV at high pressure, no CCI, late containment failure, in-vessel and late fission product release not mitigated	Late Low	CAPB-14	[CD, VB, Late CF, DW, RPV pressure <200 psig at VB, No CCI]
APB-58	Core Concrete Interactions (CCI) occurs, no containment failure	NCF	CAPB-3	[CD, VB, No CF, CCI)
APB-59	RPV at high pressure, CCI occurs, late containment failure, in-vessel and late fission product release mitigated by torus	Late Low	CAPB-13	[CD, VB, Late CF, WW, RPV pressure <200 psig at VB, CCI]
APB-60	RPV at high pressure, CCI occurs, late containment failure, in-vessel and late fission product release mitigated by drywell sprays	Late Low	CAPB-15	[CD, VB, Late CF, DW, RPV pressure <200 psig at VB, CCI]
APB-61	RPV at high pressure, CCI occurs, late containment failure, in-vessel and late fission product release mitigated by reactor building	Late Low	CAPB-15	[CD, VB, Late CF, DW, RPV pressure <200 psig at VB, CCI]
APB-62	RPV at high pressure, CCI occurs, late containment failure, in-vessel and late fission product release not mitigated	Late Medium	CAPB-15	[CD, VB, Late CF, DW, RPV pressure <200 psig at VB, CCI]
APB-63	RPV at high pressure, RPV injection not recovered, no CCI, early containment failure, in- and ex-vessel fission product release mitigated by torus	Early Low	CAPB-4	[CD, VB, Early CF, WW, RPV pressure >200 psig at VB, No CCI]
APB-64	RPV at high pressure, RPV injection not recovered, no CCI, early containment failure, in- and ex-vessel fission product release mitigated by drywell sprays	Early Low	CAPB-8	[CD, VB, Early CF, DW, RPV pressure >200 psig at VB, No CCI]
APB-65	RPV at high pressure, RPV injection not recovered, no CCI, early containment failure, in- and ex-vessel fission product release mitigated by reactor building	Early Low	CAPB-8	[CD, VB, Early CF, DW, RPV pressure >200 psig at VB, No CCI]
APB-66	RPV at high pressure, RPV injection not recovered, no CCI, early containment failure, in-vessel fission product release to torus, ex-vessel and late fission product release not mitigated	Early Low	CAPB-8	[CD, VB, Early CF, DW, RPV pressure >200 psig at VB, No CCI]

Table RAI.2-4 Description of PNPS CET Release Modes

Accident Progression Bin (CET endstate)	CET Release Mode Description	CET Release Category	CAPB	CAPB Description
APB-67	RPV at high pressure, RPV injection not recovered, CCI occurs, early containment failure, in- and ex-vessel fission product release mitigated by torus	Early Medium	CAPB-6	[CD, VB, Early CF, WW, RPV pressure >200 psig at VB, CCI]
APB-68	RPV at high pressure, RPV injection not recovered, CCI occurs, early containment failure, in- and ex-vessel fission product release mitigated by drywell sprays	Early Medium	CAPB-10	[CD, VB, Early CF, DW, RPV pressure >200 psig at VB, CCI]
APB-69	RPV at high pressure, RPV injection not recovered, CCI occurs, early containment failure, in- and ex-vessel fission product release mitigated by reactor building	Early Medium	CAPB-10	[CD, VB, Early CF, DW, RPV pressure >200 psig at VB, CCI]
APB-70	RPV at high pressure, RPV injection not recovered, CCI occurs, early containment failure, in-vessel fission product release to torus, ex-vessel and late fission product release not mitigated	Early High	CAPB-10	[CD, VB, Early CF, DW, RPV pressure >200 psig at VB, CCI]
APB-71	RPV at high pressure, RPV injection not recovered, no CCI, early containment failure mitigated by drywell sprays	Early Low	CAPB-8	[CD, VB, Early CF, DW, RPV pressure >200 psig at VB, No CCI]
APB-72	RPV at high pressure, RPV injection not recovered, no CCI, early containment failure mitigated by reactor building	Early Low	CAPB-8	[CD, VB, Early CF, DW, RPV pressure >200 psig at VB, No CCI]
APB-73	RPV at high pressure, RPV injection not recovered, no CCI, early containment failure, ex-vessel fission product release not mitigated	Early Low	CAPB-8	[CD, VB, Early CF, DW, RPV pressure >200 psig at VB, No CCI]
APB-74	RPV at high pressure, RPV injection not recovered, CCI occurs, early containment failure mitigated by drywell sprays	Early Medium	CAPB-10	[CD, VB, Early CF, DW, RPV pressure >200 psig at VB, CCI]
APB-75	RPV at high pressure, RPV injection not recovered, CCI occurs, early containment failure mitigated by reactor building	Early Medium	CAPB-10	[CD, VB, Early CF, DW, RPV pressure >200 psig at VB, CCI]
APB-76	RPV at high pressure, RPV injection not recovered, CCI occurs, early containment failure, ex-vessel fission product not mitigated	Early High	CAPB-10	[CD, VB, Early CF, DW, RPV pressure >200 psig at VB, CCI]

Table RAI.2-4 Description of PNPS CET Release Modes

Accident Progression Bin (CET endstate)	CET Release Mode Description	CET Release Category	CAPB	CAPB Description
BP-D12	RPV at low pressure, RPV injection not recovered, no CCI, early bypass containment failure, ex-vessel fission product release mitigated by drywell sprays	Early High	CAPB-17	[BYPASS, RPV pressure <200 psig, No CCI]
BP-D13	RPV at low pressure, RPV injection not recovered, no CCI, early bypass containment failure, ex-vessel fission product release mitigated by reactor building	Early High	CAPB-17	[BYPASS, RPV pressure <200 psig, No CCI]
BP-D14	RPV at low pressure, RPV injection not recovered, no CCI, early bypass containment failure, ex-vessel fission product release not mitigated	Early High	CAPB-17	[BYPASS, RPV pressure <200 psig, No CCI]
BP-D19	RPV at high pressure, RPV injection not recovered, no CCI, early bypass containment failure mitigated by drywell sprays	Early High	CAPB-16	[BYPASS, RPV pressure >200 psig, No CCI]
BP-D20	RPV at high pressure, RPV injection not recovered, no CCI, early bypass containment failure mitigated by reactor building	Early High	CAPB-16	[BYPASS, RPV pressure >200 psig, No CCI]
BP-D21	RPV at high pressure, RPV injection not recovered, no CCI, early bypass containment failure, ex-vessel fission product release not mitigated	Early High	CAPB-16	[BYPASS, RPV pressure >200 psig, No CCI]
BP-E12	RPV at low pressure, RPV injection not recovered, CCI occurs, early bypass containment failure, ex-vessel fission product release mitigated by drywell sprays	Early High	CAPB-19	[BYPASS, RPV pressure <200 psig, CCI]
BP-E13	RPV at low pressure, RPV injection not recovered, CCI occurs, early bypass containment failure, ex-vessel fission product release mitigated by reactor building	Early High	CAPB-19	[BYPASS, RPV pressure <200 psig, CCI]
BP-E14	RPV at low pressure, RPV injection not recovered, CCI occurs, early bypass containment failure, ex-vessel fission product release not mitigated	Early High	CAPB-19	[BYPASS, RPV pressure <200 psig, CCI]
BP-E19	RPV at high pressure, RPV injection not recovered, CCI occurs, early bypass containment failure mitigated by drywell sprays	Early High	CAPB-18	[BYPASS, RPV pressure >200 psig, CCI]

Table RAI.2-4 Description of PNPS CET Release Modes

Accident Progression Bin (CET endstate)	CET Release Mode Description	CET Release Category	CAPB	CAPB Description
BP-E20	RPV at high pressure, RPV injection not recovered, CCI occurs, early bypass containment failure mitigated by reactor building	Early High	CAPB-18	[BYPASS, RPV pressure >200 psig, CCI]
BP-E21	RPV at high pressure, RPV injection not recovered, CCI occurs, early bypass containment failure, ex-vessel fission product not mitigated	Early High	CAPB-18	[BYPASS, RPV pressure >200 psig, CCI]

NRC RAI 3

With regard to the treatment and inclusion of external events in the SAMA analysis, provide the following information:

a. The fire CDF (noted as a screening value) has been lowered since the individual plant examination of external events (IPEEE) as a result of updated equipment failure probability and unavailability values. However, the ER states that a more realistic value may be about a factor of three less, or 6.37E-06 per year. Provide a description of the conservatism in the dominant Pilgrim fire CDF sequences (e.g., related to fire initiating event frequencies, severity factors or recovery actions that were not credited) that would support this factor of three.

b. Since the IPEEE, the seismic CDF has been reduced to 3.22x10-5 per year, and is stated to be a conservative value. The ER states that a more realistic value would be a factor of two less, based on engineering judgement. Provide justification to support the factor of two reduction.

c. Entergy's baseline evaluation of SAMA benefits considers only the risk reduction associated with internal events, and neglects the additional risk reduction that a SAMA could have in external events. Entergy does consider the potential for additional risk reduction in external events, but this is done in the context of an upper bound assessment in which the internal event benefits are increased by a factor of six to account for the combined effect of external events and analysis uncertainties. The impact of external events should be reflected in the baseline evaluation, rather than combining the impact of external events with the uncertainty assessment. In this regard, provide a revised baseline evaluation (using a 7 percent discount rate) that accounts for risk reduction in both internal and external events, and an alternate case using a 3 percent discount rate. (Note that the CDF for external events after Entergy's adjustment in the ER is 3.5 times higher than the internal events CDF. This would justify a multiplier of 4.5 or 5, rather than a multiplier of 4 as stated in the ER.)

d. Provide an assessment of the impact on the baseline evaluation results (i.e., the revised baseline evaluation, which accounts for external events) if risk reduction estimates are increased to account for uncertainties in the analysis.

<u>Response to RAI 3a</u>

a. The EPRI Fire Induced Vulnerability Evaluation (FIVE) methodology was used for the original fire IPEEE submittal. This methodology was conservative in several areas, most notably:

   - An absence of fire severity factors resulting in conservative estimates of fire frequency.

   - Quantification of an older PSA model to obtain conditional core damage probabilities (CCDP) resulting in conservative CDF values.

   - No rigorous evaluation of plant operating procedures during fire events resulting in conservative characterization of crew actions.

- Simple fire suppression analysis resulting in conservative fire damage and fire spread characterization.

As shown in Table RAI.3-1, accounting for solely the first of these conservatisms by including fire severity factors for dominant fire scenarios[2] and requantifying the CCDP for the transformer fire reduces the fire CDF to 6.11 X 10-6 per year. This value could be further reduced by the addressing the remaining conservatisms listed above. However, these estimate more than justify use of 6.37×10^{-6} per year as the baseline fire CDF.

Response to RAI 3b

b. The updated seismic CDF of 3.22×10^{-5} per reactor-year reflects the updated Gothic computer code room heat up calculations that predict no room cooling requirements for HPCI, RCIC, core spray, and RHR areas; an update of random component failure probabilities; and reduction of the impact of relay chattering in the model to reflect the inherent ruggedness of certain relay type models.

As stated in ER Section 4.21.5.4, conservative assumptions in the updated seismic PSA analysis include the following.

- Each of the sequences in the seismic PSA assumes unrecoverable loss of off-site power. If off-site power were maintained, or recovered, following a seismic event, there would be many more systems available to maintain core cooling and containment integrity than are presently credited in the analysis.

- Each of the sequences in the seismic PSA assumes unrecoverable loss of the nitrogen system and the fire water crosstie to the RHR system.

- Each of the sequences in the seismic PSA assumes unrecoverable loss of the CSTs water source for the high pressure injection systems.

- A single, conservative, surrogate element whose failure leads directly to core damage is used in the seismic risk quantification to model the most seismically rugged components.

- Dual initiators are included in the seismic small LOCA, medium LOCA, large LOCA, and ISLOCA event trees. For example, the seismic small LOCA initiating event frequency is a combination of the probability that the seismic event induced a small LOCA and the probability that a small LOCA will occur due to a random event during the 24-hour mission time.

- The ATWS event tree was conservatively simplified so that all conditions which lead to a failure to scram result in core damage, without the benefit of standby liquid control (SLC) or other mitigating systems.

- Because there is little industry experience with crew actions following seismic events, human actions were conservatively characterized.

[2] Severity factors taken from EPRI, "Fire PRA Implementation Guide", EPRI TR-105928, December 1995, Appendix D.

The updated value is also conservative because it does not credit vessel depressurization via the SRVs following failure to provide high pressure injection from HPCI/RCIC nor include a realistic estimation of the failure to align torus cooling/drywell sprays for containment pressure control. Removing just these two conservatisms as discussed in the sensitivity analysis described below is sufficient to justify reduction of the seismic CDF by a factor of two for the SAMA analysis.

In both the original and the updated seismic PRA, vessel depressurization via the SRVs was not included in the model due to fragility of the nitrogen makeup system to the SRV accumulators. However, the SRVs are available to depressurize the vessel in the short-term. Also, post-seismic operator action to align the backup nitrogen supply to the SRVs is probable given the additional time provided by successful short-term SRV operation. Hence, this conservatism was removed by modifying the seismic PRA model to include the capability for vessel depressurization via the SRVs.

A realistic estimation of failure to align torus cooling or drywell sprays for containment decay heat removal was derived by using the internal events PSA value of 6.5×10^{-3} with the following criteria to account for seismic dependencies:

- For seismic hazard levels less than or equal to the seismic design basis earthquake (DBE), the human failure probability was that used in the PSA. It was assumed that a seismic event less severe than the DBE will produce conditions similar to the events addressed in the PSA.

- For seismic hazard level exceeding the DBE (0.15g) but less than 0.5g, the human failure probability is assumed to be twice the PSA value, and ten times the PSA value at 0.5g.

- For seismic hazard levels exceeding 0.5g, the human failure probability is predicted to be 0.1 for in-control room human actions and 1.0 for action outside the control room.

Removing these two conservatisms results in a seismic CDF of 1.72×10^{-5} per reactor year, which is a factor of 1.9 reduction in CDF. This value could be further reduced by the addressing the remaining conservatisms. However, this estimate justifies reduction of the seismic CDF by a factor of two for the SAMA analysis.

Response to RAI 3c

c. The SAMA analyses have been redone and presented in the requested format in Table RAI.3-2. As noted in RAI 3c, the appropriate multiplier is 4.51 on the averted cost risk estimates to represent the total SAMA benefits, accounting for both internal and external events. As described in the response to RAI 4c, the core inventory has been revised to account for fuel enrichment and burnup expected during the period of extended operation.

The revised baseline benefit values in Table RAI.3-2 account for both internal and external events conservatively using a multiplier of 5, account for the revised core inventory from response to RAI 4c, and use a 7% discount rate. The 3% discount rate alternate case benefit values in Table RAI.3-2 account for internal and external events using a multiplier of 5, account for the revised core inventory from response to RAI 4c, and use a 3% discount rate.

The revised benefit analyses were performed using Version 1.13.1 of the MELCOR Accident Consequences Code System 2 (MACCS2), which is the latest version of MACCS2 Code, rather than Version 1.12, that was used for the original SAMA analyses provided in the ER. Version 1.13.1 of the Code corrects errors that had been identified in certain portions of Version 1.12 of the code. The Pilgrim SAMA analysis had not, however, used those portions of Version 1.12 of the Code. Sensitivity analyses have been performed comparing the two versions of the Code which confirm that use of Version 1.13.1 of the Code produces no changes in the Pilgrim SAMA analysis results. Therefore, use of the most recent version of the code is appropriate for the revised analyses.

The estimated costs listed in Table RAI.3-2 reflect the revised values provided in response to RAI # 6b.

Results of the revised baseline analysis show that no additional SAMAs are potentially cost beneficial.

As shown in Table RAI.3-2, no additional SAMAs are potentially cost beneficial with a 3% discount rate.

Response to RAI 3d

d. The requested information was provided in Table E.2-1. However, the response to RAIs 3c and 4c revised the information. As indicated in Section E.1.1 of the ER, CDF uncertainty calculations resulted in a factor of 1.62.

   The revised baseline with uncertainty benefit values in Table RAI.3-2 account for both internal and external events using a multiplier of 5, account for revised core inventory from response to RAI 4c, use a 7% discount rate, and account for uncertainty via a 1.62 uncertainty factor. Thus, a factor of 8 is used to account for the combination of the multiplier to account for both internal and external events (5) and the uncertainty factor (1.62).

   Results show that no additional SAMAs are potentially cost beneficial even with incorporating an uncertainty factor of 1.62.

Table RAI.3-1 PNPS Dominant Scenarios to Fire CDF

Area	Target Set	Ignition Frequency (per year)	Target Damage Probability	Unavailability (CCDP)	Original CDF (per year)	Severity Factor (SF)	New CDF (per year)	Comment
1d	Scenario	1.90E-02	1.00E+00	2.90E-05	5.51E-07		5.51E-07	
1e	RB6-B	3.40E-04	6.10E-04	1.00E+00	2.07E-07	0.2	4.15E-08	HPCI Pump Oil Fire
	Scenario	2.00E-02	1.00E+00	3.70E-05	7.40E-07	0.2	1.48E-07	HPCI Pump Oil Fire
2b	Scenario	4.60E-02	1.00E+00	4.60E-05	2.12E-06	0.2	4.23E-07	TB Heater Bay Area Pump Oil Fire Excluding FW Pumps
3a	RA2-A	3.30E-03	1.00E+00	6.10E-04	2.01E-06	0.12	2.42E-07	Electrical Cabinet Fire
	Scenario	7.50E-03	1.00E+00	2.40E-06	1.80E-08		1.80E-08	Electrical Cabinet Fire
4a	RA1-F	3.30E-03	1.00E+00	3.00E-04	9.90E-07	0.12	1.19E-07	
6	CR1-A	3.20E-04	1.00E-01	3.60E-03	1.15E-07		1.15E-07	
	CR1-B	4.80E-04	1.00E-01	3.60E-03	1.73E-07		1.73E-07	
	CR1-C	1.60E-04	1.00E+00	3.60E-03	5.76E-07		5.76E-07	
	CR2-A	3.20E-04	1.00E-01	3.60E-03	1.15E-07		1.15E-07	
	CR2-B	1.60E-04	1.00E-01	3.60E-03	5.76E-08		5.76E-08	
	CR2-C	1.60E-04	1.00E+00	3.60E-03	5.76E-07		5.76E-07	
7	Scenario	5.30E-03	5.00E-02	3.60E-03	9.54E-07		9.54E-07	
9	Scenario	5.50E-03	1.00E+00	4.40E-04	2.42E-06	0.14	3.39E-07	M-G Set Fire
12	Scenario	7.00E-03	1.00E+00	4.40E-04	3.08E-06	0.12	3.70E-07	Electrical Cabinet Fire

Table RAI.3-1 PNPS Dominant Scenarios to Fire CDF

Area	Target Set	Ignition Frequency (per year)	Target Damage Probability	Unavailability (CCDP)	Original CDF (per year)	Severity Factor (SF)	New CDF (per year)	Comment
13	Scenario	1.40E-02	1.00E+00	4.40E-04	6.16E-06	0.12	7.39E-07	Electrical Cabinet Fire
26	Scenario	2.10E-02	1.00E+00	2.63E-05	5.52E-07		5.52E-07	Main Transformer Fire (original CCDP was 7E-5)
				Total	**2.14E-05**		**6.11E-06**	

Table RAI.3-2 Revised Summary of Phase II SAMA Analysis

Phase II SAMA ID	SAMA	Revised Baseline Benefit	Estimated Cost	Conclusion	Revised Baseline With Uncertainty	3% Discount Rate Alternate Case
1	Install an independent method of suppression pool cooling.	$234,337	$5,800,000	Not cost effective	$374,940	$319,334
2	Install a filtered containment vent to provide fission product scrubbing. Option 1: Gravel Bed Filter Option 2: Multiple Venturi Scrubber	$871,795[1]	$3,000,000	Not cost effective	$1,394,872	$1,218,209
3	Install a containment vent large enough to remove ATWS decay heat.	$56,799	>$2,000,000	Not cost effective	$90,878	$78,556
4	Create a large concrete crucible with heat removal potential under the basemat to contain molten core debris.	$2,405,508	>$100 million	Not cost effective	$3,848,813	$3,361,353
5	Create a water-cooled rubble bed on the pedestal.	$2,405,508	$19,000,000	Not cost effective	$3,848,813	$3,361,353
6	Provide modification for flooding the drywell head	$0	>$1,000,000	Not cost effective	$0	$0
7	Enhance fire protection system and/or SGTS hardware and procedures.	$59,196	>$2,500,000	Not cost effective	$94,714	$82,718
8	Create a core melt source reduction system.	$2,405,508	>$5,000,000	Not cost effective	$3,848,813	$3,361,353
9	Install a passive containment spray system.	$236,327	$5,800,000	Not cost effective	$378,123	$321,572
10	Strengthen primary/ secondary containment.	$1,151,630	$12,000,000	Not cost effective	$1,842,609	$1,609,238

Table RAI.3-2 Revised Summary of Phase II SAMA Analysis

Phase II SAMA ID	SAMA	Revised Baseline Benefit	Estimated Cost	Conclusion	Revised Baseline With Uncertainty	3% Discount Rate Alternate Case
11	Increase the depth of the concrete basemat or use an alternative concrete material to ensure melt-through does not occur	$26,907	>$5,000,000	Not cost effective	$43,052	$37,599
12	Provide a reactor vessel exterior cooling system	$5,381	$2,500,000	Not cost effective	$8,610	$7,520
13	Construct a building to be connected to primary/ secondary containment that is maintained at a vacuum	$59,196	>$2,000,000	Not cost effective	$94,714	$82,718
14	Dedicated Suppression Pool Cooling	$234,337	$5,800,000	Not cost effective	$374,940	$319,334
15	Create a larger volume in containment.	$1,151,630	$8,000,000	Not cost effective	$1,842,609	$1,609,238
16	Increase containment pressure capability (sufficient pressure to withstand severe accidents).	$1,151,630	$12,000,000	Not cost effective	$1,842,609	$1,609,238
17	Install improved vacuum breakers (redundant valves in each line).	$0	>$1,000,000	Not cost effective	$0	$0
18	Increase the temperature margin for seals.	$0	$12,000,000	Not cost effective	$0	$0
19	Install a filtered vent	$871,795[1]	$3,000,000	Not cost effective	$1,394,872	$1,218,209
20	Provide a method of drywell head flooding.	$0	>$1,000,000	Not cost effective	$0	$0
21	Use alternate method of reactor building spray.	$59,196	>$2,500,000	Not cost effective	$94,714	$82,718
22	Provide a means of flooding the rubble bed.	$1,124,723	$2,500,000	Not cost effective	$1,799,557	$1,571,639

Table RAI.3-2 Revised Summary of Phase II SAMA Analysis

Phase II SAMA ID	SAMA	Revised Baseline Benefit	Estimated Cost	Conclusion	Revised Baseline With Uncertainty	3% Discount Rate Alternate Case
23	Install a reactor cavity flooding system.	$2,405,508	$8,750,000	Not cost effective	$3,848,813	$3,361,353
24	Add ribbing to the containment shell.	$1,151,630	$12,000,000	Not cost effective	$1,842,609	$1,609,238
25	Provide additional DC battery capacity.	$132,726	$500,000	Not cost effective	$212,362	$183,030
26	Use fuel cells instead of lead-acid batteries.	$132,726	>$1,000,000[2]	Not cost effective	$212,362	$183,030
27	Modification for Improving DC Bus Reliability	$838,625	$1,953,682[3]	Not cost effective	1,341,800	$1,129,635
28	Provide 16-hour SBO injection.	$132,726	$500,000	Not cost effective	$212,362	$183,030
29	Provide an alternate pump power source.	$248,313	>$1,000,000[2]	Not cost effective	$397,301	$342,381
30	AC Bus Cross-Ties	$426,797	$146,120	Potentially cost effective	$682,876	$576,901
31	Add a dedicated DC power supply.	$833,243	$3,000,000	Not cost effective	$1,333,189	$1,122,116
32	Install additional batteries or divisions.	$833,243	$3,000,000	Not cost effective	$1,333,189	$1,122,116
33	Install fuel cells.	$132,726	>$1,000,000[2]	Not cost effective	$212,362	$183,030
34	DC Cross-Ties	$109,569	$13,000	Potentially cost effective	$175,311	$145,259
35	Extended SBO provisions.	$132,726	$500,000	Not cost effective	$212,362	$183,030
36	Locate RHR inside containment.	$8,366	>$500,000	Not cost effective	$13,385	$10,878
37	Increase frequency of valve leak testing.	$25,505	$100,000	Not cost effective	$40,808	$34,557
38	Improve MSIV design.	$0	n/a[2]	Not cost effective	$0	$0

Table RAI.3-2 Revised Summary of Phase II SAMA Analysis

Phase II SAMA ID	SAMA	Revised Baseline Benefit	Estimated Cost	Conclusion	Revised Baseline With Uncertainty	3% Discount Rate Alternate Case
39	Install an independent diesel for the CST makeup pumps.	$0	$135,000	Not cost effective	$0	$0
40	Provide an additional high pressure injection pump with independent diesel.	$102,606	>$1,000,000[2]	Not cost effective	$164,170	$137,423
41	Install independent AC high pressure injection system.	$102,606	>$1,000,000[2]	Not cost effective	$164,170	$137,423
42	Install a passive high pressure system.	$102,606	>$1,000,000[2]	Not cost effective	$164,170	$137,423
43	Improved high pressure systems	$68,736	>$1,000,000[2]	Not cost effective	$109,977	$91,989
44	Install an additional active high pressure system.	$102,606	>$1,000,000[2]	Not cost effective	$164,170	$137,423
45	Add a diverse injection system.	$102,606	>$1,000,000[2]	Not cost effective	$164,170	$137,423
46	Increase SRV reseat reliability.	$47,618	$1,800,000[2]	Not cost effective	$76,188	$63,832
47	Install an ATWS sized vent.	$56,799	>$2,000,000	Not cost effective	$90,878	$78,556
48	Diversify explosive valve operation.	$0	>$200,000	Not cost effective	$0	$0
49	Increase the reliability of SRVs by adding signals to open them automatically.	$31,881	>$1,500,000	Not cost effective	$51,010	$43,196
50	Improve SRV design.	$172,744	$1,500,000[2]	Not cost effective	$276,391	$232,454
51	Provide self-cooled ECCS pump seals.	$29,891	>$200,000	Not cost effective	$47,826	$40,957
52	Provide digital large break LOCA protection.	$995	>$100,000	Not cost effective	$1,592	$1,119

Table RAI.3-2 Revised Summary of Phase II SAMA Analysis

Phase II SAMA ID	SAMA	Revised Baseline Benefit	Estimated Cost	Conclusion	Revised Baseline With Uncertainty	3% Discount Rate Alternate Case
53	Control containment venting within a narrow band of pressure	$114,364	$300,000	Not cost effective	$182,982	$153,582
54	Install a bypass switch to bypass the low reactor pressure interlocks of LPCI or core spray injection valves.	$23,515	$1,000,000	Not cost effective	$37,624	$32,318
55	Improve SSW System and RBCCW pump recovery.	$334,596	>$5,000,000	Not cost effective	$535,353	$459,971
56	Provide redundant DC power supplies to DTV valves.	$200,010	$112,400	Potentially cost effective	$320,016	$264,600
57	Proceduralize the use of diesel fire pump hydroturbine in the event of EDG A failure or unavailability.	$156,828	$26,000	Potentially cost effective	$250,925	$214,544
58	Proceduralize the operator action to feed B1 loads via B3 when A5 is unavailable post-trip.	$175,142	$50,000	Potentially cost effective	$280,226	$236,616
59	Provide redundant path from fire protection pump discharge to LPCI loops A and B cross-tie.	$845,784	$1,956,000	Not cost effective	$1,353,255	$1,166,976

Note to Table RAI.3-2:

1. The baseline benefit value of zero dollars submitted in the ER has been revised. The revised value corrects the inadvertent use of the baseline source terms rather than reduced source terms in the original benefit estimate for SAMAs 002 and 019.

   In the revised analysis, the benefit of additional filtering capability is estimated by reducing the source terms (by a factor of two) for core damage sequences associated with a loss of containment heat removal (TW sequences), successful containment vent, and loss of reactor vessel makeup occurring some time following vent initiation. Specifically, the source terms associated with core damage accident sequences that are binned into plant damages states 1, 5, 12, 18, 40 and 43 (Table RAI.2-2) are reduced by a factor of 2. These plant damages states are considered 'TW' sequences and the impact on source terms are manifested in late release accident progressions. These are CAPBs 12, 13, 14 and 15. The source terms for the other accident sequences would remain the same.

   A comparison between the 'base case' source terms release fractions and the revised source terms release fractions for the filtered containment vent case (SAMA-2) for noble gases, iodine, cesium and tellurium, four of the nine source terms used as input for the MASSC2 code, are presented below.

	NG	I	Cs	Te
$CAPB\text{-}12_{Base}$	2.0E-01	5.8E-05	4.4E-05	1.3E-07
$CAPB\text{-}12_{SAMA\text{-}2}$	2.0E-01	5.7E-05	4.2E-05	1.2E-07
%Change	0.0%	-3.1%	-4.1%	-6.4%
$CAPB\text{-}13_{Base}$	1.0E+00	8.0E-03	6.0E-03	1.8E-04
$CAPB\text{-}13_{SAMA\text{-}2}$	1.0E+00	8.0E-03	6.0E-03	1.8E-04
%Change	0.0%	0.0%	0.0%	0.0%
$CAPB\text{-}14_{Base}$	7.8E-01	2.9E-02	2.7E-02	2.5E-05
$CAPB\text{-}14_{SAMA\text{-}2}$	7.8E-01	2.9E-02	2.7E-02	2.5E-05
%Change	0.0%	0.0%	0.0%	0.0%
$CAPB\text{-}15_{Base}$	1.0E+00	2.8E-01	2.7E-01	1.3E-03
$CAPB\text{-}15_{SAMA\text{-}2}$	1.0E+00	1.5E-01	1.4E-01	1.0E-04
%Change	0.0%	-46.7%	-46.6%	-91.8%

   Running the MACCS2 code with the reduced source terms results in an 18.5 percent reduction in off-site population dose risk attributable to implementing this SAMA. The use of ER values for averted risk results in a revised baseline benefit of approximately $871,795. Given that the estimated cost for implementing this SAMA is $3 million, this revised value does not alter the ER conclusion that SAMAs 002 and 019 are 'Not cost effective'.

   In redoing the SAMA analyses as requested by this RAI, it was confirmed that SAMA 2 (and its companion SAMA 19) are the only SAMAs that result in reduced source terms such that this correction causes no changes in the other SAMA analyses.

2. The estimated cost reflects the revised value provided in response to RAI #6b.
3. The estimated cost reflects the value provided in response to RAI #5e.

NRC RAI 4

Provide the following information concerning the MACCS analyses:

a. Annual meteorology data from the year 2001 were used in the MACCS2 analyses. Provide a brief statement regarding the acceptability of use of this year's data rather than a different year's data.

b. For the emergency response assumptions, indicate what percentage of the population was assumed to evacuate.

c. The MACCS2 analysis for Pilgrim is based on a core inventory from a mid-1980 analysis, scaled by the power level for Pilgrim. Current boiling water reactor (BWR) fuel management practices use longer fuel cycles (time between refueling) and result in significantly higher fuel burnups. The use of the older BWR core inventory instead of a plant specific cycle could significantly underestimate the inventory of long-lived radionuclides important to population dose (such as Sr-90, Cs-134 and Cs-137), and thus impact the SAMA evaluation. Justify the adequacy of the SAMA cost benefit evaluation given the fuel enrichment and burnup expected at Pilgrim during the renewal period.

Response to RAI 4a

a. The 2001 meteorological data set was the most current and complete at the time of data collection for this study. The data were derived from measurements at the two meteorological towers on site.

Response to RAI 4b

b. For the emergency response assumptions, the entire population (or 100% of the population) within the 10-mile emergency planning zone was assumed to evacuate.

Response to RAI 4c

c. Best-estimate inventory of long-lived radionuclides such as Sr-90, Cs-134, and Cs-137 were derived from an ORIGEN calculation assuming 4.65% enrichment and average burnup according to the expected fuel management practice. It was found that the best-estimate inventory differed from the power-scaled reference inventory by approximately 25%.

   The revised baseline benefits reported in response to RAI 3.c include the impact of the 25% increase in the inventory values for Sr-90, Cs-134, and Cs-137 for each analysis case.

NRC RAI 5

Provide the following with regard to the SAMA identification and screening processes:

a. Table 3-15 of the IPEEE submittal provides a listing of important seismic faults. While no importance values are provided, a number of these faults appear to involve equipment for which some strengthening may be relatively inexpensive. Also, as indicated in the IPEEE and the staff safety evaluation report on the IPEEE, the diesel generator building was found to have limiting fragilities that could significantly impact the CDF. Discuss and evaluate, as necessary, the potential for cost-beneficial SAMAs based on this listing and the known diesel generator building weaknesses.

b. The IPEEE submittal (page 3-44) states that the seismic PRA assumed that low ruggedness relays judged essential under A-46 had been replaced. ER Section E.1.3.1 indicates that the recent reevaluation of seismic risk included the replacement of certain relays with seismically rugged models. Explain this apparent contradiction.

c. ER Table E.1-12 includes a list of the contributors to the updated fire CDF. A number of these have CDF values significantly above 1E-06 per year. For each fire area or dominant fire sequence, explain what measures were taken to further reduce risk, and explain why the fire CDFs cannot be further reduced in a cost effective manner.

d. ER Section E.2.1 states that several enhancements from the IPE or IPEEE were recommended and implemented and that these were included as Phase I SAMA candidates 248 through 281. Provide a detailed accounting of the potential enhancements from the IPE and IPEEE. For each enhancement, indicate if the improvement has been implemented, is no longer being considered and why, and if credit is taken for the improvement in the current PSA. For those enhancements not implemented, indicate their importance and why they should not be considered as Phase II SAMA candidates.

e. Loss of direct current (dc) bus initiators contribute almost 50 percent of the CDF. The only SAMA that directly addresses improving existing dc system reliability is Phase II SAMA 27 and this SAMA reduced CDF by less than 5 percent. Discuss the loss of dc initiators in more detail, their major causes, and the potential for other modifications to reduce the CDF.

f. ER Table E.1-3 indicates that Phase I SAMAs, including procedure and instrumentation improvements, have been implemented to address event FXT XHE-FO-V4T2 (and FXT-XHE-FO-DWS). In spite of these improvements, this event is the highest risk reduction worth ranked non-initiator event. The Phase II SAMAs (57 and 59) cited do not appear to effectively address this event which is an operator error. Identify and evaluate other SAMAs that might lower the importance of this event.

g. ER Table E.1-3 indicates that Phase II SAMA 45 was considered to address event FXT-ENG-FR-P140. This SAMA includes the addition of an entire new system. The addition of a redundant diesel fire pump would appear to be more cost effective. Provide an evaluation of the costs and benefits of adding a redundant diesel fire pump, in lieu of Phase II SAMA 45.

h. ER Table E.1-3 indicates that Phase II SAMA 53 was evaluated to address event CIV XHE-FO-DTV (operator fails to vent containment). This SAMA, controlling containment venting within a narrow pressure band, would be subject to the same failure to vent human error as

in the basic event. Conversion of the containment vent system to a passive design would appear to be more effective in reducing the risk from this event. Provide an evaluation of the costs and benefits of converting the vent system to a passive design.

Response to RAI 5a

a. IPEEE Table 3-15 lists the important basic events (seismic faults and operator actions) that dominate seismic risk. Many of the components listed are important due to their physical correlation in relation to redundant equipment, e.g., correlated seismic failure of all RBCCW pumps, all RHR pumps, all SSW pumps, MCC B14 & MCC B15, etc. Relocation of such equipment would be cost prohibitive. Several other components have high seismic capacity as indicated in IPEEE Table 3-11 (median capacities of 1.0g PGA or greater) and no measurable benefit would be expected from further strengthening. The only component (other than piping) listed in IPEEE Table 3-11 with a median capacity < 1.0 PGA is the EDG building.

   The purpose of the IPEEE was to identify plant vulnerabilities and if necessary, reduce the overall likelihood of core damage and radioactive material release by modifying hardware and procedures to help prevent or mitigate severe accidents. As discussed in the IPEEE report, the north wall of the EDG building concrete structures emerged as having a potentially limiting fragility for above design basis accidents. This prompted a search for an alternative source of emergency power. After the initial sensitivity testing of the seismic PRA, the Station Blackout (SBO) diesel was introduced into the model as an alternative source of emergency power. Walkdowns of the SBO diesel revealed a potential weakness in the support of the muffler. The longitudinal direction of the noise suppression muffler supports were stiffened and subsequent analysis of the SBO diesel resulted in acceptable ruggedness for this component. Since the SBO diesel provides an alternative source of emergency power for above design basis accidents, no further evaluation of the identified EDG building fragility is necessary.

   In addition, the IPEEE seismic study was conservative because it did not credit certain systems capable of mitigating severe accidents. For example, the LPCI mode of the RHR system was not credited, nor was low pressure injection from the fire water pump cross-tie. Seismic core damage risk could be lowered significantly by inclusion of these systems.

Response to RAI 5b

b. Low ruggedness relays judged essential under A-46 were assumed to be replaced, hence, the IPEEE seismic analysis was done with rugged relays assumed in the model. In addition, the seismic PRA continued to evaluate the potential impact of relay chattering on systems performance during a seismic event. The seismic PRA looked at the response of systems, structures and components over a wide spectrum of seismic events, and some rugged relays would be expected to chatter at high enough g forces. These chattering relays could fail some functions, and these failures were included as basic events.

   The relay chatter analysis looked for events which could prevent certain seismic PRA functions from occurring. For each of these relays, a basic event for relay failure due to relay chattering was included in the seismic PRA model. These relays were uniquely identified by basic event code, a median capacity, logarithmic standard deviation and ground motion level in which the relay is assumed not to fail.

During the re-evaluation of the seismic PRA model, since all essential relays were judged to be of high ruggedness, the impact of relay chattering was reduced by increasing the median seismic capacity to 2.0g to reflect the inherent ruggedness for these relay type models.

Therefore, the statement, "and to model replacement of certain relays with a seismically rugged model," in ER Section E1.3.1 is hereby revised to state, "and to reduce the impact of relay chattering to reflect the inherent ruggedness for certain relay type models."

Response to RAI 5c

c. There were five zone scenarios which produced fire CDF contributions in excess of 1.0×10^{-6} per year. These were due to modeling conservatism and were each addressed and reduced in Table RAI.3-1 presented in the response to RAI3a. Since the applied severity factors reduced individual contributions to below the 1.0×10^{-6} per year threshold, modifications to further reduce the CDF would not be cost effective.

The risk significant fire areas are equipped with a detection system that alarms in the control room. Also, several zones are equipped with a suppression system. Therefore, no cost-effective hardware changes were identified to reduce CDF in these areas.

In addition, the Fire Protection Program uses a three-tiered approach:

1. Prevent fires from starting.

2. Detect fires promptly, suppressing them quickly, and thereby limiting fire damage.

3. Design plant safety systems so that a fire which does start will not ultimately prevent essential plant safety functions from being accomplished.

Following the Fire Hazards Analysis provisions and Fire Protection Program procedures provides assurance that risk in these areas is minimized. Therefore, no cost-effective procedural changes were identified to reduce CDF in these areas.

Response to RAI 5d

d. Table RAI.5-1 presents Phase I SAMAs candidates 248 through 281, which are the enhancements recommended in the IPE, PSA update, and IPEEE. Those with a reference source labeled [17] are from the IPE or PSA update. Those with a reference source labeled [18] are from the IPEEE.

Phase I SAMAs candidates 248 through 260 are the key human actions identified to enhance safety and reduce risk. These human actions have been implemented. In addition, an operator lesson plan is used for continuing training of operators on PSA insights and important operator actions.

Phase I SAMA candidates 262, 267, and 268 have also been implemented and included in the current 2003 PSA model. However, SAMA 269 is not considered in the 2003 PSA model update. As indicated in the response to RAI 1b, SAMA 269 modification will slightly reduce CDF, but would not impact the results of the SAMA analysis.

Phase I SAMA candidates 272 through 281, from the IPEEE, have been implemented.

Phase I SAMAs 261, 263, 264, 265, 266, 270, 271 were retained as Phase II SAMA candidates.

Response to RAI 5e

e. The most important contributor to CDF involves loss of one or both divisions of 125V DC power. Although loss of one DC bus is not likely to result in an automatic scram, procedures direct the plant to be manually shut down if immediate repairs to the bus are not imminent. Loss of a single DC bus results in loss of various DC distribution panels and loss of control power to a 4160-VAC safeguard bus (DC power for control and/or operation of a diesel generator, RCIC or HPCI, one loop of torus cooling and drywell sprays, one train of LPCI and core spray injection). The dominant loss of DC sequences are accompanied by loss of the suppression pool cooling and drywell spray modes of RHR and subsequent loss of containment heat removal.

   Because PNPS operating history has no occurrences of loss of a DC bus, loss of a safety DC bus initiator was calculated by quantifying a simple reliability model. A fault tree was constructed to accurately represent the physical plant configuration. The data in the fault tree, i.e. bus failures, reflects current updated plant data. However, the quantification process used only a single value to represent the loss of a DC bus (2.63E-3/ry).

   Evaluation of SAMA 27 involved potential modifications to improve DC bus reliability. As a result, changes to DC bus faults failure probabilities were made in the PSA model, which resulted in a 4.65 percent reduction in CDF. In response to this RAI, SAMA 27 was re-evaluated by eliminating the occurrence of a loss of a 125-Vdc bus B initiator. This resulted in a 24.3 percent reduction in CDF and a revised baseline benefit of approximately $838,625. The cost of installing a new DC source capable of powering both 125VDC busses is estimated to be $1,953,682 by engineering judgment. Therefore, this is not cost effective for PNPS.

   However, SAMA 34 (enhancement of plant procedures to cross-tie DC buses) improves DC reliability and was found to be potentially cost beneficial. Also, in response to RAI 7a, a SAMA to power the battery chargers via the security diesel generator was found to be potentially cost beneficial. Therefore, no additional modifications were examined to reduce the loss of a DC bus initiator.

Response to RAI 5f

f. Events FXT-XHE-FO-V4T2 and FXT-XHE-FO-DWS represent operator failure to align fire water via the LPCI injection path for alternate reactor vessel injection and for alternate drywell spray. To mitigate these failures, a new SAMA is proposed to change the removable spool piece to permanent piping and provide the capability to open locked-closed manual valves 10-HO-511 and 8-1-56 (see Figure RAI.5-1) remotely from the control room. These modifications would increase the success probability of the actions to align fire water to the LPCI injection path. To assess the benefit of this SAMA, the human error probability (HEP) for FXT-XHE-FO-V4T2 was reduced from 2.31E-2 to 5.0E-3 and the HEP for FXT-XHE-FO-DWS was reduced from 2.21E-2 to 5.1E-3. In addition, this SAMA also changed the manual valves 10-HO-511and 8-1-56 to motor operated valves. Therefore, the probability of manual valve failing to open (5.0E-4) was changed to the probability of motor operated valve failing to open (3.0E-3) for these events. These changes resulted in a CDF

reduction of 2.60% and a revised baseline with uncertainty benefit of approximately $313,442. The cost of implementing this SAMA is estimated to be $2,860,445 by engineering judgment. Therefore, this SAMA is not cost effective for PNPS.

Response to RAI 5g

g. A cost benefit analysis was performed to evaluate the addition of a redundant diesel fire pump to address event FXT-ENG-FR-P140, Diesel Fire Pump P140 Fails to Run. A bounding analysis was performed by setting the events for failure of the diesel fire pump to start and to run to zero in the PSA model, which resulted in the CDF reduction of 3.91% and a revised baseline with uncertainty benefit of approximately $654,306. The cost of implementing the addition of a redundant diesel fire pump is estimated to be $5,507,336 by engineering judgment. Therefore, the addition of a redundant diesel fire pump is not cost effective for PNPS.

Response to RAI 5h

h. Phase II SAMA 53 proposes a method to control containment venting within a narrow band to preclude net positive suction head concerns for pumps taking suction from the torus. The evaluation for SAMA 53 considered a reduction in the probability of failure to perform direct torus venting when required. Since SAMA 53 does not directly address plant operators failing to vent containment, a new SAMA is proposed to evaluate the cost benefit of a passive design direct torus vent instead of the existing direct torus vent.

   The existing direct torus vent line originates downstream of torus purge exhaust isolation valve AO-5042B and aligns flow to the normally-closed direct torus vent isolation valve AO-5025 (see Figure RAI.2-2). Downstream of AO-5025, the vent line continues to rupture diaphragm PSD-8180. Torus air space pressure must be greater than or equal to 30 psig in order to break the rupture disc associated with this vent path. After rupturing PSD-8180, flow from the direct torus vent line passes to the common outlet from both standby gas treatment trains and proceeds to the main stack. Air operator valves AO-5042B and AO-5025 and associated solenoid valves are controlled from the control room. These valves need 125-VDC power and an air or nitrogen supply to open. They fail closed on loss of air and nitrogen or on loss of power.

   The proposed SAMA would modify the air operated valves and the associated solenoid valves so that the air operated valves fail open on loss of air and nitrogen or on loss of power.

   Conversion of the existing direct torus vent to a passive torus vent resulted in a CDF reduction of 14.5 percent benefit and a revised baseline with uncertainty benefit of approximately $1,152,242. The cost of changing the direct torus vent to a passive design is estimated to be $3,161,837. Therefore, this SAMA is not cost effective for PNPS.

Table RAI.5-1 Phase I SAMA Analysis (SAMA 248 through 281)

Phase I SAMA ID number	SAMA Title	Source Reference of SAMA	Result of Potential Enhancement	Screening Criteria	Disposition	Disposition Reference
Improvements Related to IPE, IPE Update& IPEEE Insights						
248	Improve operator action: Align fire water cross tie for injection via LPCI	[17]	This SAMA would provide addition availability of water for RPV injection	#3 - Already installed	This operator action is taken in response to a loss of high-pressure injection (feedwater, HPCI, and RCIC) and preferred low pressure injection (condensate, LPCI, and core spray). It entails installing a spool piece/strainer, opening cross tie valves 10-HO-511 and 8-I-56, starting firewater pump, and opening the LPCI injection valve. This has already been implemented at PNPS.	PNPS procedure 5.3.26, RPV Injection During Emergencies
249	Operator Action: Vent Containment Using Direct Torus Vent	[17]	This SAMA would provide containment pressure control and containment heat removal capability	#3 - Already installed	This operator action is taken in the event that containment heat removal via suppression pool cooling and drywell spray is unavailable. The action entails defeating the isolation signal for AO-5042B, installing fuses for direct torus vent valve AO-5025, and opening AO-5042B and AO-5025. This has already been implemented at PNPS.	PNPS procedure 5.4.6, Primary Containment Venting and Purging Under Emergency Conditions
250	Operator Action: Align Fire Water Cross tie for Drywell Spray	[17]	This SAMA would provide containment pressure control and containment heat removal capability	#3 - Already installed	This operator action is taken in the event that containment heat removal via the RHR System (suppression pool cooling and drywell spray) is unavailable. The action entails aligning the fire water cross tie to LPCI and opening the drywell spray valve. This has already been implemented at PNPS.	PNPS procedure 2.2.19.5, RHR Modes of Operation for Transients
251	Operator action: Align drywell spray mode of RHR	[17]	This SAMA would provide containment pressure control and containment heat removal capability	#3 - Already installed	This operator action is taken in response to events involving loss of the Power Conversion System (PCS) and unavailability of suppression pool cooling. The action primarily entails opening a RHR heat exchanger bypass valve, and opening the drywell spray valves. This has already been implemented at PNPS.	PNPS procedure 2.2.19.5, RHR Modes of Operation for Transients

Table RAI.5-1 Phase I SAMA Analysis (SAMA 248 through 281)

Phase I SAMA ID number	SAMA Title	Source Reference of SAMA	Result of Potential Enhancement	Screening Criteria	Disposition	Disposition Reference
252	Operator Action: Initiate Suppression pool cooling	[17]	This SAMA would provide containment pressure control and containment heat removal capability	#3 - Already installed	This operator action is taken in response to provide containment heat removal during transients, LOCAs and ATWS. The action entails to align the RHR System suppression pool cooling path for containment heat removal. This operator action has already been implemented at PNPS EOP-3, "Primary Containment Control.	EOP-3, "Primary Containment Control"
253	Operator Action: Manually initiate emergency depressurization	[17]	This SAMA would prevent the core damage during transients, small and medium LOCAs, and ATWS	#3 - Already installed	This operator action is taken in response to depressurize the reactor to allow the low pressure injection systems to provide coolant makeup to the reactor pressure vessel during transients, small and medium LOCAs, and ATWS. This operator action has already been implemented at PNPS EOP -1, "RPV Control".	EOP-1, "RPV Control"
254	Operator action: Align Station Blackout diesel generator	[17]	Availability of additional electric power sources for coping with the loss of normal power	#3 - Already installed	This operator action is taken in response to align the Station Blackout diesel generator if a loss of offsite power were to occur. The Station Blackout diesel generator can be aligned to provide electric power to 4160Vac busses A5 or A6. With bus B1 or B2 energized and supplying MCC B15 or B14 and B20 battery charging is maintained and RHR valves necessary for aligning the diesel fire pump for RPV vessel injection can be remotely operated. This operator action has already been implemented at PNPS Procedure 5.3.31, Station blackout 2.2.146, "Station Blackout Diesel Generator", and 2.416 "Distribution Alignment Electrical System Malfunction"	PNPS Procedure 5.3.31 Station Blackout
255	Operator Action: Recovery of offsite power within 14 hours	[17]	This SAMA would reduce the core damage frequency contribution from the loss of	#3 - Already installed	This operator action is taken to restore offsite power within 14 hours from the start a loss of offsite power event and subsequent loss of onsite AC power	Procedure 2.4.16, Distribution Alignment Electrical System

Table RAI.5-1 Phase I SAMA Analysis (SAMA 248 through 281)

Phase I SAMA ID number	SAMA Title	Source Reference of SAMA	Result of Potential Enhancement	Screening Criteria	Disposition	Disposition Reference
	during loss of normal power event		offsite power event		resulting in a plant station blackout. Procedure 2.4.16, attachment11, Restoration of AC Power provides guidance in restoring offsite AC power to the plant. Additionally, attachment 12 provides a flow chart for optimizing AC Power Restoration.	Malfunctions
256	Operator Action: Initiate Standby liquid control system	[17]	This SAMA would provide boron injection during ATWS	#3 - Already installed	This operator action is taken in response to provide boron injection ATWS. The operator action entails to align the standby liquid control system for boron injection. This operator action has already been implemented at PNPS EOP-2, RPV Control Failure-to-Scram.	EOP-2, RPV Control Failure-to-Scram
257	Operator Action: Align alternate RPV injection using Condensate and Feedwater System with service water makeup	[17]	Availability of alternate external water injection to the RPV through the use of the Condensate and Feed water System post core damage	#3 - Already installed	The fire water system can be crosstied to feedwater system for long-term recovery RPV injection. This requires the use of a Plymouth fire pump truck on site. This operator action has already been implemented at PNPS.	5.3.26, RPV Injection During Emergencies
258	Operator Action: Manually initiate RPV depressurization post core damage	[17]	This SAMA would impact accident sequence timing, and the occurrence of severe accident phenomena that challenges containment integrity	#3 - Already installed	This operator action is taken in response to depressurize the reactor to allow restoration of low-pressure injection to a damaged core, the potential elimination of severe accident phenomena related to direct containment heating (DCH) and the potential reduction in radionuclide releases. For example, if the RPV is breached at high pressure, venting into an open containment, the radionuclide releases are substantially higher than with the RPV depressurized at the time of failure. This operator action has already been implemented at PNPS in SAG-01" RPV and Primary Containment Flooding".	SAG-01" RPV and Primary Containment Flooding"

Table RAI.5-1 Phase I SAMA Analysis (SAMA 248 through 281)

Phase I SAMA ID number	SAMA Title	Source Reference of SAMA	Result of Potential Enhancement	Screening Criteria	Disposition	Disposition Reference
259	Operator action: Align firewater cross tie for injection via LPCI post core damage.	[17]	This SAMA would provide addition availability of water for RPV injection post core damage as directed by SAG-01" RPV and Primary Containment Flooding"	#3 - Already installed	This operator action is taken flood the RPV and primary containment during a severe accident. Plant operators initiate firewater system injection to the RPV prior to vessel failure given that there is water in the fire water storage tanks and that power is available. The action entails installing a spool piece/strainer, opening crosstie valves 10-HO-511 and 8-I-56, starting a firewater pump, and opening a LPCI injection valve. This operator action has already been implemented at PNPS in SAG-01" RPV and Primary Containment Flooding".	PNPS procedure 5.3.26, RPV Injection During Emergencies SAG-01" RPV and Primary Containment Flooding
260	Operator action: Align drywell sprays post core damage	[17]	This SAMA would provide containment pressure control, containment radiation control and primary containment flooding capability	#3 - Already installed	This operator action is taken in response to events that occur post core damage that result in high drywell pressure conditions, high radiation in either the drywell or tours, or the requirement for containment flooding. The action primarily entails starting an RHR pump or fire water system pump, closing the RHR heat exchanger bypass valve, and opening the drywell sprays valves. This operator action has already been implemented at PNPS in SAG-01" RPV and Primary Containment Flooding".	PNPS procedure 5.3.26, RPV Injection During Emergencies PNPS procedure 2.2.19.5, RHR Modes of Operation for Transients SAG-01" RPV and Primary Containment Flooding
261	Control containment venting within a narrow band of pressure	[17] [5]	This SAMA would establish a narrow pressure control band to prevent rapid containment depressurization when venting is implemented thus avoiding adverse impact on the low pressure ECCS injection systems taking suction from the torus.	Retain	Procedural changes and training will be required to implement this SAMA.	
262	Install nitrogen	[17]	This SAMA would improve	#3 - Already	The containment vent function is the last	SDBD-09A,

Table RAI.5-1 Phase I SAMA Analysis (SAMA 248 through 281)

Phase I SAMA ID number	SAMA Title	Source Reference of SAMA	Result of Potential Enhancement	Screening Criteria	Disposition	Disposition Reference
	bottles as backup air supply for direct torus vent valves		the nitrogen supply reliability and extend direct torus vent valve operation time.	installed	resort methods currently specified in BWRs to remove heat from containment and control containment pressure under extremely adverse circumstances. Pilgrim has redundant and diverse nitrogen supplies to back up the instrument air supply to the direct torus valves.	Primary Containment Atmosphere Control System
263	Install a bypass switch to bypass the low reactor pressure interlocks of LPCI or core spray injection valves	[17]	This SAMA would reduce the core damage frequency contribution from the transients with stuck open SRVs or LOCAs cases. Core Spray and LPCI injection valves require a low permissive signal from the same two sensors to open the valves for RPV injection.	Retain	Considering a modification to Install a bypass switch to bypass the low reactor pressure interlocks of LPCI or core spray injection valves. This modification would permit these valves to open for injection.	
264	Increase the reliability of salt service water (SSW) and RBCCW pumps	[17]	This SAMA would reduce common cause dependencies from SWS and RBCCW Systems and thus reduce plant risk through system reliability improvement.	Retain	The SSW, and RBCCW systems have redundant loops, each having a minimum of two pumps. Adding additional trains of equipment to improve pump recovery would be expensive, costing far more than the associated risk benefit. Retain for evaluation.	
265	Provide redundant DC power supplies to direct torus vent valves	[17]	This SAMA would improve the reliability of the direct torus vent valves and enhance the containment heat removal capability	Retain	Consider powering the two series valves, AO-5025 and AO-5042B, from DC A or DC B, whichever is live. This would require adding four fuses to C7, so the operator still has to inset two (or perhaps four) fuses to enable the direct torus vent function, as he does now. Indication of the live bus(s) might be added as well if necessary. Retain for evaluation.	5.4.6, Primary Containment Venting and Purging Under Emergency Conditions
266	Proceduralize the use of diesel fire pump hydroturbine in	[17]	This SAMA would increase applicability of diesel fire pump hydroturbine-driven fuel pump to reduce the core	Retain	The hydroturbine fuel oil transfer pump (P-181) has the capability to provide makeup to the fire pump day tank to allow continued operation of the diesel fire pump, without	PNPS procedures: 2.2.25, Fire Water Supply System

Table RAI.5-1 Phase I SAMA Analysis (SAMA 248 through 281)

Phase I SAMA ID number	SAMA Title	Source Reference of SAMA	Result of Potential Enhancement	Screening Criteria	Disposition	Disposition Reference
	the event of EDG A failure or unavailability		damage frequency.		dependence on electrical power. However, existing procedures only direct use of the hydroturbine FOTP in the event of a station blackout (SBO). The primary reason for this is that operation of the hydroturbine FOTP requires isolation (and therefore unavailability) of EDG A FOTP P-141A. Thus, for non-SBO sequences involving a loss of offsite power (LOSP) and failure of either EDG A or EDG A FOTP P-141, use of the hydroturbine is not credited. Procedures could be revised to allow use of the hydroturbine in the event that EDG A or EDG A FOTP P-141A is unavailable to reduce the core damage frequency.	2.4.54, Loss of All Fire Suppression Pumps, or Loss of Redundancy in the Fire Water Supply System
267	Proceduralize the operator action to Manually Close 480V Circuit Breaker	[17]	This SAMA would provide the direction to close the 480V Circuit Breaker to support associated loads	#3 - Already installed	Currently Pilgrim Breaker Interchangeability Matrix provides location of the nearest interchangeable breaker to the one that is failing to remain closed, whether it is in an adjacent load center or the warehouse. The existence and application of this matrix will be made known to the operators via appropriate training.	Procedure 2.2.7 480Vac system, E43, sh. 2, Breaker Interchangeability Matrix, 480V System
268	Proceduralize the operator action to Manually Close 4160V Circuit Breaker	[17]	This SAMA would provide the direction to close the 4.16KV Circuit Breaker to support associated loads	#3 - Already installed	Currently Pilgrim Breaker Interchangeability Matrix provides location of the nearest interchangeable breaker to the one that is failing to remain closed, whether it is in an adjacent load center or the warehouse. The existence and application of this matrix will be made known to the operators via appropriate training.	Procedure 2.2.6 4160Vac system E28, sh. 2, Breaker Interchangeability Matrix, 4160V System
269	Operator Action: Manually Initiate HPCI /RCIC Systems	[17]	Additional initiation capability of HPC/RCIC given auto initiation signal failure	#3 - Already installed	This operator action is taken in response to provide an alternate high pressure injection capability during small or medium LOCAs and transients. PNPS Procedure EOP-1 assures initiation of those automatic actions important for controlling reactor coolant	PNPS Procedure EOP-1, RPV Control

Table RAI.5-1 Phase I SAMA Analysis (SAMA 248 through 281)

Phase I SAMA ID number	SAMA Title	Source Reference of SAMA	Result of Potential Enhancement	Screening Criteria	Disposition	Disposition Reference
					inventory. In many cases an operator need only verify system lineups for systems designed to start or operate automatically. The word "verify" encompasses conditions for which automatic action should have occurred but failed to. In such a case, manual operator action to initiate the appropriate action is required.	
270	Proceduralize the operator action to feed B1 loads via B3 When A5 is unavailable post-trip. Similarly, feed B2 loads via B4 when A6 is unavailable post trip.	[17]	This SAMA would provide the direction to restore B15 and B17 loads upon loss of A5 initiating events as long as A3 is available. Additionally, it would provide the direction to restore B14 and B18 loads upon loss of A6 initiating events as long as A4 is available.	Retain	Alternately feeding B1 loads via B3 when A5 is unavailable can be performed via circuit breaker 52-310. This is an evolution controlled by procedure 3.M.3-35. While there are load restrictions in this configuration as explained in the procedure, this is utilized every refueling outage in support of 4.16kV bus maintenance. This can restore B15 and B17 loads upon loss of A5 initiating events as long as A3 is available. Likewise, B14 and B18 loads can be restored upon loss of A6 initiating events as long as A4 is available. Modify PNPS procedure to allow this evolution under other circumstances.	3.M.3-35, Dead Bus and Live Bus Transfer of 480V Load Centers
271	Provide redundant path from fire protection pump discharge to LPCI loops A and B crosstie	[17]	This SAMA would enhance the availability and reliability of the fire water cross-tie to LPCI loops A and B for reactor vessel injection and drywell spray.	Retain	This hard ware modification would provide a redundant path for fire water cross tie to LPCI loops A and B when either manual valve 10-HO-511 or 8-1-56 fails to open on demand.	
272	Enhance tornado protection for tanks, pumps, switchgear, or other equipment/ rooms that may not have	[18]	This SAMA would provide protection from tornadoes and hurricanes	#3 - Already installed	Pilgrim IPEEE has verified plant protection of equipment require for shutdown following the occurrence a tornado. Contribution of tornados to CDF is insignificant.	PNPS Individual Plant Examination for External Events, Revision 0, July 1994

Table RAI.5-1 Phase I SAMA Analysis (SAMA 248 through 281)

Phase I SAMA ID number	SAMA Title	Source Reference of SAMA	Result of Potential Enhancement	Screening Criteria	Disposition	Disposition Reference
	protection or that may be susceptible to tornadoes in category F2					
273	Structurally reinforce masonry wall in the Intake Structure	[18]	Failure of the partition wall between the two trains of Salt Service Water results in the loss of both trains, leading directly to core damage. The improvement would be to raise the median seismic fragility value from 1.07g to 2.0g by structural beams and columns.	#3 - Already installed	This masonry wall between the two trains of the Salt Service Water System, designated as 45.3 is seismically qualified It was reinforced in accordance with a design developed in response to NRC bulletin 80-11 "Masonry Wall Design" issued May 1980.	Calculation Number C15.0.1300 drawings C939 sheet 1 & 2.
274	Structural modifications to SBO diesel	[18]	Structural bracing of the Station Blackout Diesel muffler supports raises the seismic fragility to >1.0g making this component available as an alternate source of emergency power.	#3 - Already installed	The structural modification to the SBO diesel was identified in the PNPS Seismic PRA prepared in 1994. The seismically induced CDF included the beneficial effects of this enhancement.	PNPS Individual Plant Examination for External Events, Revision 0, July 1994
275	Structural modifications to Bus A8	[18]	Power from the Station Blackout Diesel passes through Bus A8. Minor structural modifications to the anchorage of Bus A8 increases its fragility to 0.96g thereby providing access to an alternate source of emergency power.	#3 - Already installed	The structural modification to Bus A8 was identified in the PNPS Seismic PRA prepared in 1994. The seismically induced CDF includes the beneficial effects of this enhancement.	PNPS Individual Plant Examination for External Events, Revision 0, July 1994
276	Install debris barrier to protect Bus A8	[18]	Power from the Station Blackout Diesel passes through Bus A8. Seismic failure of fragile elements on	#3 - Already installed	This installation of a debris barrier to protect Bus A8 was identified in the PNPS Seismic PRA prepared in 1994. The seismically induced CD Frequency includes the	PNPS Individual Plant Examination for External Events, Revision 0, July

Table RAI.5-1 Phase I SAMA Analysis (SAMA 248 through 281)

Phase I SAMA ID number	SAMA Title	Source Reference of SAMA	Result of Potential Enhancement	Screening Criteria	Disposition	Disposition Reference
			the main transformer, located adjacent to Bus A8, create an interaction hazard that can be removed by the installation of a debris barrier.		beneficial effects of this enhancement.	1994
277	Seismically restrain Nitrogen Tanks located near the Condensate Storage Tanks	[18]	Seismic restraints on the Nitrogen tanks remove a seismic interaction hazard thereby raising the fragility of the Condensate Storage Tanks from 0.16g to 0.94g.	#3 - Already installed	This enhancement was implemented after completion of the PNPS Seismic PRA. The seismically induced Core Damage Frequency values do not reflect the beneficial effects of this improvement; however, the impact is estimated at a 2 percent reduction in CDF.	Plant Design Change 97-01
278	Isolate combustible sources for seismic or other events	[18]	This SAMA would limit combustible source to that enclosed in line	#3 - Already installed	The hydrogen vent line at Pilgrim has isolation valves to limit the flammable source to that contained in the line.	PNPS P&IDs M-226 and M-260 PNPS Individual Plant Examination for External Events, Revision 0, July 1994
279	Restrain or locate flammables cabinets to reduce the likelihood of overturning caused by seismic or other events.	[18]	This SAMA would eliminate probability of cabinets overturning, spilling flammable liquid contents.	#3 - Already installed	At Pilgrim, flammables cabinets contain small quantities of flammables, usually in the original containers that seal tightly, so overturning a cabinet would not result in releasing a significant amount of flammable material.	ENN-DC-161, Transient Combustible Program
280	Ensure that the quantity of combustible materials in critical process areas is monitored	[18]	This SAMA would minimize combustibles and chance of prolonged fire in safety-related areas	#3 - Already installed	PNPS has a procedure governing the fire-safe use and storage of combustible materials within the process buildings.	ENN-DC-161, Transient Combustible Program

Table RAI.5-1 Phase I SAMA Analysis (SAMA 248 through 281)

Phase I SAMA ID number	SAMA Title	Source Reference of SAMA	Result of Potential Enhancement	Screening Criteria	Disposition	Disposition Reference
281	Monitor and control pre-staging of outage materials	[18]	This SAMA would reduce fire risk	#3 - Already installed	PNPS Procedure 1.4.3 establishes the requirements for the control of site specific combustible material storage, ignition sources and impairments of fire systems to prevent or minimize the effects of a fire at PNPS. This procedure also provides a control mechanism for tracking system impairments and instituting compensatory measures to minimize the effects that those impairments may have on safety, controls combustible materials within the plant.	ENN-DC-161, Transient Combustible Program

Figure RAI.5-1 Fire Water Cross-Tie to LPCI

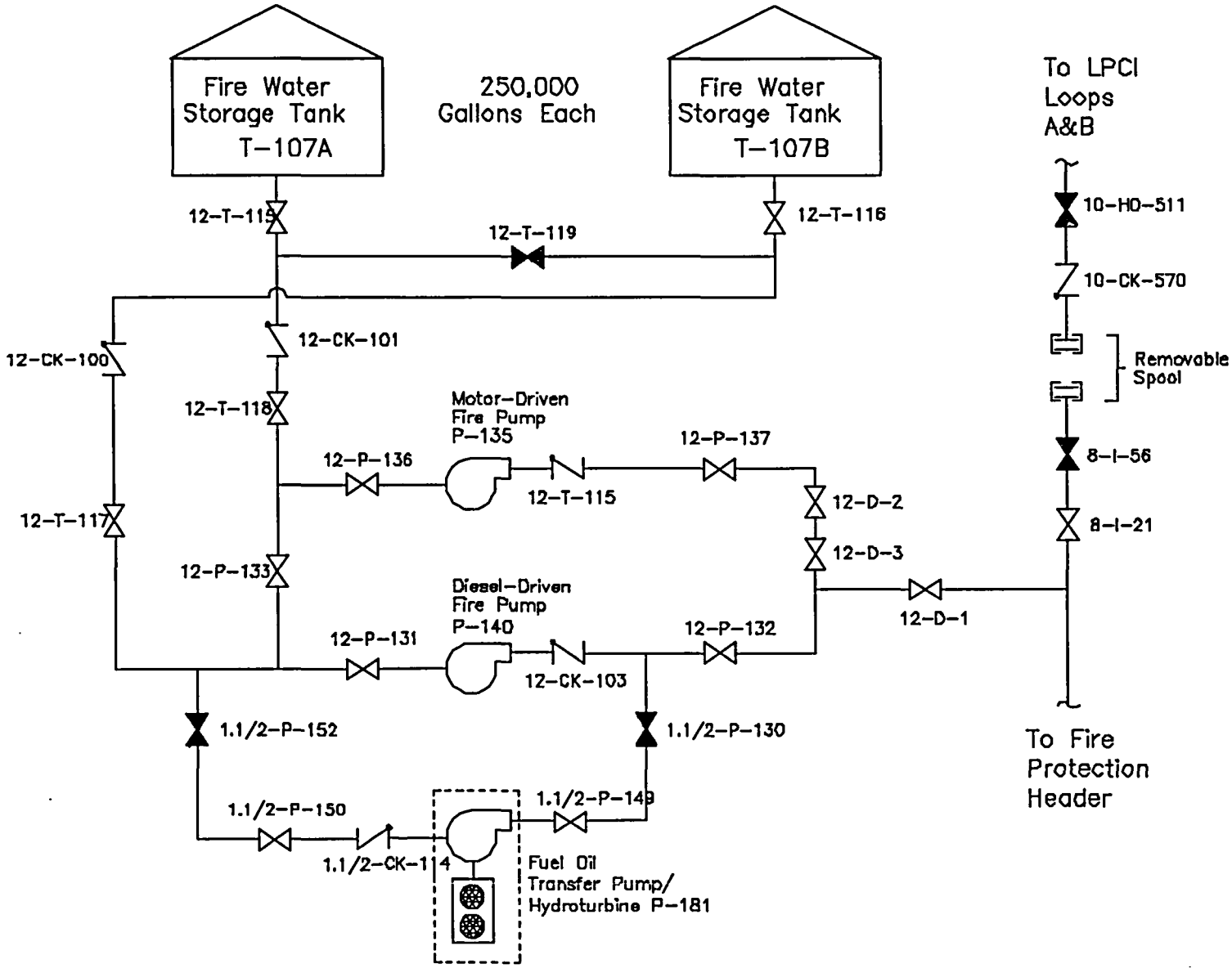

Figure RAI.5-2 PNPS Direct Torus Vent Pathway

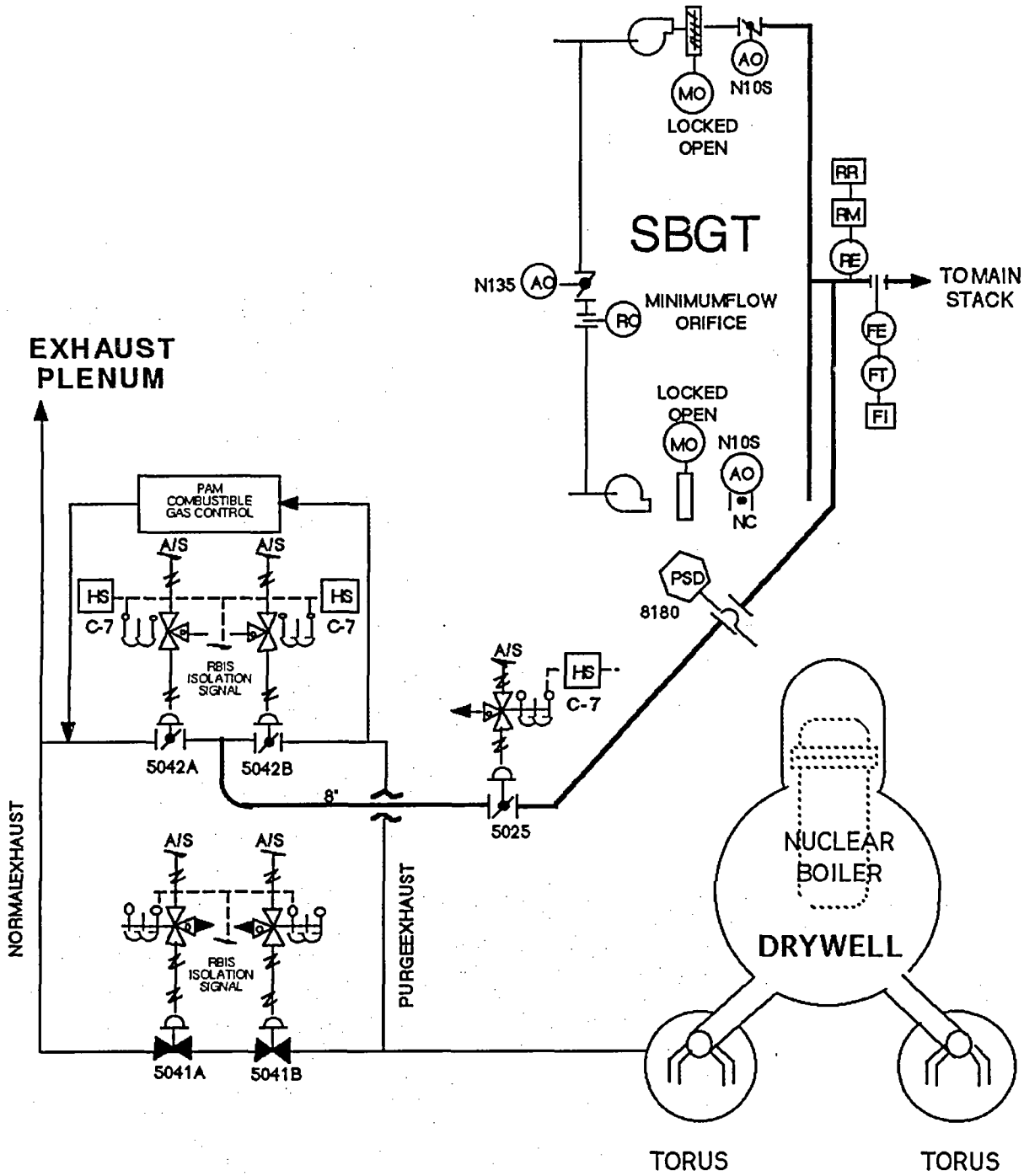

NRC RAI 6

Provide the following with regard to the Phase II cost-benefit evaluations:

a. For a number of the Phase II SAMAs listed in ER Table E.2-1, the information provided does not sufficiently describe the associated modifications and what is included in the cost estimate. Provide a more detailed description of the modifications for Phase II SAMAs 3, 6, 7, 10, 20, 21, 22, 27, 28, 29, 35, 43, 47, 53, and 55.

b. Several of the cost estimates provided were drawn from previous SAMA analyses for a dual-unit site (e.g., Peach Bottom). As such, many of those cost estimates reflect the cost for implementation in two units. Since Pilgrim is a single-unit site, some of the cost estimates should be one-half of what has been cited (i.e., Phase II SAMAs 26, 29, 33, 40, 41, 42, 43, 44, and 45) while others are specific to a plant's design, such as the number of valves or batteries that need to be replaced or added (i.e., Phase II SAMAs 38, 46, and 50). For these cases, provide appropriate (specific to Pilgrim) cost estimates.

c. For Phase II SAMA 12, it is stated that probability of vessel failure was modified. Describe the modification considered, and the initial and revised probability of failure.

d. Phase II SAMA 53, control containment venting within a narrow band of pressure, is intended to eliminate failures associated with successful venting. The benefit of this SAMA was determined by reducing the operator failure to vent by a factor of three. It is not clear that reducing the failure to vent probability is related to the actual benefit from this SAMA. Also, the cost of $300,000 appears high for what appears to be a procedure and training issue. Justify the benefit and cost for this SAMA.

e. In ER Table E.2-1, the percent change in CDF and population dose is reported for each analysis case. However, the change in the offsite economic cost risk (OECR) is not reported. Provide the change in the OECR for each analysis case.

f. Phase II SAMA 47 is stated to include items which reduce the contribution of anticipated transient without scram. Indicate which items are included.

g. Phase II SAMA 49 involves providing instrument signals to open safety/relief valves for medium loss of coolant accident. Discuss whether the signals already exist in the automatic depressurization system.

<u>Response to RAI 6a</u>

a. SAMAs 3 (Install a containment vent large enough to remove ATWS decay heat) and 47 (Install an ATWS sized vent) provide a means to remove decay heat during an ATWS event. The proposed design modification for these SAMAs involves installation of a larger vent pipe than the existing 8-inch torus vent pipe. The proposed design would require a vent pipe of sufficient size to remove decay heat following an ATWS with MSIV closure and successful recirculation pump and feedwater pump.

   SAMAs 6 (Provide modification for flooding the drywell head), and 20 (Provide a method of drywell head flooding), would provide intentional flooding of the upper drywell head such that if high drywell temperatures occurred, the drywell head seal would not fail. The

proposed design modification requires extensive structural modification to accommodate a drywell head flooding system. To flood the drywell head seal at elevation 93-foot, the drywell vent at the 70-foot elevation would have to be plugged and a new penetration would have to be installed in the drywell head at the 93-foot elevation. The new vent penetration would have to be tied into the existing vent line and would have to permit removal of the drywell head at each refueling outage.

SAMAs 7 (Enhance fire protection system and standby gas treatment system hardware and procedure) and 21 (Use alternate method of reactor building spray) would improve fission product scrubbing in severe accidents. The proposed design modification would upgrade the standby gas treatment and fire protection systems to a sufficient capacity to handle postulated loads from severe accidents due to a bypass or breach of the containment. Loads produced as a result of reactor pressure vessel or containment blowdown would require large filtering capacities.

SAMA 10 (Strengthen primary and secondary containment) would reduce the probability of containment over-pressurization failure. This SAMA is intended for a new plant; hence, it is not practical to back-fit this modification into a plant which is already built and operating. Since PNPS has a MARK I containment, early release risk is dominated by events that result in early failure of the drywell shell due to direct contact with debris and events that bypass the containment. Strengthening of primary and secondary containment would have a small impact on the overall risk of these accidents. The cost estimated for ABWR was $12 million and the retrofit for an existing containment would cost more. Therefore, the cost of implementation for this SAMA exceeds the revised baseline benefit.

SAMA 22 (Provide a means of flooding the rubble bed) would contain molten core debris on the reactor pedestal and allow the debris to be cooled. The proposed design modification involves a core retention device inside the reactor pedestal area. However, the Industry Degraded Core Rulemaking (IDCOR) Program has investigated core retention devices and concluded, "core retention devices are not effective risk reduction devices for degraded core events". The cost of implementing this SAMA at Quad Cities was estimated to be $2.5 million. Therefore, SAMA 22 is not cost effective.

SAMA 27 (Modification for improving DC bus reliability) would increase reliability of AC power and injection capability. It consists of providing an independent DC source, capable of powering both 125 VDC busses. This would be accomplished by feeding the independent source to either DC bus and cross-tying the busses together. This was not found to be cost effective. In response to RAI 5e, the installation of a new DC source to mitigate the loss of DC power initiator is estimated to be $1,953,682 and would increase reliability of DC power and injection capability. This design change was not found to be cost effective. However, the proposed procedural enhancement to cross-tie DC buses as described in SAMA 34 will improve DC bus reliability and is potentially cost beneficial.

SAMAs 28 (Provide 16-hour SBO injection) and 35 (Extended SBO provisions), would improve the capability to cope with longer station blackout scenarios. The proposed design modification for these SAMAs involves adding a battery to improve the coping capability during SBO scenarios.

SAMA 29 (Provide an alternate pump power source) would provide a small, dedicated power source such as a dedicated diesel or gas turbine for the feedwater or condensate pumps so that they do not rely on offsite power. The proposed design modification would

involve adding one 4.16 KV power source to supply AC power to one feedwater or one condensate pump. The additional diesel generator or gas turbine would have to be sufficiently sized to handle starting (inrush) and running of at least one 5,000 hp pump at a rated voltage of 4.16kV. A generator of that size would easily exceed 6,000 KW which is larger than the existing SBO diesel generator.

SAMA 43 (Improved high pressure systems) would improve prevention of core melt sequences by improving reliability of high pressure capability to remove decay heat. The proposed design modification considers replacing one CRD pump with a flow capacity equal to the RCIC system (400 gpm).

SAMA 53 (Control containment venting within a narrow band of pressure) would establish a narrow pressure control band to prevent rapid containment depressurization when venting is implemented thus avoiding adverse impact on the low pressure ECCS injection systems taking suction from the torus. Hence, the proposed modification for SAMA 53 requires a detailed engineering analysis examining the impact of opening the torus vent path and an examination of the NPSH requirements for LPCI and core spray systems. It would also require an engineering study of the feasibility of closing torus vent valves AO-5042B and AO-5025 against high containment pressures as well as potential hardware modifications. Procedure changes, simulator changes, and training would also be required.

SAMA 55 (Increase the reliability of SSW and RBCCW pumps) would reduce common cause dependencies from SSW and RBCCW systems and thus reduce plant risk. The proposed design modification would require installation of a different type of pump with a dedicated power supply. In addition, a separate pump intake and a new intake building to house the pump would be required. The proposed dedicated power would be routed from the switchyard underground or overhead to the new intake structure.

Response to RAI 6b

b. Since Pilgrim is a single-unit site, the cost estimates for Phase II SAMAs 26, 29, 33, 40, 41, 42, 43, 44, and 45 are now one-half of what was previously cited (see Table RAI.3-2). Revision of these cost estimates had no impact on the original conclusions.

   Redundant MSIVs are designed to isolate during severe accidents that could lead to radionuclide release and containment bypass. The MSIVs are leak tested each operating cycle to ensure their adequacy. The maintenance rule program monitors the performance of the MSIVs providing early feedback on degradation. In addition, the PSA has determined that the contribution from MSIV isolation failure is insignificant and results in no benefit from implementing this SAMA. Thus, cost estimates for SAMA 38 (Improve MSIV design) are moot.

   For SAMA 46 (Increase SRV reseat reliability), the modification assumed replacing 4 ADS/SRV plus 2 RVs with more reliable SRVs. The cost estimate includes engineering analysis and design, and hardware modification. The total cost estimate to implement this SAMA is $1,800,000.

   PNPS SRVs have redundant DC power supplies and back up nitrogen supply to enhance SRV reliability. SAMA 50 (Improve SRV design) assumed replacing 4 SRVs with more reliable SRVs. The total cost estimate to implement this SAMA is $1,500,000.

Response to RAI 6c

c. SAMA 12 evaluates a reactor vessel exterior cooling system to potentially cool the molten core before it causes vessel failure, if the lower head could be submerged in water. One method of accomplishing this is to flood containment in accordance with plant procedures during a severe accident. However, the reactor vessel support skirt at PNPS is not vented. Thus, there would be an air pocket underneath the vessel preventing full contact of the water in containment with the vessel bottom head. Hence, the proposed design modification requires a vent path for the trapped air. This can be accomplished by drilling vent holes in the skirt to provide a vent path for the trapped air or installation of a u-tube extending from the base of the vessel down to an accessible opening in the skirt, then up to a level above that of the containment flood water. The cost of this modification is expected to be similar to that reported for Quad Cities, approximately $2.5 million, and therefore is not considered cost effective.

   To account for potential ex-vessel cooling, the containment even tree basic events for vessel failure probabilities were lowered. Event VF_1 represents the probability of vessel failure given core melt less than 20 percent with injection available. VF_1 was changed from 0.05 to 0.025. Event VF_2 represents the probability of vessel failure given core melt greater than 20 percent, core slump and availability of injection. VF_2 was changed from 1.0 to 0.5.

Response to RAI 6d

d. The PSA model assumes the failure of low-pressure injection systems (LPCI and core spray) that take suction from the torus due to inadequate net positive suction head (NPSH) requirements upon performing torus venting. Therefore, the model does not contain basic events for failure of these systems following successful torus venting. Thus, the benefit for SAMA 53 was conservatively estimated by reducing the failure to vent containment basic event. Since CDF is dominated by loss of containment heat removal events, of which failure to vent containment is a dominant contributor, a factor of three reduction in the probability of failure to perform containment venting was considered the appropriate method to evaluate the benefit of SAMA 53. In regards to the cost, as stated in response to 6a, the $300,000 cost includes engineering analyses, procedure changes, simulator changes, and training.

Response to RAI 6e

e. The reduction in the OECR for each analysis case in Table E.2-1 of the ER is given in Table RAI.6-1.

Response to RAI 6f

f. To conservatively assess the benefit of SAMA 047 (Install an ATWS sized vent), the CDF contribution from ATWS sequences associated with containment bypass were eliminated. It is not considered technically feasible to supply enough additional make-up water for injection to allow for large enough removal of ATWS decay heat, beyond the current design basis. Therefore, eliminating the CDF contribution from containment bypass ATWS sequences provides a conservative assessment of the benefits of this SAMA.

Response to RAI 6g

g. Phase II SAMA 49 provides a means to reduce the consequences of a medium LOCA by increasing SRV reliability to open automatically. This SAMA provides adequate reactor coolant system (RCS) pressure control to prevent an overpressurization condition in the RCS and therefore preclude the occurrence of a LOCA.

   The proposed design modification was based on the design implemented at the James A. Fitzpatrick Nuclear Power Plant called, "SRV Electric Lift System". This plant modification involved opening the SRVs electrically by energizing existing solenoid valves on the pilot stage assembly located on each SRV when the appropriate RCS pressure setpoint is exceeded (the pressures ranges are 1135 psig to 1145 psig). The electric lift initiation is designed to assist the existing mechanical relief in performing its intended function. The SRV electric lift system functions only as an electrical back up to the mechanical setpoint and does not prevent the mechanical portion of the SRV from operating as designed.

   Therefore, the proposed design modification does not impact any existing signals in the automatic depressurization system.

Table RAI.6-1 Reduction in Off-site Economic Cost Risk (OECR)

SAMA ID	SAMA Description	OECR Reduction (%)
1	Install an independent method of suppression pool cooling.	4.56%
2	Install a filtered containment vent to provide fission product scrubbing.	20.53%
3	Install a containment vent large enough to remove ATWS decay heat.	1.14%
4	Create a large concrete crucible with heat removal potential under the base mat to contain molten core debris.	57.79%
5	Create a water-cooled rubble bed on the pedestal.	57.79%
6	Provide modification for flooding the drywell head.	0.00%
7	Enhance fire protection system and standby gas treatment system hardware and procedures.	1.33%
8	Create a core melt source reduction system.	57.79%
9	Install a passive containment spray system.	4.56%
10	Strengthen primary and secondary containment.	26.24%
11	Increase the depth of the concrete basemat or use an alternative concrete material to ensure melt-through does not occur	0.57%
12	Provide a reactor vessel exterior cooling system	0.19%
13	Construct a building to be connected to primary/ secondary containment that is maintained at a vacuum	1.33%
14	Dedicated Suppression Pool Cooling	4.56%
15	Create a larger volume in containment.	26.24%
16	Increase containment pressure capability (sufficient pressure to withstand severe accidents).	26.24%
17	Install improved vacuum breakers (redundant valves in each line).	0.00%
18	Increase the temperature margin for seals.	0.00%
19	Install a filtered vent	20.53%
20	Provide a method of drywell head flooding.	0.00%
21	Use alternate method of reactor building spray.	1.33%

Table RAI.6-1 Reduction in Off-site Economic Cost Risk (OECR)

SAMA ID	SAMA Description	OECR Reduction (%)
22	Provide a means of flooding the rubble bed.	27.19%
23	Install a reactor cavity flooding system.	57.79%
24	Add ribbing to the containment shell.	26.24%
25	Provide additional DC battery capacity.	2.85%
26	Use fuel cells instead of lead-acid batteries.	2.85%
27	Modification for Improving DC Bus Reliability	1.71%
28	Provide 16-hour SBO injection.	2.85%
29	Provide an alternate pump power source.	5.13%
30	AC Bus Cross-Ties	7.98%
31	Add a dedicated DC power supply.	14.83%
32	Install additional batteries or divisions.	14.83%
33	Install fuel cells.	2.85%
34	DC Cross-Ties	1.71%
35	Extended SBO provisions.	2.85%
36	Locate RHR inside containment.	0.19%
37	Increase frequency of valve leak testing.	0.38%
38	Improve MSIV design.	0.00%
39	Install an independent diesel for the CST makeup pumps.	0.00%
40	Provide an additional high pressure injection pump with independent diesel.	1.71%
41	Install independent AC high pressure injection system.	1.71%
42	Install a passive high pressure system.	1.71%
43	Improved high pressure systems	1.14%
44	Install an additional active high pressure system.	1.71%
45	Add a diverse injection system.	1.71%
46	Increase SRV reseat reliability.	0.95%

Table RAI.6-1 Reduction in Off-site Economic Cost Risk (OECR)

SAMA ID	SAMA Description	OECR Reduction (%)
47	Install an ATWS sized vent.	1.14%
48	Diversify explosive valve operation.	0.00%
49	Increase the reliability of SRVs by adding signals to open them automatically.	0.57%
50	Improve SRV design.	3.04%
51	Provide self-cooled ECCS pump seals.	0.57%
52	Provide digital large break LOCA protection.	0.00%
53	Control containment venting within a narrow band of pressure	2.09%
54	Install a bypass switch to bypass the low reactor pressure interlocks of LPCI or core spray injection valves.	0.38%
55	Improve SSW System and RBCCW pump recovery.	7.03%
56	Provide redundant DC power supplies to DTV valves.	3.23%
57	Proceduralize the use of diesel fire pump hydroturbine in the event of EDG A failure or unavailability.	3.04%
58	Proceduralize the operator action to feed B1 loads via B3 when A5 is unavailable post-trip.	3.23%
59	Provide redundant path from fire protection pump discharge to LPCI loops A and B cross-tie.	18.44%

NRC RAI 7

For certain SAMAs considered in the ER, there may be lower-cost alternatives that could achieve much of the risk reduction at a lower cost. In this regard, discuss whether any lower cost alternatives to those Phase II SAMAs considered in the ER, would be viable and potentially cost beneficial. Evaluate the following SAMAs (previously found to be potentially cost-beneficial at other plants), or indicate if the particular SAMA has already been considered. If the latter, indicate whether the SAMA has been implemented or has been determined to not be cost-beneficial at Pilgrim:

a. Use portable generator to extend the coping time in loss of alternating current (ac) power events (to power battery chargers).

b. Enhance dc power availability (provide cables from diesel generators or another source to directly power battery chargers).

c. Provide alternate dc feeds (using a portable generator) to panels supplied only by dc bus.

d. Modify procedures and training to allow operators to cross-tie emergency ac buses under emergency conditions which require operation of critical equipment.

e. Develop guidance/procedures for local, manual control of reactor core isolation cooling following loss of dc power.

f. Enhance loss of salt service water procedure to provide more specific guidance to deal with or prevent a complete loss of the system.

Response to RAI 7a

a. Upon a complete station blackout with failure of the station blackout diesel generator, the 400kw security diesel generator could be used to extend the life of both 125-Vdc batteries. This allows maintaining RCIC and SRVs availability. Plant procedural changes would be required to implement this SAMA. In addition, since both batteries are required to be able to remove containment heat via the direct torus vent, two cables would be required, one to power each 125VDC battery charger.

   With load shedding and battery depletion, core boil off times can reach a maximum of 14 hours. To assess the impact of prolonging battery life using the security diesel generator to power the battery chargers, the probability of non-recovery of offsite power for 14 hours was changed to 24 hours for SBO scenarios. This resulted in a revised baseline with uncertainty benefit of approximately $212,362[3]. The estimate cost of implementing and using the portable generator is $75,000. Therefore, this SAMA is potentially cost effective for PNPS.

Response to RAI 7b

b. Loss of battery charging is not a dominant contributor to CDF. This is due to the use of a swing battery charger as a backup to the normally operating chargers. This swing battery charger is powered from MCC B10 which in turn is powered from swing 480VAC load center

[3] The value reflects the revised value provided in the response to RAI #3c.

6 which can automatically transfer feed between divisions. The response to RAI 7a discusses use of the security diesel as another method to enhance DC power availability. Also, Phase II SAMA 34 recommends a procedural enhancement to use DC bus cross-ties to enhance the reliability of the DC power system. Therefore, the proposed SAMA to enhance DC power availability by providing cables from diesel generators or another source to directly power battery chargers has been evaluated for PNPS.

Response to RAI 7c

c. Scenarios involving loss of 125VDC are dominated by failures of circuit breakers to remain shut on main distribution panels. Providing an alternate feed would not mitigate these failures. As discussed in the response to RAI 7b, PNPS uses a swing battery charger as a backup to the normally operating chargers. This swing battery charger is powered from MCC B10 which in turn is powered from swing 480VAC load center B6 that can automatically transfer feed between divisions. Therefore, the impact of loss of battery charging is reduced. The response to RAI 7a discusses use of the security diesel as another method to enhance DC power availability. Also, Phase II SAMA 34 recommends a procedural enhancement to use DC bus cross-ties to enhance the reliability of the DC power system. Therefore, the proposed SAMA to provide alternate DC feeds using a portable generator to panels supplied only by DC bus has been evaluated for PNPS.

Response to RAI 7d

d. Phase II SAMA 58 allows operators to cross-tie emergency AC buses under emergency conditions which require operation of critical equipment.

Response to RAI 7e

e. Plant procedure 5.3.26, "RPV Injection during Emergencies," Attachment 1, provides guidance for local manual control of the reactor core isolation cooling (RCIC) system following loss of DC power. Therefore, this SAMA has already been implemented at PNPS.

Response to RAI 7f

f. Plant procedure 5.3.3, "Loss of all SSW," provides specific guidance to mitigate or prevent a complete loss of the SSW system. Therefore, this SAMA has already been implemented at PNPS.