Tennessee Valley Authority, Post Office Box 2000, Decatur, Alabama 35609-2000

June 20, 2006

10 CFR 50.55a

U.S. Nuclear Regulatory Commission
ATTN: Document Control Desk
Mail Stop: OWFN P1-35
Washington, D.C. 20555-0001

Gentlemen:

In the Matter of	)	Docket No. 50-260
Tennessee Valley Authority	)	50-296

BROWNS FERRY NUCLEAR PLANT (BFN) - UNIT 3 - AMERICAN SOCIETY OF MECHANICAL ENGINEERS (ASME) SECTION XI, INSERVICE INSPECTION, SYSTEM PRESSURE TEST, CONTAINMENT INSPECTION (IWE), AND REPAIR AND REPLACEMENT PROGRAMS - SUMMARY REPORTS (NIS-1 AND NIS-2) FOR CYCLE 12 OPERATION, SEVEN REACTOR PRESSURE VESSEL NOZZLE EXAMINATIONS DEFERRED FROM UNIT 3 CYCLE 11 OPERATION (NIS-1 REPORT), AND SUPPLEMENTAL NIS-2 REPORT FROM UNIT 2 CYCLE 13 OPERATION

In accordance with paragraphs IWA-6220, IWA-6230, and IWA-6240 of the American Society of Mechanical Engineers (ASME) Boiler and Pressure Vessel Code, Section XI, 2001 Edition through the 2003 addenda, TVA is submitting BFN Unit 3 outage summary reports for NRC review. The summary reports are for inservice inspection, system pressure test, and containment inspection (NIS-1 Report), and repair and replacement activities (NIS-2 Report) for Unit 3 Cycle 12 operation.

TVA has determined that certain BFN Unit 3 components had nondestructive examination (NDE) coverage limitations (less than 90 percent coverage completed) which exceed that specified in NRC Information Notice 98-42, "Implementation of 10 CFR 50.55a(g) Inservice Inspection Requirements."

A047

Specifically, one Reactor Recirculation System piping weld, and nine reactor pressure vessel (RPV) nozzles received ultrasonic examination coverage of less than essentially 100 percent (i.e., less than 90 percent). Also, seven RPV nozzle inner radii received enhanced remote visual examination (capable of a 1-mil wire resolution) coverage less than essentially 100 percent (i.e., less than 90 percent). These examination limitations will be addressed by TVA in requests for relief and submitted to NRC for staff review and approval at a later date.

Additionally, TVA deferred UT examinations for seven Unit 3 RPV nozzles from the ASME Section XI, Second Ten-Year Inspection interval, third period (Cycle 11) to the Cycle 12 outage. As a result of these examinations, TVA determined that each of the seven RPV nozzle examinations received examination coverage less than essentially 100 percent (see Enclosure 1, Attachment 3). These examination limitations will be addressed by TVA in a request for relief and submitted to NRC for staff review and approval at a later date.

Enclosure 1 of this letter contains the BFN Unit 3 Inservice Inspection, System Pressure Test, and Containment Inspection Summary Report (NIS-1) for Code Class 1 and 2 pressure retaining components and their supports. Enclosure 2 contains the Repair and Replacement Summary Report (NIS-2) for Code Class 1 and 2 components and supports. Enclosure 2 also contains two supplemental NIS-2 reports from Unit 2 Cycle 13 operation.

There are no new regulatory commitments in this letter. If you have any questions regarding these reports, please contact me at (256) 729-2636.

Sincerely,

William D. Crouch

William D. Crouch
Manager of Licensing
and Industry Affairs

Enclosures

ENCLOSURE 1

TENNESSEE VALLEY AUTHORITY
BROWNS FERRY NUCLEAR PLANT (BFN)
UNIT 3
AMERICAN SOCIETY OF MECHANICAL ENGINEERS (ASME),
SECTION XI, THIRD TEN-YEAR INSPECTION INTERVAL

INSERVICE INSPECTION (ISI), SYSTEM PRESSURE TEST,
CONTAINMENT INSPECTION, AND AUGMENTED EXAMINATIONS PROGRAM

SUMMARY REPORT (NIS-1) FOR CYCLE 12 OPERATION

(SEE ATTACHED)

OWNER: TENNESSEE VALLEY AUTHORITY OFFICE OF NUCLEAR POWER 1101 MARKET STREET CHATTANOOGA, TENNESSEE 37402	PLANT: BROWNS FERRY NUCLEAR PLANT P.O. BOX 2000 DECATUR, ALABAMA 35609-2000
UNIT: THREE	CERTIFICATE OF AUTHORIZATION: NOT REQUIRED.
COMMERCIAL SERVICE DATE: MARCH 1, 1977	
NATIONAL BOARD NUMBER FOR UNIT: NOT REQUIRED.	

UNIT 3 CYCLE 12

NIS-1

"OWNER'S REPORT FOR INSERVICE INSPECTION"

TABLE OF CONTENTS

OWNER: TENNESSEE VALLEY AUTHORITY OFFICE OF NUCLEAR POWER 1101 MARKET STREET CHATTANOOGA, TENNESSEE 37402	PLANT: BROWNS FERRY NUCLEAR PLANT P.O. BOX 2000 DECATUR, ALABAMA 35609-2000
UNIT: THREE	CERTIFICATE OF AUTHORIZATION: NOT REQUIRED.
COMMERCIAL SERVICE DATE: MARCH 1, 1977	
NATIONAL BOARD NUMBER FOR UNIT: NOT REQUIRED.	

APPENDIX I FORM NIS-1 OWNER'S REPORT

APPENDIX II SCOPE AND INTRODUCTION

SCOPE
INTRODUCTION

APPENDIX III ISI ABSTRACT

EXAMINATION SUMMARY
ASME CODE CASES
UNIT 3 INTERVAL STATUS
PERSONNEL AND EQUIPMENT CERTIFICATIONS

APPENDIX IV EXAMINATION LIMITATIONS

METHOD OF CALCULATION OF LIMITATIONS
EXAMINATION LIMITATIONS

APPENDIX V EXAMINATION PLAN

KEY TO WELD TRACKING SYSTEM
EXAMINATION PLAN OF CLASS 1 AND 2 COMPONENTS
COMPONENT ISOMETRICS

APPENDIX VI SUMMARY OF INDICATIONS

SUMMARY OF INDICATIONS

OWNER: TENNESSEE VALLEY AUTHORITY OFFICE OF NUCLEAR POWER 1101 MARKET STREET CHATTANOOGA, TENNESSEE 37402	PLANT: BROWNS FERRY NUCLEAR PLANT P.O. BOX 2000 DECATUR, ALABAMA 35609-2000
UNIT: THREE	CERTIFICATE OF AUTHORIZATION: NOT REQUIRED.
COMMERCIAL SERVICE DATE: MARCH 1, 1977	
NATIONAL BOARD NUMBER FOR UNIT: NOT REQUIRED.	

ATTACHMENT 1 AUGMENTED EXAMINATION SUMMARY

SECTION 1: AUGMENTED SUMMARY
SECTION 2: EXAMINATIONS PERFORMED DURING UNIT 3 CYCLE 12 (EXAMINATION SUMMARY)

ATTACHMENT 2 BFN IWE – CONTAIMENT INSERVICE INSPECTION PROGRAM

ATTACHMENT 3 REACTOR PRESSURE VESSEL (RPV) NOZZLE EXAMS DEFERRED FROM UNIT 3 CYCLE 11, 2ND INTERVAL 3RD PERIOD PERFORMED IN CYCLE 12

OWNER: TENNESSEE VALLEY AUTHORITY OFFICE OF NUCLEAR POWER 1101 MARKET STREET CHATTANOOGA, TENNESSEE 37402	PLANT: BROWNS FERRY NUCLEAR PLANT P.O. BOX 2000 DECATUR, ALABAMA 35609-2000
UNIT: THREE	CERTIFICATE OF AUTHORIZATION: NOT REQUIRED.
COMMERCIAL SERVICE DATE: MARCH 1, 1977	
NATIONAL BOARD NUMBER FOR UNIT: NOT REQUIRED.	

APPENDIX I

NIS-1 OWNER'S REPORT

FORM NIS-1 OWNERS' REPORT FOR INSERVICE INSPECTIONS
As required by the Provisions of the ASME Code Rules

1. Owner Tennessee Valley Authority, 1101 Market St. Chattanooga, TN. 37402
(Name and Address of Owner)

2. Plant Browns Ferry Nuclear Plant, P.O. Box 2000 Decatur, AL. 35609-2000
(Name and Address of Plant)

3. Plant Unit 3 4. Owner Certificate of Authorization Not Required

5. Commercial Service Date 03/01/77 6. National Board Number for Unit Not Required

7. Components Inspected:

Component or Appurtenance	Manufacturer or Installer	Manufacturer or Installer Serial No.	State or Province No.	National Board No.
Reactor Pressure Vessel	General Electric	Contract No. 67C21-91750	N/A	N/A
Various systems and components. (See Appendix V)	TVA	N/A	N/A	N/A
The NIS-1 Owners Report for Inservice Inspections includes Appendices I, II, III, IV, V, and VI.				

Note: Supplemental sheets in form of lists, sketches, or drawings may be used provided (1) size is 8.5 in. X 11 in., (2) information in items 1 through 6 on this data report is included on each sheet, and (3) each sheet is numbered and the number of sheets is recorded at the top of this form.

FORM NIS-1 (back)

8. Examination Dates 12/06/2005 to 03/22/2006

9. Inspection Period Identification: First Period, 11/19/2005 to 11/18/2008

10. Inspection Interval Identification: 11/19/2005 to 11/18/2015

11. Applicable Edition of Section XI 2001 Edition through 2003 Addenda as amended by 10 CFR50.55a, "Mandatory Limitations and Modifications"

12. Date/Revision of Inspection Plan: 3-SI-4.6.G Revision, 021 (11/18/05), 022 (01/09/06), and 023 (03/01/06)

13. Abstract of Examinations and Tests. Include a list of examinations and tests and a statement concerning status of work required for the Inspection Plan.

    See Appendix II, III, IV, V, VI.

14. Abstract of Results of Examinations and Tests.

    See Appendix II, III, IV, V, VI.

15. Abstract of Corrective Measures. See Appendix VI

We certify that a) the statements made in this report are correct, b) the examinations and tests meet the Inspection Plan as required by the ASME Code, Section XI, and c) corrective measures taken conform to the rules of the ASME Code, Section XI.

Certificate of Authorization No. Not Applicable Expiration Date Not Applicable

Date June 7, 2006 Signed Tennessee Valley Authority By [signature]
Owner

CERTIFICATE OF INSERVICE INSPECTION

I, The undersigned, holding a valid commission issued by the National Board of Boiler and Pressure Vessel Inspectors and the State or Province of Tennessee and employed by HSB-CT of Hartford, CT., have inspected the components described in this Owners' Report during the period 12/06/2005 to 03/22/2006, and state that to the best of my knowledge and belief, the Owner has performed examinations and tests and taken corrective measures described in this Owners' Report in accordance with the Inspection Plan and as required by the ASME Code, Section XI.

By signing this certificate neither the Inspector nor his employer makes any warranty, expressed or implied, concerning the examinations tests, and corrective measures described in this Owners' Report. Furthermore, neither the Inspector nor his employer shall be liable in any manner for any personal injury or property damage or a loss of any kind arising from or connected with this inspection.

[signature] Commissions TN 4011
Inspector's Signature National Board, State, Province and No.

Date June 7, 2006

OWNER: TENNESSEE VALLEY AUTHORITY OFFICE OF NUCLEAR POWER 1101 MARKET STREET CHATTANOOGA, TENNESSEE 37402	PLANT: BROWNS FERRY NUCLEAR PLANT P.O. BOX 2000 DECATUR, ALABAMA 35609-2000
UNIT: THREE	CERTIFICATE OF AUTHORIZATION: NOT REQUIRED.
COMMERCIAL SERVICE DATE: MARCH 1, 1977	
NATIONAL BOARD NUMBER FOR UNIT: NOT REQUIRED.	

APPENDIX II

SCOPE AND INTRODUCTION

OWNER: TENNESSEE VALLEY AUTHORITY OFFICE OF NUCLEAR POWER 1101 MARKET STREET CHATTANOOGA, TENNESSEE 37402	PLANT: BROWNS FERRY NUCLEAR PLANT P.O. BOX 2000 DECATUR, ALABAMA 35609-2000
UNIT: THREE	CERTIFICATE OF AUTHORIZATION: NOT REQUIRED.
COMMERCIAL SERVICE DATE: MARCH 1, 1977	
NATIONAL BOARD NUMBER FOR UNIT: NOT REQUIRED.	

Scope:

The scope of this appendix is to provide an overview of the Inservice inspections performed during the Unit 3/Cycle 12 Outage on Class 1 and 2 components for ASME Section XI Code credit and other augmented examinations.

Introduction:

The examinations were performed in accordance with implementing plant surveillance instruction 3-SI-4.6.G "Inservice Inspection and Risk Informed Inservice Inspection Program Unit 3". 3-SI-4.6.G is organized to comply with the ISI NDE requirements of the 2001 Edition, through 2003 Addenda of the American Society of Mechanical Engineers (ASME) Boiler and Pressure Vessel Code, Section XI, Division 1, as amended by 10 CFR 50.55a, "Mandatory Limitations and Modifications," Articles IWX-1000, IWX-2000, IWX-3000, and IWX-6000 in accordance with Title 10 Code of Federal Regulations (CFR) Part 50, 50.55a (g); to implement the Browns Ferry Nuclear Plant (BFN) Technical Requirements TR-3.4.3; and to fulfill the requirements of SPP-9.1, ASME Section XI Inservice Inspection Program.

Beginning in the Second Period of the Second Inspection Interval , Surveillance Instruction 3-SI-4.6.G implemented the NRC approved BFN Risk-Informed Inservice Inspection Program to address all piping locations that are subject to service induced degradation. In accordance with, "Westinghouse Owners Group (WOG) Application Of Risk-Informed Methods To Piping Inservice Inspection Topical Report, WCAP-14572 revision 1-NP-A, Section 4, Table 4.1-1,"this program provides an acceptable alternative approach to the existing ASME Section XI requirements for scope and frequency of piping weld examinations, and satisfies the criteria of 10CFR50.55a(a)(3)(i) providing an acceptable level of quality and safety.

The ASME Section XI Code of record for the BFN Unit 3 third ten-year inservice inspection interval is the 2001 Edition, through 2003 Addenda, as amended by 10 CFR 50.55a, "Mandatory Limitations and Modifications." Subarticle IWA-2430(d)(1) of the Code describes the inservice inspection interval inspection schedule and provides options for extending or decreasing the inspection interval for up to one year.

3-SI-4.6.G reflects the built-in limitations of the original plant design, geometry, construction, component materials and the current technology or state-of-the-art nondestructive examination techniques. The SI specifies the methods to be used and provides schedule tables from which specific items were scheduled for examination during the outage. Examinations were witnessed or verified by an Authorized Nuclear Inservice Inspector (ANII) and performed in accordance with the Section XI of the ASME Boiler and Pressure Vessel Code.

OWNER: TENNESSEE VALLEY AUTHORITY OFFICE OF NUCLEAR POWER 1101 MARKET STREET CHATTANOOGA, TENNESSEE 37402	PLANT: BROWNS FERRY NUCLEAR PLANT P.O. BOX 2000 DECATUR, ALABAMA 35609-2000
UNIT: THREE	CERTIFICATE OF AUTHORIZATION: NOT REQUIRED.
COMMERCIAL SERVICE DATE: MARCH 1, 1977	
NATIONAL BOARD NUMBER FOR UNIT: NOT REQUIRED.	

The majority of examinations were performed by the TVA Inspection Services Organization (ISO). Augmentation of personnel was provided by Wesdyne, Inc., and AREVA/Framatome .

An overview of ISI activities consists of the following:

- ASME Section XI Class 1 and 2 Piping Examinations
- ASME Section XI Class 1 Reactor Pressure Vessel Weld Examinations
- ASME Section XI Class 1 and 2 Support Examinations
- Reactor Pressure Vessel In-Vessel Visual Inspection (RPVII)
- Augmented Examinations

OWNER: TENNESSEE VALLEY AUTHORITY OFFICE OF NUCLEAR POWER 1101 MARKET STREET CHATTANOOGA, TENNESSEE 37402	PLANT: BROWNS FERRY NUCLEAR PLANT P.O. BOX 2000 DECATUR, ALABAMA 35609-2000
UNIT: THREE	CERTIFICATE OF AUTHORIZATION: NOT REQUIRED.
COMMERCIAL SERVICE DATE: MARCH 1, 1977	
NATIONAL BOARD NUMBER FOR UNIT: NOT REQUIRED.	

APPENDIX III

ISI ABSTRACT

OWNER: TENNESSEE VALLEY AUTHORITY OFFICE OF NUCLEAR POWER 1101 MARKET STREET CHATTANOOGA, TENNESSEE 37402	PLANT: BROWNS FERRY NUCLEAR PLANT P.O. BOX 2000 DECATUR, ALABAMA 35609-2000
UNIT: THREE	CERTIFICATE OF AUTHORIZATION: NOT REQUIRED.
COMMERCIAL SERVICE DATE: MARCH 1, 1977	
NATIONAL BOARD NUMBER FOR UNIT: NOT REQUIRED.	

Inservice Inspection Introduction Summary

In accordance with paragraph IWA-6230 of 2001 Edition, through 2003 Addenda of Section XI of the ASME Boiler and Pressure Vessel Code the following information is provided.

1. Date of document completion:

2. Name of owner and address of principal offices:

   Tennessee Valley Authority
   Office of Nuclear Power
   1101 Market Street
   Chattanooga, Tennessee 37402-2801

3. Name and address of the nuclear generating plant:

   Browns Ferry Nuclear Plant
   P.O. Box 2000
   Decatur, Alabama 35609-2000

4. Name or number assigned to the nuclear power unit by TVA:

   Browns Ferry Nuclear Plant, Unit 3.

5. Commercial operation date of unit:

   March 1, 1977

OWNER: TENNESSEE VALLEY AUTHORITY OFFICE OF NUCLEAR POWER 1101 MARKET STREET CHATTANOOGA, TENNESSEE 37402	PLANT: BROWNS FERRY NUCLEAR PLANT P.O. BOX 2000 DECATUR, ALABAMA 35609-2000
UNIT: THREE	CERTIFICATE OF AUTHORIZATION: NOT REQUIRED.
COMMERCIAL SERVICE DATE: MARCH 1, 1977	
NATIONAL BOARD NUMBER FOR UNIT: NOT REQUIRED.	

Examination Summary:

The Unit 3, Cycle 12 Inservice Inspection (ISI) is the first scheduled refueling outage during the first inspection period of the third ASME Section XI,10-year inspection interval.

On February 20, 2004, TVA opted to request NRC approval to utilize IWA-2430(d)(1) of the 1995 Edition through 1996 Addenda of the ASME Section XI, Division1 Code. NRC approved this request on March 29, 2004. This later Code allowed TVA to extend the BFN Unit 3 Second Ten Year ISI Interval but yet allow the start of the BFN Unit 3 Third Ten Year ISI Interval. This was done anticipating that Request for Relief 3-ISI-18 would be approved allowing TVA permission from examining seven (7) Reactor Pressure Vessel (RPV) Nozzles, Code Category B-D, Item No. B3.90. If the request for relief was not approved; the seven (7) RPV Nozzles would be examined during the U3C12 outage completing the Unit 3 Second ISI Ten Year Interval. TVA withdrew the request for relief on September 14, 2005. Therefore, since the seven (7) RPV Nozzle examinations are for the Unit 3 Second Interval, the Code of Record is the 1989 Edition, No addenda of the ASME Section XI, Division 1 Code and the Code of Record for NDE is the 1995 Edition through the 1996 Addenda of the ASME Section XI, Division 1 Code. The other nozzle examinations are for the Unit 3 Third Ten Year ISI Interval, First Period, with a Code of Record of the 2001 Edition of the ASME Section XI, Division 1 Code, as amended by 10 CFR 50.55a(b)(2)(xxiv) and as amended by Sections 10 CFR 50.55a(b)(2)(xv)(B) through 10 CFR 50.55a(b)(2)(xv)(G), and 10 CFR50-55a(b)(2)(xvi)(A), and by following the Electric Power Research Institute (EPRI) Performance Demonstration Initiative (PDI) processes, and a NDE Code of Record of the 2001 Edition through 2003 Addenda of the ASME Section XI, Division 1 Code as amended by 10CFR50.55a. Reference RFR# 3-PDI-4. The seven (7) RPV Nozzles are as follows: N2G, N2H, N2J, N2K, N3C, N3D and N8B. Reference Attachment # 3 for the NIS-1 submittal for the 2nd Interval 3rd period.

Approximately 154 visual, 27 ultrasonic, and 5 magnetic particle examinations were performed in support of code credit components. Also, a successive examination was performed; 1 visual. Preservice examinations were performed; 9 visual examinations. Eight (8) Notification of Indications (NOI's) were issued to document indications identified during the performance of the examinations. These NOI's were evaluated by engineering and dispositioned (see Appendix VI, Summary of Indications).

Other examinations were performed in accordance with BFN's augmented inspection program and are included in Attachment 1 for information. These examinations are inclusive of the Reactor Pressure Vessel Internals Inspection (RPVII) on Unit 3 RPV internals.

OWNER: TENNESSEE VALLEY AUTHORITY OFFICE OF NUCLEAR POWER 1101 MARKET STREET CHATTANOOGA, TENNESSEE 37402	PLANT: BROWNS FERRY NUCLEAR PLANT P.O. BOX 2000 DECATUR, ALABAMA 35609-2000
UNIT: THREE	CERTIFICATE OF AUTHORIZATION: NOT REQUIRED.
COMMERCIAL SERVICE DATE: MARCH 1, 1977	
NATIONAL BOARD NUMBER FOR UNIT: NOT REQUIRED.	

ASME Code Cases

The following code cases have been approved for use as applicable during the Unit 3/Cycle 12 outage:

N-526 Alternate Additional Examination Requirements for Successive Inspections of Class 1, 2, and 3 Vessels, Section XI, Division 1.

N-552 Alternate Methods - Qualification For Nozzle Inside Radius Section From the Outside Surface section XI, Division 1.

To achieve consistency with the 10 CFR 50.55a rule change published September 22, 1999 (64 FR 51370), incorporating Appendix VIII, "Performance Demonstration for Ultrasonic Examination Systems," to Section XI, add the following to the specimen requirements:

"At least 50 percent of the flaws in the demonstration test set must be cracks and the maximum misorientation must be demonstrated with cracks. Flaws in nozzles with bore diameters equal to or less than 4 inches may be notches."

The number of false calls must not exceed three.

N-586 Alternate Additional Examination requirements for Class 1, 2, and 3 Piping, Components, and Supports Section XI, Division 1.

The engineering evaluations addressed under item (a) and the additional examinations addressed under Item (b) shall be performed during this outage.

If the additional examinations performed under (b) reveal indications exceeding the applicable acceptance criteria of Section XI, the engineering evaluations and the examinations shall be further extended to include additional evacuations and examinations at this outage.

N-624 Successive Inspections, Section XI, Division 1.

OWNER: TENNESSEE VALLEY AUTHORITY OFFICE OF NUCLEAR POWER 1101 MARKET STREET CHATTANOOGA, TENNESSEE 37402	PLANT: BROWNS FERRY NUCLEAR PLANT P.O. BOX 2000 DECATUR, ALABAMA 35609-2000
UNIT: THREE	CERTIFICATE OF AUTHORIZATION: NOT REQUIRED.
COMMERCIAL SERVICE DATE: MARCH 1, 1977	
NATIONAL BOARD NUMBER FOR UNIT: NOT REQUIRED.	

N-577 Risk-Informed Requirements for Class 1, 2, and 3 Piping, Method A, , Section XI, Division 1, (RIMS # R08 000601 846), with the more detailed provisions provided in WCAP-14572, Revision 1-NPA, "Westinghouse Owners Group Application Of Risk - Informed Methods To Piping Inservice Inspection Topical Report"

N-613-1 Ultrasonic Examination of full Penetration Nozzles in Vessels, Examination Category B-D, Item No's, B3.10, and B3.90, Reactor Nozzle-To-Vessel Welds, fig's. IWB-2500-7 (a), (b), and (c), Section XI, Division 1.

N-648-1 Alternative Requirements for Inner Radius Examination of Class 1 Reactor Vessel Nozzles, Section XI Division 1, subject to the following conditions:

> In place of a UT examination, a visual examination with enhanced magnification that has a resolution sensitivity to detect a 1-mil width wire or crack, utilizing the allowable flaw length criteria of Table IWB-3512-1 with limiting assumptions on the flaw aspect ratio. The provisions of Table IWB-2500-1, Examination Category B-D, continue to apply except that, in place of examination volumes, the surfaces to be examined are the external surfaces shown in the figures applicable to this table.

N-695 Qualification Requirements for Dissimilar Metal Piping Welds, Section XI, Division 1.

OWNER: TENNESSEE VALLEY AUTHORITY OFFICE OF NUCLEAR POWER 1101 MARKET STREET CHATTANOOGA, TENNESSEE 37402	PLANT: BROWNS FERRY NUCLEAR PLANT P.O. BOX 2000 DECATUR, ALABAMA 35609-2000

UNIT: THREE CERTIFICATE OF AUTHORIZATION: NOT REQUIRED.

COMMERCIAL SERVICE DATE: MARCH 1, 1977

NATIONAL BOARD NUMBER FOR UNIT: NOT REQUIRED.

UNIT 3 INTERVAL STATUS

The BFN Unit 3 cycle 12 outage ISI examinations were performed during the first scheduled refueling outage of the first period of the third interval. The component quantities examined were determined from 3-SI-4.6.G, Table A (Unit 3 Class 1, and 2 components) and from applicable BFN Unit 3 relief requests. This report covers the Cycle 12 outage for Browns Ferry Unit 3. The following table summarizes the percentage of Code required examinations completed to date. Table 1 summarizes code credited examinations by category and percentages completed and complies with ASME Section XI percentage requirements.

TABLE 1
ASME SECTION XI EXAMINATION SUMMARY FOR THE FIRST PERIOD OF THE THIRD TEN-YEAR INSPECTION INTERVAL

CATEGORY/CLASS	% COMPLETE	COMMENTS
B-A/1	0%	
B-B	N/A	
B-D/1	29%	Excludes seven (7) additional nozzles deferred from Cycle 11, 2nd Int.
B-E/1	0%	Refer to system pressure test
B-F/2	N/A	See R-A
B-G-1/1	12%	
B-G-2/1	20%	(Item # B7.50 one bolted connection among a group of bolted connections that are similar in design, size, function, and service.)
B-G-2/1	05%	(Item # B7.70 when valve is disassembled)
B-G-2/1	13%	(Item # B7.80 CRD Housing Bolting, inspected when disassembled)
B-J/1	N/A	See R-A
B-K/1	30%	
B-L-1/1	N/A	
B-L-2/1	0%	Recirc Pumps not disassembled Table IWB-2500-1 Note # 2
B-M-1/1	N/A	
B-M-2/1	05%	When disassembled
B-N-1/1	10%	Each period
B-N-2/1	10%	
B-O	N/A	
B-P/1	N/A	Refer to pressure test program
B-Q	N/A	
C-A/2	0%	
C-B/2	20%	
C-C/2	06%	
C-D	N/A	
C-F-1/2	N/A	See R-A
C-F-2/2	N/A	See R-A
C-G	N/A	
F-A/ 1 AND 2	07%	Class 1 and 2 Supports only
R-A/ 1 AND 2	15%	This percentage does not include Flow Accelerated Corrosion (FAC) Item # R1.18.

OWNER: TENNESSEE VALLEY AUTHORITY OFFICE OF NUCLEAR POWER 1101 MARKET STREET CHATTANOOGA, TENNESSEE 37402	PLANT: BROWNS FERRY NUCLEAR PLANT P.O. BOX 2000 DECATUR, ALABAMA 35609-2000
UNIT: THREE	CERTIFICATE OF AUTHORIZATION: NOT REQUIRED.
COMMERCIAL SERVICE DATE: MARCH 1, 1977	
NATIONAL BOARD NUMBER FOR UNIT: NOT REQUIRED.	

PERSONNEL/EQUIPMENT CERTIFICATIONS:

NDE personnel certification records for TVA and contractor employees are maintained by TVA's Nuclear Engineering and Technical Services Corporate, Inspection Services Organization (ISO). These records are maintained as permanent QA records for a forty year plant life. Any details or specifics regarding NDE certification records should be directed to the ISO at the Sequoyah Training Center in Soddy-Daisy, Tennessee at telephone number (423) 843-4026.

NDE equipment certification records are maintained by the TVA ISO. Any details or specifics regarding NDE equipment certification records should be directed to ISO at the Sequoyah Training Center in Soddy Daisy, Tennessee at telephone number (423)843-4026.

OWNER: TENNESSEE VALLEY AUTHORITY OFFICE OF NUCLEAR POWER 1101 MARKET STREET CHATTANOOGA, TENNESSEE 37402	PLANT: BROWNS FERRY NUCLEAR PLANT P.O. BOX 2000 DECATUR, ALABAMA 35609-2000
UNIT: THREE	CERTIFICATE OF AUTHORIZATION: NOT REQUIRED.
COMMERCIAL SERVICE DATE: MARCH 1, 1977	
NATIONAL BOARD NUMBER FOR UNIT: NOT REQUIRED.	

APPENDIX IV
EXAMINATION LIMITATIONS

OWNER: TENNESSEE VALLEY AUTHORITY OFFICE OF NUCLEAR POWER 1101 MARKET STREET CHATTANOOGA, TENNESSEE 37402	PLANT: BROWNS FERRY NUCLEAR PLANT P.O. BOX 2000 DECATUR, ALABAMA 35609-2000
UNIT: THREE	CERTIFICATE OF AUTHORIZATION: NOT REQUIRED.
COMMERCIAL SERVICE DATE: MARCH 1, 1977	
NATIONAL BOARD NUMBER FOR UNIT: NOT REQUIRED.	

METHOD OF CALCULATION OF LIMITATIONS

During the performance of Inservice Inspections, the ASME Section XI Code 2001 Edition, through 2003 Addenda, as amended by 10 CFR 50.55a, "Mandatory Limitations and Modifications," requires the determination of the ultrasonic examination volume to establish the required beam path angles needed to maximize coverage and verify technique parameters. This information is necessary in those instances where there may be a reduction in the examination volume.

Surface examinations of welded attachments are conducted in accordance with ASME Section XI Code 2001 Edition, through 2003 Addenda, as amended by 10 CFR 50.55a, "Mandatory Limitations and Modifications." Surface examinations are typically conducted on 100% of the weld length plus a defined amount of base material on each side of the weld. Surface areas are calculated in those instances where there may be a reduction in the examination area.

The Code required ultrasonic examination volume or surface examination area for each type of piping weld or nozzle-to-vessel weld is depicted in the figures of IWB-2500 or IWC-2500. As depicted for piping welds, volume width generally constitutes the weld plus 1/4" on each side while volume thickness generally constitutes the lower 1/3 of the piping thickness for the length of the weld. Additionally, Risk-Informed ISI, Category R-A, Item No. R1.11 welds subject to thermal fatigue required an expanded examination boundary to include the counterbore and/or inside diameter transitions. As depicted, for nozzle-to-vessel welds, the volume width generally constitutes the weld plus 1/2t (ts/2) on each side of the weld while volume thickness generally constitutes the entire component thickness (i.e. full volume). The volume changes with variations in weld configuration (e.g. transition between different pipe thickness or nozzle-to-vessel configuration). Therefore, it is necessary to determine the required volume for each group of similar welds to allow setting of scanner limits for automated ultrasonic examinations and scan paths for manual ultrasonic examinations. Surface examination area is generally the weld plus 1/2-inch of base material on each side of the weld.

Reactor Pressure Vessel Nozzle to shell or head weld examination volume has been reduced to ½" beyond the widest part of the boundary of the deposited weld material in lieu of the requirements of ASME Section XI Figures IWB-2500-7 (a) and IWB-2500-7 (b) per Code Case N-613-1.

Paragraph IWA-2232 of the Code requires that the ultrasonic examination of piping systems be conducted in accordance with Appendix I of ASME Section XI. Appendix I requires that the ultrasonic examination of piping systems be conducted in accordance with Appendix VIII of ASME Section XI, and the nozzle-to-vessel welds be conducted in accordance with Article 4 of ASME Section V, 2001 Edition, through 2003 Addenda, as amended by 10 CFR 50.55a, " Mandatory Limitations and Modifications," as supplemented by Appendix I of ASME Section XI. Appendix VIII and Article 4 define the applicable examination methods (e.g., examination angles, scan directions) to be used during examination. Paragraphs IWA-2221 and IWA-2222 of the ASME Section XI, requires that surface examinations be conducted in accordance with Article 6 or 7, as applicable, of ASME Section V, 2001 Edition, through 2003 Addenda.

OWNER: TENNESSEE VALLEY AUTHORITY OFFICE OF NUCLEAR POWER 1101 MARKET STREET CHATTANOOGA, TENNESSEE 37402	PLANT: BROWNS FERRY NUCLEAR PLANT P.O. BOX 2000 DECATUR, ALABAMA 35609-2000
UNIT: THREE	CERTIFICATE OF AUTHORIZATION: NOT REQUIRED.
COMMERCIAL SERVICE DATE: MARCH 1, 1977	
NATIONAL BOARD NUMBER FOR UNIT: NOT REQUIRED.	

TVA developed procedure N-GP-28 and N-GP-31 to provide a standardized methodology for calculation of Code coverage in those instances where configuration or other components cause an examination limitation. Components/welds with limitations were evaluated in terms of the feasibility of other NDE techniques or methods to increase coverage or for NRC Information Notice 98-42 applicability.

OWNER: TENNESSEE VALLEY AUTHORITY OFFICE OF NUCLEAR POWER 1101 MARKET STREET CHATTANOOGA, TENNESSEE 37402	PLANT: BROWNS FERRY NUCLEAR PLANT P.O. BOX 2000 DECATUR, ALABAMA 35609-2000
UNIT: THREE	CERTIFICATE OF AUTHORIZATION: NOT REQUIRED.
COMMERCIAL SERVICE DATE: MARCH 1, 1977	
NATIONAL BOARD NUMBER FOR UNIT: NOT REQUIRED.	

EXAMINATION LIMITATIONS:

A tabulation of NDE examination limitations recorded during the Unit 3/Cycle 12 Inservice Inspection is contained in this Appendix.

The following items/components had less than 100% R-A/Code coverage achieved. TVA elected to use NRC Information Notice, 98-42 "Implementation Of 10 CFR 50.55a(g) Inservice Inspection Requirements," which defines , "essentially 100%" of each weld to mean "greater than 90%" in 10CFR 50.55a(g)(6)(ii)(A)(2) for required examination coverage of reactor pressure vessel welds. This standard has been applied to all examinations of welds or other areas required by ASME Section XI.

SYSTEM	COMPONENT ID	COVERAGE ASME XI	CALCULATED 10CFR50.55a	REPORT NO.
RHR	DSRHR-3-08	98.4%	98.4%	R-056

The following items/components had examination limitations outside those specified in 2001 Edition, through 2003 Addenda of ASME Section XI Code and NRC Information Notice, 98-42 "Implementation Of 10 CFR 50.55a(g) Inservice Inspection Requirements." The Inservice Inspection Program 3-SI-4.6.G will be revised to incorporate these limitations in the form of Requests for Relief (RFR). Program revisions, including Requests for Relief, will be submitted to the NRC.

SYSTEM	COMPONENT ID	COVERAGE ASME XI	CALCULATED 10CFR50.55a	REPORT NO.	RFR No.
RECIRC	GR-3-63	75%	75%	R-031	3-ISI-22

OWNER: TENNESSEE VALLEY AUTHORITY OFFICE OF NUCLEAR POWER 1101 MARKET STREET CHATTANOOGA, TENNESSEE 37402	PLANT: BROWNS FERRY NUCLEAR PLANT P.O. BOX 2000 DECATUR, ALABAMA 35609-2000
UNIT: THREE	CERTIFICATE OF AUTHORIZATION: NOT REQUIRED.
COMMERCIAL SERVICE DATE: MARCH 1, 1977	
NATIONAL BOARD NUMBER FOR UNIT: NOT REQUIRED.	

EXAMINATION LIMITATIONS:

A tabulation of NDE examination limitations recorded during the Unit 3/Cycle 12 Inservice Inspection is contained in this Appendix.

The following items/components had examination limitations outside those specified in 2001 Edition, through 2003 Addenda of ASME Section XI Code, as amended by 10 CFR 50.55a, " Mandatory Limitations and Modifications," and NRC Information Notice, 98-42 "Implementation Of 10 CFR 50.55a(g) Inservice Inspection Requirements." The Inservice Inspection Program 3-SI-4.6.G will be revised to incorporate these limitations in the form of Requests for Relief (RFR). Program revisions, including Requests for Relief, will be submitted to the NRC.

SYSTEM	COMPONENT ID	COVERAGE CALCULATED	REPORT NO.	RFR No.
RPV	NIA-NV	21%	R-079	3-ISI-23
RPV	N1A-IR	90%	R-057	3-ISI-23
RPV	N2B-NV	42%	R-080	3-ISI-23
RPV	N2B-IR	40%	R-057	3-ISI-23
RPV	N2D-NV	42%	R-081	3-ISI-23
RPV	N2D-IR	40%	R-057	3-ISI-23
RPV	N2F-NV	42%	R-083	3-ISI-23
RPV	N2F-IR	40%	R-057	3-ISI-23
RPV	N3B-NV	36%	R-083	3-ISI-23
RPV	N3B-IR	90%	R-057	3-ISI-23
RPV	N4B-NV	39%	R-085	3-ISI-23
RPV	N4C-NV	39%	R-087	3-ISI-23
RPV	N5A-NV	38%	R-088	3-ISI-23
RPV	N5A-IR	40%	R-057	3-ISI-23
RPV	N8A-NV	64%	R-089	3-ISI-23
RPV	N8A-IR	40%	R-057	3-ISI-23

OWNER: TENNESSEE VALLEY AUTHORITY OFFICE OF NUCLEAR POWER 1101 MARKET STREET CHATTANOOGA, TENNESSEE 37402	PLANT: BROWNS FERRY NUCLEAR PLANT P.O. BOX 2000 DECATUR, ALABAMA 35609-2000
UNIT: THREE	CERTIFICATE OF AUTHORIZATION: NOT REQUIRED.
COMMERCIAL SERVICE DATE: MARCH 1, 1977	
NATIONAL BOARD NUMBER FOR UNIT: NOT REQUIRED.	

APPENDIX V

EXAMINATION PLAN

OWNER: TENNESSEE VALLEY AUTHORITY OFFICE OF NUCLEAR POWER 1101 MARKET STREET CHATTANOOGA, TENNESSEE 37402	PLANT: BROWNS FERRY NUCLEAR PLANT P.O. BOX 2000 DECATUR, ALABAMA 35609-2000
UNIT: THREE	CERTIFICATE OF AUTHORIZATION: NOT REQUIRED.
COMMERCIAL SERVICE DATE: MARCH 1, 1977	
NATIONAL BOARD NUMBER FOR UNIT: NOT REQUIRED.	

The following printout is an outage ISI report designed to meet the reporting requirements of IWA-6000 of the ASME Section XI Code. This report contains Unit 3/Cycle 12 Inservice Inspection data for Code Class 1 and Code Class 2 components selected for ASME Section XI credit. Attachment 2 contains a summary of augmented examinations performed during Unit 3/Cycle 12 outage. Essential unit and system files are contained herein as a reference to describe abbreviations and features in the printout. The aforementioned precedes the outage ISI report.

Code Class 3 Inservice data and reports are contained in the Browns Ferry Inservice Inspection (ISI) Final Plant Report. The Pressure Test Program Report for ASME Section XI Class 1, 2, and 3 Components for BFN for this outage will be submitted in a separate NIS-1 90 Day Report.

OWNER: TENNESSEE VALLEY AUTHORITY OFFICE OF NUCLEAR POWER 1101 MARKET STREET CHATTANOOGA, TENNESSEE 37402	PLANT: BROWNS FERRY NUCLEAR PLANT P.O. BOX 2000 DECATUR, ALABAMA 35609-2000
UNIT: THREE	CERTIFICATE OF AUTHORIZATION: NOT REQUIRED.
COMMERCIAL SERVICE DATE: MARCH 1, 1977	
NATIONAL BOARD NUMBER FOR UNIT: NOT REQUIRED.	

UNIT 3/CYCLE 12
ISI REPORT OF CLASS 1 AND CLASS 2 COMPONENTS

OWNER: TENNESSEE VALLEY AUTHORITY OFFICE OF NUCLEAR POWER 1101 MARKET STREET CHATTANOOGA, TENNESSEE 37402	PLANT: BROWNS FERRY NUCLEAR PLANT P.O. BOX 2000 DECATUR, ALABAMA 35609-2000
UNIT: THREE	CERTIFICATE OF AUTHORIZATION: NOT REQUIRED.
COMMERCIAL SERVICE DATE: MARCH 1, 1977	
NATIONAL BOARD NUMBER FOR UNIT: NOT REQUIRED.	

Key to computer weld/feature tracking system

A. CYCLE- Refueling Cycle Number and Unit Number
B. SYSTEM- System/Component

CCWS- Closed Cooling Water System (Reactor Building Closed Cooling Water)
CRDS- Control Rod Drive System
CSS- Core Spray System
EECW- Emergency Equipment Cooling Water System
FPCS- Fuel Pool Cooling System
FWS- Feedwater System
HPCIS- High Pressure Coolant Injection System
MSS- Main Steam System
RCICS- Reactor Core Isolation Cooling System
RECIR- Recirculation System
RHRS- Residual Heat Removal System
RHRSW- Residual Heat Removal Service Water System
RPV- Reactor Pressure Vessel
RWCU- Reactor Water Cleanup System

C. Component Number/Identifier

D. Drawing- ISI Drawing Number and sheet number from the Surveillance Instruction (SI-4.6.G)

E. Exreq- ASME Section XI Code year and interval (See Note # 1)

F. Category- Code Category

G. Item Number- Code Item Number

H. Exam Scheduled

I. NDE METH- Nondestructive Examination (NDE) Method

ET- Eddy Current Test
MT- Magnetic Particle Test
PT- Penetrant Test
RT- Radiography Test
UT- Ultrasonic Test
VT- Visual Test (VT-1, VT-2, VT-3)
VT-1E – Enhanced VT-1 with 1 mil wire resolution
EVT-1- Enhanced VT-1 with ½ mil wire resolution

OWNER: TENNESSEE VALLEY AUTHORITY OFFICE OF NUCLEAR POWER 1101 MARKET STREET CHATTANOOGA, TENNESSEE 37402	PLANT: BROWNS FERRY NUCLEAR PLANT P.O. BOX 2000 DECATUR, ALABAMA 35609-2000
UNIT: THREE	CERTIFICATE OF AUTHORIZATION: NOT REQUIRED.
COMMERCIAL SERVICE DATE: MARCH 1, 1977	
NATIONAL BOARD NUMBER FOR UNIT: NOT REQUIRED.	

J. Calibration Standard- If required

K. Exam Date- Date of Inspection

L. Exam Report No.- Examination Report Number

M. Exam Results - P - Pass
R- Rejectable
E- Evaluated acceptable for continued operation by Engineering

O. COMMENTS

NOTE (1): EXREQ Identifiers:

89E-02 - ASME Section XI Code 1989 Edition, No addenda/ Second Interval

03E-03 - ASME Section XI Code 2001Edition, through 2003 Addenda/ Third Interval

95E-03 - ASME Section XI Code 1995 Edition, 1996 Addenda/Third Interval

P03-03 - Preservice Examination/Third Interval

S01-02 - Successive exam due to previous findings

B01-02 – UT of Feedwater Nozzles and Visual of FW Spargers

B02-02 - Examinations performed to NUREG-0313/Generic Letter 88-01/BWRVIP-75 for IGSCC detection

B04-02 - Weld inspection for Pipe Whip Protection per TSR 3.4.3.2

B06-02 - Examinations performed to the recommendation of BWRVIP-27 and BWRVIP-49

OTI365 - Augmented examinations (UT, VT, EVT-1 of RPV Internals)

January 03, 2006

Sam Flood, ANI/ANII, PEC-1C, BFN

BROWNS FERRY NUCLEAR PLANT (BFN) – UNIT 3 CYCLE 12 REFUELING OUTAGE INSERVICE INSPECTION (ISI) SCAN PLAN REV 000

Attached for your review is the BFN Unit 3 Cycle 12 Refueling Outage ISI Scan Plan, Revision 000, for the examinations to be performed for the current Unit 3 outage by BFN Site Engineering/Components Engineering. These examinations are being performed to satisfy the requirements of ASME Section XI Code, 2001 Edition, through 2003Addenda.

This document was prepared by Harold E. Hodges of BFN Components Engineering and coordinated with Matthew Welch and Fred Froscello of TVAN Inspection Services Organization (ISO).

1/30/2006

Harold E. Hodges
ISI Engineer
BFN Components Engineering

Matthew C. Welch
BFN ISO, NDE Level III

01/03/06

Frederick W. Froscello Jr.
BFN ISO, NDE Specialist - ISI

01/30/2006

BFN Mechanical Nuclear Design Engineering (NUREG-0619, TSR3.4.3.2, BWRVIP-27, BWRVIP-49, BWRVIP-75, SPP-9.7, APPENDIX. "B")

1/30/06

Sam Flood ANI/ANII
Concurrence

cc: R. K. Golub, SAB-1B, BFN
M. L. Turnbow, STC-1I, SQN

Revision 000
01/10/2006
Total Examinations: 194

TENNESSEE VALLEY AUTHORITY
BROWNS FERRY NUCLEAR POWER PLANT - UNIT 3
EXAMS SCHEDULED FOR CYCLE 12

SYSTEM	WELDNO	SEGMENT	ISONO	CYCLE	ITEMNO	CATEGORY	EXREQ	EXSCHD	NDEPROC	CALSTD	COMPDIA	NOMTHCK	COMPDESA	COMPDESB
FWS	3-47B415-34		3-ISI-0336-C-01	12	F1.10B	F-A	03E-03	VT-3	N-VT-1		24.00		RGD HGR	
FWS	3-47B415-34		3-ISI-0336-C-01	12	F1.10B	F-A	P03-03	VT-3	N-VT-1		24.00		RGD HGR	
FWS	3-47B415-37		3-ISI-0336-C-01	12	F1.10C	F-A	03E-03	VT-3	N-VT-1		20.00		VAR SUP	
FWS	3-47B415-38		3-ISI-0336-C-01	12	F1.10C	F-A	03E-03	VT-3	N-VT-1		12.00		CFS	
FWS	3-47B415-39		3-ISI-0336-C-01	12	F1.10C	F-A	03E-03	VT-3	N-VT-1		12.00		VAR SUP	
FWS	3-47B415-49		3-ISI-0336-C-01	12	F1.10B	F-A	P03-03	VT-3	N-VT-1		24.00		RGD HGR	
FWS	3RFWA-17R	3-003-036	3-ISI-0327-C-01	12	R1.18	R-A	03E-03	UT	N-UT-26	CSW			GRID	
FWS	3RFWA-28P	3-003-037	3-ISI-0327-C-01	12	R1.18	R-A	03E-03	UT	N-UT-26	CSW			GRID	
FWS	3RFWA-30P	3-003-038	3-ISI-0327-C-01	12	R1.18	R-A	03E-03	UT	N-UT-25	CSW			GRID	
FWS	3RFWA-39E	3-003-039	3-ISI-0327-C-01	12	R1.18	R-A	03E-03	UT	N-UT-26	CSW			GRID	
FWS	3RFWB-13T	3-003-040	3-ISI-0327-C-01	12	R1.18	R-A	03E-03	UT	N-UT-26	CSW	24.00	1.531	GRID	
FWS	3RFWB-16T	3-003-040	3-ISI-0327-C-01	12	R1.18	R-A	03E-03	UT	N-UT-26	CSW	20.00	1.281	GRID	
FWS	3RFWB-20E	3-003-040	3-ISI-0327-C-01	12	R1.18	R-A	03E-03	UT	N-UT-26	CSW	12.75	0.844	GRID	
FWS	3RFWB-39E	3-003-043	3-ISI-0327-C-01	12	R1.18	R-A	03E-03	UT	N-UT-26	CSW			GRID	
MSS	3-47B400-095		3-ISI-0338-C-02	12	F1.10B	F-A	P03-03	VT-3	N-VT-1		26.00		RGD HGR	
MSS	3-47B400-114-IA		3-ISI-0338-C-02	12	B10.20	B-K	03E-03	MT	N-MT-6			1.625	WLD ATT	
MSS	3-47B400-115		3-ISI-0338-C-02	12	F1.10D	F-A	03E-03	VT-3	N-VT-1		26.00		SNBR	
MSS	3-47B400-115-IA		3-ISI-0338-C-02	12	B10.20	B-K	03E-03	MT	N-MT-6			0.750	WLD ATT	
MSS	3-47B400-116		3-ISI-0338-C-02	12	F1.10D	F-A	03E-03	VT-3	N-VT-1		26.00		SNBR	
MSS	3-47B400-116-IA		3-ISI-0338-C-02	12	B10.20	B-K	03E-03	MT	N-MT-6			0.625	WLD ATT	
MSS	3-47B400-204		3-ISI-0338-C-02	12	F1.10B	F-A	P03-03	VT-3	N-VT-1		26.00		RGD HGR	
MSS	3-47B400-204		3-ISI-0338-C-02	12	F1.10B	F-A	S01-02	VT-3	N-VT-1		26.00		RGD HGR	
MSS	3-47B400-68		3-ISI-0338-C-01	12	F1.10B	F-A	P03-03	VT-3	N-VT-1		26.00		RGD HGR	
MSS	3-47B400-82		3-ISI-0338-C-01	12	F1.10B	F-A	P03-03	VT-3	N-VT-1		26.00		RGD HGR	
MSS	3-47B400-83-IA		3-ISI-0338-C-01	12	B10.20	B-K	03E-03	MT	N-MT-6			1.500	WLD ATT	
MSS	3MSZ-MS1A-19E	3-001-036	3-ISI-0329-C-01	12	R1.18	R-A	03E-03	UT	N-UT-26	CSW			GRID	
MSS	3MSZ-MS2B-13E	3-001-037	3-ISI-0329-C-02	12	R1.18	R-A	03E-03	UT	N-UT-26	CSW			GRID	
MSS	3MSZ-MS2B-14P	3-001-037	3-ISI-0329-C-02	12	R1.18	R-A	03E-03	UT	N-UT-26	CSW			GRID	
MSS	DSAS-3-03	3-001-002	ISI-0354-C-02	12	R1.11	R-A	03E-03	UT	N-UT-76	ALTCS	06.00	0.432	EL	P
MSS	HPAS-3-H-03		3-ISI-0355-C-02	12	F1.20C	F-A	03E-03	VT-3	N-VT-1		06.00		VAR SUP	
MSS	HPAS-3-H-10		3-ISI-0355-C-02	12	F1.20C	F-A	03E-03	VT-3	N-VT-1		06.00		VAR SUP	
RECIR	3-47B465-497		3-ISI-0337-C-02	12	F1.40D	F-A	03E-03	VT-3	N-VT-1				SNBR	
RECIR	3-47B465-498		3-ISI-0337-C-02	12	F1.40D	F-A	03E-03	VT-3	N-VT-1				SNBR	
RECIR	3-47B465-499		3-ISI-0337-C-02	12	F1.40D	F-A	03E-03	VT-3	N-VT-1				SNBR	
RECIR	3-47B465-500		3-ISI-0337-C-02	12	F1.40C	F-A	03E-03	VT-3	N-VT-1				CFS	

SORT ORDER: SYSTEM-WELDNO

SYSTEM	WELDNO	SEGMENT	ISONO	CYCLE	ITEMNO	CATEGORY	EXREQ	EXSCHD	NDEPROC	CALSTD	COMPDIA	NOMTHCK	COMPDESA	COMPDESB
RECIR	3-47B465-501		3-ISI-0337-C-02	12	F1.40C	F-A	03E-03	VT-3	N-VT-1				CFS	
RECIR	3-47B465-502		3-ISI-0337-C-02	12	F1.40C	F-A	03E-03	VT-3	N-VT-1				CFS	
RECIR	3-47B465-503		3-ISI-0337-C-02	12	F1.40D	F-A	03E-03	VT-3	N-VT-1				SNBR	
RECIR	GR-3-03(OL)		3-ISI-0328-C-01	12	R1.16E	R-A	03E-03	UT	N-UT-66	BF-83	28.00	1.322	VLV	EL
RECIR	GR-3-03(OL)		3-ISI-0328-C-01	12	NU0313	E	B02-02	UT	N-UT-66	BF-83	28.00	1.322	VLV	EL
RECIR	GR-3-27(OL)		3-ISI-0328-C-02	12	R1.16E	R-A	03E-03	UT	N-UT-66	BF-83	28.00	1.322	PUMP	P
RECIR	GR-3-27(OL)		3-ISI-0328-C-02	12	NU0313	E	B02-02	UT	N-UT-66	BF-83	28.00	1.322	PUMP	P
RECIR	GR-3-63		3-ISI-0328-C-02	12	R1.16E	R-A	03E-03	UT	N-UT-64	ALTSS	28.00	1.138	VLV	P
RECIR	GR-3-63		3-ISI-0328-C-02	12	NU0313	E	B02-02	UT	N-UT-65	SIZING	28.00	1.138	VLV	P
RECIR	KR-3-02		3-ISI-0328-C-01	12	R1.16C	R-A	03E-03	UT	N-UT-64	ALTSS	28.00	1.322	EL	P
RECIR	KR-3-02		3-ISI-0328-C-01	12	NU0313	C	B02-02	UT	N-UT-64	ALTSS	28.00	1.322	EL	P
RECIR	KR-3-24		3-ISI-0328-C-02	12	R1.16C	R-A	03E-03	UT	N-UT-64	ALTSS	28.00	1.322	EL	P
RECIR	KR-3-24		3-ISI-0328-C-02	12	NU0313	C	B02-02	UT	N-UT-64	ALTSS	28.00	1.322	EL	P
RHRS	3-SI-3.3.8.C		N/A	12	C7.20	C-H	89E-02	VT-2	N-VT-4				SYSLEAK	
RHRS	3-SI-3.3.8.C		N/A	12	C7.40	C-H	89E-02	VT-2	N-VT-4				SYSLEAK	
RHRS	3-SI-3.3.8.C		N/A	12	C7.60	C-H	89E-02	VT-2	N-VT-4				SYSLEAK	
RHRS	3-SI-3.3.8.C		N/A	12	C7.80	C-H	89E-02	VT-2	N-VT-4				SYSLEAK	
RHRS	DRHR-3-03B	3-074-005	3-ISI-0330-C-01	12	R1.16G	R-A	03E-03	VT-2	N-VT-4		24.00	1.219	P	P
RHRS	DRHR-3-03B	3-074-005	3-ISI-0330-C-01	12	NU0313	G	B02-02	VT-2	N-VT-4		24.00	1.219	P	P
RHRS	DRHR-3-13B	3-074-013	3-ISI-0330-C-01	12	R1.16G	R-A	03E-03	VT-2	N-VT-4		24.00	1.219	P	P
RHRS	DRHR-3-13B	3-074-013	3-ISI-0330-C-01	12	NU0313	G	B02-02	VT-2	N-VT-4		24.00	1.219	P	P
RHRS	DSRHR-3-01	3-074-005	3-ISI-0330-C-01	12	R1.16C	R-A	03E-03	UT	N-UT-64	ALTSS	24.00	1.219	EL	P
RHRS	DSRHR-3-01	3-074-005	3-ISI-0330-C-01	12	NU0313	C	B02-02	UT	N-UT-64	ALTSS	24.00	1.219	EL	P
RHRS	DSRHR-3-08	3-074-007	3-ISI-0330-C-01	12	R1.16C	R-A	03E-03	UT	N-UT-64	ALTSS	20.00	1.031	BRCN	P
RHRS	DSRHR-3-08	3-074-007	3-ISI-0330-C-01	12	NU0313	C	B02-02	UT	N-UT-64	ALTSS	20.00	1.031	BRCN	P
RHRS	RHRG-3-05-B		3-ISI-0422-C-01	12	C2.33	C-B	89E-02	VT-2	N-VT-4				NOZ	SHL
RHRS	RHRG-3-06-B		3-ISI-0422-C-01	12	C2.33	C-B	89E-02	VT-2	N-VT-4			0.813	NOZ	SHL
RPV	CRDN-3-0219-BC		ISI-0293-C-01	12	B7.80	B-G-2	95E-03	VT-1	VENDOR VT				BLTG	
RPV	CRDN-3-0223-BC		ISI-0293-C-01	12	B7.80	B-G-2	95E-03	VT-1	VENDOR VT				BLTG	
RPV	CRDN-3-0639-BC		ISI-0293-C-01	12	B7.80	B-G-2	95E-03	VT-1	VENDOR VT				BLTG	
RPV	CRDN-3-0647-BC		ISI-0293-C-01	12	B7.80	B-G-2	95E-03	VT-1	VENDOR VT				BLTG	
RPV	CRDN-3-1035-BC		ISI-0293-C-01	12	B7.80	B-G-2	95E-03	VT-1	VENDOR VT				BLTG	
RPV	CRDN-3-1051-BC		ISI-0293-C-01	12	B7.80	B-G-2	95E-03	VT-1	VENDOR VT				BLTG	
RPV	CRDN-3-1427-BC		ISI-0293-C-01	12	B7.80	B-G-2	95E-03	VT-1	VENDOR VT				BLTG	
RPV	CRDN-3-1823-BC		ISI-0293-C-01	12	B7.80	B-G-2	95E-03	VT-1	VENDOR VT				BLTG	
RPV	CRDN-3-1839-BC		ISI-0293-C-01	12	B7.80	B-G-2	95E-03	VT-1	VENDOR VT				BLTG	
RPV	CRDN-3-2611-BC		ISI-0293-C-01	12	B7.80	B-G-2	95E-03	VT-1	VENDOR VT				BLTG	
RPV	CRDN-3-2647-BC		ISI-0293-C-01	12	B7.80	B-G-2	95E-03	VT-1	VENDOR VT				BLTG	
RPV	CRDN-3-3011-BC		ISI-0293-C-01	12	B7.80	B-G-2	95E-03	VT-1	VENDOR VT				BLTG	
RPV	CRDN-3-3051-BC		ISI-0293-C-01	12	B7.80	B-G-2	95E-03	VT-1	VENDOR VT				BLTG	

SYSTEM	WELDNO	SEGMENT	ISONO	CYCLE	ITEMNO	CATEGORY	EXREQ	EXSCHD	NDEPROC	CALSTD	COMPDIA	NOMTHCK	COMPDESA	COMPDESB
RPV	CRDN-3-3055-BC		ISI-0293-C-01	12	B7.80	B-G-2	95E-03	VT-1	VENDOR VT				BLTG	
RPV	CRDN-3-3403-BC		ISI-0293-C-01	12	B7.80	B-G-2	95E-03	VT-1	VENDOR VT				BLTG	
RPV	CRDN-3-3451-BC		ISI-0293-C-01	12	B7.80	B-G-2	95E-03	VT-1	VENDOR VT				BLTG	
RPV	CRDN-3-4239-BC		ISI-0293-C-01	12	B7.80	B-G-2	95E-03	VT-1	VENDOR VT				BLTG	
RPV	CRDN-3-4607-BC		ISI-0293-C-01	12	B7.80	B-G-2	95E-03	VT-1	VENDOR VT				BLTG	
RPV	CRDN-3-4615-BC		ISI-0293-C-01	12	B7.80	B-G-2	95E-03	VT-1	VENDOR VT				BLTG	
RPV	CRDN-3-4647-BC		ISI-0293-C-01	12	B7.80	B-G-2	95E-03	VT-1	VENDOR VT				BLTG	
RPV	CRDN-3-5027-BC		ISI-0293-C-01	12	B7.80	B-G-2	95E-03	VT-1	VENDOR VT				BLTG	
RPV	CRDN-3-5035-BC		ISI-0293-C-01	12	B7.80	B-G-2	95E-03	VT-1	VENDOR VT				BLTG	
RPV	CRDN-3-5827-BC		ISI-0293-C-01	12	B7.80	B-G-2	95E-03	VT-1	VENDOR VT				BLTG	
RPV	CRDN-3-5835-BC		ISI-0293-C-01	12	B7.80	B-G-2	95E-03	VT-1	VENDOR VT				BLTG	
RPV	N10-SE		ISI-0445-C-01	12	N/A	BWRVIP-27	B06-02	VT-2	N-VT-4		2.00	0.250	NOZ	SE
RPV	N11A-SE		3-ISI-0346-C-01	12	N/A	BWRVIP-49	B06-02	VT-2	N-VT-4		2.00	0.250	NOZ	SE
RPV	N11B-SE		3-ISI-0346-C-01	12	N/A	BWRVIP-49	B06-02	VT-2	N-VT-4		2.00	0.250	NOZ	SE
RPV	N12A-SE		3-ISI-0346-C-01	12	N/A	BWRVIP-49	B06-02	VT-2	N-VT-4		2.00	0.250	NOZ	SE
RPV	N12B-SE		3-ISI-0346-C-01	12	N/A	BWRVIP-49	B06-02	VT-2	N-VT-4		2.00	0.250	NOZ	SE
RPV	N16A-SE		3-ISI-0346-C-01	12	N/A	BWRVIP-49	B06-02	VT-2	N-VT-4		2.00	0.250	NOZ	SE
RPV	N16B-SE		3-ISI-0346-C-01	12	N/A	BWRVIP-49	B06-02	VT-2	N-VT-4		2.00	0.250	NOZ	SE
RPV	N1A-IR		3-ISI-0328-C-01	12	B3.100	B-D	03E-03	VT-1E	VENDOR VT				NOZ IR	
RPV	N1A-NV		3-ISI-0328-C-01	12	B3.90	B-D	03E-03	UT	N-UT-78	BF-18	28.00	6.600	SHL	NOZ
RPV	N2B-IR		3-ISI-0328-C-02	12	B3.100	B-D	03E-03	VT-1E	VENDOR VT				NOZ IR	
RPV	N2B-NV		3-ISI-0328-C-02	12	B3.90	B-D	03E-03	UT	N-UT-78	BF-18	12.00	6.600	NOZ	SHL
RPV	N2D-IR		3-ISI-0328-C-02	12	B3.100	B-D	03E-03	VT-1E	VENDOR VT				NOZ IR	
RPV	N2D-NV		3-ISI-0328-C-02	12	B3.90	B-D	03E-03	UT	N-UT-78	BF-18	12.00	6.600	NOZ	SHL
RPV	N2F-IR		3-ISI-0328-C-01	12	B3.100	B-D	03E-03	VT-1E	VENDOR VT				NOZ IR	
RPV	N2F-NV		3-ISI-0328-C-01	12	B3.90	B-D	03E-03	UT	N-UT-78	BF-18	12.00	6.600	NOZ	SHL
RPV	N2G-IR		3-ISI-0328-C-01	12	B3.100	B-D	89E-02	VT-1E	VENDOR VT				NOZ IR	
RPV	N2G-NV		3-ISI-0328-C-01	12	B3.90	B-D	89E-02	UT	N-UT-78	BF-18	12.00	6.600	NOZ	SHL
RPV	N2H-IR		3-ISI-0328-C-01	12	B3.100	B-D	89E-02	VT-1E	VENDOR VT				NOZ IR	
RPV	N2H-NV		3-ISI-0328-C-01	12	B3.90	B-D	89E-02	UT	N-UT-78	BF-18	12.00	6.600	NOZ	SHL
RPV	N2J-IR		3-ISI-0328-C-01	12	B3.100	B-D	89E-02	VT-1E	VENDOR VT				NOZ IR	
RPV	N2J-NV		3-ISI-0328-C-01	12	B3.90	B-D	89E-02	UT	N-UT-78	BF-18	12.00	6.600	NOZ	SHL
RPV	N2K-IR		3-ISI-0328-C-01	12	B3.100	B-D	89E-02	VT-1E	VENDOR VT				NOZ IR	
RPV	N2K-NV		3-ISI-0328-C-01	12	B3.90	B-D	89E-02	UT	N-UT-78	BF-18	12.00	6.600	NOZ	SHL
RPV	N3B-IR		3-ISI-0329-C-02	12	B3.100	B-D	03E-03	VT-1E	VENDOR VT				NOZ IR	
RPV	N3B-NV		3-ISI-0329-C-02	12	B3.90	B-D	03E-03	UT	N-UT-78	BF-18	26.00	6.600	SHL	NOZ
RPV	N3C-IR		3-ISI-0329-C-02	12	B3.100	B-D	89E-02	VT-1E	VENDOR VT				NOZ IR	
RPV	N3C-NV		3-ISI-0329-C-02	12	B3.90	B-D	89E-02	UT	N-UT-78	BF-18	26.00	6.600	SHL	NOZ
RPV	N3D-IR		3-ISI-0329-C-01	12	B3.100	B-D	89E-02	VT-1E	VENDOR VT				NOZ IR	
RPV	N3D-NV		3-ISI-0329-C-01	12	B3.90	B-D	89E-02	UT	N-UT-78	BF-18	26.00	6.600	SHL	NOZ

SYSTEM	WELDNO	SEGMENT	ISONO	CYCLE	ITEMNO	CATEGORY	EXREQ	EXSCHD	NDEPROC	CALSTD	COMPDIA	NOMTHCK	COMPDESA	COMPDESB
RPV	N4A-FW-SPARG		3-ISI-0220-C-02	12	N/A	NU0619	B01-02	VT-1E	VENDOR VT					
RPV	N4B-FW-SPARG		3-ISI-0220-C-02	12	N/A	NU0619	B01-02	VT-1E	VENDOR VT					
RPV	N4B-IR		3-ISI-0327-C-01	12	B3.100	B-D	03E-03	UT	VENDOR UT	BF-18			NOZ IR	
RPV	N4B-IR/NB		3-ISI-0327-C-01	12	NU0619	B-D	B01-02	UT	VENDOR UT	BF-18			SNOZFWB	SSE
RPV	N4B-NV		3-ISI-0327-C-01	12	B3.90	B-D	03E-03	UT	N-UT-78	BF-18	12.00	6.600	NOZ	SHL
RPV	N4C-FW-SPARG		3-ISI-0220-C-02	12	N/A	NU0619	B01-02	VT-1E	VENDOR VT					
RPV	N4C-IR		3-ISI-0327-C-01	12	B3.100	B-D	03E-03	UT	VENDOR UT	BF-18			NOZ IR	
RPV	N4C-IR/NB		3-ISI-0327-C-01	12	NU0619	B-D	B01-02	UT	VENDOR UT	BF-18			SNOZFWB	SSE
RPV	N4C-NV		3-ISI-0327-C-01	12	B3.90	B-D	03E-03	UT	N-UT-78	BF-18	12.00	6.600	NOZ	SHL
RPV	N4D-FW-SPARG		3-ISI-0220-C-02	12	N/A	NU0619	B01-02	VT-1E	VENDOR VT					
RPV	N4E-FW-SPARG		3-ISI-0220-C-02	12	N/A	NU0619	B01-02	VT-1E	VENDOR VT					
RPV	N4F-FW-SPARG		3-ISI-0220-C-02	12	N/A	NU0619	B01-02	VT-1E	VENDOR VT					
RPV	N5A-IR		3-ISI-0331-C-01	12	B3.100	B-D	03E-03	VT-1E	VENDOR VT				NOZ IR	
RPV	N5A-NV		3-ISI-0331-C-01	12	B3.90	B-D	03E-03	UT	N-UT-78	BF-18	10.00	6.600	NOZ	SHL
RPV	N8A-IR		3-ISI-0411-C-01	12	B3.100	B-D	03E-03	VT-1E	VENDOR VT				NOZ IR	
RPV	N8A-NV		3-ISI-0411-C-01	12	B3.90	B-D	03E-03	UT	N-UT-78	BF-18	04.00	6.600	SHL	NOZ
RPV	N8B-IR		3-ISI-0411-C-01	12	B3.100	B-D	89E-02	VT-1E	VENDOR VT				NOZ IR	
RPV	N8B-NV		3-ISI-0411-C-01	12	B3.90	B-D	89E-02	UT	N-UT-78	BF-18	04.00	6.600	SHL	NOZ
RPV	RPV INTERIOR		ISI-0220-C-02	12	B13.10	B-N-1	03E-03	VT-3	VENDOR VT				INT	
RPV	RPV-NUTS-3-01		3-ISI-0267-C-01	12	B6.10	B-G-1	03E-03	VT-1	N-VT-1		08.50		CL HD BLT	
RPV	RPV-NUTS-3-02		3-ISI-0267-C-01	12	B6.10	B-G-1	03E-03	VT-1	N-VT-1		08.50		CL HD BLT	
RPV	RPV-NUTS-3-03		3-ISI-0267-C-01	12	B6.10	B-G-1	03E-03	VT-1	N-VT-1		08.50		CL HD BLT	
RPV	RPV-NUTS-3-04		3-ISI-0267-C-01	12	B6.10	B-G-1	03E-03	VT-1	N-VT-1		08.50		CL HD BLT	
RPV	RPV-NUTS-3-05		3-ISI-0267-C-01	12	B6.10	B-G-1	03E-03	VT-1	N-VT-1		08.50		CL HD BLT	
RPV	RPV-NUTS-3-06		3-ISI-0267-C-01	12	B6.10	B-G-1	03E-03	VT-1	N-VT-1		08.50		CL HD BLT	
RPV	RPV-NUTS-3-07		3-ISI-0267-C-01	12	B6.10	B-G-1	03E-03	VT-1	N-VT-1		08.50		CL HD BLT	
RPV	RPV-NUTS-3-08		3-ISI-0267-C-01	12	B6.10	B-G-1	03E-03	VT-1	N-VT-1		08.50		CL HD BLT	
RPV	RPV-NUTS-3-09		3-ISI-0267-C-01	12	B6.10	B-G-1	03E-03	VT-1	N-VT-1		08.50		CL HD BLT	
RPV	RPV-NUTS-3-10		3-ISI-0267-C-01	12	B6.10	B-G-1	03E-03	VT-1	N-VT-1		08.50		CL HD BLT	
RPV	RPV-NUTS-3-11		3-ISI-0267-C-01	12	B6.10	B-G-1	03E-03	VT-1	N-VT-1		08.50		CL HD BLT	
RPV	RPV-NUTS-3-12		3-ISI-0267-C-01	12	B6.10	B-G-1	03E-03	VT-1	N-VT-1		08.50		CL HD BLT	
RPV	RPV-NUTS-3-13		3-ISI-0267-C-01	12	B6.10	B-G-1	03E-03	VT-1	N-VT-1		08.50		CL HD BLT	
RPV	RPV-NUTS-3-14		3-ISI-0267-C-01	12	B6.10	B-G-1	03E-03	VT-1	N-VT-1		08.50		CL HD BLT	
RPV	RPV-NUTS-3-15		3-ISI-0267-C-01	12	B6.10	B-G-1	03E-03	VT-1	N-VT-1		08.50		CL HD BLT	
RPV	RPV-NUTS-3-16		3-ISI-0267-C-01	12	B6.10	B-G-1	03E-03	VT-1	N-VT-1		08.50		CL HD BLT	
RPV	RPV-NUTS-3-17		3-ISI-0267-C-01	12	B6.10	B-G-1	03E-03	VT-1	N-VT-1		08.50		CL HD BLT	
RPV	RPV-NUTS-3-18		3-ISI-0267-C-01	12	B6.10	B-G-1	03E-03	VT-1	N-VT-1		08.50		CL HD BLT	
RPV	RPV-NUTS-3-19		3-ISI-0267-C-01	12	B6.10	B-G-1	03E-03	VT-1	N-VT-1		08.50		CL HD BLT	
RPV	RPV-NUTS-3-20		3-ISI-0267-C-01	12	B6.10	B-G-1	03E-03	VT-1	N-VT-1		08.50		CL HD BLT	
RPV	RPV-NUTS-3-21		3-ISI-0267-C-01	12	B6.10	B-G-1	03E-03	VT-1	N-VT-1		08.50		CL HD BLT	

SYSTEM	WELDNO	SEGMENT	ISONO	CYCLE	ITEMNO	CATEGORY	EXREQ	EXSCHD	NDEPROC	CALSTD	COMPDIA	NOMTHCK	COMPDESA	COMPDESB
RPV	RPV-NUTS-3-22		3-ISI-0267-C-01	12	B6.10	B-G-1	03E-03	VT-1	N-VT-1		08.50		CL HD BLT	
RPV	RPV-NUTS-3-23		3-ISI-0267-C-01	12	B6.10	B-G-1	03E-03	VT-1	N-VT-1		08.50		CL HD BLT	
RPV	RPV-NUTS-3-24		3-ISI-0267-C-01	12	B6.10	B-G-1	03E-03	VT-1	N-VT-1		08.50		CL HD BLT	
RPV	RPV-NUTS-3-25		3-ISI-0267-C-01	12	B6.10	B-G-1	03E-03	VT-1	N-VT-1		08.50		CL HD BLT	
RPV	RPV-NUTS-3-26		3-ISI-0267-C-01	12	B6.10	B-G-1	03E-03	VT-1	N-VT-1		08.50		CL HD BLT	
RPV	RPV-NUTS-3-27		3-ISI-0267-C-01	12	B6.10	B-G-1	03E-03	VT-1	N-VT-1		08.50		CL HD BLT	
RPV	RPV-NUTS-3-28		3-ISI-0267-C-01	12	B6.10	B-G-1	03E-03	VT-1	N-VT-1		08.50		CL HD BLT	
RPV	RPV-NUTS-3-29		3-ISI-0267-C-01	12	B6.10	B-G-1	03E-03	VT-1	N-VT-1		08.50		CL HD BLT	
RPV	RPV-NUTS-3-30		3-ISI-0267-C-01	12	B6.10	B-G-1	03E-03	VT-1	N-VT-1		08.50		CL HD BLT	
RPV	RPV-WASH-3-01		3-ISI-0267-C-01	12	B6.50	B-G-1	03E-03	VT-1	N-VT-1		06.00	08.62	WASH	
RPV	RPV-WASH-3-02		3-ISI-0267-C-01	12	B6.50	B-G-1	03E-03	VT-1	N-VT-1		06.00	08.62	WASH	
RPV	RPV-WASH-3-03		3-ISI-0267-C-01	12	B6.50	B-G-1	03E-03	VT-1	N-VT-1		06.00	08.62	WASH	
RPV	RPV-WASH-3-04		3-ISI-0267-C-01	12	B6.50	B-G-1	03E-03	VT-1	N-VT-1		06.00	08.62	WASH	
RPV	RPV-WASH-3-05		3-ISI-0267-C-01	12	B6.50	B-G-1	03E-03	VT-1	N-VT-1		06.00	08.62	WASH	
RPV	RPV-WASH-3-06		3-ISI-0267-C-01	12	B6.50	B-G-1	03E-03	VT-1	N-VT-1		06.00	08.62	WASH	
RPV	RPV-WASH-3-07		3-ISI-0267-C-01	12	B6.50	B-G-1	03E-03	VT-1	N-VT-1		06.00	08.62	WASH	
RPV	RPV-WASH-3-08		3-ISI-0267-C-01	12	B6.50	B-G-1	03E-03	VT-1	N-VT-1		06.00	08.62	WASH	
RPV	RPV-WASH-3-09		3-ISI-0267-C-01	12	B6.50	B-G-1	03E-03	VT-1	N-VT-1		06.00	08.62	WASH	
RPV	RPV-WASH-3-10		3-ISI-0267-C-01	12	B6.50	B-G-1	03E-03	VT-1	N-VT-1		06.00	08.62	WASH	
RPV	RPV-WASH-3-11		3-ISI-0267-C-01	12	B6.50	B-G-1	03E-03	VT-1	N-VT-1		06.00	08.62	WASH	
RPV	RPV-WASH-3-12		3-ISI-0267-C-01	12	B6.50	B-G-1	03E-03	VT-1	N-VT-1		06.00	08.62	WASH	
RPV	RPV-WASH-3-13		3-ISI-0267-C-01	12	B6.50	B-G-1	03E-03	VT-1	N-VT-1		06.00	08.62	WASH	
RPV	RPV-WASH-3-14		3-ISI-0267-C-01	12	B6.50	B-G-1	03E-03	VT-1	N-VT-1		06.00	08.62	WASH	
RPV	RPV-WASH-3-15		3-ISI-0267-C-01	12	B6.50	B-G-1	03E-03	VT-1	N-VT-1		06.00	08.62	WASH	
RPV	RPV-WASH-3-16		3-ISI-0267-C-01	12	B6.50	B-G-1	03E-03	VT-1	N-VT-1		06.00	08.62	WASH	
RPV	RPV-WASH-3-17		3-ISI-0267-C-01	12	B6.50	B-G-1	03E-03	VT-1	N-VT-1		06.00	08.62	WASH	
RPV	RPV-WASH-3-18		3-ISI-0267-C-01	12	B6.50	B-G-1	03E-03	VT-1	N-VT-1		06.00	08.62	WASH	
RPV	RPV-WASH-3-19		3-ISI-0267-C-01	12	B6.50	B-G-1	03E-03	VT-1	N-VT-1		06.00	08.62	WASH	
RPV	RPV-WASH-3-20		3-ISI-0267-C-01	12	B6.50	B-G-1	03E-03	VT-1	N-VT-1		06.00	08.62	WASH	
RPV	RPV-WASH-3-21		3-ISI-0267-C-01	12	B6.50	B-G-1	03E-03	VT-1	N-VT-1		06.00	08.62	WASH	
RPV	RPV-WASH-3-22		3-ISI-0267-C-01	12	B6.50	B-G-1	03E-03	VT-1	N-VT-1		06.00	08.62	WASH	
RPV	RPV-WASH-3-23		3-ISI-0267-C-01	12	B6.50	B-G-1	03E-03	VT-1	N-VT-1		06.00	08.62	WASH	
RPV	RPV-WASH-3-24		3-ISI-0267-C-01	12	B6.50	B-G-1	03E-03	VT-1	N-VT-1		06.00	08.62	WASH	
RPV	RPV-WASH-3-25		3-ISI-0267-C-01	12	B6.50	B-G-1	03E-03	VT-1	N-VT-1		06.00	08.62	WASH	
RPV	RPV-WASH-3-26		3-ISI-0267-C-01	12	B6.50	B-G-1	03E-03	VT-1	N-VT-1		06.00	08.62	WASH	
RPV	RPV-WASH-3-27		3-ISI-0267-C-01	12	B6.50	B-G-1	03E-03	VT-1	N-VT-1		06.00	08.62	WASH	
RPV	RPV-WASH-3-28		3-ISI-0267-C-01	12	B6.50	B-G-1	03E-03	VT-1	N-VT-1		06.00	08.62	WASH	
RPV	RPV-WASH-3-29		3-ISI-0267-C-01	12	B6.50	B-G-1	03E-03	VT-1	N-VT-1		06.00	08.62	WASH	
RPV	RPV-WASH-3-30		3-ISI-0267-C-01	12	B6.50	B-G-1	03E-03	VT-1	N-VT-1		06.00	08.62	WASH	

Revision 000
02/22/2006
Total Examinations: 200

TENNESSEE VALLEY AUTHORITY
BROWNS FERRY NUCLEAR POWER PLANT - UNIT 3
EXAMS SCHEDULED FOR CYCLE 12

SYSTEM	WELDNO	SEGMENT	ISONO	CYCLE	ITEMNO	CATEGORY	EXREQ	EXSCHD	NDEPROC	CALSTD	COMPDIA	NOMTHCK	COMPDESA	COMPDESB
FWS	3-47B415-34		3-ISI-0336-C-01	12	F1.10B	F-A	03E-03	VT-3	N-VT-1		24.00		RGD HGR	
FWS	3-47B415-34		3-ISI-0336-C-01	12	F1.10B	F-A	P03-03	VT-3	N-VT-1		24.00		RGD HGR	
FWS	3-47B415-37		3-ISI-0336-C-01	12	F1.10C	F-A	03E-03	VT-3	N-VT-1		20.00		VAR SUP	
FWS	3-47B415-38		3-ISI-0336-C-01	12	F1.10C	F-A	03E-03	VT-3	N-VT-1		12.00		CFS	
FWS	3-47B415-39		3-ISI-0336-C-01	12	F1.10C	F-A	03E-03	VT-3	N-VT-1		12.00		VAR SUP	
FWS	3-47B415-49		3-ISI-0336-C-01	12	F1.10B	F-A	P03-03	VT-3	N-VT-1		24.00		RGD HGR	
FWS	3RFWA-17R	3-003-036	3-ISI-0327-C-01	12	R1.18	R-A	03E-03	UT	N-UT-26	CSW			GRID	
FWS	3RFWA-28P	3-003-037	3-ISI-0327-C-01	12	R1.18	R-A	03E-03	UT	N-UT-26	CSW			GRID	
FWS	3RFWA-30P	3-003-038	3-ISI-0327-C-01	12	R1.18	R-A	03E-03	UT	N-UT-26	CSW			GRID	
FWS	3RFWA-39E	3-003-039	3-ISI-0327-C-01	12	R1.18	R-A	03E-03	UT	N-UT-26	CSW			GRID	
FWS	3RFWB-13T	3-003-040	3-ISI-0327-C-01	12	R1.18	R-A	03E-03	UT	N-UT-26	CSW	24.00	1.531	GRID	
FWS	3RFWB-16T	3-003-040	3-ISI-0327-C-01	12	R1.18	R-A	03E-03	UT	N-UT-26	CSW	20.00	1.281	GRID	
FWS	3RFWB-20E	3-003-040	3-ISI-0327-C-01	12	R1.18	R-A	03E-03	UT	N-UT-26	CSW	12.75	0.844	GRID	
FWS	3RFWB-39E	3-003-043	3-ISI-0327-C-01	12	R1.18	R-A	03E-03	UT	N-UT-26	CSW			GRID	
MSS	3-47B400-095		3-ISI-0338-C-02	12	F1.10B	F-A	P03-03	VT-3	N-VT-1		26.00		RGD HGR	
MSS	3-47B400-114-IA		3-ISI-0338-C-02	12	B10.20	B-K	03E-03	MT	N-MT-6			1.625	WLD ATT	
MSS	3-47B400-115		3-ISI-0338-C-02	12	F1.10D	F-A	03E-03	VT-3	N-VT-1		26.00		SNBR	
MSS	3-47B400-115-IA		3-ISI-0338-C-02	12	B10.20	B-K	03E-03	MT	N-MT-6			0.750	WLD ATT	
MSS	3-47B400-116		3-ISI-0338-C-02	12	F1.10D	F-A	03E-03	VT-3	N-VT-1		26.00		SNBR	
MSS	3-47B400-116-IA		3-ISI-0338-C-02	12	B10.20	B-K	03E-03	MT	N-MT-6			0.625	WLD ATT	
MSS	3-47B400-204		3-ISI-0338-C-02	12	F1.10B	F-A	P03-03	VT-3	N-VT-1		26.00		RGD HGR	
MSS	3-47B400-204		3-ISI-0338-C-02	12	F1.10B	F-A	S01-02	VT-3	N-VT-1		26.00		RGD HGR	
MSS	3-47B400-68		3-ISI-0338-C-01	12	F1.10B	F-A	P03-03	VT-3	N-VT-1		26.00		RGD HGR	
MSS	3-47B400-82		3-ISI-0338-C-01	12	F1.10B	F-A	P03-03	VT-3	N-VT-1		26.00		RGD HGR	
MSS	3-47B400-83-IA		3-ISI-0338-C-01	12	B10.20	B-K	03E-03	MT	N-MT-6			1.500	WLD ATT	
MSS	3MSZ-MS1A-19E	3-001-036	3-ISI-0329-C-01	12	R1.18	R-A	03E-03	UT	N-UT-26	CSW			GRID	
MSS	3MSZ-MS2B-13E	3-001-037	3-ISI-0329-C-02	12	R1.18	R-A	03E-03	UT	N-UT-26	CSW			GRID	
MSS	3MSZ-MS2B-14P	3-001-037	3-ISI-0329-C-02	12	R1.18	R-A	03E-03	UT	N-UT-26	CSW			GRID	
MSS	DSAS-3-03	3-001-002	ISI-0354-C-02	12	R1.11	R-A	03E-03	UT	N-UT-76	ALTCS	06.00	0.432	EL	P
MSS	HPAS-3-H-03		3-ISI-0355-C-02	12	F1.20C	F-A	03E-03	VT-3	N-VT-1		06.00		VAR SUP	
MSS	HPAS-3-H-10		3-ISI-0355-C-02	12	F1.20C	F-A	03E-03	VT-3	N-VT-1		06.00		VAR SUP	
MSS	MS-3-H-12		3-ISI-0355-C-01	12	F1.20C	F-A	03E-03	VT-3	N-VT-1		24.00		VAR SUP	
MSS	MS-3-H-13		3-ISI-0355-C-01	12	F1.20C	F-A	03E-03	VT-3	N-VT-1		24.00		VAR SUP	
MSS	MS-3-H-13-IA		3-ISI-0355-C-01	12	C3.20	C-C	03E-03	MT	N-MT-6			1.500	WLD ATT	
MSS	MS-3-H-17		3-ISI-0355-C-01	12	F1.20C	F-A	03E-03	VT-3	N-VT-1		30.00		VAR SUP	

SORT ORDER: SYSTEM-WELDNO

SYSTEM	WELDNO	SEGMENT	ISONO	CYCLE	ITEMNO	CATEGORY	EXREQ	EXSCHD	NDEPROC	CALSTD	COMPDIA	NOMTHCK	COMPDESA	COMPDESB
RECIR	3-47B465-497		3-ISI-0337-C-02	12	F1.40D	F-A	03E-03	VT-3	N-VT-1				SNBR	
RECIR	3-47B465-498		3-ISI-0337-C-02	12	F1.40D	F-A	03E-03	VT-3	N-VT-1				SNBR	
RECIR	3-47B465-499		3-ISI-0337-C-02	12	F1.40D	F-A	03E-03	VT-3	N-VT-1				SNBR	
RECIR	3-47B465-500		3-ISI-0337-C-02	12	F1.40C	F-A	03E-03	VT-3	N-VT-1				CFS	
RECIR	3-47B465-501		3-ISI-0337-C-02	12	F1.40C	F-A	03E-03	VT-3	N-VT-1				CFS	
RECIR	3-47B465-502		3-ISI-0337-C-02	12	F1.40C	F-A	03E-03	VT-3	N-VT-1				CFS	
RECIR	3-47B465-503		3-ISI-0337-C-02	12	F1.40D	F-A	03E-03	VT-3	N-VT-1				SNBR	
RECIR	3-47B465-513		3-ISI-0337-C-01	12	F1.40D	F-A	P03-03	VT-3	N-VT-1				SNBR	
RECIR	GR-3-03(OL)		3-ISI-0328-C-01	12	R1.16E	R-A	03E-03	UT	N-UT-66	BF-83	28.00	1.322	VLV	EL
RECIR	GR-3-03(OL)		3-ISI-0328-C-01	12	NU0313	E	B02-02	UT	N-UT-66	BF-83	28.00	1.322	VLV	EL
RECIR	GR-3-27(OL)		3-ISI-0328-C-02	12	R1.16E	R-A	03E-03	UT	N-UT-66	BF-83	28.00	1.322	PUMP	P
RECIR	GR-3-27(OL)		3-ISI-0328-C-02	12	NU0313	E	B02-02	UT	N-UT-66	BF-83	28.00	1.322	PUMP	P
RECIR	GR-3-63		3-ISI-0328-C-02	12	R1.16E	R-A	03E-03	UT	N-UT-64	ALTSS	28.00	1.138	VLV	P
RECIR	GR-3-63		3-ISI-0328-C-02	12	NU0313	E	B02-02	UT	N-UT-65	SIZING	28.00	1.138	VLV	P
RECIR	KR-3-02		3-ISI-0328-C-01	12	R1.16C	R-A	03E-03	UT	N-UT-64	ALTSS	28.00	1.322	EL	P
RECIR	KR-3-02		3-ISI-0328-C-01	12	NU0313	C	B02-02	UT	N-UT-64	ALTSS	28.00	1.322	EL	P
RECIR	KR-3-24		3-ISI-0328-C-02	12	R1.16C	R-A	03E-03	UT	N-UT-64	ALTSS	28.00	1.322	EL	P
RECIR	KR-3-24		3-ISI-0328-C-02	12	NU0313	C	B02-02	UT	N-UT-64	ALTSS	28.00	1.322	EL	P
RHRS	3-SI-3.3.8.C		N/A	12	C7.20	C-H	89E-02	VT-2	N-VT-4				SYSLEAK	
RHRS	3-SI-3.3.8.C		N/A	12	C7.40	C-H	89E-02	VT-2	N-VT-4				SYSLEAK	
RHRS	3-SI-3.3.8.C		N/A	12	C7.60	C-H	89E-02	VT-2	N-VT-4				SYSLEAK	
RHRS	3-SI-3.3.8.C		N/A	12	C7.80	C-H	89E-02	VT-2	N-VT-4				SYSLEAK	
RHRS	DRHR-3-03B	3-074-005	3-ISI-0330-C-01	12	R1.16G	R-A	03E-03	VT-2	N-VT-4		24.00	1.219	P	P
RHRS	DRHR-3-03B	3-074-005	3-ISI-0330-C-01	12	NU0313	G	B02-02	VT-2	N-VT-4		24.00	1.219	P	P
RHRS	DRHR-3-13B	3-074-013	3-ISI-0330-C-01	12	R1.16G	R-A	03E-03	VT-2	N-VT-4		24.00	1.219	P	P
RHRS	DRHR-3-13B	3-074-013	3-ISI-0330-C-01	12	NU0313	G	B02-02	VT-2	N-VT-4		24.00	1.219	P	P
RHRS	DSRHR-3-01	3-074-005	3-ISI-0330-C-01	12	R1.16C	R-A	03E-03	UT	N-UT-64	ALTSS	24.00	1.219	EL	P
RHRS	DSRHR-3-01	3-074-005	3-ISI-0330-C-01	12	NU0313	C	B02-02	UT	N-UT-64	ALTSS	24.00	1.219	EL	P
RHRS	DSRHR-3-08	3-074-007	3-ISI-0330-C-01	12	R1.16C	R-A	03E-03	UT	N-UT-64	ALTSS	20.00	1.031	BRCN	P
RHRS	DSRHR-3-08	3-074-007	3-ISI-0330-C-01	12	NU0313	C	B02-02	UT	N-UT-64	ALTSS	20.00	1.031	BRCN	P
RHRS	RHRG-3-05-B		3-ISI-0422-C-01	12	C2.33	C-B	89E-02	VT-2	N-VT-4				NOZ	SHL
RHRS	RHRG-3-06-B		3-ISI-0422-C-01	12	C2.33	C-B	89E-02	VT-2	N-VT-4			0.813	NOZ	SHL
RPV	CRDN-3-0219-BC		ISI-0293-C-01	12	B7.80	B-G-2	95E-03	VT-1	VENDOR VT				BLTG	
RPV	CRDN-3-0223-BC		ISI-0293-C-01	12	B7.80	B-G-2	95E-03	VT-1	VENDOR VT				BLTG	
RPV	CRDN-3-0639-BC		ISI-0293-C-01	12	B7.80	B-G-2	95E-03	VT-1	VENDOR VT				BLTG	
RPV	CRDN-3-0647-BC		ISI-0293-C-01	12	B7.80	B-G-2	95E-03	VT-1	VENDOR VT				BLTG	
RPV	CRDN-3-1035-BC		ISI-0293-C-01	12	B7.80	B-G-2	95E-03	VT-1	VENDOR VT				BLTG	
RPV	CRDN-3-1051-BC		ISI-0293-C-01	12	B7.80	B-G-2	95E-03	VT-1	VENDOR VT				BLTG	
RPV	CRDN-3-1427-BC		ISI-0293-C-01	12	B7.80	B-G-2	95E-03	VT-1	VENDOR VT				BLTG	
RPV	CRDN-3-1823-BC		ISI-0293-C-01	12	B7.80	B-G-2	95E-03	VT-1	VENDOR VT				BLTG	

SYSTEM	WELDNO	SEGMENT	ISONO	CYCLE	ITEMNO	CATEGORY	EXREQ	EXSCHD	NDEPROC	CALSTD	COMPDIA	NOMTHCK	COMPDESA	COMPDESB
RPV	CRDN-3-1839-BC		ISI-0293-C-01	12	B7.80	B-G-2	95E-03	VT-1	VENDOR VT				BLTG	
RPV	CRDN-3-2611-BC		ISI-0293-C-01	12	B7.80	B-G-2	95E-03	VT-1	VENDOR VT				BLTG	
RPV	CRDN-3-2647-BC		ISI-0293-C-01	12	B7.80	B-G-2	95E-03	VT-1	VENDOR VT				BLTG	
RPV	CRDN-3-3011-BC		ISI-0293-C-01	12	B7.80	B-G-2	95E-03	VT-1	VENDOR VT				BLTG	
RPV	CRDN-3-3051-BC		ISI-0293-C-01	12	B7.80	B-G-2	95E-03	VT-1	VENDOR VT				BLTG	
RPV	CRDN-3-3055-BC		ISI-0293-C-01	12	B7.80	B-G-2	95E-03	VT-1	VENDOR VT				BLTG	
RPV	CRDN-3-3403-BC		ISI-0293-C-01	12	B7.80	B-G-2	95E-03	VT-1	VENDOR VT				BLTG	
RPV	CRDN-3-3451-BC		ISI-0293-C-01	12	B7.80	B-G-2	95E-03	VT-1	VENDOR VT				BLTG	
RPV	CRDN-3-4239-BC		ISI-0293-C-01	12	B7.80	B-G-2	95E-03	VT-1	VENDOR VT				BLTG	
RPV	CRDN-3-4607-BC		ISI-0293-C-01	12	B7.80	B-G-2	95E-03	VT-1	VENDOR VT				BLTG	
RPV	CRDN-3-4615-BC		ISI-0293-C-01	12	B7.80	B-G-2	95E-03	VT-1	VENDOR VT				BLTG	
RPV	CRDN-3-4647-BC		ISI-0293-C-01	12	B7.80	B-G-2	95E-03	VT-1	VENDOR VT				BLTG	
RPV	CRDN-3-5027-BC		ISI-0293-C-01	12	B7.80	B-G-2	95E-03	VT-1	VENDOR VT				BLTG	
RPV	CRDN-3-5035-BC		ISI-0293-C-01	12	B7.80	B-G-2	95E-03	VT-1	VENDOR VT				BLTG	
RPV	CRDN-3-5827-BC		ISI-0293-C-01	12	B7.80	B-G-2	95E-03	VT-1	VENDOR VT				BLTG	
RPV	CRDN-3-5835-BC		ISI-0293-C-01	12	B7.80	B-G-2	95E-03	VT-1	VENDOR VT				BLTG	
RPV	N10-SE		ISI-0445-C-01	12	N/A	BWRVIP-27	B06-02	VT-2	N-VT-4		2.00	0.250	NOZ	SE
RPV	N11A-SE		3-ISI-0346-C-01	12	N/A	BWRVIP-49	B06-02	VT-2	N-VT-4		2.00	0.250	NOZ	SE
RPV	N11B-SE		3-ISI-0346-C-01	12	N/A	BWRVIP-49	B06-02	VT-2	N-VT-4		2.00	0.250	NOZ	SE
RPV	N12A-SE		3-ISI-0346-C-01	12	N/A	BWRVIP-49	B06-02	VT-2	N-VT-4		2.00	0.250	NOZ	SE
RPV	N12B-SE		3-ISI-0346-C-01	12	N/A	BWRVIP-49	B06-02	VT-2	N-VT-4		2.00	0.250	NOZ	SE
RPV	N16A-SE		3-ISI-0346-C-01	12	N/A	BWRVIP-49	B06-02	VT-2	N-VT-4		2.00	0.250	NOZ	SE
RPV	N16B-SE		3-ISI-0346-C-01	12	N/A	BWRVIP-49	B06-02	VT-2	N-VT-4		2.00	0.250	NOZ	SE
RPV	N1A-IR		3-ISI-0328-C-01	12	B3.100	B-D	03E-03	VT-1E	VENDOR VT				NOZ IR	
RPV	N1A-NV		3-ISI-0328-C-01	12	B3.90	B-D	03E-03	UT	N-UT-78	BF-18	28.00	6.600	SHL	NOZ
RPV	N2B-IR		3-ISI-0328-C-02	12	B3.100	B-D	03E-03	VT-1E	VENDOR VT				NOZ IR	
RPV	N2B-NV		3-ISI-0328-C-02	12	B3.90	B-D	03E-03	UT	N-UT-78	BF-18	12.00	6.600	NOZ	SHL
RPV	N2D-IR		3-ISI-0328-C-02	12	B3.100	B-D	03E-03	VT-1E	VENDOR VT				NOZ IR	
RPV	N2D-NV		3-ISI-0328-C-02	12	B3.90	B-D	03E-03	UT	N-UT-78	BF-18	12.00	6.600	NOZ	SHL
RPV	N2F-IR		3-ISI-0328-C-01	12	B3.100	B-D	03E-03	VT-1E	VENDOR VT				NOZ IR	
RPV	N2F-NV		3-ISI-0328-C-01	12	B3.90	B-D	03E-03	UT	N-UT-78	BF-18	12.00	6.600	NOZ	SHL
RPV	N2G-IR		3-ISI-0328-C-01	12	B3.100	B-D	89E-02	VT-1E	VENDOR VT				NOZ IR	
RPV	N2G-NV		3-ISI-0328-C-01	12	B3.90	B-D	89E-02	UT	N-UT-78	BF-18	12.00	6.600	NOZ	SHL
RPV	N2H-IR		3-ISI-0328-C-01	12	B3.100	B-D	89E-02	VT-1E	VENDOR VT				NOZ IR	
RPV	N2H-NV		3-ISI-0328-C-01	12	B3.90	B-D	89E-02	UT	N-UT-78	BF-18	12.00	6.600	NOZ	SHL
RPV	N2J-IR		3-ISI-0328-C-01	12	B3.100	B-D	89E-02	VT-1E	VENDOR VT				NOZ IR	
RPV	N2J-NV		3-ISI-0328-C-01	12	B3.90	B-D	89E-02	UT	N-UT-78	BF-18	12.00	6.600	NOZ	SHL
RPV	N2K-IR		3-ISI-0328-C-01	12	B3.100	B-D	89E-02	VT-1E	VENDOR VT				NOZ IR	
RPV	N2K-NV		3-ISI-0328-C-01	12	B3.90	B-D	89E-02	UT	N-UT-78	BF-18	12.00	6.600	NOZ	SHL
RPV	N3B-IR		3-ISI-0329-C-02	12	B3.100	B-D	03E-03	VT-1E	VENDOR VT				NOZ IR	

SYSTEM	WELDNO	SEGMENT	ISONO	CYCLE	ITEMNO	CATEGORY	EXREQ	EXSCHD	NDEPROC	CALSTD	COMPDIA	NOMTHCK	COMPDESA	COMPDESB
RPV	N3B-NV		3-ISI-0329-C-02	12	B3.90	B-D	03E-03	UT	N-UT-78	BF-18	26.00	6.600	SHL	NOZ
RPV	N3C-IR		3-ISI-0329-C-02	12	B3.100	B-D	89E-02	VT-1E	VENDOR VT				NOZ IR	
RPV	N3C-NV		3-ISI-0329-C-02	12	B3.90	B-D	89E-02	UT	N-UT-78	BF-18	26.00	6.600	SHL	NOZ
RPV	N3D-IR		3-ISI-0329-C-01	12	B3.100	B-D	89E-02	VT-1E	VENDOR VT				NOZ IR	
RPV	N3D-NV		3-ISI-0329-C-01	12	B3.90	B-D	89E-02	UT	N-UT-78	BF-18	26.00	6.600	SHL	NOZ
RPV	N4A-FW-SPARG		3-ISI-0220-C-02	12	N/A	NU0619	B01-02	VT-1E	VENDOR VT					
RPV	N4B-FW-SPARG		3-ISI-0220-C-02	12	N/A	NU0619	B01-02	VT-1E	VENDOR VT					
RPV	N4B-IR		3-ISI-0327-C-01	12	B3.100	B-D	03E-03	UT	VENDOR UT	BF-18			NOZ IR	
RPV	N4B-IR/NB		3-ISI-0327-C-01	12	NU0619	B-D	B01-02	UT	VENDOR UT	BF-18			SNOZFWB	SSE
RPV	N4B-NV		3-ISI-0327-C-01	12	B3.90	B-D	03E-03	UT	N-UT-78	BF-18	12.00	6.600	NOZ	SHL
RPV	N4C-FW-SPARG		3-ISI-0220-C-02	12	N/A	NU0619	B01-02	VT-1E	VENDOR VT					
RPV	N4C-IR		3-ISI-0327-C-01	12	B3.100	B-D	03E-03	UT	VENDOR UT	BF-18			NOZ IR	
RPV	N4C-IR/NB		3-ISI-0327-C-01	12	NU0619	B-D	B01-02	UT	VENDOR UT	BF-18			SNOZFWB	SSE
RPV	N4C-NV		3-ISI-0327-C-01	12	B3.90	B-D	03E-03	UT	N-UT-78	BF-18	12.00	6.600	NOZ	SHL
RPV	N4D-FW-SPARG		3-ISI-0220-C-02	12	N/A	NU0619	B01-02	VT-1E	VENDOR VT					
RPV	N4D-NV		3-ISI-0327-C-01	12	B3.90	B-D	89E-02	UT	N-UT-78	BF-18	12.00	6.600	NOZ	SHL
RPV	N4E-FW-SPARG		3-ISI-0220-C-02	12	N/A	NU0619	B01-02	VT-1E	VENDOR VT					
RPV	N4F-FW-SPARG		3-ISI-0220-C-02	12	N/A	NU0619	B01-02	VT-1E	VENDOR VT					
RPV	N5A-IR		3-ISI-0331-C-01	12	B3.100	B-D	03E-03	VT-1E	VENDOR VT				NOZ IR	
RPV	N5A-NV		3-ISI-0331-C-01	12	B3.90	B-D	03E-03	UT	N-UT-78	BF-18	10.00	6.600	NOZ	SHL
RPV	N8A-IR		3-ISI-0411-C-01	12	B3.100	B-D	03E-03	VT-1E	VENDOR VT				NOZ IR	
RPV	N8A-NV		3-ISI-0411-C-01	12	B3.90	B-D	03E-03	UT	N-UT-78	BF-18	04.00	6.600	SHL	NOZ
RPV	N8B-IR		3-ISI-0411-C-01	12	B3.100	B-D	89E-02	VT-1E	VENDOR VT				NOZ IR	
RPV	N8B-NV		3-ISI-0411-C-01	12	B3.90	B-D	89E-02	UT	N-UT-78	BF-18	04.00	6.600	SHL	NOZ
RPV	RPV INTERIOR		ISI-0220-C-02	12	B13.10	B-N-1	03E-03	VT-3	VENDOR VT				INT	
RPV	RPV-NUTS-3-01		3-ISI-0267-C-01	12	B6.10	B-G-1	03E-03	VT-1	N-VT-1		08.50		CL HD BLTG	
RPV	RPV-NUTS-3-02		3-ISI-0267-C-01	12	B6.10	B-G-1	03E-03	VT-1	N-VT-1		08.50		CL HD BLTG	
RPV	RPV-NUTS-3-03		3-ISI-0267-C-01	12	B6.10	B-G-1	03E-03	VT-1	N-VT-1		08.50		CL HD BLTG	
RPV	RPV-NUTS-3-04		3-ISI-0267-C-01	12	B6.10	B-G-1	03E-03	VT-1	N-VT-1		08.50		CL HD BLTG	
RPV	RPV-NUTS-3-05		3-ISI-0267-C-01	12	B6.10	B-G-1	03E-03	VT-1	N-VT-1		08.50		CL HD BLTG	
RPV	RPV-NUTS-3-06		3-ISI-0267-C-01	12	B6.10	B-G-1	03E-03	VT-1	N-VT-1		08.50		CL HD BLTG	
RPV	RPV-NUTS-3-07		3-ISI-0267-C-01	12	B6.10	B-G-1	03E-03	VT-1	N-VT-1		08.50		CL HD BLTG	
RPV	RPV-NUTS-3-08		3-ISI-0267-C-01	12	B6.10	B-G-1	03E-03	VT-1	N-VT-1		08.50		CL HD BLTG	
RPV	RPV-NUTS-3-09		3-ISI-0267-C-01	12	B6.10	B-G-1	03E-03	VT-1	N-VT-1		08.50		CL HD BLTG	
RPV	RPV-NUTS-3-10		3-ISI-0267-C-01	12	B6.10	B-G-1	03E-03	VT-1	N-VT-1		08.50		CL HD BLTG	
RPV	RPV-NUTS-3-11		3-ISI-0267-C-01	12	B6.10	B-G-1	03E-03	VT-1	N-VT-1		08.50		CL HD BLTG	
RPV	RPV-NUTS-3-12		3-ISI-0267-C-01	12	B6.10	B-G-1	03E-03	VT-1	N-VT-1		08.50		CL HD BLTG	
RPV	RPV-NUTS-3-13		3-ISI-0267-C-01	12	B6.10	B-G-1	03E-03	VT-1	N-VT-1		08.50		CL HD BLTG	
RPV	RPV-NUTS-3-14		3-ISI-0267-C-01	12	B6.10	B-G-1	03E-03	VT-1	N-VT-1		08.50		CL HD BLTG	
RPV	RPV-NUTS-3-15		3-ISI-0267-C-01	12	B6.10	B-G-1	03E-03	VT-1	N-VT-1		08.50		CL HD BLTG	

SYSTEM	WELDNO	SEGMENT	ISONO	CYCLE	ITEMNO	CATEGORY	EXREQ	EXSCHD	NDEPROC	CALSTD	COMPDIA	NOMTHCK	COMPDESA	COMPDESB
RPV	RPV-NUTS-3-16		3-ISI-0267-C-01	12	B6.10	B-G-1	03E-03	VT-1	N-VT-1		08.50		CL HD BLTG	
RPV	RPV-NUTS-3-17		3-ISI-0267-C-01	12	B6.10	B-G-1	03E-03	VT-1	N-VT-1		08.50		CL HD BLTG	
RPV	RPV-NUTS-3-18		3-ISI-0267-C-01	12	B6.10	B-G-1	03E-03	VT-1	N-VT-1		08.50		CL HD BLTG	
RPV	RPV-NUTS-3-19		3-ISI-0267-C-01	12	B6.10	B-G-1	03E-03	VT-1	N-VT-1		08.50		CL HD BLTG	
RPV	RPV-NUTS-3-20		3-ISI-0267-C-01	12	B6.10	B-G-1	03E-03	VT-1	N-VT-1		08.50		CL HD BLTG	
RPV	RPV-NUTS-3-21		3-ISI-0267-C-01	12	B6.10	B-G-1	03E-03	VT-1	N-VT-1		08.50		CL HD BLTG	
RPV	RPV-NUTS-3-22		3-ISI-0267-C-01	12	B6.10	B-G-1	03E-03	VT-1	N-VT-1		08.50		CL HD BLTG	
RPV	RPV-NUTS-3-23		3-ISI-0267-C-01	12	B6.10	B-G-1	03E-03	VT-1	N-VT-1		08.50		CL HD BLTG	
RPV	RPV-NUTS-3-24		3-ISI-0267-C-01	12	B6.10	B-G-1	03E-03	VT-1	N-VT-1		08.50		CL HD BLTG	
RPV	RPV-NUTS-3-25		3-ISI-0267-C-01	12	B6.10	B-G-1	03E-03	VT-1	N-VT-1		08.50		CL HD BLTG	
RPV	RPV-NUTS-3-26		3-ISI-0267-C-01	12	B6.10	B-G-1	03E-03	VT-1	N-VT-1		08.50		CL HD BLTG	
RPV	RPV-NUTS-3-27		3-ISI-0267-C-01	12	B6.10	B-G-1	03E-03	VT-1	N-VT-1		08.50		CL HD BLTG	
RPV	RPV-NUTS-3-28		3-ISI-0267-C-01	12	B6.10	B-G-1	03E-03	VT-1	N-VT-1		08.50		CL HD BLTG	
RPV	RPV-NUTS-3-29		3-ISI-0267-C-01	12	B6.10	B-G-1	03E-03	VT-1	N-VT-1		08.50		CL HD BLTG	
RPV	RPV-NUTS-3-30		3-ISI-0267-C-01	12	B6.10	B-G-1	03E-03	VT-1	N-VT-1		08.50		CL HD BLTG	
RPV	RPV-WASH-3-01		3-ISI-0267-C-01	12	B6.50	B-G-1	03E-03	VT-1	N-VT-1		06.00	08.62	WASH	
RPV	RPV-WASH-3-02		3-ISI-0267-C-01	12	B6.50	B-G-1	03E-03	VT-1	N-VT-1		06.00	08.62	WASH	
RPV	RPV-WASH-3-03		3-ISI-0267-C-01	12	B6.50	B-G-1	03E-03	VT-1	N-VT-1		06.00	08.62	WASH	
RPV	RPV-WASH-3-04		3-ISI-0267-C-01	12	B6.50	B-G-1	03E-03	VT-1	N-VT-1		06.00	08.62	WASH	
RPV	RPV-WASH-3-05		3-ISI-0267-C-01	12	B6.50	B-G-1	03E-03	VT-1	N-VT-1		06.00	08.62	WASH	
RPV	RPV-WASH-3-06		3-ISI-0267-C-01	12	B6.50	B-G-1	03E-03	VT-1	N-VT-1		06.00	08.62	WASH	
RPV	RPV-WASH-3-07		3-ISI-0267-C-01	12	B6.50	B-G-1	03E-03	VT-1	N-VT-1		06.00	08.62	WASH	
RPV	RPV-WASH-3-08		3-ISI-0267-C-01	12	B6.50	B-G-1	03E-03	VT-1	N-VT-1		06.00	08.62	WASH	
RPV	RPV-WASH-3-09		3-ISI-0267-C-01	12	B6.50	B-G-1	03E-03	VT-1	N-VT-1		06.00	08.62	WASH	
RPV	RPV-WASH-3-10		3-ISI-0267-C-01	12	B6.50	B-G-1	03E-03	VT-1	N-VT-1		06.00	08.62	WASH	
RPV	RPV-WASH-3-11		3-ISI-0267-C-01	12	B6.50	B-G-1	03E-03	VT-1	N-VT-1		06.00	08.62	WASH	
RPV	RPV-WASH-3-12		3-ISI-0267-C-01	12	B6.50	B-G-1	03E-03	VT-1	N-VT-1		06.00	08.62	WASH	
RPV	RPV-WASH-3-13		3-ISI-0267-C-01	12	B6.50	B-G-1	03E-03	VT-1	N-VT-1		06.00	08.62	WASH	
RPV	RPV-WASH-3-14		3-ISI-0267-C-01	12	B6.50	B-G-1	03E-03	VT-1	N-VT-1		06.00	08.62	WASH	
RPV	RPV-WASH-3-15		3-ISI-0267-C-01	12	B6.50	B-G-1	03E-03	VT-1	N-VT-1		06.00	08.62	WASH	
RPV	RPV-WASH-3-16		3-ISI-0267-C-01	12	B6.50	B-G-1	03E-03	VT-1	N-VT-1		06.00	08.62	WASH	
RPV	RPV-WASH-3-17		3-ISI-0267-C-01	12	B6.50	B-G-1	03E-03	VT-1	N-VT-1		06.00	08.62	WASH	
RPV	RPV-WASH-3-18		3-ISI-0267-C-01	12	B6.50	B-G-1	03E-03	VT-1	N-VT-1		06.00	08.62	WASH	
RPV	RPV-WASH-3-19		3-ISI-0267-C-01	12	B6.50	B-G-1	03E-03	VT-1	N-VT-1		06.00	08.62	WASH	
RPV	RPV-WASH-3-20		3-ISI-0267-C-01	12	B6.50	B-G-1	03E-03	VT-1	N-VT-1		06.00	08.62	WASH	
RPV	RPV-WASH-3-21		3-ISI-0267-C-01	12	B6.50	B-G-1	03E-03	VT-1	N-VT-1		06.00	08.62	WASH	
RPV	RPV-WASH-3-22		3-ISI-0267-C-01	12	B6.50	B-G-1	03E-03	VT-1	N-VT-1		06.00	08.62	WASH	
RPV	RPV-WASH-3-23		3-ISI-0267-C-01	12	B6.50	B-G-1	03E-03	VT-1	N-VT-1		06.00	08.62	WASH	
RPV	RPV-WASH-3-24		3-ISI-0267-C-01	12	B6.50	B-G-1	03E-03	VT-1	N-VT-1		06.00	08.62	WASH	
RPV	RPV-WASH-3-25		3-ISI-0267-C-01	12	B6.50	B-G-1	03E-03	VT-1	N-VT-1		06.00	08.62	WASH	

SYSTEM	WELDNO	SEGMENT	ISONO	CYCLE	ITEMNO	CATEGORY	EXREQ	EXSCHD	NDEPROC	CALSTD	COMPDIA	NOMTHCK	COMPDESA	COMPDESB
RPV	RPV-WASH-3-26		3-ISI-0267-C-01	12	B6.50	B-G-1	03E-03	VT-1	N-VT-1		06.00	08.62	WASH	
RPV	RPV-WASH-3-27		3-ISI-0267-C-01	12	B6.50	B-G-1	03E-03	VT-1	N-VT-1		06.00	08.62	WASH	
RPV	RPV-WASH-3-28		3-ISI-0267-C-01	12	B6.50	B-G-1	03E-03	VT-1	N-VT-1		06.00	08.62	WASH	
RPV	RPV-WASH-3-29		3-ISI-0267-C-01	12	B6.50	B-G-1	03E-03	VT-1	N-VT-1		06.00	08.62	WASH	
RPV	RPV-WASH-3-30		3-ISI-0267-C-01	12	B6.50	B-G-1	03E-03	VT-1	N-VT-1		06.00	08.62	WASH	

BFN SCAN PLAN REVISION LOG

UNIT/ CYCLE	SCAN PLAN REV.	SYSTEM	COMPONENT IDENTIFIER	ASME XI	REVISION	REASON FOR REVISION	APPROVED BY ISI/NDE SIGN AND DATE	APPROVED BY NDE LEVEL III SIGN AND DATE	ISI DATA BASE REVISED BY ISO SIGN AND DATE	ISI DATA BASE REVISION VERIFIED BY ISI/NDE SIGN AND DATE
3/12	01	FW 003	N4D-NV N4D-IR N4D-IR/NB	X	Add UT exams to Scan Plan FOR N4D-NV, N4D-IR, and N4D-IR/NB	Added in accordance with corrective action FOR PER# 96089.	2/1/06	1/31/06	1/31/06	1/31/06
3/12	01	MS 001	MS-3-H-12 MS-3-H-13 MS-3-H-13-IA MS-3-H-17	X	Add Visual VT-3 and MT exams: MS-3-H-12 MS-3-H-13 MS-3-H-13-IA MS-3-H-17	Originally Scheduled FOR Precutage but were moved to outage U3C12.	3/15/06	2/3/06	2/03/06	2/3/06
3/12	01	FW 003	N4D-IR N4D-IR/NB	X	Remove From U3C12 Outage, NOT REQUIRED. N4D-IR N4D-IR/NB	Completed in 3rd Period, 2nd Interval Not required in 1ST Period, 3 Interval	3/15/06	2/22/06	2/22/06	2/22/06
3/12	01	FW 003	N4D-NV	X	Change Code Year OF N4D-NV FROM 03E-03 TO 89E-03	Credit to go to U3, 3rd period, 2nd Interval to 1989 Asme XI Code	3/15/06	2/23/06	2/23/06	2/23/06
3/12	01	RPV	CRD#-3-0219, 0223, 0639, 0647, 1035, 1051, 1427, 1823, 1839, 2611, 2647, 3011, 3051, 3055, 3403, 3451, 4239, 4607, 4615, 4647, 5027, 5033, 5827 and 5835-BC	X	Change "NDEPROC" from "Vendor VT" to "N-VT-1"	VT-1 exams performed by TVA/ISI personnel	3/15/06	3/10/06	3/10/06	3/10/06

BFN SCAN PLAN REVISION LOG

UNIT/ CYCLE	SCAN PLAN REV.	SYSTEM	COMPONENT IDENTIFIER	ASME XI	REVISION	REASON FOR REVISION	APPROVED BY ISI/NDE SIGN AND DATE	APPROVED BY NDE LEVEL III SIGN AND DATE	ISI DATA BASE REVISED BY ISO SIGN AND DATE	ISI DATA BASE REVISION VERIFIED BY ISI/NDE SIGN AND DATE
3/12	01	MS	3MSZ-MS2B-14P U3C12-005	X	REMOVE COMPONENT	GRID DOES NOT EXIST ON PIPING SYSTEM.	3/15/06	3/14/06	3/15/06	3/14/06
3/12	01	MS	MS-3-002-021 ~~U3C12-005~~ 3/15/06	X	ADD COMPONENT PSI EXAM CAT: B-J ITEM: B9.11	PSI EXAM	3/15/06	3/14/06	3/15/06	3/14/06
3/12	01	MS	FCV-1-014	X	Add valve FCV-1-014 ISI EXAM B-M-2, IT#B12.50	ISI-EXAM	3/15/06	3/15/06	3/15/06	3/15/06
3/12	01	MS	FCV-1-014-BC	X	Add FCV-1-014-BC ISI EXAM B-G-2-B7.70	ISI EXAM	3/15/06	3/15/06	3/15/06	3/15/06
3/12	01	MS	PCV-1-3-034-BC	X	Add PCV-1-3-034-BC ISI EXAM B-G-2, B7.50	ISI EXAM	3/15/06	3/15/06	3/15/06	3/15/06

BFN SCAN PLAN REVISION LOG

UNIT/ CYCLE	SCAN PLAN REV.	SYSTEM	COMPONENT IDENTIFIER	ASME XI	REVISION	REASON FOR REVISION	APPROVED BY ISI/NDE SIGN AND DATE	APPROVED BY NDE LEVEL III SIGN AND DATE	ISI DATA BASE REVISED BY ISO SIGN AND DATE	ISI DATA BASE REVISION VERIFIED BY ISI/NDE SIGN AND DATE
3/12	01	RPV	B-N-2 IT# B13.30 B13.40	X	Add Components B-N-2 B13.30 B-N-2 B13.40	Components Covered and inspected under OTI-365	3/27/2006	3/27/06	3/27/06	3/27/06
3/12	01	MS	Weld MS-3-002-021	X	Delete PT exam of Weld MS-3-002-021 From U3C12 Scan Plan.	Preservice Exam not required.	4/11/06	4/11/06	4/11/06	4/11/06
3/12	01	FW	N4E-NV	X	Add UT exam to scan plan FOR N4E-NV	Added in accordance with corrective action FOR PER# 99123	4/12/06	4/12/06	4/12/06	4/12/06
3/12	01	MS	Valve PCV1-3-034-VBC	N	Add Component PCV1-3-034-VBC B-G-2-B7.70, PSI P03-03	Preservice Exam W.O. 03-004255-001	5/2/2006	5/2/06	5/2/06	5/2/06
3/12	01	MS	Valve PCV1-3-042-VBC	N	Add Component PCV1-3-~~034~~ 042-VBC 5/2/06 B-G-2; B7.70 PSI P03-03	Preservice Exam WO. 03-004268-001	5/2/2006	5/2/06	5/2/06	5/2/06

BFN SCAN PLAN REVISION LOG

UNIT/ CYCLE	SCAN PLAN REV.	SYSTEM	COMPONENT IDENTIFIER	ASME XI	REVISION	REASON FOR REVISION	APPROVED BY ISI/NDE SIGN AND DATE	APPROVED BY NDE LEVEL III SIGN AND DATE	ISI DATA BASE REVISED BY ISO SIGN AND DATE	ISI DATA BASE REVISION VERIFIED BY ISI/NDE SIGN AND DATE
3/12	01	Recirc	3-478465-573	X	Add support 3-478465-573 F-A, F1.40D -P03-03 PSI	PSI exam performed 01/20/06 per W.O. 06-710779-000	[illegible] 5/12/06	[illegible] 5/12/06	[illegible] 5/12/06	[illegible] 5/12/06

H:SCAN PLAN REV LOG XLS

May 12, 2006

Sam Flood, ANI/ANII, PEC-1C, BFN

BROWNS FERRY NUCLEAR PLANT (BFN) – UNIT 3 CYCLE 12 REFUELING OUTAGE INSERVICE INSPECTION (ISI) SCAN PLAN REV 001

Attached for your review is the BFN Unit 3 Cycle 12 Refueling Outage ISI Scan Plan, Revision 001, for the examinations to be performed for the current Unit 3 outage by BFN Site Engineering/Components Engineering. These examinations are being performed to satisfy the requirements of ASME Section XI Code, 2001 Edition, through 2003Addenda.

This document was prepared by Harold E. Hodges of BFN Components Engineering and coordinated with Matthew Welch and Fred Froscello of TVAN Inspection Services Organization (ISO).

5/12/2006

Harold E. Hodges
ISI Engineer
BFN Components Engineering

Matthew C. Welch
BFN ISO, NDE Level III

Frederick W. Froscello Jr.
BFN ISO, NDE Specialist - ISI

BFN Mechanical Nuclear Design Engineering (NUREG-0619, TSR3.4.3.2, BWRVIP-27, BWRVIP-49, BWRVIP-75, SPP-9.7, APPENDIX. "B")

5/12/06.

Sam Flood ANI/ANII
Concurrence

cc: R. K. Golub, SAB-1B, BFN
M. L. Turnbow, STC-1I, SQN

Revision 001
05/12/2006
Total Examinations: 242

TENNESSEE VALLEY AUTHORITY
BROWNS FERRY NUCLEAR POWER PLANT - UNIT 3
EXAMS SCHEDULED FOR CYCLE 12

SYSTEM	WELDNO	SEGMENT	ISONO	CYCLE	ITEMNO	CATEGORY	EXREQ	EXSCHD	NDEPROC	CALSTD	COMPDIA	NOMTHCK	COMPDESA	COMPDESB
CSS	3-SI-3.3.6		N/A	12	C7.40	C-H	89E-02	VT-2	N-VT-4				SYSLEAK	
CSS	3-SI-3.3.6		N/A	12	C7.60	C-H	89E-02	VT-2	N-VT-4				SYSLEAK	
CSS	3-SI-3.3.6		N/A	12	C7.80	C-H	89E-02	VT-2	N-VT-4				SYSLEAK	
EECWS	3-SI-3.3.14.A		N/A	12	D2.10	D-B	89E-02	VT-2	N-VT-4				SYSLEAK	
EECWS	3-SI-3.3.14.B		N/A	12	D2.10	D-B	89E-02	VT-2	N-VT-4				SYSLEAK	
FWS	3-47B415-34		3-ISI-0336-C-01	12	F1.10B	F-A	03E-03	VT-3	N-VT-1		24.00		RGD HGR	
FWS	3-47B415-34		3-ISI-0336-C-01	12	F1.10B	F-A	P03-03	VT-3	N-VT-1		24.00		RGD HGR	
FWS	3-47B415-37		3-ISI-0336-C-01	12	F1.10C	F-A	03E-03	VT-3	N-VT-1		20.00		VAR SUP	
FWS	3-47B415-38		3-ISI-0336-C-01	12	F1.10C	F-A	03E-03	VT-3	N-VT-1		12.00		CFS	
FWS	3-47B415-39		3-ISI-0336-C-01	12	F1.10C	F-A	03E-03	VT-3	N-VT-1		12.00		VAR SUP	
FWS	3-47B415-49		3-ISI-0336-C-01	12	F1.10B	F-A	P03-03	VT-3	N-VT-1		24.00		RGD HGR	
FWS	3RFWA-17R	3-003-036	3-ISI-0327-C-01	12	R1.18	R-A	03E-03	UT	N-UT-26	CSW			GRID	
FWS	3RFWA-28P	3-003-037	3-ISI-0327-C-01	12	R1.18	R-A	03E-03	UT	N-UT-26	CSW			GRID	
FWS	3RFWA-30P	3-003-038	3-ISI-0327-C-01	12	R1.18	R-A	03E-03	UT	N-UT-26	CSW			GRID	
FWS	3RFWA-39E	3-003-039	3-ISI-0327-C-01	12	R1.18	R-A	03E-03	UT	N-UT-26	CSW			GRID	
FWS	3RFWB-13T	3-003-040	3-ISI-0327-C-01	12	R1.18	R-A	03E-03	UT	N-UT-26	CSW	24.00	1.531	GRID	
FWS	3RFWB-16T	3-003-040	3-ISI-0327-C-01	12	R1.18	R-A	03E-03	UT	N-UT-26	CSW	20.00	1.281	GRID	
FWS	3RFWB-20E	3-003-040	3-ISI-0327-C-01	12	R1.18	R-A	03E-03	UT	N-UT-26	CSW	12.75	0.844	GRID	
FWS	3RFWB-39E	3-003-043	3-ISI-0327-C-01	12	R1.18	R-A	03E-03	UT	N-UT-26	CSW			GRID	
HPCIS	3-SI-3.3.9		N/A	12	C7.40	C-H	89E-02	VT-2	N-VT-4				SYSLEAK	
HPCIS	3-SI-3.3.9		N/A	12	C7.60	C-H	89E-02	VT-2	N-VT-4				SYSLEAK	
HPCIS	3-SI-3.3.9		N/A	12	C7.80	C-H	89E-02	VT-2	N-VT-4				SYSLEAK	
MSS	3-47B400-095		3-ISI-0338-C-02	12	F1.10B	F-A	P03-03	VT-3	N-VT-1		26.00		RGD HGR	
MSS	3-47B400-114-IA		3-ISI-0338-C-02	12	B10.20	B-K	03E-03	MT	N-MT-6			1.625	WLD ATT	
MSS	3-47B400-115		3-ISI-0338-C-02	12	F1.10D	F-A	03E-03	VT-3	N-VT-1		26.00		SNBR	
MSS	3-47B400-115-IA		3-ISI-0338-C-02	12	B10.20	B-K	03E-03	MT	N-MT-6			0.750	WLD ATT	
MSS	3-47B400-116		3-ISI-0338-C-02	12	F1.10D	F-A	03E-03	VT-3	N-VT-1		26.00		SNBR	
MSS	3-47B400-116-IA		3-ISI-0338-C-02	12	B10.20	B-K	03E-03	MT	N-MT-6			0.625	WLD ATT	
MSS	3-47B400-204		3-ISI-0338-C-02	12	F1.10B	F-A	P03-03	VT-3	N-VT-1		26.00		RGD HGR	
MSS	3-47B400-204		3-ISI-0338-C-02	12	F1.10B	F-A	S01-02	VT-3	N-VT-1		26.00		RGD HGR	
MSS	3-47B400-68		3-ISI-0338-C-01	12	F1.10B	F-A	P03-03	VT-3	N-VT-1		26.00		RGD HGR	
MSS	3-47B400-82		3-ISI-0338-C-01	12	F1.10B	F-A	P03-03	VT-3	N-VT-1		26.00		RGD HGR	
MSS	3-47B400-83-IA		3-ISI-0338-C-01	12	B10.20	B-K	03E-03	MT	N-MT-6			1.500	WLD ATT	
MSS	3MSZ-MS1A-19E	3-001-036	3-ISI-0329-C-01	12	R1.18	R-A	03E-03	UT	N-UT-26	CSW			GRID	
MSS	3MSZ-MS2B-13E	3-001-037	3-ISI-0329-C-02	12	R1.18	R-A	03E-03	UT	N-UT-26	CSW			GRID	

SORT ORDER: SYSTEM-WELDNO

SYSTEM	WELDNO	SEGMENT	ISONO	CYCLE	ITEMNO	CATEGORY	EXREQ	EXSCHD	NDEPROC	CALSTD	COMPDIA	NOMTHCK	COMPDESA	COMPDESB
MSS	3-SI-3.3.1.C		N/A	12	C7.40	C-H	89E-02	VT-2	N-VT-4				SYSLEAK	
MSS	3-SI-3.3.1.C		N/A	12	C7.80	C-H	89E-02	VT-2	N-VT-4				SYSLEAK	
MSS	DSAS-3-03	3-001-002	ISI-0354-C-02	12	R1.11	R-A	03E-03	UT	N-UT-76	ALTCS/WB 78	06.00	0.432	EL	P
MSS	FCV-1-014		3-ISI-0329-C-01	12	B12.50	B-M-2	03E-03	VT-3	N-VT-1		26.00		INT	
MSS	FCV-1-014-BC		3-ISI-0329-C-01	12	B7.70	B-G-2	03E-03	VT-1	N-VT-1				BLTG	
MSS	HPAS-3-H-03		3-ISI-0355-C-02	12	F1.20C	F-A	03E-03	VT-3	N-VT-1		06.00		VAR SUP	
MSS	HPAS-3-H-10		3-ISI-0355-C-02	12	F1.20C	F-A	03E-03	VT-3	N-VT-1		06.00		VAR SUP	
MSS	MS-3-H-12		3-ISI-0355-C-01	12	F1.20C	F-A	03E-03	VT-3	N-VT-1		24.00		VAR SUP	
MSS	MS-3-H-13		3-ISI-0355-C-01	12	F1.20C	F-A	03E-03	VT-3	N-VT-1		24.00		VAR SUP	
MSS	MS-3-H-13-IA		3-ISI-0355-C-01	12	C3.20	C-C	03E-03	MT	N-MT-6			1.500	WLD ATT	
MSS	MS-3-H-17		3-ISI-0355-C-01	12	F1.20C	F-A	03E-03	VT-3	N-VT-1		30.00		VAR SUP	
MSS	PCV1-3-034-PBC		3-ISI-0313-B-01	12	B7.50	B-G-2	03E-03	VT-1	N-VT-1				BLTG	
MSS	PCV1-3-034-VBC		3-ISI-0313-B-01	12	B7.70	B-G-2	P03-03	VT-1	N-VT-1				BLTG	
MSS	PCV1-3-042-VBC		3-ISI-0313-B-01	12	B7.70	B-G-2	P03-03	VT-1	N-VT-1				BLTG	
RCICS	3-SI-3.3.10		N/A	12	C7.40	C-H	89E-02	VT-2	N-VT-4				SYSLEAK	
RCICS	3-SI-3.3.10		N/A	12	C7.60	C-H	89E-02	VT-2	N-VT-4				SYSLEAK	
RCICS	3-SI-3.3.10		N/A	12	C7.80	C-H	89E-02	VT-2	N-VT-4				SYSLEAK	
RECIR	3-47B465-497		3-ISI-0337-C-02	12	F1.40D	F-A	03E-03	VT-3	N-VT-1				SNBR	
RECIR	3-47B465-498		3-ISI-0337-C-02	12	F1.40D	F-A	03E-03	VT-3	N-VT-1				SNBR	
RECIR	3-47B465-499		3-ISI-0337-C-02	12	F1.40D	F-A	03E-03	VT-3	N-VT-1				SNBR	
RECIR	3-47B465-500		3-ISI-0337-C-02	12	F1.40C	F-A	03E-03	VT-3	N-VT-1				CFS	
RECIR	3-47B465-501		3-ISI-0337-C-02	12	F1.40C	F-A	03E-03	VT-3	N-VT-1				CFS	
RECIR	3-47B465-502		3-ISI-0337-C-02	12	F1.40C	F-A	03E-03	VT-3	N-VT-1				CFS	
RECIR	3-47B465-503		3-ISI-0337-C-02	12	F1.40D	F-A	03E-03	VT-3	N-VT-1				SNBR	
RECIR	3-47B465-513		3-ISI-0337-C-01	12	F1.40D	F-A	P03-03	VT-3	N-VT-1				SNBR	
RECIR	GR-3-03(OL)		3-ISI-0328-C-01	12	R1.16E	R-A	03E-03	UT	N-UT-66	BF-83	28.00	1.322	VLV	EL
RECIR	GR-3-03(OL)		3-ISI-0328-C-01	12	NU0313	E	B02-02	UT	N-UT-66	BF-83	28.00	1.322	VLV	EL
RECIR	GR-3-27(OL)		3-ISI-0328-C-02	12	R1.16E	R-A	03E-03	UT	N-UT-66	BF-83	28.00	1.322	PUMP	P
RECIR	GR-3-27(OL)		3-ISI-0328-C-02	12	NU0313	E	B02-02	UT	N-UT-66	BF-83	28.00	1.322	PUMP	P
RECIR	GR-3-63		3-ISI-0328-C-02	12	R1.16E	R-A	03E-03	UT	N-UT-64	ALTSS WB85	28.00	1.138	VLV	P
RECIR	GR-3-63		3-ISI-0328-C-02	12	NU0313	E	B02-02	UT	N-UT-65	SIZING/WB 85	28.00	1.138	VLV	P
RECIR	KR-3-02		3-ISI-0328-C-01	12	R1.16C	R-A	03E-03	UT	N-UT-64	ALTSS WB85	28.00	1.322	EL	P
RECIR	KR-3-02		3-ISI-0328-C-01	12	NU0313	C	B02-02	UT	N-UT-64	ALTSS WB85	28.00	1.322	EL	P
RECIR	KR-3-24		3-ISI-0328-C-02	12	R1.16C	R-A	03E-03	UT	N-UT-64	ALTSS WB85	28.00	1.322	EL	P
RECIR	KR-3-24		3-ISI-0328-C-02	12	NU0313	C	B02-02	UT	N-UT-64	ALTSS	28.00	1.322	EL	P

SYSTEM	WELDNO	SEGMENT	ISONO	CYCLE	ITEMNO	CATEGORY	EXREQ	EXSCHD	NDEPROC	CALSTD	COMPDIA	NOMTHICK	COMPDESA	COMPDESB
RHRS	3-SI-3.3.8.A		N/A	12	C7.20	C-H	89E-02	VT-2	N-VT-4				SYSLEAK	
RHRS	3-SI-3.3.8.A		N/A	12	C7.40	C-H	89E-02	VT-2	N-VT-4				SYSLEAK	
RHRS	3-SI-3.3.8.A		N/A	12	C7.60	C-H	89E-02	VT-2	N-VT-4				SYSLEAK	
RHRS	3-SI-3.3.8.A		N/A	12	C7.80	C-H	89E-02	VT-2	N-VT-4				SYSLEAK	
RHRS	3-SI-3.3.8.C		N/A	12	C2.33	C-B	89E-02	VT-2	N-VT-4				SYSLEAK	
RHRS	3-SI-3.3.8.C		N/A	12	C7.20	C-H	89E-02	VT-2	N-VT-4				SYSLEAK	
RHRS	3-SI-3.3.8.C		N/A	12	C7.40	C-H	89E-02	VT-2	N-VT-4				SYSLEAK	
RHRS	3-SI-3.3.8.C		N/A	12	C7.60	C-H	89E-02	VT-2	N-VT-4				SYSLEAK	
RHRS	3-SI-3.3.8.C		N/A	12	C7.80	C-H	89E-02	VT-2	N-VT-4				SYSLEAK	
RHRS	DRHR-3-03B	3-074-005	3-ISI-0330-C-01	12	R1.16G	R-A	03E-03	VT-2	N-VT-4		24.00	1.219	P	P
RHRS	DRHR-3-03B	3-074-005	3-ISI-0330-C-01	12	NU0313	G	B02-02	VT-2	N-VT-4		24.00	1.219	P	P
RHRS	DRHR-3-13B	3-074-013	3-ISI-0330-C-01	12	R1.16G	R-A	03E-03	VT-2	N-VT-4		24.00	1.219	P	P
RHRS	DRHR-3-13B	3-074-013	3-ISI-0330-C-01	12	NU0313	G	B02-02	VT-2	N-VT-4		24.00	1.219	P	P
RHRS	DSRHR-3-01	3-074-005	3-ISI-0330-C-01	12	R1.16C	R-A	03E-03	UT	N-UT-64	ALTSS/WB 85	24.00	1.219	EL	P
RHRS	DSRHR-3-01	3-074-005	3-ISI-0330-C-01	12	NU0313	C	B02-02	UT	N-UT-64	ALTSS/WB 85	24.00	1.219	EL	P
RHRS	DSRHR-3-08	3-074-007	3-ISI-0330-C-01	12	R1.16C	R-A	03E-03	UT	N-UT-64	ALTSS/WB 85	20.00	1.031	BRCN	P
RHRS	DSRHR-3-08	3-074-007	3-ISI-0330-C-01	12	NU0313	C	B02-02	UT	N-UT-64	ALTSS/WB 85	20.00	1.031	BRCN	P
RHRS	RHRG-3-05-B		3-ISI-0422-C-01	12	C2.33	C-B	89E-02	VT-2	N-VT-4				NOZ	SHL
RHRS	RHRG-3-06-B		3-ISI-0422-C-01	12	C2.33	C-B	89E-02	VT-2	N-VT-4			0.813	NOZ	SHL
RHRSW	3-SI-3.3.13		N/A	12	D2.10	D-B	89E-02	VT-2	N-VT-4				SYSLEAK	
RPV	3-SI-3.3.1.A		N/A	12	B15.10	B-P	03E-03	VT-2	N-VT-4				SYSLEAK	
RPV	3-SI-3.3.1.A		N/A	12	C7.10	C-H	03E-03	VT-2	N-VT-4				SYSLEAK	
RPV	CRDN-3-0219-BC		ISI-0293-C-01	12	B7.80	B-G-2	95E-03	VT-1	N-VT-1				BLTG	
RPV	CRDN-3-0223-BC		ISI-0293-C-01	12	B7.80	B-G-2	95E-03	VT-1	N-VT-1				BLTG	
RPV	CRDN-3-0639-BC		ISI-0293-C-01	12	B7.80	B-G-2	95E-03	VT-1	N-VT-1				BLTG	
RPV	CRDN-3-0647-BC		ISI-0293-C-01	12	B7.80	B-G-2	95E-03	VT-1	N-VT-1				BLTG	
RPV	CRDN-3-1035-BC		ISI-0293-C-01	12	B7.80	B-G-2	95E-03	VT-1	N-VT-1				BLTG	
RPV	CRDN-3-1051-BC		ISI-0293-C-01	12	B7.80	B-G-2	95E-03	VT-1	N-VT-1				BLTG	
RPV	CRDN-3-1427-BC		ISI-0293-C-01	12	B7.80	B-G-2	95E-03	VT-1	N-VT-1				BLTG	
RPV	CRDN-3-1823-BC		ISI-0293-C-01	12	B7.80	B-G-2	95E-03	VT-1	N-VT-1				BLTG	
RPV	CRDN-3-1839-BC		ISI-0293-C-01	12	B7.80	B-G-2	95E-03	VT-1	N-VT-1				BLTG	
RPV	CRDN-3-2611-BC		ISI-0293-C-01	12	B7.80	B-G-2	95E-03	VT-1	N-VT-1				BLTG	
RPV	CRDN-3-2647-BC		ISI-0293-C-01	12	B7.80	B-G-2	95E-03	VT-1	N-VT-1				BLTG	
RPV	CRDN-3-3011-BC		ISI-0293-C-01	12	B7.80	B-G-2	95E-03	VT-1	N-VT-1				BLTG	
RPV	CRDN-3-3051-BC		ISI-0293-C-01	12	B7.80	B-G-2	95E-03	PT	N-PT-1				BLTG	
RPV	CRDN-3-3051-BC		ISI-0293-C-01	12	B7.80	B-G-2	95E-03	VT-1	N-VT-1				BLTG	
RPV	CRDN-3-3055-BC		ISI-0293-C-01	12	B7.80	B-G-2	95E-03	VT-1	N-VT-1				BLTG	

SYSTEM	WELDNO	SEGMENT	ISONO	CYCLE	ITEMNO	CATEGORY	EXREQ	EXSCHD	NDEPROC	CALSTD	COMPDIA	NOMTHICK	COMPDESA	COMPDESB
RPV	CRDN-3-3403-BC		ISI-0293-C-01	12	B7.80	B-G-2	95E-03	VT-1	N-VT-1				BLTG	
RPV	CRDN-3-3451-BC		ISI-0293-C-01	12	B7.80	B-G-2	95E-03	VT-1	N-VT-1				BLTG	
RPV	CRDN-3-4239-BC		ISI-0293-C-01	12	B7.80	B-G-2	95E-03	VT-1	N-VT-1				BLTG	
RPV	CRDN-3-4607-BC		ISI-0293-C-01	12	B7.80	B-G-2	95E-03	VT-1	N-VT-1				BLTG	
RPV	CRDN-3-4615-BC		ISI-0293-C-01	12	B7.80	B-G-2	95E-03	VT-1	N-VT-1				BLTG	
RPV	CRDN-3-4647-BC		ISI-0293-C-01	12	B7.80	B-G-2	95E-03	VT-1	N-VT-1				BLTG	
RPV	CRDN-3-5027-BC		ISI-0293-C-01	12	B7.80	B-G-2	95E-03	VT-1	N-VT-1				BLTG	
RPV	CRDN-3-5035-BC		ISI-0293-C-01	12	B7.80	B-G-2	95E-03	VT-1	N-VT-1				BLTG	
RPV	CRDN-3-5827-BC		ISI-0293-C-01	12	B7.80	B-G-2	95E-03	VT-1	N-VT-1				BLTG	
RPV	CRDN-3-5835-BC		ISI-0293-C-01	12	B7.80	B-G-2	95E-03	VT-1	N-VT-1				BLTG	
RPV	N10-SE		ISI-0445-C-01	12	N/A	BWRVIP-27	B06-02	VT-2	N-VT-4		2.00	0.250	NOZ	SE
RPV	N11A-SE		3-ISI-0346-C-01	12	N/A	BWRVIP-49	B06-02	VT-2	N-VT-4		2.00	0.250	NOZ	SE
RPV	N11B-SE		3-ISI-0346-C-01	12	N/A	BWRVIP-49	B06-02	VT-2	N-VT-4		2.00	0.250	NOZ	SE
RPV	N12A-SE		3-ISI-0346-C-01	12	N/A	BWRVIP-49	B06-02	VT-2	N-VT-4		2.00	0.250	NOZ	SE
RPV	N12B-SE		3-ISI-0346-C-01	12	N/A	BWRVIP-49	B06-02	VT-2	N-VT-4		2.00	0.250	NOZ	SE
RPV	N16A-SE		3-ISI-0346-C-01	12	N/A	BWRVIP-49	B06-02	VT-2	N-VT-4		2.00	0.250	NOZ	SE
RPV	N16B-SE		3-ISI-0346-C-01	12	N/A	BWRVIP-49	B06-02	VT-2	N-VT-4		2.00	0.250	NOZ	SE
RPV	N1A-IR		3-ISI-0328-C-01	12	B3.100	B-D	03E-03	VT-1E	VENDOR VT				NOZ IR	
RPV	N1A-NV		3-ISI-0328-C-01	12	B3.90	B-D	03E-03	UT	N-UT-78	BF-18	28.00	6.600	SHL	NOZ
RPV	N2B-IR		3-ISI-0328-C-02	12	B3.100	B-D	03E-03	VT-1E	VENDOR VT				NOZ IR	
RPV	N2B-NV		3-ISI-0328-C-02	12	B3.90	B-D	03E-03	UT	N-UT-78	BF-18	12.00	6.600	NOZ	SHL
RPV	N2D-IR		3-ISI-0328-C-02	12	B3.100	B-D	03E-03	VT-1E	VENDOR VT				NOZ IR	
RPV	N2D-NV		3-ISI-0328-C-02	12	B3.90	B-D	03E-03	UT	N-UT-78	BF-18	12.00	6.600	NOZ	SHL
RPV	N2F-IR		3-ISI-0328-C-01	12	B3.100	B-D	03E-03	VT-1E	VENDOR VT				NOZ IR	
RPV	N2F-NV		3-ISI-0328-C-01	12	B3.90	B-D	03E-03	UT	N-UT-78	BF-18	12.00	6.600	NOZ	SHL
RPV	N2G-IR		3-ISI-0328-C-01	12	B3.100	B-D	89E-02	VT-1E	VENDOR VT				NOZ IR	
RPV	N2G-NV		3-ISI-0328-C-01	12	B3.90	B-D	89E-02	UT	N-UT-78	BF-18	12.00	6.600	NOZ	SHL
RPV	N2H-IR		3-ISI-0328-C-01	12	B3.100	B-D	89E-02	VT-1E	VENDOR VT				NOZ IR	
RPV	N2H-NV		3-ISI-0328-C-01	12	B3.90	B-D	89E-02	UT	N-UT-78	BF-18	12.00	6.600	NOZ	SHL
RPV	N2J-IR		3-ISI-0328-C-01	12	B3.100	B-D	89E-02	VT-1E	VENDOR VT				NOZ IR	
RPV	N2J-NV		3-ISI-0328-C-01	12	B3.90	B-D	89E-02	UT	N-UT-78	BF-18	12.00	6.600	NOZ	SHL
RPV	N2K-IR		3-ISI-0328-C-01	12	B3.100	B-D	89E-02	VT-1E	VENDOR VT				NOZ IR	
RPV	N2K-NV		3-ISI-0328-C-01	12	B3.90	B-D	89E-02	UT	N-UT-78	BF-18	12.00	6.600	NOZ	SHL
RPV	N3B-IR		3-ISI-0329-C-02	12	B3.100	B-D	03E-03	VT-1E	VENDOR VT				NOZ IR	
RPV	N3B-NV		3-ISI-0329-C-02	12	B3.90	B-D	03E-03	UT	N-UT-78	BF-18	26.00	6.600	SHL	NOZ
RPV	N3C-IR		3-ISI-0329-C-02	12	B3.100	B-D	89E-02	VT-1E	VENDOR VT				NOZ IR	
RPV	N3C-NV		3-ISI-0329-C-02	12	B3.90	B-D	89E-02	UT	N-UT-78	BF-18	26.00	6.600	SHL	NOZ
RPV	N3D-IR		3-ISI-0329-C-01	12	B3.100	B-D	89E-02	VT-1E	VENDOR VT				NOZ IR	
RPV	N3D-NV		3-ISI-0329-C-01	12	B3.90	B-D	89E-02	UT	N-UT-78	BF-18	26.00	6.600	SHL	NOZ
RPV	N4A-FW-SPARG		3-ISI-0220-C-02	12	N/A	NU0619	B01-02	VT-1	VENDOR VT					

SYSTEM	WELDNO	SEGMENT	ISONO	CYCLE	ITEMNO	CATEGORY	EXREQ	EXSCHD	NDEPROC	CALSTD	COMPDIA	NOMTHCK	COMPDESA	COMPDESB
RPV	N4B-FW-SPARG		3-ISI-0220-C-02	12	N/A	NU0619	B01-02	VT-1	VENDOR VT					
RPV	N4B-IR		3-ISI-0327-C-01	12	B3.100	B-D	03E-03	UT	VENDOR UT	BF-18			NOZ IR	
RPV	N4B-IR/NB		3-ISI-0327-C-01	12	NU0619	B-D	B01-02	UT	VENDOR UT	BF-18			SNOZFWB	SSE
RPV	N4B-NV		3-ISI-0327-C-01	12	B3.90	B-D	03E-03	UT	N-UT-78	BF-18	12.00	6.600	NOZ	SHL
RPV	N4C-FW-SPARG		3-ISI-0220-C-02	12	N/A	NU0619	B01-02	VT-1	VENDOR VT					
RPV	N4C-IR		3-ISI-0327-C-01	12	B3.100	B-D	03E-03	UT	VENDOR UT	BF-18			NOZ IR	
RPV	N4C-IR/NB		3-ISI-0327-C-01	12	NU0619	B-D	B01-02	UT	VENDOR UT	BF-18			SNOZFWB	SSE
RPV	N4C-NV		3-ISI-0327-C-01	12	B3.90	B-D	03E-03	UT	N-UT-78	BF-18	12.00	6.600	NOZ	SHL
RPV	N4D-FW-SPARG		3-ISI-0220-C-02	12	N/A	NU0619	B01-02	VT-1	VENDOR VT					
RPV	N4D-NV		3-ISI-0327-C-01	12	B3.90	B-D	V01-02	UT	N-UT-78	BF-18	12.00	6.600	NOZ	SHL
RPV	N4E-FW-SPARG		3-ISI-0220-C-02	12	N/A	NU0619	B01-02	VT-1	VENDOR VT					
RPV	N4E-NV		3-ISI-0327-C-01	12	B3.90	B-D	V01-02	UT	N-UT-78	BF-18	12.00	6.600	NOZ	SHL
RPV	N4F-FW-SPARG		3-ISI-0220-C-02	12	N/A	NU0619	B01-02	VT-1	VENDOR VT					
RPV	N5A-IR		3-ISI-0331-C-01	12	B3.100	B-D	03E-03	VT-1E	VENDOR VT				NOZ IR	
RPV	N5A-NV		3-ISI-0331-C-01	12	B3.90	B-D	03E-03	UT	N-UT-78	BF-18	10.00	6.600	NOZ	SHL
RPV	N8A-IR		3-ISI-0411-C-01	12	B3.100	B-D	03E-03	VT-1E	VENDOR VT				NOZ IR	
RPV	N8A-NV		3-ISI-0411-C-01	12	B3.90	B-D	03E-03	UT	N-UT-78	BF-18	04.00	6.600	SHL	NOZ
RPV	N8B-IR		3-ISI-0411-C-01	12	B3.100	B-D	89E-02	VT-1E	VENDOR VT				NOZ IR	
RPV	N8B-NV		3-ISI-0411-C-01	12	B3.90	B-D	89E-02	UT	N-UT-78	BF-18	04.00	6.600	SHL	NOZ
RPV	RPV CORE PLATE		ISI-0220-C-02	12	N/A	N/A	0TI365	EVT	VENDOR VT				INT	
RPV	RPV CORE PLATE		ISI-0220-C-02	12	N/A	N/A	0TI365	VT-3	VENDOR VT				INT	
RPV	RPV CORE SUPPORT		ISI-0220-C-02	12	B13.40	B-N-2	03E-03	VT-3	VENDOR VT				INT	
RPV	RPV CRD GUIDE TUBES		ISI-0220-C-02	12	N/A	N/A	0TI365	EVT	VENDOR VT				INT	
RPV	RPV CRD GUIDE TUBES		ISI-0220-C-02	12	N/A	N/A	0TI365	VT-3	VENDOR VT				INT	
RPV	RPV CS PIPING WELDS		ISI-0220-C-02	12	N/A	N/A	0TI365	UT	VENDOR UT				INT	
RPV	RPV CS PIPING WELDS		ISI-0220-C-02	12	N/A	N/A	0TI365	EVT	VENDOR VT				INT	
RPV	RPV CS PIPING WELDS		ISI-0220-C-02	12	N/A	N/A	0TI365	VT-3	VENDOR VT				INT	
RPV	RPV INT ATT NBLR		ISI-0220-C-02	12	B13.30	B-N-2	03E-03	VT-3	VENDOR VT				INT	
RPV	RPV INTERIOR		ISI-0220-C-02	12	B13.10	B-N-1	03E-03	VT-3	VENDOR VT				INT	
RPV	RPV JET PMP BEAMS		ISI-0220-C-02	12	N/A	N/A	0TI365	UT	VENDOR UT				INT	
RPV	RPV JET PMPS		ISI-0220-C-02	12	N/A	N/A	0TI365	EVT	VENDOR VT	N/A			INT	
RPV	RPV JET PMPS		ISI-0220-C-02	12	N/A	N/A	0TI365	VT-1	VENDOR VT	N/A			INT	
RPV	RPV JET PMPS		ISI-0220-C-02	12	N/A	N/A	0TI365	VT-3	VENDOR VT				INT	
RPV	RPV SHROUD WELDS		ISI-0220-C-02	12	N/A	N/A	0TI365	UT	VENDOR UT				INT	
RPV	RPV STEAM DRYER		ISI-0220-C-02	12	N/A	N/A	0TI365	VT-1	VENDOR VT	N/A			INT	
RPV	RPV-NUTS-3-01		3-ISI-0267-C-01	12	B6.10	B-G-1	03E-03	VT-1	N-VT-1		08.50		CL HD BLT	
RPV	RPV-NUTS-3-02		3-ISI-0267-C-01	12	B6.10	B-G-1	03E-03	VT-1	N-VT-1		08.50		CL HD BLT	
RPV	RPV-NUTS-3-03		3-ISI-0267-C-01	12	B6.10	B-G-1	03E-03	VT-1	N-VT-1		08.50		CL HD BLT	
RPV	RPV-NUTS-3-04		3-ISI-0267-C-01	12	B6.10	B-G-1	03E-03	VT-1	N-VT-1		08.50		CL HD BLT	
RPV	RPV-NUTS-3-05		3-ISI-0267-C-01	12	B6.10	B-G-1	03E-03	VT-1	N-VT-1		08.50		CL HD BLT	

SYSTEM	WELDNO	SEGMENT	ISONO	CYCLE	ITEMNO	CATEGORY	EXREQ	EXSCHD	NDEPROC	CALSTD	COMPDIA	NOMTHCK	COMPDESA	COMPDESB
RPV	RPV-NUTS-3-06		3-ISI-0267-C-01	12	B6.10	B-G-1	03E-03	VT-1	N-VT-1		08.50		CL HD BLT	
RPV	RPV-NUTS-3-07		3-ISI-0267-C-01	12	B6.10	B-G-1	03E-03	VT-1	N-VT-1		08.50		CL HD BLT	
RPV	RPV-NUTS-3-08		3-ISI-0267-C-01	12	B6.10	B-G-1	03E-03	VT-1	N-VT-1		08.50		CL HD BLT	
RPV	RPV-NUTS-3-09		3-ISI-0267-C-01	12	B6.10	B-G-1	03E-03	VT-1	N-VT-1		08.50		CL HD BLT	
RPV	RPV-NUTS-3-10		3-ISI-0267-C-01	12	B6.10	B-G-1	03E-03	VT-1	N-VT-1		08.50		CL HD BLT	
RPV	RPV-NUTS-3-11		3-ISI-0267-C-01	12	B6.10	B-G-1	03E-03	VT-1	N-VT-1		08.50		CL HD BLT	
RPV	RPV-NUTS-3-12		3-ISI-0267-C-01	12	B6.10	B-G-1	03E-03	VT-1	N-VT-1		08.50		CL HD BLT	
RPV	RPV-NUTS-3-13		3-ISI-0267-C-01	12	B6.10	B-G-1	03E-03	VT-1	N-VT-1		08.50		CL HD BLT	
RPV	RPV-NUTS-3-14		3-ISI-0267-C-01	12	B6.10	B-G-1	03E-03	VT-1	N-VT-1		08.50		CL HD BLT	
RPV	RPV-NUTS-3-15		3-ISI-0267-C-01	12	B6.10	B-G-1	03E-03	VT-1	N-VT-1		08.50		CL HD BLT	
RPV	RPV-NUTS-3-16		3-ISI-0267-C-01	12	B6.10	B-G-1	03E-03	VT-1	N-VT-1		08.50		CL HD BLT	
RPV	RPV-NUTS-3-17		3-ISI-0267-C-01	12	B6.10	B-G-1	03E-03	VT-1	N-VT-1		08.50		CL HD BLT	
RPV	RPV-NUTS-3-18		3-ISI-0267-C-01	12	B6.10	B-G-1	03E-03	VT-1	N-VT-1		08.50		CL HD BLT	
RPV	RPV-NUTS-3-19		3-ISI-0267-C-01	12	B6.10	B-G-1	03E-03	VT-1	N-VT-1		08.50		CL HD BLT	
RPV	RPV-NUTS-3-20		3-ISI-0267-C-01	12	B6.10	B-G-1	03E-03	VT-1	N-VT-1		08.50		CL HD BLT	
RPV	RPV-NUTS-3-21		3-ISI-0267-C-01	12	B6.10	B-G-1	03E-03	VT-1	N-VT-1		08.50		CL HD BLT	
RPV	RPV-NUTS-3-22		3-ISI-0267-C-01	12	B6.10	B-G-1	03E-03	VT-1	N-VT-1		08.50		CL HD BLT	
RPV	RPV-NUTS-3-23		3-ISI-0267-C-01	12	B6.10	B-G-1	03E-03	VT-1	N-VT-1		08.50		CL HD BLT	
RPV	RPV-NUTS-3-24		3-ISI-0267-C-01	12	B6.10	B-G-1	03E-03	VT-1	N-VT-1		08.50		CL HD BLT	
RPV	RPV-NUTS-3-25		3-ISI-0267-C-01	12	B6.10	B-G-1	03E-03	VT-1	N-VT-1		08.50		CL HD BLT	
RPV	RPV-NUTS-3-26		3-ISI-0267-C-01	12	B6.10	B-G-1	03E-03	VT-1	N-VT-1		08.50		CL HD BLT	
RPV	RPV-NUTS-3-27		3-ISI-0267-C-01	12	B6.10	B-G-1	03E-03	VT-1	N-VT-1		08.50		CL HD BLT	
RPV	RPV-NUTS-3-28		3-ISI-0267-C-01	12	B6.10	B-G-1	03E-03	VT-1	N-VT-1		08.50		CL HD BLT	
RPV	RPV-NUTS-3-29		3-ISI-0267-C-01	12	B6.10	B-G-1	03E-03	VT-1	N-VT-1		08.50		CL HD BLT	
RPV	RPV-NUTS-3-30		3-ISI-0267-C-01	12	B6.10	B-G-1	03E-03	VT-1	N-VT-1		08.50		CL HD BLT	
RPV	RPV-WASH-3-01		3-ISI-0267-C-01	12	B6.50	B-G-1	03E-03	VT-1	N-VT-1		06.00	08.62	WASH	
RPV	RPV-WASH-3-02		3-ISI-0267-C-01	12	B6.50	B-G-1	03E-03	VT-1	N-VT-1		06.00	08.62	WASH	
RPV	RPV-WASH-3-03		3-ISI-0267-C-01	12	B6.50	B-G-1	03E-03	VT-1	N-VT-1		06.00	08.62	WASH	
RPV	RPV-WASH-3-04		3-ISI-0267-C-01	12	B6.50	B-G-1	03E-03	VT-1	N-VT-1		06.00	08.62	WASH	
RPV	RPV-WASH-3-05		3-ISI-0267-C-01	12	B6.50	B-G-1	03E-03	VT-1	N-VT-1		06.00	08.62	WASH	
RPV	RPV-WASH-3-06		3-ISI-0267-C-01	12	B6.50	B-G-1	03E-03	VT-1	N-VT-1		06.00	08.62	WASH	
RPV	RPV-WASH-3-07		3-ISI-0267-C-01	12	B6.50	B-G-1	03E-03	VT-1	N-VT-1		06.00	08.62	WASH	
RPV	RPV-WASH-3-08		3-ISI-0267-C-01	12	B6.50	B-G-1	03E-03	VT-1	N-VT-1		06.00	08.62	WASH	
RPV	RPV-WASH-3-09		3-ISI-0267-C-01	12	B6.50	B-G-1	03E-03	VT-1	N-VT-1		06.00	08.62	WASH	
RPV	RPV-WASH-3-10		3-ISI-0267-C-01	12	B6.50	B-G-1	03E-03	VT-1	N-VT-1		06.00	08.62	WASH	
RPV	RPV-WASH-3-11		3-ISI-0267-C-01	12	B6.50	B-G-1	03E-03	VT-1	N-VT-1		06.00	08.62	WASH	
RPV	RPV-WASH-3-12		3-ISI-0267-C-01	12	B6.50	B-G-1	03E-03	VT-1	N-VT-1		06.00	08.62	WASH	
RPV	RPV-WASH-3-13		3-ISI-0267-C-01	12	B6.50	B-G-1	03E-03	VT-1	N-VT-1		06.00	08.62	WASH	
RPV	RPV-WASH-3-14		3-ISI-0267-C-01	12	B6.50	B-G-1	03E-03	VT-1	N-VT-1		06.00	08.62	WASH	
RPV	RPV-WASH-3-15		3-ISI-0267-C-01	12	B6.50	B-G-1	03E-03	VT-1	N-VT-1		06.00	08.62	WASH	

SYSTEM	WELDNO	SEGMENT	ISONO	CYCLE	ITEMNO	CATEGORY	EXREQ	EXSCHD	NDEPROC	CALSTD	COMPDIA	NOMTHCK	COMPDESA	COMPDESB
RPV	RPV-WASH-3-16		3-ISI-0267-C-01	12	B6.50	B-G-1	03E-03	VT-1	N-VT-1		06.00	08.62	WASH	
RPV	RPV-WASH-3-17		3-ISI-0267-C-01	12	B6.50	B-G-1	03E-03	VT-1	N-VT-1		06.00	08.62	WASH	
RPV	RPV-WASH-3-18		3-ISI-0267-C-01	12	B6.50	B-G-1	03E-03	VT-1	N-VT-1		06.00	08.62	WASH	
RPV	RPV-WASH-3-19		3-ISI-0267-C-01	12	B6.50	B-G-1	03E-03	VT-1	N-VT-1		06.00	08.62	WASH	
RPV	RPV-WASH-3-20		3-ISI-0267-C-01	12	B6.50	B-G-1	03E-03	VT-1	N-VT-1		06.00	08.62	WASH	
RPV	RPV-WASH-3-21		3-ISI-0267-C-01	12	B6.50	B-G-1	03E-03	VT-1	N-VT-1		06.00	08.62	WASH	
RPV	RPV-WASH-3-22		3-ISI-0267-C-01	12	B6.50	B-G-1	03E-03	VT-1	N-VT-1		06.00	08.62	WASH	
RPV	RPV-WASH-3-23		3-ISI-0267-C-01	12	B6.50	B-G-1	03E-03	VT-1	N-VT-1		06.00	08.62	WASH	
RPV	RPV-WASH-3-24		3-ISI-0267-C-01	12	B6.50	B-G-1	03E-03	VT-1	N-VT-1		06.00	08.62	WASH	
RPV	RPV-WASH-3-25		3-ISI-0267-C-01	12	B6.50	B-G-1	03E-03	VT-1	N-VT-1		06.00	08.62	WASH	
RPV	RPV-WASH-3-26		3-ISI-0267-C-01	12	B6.50	B-G-1	03E-03	VT-1	N-VT-1		06.00	08.62	WASH	
RPV	RPV-WASH-3-27		3-ISI-0267-C-01	12	B6.50	B-G-1	03E-03	VT-1	N-VT-1		06.00	08.62	WASH	
RPV	RPV-WASH-3-28		3-ISI-0267-C-01	12	B6.50	B-G-1	03E-03	VT-1	N-VT-1		06.00	08.62	WASH	
RPV	RPV-WASH-3-29		3-ISI-0267-C-01	12	B6.50	B-G-1	03E-03	VT-1	N-VT-1		06.00	08.62	WASH	
RPV	RPV-WASH-3-30		3-ISI-0267-C-01	12	B6.50	B-G-1	03E-03	VT-1	N-VT-1		06.00	08.62	WASH	

EXAM RL REMENTS
03E-03
95E-03
89E-02
P03-03
S01-02

OWNER: TENNESSEE VALLEY AUTHORITY
NUCLEAR POWER GROUP
1101 MARKET STREET
CHATTANOOGA, TENNESSEE 37402

PLANT: BROWNS FERRY NUCLEAR PLANT
P.O. BOX 2000
DECATUR, ALABAMA 35609-2000

UNIT: THREE CYCLE: 12 COMMERCIAL SERVICE DATE: MARCH 1, 1977

CERTIFICATION OF AUTHORIZATION: NOT REQUIRED
NATIONAL BOARD NUMBER FOR UNIT: NOT REQUIRED

System	Component Number	ISO Drawing	Exam Requirement	Category	Item Number	Exam Scheduled	Calibration Standard	Exam Date	Exam Report	Exam Results	Comments
FWS	3-47B415-34	3-ISI-0336-C-01 01	P03-03	F-A	F1.10B	VT-3		20060307	R-038	P	IWF-2220 (b)
FWS	3-47B415-34	3-ISI-0336-C-01 01	03E-03	F-A	F1.10B	VT-3		20060307	R-038	P	
FWS	3-47B415-37	3-ISI-0336-C-01 01	03E-03	F-A	F1.10C	VT-3		20060307	R-040	P	
FWS	3-47B415-38	3-ISI-0336-C-01 01	03E-03	F-A	F1.10C	VT-3		20060307	R-042	P	
FWS	3-47B415-39	3-ISI-0336-C-01 01	03E-03	F-A	F1.10C	VT-3		20060307	R-039	P	
FWS	3-47B415-49	3-ISI-0336-C-01 01	P03-03	F-A	F1.10B	VT-3		20060307	R-041	P	IWF- 2220 (b)
FWS	3RFWA-17R	3-ISI-0327-C-01	03E-03	R-A	R1.18	UT	CSW	20060313	R-065	P	
FWS	3RFWA-28P	3-ISI-0327-C-01	03E-03	R-A	R1.18	UT	CSW	20060313	R-069	P	
FWS	3RFWA-30P	3-ISI-0327-C-01	03E-03	R-A	R1.18	UT	CSW	20060313	R-062	P	
FWS	3RFWA-39E	3-ISI-0327-C-01	03E-03	R-A	R1.18	UT	CSW	20060313	R-066	P	
FWS	3RFWB-13T	3-ISI-0327-C-01	03E-03	R-A	R1.18	UT	CSW	20060313	R-064	P	
FWS	3RFWB-16T	3-ISI-0327-C-01	03E-03	R-A	R1.18	UT	CSW	20060313	R-060	P	
FWS	3RFWB-20E	3-ISI-0327-C-01	03E-03	R-A	R1.18	UT	CSW	20060313	R-061	P	
FWS	3RFWB-39E	3-ISI-0327-C-01	03E-03	R-A	R1.18	UT	CSW	20060313	R-063	P	
MSS	3-47B400-095	3-ISI-0338-C-02 02	P03-03	F-A	F1.10B	VT-3		20060303	R-035	P	IWE- 2220 (b)
MSS	3-47B400-114-IA	3-ISI-0338-C-02 02	03E-03	B-K	B10.20	MT		20060307	r-044	P	
MSS	3-47B400-115	3-ISI-0338-C-02 02	03E-03	F-A	F1.10D	VT-3		20060305	R-024	P	RFR# 3-ISI-2
MSS	3-47B400-115-IA	3-ISI-0338-C-02 02	03E-03	B-K	B10.20	MT		20060305	R-025	P	
MSS	3-47B400-116	3-ISI-0338-C-02 02	03E-03	F-A	F1.10D	VT-3		20060305	R-023	P	RFR# 3-ISI-2
MSS	3-47B400-116-IA	3-ISI-0338-C-02 02	03E-03	B-K	B10.20	MT		20060305	R-026	P	
MSS	3-47B400-204	3-ISI-0338-C-02 02	P03-03	F-A	F1.10B	VT-3		20060303	R-036	P	IWE-2220(b)
MSS	3-47B400-204	3-ISI-0338-C-02 02	S01-02	F-A	F1.10B	VT-3		20060307	R-036	P	Successive Exam
MSS	3-47B400-68	3-ISI-0338-C-01	P03-03	F-A	F1.10B	VT-3		20060303	R-034	P	IWF-22210 (b)
MSS	3-47B400-82	3-ISI-0338-C-01 01	P03-03	F-A	F1.10B	VT-3		20060303	R-018	P	IWE- 2220 (b). THIS CLEARS NO# U3C12-002
MSS	3-47B400-83-IA	3-ISI-0338-C-01	03E-03	B-K	B10.20	MT		20060307	R-043	P	
MSS	3MSZ-MS1A-19E	3-ISI-0329-C-01	03E-03	R-A	R1.18	UT	CSW	20060313	R-058	P	
MSS	3MSZ-MS2B-13E	3-ISI-0329-C-02	03E-03	R-A	R1.18	UT	CSW	20060313	R-059	P	
MSS	DSAS-3-03	ISI-0354-C-02 02	03E-03	R-A	R1.11	UT	ALTCS/W B78	20060307	R-037	P	
MSS	FCV-1-014	3-ISI-0329-C-01 01	03E-03	B-M-2	B12.50	VT-3		20060305	R-033	P	
MSS	FCV-1-014-BC	3-ISI-0329-C-01 01	03E-03	B-G-2	B7.70	VT-1		20060305	R-032	P	
MSS	HPAS-3-H-03	3-ISI-0355-C-02 02	03E-03	F-A	F1.20C	VT-3		20060308	R-046	P	

EXAM RL .REMENTS
03E-03
95E-03
89E-02
P03-03
S01-02

OWNER: TENNESSEE VALLEY AUTHORITY
NUCLEAR POWER GROUP
1101 MARKET STREET
CHATTANOOGA, TENNESSEE 37402

PLANT: BROWNS FERRY NUCLEAR PLANT
P.O. BOX 2000
DECATUR, ALABAMA 35609-2000

UNIT: THREE CYCLE: 12 COMMERCIAL SERVICE DATE: MARCH 1, 1977

CERTIFICATION OF AUTHORIZATION: NOT REQUIRED
NATIONAL BOARD NUMBER FOR UNIT: NOT REQUIRED

System	Component Number	ISO Drawing	Exam Requirement	Category	Item Number	Exam Scheduled	Calibration Standard	Exam Date	Exam Report	Exam Results	Comments
MSS	HPAS-3-H-10	3-ISI-0355-C-02 02	03E-03	F-A	F1.20C	VT-3		20060309	R-052	P	
MSS	MS-3-H-12	3-ISI-0355-C-01 01	03E-03	F-A	F1.20C	VT-3		20060308	R-048	P	
MSS	MS-3-H-13	3-ISI-0355-C-01 01	03E-03	F-A	F1.20C	VT-3		20060308	R-050	P	THIS CLEARS NOI# U312-019.
MSS	MS-3-H-13-IA	3-ISI-0355-C-01 01	03E-03	C-C	C3.20	MT		20060308	R-047	P	
MSS	MS-3-H-17	3-ISI-0355-C-01 01	03E-03	F-A	F1.20C	VT-3		20060308	R-045	P	THIS CLEARS NOI# U3C12-015
MSS	PCV1-3-034-PBC	3-ISI-0313-B-01 01	03E-03	B-G-2	B7.50	VT-1		20060308	R-049	P	
MSS	PCV1-3-034-VBC	3-ISI-0313-B-01 01	P03-03	B-G-2	B7.70	VT-1		20051206	R-090	P	VALVE S/N 1021 W.O. 03-004255-001, 12 NUTS
MSS	PCV1-3-042-VBC	3-ISI-0313-B-01 01	P03-03	B-G-2	B7.70	VT-1		20051206	R-091	P	VALVE S/N 1026 W.O. 03-004268-001, 12 NUTS
RECIR	3-47B465-497	3-ISI-0337-C-02 02	03E-03	F-A	F1.40D	VT-3		20060302	R-014	P	RFR# 3-ISI-2
RECIR	3-47B465-498	3-ISI-0337-C-02 02	03E-03	F-A	F1.40D	VT-3		20060302	R-015	P	RFR# 3-ISI-2
RECIR	3-47B465-499	3-ISI-0337-C-02 02	03E-03	F-A	F1.40D	VT-3		20060320	R-016	P	RFR# 3-ISI-2
RECIR	3-47B465-500	3-ISI-0337-C-02 02	03E-03	F-A	F1.40C	VT-3		20060302	R-021	P	THIS CLEARS NOI# U3C12-008
RECIR	3-47B465-501	3-ISI-0337-C-02 02	03E-03	F-A	F1.40C	VT-3		20060303	R-019	P	THIS CLEARS NOI# U3C12-003
RECIR	3-47B465-502	3-ISI-0337-C-02 02	03E-03	F-A	F1.40C	VT-3		20060302	R-020	P	THIS CLEARS NOI# U3C12-004
RECIR	3-47B465-503	3-ISI-0337-C-02 02	03E-03	F-A	F1.40D	VT-3		20060302	R-017	P	RFR# 3-ISI-2
RECIR	3-47B465-513	3-ISI-0337-C-01 01	P03-03	F-A	F1.40D	VT-3		20060120	R-013	P	W.O. 06-710779-000
RECIR	GR-3-03(OL)	3-ISI-0328-C-01 01	03E-03	R-A	R1.16E	UT	BF-83	20060303	R-029	P	PROCEDURE PDI-UT-8, REV. E
RECIR	GR-3-27(OL)	3-ISI-0328-C-02 02	03E-03	R-A	R1.16E	UT	BF-83	20060303	R-029	P	PROCEDURE PDI-UT-8, REV. E
RECIR	GR-3-63	3-ISI-0328-C-02 02	03E-03	R-A	R1.16E	UT	ALTSS WB85	20060305	R-031	P	PROCEDURE PDI-UT-2, REV. C. ADDENDUM #1
RECIR	KR-3-02	3-ISI-0328-C-01 01	03E-03	R-A	R1.16C	UT	ALTSS WB85	20060303	R-028	P	PROCEDURE PDI-UT-2, REV. C, ADDENDUM #1
RECIR	KR-3-24	3-ISI-0328-C-02 02	03E-03	R-A	R1.16C	UT	ALTSS WB85	20060302	R-027	P	PROCEDURE PDI-UT-2, REV.C, ADDENDUM #1
RHRS	3-SI-3.3.8.C	N/A	89E-02	C-B	C2.33	VT-2		20041022	R-006	P	LOOP II
RHRS	DRHR-3-03B	3-ISI-0330-C-01 01	03E-03	R-A	R1.16G	VT-2		20060319	R-068	P	
RHRS	DRHR-3-13B	3-ISI-0330-C-01 01	03E-03	R-A	R1.16G	VT-2		20060319	R-068	P	
RHRS	DSRHR-3-01	3-ISI-0330-C-01 01	03E-03	R-A	R1.16C	UT	ALTSS/W B85	20060309	R-051	P	
RHRS	DSRHR-3-08	3-ISI-0330-C-01 01	03E-03	R-A	R1.16C	UT	ALTSS/W B85	20060310	R-056	P	
RHRS	RHRG-3-05-B	3-ISI-0422-C-01 01	89E-02	C-B	C2.33	VT-2		20041022	R-006	P	LOOP II
RHRS	RHRG-3-06-B	3-ISI-0422-C-01 01	89E-02	C-B	C2.33	VT-2		20041022	R-006	P	LOOP II

EXAM RE...REMENTS
03E-03
95E-03
89E-02
P03-03
S01-02

OWNER: TENNESSEE VALLEY AUTHORITY
NUCLEAR POWER GROUP
1101 MARKET STREET
CHATTANOOGA, TENNESSEE 37402

PLANT: BROWNS FERRY NUCLEAR PLANT
P.O. BOX 2000
DECATUR, ALABAMA 35609-2000

UNIT: THREE CYCLE: 12 COMMERCIAL SERVICE DATE: MARCH 1, 1977

CERTIFICATION OF AUTHORIZATION: NOT REQUIRED
NATIONAL BOARD NUMBER FOR UNIT: NOT REQUIRED

System	Component Number	ISO Drawing	Exam Requirement	Category	Item Number	Exam Scheduled	Calibration Standard	Exam Date	Exam Report	Exam Results	Comments
RPV	CRDN-3-0219-BC	ISI-0293-C-01	95E-03	B-G-2	B7.80	VT-1		20060304	R-022	P	DATE: 20060309, TVA/ISO; PATRICK V. MAHONEY
RPV	CRDN-3-0223-BC	ISI-0293-C-01	95E-03	B-G-2	B7.80	VT-1		20060304	R-022	P	DATE: 20060309, TVA/ISO; PATRICK V. MAHONEY
RPV	CRDN-3-0639-BC	ISI-0293-C-01	95E-03	B-G-2	B7.80	VT-1		20060304	R-022	P	DATE: 20060309, TVA/ISO; PATRICK V. MAHONEY
RPV	CRDN-3-0647-BC	ISI-0293-C-01	95E-03	B-G-2	B7.80	VT-1		20060304	R-022	P	DATE: 20060309, TVA/ISO; PATRICK V. MAHONEY
RPV	CRDN-3-1035-BC	ISI-0293-C-01	95E-03	B-G-2	B7.80	VT-1		20060304	R-022	P	DATE: 20060309, TVA/ISO; PATRICK V. MAHONEY
RPV	CRDN-3-1051-BC	ISI-0293-C-01	95E-03	B-G-2	B7.80	VT-1		20060304	R-022	P	DATE: 20060309, TVA/ISO; PATRICK V. MAHONEY
RPV	CRDN-3-1427-BC	ISI-0293-C-01	95E-03	B-G-2	B7.80	VT-1		20060304	R-022	P	DATE: 20060309, TVA/ISO; PATRICK V. MAHONEY
RPV	CRDN-3-1823-BC	ISI-0293-C-01	95E-03	B-G-2	B7.80	VT-1		20060304	R-022	P	DATE: 20060309, TVA/ISO; PATRICK V. MAHONEY
RPV	CRDN-3-1839-BC	ISI-0293-C-01	95E-03	B-G-2	B7.80	VT-1		20060304	R-022	P	DATE: 20060309, TVA/ISO; PATRICK V. MAHONEY
RPV	CRDN-3-2611-BC	ISI-0293-C-01	95E-03	B-G-2	B7.80	VT-1		20060304	R-022	P	DATE: 20060309, TVA/ISO; PATRICK V. MAHONEY
RPV	CRDN-3-2647-BC	ISI-0293-C-01	95E-03	B-G-2	B7.80	VT-1		20060304	R-022	P	DATE: 20060309, TVA/ISO; PATRICK V. MAHONEY
RPV	CRDN-3-3011-BC	ISI-0293-C-01	95E-03	B-G-2	B7.80	VT-1		20060304	R-022	P	DATE: 20060309, TVA/ISO; PATRICK V. MAHONEY
RPV	CRDN-3-3051-BC	ISI-0293-C-01	95E-03	B-G-2	B7.80	PT		20060304	R-022	P	N-VT-1 PARAGRAPH A.1.3, SUPPLEMENTAL EXAM FOR VT-1 VISUAL LINEAR INDICATION.
RPV	CRDN-3-3051-BC	ISI-0293-C-01	95E-03	B-G-2	B7.80	VT-1		20060304	R-022	P	DATE: 20060309, TVA/ISO; PATRICK V. MAHONEY
RPV	CRDN-3-3055-BC	ISI-0293-C-01	95E-03	B-G-2	B7.80	VT-1		20060304	R-022	P	7 BOLTS ACCEPTABLE 1 REJECT. DATE: 20060309, TVA/ISO; PATRICK V. MAHONEY NO#U3C12-012 CLEARED.
RPV	CRDN-3-3403-BC	ISI-0293-C-01	95E-03	B-G-2	B7.80	VT-1		20060304	R-022	P	DATE: 20060309, TVA/ISO; PATRICK V. MAHONEY
RPV	CRDN-3-3451-BC	ISI-0293-C-01	95E-03	B-G-2	B7.80	VT-1		20060304	R-022	P	DATE: 20060309, TVA/ISO; PATRICK V. MAHONEY
RPV	CRDN-3-4239-BC	ISI-0293-C-01	95E-03	B-G-2	B7.80	VT-1		20060304	R-022	P	7 ACCEPTABLE 1 REJECT. DATE: 20060309, TVA/ISO; PATRICK V. MAHONEY NO#U3C12-012 CLEARED.

EXAM RE[illegible]REMENTS
03E-03
95E-03
89E-02
P03-03
S01-02

OWNER: TENNESSEE VALLEY AUTHORITY
NUCLEAR POWER GROUP
1101 MARKET STREET
CHATTANOOGA, TENNESSEE 37402

PLANT: BROWNS FERRY NUCLEAR PLANT
P.O. BOX 2000
DECATUR, ALABAMA 35609-2000

CERTIFICATION OF AUTHORIZATION: NOT REQUIRED
NATIONAL BOARD NUMBER FOR UNIT: NOT REQUIRED

UNIT: THREE CYCLE: 12 COMMERCIAL SERVICE DATE: MARCH 1, 1977

System	Component Number	ISO Drawing	Exam Requirement	Category	Item Number	Exam Scheduled	Calibration Standard	Exam Date	Exam Report	Exam Results	Comments
RPV	CRDN-3-4607-BC	ISI-0293-C-01	95E-03	B-G-2	B7.80	VT-1		20060304	R-022	P	DATE: 20060309, TVA/ISO; PATRICK V. MAHONEY
RPV	CRDN-3-4615-BC	ISI-0293-C-01	95E-03	B-G-2	B7.80	VT-1		20060304	R-022	P	DATE: 20060309, TVA/ISO; PATRICK V. MAHONEY
RPV	CRDN-3-4647-BC	ISI-0293-C-01	95E-03	B-G-2	B7.80	VT-1		20060304	R-022	P	7 ACCEPTABL;E 1 REJECT. DATE: 20060309, TVA/ISO; PATRICK V. MAHONEY NO#U3C12-012 CLEARED.
RPV	CRDN-3-5027-BC	ISI-0293-C-01	95E-03	B-G-2	B7.80	VT-1		20060304	R-022	P	DATE: 20060309, TVA/ISO; PATRICK V. MAHONEY
RPV	CRDN-3-5035-BC	ISI-0293-C-01	95E-03	B-G-2	B7.80	VT-1		20060304	R-022	P	DATE: 20060309, TVA/ISO; PATRICK V. MAHONEY
RPV	CRDN-3-5827-BC	ISI-0293-C-01	95E-03	B-G-2	B7.80	VT-1		20060304	R-022	P	DATE: 20060309, TVA/ISO; PATRICK V. MAHONEY
RPV	CRDN-3-5835-BC	ISI-0293-C-01	95E-03	B-G-2	B7.80	VT-1		20060304	R-022	P	DATE: 20060309, TVA/ISO; PATRICK V. MAHONEY
RPV	N1A-IR	3-ISI-0328-C-01 01	03E-03	B-D	B3.100	VT-1E		20060307	R-057	P	*54-ISI-363-02, SDCN'S# 30-5038911-02, 305038911-03 90% COVERAGE
RPV	N1A-NV	3-ISI-0328-C-01 01	03E-03	B-D	B3.90	UT	BF-18	20060310	R-079	P	54-ISI-850-03 SDCN# 30-5037583-000, 30-9011321-00, 30-9015396-00 PER# 99373, 99581
RPV	N2B-IR	3-ISI-0328-C-02 02	03E-03	B-D	B3.100	VT-1E		20060307	R-057	P	*54-ISI-363-02, SDCN'S# 30-5038911-02, 305038911-03. 40% COVERAGE
RPV	N2B-NV	3-ISI-0328-C-02 02	03E-03	B-D	B3.90	UT	BF-18	20060310	R-080	P	54-ISI-850-03 SDCN# 30-5037583-000, 30-9011321-00, 30-9015396-00 PER# 99373, 99581
RPV	N2D-IR	3-ISI-0328-C-02 02	03E-03	B-D	B3.100	VT-1E		20060307	R-057	P	*54-ISI-363-02, SDCN'S# 30-5038911-02, 305038911-03. 40% COVERAGE
RPV	N2D-NV	3-ISI-0328-C-02 02	03E-03	B-D	B3.90	UT	BF-18	20060310	R-081	P	54-ISI-850-03 SDCN# 30-5037583-000, 30-9011321-00, 30-9015396-00 PER# 99373, 99581
RPV	N2F-IR	3-ISI-0328-C-01 02	03E-03	B-D	B3.100	VT-1E		20060307	R-057	P	*54-ISI-363-02, SDCN'S# 30-5038911-02, 305038911-03. 40% COVERAGE
RPV	N2F-NV	3-ISI-0328-C-01 02	03E-03	B-D	B3.90	UT	BF-18	20060310	R-082	P	54-ISI-850-03 SDCN# 30-5037583-000, 30-9011321-00, 30-9015396-00 PER# 99373, 99581
RPV	N2G-IR	3-ISI-0328-C-01 01	89E-02	B-D	B3.100	VT-1E		20060307	R-057	P	Deferred from Cycle 11, 2nd Interval. *54-ISI-363-02, SDCN'S# 30-5038911-02, 305038911-03. 40% COVERAGE
RPV	N2G-NV	3-ISI-0328-C-01 01	89E-02	B-D	B3.90	UT	BF-18	20060317	R-070	P	Deferred from Cycle 11, 2nd Interval. 54-ISI-850-03 SDCN# 30-5037583-000, 30-9011321-00, 30-9015396-00 PER# 99373, 99581

EXAM RE...REMENTS
03E-03
95E-03
89E-02
P03-03
S01-02

OWNER: TENNESSEE VALLEY AUTHORITY
NUCLEAR POWER GROUP
1101 MARKET STREET
CHATTANOOGA, TENNESSEE 37402

PLANT: BROWNS FERRY NUCLEAR PLANT
P.O. BOX 2000
DECATUR, ALABAMA 35609-2000

CERTIFICATION OF AUTHORIZATION: NOT REQUIRED
NATIONAL BOARD NUMBER FOR UNIT: NOT REQUIRED

UNIT: THREE CYCLE: 12 COMMERCIAL SERVICE DATE: MARCH 1, 1977

System	Component Number	ISO Drawing	Exam Requirement	Category	Item Number	Exam Scheduled	Calibration Standard	Exam Date	Exam Report	Exam Results	Comments
RPV	N2H-IR	3-ISI-0328-C-01 01	89E-02	B-D	B3.100	VT-1E		20060307	R-057	P	Deferred from Cycle 11, 2nd Interval. *54-ISI-363-02, SDCN'S# 30-5038911-02, 305038911-03. 40% COVERAGE
RPV	N2H-NV	3-ISI-0328-C-01 01	89E-02	B-D	B3.90	UT	BF-18	20060317	R-071	P	Deferred from Cycle 11, 2nd Interval. 54-ISI-850-03 SDCN# 30-5037583-000, 30-9011321-00, 30-9015396-00 PER# 99373, 99581
RPV	N2J-IR	3-ISI-0328-C-01 01	89E-02	B-D	B3.100	VT-1E		20060307	R-057	P	Deferred from Cycle 11, 2nd Interval. *54-ISI-363-02, SDCN'S# 30-5038911-02, 305038911-03. 40% COVERAGE
RPV	N2J-NV	3-ISI-0328-C-01 01	89E-02	B-D	B3.90	UT	BF-18	20060317	R-072	P	Deferred for Cycle 11, 2nd Interval. 54-ISI-850-03 SDCN# 30-5037583-000, 30-9011321-00, 30-9015396-00 PER# 99373, 99581
RPV	N2K-IR	3-ISI-0328-C-01 01	89E-02	B-D	B3.100	VT-1E		20060307	R-057	P	Deferred from Cycle 11, 2nd Interval. *54-ISI-363-02, SDCN'S# 30-5038911-02, 305038911-03. 40% COVERAGE
RPV	N2K-NV	3-ISI-0328-C-01 01	89E-02	B-D	B3.90	UT	BF-18	20060317	R-073	P	Deferred from Cycle 11, 2nd Interval. 54-ISI-850-03 SDCN# 30-5037583-000, 30-9011321-00, 30-9015396-00 PER# 99373, 99581
RPV	N3B-IR	3-ISI-0329-C-02 02	03E-03	B-D	B3.100	VT-1E		20060307	R-057	P	*54-ISI-363-02, SDCN'S# 30-5038911-02, 305038911-03. 90% COVERAGE
RPV	N3B-NV	3-ISI-0329-C-02 02	03E-03	B-D	B3.90	UT	BF-18	20060307	R-083	P	54-ISI-850-03 SDCN# 30-5037583-000, 30-9011321-00, 30-9015396-00 PER# 99373, 99581
RPV	N3C-IR	3-ISI-0329-C-02 01	89E-02	B-D	B3.100	VT-1E		20060307	R-057	P	Deferred from Cycle 11, 2nd Interval. *54-ISI-363-02, SDCN'S# 30-5038911-02, 305038911-03. 90% COVERAGE
RPV	N3C-NV	3-ISI-0329-C-02 01	89E-02	B-D	B3.90	UT	BF-18	20060317	R-074	P	Deferred from Cycle 11, 2nd Interval. 54-ISI-850-03 SDCN# 30-5037583-000, 30-9011321-00, 30-9015396-00 PER# 99373, 99581
RPV	N3D-IR	3-ISI-0329-C-01 01	89E-02	B-D	B3.100	VT-1E		20060307	R-057	P	Deferred from Cycle 11, 2nd Interval. *54-ISI-363-02, SDCN'S# 30-5038911-02, 305038911-03. 90% COVERAGE
RPV	N3D-NV	3-ISI-0329-C-01 01	89E-02	B-D	B3.90	UT	BF-18	20060317	R-075	P	Deferred from Cycle 11, 2nd Interval. 54-ISI-850-03 SDCN# 30-5037583-000, 30-9011321-00, 30-9015396-00 PER# 99373, 99581
RPV	N4B-IR	3-ISI-0327-C-01 01	03E-03	B-D	B3.100	UT	BF-18	20060309	R-084	P	
RPV	N4B-NV	3-ISI-0327-C-01 01	03E-03	B-D	B3.90	UT	BF-18	20060309	R-085	P	54-ISI-850-03 SDCN# 30-5037583-000, 30-9011321-00, 30-9015396-00 PER# 99373, 99581

EXAM RE_ _REMENTS
03E-03
95E-03
89E-02
P03-03
S01-02

OWNER: TENNESSEE VALLEY AUTHORITY
NUCLEAR POWER GROUP
1101 MARKET STREET
CHATTANOOGA, TENNESSEE 37402

PLANT: BROWNS FERRY NUCLEAR PLANT
P.O. BOX 2000
DECATUR, ALABAMA 35609-2000

CERTIFICATION OF AUTHORIZATION: NOT REQUIRED
NATIONAL BOARD NUMBER FOR UNIT: NOT REQUIRED

UNIT: THREE CYCLE: 12 COMMERCIAL SERVICE DATE: MARCH 1, 1977

System	Component Number	ISO Drawing	Exam Requirement	Category	Item Number	Exam Scheduled	Calibration Standard	Exam Date	Exam Report	Exam Results	Comments
RPV	N4C-IR	3-ISI-0327-C-01 01	03E-03	B-D	B3.100	UT	BF-18	20060309	R-086	P	
RPV	N4C-NV	3-ISI-0327-C-01 01	03E-03	B-D	B3.90	UT	BF-18	20060309	R-087	P	54-ISI-850-03 SDCN# 30-5037583-000, 30-9011321-00, 30-9015396-00 PER# 99373, 99581
RPV	N5A-IR	3-ISI-0331-C-01 01	03E-03	B-D	B3.100	VT-1E		20060307	R-057	P	*54-ISI-363-02, SDCN'S# 30-5038911-02, 305038911-03. 40% COVERAGE
RPV	N5A-NV	3-ISI-0331-C-01 01	03E-03	B-D	B3.90	UT	BF-18	20060308	R-088	P	54-ISI-850-03 SDCN# 30-5037583-000, 30-9011321-00, 30-9015396-00 PER# 99373, 99581
RPV	N8A-IR	3-ISI-0411-C-01 01	03E-03	B-D	B3.100	VT-1E		20060307	R-057	P	*54-ISI-363-02, SDCN'S# 30-5038911-02, 305038911-03. 40% COVERAGE
RPV	N8A-NV	3-ISI-0411-C-01 01	03E-03	B-D	B3.90	UT	BF-18	200603	R-089	P	54-ISI-850-03 SDCN# 30-5037583-000, 30-9011321-00, 30-9015396-00 PER# 99373, 99581
RPV	N8B-IR	3-ISI-0411-C-01 01	89E-02	B-D	B3.100	VT-1E		20060307	R-057	P	Deferred from Cycle 11, 2nd Interval. *54-ISI-363-02, SDCN'S# 30-5038911-02, 305038911-03. 40% COVERAGE
RPV	N8B-NV	3-ISI-0411-C-01 01	89E-02	B-D	B3.90	UT	BF-18	20060317	R-078	P	Deferred from Cycle 11, 2nd Interval. 54-ISI-850-03 SDCN# 30-5037583-000, 30-9011321-00, 30-9015396-00 PER# 99373, 99581
RPV	RPV CORE SUPPORT	ISI-0220-C-02	03E-03	B-N-2	B13.40	VT-3		20060307	R-057	P	*54-ISI-363-02, SDCN'S# 30-5038911-02, 305038911-03
RPV	RPV INT ATT NBLR	ISI-0220-C-02	03E-03	B-N-2	B13.30	VT-3		20060307	R-057	P	
RPV	RPV INTERIOR	ISI-0220-C-02	03E-03	B-N-1	B13.10	VT-3		20060307	R-057	P	*54-ISI-363-02, SDCN'S# 30-5038911-02, 305038911-03
RPV	RPV-NUTS-3-01	3-ISI-0267-C-01 01	03E-03	B-G-1	B6.10	VT-1		20060310	R-054	P	
RPV	RPV-NUTS-3-02	3-ISI-0267-C-01 01	03E-03	B-G-1	B6.10	VT-1		20060310	R-054	P	
RPV	RPV-NUTS-3-03	3-ISI-0267-C-01 01	03E-03	B-G-1	B6.10	VT-1		20060310	R-054	P	
RPV	RPV-NUTS-3-04	3-ISI-0267-C-01 01	03E-03	B-G-1	B6.10	VT-1		20060310	R-054	P	
RPV	RPV-NUTS-3-05	3-ISI-0267-C-01 01	03E-03	B-G-1	B6.10	VT-1		20060310	R-054	P	
RPV	RPV-NUTS-3-06	3-ISI-0267-C-01 01	03E-03	B-G-1	B6.10	VT-1		20060310	R-054	P	
RPV	RPV-NUTS-3-07	3-ISI-0267-C-01 01	03E-03	B-G-1	B6.10	VT-1		20060310	R-054	P	
RPV	RPV-NUTS-3-08	3-ISI-0267-C-01 01	03E-03	B-G-1	B6.10	VT-1		20060310	R-054	P	
RPV	RPV-NUTS-3-09	3-ISI-0267-C-01 01	03E-03	B-G-1	B6.10	VT-1		20060310	R-054	P	
RPV	RPV-NUTS-3-10	3-ISI-0267-C-01 01	03E-03	B-G-1	B6.10	VT-1		20060310	R-054	P	
RPV	RPV-NUTS-3-11	3-ISI-0267-C-01 01	03E-03	B-G-1	B6.10	VT-1		20060310	R-054	P	
RPV	RPV-NUTS-3-12	3-ISI-0267-C-01 01	03E-03	B-G-1	B6.10	VT-1		20060310	R-054	P	

EXAM RE[illegible]REMENTS
03E-03
95E-03
89E-02
P03-03
S01-02

OWNER: TENNESSEE VALLEY AUTHORITY
NUCLEAR POWER GROUP
1101 MARKET STREET
CHATTANOOGA, TENNESSEE 37402

PLANT: BROWNS FERRY NUCLEAR PLANT
P.O. BOX 2000
DECATUR, ALABAMA 35609-2000

CERTIFICATION OF AUTHORIZATION: NOT REQUIRED
NATIONAL BOARD NUMBER FOR UNIT: NOT REQUIRED

UNIT: THREE CYCLE: 12 COMMERCIAL SERVICE DATE: MARCH 1, 1977

System	Component Number	ISO Drawing	Exam Requirement	Category	Item Number	Exam Scheduled	Calibration Standard	Exam Date	Exam Report	Exam Results	Comments
RPV	RPV-NUTS-3-13	3-ISI-0267-C-01 01	03E-03	B-G-1	B6.10	VT-1		20060310	R-054	P	
RPV	RPV-NUTS-3-14	3-ISI-0267-C-01 01	03E-03	B-G-1	B6.10	VT-1		20060310	R-054	P	
RPV	RPV-NUTS-3-15	3-ISI-0267-C-01 01	03E-03	B-G-1	B6.10	VT-1		20060310	R-054	P	
RPV	RPV-NUTS-3-16	3-ISI-0267-C-01 01	03E-03	B-G-1	B6.10	VT-1		20060310	R-054	P	
RPV	RPV-NUTS-3-17	3-ISI-0267-C-01 01	03E-03	B-G-1	B6.10	VT-1		20060310	R-054	P	
RPV	RPV-NUTS-3-18	3-ISI-0267-C-01 01	03E-03	B-G-1	B6.10	VT-1		20060310	R-054	P	
RPV	RPV-NUTS-3-19	3-ISI-0267-C-01 01	03E-03	B-G-1	B6.10	VT-1		20060310	R-054	P	
RPV	RPV-NUTS-3-20	3-ISI-0267-C-01 01	03E-03	B-G-1	B6.10	VT-1		20060310	R-054	P	
RPV	RPV-NUTS-3-21	3-ISI-0267-C-01 01	03E-03	B-G-1	B6.10	VT-1		20060310	R-054	P	
RPV	RPV-NUTS-3-22	3-ISI-0267-C-01 01	03E-03	B-G-1	B6.10	VT-1		20060310	R-054	P	
RPV	RPV-NUTS-3-23	3-ISI-0267-C-01 01	03E-03	B-G-1	B6.10	VT-1		20060310	R-054	P	
RPV	RPV-NUTS-3-24	3-ISI-0267-C-01 01	03E-03	B-G-1	B6.10	VT-1		20060310	R-054	P	
RPV	RPV-NUTS-3-25	3-ISI-0267-C-01 01	03E-03	B-G-1	B6.10	VT-1		20060310	R-054	P	
RPV	RPV-NUTS-3-26	3-ISI-0267-C-01 01	03E-03	B-G-1	B6.10	VT-1		20060310	R-054	P	
RPV	RPV-NUTS-3-27	3-ISI-0267-C-01 01	03E-03	B-G-1	B6.10	VT-1		20060310	R-054	P	
RPV	RPV-NUTS-3-28	3-ISI-0267-C-01 01	03E-03	B-G-1	B6.10	VT-1		20060310	R-054	P	
RPV	RPV-NUTS-3-29	3-ISI-0267-C-01 01	03E-03	B-G-1	B6.10	VT-1		20060310	R-054	P	
RPV	RPV-NUTS-3-30	3-ISI-0267-C-01 01	03E-03	B-G-1	B6.10	VT-1		20060310	R-054	P	
RPV	RPV-WASH-3-01	3-ISI-0267-C-01 01	03E-03	B-G-1	B6.50	VT-1		20060310	R-055	P	
RPV	RPV-WASH-3-02	3-ISI-0267-C-01 01	03E-03	B-G-1	B6.50	VT-1		20060310	R-055	P	
RPV	RPV-WASH-3-03	3-ISI-0267-C-01 01	03E-03	B-G-1	B6.50	VT-1		20060310	R-055	P	
RPV	RPV-WASH-3-04	3-ISI-0267-C-01 01	03E-03	B-G-1	B6.50	VT-1		20060310	R-055	P	
RPV	RPV-WASH-3-05	3-ISI-0267-C-01 01	03E-03	B-G-1	B6.50	VT-1		20060310	R-055	P	
RPV	RPV-WASH-3-06	3-ISI-0267-C-01 01	03E-03	B-G-1	B6.50	VT-1		20060310	R-055	P	
RPV	RPV-WASH-3-07	3-ISI-0267-C-01 01	03E-03	B-G-1	B6.50	VT-1		20060310	R-055	P	
RPV	RPV-WASH-3-08	3-ISI-0267-C-01 01	03E-03	B-G-1	B6.50	VT-1		20060310	R-055	P	
RPV	RPV-WASH-3-09	3-ISI-0267-C-01 01	03E-03	B-G-1	B6.50	VT-1		20060310	R-055	P	
RPV	RPV-WASH-3-10	3-ISI-0267-C-01 01	03E-03	B-G-1	B6.50	VT-1		20060310	R-055	P	
RPV	RPV-WASH-3-11	3-ISI-0267-C-01 01	03E-03	B-G-1	B6.50	VT-1		20060310	R-055	P	
RPV	RPV-WASH-3-12	3-ISI-0267-C-01 01	03E-03	B-G-1	B6.50	VT-1		20060310	R-055	P	
RPV	RPV-WASH-3-13	3-ISI-0267-C-01 01	03E-03	B-G-1	B6.50	VT-1		20060310	R-055	P	
RPV	RPV-WASH-3-14	3-ISI-0267-C-01 01	03E-03	B-G-1	B6.50	VT-1		20060310	R-055	P	

EXAM R. .REMENTS
03E-03
95E-03
89E-02
P03-03
S01-02

OWNER: TENNESSEE VALLEY AUTHORITY
NUCLEAR POWER GROUP
1101 MARKET STREET
CHATTANOOGA, TENNESSEE 37402

PLANT: BROWNS FERRY NUCLEAR PLANT
P.O. BOX 2000
DECATUR, ALABAMA 35609-2000

CERTIFICATION OF AUTHORIZATION: NOT REQUIRED
NATIONAL BOARD NUMBER FOR UNIT: NOT REQUIRED

UNIT: THREE CYCLE: 12 COMMERCIAL SERVICE DATE: MARCH 1, 1977

System	Component Number	ISO Drawing	Exam Requirement	Category	Item Number	Exam Scheduled	Calibration Standard	Exam Date	Exam Report	Exam Results	Comments
RPV	RPV-WASH-3-15	3-ISI-0267-C-01 01	03E-03	B-G-1	B6.50	VT-1		20060310	R-055	P	
RPV	RPV-WASH-3-16	3-ISI-0267-C-01 01	03E-03	B-G-1	B6.50	VT-1		20060310	R-055	P	
RPV	RPV-WASH-3-17	3-ISI-0267-C-01 01	03E-03	B-G-1	B6.50	VT-1		20060310	R-055	P	
RPV	RPV-WASH-3-18	3-ISI-0267-C-01 01	03E-03	B-G-1	B6.50	VT-1		20060310	R-055	P	
RPV	RPV-WASH-3-19	3-ISI-0267-C-01 01	03E-03	B-G-1	B6.50	VT-1		20060310	R-055	P	
RPV	RPV-WASH-3-20	3-ISI-0267-C-01 01	03E-03	B-G-1	B6.50	VT-1		20060310	R-055	P	
RPV	RPV-WASH-3-21	3-ISI-0267-C-01 01	03E-03	B-G-1	B6.50	VT-1		20060310	R-055	P	
RPV	RPV-WASH-3-22	3-ISI-0267-C-01 01	03E-03	B-G-1	B6.50	VT-1		20060310	R-055	P	
RPV	RPV-WASH-3-23	3-ISI-0267-C-01 01	03E-03	B-G-1	B6.50	VT-1		20060310	R-055	P	
RPV	RPV-WASH-3-24	3-ISI-0267-C-01 01	03E-03	B-G-1	B6.50	VT-1		20060310	R-055	P	
RPV	RPV-WASH-3-25	3-ISI-0267-C-01 01	03E-03	B-G-1	B6.50	VT-1		20060310	R-055	P	
RPV	RPV-WASH-3-26	3-ISI-0267-C-01 01	03E-03	B-G-1	B6.50	VT-1		20060310	R-055	P	
RPV	RPV-WASH-3-27	3-ISI-0267-C-01 01	03E-03	B-G-1	B6.50	VT-1		20060310	R-055	P	
RPV	RPV-WASH-3-28	3-ISI-0267-C-01 01	03E-03	B-G-1	B6.50	VT-1		20060310	R-055	P	
RPV	RPV-WASH-3-29	3-ISI-0267-C-01 01	03E-03	B-G-1	B6.50	VT-1		20060310	R-055	P	
RPV	RPV-WASH-3-30	3-ISI-0267-C-01 01	03E-03	B-G-1	B6.50	VT-1		20060310	R-055	P	

OWNER: TENNESSEE VALLEY AUTHORITY OFFICE OF NUCLEAR POWER 1101 MARKET STREET CHATTANOOGA, TENNESSEE 37402	PLANT: BROWNS FERRY NUCLEAR PLANT P.O. BOX 2000 DECATUR, ALABAMA 35609-2000
UNIT: THREE	CERTIFICATE OF AUTHORIZATION: NOT REQUIRED.
COMMERCIAL SERVICE DATE: MARCH 1, 1977	
NATIONAL BOARD NUMBER FOR UNIT: NOT REQUIRED.	

ISOMETRICS FOR COMPONENT LOCATIONS

NOZZLE	JP	DISTANCE TO MATING SURFACE
N3X	-	86.5"
N12X	-	146"
N11X	-	228"
N4X	-	246.5"
N5X	-	259.5"
N9	-	296.5"
N16X	-	379"
N2X	-	564"
N1X	-	583.5"
N8X	-	610"

REFERENCE DRAWINGS (GE)
SKETCHES - RPV EXAMINATION (GE)
SK-B3001 SK-B3005 5010
SK-B3003 SK-B3007
SK-B3004 SK-B3006

LEGEND
O VESSEL NOZZLE
FULL PENETRATION NOZZLE WELD

ASME CC-1 (EQUIVALENT)

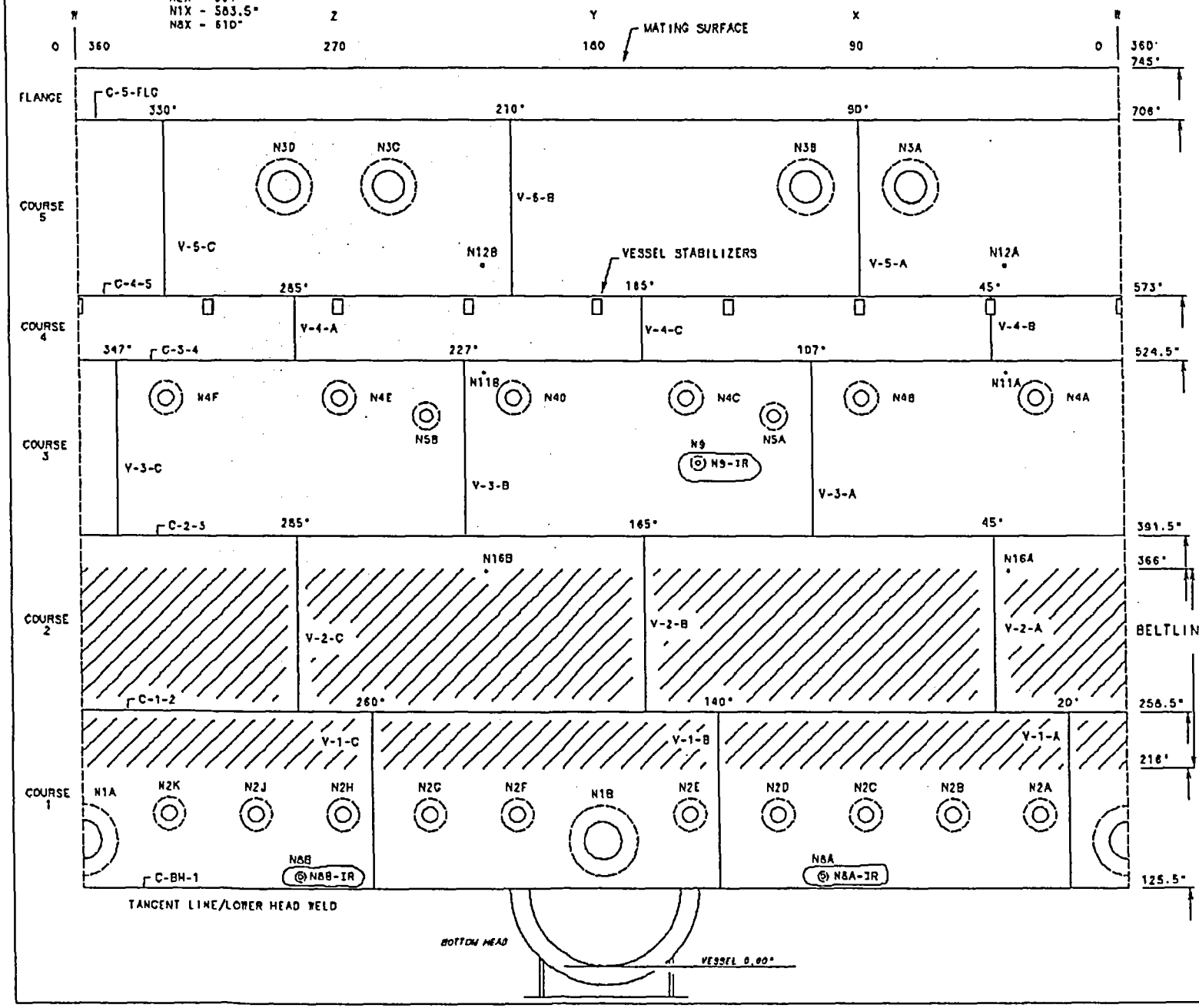

NOTES:
1. REFER TO RPV MANUAL FOR MATERIAL SPECIFICATIONS AND THICKNESS OF MATERIAL.
2. NOZZLES N-11A, N-11B, N-12A, N-12B, N-16A, AND N-16B ARE CATEGORY B-E.

001	ADMIN		EDL		N/A		N/A	N/A	
	REVISED PER RIMS MEMO RIM 879506 002								
REV NO	CHANGE REF	DATE	DRN	CHKD	DSGN	DWNG	APPD	APPD	APPD	ISSD

S TENNESSEE VALLEY AUTHORITY

BROWNS FERRY NUCLEAR PLANT
UNIT 3
REACTOR PRESSURE VESSEL (RPV)
SHELL COURSE WELD/NOZZLE LOCATIONS (OUTSIDE VIEW)

DRAWN: PHB	DATE: 7-11-89	SCALE: NTS	CADAM/ISIDAP
CHECKED: EDC	APPROVED: CLB	SHEET 01 OF 02	REV
SUBMITTED: JES		3-ISI-0220-C	001
		CCD	

PCADAM

ALL A/D HISTORY RESEARCHED AT R000

REFERENCE DRAWING

500733-001C (HIRAL ... INSULATION)
24187-F (BGW)
122856E

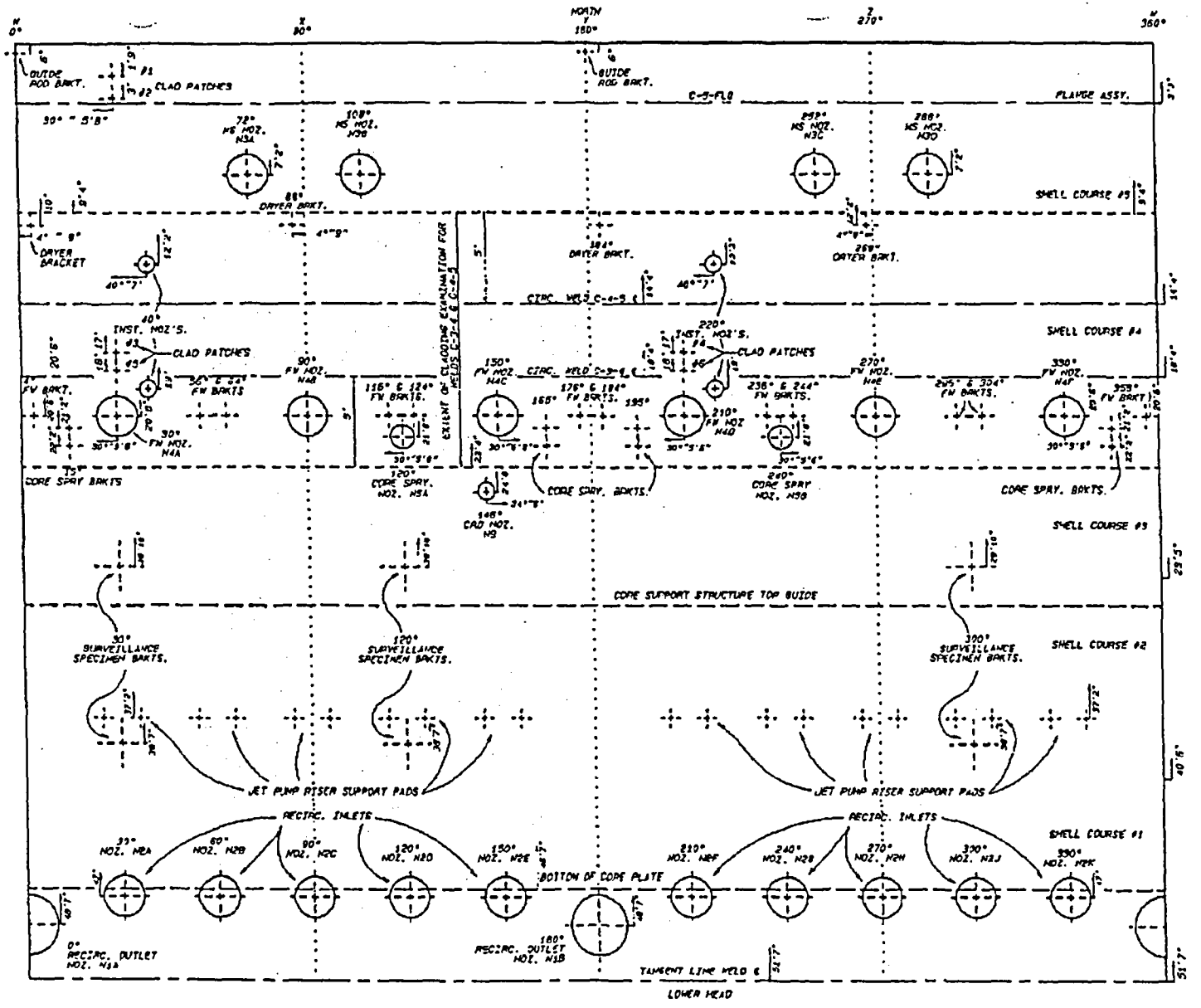

NOTES:

1. FOUR (4) STEAM DRYER HOLDDOWN BRACKETS (NOT SHOWN) ARE LOCATED IN THE VESSEL CLOSURE HEAD 10° UP FROM THE FLANGE. THESE ARE AT AZIMUTH LOCATIONS 41°, 139°, 221°, AND 319°.
2. FOR CODE CATEGORY B-N-1 "RPV INTERIOR"
   FOR CODE CATEGORY B-N-2
   "RPV INT ATT BLR" (1)
   "RPV INT ATT NBLR" (2)
   "RPV CORE SUPPORT"

(1) BELTLINE REGION
(2) NON BELTLINE REGION

MF R00

000	CCD ADMIN		PBL		N/A		N/A	N/A		
	1) ADD TO CREATE ECD SUPERSEDES AS-DESIGNED 151-0220-C-3 B1 AND TO REFLECT AS CONSTRUCTED STATUS PER PIMS MWO 814 970000 202; A/D R0									
ALT NO	CHANGE REF	DATE	OF ID	CHKR	DTBM	RVWR	1 APPD	2 APPD	3 APPD	1SSD

S TENNESSEE VALLEY AUTHORITY

BROWNS FERRY NUCLEAR PLANT
UNIT 3
REACTOR VESSEL WELD AND NOZZLE LOCATIONS (INTERIOR WALL)

DRAWN PHB	SUBMITTED	APPROVED	SCALE NTS
DATE 4-12-91	DATE 4-12-91	DATE 4-24-91	SHEET 02 OF 02 SHEET(S)
CHECKED			DRAWING NO. REV
DATE 4-18-91			3-151-0220-C 000

CCD

PCADAM

ALL A/D HISTORY RESEARCHED AT R000

ASME CC-' 'EQUIVALENT)

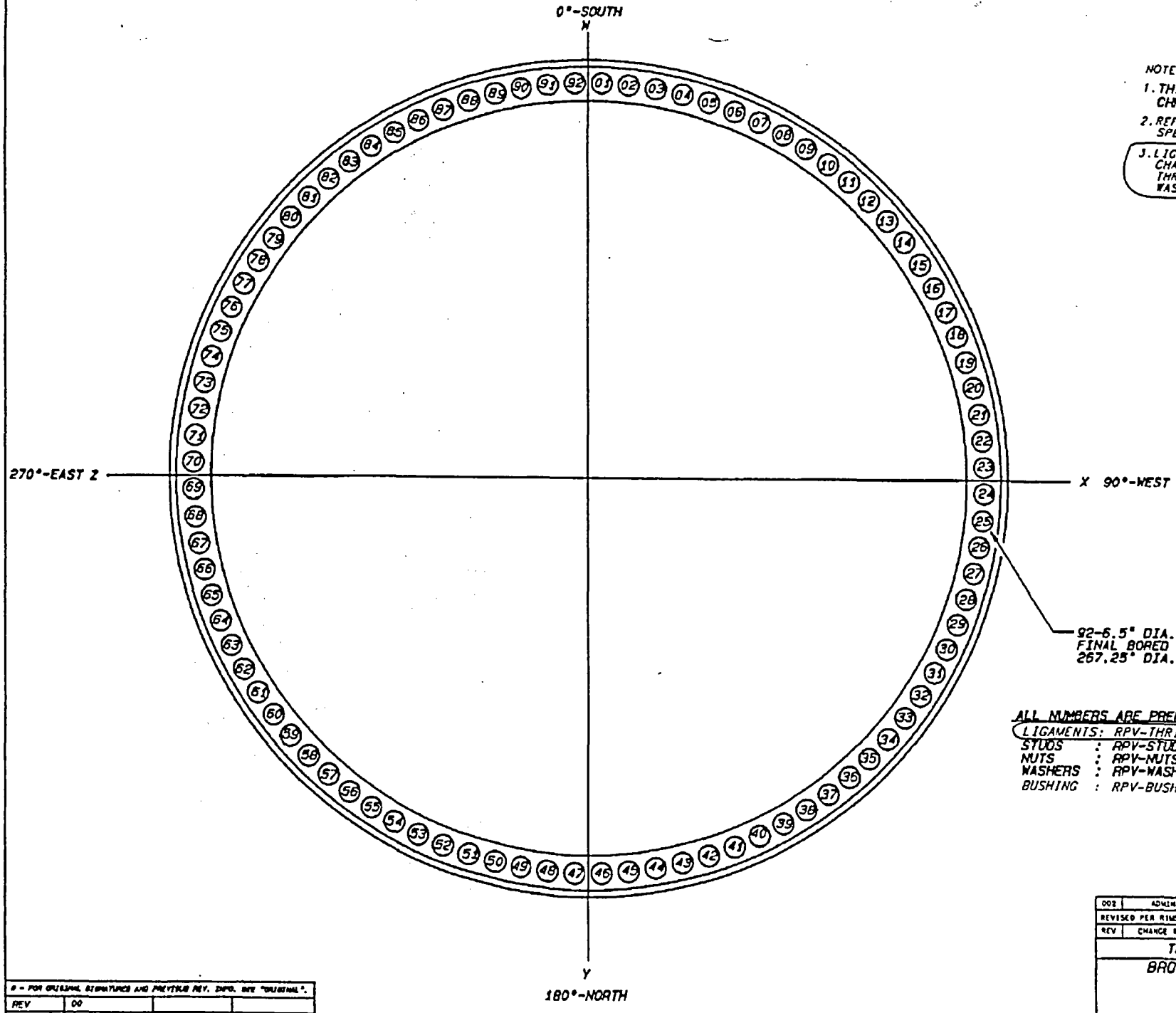

NOTES:

1. THIS DRAWING SUPERCEDES CHN-2001-C (UNIT 3)
2. REFER TO RPV MANUAL FOR MATERIAL SPECIFICATIONS AND BOLTING SIZES.
3. LIGAMENTS-RPV-LIGS-3-(01-92) WAS CHANGED IN ASME XI 2001E2003A TO THREADS IN FLANGE AND EXAM VOLUME WAS CHANGED.

ALL NUMBERS ARE PREFIXED BY:

LIGAMENTS: RPV-THRINFLG-3-(01-92)
STUDS : RPV-STUDS-3-(01-92)
NUTS : RPV-NUTS-3-(01-92)
WASHERS : RPV-WASH-3-(01-92)
BUSHING : RPV-BUSH-3-(01-92)

002	ADMIN	J MCFARLAND	WC HODGES	DP WALKER	4-26-2005	
REVISED PER RIMS MEMO R14 030328 103						
REV	CHANGE REF	PREPARER	CHECKER	APPROVED	DATE	

TENNESSEE VALLEY AUTHORITY

BROWNS FERRY NUCLEAR PLANT
UNIT 3
VESSEL STUD LOCATIONS

DRAWN PHB	SUBMITTED	APPROVED	SCALE: NTS
DATE 10-11-94	DATE 5/6/92	DATE 7/1/94	SHEET 1 OF 1 SHEET(S)
CHECKED			DRAWING NO. 3-ISI-0267-C REV 002
DATE 5-2-95			

CAD MAINTAINED DRAWING

CCD

# - FOR ORIGINAL SIGNATURES AND PREVIOUS REV. INFO. USE "ORIGINAL".			
REV	00		
HARDWARE	TEKTRONIX 4129		
SOFTWARE	TEKNICAD 8.0		
FLOPPY OR TAPE #	FLOPPY ASF13		

ALL A/D HISTORY RESEARCHED AT RDDO

REFERENCE DRAWINGS:
3-47E801-1
ADMIN

ASME CC-1 (EQUIVALENT)

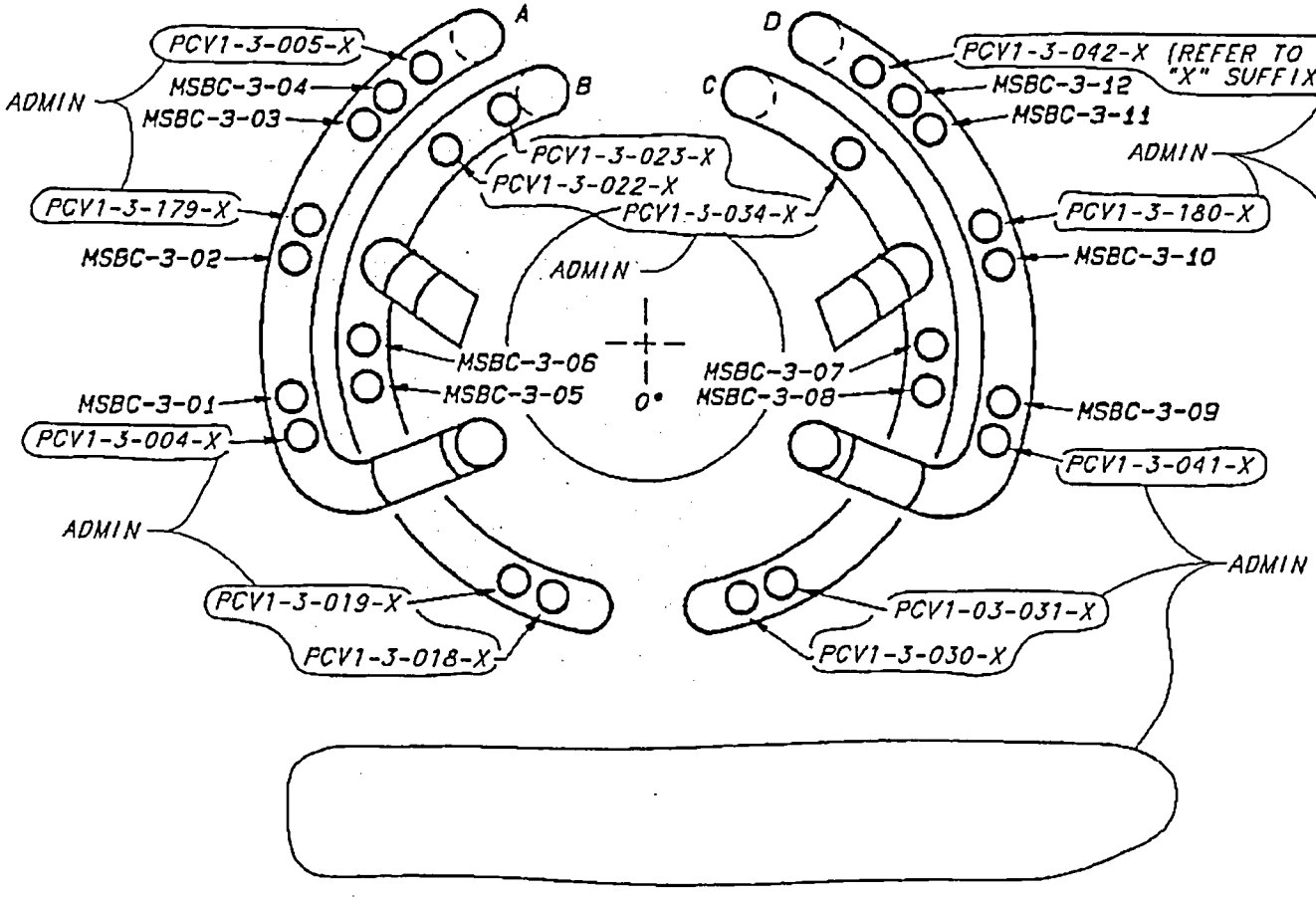

NOTES:
1. THIS DRAWING SUPERCEDES 1S1-0022-A FOR UNIT 3 ONLY.
2. SUBSTITUTE "VBC" FOR "X" WHEN EXAMINING VALVE BODY BOLTING AND "PBC" FOR "X" WHEN EXAMINING VALVE TO PIPE BOLTING.

TENNESSEE VALLEY AUTHORITY

S BROWNS FERRY NUCLEAR PLANT
UNIT 3
MAINSTEAM SYSTEM
BOLTED CONNECTIONS

DRAWN: FHB	SUBMITTED	APPROVED	SCALE: NTS
DATE: 2-13-89	DATE: 5/16/89	DATE: 5/17/89	SHEET 1 OF 1 SHEET (S)
CHECKED:			DRAWING NO. 3-1S1-0313-B REV. 000
DATE: 5-8-89			

CCD

HARDWARE	TEKTRONIX 4129
SOFTWARE	TEKNICAD 8.2
FLOPPY OR TAPE #	FLOPPY #BF4

PCADAM

REV NO.	CHANGE REF	DATE	DFTR	CHKR	DSGN	RVWR	APPD	APPD	APPD	ISSD
000	CCD ADMIN		MLP		N/A		N/A	N/A		
	ISSUED TO CREATE CCD, SUPERSEDES A/D 1S1-0313-B-1 R1 AND TO DEPICT AS-CONSTRUCTED STATUS PER A/D R0; RIMS MEMO RSP 950604 050 (ADMINISTRATIVE REVISION)									

ALL A/D HISTORY RESEARCHED AT R000

NOTE:

1. PIPE SEGMENTS CONTAINING TWO LONGITUDINAL SEAMS WILL BE IDENTIFIED AS:

   (BASE WELD NO.)-LS-1D (DOWNSTREAM)
   (BASE WELD NO.)-LS-2D (DOWNSTREAM)
   (BASE WELD NO.)-LS-1U (UPSTREAM)
   (BASE WELD NO.)-LS-2U (UPSTREAM)

   THE -LS-1 SEAM WILL BE NUMERICALLY CLOSEST TO 0° ON THE PIPE AND THE -LS-2 SEAM WILL BE NUMERICALLY FARTHERMOST FROM 0° ON THE PIPE. (e.g. -LS-1 AT 130°, AND -LS-2 AT 310°)

2. PIPE SEGMENTS CONTAINING ONLY ONE LONGITUDINAL SEAM WILL BE IDENTIFIED AS:

   (BASE WELD NO.)-LS-D (DOWNSTREAM)
   (BASE WELD NO.)-LS-U (UPSTREAM)

3. FW NOZZLES (INNER RADIUS)
   N-4A-IR
   N-4B-IR
   N-4C-IR
   N-4D-IR
   N-4E-IR
   N-4F-IR

REFERENCE DRAWINGS

47K1545-1
47W935-2
GE 729E152
2-ISI-0277-C (SH. 1) SUPPORT MAP
THIS DRAWING SUPERCEDES CHM-2138-C
ALL SHEETS.

MATERIAL SPECIFICATIONS

A155 CL.1 GR.KCF70, OR A234 GFR.WPB,
OR A333 GR.6 SCH.100, OR A420 GR.WPL1
8" X 0.593" NOM. WALL
12" X 0.566" MIN. WALL
16" X 1.031" NOM. WALL (16" SCH 100)
20" X 0.842" MIN. WALL
24" X 0.994" MIN. WALL
26" X 0.994" MIN. WALL

NOTES

GE FIELD WELDS WERE MADE IN THE FIELD BY TVA

ASME CC-1 (EQUIVALENT)

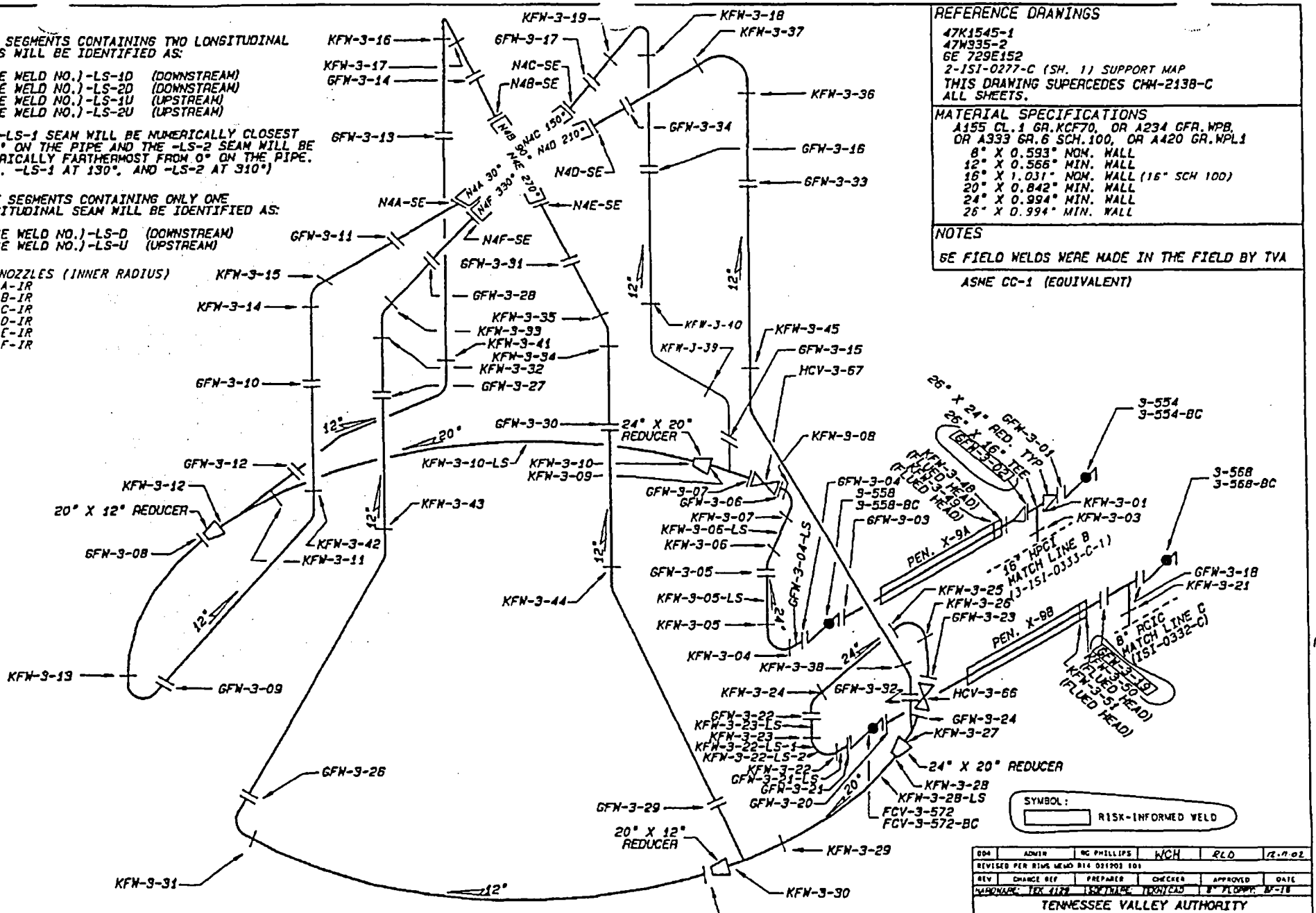

XFW-N-N
K=KELLOGG SHOPWELD
6=GE FIELD WELD
UNIT NO.
FEEDWATER
WELD NO.

004	ADMIN	RG PHILLIPS	WCH	RLD	12.11.02
REVISED PER RIMS MEMO R14 021203 101					
REV	CHANGE REF	PREPARER	CHECKER	APPROVED	DATE
HARDWARE: TEK 4128		SOFTWARE: TOPNICAD		8" PLOTTER: AF-18	

TENNESSEE VALLEY AUTHORITY

BROWNS FERRY NUCLEAR PLANT
UNIT 3
FEEDWATER SYSTEM
WELD LOCATIONS

DRAWN: PHB	SUBMITTED	APPROVED	SCALE: NTS
DATE: 8-7-88	DATE: 5-8-89	DATE: 5-17-89	SHEET 01 OF 01 SHEET(S)
CHECKED: WES	EDC	SLB	DRAW NO. 3-ISI-0327-C
DATE: 5-8-89			REV 004

CAD MAINTAINED DRAWING

CCD

ALL A/D HISTORY RESEARCHED AT RDDD

MF-R2

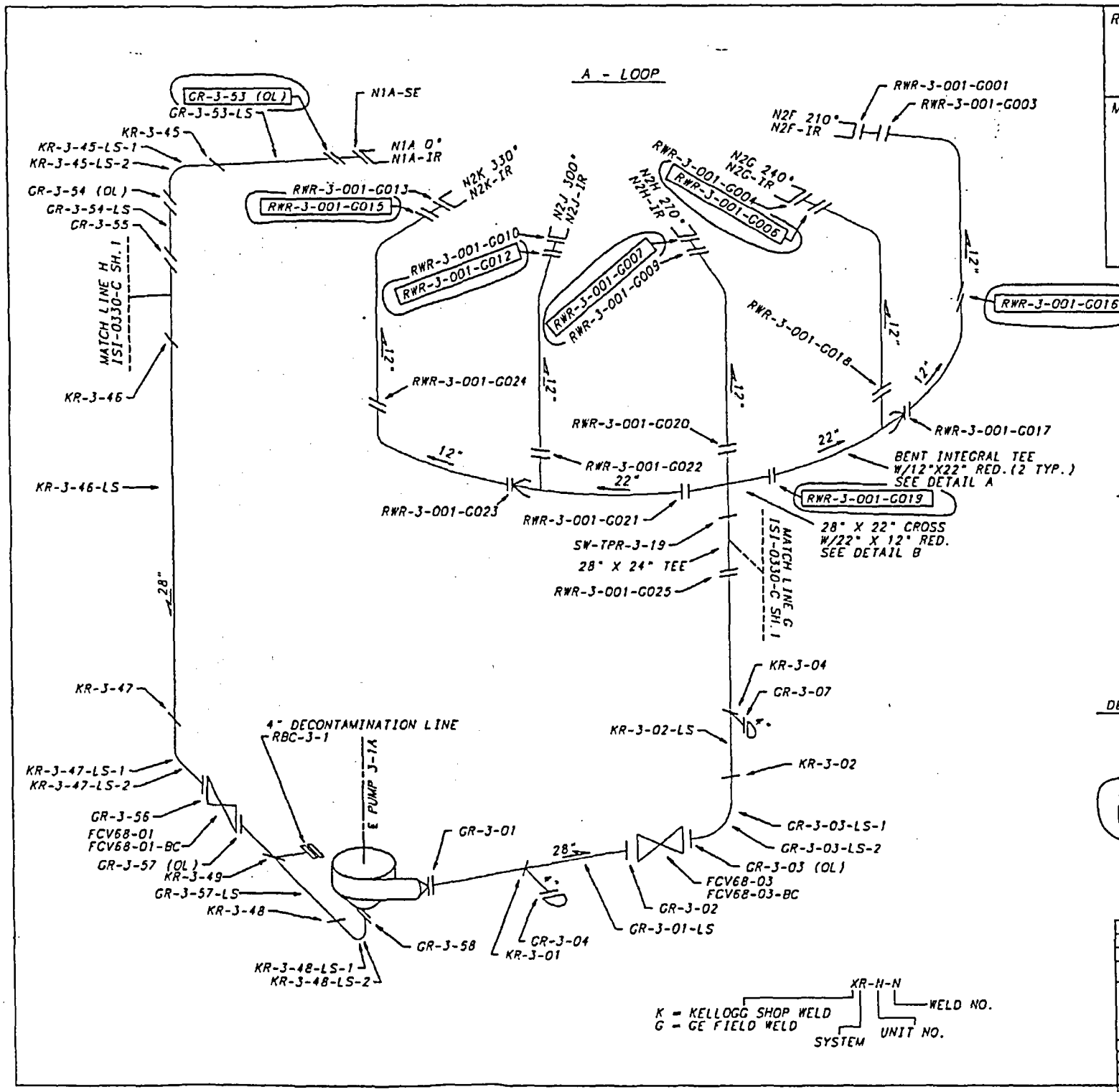

REFERENCE DRAWINGS:
TVA 47K1544-3
GE 153F754
KELLOGG BF 2-180
NOTE: THIS DRAWING SUPERSEDES CHM-2139-C ALL SHEETS

MATERIAL SPECIFICATIONS:
A378, TP 304
4" X 0.337" NOM WALL THK. (SS)
28" X 1.138" NOM. WALL THK. (SS) SUCTION
28" X 1.322" NOM. WALL THK. (SS) DISCHARGE

SA403 WP316NG
12" X 0.602" MIN. WALL
22" INTEGRAL RED. TEE 0.980" MIN. WALL
28" X 22" CROSS 0.980" MIN. WALL
28" X 24" INTEGRAL TEE X 1.272" MIN. WALL

ASME CC-1 (EQUIVALENT)

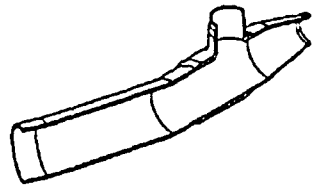

DETAIL A - ONE PEICE SPECIAL FORGING

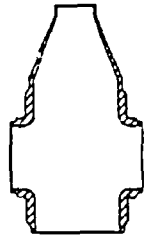

DETAIL B - ONE PEICE SPECIAL FORGING

SYMBOL:
RISK-INFORMED WELD

001	ADMIN	PG PHILLIPS	WCH	P&D	12-11-02
REVISED PER RIMS MEMO #14 021202 101					
REV	CHANGE REF	PREPARER	CHECKER	APPROVED	DATE

TENNESSEE VALLEY AUTHORITY

BROWNS FERRY NUCLEAR PLANT
UNIT 3
RECIRCULATION SYSTEM
WELD LOCATIONS

DRAWN: PHB	SUBMITTED	APPROVED	SCALE NTS
DATE: 4-4-89	DATE: 3-10-89	DATE: 3-10-89	SHEET 1 OF 2 SHEET(S)
CHECKED: JES	EDC	CLB	DRAWING NO. 3-1SI-0328-C REV 001
DATE: 3-3-89			

CAD MAINTAINED DRAWING

CCD

ALL A/D HISTORY RESEARCHED AT ROOO

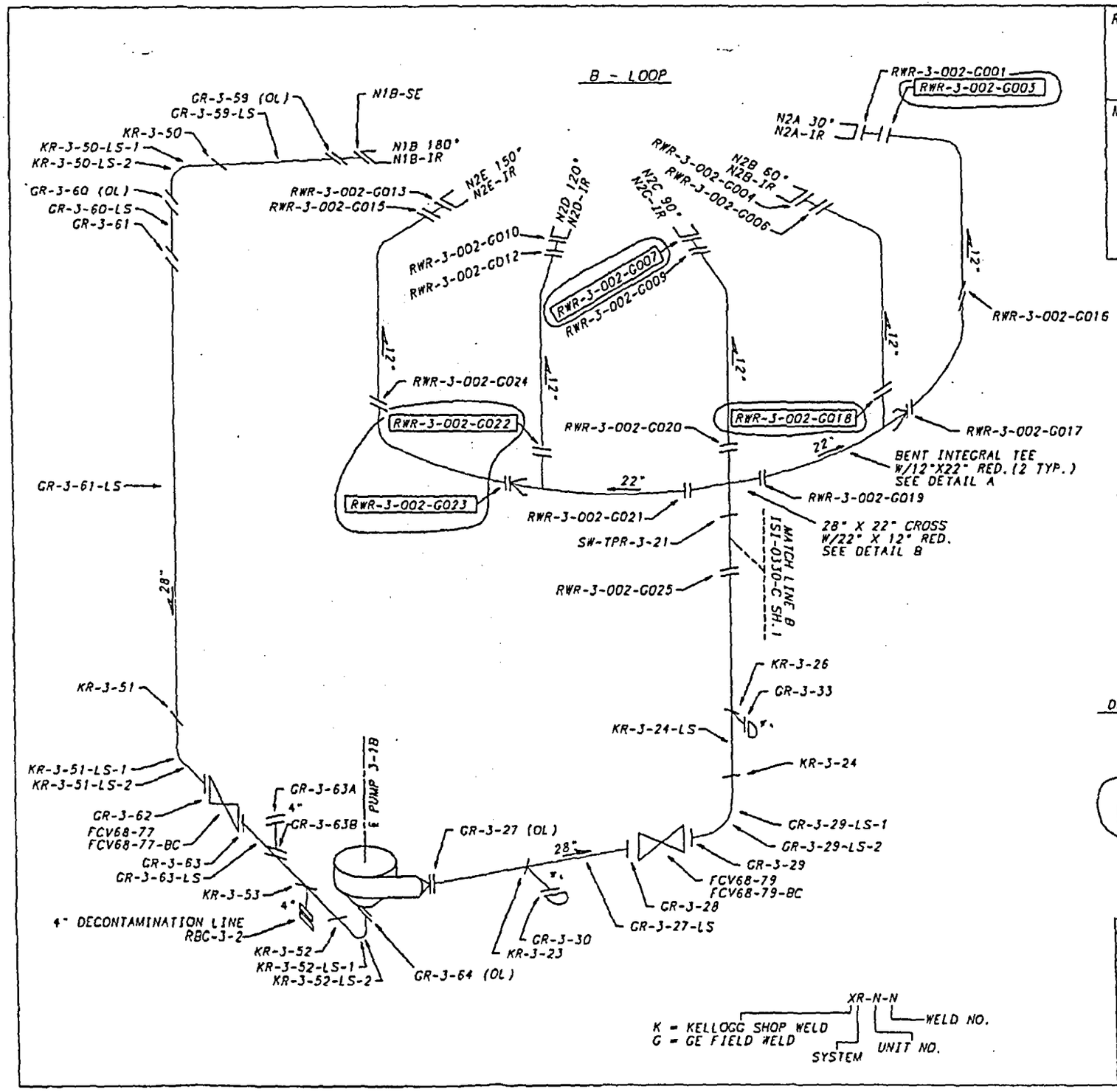

REFERENCE DRAWINGS:

TVA 47K1544-3
GE 153F754
KELLOGG BF 2-180
NOTE: THIS DRAWING SUPERSEDES CHM-2139-C ALL SHEETS

MATERIAL SPECIFICATIONS:

A378, TP 304
4" X 0.337" NOM WALL THK. (SS)
28" X 1.138" NOM. WALL THK. (SS) SUCTION
28" X 1.322" NOM. WALL THK. (SS) DISCHARGE

SA403 WP316NG

12" X 0.602" MIN. WALL
22" INTEGRAL RED. TEE 0.980" MIN. WALL
28" X 22" CROSS 0.980" MIN. WALL
28" X 24" INEGRAL TEE X 1.272" MIN. WALL

ASME CC-1 (EQUIVALENT)

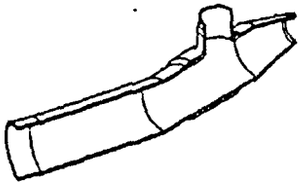

DETAIL A - ONE PEICE SPECIAL FORGING

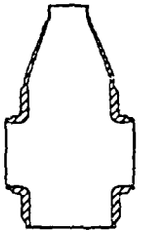

DETAIL B - ONE PEICE SPECIAL FORGING

SYMBOL:

RISK-INFORMED WELD

001	ADMIN	RC PHILLIPS	WCH	RLD	12-11-02
REVISED PER RIMS MEMO R14 021202 101					
REV	CHANGE REF	PREPARER	CHECKER	APPROVED	DATE

TENNESSEE VALLEY AUTHORITY

BROWNS FERRY NUCLEAR PLANT
UNIT 3
RECIRCULATION SYSTEM
WELD LOCATIONS

DRAWN: RNB	SUBMITTED	APPROVED	SCALE NTS
DATE: 4-6-89	DATE 5-8-89	DATE 5-12-89	SHEET 2 OF 2 SHEET(S)
CHECKED: JLS	EOC	GLB	DRAWING NO. 3-1SI-0328-C REV 001
DATE: 5-8-89			

CAD MAINTAINED DRAWING

CCD

ALL A/D HISTORY RESEARCHED AT RDOD

REFERENCE DRAWINGS:

47K1767
47W335-1
KELLOGG 729E229

NOTE: THIS DRAWING SUPERCEDES CHM-2140-C (SH. 1)

MATERIAL SPECIFICATIONS

A-155 GR.KC70 CL.1, OR A-516 0.950" MIN. WALL, OR A-106 GR.B SCH.80, OR A-234 GR.B (SCH.80 OR 0.950" MIN. WALL), OR A-105 GR.II (SCH. OR MIN. WALL TO SUIT PIPE), OR A-106 GR.B SCH. 160

6" X 0.719" NOM. WALL (SCH. 160)
26" X 0.950" MIN. WALL

NOTE:

ALL FIELD WELDS WERE MADE BY TVA

ASME CC-1 (EQUIVALENT)

NOTE:

1. PIPE SEGMENTS CONTAINING TWO LONGITUDINAL SEAMS WILL BE IDENTIFIED AS:

(BASE WELD NO.)-LS-1D (DOWNSTREAM)
(BASE WELD NO.)-LS-2D (DOWNSTREAM)
(BASE WELD NO.)-LS-1U (UPSTREAM)
(BASE WELD NO.)-LS-2U (UPSTREAM)

THE -LS-1 SEAM WILL BE NUMERICALLY CLOSEST TO 0° ON THE PIPE AND THE -LS-2 SEAM WILL BE NUMERICALLY FARTHERMOST FROM 0° ON THE PIPE. (e.g. -LS-1 AT 130°, AND -LS-2 AT 310°)

2. PIPE SEGMENTS CONTAINING ONLY ONE LONGITUDINAL SEAM WILL BE IDENTIFIED AS:

(BASE WELD NO.)-LS-D (DOWNSTREAM)
(BASE WELD NO.)-LS-U (UPSTREAM)

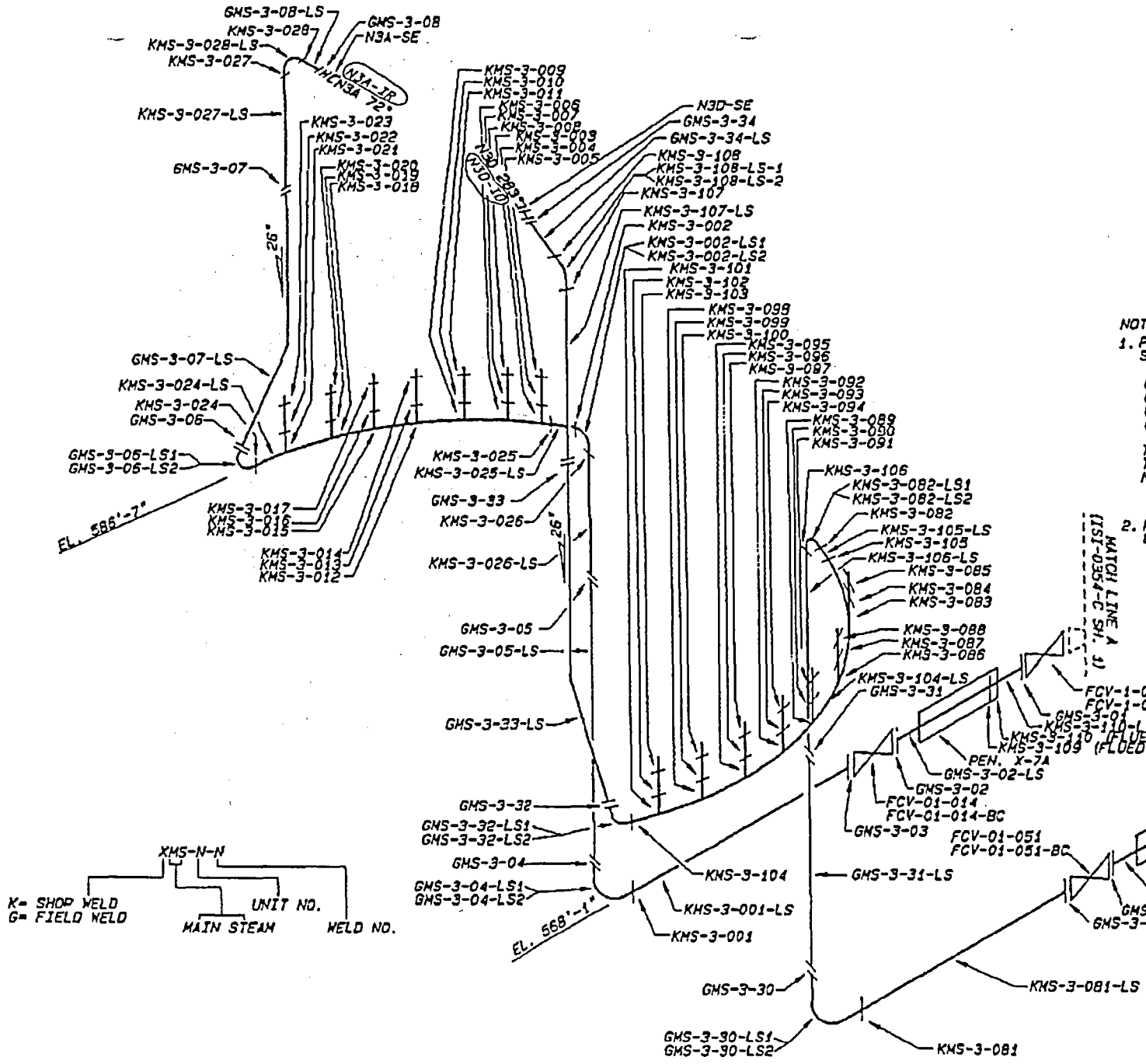

REV										
001	ADDED		SDL		N/A		N/A	N/A		
	REVISED PER RIS'S UPND R14 S70606 104									
SLV NO	CHANGE REF	DATE	DRTP	CHKR	DSCN	RVWR	1 APPD	2 APPD	3 APPD	ISSD

TENNESSEE VALLEY AUTHORITY

S

BROWNS FERRY NUCLEAR PLANT
UNIT 3
MAIN STEAM SYSTEM WELD LOCATIONS

DRAWN PHB	SUBMITTED	APPROVED	SCALE: NTS
DATE 8-8-89	DATE 5-8-89	DATE 5-17-89	SHEET 1 OF 2 SHEET (S)
CHECKED JLS	EDC	CLB	DRAWING NO. 3-ISI-0329-C
DATE 8-8-89			REV 001

CCD

PCADAM

ALL A/D HISTORY RESEARCHED @ RDOO

REFERENCE DRAWINGS:
47K1767
47W935-1
KELLOG 729E229

NOTE: THIS DRAWING SUPERCEDES CHM-2140-C (SH. 2)

MATERIAL SPECIFICATIONS:
A-155 GR.KC70 CL.1, OR A-516 0.950" MIN. WALL, OR A-106 GR.B SCH.80, OR A-234 GR.B (SCH.80 OR 0.950" MIN. WALL), OR A-105 GR.II (SCH. OR MIN. WALL TO SUIT PIPE), OR A-106 GR.B SCH. 160

6" X 0.719" NOM. WALL (SCH. 160)
10" X 0.594" NOM. WALL (SCH. 80)
26" X 0.950" MIN. WALL

NOTES:
ALL FIELD WELDS WERE MADE BY TVA

ASME CC-1 (EQUIVALENT)

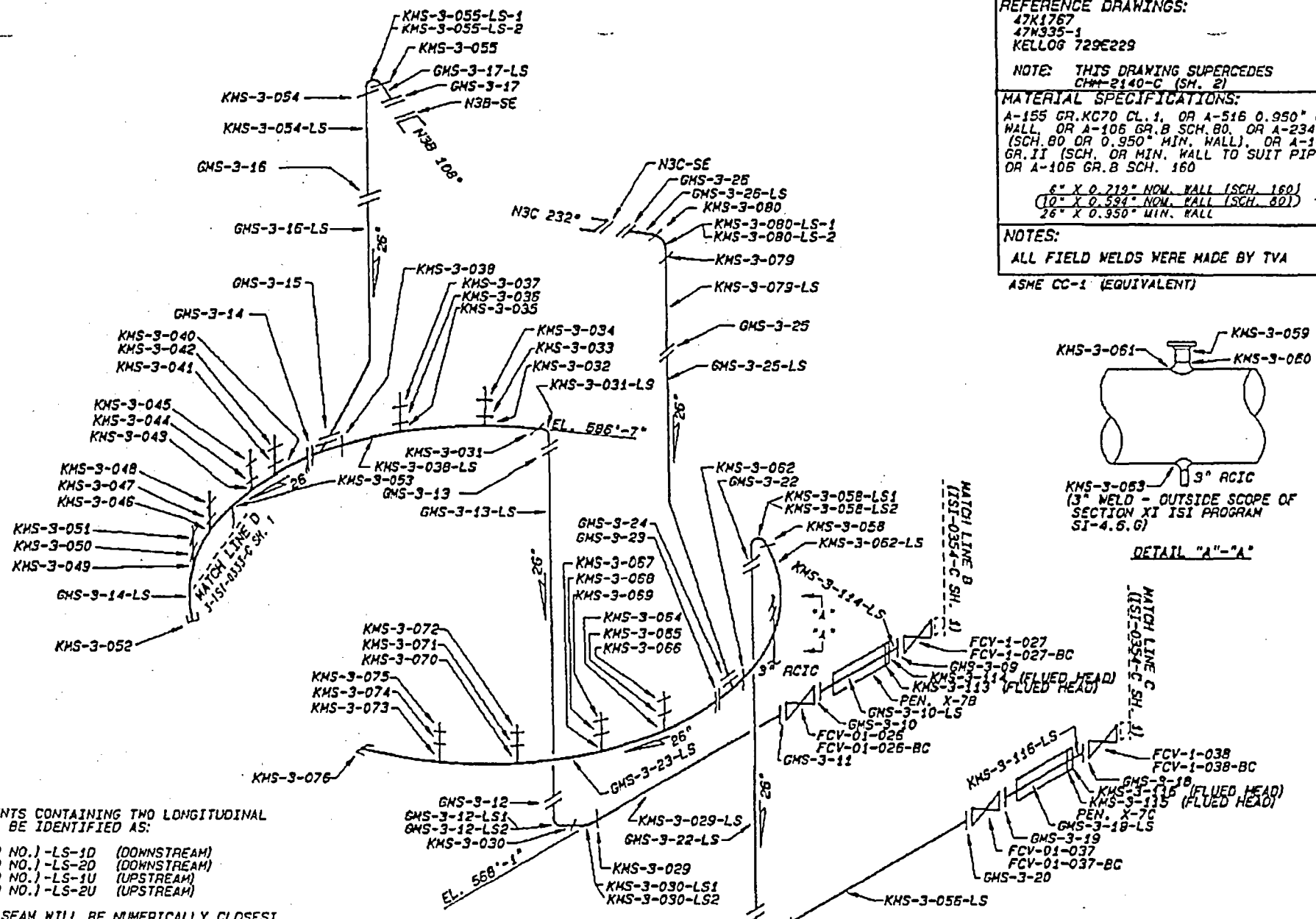

NOTE:

1. PIPE SEGMENTS CONTAINING TWO LONGITUDINAL SEAMS WILL BE IDENTIFIED AS:

   (BASE WELD NO.)-LS-1D (DOWNSTREAM)
   (BASE WELD NO.)-LS-2D (DOWNSTREAM)
   (BASE WELD NO.)-LS-1U (UPSTREAM)
   (BASE WELD NO.)-LS-2U (UPSTREAM)

   THE -LS-1 SEAM WILL BE NUMERICALLY CLOSEST TO 0° ON THE PIPE AND THE -LS-2 SEAM WILL BE NUMERICALLY FARTHERMOST FROM 0° ON THE PIPE. (e.g. -LS-1 AT 130°, AND -LS-2 AT 310°)

2. PIPE SEGMENTS CONTAINING ONLY ONE LONGITUDINAL SEAM WILL BE IDENTIFIED AS:

   (BASE WELD NO.)-LS-D (DOWNSTREAM)
   (BASE WELD NO.)-LS-U (UPSTREAM)

3. MS-NOZZLES (INNER RADIUS) N-3B-IR AND N-3C-IR

XMS-N-N
K = SHOP WELD
G = FIELD WELD
UNIT NO.
WELD NO.
MAIN STEAM

MF R2

000	CCD ADMIN			BDL		N/A		N/A	N/A	
	ISSUED TO CREATE CYD SUPERCEDED AS DESIGNED 1S1-0329-C.D 03 AND IS BASED AS CONSTRUCTED STATUS PER RIMS MEMO DIA 870605 341, A/D NO-R2									
REV NO.	CHANGE DIA	DATE	DFTR	CHKD	DSGN	RVWR	1 APPD	2 APPD	3 APPD	1990

S TENNESSEE VALLEY AUTHORITY

BROWNS FERRY NUCLEAR PLANT
UNIT 3
MAIN STEAM SYSTEM WELD LOCATIONS

DRAWN: RHB	SUBMITTED	APPROVED	SCALE: NTS
DATE: 8-13-85	DATE: 8-14-88	DATE: 8-14-88	SHEET 2 OF 2 SHEET(S)
CHECKED: WEB	EDC	GLB	DRAWING NO. 3-1SI-0329-C REV 000
DATE: 8-13-88			

CCD

PCADAM

ALL A/D HISTORY RESEARCHED AT R000

NOTE:

1. PIPE SEGMENTS CONTAINING TWO LONGITUDINAL SEAMS WILL BE IDENTIFIED AS:

   (BASE WELD NO.)-LS-1D (DOWNSTREAM)
   (BASE WELD NO.)-LS-2D (DOWNSTREAM)
   (BASE WELD NO.)-LS-1U (UPSTREAM)
   (BASE WELD NO.)-LS-2U (UPSTREAM)

   THE -LS-1 SEAM WILL BE NUMERICALLY CLOSEST TO 0° ON THE PIPE, AND THE -LS-2 SEAM WILL BE NUMERICALLY FARTHERMOST FROM 0° ON THE PIPE. (e.g. -LS-1 AT 130°, AND -LS-2 AT 310°)

2. PIPE SEGMENTS CONTAINING ONLY ONE LONGITUDINAL SEAM WILL BE IDENTIFIED AS

   (BASE WELD NO.)-LS-D (DOWNSTREAM)
   (BASE WELD NO.)-LS-U (UPSTREAM)

REFERENCE DRAWING

47N1568
47W335-4 & 6
47W452 SERIES
DRAVO E-2460-IC-31, 32, & 33

NOTE: THIS DRAWING SUPERCEDES CHM-2141-C ALL SHEETS.

MATERIAL SPECIFICATION:
A-358 GR 304 CL.1, OR A-403WP304, OR A-106 GR.B, OR SA376 TP 316NG

24" X 1.219" NOM. WALL THK. SCH. 80 SS
20" X 1.031" NOM. WALL THK. SCH. 80 SS
20" X 1.031" NOM. WALL THK. SCH. 80 CS
6" X 0.432" NOM. WALL THK. SCH. 80S SS

ASME CC-1 (EQUIVALENT)

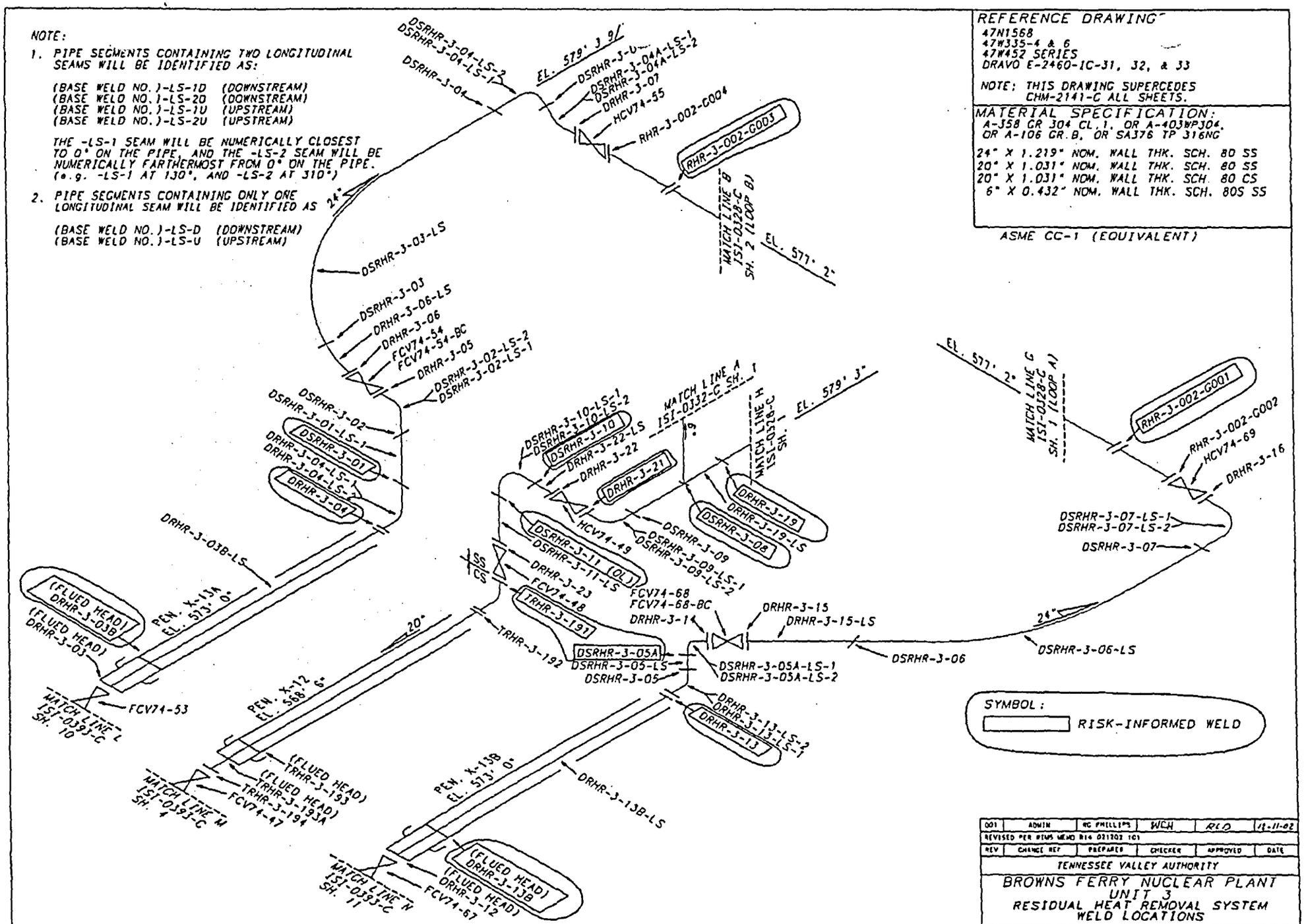

SYMBOL:

RISK-INFORMED WELD

001	ADMIN	RG PHILLIPS	WCH	RCD	12-11-02
REVISED PER RIMS MEMO R14 021202 101					
REV	CHANGE REF	PREPARED	CHECKED	APPROVED	DATE

TENNESSEE VALLEY AUTHORITY

BROWNS FERRY NUCLEAR PLANT
UNIT 3
RESIDUAL HEAT REMOVAL SYSTEM
WELD LOCATIONS

DRAWN: PHB	DATE: 3-17-89	SCALE: NTS	CADAM/ISICMP	
CHECKED: JCS	APPROVED: GLB	SHEET 01 OF 01		REV
SUBMITTED: EDC		3-ISI-0330-C		001

CAD MAINTAINED DRAWING

CCD

ALL A/D HISTORY RESEARCHED AT R000

REFERENCE DRAWINGS
TVA 47K1772
TVA 47W335-15
DRAVO 3-E-2460-IC-34-1
DRAVO 3-E-2460-IC-35-1

NOTE: THIS DRAWING SUPERSEDES CHW-2142-C ALL SHEETS

MATERIAL SPECIFICATIONS
A-333, GR.6 OR SA-420, GR.WPL6 OR SA333, GR.6 OR A-358, GR.304

12" X 0.688" NOM. WALL THK.
10" X 0.594" NOM. WALL THK.

ASME CC-1 (EQUIVALENT)

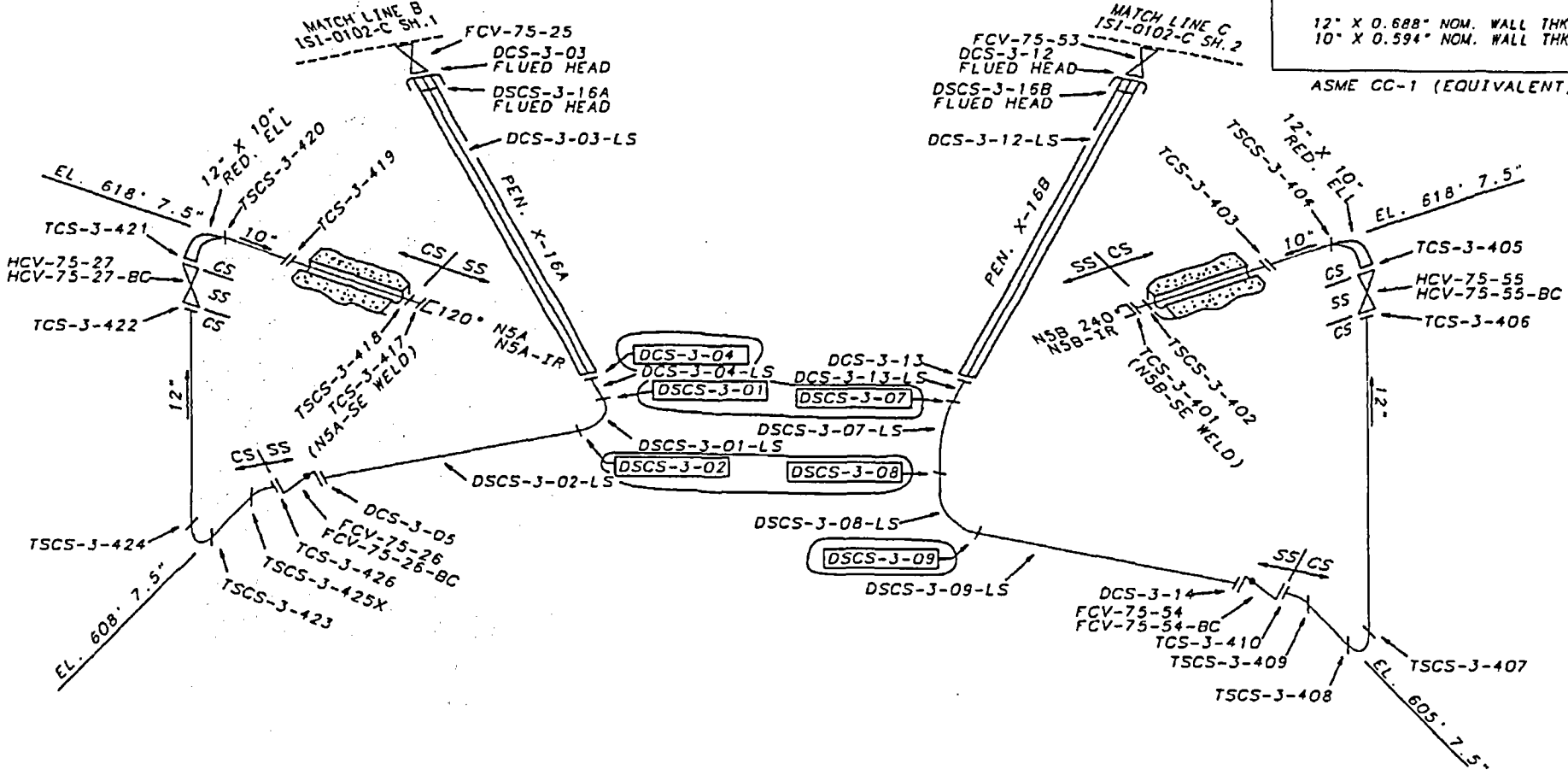

DXCS - N - N
CORE SPRAY
WELD NO.
UNIT NO.

D=DRAVO FIELD WELD
DS=DRAVO SHOP WELD
T=TVA FIELD WELD
TS=TVA SHOP WELD

NOTE:

1. PIPE SEGMENTS CONTAINING ONLY ONE LONGITUDINAL SEAM WILL BE IDENTIFIED AS

(BASE WELD NO.)-LS-D (DOWNSTREAM)
(BASE WELD NO.)-LS-U (UPSTREAM)

SYMBOL:
RISK-INFORMED WELD

REV	CHANGE REF	PREPARER	CHECKER	APPROVED	DATE
001	ADMIN	AG PHILLIPS	WCH	RLD	12-11-02
REVISED PER RIMS MEMO R14 021202 101					

TENNESSEE VALLEY AUTHORITY

BROWNS FERRY NUCLEAR PLANT
UNIT 3
CORE SPRAY SYSTEM
WELD LOCATIONS

DRAWN: FHB	DATE: 3-17-83	SCALE: NTS	CADAM/ISICAD
CHECKED: JES	APPROVED: CLB	SHEET 01 OF 01	REV
SUBMITTED: EOC		3-ISI-0331-C	001

CCD

ALL A/D HISTORY RESEARCHED AT ROOO

CAD MAINTAINED DRAWING

REFERENCE DRAWI

RWCU-3-001 (TVA WELD MAP)

NOTE:
THIS DRAWING SUPERSEDES A PORTION OF CHM-2144-C

MATERIAL SPECIFICATIONS

FITTINGS
6" SA403 WP316NG SCH. 80

PIPING
6" SA376 TP316NG SCH. 80

ASME CC-1 (EQUIVALENT)

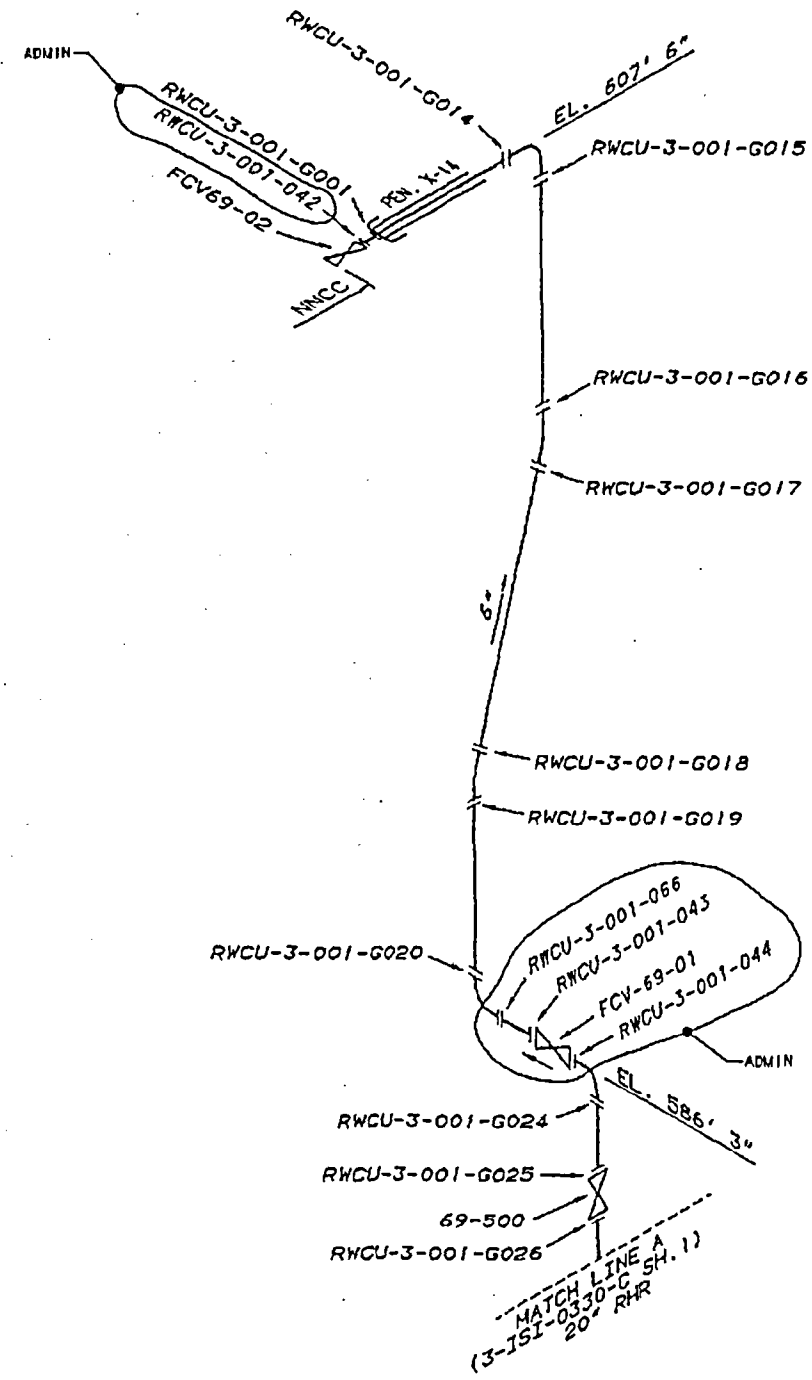

REV	CHANGE REF	PREPARER	CHECKER	APPROVED	DATE
000	CCD/ADMIN	RGP	JT	RLD/M	10-29-98

ISSUED TO CREATE CCD. SUPERSEDES A/D JSI-0332-C-1 RD3 AND TO DEPICT AS-CONSTRUCTED STATUS PER A/D RD-R2; REVISED PER RIMS MEMO R21 981013 003 (ADMINISTRATIVE REVISION)

TENNESSEE VALLEY AUTHORITY

BROWNS FERRY NUCLEAR PLANT
UNIT 3
REACTOR WATER CLEAN UP, RCIC, AND CRD
WELD IDENTIFICATION

DRAWN: PHB	DATE: 8-17-89	SCALE: NTS	CADAM/IGICAP
CHECKED: JES	APPROVED: CLB	SHEET 01 OF 02	REV
SUBMITTED: EDC		3-ISI-0332-C	000

CCD

PROCAD

ALL A/D HISTORY RESEARCHED AT RDOO

REFERENCE DRAWINGS
TVA 47W335-11
TVA 47W335-12
TVA 47K1847
3-ISI-0335-C (SH. 1) SUPPORT MAP

NOTE: THIS DRAWING SUPERSEDES CHM-2146-C ALL SHEETS

MATERIAL SPECIFICATIONS

(S) - DESIGNATES SHOP WELD

16" X 1.031" NOM. WALL THK. CS
14" X 0.938" NOM. WALL THK. CS
10" X 0.593" NOM. WALL THK. CS
4" X 0.375" NOM. WALL THK. CS

ASME CC-1 (EQUIVALENT)

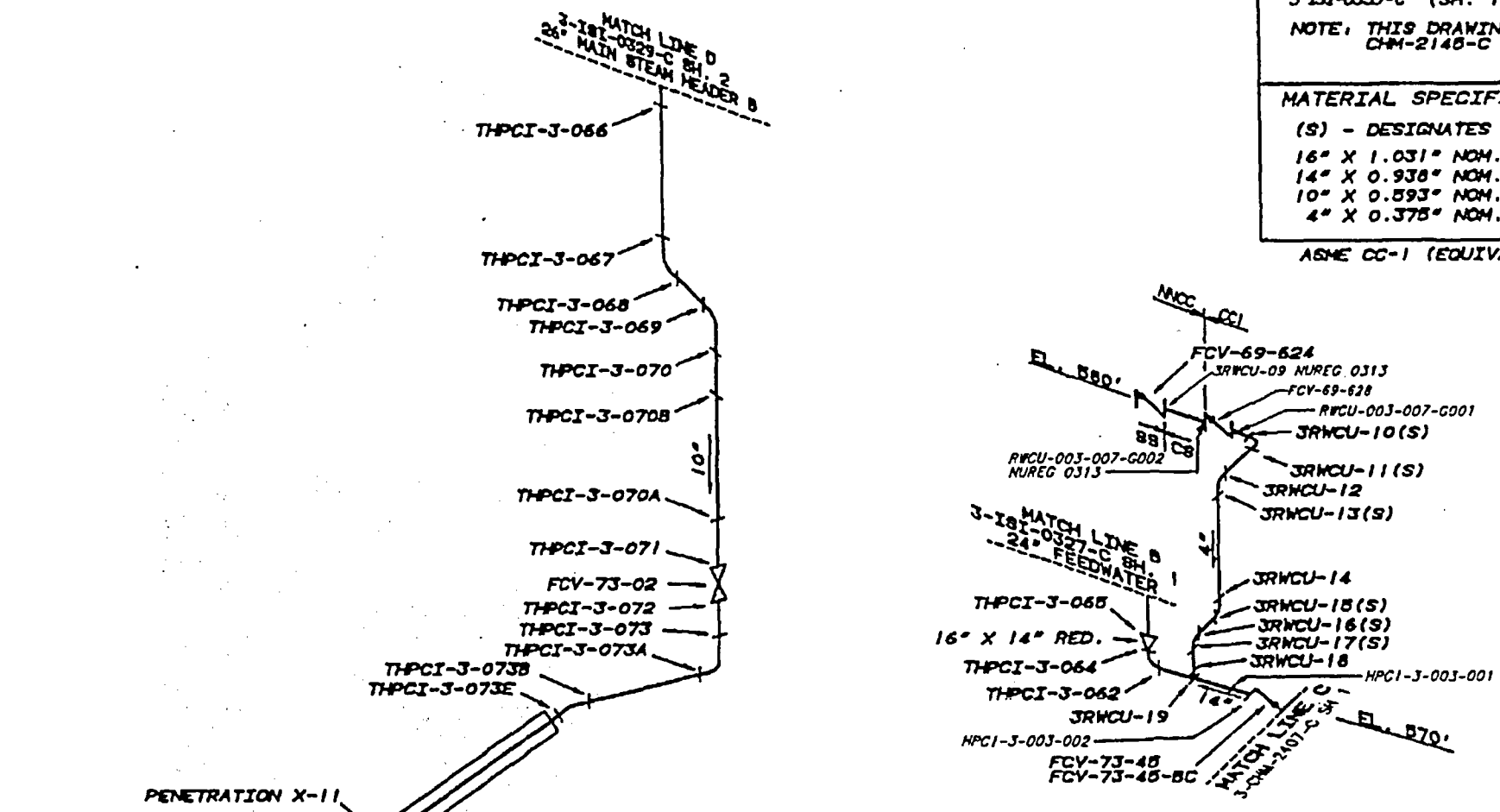

REV	CHANGE REF	PREPARER	CHECKER	APPROVED	DATE
004	ADMIN	J MCFARLAND	WC HODGES	DP Walker	3-14-2004
REVISED PER RIMS MEMO R14 040318 109					

TENNESSEE VALLEY AUTHORITY

BROWNS FERRY NUCLEAR PLANT
UNIT 3
HPCI AND RWCU SYSTEMS
WELD LOCATIONS

DRAWN: PHB | DATE: 8-19-89 | SCALE: NTS | DRAWING NO.
CHECKED: JEB | APPROVED: ELB | SHEET 01 OF 01 | REV
SUBMITTED: EDC | 3-ISI-0333-C | 004
CCO

CAD MAINTAINED DRAWING

ALL A/D HISTORY RESEARCHED AT R000

REFERENCE DRAWINGS
47W415
ISI-0327-C (WELD MAP)
NOTE: THIS DRAWING SUPERSEDES CHM-2148-C ALL SHEETS.

LEGEND
- GRATING
- CONSTANT SUPPORT
- RIGID SUPPORT
- VARIABLE SUPPORT
- HYDRAULIC SNUBBER
- MECHANICAL SNUBBER

CALCULATION BRANCH/PROJECT IDENTIFIER
CD-Q3003-910728
CD-Q3003-910729

ASME CC-1 (EQUIVALENT)

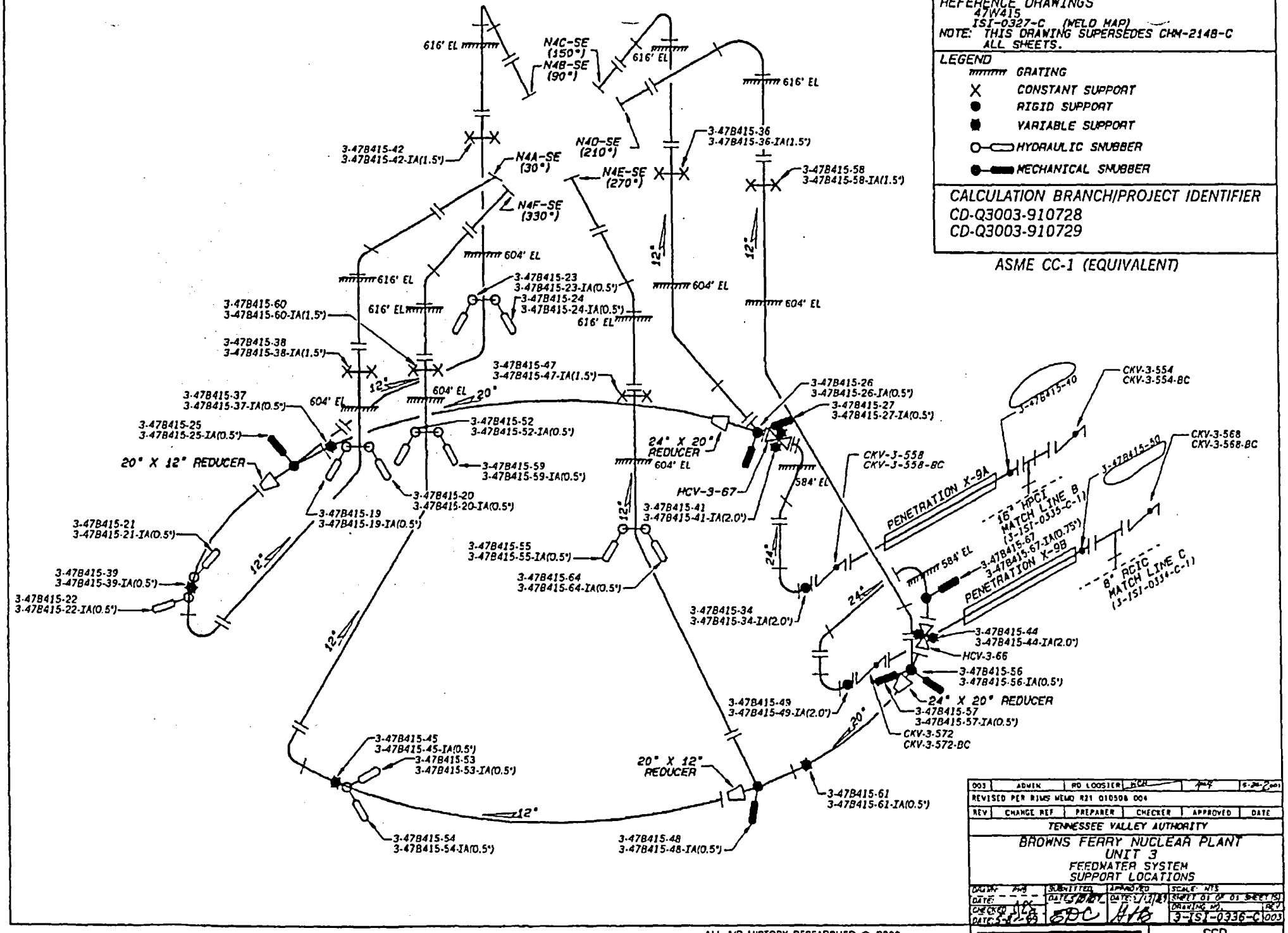

REV	CHANGE REF	PREPARER	CHECKER	APPROVED	DATE
003	ADMIN	RD LOOSIER	HCR		5-26-2001
REVISED PER RIMS MEMO R21 010508 004					

TENNESSEE VALLEY AUTHORITY

BROWNS FERRY NUCLEAR PLANT
UNIT 3
FEEDWATER SYSTEM
SUPPORT LOCATIONS

DRAWN: PHB DATE: 10/1/98
CHECKED: HLB DATE: 5-21-99
SUBMITTED: DATE: 5/21/99
APPROVED: DATE: 5/21/99
SCALE: NTS
SHEET 01 OF 01 SHEET(S)
DRAWING NO. 3-(S)-0336-C REV 003

CAD MAINTAINED DRAWING

CCD

AutoCAD

ALL A/D HISTORY RESEARCHED @ R000

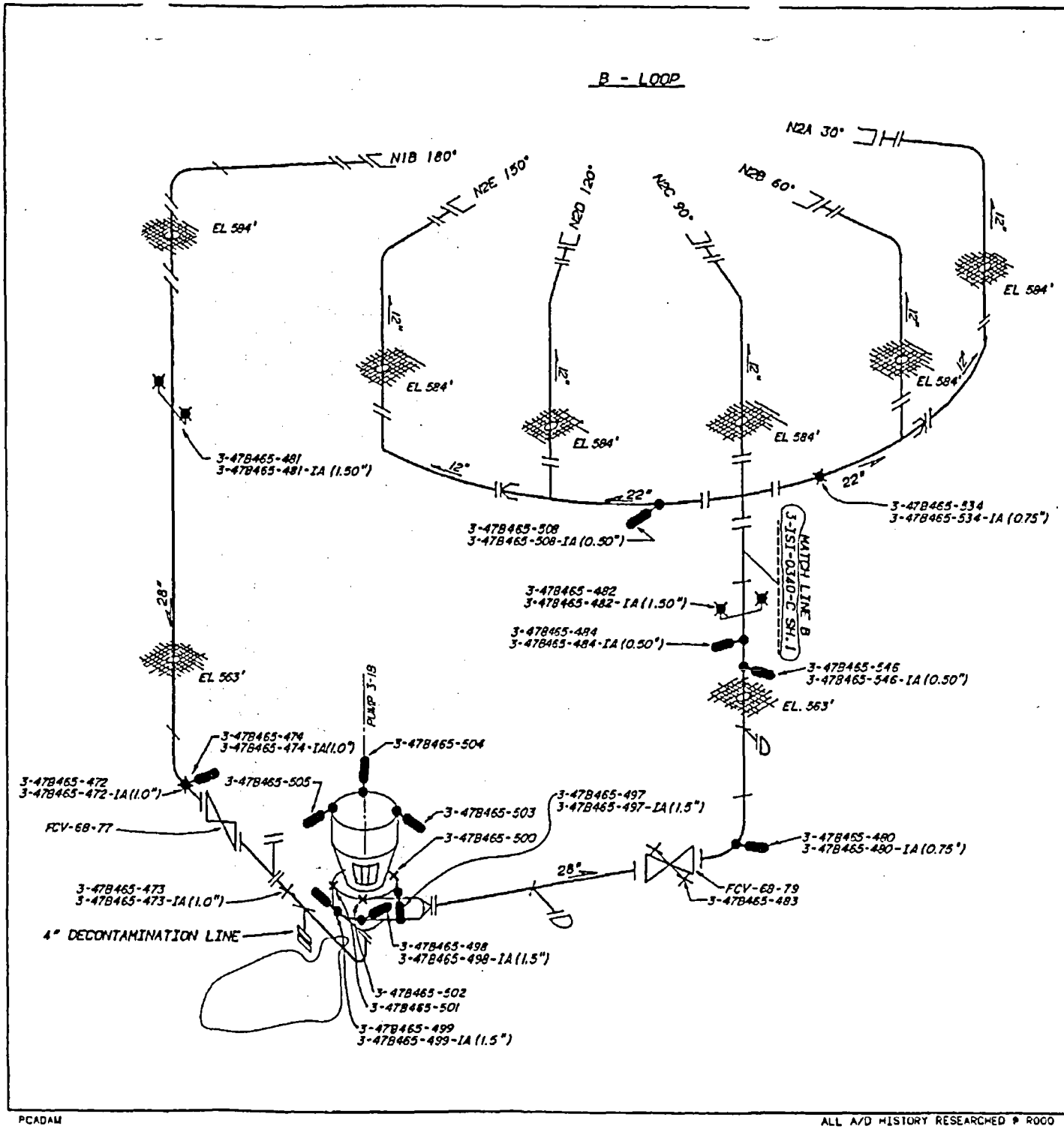

REFERENCE DRAWINGS:

TVA 47K1544-3
GE 729E461
KELLOGG BF 2-180
NOTE: THIS DRAWING SUPERSEDES CHM-2149-C ALL SHEETS

LEGEND:

- RIGID SUPPORT
- VARIABLE SUPPORT
- MECHANICAL SNUBBER
- CONSTANT FORCE SUPPORT (CF)
- RIGID STRUT

CALCULATION BRANCH/PROJECT IDENTIFIER:
CD-03068-922489
ASME - CC-1 (EQUIVALENT)

REV NO	CHANGE REF	DATE	DFTR	CHKR	DSGN	RVWR	APPD	APPD	APPD	ISSD
001	ADMIN	4-23-87	RDL	JT	R/A	RLD/N	R/A	R/A	RLB	RLB/D
	REVISED PER RIMS MEMO R14 870329 304 AND DRAWING REFERENCE									

TENNESSEE VALLEY AUTHORITY
DIVISION OF NUCLEAR ENGINEERING

S

BROWNS FERRY NUCLEAR PLANT
UNIT 3
RECIRCULATION SYSTEM
SUPPORT LOCATIONS

DRAWN: PHB	SUBMITTED	APPROVED	SCALE NTS
DATE: 4-3-89	DATE 5/10/89	DATE 5/11/89	SHEET 2 OF 2 SHEET(S)
CHECKED:			DRAWING NO. / REV.
DATE: 5-10-89			3-ISI-0337-C / 001

CCD

PCADAM

ALL A/D HISTORY RESEARCHED @ ROCO

REFERENCE DRAWINGS:
GE 729E401-1, 0-729E401-
3-ISI-0329-C SH. 1 (WELD LOCATIONS)
NOTE: THIS DRAWING SUPERCEDES CHN-2150-C SH. 1

LEGEND:
- RIGID SUPPORT
- VARIABLE SUPPORT
- HYDRAULIC SNUBBER
- CONSTANT SUPPORT
- MECHANICAL SNUBBER

CALCULATION BRANCH/PROJECT IDENTIFIERS:
CD-03001-910421
CD-03001-910436

ASME CC-1 (EQUIVALENT)

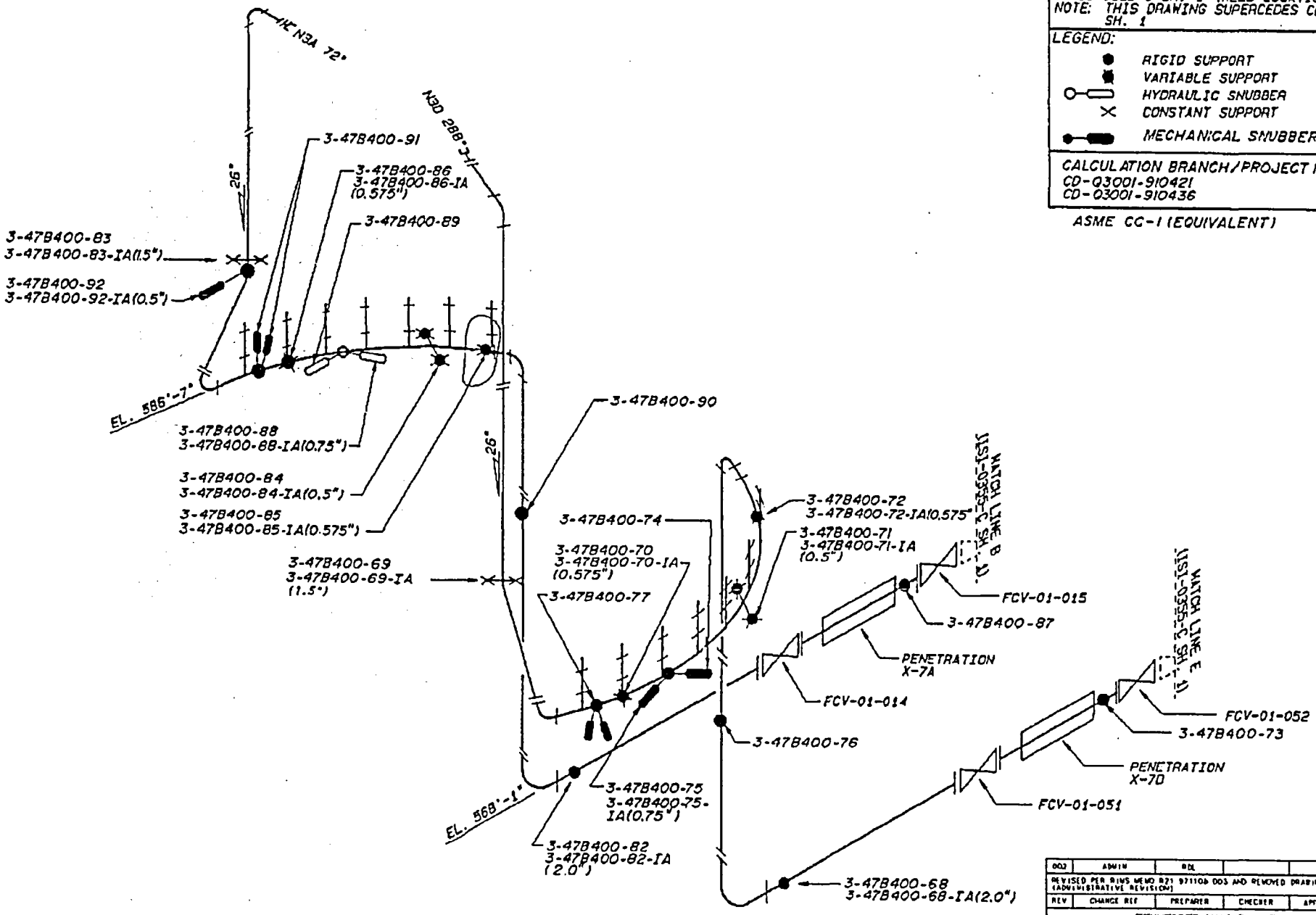

REV	CHANGE REF	PREPARER	CHECKER	APPROVED	DATE
002	ADMIN	RDL			
REVISED PER RIMS MEMO R21 971106 003 AND REMOVED DRAWING CLASSIFICATION (ADMINISTRATIVE REVISION)					

TENNESSEE VALLEY AUTHORITY

BROWNS FERRY NUCLEAR PLANT
UNIT 3
MAIN STEAM SYSTEM SUPPORT LOCATIONS

DRAWN PMB	SUBMITTED	APPROVED	SCALE NTS
DATE: 7-12-88	DATE: 5/12/89	DATE: 5/11/89	SHEET 1 OF 2 SHEET(S)
CHECKED:			DRAWING NO. 3-ISI-0329-C REV 002
DATE: 5-8-89			CCD

PCADAM

ALL A/D HISTORY RESEARCHED @ R000

REFERENCE DRAWINGS:
GE 729E401-1 (& 0-729E4)
ISI-0329-C SH. 2 (WELD ...)
NOTE: THIS DRAWING SUPERCEDES CHM-2150-C SH. 2

LEGEND:
- RIGID SUPPORT
- VARIABLE SUPPORT
- HYDRAULIC SNUBBER
- CONSTANT SUPPORT
- MECHANICAL SNUBBER

CALCULATION BRANCH/ PROJECT ID:
CD-Q3001-910569
CD-Q3001-910429

ASME CC-I (EQUIVALENT)

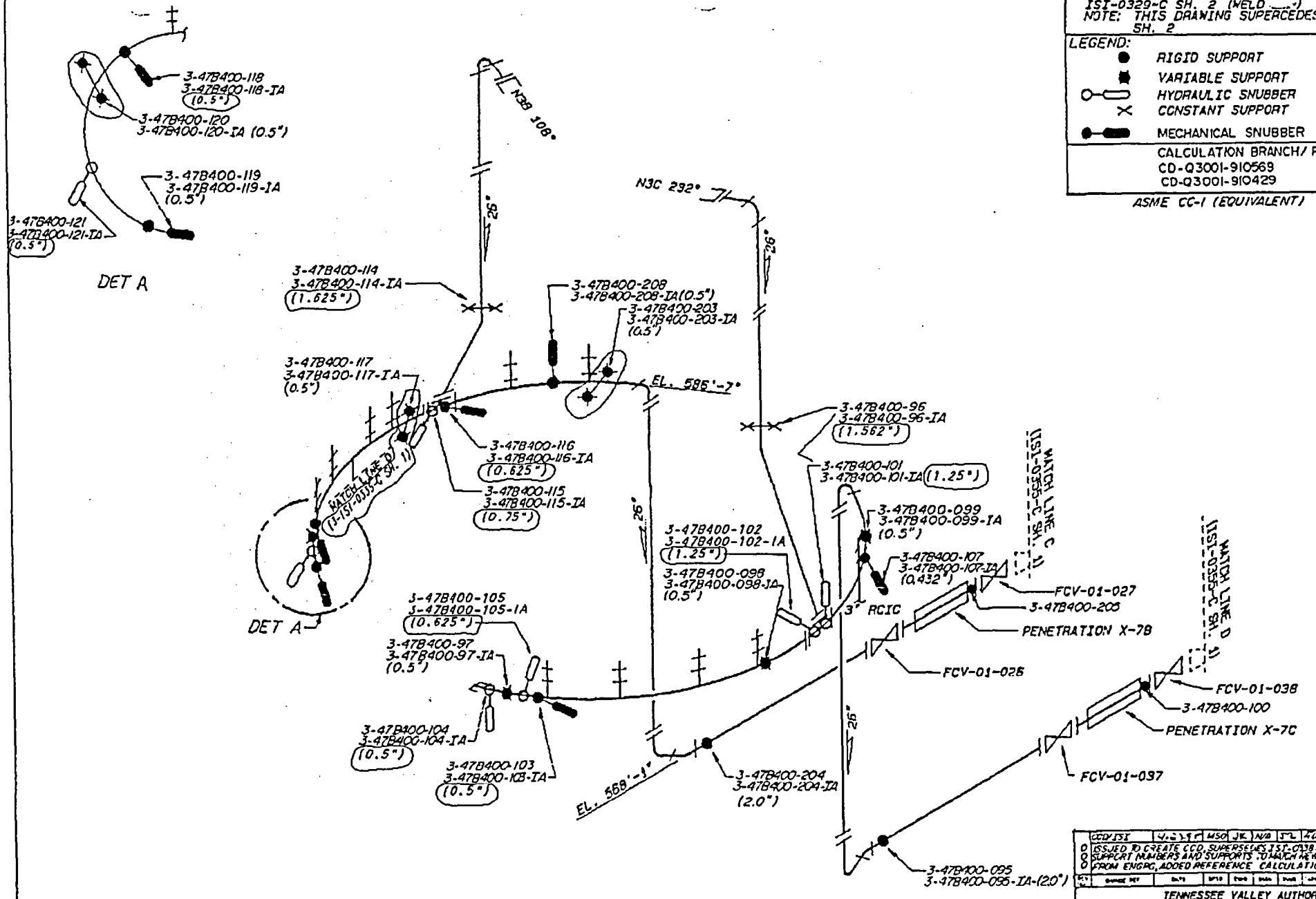

REV NO.	CHANGE REF	DATE	DFTR	CHKR	DSGN	RVWR	APPD	APPD	APPD	ISSD
001	ADMIN		RDL		N/A		N/A	N/A		
	REVISED SUPPORT TYPES AND ADDED INTEGRAL ATTACHMENT THICKNESS PER RIMS MEMO R92 960521 875; UPDATED REFERENCE DRAWINGS TO REFLECT UNITIZATION (ADMINISTRATIVE REVISION)									

REV NO.	CHANGE REF	DATE	DFTR	CHKR	DSGN	RVWR	APPD	APPD	APPD	ISSD
0	CCD/ISI			MSO	JK	N/A	JTL			
0	ISSUED TO CREATE CCD. SUPERSEDES ISI-0338-C-2 POR. REVISED									
0	SUPPORT NUMBERS AND SUPPORTS TO MATCH NEW NUMBERS AND SPATS									
0	FROM ENGRG. ADDED REFERENCE CALCULATIONS (ISI REVISION)									

TENNESSEE VALLEY AUTHORITY

S

BROWNS FERRY NUCLEAR PLANT
UNIT 3
MAIN STEAM SYSTEM SUPPORT LOCATIONS

DRAWN PHB	SUBMITTED	APPROVED	SCALE: NTS
DATE: 3-12-88	DATE: 5/18/89	DATE: 5/18/89	SHEET 2 OF 2 SHEET (S)
CHECKED			DRAWING NO. 3-ISI-0338-C
DATE: 5-8-89			REV 001

CCD

PCADAM

ALL A/D HISTORY RESEARCHED & ROOD

NOTE: THIS DRAWING SUPERSEDES ISI-0160-A (UNIT 3)

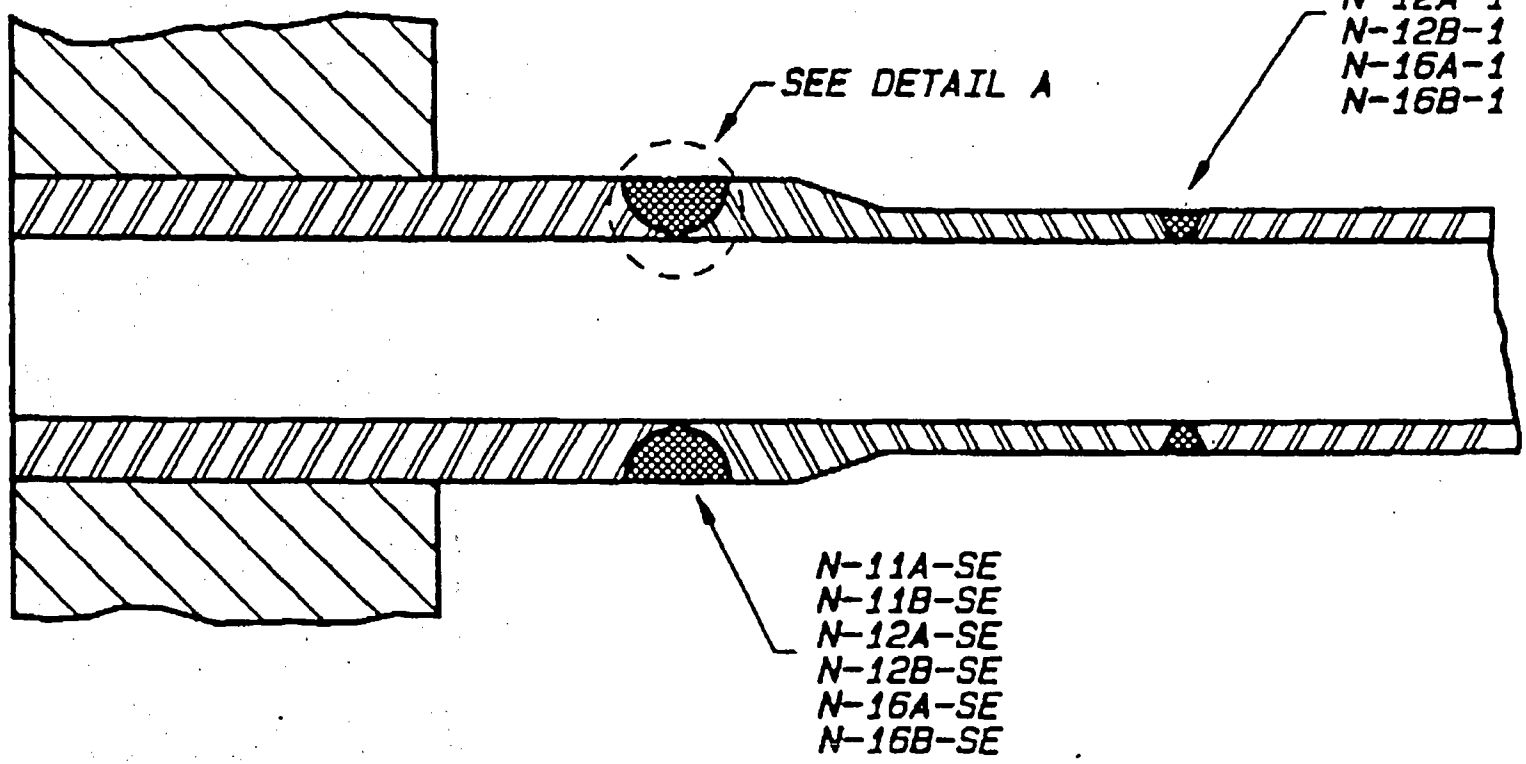

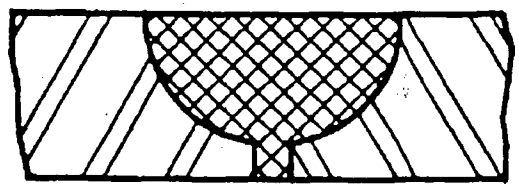

DETAIL A

REV	BY	DATE	DESCRIPTION	CK'D	SUP'D	APP'D

TENNESSEE VALLEY AUTHORITY

BROWNS FERRY NUCLEAR PLANT
UNIT 3

INSTRUMENTATION NOZZLES
WELD LOCATIONS

DRAWN: PHB	SUBMITTED:	APPROVED:	SCALE: NTS
DATE: 10-11-88	DATE: 3/23/89	DATE: 3/29/89	SHEET 1 OF 1 SHEET(S)
CHECKED:			DRAWING NO. ISI-0346-A
DATE: 3-3-89			REV. 00

REV	00		
HARDWARE	TEKTRONIX 4129		
SOFTWARE	TEKNICAD 8.2		
FLOPPY OR TAPE #	FLOPPY #BF22		

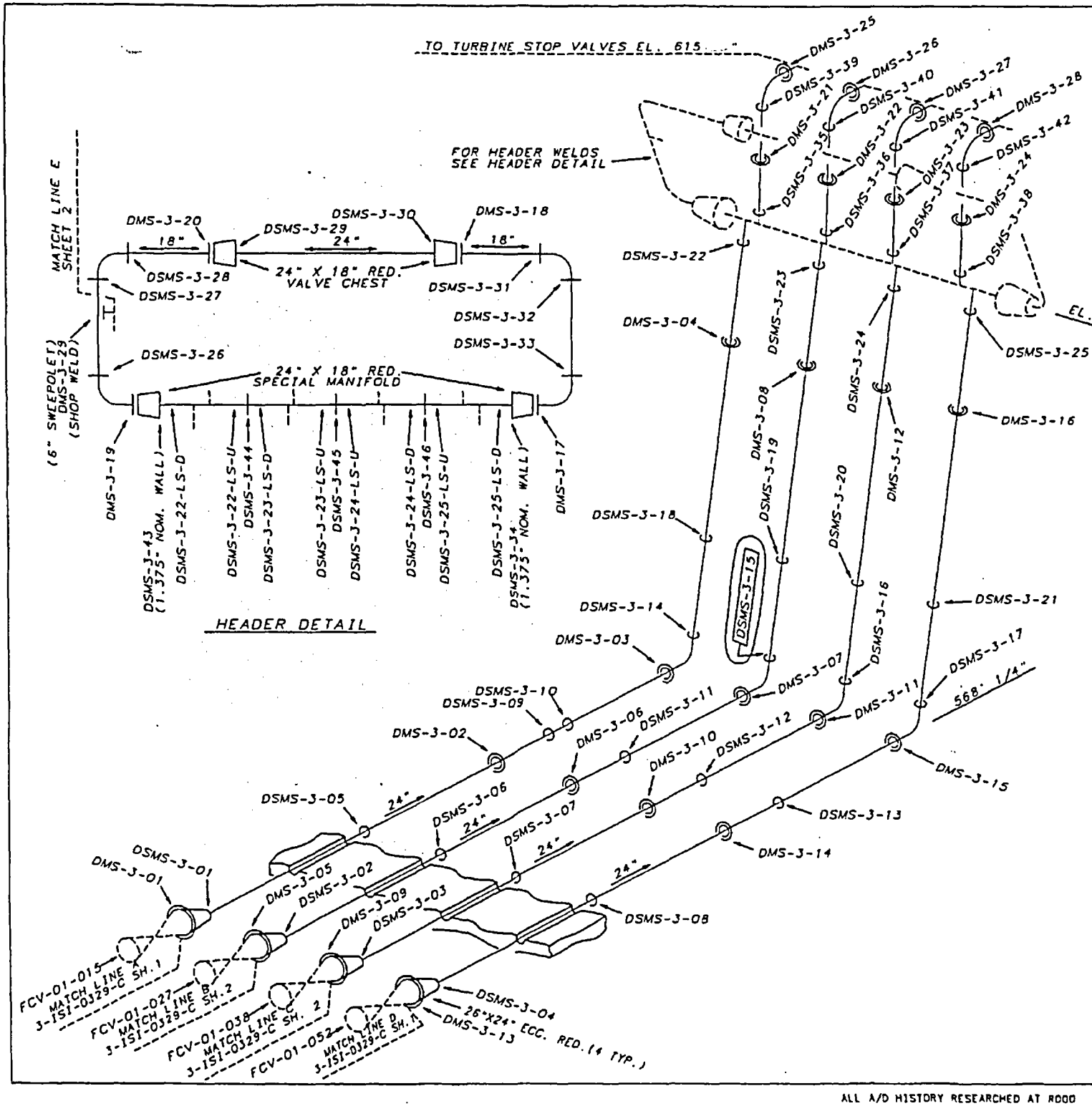

REFERENCE DRAWINGS
47W335-1
47W400 SERIES
47W801 SERIES
GE 9450695 (CONT. # 68-91062)
DRAVO E-2478 IC-1
TAYLOR FORGE 950037-1
NOTE: THIS DRAWING SUPERSEDES CHM-2405-C SH. 1

MATERIAL SPECIFICATIONS:
A515-70 SPECIAL MANIFOLD
24" X 1.375" NOM. WALL, CS

A-106-B
24" X 1.219" NOM. WALL THK. SCH. 80
24" X 2.5" NOM. WALL THK. CS
18" X 0.938" NOM WALL THK. SCH. 80

VALVE CHEST
24" NOM. DIA. X 2.500" WALL VALVE CHEST CS
26" X 1.219 " FITTINGS ASTM A234 GR. WPB

ASME CC-2 (EQUIVALENT)

SYMBOL: RISK-INFORMED WELD

REV	CHANGE REF	PREPARER	CHECKER	APPROVED	DATE
001	ADMIN	RC PHILLIPS	WCH	RLD	18-11-02
REVISED PER RIMS MEMO R14 021202 101					

TENNESSEE VALLEY AUTHORITY

BROWNS FERRY NUCLEAR PLANT
UNIT 3
MAIN STEAM SYSTEM
WELD LOCATIONS

DRAWN: PHB | DATE: 5-17-89 | SCALE: NTS | CADAM/ISICM
CHECKED: JES | APPROVED: CLB | SHEET 01 OF 02 | REV
SUBMITTED: EOC | 3-ISI-0354-C | 001

CAD MAINTAINED DRAWING | CCD

ALL A/D HISTORY RESEARCHED AT ROOO

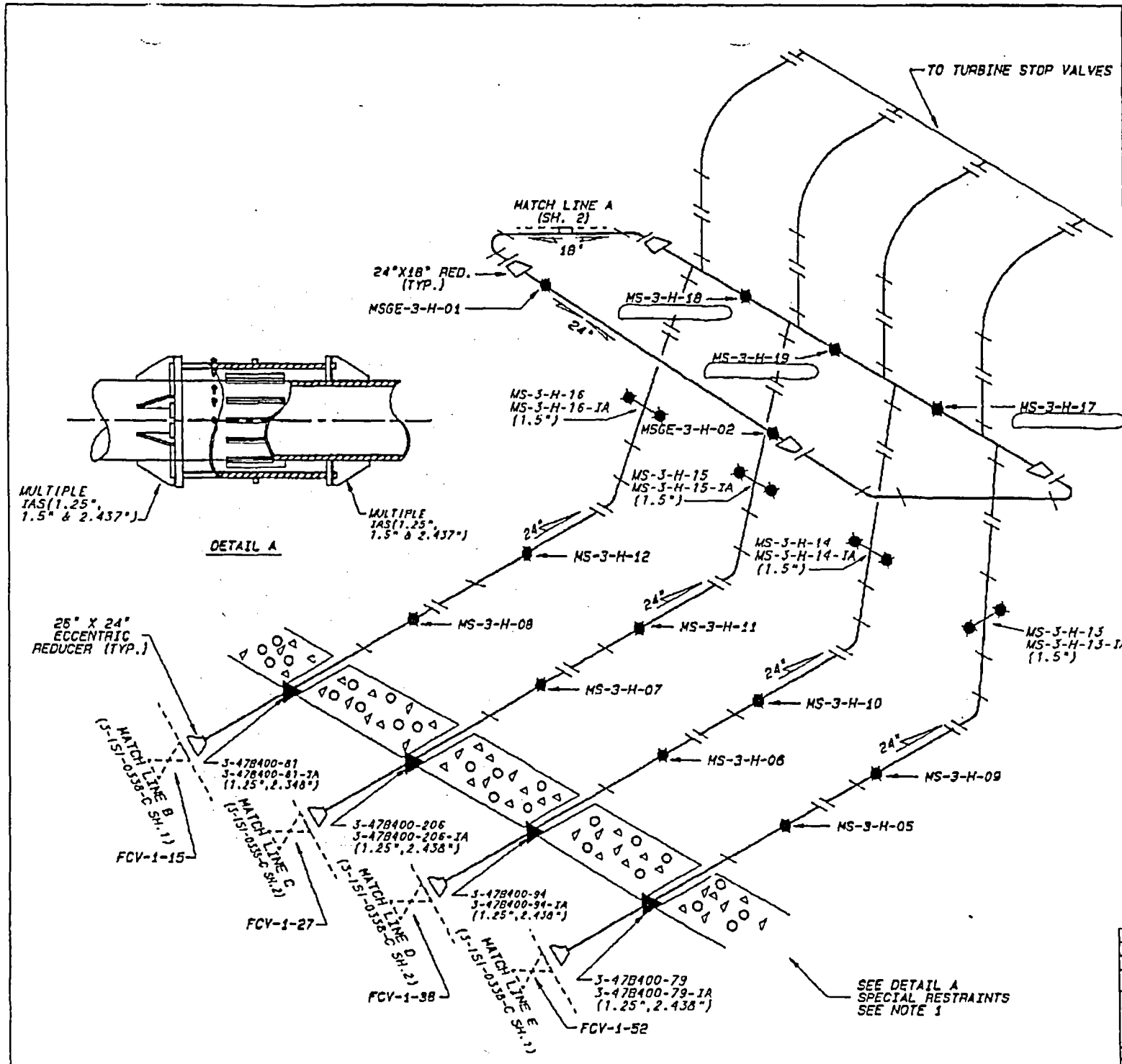

REFERENCE DRAWINGS

BP-201-3
0-47W400 SH. 1 & 5
DRAWO E-2479-IC-1
ISI-0354-C (SH. 1) WELD MAP
NOTE: THIS DRAWING SUPERSEDES CHM-2411-C SH. 1

LEGEND

- RIGID SUPPORT
- VARIABLE SUPPORT
- ANCHOR

CALCULATION BRANCH PROJECT IDENTIFIERS

CD-03001-910436
CD-03001-910569
CD-03001-910429
CD-03001-910421

ASME CC-2 (EQUIVALENT)

NOTES:

1. REFERENCE SI-4.6.G. REQUEST FOR RELIEF ISI-11 DRAWING NO. 0-47W400 SH. 1 & 5
2. IN DETAIL A THE X CORRESPONDS TO THE SUPPORT NUMBER.

REV	CHANGE REF	PREPARER	CHECKER	APPROVED	DATE
003	ADMIN	PML	JT	RDM	10-29-98
REVISED PER RIMS MEMO 921 981813 003 AND REMOVED DRAWING CLASSIFICATION					

TENNESSEE VALLEY AUTHORITY

BROWNS FERRY NUCLEAR PLANT
UNIT 3
MAINSTEAM SYSTEM
SUPPORT LOCATIONS

DRAWN: PMB DATE 4-15-88	SUBMITTED DATE: 5/5/88	APPROVED DATE: 5/11/88	SCALE: NTS SHEET 1 OF 2 SHEET(S)
CHECKED: DEC DATE: 5-5-88			DRAWING NO. 3-ISI-0355-C REV 002

CCD

PCADAM

ALL A/D HISTORY RESEARCHED AT R000

REFERENCE DRAWIN'
112D3838 GE (84P6 135271)
769E957 GE (84P64-D335271)
ISI-0220-C (NOZZLE LOCATIONS)
RWR-3-003 (TVA WELD MAP)

NOTE:
THIS DRAWING SUPERSEDES
ISI-0152-A

MATERIAL SPECIFICATIONS
DISSIMILAR METAL WELD

ASME CC-1 (EQUIVALENT)

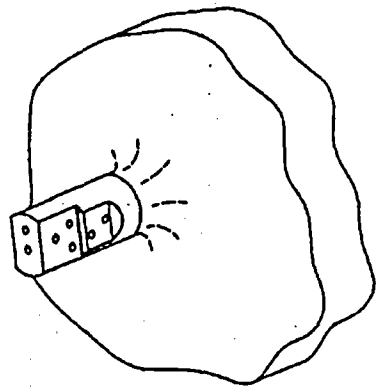

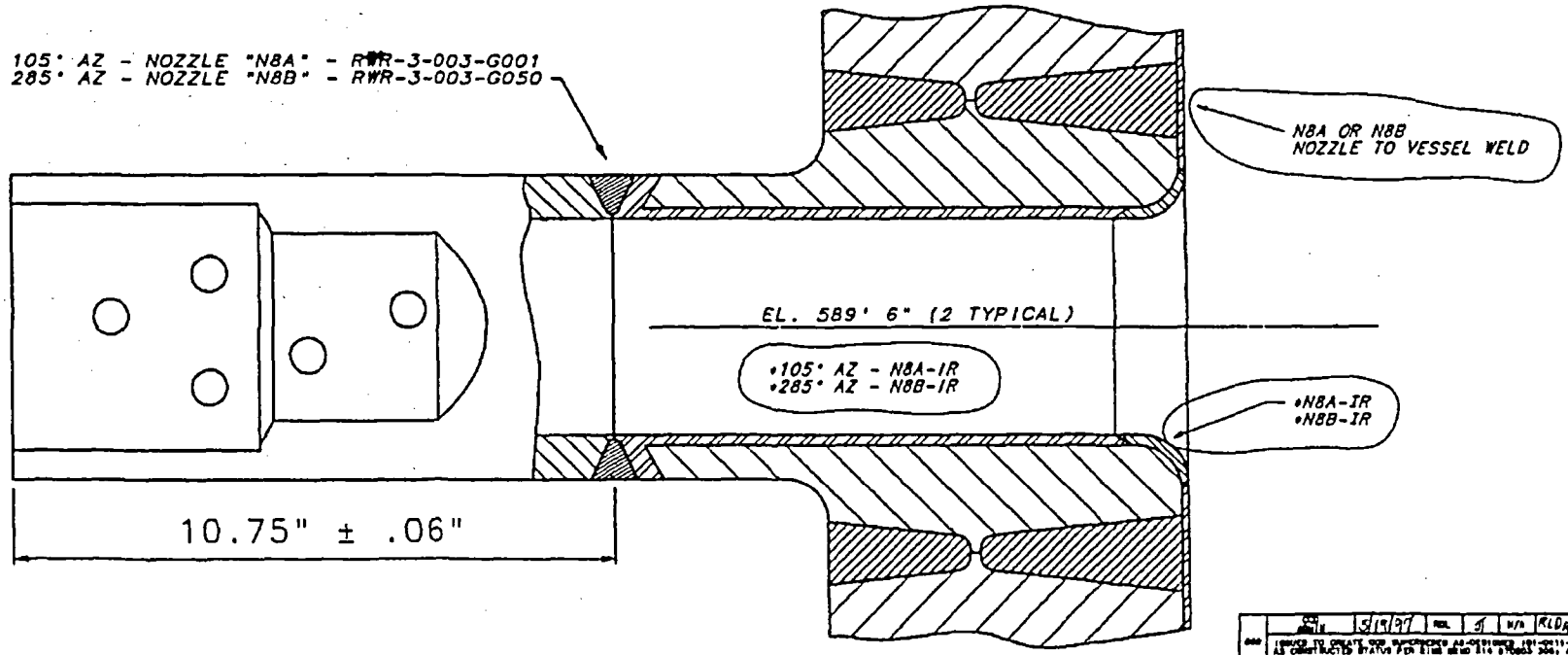

0748146862
BFND DRAWINGS
CC 3 3-ISI-0411-C
000001
051997 000

CONFORM

000	CCN 000116	5/19/97	REL	JI	N/A	RLDA	N/A	N/A	RLD	HLM	
	ISSUED TO CREATE CCD. INCORPORATED AD-0510002 (ISI-0411-C-1 S3 AND TS DEF101 AS CONSTRUCTED STATUS FOR ERIN BRID 514 STUDIES 2001, A/D 90-01										
REV NO	CHANGE REF	DATE	DFTR	CHKR	DSGN	RVWR	1 APPD	2 APPD	3 APPD	ISSD	
S	TENNESSEE VALLEY AUTHORITY										

BROWNS FERRY NUCLEAR PLANT
UNIT 3
JET PUMP INSTRUMENTATION NOZZLE
WELD LOCATIONS

DRAWN: PHB	DATE: 2-28-92	SCALE: NTS	CADAM/ISICMP
CHECKED: RPG	APPROVED: CLB	SHEET 01 OF 01	REV
SUBMITTED: JES		3-ISI-0411-C	000
		CCD	

PCADMA

ALL A/D HISTORY RESEARCHED AT ROOO

OWNER: TENNESSEE VALLEY AUTHORITY OFFICE OF NUCLEAR POWER 1101 MARKET STREET CHATTANOOGA, TENNESSEE 37402	PLANT: BROWNS FERRY NUCLEAR PLANT P.O. BOX 2000 DECATUR, ALABAMA 35609-2000
UNIT: THREE	CERTIFICATE OF AUTHORIZATION: NOT REQUIRED.
COMMERCIAL SERVICE DATE: MARCH 1, 1977	
NATIONAL BOARD NUMBER FOR UNIT: NOT REQUIRED.	

APPENDIX VI

SUMMARY OF INDICATIONS

OWNER: TENNESSEE VALLEY AUTHORITY OFFICE OF NUCLEAR POWER 1101 MARKET STREET CHATTANOOGA, TENNESSEE 37402	PLANT: BROWNS FERRY NUCLEAR PLANT P.O. BOX 2000 DECATUR, ALABAMA 35609-2000
UNIT: THREE	CERTIFICATE OF AUTHORIZATION: NOT REQUIRED.
COMMERCIAL SERVICE DATE: MARCH 1, 1977	
NATIONAL BOARD NUMBER FOR UNIT: NOT REQUIRED.	

Summary of Indications

Indications detected during the performance of examinations for Browns Ferry Nuclear Plant Unit 3 Cycle 12 were evaluated in accordance with approved written procedures. Generally, examination results yielded either No Recordable Indications (NRI) or Recordable Indications.

Recordable Indications were evaluated to determine their origin. Indications determined to be of a geometric, metallurgical, or similar origin were typically dispositioned as non-relevant. Indications determined to be of a non-geometric, non-metallurgical, or similar origin were typically dispositioned as relevant. Such indications required additional measures such as further evaluation in accordance with ASME Section XI acceptance standards, engineering analysis, repair, or replacement.

NOI No.	Code Cat.	Component Identifier	Indication Description	Resolution	Additional samples
U3C12-002	F-A	3-47B400-82	BOLT MISSING LOOSE BOLTING	EVALUATED ACCEPTABLE (No Corrective Measures Required)	NOT REQUIRED
U3C12-003	F-A	3-47B465-501	BENT AND DISTORTED STRUCTURAL STEEL	EVALUATED ACCEPTABLE (No Corrective Measures Required)	NOT REQUIRED
U3C12-004	F-A	3-47B465-502	CONSTANT FORCE SUPPORT HOUSING DENTED	EVALUATED ACCEPTABLE (No Corrective Measures Required)	NOT REQUIRED
U3C12-008	F-A	3-47B465-500	SPRING CAN OUT OF SETTING RANGE	EVALUATED ACCEPTABLE (No Corrective Measures Required)	NOT REQUIRED
U3C12-012	B-G-2	CRDN-3-3055-BC CRDN-3-4239-BC CRDN-3-4647-BC	UPSET/RAISED METAL ON HEAD OF BOLT	NOT SERVICE INDUCED REPLACE BOLTS (No Corrective Measures Required)	NOT REQUIRED
U3C12-015	F-A	MS-3-H-17	SPRING CAN OUT OF SETTING RANGE LOOSE BOLTING	EVALUATED ACCEPTABLE (No Corrective Measures Required)	NOT REQUIRED
U3C12-019	F-A	MS-3-H-13	LOOSE BOLTING/NUT MISSING	EVALUATED ACCEPTABLE (No Corrective Measures Required)	NOT REQUIRED
U3C12-022	B-N-2	RPV -INT-NBLR	ABNORMAL WEAR OF PIN ON FEEDWATER SPARGER END BRACKET AT 185'	REPAIRED IN ACCORDANCE WITH DCN# 66546	EXAMINED ALL SIX (6) FEEDWATER SPARGERS

ADDITIONAL SAMPLES

None

OWNER: TENNESSEE VALLEY AUTHORITY OFFICE OF NUCLEAR POWER 1101 MARKET STREET CHATTANOOGA, TENNESSEE 37402	PLANT: BROWNS FERRY NUCLEAR PLANT P.O. BOX 2000 DECATUR, ALABAMA 35609-2000
UNIT: THREE	CERTIFICATE OF AUTHORIZATION: NOT REQUIRED.
COMMERCIAL SERVICE DATE: MARCH 1, 1977	
NATIONAL BOARD NUMBER FOR UNIT: NOT REQUIRED.	

ATTACHMENT 1

SECTION 1

UNIT 3 CYCLE 12 AUGMENTED EXAMINATION SUMMARY

OWNER: TENNESSEE VALLEY AUTHORITY OFFICE OF NUCLEAR POWER 1101 MARKET STREET CHATTANOOGA, TENNESSEE 37402	PLANT: BROWNS FERRY NUCLEAR PLANT P.O. BOX 2000 DECATUR, ALABAMA 35609-2000
UNIT: THREE	CERTIFICATE OF AUTHORIZATION: NOT REQUIRED.
COMMERCIAL SERVICE DATE: MARCH 1, 1977	
NATIONAL BOARD NUMBER FOR UNIT: NOT REQUIRED.	

This section includes augmented examinations performed to comply with NRC or TVA self-imposed requirements. Typical sources include generic letters, IE Bulletins, technical specifications, vendor recommendations, and industry experience. The following summarizes the augmented examinations performed during the Unit 3 Cycle 12 Refueling Outage and references the corresponding paragraph in 3-SI-4.6.G.

Paragraph 7.11.3 Augmented Examination of Austenitic Stainless Steel and Dissimilar Metal Welds Susceptible to IGSCC (BWRVIP-75)

Austenitic stainless steel and dissimilar metal circumferential welds in piping four inches or larger in nominal pipe diameter which contain reactor coolant at temperatures above 200 degrees F during power operation shall be examined. There was no new IGSCC identified in Cycle 12.

Reference: BWRVIP-75

NUREG-0313 CATEGORY	TOTAL NUMBER OF WELDS	WELDS EXAMINED DURING U3/C12 Outage
A	71	0
B	N/A	N/A
C	79	4
D	2	0
E	10	3
F	N/A	N/A
G	2	2 (VT-2)

OWNER: TENNESSEE VALLEY AUTHORITY OFFICE OF NUCLEAR POWER 1101 MARKET STREET CHATTANOOGA, TENNESSEE 37402	PLANT: BROWNS FERRY NUCLEAR PLANT P.O. BOX 2000 DECATUR, ALABAMA 35609-2000
UNIT: THREE	CERTIFICATE OF AUTHORIZATION: NOT REQUIRED.
COMMERCIAL SERVICE DATE: MARCH 1, 1977	
NATIONAL BOARD NUMBER FOR UNIT: NOT REQUIRED.	

Paragraph 7.11.4 Reactor Pressure Vessel Interior

Augmented examinations of the RPV interior components are performed in accordance with 0-TI-365, Revision 20, Reactor Pressure Vessel Internals Inspection (RPVII) Units 1, 2 and 3. This is also reported in a separate report to the BWRVIP Committee.

Core Spray Internals Visual Examinations: BWRVIP-18-A

- Enhanced visual (EVT-1) examination of Piping T-Box Welds (Loops A and B) per BWRVIP-18-A - No recordable indications.
- EVT-1 examination of T-Box Repair Brackets, Arc Strike (117°), and Linear Indication (240°) - No change.
- Ultrasonic (UT) examination of Downcomer B Elbow Welds per BWRVIP-18-A - No recordable indications.
- UT examination of Downcomer A, B, D Sleeve Welds per BWRVIP-18-A - No recordable indications.

Core Plate Bolts and Core Plate PlugsVisual Examinations: BWRVIP-25

- VT-3 examination of Location 10 (Rim Holddown Bolts) performed per BWRVIP-25 for all 34 bolts - No recordable indications.
- VT-3 examination of Location 13 (Core Plate Plugs) performed per BWRVIP-25 for all accessible plugs - No loose plugs observed.

Core Shroud Welds - Ultrasonic (UT) Examinations: BWRVIP-76

- Horizontal Welds H1 thru H7 and Vertical Welds V5 & V6 to be reinspected (UT examination) per BWRVIP-76.
- Welds H6 and H7 were at the end of their 10-year reinspection interval. Due to mechanical and physical accessibility problems with the UT inspection equipment, inspected length (ONE-SIDED) of both the H6 (24.41 percent) and H7 (19.44 percent) Welds was less than the BWRVIP-76 mandated minimum of 50 percent. A plant-specific evaluation (Distributed Ligament Length (DLL) analysis) was completed for Welds H6 and H7 to demonstrate adequate structural margin exists for continued operation through the U3C13 Fuel Cycle.

OWNER: TENNESSEE VALLEY AUTHORITY OFFICE OF NUCLEAR POWER 1101 MARKET STREET CHATTANOOGA, TENNESSEE 37402	PLANT: BROWNS FERRY NUCLEAR PLANT P.O. BOX 2000 DECATUR, ALABAMA 35609-2000
UNIT: THREE	CERTIFICATE OF AUTHORIZATION: NOT REQUIRED.
COMMERCIAL SERVICE DATE: MARCH 1, 1977	
NATIONAL BOARD NUMBER FOR UNIT: NOT REQUIRED.	

Core Shroud Welds - Ultrasonic (UT) Examinations (cont'd): BWRVIP-76

A deviation disposition has been prepared per BWRVIP-94 R1 and will be sent to the BWRVIP for documentation and distribution to other BWRVIP member utilities. In addition, a cover letter will be sent to the NRC notifying them of our deviation from BWRVIP guidelines.

- Both Horizontal Welds H6 and H7 will require reinspection using a two-sided UT technique during the U3C13 Refueling Outage (RFO) in 2008.
- The inspection interval for Horizontal Welds H1 through H5 and Vertical Welds V6 & V7 mandates reinspection no later than the U3C13 RFO in 2008. Attempts were made during the U3C12 RFO to obtain coverage of these welds so as to avoid mobilization costs during the U3C13 RFO. Results are as follows:
  - Horizontal Weld H1: 75.62 percent examined (ONE-SIDED), 5.65 percent flawed per examined weld length
  - Horizontal Weld H2: 86.10 percent examined (ONE-SIDED), 1.28 percent flawed per examined weld length
  - Horizontal Weld H3: Not examined this outage
  - Horizontal Weld H4: 15.92 percent examined (ONE-SIDED), 3.24 percent flawed per examined weld length
  - Horizontal Weld H5: Not examined this outage
  - Vertical Weld V6: Not examined this outage
  - Vertical Weld V7: Not examined this outage
- Horizontal Welds H1 thru H5 will require reinspection using a two-sided UT technique during the U3C13 RFO in 2008.
- Vertical Welds V6 and V7 will require reinspection using a one-sided UT technique during the U3C13 RFO in 2008.

OWNER: TENNESSEE VALLEY AUTHORITY OFFICE OF NUCLEAR POWER 1101 MARKET STREET CHATTANOOGA, TENNESSEE 37402	PLANT: BROWNS FERRY NUCLEAR PLANT P.O. BOX 2000 DECATUR, ALABAMA 35609-2000
UNIT: THREE	CERTIFICATE OF AUTHORIZATION: NOT REQUIRED.
COMMERCIAL SERVICE DATE: MARCH 1, 1977	
NATIONAL BOARD NUMBER FOR UNIT: NOT REQUIRED.	

Steam Dryer Visual Examinations: BWRVIP- 139

- VT-1 examination of Inner Bank Welds performed per BWRVIP-139 - No recordable indications.
- VT-1 examination of Original Dryer Stabilizer/Tie Bars per BWRVIP-139 - No recordable indications.
- VT-1 examination of Repaired Dryer Stabilizer/Tie Bars per BWRVIP-139 - No recordable indications.

Jet Pump Visual Examinations: BWRVIP-41

- HOLDDOWN BEAMS:
  - Baseline inspection per BWRVIP-41 R1 and BWRVIP-138.
  - UT examination of holddown beam locations BB-1, BB-2, BB-3 for Jet Pumps 1 thru 20. No recordable indications.
- RESTRAINER BRACKET ASSEMBLY:
  - Reinspection per BWRVIP-41 R1.
  - Visual (VT-1) examination of inlet-mixer wedge (Location WD-1) for Jet Pumps 1 thru 20. No recordable wedge wear observed.
  - VT-1 examination of Set Screw Locations AS-1 and AS-2 performed for Jet Pumps 1 thru 20. Six set screw gaps identified, all over 15 mils in width. Auxiliary spring wedges installed for Jet Pumps 4, 7, 10, 16, 18, and 20.
- EVT-1 examination of Riser Pipe Welds RS-1, RS-2, RS-3 per BWRVIP-41 R1 (Jet Pumps 11 thru 20) - No recordable indications.
- EVT-1 examination of Diffuser and Adapter Welds DF-2, AD-1, AD-2, AD-3a, AD-3b (Jet Pumps 11 thru 20) - No recordable indications.
- EVT-1 examination of Riser Pipe Welds RS-8, RS-9 (Jet Pumps 1 and 2) due to INPO concerns with past examination quality (Reference: PER Action 75633-006) - No recordable indications.
- Visual (VT-3) examination of Riser Brace Repair Clamp (Jet Pumps 5 and 6) - No change.

OWNER: TENNESSEE VALLEY AUTHORITY OFFICE OF NUCLEAR POWER 1101 MARKET STREET CHATTANOOGA, TENNESSEE 37402	PLANT: BROWNS FERRY NUCLEAR PLANT P.O. BOX 2000 DECATUR, ALABAMA 35609-2000
UNIT: THREE	CERTIFICATE OF AUTHORIZATION: NOT REQUIRED.
COMMERCIAL SERVICE DATE: MARCH 1, 1977	
NATIONAL BOARD NUMBER FOR UNIT: NOT REQUIRED.	

CRD Guide Tube Examinations: BWRVIP-47

- New baseline performed per BWRVIP-47 due to INPO concerns in obtaining an adequate visual examination for Locations CRGT-2 and CRGT-3 during the U3C12 Refueling Outage (Reference: PER Action 75633-003).
- 13 Control Rod Guide Tubes examined.
- VT-3 examination of Locations CRGT-1 and FS/GT-ARPIN-1 performed. EVT-1 examination of Locations CRGT-2 and CRGT-3 performed. No recordable indications.

Feedwater Sparger Examinations: NUREG-0619 and ASME section XI

- VT-1 examination of Sparger Nozzles performed per NUREG-0619 (non-BWRVIP inspection) - No recordable indications.
- During a ASME Section XI examination, abnormal wear from the retaining pin was noted on the upper slot of the feedwater sparger end bracket located on Sparger N-4 D, azimuth 185-235. The pin had worn into the slot located on the bracket shoulder and slipped down approximately one-half inch (this is approximately one-quarter inch farther than was noted during an examination performed during the U3C11 RFO in March 2004). Reference NOI# U3C12-022. GE-NE performed a one-cycle repair to justify continued operation through the U3C13 Fuel Cycle. A permanent repair will be performed during the U3C13 RFO in 2008.

Paragraph 7.11.5 Level Instrument Nozzle Safe-Ends BWRVIP-49 Examinations:

According to BWRVIP-49, "Instrument Penetration Inspection and Flaw Evaluation Guidelines", it is the intent that the inspection and evaluation guidelines be followed in place of any prior GE SIL (i. e. GE SIL-571) related to essential safety functions of the instrument penetrations. The BWRVIP-49 document follows ASME Section XI Code examinations, with no additional augmented BWRVIP examinations.

For commercial dependability, an ASME Section XI, IWB-2500, Code Category B-P, VT-2 examination for instrument penetrations shall be performed as an augmented examination. A VT-2 leakage inspection shall be performed of the safe end to nozzle weld during the drywell leakage test performed each outage. Insulation removal is not necessary to perform the leak check.

Examination Results: VT-2 examinations of Instrumentation Nozzle Safe-Ends N11A-SE, N11B-SE, N12A-SE, N12B-SE N16A-SE and N16B-SE revealed no leakage.

OWNER: TENNESSEE VALLEY AUTHORITY OFFICE OF NUCLEAR POWER 1101 MARKET STREET CHATTANOOGA, TENNESSEE 37402	PLANT: BROWNS FERRY NUCLEAR PLANT P.O. BOX 2000 DECATUR, ALABAMA 35609-2000
UNIT: THREE	CERTIFICATE OF AUTHORIZATION: NOT REQUIRED.
COMMERCIAL SERVICE DATE: MARCH 1, 1977	
NATIONAL BOARD NUMBER FOR UNIT: NOT REQUIRED.	

Paragraph 7.11.6 Core Plate delta/P/Standby Liquid Control (SLC) Nozzle BWRVIP-27 Examinations:

According to BWRVIP-27, "BWR Standby Liquid Control System/Core Plate deltaP Inspection and Flaw Evaluation Guidelines", it is the intent that the inspection and evaluation guidelines be followed in place of any prior GE SIL (i. e. GE SIL-571) related to essential safety functions of the instrument penetrations. The BWRVIP-27 document follows ASME Section XI Code examinations, with no additional augmented BWRVIP examinations. For commercial dependability, an ASME Section XI, IWB-2500, Code Category B-P, VT-2 examination for instrument penetrations shall be performed as an augmented examination. A VT-2 leakage inspection shall be performed of the safe end to nozzle weld and safe end during the drywell leakage test performed each outage. Insulation removal is not necessary to perform the leak check.

Examination Results: VT-2 examinations of Instrumentation Nozzle Safe-End N10-SE revealed no leakage.

Paragraph 7.11.8 Weld Inspection For Pipe Whip Protection

Additional examinations shall be performed each inspection interval on selected circumferential pipe welds to provide additional protection against pipe whip in accordance with TSR 3.4.3.2. This TSR identifies the need to meet as closely as possible the requirements of ASME Section XI and NRC accepted alternatives. Therefore, examination volumes, examination methods, and acceptance standards for piping welds examined in accordance with TSR 3.4.3.2 should be similar to the RI-ISI Program. These examination criteria utilized for the RI-ISI Program is specified in Table 1, Examination Category R-A, Item No. R1.11 and R1.16 of Code Case N-577, with the more detailed provisions provided in WCAP-14572, Revision 1-NPA, "Westinghouse Owners Group Application Of Risk - Informed Methods To Piping Inservice Inspection Topical Report"

No examinations were performed this outage.

OWNER: TENNESSEE VALLEY AUTHORITY OFFICE OF NUCLEAR POWER 1101 MARKET STREET CHATTANOOGA, TENNESSEE 37402	PLANT: BROWNS FERRY NUCLEAR PLANT P.O. BOX 2000 DECATUR, ALABAMA 35609-2000
UNIT: THREE	CERTIFICATE OF AUTHORIZATION: NOT REQUIRED.
COMMERCIAL SERVICE DATE: MARCH 1, 1977	
NATIONAL BOARD NUMBER FOR UNIT: NOT REQUIRED.	

ATTACHMENT 1

SECTION 2

EXAMINATIONS PERFORMED DURING

UNIT 3 CYCLE 12 OUTAGE

EXAM REQUIREMENTS
0TI365
B01-02
B02-02
B06-02
V01-02

OWNER: TENNESSEE VALLEY AUTHORITY
NUCLEAR POWER GROUP
1101 MARKET STREET
CHATTANOOGA, TENNESSEE 37402

PLANT: BROWNS FERRY NUCLEAR PLANT
P.O. BOX 2000
DECATUR, ALABAMA 35609-2000

UNIT: THREE CYCLE: 12 COMMERCIAL SERVICE DATE: MARCH 1, 1977

CERTIFICATION OF AUTHORIZATION: NOT REQUIRED
NATIONAL BOARD NUMBER FOR UNIT: NOT REQUIRED

System	Component Number	ISO Drawing	Exam Requirement	Category	Item Number	Exam Scheduled	Calibration Standard	Exam Date	Exam Report	Exam Results	Comments
RPV	N4D-FW-SPARG	3-ISI-0220-C-02	B01-02	NU0619	N/A	VT-1			R-057	P	THIS CLEARS NOI# U3C12-022.
RPV	N4D-NV	3-ISI-0327-C-01 01	V01-02	B-D	B3.90	UT	BF-18	20060317	R-076	P	54-ISI-850-03 SDCN# 30-5037583-000, 30-9011321-00, 30-9015396-00 PER# 96089, 99373, 99581
RPV	N4E-FW-SPARG	3-ISI-0220-C-02	B01-02	NU0619	N/A	VT-1			R-057	P	
RPV	N4E-NV	3-ISI-0327-C-01 01	V01-02	B-D	B3.90	UT	BF-18	20060317	R-077	P	54-ISI-850-03 SDCN# 30-5037583-000, 30-9011321-00, 30-9015396-00 PER# 99123, 99581
RPV	N4F-FW-SPARG	3-ISI-0220-C-02	B01-02	NU0619	N/A	VT-1			R-057	P	
RPV	RPV CORE PLATE	ISI-0220-C-02	0TI365	N/A	N/A	EVT		20060313	R-057	P	*54-ISI-363-02, SDCN'S# 30-5038911-02, 305038911-03. CORE PLATE BOLTS
RPV	RPV CORE PLATE	ISI-0220-C-02	0TI365	N/A	N/A	VT-3		20060313	R-057	P	*54-ISI-363-02, SDCN'S# 30-5038911-02, 305038911-03
RPV	RPV CRD GUIDE TUBES	ISI-0220-C-02	0TI365	N/A	N/A	EVT		20060312	R-057	P	*54-ISI-363-02, SDCN'S# 30-5038911-02, 305038911-03
RPV	RPV CRD GUIDE TUBES	ISI-0220-C-02	0TI365	N/A	N/A	VT-3		20060312	R-057	P	*54-ISI-363-02, SDCN'S# 30-5038911-02, 305038911-03
RPV	RPV CS PIPING WELDS	ISI-0220-C-02	0TI365	N/A	N/A	EVT		20060313	R-057	P	*54-ISI-363-02, SDCN'S# 30-5038911-02, 305038911-03
RPV	RPV CS PIPING WELDS	ISI-0220-C-02	0TI365	N/A	N/A	UT		20060310	R057	P	*54-ISI-160-04
RPV	RPV CS PIPING WELDS	ISI-0220-C-02	0TI365	N/A	N/A	VT-3		20060313	R-057	P	*54-ISI-363-02, SDCN'S# 30-5038911-02, 305038911-03
RPV	RPV JET PMP BEAMS	ISI-0220-C-02	0TI365	N/A	N/A	UT		20060313	R-057	P	*54-ISI-159-07 SDCN# 30-5061633-000
RPV	RPV JET PMPS	ISI-0220-C-02	0TI365	N/A	N/A	EVT	N/A	20060313	R-057	P	*54-ISI-363-02, SDCN'S# 30-5038911-02, 305038911-03
RPV	RPV JET PMPS	ISI-0220-C-02	0TI365	N/A	N/A	VT-1	N/A	20060313	R-057	P	*54-ISI-363-02, SDCN'S# 30-5038911-02, 305038911-03
RPV	RPV JET PMPS	ISI-0220-C-02	0TI365	N/A	N/A	VT-3		20060313	R-057	P	*54-ISI-363-02, SDCN'S# 30-5038911-02, 305038911-03
RPV	RPV SHROUD WELDS	ISI-0220-C-02	0TI365	N/A	N/A	UT		20060315	R-057	P	*54-ISI-858-02. WELDS H-1, H-2, H-4, H-6 & H-7.
RPV	RPV STEAM DRYER	ISI-0220-C-02	0TI365	N/A	N/A	VT-1	N/A	20060306	R-057	P	*54-ISI-363-02, SDCN'S# 30-5038911-02, 305038911-03

EXAM REQUIREMENTS
0TI365
B01-02
B02-02
B06-02
V01-02

OWNER: TENNESSEE VALLEY AUTHORITY
NUCLEAR POWER GROUP
1101 MARKET STREET
CHATTANOOGA, TENNESSEE 37402

PLANT: BROWNS FERRY NUCLEAR PLANT
P.O. BOX 2000
DECATUR, ALABAMA 35609-2000

UNIT: THREE CYCLE: 12 COMMERCIAL SERVICE DATE: MARCH 1, 1977

CERTIFICATION OF AUTHORIZATION: NOT REQUIRED
NATIONAL BOARD NUMBER FOR UNIT: NOT REQUIRED

System	Component Number	ISO Drawing	Exam Requirement	Category	Item Number	Exam Scheduled	Calibration Standard	Exam Date	Exam Report	Exam Results	Comments
RECIR	GR-3-03(OL)	3-ISI-0328-C-01 01	B02-02	E	NU0313	UT	BF-83	20060303	R-029	P	PROCEDURE PDI-UT-8, REV. E
RECIR	GR-3-27(OL)	3-ISI-0328-C-02 02	B02-02	E	NU0313	UT	BF-83	20060303	R-029	P	PROCEDURE PDI-UT-78, REV. E
RECIR	GR-3-63	3-ISI-0328-C-02 02	B02-02	E	NU0313	UT	SIZING/WB85	20060306	R-031	P	3rd SUCCESSIVE EXAM. PROCEDURE PDI-UT-2, REV. C. ADDENDUM #1
RECIR	KR-3-02	3-ISI-0328-C-01 01	B02-02	C	NU0313	UT	ALTSS WB85	20060303	R-028	P	PROCEDURE PDI-UT-2, REV. C, ADDENDUM #1
RECIR	KR-3-24	3-ISI-0328-C-02 02	B02-02	C	NU0313	UT	ALTSS	20060302	R-027	P	PROCEDURE PDI-UT-2, REV. C, ADDENDUM #1
RHRS	DRHR-3-03B	3-ISI-0330-C-01 01	B02-02	G	NU0313	VT-2		20060319	R-068	P	
RHRS	DRHR-3-13B	3-ISI-0330-C-01 01	B02-02	G	NU0313	VT-2		20060319	R-068	P	
RHRS	DSRHR-3-01	3-ISI-0330-C-01 01	B02-02	C	NU0313	UT	ALTSS/WB85	20060309	R-051	P	
RHRS	DSRHR-3-08	3-ISI-0330-C-01 01	B02-02	C	NU0313	UT	ALTSS/WB85	20060310	R-056	P	
RPV	N10-SE	ISI-0445-C-01 01	B06-02	BWRVIP-27	N/A	VT-2		20060319	R-068	P	
RPV	N11A-SE	3-ISI-0346-C-01	B06-02	BWRVIP-49	N/A	VT-2		20060319	R-068	P	
RPV	N11B-SE	3-ISI-0346-C-01	B06-02	BWRVIP-49	N/A	VT-2		20060319	R-068	P	
RPV	N12A-SE	3-ISI-0346-C-01	B06-02	BWRVIP-49	N/A	VT-2		20060319	R-068	P	
RPV	N12B-SE	3-ISI-0346-C-01	B06-02	BWRVIP-49	N/A	VT-2		20060319	R-068	P	
RPV	N16A-SE	3-ISI-0346-C-01	B06-02	BWRVIP-49	N/A	VT-2		20060319	R-068	P	
RPV	N16B-SE	3-ISI-0346-C-01	B06-02	BWRVIP-49	N/A	VT-2		20060319	R-068	P	
RPV	N4A-FW-SPARG	3-ISI-0220-C-02	B01-02	NU0619	N/A	VT-1			R-057	P	
RPV	N4B-FW-SPARG	3-ISI-0220-C-02	B01-02	NU0619	N/A	VT-1			R-057	P	
RPV	N4B-IR/NB	3-ISI-0327-C-01	B01-02	B-D	NU0619	UT	BF-18	20060309	R-084	P	
RPV	N4C-FW-SPARG	3-ISI-0220-C-02	B01-02	NU0619	N/A	VT-1			R-057	P	
RPV	N4C-IR/NB	3-ISI-0327-C-01	B01-02	B-D	NU0619	UT	BF-18	20060309	R-086	P	

OWNER: TENNESSEE VALLEY AUTHORITY OFFICE OF NUCLEAR POWER 1101 MARKET STREET CHATTANOOGA, TENNESSEE 37402	PLANT: BROWNS FERRY NUCLEAR PLANT P.O. BOX 2000 DECATUR, ALABAMA 35609-2000
UNIT: THREE	CERTIFICATE OF AUTHORIZATION: NOT REQUIRED.
COMMERCIAL SERVICE DATE: MARCH 1, 1977	
NATIONAL BOARD NUMBER FOR UNIT: NOT REQUIRED.	

ATTACHMENT 2

BFN IWE – CONTAIMENT INSERVICE INSPECTION PROGRAM

December 12, 2005

Sam Flood, ANI/ANII, PEC-1C, BFN

BROWNS FERRY NUCLEAR PLANT (BFN) – UNIT 3 CYCLE 12 REFUELING OUTAGE CONTAINMENT INSERVICE INSPECTION (CISI) SCAN PLAN REV 000

Attached for your review is the BFN Unit 3 Cycle 12 Refueling Outage CISI Scan Plan, Revision 000, for the examinations to be performed for the current Unit 3 outage by BFN Site Engineering/Components Engineering. These examinations are being performed to satisfy the requirements of ASME Section XI Code, Subsection IWE, 1992 Edition and 1992 Addenda.

This document was prepared by D. Kelvin Green of BFN Components Engineering and forwarded to Matthew Welch and Fred Froscello of TVAN Inspection Services Organization (ISO) as notification of work scope.

D. Kelvin Green
D. Kelvin Green
BFN Components Engineering

Matthew C. Welch
Matthew C. Welch
BFN ISO, NDE Level III

Frederick W. Froscello Jr.
Frederick W. Froscello Jr.
BFN ISO, NDE Specialist - ISI

Sam Flood 1/4/06.
Sam Flood ANI/ANII
Concurrence

cc: R. K. Golub, SAB-1B, BFN
M. L. Turnbow, STC-1I, SQN

Revision 0
01/31/2006
Total Examinations: 98

TENNESSEE VALLEY AUTHORITY
BROWNS FERRY NUCLEAR POWER PLANT
UNIT 3 IWE EXAMS SCHEDULED FOR CYCLE 12

SYSTEM	WELDNO	ISONO	CYCLE	ITEMNO	CATEGORY	EXREQ	EXSCHD	NDEPROC
SCV	DW FLG-3-1	BFN-CISI-012-(1-3)	12	E8.10	E-G	92E-92	VT-1	N-VT-15
SCV	DW HD-3-1	BFN-CISI-012-(1-3)	12	E1.11	E-A	92E-92	VT-GEN	3-TI-173
SCV	DW HD-3-1	BFN-CISI-012-(1-3)	12	E1.12	E-A	92E-92	VT-3	N-VT-15
SCV	DW LNR-3-1	3-719E532-4	12	E1.11	E-A	92E-92	VT-GEN	3-TI-173
SCV	DW LNR-3-1	3-719E532-4	12	E1.12	E-A	92E-92	VT-3	N-VT-15
SCV	DW LNR-3-2	BFN-CISI-010&11	12	E1.11	E-A	92E-92	VT-GEN	3-TI-173
SCV	DW LNR-3-2	BFN-CISI-010&11	12	E1.12	E-A	92E-92	VT-3	N-VT-15
SCV	DW LNR-3-3	BFN-CISI-010&11	12	E1.11	E-A	92E-92	VT-GEN	3-TI-173
SCV	DW LNR-3-3	BFN-CISI-010&11	12	E1.12	E-A	92E-92	VT-3	N-VT-15
SCV	DW LNR-3-4	BFN-CISI-010&11	12	E1.11	E-A	92E-92	VT-GEN	3-TI-173
SCV	DW LNR-3-4	BFN-CISI-010&11	12	E1.12	E-A	92E-92	VT-3	N-VT-15
SCV	DW LNR-3-5	BFN-CISI-010&11	12	E1.11	E-A	92E-92	VT-GEN	3-TI-173
SCV	DW LNR-3-5	BFN-CISI-010&11	12	E1.12	E-A	92E-92	VT-3	N-VT-15
SCV	DW LNR-3-6	BFN-CISI-010&11	12	E1.11	E-A	92E-92	VT-GEN	3-TI-173
SCV	DW LNR-3-6	BFN-CISI-010&11	12	E1.12	E-A	92E-92	VT-3	N-VT-15
SCV	ECCS RH 3-1	BFN-CISI-002-1	12	E1.11	E-A	92E-92	VT-GEN	3-TI-173
SCV	ECCS RH 3-1	BFN-CISI-002-1	12	E1.12	E-A	92E-92	VT-3	N-VT-15
SCV	ECCS RH 3-10	BFN-CISI-002-1	12	E1.11	E-A	92E-92	VT-GEN	3-TI-173
SCV	ECCS RH 3-10	BFN-CISI-002-1	12	E1.12	E-A	92E-92	VT-3	N-VT-15
SCV	ECCS RH 3-11	BFN-CISI-002-1	12	E1.11	E-A	92E-92	VT-GEN	3-TI-173
SCV	ECCS RH 3-11	BFN-CISI-002-1	12	E1.12	E-A	92E-92	VT-3	N-VT-15
SCV	ECCS RH 3-12	BFN-CISI-002-1	12	E1.11	E-A	92E-92	VT-GEN	3-TI-173
SCV	ECCS RH 3-12	BFN-CISI-002-1	12	E1.12	E-A	92E-92	VT-3	N-VT-15
SCV	ECCS RH 3-13	BFN-CISI-002-1	12	E1.11	E-A	92E-92	VT-GEN	3-TI-173
SCV	ECCS RH 3-13	BFN-CISI-002-1	12	E1.12	E-A	92E-92	VT-3	N-VT-15

SYSTEM	WELDNO	ISONO	CYCLE	ITEMNO	CATEGORY	EXREQ	EXSCHD	NDEPROC
SCV	ECCS RH 3-14	BFN-CISI-002-1	12	E1.11	E-A	92E-92	VT-GEN	3-TI-173
SCV	ECCS RH 3-14	BFN-CISI-002-1	12	E1.12	E-A	92E-92	VT-3	N-VT-15
SCV	ECCS RH 3-15	BFN-CISI-002-1	12	E1.11	E-A	92E-92	VT-GEN	3-TI-173
SCV	ECCS RH 3-15	BFN-CISI-002-1	12	E1.12	E-A	92E-92	VT-3	N-VT-15
SCV	ECCS RH 3-16	BFN-CISI-002-1	12	E1.11	E-A	92E-92	VT-GEN	3-TI-173
SCV	ECCS RH 3-16	BFN-CISI-002-1	12	E1.12	E-A	92E-92	VT-3	N-VT-15
SCV	ECCS RH 3-2	BFN-CISI-002-1	12	E1.11	E-A	92E-92	VT-GEN	3-TI-173
SCV	ECCS RH 3-2	BFN-CISI-002-1	12	E1.12	E-A	92E-92	VT-3	N-VT-15
SCV	ECCS RH 3-3	BFN-CISI-002-1	12	E1.11	E-A	92E-92	VT-GEN	3-TI-173
SCV	ECCS RH 3-3	BFN-CISI-002-1	12	E1.12	E-A	92E-92	VT-3	N-VT-15
SCV	ECCS RH 3-4	BFN-CISI-002-1	12	E1.11	E-A	92E-92	VT-GEN	3-TI-173
SCV	ECCS RH 3-4	BFN-CISI-002-1	12	E1.12	E-A	92E-92	VT-3	N-VT-15
SCV	ECCS RH 3-5	BFN-CISI-002-1	12	E1.11	E-A	92E-92	VT-GEN	3-TI-173
SCV	ECCS RH 3-5	BFN-CISI-002-1	12	E1.12	E-A	92E-92	VT-3	N-VT-15
SCV	ECCS RH 3-6	BFN-CISI-002-1	12	E1.11	E-A	92E-92	VT-GEN	3-TI-173
SCV	ECCS RH 3-6	BFN-CISI-002-1	12	E1.12	E-A	92E-92	VT-3	N-VT-15
SCV	ECCS RH 3-7	BFN-CISI-002-1	12	E1.11	E-A	92E-92	VT-GEN	3-TI-173
SCV	ECCS RH 3-7	BFN-CISI-002-1	12	E1.12	E-A	92E-92	VT-3	N-VT-15
SCV	ECCS RH 3-8	BFN-CISI-002-1	12	E1.11	E-A	92E-92	VT-GEN	3-TI-173
SCV	ECCS RH 3-8	BFN-CISI-002-1	12	E1.12	E-A	92E-92	VT-3	N-VT-15
SCV	ECCS RH 3-9	BFN-CISI-002-1	12	E1.11	E-A	92E-92	VT-GEN	3-TI-173
SCV	ECCS RH 3-9	BFN-CISI-002-1	12	E1.12	E-A	92E-92	VT-3	N-VT-15
SCV	MSB-3-1	41N1015	12	E5.30	E-D	92E-92	VT-3	N-VT-15
SCV	MSB-3-2	41N1015	12	E5.30	E-D	92E-92	VT-3	N-VT-15
SCV	MSB-3-3	41N1015	12	E5.30	E-D	92E-92	VT-3	N-VT-15
SCV	PSC INT 3-B-10A	BFN-CISI-007	12	E1.11	E-A	92E-92	VT-GEN	3-TI-173
SCV	PSC INT 3-B-10A	BFN-CISI-007	12	E1.12	E-A	92E-92	VT-3	N-VT-15
SCV	PSC INT 3-B-11A	BFN-CISI-007	12	E1.11	E-A	92E-92	VT-GEN	3-TI-173

SYSTEM	WELDNO	ISONO	CYCLE	ITEMNO	CATEGORY	EXREQ	EXSCID	NDEPROC
SCV	PSC INT 3-B-11A	BFN-CISI-007	12	E1.12	E-A	92E-92	VT-3	N-VT-15
SCV	PSC INT 3-B-12A	BFN-CISI-007	12	E1.11	E-A	92E-92	VT-GEN	3-TI-173
SCV	PSC INT 3-B-12A	BFN-CISI-007	12	E1.12	E-A	92E-92	VT-3	N-VT-15
SCV	PSC INT 3-B-13A	BFN-CISI-007	12	E1.11	E-A	92E-92	VT-GEN	3-TI-173
SCV	PSC INT 3-B-13A	BFN-CISI-007	12	E1.12	E-A	92E-92	VT-3	N-VT-15
SCV	PSC INT 3-B-14A	BFN-CISI-007	12	E1.11	E-A	92E-92	VT-GEN	3-TI-173
SCV	PSC INT 3-B-14A	BFN-CISI-007	12	E1.12	E-A	92E-92	VT-3	N-VT-15
SCV	PSC INT 3-B-15A	BFN-CISI-007	12	E1.11	E-A	92E-92	VT-GEN	3-TI-173
SCV	PSC INT 3-B-15A	BFN-CISI-007	12	E1.12	E-A	92E-92	VT-3	N-VT-15
SCV	PSC INT 3-B-16A	BFN-CISI-007	12	E1.11	E-A	92E-92	VT-GEN	3-TI-173
SCV	PSC INT 3-B-16A	BFN-CISI-007	12	E1.12	E-A	92E-92	VT-3	N-VT-15
SCV	PSC INT 3-B-1A	BFN-CISI-007	12	E1.11	E-A	92E-92	VT-GEN	3-TI-173
SCV	PSC INT 3-B-1A	BFN-CISI-007	12	E1.12	E-A	92E-92	VT-3	N-VT-15
SCV	PSC INT 3-B-2A	BFN-CISI-007	12	E1.11	E-A	92E-92	VT-GEN	3-TI-173
SCV	PSC INT 3-B-2A	BFN-CISI-007	12	E1.12	E-A	92E-92	VT-3	N-VT-15
SCV	PSC INT 3-B-3A	BFN-CISI-007	12	E1.11	E-A	92E-92	VT-GEN	3-TI-173
SCV	PSC INT 3-B-3A	BFN-CISI-007	12	E1.12	E-A	92E-92	VT-3	N-VT-15
SCV	PSC INT 3-B-4A	BFN-CISI-007	12	E1.11	E-A	92E-92	VT-GEN	3-TI-173
SCV	PSC INT 3-B-4A	BFN-CISI-007	12	E1.12	E-A	92E-92	VT-3	N-VT-15
SCV	PSC INT 3-B-5A	BFN-CISI-007	12	E1.11	E-A	92E-92	VT-GEN	3-TI-173
SCV	PSC INT 3-B-5A	BFN-CISI-007	12	E1.12	E-A	92E-92	VT-3	N-VT-15
SCV	PSC INT 3-B-6A	BFN-CISI-007	12	E1.11	E-A	92E-92	VT-GEN	3-TI-173
SCV	PSC INT 3-B-6A	BFN-CISI-007	12	E1.12	E-A	92E-92	VT-3	N-VT-15
SCV	PSC INT 3-B-7A	BFN-CISI-007	12	E1.11	E-A	92E-92	VT-GEN	3-TI-173
SCV	PSC INT 3-B-7A	BFN-CISI-007	12	E1.12	E-A	92E-92	VT-3	N-VT-15
SCV	PSC INT 3-B-8A	BFN-CISI-007	12	E1.11	E-A	92E-92	VT-GEN	3-TI-173
SCV	PSC INT 3-B-8A	BFN-CISI-007	12	E1.12	E-A	92E-92	VT-3	N-VT-15
SCV	PSC INT 3-B-9A	BFN-CISI-007	12	E1.11	E-A	92E-92	VT-GEN	3-TI-173

SYSTEM	WELDNO	ISONO	CYCLE	ITEMNO	CATEGORY	EXREQ	EXSCHD	NDEPROC
SCV	PSC INT 3-B-9A	BFN-CISI-007	12	E1.12	E-A	92E-92	VT-3	N-VT-15
SCV	VNT HDR-3-1A	BFN-CISI-017&18	12	E1.11	E-A	92E-92	VT-GEN	3-TI-173
SCV	VNT HDR-3-1A	BFN-CISI-017&18	12	E1.20	E-A	92E-92	VT-3	N-VT-15
SCV	VNT HDR-3-2A	BFN-CISI-017&18	12	E1.11	E-A	92E-92	VT-GEN	3-TI-173
SCV	VNT HDR-3-2A	BFN-CISI-017&18	12	E1.20	E-A	92E-92	VT-3	N-VT-15
SCV	VNT HDR-3-3A	BFN-CISI-017&18	12	E1.11	E-A	92E-92	VT-GEN	3-TI-173
SCV	VNT HDR-3-3A	BFN-CISI-017&18	12	E1.20	E-A	92E-92	VT-3	N-VT-15
SCV	VNT HDR-3-4A	BFN-CISI-017&18	12	E1.11	E-A	92E-92	VT-GEN	3-TI-173
SCV	VNT HDR-3-4A	BFN-CISI-017&18	12	E1.20	E-A	92E-92	VT-3	N-VT-15
SCV	VNT HDR-3-5A	BFN-CISI-017&18	12	E1.11	E-A	92E-92	VT-GEN	3-TI-173
SCV	VNT HDR-3-5A	BFN-CISI-017&18	12	E1.20	E-A	92E-92	VT-3	N-VT-15
SCV	VNT HDR-3-6A	BFN-CISI-017&18	12	E1.11	E-A	92E-92	VT-GEN	3-TI-173
SCV	VNT HDR-3-6A	BFN-CISI-017&18	12	E1.20	E-A	92E-92	VT-3	N-VT-15
SCV	VNT HDR-3-7A	BFN-CISI-017&18	12	E1.11	E-A	92E-92	VT-GEN	3-TI-173
SCV	VNT HDR-3-7A	BFN-CISI-017&18	12	E1.20	E-A	92E-92	VT-3	N-VT-15
SCV	VNT HDR-3-8A	BFN-CISI-017&18	12	E1.11	E-A	92E-92	VT-GEN	3-TI-173
SCV	VNT HDR-3-8A	BFN-CISI-017&18	12	E1.20	E-A	92E-92	VT-3	N-VT-15

March 01, 2006

Sam Flood, ANI/ANII, PEC-1C, BFN

BROWNS FERRY NUCLEAR PLANT (BFN) – UNIT 3 CYCLE 12 REFUELING OUTAGE CONTAINMENT INSERVICE INSPECTION (CISI) SCAN PLAN REV 001

Attached for your review is the BFN Unit 3 Cycle 12 Refueling Outage CISI Scan Plan, Revision 001, for the examinations to be performed for the current Unit 3 outage by BFN Site Engineering/Components Engineering. These examinations are being performed to satisfy the requirements of ASME Section XI Code, Subsection IWE, 1992 Edition and 1992 Addenda.

This document was prepared by D. Kelvin Green of BFN Components Engineering and forwarded to Matthew Welch and Fred Froscello of TVAN Inspection Services Organization (ISO) as notification of work scope.

D. Kelvin Green
BFN Components Engineering

Matthew C. Welch
BFN ISO, NDE Level III

Frederick W. Froscello Jr.
BFN ISO, NDE Specialist - ISI

3/2/06
Sam Flood ANI/ANII
Concurrence

cc: R. K. Golub, SAB-1B, BFN
M. L. Turnbow, STC-1I, SQN

Revision 1
03/01/2006
Total Examinations: 52

TENNESSEE VALLEY AUTHORITY
BROWNS FERRY NUCLEAR POWER PLANT
UNIT 3 IWE EXAMS SCHEDULED FOR CYCLE 12

SYSTEM	WELDNO	ISONO	CYCLE	ITEMNO	CATEGORY	EXREQ	EXSCHD	NDEPROC
SCV	DW FLG-3-1	BFN-CISI-012	12	E8.10	E-G	92E-92	VT-1	N-VT-15
SCV	DW HD-3-1	BFN-CISI-012	12	E1.12	E-A	92E-92	VT-3	N-VT-15
SCV	DW LNR-3-1	BFN-CISI-008-2	12	E1.12	E-A	92E-92	VT-3	N-VT-15
SCV	DW LNR-3-2	BFN-CISI-008-2	12	E1.12	E-A	92E-92	VT-3	N-VT-15
SCV	DW LNR-3-3	BFN-CISI-008-2	12	E1.12	E-A	92E-92	VT-3	N-VT-15
SCV	DW LNR-3-4	BFN-CISI-008-2	12	E1.12	E-A	92E-92	VT-3	N-VT-15
SCV	DW LNR-3-5	BFN-CISI-008-2	12	E1.12	E-A	92E-92	VT-3	N-VT-15
SCV	DW LNR-3-6	BFN-CISI-008-2	12	E1.12	E-A	92E-92	VT-3	N-VT-15
SCV	ECCS RH 3-1	BFN-CISI-002	12	E1.12	E-A	92E-92	VT-3	N-VT-15
SCV	ECCS RH 3-10	BFN-CISI-002	12	E1.12	E-A	92E-92	VT-3	N-VT-15
SCV	ECCS RH 3-11	BFN-CISI-002	12	E1.12	E-A	92E-92	VT-3	N-VT-15
SCV	ECCS RH 3-12	BFN-CISI-002	12	E1.12	E-A	92E-92	VT-3	N-VT-15
SCV	ECCS RH 3-13	BFN-CISI-002	12	E1.12	E-A	92E-92	VT-3	N-VT-15
SCV	ECCS RH 3-14	BFN-CISI-002	12	E1.12	E-A	92E-92	VT-3	N-VT-15
SCV	ECCS RH 3-15	BFN-CISI-002	12	E1.12	E-A	92E-92	VT-3	N-VT-15
SCV	ECCS RH 3-16	BFN-CISI-002	12	E1.12	E-A	92E-92	VT-3	N-VT-15
SCV	ECCS RH 3-2	BFN-CISI-002	12	E1.12	E-A	92E-92	VT-3	N-VT-15
SCV	ECCS RH 3-3	BFN-CISI-002	12	E1.12	E-A	92E-92	VT-3	N-VT-15
SCV	ECCS RH 3-4	BFN-CISI-002	12	E1.12	E-A	92E-92	VT-3	N-VT-15
SCV	ECCS RH 3-5	BFN-CISI-002	12	E1.12	E-A	92E-92	VT-3	N-VT-15
SCV	ECCS RH 3-6	BFN-CISI-002	12	E1.12	E-A	92E-92	VT-3	N-VT-15
SCV	ECCS RH 3-7	BFN-CISI-002	12	E1.12	E-A	92E-92	VT-3	N-VT-15
SCV	ECCS RH 3-8	BFN-CISI-002	12	E1.12	E-A	92E-92	VT-3	N-VT-15
SCV	ECCS RH 3-9	BFN-CISI-002	12	E1.12	E-A	92E-92	VT-3	N-VT-15
SCV	GEN-VTE	3-47E872-1-ISI	12	E1.11	E-A	92E-92	VT-GEN	3-TI-173

SYSTEM	WELDNO	ISONO	CYCLE	ITEMNO	CATEGORY	EXREQ	EXSCHD	NDEPROC
SCV	MSB-3-1	BFN-CISI-015	12	E5.30	E-D	92E-92	VT-3	N-VT-15
SCV	MSB-3-2	BFN-CISI-015	12	E5.30	E-D	92E-92	VT-3	N-VT-15
SCV	MSB-3-3	BFN-CISI-015	12	E5.30	E-D	92E-92	VT-3	N-VT-15
SCV	PSC INT 3-B-10A	BFN-CISI-007	12	E1.12	E-A	92E-92	VT-3	N-VT-15
SCV	PSC INT 3-B-11A	BFN-CISI-007	12	E1.12	E-A	92E-92	VT-3	N-VT-15
SCV	PSC INT 3-B-12A	BFN-CISI-007	12	E1.12	E-A	92E-92	VT-3	N-VT-15
SCV	PSC INT 3-B-13A	BFN-CISI-007	12	E1.12	E-A	92E-92	VT-3	N-VT-15
SCV	PSC INT 3-B-14A	BFN-CISI-007	12	E1.12	E-A	92E-92	VT-3	N-VT-15
SCV	PSC INT 3-B-15A	BFN-CISI-007	12	E1.12	E-A	92E-92	VT-3	N-VT-15
SCV	PSC INT 3-B-16A	BFN-CISI-007	12	E1.12	E-A	92E-92	VT-3	N-VT-15
SCV	PSC INT 3-B-1A	BFN-CISI-007	12	E1.12	E-A	92E-92	VT-3	N-VT-15
SCV	PSC INT 3-B-2A	BFN-CISI-007	12	E1.12	E-A	92E-92	VT-3	N-VT-15
SCV	PSC INT 3-B-3A	BFN-CISI-007	12	E1.12	E-A	92E-92	VT-3	N-VT-15
SCV	PSC INT 3-B-4A	BFN-CISI-007	12	E1.12	E-A	92E-92	VT-3	N-VT-15
SCV	PSC INT 3-B-5A	BFN-CISI-007	12	E1.12	E-A	92E-92	VT-3	N-VT-15
SCV	PSC INT 3-B-6A	BFN-CISI-007	12	E1.12	E-A	92E-92	VT-3	N-VT-15
SCV	PSC INT 3-B-7A	BFN-CISI-007	12	E1.12	E-A	92E-92	VT-3	N-VT-15
SCV	PSC INT 3-B-8A	BFN-CISI-007	12	E1.12	E-A	92E-92	VT-3	N-VT-15
SCV	PSC INT 3-B-9A	BFN-CISI-007	12	E1.12	E-A	92E-92	VT-3	N-VT-15
SCV	VNT HDR-3-1A	BFN-CISI-018	12	E1.20	E-A	92E-92	VT-3	N-VT-15
SCV	VNT HDR-3-2A	BFN-CISI-018	12	E1.20	E-A	92E-92	VT-3	N-VT-15
SCV	VNT HDR-3-3A	BFN-CISI-018	12	E1.20	E-A	92E-92	VT-3	N-VT-15
SCV	VNT HDR-3-4A	BFN-CISI-018	12	E1.20	E-A	92E-92	VT-3	N-VT-15
SCV	VNT HDR-3-5A	BFN-CISI-018	12	E1.20	E-A	92E-92	VT-3	N-VT-15
SCV	VNT HDR-3-6A	BFN-CISI-018	12	E1.20	E-A	92E-92	VT-3	N-VT-15
SCV	VNT HDR-3-7A	BFN-CISI-018	12	E1.20	E-A	92E-92	VT-3	N-VT-15
SCV	VNT HDR-3-8A	BFN-CISI-018	12	E1.20	E-A	92E-92	VT-3	N-VT-15

March 06, 2006

Sam Flood, ANI/ANII, PEC-1C, BFN

BROWNS FERRY NUCLEAR PLANT (BFN) – UNIT 3 CYCLE 12 REFUELING OUTAGE CONTAINMENT INSERVICE INSPECTION (CISI) SCAN PLAN REV 002

Attached for your review is the BFN Unit 3 Cycle 12 Refueling Outage CISI Scan Plan, Revision 002, for the examinations to be performed for the current Unit 3 outage by BFN Site Engineering/Components Engineering. These examinations are being performed to satisfy the requirements of ASME Section XI Code, Subsection IWE, 1992 Edition and 1992 Addenda.

This document was prepared by D. Kelvin Green of BFN Components Engineering and forwarded to Matthew Welch and Fred Froscello of TVAN Inspection Services Organization (ISO) as notification of work scope.

D. Kelvin Green
BFN Components Engineering

Matthew C. Welch
BFN ISO, NDE Level III

Frederick W. Froscello Jr.
BFN ISO, NDE Specialist - ISI

3/8/06
Sam Flood ANI/ANII
Concurrence

cc: R. K. Golub, SAB-1B, BFN
M. L. Turnbow, STC-1I, SQN

Revision 2
03/06/2006
Total Examinations: 67

TENNESSEE VALLEY AUTHORITY
BROWNS FERRY NUCLEAR POWER PLANT
UNIT 3 IWE EXAMS SCHEDULED FOR CYCLE 12

SYSTEM	WELDNO	ISONO	CYCLE	ITEMNO	CATEGORY	EXREQ	EXSCHD	NDEPROC
SCV	DW HD-3-1	BFN-CISI-012	12	E1.12	E-A	92E-92	VT-3	N-VT-15
SCV	DW LNR-3-1	BFN-CISI-008-2	12	E1.12	E-A	92E-92	VT-3	N-VT-15
SCV	DW LNR-3-2	BFN-CISI-008-2	12	E1.12	E-A	92E-92	VT-3	N-VT-15
SCV	DW LNR-3-3	BFN-CISI-008-2	12	E1.12	E-A	92E-92	VT-3	N-VT-15
SCV	DW LNR-3-4	BFN-CISI-008-2	12	E1.12	E-A	92E-92	VT-3	N-VT-15
SCV	DW LNR-3-5	BFN-CISI-008-2	12	E1.12	E-A	92E-92	VT-3	N-VT-15
SCV	DW LNR-3-6	BFN-CISI-008-2	12	E1.12	E-A	92E-92	VT-3	N-VT-15
SCV	ECCS RH 3-1	BFN-CISI-002	12	E1.12	E-A	92E-92	VT-3	N-VT-15
SCV	ECCS RH 3-10	BFN-CISI-002	12	E1.12	E-A	92E-92	VT-3	N-VT-15
SCV	ECCS RH 3-11	BFN-CISI-002	12	E1.12	E-A	92E-92	VT-3	N-VT-15
SCV	ECCS RH 3-12	BFN-CISI-002	12	E1.12	E-A	92E-92	VT-3	N-VT-15
SCV	ECCS RH 3-13	BFN-CISI-002	12	E1.12	E-A	92E-92	VT-3	N-VT-15
SCV	ECCS RH 3-14	BFN-CISI-002	12	E1.12	E-A	92E-92	VT-3	N-VT-15
SCV	ECCS RH 3-15	BFN-CISI-002	12	E1.12	E-A	92E-92	VT-3	N-VT-15
SCV	ECCS RH 3-16	BFN-CISI-002	12	E1.12	E-A	92E-92	VT-3	N-VT-15
SCV	ECCS RH 3-2	BFN-CISI-002	12	E1.12	E-A	92E-92	VT-3	N-VT-15
SCV	ECCS RH 3-3	BFN-CISI-002	12	E1.12	E-A	92E-92	VT-3	N-VT-15
SCV	ECCS RH 3-4	BFN-CISI-002	12	E1.12	E-A	92E-92	VT-3	N-VT-15
SCV	ECCS RH 3-5	BFN-CISI-002	12	E1.12	E-A	92E-92	VT-3	N-VT-15
SCV	ECCS RH 3-6	BFN-CISI-002	12	E1.12	E-A	92E-92	VT-3	N-VT-15
SCV	ECCS RH 3-7	BFN-CISI-002	12	E1.12	E-A	92E-92	VT-3	N-VT-15
SCV	ECCS RH 3-8	BFN-CISI-002	12	E1.12	E-A	92E-92	VT-3	N-VT-15
SCV	ECCS RH 3-9	BFN-CISI-002	12	E1.12	E-A	92E-92	VT-3	N-VT-15
SCV	GEN-VTE	3-47E872-1-ISI	12	E1.11	E-A	92E-92	VT-GEN	3-TI-173
SCV	MSB-3-1	BFN-CISI-015	12	E5.30	E-D	92E-92	VT-3	N-VT-15

SYSTEM	WELDNO	ISONO	CYCLE	ITEMNO	CATEGORY	EXREQ	EXSCHD	NDEPROC
SCV	MSB-3-2	BFN-CISI-015	12	E5.30	E-D	92E-92	VT-3	N-VT-15
SCV	MSB-3-3	BFN-CISI-015	12	E5.30	E-D	92E-92	VT-3	N-VT-15
SCV	PSC INT 3-B-10A	BFN-CISI-007	12	E1.12	E-A	92E-92	VT-3	N-VT-15
SCV	PSC INT 3-B-11A	BFN-CISI-007	12	E1.12	E-A	92E-92	VT-3	N-VT-15
SCV	PSC INT 3-B-12A	BFN-CISI-007	12	E1.12	E-A	92E-92	VT-3	N-VT-15
SCV	PSC INT 3-B-13A	BFN-CISI-007	12	E1.12	E-A	92E-92	VT-3	N-VT-15
SCV	PSC INT 3-B-14A	BFN-CISI-007	12	E1.12	E-A	92E-92	VT-3	N-VT-15
SCV	PSC INT 3-B-15A	BFN-CISI-007	12	E1.12	E-A	92E-92	VT-3	N-VT-15
SCV	PSC INT 3-B-16A	BFN-CISI-007	12	E1.12	E-A	92E-92	VT-3	N-VT-15
SCV	PSC INT 3-B-1A	BFN-CISI-007	12	E1.12	E-A	92E-92	VT-3	N-VT-15
SCV	PSC INT 3-B-2A	BFN-CISI-007	12	E1.12	E-A	92E-92	VT-3	N-VT-15
SCV	PSC INT 3-B-3A	BFN-CISI-007	12	E1.12	E-A	92E-92	VT-3	N-VT-15
SCV	PSC INT 3-B-4A	BFN-CISI-007	12	E1.12	E-A	92E-92	VT-3	N-VT-15
SCV	PSC INT 3-B-5A	BFN-CISI-007	12	E1.12	E-A	92E-92	VT-3	N-VT-15
SCV	PSC INT 3-B-6A	BFN-CISI-007	12	E1.12	E-A	92E-92	VT-3	N-VT-15
SCV	PSC INT 3-B-7A	BFN-CISI-007	12	E1.12	E-A	92E-92	VT-3	N-VT-15
SCV	PSC INT 3-B-8A	BFN-CISI-007	12	E1.12	E-A	92E-92	VT-3	N-VT-15
SCV	PSC INT 3-B-9A	BFN-CISI-007	12	E1.12	E-A	92E-92	VT-3	N-VT-15
SCV	PSC MVH 3-B-1	BFN-CISI-017	12	E1.20	E-A	92E-92	VT-3	N-VT-15
SCV	PSC MVH 3-B-10	BFN-CISI-017	12	E1.20	E-A	92E-92	VT-3	N-VT-15
SCV	PSC MVH 3-B-11	BFN-CISI-017	12	E1.20	E-A	92E-92	VT-3	N-VT-15
SCV	PSC MVH 3-B-12	BFN-CISI-017	12	E1.20	E-A	92E-92	VT-3	N-VT-15
SCV	PSC MVH 3-B-13	BFN-CISI-017	12	E1.20	E-A	92E-92	VT-3	N-VT-15
SCV	PSC MVH 3-B-14	BFN-CISI-017	12	E1.20	E-A	92E-92	VT-3	N-VT-15
SCV	PSC MVH 3-B-15	BFN-CISI-017	12	E1.20	E-A	92E-92	VT-3	N-VT-15
SCV	PSC MVH 3-B-16	BFN-CISI-017	12	E1.20	E-A	92E-92	VT-3	N-VT-15
SCV	PSC MVH 3-B-2	BFN-CISI-017	12	E1.20	E-A	92E-92	VT-3	N-VT-15
SCV	PSC MVH 3-B-3	BFN-CISI-017	12	E1.20	E-A	92E-92	VT-3	N-VT-15

SYSTEM	WELDNO	ISONO	CYCLE	ITEMNO	CATEGORY	EXREQ	EXSCHD	NDEPROC
SCV	PSC MVH 3-B-4	BFN-CISI-017	12	E1.20	E-A	92E-92	VT-3	N-VT-15
SCV	PSC MVH 3-B-5	BFN-CISI-017	12	E1.20	E-A	92E-92	VT-3	N-VT-15
SCV	PSC MVH 3-B-6	BFN-CISI-017	12	E1.20	E-A	92E-92	VT-3	N-VT-15
SCV	PSC MVH 3-B-7	BFN-CISI-017	12	E1.20	E-A	92E-92	VT-3	N-VT-15
SCV	PSC MVH 3-B-8	BFN-CISI-017	12	E1.20	E-A	92E-92	VT-3	N-VT-15
SCV	PSC MVH 3-B-9	BFN-CISI-017	12	E1.20	E-A	92E-92	VT-3	N-VT-15
SCV	VNT HDR-3-1A	BFN-CISI-018	12	E1.20	E-A	92E-92	VT-3	N-VT-15
SCV	VNT HDR-3-2A	BFN-CISI-018	12	E1.20	E-A	92E-92	VT-3	N-VT-15
SCV	VNT HDR-3-3A	BFN-CISI-018	12	E1.20	E-A	92E-92	VT-3	N-VT-15
SCV	VNT HDR-3-4A	BFN-CISI-018	12	E1.20	E-A	92E-92	VT-3	N-VT-15
SCV	VNT HDR-3-5A	BFN-CISI-018	12	E1.20	E-A	92E-92	VT-3	N-VT-15
SCV	VNT HDR-3-6A	BFN-CISI-018	12	E1.20	E-A	92E-92	VT-3	N-VT-15
SCV	VNT HDR-3-7A	BFN-CISI-018	12	E1.20	E-A	92E-92	VT-3	N-VT-15
SCV	VNT HDR-3-8A	BFN-CISI-018	12	E1.20	E-A	92E-92	VT-3	N-VT-15

April 10, 2006

Sam Flood, ANI/ANII, PEC-1C, BFN

BROWNS FERRY NUCLEAR PLANT (BFN) – UNIT 3 CYCLE 12 REFUELING OUTAGE CONTAINMENT INSERVICE INSPECTION (CISI) SCAN PLAN REV 003

Attached for your review is the BFN Unit 3 Cycle 12 Refueling Outage CISI Scan Plan, Revision 003, for the examinations to be performed for the current Unit 3 outage by BFN Site Engineering/Components Engineering. These examinations are being performed to satisfy the requirements of ASME Section XI Code, Subsection IWE, 1992 Edition and 1992 Addenda.

This document was prepared by D. Kelvin Green of BFN Components Engineering and forwarded to Matthew Welch and Fred Froscello of TVAN Inspection Services Organization (ISO) as notification of work scope.

D. Kelvin Green
D. Kelvin Green
BFN Components Engineering

Matthew C. Welch
Matthew C. Welch
BFN ISO, NDE Level III

Frederick W. Froscello Jr.
Frederick W. Froscello Jr.
BFN ISO, NDE Specialist - ISI

Sam Flood 5/9/06
Sam Flood ANI/ANII
Concurrence

cc: R. K. Golub, SAB-1B, BFN
M. L. Turnbow, STC-1I, SQN

Revision 003
04/10/2006

TENNESSEE VALLEY AUTHORITY
BROWNS FERRY NUCLEAR POWER PLANT - UNIT 3
IWE EXAMS SCHEDULED FOR CYCLE 12

SYSTEM	COMPONENT	ISONO	CYCLE	ITEMNO	CATEGORY	EXREQ	EXSCHD	NDEPROC	CALSTD	COMPDIA	NOMTHCK	COMPDESA	COMPDESB
SCV	DW HD-3-1	BFN-CISI-012	12	E1.12	E-A	92E-92	VT-3	N-VT-15					
SCV	DW LNR 3-1A	BFN-CISI-006	12	E1.12	E-A	92E-MS	VT-3	N-VT-15					
SCV	DW LNR-3-1	BFN-CISI-008-2	12	E1.12	E-A	92E-92	VT-3	N-VT-15					
SCV	DW LNR-3-1	BFN-CISI-008-2	12	N/A	N/A	92E-PC	VT-3	N-VT-15					
SCV	DW LNR-3-2	BFN-CISI-008-2	12	E1.12	E-A	92E-92	VT-3	N-VT-15					
SCV	DW LNR-3-2	BFN-CISI-008-2	12	N/A	N/A	92E-PC	VT-3	N-VT-15					
SCV	DW LNR-3-3	BFN-CISI-008-2	12	E1.12	E-A	92E-92	VT-3	N-VT-15					
SCV	DW LNR-3-3	BFN-CISI-008-2	12	N/A	N/A	92E-PC	VT-3	N-VT-15					
SCV	DW LNR-3-4	BFN-CISI-008-2	12	E1.12	E-A	92E-92	VT-3	N-VT-15					
SCV	DW LNR-3-4	BFN-CISI-008-2	12	N/A	N/A	92E-PC	VT-3	N-VT-15					
SCV	DW LNR-3-5	BFN-CISI-008-2	12	E1.12	E-A	92E-92	VT-3	N-VT-15					
SCV	DW LNR-3-5	BFN-CISI-008-2	12	N/A	N/A	92E-PC	VT-3	N-VT-15					
SCV	DW LNR-3-6	BFN-CISI-008-2	12	E1.12	E-A	92E-92	VT-3	N-VT-15					
SCV	DW LNR-3-6	BFN-CISI-008-2	12	N/A	N/A	92E-PC	VT-3	N-VT-15					
SCV	ECCS RH 3-1	BFN-CISI-002	12	E1.12	E-A	92E-92	VT-3	N-VT-15					
SCV	ECCS RH 3-10	BFN-CISI-002	12	E1.12	E-A	92E-92	VT-3	N-VT-15					
SCV	ECCS RH 3-11	BFN-CISI-002	12	E1.12	E-A	92E-92	VT-3	N-VT-15					
SCV	ECCS RH 3-12	BFN-CISI-002	12	E1.12	E-A	92E-92	VT-3	N-VT-15					
SCV	ECCS RH 3-13	BFN-CISI-002	12	E1.12	E-A	92E-92	VT-3	N-VT-15					
SCV	ECCS RH 3-14	BFN-CISI-002	12	E1.12	E-A	92E-92	VT-3	N-VT-15					
SCV	ECCS RH 3-15	BFN-CISI-002	12	E1.12	E-A	92E-92	VT-3	N-VT-15					
SCV	ECCS RH 3-16	BFN-CISI-002	12	E1.12	E-A	92E-92	VT-3	N-VT-15					
SCV	ECCS RH 3-2	BFN-CISI-002	12	E1.12	E-A	92E-92	VT-3	N-VT-15					

SYSTEM	COMPONENT	ISONO	CYCLE	ITEMNO	CATEGORY	EXREQ	EXSCHD	NDEPROC	CALSTD	COMPDIA	NOMTHCK	COMPDESA	COMPDESB
SCV	ECCS RH 3-3	BFN-CISI-002	12	E1.12	E-A	92E-92	VT-3	N-VT-15					
SCV	ECCS RH 3-4	BFN-CISI-002	12	E1.12	E-A	92E-92	VT-3	N-VT-15					
SCV	ECCS RH 3-5	BFN-CISI-002	12	E1.12	E-A	92E-92	VT-3	N-VT-15					
SCV	ECCS RH 3-6	BFN-CISI-002	12	E1.12	E-A	92E-92	VT-3	N-VT-15					
SCV	ECCS RH 3-7	BFN-CISI-002	12	E1.12	E-A	92E-92	VT-3	N-VT-15					
SCV	ECCS RH 3-8	BFN-CISI-002	12	E1.12	E-A	92E-92	VT-3	N-VT-15					
SCV	ECCS RH 3-9	BFN-CISI-002	12	E1.12	E-A	92E-92	VT-3	N-VT-15					
SCV	GEN-VTE	3-47E872-1-ISI	12	E1.11	E-A	92E-92	VT-GEN	3-TI-173				SHL	
SCV	MSB-3-1	BFN-CISI-015	12	E5.30	E-D	92E-92	VT-3	N-VT-15					
SCV	MSB-3-2	BFN-CISI-015	12	E5.30	E-D	92E-92	VT-3	N-VT-15					
SCV	MSB-3-3	BFN-CISI-015	12	E5.30	E-D	92E-92	VT-3	N-VT-15					
SCV	PEN 3-X-35F	BFN-CISI-043	12	E1.12	E-A	92E-92	VT-3	N-VT-15					
SCV	PEN 3-X-35F	BFN-CISI-043	12	N/A	N/A	92E-CV	VT-3	N-VT-15					
SCV	PEN 3-X-48	BFN-CISI-046	12	E1.12	E-A	P92-01	VT-3	N-VT-15					
SCV	PEN 3-X-48	BFN-CISI-046	12	E8.10	E-G	P92-01	VT-1	N-VT-15					
SCV	PEN 3-X-48	BFN-CISI-046	12	E9.10	E-P	P92-01	VT-1	N-VT-15					
SCV	PSC INT 3-B-10A	BFN-CISI-007	12	E1.12	E-A	92E-92	VT-3	N-VT-15					
SCV	PSC INT 3-B-11A	BFN-CISI-007	12	E1.12	E-A	92E-92	VT-3	N-VT-15					
SCV	PSC INT 3-B-12A	BFN-CISI-007	12	E1.12	E-A	92E-92	VT-3	N-VT-15					
SCV	PSC INT 3-B-13A	BFN-CISI-007	12	E1.12	E-A	92E-92	VT-3	N-VT-15					
SCV	PSC INT 3-B-14A	BFN-CISI-007	12	E1.12	E-A	92E-92	VT-3	N-VT-15					
SCV	PSC INT 3-B-15A	BFN-CISI-007	12	E1.12	E-A	92E-92	VT-3	N-VT-15					
SCV	PSC INT 3-B-16A	BFN-CISI-007	12	E1.12	E-A	92E-92	VT-3	N-VT-15					
SCV	PSC INT 3-B-1A	BFN-CISI-007	12	E1.12	E-A	92E-92	VT-3	N-VT-15					
SCV	PSC INT 3-B-2A	BFN-CISI-007	12	E1.12	E-A	92E-92	VT-3	N-VT-15					
SCV	PSC INT 3-B-3A	BFN-CISI-007	12	E1.12	E-A	92E-92	VT-3	N-VT-15					

SYSTEM	COMPONENT	ISONO	CYCLE	ITEMNO	CATEGORY	EXREQ	EXSCHD	NDEPROC	CALSTD	COMPDIA	NOMTHCK	COMPDESA	COMPDESB
SCV	PSC INT 3-B-4A	BFN-CISI-007	12	E1.12	E-A	92E-92	VT-3	N-VT-15					
SCV	PSC INT 3-B-5A	BFN-CISI-007	12	E1.12	E-A	92E-92	VT-3	N-VT-15					
SCV	PSC INT 3-B-6A	BFN-CISI-007	12	E1.12	E-A	92E-92	VT-3	N-VT-15					
SCV	PSC INT 3-B-7A	BFN-CISI-007	12	E1.12	E-A	92E-92	VT-3	N-VT-15					
SCV	PSC INT 3-B-8A	BFN-CISI-007	12	E1.12	E-A	92E-92	VT-3	N-VT-15					
SCV	PSC INT 3-B-9A	BFN-CISI-007	12	E1.12	E-A	92E-92	VT-3	N-VT-15					
SCV	PSC MVH 3-B-1	BFN-CISI-017	12	E1.20	E-A	92E-92	VT-3	N-VT-15					
SCV	PSC MVH 3-B-10	BFN-CISI-017	12	E1.20	E-A	92E-92	VT-3	N-VT-15					
SCV	PSC MVH 3-B-11	BFN-CISI-017	12	E1.20	E-A	92E-92	VT-3	N-VT-15					
SCV	PSC MVH 3-B-12	BFN-CISI-017	12	E1.20	E-A	92E-92	VT-3	N-VT-15					
SCV	PSC MVH 3-B-13	BFN-CISI-017	12	E1.20	E-A	92E-92	VT-3	N-VT-15					
SCV	PSC MVH 3-B-14	BFN-CISI-017	12	E1.20	E-A	92E-92	VT-3	N-VT-15					
SCV	PSC MVH 3-B-15	BFN-CISI-017	12	E1.20	E-A	92E-92	VT-3	N-VT-15					
SCV	PSC MVH 3-B-16	BFN-CISI-017	12	E1.20	E-A	92E-92	VT-3	N-VT-15					
SCV	PSC MVH 3-B-2	BFN-CISI-017	12	E1.20	E-A	92E-92	VT-3	N-VT-15					
SCV	PSC MVH 3-B-3	BFN-CISI-017	12	E1.20	E-A	92E-92	VT-3	N-VT-15					
SCV	PSC MVH 3-B-4	BFN-CISI-017	12	E1.20	E-A	92E-92	VT-3	N-VT-15					
SCV	PSC MVH 3-B-5	BFN-CISI-017	12	E1.20	E-A	92E-92	VT-3	N-VT-15					
SCV	PSC MVH 3-B-6	BFN-CISI-017	12	E1.20	E-A	92E-92	VT-3	N-VT-15					
SCV	PSC MVH 3-B-7	BFN-CISI-017	12	E1.20	E-A	92E-92	VT-3	N-VT-15					
SCV	PSC MVH 3-B-8	BFN-CISI-017	12	E1.20	E-A	92E-92	VT-3	N-VT-15					
SCV	PSC MVH 3-B-9	BFN-CISI-017	12	E1.20	E-A	92E-92	VT-3	N-VT-15					
SCV	VNT HDR-3-1A	BFN-CISI-018	12	E1.20	E-A	92E-92	VT-3	N-VT-15					
SCV	VNT HDR-3-2A	BFN-CISI-018	12	E1.20	E-A	92E-92	VT-3	N-VT-15					
SCV	VNT HDR-3-2A	BFN-CISI-018	12	N/A	N/A	92E-PC	VT-3	N-VT-15					
SCV	VNT HDR-3-3A	BFN-CISI-018	12	E1.20	E-A	92E-92	VT-3	N-VT-15					

SYSTEM	COMPONENT	ISONO	CYCLE	ITEMNO	CATEGORY	EXREQ	EXSCHD	NDEPROC	CALSTD	COMPDIA	NOMTHCK	COMPDESA	COMPDESB
SCV	VNT HDR-3-4A	BFN-CISI-018	12	E1.20	E-A	92E-92	VT-3	N-VT-15					
SCV	VNT HDR-3-5A	BFN-CISI-018	12	E1.20	E-A	92E-92	VT-3	N-VT-15					
SCV	VNT HDR-3-6A	BFN-CISI-018	12	E1.20	E-A	92E-92	VT-3	N-VT-15					
SCV	VNT HDR-3-7A	BFN-CISI-018	12	E1.20	E-A	92E-92	VT-3	N-VT-15					
SCV	VNT HDR-3-8A	BFN-CISI-018	12	E1.20	E-A	92E-92	VT-3	N-VT-15					

OWNER: TENNESSEE VALLEY AUTHORITY
NUCLEAR POWER GROUP
1101 MARKET STREET
CHATTANOOGA, TENNESSEE 37402

PLANT: BROWNS FERRY NUCLEAR PLANT
PO BOX 2000
DECATUR, ALABAMA 35609-2000

IWE Exams EXREQ's
92E-92
P92-01

UNIT: 3 CYCLE: 12 COMMERCIAL SERVICE DATE: MARCH 1, 1975

CERTIFICATION OF AUTHORIZATION: NOT REQUIRED
NATIONAL BOARD NUMBER FOR UNIT: NOT REQUIRED

System	Component Number	ISO Drawing	Exreq	Category	Item Number	Exam Scheduled	Calibration Standard	Exam Date	Exam Report	Exam Results	Comments
SCV	DW HD-3-1	BFN-CISI-012	92E-92	E-A	E1.12	VT-3		20060310	CISI-312-050	P	NOI# U3C12-021 CLEARED THIS REPORT.
SCV	DW LNR-3-1	BFN-CISI-008-2	92E-92	E-A	E1.12	VT-3		20060303	CISI-312-042	P	CLEARED BY REPORT# CISI-312-045.
SCV	DW LNR-3-2	BFN-CISI-008-2	92E-92	E-A	E1.12	VT-3		20060308	CISI-312-043	P	CLEARED BY NOI# U3C12-017 AND REPORT CICI-312-044.
SCV	DW LNR-3-3	BFN-CISI-008-2	92E-92	E-A	E1.12	VT-3		20060305	CISI-312-048	P	REPORT CISI-312-049 CLEARS THIS REPORT.
SCV	DW LNR-3-4	BFN-CISI-008-2	92E-92	E-A	E1.12	VT-3		20060303	CISI-312-010	P	REPORT CISI-312-036 CLEARS NOI# U3C12-007.
SCV	DW LNR-3-5	BFN-CISI-008-2	92E-92	E-A	E1.12	VT-3		20060308	CISI-312-040	P	REF. CISI-312-011. THIS CLEARED BY NOI# U3C12-014 & NOI# U3C12-006 AND REPORT# CISI-312-041.
SCV	DW LNR-3-5	BFN-CISI-008-2	92E-92	E-A	E1.12	VT-3		20060303	CISI-312-011	P	CISI-312-035 CLEARS NOI# U3C12-006.
SCV	DW LNR-3-6	BFN-CISI-008-2	92E-92	E-A	E1.12	VT-3		20060303	CISI-312-012	P	REPORT CISI-312-034 CLEARS NOI# U3C12-005.
SCV	ECCS RH 3-1	BFN-CISI-002	92E-92	E-A	E1.12	VT-3		20060223	CISI-312-029	P	
SCV	ECCS RH 3-10	BFN-CISI-002	92E-92	E-A	E1.12	VT-3		20060223	CISI-312-015	P	
SCV	ECCS RH 3-11	BFN-CISI-002	92E-92	E-A	E1.12	VT-3		20060224	CISI-312-032	P	
SCV	ECCS RH 3-12	BFN-CISI-002	92E-92	E-A	E1.12	VT-3		20060223	CISI-312-033	P	
SCV	ECCS RH 3-13	BFN-CISI-002	92E-92	E-A	E1.12	VT-3		20060224	CISI-312-037	P	
SCV	ECCS RH 3-14	BFN-CISI-002	92E-92	E-A	E1.12	VT-3		20060222	CISI-312-014	P	
SCV	ECCS RH 3-15	BFN-CISI-002	92E-92	E-A	E1.12	VT-3		20060222	CISI-312-013	P	
SCV	ECCS RH 3-16	BFN-CISI-002	92E-92	E-A	E1.12	VT-3		20060302	CISI-312-006	P	
SCV	ECCS RH 3-2	BFN-CISI-002	92E-92	E-A	E1.12	VT-3		20060223	CISI-312-018	P	
SCV	ECCS RH 3-3	BFN-CISI-002	92E-92	E-A	E1.12	VT-3		20060223	CISI-312-017	P	
SCV	ECCS RH 3-4	BFN-CISI-002	92E-92	E-A	E1.12	VT-3		20060302	CISI-312-009	P	

OWNER: TENNESSEE VALLEY AUTHORITY
NUCLEAR POWER GROUP
1101 MARKET STREET
CHATTANOOGA, TENNESSEE 37402

PLANT: BROWNS FERRY NUCLEAR PLANT
PO BOX 2000
DECATUR, ALABAMA 35609-2000

IWE Exams EXREQ's
92E-92
P92-01

UNIT: 3 CYCLE: 12 COMMERCIAL SERVICE DATE: MARCH 1, 1975

CERTIFICATION OF AUTHORIZATION: NOT REQUIRED
NATIONAL BOARD NUMBER FOR UNIT: NOT REQUIRED

System	Component Number	ISO Drawing	Exreq	Category	Item Number	Exam Scheduled	Calibration Standard	Exam Date	Exam Report	Exam Results	Comments
SCV	ECCS RH 3-5	BFN-CISI-002	92E-92	E-A	E1.12	VT-3		20060224	CISI-312-030	P	
SCV	ECCS RH 3-6	BFN-CISI-002	92E-92	E-A	E1.12	VT-3		20060224	CISI-312-031	P	
SCV	ECCS RH 3-7	BFN-CISI-002	92E-92	E-A	E1.12	VT-3		20060302	CISI-312-008	P	
SCV	ECCS RH 3-8	BFN-CISI-002	92E-92	E-A	E1.12	VT-3		20060302	CISI-312-007	P	
SCV	ECCS RH 3-9	BFN-CISI-002	92E-92	E-A	E1.12	VT-3		20060223	CISI-312-016	P	
SCV	GEN-VTE	3-47E872-1-ISI	92E-92	E-A	E1.11	VT-GE		20060221	CISI-312-002	P	EXAMINERS: J. A. FERGERSON, H. B. BARNETT, R. C. PLASKON, D. BROWN, M. E. OGGS, & R. S. SCAGLIONE.
SCV	MSB-3-1	BFN-CISI-015	92E-92	E-D	E5.30	VT-3		20060301	CISI-312-003	P	EXAMINERS: J. A. FERGERSON, H. B. BARNETT & R. C. PLASKON REFERENCE PER# 98978 & 99049. REPORT CISI-312-053 CLEARS THIS CONDITION.
SCV	MSB-3-2	BFN-CISI-015	92E-92	E-D	E5.30	VT-3		20060301	CISI-312-004	P	EXAMINERS: J. A. FERGERSON, H. B. BARNETT & R. C. PLASKON REFERENCE PER# 98978 & 99049. REPORT CISI-312-055 CLEARS THIS CONDITION.
SCV	MSB-3-3	BFN-CISI-015	92E-92	E-D	E5.30	VT-3		20060301	CISI-312-005	P	EXAMINERS: J. A. FERGERSON, H. B. BARNETT & R. C. PLASKON REFERENCE PER# 98978 & 99049. REPORT CISI-312-054 CLEARS THIS CONDITION.
SCV	PEN 3-X-35F	BFN-CISI-043	92E-92	E-A	E1.12	VT-3		20060316	CISI-312-056	P	W.O.06-713296-000, REPORT CISI-312-057 AND NOI# U3C12-024 CLEARS THIS REPORT.
SCV	PEN 3-X-48	BFN-CISI-046	P92-01	E-A	E1.12	VT-3		20060315	CISI-312-051	P	W. O. 04-712432-001, EXAMINED WELDS PNTSL-3-006-001 & 002.
SCV	PEN 3-X-48	BFN-CISI-046	P92-01	E-G	E8.10	VT-1		20060224	CISI-312-001	P	W. O. 04-712432-001, EXAMINED 3" MN FLANGE AND STUDS AND NUTS.
SCV	PEN 3-X-48	BFN-CISI-046	P92-01	E-P	E9.10	VT-1		20060318	CISI-312-058	P	W. O. 04-712432-001, EXAMINED REPLACED PORTION ONLY. VT-1 PERFORMED AFTER PRESSURE TEST REF. 0-TI-376.

OWNER: TENNESSEE VALLEY AUTHORITY
NUCLEAR POWER GROUP
1101 MARKET STREET
CHATTANOOGA, TENNESSEE 37402

PLANT: BROWNS FERRY NUCLEAR PLANT
PO BOX 2000
DECATUR, ALABAMA 35609-2000

IWE Exams EXREQ's
92E-92
P92-01

UNIT: 3 CYCLE: 12 COMMERCIAL SERVICE DATE: MARCH 1, 1975

CERTIFICATION OF AUTHORIZATION: NOT REQUIRED
NATIONAL BOARD NUMBER FOR UNIT: NOT REQUIRED

System	Component Number	ISO Drawing	Exreq	Category	Item Number	Exam Scheduled	Calibration Standard	Exam Date	Exam Report	Exam Results	Comments
SCV	PSC INT 3-B-10A	BFN-CISI-007	92E-92	E-A	E1.12	VT-3		20060310	CISI-213-059	P	NOI# U3C12-023 CLEARED NO FURTHER REEXAMS REQUIRED.
SCV	PSC INT 3-B-11A	BFN-CISI-007	92E-92	E-A	E1.12	VT-3		20060310	CISI-312-059	P	NOI# U3C12-023 CLEARED NO FURTHER REEXAMS REQUIRED.
SCV	PSC INT 3-B-12A	BFN-CISI-007	92E-92	E-A	E1.12	VT-3		20060310	CISI-213-059	P	NOI# U3C12-023 CLEARED NO FURTHER REEXAMS REQUIRED.
SCV	PSC INT 3-B-13A	BFN-CISI-007	92E-92	E-A	E1.12	VT-3		20060310	CISI-213-059	P	NOI# U3C12-023 CLEARED NO FURTHER REEXAMS REQUIRED.
SCV	PSC INT 3-B-14A	BFN-CISI-007	92E-92	E-A	E1.12	VT-3		20060310	CISI-213-059	P	NOI# U3C12-023 CLEARED NO FURTHER REEXAMS REQUIRED.
SCV	PSC INT 3-B-15A	BFN-CISI-007	92E-92	E-A	E1.12	VT-3		20060310	CISI-213-059	P	NOI# U3C12-023 CLEARED NO FURTHER REEXAMS REQUIRED.
SCV	PSC INT 3-B-16A	BFN-CISI-007	92E-92	E-A	E1.12	VT-3		20060310	CISI-312-059	P	NOI# U3C12-023 CLEARED NO FURTHER REEXAMS REQUIRED.
SCV	PSC INT 3-B-1A	BFN-CISI-007	92E-92	E-A	E1.12	VT-3		20060310	CISI-312-059	P	NOI# U3C12-023 CLEARED NO FURTHER REEXAMS REQUIRED.
SCV	PSC INT 3-B-2A	BFN-CISI-007	92E-92	E-A	E1.12	VT-3		20060310	CISI-213-059	P	NOI# U3C12-023 CLEARED NO FURTHER REEXAMS REQUIRED.
SCV	PSC INT 3-B-3A	BFN-CISI-007	92E-92	E-A	E1.12	VT-3		20060310	CISI-312-059	P	NOI# U3C12-023 CLEARED NO FURTHER REEXAMS REQUIRED.
SCV	PSC INT 3-B-4A	BFN-CISI-007	92E-92	E-A	E1.12	VT-3		20060310	CISI-213-059	P	NOI# U3C12-023 CLEARED NO FURTHER REEXAMS REQUIRED.
SCV	PSC INT 3-B-5A	BFN-CISI-007	92E-92	E-A	E1.12	VT-3		20060310	CISI-213-059	P	NOI# U3C12-023 CLEARED NO FURTHER REEXAMS REQUIRED.
SCV	PSC INT 3-B-6A	BFN-CISI-007	92E-92	E-A	E1.12	VT-3		20060310	CISI-213-059	P	NOI# U3C12-023 CLEARED NO FURTHER REEXAMS REQUIRED.
SCV	PSC INT 3-B-7A	BFN-CISI-007	92E-92	E-A	E1.12	VT-3		20060310	CISI-213-059	P	NOI# U3C12-023 CLEARED NO FURTHER REEXAMS REQUIRED.

OWNER: TENNESSEE VALLEY AUTHORITY
NUCLEAR POWER GROUP
1101 MARKET STREET
CHATTANOOGA, TENNESSEE 37402

PLANT: BROWNS FERRY NUCLEAR PLANT
PO BOX 2000
DECATUR, ALABAMA 35609-2000

IWE Exams EXREQ's
92E-92
P92-01

UNIT: 3 CYCLE: 12 COMMERCIAL SERVICE DATE: MARCH 1, 1975

CERTIFICATION OF AUTHORIZATION: NOT REQUIRED
NATIONAL BOARD NUMBER FOR UNIT: NOT REQUIRED

System	Component Number	ISO Drawing	Exreq	Category	Item Number	Exam Scheduled	Calibration Standard	Exam Date	Exam Report	Exam Results	Comments
SCV	PSC INT 3-B-8A	BFN-CISI-007	92E-92	E-A	E1.12	VT-3		20060310	CISI-213-059	P	NOI# U3C12-023 CLEARED NO FURTHER REEXAMS REQUIRED.
SCV	PSC INT 3-B-9A	BFN-CISI-007	92E-92	E-A	E1.12	VT-3		20060310	CISI-213-059	P	NOI# U3C12-023 CLEARED NO FURTHER REEXAMS REQUIRED.
SCV	PSC MVH 3-B-1	BFN-CISI-017	92E-92	E-A	E1.20	VT-3		20060305	CISI-312-039	P	NOI# U3C12-013 CLEARS THIS REPORT.
SCV	PSC MVH 3-B-10	BFN-CISI-017	92E-92	E-A	E1.20	VT-3		20060305	CISI-312-039	P	NOI# U3C12-013 CLEARS THIS REPORT.
SCV	PSC MVH 3-B-11	BFN-CISI-017	92E-92	E-A	E1.20	VT-3		20060305	CISI-312-039	P	NOI# U3C12-013 CLEARS THIS REPORT.
SCV	PSC MVH 3-B-12	BFN-CISI-017	92E-92	E-A	E1.20	VT-3		20060305	CISI-312-039	P	NOI# U3C12-013 CLEARS THIS REPORT.
SCV	PSC MVH 3-B-13	BFN-CISI-017	92E-92	E-A	E1.20	VT-3		20060305	CISI-312-039	P	NOI# U3C12-013 CLEARS THIS REPORT.
SCV	PSC MVH 3-B-14	BFN-CISI-017	92E-92	E-A	E1.20	VT-3		20060305	CISI-312-039	P	NOI# U3C12-013 CLEARS THIS REPORT.
SCV	PSC MVH 3-B-15	BFN-CISI-017	92E-92	E-A	E1.20	VT-3		20060305	CISI-312-039	P	NOI# U3C12-013 CLEARS THIS REPORT.
SCV	PSC MVH 3-B-16	BFN-CISI-017	92E-92	E-A	E1.20	VT-3		20060305	CISI-312-039	P	NOI# U3C12-013 CLEARS THIS REPORT.
SCV	PSC MVH 3-B-2	BFN-CISI-017	92E-92	E-A	E1.20	VT-3		20060305	CISI-312-039	P	NOI# U3C12-013 CLEARS THIS REPORT.
SCV	PSC MVH 3-B-3	BFN-CISI-017	92E-92	E-A	E1.20	VT-3		20060305	CISI-312-039	P	NOI# U3C12-013 CLEARS THIS REPORT.
SCV	PSC MVH 3-B-4	BFN-CISI-017	92E-92	E-A	E1.20	VT-3		20060305	CISI-312-039	P	NOI# U3C12-013 CLEARS THIS REPORT.
SCV	PSC MVH 3-B-5	BFN-CISI-017	92E-92	E-A	E1.20	VT-3		20060305	CISI-312-039	P	NOI# U3C12-013 CLEARS THIS REPORT.
SCV	PSC MVH 3-B-6	BFN-CISI-017	92E-92	E-A	E1.20	VT-3		20060305	CISI-312-039	P	NOI# U3C12-013 CLEARS THIS REPORT.
SCV	PSC MVH 3-B-7	BFN-CISI-017	92E-92	E-A	E1.20	VT-3		20060305	CISI-312-039	P	NOI# U3C12-013 CLEARS THIS REPORT.
SCV	PSC MVH 3-B-8	BFN-CISI-017	92E-92	E-A	E1.20	VT-3		20060305	CISI-312-039	P	NOI# U3C12-013 CLEARS THIS REPORT.
SCV	PSC MVH 3-B-9	BFN-CISI-017	92E-92	E-A	E1.20	VT-3		20060305	CISI-312-039	P	NOI# U3C12-013 CLEARS THIS REPORT.
SCV	VNT HDR-3-1A	BFN-CISI-018	92E-92	E-A	E1.20	VT-3		20060303	CISI-312-019	P	NOI# U3C12-018 CLEARED THIS REPORT.

OWNER: TENNESSEE VALLEY AUTHORITY
NUCLEAR POWER GROUP
1101 MARKET STREET
CHATTANOOGA, TENNESSEE 37402

PLANT: BROWNS FERRY NUCLEAR PLANT
PO BOX 2000
DECATUR, ALABAMA 35609-2000

IWE Exams EXREQ's
92E-92
P92-01

UNIT: 3 CYCLE: 12 COMMERCIAL SERVICE DATE: MARCH 1, 1975

CERTIFICATION OF AUTHORIZATION: NOT REQUIRED
NATIONAL BOARD NUMBER FOR UNIT: NOT REQUIRED

System	Component Number	ISO Drawing	Exreq	Category	Item Number	Exam Scheduled	Calibration Standard	Exam Date	Exam Report	Exam Results	Comments
SCV	VNT HDR-3-2A	BFN-CISI-018	92E-92	E-A	E1.20	VT-3		20060303	CISI-312-020	P	THIS REPORT CLEARED BY CISI-312-026 AND NOI# U3C12-009 CLEARED.
SCV	VNT HDR-3-2A	BFN-CISI-018	92E-92	E-A	E1.20	VT-3		20060303	CISI-312-046	P	THIS CLEARS NOI# U3C12-046.
SCV	VNT HDR-3-3A	BFN-CISI-018	92E-92	E-A	E1.20	VT-3		20060303	CISI-312-021	P	NOI# U3C12-018 CLEARS THIS REPORT.
SCV	VNT HDR-3-4A	BFN-CISI-018	92E-92	E-A	E1.20	VT-3		20060303	CISI-312-022	P	NOI# U3C12-018 CLEARS THIS REPORT.
SCV	VNT HDR-3-5A	BFN-CISI-018	92E-92	E-A	E1.20	VT-3		20060303	CISI-312-023	P	NOI# U3C12-018 CLEARS THIS REPORT.
SCV	VNT HDR-3-6A	BFN-CISI-018	92E-92	E-A	E1.20	VT-3		20060303	CISI-312-027	P	NOI# U3C12-010 CLEARS THIS REPORT.
SCV	VNT HDR-3-6A	BFN-CISI-018	92E-92	E-A	E1.20	VT-3		20060303	CISI-312-047	P	NOI# U3C12 CLEARS THIS REPORT.
SCV	VNT HDR-3-7A	BFN-CISI-018	92E-92	E-A	E1.20	VT-3		20060303	CISI-312-024	P	NOI# U3C12-018 CLEARS THIS REPORT.
SCV	VNT HDR-3-8A	BFN-CISI-018	92E-92	E-A	E1.20	VT-3		20060303	CISI-312-025	P	NOI# U3C12-018 CLEARS THIS REPORT.

OWNER: TENNESSEE VALLEY AUTHORITY
NUCLEAR POWER GROUP
1101 MARKET STREET
CHATTANOOGA, TENNESSEE 37402

PLANT: BROWNS FERRY NUCLEAR PLANT
PO BOX 2000
DECATUR, ALABAMA 35609-2000

IWE Exams EXREQ's
92E-CV
92E-PC
92E-MS

UNIT: 3 CYCLE: 12 COMMERCIAL SERVICE DATE: MARCH 1, 1975

CERTIFICATION OF AUTHORIZATION: NOT REQUIRED
NATIONAL BOARD NUMBER FOR UNIT: NOT REQUIRED

System	Component Number	ISO Drawing	Exreq	Category	Item Number	Exam Scheduled	Calibration Standard	Exam Date	Exam Report	Exam Results	Comments
SCV	DW LNR 3-1A	BFN-CISI-006	92E-MS	E-A	E1.12	VT-3		20060315	CISI-213-052	P	A VOLUNTARTY VT-1 WAS PERFORMED IN LIEU OF A VT-3. REFERENCE PER# 98978 NOI# U3C12-001.
SCV	DW LNR-3-1	BFN-CISI-008-2	92E-PC	N/A	N/A	VT-3		20060303	CISI-312-045	P	Preservice following coating repair required by NOI U3C12-016
SCV	DW LNR-3-2	BFN-CISI-008-2	92E-PC	N/A	N/A	VT-3		20060308	CISI-312-044	P	Preservice following coating repair required by NOI U3C12-017
SCV	DW LNR-3-3	BFN-CISI-008-2	92E-PC	N/A	N/A	VT-3		20060305	CISI-312-049	P	Preservice following coating repair required by NOI U3C12-020
SCV	DW LNR-3-4	BFN-CISI-008-2	92E-PC	N/A	N/A	VT-3		200603	CISI-312-036	P	Preservice following coating repair required by NOI U3C12-007
SCV	DW LNR-3-5	BFN-CISI-008-2	92E-PC	N/A	N/A	VT-3		20060308	CISI-312-041	P	THIS CLEARS NOI# U3C12-014 AND NOI# U3C12-006.
SCV	DW LNR-3-5	BFN-CISI-008-2	92E-PC	N/A	N/A	VT-3		20060305	CISI-312-035	P	Preservice following coating repair required by NOI U3C12-006
SCV	DW LNR-3-6	BFN-CISI-008-2	92E-PC	N/A	N/A	VT-3		20060305	CISI-312-034	P	Preservice following coating repair required by NOI U3C12-006 and 014
SCV	PEN 3-X-35F	BFN-CISI-043	92E-CV	N/A	N/A	VT-3		20060316	CISI-312-057	P	W.O.06-713296-000. NOI# U3C12-024 IS CLEARED. INDICATIONS ARE NOT WITHIN THE iwe CODE BOUDARY.
SCV	VNT HDR-3-2A	BFN-CISI-018	92E-PC	N/A	N/A	VT-3		20060303	CISI-312-026	P	Preservice following coating repair required by NOI U3C12-009

OWNER: TENNESSEE VALLEY AUTHORITY OFFICE OF NUCLEAR POWER 1101 MARKET STREET CHATTANOOGA, TENNESSEE 37402	PLANT: BROWNS FERRY NUCLEAR PLANT P.O. BOX 2000 DECATUR, ALABAMA 35602
UNIT: THREE	CERTIFICATE OF AUTHORIZATION: NOT REQUIRED
COMMERCIAL SERVICE DATE: MARCH 1, 1977	
NATIONAL BOARD NUMBER FOR UNIT: NOT REQUIRED	

SUMMARY OF INDICATIONS

OWNER: TENNESSEE VALLEY AUTHORITY OFFICE OF NUCLEAR POWER 1101 MARKET STREET CHATTANOOGA, TENNESSEE 37402	PLANT: BROWNS FERRY NUCLEAR PLANT P.O. BOX 2000 DECATUR, ALABAMA 35602
UNIT: THREE	CERTIFICATE OF AUTHORIZATION: NOT REQUIRED
COMMERCIAL SERVICE DATE: MARCH 1, 1977	
NATIONAL BOARD NUMBER FOR UNIT: NOT REQUIRED	

The information contained in this report is provided in accordance with the requirements of 10CFR50.55a(b)(2)(x)(A), evaluation of inaccessible areas, and 10CFR50.55a(b)(2)(x)(D), evaluation for additional examinations, as they pertain to containment inservice examinations performed during the BFN Unit 3 Cycle 12 refueling outage.

The subject examinations were performed in accordance with ASME Section XI Subsection IWE, 1992 Edition/1992 Addenda. BFN Unit 3 is in the third period of the first examination interval.

OWNER: TENNESSEE VALLEY AUTHORITY OFFICE OF NUCLEAR POWER 1101 MARKET STREET CHATTANOOGA, TENNESSEE 37402	PLANT: BROWNS FERRY NUCLEAR PLANT P.O. BOX 2000 DECATUR, ALABAMA 35602
UNIT: THREE	CERTIFICATE OF AUTHORIZATION: NOT REQUIRED
COMMERCIAL SERVICE DATE: MARCH 1, 1977	
NATIONAL BOARD NUMBER FOR UNIT: NOT REQUIRED	

BFN CONTAINMENT INSERVICE INSPECTION (CISI) PROGRAM U3C12 REFUELING OUTAGE SUMMARY REPORT

Unit:	BFN Unit 3
Refueling Outage:	12
Period/Interval:	Third Period of the First Interval
Code of Record:	ASME Section XI, 1992 Edition/1992 Addenda
Program Procedure:	0-TI-376, Revision 4

Summary of Examinations

The records contained within the Site Final Report comprise the Containment Inservice examinations performed to implement the requirements of ASME Section XI, Subsection IWE. The examinations are summarized as follows:

Table IWE-2500-1, Examination Category E-A, Containment Surfaces
Periodic examinations were scheduled for the outage as well as examinations performed in support of maintenance activities. The examinations are as described below:

- Torus exterior (accessible portions)
- Drywell liner (drywell interior)
- Drywell Head
- Suppression chamber interior including: Vent Pipe from Drywell to Torus, Main Vent Header and Downcomers, Torus Interior above water line
- Drywell liner @ elevation 550' when exposed for repair of the moisture seal barrier

Table IWE-2500-1, Examination Category E-D, Seals, Gaskets and Moisture Barriers
During the refueling outage, accessible portions of the Drywell moisture barrier seal at elevation 550' were examined.

Table IWE-2500-1, Examination Category E-G, Pressure Retaining Bolting
Flange, nuts, and bolting for modified penetration X-48 was examined.

OWNER: TENNESSEE VALLEY AUTHORITY OFFICE OF NUCLEAR POWER 1101 MARKET STREET CHATTANOOGA, TENNESSEE 37402	PLANT: BROWNS FERRY NUCLEAR PLANT P.O. BOX 2000 DECATUR, ALABAMA 35602
UNIT: THREE	CERTIFICATE OF AUTHORIZATION: NOT REQUIRED
COMMERCIAL SERVICE DATE: MARCH 1, 1977	
NATIONAL BOARD NUMBER FOR UNIT: NOT REQUIRED	

NOI No: U3C12-001 **Report No:** CISI-312-003, -004, -005 **Component:** Drywell Moisture Seal Barrier MSB-3-1, MSB-3-2, MSB-3-3

Condition/Indication: Moisture seal barrier is separated from the drywell liner / concrete and is damaged.

EVALUATION OF INACCESSIBLE AREAS 10CFR50.55a(b)(2)(ix)(A)

(1) Description of the type and estimated extent of degradation, and the conditions that led to the degradation:

NOI U3C12-001 and Report CISI-312-003,-004,-005 document conditions noted during the VT-3 Examination of the Drywell Moisture Seal Barrier at Elevation 550'. The reported conditions consisted of separation and damage of the moisture seal barrier. Inaccessible areas are located under the 6 foot wide air duct at the 90 degree azimuth and the 270 degree azimuth.

(2) Evaluation of each area, and the result of the evaluation:

The reported conditions consisted of separation and damage of the Moisture Seal Barrier. Due to age and/or damage, the seal separates from the liner allowing the potential for moisture, if present, to get entrapped between the seal and liner. Inaccessible areas are located under the six foot wide air duct at the 90 degree azimuth and the 270 degree azimuth. For each inaccessible area, the area under the duct is not accessible for visual inspection using VT-3 criteria. The physical condition of the Moisture Seal Barrier appears not to meet the acceptance criteria given in 0-SI-4.7.A.2.K (low spots, debris, and poor appearance). Sixteen areas of seal separation were identified in the accessible Moisture Seal Barrier inspection. Following the removal of the seal in these areas, a VT-1 examination of the liner was performed (Reference CISI-312-052). No reportable condition was found. It is not expected that similar separation of the moisture seal from the liner has occurred in the inaccessible areas. Because there was no moisture in the identified areas, the nitrogen atmosphere during plant operations, and that there is still some remaining ligament in the existing Moisture Seal Barrier, the present condition should be accepted for continued use. These results indicate that the inaccessible areas are acceptable for continued use.

(3) Description of necessary corrective actions:
Areas of Moisture Seal Barrier failure (e.g., separation from shell/concrete, damage, depression, etc.) were removed and then replaced to meet the standards specified in 0-SI-4.7.A.2.K.

OWNER: TENNESSEE VALLEY AUTHORITY OFFICE OF NUCLEAR POWER 1101 MARKET STREET CHATTANOOGA, TENNESSEE 37402	PLANT: BROWNS FERRY NUCLEAR PLANT P.O. BOX 2000 DECATUR, ALABAMA 35602
UNIT: THREE	CERTIFICATE OF AUTHORIZATION: NOT REQUIRED
COMMERCIAL SERVICE DATE: MARCH 1, 1977	
NATIONAL BOARD NUMBER FOR UNIT: NOT REQUIRED	

ADDITIONAL EXAMINATIONS 10CFR50.55a(b)(2)(ix)(D)

(1) Description of each flaw or area, including the extent of degradation, and the conditions that led to the degradation:

The condition documented by this NOI is not considered to be a defective condition with respect to the steel containment vessel. The condition has been addressed by evaluating the containment vessel in the affected areas. Therefore, additional examinations are not warranted.

(2) The acceptability of each flaw or area, and the need for additional examinations to verify that similar degradation does not exist in similar components:
N/A. See (1) above.

(3) A description of the necessary corrective actions:

N/A. See (1) above.

(4) The number and type of additional examinations to ensure detection of similar degradation in similar components:

N/A. See (1) above.

OWNER: TENNESSEE VALLEY AUTHORITY OFFICE OF NUCLEAR POWER 1101 MARKET STREET CHATTANOOGA, TENNESSEE 37402	PLANT: BROWNS FERRY NUCLEAR PLANT P.O. BOX 2000 DECATUR, ALABAMA 35602
UNIT: THREE	CERTIFICATE OF AUTHORIZATION: NOT REQUIRED
COMMERCIAL SERVICE DATE: MARCH 1, 1977	
NATIONAL BOARD NUMBER FOR UNIT: NOT REQUIRED	

NOI No: U3C12-005 **Report No:** CISI-312-012 **Component:** Drywell Liner Elevation 633 DW-LNR-3-6

Condition/Indication: Coating / paint flaking and blistering of painted / coated surfaces on the metal containment liner.

EVALUATION OF INACCESSIBLE AREAS 10CFR50.55a(b)(2)(ix)(A)

(1) Description of the type and estimated extent of degradation, and the conditions that led to the degradation:

NOI U3C12-005 and Report CISI-312-012 document conditions noted during the VT-3 Examination of the steel Drywell containment vessel on elevation 633'. This examination was performed to satisfy the requirements of IWE-2500 (b). The reported conditions consisted of flaking and blistering coatings.

(2) Evaluation of each area, and the result of the evaluation:

This NOI documents indications noted during the VT-3 examination of the steel containment vessel surface in areas identified for coating removal. This examination was performed to satisfy the requirements of IWE-2500(b), examination of coatings prior to removal. The indications noted consist of areas of flaking or delaminating of the applied coating. The exposed liner surface in these areas has been inspected after coating removal and is in good condition. There is no degradation that affects the structural integrity or leak tightness of the steel containment vessel. The conditions noted are expected based on the age and service conditions of the component. Therefore, no adverse condition exists that may be present in inaccessible areas. See VT-3 Report Number CISI 312-034.

(3) Description of necessary corrective actions:

N/A. No additional corrective actions necessary. Reference (2) above.

OWNER: TENNESSEE VALLEY AUTHORITY OFFICE OF NUCLEAR POWER 1101 MARKET STREET CHATTANOOGA, TENNESSEE 37402	PLANT: BROWNS FERRY NUCLEAR PLANT P.O. BOX 2000 DECATUR, ALABAMA 35602
UNIT: THREE	CERTIFICATE OF AUTHORIZATION: NOT REQUIRED
COMMERCIAL SERVICE DATE: MARCH 1, 1977	
NATIONAL BOARD NUMBER FOR UNIT: NOT REQUIRED	

ADDITIONAL EXAMINATIONS 10CFR50.55a(b)(2)(ix)(D)

(1) Description of each flaw or area, including the extent of degradation, and the conditions that led to the degradation:

The condition documented by this NOI is not considered to be a defective condition with respect to the shell containment vessel. The condition has been addressed by removal of the coating and examination of the liner in the affected areas. Therefore, additional examinations are not warranted.

(2) The acceptability of each flaw or area, and the need for additional examinations to verify that similar degradation does not exist in similar components:

Not applicable. See (1) above.

(3) A description of the necessary corrective actions:

Not applicable. See (1) above.

(4) The number and type of additional examinations to ensure detection of similar degradation in similar components:

Not applicable. See (1) above.

OWNER: TENNESSEE VALLEY AUTHORITY OFFICE OF NUCLEAR POWER 1101 MARKET STREET CHATTANOOGA, TENNESSEE 37402	PLANT: BROWNS FERRY NUCLEAR PLANT P.O. BOX 2000 DECATUR, ALABAMA 35602
UNIT: THREE	CERTIFICATE OF AUTHORIZATION: NOT REQUIRED
COMMERCIAL SERVICE DATE: MARCH 1, 1977	
NATIONAL BOARD NUMBER FOR UNIT: NOT REQUIRED	

NOI No: U3C12-006 **Report No:** CISI-312-011 **Component:** Drywell Liner Elevation 616 DW-LNR-3-5

Condition/Indication: Coating / paint flaking and blistering of painted / coated surfaces on the metal containment liner.

EVALUATION OF INACCESSIBLE AREAS 10CFR50.55a(b)(2)(ix)(A)

(1) Description of the type and estimated extent of degradation, and the conditions that led to the degradation:

NOI U3C12-006 and Report CISI-312-011 document conditions noted during the VT-3 Examination of the steel Drywell containment vessel on elevation 616'. This examination was performed to satisfy the requirements of IWE-2500 (b). The reported conditions consisted of flaking and blistering coatings.

(2) Evaluation of each area, and the result of the evaluation:

This NOI documents indications noted during the VT-3 examination of the steel containment vessel surface in areas identified for coating removal. This examination was performed to satisfy the requirements of IWE-2500(b), examination of coatings prior to removal. The indications noted consist of areas of flaking or delaminating of the applied coating. The exposed liner surface in these areas has been inspected after coating removal and is in good condition. There is no degradation that affects the structural integrity or leak tightness of the steel containment vessel. The conditions noted are expected based on the age and service conditions of the component. Therefore, no adverse condition exists that may be present in inaccessible areas. See VT-3 Report Number CISI-312-035.

(3) Description of necessary corrective actions:

N/A. No additional corrective actions necessary. Reference (2) above.

OWNER: TENNESSEE VALLEY AUTHORITY OFFICE OF NUCLEAR POWER 1101 MARKET STREET CHATTANOOGA, TENNESSEE 37402	PLANT: BROWNS FERRY NUCLEAR PLANT P.O. BOX 2000 DECATUR, ALABAMA 35602
UNIT: THREE	CERTIFICATE OF AUTHORIZATION: NOT REQUIRED
COMMERCIAL SERVICE DATE: MARCH 1, 1977	
NATIONAL BOARD NUMBER FOR UNIT: NOT REQUIRED	

ADDITIONAL EXAMINATIONS 10CFR50.55a(b)(2)(ix)(D)

(1) **Description of each flaw or area, including the extent of degradation, and the conditions that led to the degradation:**

The condition documented by this NOI is not considered to be a defective condition with respect to the steel containment vessel. The condition has been addressed by removal of the coating and examination of the liner in the affected areas. Therefore, additional examinations are not warranted.

(2) **The acceptability of each flaw or area, and the need for additional examinations to verify that similar degradation does not exist in similar components:**

Not applicable. See (1) above.

(3) **A description of the necessary corrective actions:**

Not applicable. See (1) above.

(4) **The number and type of additional examinations to ensure detection of similar degradation in similar components:**

Not applicable. See (1) above.

OWNER: TENNESSEE VALLEY AUTHORITY OFFICE OF NUCLEAR POWER 1101 MARKET STREET CHATTANOOGA, TENNESSEE 37402	PLANT: BROWNS FERRY NUCLEAR PLANT P.O. BOX 2000 DECATUR, ALABAMA 35602
UNIT: THREE	CERTIFICATE OF AUTHORIZATION: NOT REQUIRED
COMMERCIAL SERVICE DATE: MARCH 1, 1977	
NATIONAL BOARD NUMBER FOR UNIT: NOT REQUIRED	

NOI No: U3C12-007 **Report No:** CISI-312-010 **Component:** Drywell Liner Elevation 604
DW-LNR-3-4

Condition/Indication: Blistering of painted / coated surface on the metal containment liner.

EVALUATION OF INACCESSIBLE AREAS 10CFR50.55a(b)(2)(ix)(A)

(1) Description of the type and estimated extent of degradation, and the conditions that led to the degradation:

NOI U3C12-007 and Report CISI-312-010 document conditions noted during the VT-3 Examination of the steel Drywell containment vessel on elevation 604'. This examination was performed to satisfy the requirements of IWE-2500 (b). The reported conditions consisted of blistering of coatings.

(2) Evaluation of each area, and the result of the evaluation:

This NOI documents indications noted during the VT-3 examination of the steel containment vessel surface in areas identified for coating removal. This examination was performed to satisfy the requirements of IWE-2500(b), examination of coating prior to removal. The indications noted consist of areas of flaking or delaminating of the applied coating. The exposed liner surface in these areas has been inspected after coating removal and is in good condition. There is no degradation that affects the structural integrity or leak tightness of the steel containment vessel. The conditions noted are expected based on the age and service conditions of the component. Therefore, no adverse condition exists that may be present in inaccessible areas. See VT-3 Report Number CISI-312-036.

(3) Description of necessary corrective actions:

N/A. No additional corrective actions necessary. Reference (2) above.

OWNER: TENNESSEE VALLEY AUTHORITY OFFICE OF NUCLEAR POWER 1101 MARKET STREET CHATTANOOGA, TENNESSEE 37402	PLANT: BROWNS FERRY NUCLEAR PLANT P.O. BOX 2000 DECATUR, ALABAMA 35602
UNIT: THREE	CERTIFICATE OF AUTHORIZATION: NOT REQUIRED
COMMERCIAL SERVICE DATE: MARCH 1, 1977	
NATIONAL BOARD NUMBER FOR UNIT: NOT REQUIRED	

ADDITIONAL EXAMINATIONS 10CFR50.55a(b)(2)(ix)(D)

(1) Description of each flaw or area, including the extent of degradation, and the conditions that led to the degradation:

The condition documented by this NOI is not considered to be a defective condition with respect to the steel containment vessel. The condition has been addressed by removal of the coating and examination of the liner in the affected areas. Therefore, additional examinations are not warranted.

(2) The acceptability of each flaw or area, and the need for additional examinations to verify that similar degradation does not exist in similar components:

Not applicable. See (1) above.

(3) A description of the necessary corrective actions:

Not applicable. See (1) above.

(4) The number and type of additional examinations to ensure detection of similar degradation in similar components:

Not applicable. See (1) above.

OWNER: TENNESSEE VALLEY AUTHORITY OFFICE OF NUCLEAR POWER 1101 MARKET STREET CHATTANOOGA, TENNESSEE 37402	PLANT: BROWNS FERRY NUCLEAR PLANT P.O. BOX 2000 DECATUR, ALABAMA 35602
UNIT: THREE	CERTIFICATE OF AUTHORIZATION: NOT REQUIRED
COMMERCIAL SERVICE DATE: MARCH 1, 1977	
NATIONAL BOARD NUMBER FOR UNIT: NOT REQUIRED	

NOI No: U3C12-009 **Report No:** CISI-312-020 **Component:** Vent Pipe from Drywell to Torus VNT-HDR-3-2A

Condition/Indication: Coating / paint flaking, peeling, and discoloration of painted / coated surfaces on the Vent pipe from Drywell to Torus.

EVALUATION OF INACCESSIBLE AREAS 10CFR50.55a(b)(2)(ix)(A)

(1) Description of the type and estimated extent of degradation, and the conditions that led to the degradation:

NOI U3C12-009 and Report CISI-312-020 document conditions noted during the VT-3 examination of the vent pipe from drywell to torus. This examination was performed to satisfy the requirements of IWE-2500 (b). The reported conditions consisted of flaking, peeling, and discoloration of coatings.

(2) Evaluation of each area, and the result of the evaluation:

This NOI documents indication noted during the VT-3 examination of the steel containment vessel surface in areas identified for coating removal. This examination was performed to satisfy the requirements of IWE-2500(b), examination of coating prior to removal. The indications noted consist of areas of flaking or delaminating of the applied coating. The exposed liner surface in these areas has been inspected after coating removal and is in good condition. There is no degradation that affects the structural integrity or leak tightness of the steel containment vessel. The conditions noted are expected based on the age and service conditions of the component. Therefore, no adverse condition exists that may be present in inaccessible areas. See VT-3 Report Number CISI-312-026.

(3) Description of necessary corrective actions:

N/A. No additional corrective actions necessary. Reference (2) above.

OWNER: TENNESSEE VALLEY AUTHORITY OFFICE OF NUCLEAR POWER 1101 MARKET STREET CHATTANOOGA, TENNESSEE 37402	PLANT: BROWNS FERRY NUCLEAR PLANT P.O. BOX 2000 DECATUR, ALABAMA 35602
UNIT: THREE	CERTIFICATE OF AUTHORIZATION: NOT REQUIRED
COMMERCIAL SERVICE DATE: MARCH 1, 1977	
NATIONAL BOARD NUMBER FOR UNIT: NOT REQUIRED	

ADDITIONAL EXAMINATIONS 10CFR50.55a(b)(2)(ix)(D)

(1) Description of each flaw or area, including the extent of degradation, and the conditions that led to the degradation:

The condition documented by this NOI is not considered to be a defective condition with respect to the steel containment vessel. The condition has been addressed by removal of the coating and examination of the liner in the affected areas. Therefore, additional examinations are not warranted.

(2) The acceptability of each flaw or area, and the need for additional examinations to verify that similar degradation does not exist in similar components:

Not applicable. See (1) above.

(3) A description of the necessary corrective actions:

Not applicable. See (1) above.

(4) The number and type of additional examinations to ensure detection of similar degradation in similar components:

Not applicable. See (1) above.

OWNER: TENNESSEE VALLEY AUTHORITY OFFICE OF NUCLEAR POWER 1101 MARKET STREET CHATTANOOGA, TENNESSEE 37402	PLANT: BROWNS FERRY NUCLEAR PLANT P.O. BOX 2000 DECATUR, ALABAMA 35602
UNIT: THREE	CERTIFICATE OF AUTHORIZATION: NOT REQUIRED
COMMERCIAL SERVICE DATE: MARCH 1, 1977	
NATIONAL BOARD NUMBER FOR UNIT: NOT REQUIRED	

NOI No: U3C12-010 **Report No:** CISI-312-027 **Component:** Vent Pipe from Drywell to Torus VNT-HDR-3-6A

Condition/Indication: Coating / paint flaking, peeling, and discoloration of painted / coated surfaces on the Vent pipe from Drywell to Torus.

EVALUATION OF INACCESSIBLE AREAS 10CFR50.55a(b)(2)(ix)(A)

(1) Description of the type and estimated extent of degradation, and the conditions that led to the degradation:

NOI U3C12-010 and Report CISI-312-027 document conditions noted during the VT-3 Examination of the Vent Pipe from Drywell to Torus. The reported conditions consisted of flaking, peeling, and discoloration of coatings.

(2) Evaluation of each area, and the result of the evaluation:

These NOI documents indications noted during the VT-3 examination of the steel containment vessel surface in areas identified for coating removal. This examination was performed to satisfy the requirements of IWE 2500(b) examination of coating prior to removal. The indications noted consist of areas of flaking or delaminating of the applied coating. The exposed liner surface in these areas has been inspected and was found to be in good condition. There is no degradation that affects the structural integrity or leak tightness of the steel containment vessel. The conditions noted are expected based on the age and service conditions of the component. Therefore, no adverse condition exist that may be present in inaccessible areas. See VT-3 Report Number CISI-312-026.

(3) Description of necessary corrective actions:

N/A. No additional corrective actions necessary. Reference (2) above.

OWNER: TENNESSEE VALLEY AUTHORITY OFFICE OF NUCLEAR POWER 1101 MARKET STREET CHATTANOOGA, TENNESSEE 37402	PLANT: BROWNS FERRY NUCLEAR PLANT P.O. BOX 2000 DECATUR, ALABAMA 35602
UNIT: THREE	CERTIFICATE OF AUTHORIZATION: NOT REQUIRED
COMMERCIAL SERVICE DATE: MARCH 1, 1977	
NATIONAL BOARD NUMBER FOR UNIT: NOT REQUIRED	

ADDITIONAL EXAMINATIONS 10CFR50.55a(b)(2)(ix)(D)

(1) Description of each flaw or area, including the extent of degradation, and the conditions that led to the degradation:

The condition documented by this NOI is not considered to be a defective condition with respect to the steel containment vessel. The condition has been addressed by removal of the coating and examination of the liner in the affected areas. Therefore, additional examinations are not warranted.

(2) The acceptability of each flaw or area, and the need for additional examinations to verify that similar degradation does not exist in similar components:

Not applicable. See (1) above.

(3) A description of the necessary corrective actions:

Not applicable. See (1) above.

(4) The number and type of additional examinations to ensure detection of similar degradation in similar components:

Not applicable. See (1) above.

OWNER: TENNESSEE VALLEY AUTHORITY OFFICE OF NUCLEAR POWER 1101 MARKET STREET CHATTANOOGA, TENNESSEE 37402	PLANT: BROWNS FERRY NUCLEAR PLANT P.O. BOX 2000 DECATUR, ALABAMA 35602
UNIT: THREE	CERTIFICATE OF AUTHORIZATION: NOT REQUIRED
COMMERCIAL SERVICE DATE: MARCH 1, 1977	
NATIONAL BOARD NUMBER FOR UNIT: NOT REQUIRED	

NOI No: U3C12-011 **Report No:** 3-TI-173/ 0-TI-417 **Component:** **PSC EXTERIOR** PSC-EXT-3-B1 THRU B16

Condition/Indication: Various conditions (including nicks, scratches, surface rust) related to the PSC exterior general visual inspection and coating inspection.

EVALUATION OF INACCESSIBLE AREAS 10CFR50.55a(b)(2)(ix)(A)

(1) Description of the type and estimated extent of degradation, and the conditions that led to the degradation:

NOI U3C12-011 and 3-TI-173 / 0-TI-417 document conditions noted during the General Visual Examination of the pressure suppression chamber exterior. The reported conditions consisted of random areas of nicks, scratches, and surface rust. There is no evidence of degradation that affects the containment structural integrity or leak tightness.

(2) Evaluation of each area, and the result of the evaluation:

The random areas of nicks, scratches, and surface rust are the results of time in service and mechanical damage. The conditions found have been evaluated and were found not to be detrimental for continued operation. No corrective actions are required for startup. The conditions identified have been documented on PER #98500. There is no evidence of degradation that affects the containment structural integrity or leak tightness.

(3) Description of necessary corrective actions:

N/A. No additional corrective actions necessary. Reference (2) above.

OWNER: TENNESSEE VALLEY AUTHORITY OFFICE OF NUCLEAR POWER 1101 MARKET STREET CHATTANOOGA, TENNESSEE 37402	PLANT: BROWNS FERRY NUCLEAR PLANT P.O. BOX 2000 DECATUR, ALABAMA 35602
UNIT: THREE	CERTIFICATE OF AUTHORIZATION: NOT REQUIRED
COMMERCIAL SERVICE DATE: MARCH 1, 1977	
NATIONAL BOARD NUMBER FOR UNIT: NOT REQUIRED	

ADDITIONAL EXAMINATIONS 10CFR50.55a(b)(2)(ix)(D)

(1) Description of each flaw or area, including the extent of degradation, and the conditions that led to the degradation:

All areas with the similar condition and coating have been evaluated. No additional examinations are required.

(2) The acceptability of each flaw or area, and the need for additional examinations to verify that similar degradation does not exist in similar components:

Not applicable. See (1) above.

(3) A description of the necessary corrective actions:

Not applicable. See (1) above.

(4) The number and type of additional examinations to ensure detection of similar degradation in similar components:

Not applicable. See (1) above.

OWNER: TENNESSEE VALLEY AUTHORITY OFFICE OF NUCLEAR POWER 1101 MARKET STREET CHATTANOOGA, TENNESSEE 37402	PLANT: BROWNS FERRY NUCLEAR PLANT P.O. BOX 2000 DECATUR, ALABAMA 35602
UNIT: THREE	CERTIFICATE OF AUTHORIZATION: NOT REQUIRED
COMMERCIAL SERVICE DATE: MARCH 1, 1977	
NATIONAL BOARD NUMBER FOR UNIT: NOT REQUIRED	

NOI No: U3C12-013 **Report No:** CISI-312-039 **Component:** Main Vent Header and Downcomers PSC-MVH-3-B-1 THRU -16

Condition/Indication: Coating / paint flaking, discoloration, signs of distress of painted / coated surfaces on the Main Vent Header and Downcomers.

EVALUATION OF INACCESSIBLE AREAS 10CFR50.55a(b)(2)(ix)(A)

(1) Description of the type and estimated extent of degradation, and the conditions that led to the degradation:

NOI U3C12-013 and Report CISI-312-039 document conditions noted during the VT-3 examination of the main vent header and downcomers . This examination was performed to satisfy the requirements of IWE-2500 (b). The indications noted consist of flaking, discoloration, and rust bloom of the applied coating.

(2) Evaluation of each area, and the result of the evaluation:

This NOI documents indications noted during the VT-3 examination of the steel containment vessel surface (Main Vent Header Downcomers). This examination was performed to satisfy the requirements of IWE 2500 (b). The indications noted consist of flaking, discoloration, and rust bloom of the applied coating. The areas of discoloration exist throughout the entire Vent Header. The steel surface of the Header is not exposed and the coating has strong adherence. 100% of the vent header was inspected. All 96 downcomers were inspected and 17 had indications of flaking and rust bloom on the lower portion of the 45 degree miter joint. The nitrogen atmosphere and dry conditions during operation will prevent corrosion of the weld joint. Indications of rust bloom and flaking have been evaluated and found to be coating failures. Poor application, due to accessibility, resulted in a thin Dry Film Thickness (DFT) on the weld joint. Environmental conditions and thin DFT has caused the rust bloom and flaking of the coating at the lower portion of the 45 degree miter weld joint in the Downcomer. To avoid Torus FME, no scrapings of the loose coatings on the welds will be performed. Based on the nitrogen atmosphere and dry conditions during operation, the corrosion rate is zero. There is no degradation that affects the structural integrity or leak tightness of the steel downcomers. The indication of discoloration found in the downcomers have been evaluated and found to be the results of carbon contamination on the surface of the coating. There is no exposed liner, and the coating adherence is good. Therefore, the structural integrity or leak tightness of the steel downcomers will not be compromised.

(3) Description of necessary corrective actions:

N/A. No additional corrective actions necessary. Reference (2) above.

OWNER: TENNESSEE VALLEY AUTHORITY OFFICE OF NUCLEAR POWER 1101 MARKET STREET CHATTANOOGA, TENNESSEE 37402	PLANT: BROWNS FERRY NUCLEAR PLANT P.O. BOX 2000 DECATUR, ALABAMA 35602
UNIT: THREE	CERTIFICATE OF AUTHORIZATION: NOT REQUIRED
COMMERCIAL SERVICE DATE: MARCH 1, 1977	
NATIONAL BOARD NUMBER FOR UNIT: NOT REQUIRED	

ADDITIONAL EXAMINATIONS 10CFR50.55a(b)(2)(ix)(D)

(1) **Description of each flaw or area, including the extent of degradation, and the conditions that led to the degradation:**

The condition documented by this NOI is not considered to be a defective condition with respect to the steel containment vessel. The condition has been addressed by evaluating the coating in the affected areas. Therefore, additional examinations are not warranted.

(2) **The acceptability of each flaw or area, and the need for additional examinations to verify that similar degradation does not exist in similar components:**

Not applicable. See (1) above.

(3) **A description of the necessary corrective actions:**

Not applicable. See (1) above.

(4) **The number and type of additional examinations to ensure detection of similar degradation in similar components:**

Not applicable. See (1) above.

OWNER: TENNESSEE VALLEY AUTHORITY OFFICE OF NUCLEAR POWER 1101 MARKET STREET CHATTANOOGA, TENNESSEE 37402	PLANT: BROWNS FERRY NUCLEAR PLANT P.O. BOX 2000 DECATUR, ALABAMA 35602
UNIT: THREE	CERTIFICATE OF AUTHORIZATION: NOT REQUIRED
COMMERCIAL SERVICE DATE: MARCH 1, 1977	
NATIONAL BOARD NUMBER FOR UNIT: NOT REQUIRED	

NOI No: U3C12-014 **Report No:** CISI-312-040 **Component:** Drywell Liner Elevation 616 DW-LNR-3-5

Condition/Indication: Coating / paint flaking, blistering on painted / coated surfaces on the metal containment liner.

EVALUATION OF INACCESSIBLE AREAS 10CFR50.55a(b)(2)(ix)(A)

(1) Description of the type and estimated extent of degradation, and the conditions that led to the degradation:

NOI U3C12-014 and Report CISI-312-040 document conditions noted during the VT-3 examination of the steel Drywell containment vessel on elevation 616'. This examination was performed to satisfy the requirements of IWE-2500 (b). The reported conditions consisted of flaking and blistering of coatings.

(2) Evaluation of each area, and the result of the evaluation:

This NOI documents indications noted during the VT-3 examination of the steel containment vessel surface in areas identified for coating removal. This examination was performed to satisfy the requirements of IWE-2500(b), examination of coatings prior to removal. The indications noted consist of areas of flaking or delaminating of the applied coating. The exposed liner surface in these areas has been inspected after coating removal and is in good condition. There is no degradation that affects the structural integrity or leak tightness of the steel containment vessel. The conditions noted are expected based on the age and service conditions of the component. Therefore, no adverse condition exists that may be present in inaccessible areas. See VT-3 Report Number CISI-312-041.

(3) Description of necessary corrective actions:

N/A. No additional corrective actions necessary. Reference (2) above.

OWNER: TENNESSEE VALLEY AUTHORITY OFFICE OF NUCLEAR POWER 1101 MARKET STREET CHATTANOOGA, TENNESSEE 37402	PLANT: BROWNS FERRY NUCLEAR PLANT P.O. BOX 2000 DECATUR, ALABAMA 35602
UNIT: THREE	CERTIFICATE OF AUTHORIZATION: NOT REQUIRED
COMMERCIAL SERVICE DATE: MARCH 1, 1977	
NATIONAL BOARD NUMBER FOR UNIT: NOT REQUIRED	

ADDITIONAL EXAMINATIONS 10CFR50.55a(b)(2)(ix)(D)

(1) Description of each flaw or area, including the extent of degradation, and the conditions that led to the degradation:

The condition documented by this NOI is not considered to be a defective condition with respect to the steel containment vessel. The condition has been addressed by evaluating the coating in the affected areas. Therefore, additional examinations are not warranted.

(2) The acceptability of each flaw or area, and the need for additional examinations to verify that similar degradation does not exist in similar components:

Not applicable. See (1) above.

(3) A description of the necessary corrective actions:

Not applicable. See (1) above.

(4) The number and type of additional examinations to ensure detection of similar degradation in similar components:

Not applicable. See (1) above.

OWNER: TENNESSEE VALLEY AUTHORITY OFFICE OF NUCLEAR POWER 1101 MARKET STREET CHATTANOOGA, TENNESSEE 37402	PLANT: BROWNS FERRY NUCLEAR PLANT P.O. BOX 2000 DECATUR, ALABAMA 35602
UNIT: THREE	CERTIFICATE OF AUTHORIZATION: NOT REQUIRED
COMMERCIAL SERVICE DATE: MARCH 1, 1977	
NATIONAL BOARD NUMBER FOR UNIT: NOT REQUIRED	

NOI No: U3C12-016 **Report No:** CISI-312-042 **Component:** Drywell Liner Elevation 550 DW-LNR-3-1

Condition/Indication: Coating / paint flaking, peeling, and discoloration of painted / coated surfaces on the metal containment liner.

EVALUATION OF INACCESSIBLE AREAS 10CFR50.55a(b)(2)(ix)(A)

(1) Description of the type and estimated extent of degradation, and the conditions that led to the degradation:

NOI U3C12-016 and Report CISI-312-042 document conditions noted during the VT-3 examination of the steel drywell containment vessel on elevation 550'. This examination was performed to satisfy the requirements of IWE-2500 (b). The reported conditions consisted of flaking, peeling, and discoloration of coatings.

(2) Evaluation of each area, and the result of the evaluation:

This NOI documents indications noted during the VT-3 examination of the steel containment vessel surface in areas identified for coating removal. This examination was performed to satisfy the requirements of IWE-2500(b), examination of coatings prior to removal. The indications noted consist of areas of flaking or delaminating of the applied coating. The exposed liner surface in these areas has been inspected after coating removal and is in good condition. There is no degradation that affects the structural integrity or leak tightness of the steel containment vessel. The conditions noted are expected based on the age and service conditions of the component. Therefore, no adverse condition exists that may be present in inaccessible areas. See VT-3 Report Number CISI-312-045.

(3) Description of necessary corrective actions:

N/A. No additional corrective actions necessary. Reference (2) above.

OWNER: TENNESSEE VALLEY AUTHORITY OFFICE OF NUCLEAR POWER 1101 MARKET STREET CHATTANOOGA, TENNESSEE 37402	PLANT: BROWNS FERRY NUCLEAR PLANT P.O. BOX 2000 DECATUR, ALABAMA 35602
UNIT: THREE	CERTIFICATE OF AUTHORIZATION: NOT REQUIRED
COMMERCIAL SERVICE DATE: MARCH 1, 1977	
NATIONAL BOARD NUMBER FOR UNIT: NOT REQUIRED	

ADDITIONAL EXAMINATIONS 10CFR50.55a(b)(2)(ix)(D)

(1) **Description of each flaw or area, including the extent of degradation, and the conditions that led to the degradation:**

The condition documented by this NOI is not considered to be a defective condition with respect to the steel containment vessel. The condition has been addressed by evaluating the coating in the affected areas. Therefore, additional examinations are not warranted.

(2) **The acceptability of each flaw or area, and the need for additional examinations to verify that similar degradation does not exist in similar components:**

Not applicable. See (1) above.

(3) **A description of the necessary corrective actions:**

Not applicable. See (1) above.

(4) **The number and type of additional examinations to ensure detection of similar degradation in similar components:**

Not applicable. See (1) above.

OWNER: TENNESSEE VALLEY AUTHORITY OFFICE OF NUCLEAR POWER 1101 MARKET STREET CHATTANOOGA, TENNESSEE 37402	PLANT: BROWNS FERRY NUCLEAR PLANT P.O. BOX 2000 DECATUR, ALABAMA 35602
UNIT: THREE	CERTIFICATE OF AUTHORIZATION: NOT REQUIRED
COMMERCIAL SERVICE DATE: MARCH 1, 1977	
NATIONAL BOARD NUMBER FOR UNIT: NOT REQUIRED	

NOI No: U3C12-017 **Report No:** CISI-312-043 **Component:** Drywell Liner Elevation 563
DW-LNR-3-2

Condition/Indication: Blistering and peeling of painted / coated surfaces on the metal containment liner.

EVALUATION OF INACCESSIBLE AREAS 10CFR50.55a(b)(2)(ix)(A)

(1) Description of the type and estimated extent of degradation, and the conditions that led to the degradation:

NOI U3C12-017 and Report CISI-312-043 document conditions noted during the VT-3 examination of the steel drywell containment vessel on elevation 563'. This examination was performed to satisfy the requirements of IWE-2500 (b). The reported conditions consisted of peeling and blistering of coatings.

(2) Evaluation of each area, and the result of the evaluation:

This NOI documents indications noted during the VT-3 examination of the steel containment vessel surface in areas identified for coating removal. This examination was performed to satisfy the requirements of IWE-2500(b), examination of coatings prior to removal. The indications noted consist of areas of flaking or delaminating of the applied coating. The exposed liner surface in these areas has been inspected after coating removal and is in good condition. There is no degradation that affects the structural integrity or leak tightness of the steel containment vessel. The conditions noted are expected based on the age and service conditions of the component. Therefore, no adverse condition exists that may be present in inaccessible areas. See VT-3 Report Number CISI-312-044.

(3) Description of necessary corrective actions:

N/A. No additional corrective actions necessary. Reference (2) above.

OWNER: TENNESSEE VALLEY AUTHORITY OFFICE OF NUCLEAR POWER 1101 MARKET STREET CHATTANOOGA, TENNESSEE 37402	PLANT: BROWNS FERRY NUCLEAR PLANT P.O. BOX 2000 DECATUR, ALABAMA 35602
UNIT: THREE	CERTIFICATE OF AUTHORIZATION: NOT REQUIRED
COMMERCIAL SERVICE DATE: MARCH 1, 1977	
NATIONAL BOARD NUMBER FOR UNIT: NOT REQUIRED	

ADDITIONAL EXAMINATIONS 10CFR50.55a(b)(2)(ix)(D)

(1) Description of each flaw or area, including the extent of degradation, and the conditions that led to the degradation:

The condition documented by this NOI is not considered to be a defective condition with respect to the steel containment vessel. The condition has been addressed by evaluating the coating in the affected areas. Therefore, additional examinations are not warranted.

(2) The acceptability of each flaw or area, and the need for additional examinations to verify that similar degradation does not exist in similar components:

Not applicable. See (1) above.

(3) A description of the necessary corrective actions:

Not applicable. See (1) above.

(4) The number and type of additional examinations to ensure detection of similar degradation in similar components:

Not applicable. See (1) above.

OWNER: TENNESSEE VALLEY AUTHORITY OFFICE OF NUCLEAR POWER 1101 MARKET STREET CHATTANOOGA, TENNESSEE 37402	PLANT: BROWNS FERRY NUCLEAR PLANT P.O. BOX 2000 DECATUR, ALABAMA 35602
UNIT: THREE	CERTIFICATE OF AUTHORIZATION: NOT REQUIRED
COMMERCIAL SERVICE DATE: MARCH 1, 1977	
NATIONAL BOARD NUMBER FOR UNIT: NOT REQUIRED	

NOI No: U3C12-018 **Report No:** CISI-312-019, -021,-022,-023, -024,-024, -046, -047 **Component:** Vent Pipe from Drywell to Torus VNT-HDR-3-1A THRU -8A

Condition/Indication: Discoloration of painted / coated surfaces on the Vent Pipe from Drywell to Torus.

EVALUATION OF INACCESSIBLE AREAS 10CFR50.55a(b)(2)(ix)(A)

(1) Description of the type and estimated extent of degradation, and the conditions that led to the degradation:

NOI U3C12-018 and Report CISI-312-019,-021,-022,-023,-024,-046,-047 document conditions noted during the VT-3 examination of the vent pipe from drywell to torus. This examination was performed to satisfy the requirements of IWE-2500 (b). The reported conditions consisted of discoloration of coatings.

(2) Evaluation of each area, and the result of the evaluation:

This NOI documents indications noted during the VT-3 examination of the steel containment vessel surface in areas identified for coating removal. This examination was performed to satisfy the requirements of IWE-2500(b) examination of coatings prior to removal. The indications noted consist of areas of discoloration of the applied coating. The liner surface is not exposed in these areas, and the coating has strong adherence and is in good condition. There is no degradation that affects the structural integrity or leak tightness of the steel containment vessel. The conditions noted are expected based on the age and service conditions of the component. Therefore, no adverse condition exists that may be present in inaccessible areas.

(3) Description of necessary corrective actions:

N/A. No additional corrective actions necessary. Reference (2) above.

OWNER: TENNESSEE VALLEY AUTHORITY OFFICE OF NUCLEAR POWER 1101 MARKET STREET CHATTANOOGA, TENNESSEE 37402	PLANT: BROWNS FERRY NUCLEAR PLANT P.O. BOX 2000 DECATUR, ALABAMA 35602
UNIT: THREE	CERTIFICATE OF AUTHORIZATION: NOT REQUIRED
COMMERCIAL SERVICE DATE: MARCH 1, 1977	
NATIONAL BOARD NUMBER FOR UNIT: NOT REQUIRED	

ADDITIONAL EXAMINATIONS 10CFR50.55a(b)(2)(ix)(D)

(1) Description of each flaw or area, including the extent of degradation, and the conditions that led to the degradation::

The condition documented by this NOI is not considered to be a defective condition with respect to the steel containment vessel. The condition has been addressed by evaluating the coating in the affected areas. Therefore, additional examinations are not warranted.

(2) The acceptability of each flaw or area, and the need for additional examinations to verify that similar degradation does not exist in similar components:

Not applicable. See (1) above.

(3) A description of the necessary corrective actions:

Not applicable. See (1) above.

(4) The number and type of additional examinations to ensure detection of similar degradation in similar components:

Not applicable. See (1) above.

OWNER: TENNESSEE VALLEY AUTHORITY OFFICE OF NUCLEAR POWER 1101 MARKET STREET CHATTANOOGA, TENNESSEE 37402	PLANT: BROWNS FERRY NUCLEAR PLANT P.O. BOX 2000 DECATUR, ALABAMA 35602
UNIT: THREE	CERTIFICATE OF AUTHORIZATION: NOT REQUIRED
COMMERCIAL SERVICE DATE: MARCH 1, 1977	
NATIONAL BOARD NUMBER FOR UNIT: NOT REQUIRED	

NOI No:U3C12-020 **Report No:** CISI-312-048 **Component:** Drywell Liner Elevation 584 DW-LNR-3-3

Condition/Indication: Coating / paint flaking, blistering, and peeling of painted / coated surfaces of the drywell liner.

EVALUATION OF INACCESSIBLE AREAS 10CFR50.55a(b)(2)(ix)(A)

(1) Description of the type and estimated extent of degradation, and the conditions that led to the degradation:

NOI U3C12-020 and Report CISI-312-048 document conditions noted during the VT-3 examination of the steel drywell containment vessel on elevation 584'. This examination was performed to satisfy the requirements of IWE-2500 (b). The reported conditions consisted of flaking, peeling, and blistering of coatings.

(2) Evaluation of each area, and the result of the evaluation:

This NOI documents indications noted during the VT-3 examination of the steel containment vessel surface in areas identified for coating removal. This examination was performed to satisfy the requirements of IWE-2500(b), examination of coatings prior to removal. The indications noted consist of areas of flaking or delaminating of the applied coating. The exposed liner surface in these areas has been inspected after coating removal and is in good condition. There is no degradation that affects the structural integrity or leak tightness of the steel containment vessel. The conditions noted are expected based on the age and service conditions of the component. Therefore, no adverse condition exists that may be present in inaccessible areas. See VT-3 Report Number CISI-312-049.

(3) Description of necessary corrective actions:

N/A. No additional corrective actions necessary. Reference (2) above.

OWNER: TENNESSEE VALLEY AUTHORITY OFFICE OF NUCLEAR POWER 1101 MARKET STREET CHATTANOOGA, TENNESSEE 37402	PLANT: BROWNS FERRY NUCLEAR PLANT P.O. BOX 2000 DECATUR, ALABAMA 35602
UNIT: THREE	CERTIFICATE OF AUTHORIZATION: NOT REQUIRED
COMMERCIAL SERVICE DATE: MARCH 1, 1977	
NATIONAL BOARD NUMBER FOR UNIT: NOT REQUIRED	

ADDITIONAL EXAMINATIONS 10CFR50.55a(b)(2)(ix)(D)

(1) Description of each flaw or area, including the extent of degradation, and the conditions that led to the degradation:

The condition documented by this NOI is not considered to be a defective condition with respect to the steel containment vessel. The condition has been addressed by evaluating the coating in the affected areas. Therefore, additional examinations are not warranted.

(2) The acceptability of each flaw or area, and the need for additional examinations to verify that similar degradation does not exist in similar components:

Not applicable. See (1) above.

(3) A description of the necessary corrective actions:

Not applicable. See (1) above.

(4) The number and type of additional examinations to ensure detection of similar degradation in similar components:

Not applicable. See (1) above.

OWNER: TENNESSEE VALLEY AUTHORITY OFFICE OF NUCLEAR POWER 1101 MARKET STREET CHATTANOOGA, TENNESSEE 37402	PLANT: BROWNS FERRY NUCLEAR PLANT P.O. BOX 2000 DECATUR, ALABAMA 35602
UNIT: THREE	CERTIFICATE OF AUTHORIZATION: NOT REQUIRED
COMMERCIAL SERVICE DATE: MARCH 1, 1977	
NATIONAL BOARD NUMBER FOR UNIT: NOT REQUIRED	

NOI No: U3C12-021 **Report No:** CISI-312-050 **Component:** DRYWELL HEAD DW-HD-3-1

Condition/Indication: Coating / paint flaking, discoloration, and signs of distress of painted / coated surfaces on the drywell head.

EVALUATION OF INACCESSIBLE AREAS 10CFR50.55a(b)(2)(ix)(A)

(1) Description of the type and estimated extent of degradation, and the conditions that led to the degradation:

NOI U3C12-021 and Report CISI-312-050 document conditions noted during the VT-3 examination of the drywell head. The reported conditions consisted of coating / paint flaking, discoloration, signs of distress of the painted / coated surfaces.

(2) Evaluation of each area, and the result of the evaluation:

This NOI documents indications noted during the VT-3 examination of the drywell head. The drywell head was observed to have light to medium rust / scaling inside the stud holes, light surface rust / scaling, and small areas of coatings surface discoloration / distress / flaking of the drywell head flange which are expected conditions considering the environment, age, and service conditions of the drywell head. The interior surfaces had very minor surface scratches and some signs of light to medium rust / scaling in one penetration near the top of the head. The flange is for seating the stud washers had minor rust / scaling. The existing hardened washers mitigate wear to the flange bearing surface for the studs. The aforementioned observations to the drywell head are judged minor and have no adverse impact on the overall drywell head structural integrity. Therefore, the drywell head is acceptable for continued service and the structural integrity of the drywell head is still maintained. No corrective measures required at this time. 100% of the drywell head was inspected, thus, no evaluation for inaccessible areas required.

(3) Description of necessary corrective actions:

N/A. No additional corrective actions necessary. Reference (2) above.

OWNER: TENNESSEE VALLEY AUTHORITY OFFICE OF NUCLEAR POWER 1101 MARKET STREET CHATTANOOGA, TENNESSEE 37402	PLANT: BROWNS FERRY NUCLEAR PLANT P.O. BOX 2000 DECATUR, ALABAMA 35602
UNIT: THREE	CERTIFICATE OF AUTHORIZATION: NOT REQUIRED
COMMERCIAL SERVICE DATE: MARCH 1, 1977	
NATIONAL BOARD NUMBER FOR UNIT: NOT REQUIRED	

ADDITIONAL EXAMINATIONS 10CFR50.55a(b)(2)(ix)(D)

(1) Description of each flaw or area, including the extent of degradation, and the conditions that led to the degradation:

The condition documented by this NOI is not considered to be a defective condition with respect to the steel containment vessel. The condition has been addressed by evaluating the findings in the affected areas. Therefore, additional examinations are not warranted.

(2) The acceptability of each flaw or area, and the need for additional examinations to verify that similar degradation does not exist in similar components:

Not applicable. See (1) above.

(3) A description of the necessary corrective actions:

Not applicable. See (1) above.

(4) The number and type of additional examinations to ensure detection of similar degradation in similar components:

Not applicable. See (1) above.

OWNER: TENNESSEE VALLEY AUTHORITY OFFICE OF NUCLEAR POWER 1101 MARKET STREET CHATTANOOGA, TENNESSEE 37402	PLANT: BROWNS FERRY NUCLEAR PLANT P.O. BOX 2000 DECATUR, ALABAMA 35602

UNIT: THREE CERTIFICATE OF AUTHORIZATION: NOT REQUIRED

COMMERCIAL SERVICE DATE: MARCH 1, 1977

NATIONAL BOARD NUMBER FOR UNIT: NOT REQUIRED

NOI No:U3C12-023 **Report No:** CISI-312-059 **Component:** Torus Interior - Above Water Line PSC-INT-3-1A THRU -16A

Condition/Indication: Coating / paint flaking and blistering of coating in the torus interior above the water line.

EVALUATION OF INACCESSIBLE AREAS 10CFR50.55a(b)(2)(ix)(A)

(1) Description of the type and estimated extent of degradation, and the conditions that led to the degradation:

NOI U3C12-023 and Report CISI-312-059 document conditions noted during the VT-3 examination of the torus interior - above water line. This examination was performed to satisfy the requirements of IWE-2500 (a) and IWE-2500 (b). The reported conditions consisted of flaking and blistering of coatings.

(2) Evaluation of each area, and the result of the evaluation:

Indications were found in the coating on the above water interior surface of the Unit 3 torus. The indications consisted of a thin layer of paint delaminating from an existing layer of paint. The condition which exists is the result of application errors and has not resulted from degradation of the carbon steel shell of the torus. The containment boundary has not been compromised. Temporary support steel, used during Unit 3 recovery, was attached to the torus interior in 20 locations. When the weld and weld area was cleaned, prepped, and coated, a thin layer of overspray beyond the weld area resulted. Because the area of overspray (approximately 1 foot diameter around each support) was not cleaned or prepped, some of the areas of overspray have started to delaminate from the existing coating in 5 of the 20 locations. The delaminating coating has not resulted in exposure of the torus shell. Visually each of the 20 locations appear to have an area of overspray from 8 to 12 inches in diameter around the weld which attaches the temporary support steel to the torus shell. The overspray has started to delaminate in 5 locations. The loss of the overspray has not resulted in degraded conditions of the torus shell.

(3) Description of necessary corrective actions:

N/A. No additional corrective actions necessary. Reference (2) above.

OWNER: TENNESSEE VALLEY AUTHORITY OFFICE OF NUCLEAR POWER 1101 MARKET STREET CHATTANOOGA, TENNESSEE 37402	PLANT: BROWNS FERRY NUCLEAR PLANT P.O. BOX 2000 DECATUR, ALABAMA 35602
UNIT: THREE	CERTIFICATE OF AUTHORIZATION: NOT REQUIRED
COMMERCIAL SERVICE DATE: MARCH 1, 1977	
NATIONAL BOARD NUMBER FOR UNIT: NOT REQUIRED	

ADDITIONAL EXAMINATIONS 10CFR50.55a(b)(2)(ix)(D)

(1) Description of each flaw or area, including the extent of degradation, and the conditions that led to the degradation:

All areas with the similar condition and coating have been evaluated. No additional examination required.

(2) The acceptability of each flaw or area, and the need for additional examinations to verify that similar degradation does not exist in similar components:

Not applicable. See (1) above.

(3) A description of the necessary corrective actions:

Not applicable. See (1) above.

(4) The number and type of additional examinations to ensure detection of similar degradation in similar components:

Not applicable. See (1) above.

OWNER: TENNESSEE VALLEY AUTHORITY OFFICE OF NUCLEAR POWER 1101 MARKET STREET CHATTANOOGA, TENNESSEE 37402	PLANT: BROWNS FERRY NUCLEAR PLANT P.O. BOX 2000 DECATUR, ALABAMA 35602
UNIT: THREE	CERTIFICATE OF AUTHORIZATION: NOT REQUIRED
COMMERCIAL SERVICE DATE: MARCH 1, 1977	
NATIONAL BOARD NUMBER FOR UNIT: NOT REQUIRED	

NOI No: U3C12-024 **Report No:** TI-173, P. 129 **Component:** X-35F

Condition/Indication: Indications identified during general visual of penetration X-35F.

EVALUATION OF INACCESSIBLE AREAS 10CFR50.55a(b)(2)(ix)(A)

(1) Description of the type and estimated extent of degradation, and the conditions that led to the degradation:

NOI U3C12-024 and Report TI-173, page 129 documents conditions noted during the General Visual Examination of Penetration X-35F. The reported conditions consisted of indications identified on the plate welded to penetration X-35F. These welds are original welds and do not appear to have been altered. The pipe to plate indication has not propagated into the pipe base metal and appears to be the results of poor quality welding. BFN Civil Engineering Branch reviewed the loading conditions and identified that the loads are small and that this condition will not propagate any flaws. This condition has not compromised the leak tightness of the containment neither has it compromised any structural integrity or leak tightness. Further evaluation determined that the cover plate and its welds are not part of the IWE boundary.

(2) Evaluation of each area, and the result of the evaluation:

The indications are not part of the IWE boundary. In addition, the indications on this cover plate are non-relevant and do not affect the containment structural integrity or leak tightness. Therefore, there is no need to perform an evaluation of inaccessible areas.

(3) Description of necessary corrective actions:

N/A. No additional corrective actions necessary. Reference (2) above.

OWNER: TENNESSEE VALLEY AUTHORITY OFFICE OF NUCLEAR POWER 1101 MARKET STREET CHATTANOOGA, TENNESSEE 37402	PLANT: BROWNS FERRY NUCLEAR PLANT P.O. BOX 2000 DECATUR, ALABAMA 35602
UNIT: THREE	CERTIFICATE OF AUTHORIZATION: NOT REQUIRED
COMMERCIAL SERVICE DATE: MARCH 1, 1977	
NATIONAL BOARD NUMBER FOR UNIT: NOT REQUIRED	

ADDITIONAL EXAMINATIONS 10CFR50.55a(b)(2)(ix)(D)

(1) Description of each flaw or area, including the extent of degradation, and the conditions that led to the degradation::

These indications are not part of the IWE boundary. In addition, the indications on this cover plate are non-relevant and do not affect the containment structural integrity or leak tightness. Therefore, there is no need to perform additional examinations. These welds are original welds and do not appear to have been altered. The pipe to plate indication has not propagated into the pipe base metal and appears to be the results of poor quality welding. This condition has not compromised the leak tightness of the containment neither has it compromised any structural integrity or leak tightness.

(2) The acceptability of each flaw or area, and the need for additional examinations to verify that similar degradation does not exist in similar components:

Not applicable. See (1) above.

(3) A description of the necessary corrective actions:

Not applicable. See (1) above.

(4) The number and type of additional examinations to ensure detection of similar degradation in similar components:

Not applicable. See (1) above.

OWNER: TENNESSEE VALLEY AUTHORITY OFFICE OF NUCLEAR POWER 1101 MARKET STREET CHATTANOOGA, TENNESSEE 37402	PLANT: BROWNS FERRY NUCLEAR PLANT P.O. BOX 2000 DECATUR, ALABAMA 35609-2000
UNIT: THREE	CERTIFICATE OF AUTHORIZATION: NOT REQUIRED.
COMMERCIAL SERVICE DATE: MARCH 1, 1977	
NATIONAL BOARD NUMBER FOR UNIT: NOT REQUIRED.	

ATTACHMENT 3

REACTOR PRESSURE VESSEL (RPV) NOZZLE EXAMS DEFERRED FROM UNIT 3 CYCLE 11, 2ND INTERVAL 3RD PERIOD PERFORMED IN CYCLE 12

OWNER: TENNESSEE VALLEY AUTHORITY OFFICE OF NUCLEAR POWER 1101 MARKET STREET CHATTANOOGA, TENNESSEE 37402	PLANT: BROWNS FERRY NUCLEAR PLANT P.O. BOX 2000 DECATUR, ALABAMA 35609-2000
UNIT: THREE	CERTIFICATE OF AUTHORIZATION: NOT REQUIRED.
COMMERCIAL SERVICE DATE: MARCH 1, 1977	
NATIONAL BOARD NUMBER FOR UNIT: NOT REQUIRED.	

Introduction:

On February 20, 2004, TVA opted to request NRC approval to utilize IWA-2430 of the 1995 Edition through 1996 Addenda of the ASME Section XI, Division1 Code. NRC approved this request on March 29, 2004. This later Code allowed TVA to extend the BFN Unit 3 Second Ten Year ISI Interval but yet allow the start of the BFN Unit 3 Third Ten Year ISI Interval. This was done anticipating that Request for Relief 3-ISI-18 would be approved allowing TVA permission from examining seven (7) Reactor Pressure Vessel (RPV) Nozzles, Code Category B-D, Item No. B3.90. If the request for relief was not approved; the seven (7) RPV Nozzles would be examined during the U3C12 outage completing the Unit 3 Second ISI Ten Year Interval. TVA withdrew the request for relief on September 14, 2005. Therefore, since the seven (7) RPV Nozzle examinations are for the Unit 3 Second Interval, the Code of Record is the 1989 Edition, No addenda of the ASME Section XI, Division 1 Code and the Code of Record for NDE is the 1995 Edition through the 1996 Addenda of the ASME Section XI, Division 1 Code.

OWNER: TENNESSEE VALLEY AUTHORITY OFFICE OF NUCLEAR POWER 1101 MARKET STREET CHATTANOOGA, TENNESSEE 37402	PLANT: BROWNS FERRY NUCLEAR PLANT P.O. BOX 2000 DECATUR, ALABAMA 35609-2000
UNIT: THREE	CERTIFICATE OF AUTHORIZATION: NOT REQUIRED.
COMMERCIAL SERVICE DATE: MARCH 1, 1977	
NATIONAL BOARD NUMBER FOR UNIT: NOT REQUIRED.	

UNIT 3 INTERVAL STATUS

On February 20, 2004, TVA opted to request NRC approval to utilize IWA-2430 of the 1995 Edition through 1996 Addenda of the ASME Section XI, Division1 Code. NRC approved this request on March 29, 2004. This later Code allowed TVA to extend the BFN Unit 3 Second Ten Year ISI Interval but yet allow the start of the BFN Unit 3 Third Ten Year ISI Interval. This was done anticipating that Request for Relief 3-ISI-18 would be approved allowing TVA permission from examining seven (7) Reactor Pressure Vessel (RPV) Nozzles, Code Category B-D, Item No. B3.90. If the request for relief was not approved; the seven (7) RPV Nozzles would be examined during the U3C12 outage completing the Unit 3 Second ISI Ten Year Interval. TVA withdrew the request for relief on September 14, 2005. Therefore, since the seven (7) RPV Nozzle examinations are for the Unit 3 Second Interval, the Code of Record is the 1989 Edition, No addenda of the ASME Section XI, Division 1 Code and the Code of Record for NDE is the 1995 Edition through the 1996 Addenda of the ASME Section XI, Division 1 Code. The seven (7) RPV Nozzles are as follows: N2G, N2H, N2J, N2K, N3C, N3D and N8B.

Table 1 summarizes code credited examinations by category and percentages completed and complies with ASME Section XI percentage requirements.

TABLE 1
ASME SECTION XI EXAMINATION SUMMARY FOR THE THIRD PERIOD OF THE SECOND TEN-YEAR INSPECTION INTERVAL

CATEGORY/CLASS	% COMPLETE	COMMENTS
B-D/1	100%	Seven (7) RPV nozzles deferred from Unit 3 Cycle 11, 2nd Interval

OWNER: TENNESSEE VALLEY AUTHORITY OFFICE OF NUCLEAR POWER 1101 MARKET STREET CHATTANOOGA, TENNESSEE 37402	PLANT: BROWNS FERRY NUCLEAR PLANT P.O. BOX 2000 DECATUR, ALABAMA 35609-2000
UNIT: THREE	CERTIFICATE OF AUTHORIZATION: NOT REQUIRED.
COMMERCIAL SERVICE DATE: MARCH 1, 1977	
NATIONAL BOARD NUMBER FOR UNIT: NOT REQUIRED.	

EXAMINATION LIMITATIONS:

A tabulation of NDE examination limitations recorded during the Unit 3/Cycle 12 Inservice Inspection is contained in this Appendix.

On February 20, 2004, TVA opted to request NRC approval to utilize IWA-2430(d)(1) of the 1995 Edition through 1996 Addenda of the ASME Section XI, Division1 Code. NRC approved this request on March 29, 2004. This later Code allowed TVA to extend the BFN Unit 3 Second Ten Year ISI Interval but yet allow the start of the BFN Unit 3 Third Ten Year ISI Interval. This was done anticipating that Request for Relief 3-ISI-18 would be approved allowing TVA permission from examining seven (7) Reactor Pressure Vessel (RPV) Nozzles, Code Category B-D, Item No. B3.90. If the request for relief was not approved; the seven (7) RPV Nozzles would be examined during the U3C12 outage completing the Unit 3 Second ISI Ten Year Interval. TVA withdrew the request for relief on September 14, 2005. Therefore, since the seven (7) RPV Nozzle examinations are for the Unit 3 Second Interval, the Code of Record is the 1989 Edition, No addenda of the ASME Section XI, Division 1 Code and the Code of Record for NDE is the 1995 Edition through the 1996 Addenda of the ASME Section XI, Division 1 Code. The seven (7) RPV Nozzles are as follows: N2G, N2H, N2J, N2K, N3C, N3D and N8B.

The following items/components had examination limitations outside those specified in 1989 Edition, No Addenda, of ASME Section XI Code and NRC Information Notice, 98-42 "Implementation of 10 CFR 50.55a(g) Inservice Inspection Requirements." The Inservice Inspection Program 3-SI-4.6.G will be revised to incorporate these limitations in the form of Requests for Relief (RFR). Program revisions, including Requests for Relief, will be submitted to the NRC.

SYSTEM	COMPONENT ID	COVERAGE CALCULATED	REPORT NO.	RFR No.
RPV	N2G-NV	42%	R-070	3-ISI-07 REV. 02
RPV	N2H-NV	42%	R-071	3-ISI-07 REV. 02
RPV	N2J-NV	42%	R-072	3-ISI-07 REV. 02
RPV	N2K-NV	42%	R-073	3-ISI-07 REV. 02
RPV	N3C-NV	36%	R-074	3-ISI-07 REV. 02
RPV	N3D-NV	36%	R-075	3-ISI-07 REV. 02
RPV	N8B-NV	64%	R-078	3-ISI-07 REV. 02

OWNER: TENNESSEE VALLEY AUTHORITY OFFICE OF NUCLEAR POWER 1101 MARKET STREET CHATTANOOGA, TENNESSEE 37402	PLANT: BROWNS FERRY NUCLEAR PLANT P.O. BOX 2000 DECATUR, ALABAMA 35609-2000
UNIT: THREE	CERTIFICATE OF AUTHORIZATION: NOT REQUIRED.
COMMERCIAL SERVICE DATE: MARCH 1, 1977	
NATIONAL BOARD NUMBER FOR UNIT: NOT REQUIRED.	

EXAMINATION LIMITATIONS:

A tabulation of NDE examination limitations recorded during the Unit 3/Cycle 12 Inservice Inspection is contained in this Appendix.

The following BFN Unit 3 Reactor Pressure Vessel Inner Radius Sections, Code Category, B-D, Item No. B3.100, received an Enhanced Remote Visual (EVT-1) examination, capable of a 1-mil wire resolution in accordance with ASME Section XI, VT-1 requirements. This was in lieu of a volumetric examination required in accordance with the 1989 Edition, No Addenda of ASME Section XI Code.
This was in accordance with Request For Relief # 3-ISI-14 for the Reactor Pressure Vessel Nozzles, N1A, N1B, N3A, N3B, N3C, and N3D, and Request For Relief # 3-ISI-15 for the Reactor Pressure Vessel Nozzles, N2A, N2B, N2C, N2D, N2E, N2F, N2G, N2H, N2J, N2K, N5A, N5B, N8A, and N8B, approved by the NRC on February 11, 2004, (TAC NO. MB8956 and MB8957) (RIMS# L44 040218 004). TVA provided the NRC specific limitations and estimated coverage's for each nozzle in the Request For Relief # 3-ISI-14 and 3-ISI-15. TVA is reporting the actual coverage's obtained during the Enhanced Remote Visual (EVT-1) examination, capable of a 1-mil wire resolution in this report below.

SYSTEM	COMPONENT ID	COVERAGE ESTIMATED	CALCULATED ACTUAL	REPORT NO.
RECIRC	N2G-IR	50%	40%	R-057
RECIRC	N2H-IR	50%	40%	R-057
RECIRC	N2J-IR	50%	40%	R-057
RECIRC	N2K-IR	50%	40%	R-057
MS	N3C-IR	100%	90%	R-057
MS	N3D-IR	100%	90%	R-057
RECIRC	N8B-IR	60%	40%	R-057

ATTACHMENT 4

System Pressure Test Program

BROWNS FERRY

NUCLEAR PLANT

UNIT 3 CYCLE 12

ASME SECTION XI

NIS-1 OWNER'S REPORT
ON
SYSTEM PRESSURE TESTS

FORM NIS-1 OWNER'S REPORT FOR INSERVICE INSPECTIONS
As Required by the Provisions of the ASME Code Rules

Sheet 1 of 4

1. Owner Tennessee Valley Authority (TVA), 1101 Market St., Chattanooga, TN 37402-2801
(Name and Address of Owner)

2. Plant Browns Ferry Nuclear Plant (BFN), P. O. Box 2000, Decatur, AL 35609-2000
(Name and Address of Plant)

3. Plant Unit 3

4. Owner Certificate of Authorization (if required) Not Required

5. Commercial Service Date 03/01/1977

6. National Board Number for Unit Not Required

7. Components Inspected

Component or Appurtenance	Manufacturer or Installer	Manufacturer or Installer Serial No.	State or Province No.	National Board No.
Reactor Vessel	General Electric	Contract No. 67C21-91750	N/A	N/A
Piping attached to the Reactor Vessel (various systems)	TVA	N/A	N/A	N/A

NOTE: Supplemental Sheets in form of lists, sketches, or drawings may be used, provided (1) size is 8½ in. X 11 in., (2) information in items 1 through 6 on this report is included on each sheet, and (3) each sheet is numbered and the number of sheets is recorded at the top of this form.

FORM NIS-1 (Back)

8. Examination Dates 11/19/2005 to 03/22/2006

9. Inspection Period Identification First Period, 11/19/2005 to 11/18/2008

10. Inspection Interval Identification Third Interval, 11/19/2005 to 11/18/2015

11. Applicable Edition of Section XI 2001 Addenda 2003

12. Date/Revision of Inspection Plan 12/22/2004 / Revision 0

13. Abstract of Examinations and Tests. Include a list of examinations and tests and a statement concerning status of work required for the Inspection Plan.

    See Appendix I

14. Abstract of Results of Examinations and Tests

    See Appendix II

15. Abstract of Corrective Measures.

    See Appendix III

We certify that a) the statements made in this report are correct, b) the examinations and tests meet the Inspection Plan as required by the ASME Code, Section XI, and c) corrective measures taken conform to the rules of the ASME Code, Section XI.

Certificate of Authorization No. (if applicable) N/A Expiration Date N/A

Date 6/5, 2006 Signed Tennessee Valley Authority by
Owner

CERTIFICATE OF INSERVICE INSPECTION

I, the undersigned, holding a valid commission issued by the National Board of Boiler and Pressure Vessel Inspectors and the State or Province of Tennessee and employed by HSB CT of Connecticut have inspected the components described in this Owner's Report during the period 11-19-05 to 3-22-06, and state that to the best of my knowledge and belief, the Owner has performed examinations and tests and taken corrective measures described in this Owner's Report in accordance with the Inspection Plan and as required by the ASME Code, Section XI.

By signing this certificate neither the Inspector nor his employer makes any warranty, expressed or implied, concerning the examinations, tests and corrective measures described in this Owner's Report. Furthermore, neither the Inspector nor his employer shall be liable in any manner for any personal injury or property damage or a loss of any kind arising from or connected with this inspection.

Inspector's Signature Commissions TN 4011
National Board State Province and Endorsements

Date June 7, 2006

Owner: TENNESSEE VALLEY AUTHORITY 1101 Market Street Chattanooga, TN 37402-2801	Plant: Browns Ferry Nuclear Plant P. O. Box 2000 Decatur, AL 35609-2000
Unit: Three	Certificate of Authorization: Not Required
Commercial Service Date: March 1, 1977	
National Board Number for Unit: Not Required	

APPENDIX I

Appendix I addresses item 13, Abstract of Examinations and Tests, on the Form NIS-1. Appendix I provides a list of the Class 1 and 2 System Pressure Tests performed on BFN Unit 3 during the First Inspection Period, Third Inspection Interval, during Operating Cycle 12.

The following Class 1 and Class 2 System Pressure Test was performed during the U3C12 refueling outage.

3-SI-3.3.1.A Reactor Vessel and attached piping (Class 1 and 2)

Owner: TENNESSEE VALLEY AUTHORITY 1101 Market Street Chattanooga, TN 37402-2801	Plant: Browns Ferry Nuclear Plant P. O. Box 2000 Decatur, AL 35609-2000
Unit: Three	Certificate of Authorization: Not Required
Commercial Service Date: March 1, 1977	
National Board Number for Unit: Not Required	

APPENDIX II

Appendix II addresses item 14, Abstract of Results of Examinations and Tests, on the Form NIS-1. Appendix II provides a list of results from the Class 2 System Pressure Tests performed on BFN Unit 3 during the First Inspection Period, Third Inspection Interval, during Operating Cycle 12.

Eight (8) relevant leaks were identified during the system pressure test (3-SI-3.3.1.A) covered by this report. The leaks are listed below.

3-FCV-74-54	leak at bolted body to bonnet connection
3-FCV-74-68	leak at bolted body to bonnet connection
3-ISV-043-0599	leak at bolted body to bonnet connection
3-CRDM-85-26-31	leak at bolted flange connection
3-CRDM-85-10-51	leak at bolted flange connection
3-CRDM-85-02-19	leak at bolted flange connection
3-FCV-85-40D/4235	leak at threaded access port connection
3-CKV-85-616/5047	leak at bolted body to bonnet connection

Owner:	TENNESSEE VALLEY AUTHORITY 1101 Market Street Chattanooga, TN 37402-2801	Plant:	Browns Ferry Nuclear Plant P. O. Box 2000 Decatur, AL 35609-2000
Unit:	Three	Certificate of Authorization:	Not Required
Commercial Service Date:	March 1, 1977		
National Board Number for Unit:	Not Required		

APPENDIX III

Appendix III addresses item 15, Abstract of Corrective Measures, on the Form NIS-1. Appendix III provides a list of corrective measures from the Class 2 System Pressure Tests performed on BFN Unit 3 during the First Inspection Period, Third Inspection Interval, during Operating Cycle 12.

For all leaks identified at bolted connections, an evaluation of the bolted connection structural integrity, susceptibility of the bolting to corrosion and potential failure was conducted.

3-FCV-74-54 leak at bolted body to bonnet connection
Evaluated condition; no further actions were required.

3-FCV-74-68 leak at bolted body to bonnet connection
Evaluated condition; no further actions were required.

3-ISV-043-0599 leak at bolted body to bonnet connection
Evaluated condition; no further actions were required.

3-CRDM-85-26-31 leak at bolted flange connection
Evaluated condition; per GE recommendations no further actions were required.

3-CRDM-85-10-51 leak at bolted flange connection
Evaluated condition; per GE recommendations no further actions were required.

3-CRDM-85-02-19 leak at bolted flange connection
Evaluated condition; per GE recommendations no further actions were required.

3-FCV-85-40D/4235 leak at threaded access port connection
Evaluated condition; valve replaced under Work Order 06-713598-000.

3-CKV-85-616/5047 leak at bolted body to bonnet connection
Leakage stopped, no further actions were required.

FORM NIS-1 OWNER'S REPORT FOR INSERVICE INSPECTIONS
As Required by the Provisions of the ASME Code Rules

1. Owner Tennessee Valley Authority (TVA), 1101 Market St., Chattanooga, TN 37402-2801
(Name and Address of Owner)

2. Plant Browns Ferry Nuclear Plant (BFN), P. O. Box 2000, Decatur, AL 35609-2000
(Name and Address of Plant)

3 Plant Unit 3

4. Owner Certificate of Authorization (if required) Not Required

5. Commercial Service Date 03/01/1977

6. National Board Number for Unit Not Required

7. Components Inspected

Component or Appurtenance	Manufacturer or Installer	Manufacturer or Installer Serial No.	State or Province No.	National Board No.
Main Steam System	TVA	N/A	N/A	N/A
Core Spray System	TVA	N/A	N/A	N/A
Residual Heat Removal System	TVA	N/A	N/A	N/A
High Pressure Coolant Injection System	TVA	N/A	N/A	N/A
Reactor Core Isolation Cooling System	TVA	N/A	N/A	N/A

NOTE: Supplemental Sheets in form of lists, sketches, or drawings may be used, provided (1) size is 8½ in. X 11 in., (2) information in items 1 through 6 on this report is included on each sheet, and (3) each sheet is numbered and the number of sheets is recorded at the top of this form.

FORM NIS-1 (Back)

8. Examination Dates 04/07/2004 to 11/18/2005

9. Inspection Period Identification Third Period, 11/19/2002 to 11/18/2005

10. Inspection Interval Identification Second Interval, 11/19/1996 to 11/18/2005

11. Applicable Edition of Section XI 1989 Addenda None

12. Date/Revision of Inspection Plan 01/22/1997 / Revision 0

13. Abstract of Examinations and Tests. Include a list of examinations and tests and a statement concerning status of work required for the Inspection Plan.

    See Appendix I

14. Abstract of Results of Examinations and Tests.

    See Appendix II

15. Abstract of Corrective Measures.

    See Appendix III

We certify that a) the statements made in this report are correct, b) the examinations and tests meet the Inspection Plan as required by the ASME Code, Section XI, and c) corrective measures taken conform to the rules of the ASME Code, Section XI.

Certificate of Authorization No. (if applicable) N/A Expiration Date N/A

Date 6/5, 2006 Signed Tennessee Valley Authority (Owner) by [signature]

CERTIFICATE OF INSERVICE INSPECTION

I, the undersigned, holding a valid commission issued by the National Board of Boiler and Pressure Vessel Inspectors and the State or Province of Tennessee and employed by HSB CT of Connecticut have inspected the components described in this Owner's Report during the period 4-7-04 to 11-18-05, and state that to the best of my knowledge and belief, the Owner has performed examinations and tests and taken corrective measures described in this Owner's Report in accordance with the Inspection Plan and as required by the ASME Code, Section XI.

By signing this certificate neither the Inspector nor his employer makes any warranty, expressed or implied, concerning the examinations, tests and corrective measures described in this Owner's Report. Furthermore, neither the Inspector nor his employer shall be liable in any manner for any personal injury or property damage or a loss of any kind arising from or connected with this inspection.

[signature] Commissions TN4011

Inspector's Signature — National Board, State, Province, and Endorsements

Date June 7, 2006

Owner: TENNESSEE VALLEY AUTHORITY 1101 Market Street Chattanooga, TN 37402-2801	Plant: Browns Ferry Nuclear Plant P. O. Box 2000 Decatur, AL 35609-2000
Unit: Three	Certificate of Authorization: Not Required
Commercial Service Date: March 1, 1977	
National Board Number for Unit: Not Required	

APPENDIX I

Appendix I addresses item 13, Abstract of Examinations and Tests, on the Form NIS-1. Appendix I provides a list of the Class 2 System Pressure Tests performed on BFN Unit 3 during the Third Inspection Period, Second Inspection Interval, during Operating Cycle 12.

3-SI-3.3.1.C	Main Steam (Class 2)	partial boundary coverage – 3C RFPT steam supply piping – 3B SJAE steam supply piping
3-SI-3.3.6	Core Spray (Class 2)	Loops I and II
3-SI-3.3.8.A	Residual Heat Removal (Class 2)	Loop I
3-SI-3.3.8.C	Residual Heat Removal (Class 2)	Loop II
3-SI-3.3.9	High Pressure Coolant Injection (Class 2)	
3-SI-3.3.10	Reactor Core Isolation Cooling (Class 2)	

Owner: TENNESSEE VALLEY AUTHORITY 1101 Market Street Chattanooga, TN 37402-2801	Plant: Browns Ferry Nuclear Plant P. O. Box 2000 Decatur, AL 35609-2000
Unit: Three	Certificate of Authorization: Not Required
Commercial Service Date: March 1, 1977	
National Board Number for Unit: Not Required	

APPENDIX II

Appendix II addresses item 14, Abstract of Results of Examinations and Tests, on the Form NIS-1. Appendix II provides a list of results from the Class 2 System Pressure Tests performed on BFN Unit 3 during the Third Inspection Period, Second Inspection Interval, during Operating Cycle 12.

Three (3) relevant leaks were identified during the system pressure tests covered by this report. The leaks are listed below.

One (1) leak was identified during 3-SI-3.3.8.A, Residual Heat Removal, Loop I (Class 2)
3-RTV-043-0158 leak at bolted body to bonnet connection.

One (1) leak was identified during 3-SI-3.3.8.C, Residual Heat Removal, Loop II (Class 2)
3D RHR heat exchanger leakage at bolted flange connection.

One (1) leak was identified during 3-SI-3.3.9, High Pressure Coolant Injection (Class 2)
3-PRO-73-0724 leakage at bolted flange connection.

Owner: TENNESSEE VALLEY AUTHORITY 1101 Market Street Chattanooga, TN 37402-2801	Plant: Browns Ferry Nuclear Plant P. O. Box 2000 Decatur, AL 35609-2000
Unit: Three	Certificate of Authorization: Not Required
Commercial Service Date: March 1, 1977	
National Board Number for Unit: Not Required	

APPENDIX III

Appendix III addresses item 15, Abstract of Corrective Measures, on the Form NIS-1. Appendix III provides a list of corrective measures from the Class 2 System Pressure Tests performed on BFN Unit 3 during the Third Inspection Period, Second Inspection Interval, during Operating Cycle 12.

For all leaks identified at bolted connections, an engineering evaluation of the bolted connection structural integrity, susceptibility of the bolting to corrosion and potential failure was conducted in accordance with Request for Relief 3-SPT-4, (Proposed Alternative to IWA-5250, Corrective Measures for Leakage at Bolted Connections, approved by the NRC in the letter dated April 8, 1999 (L44 990414 002)).

3-RTV-043-0158 leak at bolted body to bonnet connection
Evaluated per 3-SPT-4, Work Order 04-720588-000 initiated to correct leakage.

3D RHR heat exchanger leakage at bolted flange connection
Evaluated per 3-SPT-4, Work Order 04-723247-000 initiated to correct leakage.

3-PRO-73-0724 leakage at bolted flange connection.
Evaluated per 3-SPT-4, Work Order 05-710168-000 corrected leakage.

ENCLOSURE 2

TENNESSEE VALLEY AUTHORITY
BROWNS FERRY NUCLEAR PLANT (BFN)
UNITS 2 AND3
AMERICAN SOCIETY OF MECHANICAL ENGINEERS (ASME),
SECTION XI, THIRD TEN-YEAR INSPECTION INTERVAL

REPAIR AND REPLACEMENT PROGRAM

UNIT 3 SUMMARY REPORT (NIS-2) FOR CYCLE 12 OPERATION
UNIT 2 SUPPLEMENTAL SUMMARY REPORT (NIS-2) FOR CYCLE 13 OPERATION

(SEE ATTACHED)

BROWNS FERRY

NUCLEAR PLANT

UNIT 3 CYCLE 12

ASME SECTION XI

NIS-2 OWNER'S REPORT

OWNER'S REPORT FOR REPAIRS OR REPLACEMENTS

APPENDIX I _____ **Summary of Repair and Replacement Activities**

APPENDIX II _____ **Form NIS-2 Owner's Report For Repairs or Replacements**

Owner:	TENNESSEE VALLEY AUTHORITY 1101 Market Street Chattanooga, TN 37402-2801	Plant:	Browns Ferry Nuclear Plant P. O. Box 2000 Decatur, AL 35609-2000
Unit:	Three	Certificate of Authorization:	Not Required
Commercial Service Date:	March 1, 1977		
National Board Number for Unit:	Not Required		

APPENDIX I

SUMMARY OF REPAIR AND REPLACEMENT ACTIVITIES

Owner: TENNESSEE VALLEY AUTHORITY
1101 Market Street
Chattanooga, TN 37402-2801

Plant: Browns Ferry Nuclear Plant
P. O. Box 2000
Decatur, AL 35609-2000

Unit: Three

Certificate of Authorization: Not Required

Commercial Service Date: March 1, 1977

National Board Number for Unit: Not Required

WID	SYS	ORG	CLASS	ACTIVITY
05-720205-000	085	MAINT	2	REPLACEMENT
04-719493-000	073	MAINT	2	REPLACEMENT
06-710779-000	068	MAINT	1	REPLACEMENT
05-715980-000 05-719566-000	075	MAINT	2	REPLACEMENT
05-711514-000 05-720206-000 05-724436-000 06-710407-000	085	MAINT	2	REPLACEMENT
03-004243-000 03-004255-001 03-004244-000 03-004268-001	001	MAINT	1	REPLACEMENT
04-722413-000 through 04-722413-023 04-722413-026 04-722413-027 04-722413-085 04-722413-112 04-722413-113 04-722413-116 04-722413-117	001	MAINT	2 2 2 2 1 2 2 2 2	REPLACEMENT

Owner: TENNESSEE VALLEY AUTHORITY
1101 Market Street
Chattanooga, TN 37402-2801

Plant: Browns Ferry Nuclear Plant
P. O. Box 2000
Decatur, AL 35609-2000

Unit: Three

Certificate of Authorization: Not Required

Commercial Service Date: March 1, 1977

National Board Number for Unit: Not Required

WID	SYS	ORG	CLASS	ACTIVITY
04-722413-070	003	MAINT	1	REPLACEMENT
04-722413-080 04-722413-081	068	MAINT	1	MODIFICATION
04-722413-068	063	MAINT	2	REPLACEMENT
05-715977-000 05-715978-000 05-715979-000 05-719565-000	074	MAINT	2	REPLACEMENT
05-715981-000 05-716126-000	075	MAINT	2	REPLACEMENT
DCN 65602 05-721766-000 05-721767-000 05-721768-000 05-721769-000 05-717705-004	001	MAINT	2	REPLACEMENT
05-717705-000 05-717705-004	006	MAINT	2	REPLACEMENT
EDC 61548 04-716165-002 04-716165-003	073	MAINT	2	REPLACEMENT
DCN 62156 04-720059-000 04-720059-004	001	MAINT	1	REPLACEMENT
DCN 64390 05-717803-000 05-717803-001	001	MAINT	2	REPLACEMENT

02-006178-000	063	MAINT	2	MODIFICATION
04-720552-000	069	MAINT	1	REPLACEMENT
05-714949-000	071	MAINT	2	REPLACEMENT
DCN T39906A & 61144 04-715368-000	001	MAINT	1	REPLACEMENT
DCN S18883A 05-718042-000	085	TVA	1	REPLACEMENT
05-721003-000	001	MAINT	2	REPLACEMENT

Owner: TENNESSEE VALLEY AUTHORITY 1101 Market Street Chattanooga, TN 37402-2801	Plant: Browns Ferry Nuclear Plant P. O. Box 2000 Decatur, AL 35609-2000
Unit: Three	Certificate of Authorization: Not Required
Commercial Service Date: March 1, 1977	
National Board Number for Unit: Not Required	

LEGEND

WID - Work Implementing Document
Example: A99999A or 50000A refers to a Design Change Notice
99-999999-999 refers to a Work Order

SYS- System

1 - Main Steam
3 - Reactor Feedwater
6 - Heater Drains & Vents
8 - Turbine Drains
10 - Reactor Drains, Vents and Blowdown
63 - Standby Liquid Control
68 - Reactor Water Recirculation
69 - Reactor Water Cleanup
71 - Reactor Core Isolation Cooling
73 - High Pressure Coolant Injection
74 - Residual Heat Removal
75 - Core Spray
85 - Control Rod Drive
92 - Neutron Monitoring

ORG - Organization which performed the WID
MAINT - TVA's Maintenance Organization
GE - General Electric Company
TVA - Work performed by Stone and Webster Engineering Corporation or Framatome utilizing TVA's Quality Assurance Program and procedures

CLASS - Refers to ASME Code Class 1 or 2

ACTIVITY - Classifies work activity as being repair, replacement or modification

Owner:	TENNESSEE VALLEY AUTHORITY 1101 Market Street Chattanooga, TN 37402-2801	Plant:	Browns Ferry Nuclear Plant P. O. Box 2000 Decatur, AL 35609-2000
Unit:	Three	Certificate of Authorization:	Not Required
Commercial Service Date:	March 1, 1977		
National Board Number for Unit:	Not Required		

APPENDIX II

FORM NIS-2 OWNER'S REPORT FOR REPAIRS OR REPLACEMENTS

FORM NIS-2 OWNER'S REPORT FOR REPAIR/REPLACEMENT ACTIVITY
As Required by the Provisions of the ASME Code Section XI

1. Owner Tennessee Valley Authority (TVA) (Name)
   1101 Market Street
   Chattanooga, TN 37402-2801 (Address)

   Date January 19, 2006

   Sheet 1 of 1

2. Plant Browns Ferry Nuclear Plant (BFN) (Name)
   P. O. Box 2000, Decatur, AL 35609-2000 (Address)

   Unit 3

   Work Order (WO) 05-720205-000
   Repair/Replacement Organization P O No Job No , etc.

3. Work Performed by TVA-BFN (Name)
   P. O. Box 2000, Decatur, AL 35609-2000 (Address)

   Type Code Symbol Stamp N/A

   Authorization No. N/A

   Expiration Date N/A

4. Identification of System System 085, Control Rod Drive (CRD) System (ASME Code Class 2 equivalent)

5. (a) Applicable Construction Code accumulator ASME Section VIII piping USAS B31.1.0 19 67 * Edition, N/A Addenda, N/A Code Case

   (b) Applicable Edition of Section XI Utilized for Repairs or Replacements 19 95 Edition, 1996 Addenda

6. Identification of Components

Name of Component	Name of Manufacturer	Manufacturer Serial No.	National Board No.	Other Identification	Year Built	Corrected, Removed, or Installed	ASME Code Stamped (Yes or No)
SCRAM Water Accumulator	General Electric	H0910	N/A	3-ACC-085-718/5039	1969	Removed	Yes
SCRAM Water Accumulator	General Electric	H1719	N/A	3-ACC-085-718/5039	1978	Installed	Yes

7. Description of Work Replaced accumulator.

8. Tests Conducted: Hydrostatic ☐ Pneumatic ☐ Nominal Operating Pressure ☒ Exempt ☐
   Other ☐ Pressure N/A psi Test Temp. N/A °F

NOTE: Supplemental Sheets in form of lists, sketches, or drawings may be used, provided (1) size is 8½ in. X 11 in., (2) information in items 1 through 6 on this report is included on each sheet, and (3) each sheet is numbered and the number of sheets is recorded at the top of this form.

*as amended by additional quality assurance requirements found in PEG Pkg 050222-ABF490HG0 and Design Criteria BFN-50-7085 and BFN-50-C-7105.

FORM NIS-2 (Back)

WID: 05-720205-000

9. Remarks Replaced accumulator.

Applicable Manufacturer's Data Reports to be attached

CERTIFICATE OF COMPLIANCE

I certify that the statements made in the report are correct and this conforms to the rules of the ASME Code, Section XI.

Type Code Symbol Stamp N/A

Certificate of Authorization No. N/A Expiration Date N/A

Signed [signature], System Engineer Date 4/26, 20 06

Owner or Owner's Designee Title

CERTIFICATE OF INSERVICE INSPECTION

I, the undersigned, holding a valid commission issued by the National Board of Boiler and Pressure Vessel Inspectors and the State or Province of Tennessee and employed by HSB CT of Connecticut have inspected the components described in this Owner's Report during the period 10/31/05 to 5/5/06, and state that to the best of my knowledge and belief, the Owner has performed examinations and taken corrective measures described in this Owner's Report in accordance with the requirements of the ASME Code, Section XI.

By signing this certificate neither the Inspector nor his employer makes any warranty, expressed or implied, concerning the examinations and corrective measures described in this Owner's Report. Furthermore, neither the Inspector nor his employer shall be liable in any manner for any personal injury or property damage or a loss of any kind arising from or connected with this inspection.

[signature] Commissions TN4011

Inspector's Signature National Board State Province and Endorsements

Date 5/5 20 06

FORM U-1 MANUFACTURERS' DATA REPORT FOR PRESSURE VESSELS
(Alternate Form for Single Chamber, Completely Shop-Fabricated Vessels Only)
As Required by the Provisions of the ASME Code Rules, Section VIII, Division 1

1. Manufactured by General Electric Company, P.O. Box 780, Wilmington, N.C.
2. Manufactured for Same As Above
3. Location of Installation
4. Type Vertical (Horiz. or vert. tank) HT719 (Mfr's Serial No.) (CRN) 105D6138G001 (Drawing No.) N/R (Nat'l Bd. No.) (Year Built) 1978
5. The chemical and physical properties of all parts meet the requirements of material specifications of the ASME BOILER AND PRESSURE VESSEL CODE. The design, construction, and workmanship conform to ASME Rules, Section VIII, Division 1 1974 (Year) and Addenda to S'75 (Date) and Code Case Nos.
Special Service per UG-120(d) As Per This Data Report - See Remarks Below
Manufacturers' Partial Data Reports properly identified and signed by Commissioned Inspectors have been furnished for the following items of the report: N/A
6. Shell: Matl. SA-106 Gr.B (Spec. No., Grade) Nom. Thk. .25 in. Corr. Allow. in. Diam. 8.70 Length 3 ft. 2.38 in.
7. Seams: Long. N/A Seamless (Welded, Dbl. Snglt. Lap, Butt) R.T. N/A (Spot or Full) Efficiency % H.T. Temp. F Time hr
Girth Butt Welding: Performed (Welded, Dbl. Snglt. Lap, Butt) R.T. (Spot, Partial, or Full) No. of Courses
8. Heads: (a) Material SA-182-F304 (Spec. No., Grade) (b) Material SA-182-F304 (Spec. No., Grade)

Location (Top, Bottom, Ends)	Min. Thk.	Corr. Allow.	Crown Radius	Knuckle Radius	Inside Depth	Conical Apex Angle	Straight Radius	Out Diam.	Side to Pressure (Convex or Concave)
(a) Top	2.5"							7.230	Flathead
(b) Bottom	2.5"							7.230	Flathead

If removable, bolts used (describe other fastenings) .500-13 Bolts-ASME-SA193-b7 for Split Flange (A) (Material, Spec. No., Gr., Size, No.)
9. Constructed for max. allowable working pressure 2100 psi at max. temp 400. F Min. temp (specify less than 20 F) F hydrostatic, pneumatic, or combination test pressure 3200 psi.
10. Safety Valve Outlets: Number None Size Location
11. Nozzles and Inspection Openings:

Purpose (Inlet, Outlet, Drain)	No.	Diam. or Size	Type	Mat'l	Diam. Thk.	Reinforcement Mat'l	How Attached	Location
Gas Port	1	.75"	Split Flng.	30455	1.060	None	Bolts (4)	bot
Water Port	1	.97"	Split Flng.	30455	1.300	None	Bolts (4)	top

12. Supports: Skirt No (Yes or No) Legs No Lugs No Other Clearance Attached (Yes or No)
13. Remarks: Complete Mechanical Assembly with No Welded Joint.

Although A Differential Pressure Exists on each side of the Internal Piston, the Accumulator Cylinder is Hydrostatically tested with the Piston removed. The Hydro Test pressure is based on the higher design press.

CERTIFICATE OF COMPLIANCE

We certify that the statements made in this report are correct and that all details of design, material, construction, and workmanship of this vessel conform to the ASME Code for Pressure Vessels, Section VIII, Division 1.
Date 7/18/78 Signed General Electric Co. By (Manufacturer) (Representative)
U1 Certificate of Authorization No. 10,572 Expires June 10, 1981

CERTIFICATE OF SHOP INSPECTION

Vessel made by General Electric Co. at Wilmington, N. C.
I, the undersigned, holding a valid commission issued by the National Board of Boiler and Pressure Vessel Inspectors and/or the State or Province of N. Carolina and employed by Dept. of Labor have inspected the pressure vessel described in the Manufacturers' Data Report on 7/18 1978 and state that to the best of my knowledge and belief, the Manufacturer has constructed this pressure vessel in accordance with ASME Code, Section VIII, Division 1. By signing this certificate neither the Inspector nor his employer makes any warranty, expressed or implied, concerning the pressure vessel described in the Manufacturers' Data Report. Furthermore, neither the Inspector nor his employer shall be liable in any manner for any personal injury or property damage or a loss of any kind arising from or connected with this inspection.
Signed (Inspector) Date 7/18/78 Commissions NC 723, 2A, WC1766, OH10 (Nat'l Board, State, Province and No.)

FORM NIS-2 OWNER'S REPORT FOR REPAIR/REPLACEMENT ACTIVITY
As Required by the Provisions of the ASME Code Section XI

1. Owner Tennessee Valley Authority (TVA) (Name)
   1101 Market Street
   Chattanooga, TN 37402-2801 (Address)

   Date January 19, 2006

   Sheet 1 of 1

2. Plant Browns Ferry Nuclear Plant (BFN) (Name)
   P. O. Box 2000, Decatur, AL 35609-2000 (Address)

   Unit 3

   Work Order (WO) 04-719493-000
   Repair/Replacement Organization P.O. No. Job No. etc

3. Work Performed by TVA-BFN (Name)
   P. O. Box 2000, Decatur, AL 35609-2000 (Address)

   Type Code Symbol Stamp N/A
   Authorization No. N/A
   Expiration Date N/A

4. Identification of System System 073, High Pressure Coolant Injection (HPCI) System (ASME Code Class 2 equivalent)

5. (a) Applicable Construction Code valve ASME Section III, Class 2 1989 (less N stamp) piping USAS B31.1 0 19 67 * Edition, N/A Addenda, N/A Code Case

   (b) Applicable Edition of Section XI Utilized for Repairs or Replacements 20 01 Edition, 2003 Addenda

   (c) Applicable Section XI Code Case(s)

6. Identification of Components

Name of Component	Name of Manufacturer	Manufacturer Serial No.	National Board No.	Other Identification	Year Built	Corrected, Removed, or Installed	ASME Code Stamped (Yes or No)
HPCI Steam Supply Valve	Anchor/Darling 10"-900# DD Gate	E413A-1-1	N/A	3-FCV-073-0016	1998	*	No
* - replaced valve disc							
valve disc	Anchor Darling	N/A	N/A	3-FCV-073-0016	1998	Removed	No
valve disc	Flowserve	N/A	N/A	3-FCV-073-0016	2002	Installed	No

7. Description of Work Replaced valve disc with a new valve disc

8. Tests Conducted: Hydrostatic ☐ Pneumatic ☐ Nominal Operating Pressure ☒ Exempt ☐
   Other ☐ Pressure N/A psi Test Temp. N/A °F

NOTE: Supplemental Sheets in form of lists, sketches, or drawings may be used, provided (1) size is 8½ in. X 11 in., (2) information in items 1 through 6 on this report is included on each sheet, and (3) each sheet is numbered and the number of sheets is recorded at the top of this form.

*as amended by additional quality assurance requirements found in Contract 1721-0076 and Design Criteria BFN-50-7073 and BFN-50-C-7105.

FORM NIS-2 (Back)

WID: 04-719493-000

9. Remarks Replaced valve disc with a new valve disc

Applicable Manufacturer's Data Reports to be attached

CERTIFICATE OF COMPLIANCE

I certify that the statements made in the report are correct and that this conforms to the requirements of the ASME Code, Section XI.

Type Code Symbol Stamp N/A

Certificate of Authorization No. N/A Expiration Date N/A

Signed [signature] System Engineer Date 1-20 , 20 06

Owner or Owner's Designee, Title

CERTIFICATE OF INSERVICE INSPECTION

I, the undersigned, holding a valid commission issued by the National Board of Boiler and Pressure Vessel Inspectors and the State or Province of Tennessee and employed by HSB CT of Connecticut have inspected the components described in this Owner's Report during the period 7/20/05 to 3/13/06, and state that to the best of my knowledge and belief, the Owner has performed examinations and taken corrective measures described in this Owner's Report in accordance with the requirements of the ASME Code, Section XI.

By signing this certificate neither the Inspector nor his employer makes any warranty, expressed or implied, concerning the examinations and corrective measures described in this Owner's Report. Furthermore, neither the Inspector nor his employer shall be liable in any manner for any personal injury or property damage or a loss of any kind arising from or connected with this inspection.

[signature] Commissions TN4011

Inspector's Signature National Board, State, Province, and Endorsements

Date ~~3/22 20 0~~ 3/13/06 CT

FORM NIS-2 OWNER'S REPORT FOR REPAIR/REPLACEMENT ACTIVITY
As Required by the Provisions of the ASME Code Section XI

1. Owner Tennessee Valley Authority (TVA) (Name)
1101 Market Street
Chattanooga, TN 37402-2801 (Address)

Date January 25, 2006

Sheet 1 of 1

2. Plant Browns Ferry Nuclear Plant (BFN) (Name)
P. O. Box 2000, Decatur, AL 35609-2000 (Address)

Unit 3

Work Order (WO) 06-710779-000
Repair/Replacement Organization P.O. No., Job No., etc.

3. Work Performed by TVA-BFN (Name)
P. O. Box 2000, Decatur, AL 35609-2000 (Address)

Type Code Symbol Stamp N/A

Authorization No. N/A

Expiration Date N/A

4. Identification of System System 068, Reactor Recirculation System (ASME Code Class 1 equivalent)

5. (a) Applicable Construction Code piping USAS B31.1.0 supports AISC 8th Ed. and MSS-SP-58, 1967 19 67* Edition, N/A Addenda, N/A Code Case

(b) Applicable Edition of Section XI Utilized for Repairs or Replacements 20 01 Edition, 2003 Addenda

6. Identification of Components

Name of Component	Name of Manufacturer	Manufacturer Serial No.	National Board No.	Other Identification	Year Built	Corrected, Removed, or Installed	ASME Code Stamped (Yes or No)
snubber connection pin	Bergen Patterson	N/A	N/A	3-47B465-513 3-SNUB-068-5001	N/A	Removed	No
snubber connection pin	Bergen Patterson	N/A	N/A	3-47B465-513 3-SNUB-068-5001	N/A	Installed	No

7. Description of Work Replaced snubber connection pin with a pin from the same application/location on Unit 1.

8. Tests Conducted: Hydrostatic ☐ Pneumatic ☐ Nominal Operating Pressure ☐ Exempt ☐

Other ☒** Pressure N/A psi Test Temp. N/A °F

** - VT-3 exam of support

NOTE: Supplemental Sheets in form of lists, sketches, or drawings may be used, provided (1) size is 8½ in. X 11 in., (2) information in items 1 through 6 on this report is included on each sheet, and (3) each sheet is numbered and the number of sheets is recorded at the top of this form.

*as amended by additional quality assurance requirements found in Design Criteria BFN-50-7068 and BFN-50-C-7105.

FORM NIS-2 (Back)

WID: 06-710779-000

9. Remarks Replaced snubber connection pin with a pin from the same application/location on Unit 1.
Applicable Manufacturer's Data Reports to be attached

CERTIFICATE OF COMPLIANCE

I certify that the statements made in the report are correct and this conforms to the rules of the ASME Code, Section XI.

Type Code Symbol Stamp N/A

Certificate of Authorization No. N/A Expiration Date N/A

Signed [signature], System Engineer Date 4/27, 20 06
Owner or Owner's Designee, Title

CERTIFICATE OF INSERVICE INSPECTION

I, the undersigned, holding a valid commission issued by the National Board of Boiler and Pressure Vessel Inspectors and the State or Province of Tennessee and employed by HSB CT of Connecticut have inspected the components described in this Owner's Report during the period 1-20-06 to 5-4-06, and state that to the best of my knowledge and belief, the Owner has performed examinations and taken corrective measures described in this Owner's Report in accordance with the requirements of the ASME Code, Section XI.

By signing this certificate neither the Inspector nor his employer makes any warranty, expressed or implied, concerning the examinations and corrective measures described in this Owner's Report. Furthermore, neither the Inspector nor his employer shall be liable in any manner for any personal injury or property damage or a loss of any kind arising from or connected with this inspection.

[signature] Commissions TN4011
Inspector's Signature National Board, State, Province, and Endorsements

Date 5/4 20 06

FORM NIS-2 OWNER'S REPORT FOR REPAIR/REPLACEMENT ACTIVITY
As Required by the Provisions of the ASME Code Section XI

1. Owner Tennessee Valley Authority (TVA) (Name)
1101 Market Street
Chattanooga, TN 37402-2801 (Address)

Date February 13, 2006

Sheet 1 of 1

2. Plant Browns Ferry Nuclear Plant (BFN) (Name)
P. O. Box 2000, Decatur, AL 35609-2000 (Address)

Unit 3

Work Orders (WOs) 05-715980-000 and 05-719566-000
Repair/Replacement Organization P.O. No., Job No., etc

3. Work Performed by TVA-BFN (Name)
P. O. Box 2000, Decatur, AL 35609-2000 (Address)

Type Code Symbol Stamp N/A
Authorization No. N/A
Expiration Date N/A

4. Identification of System System 075, Core Spray System (ASME Code Class 2 equivalent)

5. (a) Applicable Construction Code USAS B31.1.0 19 67 * Edition, N/A Addenda, N/A Code Case

(b) Applicable Edition of Section XI Utilized for Repairs or Replacements 20 01 Edition, 2003 Addenda

6. Identification of Components

Name of Component	Name of Manufacturer	Manufacturer Serial No.	National Board No.	Other Identification	Year Built	Corrected, Removed, or Installed	ASME Code Stamped (Yes or No)
PSC Water Fill Check Valve	Hancock 5580W	N/A	N/A	3-CKV-075-0609	N/A	‡	No
PSC Water Fill Check Valve	Hancock 5580W	N/A	N/A	3-CKV-075-0610	N/A	‡	No
‡ - Replaced valve disc and cap							
cap	Hancock	N/A	N/A	3-CKV-075-0609	N/A	Removed	No
cap	Anderson Greenwood Crosby	N900132-31-01	N/A	3-CKV-075-0609	N/A	Installed	No
disc	Hancock	N/A	N/A	3-CKV-075-0609	N/A	Removed	No
disc	Anderson Greenwood Crosby	N900133-31-12	N/A	3-CKV-075-0609	N/A	Installed	No
cap	Hancock	N/A	N/A	3-CKV-075-0610	N/A	Removed	No
cap	Anderson Greenwood Crosby	N900132-31-06	N/A	3-CKV-075-0610	N/A	Installed	No
disc	Hancock	N/A	N/A	3-CKV-075-0610	N/A	Removed	No
disc	Anderson Greenwood Crosby	N900133-31-10	N/A	3-CKV-075-0610	N/A	Installed	No

7. Description of Work Replaced valve disc and cap (bonnet) with vendor supplier parts of new more corrosion resistant material.

8 Tests Conducted: Hydrostatic ☐ Pneumatic ☐ Nominal Operating Pressure ☒ Exempt ☐

Other ☐ Pressure N/A psi Test Temp. N/A °F

NOTE: Supplemental Sheets in form of lists, sketches, or drawings may be used, provided (1) size is 8½ in. X 11 in., (2) information in items 1 through 6 on this report is included on each sheet, and (3) each sheet is numbered and the number of sheets is recorded at the top of this form.

*as amended by additional quality assurance requirements found in 0-47BM435-11-3 and Design Criteria BFN-50-7075 and BFN-50-C-7105.

FORM NIS-2 (Back)

WOs 05-715980-000 and 05-719566-000

9. Remarks Replaced valve disc and cap (bonnet) with vendor supplier parts of new more corrosion resistant material.

Applicable Manufacturer's Data Reports to be attached

CERTIFICATE OF COMPLIANCE

I certify that the statements made in the report are correct and this conforms to the rules of the ASME Code, Section XI.

Type Code Symbol Stamp N/A

Certificate of Authorization No. N/A Expiration Date N/A

Signed [signature], System Engineer Date 4/27, 20 06

Owner or Owner's Designee Title

CERTIFICATE OF INSERVICE INSPECTION

I, the undersigned, holding a valid commission issued by the National Board of Boiler and Pressure Vessel Inspectors and the State or Province of Tennessee and employed by HSB CT of Connecticut have inspected the components described in this Owner's Report during the period 2-2-06 to 5-12-06, and state that to the best of my knowledge and belief, the Owner has performed examinations and taken corrective measures described in this Owner's Report in accordance with the requirements of the ASME Code, Section XI.

By signing this certificate neither the Inspector nor his employer makes any warranty, expressed or implied, concerning the examinations and corrective measures described in this Owner's Report. Furthermore, neither the Inspector nor his employer shall be liable in any manner for any personal injury or property damage or a loss of any kind arising from or connected with this inspection.

[signature] Commissions TN 4011

Inspector's Signature National Board State Province and Endorsements

Date 5/12 20 06.

FORM NIS-2 OWNER'S REPORT FOR REPAIR/REPLACEMENT ACTIVITY
As Required by the Provisions of the ASME Code Section XI

1. Owner Tennessee Valley Authority (TVA) (Name)
1101 Market Street
Chattanooga, TN 37402-2801 (Address)

Date April 26, 2006

Sheet 1 of 1

2. Plant Browns Ferry Nuclear Plant (BFN) (Name)
P. O Box 2000, Decatur, AL 35609-2000 (Address)

Unit 3

Work Orders (WO) 05-711514-000, 05720206-000 05-724436-000 and 06-710407-000 (Repair/Replacement Organization P.O No., Job No etc)

3. Work Performed by TVA-BFN (Name)
P. O. Box 2000, Decatur, AL 35609-2000 (Address)

Type Code Symbol Stamp N/A

Authorization No. N/A

Expiration Date N/A

4. Identification of System System 085, Control Rod Drive System (ASME Code Class 2 equivalent)
Accumulators - ASME Section VIII, Div 1, 1974 Edition, Summer 1975Addenda

5. (a) Applicable Construction Code USAS B31.1.0 19 67 * Edition, N/A Addenda, N/A Code Case

(b) Applicable Edition of Section XI Utilized for Repairs or Replacements 20 01 Edition, 2003 Addenda

(c) Applicable Section XI Code Case(s)

6. Identification of Components

Name of Component	Name of Manufacturer	Manufacturer Serial No.	National Board No.	Other Identification	Year Built	Corrected, Removed, or Installed	ASME Code Stamped (Yes or No)
CRD Hydraulic Control Unit Accumulator	General Electric	C0007	N/A	3-ACC-085-718/3459	1969	Removed	Yes
CRD Hydraulic Control Unit Accumulator	General Electric	H1451	N/A	3-ACC-085-718/3459	1978	Installed	Yes
CRD Hydraulic Control Unit Accumulator	General Electric	C0053	N/A	3-ACC-085-718/4635	1969	Removed	Yes
CRD Hydraulic Control Unit Accumulator	General Electric	H1672	N/A	3-ACC-085-718/4635	1978	Installed	Yes
CRD Hydraulic Control Unit Accumulator	General Electric	C0005	N/A	3-ACC-085-718/3419	1969	Removed	Yes
CRD Hydraulic Control Unit Accumulator	General Electric	H1247	N/A	3-ACC-085-718/3419	1978	Installed	Yes
CRD Hydraulic Control Unit Accumulator	General Electric	H0823	N/A	3-ACC-085-718/5447	1969	Removed	Yes
CRD Hydraulic Control Unit Accumulator	General Electric	H1704	N/A	3-ACC-085-718/5447	1978	Installed	Yes

7. Description of Work Replaced 4 CRD Hydraulic Control Unit accumulators with new accumulators

8. Tests Conducted: Hydrostatic ☐ Pneumatic ☐ Nominal Operating Pressure ☒ Exempt ☐

Other ☐ Pressure N/A psi Test Temp. N/A °F

NOTE: Supplemental Sheets in form of lists, sketches, or drawings may be used, provided (1) size is 8½ in. X 11 in., (2) information in items 1 through 6 on this report is included on each sheet, and (3) each sheet is numbered and the number of sheets is recorded at the top of this form.

*as amended by additional quality assurance requirements found in Contract 90744, vendor manual VTD-G080-0755, PEG pkg ABF490H-UPGR and Design Criteria BFN-50-7085 and BFN-50-C-7105.

FORM NIS-2 (Back)

WID: 05-711514-000, 05720206-000, 05-724436-000 and 06-710407-000

9. Remarks Replaced 4 CRD Hydraulic Control Unit accumulators with new accumulators
Applicable Manufacturer's Data Reports to be attached

CERTIFICATE OF COMPLIANCE

I certify that the statements made in the report are correct and that this conforms to the requirements of the ASME Code, Section XI.

Type Code Symbol Stamp N/A

Certificate of Authorization No. N/A Expiration Date N/A

Signed Stephen C. Willard, System Engineer Date 4/26, 20 06
Owner or Owner's Designee Title

CERTIFICATE OF INSERVICE INSPECTION

I, the undersigned, holding a valid commission issued by the National Board of Boiler and Pressure Vessel Inspectors and the State or Province of Tennessee and employed by HSB CT of Hartford Connecticut have inspected the components described in this Owner's Report during the period 11/3/05 to 6/1/06, and state that to the best of my knowledge and belief, the Owner has performed examinations and taken corrective measures described in this Owner's Report in accordance with the requirements of the ASME Code, Section XI.

By signing this certificate neither the Inspector nor his employer makes any warranty, expressed or implied, concerning the examinations and corrective measures described in this Owner's Report. Furthermore, neither the Inspector nor his employer shall be liable in any manner for any personal injury or property damage or a loss of any kind arising from or connected with this inspection.

Bruce M. Earnigh Commissions TN2534
Inspector's Signature National Board State Province and Endorsements

Date 6/1 20 06

FORM U-1A MANUFACTURERS' DATA REPORT FOR PRESSURE VESSELS

(Alternate Form for Single Chamber, Completely Shop-Fabricated Vessels Only)
As Required by the Provisions of the ASME Code Rules, Section VIII, Division 1

1. Manufactured by General Electric Company, P.O. Box 780, Wilmington, N.C.
2. Manufactured for Same as Above
3. Location of Installation
4. Type Vertical (Horiz. or vert.) H1451 (Mfgr's Serial No.) 105D6138G001 (CRN) N/R (Drawing No.) (Nat'l Bd No.) (Year Built) 1978
5. The chemical and physical properties of all parts meet the requirements of material specifications of the ASME BOILER AND PRESSURE VESSEL CODE. The design, construction, and workmanship conform to ASME Rules, Section VIII, Division 1 1974 (Year) and Addenda to S'75 (Date) and Code Case Nos. --
Special Service per UG-120(d) As Per This Data Report - See Remarks Below
Manufacturers' Partial Data Reports properly identified and signed by Commissioned Inspectors have been furnished for the following items of the report: N/A
6. Shell: Matl. SA-106 Gr. B (Spec. No., Grade) Nom. Thk. .55 in. Corr. Allow. ___ in. Diam. 8.70' in. Lgth. 3 ft 2.38 in.
7. Seams: Long N/A Seamless (Welded, Dbl, Sngl, Lap, Butt) R.T. N/A (Spot or Full) Efficiency -- % H.T. Temp. -- F Time -- hr
Girth No Welding Performed (Welded, Dbl, Sngl, Lap, Butt) R.T. -- (Spot, Partial, or Full) No. of Courses --
8. Heads: (a) Material Sa-182-F304 (Spec. No., Grade) (b) Material Sa-182-F304 (Spec. No., Grade)

	Location (Top, Bottom, Ends)	Min. Thk.	Corr. Allow.	Crown Radius	Knuckle Radius	Ellipse Ratio	Conical Apex Angle	Hemisph. Radius	Flat Diam.	Side to Pressure (Convex or Concave)
(a)	Top	2.5"							7.230	Flathead
(b)	Bottom	2.5"							7.230	Flathead

If removable, bolts used (describe other fastenings) 500-13 Bolts-ASME-SA193-B7 for Split Flanges (4) (Material, Spec. No., Gr., Size, No.)

9. Constructed for max. allowable working pressure 2100 psi at max. temp. 400 F. Min. temp. (when less than -20 F) -- F. Hydrostatic, pneumatic, or combination test pressure 3200 psi.
10. Safety Valve Outlets: Number None Size -- Location -------
11. Nozzles and Inspection Openings:

Purpose (Inlet, Outlet, Drain)	No.	Diam. or Size	Type	Matl.	Nom. Thk.	Reinforcement Matl.	How Attached	Location
Gas Port	1	.75"	Split Flng.	30455	1.060	None	Bolts	(4) Bottom.
Water Port	1	.97"	Split Flng.	30455	1.300	None	Bolts	(4) Top

12. Supports: Skirt No (Yes or no) Lugs ___ (No.) Legs ___ (No.) Other ___ (Describe) Attached ___ (Where and how)
13. Remarks: Complete Mechanical Assembly with No Welded Joints.

Although A Differential Pressure Exists on each side of the Internal Piston, the Accumulator Cylinder is Hydrostatically tested with the Piston removed. The Hydro Test pressure is based on the higher design pressure.

CERTIFICATE OF COMPLIANCE

We certify that the statements made in this report are correct and that all details of design, material, construction, and workmanship of this vessel conform to the ASME Code for Pressure Vessels, Section VIII, Division 1.
Date 6/8/78 Signed General Electric Co. (Manufacturer) by [signature] (Representative)
"U" Certificate of Authorization No. 10,572 expires June 10, 1981

CERTIFICATE OF SHOP INSPECTION

Vessel made by General Electric Co. at Wilmington, N. C.
I, the undersigned, holding a valid commission issued by the National Board of Boiler and Pressure Vessel Inspectors and/or the State or Province of N. Carolina and employed by Dept Of Labor have inspected the pressure vessel described in this Manufacturers' Data Report on 6/8 1978 and state that, to the best of my knowledge and belief, the Manufacturer has constructed this pressure vessel in accordance with ASME Code, Section VIII, Division 1. By signing this certificate neither the Inspector nor his employer makes any warranty, expressed or implied, concerning the pressure vessel described in the Manufacturers' Data Report. Furthermore, neither the Inspector nor his employer shall be liable in any manner for any personal injury or property damage or a loss of any kind arising from or connected with this inspection.
Signed [signature] (Inspector) Date 6/8/78 Commissions NC 723, PA. WC1766, OHIO (Nat'l Board, State, Province and No.)

[signature] 1/13/05

FORM U-1A MANUFACTURERS' DATA REPORT FOR PRESSURE VESSELS
(Alternate Form for Single Chamber, Completely Shop-Fabricated Vessels Only)
As Required by the Provisions of the ASME Code Rules, Section VIII, Division 1

1. Manufactured by General Electric Company, P.O. Box 780, Wilmington, N.C.
2. Manufactured for Same as Above
3. Location of Installation
4. Type Vertical (Horz or Vert) 10572 (Mfg's Serial No.) (CRN) 105D6138G001 (Drawing No.) N/R (Nat'l Bd No.) (Year Built) 1978
5. The chemical and physical properties of all parts meet the requirements of material specifications of the ASME BOILER AND PRESSURE VESSEL CODE. The design, construction, and workmanship conform to ASME Rules, Section VIII, Division 1 1974 (Year) and Addenda to S'75 (Date) and Code Case Nos. --
Special Service per UG-120(d) As Per This Data Report - See Remarks Below
Manufacturers' Partial Data Reports properly identified and signed by Commissioned Inspectors have been furnished for the following items of the report: N/A
6. Shell: Matl. SA-106 Gr. B (Spec. No., Grade) Nom Thk. 55 in. Corr. Allow. in. Diam. 8.70 in. Lgth. 3 ft 2.38 in.
7. Seams: Long. N/A Seamless (Welded, Dbl. Shpl. Lap Joint) R.T. N/A (Spot or Full) Efficiency -- % H.T. Temp -- F Time -- hr
Girth No Welding Performed (Welded, Dbl. Shpl. Lap Joint) R.T. -- (Spot, Partial, or Full) No. of Courses --
8. Heads: (a) Material SA-182-F304 (Spec. No., Grade) (b) Material SA-182-F304 (Spec. No., Grade)

Location (Top, Bottom, Each)	Min. Thk.	Corr. Allow.	Crown Radius	Knuckle Radius	Elliptic Ratio	Conical Apex Angle	Hemisph. Radius	Flat Diam.	Side to Pressure (Convex or Concave)
(a) Top	2.5"							7.230	Flathead
(b) Bottom	2.5"							7.230	Flathead

If removable, bolts used (describe other fastenings) 500-13 Bolts-ASME-SA193-B7 for Split Flanges (4)
(Material, Spec. No., Gr., Size, No.)
9. Constructed for max. allowable working pressure 2100 psi at max. temp 400 F. Min. temp. (when less than -20 F) -- F. hydrostatic, pneumatic, or combination test pressure 3200 psi
10. Safety Valve Outlets: Number NonSize -- Location --
11. Nozzles and Inspection Openings:

Purpose (Inlet, Outlet, Drain)	No.	Diam. or Size	Type	Matl.	Nom. Thk.	Reinforcement Matl.	How Attached	Location
Gas Port	1	.75"	Split Flng.	30455	1.000	None	Bolts	(4) Bottom.
Water Port	1	.97"	Split Flng.	30455	1.300	None	Bolts	(4) Top

12. Supports: Skirt No (Yes or No) Lugs (No.) Legs (No.) Other (Describe) Attached (Where and how)
13. Remarks: Complete Mechanical Assembly with No Welded Joints.
Although A Differential Pressure Exists on each side of the Internal Piston, the Accumulator Cylinder is Hydrostatically tested with the Piston removed. The Hydro Test pressure is based on the higher design pressure.

CERTIFICATE OF COMPLIANCE

We certify that the statements made in this report are correct and that all details of design, material, construction, and workmanship of this vessel conform to the ASME Code for Pressure Vessels, Section VIII, Division 1.
Date 7/18/78 Signed General Electric Co. (Manufacturer) by (Representative)
"U" Certificate of Authorization No. 10,572 expires June 10, 1981.

CERTIFICATE OF SHOP INSPECTION

Vessel made by General Electric Co. at Wilmington, N. C.
I, the undersigned, holding a valid commission issued by the National Board of Boiler and Pressure Vessel Inspectors and/or the State or Province of N. Carolina and employed by Dept. Of Labor have inspected the pressure vessel described in this Manufacturers' Data Report on 7/18 1978, and state that, to the best of my knowledge and belief, the Manufacturer has constructed this pressure vessel in accordance with ASME Code, Section VIII, Division 1. By signing this certificate neither the Inspector nor his employer makes any warranty, expressed or implied, concerning the pressure vessel described in the Manufacturers' Data Report. Furthermore, neither the Inspector nor his employer shall be liable in any manner for any personal injury or property damage or a loss of any kind arising from or connected with this inspection.
Signed (Inspector) Date 7/18/78 Commissions NC 723, PA. NC1766, OHIO (Nat'l Board, State, Province and No.)

Cf 11/3/05

FORM U-1A MANUFACTURER'S DATA REPORT FOR PRESSURE VESSELS
(Alternate Form for Single Chamber, Owner's or Shop Fabricated Vessels Only)
As Required by the Provisions of the ASME Code Rules, Section VIII, Division 1

1. Manufactured by General Electric Company, P.O. Box 780, Wilmington, N.C.
2. Manufactured for Same as Above
3. Location of Installation
4. Type Vertical (Horiz. or Vert.) 11207 (Mfr's Serial No.) (CRN) 105961326001 (Drawing No.) N/R (Nat'l Bd. No.) (Year Built) 1978
5. The chemical and physical properties of all parts meet the requirements of material specifications of the ASME BOILER AND PRESSURE VESSEL CODE. The design, construction, and workmanship conform to ASME Rules, Section VIII, Division 1 1974 (Year) and Addenda to S'74 (Date) and Code Case Nos.
Special Service (per UG-120(d)) As Per This Data Report - See Remarks Below
Manufacturers' Partial Data Reports properly identified and signed by Commissioned Inspectors have been furnished for the following items of the report: N/A

6. Shell: Mat'l SA-106 Gr. B Nom. .55 in. Corr. Allow. in. Diam. 8.70 in. Lgth 3 ft 2.38 in.
7. Seams: Long N/A Seamless RT N/A (Efficiency) % H.T. Temp F. Time hr.
Girth No Welding Performed RT (Spot or Full) No. of Courses
8. Heads: (a) Material SA-182-F304 (b) Material SA-182-F304

	Location (Top, Bottom, End)	Min. Thk.	Corr. Allow.	Crown Radius	Knuckle Radius	Ellipse Ratio	Center Lap Seam	Height Radius	Flat Diam.	Side in Pressure (Concave or Convex)
(a)	Top	2.5"							7.230	Outward
(b)	Bottom	2.5"							7.230	Outward

If removable, bolts used (describe other fastenings) 500-13 Bolts-ASME-SA193-B7 for Split Flanges (4 (Material, Spec. No., Gr., Size, No.)
9. Constructed for max. allowable working pressure 2100 psi at max. temp 400 F. Min. temp. (when less than -20 F) F. Hydrostatic, pneumatic, or combination test pressure 3200 psi.
10. Safety Valve Outlet: Number None Size Location
11. Nozzles and Inspection Openings:

Purpose (Inlet, Outlet, Drain)	No.	Diam. or Size	Type	Mat'l	Min. Thk.	Reinforcement Mat'l	How Attached	Location
Gas Port	1	.75"	Split Flng.	30455	1.060	None	Bolts	(4) Bottom
Water Port	1	.97"	Split Flng.	30455	1.300	None	Bolts	(4) Top

12. Supports: Skirt No. (Material) Legs (No.) Lugs (No.) Other (Description) Attached (Where and How)
13. Remarks: Complete Mechanical Assembly with No Welded Joints.

Although A Differential Pressure Exists on each side of the Internal Piston, the Accumulator Cylinder is Hydrostatically tested with the Piston removed. The Hydro Test pressure is based on the higher design pressure.

CERTIFICATE OF COMPLIANCE

We certify that the statements made in this report are correct and that all details of design, material, construction, and workmanship of this vessel conform to the ASME Code for Pressure Vessels, Section VIII, Division 1.
Date 6/20/78 Signed General Electric Co. (Manufacturer) by (Representative)
"U" Certificate of Authorization No. 10,572 expires June 10, 1981

CERTIFICATE OF SHOP INSPECTION

Vessel made by General Electric Co. at Wilmington, N.C.
I, the undersigned, holding a valid commission issued by the National Board of Boiler and Pressure Vessel Inspectors and/or the State or Province of N. Carolina and employed by Dept. Of Labor have inspected the pressure vessel described in the Manufacturers' Data Report on 6/20 19 78 and state that, to the best of my knowledge and belief, the Manufacturer has constructed this pressure vessel in compliance with ASME Code, Section VIII, Division 1. By signing this certificate neither the Inspector nor his employer makes any warranty, expressed or implied, concerning the pressure vessel described in the Manufacturers' Data Report. Furthermore, neither the Inspector nor his employer shall be liable in any manner for any personal injury or property damage or a loss of any kind arising from or connected with this inspection.
Signed (Inspector) Date 6/20/78 Commissions NC799, PA. UC2160, Ohio (Nat'l Board, State, Province and No.)

2/10/06

(1976) This form (E00117) may be obtained from the Order Dept., ASME, 345 E. 47th St., New York, N.Y. 10017

FORM U-1A MANUFACTURERS' DATA REPORT FOR PRESSURE VESSELS
(Alternate Form for Single Chamber, Completely Shop-Fabricated Vessels Only)
As Required by the Provisions of the ASME Code Rules, Section VIII, Division 1

1. Manufactured by General Electric Company, P.O. Box 780, Wilmington, N.C.
2. Manufactured for Same as Above
3. Location of Installation
4. Type Vertical (Horiz. or vert. tank) H1704 (Manufr. Serial No.) (CRN) 105D5138G001 (Drawing No.) N/R (Nat'l Bd. No.) (Year Built) 1978
5. The chemical and physical properties of all parts meet the requirements of material specifications of the ASME BOILER AND PRESSURE VESSEL CODE. The design, construction, and workmanship conform to ASME Rules, Section VIII, Division 1 1974 (Year) and Addenda to S'75 (Date) and Code Case Nos --
Special Service per UG-120(d) As Per This Data Report - See Remarks Below
Manufacturers' Partial Data Reports properly identified and signed by Commissioned Inspectors have been furnished for the following items of the report: N/A

6. Shell: Matl. SA-106 Gr. B (Spec. No., Grade) Nom. Thk. .55 in. Corr. Allow. ____ in. Diam. 8.70 in. Lgth 3 ft 2.38 in.
7. Seams: Long. N/A Seamless (Welded, Dbl. Sngl. Lap Butt) R.T. N/A (Spot or Full) Efficiency -- % H.T. Temp. -- F Time -- hr
Girth No Welding Performed (Welded, Dbl. Sngl. Lap Butt) R.T. -- (Spot, Partial, or Full) No. of Courses --
8. Heads: (a) Material Sa-182-F304 (Spec. No., Grade) (b) Material Sa-182-F304 (Spec. No., Grade)

	Location (Top, Bottom, Ends)	Min. Thk.	Corr. Allow.	Crown Radius	Knuckle Radius	Ellipse Ratio	Conical Apex Angle	Hemisph. Radius	Flat Diam.	Side to Pressure (Convex or Concave)
(a)	Top	2.5"							7.230	Flathead
(b)	Bottom	2.5"							7.230	Flathead

If removable, bolts used (describe other fastenings) 500-13 Bolts-ASME-SA193-B7 for Split Flanges (4
(Material, Spec. No., Gr., Size, No.)
9. Constructed for max. allowable working pressure 2100 psi at max. temp 400 F. Min temp (when less than -20 F) -- F. Hydrostatic, pneumatic, or combination test pressure 3200 psi.
10. Safety Valve Outlets: Number None Size -- Location --
11. Nozzles and Inspection Openings:

Purpose (Inlet, Outlet, Drain)	No.	Diam. or Size	Type	Matl.	Nom. Thk.	Reinforcement Matl.	How Attached	Location
Gas Port	1	.75"	Split Flng.	30455	1.060	None	Bolts	(4) Bottom.
Water Port	1	.97"	Split Flng.	30455	1.300	None	Bolts	(4) Top

12. Supports: Skirt No (Yes or No) Lugs ____ (No.) Legs ____ (No.) Other ____ (Describe) Attached ____ (Where and how)
13. Remarks: Complete Mechanical Assembly with No Welded Joints.

Although A Differential Pressure Exists on each side of the Internal Piston, the Accumulator Cylinder is Hydrostatically tested with the Piston removed. The Hydro Test pressure is based on the higher design pressure

CERTIFICATE OF COMPLIANCE

We certify that the statements made in this report are correct and that all details of design, material, construction, and workmanship of this vessel conform to the ASME Code for Pressure Vessels, Section VIII, Division 1.
Date 6/20/78 Signed General Electric Co. By [signature]
(Manufacturer) (Representative)
"U" Certificate of Authorization No. 10,572 expires June 10, 1981.

CERTIFICATE OF SHOP INSPECTION

Vessel made by General Electric Co. at Wilmington, N. C.
I, the undersigned, holding a valid commission issued by the National Board of Boiler and Pressure Vessel Inspectors and/or the State or Province of N. Carolina and employed by Dept. Of Labor have inspected the pressure vessel described in this Manufacturers' Data Report on 6/20 1978 and state that, to the best of my knowledge and belief, the Manufacturer has constructed this pressure vessel in accordance with ASME Code Section VIII Division 1. By signing this certificate neither the Inspector nor his employer makes any warranty, expressed or implied, concerning the pressure vessel described in the Manufacturers' Data Report. Furthermore, neither the Inspector nor his employer shall be liable in any manner for any personal injury or property damage or a loss of any kind arising from or connected with this inspection.
Signed [signature] (Inspector) Date 6/20/78 Commissions NC799, PA. WC2L60, Ohio (Nat'l Board, State, Province and No.)

2/10/06

FORM NIS-2 OWNER'S REPORT FOR REPAIR/REPLACEMENT ACTIVITY
As Required by the Provisions of the ASME Code Section XI

1. Owner Tennessee Valley Authority (TVA) (Name)
1101 Market Street
Chattanooga, TN 37402-2801 (Address)

Date May 1, 2006

Sheet 1 of 1

2. Plant Browns Ferry Nuclear Plant (BFN) (Name)
P. O. Box 2000, Decatur, AL 35609-2000 (Address)

Unit 3

Work Orders (WOs) 03-004243-000, 03-004255-001, 03-004244-000 and 03-004268-001
(Repair/Replacement Organization P O No., Job No. etc)

3. Work Performed by TVA-BFN (Name)
P. O. Box 2000, Decatur, AL 35609-2000 (Address)

Type Code Symbol Stamp N/A
Authorization No. N/A
Expiration Date N/A

4. Identification of System System 001, Main Steam System (ASME Code Class 1 equivalent)

5. (a) Applicable Construction Code ASME Section III 19 68 Edition, Summer 1970 Addenda, N/A Code Case

(b) Applicable Edition of Section XI Utilized for Repairs or Replacements 20 01 Edition, 2003 Addenda

(c) Applicable Section XI Code Case(s)

6. Identification of Components

Name of Component	Name of Manufacturer	Manufacturer Serial No.	National Board No.	Other Identification	Year Built	Corrected, Removed, or Installed	ASME Code Stamped (Yes or No)
Main Steam Relief Valve	Target Rock Corp. 7567F-000-10	1069	N/A	3-PCV-001-0034	1979	Removed	Yes
Main Steam Relief Valve	Target Rock Corp. 7567F-000-10	1021	N/A	3-PCV-001-0034	1978	Installed	Yes
Main Steam Relief Valve	Target Rock Corp. 7567F-000-10	1019	N/A	3-PCV-001-0042	1978	Removed	Yes
Main Steam Relief Valve	Target Rock Corp. 7567F-000-10	1026	N/A	3-PCV-001-0042	1978	Installed	Yes

7. Description of Work Replaced two Main Steam Relief Valve main bodies with refurbished valve bodies.
Replaced 12 spline nuts on each valve body.

8. Tests Conducted: Hydrostatic ☐ Pneumatic ☐ Nominal Operating Pressure ☒ Exempt ☐

Other ☐ Pressure N/A psi Test Temp. N/A °F

NOTE: Supplemental Sheets in form of lists, sketches, or drawings may be used, provided (1) size is 8½ in. X 11 in., (2) information in items 1 through 6 on this report is included on each sheet, and (3) each sheet is numbered and the number of sheets is recorded at the top of this form.

*as amended by additional quality assurance requirements found in Contract 158199, GE P. O. 205AJ600, and Design Criteria BFN-50-7001 and BFN-50-C-7105.

FORM NIS-2 (Back)

WID: 03-004243-000 and 03-004255-001

9. Remarks The main valve body was replaced with rebuilt valve body previously used on Unit 2 (same manufacturer/model number).

Applicable Manufacturer's Data Reports to be attached

As a part of the Tech Spec required valve inspections WO 03-004243-000 replaced 3-PCV-001-0034 with a rebuilt valve previously used in BFN Unit 2 (2-PCV-001-0005, S/N 1021). The replacement valve was removed from Unit 2 by WO 03-004255-000 and refurbished by WO 03-004255-001 (12 spline nuts were replaced under WO 03-004255-001 due to galling during disassembly and for ease of maintenance).

WID: 03-004244-000 and 03-004268-001

The main valve body was replaced with rebuilt valve body previously used on Unit 2 (same manufacturer/model number).

As a part of the Tech Spec required valve inspections WO 03-004244-000 replaced 3-PCV-001-0042 with a rebuilt valve previously used in BFN Unit 2 (2-PCV-001-0179, S/N 1026). The replacement valve was removed from Unit 2 by WO 03-004268-000 and refurbished by WO 03-004268-001 (12 spline nuts were replaced under WO 03-004268-001 due to galling during disassembly and for ease of maintenance)

CERTIFICATE OF COMPLIANCE

I certify that the statements made in the report are correct and that this conforms to the requirements of the ASME Code, Section XI.

Type Code Symbol Stamp N/A

Certificate of Authorization No. N/A Expiration Date N/A

Signed [signature], System Engineer (Owner or Owner's Designee, Title) Date 5/1, 20 06

CERTIFICATE OF INSERVICE INSPECTION

I, the undersigned, holding a valid commission issued by the National Board of Boiler and Pressure Vessel Inspectors and the State or Province of Tennessee and employed by HSB CT of Connecticut have inspected the components described in this Owner's Report during the period 11/1/05 to 5/16/06, and state that to the best of my knowledge and belief, the Owner has performed examinations and taken corrective measures described in this Owner's Report in accordance with the requirements of the ASME Code, Section XI.

By signing this certificate neither the Inspector nor his employer makes any warranty, expressed or implied, concerning the examinations and corrective measures described in this Owner's Report. Furthermore, neither the Inspector nor his employer shall be liable in any manner for any personal injury or property damage or a loss of any kind arising from or connected with this inspection.

[signature] (Inspector's Signature) Commissions TN 4011 (National Board, State, Province, and Endorsements)

Date 5/16 20 06

FORM N-2 MANUFACTURERS DATA REPORT FOR NUCLEAR PARTS AND APPURTENANCES*

As required by the Provisions of the ASME Code Rules

13

1. (a) Manufactured by Target Rock Corp., 1966E. Broadhollow Rd., E.Farmingdale, NY
(Name and address of Manufacturer of part)

(b) Manufactured for General Electric Co., 175 Curtner Ave., San Jose, Calif.
(Name and address of Manufacturer of completed nuclear component)

2. Identification-Manufacturer's Serial No. of Part 1021 Nat'l Bd. No. ---

(a) Constructed According to Drawing No. 7567F-000-22 Drawing Prepared by Target Rock Corp.

(b) Description of Part Inspected Base Assembly

(c) Applicable ASME Code: Section III, Edition 1968, Addenda date Summer 1970, Code No. -- Class 1

3. Remarks Base assembly is the subassembly component of TRC model 7567F
(Brief description of service for which component was designed)
Safety/Relief valve which serves as the control element. Application of S/R valve is for BWR (Steam) service.

We certify that the statements made in this report are correct and this vessel part or appurtenance as defined in the Code conforms to the rules of construction of the ASME Code Section III.
(The applicable Design Specification and Stress Report are not the responsibility of the part Manufacturer. An appurtenance Manufacturer is responsible for furnishing a separate Design Specification and Stress Report if the appurtenance is not included in the component Design Specification and Stress Report.)

Date 9-1Y- 19 78 Signed Target Rock Corp. By
(Manufacturer)

Certificate of Authorization Expires 12/9/80 Certificate of Authorization No. 1948

CERTIFICATION OF DESIGN FOR APPURTENANCE (when applicable)

Design information on file at Target Rock Corp.

Stress analysis report on file at Target Rock Corporation

Design specifications certified by R.R. Ghosh Prof. Eng. State Calif Reg. No. 16371

Stress analysis report certified by D.M. Pattarini Prof. Eng. State N.Y. Reg. No. 02981

CERTIFICATE OF SHOP INSPECTION

I, the undersigned, holding a valid commission issued by the National Board of Boiler and Pressure Vessel Inspectors and/or the State or Province of New York and employed by Commercial Union Ins. Co. of Boston, Mass. have inspected the part of a pressure vessel described in this Manufacturer's Partial Data Report on Sept. 26, 19 78 and state that to the best of my knowledge and belief, the Manufacturer has constructed this part in accordance with the ASME Code Section III.

By signing this certificate, neither the inspector nor his employer makes any warranty, expressed or implied, concerning the part described in this Manufacturer's Partial Data Report. Furthermore, neither the inspector nor his employer shall be liable in any manner for any personal injury or property damage or a loss of any kind arising from or connected with this inspection.

Date Sept. 19 78 NEW YORK STATE COMMISSION NO. 1238

Inspector's Signature Commissions National Board, State, Province and No.

Form

As required by the Provisions of the ASME Code Rules

1. Manufactured by Target Rock Corp., 1966E. Broadhollow Rd., E.Farmingdale, NY
(Name and address of Manufacturer of part)

(b) Manufactured for General Electric Co., 175 Curtner Ave., San Jose, Calif.
(Name and address of Manufacturer of completed nuclear component)

2. Identification-Manufacturer's Serial No. of Part 1026 Nat'l Bd. No. ---

(a) Constructed According to Drawing No. 7567F-000-22 Drawing Prepared by Target Rock Corp.

(b) Description of Part Inspected Base Assembly

(c) Applicable ASME Code: Section III, Edition 1968, Addenda date Summer 1970, Case No. -- Class 1

3. Remarks: Base assembly is the subassembly component of TRC model 7567F
(Brief description of service for which component was designed)
Safety/Relief valve which serves as the control element. Application of S/R valve is for BWR (Steam) service.

We certify that the statements made in this report are correct and this vessel part or appurtenance as defined in the Code conforms to the rules of construction of the ASME Code Section III.
The applicable Design Specification and Stress Report are not the responsibility of the part Manufacturer. An appurtenance Manufacturer is responsible for furnishing a separate Design Specification and Stress Report if the appurtenance is not included in the component Design Specification and Stress Report.)

Sept 19 1978 Signed Target Rock Corp. By
(Manufacturer)

Certificate of Authorization Expires 12/9/80 Certificate of Authorization No. 1948

CERTIFICATION OF DESIGN FOR APPURTENANCE (when applicable)

Design information on file at Target Rock Corp.

Stress analysis report on file at Target Rock Corporation

Design specifications certified by R.R. Ghosh Prof. Eng. State Calif. Reg. No. 16371

Stress analysis report certified by D.M. Pattarini Prof. Eng. State N.Y. Reg. No. 029841

CERTIFICATE OF SHOP INSPECTION

I, the undersigned, holding a valid commission issued by the National Board of Boiler and Pressure Vessel Inspectors and/or the State or Province of New York and employed by Commercial Union Ins. Co. of Boston, Mass. have inspected the part of a pressure vessel described in this Manufacturer's Partial Data Report on 9/21 19 78, and state that to the best of my knowledge and belief, the Manufacturer has constructed this part in accordance with the ASME Code Section III.

By signing this certificate, neither the Inspector nor his employer makes any warranty, expressed or implied, concerning the part described in this Manufacturer's Partial Data Report. Furthermore, neither the Inspector nor his employer shall be liable in any manner for any personal injury or property damage or a loss of any kind arising from or connected with this inspection.

9/21 19 78

William A. Maland
Inspector's Signature

Commissions NEW YORK STATE COMMISSION NO. 2283
ALSO COMMISSIONED IN Penn., Ohio & Conn.
National Board, State, Province and No.

Supplemental sheets in form of lists, sketches or drawings may be used provided (1) size is 8½" x 11", (2) information in items 1-3 includes in report is included on each sheet, and (3) each sheet is numbered and number of sheets is recorded in item 3, "Remarks".

325 0370

FORM N-2 N OR NPT CERTIFICATE HOLDERS' DATA REPORT FOR IDENTICAL NUCLEAR PARTS AND APPURTENANCES*

As Required by the Provisions of the ASME Code, Section III, Division 1

Not To Exceed One Day's Production

Pg 1 of 1

1. Manufactured and certified by Target Rock Corp., 1966E Broadhollow Rd, E. Farmingdale, NY 11735 (name and address of certificate holder)

2. Manufactured for Tennessee Valley Authority, Chattanooga, TN 37401 (name and address of purchaser)

3. Location of installation Browns Ferry Nuclear Plant, Athens, Alabama 35611 (name and address)

4. Type See Back (drawing no) See Back (mat'l spec. no.) See Back (tensile strength) N/A (CRN) 1988 (year built)

5. ASME Code, Section III 1968 (edition) Summer 1970 (addenda) 1 (class) N/A (Code Case no.)

6. Fabricated in accordance with Const. Spec. (Div. 2 only) N/A (No.) Revision N/A Date N/A

7. Remarks Spare Parts for a completed valve assembly, 25 Bolts, Item 107, 688 Nuts, Item 115 for valve style 7567F-000

8. Nom. thickness (in.) N/A Min. design thickness (in.) N/A Dia. ID (ft. & in.) N/A Length overall (ft. & in.) N/A

9. When applicable, Certificate Holders' data reports are attached for each item of this report:

Part or Appurtenance Serial Number	National Board No. in Numerical Order	Part or Appurtenance Serial Number	National Board Number in Numerical Order
N/A	N/A	(26)	
(2)		(27)	
(3)		(28)	
(4)		(29)	
(5)		(30)	
(6)		(31)	
(7)		(32)	
(8)		(33)	
(9)		(34)	
(10)		(35)	
(11)		(36)	
(12)		(37)	
(13)		(38)	
(14)		(39)	
(15)		(40)	
(16)		(41)	
(17)		(42)	
(18)		(43)	
(19)		(44)	
(20)		(45)	
(21)		(46)	
(22)		(47)	
(23)		(48)	
(24)		(49)	
(25)		(50)	

Design pressure N/A psi Temp. N/A °F. Hydro. test pressure N/A (when applicable) at temp °F.

*Supplemental information in the form of lists, sketches, or drawings may be used provided (1) size is 8½ X 1, (2) information in items 2 and 3 on this data report is included on each sheet, (3) each sheet is numbered and the number of sheets is recorded at the top of this form.

(6/85)-1 This form (E00040) may be obtained from the Order Dept., ASME, 345 E. 47th St., New York, N.Y. 10017.

07/11/05

FORM N-2 (back)

Mfr. Serial No. N/A

CERTIFICATE OF DESIGN

Design specifications certified by R. R. Ghosh (when applicable) P.E. state Calif. Reg. no. 16371

Design report* certified by D. M. Pastarini (when applicable) P.E. state NY Reg. no. 029841

CERTIFICATE OF SHOP COMPLIANCE

We certify that the statements made in this report are correct and that this (these) Part conform to the rules of construction of the ASME Code, Section III.

NPT Certificate of Authorization no. 1948 Expires 12-9-89

Date 6/7/85 Name Target Rock Corporation (NPT Certificate Holder) Signed R. Rudolph, QA Supervisor (Authorized representative) For G. Abruzzo, Q.A. Manager

CERTIFICATE OF SHOP INSPECTION

The undersigned, holding a valid commission issued by the National Board of Boiler and Pressure Vessel Inspectors and the state or province of New York and employed by Commercial Union Insurance Company of Boston, Mass. have inspected these items described in this data report on 6/7/85, and state that to the best of my knowledge and belief, the Certificate Holder has fabricated these parts or appurtenances in accordance with the ASME Code, Section III. Each part listed has been authorized for stamping on the date shown above.

By signing this certificate, neither the inspector nor his employer makes any warranty, expressed or implied, concerning the equipment described in this data report. Furthermore, neither the inspector nor his employer shall be liable in any manner for any personal injury or property damage or loss of any kind arising from or connected with this inspection.

Date 7/85 Signed William O. Roland (Authorized inspector) Commissions NEW YORK STATE COMMISSION NO. 2288 ALSO COMMISSIONED IN Penna., Ohio & Conn. (Nat'l Bd. (incl. endorsements) state or prov. and no.)

ITEM #	PART NAME	PART NAME	MATERIAL	TENSILE	LOT CODE
[illegible]	Bolt	204018-1 Rev. A	SA-193 B7	125,000 MIN	SPS-87
[illegible]	Nut	204041-1 Rev. B	SA-194 GR 7	-	SPS-7

CA 11/1/03

FORM NIS-2 OWNER'S REPORT FOR REPAIR/REPLACEMENT ACTIVITY
As Required by the Provisions of the ASME Code Section XI

1. Owner Tennessee Valley Authority (TVA) (Name)
1101 Market Street
Chattanooga, TN 37402-2801 (Address)

Date May 2, 2006

Sheet 1 of 4

2. Plant Browns Ferry Nuclear Plant (BFN) (Name)
P. O. Box 2000, Decatur, AL 35609-2000 (Address)

Unit 3

Work Orders (WOs) 04-722413-000 through -023 and 04-722413-026, 04-722413-027, 04-722413-085, 04-722413-112, 04-722413-113, 04-722413-116 and 04-722413-117
(Repair/Replacement Organization P.O No., Job No. etc)

3. Work Performed by TVA-BFN (Name)
P. O. Box 2000, Decatur, AL 35609-2000 (Address)

Type Code Symbol Stamp N/A
Authorization No. N/A
Expiration Date N/A

4. Identification of System System 001, Main Steam System
(ASME Code Class 2 equivalent except, 3-SNUB-001-5075, ASME Code Class 1 equivalent)

5 (a) Applicable Construction Code USAS B31.1.0 19 67* Edition, N/A Addenda, N/A Code Case

(b) Applicable Edition of Section XI Utilized for Repairs or Replacements 2001 Edition, 2003 Addenda

(c) Applicable Section XI Code Case(s)

6 Identification of Components

Name of Component	Name of Manufacturer	Manufacturer Serial No.	National Board No.	Other Identification	Year Built	Corrected, Removed, or Installed	ASME Code Stamped (Yes or No)
Support (Snubber) 3-47B401-51	Pacific Scientific	133	N/A	3-SNUB-001-5044 RSSL-4	N/A	Removed	No
Support (Snubber) 3-47B401-51	Pacific Scientific	6467	N/A	3-SNUB-001-5044 RSSL-4	1979	Installed	Yes
Support (Snubber) 3-47B401-40	Pacific Scientific	107	N/A	3-SNUB-001-5035 RSSJ-3	N/A	Removed	No
Support (Snubber) 3-47B401-40	Pacific Scientific	6470	N/A	3-SNUB-001-5035 RSSJ-3	1979	Installed	Yes

7. Description of Work Replaced 29 old pre-NF snubbers with new NF snubbers. Replaced pins on two snubbers. Replaced adapter bolting on one snubber. Replaced spherical bearing on one snubber.

8. Tests Conducted: Hydrostatic ☐ Pneumatic ☐ Nominal Operating Pressure ☐ Exempt ☐

Other ☒** Pressure N/A psi Test Temp. N/A °F ** - See Remarks

NOTE: Supplemental Sheets in form of lists, sketches, or drawings may be used, provided (1) size is 8½ in. X 11 in., (2) information in items 1 through 6 on this report is included on each sheet, and (3) each sheet is numbered and the number of sheets is recorded at the top of this form.

*as amended by additional quality assurance requirements found in Contract 68C37-91602 and Design Criteria BFN-50-7001 and BFN-50-C-7105.

FORM NIS-2 (Back)

9. Remarks WO 04-722413-000 - (3-SNUB-001-5044)

Applicable Manufacturer's Data Reports to be attached

The original snubber (133) was removed and tested as part of the 10 percent sample per the snubber program.

The replacement snubber (6467) is a new snubber and was tested per 3-SI-4.6.H-2A, prior to installation.

WO 04-722413-001 - (3-SNUB-001-5035)

The original snubber (107) was removed and tested as part of the 10 percent sample per the snubber program.

The replacement snubber (6470) is a new snubber and was tested per 3-SI-4.6.H-2A, prior to installation.

CERTIFICATE OF COMPLIANCE

I certify that the statements made in the report are correct and that this conforms to the requirements of the ASME Code, Section XI.

Type Code Symbol Stamp N/A

Certificate of Authorization No. N/A Expiration Date N/A

Signed [signature], System Engineer (Owner or Owner's Designee, Title) Date 5/15, 20 06

CERTIFICATE OF INSERVICE INSPECTION

I, the undersigned, holding a valid commission issued by the National Board of Boiler and Pressure Vessel Inspectors and the State or Province of Tennessee and employed by HSB CT of Hartford Connecticut have inspected the components described in this Owner's Report during the period 3/12/06 to 6/2/06, and state that to the best of my knowledge and belief, the Owner has performed examinations and taken corrective measures described in this Owner's Report in accordance with the requirements of the ASME Code, Section XI.

By signing this certificate neither the Inspector nor his employer makes any warranty, expressed or implied, concerning the examinations and corrective measures described in this Owner's Report. Furthermore, neither the Inspector nor his employer shall be liable in any manner for any personal injury or property damage or a loss of any kind arising from or connected with this inspection.

[signature] (Inspector's Signature) Commissions TN 2534 (National Board, State, Province, and Endorsements)

Date 6/2 20 06

FORM NIS-2 OWNER'S REPORT FOR REPAIRS/REPLACEMENT ACTIVITY
SUPPLEMENTAL SHEET

1. Owner Tennessee Valley Authority (TVA) (Name)
1101 Market Street
Chattanooga, TN 37402-2801 (Address)

Date May 2, 2006

Sheet 2 of 4

2. Plant Browns Ferry Nuclear Plant (BFN) (Name)
P. O. Box 2000, Decatur, AL 35609-2000 (Address)

Unit 3

Work Orders (WOs) 04-722413-000 through -023 and 04-722413-026, 04-722413-027, 04-722413-085, 04-722413-112, 04-722413-113, 04-722413-116 and 04-722413-117
(Repair/Replacement Organization P.O. No., Job No., etc.)

3. Work Performed by TVA-BFN (Name)
P. O. Box 2000, Decatur, AL 35609-2000 (Address)

Type Code Symbol Stamp N/A

Authorization No. N/A

Expiration Date N/A

4. Identification of System System 001, Main Steam System (ASME Code Class 2 equivalent except, 3-SNUB-001-5075, ASME Code Class 1 equivalent)

5. (a) Applicable Construction Code USAS B31.1.0 19 67 Edition, N/A Addenda, N/A Code Case
(b) Applicable Edition of Section XI Utilized for Repairs or Replacements 2001 Edition, 2003 Addenda
(c) Applicable Section XI Code Case(s)

6. Identification of Components

Name of Component	Name of Manufacturer	Manufacturer Serial No.	National Board No.	Other Identification	Year Built	Corrected, Removed, or Installed	ASME Code Stamped (Yes or No)
Support (Snubber) 3-47B401-30	Pacific Scientific	114	N/A	3-SNUB-001-5022 RSSG-3	N/A	Removed	No
Support (Snubber) 3-47B401-30	Pacific Scientific	6832	N/A	3-SNUB-001-5022 RSSG-3	1980	Installed	Yes
Support (Snubber) 3-47B401-30	Pacific Scientific	112	N/A	3-SNUB-001-5023 RSSG-4	N/A	Removed	No
Support (Snubber) 3-47B401-30	Pacific Scientific	6833	N/A	3-SNUB-001-5023 RSSG-4	1980	Installed	Yes
Support (Snubber) 3-47B401-35	Pacific Scientific	258	N/A	3-SNUB-001-5028 RSSH-3	N/A	Removed	No
Support (Snubber) 3-47B401-35	Pacific Scientific	6834	N/A	3-SNUB-001-5028 RSSH-3	1980	Installed	Yes
Support (Snubber) 3-47B401-35	Pacific Scientific	211	N/A	3-SNUB-001-5029 RSSH-4	N/A	Removed	No
Support (Snubber) 3-47B401-35	Pacific Scientific	6835	N/A	3-SNUB-001-5029 RSSH-4	1980	Installed	Yes
Support (Snubber) 3-47B401-36	Pacific Scientific	231	N/A	3-SNUB-001-5030 RSSH-5	N/A	Removed	No
Support (Snubber) 3-47B401-36	Pacific Scientific	7294	N/A	3-SNUB-001-5030 RSSH-5	1980	Installed	Yes
Support (Snubber) 3-47B401-46	Pacific Scientific	132	N/A	3-SNUB-001-5040 RSSK-4	N/A	Removed	No
Support (Snubber) 3-47B401-46	Pacific Scientific	7295	N/A	3-SNUB-001-5040 RSSK-4	1980	Installed	Yes
Support (Snubber) 3-47B401-11	Pacific Scientific	216	N/A	3-SNUB-001-5007 RSSC-1	N/A	Removed	No
Support (Snubber) 3-47B401-11	Pacific Scientific	7296	N/A	3-SNUB-001-5007 RSSC-1	1980	Installed	Yes
Support (Snubber) 3-47B401-13	Pacific Scientific	498	N/A	3-SNUB-001-5009 RSSC-3	N/A	Removed	No
Support (Snubber) 3-47B401-13	Pacific Scientific	7297	N/A	3-SNUB-001-5009 RSSC-3	1980	Installed	Yes
Support (Snubber) 3-47B401-13	Pacific Scientific	477	N/A	3-SNUB-001-5010 RSSC-4	N/A	Removed	No
Support (Snubber) 3-47B401-13	Pacific Scientific	10521	N/A	3-SNUB-001-5010 RSSC-4	1981	Installed	Yes
Support (bolting) 3-47B401-13	Pacific Scientific	N/A	N/A	3-SNUB-001-5010 RSSC-4	N/A	Removed	No
Support (bolting) 3-47B401-13	Pacific Scientific & Consolidated Power	N/A	N/A	3-SNUB-001-5010 RSSC-4	N/A	Installed	No
Support (Snubber) 3-47B401-15	Pacific Scientific	489	N/A	3-SNUB-001-5011 RSSD-1	N/A	Removed	No
Support (Snubber) 3-47B401-15	Pacific Scientific	10522	N/A	3-SNUB-001-5011 RSSD-1	1981	Installed	Yes

FORM NIS-2, SUPPLEMENTAL SHEET (Back)

Remarks WO 04-722413-002 - (3-SNUB-001-5022)

The original snubber (114) was removed and tested as part of the 10 percent sample per the snubber program.

The replacement snubber (66832) is a new snubber and was functionally tested per 0-SI-4.6.H-2A, prior to installation.

WO 04-722413-003 - (3-SNUB-001-5023)

The original snubber (112) was removed and tested as part of the 10 percent sample per the snubber program.

The replacement snubber (6833) is a new snubber and was functionally tested per 0-SI-4.6 H-2A, prior to installation.

WO 04-722413-004 - (3-SNUB-001-5028)

The original snubber (258) was removed and tested as part of the 10 percent sample per the snubber program.

The replacement snubber (6834) is a new snubber and was functionally tested per 0-SI-4.6.H-2A, prior to installation.

WO 04-722413-005 - (3-SNUB-001-5029)

The original snubber (211) was removed and tested as part of the 10 percent sample per the snubber program.

The replacement snubber (6835) is a new snubber and was functionally tested per 0-SI-4.6.H-2A, prior to installation.

WO 04-722413-006 - (3-SNUB-001-5030)

The original snubber (231) was removed and tested as part of the 10 percent sample per the snubber program.

The replacement snubber (7294) is a new snubber and was functionally tested per 0-SI-4.6.H-2A, prior to installation.

WO 04-722413-007 - (3-SNUB-001-5040)

The original snubber (132) was removed and tested as part of the 10 percent sample per the snubber program.

The replacement snubber (7295) is a new snubber and was functionally tested per 0-SI-4.6.H-2A, prior to installation.

WO 04-722413-008 - (3-SNUB-001-5007)

The original snubber (216) was removed and tested as part of the 10 percent sample per the snubber program.

The replacement snubber (7296) is a new snubber and was functionally tested per 0-SI-4.6.H-2A, prior to installation.

WO 04-722413-009 - (3-SNUB-001-5009)

The original snubber (498) was removed and tested as part of the 10 percent sample per the snubber program.

The replacement snubber (7297) is a new snubber and was functionally tested per 0-SI-4.6.H-2A, prior to installation.

WO 04-722413-010 - (3-SNUB-001-5010)

The original snubber (477) was removed and tested as part of the 10 percent sample per the snubber program.

The replacement snubber (10521) is a new snubber and was functionally tested per 0-SI-4.6.H-2A, prior to installation

Damaged bolting was identified and replaced.

WO 04-722413-011 - (3-SNUB-001-5011)

The original snubber (489) was removed and tested as part of the 10 percent sample per the snubber program.

The replacement snubber (10522) is a new snubber and was functionally tested per 0-SI-4.6.H-2A, prior to installation.

FORM NIS-2 OWNER'S REPORT FOR REPAIRS/REPLACEMENT ACTIVITY
SUPPLEMENTAL SHEET

1. Owner Tennessee Valley Authority (TVA) (Name)
1101 Market Street
Chattanooga, TN 37402-2801 (Address)

Date May 2, 2006

Sheet 3 of 4

2. Plant Browns Ferry Nuclear Plant (BFN) (Name)
P. O. Box 2000, Decatur, AL 35609-2000 (Address)

Unit 3

Work Orders (WOs) 04-722413-000 through -023 and 04-722413-026, 04-722413-027, 04-722413-085, 04-722413-112, 04-722413-113, 04-722413-116 and 04-722413-117
Repair/Replacement Organization P.O. No., Job No., etc.

3. Work Performed by TVA-BFN (Name)
P. O. Box 2000, Decatur, AL 35609-2000 (Address)

Type Code Symbol Stamp N/A
Authorization No. N/A
Expiration Date N/A

4. Identification of System System 001, Main Steam System
(ASME Code Class 2 equivalent except, 3-SNUB-001-5075, ASME Code Class 1 equivalent)

5. (a) Applicable Construction Code USAS B31.1.0 19 67 * Edition, N/A Addenda, N/A Code Case
(b) Applicable Edition of Section XI Utilized for Repairs or Replacements 2001 Edition, 2003 Addenda
(c) Applicable Section XI Code Case(s)

6. Identification of Components

Name of Component	Name of Manufacturer	Manufacturer Serial No.	National Board No.	Other Identification	Year Built	Corrected, Removed, or Installed	ASME Code Stamped (Yes or No)
Support (Snubber) 3-47B401-15	Pacific Scientific	487	N/A	3-SNUB-001-5012 RSSD-2	N/A	Removed	No
Support (Snubber) 3-47B401-15	Pacific Scientific	10523	N/A	3-SNUB-001-5012 RSSD-2	1981	Installed	Yes
Support (Snubber) 3-47B401-17	Pacific Scientific	483	N/A	3-SNUB-001-5013 RSSd-3	N/A	Removed	No
Support (Snubber) 3-47B401-17	Pacific Scientific	10525	N/A	3-SNUB-001-5013 RSSd-3	1981	Installed	Yes
Support (Snubber) 3-47B401-17	Pacific Scientific	506	N/A	3-SNUB-001-5014 RSSD-4	N/A	Removed	No
Support (Snubber) 3-47B401-17	Pacific Scientific	10532	N/A	3-SNUB-001-5014 RSSD-4	1981	Installed	Yes
Support (Snubber) 3-47B401-3	Pacific Scientific	126	N/A	3-SNUB-001-5001 RSSA-1	N/A	Removed	No
Support (Snubber) 3-47B401-3	Pacific Scientific	10534	N/A	3-SNUB-001-5001 RSSA-1	1981	Installed	Yes
Support (Snubber) 3-47B401-5	Pacific Scientific	124	N/A	3-SNUB-001-5004 RSSA-4	N/A	Removed	No
Support (Snubber) 3-47B401-5	Pacific Scientific	10536	N/A	3-SNUB-001-5004 RSSA-4	1981	Installed	Yes
Support (Snubber) 3-47B401-8	Pacific Scientific	138	N/A	3-SNUB-001-5005 RSSB-1	N/A	Removed	No
Support (Snubber) 3-47B401-8	Pacific Scientific	10554	N/A	3-SNUB-001-5005 RSSB-1	1981	Installed	Yes
Support (Snubber) 3-47B401-24	Pacific Scientific	496	N/A	3-SNUB-001-5018 RSSF-1	N/A	Removed	No
Support (Snubber) 3-47B401-24	Pacific Scientific	10568	N/A	3-SNUB-001-5018 RSSF-1	1981	Installed	Yes
Support (Snubber) 3-47B401-24	Pacific Scientific	500	N/A	3-SNUB-001-5019 RSSF-2	N/A	Removed	No
Support (Snubber) 3-47B401-24	Pacific Scientific	10569	N/A	3-SNUB-001-5019 RSSF-2	1981	Installed	Yes
Support (Snubber) 3-47B401-21	Pacific Scientific	145	N/A	3-SNUB-001-5016 RSSE-3	N/A	Removed	No
Support (Snubber) 3-47B401-21	Pacific Scientific	10570	N/A	3-SNUB-001-5016 RSSE-3	1981	Installed	Yes
Support (Snubber) 3-47B401-21	Pacific Scientific	243	N/A	3-SNUB-001-5015 RSSE-2	N/A	Removed	No
Support (Snubber) 3-47B401-21	Pacific Scientific	10571	N/A	3-SNUB-001-5015 RSSE-2	1981	Installed	Yes

FORM NIS-2, SUPPLEMENTAL SHEET (Back)

Remarks WO 04-722413-012 - (3-SNUB-001-5012)

The original snubber (487) was removed and tested as part of the 10 percent sample per the snubber program.

The replacement snubber (10523) is a new snubber and was functionally tested per 0-SI-4.6.H-2A, prior to installation.

WO 04-722413-013 - (3-SNUB-001-5013)

The original snubber (483) was removed and tested as part of the 10 percent sample per the snubber program.

The replacement snubber (10525) is a new snubber and was functionally tested per 0-SI-4.6.H-2A, prior to installation.

WO 04-722413-014 - (3-SNUB-001-5014)

The original snubber (506) was removed and tested as part of the 10 percent sample per the snubber program.

The replacement snubber (10532) is a new snubber and was functionally tested per 0-SI-4.6.H-2A, prior to installation.

WO 04-722413-015 - (3-SNUB-001-5001)

The original snubber (126) was removed and tested as part of the 10 percent sample per the snubber program.

The replacement snubber (10534) is a new snubber and was functionally tested per 0-SI-4.6.H-2A, prior to installation.

WO 04-722413-016 - (3-SNUB-001-5004)

The original snubber (124) was removed and tested as part of the 10 percent sample per the snubber program.

The replacement snubber (10536) is a new snubber and was functionally tested per 0-SI-4.6.H-2A, prior to installation.

WO 04-722413-017 - (3-SNUB-001-5005)

The original snubber (138) was removed and tested as part of the 10 percent sample per the snubber program.

The replacement snubber (10554) is a new snubber and was functionally tested per 0-SI-4.6.H-2A, prior to installation.

WO 04-722413-018 - (3-SNUB-001-5018)

The original snubber (496) was removed and tested as part of the 10 percent sample per the snubber program.

The replacement snubber (10568) is a new snubber and was functionally tested per 0-SI-4.6.H-2A, prior to installation

WO 04-722413-019 - (3-SNUB-001-50)

The original snubber (133) was removed and tested as part of the 10 percent sample per the snubber program

The replacement snubber (6467) is a new snubber and was functionally tested per 0-SI-4.6.H-2A, prior to installation.

WO 04-722413-020 - (3-SNUB-001-5016)

The original snubber (145) was removed and tested as part of the 10 percent sample per the snubber program.

The replacement snubber (10570) is a new snubber and was functionally tested per 0-SI-4.6.H-2A, prior to installation.

WO 04-722413-021 - (3-SNUB-001-5015)

The original snubber (243) was removed and tested as part of the 10 percent sample per the snubber program.

The replacement snubber (10571) is a new snubber and was functionally tested per 0-SI-4.6.H-2A, prior to installation.

FORM NIS-2 OWNER'S REPORT FOR REPAIRS/REPLACEMENT ACTIVITY
SUPPLEMENTAL SHEET

1. Owner Tennessee Valley Authority (TVA) (Name)
1101 Market Street
Chattanooga, TN 37402-2801 (Address)

Date May 2, 2006

Sheet 4 of 4

2. Plant Browns Ferry Nuclear Plant (BFN) (Name)
P. O. Box 2000, Decatur, AL 35609-2000 (Address)

Unit 3

Work Orders (WOs) 04-722413-000 through -023 and 04-722413-026, 04-722413-027, 04-722413-085, 04-722413-112, 04-722413-113, 04-722413-116 and 04-722413-117
(Repair/Replacement Organization P.O. No., Job No., etc.)

3. Work Performed by TVA-BFN (Name)
P. O. Box 2000, Decatur, AL 35609-2000 (Address)

Type Code Symbol Stamp N/A

Authorization No. N/A

Expiration Date N/A

4. Identification of System System 001, Main Steam System
(ASME Code Class 2 equivalent except, 3-SNUB-001-5075, ASME Code Class 1 equivalent)

5. (a) Applicable Construction Code USAS B31.1.0 19 67 Edition, N/A Addenda, N/A Code Case
(b) Applicable Edition of Section XI Utilized for Repairs or Replacements 2001 Edition, 2003 Addenda
(c) Applicable Section XI Code Case(s)

6. Identification of Components

Name of Component	Name of Manufacturer	Manufacturer Serial No.	National Board No.	Other Identification	Year Built	Corrected, Removed, or Installed	ASME Code Stamped (Yes or No)
Support (Snubber) 3-47B401-43	Pacific Scientific	209	N/A	3-SNUB-001-5036 RSSK-1	N/A	Removed	No
Support (Snubber) 3-47B401-43	Pacific Scientific	10572	N/A	3-SNUB-001-5036 RSSK-1	1981	Installed	Yes
Support (Snubber) 3-47B401-44	Pacific Scientific	242	N/A	3-SNUB-001-5037 RSSK-2	N/A	Removed	No
Support (Snubber) 3-47B401-44	Pacific Scientific	10573	N/A	3-SNUB-001-5037 RSSK-2	1981	Installed	Yes
Support (Snubber) 3-47B401-28	Pacific Scientific	482	N/A	3-SNUB-001-5021 RSSG-2	N/A	Removed	No
Support (Snubber) 3-47B401-28	Pacific Scientific	10574	N/A	3-SNUB-001-5021 RSSG-2	1981	Installed	Yes
Support (Snubber) 3-47B401-33	Pacific Scientific	416	N/A	3-SNUB-001-5027 RSSH-2	N/A	Removed	No
Support (Snubber) 3-47B401-33	Pacific Scientific	10576	N/A	3-SNUB-001-5027 RSSH-2	1981	Installed	Yes
Support (spherical bearing) 3-47B400-107	Pacific Scientific	N/A	N/A	3-SNUB-001-5075 3-47B400-107	N/A	Removed	No
Support (spherical bearing) 3-47B400-107	Pacific Scientific	N/A	N/A	3-SNUB-001-5075 3-47B400-107	N/A	Installed	No
Support (Snubber) 3-47B401-54	Pacific Scientific	6275	N/A	3-SNUB-001-5050 MSS-15S	N/A	Removed	No
Support (Snubber) 3-47B401-54	Pacific Scientific	15545	N/A	3-SNUB-001-5050 MSS-15S	1981	Installed	Yes
Support (Snubber) 3-47B401-54	Pacific Scientific	6278	N/A	3-SNUB-001-5049 MSS-15N	N/A	Removed	No
Support (Snubber) 3-47B401-54	Pacific Scientific	15548	N/A	3-SNUB-001-5049 MSS-15N	1981	Installed	Yes
Support (load pin) 3-47B401-59	Pacific Scientific	N/A	N/A	3-SNUB-001-5054 MSS-18S	N/A	Removed	No
Support (load pin) 3-47B401-59	Pacific Scientific	N/A	N/A	3-SNUB-001-5054 MSS-18S	1981	Installed	No
Support (Snubber) 3-47B401-59	Pacific Scientific	6282	N/A	3-SNUB-001-5053 MSS-18N	N/A	Removed	No
Support (Snubber) 3-47B401-59	Pacific Scientific	16153	N/A	3-SNUB-001-5053 MSS-18N	1981	Installed	Yes

FORM NIS-2, SUPPLEMENTAL SHEET (Back)

Remarks WO 04-722413-022 - (3-SNUB-001-5036)

The original snubber (209) was removed and tested as part of the 10 percent sample per the snubber program.

The replacement snubber (10572) is a new snubber and was functionally tested per 0-SI-4 6 H-2A, prior to installation.

WO 04-722413-023 - (3-SNUB-001-5037)

The original snubber (242) was removed and tested as part of the 10 percent sample per the snubber program.

The replacement snubber (10573) is a new snubber and was functionally tested per 0-SI-4 6 H-2A, prior to installation.

WO 04-722413-026 - (3-SNUB-001-5021)

The original snubber (482) was removed and tested as part of the 10 percent sample per the snubber program.

The replacement snubber (10574) is a new snubber and was functionally tested per 0-SI-4.6.H-2A, prior to installation.

WO 04-722413-027 - (3-SNUB-001-5027)

The original snubber (416) was removed and tested as part of the 10 percent sample per the snubber program.

The replacement snubber (10576) is a new snubber and was functionally tested per 0-SI-4 6.H-2A, prior to installation.

WO 04-722413-085 - (3-SNUB-001-5075)

Snubber (13123) was removed and tested as part of the 10 percent sample per the snubber program and then returned to service.

Replaced the spherical bearing due to damage during removal.

WO 04-722413-112 - (3-SNUB-001-5050)

The original snubber (6275) was removed and tested as part of the 10 percent sample per the snubber program.

The replacement snubber (15545) is a new snubber and was functionally tested per 0-SI-4.6.H-2A, prior to installation.

WO 04-722413-113 - (3-SNUB-001-5049)

The original snubber (6278) was removed and tested as part of the 10 percent sample per the snubber program.

The replacement snubber (15548) is a new snubber and was functionally tested per 0-SI-4.6.H-2A, prior to installation.

WO 04-722413-116 - (3-SNUB-001-5054) *Replaced load pin lost during testing.*

Snubber (6277) was removed and tested as part of the 10 percent sample per the snubber program and then returned to service.

Replaced load pin lost during testing.

WO 04-722413-117 - (3-SNUB-001-5053)

The original snubber (6282) was removed and tested as part of the 10 percent sample per the snubber program.

The replacement snubber (16153) is a new snubber and was functionally tested per 0-SI-4.6.H-2A, prior to installation.

FORM NF-1 NPT CERTIFICATE HOLDERS' DATA REPORT FOR COMPONENT SUPPORTS*
As Required by the Provisions of the ASME Code Rules, Section III, Division 1

1 Manufactured by Pacific Scientific 1346 S. State College Blvd. Anaheim, Ca 923
(Name and address of NPT Certificate Holder)

2 Manufactured for Bergen Paterson Pipesupport Corp. 74 C Commerce Way ~~Woburn, Massachusetts 01801~~
(Name and address of purchaser or owner)

Location of Installation Unknown

4 Identification

	(a) Component Support I.D. No.	(b) Canadian Registration No.	(c) Applicable Drawings with Last Rev. & Date	(d) Stress Report or Load Capacity Data Sheet	(e) Type of Component Support	(f) Class	(g) Nat'l Board No.	(h) Year Built
(1)	6457-6519	None	1201103-07-B	DR-1352-Rev. B	linear	1	None	1979
(2)								
(3)								
(4)								
(5)								
(6)								
(7)								
(8)								
(9)								
(10)								

5. Remarks:

CERTIFICATE OF COMPLIANCE

We certify that the statements made in this report are correct and that these components supports conform to the rules of construction of the ASME Code for Nuclear Power Plant Components, Section III, Division 1, Edition '77, Addenda Summer '77 (Date), Code Case No. 1644-5

Date 12-20-79 Signed Pacific Scientific (NPT Certificate Holder) By Ed Yager

Our ASME Certificate of Authorization No. 1198 to use the Component Supports (NPT)

Symbol expires Aug. 4, 1981 (Date).

CERTIFICATION OF DESIGN

Design Information on File at Pacific Scientific

Stress Report or Load Capacity Data Sheets on File at Pacific Scientific

Filed Per NA 3256

Design Specifications Certified by (1) Alex Walsenko PE State California

Reg. No. C22,109

Stress Analysis Report or Load Capacity Data Sheets Certified by (1) Leo E. Ay

PE State California Reg. No 13533

(1) List name only, signature not required.

Supplemental sheets in form of lists, sketches or drawings may be used provided (1) size is 8½ x 11 in., (2) information in items 1, 2, 3 on this Data Report is included on each sheet, and (3) each sheet is numbered and number of sheets is recorded at top of this form.

CT 12/1/05.

(12/77) This form (E00035) may be obtained from the Order Dept., ASME, 345 E. 47th St., New York, N.Y. 10017

S/N 1611 7

FORM NF-1 (Back)

CERTIFICATE OF SHOP INSPECTION

I, the undersigned, holding a valid commission issued by the National Board of Boiler and Pressure Vessel Inspectors and the State or Province of New York and employed by ESBIST Co of Hartford, CT have inspected the component supports described in this Data Report on 12/20, 19 79 and state that to the best of my knowledge and belief the NPT Certificate Holder has constructed these component supports in accordance with the ASME Code for Nuclear Power Plant Components.

By signing this certificate, neither I, a Inspector nor his employer makes any warranty, expressed or implied, concerning the component supports described in this Data Report. Furthermore, neither the Inspector nor his employer shall be liable in any manner for any personal injury or property damage or a loss of any kind arising from or connected with this inspection.

Date 12/20/79

Signed William G. Meyer Commissions N.Y. Commission #2720
(Nat'l Bd., State Prov., and No.)

CERTIFICATION OF FIELD INSPECTION

I, the undersigned, holding a valid commission issued by the National Board of Boiler and Pressure Vessel Inspectors and the State or Province of _____ and employed by _____ of _____ have compared the statements in this Data Report with the described component supports and state that the parts referred to as data items _____, not included in the certificate of shop inspection, have been inspected by me and that to the best of my knowledge and belief the NPT Certificate Holder has constructed these component supports in accordance with the ASME Code for Nuclear Power Plant Components.

By signing this certificate neither the Inspector nor his employer makes any warranty, expressed or implied, concerning the component supports described in this Data Report. Furthermore, neither the inspector nor his employer shall be liable in any manner for any personal injury or property damage or a loss of any kind arising from or connected with this inspection.

Date _____

Signed _____ Commissions _____
(Nat'l Bd., State, Prov., and No.)

FORM NF-1 NPT CERTIFICATE HOLDERS' DATA REPORT FOR COMPONENT SUPPORTS*

As Required by the Provisions of the ASME Code Rules, Section III, Division 1

Manufactured by Pacific Scientific 1346 S. State College Blvd. Anaheim, Ca. 92803
(Name and address of NPT Certificate Holder)

2. Manufactured for Bergen Paterson Pipesupport Corp. 74 C Commerce Way, Woburn, Mass. 01801
(Name and address of purchaser or owner)

3. Location of Installation Unknown

4. Identification

	(a) Component Support I. D. No.	(b) Canadian Registration No.	(c) Applicable Drawings with Last Rev. & Date	(d) Stress Report or Load Capacity Data Sheet	(e) Type of Component Support	(f) Class	(g) Nat'l Board No.	(h) Year Built
(1)	6791-6836	None	1801103-07-E	DR-1352-Rev. B	Linear	1	None	1980
(2)								
(3)								
(4)								
(5)								
(6)								
(7)								
(8)								
(9)								
(10)								

5. Remarks Built TVA/C.F. Braun Design Spec. No. 400-20

CERTIFICATE OF COMPLIANCE

Certify that the statements made in this report are correct and that these components supports conform to the rules of construction of the ASME Code for Nuclear Power Plant Components, Section III, Division 1, Edition 1977, Addenda Summer 1977 (Date)

Code Case No 1544-5

Date 2-8-80 Signed Pacific Scientific (NPT Certificate Holder) by [signature]

Our ASME Certificate of Authorization No. N-1198 to use the Component Support (NPT)

Symbol expires Aug. 4, 1981 (Date)

CERTIFICATION OF DESIGN

Design Information on File at Pacific Scientific

Stress Report or Load Capacity Data Sheets on File at Pacific Scientific
Filed Per NF 3250

Design Specifications Certified by (1) Alex Halsenko PE State California

Reg. No C22,109

Stress Analysis Report or Load Capacity Data Sheets Certified by (1) Leo E. Ay

PE State California Reg. No 13533

(1) Last name only, signature not required

Page-43

Supplemental sheets in form of lists, sketches or drawings may be used provided (1) size is 8½ x 11 in., (2) information in items 1, 2, 3 on this Data Report is included on each sheet, and (3) each sheet is numbered and number of sheets is recorded at top of this form.

CT 12/8/05

(10/77)

(Back) Sheet 12 of 20

CERTIFICATE OF SHOP INSPECTION

000244

I, the undersigned, holding a valid commission issued by the National Board of Boiler and Pressure Vessel Inspectors and the State or Province of New York and employed by ESEICI Co. of Hartford, CT have inspected the component supports described in this Data Report on 2/8, 1980 and state that to the best of my knowledge and belief the NPT Certificate Holder has constructed these component supports in accordance with the ASME Code for Nuclear Power Plant Components.

By signing this certificate, neither the Inspector nor his employer makes any warranty, expressed or implied, concerning the component supports described in this Data Report. Furthermore, neither the Inspector nor his employer shall be liable in any manner for any personal injury or property damage or a loss of any kind arising from or connected with this inspection.

Date 2/8/80

Signed William May Commissions N.Y. Comm #3770
(National Board, State, Prov., and No.)

CERTIFICATION OF FIELD INSPECTION

I, the undersigned, holding a valid commission issued by the National Board of Boiler and Pressure Vessel Inspectors and the State or Province of _____ and employed by _____ of _____ have compared the statements in this Data Report with the described component supports and state the parts referred to as data items _____, not included in the certificate of shop inspection have been inspected by me and that to the best of my knowledge and belief the NPT Certificate Holder has constructed these component supports in accordance with the ASME Code for Nuclear Power Plant Components.

By signing this certificate neither the Inspector nor his employer makes any warranty, expressed or implied, concerning the component supports described in this Data Report. Furthermore, neither the Inspector nor his employer shall be liable in any manner for any personal injury or property damage or a loss of any kind arising from or connected with this inspection.

Date _____

Signed _____ Commissions _____
(National Board, State, Prov., and No.)

Page-44

FORM NF-1 NPT CERTIFICATE HOLDERS' DATA REPORT FOR COMPONENT SUPPORTS*

As Required by the Provisions of the ASME Code Rules, Section III, Division 1

1. Manufactured by Pacific Scientific 1346 S. State College Blvd. Anaheim, Ca. 92803
(Name and address of NPT Certificate Holder)

2. Manufactured for Bergen Paterson Pipesupport Corp. 74 C Commerce Way, Woburn, Massachusetts, 01801
(Name and address of purchaser or owner)

3. Location of Installation Unknown

4. Identification

(a) Component Support I.D. No.	(b) Canadian Registration No.	(c) Applicable Drawings with Last Rev. & Date	(d) Stress Report or Load Capacity Data Sheet	(e) Type of Component Support	(f) Class	(g) Nat'l Board No.	(h) Year Built
(1) 7025,	None	1801103-07-H	DR-1352-Rev. B	Linear	1	None	1980
(2) 7242,							
(3) 7256-7299							
(4)							
(5)							
(6)							
(7)							
(8)							
(9)							
(10)							

5. Remarks: Built in accordance with TVA/C.F. Braun Design Spec. No. 400-20

CERTIFICATE OF COMPLIANCE

We certify that the statements made in this report are correct and that these components supports conform to the rules of construction of the ASME Code for Nuclear Power Plant Components, Section III, Division 1, Edition 1977, Addenda Summer 1977 (Date)

Code Case No. 1644-5

Date 4-26-80 Signed Pacific Scientific (NPT Certificate Holder) by [signature]

Our ASME Certificate of Authorization No. 1198 to use the Component Supports (NPT)

Symbol expires Aug. 4, 1981 (Date).

CERTIFICATION OF DESIGN

Design Information on File at Pacific Scientific

Stress Report or Load Capacity Data Sheets on File at:
Pacific Scientific
Filed Per IR 3256

Design Specifications Certified by (1) Alex Valsenko PE State California

Reg No. C22,109.

Stress Analysis Report or Load Capacity Data Sheets Certified by (1) Leo E. Ay

PE State California Reg No 13533.

(1) List name only, signature not required.

* Supplemental sheets in form of lists, sketches or drawings may be used provided (1) size is 8½ in., (2) information in items 1, 2, 4c, 4g on this Data Report is included on each sheet, and (3) each sheet is numbered and number of sheets is recorded at top of this form.

(10/77)

This form (E00075) may be obtained from the Order Dept., ASME, 345 E. 47th St., New York, N.Y. 10017

FORM NF-1 (Back)

CERTIFICATE OF SHOP INSPECTION

I, the undersigned, holding a valid commission issued by the National Board of Boiler and Pressure Vessel Inspectors and the State or Province of California and employed by HSBI&I Co. of Hartford, CT _____ have inspected the component supports described in this Data Report on 4/26/80 19 ___ and state that to the best of my knowledge and belief the NPT Certificate Holder has constructed these component supports in accordance with the ASME Code for Nuclear Power Plant Components.

By signing this certificate, neither the Inspector nor his employer makes any warranty, expressed or implied, concerning the component supports described in this Data Report. Furthermore, neither the Inspector nor his employer shall be liable in any manner for any personal injury or property damage or a loss of any kind arising from or connected with this inspection.

Date 4/26/80.

Signed William Meyer Commissions Ca #1494
(Nat'l Bd., State, Prov., and No.)

CERTIFICATION OF FIELD INSPECTION

I, the undersigned, holding a valid commission issued by the National Board of Boiler and Pressure Vessel Inspectors and the State or Province of _____ and employed by _____ of _____ have compared the statements in this Data Report with the described component supports and state that the parts referred to as data items _____, not included in the certificate of shop inspection, have been inspected by me and that to the best of my knowledge and belief the NPT Certificate Holder has constructed these component supports in accordance with the ASME Code for Nuclear Power Plant Components.

By signing this certificate neither the Inspector nor his employer makes any warranty, expressed or implied, concerning the component supports described in this Data Report. Furthermore, neither the inspector nor his employer shall be liable in any manner for any personal injury or property damage or a loss of any kind arising from or connected with this inspection.

Date _____.

Signed _____ Commissions _____
(Nat'l Bd., State, Prov., and No.)

FORM NF-1 NPT CERTIFICATE HOLDERS' DATA REPORT FOR COMPONENT SUPPORTS*
As Required by the Provisions of the ASME Code Rules, Section III, Division 1

1. Manufactured by Pacific Scientific 1346 S. State College Blvd. Anaheim, Ca. 92803
(Name and address of NPT Certificate Holder)

2. Manufactured for Bergen Paterson Pipesupport Corp. 74 C Commerce Way, Woburn, Massachusetts, 01801
(Name and address of purchaser or owner)

3. Location of Installation Unknown

4. Identification

	(a) Component Support I.D. No.	(b) Canadian Registration No.	(c) Applicable Drawings with Last Rev. & Date	(d) Stress Report or Load Capacity Data Sheet	(e) Type of Component Support	(f) Class	(g) Nat'l Board No.	(h) Year Built
(1)	10434-10617	None	1801103-07-E	DR-1416-Rev. 0	Linear	1	None	1981
(2)								
(3)								
(4)								
(5)								
(6)								
(7)								
(8)								
(9)								
(10)								

5. Remarks: Built in accordance with TVA/C.F. Braun Design Spec. No. 400-20

CERTIFICATE OF COMPLIANCE

We certify that the statements made in the report are correct and that these components supports conform to the rules of construction of the ASME Code for Nuclear Power Plant Components, Section III, Division 1, Edition 1977, Addenda Summer 1977 (Date), Code Case No. 1644-5

Date 7/8/81 Signed Pacific Scientific (NPT Certificate Holder) by Ronald A Nava

Our ASME Certificate of Authorization No. 1198 to use the Component Supports (NPT)

Symbol expires Aug. 4, 1981 (Date).

CERTIFICATION OF DESIGN

Design Information on File at Pacific Scientific

Stress Report or Load Capacity Data Sheets on File at
Pacific Scientific
Filed Per IR 3256

Design Specifications Certified by (1) Alex Valsenko PE State California

Reg. No. C22,109

Stress Analysis Report or Load Capacity Data Sheets Certified by (1) Leo E. Ay

PE State California Reg. No. 13533

(1) List name only, signature not required

*Supplemental sheets in form of lists, sketches or drawings may be used provided (1) size is 8½ x 11 in., (2) information in items 1, 2, 3, 4, 5 on this Data Report is included on each sheet, and (3) each sheet is numbered and number of sheets is recorded at top of this form.

12/9/05

CERTIFICATE OF SHOP INSPECTION

I, the undersigned, holding a valid commission issued by the National Board of Boiler and Pressure Vessel Inspectors and the State or Province of California and employed by HSBI&I Co. of Hartford, CT have inspected the component supports described in this Data Report on 7-8-81 19 ___ and state that to the best of my knowledge and belief the NPT Certificate Holder has constructed these component supports in accordance with the ASME Code for Nuclear Power Plant Components.

By signing this certificate, neither the Inspector nor his employer makes any warranty, expressed or implied, concerning the component supports described in this Data Report. Furthermore, neither the Inspector nor his employer shall be liable in any manner for any personal injury or property damage or a loss of any kind arising from or connected with this inspection.

Date 7-8-81

Signed [signature] Commission Ca #1494
(Nat'l Bd., State, Prov., and No.)

CERTIFICATION OF FIELD INSPECTION

I, the undersigned, holding a valid commission issued by the National Board of Boiler and Pressure Vessel Inspectors and the State or Province of ___ and employed by ___ of ___ have compared the statements in this Data Report with the described component supports and state that the parts referred to as data items ___, not included in the certificate of shop inspection, have been inspected by me and that to the best of my knowledge and belief the NPT Certificate Holder has constructed these component supports in accordance with the ASME Code for Nuclear Power Plant Components.

By signing this certificate neither the Inspector nor his employer makes any warranty, expressed or implied, concerning the component supports described in this Data Report. Furthermore, neither the Inspector nor his employer shall be liable in any manner for any personal injury or property damage or a loss of any kind arising from or connected with this inspection.

Date ___

Signed ___ Commission ___
(Nat'l Bd., State, Prov., and No.)

822 1123

FORM NA-1 [redacted] CERTIFICATE HOLDERS' DATA REPORT FOR COMPONENT SUPPORTS

As R[redacted] the Provisions of the ASME Code Rules, Section III, Division 1

1. Manufactured by [redacted]entific 1346 S. State College Blvd. Anaheim, Ca. 92803
(Name and address of N-Certificate Holder)

2. Manufactured for [redacted]rson-Pipesupport Corp. 74 C Commercial Way, Holbrook, Massachusetts, 02343 Alex
(Name and address of purchaser or owner)

3. Location of Installation [redacted] Dubuque

4. Installation

(a) Component Support I.D. No.	(b) Co[redacted] Registration No.	(c) Applicable Drawings with Rev. & Date	(d) Stress Report or Load Capacity Data Sheet	(e) Type of Component Support	(f) Class	(g) Nat'l Board No.	(h) Year Built
(1) 15528-	No[redacted]	[redacted]05-J	DR-1150-Rev. B	Linear	1	None	1981
(2) 15627	[redacted]						
(3)	[redacted]						
(4)	[redacted]						
(5)	[redacted]						
(6)	[redacted]						
(7)	[redacted]						
(8)	[redacted]						
(9)	[redacted]						
(10)	[redacted]						

5. Remarks: Built[redacted]ance with TVA/C.F. Brown Design Spec. No. 400-20

CERTIFICATE OF COMPLIANCE

We certify that the statements [redacted] report are correct and that these components supports conform to the rules of construction of the ASME Code for Nu[redacted] Components, Section III, Division 1, Edition 1977, Addenda Summer 1977 (Date)

Code Case No. 1644-[redacted]

Date 21 January 1981 [redacted] Pacific Scientific (NPT Certificate Holder) By Bill Gerlins

Our ASME Certificate of A[redacted] 1198 to use the Component Supports (NPT)

Symbol expires Aug. [redacted]

CERTIFICATION OF DESIGN

Design Information on File [redacted] Scientific

Stress Report or Load Cap[redacted] on File at

Pacific Scientific [redacted]

Filed Per PA 3256 [redacted]

Design Specifications Certified by [redacted] Alex Halpenko PE State California

Reg. No. C22,109 [redacted]

Stress Analysis Report or L[redacted] Data Sheets Certified by (1) Leo E. Ay

PE State California [redacted] Reg. No. 13533

(1) Last name only, typed or [redacted]

*Supplemental sheets in [redacted] sketches or drawings may be used provided (1) size is 8½ in. x 11 in., (2) information in items 1, 2, 4[redacted] on this Data Report [redacted] each sheet and (3) each sheet is numbered and number of sheets is recorded at top of this form.

3/12/86

(10/77) [redacted] Form (E00018) may be obtained from the Order Dept., ASME, 345 E. 47th St., New York, N.Y. 10017

CERTIFICATE OF SHOP INSPECTION

I, the undersigned, holding a valid commission issued by the National Board of Boiler and Pressure Vessel Inspectors and the State or Province of California and employed by HSBI&I Co. of Hartford, CT have inspected the component supports described in this Data Report on 2/21, 81 and state that to the best of my knowledge and belief the NPT Certificate Holder has constructed these component supports in accordance with the ASME Code for Nuclear Power Plant Components.

By signing this certificate, neither the inspector nor his employer makes any warranty, expressed or implied, concerning the component supports described in this Data Report. Furthermore, neither the inspector nor his employer shall be liable in any manner for any personal injury or property damage or loss of any kind arising from or connected with this inspection.

Date 2/21/81

Signed [illegible] Commissions Ca #1494
(Nat'l Bd., State, Prov., and No.)

CERTIFICATION OF FIELD INSPECTION

I, the undersigned, holding a valid commission issued by the National Board of Boiler and Pressure Vessel Inspectors and the State or Province of _____ and employed by _____ of _____ have compared the statements in this Data Report with the described component supports and state that the parts referred to as data items _____, not included in the certificate of shop inspection, have been inspected by me and that to the best of my knowledge and belief the NPT Certificate Holder has constructed these component supports in accordance with the ASME Code for Nuclear Power Plant Components.

By signing this certificate neither the inspector nor his employer makes any warranty, expressed or implied, concerning the component supports described in this Data Report. Furthermore, neither the inspector nor his employer shall be liable in any manner for any personal injury or property damage or a loss of any kind arising from or connected with this inspection.

Date _____

Signed _____ Commissions _____
(Nat'l Bd., State, Prov., and No.)

FORM NF-1 NPT CERTIFICATE HOLDERS' DATA REPORT FOR COMPONENT SUPPORTS*

As Required by the Provisions of the ASME Code Rules, Section III, Division 1

SHEET 6 OF 7

1. Manufactured by Pacific Scientific 1346 S. State College Blvd. Anaheim, Ca. 92803
(Name and address of NPT Certificate Holder)

2. Manufactured for Bergen Paterson Pipesupport Corp. 75 C Commerce Way, Billerica, Massachusetts, 01821
(Name and address of purchaser or owner)

3. Location of Installation Unknown

4. Identification

(a) Component Support I.D. No.	(b) Canadian Registration No.	(c) Applicable Drawings with Last Rev. & Date	(d) Stress Report or Load Capacity Data Sheet	(e) Type of Component Support	(f) Class	(g) Nat'l Board No.	(h) Year Built
(1) 16151-16250	None	1801106-05-J	DR-1350-Rev. B	Linear	1	None	1981
(2)							
(3)							
(4)							
(5)							
(6)							
(7)							
(8)							
(9)							
(10)							

5. Remarks: Built in accordance with TVA/C.F. Braun Design Spec. No. 400-20

CERTIFICATE OF COMPLIANCE

We certify that the statements made in this report are correct and that these components supports conform to the rules of construction of the ASME Code for Nuclear Power Plant Components, Section III, Division 1, Edition 1977, Addenda Summer 1977 (Date)

Code Case No. 1644-5

Date 1/27/80 Signed Pacific Scientific (NPT Certificate Holder) by Rosalie A. Nurse

Our ASME Certificate of Authorization No. 1198 to use the Component Supports (NPT)

Symbol expires Aug. 4, 1981 (Date).

CERTIFICATION OF DESIGN

Design Information on File at Pacific Scientific

Stress Report or Load Capacity Data Sheets on File at:
Pacific Scientific
Filed Per NA 3256

Design Specifications Certified by (1) Alex Nalepenko PE State California

Reg. No. C22,109

Stress Analysis Report or Load Capacity Data Sheets Certified by (1) Leo E. Ly

PE State California Reg. No 13533

(1) List name only, signature not required

* Supplemental sheets in form of lists, sketches or drawings may be used provided (1) size is 8½ in., (2) information in items 1, 2, 4c, 4g on this Data Report is included on each sheet, and (3) each sheet is numbered and number of sheets is recorded at top of this form

(10/77) This form (E00076) may be obtained from the Order Dept., ASME, 345 E. 47th St., New York, N.Y. 10017

FORM NP-1 (Back)

SHEET 2 OF 2

CERTIFICATE OF SHOP INSPECTION

I, the undersigned, holding a valid commission issued by the National Board of Boiler and Pressure Vessel Inspectors and the State or Province of California and employed by Hartford Steam Boiler Inspection and Insurance Company of Hartford, Connecticut have inspected the component supports described in this Data Report on 1981 to ___, and state that to the best of my knowledge and belief the NPT Certificate Holder has constructed these component supports in accordance with the ASME Code for Nuclear Power Plant Components.

By signing this certificate, neither the Inspector nor his employer makes any warranty, expressed or implied, concerning the component supports described in this Data Report. Furthermore, neither the Inspector nor his employer shall be liable in any manner for any personal injury or property damage or a loss of any kind arising from or connected with this inspection.

Date 1/31/81.

Signed William Mayer Commission Ca #1494
(Nat'l Bd., State, Prov., and No.)

CERTIFICATION OF FIELD INSPECTION

I, the undersigned, holding a valid commission issued by the National Board of Boiler and Pressure Vessel Inspectors and the State or Province of _____ and employed by _____ of _____ have compared the statements in this Data Report with the described component supports and state that the parts referred to as data items _____, not included in the certificate of shop inspection, have been inspected by me and that to the best of my knowledge and belief the NPT Certificate Holder has constructed these component supports in accordance with the ASME Code for Nuclear Power Plant Components.

By signing this certificate neither the Inspector nor his employer makes any warranty, expressed or implied, concerning the component supports described in this Data Report. Furthermore, neither the Inspector nor his employer shall be liable in any manner for any personal injury or property damage or a loss of any kind arising from or connected with this inspection.

Date _____.

Signed _____ Commission _____
(Nat'l Bd., State, Prov., and No.)

S/N 16151-16250

FORM NIS-2 OWNER'S REPORT FOR REPAIR/REPLACEMENT ACTIVITY
As Required by the Provisions of the ASME Code Section XI

1 Owner Tennessee Valley Authority (TVA) (Name)
1101 Market Street
Chattanooga, TN 37402-2801 (Address)

Date May 5, 2006

Sheet 1 of 1

2. Plant Browns Ferry Nuclear Plant (BFN) (Name)
P. O. Box 2000, Decatur, AL 35609-2000 (Address)

Unit 3

Work Order (WO) 04-722413-070
Repair/Replacement Organization P.O. No., Job No., etc

3. Work Performed by TVA-BFN (Name)
P. O. Box 2000, Decatur, AL 35609-2000 (Address)

Type Code Symbol Stamp N/A
Authorization No. N/A
Expiration Date N/A

4. Identification of System System 003, Feedwater System (ASME Code Class 1 equivalent)

5. (a) Applicable Construction Code USAS B31.1.0 19 67 * Edition, N/A Addenda, N/A Code Case

(b) *Applicable Edition of Section XI Utilized for Repairs or Replacements 20 01 Edition, 2003 Addenda*

(c) Applicable Section XI Code Case(s)

6. Identification of Components

Name of Component	Name of Manufacturer	Manufacturer Serial No.	National Board No.	Other Identification	Year Built	Corrected, Removed, or Installed	ASME Code Stamped (Yes or No)
Support (Snubber) 3-47B415-20	Bergen-Paterson HSSA-10	TVA Serial No. M0278	N/A	3-SNUB-003-5016	N/A	Removed	No
Support (Snubber) 3-47B415-20	Bergen-Paterson HSSA-10	TVA Serial No. M0193	N/A	3-SNUB-003-5016	N/A	Installed	No

7. Description of Work Replaced snubber with like for like rebuilt snubber. Rebuild included a new main cylinder.

8. Tests Conducted: Hydrostatic ☐ Pneumatic ☐ Nominal Operating Pressure ☐ Exempt ☐

Other ☒** Pressure N/A psi Test Temp. N/A °F ** - See Remarks

NOTE: Supplemental Sheets in form of lists, sketches, or drawings may be used, provided (1) size is 8½ in. X 11 in., (2) information in items 1 through 6 on this report is included on each sheet, and (3) each sheet is numbered and the number of sheets is recorded at the top of this form.

*as amended by additional quality assurance requirements found in Contract 68C37-91602 and Design Criteria BFN-50-7003 and BFN-50-C-7105.

FORM NIS-2 (Back)

WID: 04-722413-070

9. Remarks

Applicable Manufacturer's Data Reports to be attached

The original snubber (TVA Serial No. M0278) was removed and tested as part of the 10 percent sample per the snubber program.

The replacement snubber (TVA Serial No. M0193) had been previously located in Unit 2 as 2-SNUB-074-5032 and was removed from Unit 2 under WO 04-718360-000. The replacement snubber (TVA Serial No. M0193) was rebuilt under WO 04-722413-070 and functionally tested per 0-SI-4 6.H-2B. Rebuild included installation of a new main cylinder tube.

CERTIFICATE OF COMPLIANCE

I certify that the statements made in the report are correct and that this conforms to the requirements of the ASME Code, Section XI.

Type Code Symbol Stamp N/A

Certificate of Authorization No. N/A Expiration Date N/A

Signed Stephen C. Willard, System Engineer Date 5/9, 2006

Owner or Owner's Designee Title

CERTIFICATE OF INSERVICE INSPECTION

I, the undersigned, holding a valid commission issued by the National Board of Boiler and Pressure Vessel Inspectors and the State or Province of Tennessee and employed by HSB CT of Hartford Connecticut have inspected the components described in this Owner's Report during the period 11/12/05 to 6/1/06, and state that to the best of my knowledge and belief, the Owner has performed examinations and taken corrective measures described in this Owner's Report in accordance with the requirements of the ASME Code, Section XI.

By signing this certificate neither the Inspector nor his employer makes any warranty, expressed or implied, concerning the examinations and corrective measures described in this Owner's Report. Furthermore, neither the Inspector nor his employer shall be liable in any manner for any personal injury or property damage or a loss of any kind arising from or connected with this inspection.

Bruce M. Earnigh Commissions TN2534

Inspector's Signature National Board State Province and Endorsements

Date 6/1 20 06

FORM NIS-2 OWNER'S REPORT FOR REPAIR/REPLACEMENT ACTIVITY
As Required by the Provisions of the ASME Code Section XI

1. Owner Tennessee Valley Authority (TVA) (Name)
   1101 Market Street
   Chattanooga, TN 37402-2801 (Address)

   Date May 8, 2006

   Sheet 1 of 1

2. Plant Browns Ferry Nuclear Plant (BFN) (Name)
   P. O. Box 2000, Decatur, AL 35609-2000 (Address)

   Unit 3

   Work Orders (WOs) 04-722413-080 and 04-722413-081
   Repair/Replacement Organization P O No , Job No etc

3. Work Performed by TVA-BFN (Name)
   P. O. Box 2000, Decatur, AL 35609-2000 (Address)

   Type Code Symbol Stamp N/A
   Authorization No. N/A
   Expiration Date N/A

4. Identification of System System 068, Reactor Recirculation System (ASME Code Class 1 equivalent)

5. (a) Applicable Construction Code USAS B31.1.0 19 67 * Edition, N/A Addenda, N/A Code Case

   (b) Applicable Edition of Section XI Utilized for Repairs or Replacements 20 01 Edition, 2003 Addenda

   (c) *Applicable Section XI Code Case(s)*

6. Identification of Components

Name of Component	Name of Manufacturer	Manufacturer Serial No.	National Board No.	Other Identification	Year Built	Corrected, Removed, or Installed	ASME Code Stamped (Yes or No)
Support (Snubber) 3-47B465-457	Pacific Scientific PSA-10	10878	N/A	3-SNUB-068-5024	N/A	Removed	No
Support (Snubber) 3-47B465-457	Pacific Scientific PSA-10	10627	N/A	3-SNUB-068-5024	1981	Installed	Yes
Support (Snubber) 3-47B465-480	Pacific Scientific PSA-10	10875	N/A	3-SNUB-068-5025	N/A	Removed	No
Support (Snubber) 3-47B465-480	Pacific Scientific PSA-10	10673	N/A	3-SNUB-068-5025	1981	Installed	Yes

7. Description of Work Replaced 2 snubbers.

8. Tests Conducted: Hydrostatic ☐ Pneumatic ☐ Nominal Operating Pressure ☐ Exempt ☐
   Other ☒** Pressure N/A psi Test Temp. N/A °F ** - See Remarks

NOTE: Supplemental Sheets in form of lists, sketches, or drawings may be used, provided (1) size is 8½ in. X 11 in., (2) information in items 1 through 6 on this report is included on each sheet, and (3) each sheet is numbered and the number of sheets is recorded at the top of this form.

*as amended by additional quality assurance requirements found in Contract 68C37-91602 and Design Criteria BFN-50-7068 and BFN-50-C-7105.

FORM NIS-2 (Back)

9. Remarks WO 04-722413-080 - (3-SNUB-068-5024)

Applicable Manufacturer's Data Reports to be attached

The original snubber (10878) was removed and tested as part of the 10 percent sample per the snubber program.

The replacement snubber (10627) is a new snubber and was tested per 3-SI-4.6.H-2A, prior to installation.

WO 04-722413-081 - (3-SNUB-068-5025)

The original snubber (10875) was removed and tested as part of the 10 percent sample per the snubber program.

The replacement snubber (10673) is a new snubber and was tested per 3-SI-4.6 H-2A, prior to installation.

CERTIFICATE OF COMPLIANCE

I certify that the statements made in the report are correct and that this conforms to the requirements of the ASME Code, Section XI.

Type Code Symbol Stamp N/A

Certificate of Authorization No. N/A Expiration Date N/A

Signed [signature], System Engineer Date 5/9, 20 06

Owner or Owner's Designee Title

CERTIFICATE OF INSERVICE INSPECTION

I, the undersigned, holding a valid commission issued by the National Board of Boiler and Pressure Vessel Inspectors and the State or Province of Tennessee and employed by HSB CT of Hartford Connecticut have inspected the components described in this Owner's Report during the period 3/19/06 to 5/31/06, and state that to the best of my knowledge and belief, the Owner has performed examinations and taken corrective measures described in this Owner's Report in accordance with the requirements of the ASME Code, Section XI.

By signing this certificate neither the Inspector nor his employer makes any warranty, expressed or implied, concerning the examinations and corrective measures described in this Owner's Report. Furthermore, neither the Inspector nor his employer shall be liable in any manner for any personal injury or property damage or a loss of any kind arising from or connected with this inspection.

Bruce M. Earnigh Commissions TN 2534

Inspector's Signature National Board State, Province and Endorsements

Date 5/31 20 06

FORM NF-1 NPT CERTIFICATE HOLDERS' DATA REPORT FOR COMPONENT SUPPORTS*

As Required by the Provisions of the ASME Code Rules, Section III, Division 1

1. Manufactured by Pacific Scientific 1346 S. State College Blvd. Anaheim, Ca. 92803
(Name and address of NPT Certificate Holder)

2. Manufactured for Bergen Paterson Pipesupport Corp. 74 C Commerce Way, Woburn, Massachusetts, 01801
(Name and address of purchaser or owner)

3. Location of Installation Unknown

4. Identification

	(a) Component Support I.D. No.	(b) Canadian Registration No.	(c) Applicable Drawings with Last Rev. & Date	(d) Stress Report or Load Capacity Data Sheet	(e) Type of Component Support	(f) Class	(g) Nat'l Board No	(h) Year Built
(1)	10415-10424	None	1801103-07-H	DR-1416-Rev. 0	Linear	1	None	1981
(2)	10618-10699	"	"	"	"	"	"	"
(3)								
(4)								
(5)								
(6)								
(7)								
(8)								
(9)								
(10)								

5. Remarks Built in accordance with TVA/C.F. Braun Design Spec. No. 400-20

CERTIFICATE OF COMPLIANCE

We certify that the statements made in this report are correct and that these components supports conform to the rules of construction of the ASME Code for Nuclear Power Plant Components, Section III, Division 1, Edition 1977, Addenda Summer 1977 (Date). Code Case No. 1644-5

Date 7/1/81 Signed Pacific Scientific (NPT Certificate Holder) by Brooke A. Davis

Our ASME Certificate of Authorization No 1198 to use the Component Supports (NPT) symbol expires Aug. 4, 1981 (Date).

CERTIFICATION OF DESIGN

Design Information on File at Pacific Scientific

Stress Report or Load Capacity Data Sheets on File at: Pacific Scientific

Filed Per IA 3256

Design Specifications Certified by (1) Alex Valsenko PE State California

Reg. No. C22,109

Stress Analysis Report or Load Capacity Data Sheets Certified by (1) Leo E. Ay

PE State California Reg. No. 13533

(1) List name only, signature not required.

CR 3/17/86

* Supplemental sheets in form of lists, sketches or drawings may be used provided (1) size is 8½ in., (2) information in items 1, 2, 4c, 4g on this Data Report is included on each sheet and (3) each sheet is numbered and number of sheets is recorded at top of this form.

CERTIFICATE OF SHOP INSPECTION

I, the undersigned, holding a valid commission issued by the National Board of Boiler and Pressure Vessel Inspectors and the State or Province of California and employed by HSB I&I Co. of Hartford, CT have inspected the component supports described in this Data Report on 7-8-81, 19 ___ and state that to the best of my knowledge and belief the NPT Certificate Holder has constructed these component supports in accordance with the ASME Code for Nuclear Power Plant Components.

By signing this certificate, neither the Inspector nor his employer makes any warranty, expressed or implied, concerning the component supports described in this Data Report. Furthermore, neither the Inspector nor his employer shall be liable in any manner for any personal injury or property damage or a loss of any kind arising from or connected with this inspection.

Date 7-8-81.

Signed [signature] Commissions Ca #1494
(Nat'l Bd., State, Prov., and No.)

CERTIFICATION OF FIELD INSPECTION

I, the undersigned, holding a valid commission issued by the National Board of Boiler and Pressure Vessel Inspectors and the State or Province of ___ and employed by ___ of ___ have compared the statements in this Data Report with the described component supports and state that the parts referred to as data items ___, not included in the certificate of shop inspection, have been inspected by me and that to the best of my knowledge and belief the NPT Certificate Holder has constructed these component supports in accordance with the ASME Code for Nuclear Power Plant Components.

By signing this certificate neither the Inspector nor his employer makes any warranty, expressed or implied, concerning the component supports described in this Data Report. Furthermore, neither the inspector nor his employer shall be liable in any manner for any personal injury or property damage or a loss of any kind arising from or connected with this inspection.

Date ___.

Signed ___ Commissions ___
(Nat'l Bd., State, Prov., and No.)

FORM NIS-2 OWNER'S REPORT FOR REPAIR/REPLACEMENT ACTIVITY
As Required by the Provisions of the ASME Code Section XI

1. Owner Tennessee Valley Authority (TVA) (Name)
   1101 Market Street
   Chattanooga, TN 37402-2801 (Address)

   Date May 8, 2006

   Sheet 1 of 1

2. Plant Browns Ferry Nuclear Plant (BFN) (Name)
   P. O. Box 2000, Decatur, AL 35609-2000 (Address)

   Unit 3

   Work Order (WO) 04-722413-068
   Repair/Replacement Organization P O No , Job No etc.

3. Work Performed by TVA-BFN (Name)
   P. O. Box 2000, Decatur, AL 35609-2000 (Address)

   Type Code Symbol Stamp N/A
   Authorization No. N/A
   Expiration Date N/A

4. Identification of System System 063, Standby Liquid Control System (ASME Code Class 2 equivalent)

5. (a) Applicable Construction Code USAS B31.1.0 19 67 * Edition, N/A Addenda, N/A Code Case

   (b) Applicable Edition of Section XI Utilized for Repairs or Replacements 20 01 Edition, 2003 Addenda

   (c) Applicable Section XI Code Case(s)

6. Identification of Components

Name of Component	Name of Manufacturer	Manufacturer Serial No.	National Board No.	Other Identification	Year Built	Corrected, Removed, or Installed	ASME Code Stamped (Yes or No)
Support (Snubber) 3-47B462-27	Bergen-Paterson	TVA Serial No. M0078	N/A	3-SNUB-063-5001	N/A	Removed	No
Support (Snubber) 3-47B462-27	Bergen-Paterson	ADH-300-2048	N/A	3-SNUB-063-5001	N/A	Installed	No

7. Description of Work Replaced snubber.

8. Tests Conducted: Hydrostatic ☐ Pneumatic ☐ Nominal Operating Pressure ☐ Exempt ☐
   Other ☒** Pressure N/A psi Test Temp. N/A °F ** - See Remarks

NOTE: Supplemental Sheets in form of lists, sketches, or drawings may be used, provided (1) size is 8½ in. X 11 in , (2) information in items 1 through 6 on this report is included on each sheet, and (3) each sheet is numbered and the number of sheets is recorded at the top of this form.

*as amended by additional quality assurance requirements found in Contract 68C37-91602 and Design Criteria BFN-50-7003 and BFN-50-C-7105.

FORM NIS-2 (Back)

WID: 04-722413-068

9. Remarks

Applicable Manufacturer's Data Reports to be attached

The original snubber (TVA Serial No. M0078) was removed and tested as part of the 10 percent sample per the snubber program.

The newly installed snubber (ADH-300-2048) is a new snubber and was functionally tested per 0-SI-4.6.H-2B.

CERTIFICATE OF COMPLIANCE

I certify that the statements made in the report are correct and that this conforms to the requirements of the ASME Code, Section XI.

Type Code Symbol Stamp N/A

Certificate of Authorization No. N/A Expiration Date N/A

Signed [signature], System Engineer Date 5/9, 2006

Owner or Owner's Designee, Title

CERTIFICATE OF INSERVICE INSPECTION

I, the undersigned, holding a valid commission issued by the National Board of Boiler and Pressure Vessel Inspectors and the State or Province of Tennessee and employed by HSB CT of Hartford Connecticut have inspected the components described in this Owner's Report during the period 11/30/05 to 5/31/06, and state that to the best of my knowledge and belief, the Owner has performed examinations and taken corrective measures described in this Owner's Report in accordance with the requirements of the ASME Code, Section XI.

By signing this certificate neither the Inspector nor his employer makes any warranty, expressed or implied, concerning the examinations and corrective measures described in this Owner's Report. Furthermore, neither the Inspector nor his employer shall be liable in any manner for any personal injury or property damage or a loss of any kind arising from or connected with this inspection.

Bruce M. Earnest Commissions TN 2534

Inspector's Signature National Board, State, Province, and Endorsements

Date 5/31 20 06

FORM NIS-2 OWNER'S REPORT FOR REPAIR/REPLACEMENT ACTIVITY
As Required by the Provisions of the ASME Code Section XI

1 Owner Tennessee Valley Authority (TVA) (Name)
1101 Market Street
Chattanooga, TN 37402-2801 (Address)

Date May 9, 2006

Sheet 1 of 2

2. Plant Browns Ferry Nuclear Plant (BFN) (Name)
P. O. Box 2000, Decatur, AL 35609-2000 (Address)

Unit 3

Work Orders (WOs) 05-715977-000, 05-715978-000, 05-715979-000 and 05-719565-000 (Repair/Replacement Organization P.O. No., Job No., etc.)

3. Work Performed by TVA-BFN (Name)
P. O. Box 2000, Decatur, AL 35609-2000 (Address)

Type Code Symbol Stamp N/A

Authorization No. N/A

Expiration Date N/A

4. Identification of System System 074, Residual Heat Removal (RHR) System (ASME Code Class 2 equivalent)

5. (a) Applicable Construction Code USAS B31.1.0 19 67* Edition, N/A Addenda, N/A Code Case

(b) Applicable Edition of Section XI Utilized for Repairs or Replacements 20 01 Edition, 2003 Addenda

(c) Applicable Section XI Code Case(s)

6. Identification of Components

Name of Component	Name of Manufacturer	Manufacturer Serial No.	National Board No.	Other Identification	Year Built	Corrected, Removed, or Installed	ASME Code Stamped (Yes or No)
RHR System Fill Check Valve	Hancock	N/A	N/A	3-CKV-074-0792	N/A	‡	No
‡ - Replaced CKV cap and disc							
cap	Hancock	N/A	N/A	3-CKV-074-0792	N/A	Removed	No
cap	Anderson Greenwood Crosby	N900132-31-009	N/A	3-CKV-074-0792	N/A	Installed	No
disc	Hancock	N/A	N/A	3-CKV-074-0792	N/A	Removed	No
disc	Anderson Greenwood Crosby	N900133-31-003	N/A	3-CKV-074-0792	N/A	Installed	No

7. Description of Work Replaced bonnet/cap and disc

8. Tests Conducted: Hydrostatic ☐ Pneumatic ☐ Nominal Operating Pressure ☒ Exempt ☐

Other ☐ Pressure N/A psi Test Temp. N/A °F

NOTE: Supplemental Sheets in form of lists, sketches, or drawings may be used, provided (1) size is 8½ in. X 11 in., (2) information in items 1 through 6 on this report is included on each sheet, and (3) each sheet is numbered and the number of sheets is recorded at the top of this form.

*as amended by additional quality assurance requirements found in Contract 68C37-91602 and Design Criteria BFN-50-7074 and BFN-50-C-7105.

FORM NIS-2 (Back)

WID. Work Orders (WOs) 05-715977-000, 05-715978-000, 05-715979-000 and 05-719565-000

9. Remarks Replaced bonnet and disc

Applicable Manufacturer's Data Reports to be attached

CERTIFICATE OF COMPLIANCE

I certify that the statements made in the report are correct and that this conforms to the requirements of the ASME Code, Section XI.

Type Code Symbol Stamp N/A

Certificate of Authorization No. N/A Expiration Date N/A

Signed [signature], System Engineer Date 5/15, 20 06

Owner or Owner's Designee Title

CERTIFICATE OF INSERVICE INSPECTION

I, the undersigned, holding a valid commission issued by the National Board of Boiler and Pressure Vessel Inspectors and the State or Province of Tennessee and employed by HSB CT of Connecticut have inspected the components described in this Owner's Report during the period 2/2/06 to 5/16/06, and state that to the best of my knowledge and belief, the Owner has performed examinations and taken corrective measures described in this Owner's Report in accordance with the requirements of the ASME Code, Section XI.

By signing this certificate neither the Inspector nor his employer makes any warranty, expressed or implied, concerning the examinations and corrective measures described in this Owner's Report. Furthermore, neither the Inspector nor his employer shall be liable in any manner for any personal injury or property damage or a loss of any kind arising from or connected with this inspection.

[signature] Commissions TN 4011

Inspector's Signature National Board State Province and Endorsements

Date 5/16 20 06.

FORM NIS-2 OWNER'S REPORT FOR REPAIRS/REPLACEMENT ACTIVITY
SUPPLEMENTAL SHEET

1. Owner Tennessee Valley Authority (TVA) (Name)
1101 Market Street
Chattanooga, TN 37402-2801 (Address)

Date May 9, 2006

Sheet 2 of 2

2. Plant Browns Ferry Nuclear Plant (BFN) (Name)
P. O. Box 2000, Decatur, AL 35609-2000 (Address)

Unit 3

Work Orders (WOs) 05-715977-000, 05-715978-000, 05-715979-000 and 05-719565-000 (Repair/Replacement Organization P.O. No., Job No., etc)

3. Work Performed by TVA-BFN (Name)
P. O. Box 2000, Decatur, AL 35609-2000 (Address)

Type Code Symbol Stamp N/A

Authorization No. N/A

Expiration Date N/A

4. Identification of System System 074 Residual Heat Removal (RHR) System (ASME Code Class 2 equivalent)

5. (a) Applicable Construction Code USAS B31.1.0 19 67* Edition, _____ Addenda, _____ Code Case
(b) Applicable Edition of Section XI Utilized for Repairs or Replacements 20 01, 2003 Addenda
(c) Applicable Section XI Code Case(s)

6. Identification of Components

Name of Component	Name of Manufacturer	Manufacturer Serial No	National Board No.	Other Identification	Year Built	Corrected, Removed, or Installed	ASME Code Stamped (Yes or No)
RHR System Fill Check Valve	Hancock	N/A	N/A	3-CKV-074-0804	N/A	‡	No
‡ - Replaced CKV cap and disc							
cap	Hancock	N/A	N/A	3-CKV-074-0804	N/A	Removed	No
cap	Anderson Greenwood Crosby	N900132-31-002	N/A	3-CKV-074-0804	N/A	Installed	No
disc	Hancock	N/A	N/A	3-CKV-074-0804	N/A	Removed	No
disc	Anderson Greenwood Crosby	N900133-31-009	N/A	3-CKV-074-0804	N/A	Installed	No
RHR System Fill Check Valve	Hancock	N/A	N/A	3-CKV-074-0802	N/A	‡	No
‡ - Replaced CKV cap and disc							
cap	Hancock	N/A	N/A	3-CKV-074-0802	N/A	Removed	No
cap	Anderson Greenwood Crosby	N900132-31-007	N/A	3-CKV-074-0802	N/A	Installed	No
disc	Hancock	N/A	N/A	3-CKV-074-0802	N/A	Removed	No
disc	Anderson Greenwood Crosby	N900133-31-005	N/A	3-CKV-074-0802	N/A	Installed	No
RHR System Fill Check Valve	Hancock	N/A	N/A	3-CKV-074-0803	N/A	‡	No
‡ - Replaced CKV cap and disc							
cap	Hancock	N/A	N/A	3-CKV-074-0803	N/A	Removed	No
cap	Anderson Greenwood Crosby	N900132-31-004	N/A	3-CKV-074-0803	N/A	Installed	No
disc	Hancock	N/A	N/A	3-CKV-074-0803	N/A	Removed	No
disc	Anderson Greenwood Crosby	N900133-31-004	N/A	3-CKV-074-0803	N/A	Installed	No

FORM NIS-2, SUPPLEMENTAL SHEET (Back)

Work Orders (WOs) 05-715977-000, 05-715978-000, 05-715979-000 and 05-719565-000

Remarks Replaced bonnet and disc

FORM NIS-2 OWNER'S REPORT FOR REPAIR/REPLACEMENT ACTIVITY
As Required by the Provisions of the ASME Code Section XI

1. Owner Tennessee Valley Authority (TVA) (Name)
   1101 Market Street
   Chattanooga, TN 37402-2801 (Address)

   Date May 9, 2006

   Sheet 1 of 2

2. Plant Browns Ferry Nuclear Plant (BFN) (Name)
   P. O. Box 2000, Decatur, AL 35609-2000 (Address)

   Unit 3

   Work Orders (WOs) 05-715981-000 and 05-716126-000
   Repair/Replacement Organization P.O. No. Job No., etc.

3. Work Performed by TVA-BFN (Name)
   P. O. Box 2000, Decatur, AL 35609-2000 (Address)

   Type Code Symbol Stamp N/A
   Authorization No. N/A
   Expiration Date N/A

4. Identification of System System 075, Core Spray (CS) System (ASME Code Class 2 equivalent)

5. (a) Applicable Construction Code USAS B31.1.0 19 67 * Edition, N/A Addenda, N/A Code Case

   (b) Applicable Edition of Section XI Utilized for Repairs or Replacements 20 01 Edition, 2003 Addenda

   (c) Applicable Section XI Code Case(s)

6. Identification of Components

Name of Component	Name of Manufacturer	Manufacturer Serial No.	National Board No.	Other Identification	Year Built	Corrected, Removed, or Installed	ASME Code Stamped (Yes or No)
CS System Fill Check Valve	Hancock	N/A	N/A	3-CKV-075-0607	N/A	‡	No
‡ - Replaced CKV cap and disc							
cap	Hancock	N/A	N/A	3-CKV-075-0607	N/A	Removed	No
cap	Anderson Greenwood Crosby	N900132-31-005	N/A	3-CKV-075-0607	N/A	Installed	No
disc	Hancock	N/A	N/A	3-CKV-075-0607	N/A	Removed	No
disc	Anderson Greenwood Crosby	N900133-31-008	N/A	3-CKV-075-0607	N/A	Installed	No

7. Description of Work Replaced bonnet/cap and disc

8. Tests Conducted: Hydrostatic ☐ Pneumatic ☐ Nominal Operating Pressure ☒ Exempt ☐

   Other ☐ Pressure N/A psi Test Temp. N/A °F

NOTE: Supplemental Sheets in form of lists, sketches, or drawings may be used, provided (1) size is 8½ in. X 11 in., (2) information in items 1 through 6 on this report is included on each sheet, and (3) each sheet is numbered and the number of sheets is recorded at the top of this form.

*as amended by additional quality assurance requirements found in Contract 68C37-91602 and Design Criteria BFN-50-7074 and BFN-50-C-7105.

FORM NIS-2 (Back)

WID: Work Orders (WOs) 05-715981-000 and 05-716126-000

9. Remarks Replaced bonnet and disc

Applicable Manufacturer's Data Reports to be attached

CERTIFICATE OF COMPLIANCE

I certify that the statements made in the report are correct and that this conforms to the requirements of the ASME Code, Section XI.

Type Code Symbol Stamp N/A

Certificate of Authorization No. N/A Expiration Date N/A

Signed [signature], System Engineer Date 5/11, 20 06

Owner or Owner's Designee Title

CERTIFICATE OF INSERVICE INSPECTION

I, the undersigned, holding a valid commission issued by the National Board of Boiler and Pressure Vessel Inspectors and the State or Province of Tennessee and employed by HSB CT of Connecticut have inspected the components described in this Owner's Report during the period 2/6/06 to 5/15/06, and state that to the best of my knowledge and belief, the Owner has performed examinations and taken corrective measures described in this Owner's Report in accordance with the requirements of the ASME Code, Section XI.

By signing this certificate neither the Inspector nor his employer makes any warranty, expressed or implied, concerning the examinations and corrective measures described in this Owner's Report. Furthermore, neither the Inspector nor his employer shall be liable in any manner for any personal injury or property damage or a loss of any kind arising from or connected with this inspection.

[signature] Commissions TN 4011

Inspector's Signature National Board, State, Province, and Endorsements

Date 5/15 20 06

FORM NIS-2 OWNER'S REPORT FOR REPAIRS/REPLACEMENT ACTIVITY
SUPPLEMENTAL SHEET

Owner Tennessee Valley Authority (TVA) (Name)
1101 Market Street
Chattanooga, TN 37402-2801 (Address)

Date May 9, 2006

Sheet 2 of 2

2. Plant Browns Ferry Nuclear Plant (BFN) (Name)
P. O. Box 2000, Decatur, AL 35609-2000 (Address)

Unit 3

Work Orders (WOs) 05-715981-000 and 05-716126-000
Repair/Replacement Organization P.O. No. Job No., etc.

3. Work Performed by TVA-BFN (Name)
P. O. Box 2000, Decatur, AL 35609-2000 (Address)

Type Code Symbol Stamp N/A
Authorization No. N/A
Expiration Date N/A

4. Identification of System System 075, Core Spray (CS) System (ASME Code Class 2 equivalent)

5. (a) Applicable Construction Code USAS B31.1.0 19 67 * Edition, N/A Addenda, N/A Code Case
(b) Applicable Edition of Section XI Utilized for Repairs or Replacements 20 01, 2003 Addenda
(c) Applicable Section XI Code Case(s)

6. Identification of Components

Name of Component	Name of Manufacturer	Manufacturer Serial No.	National Board No.	Other Identification	Year Built	Corrected, Removed, or Installed	ASME Code Stamped (Yes or No)
CS System Fill Check Valve	Hancock	N/A	N/A	3-CKV-075-0606	N/A	‡	No
‡ - Replaced CKV cap and disc							
cap	Hancock	N/A	N/A	3-CKV-075-0606	N/A	Removed	No
cap	Anderson Greenwood Crosby	N900132-31-012	N/A	3-CKV-075-0606	N/A	Installed	No
disc disc SCW 5/15/06	Hancock	N/A	N/A	3-CKV-075-0606	N/A	Removed	No
disc	Anderson Greenwood Crosby	N900133-31-002	N/A	3-CKV-075-0606	N/A	Installed	No

FORM NIS-2, SUPPLEMENTAL SHEET (Back)

Work Orders (WOs) 05-715981-000 and 05-716126-000

Remarks Replaced bonnet and disc

FORM NIS-2 OWNER'S REPORT FOR REPAIR/REPLACEMENT ACTIVITY
As Required by the Provisions of the ASME Code Section XI

1. Owner Tennessee Valley Authority (TVA) (Name)
1101 Market Street
Chattanooga, TN 37402-2801 (Address)

Date May 11, 2006

Sheet 1 of 1

2. Plant Browns Ferry Nuclear Plant (BFN) (Name)
P. O. Box 2000, Decatur, AL 35609-2000 (Address)

Unit 3

Design Change Notice (DCN) 65602,
Work Orders (WOs) 05-721766-000, 05-721767-000,
05-721768-000, 05-721769-000 and 05-717705-004
(Repair/Replacement Organization P.O. No., Job No., etc.)

3. Work Performed by TVA-BFN (Name)
P. O. Box 2000, Decatur, AL 35609-2000 (Address)

Type Code Symbol Stamp N/A

Authorization No. N/A

Expiration Date N/A

4. Identification of System System 001, Main Steam System (ASME Code Class 2 equivalent)

5. (a) Applicable Construction Code USAS B31.1.0 19 67 * Edition, N/A Addenda, N/A Code Case

(b) Applicable Edition of Section XI Utilized for Repairs or Replacements 20 01 Edition, 2003 Addenda

(c) Applicable Section XI Code Case(s)

6. Identification of Components

Name of Component	Name of Manufacturer	Manufacturer Serial No.	National Board No.	Other Identification	Year Built	Corrected, Removed, or Installed	ASME Code Stamped (Yes or No)
Steam to SJAE A Stg 1&2 Isol Valve	Hancock 5500	N/A	N/A	3-FCV-001-0155	N/A	Removed	No
Steam to SJAE A Stg 1&2 Isol Valve	Flowserve (Anchor/Darling)	74BCF	N/A	3-FCV-001-0155	N/A	Installed	No
Steam to SJAE B Stg 1&2 Isol Valve	Hancock 5500	N/A	N/A	3-FCV-001-0156	N/A	Removed	No
Steam to SJAE B Stg 1&2 Isol Valve	Flowserve (Anchor/Darling)	72BCF	N/A	3-FCV-001-0156	N/A	Installed	No
Steam to SJAE A Stg3 Isol Valve	Hancock 5500	N/A	N/A	3-FCV-001-0172	N/A	Removed	No
Steam to SJAE A Stg 3 Isol Valve	Flowserve (Anchor/Darling)	71BCF	N/A	3-FCV-001-0172	N/A	Installed	No
Steam to SJAE B Stg 3 Isol Valve	Hancock 5500	N/A	N/A	3-FCV-001-0173	N/A	Removed	No
Steam to SJAE B Stg 3 Isol Valve	Flowserve (Anchor/Darling)	73BCF	N/A	3-FCV-001-0173	N/A	Installed	No
pipe	unknown	N/A	N/A	N/A	N/A	Removed	No
pipe	Consolidated Power Supply	N/A	N/A	N/A	N/A	Installed	No

7. Description of Work Replaced isolation valves with new valves and replaced some associated piping.

8. Tests Conducted: Hydrostatic ☐ Pneumatic ☐ Nominal Operating Pressure ☒ Exempt ☐

Other ☐ Pressure N/A psi Test Temp. N/A °F

NOTE: Supplemental Sheets in form of lists, sketches, or drawings may be used, provided (1) size is 8½ in. X 11 in., (2) information in items 1 through 6 on this report is included on each sheet, and (3) each sheet is numbered and the number of sheets is recorded at the top of this form.

*as amended by additional quality assurance requirements found in Contract 20077-0278 and Design Criteria BFN-50-7001 and BFN-50-C-7105.

FORM NIS-2 (Back)

WID. Work Orders (WOs) 05-721766-000, 05-721767-000, 05-721768-000, 05-721769-000 and 05-717705-004

9 Remarks Replaced isolation valves with new valves and replaced some associated piping.

Applicable Manufacturer's Data Reports to be attached

CERTIFICATE OF COMPLIANCE

I certify that the statements made in the report are correct and that this conforms to the requirements of the ASME Code, Section XI.

Type Code Symbol Stamp N/A

Certificate of Authorization No. N/A Expiration Date N/A

Signed [signature], System Engineer Date 5/18, 20 06

Owner or Owner's Designee, Title

CERTIFICATE OF INSERVICE INSPECTION

I, the undersigned, holding a valid commission issued by the National Board of Boiler and Pressure Vessel Inspectors and the State or Province of Tennessee and employed by HSB CT of Hartford Connecticut have inspected the components described in this Owner's Report during the period 2/17/06 to 5/31/06, and state that to the best of my knowledge and belief, the Owner has performed examinations and taken corrective measures described in this Owner's Report in accordance with the requirements of the ASME Code, Section XI.

By signing this certificate neither the Inspector nor his employer makes any warranty, expressed or implied, concerning the examinations and corrective measures described in this Owner's Report. Furthermore, neither the Inspector nor his employer shall be liable in any manner for any personal injury or property damage or a loss of any kind arising from or connected with this inspection.

Bruce M. Earnigh Commissions TN 2534

Inspector's Signature National Board, State, Province, and Endorsements

Date 5/31 20 06

FORM NIS-2 OWNER'S REPORT FOR REPAIR/REPLACEMENT ACTIVITY
As Required by the Provisions of the ASME Code Section XI

1. Owner Tennessee Valley Authority (TVA) (Name)
   1101 Market Street
   Chattanooga, TN 37402-2801 (Address)

   Date May 11, 2006

   Sheet 1 of 1

2. Plant Browns Ferry Nuclear Plant (BFN) (Name)
   P. O. Box 2000, Decatur, AL 35609-2000 (Address)

   Unit 3

   Work Orders (WOs) 05-717705-000 and 05-717705-004
   Repair/Replacement Organization P.O. No., Job No., etc.

3. Work Performed by TVA-BFN (Name)
   P. O. Box 2000, Decatur, AL 35609-2000 (Address)

   Type Code Symbol Stamp N/A

   Authorization No. N/A

   Expiration Date N/A

4. Identification of System System 006, Heater Drains and Vents (HDV) System (ASME Code Class 2 equivalent)

5. (a) Applicable Construction Code USAS B31.1.0 19 67* Edition, N/A Addenda, N/A Code Case

   (b) Applicable Edition of Section XI Utilized for Repairs or Replacements 20 01 Edition, 2003 Addenda

   (c) Applicable Section XI Code Case(s)

6. Identification of Components

Name of Component	Name of Manufacturer	Manufacturer Serial No.	National Board No.	Other Identification	Year Built	Corrected, Removed, or Installed	ASME Code Stamped (Yes or No)
HDV piping	Unknown	N/A	N/A	N/A	N/A	Removed	No
HDV piping	Consolidated Power Supply And Mid-South Nuclear	N/A	N/A	N/A	N/A	Installed	No

7. Description of Work Replaced carbon steel steam drain piping with FAC resistant Cr-Mo alloy piping.

8. Tests Conducted: Hydrostatic ☐ Pneumatic ☐ Nominal Operating Pressure ☒ Exempt ☐

   Other ☐ Pressure N/A psi Test Temp. N/A °F

NOTE: *Supplemental Sheets in form of lists, sketches, or drawings may be used, provided (1) size is 8½ in. X 11 in., (2) information in items 1 through 6 on this report is included on each sheet, and (3) each sheet is numbered and the number of sheets is recorded at the top of this form.*

*as amended by additional quality assurance requirements found in Contract 68C37-91602 and Design Criteria BFN-50-7006 and BFN-50-C-7105.

FORM NIS-2 (Back)

WID: Work Orders (WOs) 05-717705-000 and 05-717705-004

9. Remarks Replaced carbon steel steam drain piping with FAC resistant Cr-Mo alloy piping.
Applicable Manufacturer's Data Reports to be attached

CERTIFICATE OF COMPLIANCE

I certify that the statements made in the report are correct and that this conforms to the requirements of the ASME Code, Section XI.

Type Code Symbol Stamp N/A

Certificate of Authorization No. N/A Expiration Date N/A

Signed [signature], System Engineer Date 5/18, 20 06
Owner or Owner's Designee, Title

CERTIFICATE OF INSERVICE INSPECTION

I, the undersigned, holding a valid commission issued by the National Board of Boiler and Pressure Vessel Inspectors and the State or Province of Tennessee and employed by HSB CT of Hartford Connecticut have inspected the components described in this Owner's Report during the period 2/24/06 to 5/31/06, and state that to the best of my knowledge and belief, the Owner has performed examinations and taken corrective measures described in this Owner's Report in accordance with the requirements of the ASME Code, Section XI.

By signing this certificate neither the Inspector nor his employer makes any warranty, expressed or implied, concerning the examinations and corrective measures described in this Owner's Report. Furthermore, neither the Inspector nor his employer shall be liable in any manner for any personal injury or property damage or a loss of any kind arising from or connected with this inspection.

Bruce M. Earnigh Commissions TN 2534
Inspector's Signature National Board, State, Province, and Endorsements

Date 5/31 20 06

FORM NIS-2 OWNER'S REPORT FOR REPAIR/REPLACEMENT ACTIVITY
As Required by the Provisions of the ASME Code Section XI

1. Owner Tennessee Valley Authority (TVA) (Name)
1101 Market Street
Chattanooga, TN 37402-2801 (Address)

Date May 11, 2006

Sheet 1 of 1

2. Plant Browns Ferry Nuclear Plant (BFN) (Name)
P. O. Box 2000, Decatur, AL 35609-2000 (Address)

Unit 3

Design Change EDC 61548,
Work Orders (WOs) 04-716165-002 and 04-716165-003
(Repair/Replacement Organization P.O. No., Job No., etc)

3. Work Performed by TVA-BFN (Name)
P. O. Box 2000, Decatur, AL 35609-2000 (Address)

Type Code Symbol Stamp N/A

Authorization No. N/A

Expiration Date N/A

4. Identification of System System 073, High Pressure Coolant Injection (HPCI) System (ASME Code Class 2 equivalent)

5. (a) Applicable Construction Code USAS B31.1.0 19 67 * Edition, N/A Addenda, N/A Code Case

(b) Applicable Edition of Section XI Utilized for Repairs or Replacements 20 01 Edition, 2003 Addenda

(c) Applicable Section XI Code Case(s)

6. Identification of Components

Name of Component	Name of Manufacturer	Manufacturer Serial No.	National Board No.	Other Identification	Year Built	Corrected, Removed, or Installed	ASME Code Stamped (Yes or No)
HPCI/RCIC AUX Steam Drain Check Valve	Hancock 2" - 5580	H819ABC	N/A	3-CKV-073-0629	N/A	Removed	No
HPCI/RCIC AUX Steam Drain Check Valve	Flowserve 2" - 1878	98BAP	N/A	3-CKV-073-0629	N/A	Installed	No
piping	unknown	N/A	N/A	N/A	N/A	Removed	No
piping	Consolidated Power Supply	N/A	N/A	N/A	N/A	Installed	No

7. Description of Work Replaced valve per EDC 61548 including some adjacent piping.

8. Tests Conducted: Hydrostatic ☐ Pneumatic ☐ Nominal Operating Pressure ☒ Exempt ☐

Other ☐ Pressure N/A psi Test Temp. N/A °F

NOTE: Supplemental Sheets in form of lists, sketches, or drawings may be used, provided (1) size is 8½ in. X 11 in., (2) information in items 1 through 6 on this report is included on each sheet, and (3) each sheet is numbered and the number of sheets is recorded at the top of this form.

*as amended by additional quality assurance requirements found in Contract 68C37-91602 and Design Criteria BFN-50-7073 and BFN-50-C-7105.

FORM NIS-2 (Back)

WID: Work Orders (WOs) 04-716165-002 and 04-716165-003

9. Remarks Replaced valve per EDC 61548 including some adjacent piping.
Applicable Manufacturer's Data Reports to be attached

CERTIFICATE OF COMPLIANCE

I certify that the statements made in the report are correct and that this conforms to the requirements of the ASME Code, Section XI.

Type Code Symbol Stamp N/A

Certificate of Authorization No. N/A Expiration Date N/A

Signed Stephen C. Williams, System Engineer Date 5/15, 20 06
Owner or Owner's Designee Title

CERTIFICATE OF INSERVICE INSPECTION

I, the undersigned, holding a valid commission issued by the National Board of Boiler and Pressure Vessel Inspectors and the State or Province of Tennessee and employed by HSB CT of Connecticut have inspected the components described in this Owner's Report during the period 1/6/06 to 5/16/06, and state that to the best of my knowledge and belief, the Owner has performed examinations and taken corrective measures described in this Owner's Report in accordance with the requirements of the ASME Code, Section XI.

By signing this certificate neither the Inspector nor his employer makes any warranty, expressed or implied, concerning the examinations and corrective measures described in this Owner's Report. Furthermore, neither the Inspector nor his employer shall be liable in any manner for any personal injury or property damage or a loss of any kind arising from or connected with this inspection.

Inspector's Signature Commissions TN4011
National Board State Province, and Endorsements

Date 5/16 20 06

FORM NIS-2 OWNER'S REPORT FOR REPAIR/REPLACEMENT ACTIVITY
As Required by the Provisions of the ASME Code Section XI

1. Owner Tennessee Valley Authority (TVA) (Name)
1101 Market Street
Chattanooga, TN 37402-2801 (Address)

Date May 11, 2006

Sheet 1 of 1

2. Plant Browns Ferry Nuclear Plant (BFN) (Name)
P. O. Box 2000, Decatur, AL 35609-2000 (Address)

Unit 3

Design Change Notice (DCN) 62156,
Work Orders (WOs) 04-720059-000 and 04-720059-004
(Repair/Replacement Organization P.O. No., Job No., etc)

3. Work Performed by TVA-BFN (Name)
P. O. Box 2000, Decatur, AL 35609-2000 (Address)

Type Code Symbol Stamp N/A

Authorization No. N/A

Expiration Date N/A

4. Identification of System System 001,Main Steam System (ASME Code Class 1 equivalent)

5. (a) Applicable Construction Code USAS B31.1.0 19 67 * Edition, N/A Addenda, N/A Code Case

(b) Applicable Edition of Section XI Utilized for Repairs or Replacements 20 01 Edition, 2003 Addenda

(c) Applicable Section XI Code Case(s)

6. Identification of Components

Name of Component	Name of Manufacturer	Manufacturer Serial No.	National Board No.	Other Identification	Year Built	Corrected, Removed, or Installed	ASME Code Stamped (Yes or No)
Steam Leads Drain Outer Isolation Valve	Velan	922719	N/A	3-FCV-001-0056	N/A	Removed	No
Steam Leads Drain Outer Isolation Valve	Flowserve 04-31775-01	AZ-365	N/A	3-FCV-001-0056	N/A	Installed	No
piping	unknown	N/A	N/A	N/A	N/A	Removed	No
piping	Consolidated Power Supply	N/A	N/A	N/A	N/A	Installed	No

7. *Description of Work* *Replaced valve per DCN 62156 including some adjacent piping.*

8. Tests Conducted: Hydrostatic ☐ Pneumatic ☐ Nominal Operating Pressure ☒ Exempt ☐

Other ☐ Pressure N/A psi Test Temp. N/A °F

NOTE: Supplemental Sheets in form of lists, sketches, or drawings may be used, provided (1) size is 8½ in. X 11 in., (2) information in items 1 through 6 on this report is included on each sheet, and (3) each sheet is numbered and the number of sheets is recorded at the top of this form.

*as amended by additional quality assurance requirements found in Design Criteria BFN-50-7001 and BFN-50-C-7105.

FORM NIS-2 (Back)

WID: Work Orders (WOs) 04-720059-000 and 04-720059-004

9. Remarks Replaced valve per DCN 62156 including some adjacent piping.
Applicable Manufacturer's Data Reports to be attached

CERTIFICATE OF COMPLIANCE

I certify that the statements made in the report are correct and that this conforms to the requirements of the ASME Code, Section XI.

Type Code Symbol Stamp N/A

Certificate of Authorization No. N/A Expiration Date N/A

Signed Stephen C. Williams, System Engineer Date 5/15, 20 06
Owner or Owner's Designee, Title

CERTIFICATE OF INSERVICE INSPECTION

I, the undersigned, holding a valid commission issued by the National Board of Boiler and Pressure Vessel Inspectors and the State or Province of Tennessee and employed by HSB CT of Hartford Connecticut have inspected the components described in this Owner's Report during the period 2/15/06 to 5/31/06, and state that to the best of my knowledge and belief, the Owner has performed examinations and taken corrective measures described in this Owner's Report in accordance with the requirements of the ASME Code, Section XI.

By signing this certificate neither the Inspector nor his employer makes any warranty, expressed or implied, concerning the examinations and corrective measures described in this Owner's Report. Furthermore, neither the Inspector nor his employer shall be liable in any manner for any personal injury or property damage or a loss of any kind arising from or connected with this inspection.

Bruce M. Earnigh Commissions TN 2534
Inspector's Signature National Board, State, Province, and Endorsements

Date 5/31 20 06

FORM NIS-2 OWNER'S REPORT FOR REPAIR/REPLACEMENT ACTIVITY
As Required by the Provisions of the ASME Code Section XI

1. Owner Tennessee Valley Authority (TVA) (Name)
1101 Market Street
Chattanooga, TN 37402-2801 (Address)

Date May 11, 2006

Sheet 1 of 1

2. Plant Browns Ferry Nuclear Plant (BFN) (Name)
P. O. Box 2000, Decatur, AL 35609-2000 (Address)

Unit 3

Design Change Notice (DCN) 64390,
Work Orders (WOs) 05-717803-000 and 05-717803-001
(Repair/Replacement Organization P.O. No., Job No., etc.)

3. Work Performed by TVA-BFN (Name)
P. O. Box 2000, Decatur, AL 35609-2000 (Address)

Type Code Symbol Stamp N/A

Authorization No. N/A

Expiration Date N/A

4. Identification of System System 001, Main Steam System (ASME Code Class 2 equivalent)

5. (a) Applicable Construction Code USAS B31.1.0 19 67* Edition, N/A Addenda, N/A Code Case

(b) Applicable Edition of Section XI Utilized for Repairs or Replacements 20 01 Edition, 2003 Addenda

(c) Applicable Section XI Code Case(s)

6. Identification of Components

Name of Component	Name of Manufacturer	Manufacturer Serial No.	National Board No.	Other Identification	Year Built	Corrected, Removed, or Installed	ASME Code Stamped (Yes or No)
Main Steam to Off Gas Preheater check valve	FLOWSERVE	92AYM	N/A	3-CKV-001-0742	N/A	Removed	No
Main Steam to Off Gas Preheater check valve	FLOWSERVE	91AYM	N/A	3-CKV-001-0744	N/A	Removed	No
Main Steam to Off Gas Preheater isol valve	FLOWSERVE	E969A-1-1	N/A	3-SHV-001-0741	N/A	Removed	No
Main Steam to Off Gas Preheater isol valve	FLOWSERVE	E969A-1-2	N/A	3-SHV-001-0743	N/A	Removed	No
Main Steam piping	unknown	N/A	N/A	N/A	N/A	Removed	No
Main Steam piping	Consolidated Power Supply	N/A	N/A	N/A	N/A	Installed	No

7. Description of Work DCN 64390 removed 2" NPS piping and valves; replacement components <1" NPS.
Replacement items <1" NPS not required to be addressed in Repair/Replacement Plan.

8. Tests Conducted: Hydrostatic ☐ Pneumatic ☐ Nominal Operating Pressure ☒ Exempt ☐
Other ☐ Pressure N/A psi Test Temp. N/A °F

-SCW 5/31/06

NOTE: Supplemental Sheets in form of lists, sketches, or drawings may be used, provided (1) size is 8½ in. X 11 in., (2) information in items 1 through 6 on this report is included on each sheet, and (3) each sheet is numbered and the number of sheets is recorded at the top of this form.

*as amended by additional quality assurance requirements found in Contract 68C37-91602 and Design Criteria BFN-50-70xx and BFN-50-C-7105.

FORM NIS-2 (Back)

WID: Work Orders (WOs) 05-717803-000 and 05-717803-001

9. Remarks DCN 64390 removed 2" NPS piping and valves; replacement components <1" NPS.
Applicable Manufacturer's Data Reports to be attached
Replacement items <1" NPS not required to be addressed in Repair/Replacement Plan.

CERTIFICATE OF COMPLIANCE

I certify that the statements made in the report are correct and that this conforms to the requirements of the ASME Code, Section XI.

Type Code Symbol Stamp N/A

Certificate of Authorization No. N/A Expiration Date N/A

Signed [signature], System Engineer Date 5/18, 20 06
Owner or Owner's Designee, Title

CERTIFICATE OF INSERVICE INSPECTION

I, the undersigned, holding a valid commission issued by the National Board of Boiler and Pressure Vessel Inspectors and the State or Province of Tennessee and employed by HSB CT of HARTFORT Connecticut have inspected the components described in this Owner's Report during the period 12/6/05 to 5/31/06, and state that to the best of my knowledge and belief, the Owner has performed examinations and taken corrective measures described in this Owner's Report in accordance with the requirements of the ASME Code, Section XI.

By signing this certificate neither the Inspector nor his employer makes any warranty, expressed or implied, concerning the examinations and corrective measures described in this Owner's Report. Furthermore, neither the Inspector nor his employer shall be liable in any manner for any personal injury or property damage or a loss of any kind arising from or connected with this inspection.

Bruce M. Earnight Commissions TN2534
Inspector's Signature National Board, State, Province, and Endorsements

Date 5/31 20 06

FORM NIS-2 OWNER'S REPORT FOR REPAIR/REPLACEMENT ACTIVITY
As Required by the Provisions of the ASME Code Section XI

1. Owner Tennessee Valley Authority (TVA) (Name)
   1101 Market Street
   Chattanooga, TN 37402-2801 (Address)

   Date May 16, 2006

   Sheet 1 of 1

2. Plant Browns Ferry Nuclear Plant (BFN) (Name)
   P. O. Box 2000, Decatur, AL 35609-2000 (Address)

   Unit 3

   Work Order (WO) 02-006178-000
   Repair/Replacement Organization P.O. No., Job No., etc.

3. Work Performed by TVA-BFN (Name)
   P. O. Box 2000, Decatur, AL 35609-2000 (Address)

   Type Code Symbol Stamp N/A
   Authorization No. N/A
   Expiration Date N/A

4. Identification of System System 063, Standby Liquid Control System (ASME Code Class 2 equivalent)

5. (a) Applicable Construction Code USAS B31.1.0 19 67 * Edition, N/A Addenda, N/A Code Case

   (b) Applicable Edition of Section XI Utilized for Repairs or Replacements 20 01 Edition, 2003 Addenda

   (c) Applicable Section XI Code Case(s)

6. Identification of Components

Name of Component	Name of Manufacturer	Manufacturer Serial No.	National Board No.	Other Identification	Year Built	Corrected, Removed, or Installed	ASME Code Stamped (Yes or No)
Test Tank Shutoff Valve	Velan B09-054B- 13MK	N/A	N/A	3-SHV-063-0014	N/A	Removed	No
Test Tank Shutoff Valve	Velan B09-054B- 13MK	N/A	N/A	3-SHV-063-0014	N/A	Installed	No

7. Description of Work Replaced valve.

8. Tests Conducted: Hydrostatic ☐ Pneumatic ☐ Nominal Operating Pressure ☒ Exempt ☐
   Other ☐ Pressure N/A psi Test Temp. N/A °F

NOTE: Supplemental Sheets in form of lists, sketches, or drawings may be used, provided (1) size is 8½ in. X 11 in., (2) information in items 1 through 6 on this report is included on each sheet, and (3) each sheet is numbered and the number of sheets is recorded at the top of this form.

*as amended by additional quality assurance requirements found in Pkg 00292726-BFNX0 and Design Criteria BFN-50-7063 and BFN-50-C-7105.

FORM NIS-2 (Back)

WID: Work Order (WO) 02-006178-000

9. Remarks Replaced valve.

Applicable Manufacturer's Data Reports to be attached

CERTIFICATE OF COMPLIANCE

I certify that the statements made in the report are correct and that this conforms to the requirements of the ASME Code, Section XI.

Type Code Symbol Stamp N/A

Certificate of Authorization No. N/A Expiration Date N/A

Signed Stephen C. Willis System Engineer Date 5/16 , 20 06

Owner or Owner's Designee Title

CERTIFICATE OF INSERVICE INSPECTION

I, the undersigned, holding a valid commission issued by the National Board of Boiler and Pressure Vessel Inspectors and the State or Province of Tennessee and employed by HSB CT of Connecticut have inspected the components described in this Owner's Report during the period 3/8/06 to 5/18/06, and state that to the best of my knowledge and belief, the Owner has performed examinations and taken corrective measures described in this Owner's Report in accordance with the requirements of the ASME Code, Section XI.

By signing this certificate neither the Inspector nor his employer makes any warranty, expressed or implied, concerning the examinations and corrective measures described in this Owner's Report. Furthermore, neither the Inspector nor his employer shall be liable in any manner for any personal injury or property damage or a loss of any kind arising from or connected with this inspection.

Sam Flood Commissions TN 4011

Inspector's Signature National Board, State, Province, and Endorsements

Date 5/18 20 06

FORM NIS-2 OWNER'S REPORT FOR REPAIR/REPLACEMENT ACTIVITY
As Required by the Provisions of the ASME Code Section XI

1. Owner Tennessee Valley Authority (TVA) (Name)
1101 Market Street
Chattanooga, TN 37402-2801 (Address)

Date May 16, 2006

Sheet 1 of 1

2. Plant Browns Ferry Nuclear Plant (BFN) (Name)
P. O. Box 2000, Decatur, AL 35609-2000 (Address)

Unit 3

Work Order (WO) 04-720552-000
Repair/Replacement Organization P.O. No., Job No., etc

3. Work Performed by TVA-BFN (Name)
P. O. Box 2000, Decatur, AL 35609-2000 (Address)

Type Code Symbol Stamp N/A

Authorization No. N/A

Expiration Date N/A

4. Identification of System System 069, Reactor Water Cleanup (RWCU) System (ASME Code Class 1 equivalent)

5. (a) Applicable Construction Code (valve) ASME Section III Class 1, 1986 Edition, less N-stamp (piping) USAS B31.1.0 19 67 * Edition, N/A Addenda, N/A Code Case

(b) Applicable Edition of Section XI Utilized for Repairs or Replacements 20 01 Edition, 2003 Addenda

(c) Applicable Section XI Code Case(s)

6. Identification of Components

Name of Component	Name of Manufacturer	Manufacturer Serial No.	National Board No.	Other Identification	Year Built	Corrected, Removed, or Installed	ASME Code Stamped (Yes or No)
RWCU System Return Check Valve	Anchor Darling 4"-900# Lift Check	EZ862-1-2	N/A	3-CKV-069-0629	1997	‡	No
‡ - replaced valve disc							
valve disc	Anchor Darling	5	N/A	N/A	2002	Removed	No
valve disc	Anchor Darling	22309-1	N/A	N/A	2004	Installed	No

7. Description of Work Replaced valve disc

8. Tests Conducted: Hydrostatic ☐ Pneumatic ☐ Nominal Operating Pressure ☒ Exempt ☐

Other ☐ Pressure N/A psi Test Temp. N/A °F

NOTE: Supplemental Sheets in form of lists, sketches, or drawings may be used, provided (1) size is 8½ in. X 11 in., (2) information in items 1 through 6 on this report is included on each sheet, and (3) each sheet is numbered and the number of sheets is recorded at the top of this form.

*as amended by additional quality assurance requirements found in Contract P97N2R-204635 and Design Criteria BFN-50-7069 and BFN-50-C-7105.

FORM NIS-2 (Back)

WID: Work Order (WO) 04-720552-000

9. Remarks Replaced valve disc

Applicable Manufacturer's Data Reports to be attached

CERTIFICATE OF COMPLIANCE

I certify that the statements made in the report are correct and that this conforms to the requirements of the ASME Code, Section XI.

Type Code Symbol Stamp N/A

Certificate of Authorization No. N/A Expiration Date N/A

Signed [signature], System Engineer Date 5/16, 20 06

Owner or Owner's Designee, Title

CERTIFICATE OF INSERVICE INSPECTION

I, the undersigned, holding a valid commission issued by the National Board of Boiler and Pressure Vessel Inspectors and the State or Province of Tennessee and employed by HSB CT of Hartford Connecticut have inspected the components described in this Owner's Report during the period 3/7/06 to 5/31/06, and state that to the best of my knowledge and belief, the Owner has performed examinations and taken corrective measures described in this Owner's Report in accordance with the requirements of the ASME Code, Section XI.

By signing this certificate neither the Inspector nor his employer makes any warranty, expressed or implied, concerning the examinations and corrective measures described in this Owner's Report. Furthermore, neither the Inspector nor his employer shall be liable in any manner for any personal injury or property damage or a loss of any kind arising from or connected with this inspection.

Bruce M Earnigh Commissions TN2534

Inspector's Signature National Board, State, Province, and Endorsements

Date 5/31 20 06

FORM NIS-2 OWNER'S REPORT FOR REPAIR/REPLACEMENT ACTIVITY
As Required by the Provisions of the ASME Code Section XI

1. Owner Tennessee Valley Authority (TVA) (Name)
1101 Market Street
Chattanooga, TN 37402-2801 (Address)

Date May 17, 2006

Sheet 1 of 1

2. Plant Browns Ferry Nuclear Plant (BFN) (Name)
P. O. Box 2000, Decatur, AL 35609-2000 (Address)

Unit 3

Work Order (WO) 05-714949-000
Repair/Replacement Organization P O No Job No . etc

3. Work Performed by TVA-BFN (Name)
P. O. Box 2000, Decatur, AL 35609-2000 (Address)

Type Code Symbol Stamp N/A
Authorization No. N/A
Expiration Date N/A

4. Identification of System System 071, Reactor Core Isolation Cooling (RCIC) System (ASME Code Class 2 equivalent)

5. (a) Applicable Construction Code USAS B31.1.0 19 67 * Edition, N/A Addenda, N/A Code Case

(b) Applicable Edition of Section XI Utilized for Repairs or Replacements 19 95 Edition, 1996 Addenda

6. Identification of Components

Name of Component	Name of Manufacturer	Manufacturer Serial No.	National Board No.	Other Identification	Year Built	Corrected, Removed, or Installed	ASME Code Stamped (Yes or No)
Aux Steam Supply Check Valve	Powell 9061WE	N/A	N/A	3-CKV-071-0564	N/A	Corrected	No

7. Description of Work Machined sealing surfaces on the valve body and bonnet.

8. Tests Conducted: Hydrostatic ☐ Pneumatic ☐ Nominal Operating Pressure ☒ Exempt ☐
Other ☐ Pressure N/A psi Test Temp. N/A °F

NOTE: Supplemental Sheets in form of lists, sketches, or drawings may be used, provided (1) size is 8½ in. X 11 in., (2) information in items 1 through 6 on this report is included on each sheet, and (3) each sheet is numbered and the number of sheets is recorded at the top of this form.

*as amended by additional quality assurance requirements found in Contract 68C37-91602 and Design Criteria BFN-50-7071 and BFN-50-C-7105.

FORM NIS-2 (Back)

Work Order (WO) 05-714949-000

9. Remarks Machined sealing surfaces on the valve body and bonnet.
Applicable Manufacturer's Data Reports to be attached

CERTIFICATE OF COMPLIANCE

I certify that the statements made in the report are correct and this conforms to the rules of the ASME Code, Section XI.

Type Code Symbol Stamp N/A

Certificate of Authorization No. N/A Expiration Date N/A

Signed [signature], System Engineer Date 5/17, 20 06
Owner or Owner's Designee Title

CERTIFICATE OF INSERVICE INSPECTION

I, the undersigned, holding a valid commission issued by the National Board of Boiler and Pressure Vessel Inspectors and the State or Province of Tennessee and employed by HSB CT of Hartford Connecticut have inspected the components described in this Owner's Report during the period 5/24/05 to 5/30/06, and state that to the best of my knowledge and belief, the Owner has performed examinations and taken corrective measures described in this Owner's Report in accordance with the requirements of the ASME Code, Section XI.

By signing this certificate neither the Inspector nor his employer makes any warranty, expressed or implied, concerning the examinations and corrective measures described in this Owner's Report. Furthermore, neither the Inspector nor his employer shall be liable in any manner for any personal injury or property damage or a loss of any kind arising from or connected with this inspection.

Bruce M. Earnigh Commissions TN 2534
Inspector's Signature National Board, State, Province, and Endorsements

Date 5/30 20 06

FORM NIS-2 OWNER'S REPORT FOR REPAIR/REPLACEMENT ACTIVITY
As Required by the Provisions of the ASME Code Section XI

1. Owner Tennessee Valley Authority (TVA) (Name)
1101 Market Street
Chattanooga, TN 37402-2801 (Address)

Date May 17, 2006

Sheet 1 of 1

2. Plant Browns Ferry Nuclear Plant (BFN) (Name)
P. O. Box 2000, Decatur, AL 35609-2000 (Address)

Unit 3

Design Change Notice (DCN)T39906A & 61144,
Work Order (WO) 04-715368-000
Repair/Replacement Organization P.O. No., Job No., etc.

3. Work Performed by TVA-BFN (Name)
P. O. Box 2000, Decatur, AL 35609-2000 (Address)

Type Code Symbol Stamp N/A

Authorization No. N/A

Expiration Date N/A

4. Identification of System System 001, Main Steam System (ASME Code Class 1 equivalent)

5. (a) Applicable Construction Code USAS B31.1.0 19 67 * Edition, N/A Addenda, N/A Code Case

(b) Applicable Edition of Section XI Utilized for Repairs or Replacements 20 01 Edition, 2003 Addenda

(c) Applicable Section XI Code Case(s)

6. Identification of Components

Name of Component	Name of Manufacturer	Manufacturer Serial No.	National Board No.	Other Identification	Year Built	Corrected, Removed, or Installed	ASME Code Stamped (Yes or No)
Main Steam Line A Inbd Isol Vlv (MSIV)	Atwood & Morrill 20851-H-26	N/A	N/A	3-FCV-001-0014	N/A	‡	No
‡ - Replaced poppet valve disc and cover plate							
poppet valve disc	Atwood & Morrill	Unknown	N/A	3-FCV-001-0014	N/A	Removed	No
poppet valve disc	Atwood & Morrill	1	N/A	3-FCV-001-0014	N/A	Installed	No
cover plate	Atwood & Morrill	Unknown	N/A	3-FCV-001-0014	N/A	Removed	No
cover plate	Atwood & Morrill	1	N/A	3-FCV-001-0014	N/A	Installed	No

7. Description of Work Replaced poppet valve disc and cover plate with modified components

8. Tests Conducted: Hydrostatic ☐ Pneumatic ☐ Nominal Operating Pressure ☒ Exempt ☐

Other ☐ Pressure N/A psi Test Temp. N/A °F

NOTE: Supplemental Sheets in form of lists, sketches, or drawings may be used, provided (1) size is 8½ in. X 11 in., (2) information in items 1 through 6 on this report is included on each sheet, and (3) each sheet is numbered and the number of sheets is recorded at the top of this form.

*as amended by additional quality assurance requirements found in Contract 68C37-91750, GE Purchase Spec 21A1062 Rev. 0 and 21A1062AL Rev. 6 and Design Criteria BFN-50-7001 and BFN-50-C-7105.

FORM NIS-2 (Back)

WID: Work Order (WO) 04-715368-000

9. Remarks Replaced poppet valve disc and cover plate with modified components per DCNs T39906A & 61144

Applicable Manufacturer's Data Reports to be attached

CERTIFICATE OF COMPLIANCE

I certify that the statements made in the report are correct and that this conforms to the requirements of the ASME Code, Section XI.

Type Code Symbol Stamp N/A

Certificate of Authorization No. N/A Expiration Date N/A

Signed Stephen C. Williams, System Engineer Date 5/24, 2006

Owner or Owner's Designee Title

CERTIFICATE OF INSERVICE INSPECTION

I, the undersigned, holding a valid commission issued by the National Board of Boiler and Pressure Vessel Inspectors and the State or Province of Tennessee and employed by HSB CT of Hartford Connecticut have inspected the components described in this Owner's Report during the period 1/13/06 to 6/1/06, and state that to the best of my knowledge and belief, the Owner has performed examinations and taken corrective measures described in this Owner's Report in accordance with the requirements of the ASME Code, Section XI.

By signing this certificate neither the Inspector nor his employer makes any warranty, expressed or implied, concerning the examinations and corrective measures described in this Owner's Report. Furthermore, neither the Inspector nor his employer shall be liable in any manner for any personal injury or property damage or a loss of any kind arising from or connected with this inspection.

Bruce M. Earnigh Commissions TN2534

Inspector's Signature National Board, State Province and Endorsements

Date 6/1 20 06

FORM NIS-2 OWNER'S REPORT FOR REPAIR/REPLACEMENT ACTIVITY
As Required by the Provisions of the ASME Code Section XI

1. Owner Tennessee Valley Authority (TVA) (Name)
1101 Market Street
Chattanooga, TN 37402-2801 (Address)

Date May 18, 2006

Sheet 1 of 3

2. Plant Browns Ferry Nuclear Plant (BFN) (Name)
P. O. Box 2000, Decatur, AL 35609-2000 (Address)

Unit 3

Work Order (WO) 05-718042-000
Design Change Notice (DCN) S18883A
Repair/Replacement Organization P. O. No., Job No., etc

3. Work Performed by TVA-BFN (Name)
P. O. Box 2000, Decatur, AL 35609-2000 (Address)

Type Code Symbol Stamp N/A
Authorization No. N/A
Expiration Date N/A

4. Identification of System System 085, Control Rod Drive (CRD) System (ASME Code Class 1 equivalent)

5. (a) Applicable Construction Code ASME Section III 19 74 Edition, Winter 1975 Addenda, N207 1361-2 Code Case

(b) Applicable Edition of Section XI Utilized for Repairs or Replacements 20 01 Edition, 2003 Addenda

(c) Applicable Section XI Code Case(s)

6. Identification of Components

Name of Component	Name of Manufacturer	Manufacturer Serial No.	National Board No.	Other Identification	Year Built	Corrected, Removed, or Installed	ASME Code Stamped (Yes or No)
Control Rod Drive Mechanism 10-35	General Electric Nuclear Energy	A4325	N/A	3-CRDM-085-10-35	1996	Removed	Yes
Control Rod Drive Mechanism 10-35	General Electric Nuclear Energy	A4091	N/A	3-CRDM-085-10-35	1996	Installed	Yes
Control Rod Drive Mechanism 18-23	General Electric Nuclear Energy	A5418	N/A	3-CRDM-085-18-23	1996	Removed	Yes
Control Rod Drive Mechanism 18-23	General Electric Nuclear Energy	A4426	N/A	3-CRDM-085-18-23	1996	Installed	Yes
Control Rod Drive Mechanism 18-39	General Electric Nuclear Energy	A4833	N/A	3-CRDM-085-18-39	1996	Removed	Yes
Control Rod Drive Mechanism 18-39	General Electric Nuclear Energy	A4141	N/A	3-CRDM-085-18-39	1996	Installed	Yes
Identification of Components continued on Sheet 2							

7. Description of Work Replaced 24 Control Rod Drives (CRDMs) with refurbished BWR/6 CRDMs.
Replaced a total of three CRDM flange bolts, one bolt on three different drives.

8. Tests Conducted: Hydrostatic ☐ Pneumatic ☐ Nominal Operating Pressure ☒ Exempt ☐
Other ☐ Pressure N/A psi Test Temp. N/A °F

NOTE: Supplemental Sheets in form of lists, sketches, or drawings may be used, provided (1) size is 8½ in. X 11 in., (2) information in items 1 through 6 on this report is included on each sheet, and (3) each sheet is numbered and the number of sheets is recorded at the top of this form.

FORM NIS-2 (Back)

WID: Work Order (WO) 05-718042-000

9. Remarks Replaced 24 Control Rod Drives (CRDMs) with refurbished BWR/6 CRDMs. The vendor (GE) performed the refurbishment work.
Applicable Manufacturer's Data Reports to be attached

The N-2 data reports are attached. Functional testing was performed under 3-SR-3.1.3.5(A) & (B), 3-SR-3.1.4.1 and 0-TI-20.

Pressure testing was performed as part of 3-SI-3.3.1.A.

All CRDMs were previously in service at BFN, previous locations are documented in WO 05-718042-000.

Replaced a total of three CRDM flange bolts, one bolt on each of the following three drives. The bolting was replaced due to rounded heads.

3-CRDM-085-30-55

3-CRDM-085-42-39

3-CRDM-085-46-47

CERTIFICATE OF COMPLIANCE

I certify that the statements made in the report are correct and that this conforms to the requirements of the ASME Code, Section XI.

Type Code Symbol Stamp N/A

Certificate of Authorization No. N/A Expiration Date N/A

Signed Stephen C. Williams, System Engineer Date 5/18 , 20 06
Owner or Owner's Designee, Title

CERTIFICATE OF INSERVICE INSPECTION

I, the undersigned, holding a valid commission issued by the National Board of Boiler and Pressure Vessel Inspectors and the State or Province of Tennessee and employed by HSB CT of Hartford Connecticut have inspected the components described in this Owner's Report during the period 2/24/06 to 6/1/06, and state that to the best of my knowledge and belief, the Owner has performed examinations and taken corrective measures described in this Owner's Report in accordance with the requirements of the ASME Code, Section XI.

By signing this certificate neither the Inspector nor his employer makes any warranty, expressed or implied, concerning the examinations and corrective measures described in this Owner's Report. Furthermore, neither the Inspector nor his employer shall be liable in any manner for any personal injury or property damage or a loss of any kind arising from or connected with this inspection.

Bruce M. Earnigh Commissions TN 2534
Inspector's Signature National Board, State, Province, and Endorsements

Date 6/1 20 06

FORM NIS-2 OWNER'S REPORT FOR REPAIRS/REPLACEMENT ACTIVITY
SUPPLEMENTAL SHEET

1. Owner Tennessee Valley Authority (TVA) (Name)
1101 Market Street
Chattanooga, TN 37402-2801 (Address)

Date May 18, 2006

Sheet 2 of 3

2. Plant Browns Ferry Nuclear Plant (BFN) (Name)
P. O. Box 2000, Decatur, AL 35609-2000 (Address)

Unit 3

Work Order (WO) 05-718042-000
Design Change Notice (DCN) S18883A (Repair/Replacement Organization P.O. No., Job No., etc.)

3. Work Performed by TVA-BFN (Name)
P. O. Box 2000, Decatur, AL 35609-2000 (Address)

Type Code Symbol Stamp N/A
Authorization No. N/A
Expiration Date N/A

4. Identification of System System 085, Control Rod Drive System (ASME Code Class 1 equivalent)

5. (a) Applicable Construction Code ASME Section III 19 74 Edition, Winter 1975 Addenda, N207 1361-2 Code Case
(b) Applicable Edition of Section XI Utilized for Repairs or Replacements 2001 Edition, 2003 Addenda
(c) Applicable Section XI Code Case(s)

6. Identification of Components

Name of Component	Name of Manufacturer	Manufacturer Serial No.	National Board No.	Other Identification	Year Built	Corrected, Removed, or Installed	ASME Code Stamped (Yes or No)
Control Rod Drive Mechanism 30-11	General Electric Nuclear Energy	A5604	N/A	3-CRDM-085-30-11	1996	Removed	Yes
Control Rod Drive Mechanism 30-11	General Electric Nuclear Energy	A3644	N/A	3-CRDM-085-30-11	1996	Installed	Yes
Control Rod Drive Mechanism 30-51	General Electric Nuclear Energy	A5433	N/A	3-CRDM-085-30-51	1996	Removed	Yes
Control Rod Drive Mechanism 30-51	General Electric Nuclear Energy	A4307	N/A	3-CRDM-085-30-51	1996	Installed	Yes
Control Rod Drive Mechanism 30-55	General Electric Nuclear Energy	A2151	N/A	3-CRDM-085-30-55	1996	Removed	Yes
Control Rod Drive Mechanism 30-55	General Electric Nuclear Energy	A4812	N/A	3-CRDM-085-30-55	1996	Installed	Yes
Control Rod Drive Mechanism 34-51	General Electric Nuclear Energy	A4002	N/A	3-CRDM-085-34-51	1996	Removed	Yes
Control Rod Drive Mechanism 34-51	General Electric Nuclear Energy	A5646	N/A	3-CRDM-085-34-51	1996	Installed	Yes
Control Rod Drive Mechanism 42-39	General Electric Nuclear Energy	A3759	N/A	3-CRDM-085-42-39	1996	Removed	Yes
Control Rod Drive Mechanism 42-39	General Electric Nuclear Energy	A4814	N/A	3-CRDM-085-42-39	1996	Installed	Yes
Control Rod Drive Mechanism 46-15	General Electric Nuclear Energy	A5406	N/A	3-CRDM-085-46-15	1996	Removed	Yes
Control Rod Drive Mechanism 46-15	General Electric Nuclear Energy	A5111	N/A	3-CRDM-085-46-15	1996	Installed	Yes
Control Rod Drive Mechanism 46-47	General Electric Nuclear Energy	A4756	N/A	3-CRDM-085-46-47	1996	Removed	Yes
Control Rod Drive Mechanism 46-47	General Electric Nuclear Energy	A5712	N/A	3-CRDM-085-46-47	1996	Installed	Yes
Control Rod Drive Mechanism 50-27	General Electric Nuclear Energy	A5437	N/A	3-CRDM-085-50-27	1996	Removed	Yes
Control Rod Drive Mechanism 50-27	General Electric Nuclear Energy	A4846	N/A	3-CRDM-085-50-27	1996	Installed	Yes
Control Rod Drive Mechanism 02-19	General Electric Nuclear Energy	A4155	N/A	3-CRDM-085-02-19	1996	Removed	Yes
Control Rod Drive Mechanism 02-19	General Electric Nuclear Energy	A5234	N/A	3-CRDM-085-02-19	1996	Installed	Yes
Control Rod Drive Mechanism 02-23	General Electric Nuclear Energy	A5573	N/A	3-CRDM-085-02-23	1996	Removed	Yes
Control Rod Drive Mechanism 02-23	General Electric Nuclear Energy	A4688	N/A	3-CRDM-085-02-23	1996	Installed	Yes
Control Rod Drive Mechanism 06-39	General Electric Nuclear Energy	A5461	N/A	3-CRDM-085-06-39	1996	Removed	Yes
Control Rod Drive Mechanism 06-39	General Electric Nuclear Energy	A4702	N/A	3-CRDM-085-06-39	1996	Installed	Yes

Identification of Components continued on Sheet 3

FORM NIS-2, SUPPLEMENTAL SHEET (Back)

WID: Work Order (WO) 05-718042-000

Remarks See remarks on sheet 1.

FORM NIS-2 OWNER'S REPORT FOR REPAIRS/REPLACEMENT ACTIVITY
SUPPLEMENTAL SHEET

Owner Tennessee Valley Authority (TVA) (Name)
1101 Market Street
Chattanooga, TN 37402-2801 (Address)

Date May 18, 2006

Sheet 3 of 3

2. Plant Browns Ferry Nuclear Plant (BFN) (Name)
P. O. Box 2000, Decatur, AL 35609-2000 (Address)

Unit 3

Work Order (WO) 05-718042-000
Design Change Notice (DCN) S18883A
(Repair/Replacement Organization P.O. No., Job No., etc)

3. Work Performed by TVA-BFN (Name)
P. O. Box 2000, Decatur, AL 35609-2000 (Address)

Type Code Symbol Stamp N/A

Authorization No. N/A

Expiration Date N/A

4. Identification of System System 085, Control Rod Drive System (ASME Code Class 1 equivalent)

5. (a) Applicable Construction Code ASME Section III 19 74 Edition, Winter 1975 Addenda, N207 1361-2 Code Case
(b) Applicable Edition of Section XI Utilized for Repairs or Replacements 2001 Edition, 2003 Addenda
(c) Applicable Section XI Code Case(s)

6. Identification of Components

Name of Component	Name of Manufacturer	Manufacturer Serial No.	National Board No.	Other Identification	Year Built	Corrected, Removed, or Installed	ASME Code Stamped (Yes or No)
Control Rod Drive Mechanism 06-47	General Electric Nuclear Energy	A4227	N/A	3-CRDM-085-06-47	1996	Removed	Yes
Control Rod Drive Mechanism 06-47	General Electric Nuclear Energy	A3837	N/A	3-CRDM-085-06-47	1996	Installed	Yes
Control Rod Drive Mechanism 10-51	General Electric Nuclear Energy	A3872	N/A	3-CRDM-085-10-51	1996	Removed	Yes
Control Rod Drive Mechanism 10-51	General Electric Nuclear Energy	A5660	N/A	3-CRDM-085-10-51	1996	Installed	Yes
Control Rod Drive Mechanism 14-27	General Electric Nuclear Energy	A5231	N/A	3-CRDM-085-14-27	1996	Removed	Yes
Control Rod Drive Mechanism 14-27	General Electric Nuclear Energy	A4737	N/A	3-CRDM-085-14-27	1996	Installed	Yes
Control Rod Drive Mechanism 26-11	General Electric Nuclear Energy	A5678	N/A	3-CRDM-085-26-11	1996	Removed	Yes
Control Rod Drive Mechanism 26-11	General Electric Nuclear Energy	A5553	N/A	3-CRDM-085-26-11	1996	Installed	Yes
Control Rod Drive Mechanism 26-47	General Electric Nuclear Energy	A4445	N/A	3-CRDM-085-26-47	1996	Removed	Yes
Control Rod Drive Mechanism 26-47	General Electric Nuclear Energy	A5624	N/A	3-CRDM-085-26-47	1996	Installed	Yes
Control Rod Drive Mechanism 34-03	General Electric Nuclear Energy	A5688	N/A	3-CRDM-085-34-03	1996	Removed	Yes
Control Rod Drive Mechanism 34-03	General Electric Nuclear Energy	A5394	N/A	3-CRDM-085-34-03	1996	Installed	Yes
Control Rod Drive Mechanism 46-07	General Electric Nuclear Energy	A2134	N/A	3-CRDM-085-46-07	1996	Removed	Yes
Control Rod Drive Mechanism 46-07	General Electric Nuclear Energy	A4638	N/A	3-CRDM-085-46-07	1996	Installed	Yes
Control Rod Drive Mechanism 50-35	General Electric Nuclear Energy	A5709	N/A	3-CRDM-085-50-35	1996	Removed	Yes
Control Rod Drive Mechanism 50-35	General Electric Nuclear Energy	A3841	N/A	3-CRDM-085-50-35	1996	Installed	Yes
Control Rod Drive Mechanism 58-27	General Electric Nuclear Energy	A3611	N/A	3-CRDM-085-58-27	1996	Removed	Yes
Control Rod Drive Mechanism 58-27	General Electric Nuclear Energy	A5629	N/A	3-CRDM-085-58-27	1996	Installed	Yes
Control Rod Drive Mechanism 58-35	General Electric Nuclear Energy	A5576	N/A	3-CRDM-085-58-35	1996	Removed	Yes
Control Rod Drive Mechanism 58-35	General Electric Nuclear Energy	A4842	N/A	3-CRDM-085-58-35	1996	Installed	Yes

FORM NIS-2, SUPPLEMENTAL SHEET (Back)

WID: Work Order (WO) 05-718042-000

Remarks See remarks on sheet 1.

2 0 1 3 4 5 9 3 0 0

CORRECTED COPY

FORM N-2 NPT CERTIFICATE HOLDERS' DATA REPORT FOR NUCLEAR PART AND APPURTENANCES*
As required by the Provision of the ASME Code Rules, Section III, Div. I

1. Manufactured & Certified by: GE Company, 2117 Castle Hayne Rd., Wilmington, N.C. 28401
(Name and Address of NPT Certificate Holder)

(b) Manufactured for: BROWNS FERRY - 2, Near Athens, AL 35611
(Name and Address of N Certificate Holder for completed nuclear component

2. Identification-Certificate Holders's S/N of Part: A4091 Nat'l Bd. No. N/A

(a) Constructed According to Drawing No: 768E534G006 Dwg. Prepared by D. L. Peterson

(b) Description of Part Inspected: CONTROL ROD DRIVE, MODEL # 7RDB144FG002

(c) Applicable ASME Code: Section III, Edition 1974, Addenda Date W'75, Case No. N207 1361-2 Class 1

3. REMARKS: Standard part for use with Reactor. Hydrostatically tested at 1825 psi. min.
(Brief description of service for which component was designed)
CORRECTED COPY: CHANGED ITEM 2(a) and 2(b), Modified from 768E534G1 to G6 Drive.

SHEET 1 of 2

We certify that the statements in this report are correct and this vessel part or appurtenance as defined in the code conforms to the rules of construction of the ASME Code Section III. (The applicable Designed Specification and Stress Report are not the responsibility of the NPT Certificate Holder for parts. An NPT Certification Holder for appurtenances is responsible for furnishing a separate Design Specification and Stress Report if the appurtenance is not included in the component Design Specification and Stress Report).

DATE: 5/4, 19 88 Signed GE-NEBG-NF&CM-QA By [signature]
(NPT Certificate Holder)

Certificate Of Authorization Expires: 6/16/90 Certification of Authorization No.: NPT N-1151

CERTIFICATION OF DESIGN FOR APPURTENANCE

Design information on file at GE COMPANY, SAN JOSE, CALIFORNIA

Stress analysis report on file at GE COMPANY, SAN JOSE, CALIFORNIA
DC22A6253 Rev. 0
Design specification certified by BJORN HAABERG Prof. Eng. State CALIF. Reg. No. 15570
DC22A4912 Rev. 2
Stress analysis report certified by BETTADAPUR SRIHAR Prof. Eng. State CALIF. Reg. No. 18345

CERTIFICATION OF SHOP INSPECTION

I, the undersigned, holding a valid commission by the National Board of Boiler and Pressure Inspectors and/or the State or Province of NORTH CAROLINA and employed by DEPARTMENT OF LABOR of STATE OF NORTH CAROLINA have inspected the part of a pressure vessel described in this Partial Data Report on 1/14 19 88, and state that to the best of my knowledge and belief, the NPT Certificate Holder has constructed this part in accordance with the ASME Code Section III.

By signing this certificate, neither the Inspector nor his employer makes any warranty, expressed or implied, concerning the part described in the Partial Data Report. Furthermore, neither the Inspector nor his employer shall be liable in any manner for any personal injury or property damages or a loss of any kind arising from or connected with this inspection.

DATE 5/5, 19 88 [signature] Inspector's Signature N.C. 723, PA WC1766, OHIO National Board, State, Province and No.

*Supplemental sheets in form of lists, sketches or drawing may be used provided (1) size is 8-1/2" X 11", (2) information in 1-2 on this Data Report is included on each sheet, and (3) each sheet is numbered and number of sheets is recorded in Item 3. "REMARKSs"

(10/77)

TVA 20

2 0 1 3 4 7 3 7 0 0

2 0 1 3 1 5 9 3 0 0 1 CORRECTED COPY

FORM N-2 NPT CERTIFICATE HOLDERS' DATA REPORT FOR NUCLEAR PART AND APPURTENANCES*
As required by the Provision of the ASME Code Rules, Section III, Div. I

1. Manufactured & Certified by: GE Company, 2117 Castle Hayne Rd., Wilmington, N.C. 28401
(Name and Address of NPT Certificate Holder)

(b) Manufactured for: BROWNS FERRY - 2, Near Athens, AL 35611
(Name and Address of N Certificate Holder for completed nuclear component

2. Identification-Certificate Holders's S/N of Part: A4091 Nat'l Bd. N. N/A

(a) Constructed According to Drawing No: 768E534G006 Dwg. Prepared by D. L. Peterson

(b) Description of Part Inspected: CONTROL ROD DRIVE, MODEL # 7RDB144FG002

(C) Applicable ASME Code: Section III, Edition 1974, Addenda Date W'75 Case No. N207 1361-2 Class _

3. REMARKS: Standard part for use with Reactor. Hydrostatically tested at 1825 psi min.
(Brief description of service for which component was designed)

CORRECTED COPY: Changed Items 2(a) and 2(b), Modified from 768E534G1 to G6 Drive.

Sheet 2 of 2

1. Cap 166B9274P1
SA182-F316
3/8 thick X 1 1/16 OD

2. Indicator Tube 166B9313P1
SA312-TP316
3/4 sch 40-seamless pipe
0.113 wall thickness
1.065 max. dia.

3. Plug 159A1176P1
SA182-F304
1/4 thick x 0.812 OD

4. Flange 919D610P1 (719E474)
SA182-F304
3.37 thick x 9 5/8 OD

5. Base 137C5311P1
XM-19 SA479
7/8 thick x 2.875 Dia.

6. Ring Flange 137C8151P2
SA182-F304
1" thick x 5.0 OD x 1.75 ID

7. Cap Screw 117C4516P2
SA193-B6
6 ea. 1/2 dia. on 4 1/8 bolt circle

8. Plug 175A7961P1
SA182-F304
0.38 thick x 1.307 dia.

9. Nut 137C5934P1
XM-19 SA479
1.30 thick x 2.62 dia.

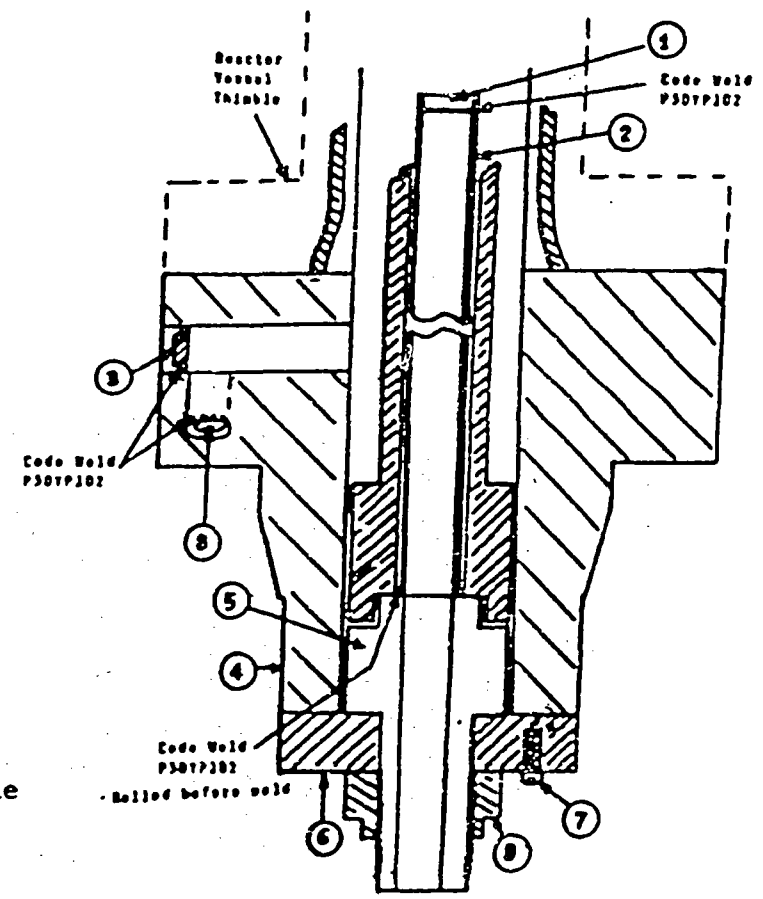

TVA 20

2 0 1 3 1 5 7 2 0 1

5002 1021

FORM N-2 NPT CERTIFICATE HOLDERS' DATA REPORT FOR NUCLEAR PART AND APPURTENANCES*

As required by the Provision of the ASME Code Rules, Section III, Div. I

1. Manufactured & Certified by : General Electric Company Nuclear Fuel & Components Manufacturing (GE NF & CM)
2117 Castle Hayne Road, Wilmington, North Carolina 28401
(Name and Address of NPT Certificate Holder)

(b) Manufactured for : TVA Chattanooga, Tennessee 37402-2127
(Name and Address of N Certificate Holder for completed nuclear component)

Identification - Certificate Holder's S/N of Part : A4428 Nat'l Bd. No. N/A

(a) Constructed According to Drawing No: 768E534G008 Rev 9 Dwg. Prepared by D. L. Peterson

(b) Description of Part Inspected: Control Rod Drive, Model # 7RDB144FG005

(c) Applicable ASME Code: Section III , Edition 1974 , Addenda Date W75 . Case No. N207 1361-2 Class 1

3. REMARKS: Standard part for use with Reactor. Hydrostatically tested at 1825 psi. min.
(Brief description of service for which component was designed)

Sheet 1 of 2

We certify that the statements in this report are correct and this vessel part or appurtenance as defined in the code conforms to the rules of construction of the ASME Code Section III. (The applicable Designed Specification and Stress Report are not the responsibility of the NPT Certificate Holder for parts. An NPT Certification Holder for appurtenances is responsible for furnishing a separate Design Specification and Stress Report if the appurtenance is not included in the component Design Specification and Stress Report).

Date: 10/06/92 Signed GE - NEBG - NF & CM - QA By [signature]
(NPT Certificate Holder) (QC QA Representive)

Certificate of Authorization Expires: 6/16/93 Certification of Authorization No. : NPT N - 1151

Certification of Design for Appurtenance

Design information on file at GE Company, San Jose, California

Stress analysis report on file at GE Company, San Jose, California

DC22A6253 Rev. 1
Design specification certified by Blom Haaberg Prof. Eng. State Calif. Reg. No. 15570

DC22A6254 Rev 1
Stress analysis report certified by Edward Yoshio Prof. Eng. State Calif. Reg. No. M018646

Certification of Shop Inspection

I, the undersigned, holding a valid commission by the National Board of Boiler and Pressure Inspectors and/or the State or Province of North Carolina and employed by Department of Labor of State of North Carolina have inspected the part of a pressure vessel described in this Partial Data Report on 9/22, 1992, and state that to the best of my knowledge and belief, the NPT Certificate Holder has constructed this part in accordance with the ASME Code Section III.
By signing this certificate, neither the Inspector nor his employer makes any warranty, expressed or implied, concerning the part described in the Partial Data Report. Furthermore, neither the Inspector nor his employer shall be liable in any manner for any personal injury or property damages or a loss of any kind arising from or connected with this Inspection.

10/6, 1992 [signature] NC 1231, Ohio, WC 3686 PA
Date Inspector's Signature National Board, State, Province And No.

*Supplemental sheets in form of lists, sketches or drawing may be used provided (1) size is 8-1/2" x 11", (2) information in 1-2 on this Data Report is included on each sheet, and (3) each sheet is numbered and number of sheets is recorded in Item 3. "REMARKS".

.07/00)

PJ 3/25/05

6022.1023

FORM N-2 NPT CERTIFICATE HOLDERS' DATA REPORT FOR NUCLEAR PART AND APPURTENANCES*

As required by the Provision of the ASME Code Rules, Section III, Div. I

1. Manufactured & Certified by : General Electric Company Nuclear Fuel & Components Manufacturing (GE NF & CM)
2117 Castle Hayne Road, Wilmington, North Carolina 28401
(Name and Address of NPT Certificate Holder)

(b) Manufactured for : TVA Chattanooga, Tennessee 37402-2127
(Name and Address of N Certificate Holder for completed nuclear component)

2. Identification - Certificate Holder's S/N of Part : A4428 Nat'l Bd. No. N/A

(a) Constructed According to Drawing No: 768E534G008 Rev 9 Dwg. Prepared by D. L. Peterson

(b) Description of Part Inspected: Control Rod Drive, Model # 7RDB144FG005

(c) Applicable ASME Code: Section III , Edition 1974 , Addenda Date W75 , Case No. N207 1361-2 Class 1

3. REMARKS: Standard part for use with Reactor. Hydrostatically tested at 1825 psi. min.
(Brief description of service for which component was designed)

Sheet 2 of 2

1. Cap 166B9274P001
SA182 - F304
3/8" thick x 1 1/16" OD

2. Indicator Tube 166B9313P001
SA312 - TP316
3/4" sch 40 - seamless pipe
0.113" wall thickness
1.065" max. dia.

3. Plug 159A1178P001
SA182 - F304
1/4" thick x 0.812" OD

4. Flange 919D610P001 (719E474)
SA182 - F304
3.37" thick x 9 5/8" OD

5. Base 137C5311P001
SA182 - F304
7/8" thick x 2.875" dia.

6. Ring Flange 114B5122P002, P003
137C8151P001, P002
SA182 - F304
1" thick x 5.0" OD x 1.75" ID

7. Cap Screw 117C4516P002
SA193 - B6
6 ea. 1/2" dia. on 4 1/8" bolt circle

8. Plug 175A7961P001
SA182 - F304
0.38" thick x 1.307" dia.

9. Nut 137C5934P001
XM - 19 SA479
1.30" thick x 2.62" dia

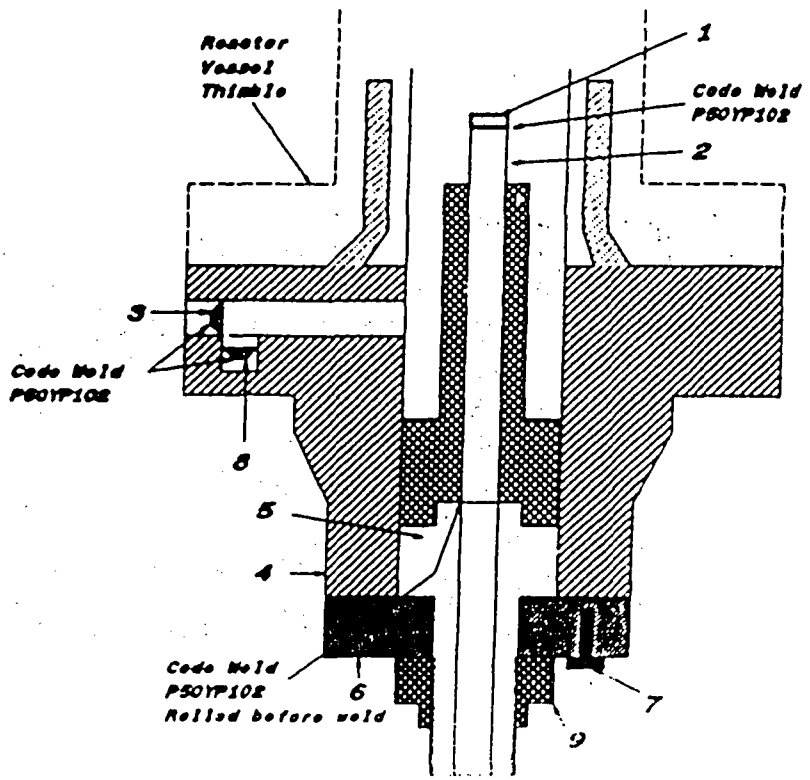

2 0 1 3 4 5 9 5 2 0

CORRECTED COPY

FORM N-2 NPT CERTIFICATE HOLDERS' DATA REPORT FOR NUCLEAR PART AND APPURTENANCES*
As required by the Provision of the ASME Code Rules, Section III, Div. I

1. Manufactured & Certified by: GE Company, 2117 Castle Hayne Rd., Wilmington, N.C. 28401
(Name and Address of NPT Certificate Holder)

(b) Manufactured for: BROWNS FERRY - 2, Near Athens, AL 35611
(Name and Address of N Certificate Holder for completed nuclear component

2. Identification-Certificate Holders's S/N of Part: A4141 Nat'l Bd. No. N/A

(a) Constructed According to Drawing No: 768E534G006 Dwg. Prepared by D. L. Peterson

(b) Description of Part Inspected: CONTROL ROD DRIVE, MODEL # 7RDB144FG002

(c) Applicable ASME Code: Section III, Edition 1974, Addenda Date W'75, Case No. N207 1361-2 Class

3. REMARKS: Standard part for use with Reactor. Hydrostatically tested at 1825 psi. min.
(Brief description of service for which component was designed)

CORRECTED COPY: CHANGED ITEM 2(a) and 2(b), Modified from 768E534G1 to G6 Drive.

SHEET 1 of 2

We certify that the statements in this report are correct and this vessel part or appurtenance as defined in the code conforms to the rules of construction of the ASME Code Section III (The applicable Designed Specification and Stress Report are not the responsibility of the NPT Certificate Holder for parts. An NPT Certification Holder for appurtenances is responsible for furnishing a separate Design Specification and Stress Report if the appurtenance is not included in the component Design Specification and Stress Report).

DATE: 5/4, 19 88 Signed GE-NEBG-NF&CM-QA By
(NPT Certificate Holder)

Certificate Of Authorization Expires: 6/16/90 Certification of Authorization No.: NPT N-1151

CERTIFICATION OF DESIGN FOR APPURTENANCE

Design information on file at GE COMPANY, SAN JOSE, CALIFORNIA

Stress analysis report on file at GE COMPANY, SAN JOSE, CALIFORNIA
DC22A6253 Rev. 0
Design specification certified by BJORN HAABERG Prof. Eng. State CALIF. Reg. No. 15570
DC22A4912 Rev. 2
Stress analysis report certified by BETTADAPUR SRDHAR Prof. Eng. State CALIF. Reg. No. 18345

CERTIFICATION OF SHOP INSPECTION

I, the undersigned, holding a valid commission by the National Board of Boiler and Pressure Inspectors and/or the State or Province of NORTH CAROLINA and employed by DEPARTMENT OF LABOR of STATE OF NORTH CAROLINA have inspected the part of a pressure vessel described in this Partial Data Report on 12/2 19 87, and state that to the best of my knowledge and belief, the NPT Certificate Holder has constructed this part in accordance with the ASME Code Section III.

By signing this certificate, neither the Inspector nor his employer makes any warranty, expressed or implied, concerning the part described in the Partial Data Report. Furthermore, neither the Inspector nor his employer shall be liable in any manner for any personal injury or property damages or a loss of any kind arising from or connected with this inspection.

N.C. 723, PA WC1766, OHIO

DATE 5/5, 19 88 Inspector's Signature National Board, State, Province and No

*Supplemental sheets in form of lists, sketches or drawing may be used provided (1) size is 8-1/2" X 11", (2) information in 1-2 on this Data Report is included on each sheet, and (3) each sheet is numbered and number of sheets is recorded in Item 3. "REMARKSs"

(10/77)

TVA 20

2 0 1 3 4 5 7 5 0 1 CORRECTED COPY

FORM N-2 NPT CERTIFICATE HOLDERS' DATA REPORT FOR NUCLEAR PART AND APPURTENANCES
As required by the Provision of the ASME Code Rules, Section III, Div. I

1. Manufactured & Certified by: GE Company, 2117 Castle Hayne Rd., Wilmington, N.C. 28401
(Name and Address of NPT Certificate Holder)
(b) Manufactured for: BROWNS FERRY - 2, Near Athens, AL 35611
(Name and Address of N Certificate Holder for completed nuclear component)

2. Identification-Certificate Holders's S/N of Part: A4141 Nat'l Bd. N. N/A

(a) Constructed According to Drawing No: 768E534G006 Dwg. Prepared by D. L. Peterson

(b) Description of Part Inspected: CONTROL ROD DRIVE, MODEL # 7RDB144FG002

(C) Applicable ASME Code: Section III, Edition 1974, Addenda Date W'75 Case No. N207 1361-2 Class 1

3. REMARKS: Standard part for use with Reactor. Hydrostatically tested at 1825 psi. min.
(Brief description of service for which component was designed)
CORRECTED COPY: Changed Items 2(a) and 2(b), Modified from 768E534G1 to G6 Drive.

Sheet 2 of 2

1. Cap 166B9274P1
SA182-F316
3/8 thick X 1 1/16 OD

2. Indicator Tube 166B9313P1
SA312-TP316
3/4 sch 40-seamless pipe
0.113 wall thickness
1.065 max. dia.

3. Plug 159A1176P1
SA182-F304
1/4 thick x 0.812 OD

4. Flange 919D610P1 (719E474)
SA182-F304
3.37 thick x 9 5/8 OD

5. Base 137C5311P1
XM-19 SA479
7/8 thick x 2.875 Dia.

6. Ring Flange 137C8151P2
SA182-F304
1" thick x 5.0 OD x 1.75 ID

7. Cap Screw 117C4516P2
SA193-B6
6 ea. 1/2 dia. on 4 1/8 bolt circle

8. Plug 175A7961P1
SA182-F304
0.38 thick x 1.307 dia.

9. Nut 137C5934P1
XM-19 SA479
1.30 thick x 2.62 dia.

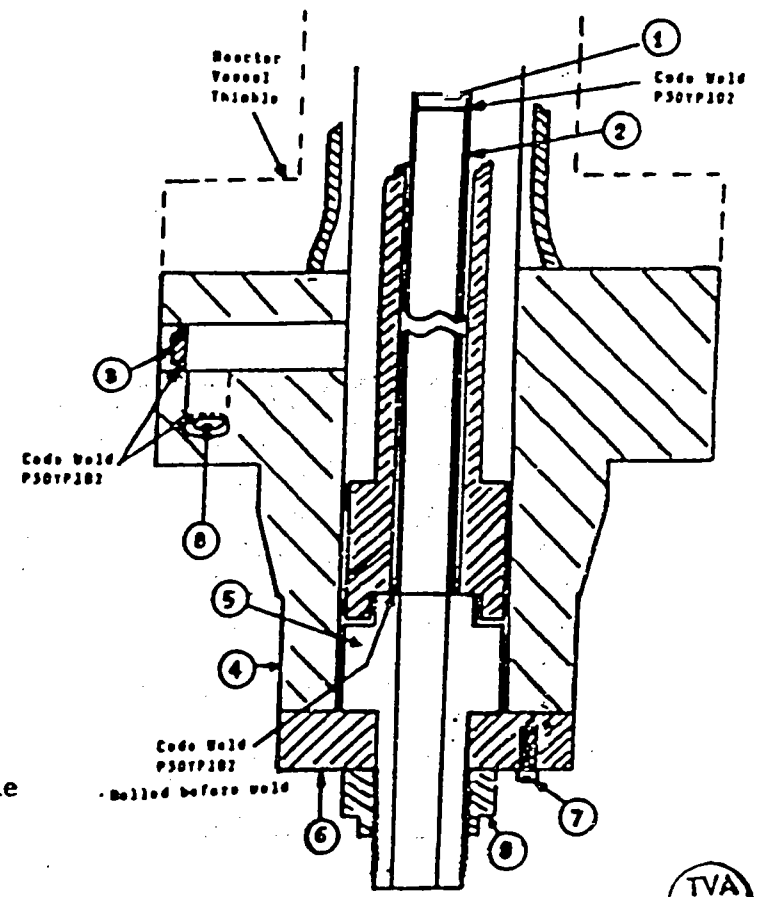

TVA 20

FORM N-2 NPT CERTIFICATE HOLDERS' DATA REPORT FOR NUCLEAR PART AND APPURTENANCES*
As required by the Provision of the ASME Code Rules, Section III, Div. I

1. Manufactured & Certified by : General Electric Company Nuclear Fuel & Components Manufacturing (GE NF & CM)
2117 Castle Hayne Road, Wilmington, North Carolina 28401
(Name and Address of NPT Certificate Holder)

(b) Manufactured for : TVA Chattanooga, Tennessee 37402-2127
(Name and Address of N Certificate Holder for completed nuclear component)

2. Identification - Certificate Holder's S/N of Part : A3644 Nat'l Bd. No. N/A

(a) Constructed According to Drawing No: 768E534G008 Rev 0 Dwg. Prepared by D. L. Peterson

(b) Description of Part Inspected: Control Rod Drive, Model # 7RDB144FG005

(c) Applicable ASME Code: Section III , Edition 1974 , Addenda Date W75 , Case No. N207 1361-2 Class 1

3. REMARKS: Standard part for use with Reactor. Hydrostatically tested at 1825 psi. min.
(Brief description of service for which component was designed)

Sheet 1 of 2

We certify that the statements in this report are correct and this vessel part or appurtenance as defined in the code conforms to the rules of construction of the ASME Code Section III. (The applicable Designed Specification and Stress Report are not the responsibility of the NPT Certificate Holder for parts. An NPT Certification Holder for appurtenances is responsible for furnishing a separate Design Specification and Stress Report if the appurtenance is not included in the component Design Specification and Stress Report).

Date: 11/19/92 Signed GE-NEBG-NF & CM-QA By
(NPT Certificate Holder) (QC/QA Representive)

Certificate of Authorization Expires: 6/16/93 Certification of Authorization No. : NPT N-1151

Certification of Design for Appurtenance

Design information on file at GE Company, San Jose, California

Stress analysis report on file at GE Company, San Jose, California

DC22A8253 Rev. 1
Design specification certified by Biorn Hasberg Prof. Eng. State Calif. Reg. No. 15570

DC22A8254 Rev 1
Stress analysis report certified by Edward Yoshio Prof. Eng. State Calif. Reg. No. M018646

Certification of Shop Inspection

I, the undersigned, holding a valid commission by the National Board of Boiler and Pressure Inspectors and/or the State or Province of North Carolina and employed by Department of Labor of State of North Carolina have inspected the part of a pressure vessel described in this Partial Data Report on 11/05, 1992, and state that to the best of my knowledge and belief, the NPT Certificate Holder has constructed this part in accordance with the ASME Code Section III.
By signing this certificate, neither the Inspector nor his employer makes any warranty, expressed or implied, concerning the part described in the Partial Data Report. Furthermore, neither the Inspector nor his employer shall be liable in any manner for any personal injury or property damages or a loss of any kind arising from or connected with this Inspection.

11/19, 1992 — Date
Inspector's Signature
NC 1231, Ohio, WC 3688 PA — National Board, State, Province And No.

Supplemental sheets in form of lists, sketches or drawing may be used provided (1) size is 8-1/2" x 11", (2) information in 1-2 on this Data Report is included on each sheet, and (3) each sheet is numbered and number of sheets is recorded in Item 3. "REMARKS".

(07/90)

3/25/05

5022.1932

FORM N-2 NPT CERTIFICATE HOLDERS' DATA REPORT FOR NUCLEAR PART AND APPURTENANCES*
As required by the Provision of the ASME Code Rules, Section III, Div. I

1. Manufactured & Certified by : General Electric Company Nuclear Fuel & Components Manufacturing (GE NF & CM)
2117 Castle Hayne Road, Wilmington, North Carolina 28401
(Name and Address of NPT Certificate Holder)

(b) Manufactured for : TVA Chattanooga, Tennessee 37402-2127
(Name and Address of N Certificate Holder for completed nuclear component)

2. Identification - Certificate Holder's S/N of Part : A3644 Nat'l Bd. No. N/A

(a) Constructed According to Drawing No: 768E534G008 Rev 0 Dwg. Prepared by D. L. Peterson

(b) Description of Part Inspected: Control Rod Drive, Model # 7RDB144FG005

(c) Applicable ASME Code: Section III , Edition 1974 , Addenda Date W75 , Case No. N207 1361-2 Class 1

3. REMARKS: Standard part for use with Reactor. Hydrostatically tested at 1825 psi. min.
(Brief description of service for which component was designed)

Sheet 2 of 2

1. Cap 186B9274P001
SA182 - F304
3/8" thick x 1 1/16" OD

2. Indicator Tube 186B9313P001
SA312 - TP316
3/4" sch 40 - seamless pipe
0.113" wall thickness
1.065" max. dia.

3. Plug 159A1178P001
SA182 - F304
1/4" thick x 0.812" OD

4. Flange 918D610P001 (718E474)
SA182 - F304
3.37" thick x 9 5/8" OD

5. Base 137C5311P001
SA182 - F304
7/8" thick x 2.875" dia.

6. Ring Flange 114B5122P002, P003
137C8151P001, P002
SA182 - F304
1" thick x 5.0" OD x 1.75" ID

7. Cap Screw 117C4516P002
SA193 - B6
6 ea. 1/2" dia. on 4 1/8" bolt circle

8. Plug 175A7961P001
SA182 - F304
0.38" thick x 1.307" dia.

9. Nut 137C5934P001
XM - 19 SA479
1.30" thick x 2.62" dia.

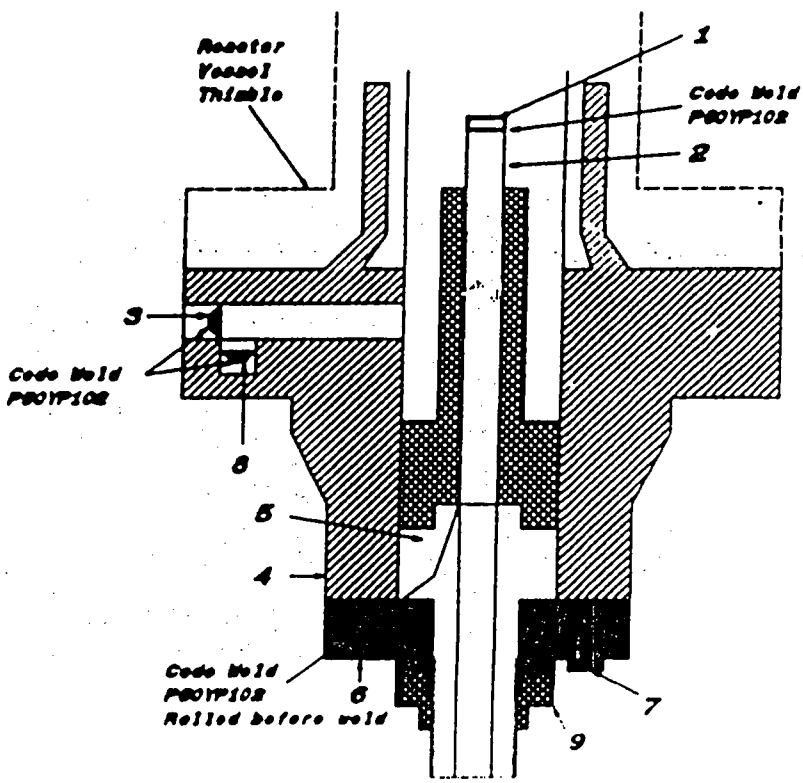

2 0 1 3 4 5 3 7 0

CORRECTED COPY

FORM N-2 NPT CERTIFICATE HOLDERS' DATA REPORT FOR NUCLEAR PART AND APPURTENANCES*
As required by the Provision of the ASME Code Rules, Section III, Div. I

1. Manufactured & Certified by: GE Company, 2117 Castle Hayne Rd., Wilmington, N.C. 28401
(Name and Address of NPT Certificate Holder)

(b) Manufactured for: BROWNS FERRY - 2, Near Athens, AL 35611
(Name and Address of N Certificate Holder for completed nuclear component)

2. Identification-Certificate Holders's S/N of Part: A4307 Nat'l Bd. No. N/A

(a) Constructed According to Drawing No: 768E534G006 Dwg. Prepared by D. L. Peterson

(b) Description of Part Inspected: CONTROL ROD DRIVE, MODEL # 7RDB144FG002

(c) Applicable ASME Code: Section III, Edition 1974, Addenda Date W'75, Case No. N207 1361-2 Class 1

3. REMARKS: Standard part for use with Reactor. Hydrostatically tested at 1825 psi. min.
(Brief description of service for which component was designed)
CORRECTED COPY: CHANGED ITEM 2(a) and 2(b), Modified from 768E534G1 to G6 Drive.

SHEET 1 of 2

We certify that the statements in this report are correct and this vessel part or appurtenance as defined in the code conforms to the rules of construction of the ASME Code Section III. (The applicable Designed Specification and Stress Report are not the responsibility of the NPT Certificate Holder for parts. An NPT Certification Holder for appurtenances is responsible for furnishing a separate Design Specification and Stress Report if the appurtenance is not included in the component Design Specification and Stress Report).

DATE: 5/3, 19 88 Signed GE-NEBG-NF&CM-QA By J. E. Mitzelmann
(NPT Certificate Holder)

Certificate Of Authorization Expires: 6/16/90 Certification of Authorization No.: NPT N-1151

CERTIFICATION OF DESIGN FOR APPURTENANCE

Design information on file at GE COMPANY, SAN JOSE, CALIFORNIA

Stress analysis report on file at GE COMPANY, SAN JOSE, CALIFORNIA

DC22A6253 Rev. 0
Design specification certified by BJORN HAABERG Prof. Eng. State CALIF. Reg. No. 15570

DC22A4912 Rev. 2
Stress analysis report certified by BETTADAPUR SRIDHAR Prof. Eng. State CALIF. Reg. No. 18345

CERTIFICATION OF SHOP INSPECTION

I, the undersigned, holding a valid commission by the National Board of Boiler and Pressure Inspectors and/or the State or Province of NORTH CAROLINA and employed by DEPARTMENT OF LABOR of STATE OF NORTH CAROLINA have inspected the part of a pressure vessel described in this Partial Data Report on 2/5 19 88 and state that to the best of my knowledge and belief, the NPT Certificate Holder has constructed this part in accordance with the ASME Code Section III.

By signing this certificate, neither the Inspector nor his employer makes any warranty, expressed or implied, concerning the part described in the Partial Data Report. Furthermore, neither the Inspector nor his employer shall be liable in any manner for any personal injury or property damages or a loss of any kind arising from or connected with this inspection.

5/3, 19 88 Ed Stovall N.C. 723, PA.WC1766, OHIO

DATE Inspector's Signature National Board, State, Province and No.

*Supplemental sheets in form of lists, sketches or drawing may be used provided (1) size is 8-1/2" X 11", (2) information in 1-2 on this Data Report is included on each sheet, and (3) each sheet is numbered and number of sheets is recorded in Item 3. "REMARKSs"

(10/77)

TVA 20

2 0 1 5 1 5 7 3 0 0 1

CORRECTED COPY

FORM N-2 NPT CERTIFICATE HOLDERS' DATA REPORT FOR NUCLEAR PART AND APPURTENANCES*
As required by the Provision of the ASME Code Rules, Section III, Div. I

1. Manufactured & Certified by: GE Company, 2117 Castle Hayne Rd., Wilmington, N.C. 28401
(Name and Address of NPT Certificate Holder)

(b) Manufactured for: BROWNS FERRY - 2, Near Athens, AL 35611
(Name and Address of N Certificate Holder for completed nuclear component)

2. Identification-Certificate Holders's S/N of Part: A4307 Nat'l Bd. N. N/A

(a) Constructed According to Drawing No: 768E534G006 Dwg. Prepared by D. L. Peterson

(b) Description of Part Inspected: CONTROL ROD DRIVE, MODEL # 7RDB144FG002

(C) Applicable ASME Code: Section III, Edition 1974, Addenda Date W'75 Case No. N207 1361-2 Class 1

3. REMARKS: Standard part for use with Reactor. Hydrostatically tested at 1825 psi. min.
(Brief description of service for which component was designed)

CORRECTED COPY: Changed Items 2(a) and 2(b), Modified from 768E534G1 to G6 Drive.

Sheet 2 of 2

1. Cap 166B9274P1
SA182-F316
3/8 thick X 1 1/16 OD

2. Indicator Tube 166B9313P1
SA312-TP316
3/4 sch 40-seamless pipe
0.113 wall thickness
1.065 max. dia.

3. Plug 159A1176P1
SA182-F304
1/4 thick x 0.812 OD

4. Flange 919D610P1 (719E474)
SA182-F304
3.37 thick x 9 5/8 OD

5. Base 137C5311P1
XM-19 SA479
7/8 thick x 2.875 Dia.

6. Ring Flange 137C8151P2
SA182-F304
1" thick x 5.0 OD x 1.75 ID

7. Cap Screw 117C4516P2
SA193-B6
6 ea. 1/2 dia. on 4 1/8 bolt circle

8. Plug 175A7961P1
SA182-F304
0.38 thick x 1.307 dia.

9. Nut 137C5934P1
XM-19 SA479
1.30 thick x 2.62 dia.

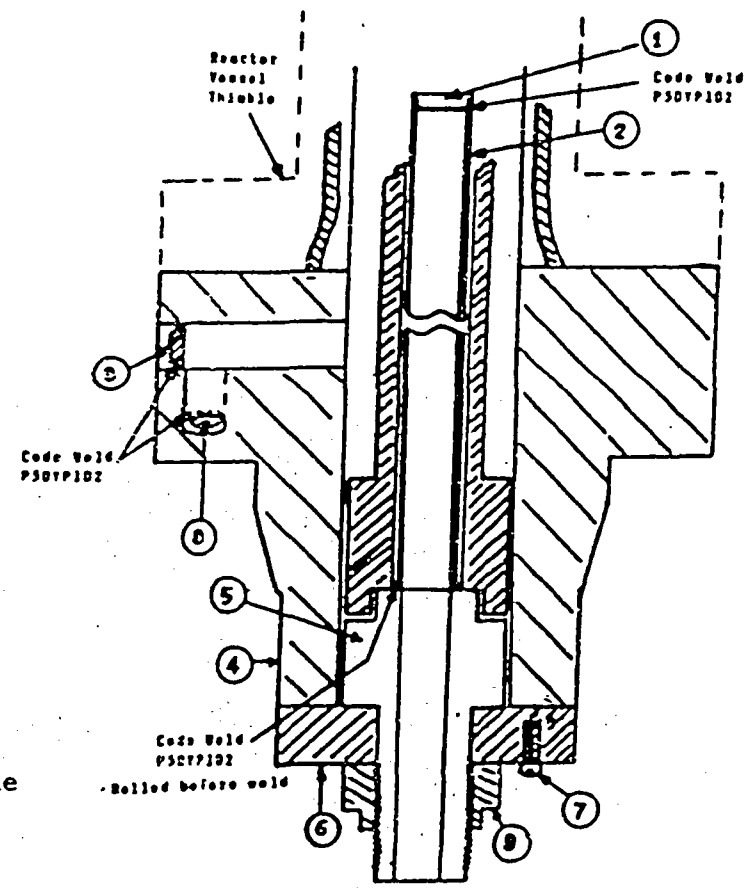

CORRECTED COPY

2 0 1 3 4 5 1 3 0 0 7

FORM N-2 NPT CERTIFICATE HOLDERS' DATA REPORT FOR NUCLEAR PART AND APPURTENANCES*
As required by the Provision of the ASME Code Rules, Section III, Div. I

1. Manufactured & Certified by: GE Company, 2117 Castle Hayne Rd., Wilmington, N.C. 28401
(Name and Address of NPT Certificate Holder)

(b) Manufactured for: BROWNS FERRY - 2, Near Athens, AL 35611
(Name and Address of N Certificate Holder for completed nuclear compone

2. Identification-Certificate Holders's S/N of Part: A4812 Nat'l Bd. No. N/A

(a) Constructed According to Drawing No: 768E534G006 Dwg. Prepared by D. L. Peters

(b) Description of Part Inspected: CONTROL ROD DRIVE, MODEL # 7RDB144FG002

(c) Applicable ASME Code: Section III, Edition 1974, Addenda Date W'75, Case No. N207 1361-2 Clas

3. REMARKS: Standard part for use with Reactor. Hydrostatically tested at 1825 psi. min.
(Brief description of service for which component was designed)
CORRECTED COPY: CHANGED ITEM 2(a) and 2(b), Modified from 768E534G1 to G6 Drive.

SHEET 1 of 2

We certify that the statements in this report are correct and this vessel part or appurtena as defined in the code conforms to the rules of construction of the ASME Code Section I (The applicable Designed Specification and Stress Report are not the responsibility of the Certificate Holder for parts. An NPT Certification Holder for appurtenances is responsib for furnishing a separate Design Specification and Stress Report if the appurtenance is included in the component Design Specification and Stress Report).

DATE: 4/14, 19 88 Signed GE-NEBG-NF&CM-QA By J. Ottendorfer
(NPT Certificate Holder)

Certificate Of Authorization Expires: 6/16/90 Certification of Authorization No.: NPT N-11

CERTIFICATION OF DESIGN FOR APPURTENANCE

Design information on file at GE COMPANY, SAN JOSE, CALIFORNIA

Stress analysis report on file at GE COMPANY, SAN JOSE, CALIFORNIA
DC22A6253 Rev. 0
Design specification certified by BJORN HAABERG Prof. Eng. State CALIF. Reg. No. 15570
DC22A4912 Rev. 2
Stress analysis report certified by BETTADAPUR SRIDHAR Prof. Eng. State CALIF. Reg. No. 18345

CERTIFICATION OF SHOP INSPECTION

I, the undersigned, holding a valid commission by the National Board of Boiler and Pressur Inspectors and/or the State or Province of NORTH CAROLINA and employed by DEPARTMENT OF LAB of STATE OF NORTH CAROLINA have inspected the part of a pressure vessel described in thi Partial Data Report on 5/5 1982, and state that to the best of my knowled and belief, the NPT Certificate Holder has constructed this part in accordance with the AS Code Section III.

By signing this certificate, neither the Inspector nor his employer makes any warrant expressed or implied, concerning the part described in the Partial Data Report. Furthermore neither the Inspector nor his employer shall be liable in any manner for any personal injur or property damages or a loss of any kind arising from or connected with this inspection.

DATE 4/15, 19 88 Inspector's Signature N.C. 723, PA WC1766, OHIO National Board, State, Province and

*Supplemental sheets in form of lists, sketches or drawing may be used provided (1) size is 8-1/2" X 11", (2) information in 1-2 on this Data Report is included on each sheet, and (3) each sheet is numbered and number of sheets is recorded in Item 3. "REMARKSs"

(10/77)

TVA 63

1417

2 2 1 7 4 5 3 2 0 1

FORM N-2 NPT CERTIFICATE HOLDERS' DATA REPORT FOR NUCLEAR PART AND APPURTENANCES*
As required by the Provision of the ASME Code Rules, Section III, Div. I

1. Manufactured & Certified by: GE Company, 2117 Castle Hayne Rd., Wilmington, N.C. 28401
(Name and Address of NPT Certificate Holder)

(b) Manufactured for: BROWNS FERRY - 2, Near Athens, AL 35611
(Name and Address of N Certificate Holder for completed nuclear component

2. Identification-Certificate Holders's S/N of Part: A4812 Nat'l Bd. N. N/A

(a) Constructed According to Drawing No: 768E534G006 Dwg. Prepared by D. L. Peterson

(b) Description of Part Inspected: CONTROL ROD DRIVE, MODEL # 7RDB144FG002

(C) Applicable ASME Code: Section III, Edition 1974, Addenda Date W'75 Case No. 1361-2 Class N207

3. REMARKS: Standard part for use with Reactor. Hydrostatically tested at 1825 psi. min.
(Brief description of service for which component was designed)
CORRECTED COPY: Changed Items 2(a) and 2(b), Modified from 768E534G1 to G6 Drive.

Sheet 2 of 2

1. Cap 166B9274P1
SA182-F316
3/8 thick X 1 1/16 OD

2. Indicator Tube 166B9313P1
SA312-TP316
3/4 sch 40-seamless pipe
0.113 wall thickness
1.065 max. dia.

3. Plug 159A1176P1
SA182-F304
1/4 thick x 0.812 OD

4. Flange 919D610P1 (719E474)
SA182-F304
3.37 thick x 9 5/8 OD

5. Base 137C5311P1
XM-19 SA479
7/8 thick x 2.875 Dia.

6. Ring Flange 137C8151P2
SA182-F304
1" thick x 5.0 OD x 1.75 ID

7. Cap Screw 117C4516P2
SA193-B6
6 ea. 1/2 dia. on 4 1/8 bolt circle

8. Plug 175A7961P1
SA182-F304
0.38 thick x 1.307 dia.

9. Nut 137C5934P1
XM-19 SA479
1.30 thick x 2.62 dia.

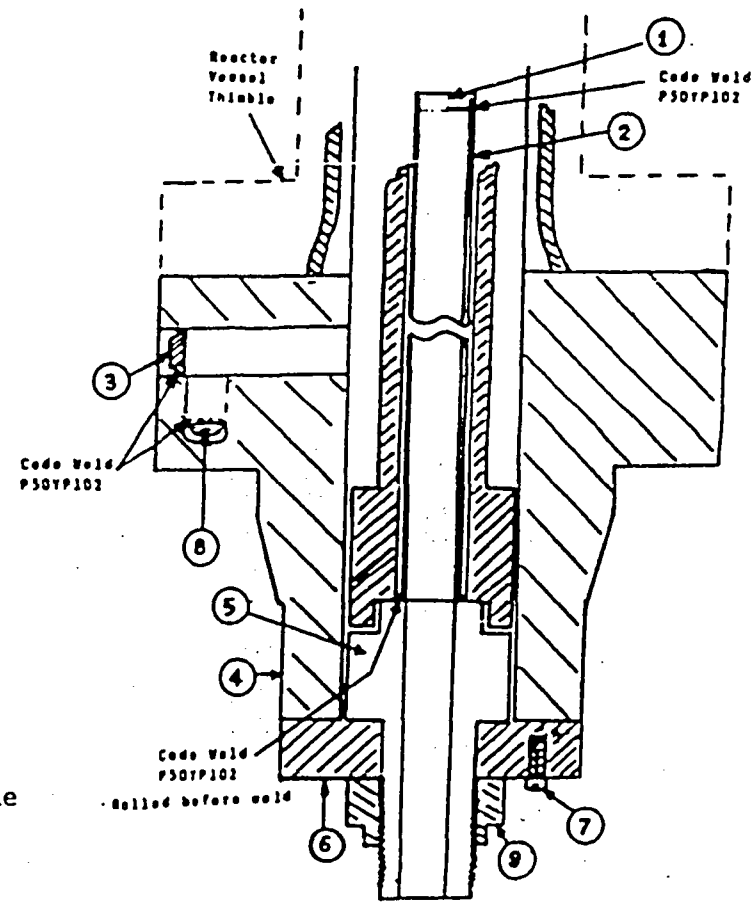

TVA 63

7/17

2 0 1 5 4 5 3 5 0 0

CORRECTED COPY

FORM N-2 NPT CERTIFICATE HOLDERS' DATA REPORT FOR NUCLEAR PART AND APPURTENANCES*
As required by the Provision of the ASME Code Rules, Section III, Div. I

1. Manufactured & Certified by: GE Company, 2117 Castle Hayne Rd., Wilmington, N.C. 28401
(Name and Address of NPT Certificate Holder)

(b) Manufactured for: BROWNS FERRY - 2, Near Athens, AL 35611
(Name and Address of N Certificate Holder for completed nuclear componen

2. Identification-Certificate Holders's S/N of Part: A5646 Nat'l Bd. No. N/A

(a) Constructed According to Drawing No: 768E534G006 Dwg. Prepared by D. L. Petersc

(b) Description of Part Inspected: CONTROL ROD DRIVE, MODEL # 7RDB144PG002

(c) Applicable ASME Code: Section III, Edition 1974, Addenda Date W'75, Case No. N207 1361-2 Class

3. REMARKS: Standard part for use with Reactor. Hydrostatically tested at 1825 psi. min.
(Brief description of service for which component was designed)
CORRECTED COPY: CHANGED ITEM 2(a) and 2(b), Modified from 768E534G1 to G6 Drive.

SHEET 1 of 2

We certify that the statements in this report are correct and this vessel part or appurtenan as defined in the code conforms to the rules of construction of the ASME Code Section II (The applicable Designed Specification and Stress Report are not the responsibility of the N Certificate Holder for parts. An NPT Certification Holder for appurtenances is responsible for furnishing a separate Design Specification and Stress Report if the appurtenance is nc included in the component Design Specification and Stress Report).

DATE: 5/20, 19 88 Signed GE-NEBG-NF&CM-QA By [signature]
(NPT Certificate Holder)

Certificate Of Authorization Expires: 6/16/90 Certification of Authorization No.: NPT N-115

CERTIFICATION OF DESIGN FOR APPURTENANCE

Design information on file at GE COMPANY, SAN JOSE, CALIFORNIA

Stress analysis report on file at GE COMPANY, SAN JOSE, CALIFORNIA
DC22A6253 Rev. 0
Design specification certified by BJORN HAABERG Prof. Eng. State CALIF. Reg. No. 15570
DC22A4912 Rev. 2
Stress analysis report certified by BETTADAPUR SRIHAR Prof. Eng. State CALIF. Reg. No. 18345

CERTIFICATION OF SHOP INSPECTION

I, the undersigned, holding a valid commission by the National Board of Boiler and Pressure Inspectors and/or the State or Province of NORTH CAROLINA and employed by DEPARTMENT OF LABOR of STATE OF NORTH CAROLINA have inspected the part of a pressure vessel described in this Partial Data Report on 4/2 1982, and state that to the best of my knowledge and belief, the NPT Certificate Holder has constructed this part in accordance with the ASME Code Section III.

By signing this certificate, neither the Inspector nor his employer makes any warranty, expressed or implied, concerning the part described in the Partial Data Report. Furthermore, neither the Inspector nor his employer shall be liable in any manner for any personal injury or property damages or a loss of any kind arising from or connected with this inspection.

5/20, 19 88 [signature] N.C. 723, PA.WC1766, OHIO
DATE Inspector's Signature National Board, State, Province and Nc

*Supplemental sheets in form of lists, sketches or drawing may be used provided (1) size is 8-1/2" X 11", (2) information in 1-2 on this Data Report is included on each sheet, and (3) each sheet is numbered and number of sheets is recorded in Item 3. "REMARKSs"

(10/77)

TVA 20

2 0 1 3 4 5 3 5 0 1

CORRECTED COPY

FORM N-2 NPT CERTIFICATE HOLDERS' DATA REPORT FOR NUCLEAR PART AND APPURTENANCES*
As required by the Provision of the ASME Code Rules, Section III, Div. I

1. Manufactured & Certified by: GE Company, 2117 Castle Hayne Rd., Wilmington, N.C. 28401
(Name and Address of NPT Certificate Holder)

(b) Manufactured for: BROWNS FERRY - 2, Near Athens, AL 35611
(Name and Address of N Certificate Holder for completed nuclear component

2. Identification-Certificate Holders's S/N of Part: A5646 Nat'l Bd. N. N/A

(a) Constructed According to Drawing No: 768E534G006 Dwg. Prepared by D. L. Peterson

(b) Description of Part Inspected: CONTROL ROD DRIVE, MODEL # 7RDB144PG002

(C) Applicable ASME Code: Section III, Edition 1974, Addenda Date W'75 Case No. 1361-2 Class N207

3. REMARKS: Standard part for use with Reactor. Hydrostatically tested at 1825 psi. min.
(Brief description of service for which component was designed)

CORRECTED COPY: Changed Items 2(a) and 2(b), Modified from 768E534G1 to G6 Drive.

Sheet 2 of 2

1. Cap 166B9274P1
SA182-F316
3/8 thick X 1 1/16 OD

2. Indicator Tube 166B9313P1
SA312-TP316
3/4 sch 40-seamless pipe
0.113 wall thickness
1.065 max. dia.

3. Plug 159A1176P1
SA182-F304
1/4 thick x 0.812 OD

4. Flange 919D610P1 (719E474)
SA182-F304
3.37 thick x 9 5/8 OD

5. Base 137C5311P1
XM-19 SA479
7/8 thick x 2.875 Dia.

6. Ring Flange 137C8151P2
SA182-F304
1" thick x 5.0 OD x 1.75 ID

7. Cap Screw 117C4516P2
SA193-B6
6 ea. 1/2 dia. on 4 1/8 bolt circle

8. Plug 175A7961P1
SA182-F304
0.38 thick x 1.307 dia.

9. Nut 137C5934P1
XM-19 SA479
1.30 thick x 2.62 dia.

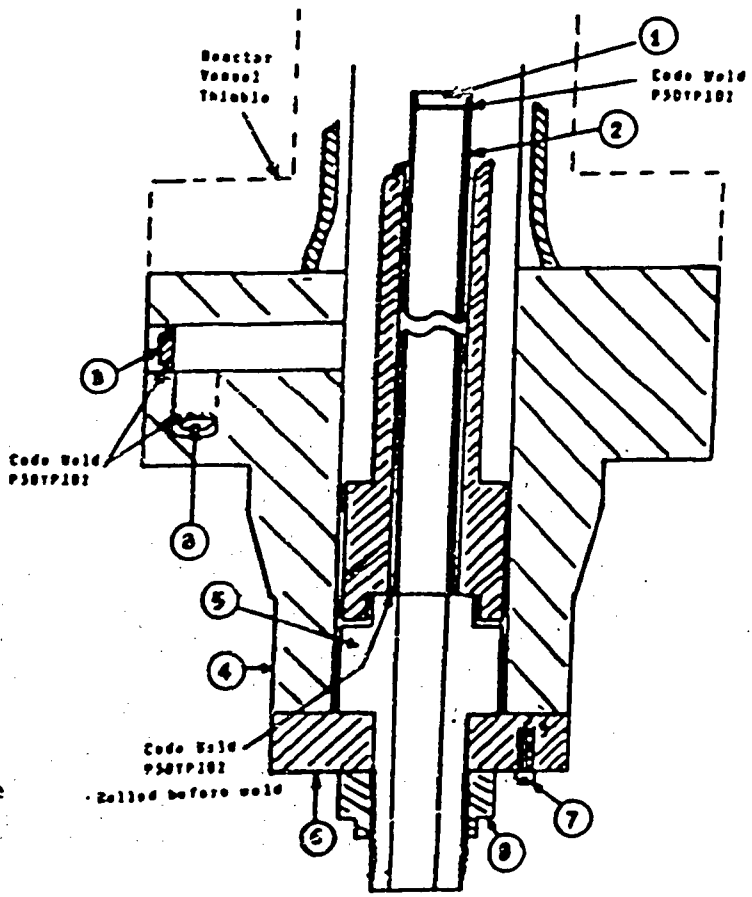

TVA 20

2 0 1 5 4 5 2 5 0 0

CORRECTED COPY

FORM N-2 NPT CERTIFICATE HOLDERS' DATA REPORT FOR NUCLEAR PART AND APPURTENANCES*
As required by the Provision of the ASME Code Rules, Section III, Div. I

1. Manufactured & Certified by: GE Company, 2117 Castle Hayne Rd., Wilmington, N.C. 28401
(Name and Address of NPT Certificate Holder)

(b) Manufactured for: BROWNS FERRY - 2, Near Athens, AL 35611
(Name and Address of N Certificate Holder for completed nuclear componen

2. Identification-Certificate Holders's S/N of Part: A4814 Nat'l Bd. No. N/A

(a) Constructed According to Drawing No: 768E534G006 Dwg. Prepared by D. L. Petersc

(b) Description of Part Inspected: CONTROL ROD DRIVE, MODEL # 7RDB144FG002

(c) Applicable ASME Code: Section III, Edition 1974, Addenda Date W'75, Case No. N207 1361-2 Class

3. REMARKS: Standard part for use with Reactor. Hydrostatically tested at 1825 psi. min.
(Brief description of service for which component was designed)

CORRECTED COPY: CHANGED ITEM 2(a) and 2(b), Modified from 768E534G1 to G6 Drive.

SHEET 1 of 2

We certify that the statements in this report are correct and this vessel part or appurtenan as defined in the code conforms to the rules of construction of the ASME Code Section II (The applicable Designed Specification and Stress Report are not the responsibility of the N Certificate Holder for parts. An NPT Certification Holder for appurtenances is responsibl for furnishing a separate Design Specification and Stress Report if the appurtenance is n included in the component Design Specification and Stress Report).

DATE: 5/20, 19 88 Signed GE-NEBG-NF&CM-QA By [signature]
(NPT Certificate Holder)

Certificate Of Authorization Expires: 6/16/90 Certification of Authorization No.: NPT N-115

CERTIFICATION OF DESIGN FOR APPURTENANCE

Design information on file at GE COMPANY, SAN JOSE, CALIFORNIA

Stress analysis report on file at GE COMPANY, SAN JOSE, CALIFORNIA
DC22A6253 Rev. 0
Design specification certified by BJORN HAABERG Prof. Eng. State CALIF. Reg. No. 15570
DC22A4912 Rev. 2
Stress analysis report certified by BETTADAPUR SRIHAR Prof. Eng. State CALIF. Reg. No. 18345

CERTIFICATION OF SHOP INSPECTION

I, the undersigned, holding a valid commission by the National Board of Boiler and Pressur Inspectors and/or the State or Province of NORTH CAROLINA and employed by DEPARTMENT OF LABO of STATE OF NORTH CAROLINA have inspected the part of a pressure vessel described in thi Partial Data Report on 3/12 1982, and state that to the best of my knowledg and belief, the NPT Certificate Holder has constructed this part in accordance with the ASM Code Section III.

By signing this certificate, neither the Inspector nor his employer makes any warranty expressed or implied, concerning the part described in the Partial Data Report. Furthermore neither the Inspector nor his employer shall be liable in any manner for any personal injury or property damages or a loss of any kind arising from or connected with this inspection.

DATE 5/20, 1988 [signature] N.C. 723, PA WC1766, OHIO
Inspector's Signature National Board, State, Province and N

*Supplemental sheets in form of lists, sketches or drawing may be used provided (1) size is 8-1/2" X 11", (2) information in 1-2 on this Data Report is included on each sheet, and (3) each sheet is numbered and number of sheets is recorded in Item 3. "REMARKSs"

(10/77)

TVA 20

2 0 1 3 4 5 2 5 0 0 1 CORRECTED COPY

FORM N-2 NPT CERTIFICATE HOLDERS' DATA REPORT FOR NUCLEAR PART AND APPURTENANCES*
As required by the Provision of the ASME Code Rules, Section III, Div. I

1. Manufactured & Certified by: GE Company, 2117 Castle Hayne Rd., Wilmington, N.C. 28401
(Name and Address of NPT Certificate Holder)

(b) Manufactured for: BROWNS FERRY - 2, Near Athens, AL 35611
(Name and Address of N Certificate Holder for completed nuclear component

2. Identification-Certificate Holders's S/N of Part: A4814 Nat'l Bd. N. N/A

(a) Constructed According to Drawing No: 768E534G006 Dwg. Prepared by D. L. Peterson

(b) Description of Part Inspected: CONTROL ROD DRIVE, MODEL # 7RDB144FG002

(C) Applicable ASME Code: Section III, Edition 1974, Addenda Date W'75 Case No. N207 1361-2 Class :

3. REMARKS: Standard part for use with Reactor. Hydrostatically tested at 1825 psi. min.
(Brief description of service for which component was designed)

CORRECTED COPY: Changed Items 2(a) and 2(b), Modified from 768E534G1 to G6 Drive.

Sheet 2 of 2

1. Cap 166B9274P1
SA182-F316
3/8 thick X 1 1/16 OD

2. Indicator Tube 166B9313P1
SA312-TP316
3/4 sch 40-seamless pipe
0.113 wall thickness
1.065 max. dia.

3. Plug 159A1176P1
SA182-F304
1/4 thick x 0.812 OD

4. Flange 919D610P1 (719E474)
SA182-F304
3.37 thick x 9 5/8 OD

5. Base 137C5311P1
XM-19 SA479
7/8 thick x 2.875 Dia.

6. Ring Flange 137C8151P2
SA182-F304
1" thick x 5.0 OD x 1.75 ID

7. Cap Screw 117C4516P2
SA193-B6
6 ea. 1/2 dia. on 4 1/8 bolt circle

8. Plug 175A7961P1
SA182-F304
0.38 thick x 1.307 dia.

9. Nut 137C5934P1
XM-19 SA479
1.30 thick x 2.62 dia.

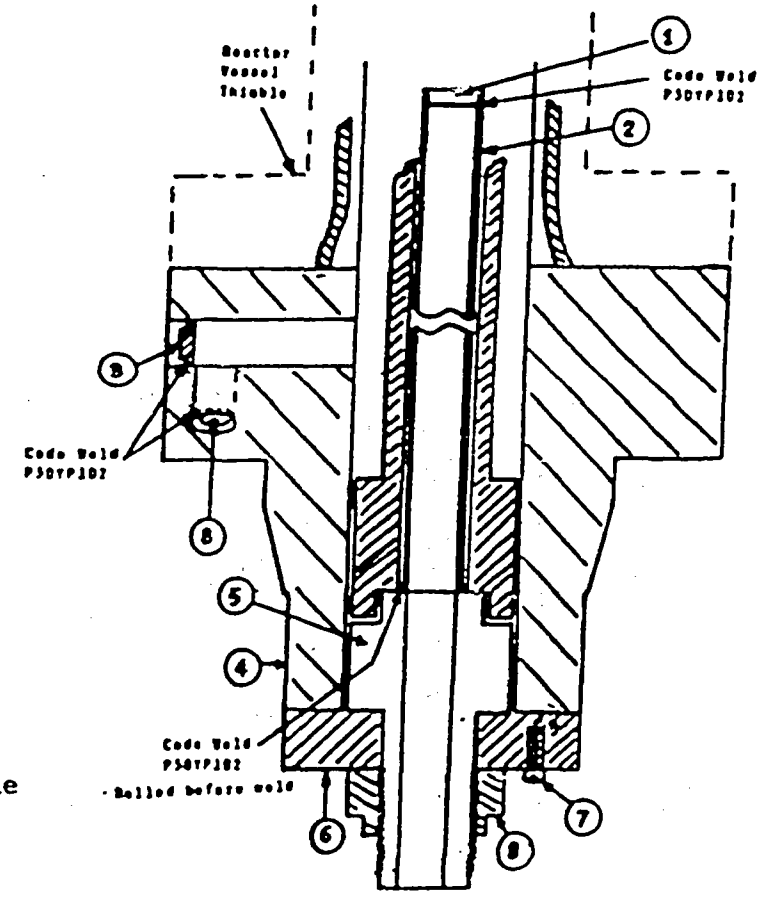

TVA 20

CORRECTED COPY

FORM N-2 NPT CERTIFICATE HOLDERS' DATA REPORT FOR NUCLEAR PART AND APPURTENANCES*
As required by the Provision of the ASME Code Rules, Section III, Div. I

1. Manufactured & Certified by: GE Company, 2117 Castle Hayne Rd., Wilmington, N.C. 28401
(Name and Address of NPT Certificate Holder)

(b) Manufactured for: BROWNS FERRY - 2, Near Athens, AL 35611
(Name and Address of N Certificate Holder for completed nuclear compone

2. Identification-Certificate Holders's S/N of Part: A5111 Nat'l Bd. No. N/A

(a) Constructed According to Drawing No: 768E534G006 Dwg. Prepared by D. L. Peters

(b) Description of Part Inspected: CONTROL ROD DRIVE, MODEL # 7RDB144FG002

(c) Applicable ASME Code: Section III, Edition 1974, Addenda Date W'75, Case No. N207 1361-2 Clas

3. REMARKS: Standard part for use with Reactor. Hydrostatically tested at 1825 psi. min.
(Brief description of service for which component was designed)
CORRECTED COPY: CHANGED ITEM 2(a) and 2(b), Modified from 768E534G1 to G6 Drive.

SHEET 1 of 2

We certify that the statements in this report are correct and this vessel part or appurtena as defined in the code conforms to the rules of construction of the ASME Code Section I (The applicable Designed Specification and Stress Report are not the responsibility of the Certificate Holder for parts. An NPT Certification Holder for appurtenances is responsib for furnishing a separate Design Specification and Stress Report if the appurtenance is included in the component Design Specification and Stress Report).

DATE: 4/15, 19 88 Signed GE-NEBG-NF&CM-QA By J. E. Stroebermann
(NPT Certificate Holder)

Certificate Of Authorization Expires: 6/16/90 Certification of Authorization No.: NPT N-11

CERTIFICATION OF DESIGN FOR APPURTENANCE

Design information on file at GE COMPANY, SAN JOSE, CALIFORNIA

Stress analysis report on file at GE COMPANY, SAN JOSE, CALIFORNIA

DC22A6253 Rev. 0
Design specification certified by BJORN HAABERG Prof. Eng. State CALIF. Reg. No. 15570
DC22A4912 Rev. 2
Stress analysis report certified by BETTADAPUR SRIHAR Prof. Eng. State CALIF. Reg. No. 18345

CERTIFICATION OF SHOP INSPECTION

I, the undersigned, holding a valid commission by the National Board of Boiler and Pressu Inspectors and/or the State or Province of NORTH CAROLINA and employed by DEPARTMENT OF LAB of STATE OF NORTH CAROLINA have inspected the part of a pressure vessel described in th Partial Data Report on 5/5 19 82, and state that to the best of my knowled and belief, the NPT Certificate Holder has constructed this part in accordance with the AS Code Section III.

By signing this certificate, neither the Inspector nor his employer makes any warrant expressed or implied, concerning the part described in the Partial Data Report. Furthermore neither the Inspector nor his employer shall be liable in any manner for any personal injur or property damages or a loss of any kind arising from or connected with this inspection.

DATE 4/15, 19 88 E. E. Sherrill N.C. 723, PA. WC1766, OHIO
Inspector's Signature National Board, State, Province and

*Supplemental sheets in form of lists, sketches or drawing may be used provided (1) size is 8-1/2" X 11", (2) information in 1-2 on this Data Report is included on each sheet, and (3) each sheet is numbered and number of sheets is recorded in Item 3. "REMARKSs"

(10/77)

TVA 63 / 1 of 7

FORM N-2 NPT CERTIFICATE HOLDERS DATA REPORT FOR NUCLEAR PART AND APPURTENANCES*
As required by the Provision of the ASME Code Rules, Section III, Div. I

1. Manufactured & Certified by: GE Company, 2117 Castle Hayne Rd., Wilmington, N.C. 28401
(Name and Address of NPT Certificate Holder)

(b) Manufactured for: BROWNS FERRY - 2, Near Athens, AL 35611
(Name and Address of N Certificate Holder for completed nuclear componen

2. Identification-Certificate Holders's S/N of Part: A5111 Nat'l Bd. N. N/A

(a) Constructed According to Drawing No: 768E534G006 Dwg. Prepared by D. L. Peterso

(b) Description of Part Inspected: CONTROL ROD DRIVE, MODEL # 7RDB144FG002

(C) Applicable ASME Code: Section III, Edition 1974, Addenda Date W'75 Case No. N207 1361-2 Class

3. REMARKS: Standard part for use with Reactor. Hydrostatically tested at 1825 psi. min.
(Brief description of service for which component was designed)

CORRECTED COPY: Changed Items 2(a) and 2(b), Modified from 768E534G1 to G6 Drive.

Sheet 2 of 2

1. Cap 166B9274P1
SA182-F316
3/8 thick X 1 1/16 OD

2. Indicator Tube 166B9313P1
SA312-TP316
3/4 sch 40-seamless pipe
0.113 wall thickness
1.065 max. dia.

3. Plug 159A1176P1
SA182-F304
1/4 thick x 0.812 OD

4. Flange 919D610P1 (719E474)
SA182-F304
3.37 thick x 9 5/8 OD

5. Base 137C5311P1
XM-19 SA479
7/8 thick x 2.875 Dia.

6. Ring Flange 137C8151P2
SA182-F304
1" thick x 5.0 OD x 1.75 ID

7. Cap Screw 117C4516P2
SA193-B6
6 ea. 1/2 dia. on 4 1/8 bolt circle

8. Plug 175A7961P1
SA182-F304
0.38 thick x 1.307 dia.

9. Nut 137C5934P1
XM-19 SA479
1.30 thick x 2.62 dia.

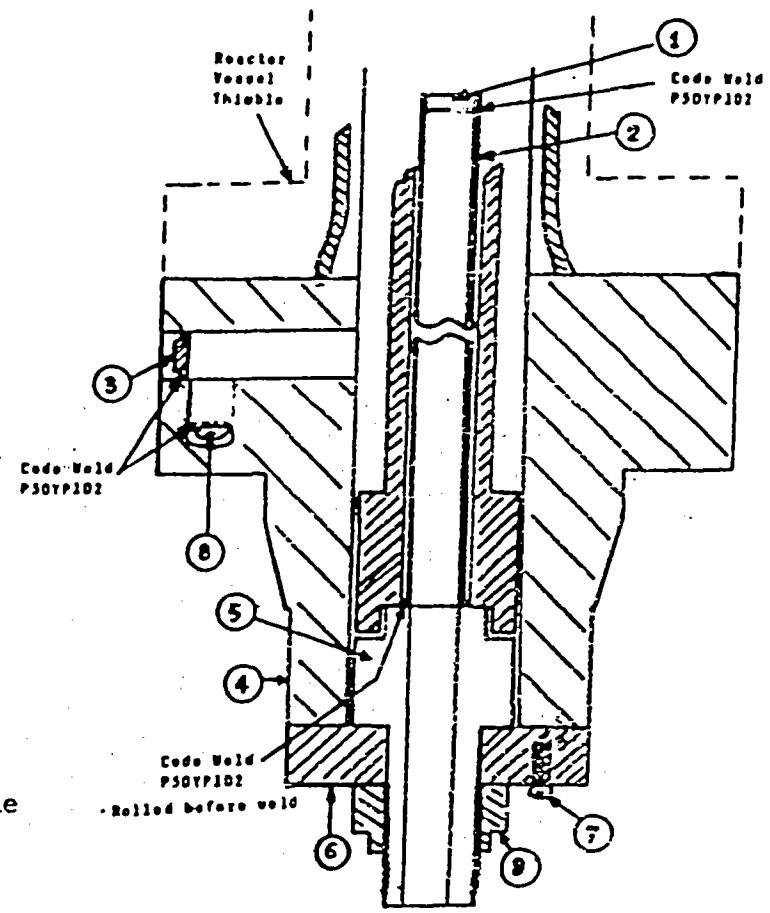

TVA 63

2017

2 0 1 2 1 3 5 3 0 0 7

CORRECTED COPY

FORM N-2 NPT CERTIFICATE HOLDERS' DATA REPORT FOR NUCLEAR PART AND APPURTENANCES*
As required by the Provision of the ASME Code Rules, Section III, Div. I

1. Manufactured & Certified by: GE Company, 2117 Castle Hayne Rd., Wilmington, N.C. 28401
(Name and Address of NPT Certificate Holder)

(b) Manufactured for: BROWNS FERRY - 2, Near Athens, AL 35611
(Name and Address of N Certificate Holder for completed nuclear componer

2. Identification-Certificate Holders's S/N of Part: A5712 Nat'l Bd. No. N/A

(a) Constructed According to Drawing No: 768E534G006 Dwg. Prepared by D. L. Peters

(b) Description of Part Inspected: CONTROL ROD DRIVE, MODEL # 7RDB144FG002

(c) Applicable ASME Code: Section III, Edition 1974, Addenda Date W'75, Case No. 1361-2 N207 Class

3. REMARKS: Standard part for use with Reactor. Hydrostatically tested at 1825 psi. min.
(Brief description of service for which component was designed)
CORRECTED COPY: CHANGED ITEM 2(a) and 2(b), Modified from 768E534G1 to G6 Drive.

SHEET 1 of 2

We certify that the statements in this report are correct and this vessel part or appurtenar as defined in the code conforms to the rules of construction of the ASME Code Section II (The applicable Designed Specification and Stress Report are not the responsibility of the N Certificate Holder for parts. An NPT Certification Holder for appurtenances is responsibl for furnishing a separate Design Specification and Stress Report if the appurtenance is n included in the component Design Specification and Stress Report).

DATE: 4/14, 19 88 Signed GE-NEBG-NF&CM-QA By J. Ottrudemmie
(NPT Certificate Holder)

Certificate Of Authorization Expires: 6/16/90 Certification of Authorization No.: NPT N-115

CERTIFICATION OF DESIGN FOR APPURTENANCE

Design information on file at GE COMPANY, SAN JOSE, CALIFORNIA

Stress analysis report on file at GE COMPANY, SAN JOSE, CALIFORNIA
DC22A6253 Rev. 0
Design specification certified by BJORN HAABERG Prof. Eng. State CALIF. Reg. No. 15570
DC22A4912 Rev. 2
Stress analysis report certified by BETTADAPUR SRIHAR Prof. Eng. State CALIF. Reg. No. 18345

CERTIFICATION OF SHOP INSPECTION

I, the undersigned, holding a valid commission by the National Board of Boiler and Pressur Inspectors and/or the State or Province of NORTH CAROLINA and employed by DEPARTMENT OF LABO of STATE OF NORTH CAROLINA have inspected the part of a pressure vessel described in thi Partial Data Report on 4/2 19 82, and state that to the best of my knowledg and belief, the NPT Certificate Holder has constructed this part in accordance with the ASM Code Section III.

By signing this certificate, neither the Inspector nor his employer makes any warranty, expressed or implied, concerning the part described in the Partial Data Report. Furthermore neither the Inspector nor his employer shall be liable in any manner for any personal injury or property damages or a loss of any kind arising from or connected with this inspection.

DATE 4/15, 19 88 Inspector's Signature N.C. 723, PA.WC1766, Ohio National Board, State, Province and N

*Supplemental sheets in form of lists, sketches or drawing may be used provided (1) size is 8-1/2" X 11", (2) information in 1-2 on this Data Report is included on each sheet, and (3) each sheet is numbered and number of sheets is recorded in Item 3. "REMARKSs"
(10/77)

TVA 63

1 of 1

CORRECTED COPY

FORM N-2 NPT CERTIFICATE HOLDERS' DATA REPORT FOR NUCLEAR PART AND APPURTENANCES*
As required by the Provision of the ASME Code Rules, Section III, Div. I

1. Manufactured & Certified by: GE Company, 2117 Castle Hayne Rd., Wilmington, N.C. 28401
(Name and Address of NPT Certificate Holder)

(b) Manufactured for: BROWNS FERRY - 2, Near Athens, AL 35611
(Name and Address of N Certificate Holder for completed nuclear component

2. Identification-Certificate Holders's S/N of Part: A5712 Nat'l Bd. N. N/A

(a) Constructed According to Drawing No: 768E534G006 Dwg. Prepared by D. L. Peterson

(b) Description of Part Inspected: CONTROL ROD DRIVE, MODEL # 7RDB144FG002

(C) Applicable ASME Code: Section III, Edition 1974, Addenda Date W'75 Case No. 1361-2 Class N207

3. REMARKS: Standard part for use with Reactor. Hydrostatically tested at 1825 psi. min.
(Brief description of service for which component was designed)

CORRECTED COPY: Changed Items 2(a) and 2(b), Modified from 768E534G1 to G6 Drive.

Sheet 2 of 2

1. Cap 166B9274P1
SA182-F316
3/8 thick X 1 1/16 OD

2. Indicator Tube 166B9313P1
SA312-TP316
3/4 sch 40-seamless pipe
0.113 wall thickness
1.065 max. dia.

3. Plug 159A1176P1
SA182-F304
1/4 thick x 0.812 OD

4. Flange 919D610P1 (719E474)
SA182-F304
3.37 thick x 9 5/8 OD

5. Base 137C5311P1
XM-19 SA479
7/8 thick x 2.875 Dia.

6. Ring Flange 137C8151P2
SA182-F304
1" thick x 5.0 OD x 1.75 ID

7. Cap Screw 117C4516P2
SA193-B6
6 ea. 1/2 dia. on 4 1/8 bolt circle

8. Plug 175A7961P1
SA182-F304
0.38 thick x 1.307 dia.

9. Nut 137C5934P1
XM-19 SA479
1.30 thick x 2.62 dia.

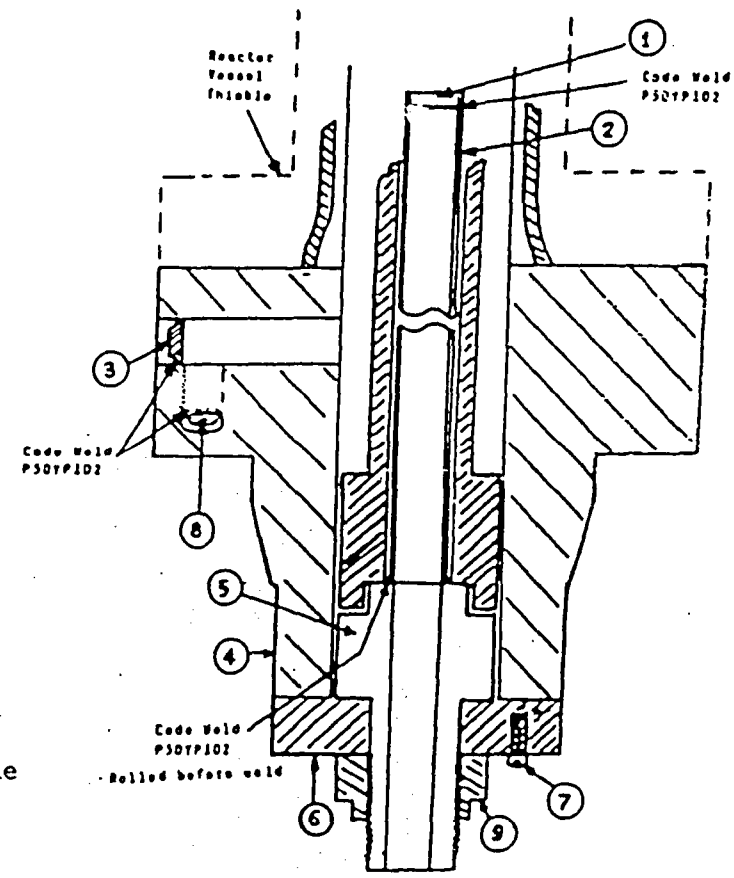

TVA 63

2 of 17

2 0 1 5 4 5 2 3 0

CORRECTED COPY

FORM N-2 NPT CERTIFICATE HOLDERS' DATA REPORT FOR NUCLEAR PART AND APPURTENANCES*
As required by the Provision of the ASME Code Rules, Section III, Div. I

1. Manufactured & Certified by: GE Company, 2117 Castle Hayne Rd., Wilmington, N.C. 28401
(Name and Address of NPT Certificate Holder)

(b) Manufactured for: BROWNS FERRY - 2, Near Athens, AL 35611
(Name and Address of N Certificate Holder for completed nuclear componen

2. Identification-Certificate Holders's S/N of Part: A4846 Nat'l Bd. No. N/A

(a) Constructed According to Drawing No: 768E534G006 Dwg. Prepared by D. L. Petersc

(b) Description of Part Inspected: CONTROL ROD DRIVE, MODEL # 7RDB144FG002

(c) Applicable ASME Code: Section III, Edition 1974, Addenda Date W'75, Case No. N207 1361-2 Class

3. REMARKS: Standard part for use with Reactor. Hydrostatically tested at 1825 psi. min.
(Brief description of service for which component was designed)
CORRECTED COPY: CHANGED ITEM 2(a) and 2(b), Modified from 768E534G1 to G6 Drive.

SHEET 1 of 2

We certify that the statements in this report are correct and this vessel part or appurtenan as defined in the code conforms to the rules of construction of the ASME Code Section II (The applicable Designed Specification and Stress Report are not the responsibility of the N Certificate Holder for parts. An NPT Certification Holder for appurtenances is responsibl for furnishing a separate Design Specification and Stress Report if the appurtenance is n included in the component Design Specification and Stress Report).

DATE: 5/20, 19 88 Signed GE-NEBG-NF&CM-QA By
(NPT Certificate Holder)

Certificate Of Authorization Expires: 6/16/90 Certification of Authorization No.: NPT N-115

CERTIFICATION OF DESIGN FOR APPURTENANCE

Design information on file at GE COMPANY, SAN JOSE, CALIFORNIA

Stress analysis report on file at GE COMPANY, SAN JOSE, CALIFORNIA
DC22A6253 Rev. 0
Design specification certified by BJORN HAABERG Prof. Eng. State CALIF. Reg. No. 15570
DC22A4912 Rev. 2
Stress analysis report certified by BETTADAPUR SRIDHAR Prof. Eng. State CALIF. Reg. No. 18345

CERTIFICATION OF SHOP INSPECTION

I, the undersigned, holding a valid commission by the National Board of Boiler and Pressur Inspectors and/or the State or Province of NORTH CAROLINA and employed by DEPARTMENT OF LABO of STATE OF NORTH CAROLINA have inspected the part of a pressure vessel described in thi Partial Data Report on 3/1 1982, and state that to the best of my knowledg and belief, the NPT Certificate Holder has constructed this part in accordance with the ASM Code Section III.

By signing this certificate, neither the Inspector nor his employer makes any warranty expressed or implied, concerning the part described in the Partial Data Report. Furthermore neither the Inspector nor his employer shall be liable in any manner for any personal injury or property damages or a loss of any kind arising from or connected with this inspection.

5/20, 19 88 Ed Sherrill N.C. 723, PA.WC1766, OHIO

DATE Inspector's Signature National Board, State, Province and N

*Supplemental sheets in form of lists, sketches or drawing may be used provided (1) size is 8-1/2" X 11", (2) information in 1-2 on this Data Report is included on each sheet, and (3) each sheet is numbered and number of sheets is recorded in Item 3. "REMARKSs"

(10/77)

TVA 20

2 0 1 3 1 5 2 3 0 1 CORRECTED COPY

FORM M-2 NPT CERTIFICATE HOLDERS' DATA REPORT FOR NUCLEAR PART AND APPURTENANCES*
As required by the Provision of the ASME Code Rules, Section III, Div. I

1. Manufactured & Certified by: GE Company, 2117 Castle Hayne Rd., Wilmington, N.C. 28401
(Name and Address of NPT Certificate Holder)

(b) Manufactured for: BROWNS FERRY - 2, Near Athens, AL 35611
(Name and Address of N Certificate Holder for completed nuclear component

2. Identification-Certificate Holders's S/N of Part: A4846 Nat'l Bd. N. N/A

(a) Constructed According to Drawing No: 768E534G006 Dwg. Prepared by D. L. Peterson

(b) Description of Part Inspected: CONTROL ROD DRIVE, MODEL # 7RDB144PG002

(C) Applicable ASME Code: Section III, Edition 1974, Addenda Date W'75 Case No. N207 1361-2 Class

3. REMARKS: Standard part for use with Reactor. Hydrostatically tested at 1825 psi. min.
(Brief description of service for which component was designed)

CORRECTED COPY: Changed Items 2(a) and 2(b), Modified from 768E534G1 to G6 Drive.

Sheet 2 of 2

1. Cap 166B9274P1
SA182-F316
3/8 thick X 1 1/16 OD

2. Indicator Tube 166B9313P1
SA312-TP316
3/4 sch 40-seamless pipe
0.113 wall thickness
1.065 max. dia.

3. Plug 159A1176P1
SA182-F304
1/4 thick x 0.812 OD

4. Flange 919D610P1 (719E474)
SA182-F304
3.37 thick x 9 5/8 OD

5. Base 137C5311P1
XM-19 SA479
7/8 thick x 2.875 Dia.

6. Ring Flange 137C8151P2
SA182-F304
1" thick x 5.0 OD x 1.75 ID

7. Cap Screw 117C4516P2
SA193-B6
6 ea. 1/2 dia. on 4 1/8 bolt circle

8. Plug 175A7961P1
SA182-F304
0.38 thick x 1.307 dia.

ut 137C5934P1
XM-19 SA479
1.30 thik x 2.62 dia.

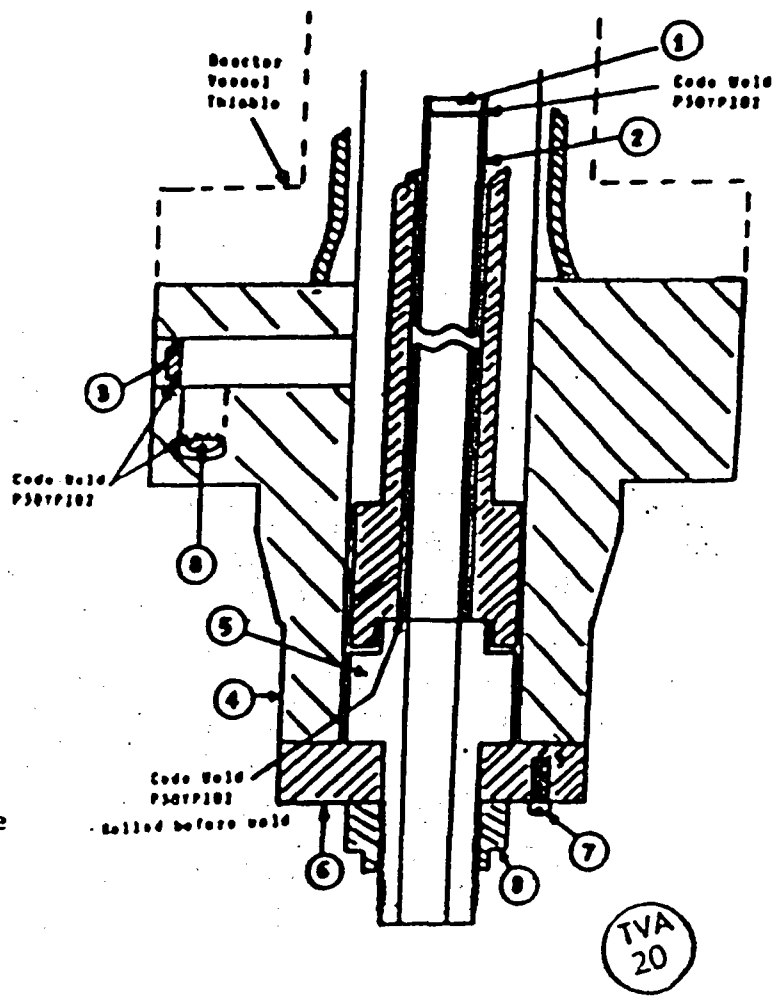

TVA 20

2 0 1 5 : 5 : 4 0 0

CORRECTED COPY

FORM N-2 NPT CERTIFICATE HOLDERS' DATA REPORT FOR NUCLEAR PART AND APPURTENANCES*
As required by the Provision of the ASME Code Rules, Section III, Div. I

1. Manufactured & Certified by: GE Company, 2117 Castle Hayne Rd., Wilmington, N.C. 28401
(Name and Address of NPT Certificate Holder)
(b) Manufactured for: BROWNS FERRY - 2, Near Athens, AL 35611
(Name and Address of N Certificate Holder for completed nuclear component)

2. Identification-Certificate Holders's S/N of Part: A5234 Nat'l Bd. No. N/A

(a) Constructed According to Drawing No: 768E534G006 Dwg. Prepared by D. L. Peterson

(b) Description of Part Inspected: CONTROL ROD DRIVE, MODEL # 7RDB144FG002

(c) Applicable ASME Code: Section III, Edition 1974, Addenda Date W'75, Case No. N207 1361-2 Class 1

3. REMARKS: Standard part for use with Reactor. Hydrostatically tested at 1825 psi. min.
(Brief description of service for which component was designed)
CORRECTED COPY: CHANGED ITEM 2(a) and 2(b), Modified from 768E534G1 to G6 Drive.

SHEET 1 of 2

We certify that the statements in this report are correct and this vessel part or appurtenance as defined in the code conforms to the rules of construction of the ASME Code Section III. (The applicable Designed Specification and Stress Report are not the responsibility of the NPT Certificate Holder for parts. An NPT Certification Holder for appurtenances is responsible for furnishing a separate Design Specification and Stress Report if the appurtenance is not included in the component Design Specification and Stress Report).

DATE: 5/3, 19 88 Signed GE-NEBG-NF&CM-QA By G. Ettenbrummer
(NPT Certificate Holder)

Certificate Of Authorization Expires: 6/16/90 Certification of Authorization No.: NPT N-1151

CERTIFICATION OF DESIGN FOR APPURTENANCE

Design information on file at GE COMPANY, SAN JOSE, CALIFORNIA

Stress analysis report on file at GE COMPANY, SAN JOSE, CALIFORNIA
DC22A6253 Rev. 0
Design specification certified by BJORN HAABERG Prof. Eng. State CALIF. Reg. No. 15570
DC22A4912 Rev. 2
Stress analysis report certified by BETTADAPUR SRIHAR Prof. Eng. State CALIF. Reg. No. 18345

CERTIFICATION OF SHOP INSPECTION

I, the undersigned, holding a valid commission by the National Board of Boiler and Pressure Inspectors and/or the State or Province of NORTH CAROLINA and employed by DEPARTMENT OF LABOR of STATE OF NORTH CAROLINA have inspected the part of a pressure vessel described in this Partial Data Report on 4/2 1982 and state that to the best of my knowledge and belief, the NPT Certificate Holder has constructed this part in accordance with the ASME Code Section III.

By signing this certificate, neither the Inspector nor his employer makes any warranty, expressed or implied, concerning the part described in the Partial Data Report. Furthermore, neither the Inspector nor his employer shall be liable in any manner for any personal injury or property damages or a loss of any kind arising from or connected with this inspection.

5/3, 1988 Ed Shirrill N.C. 723, PA.WC1766, OHIO
DATE Inspector's Signature National Board, State, Province and No.

*Supplemental sheets in form of lists, sketches or drawing may be used provided (1) size is 8-1/2" X 11", (2) information in 1-2 on this Data Report is included on each sheet, and (3) each sheet is numbered and number of sheets is recorded in Item 3. "REMARKSs"
(10/77)

TVA 20

2 0 1 3 1 5 1 4 0 0 1

CORRECTED COPY

FORM N-2 NPT CERTIFICATE HOLDERS' DATA REPORT FOR NUCLEAR PART AND APPURTENANCES*
As required by the Provision of the ASME Code Rules, Section III, Div. I

1. Manufactured & Certified by: GE Company, 2117 Castle Hayne Rd., Wilmington, N.C. 28401
(Name and Address of NPT Certificate Holder)

(b) Manufactured for: BROWNS FERRY - 2, Near Athens, AL 35611
(Name and Address of N Certificate Holder for completed nuclear component

2. Identification-Certificate Holders's S/N of Part: A5234 Nat'l Bd. N. N/A

(a) Constructed According to Drawing No: 768ES34G006 Dwg. Prepared by D. L. Peterson

(b) Description of Part Inspected: CONTROL ROD DRIVE, MODEL # 7RDB144FG002

(C) Applicable ASME Code: Section III, Edition 1974, Addenda Date W'75 Case No. N207 1361-2 Class 1

3. REMARKS: Standard part for use with Reactor. Hydrostatically tested at 1825 psi. min.
(Brief description of service for which component was designed)

CORRECTED COPY: Changed Items 2(a) and 2(b), Modified from 768ES34G1 to G6 Drive.

Sheet 2 of 2

1. Cap 166B9274P1
SA182-F316
3/8 thick X 1 1/16 OD

2. Indicator Tube 166B9313P1
SA312-TP316
3/4 sch 40-seamless pipe
0.113 wall thickness
1.065 max. dia.

3. Plug 159A1176P1
SA182-F304
1/4 thick x 0.812 OD

4. Flange 919D610P1 (719E474)
SA182-F304
3.37 thick x 9 5/8 OD

5. Base 137C5311P1
XM-19 SA479
7/8 thick x 2.875 Dia.

6. Ring Flange 137C8151P2
SA182-F304
1" thick x 5.0 OD x 1.75 ID

7. Cap Screw 117C4516P2
SA193-B6
6 ea. 1/2 dia. on 4 1/8 bolt circle

8. Plug 175A7961P1
SA182-F304
0.38 thick x 1.307 dia.

9. Nut 137C5934P1
XM-19 SA479
1.30 thick x 2.62 dia.

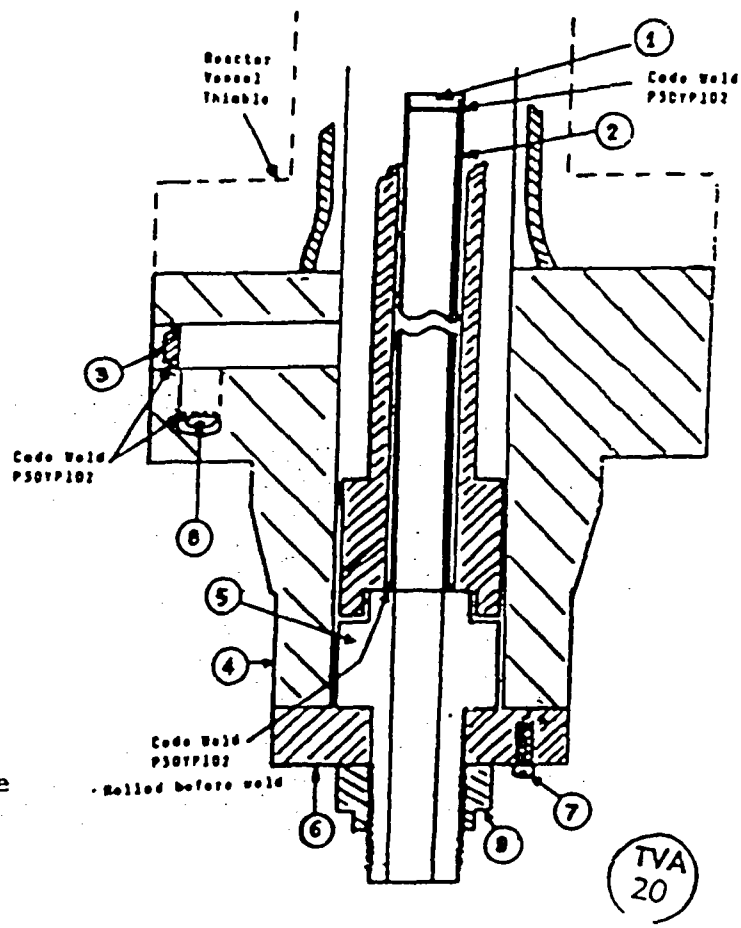

TVA 20

2 0 1 3 4 5 2 1 0 0

CORRECTED COPY

FORM N-2 NPT CERTIFICATE HOLDERS' DATA REPORT FOR NUCLEAR PART AND APPURTENANCES*
As required by the Provision of the ASME Code Rules, Section III, Div. I

1. Manufactured & Certified by: GE Company, 2117 Castle Hayne Rd., Wilmington, N.C. 28401
(Name and Address of NPT Certificate Holder)

(b) Manufactured for: BROWNS FERRY - 2, Near Athens, AL 35611
(Name and Address of N Certificate Holder for completed nuclear componen

2. Identification-Certificate Holders's S/N of Part: A4688 Nat'l Bd. No. N/A

(a) Constructed According to Drawing No: 768E534G006 Dwg. Prepared by D. L. Petersc

(b) Description of Part Inspected: CONTROL ROD DRIVE, MODEL # 7RDB144PG002

(c) Applicable ASME Code: Section III, Edition 1974, Addenda Date W'75, Case No. N207 1361-2 Class

3. REMARKS: Standard part for use with Reactor. Hydrostatically tested at 1825 ps., min.
(Brief description of service for which component was designed)
CORRECTED COPY: CHANGED ITEM 2(a) and 2(b), Modified from 768E534G1 to G6 Drive.

SHEET 1 of 2

We certify that the statements in this report are correct and this vessel part or appurtenan as defined in the code conforms to the rules of construction of the ASME Code Section II (The applicable Designed Specification and Stress Report are not the responsibility of the N. Certificate Holder for parts. An NPT Certification Holder for appurtenances is responsibl for furnishing a separate Design Specification and Stress Report if the appurtenance is n included in the component Design Specification and Stress Report).

DATE: 5/20, 19 88 Signed GE-NEBG-NF&CM-QA By
(NPT Certificate Holder)

Certificate Of Authorization Expires: 6/16/90 Certification of Authorization No.: NPT N-115

CERTIFICATION OF DESIGN FOR APPURTENANCE

Design information on file at GE COMPANY, SAN JOSE, CALIFORNIA

Stress analysis report on file at GE COMPANY, SAN JOSE, CALIFORNIA
DC22A6253 Rev. 0
Design specification certified by BJORN HAABERG Prof. Eng. State CALIF. Reg. No. 15570
DC22A4912 Rev. 2
Stress analysis report certified by BETTADAPUR SRDHAR Prof. Eng. State CALIF. Reg. No. 18345

CERTIFICATION OF SHOP INSPECTION

I, the undersigned, holding a valid commission by the National Board of Boiler and Pressure Inspectors and/or the State or Province of NORTH CAROLINA and employed by DEPARTMENT OF LABOR of STATE OF NORTH CAROLINA have inspected the part of a pressure vessel described in this Partial Data Report on 3/1 1982, and state that to the best of my knowledge and belief, the NPT Certificate Holder has constructed this part in accordance with the ASME Code Section III.

By signing this certificate, neither the Inspector nor his employer makes any warranty, expressed or implied, concerning the part described in the Partial Data Report. Furthermore, neither the Inspector nor his employer shall be liable in any manner for any personal injury or property damages or a loss of any kind arising from or connected with this inspection.

5/20, 19 88 N.C. 723, PA.WC1766, OHIO

DATE Inspector's Signature National Board, State, Province and N

*Supplemental sheets in form of lists, sketches or drawing may be used provided (1) size is 8-1/2" X 11", (2) information in 1-2 on this Data Report is included on each sheet, and (3) each sheet is numbered and number of sheets is recorded in Item 3. "REMARKS."

(10/77)

TVA 20

2 0 1 5 4 5 2 1 0 1

CORRECTED COPY

FORM N-2 NPT CERTIFICATE HOLDERS' DATA REPORT FOR NUCLEAR PART AND APPURTENANCES*
As required by the Provision of the ASME Code Rules, Section III, Div. I

1. Manufactured & Certified by: GE Company, 2117 Castle Hayne Rd., Wilmington, N.C. 28401
(Name and Address of NPT Certificate Holder)

(b) Manufactured for: BROWNS FERRY - 2, Near Athens, AL 35611
(Name and Address of N Certificate Holder for completed nuclear component

2. Identification-Certificate Holders's S/N of Part: A4688 Nat'l Bd. N. N/A

(a) Constructed According to Drawing No: 768E534G006 Dwg. Prepared by D. L. Peterson

(b) Description of Part Inspected: CONTROL ROD DRIVE, MODEL # 7RDB144FG002

(C) Applicable ASME Code: Section III, Edition 1974, Addenda Date W'75 Case No. 1361-2 Class N207

3. REMARKS: Standard part for use with Reactor. Hydrostatically tested at 1825 psi. min.
(Brief description of service for which component was designed)

CORRECTED COPY: Changed Items 2(a) and 2(b), Modified from 768E534G1 to G6 Drive.

Sheet 2 of 2

1. Cap 166B9274P1
SA182-F316
3/8 thick X 1 1/16 OD

2. Indicator Tube 166B9313P1
SA312-TP316
3/4 sch 40-seamless pipe
0.113 wall thickness
1.065 max. dia.

3. Plug 159A1176P1
SA182-F304
1/4 thick x 0.812 OD

4. Flange 919D610P1 (719E474)
SA182-F304
3.37 thick x 9 5/8 OD

5. Base 137C5311P1
XM-19 SA479
7/8 thick x 2.875 Dia.

6. Ring Flange 137C8151P2
SA182-F304
1" thick x 5.0 OD x 1.75 ID

7. Cap Screw 117C4516P2
SA193-B6
6 ea. 1/2 dia. on 4 1/8 bolt circle

8. Plug 175A7961P1
SA182-F304
0.38 thick x 1.307 dia.

9. Nut 137C5934P1
XM-19 SA479
1.30 thick x 2.62 dia.

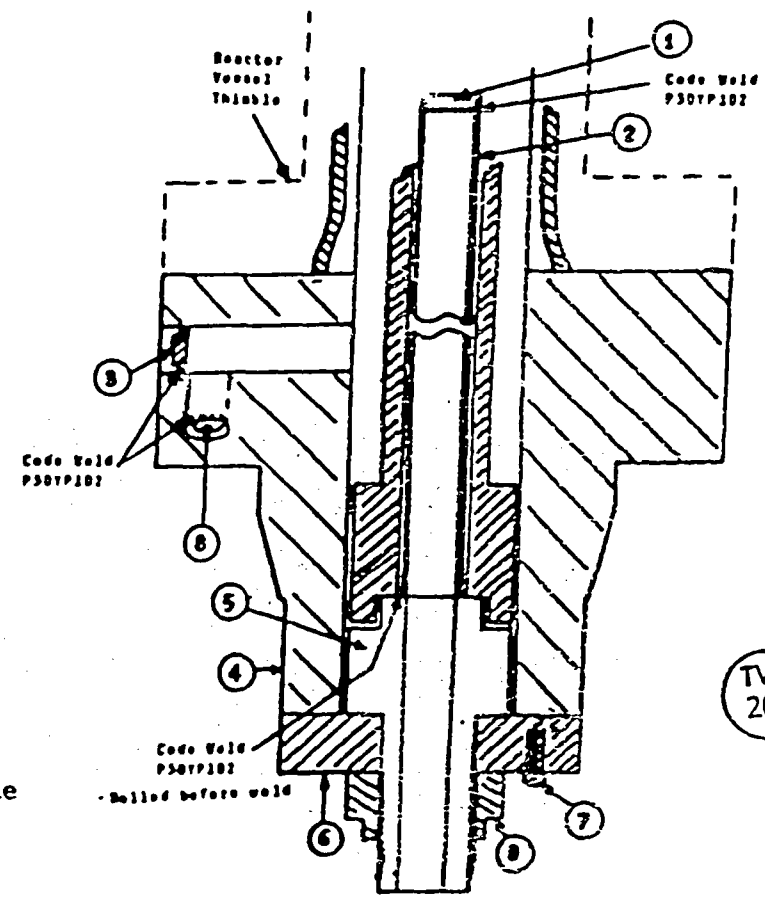

TVA 20

X-2-0 1 3 4 5 1-9 9-0-2

CORRECTED COPY

FORM N-2 NPT CERTIFICATE HOLDERS' DATA REPORT FOR NUCLEAR PART AND APPURTENANCES*
As required by the Provision of the ASME Code Rules, Section III, Div. I

1. Manufactured & Certified by: GE Company, 2117 Castle Hayne Rd., Wilmington, N.C. 28401
(Name and Address of NPT Certificate Holder)

(b) Manufactured for: BROWNS FERRY - 2, Near Athens, AL 35611
(Name and Address of N Certificate Holder for completed nuclear component

2. Identification-Certificate Holders's S/N of Part: A4702 Nat'l Bd. No. N/A

(a) Constructed According to Drawing No: 768E534G006 Dwg. Prepared by D. L. Peterson

(b) Description of Part Inspected: CONTROL ROD DRIVE, MODEL # 7RDB144PG002

(c) Applicable ASME Code: Section III, Edition 1974, Addenda Date W'75, Case No. N207 1361-2 Class

3. REMARKS: Standard part for use with Reactor. Hydrostatically tested at 1825 psi. min.
(Brief description of service for which component was designed)
CORRECTED COPY: CHANGED ITEM 2(a) and 2(b), Modified from 768E534G1 to G6 Drive.

SHEET 1 of 2

We certify that the statements in this report are correct and this vessel part or appurtenanc as defined in the code conforms to the rules of construction of the ASME Code Section II: (The applicable Designed Specification and Stress Report are not the responsibility of the N Certificate Holder for parts. An NPT Certification Holder for appurtenances is responsible for furnishing a separate Design Specification and Stress Report if the appurtenance is nc included in the component Design Specification and Stress Report).

DATE: 5/20, 19 88 Signed GE-NEBG-NF&CM-QA By
(NPT Certificate Holder)

Certificate Of Authorization Expires: 6/16/90 Certification of Authorization No.: NPT N-113

CERTIFICATION OF DESIGN FOR APPURTENANCE

Design information on file at GE COMPANY, SAN JOSE, CALIFORNIA

Stress analysis report on file at GE COMPANY, SAN JOSE, CALIFORNIA

DC22A6253 Rev. 0
Design specification certified by BJORN HAABERG Prof. Eng. State CALIF. Reg. No. 15570

DC22A4912 Rev. 2
Stress analysis report certified by BETTADAPUR SRIHAR Prof. Eng. State CALIF. Reg. No. 18345

CERTIFICATION OF SHOP INSPECTION

I, the undersigned, holding a valid commission by the National Board of Boiler and Pressure Inspectors and/or the State or Province of NORTH CAROLINA and employed by DEPARTMENT OF LABOR of STATE OF NORTH CAROLINA have inspected the part of a pressure vessel described in this Partial Data Report on 4/2 1982, and state that to the best of my knowledge and belief, the NPT Certificate Holder has constructed this part in accordance with the ASME Code Section III.

By signing this certificate, neither the Inspector nor his employer makes any warranty, expressed or implied, concerning the part described in the Partial Data Report. Furthermore, neither the Inspector nor his employer shall be liable in any manner for any personal injury or property damages or a loss of any kind arising from or connected with this inspection.

DATE 5/20, 19 88 Inspector's Signature N.C. 723, PA.WC1766, OHIO National Board, State, Province and No

*Supplemental sheets in form of lists, sketches or drawing may be used provided (1) size is 8-1/2" X 11", (2) information in 1-2 on this Data Report is included on each sheet, and (3) each sheet is numbered and number of sheets is recorded in Item 3. "REMARKSs"

(10/77)

TVA 20

2 0 1 3 4 7 5 1 0 1

2 0 1 3 4 5 1 9 7 0 1 CORRECTED COPY

FORM N-2 NPT CERTIFICATE HOLDERS' DATA REPORT FOR NUCLEAR PART AND APPURTENANCES*
As required by the Provision of the ASME Code Rules, Section III, Div. I

1. Manufactured & Certified by: GE Company, 2117 Castle Hayne Rd., Wilmington, N.C. 28401
(Name and Address of NPT Certificate Holder)

(b) Manufactured for: BROWNS FERRY - 2, Near Athens, AL 35611
(Name and Address of N Certificate Holder for completed nuclear component

2. Identification-Certificate Holders's S/N of Part: A4702 Nat'l Bd. N. N/A

(a) Constructed According to Drawing No: 768ES34G006 Dwg. Prepared by D. L. Peterson

(b) Description of Part Inspected: CONTROL ROD DRIVE, MODEL # 7RDB144FG002

(C) Applicable ASME Code: Section III, Edition 1974, Addenda Date W'75 Case No. 1361-2 N207 Class 1

3. REMARKS: Standard part for use with Reactor. Hydrostatically tested at 1825 psi. min.
(Brief description of service for which component was designed)

CORRECTED COPY: Changed Items 2(a) and 2(b), Modified from 768ES34G1 to G6 Drive.

Sheet 2 of 2

1. Cap 166B9274P1
SA182-F316
3/8 thick X 1 1/16 OD

2. Indicator Tube 166B9313P1
SA312-TP316
3/4 sch 40-seamless pipe
0.113 wall thickness
1.065 max. dia.

3. Plug 159A1176P1
SA182-F304
1/4 thick x 0.812 OD

4. Flange 919D610P1 (719E474)
SA182-F304
3.37 thick x 9 5/8 OD

5. Base 137C5311P1
XM-19 SA479
7/8 thick x 2.875 Dia.

6. Ring Flange 137C8151P2
SA182-F304
1" thick x 5.0 OD x 1.75 ID

7. Cap Screw 117C4516P2
SA193-B6
6 ea. 1/2 dia. on 4 1/8 bolt circle

8. Plug 175A7961P1
SA182-F304
0.38 thick x 1.307 dia.

9. Nut 137C5934P1
XM-19 SA479
1.30 thick x 2.62 dia.

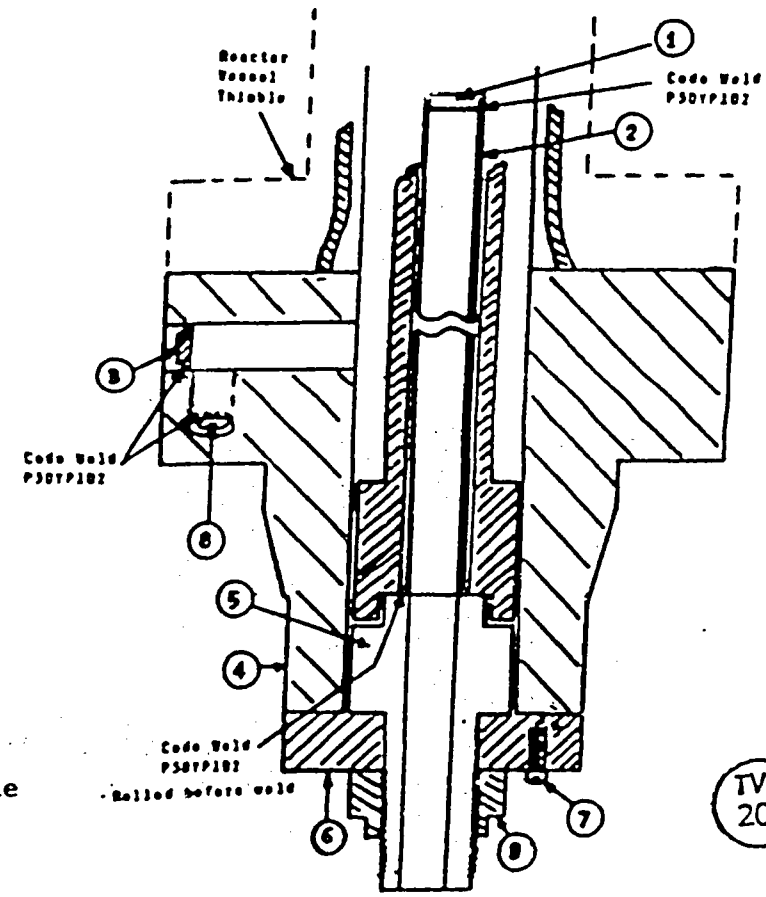

TVA 20

2 0 1 3 4 7 5 0 1

2 0 1 3 1 5 7 7 0

CORRECTED COPY

FORM N-2 NPT CERTIFICATE HOLDERS' DATA REPORT FOR NUCLEAR PART AND APPURTENANCES*
As required by the Provision of the ASME Code Rules, Section III, Div. I

1. Manufactured & Certified by: GE Company, 2117 Castle Hayne Rd., Wilmington, N.C. 28401
(Name and Address of NPT Certificate Holder)

(b) Manufactured for: BROWNS FERRY - 2, Near Athens, AL 35611
(Name and Address of N Certificate Holder for completed nuclear component

2. Identification-Certificate Holders's S/N of Part: A3837 Nat'l Bd. No. N/A

(a) Constructed According to Drawing No: 768E534G006 Dwg. Prepared by D. L. Peterson

(b) Description of Part Inspected: CONTROL ROD DRIVE, MODEL # 7RDB144FG002

(c) Applicable ASME Code: Section III, Edition 1974, Addenda Date W'75, Case No. N207 1361-2 Class 1

3. REMARKS: Standard part for use with Reactor. Hydrostatically tested at 1825 psi. min.
(Brief description of service for which component was designed)
CORRECTED COPY: CHANGED ITEM 2(a) and 2(b), Modified from 768E534G1 to G6 Drive.

SHEET 1 of 2

We certify that the statements in this report are correct and this vessel part or appurtenance as defined in the code conforms to the rules of construction of the ASME Code Section III. (The applicable Designed Specification and Stress Report are not the responsibility of the NPT Certificate Holder for parts. An NPT Certification Holder for appurtenances is responsible for furnishing a separate Design Specification and Stress Report if the appurtenance is not included in the component Design Specification and Stress Report).

DATE: 5/3, 19 88 Signed GE-NEBG-NF&CM-QA By J. E. Trudeman
(NPT Certificate Holder)

Certificate Of Authorization Expires: 6/16/90 Certification of Authorization No.: NPT N-1151

CERTIFICATION OF DESIGN FOR APPURTENANCE

Design information on file at GE COMPANY, SAN JOSE, CALIFORNIA

Stress analysis report on file at GE COMPANY, SAN JOSE, CALIFORNIA
DC22A6253 Rev. 0
Design specification certified by BJORN HAABERG Prof. Eng. State CALIF. Reg. No. 15570
DC22A4912 Rev. 2
Stress analysis report certified by BETTADAPUR SRDHAR Prof. Eng. State CALIF. Reg. No. 18345

CERTIFICATION OF SHOP INSPECTION

I, the undersigned, holding a valid commission by the National Board of Boiler and Pressure Inspectors and/or the State or Province of NORTH CAROLINA and employed by DEPARTMENT OF LABOR of STATE OF NORTH CAROLINA have inspected the part of a pressure vessel described in this Partial Data Report on 2/24 19 82, and state that to the best of my knowledge and belief, the NPT Certificate Holder has constructed this part in accordance with the ASME Code Section III.

By signing this certificate, neither the Inspector nor his employer makes any warranty, expressed or implied, concerning the part described in the Partial Data Report. Furthermore, neither the Inspector nor his employer shall be liable in any manner for any personal injury or property damages or a loss of any kind arising from or connected with this inspection.

DATE 5/3, 19 88 E. L. Merrill Inspector's Signature N.C. 723, PA WC1766, OHIO National Board, State, Province and No.

*Supplemental sheets in form of lists, sketches or drawing may be used provided (1) size is 8-1/2" X 11", (2) information in 1-2 on this Data Report is included on each sheet, and (3) each sheet is numbered and number of sheets is recorded in Item 3. "REMARKSs"

(10/77)

TVA 20

2 0 1 3 1 5 7 7 0 1

CORRECTED COPY

FORM N-2 NPT CERTIFICATE HOLDERS' DATA REPORT FOR NUCLEAR PART AND APPURTENANCES*
As required by the Provision of the ASME Code Rules, Section III, Div. I

1. Manufactured & Certified by: GE Company, 2117 Castle Hayne Rd., Wilmington, N.C. 28401
(Name and Address of NPT Certificate Holder)

(b) Manufactured for: BROWNS FERRY - 2, Near Athens, AL 35611
(Name and Address of N Certificate Holder for completed nuclear component)

2. Identification-Certificate Holders's S/N of Part: A3837 Nat'l Bd. N. N/A

(a) Constructed According to Drawing No: 768E534G006 Dwg. Prepared by D. L. Peterson

(b) Description of Part Inspected: CONTROL ROD DRIVE, MODEL # 7RDB144FG002

(C) Applicable ASME Code: Section III, Edition 1974, Addenda Date W'75 Case No. N207 1361-2 Class 1

3. REMARKS: Standard part for use with Reactor. Hydrostatically tested at 1825 psi. min.
(Brief description of service for which component was designed)

CORRECTED COPY: Changed Items 2(a) and 2(b), Modified from 768E534G1 to G6 Drive.

Sheet 2 of 2

1. Cap 166B9274P1
SA182-F316
3/8 thick X 1 1/16 OD

2. Indicator Tube 166B9313P1
SA312-TP316
3/4 sch 40-seamless pipe
0.113 wall thickness
1.065 max. dia.

3. Plug 159A1176P1
SA182-F304
1/4 thick x 0.812 OD

4. Flange 919D610P1 (719E474)
SA182-F304
3.37 thick x 9 5/8 OD

5. Base 137C5311P1
XM-19 SA479
7/8 thick x 2.875 Dia.

6. Ring Flange 137C8151P2
SA182-F304
1" thick x 5.0 OD x 1.75 ID

7. Cap Screw 117C4516P2
SA193-B6
6 ea. 1/2 dia. on 4 1/8 bolt circle

8. Plug 175A7961P1
SA182-F304
0.38 thick x 1.307 dia.

9. Nut 137C5934P1
XM-19 SA479
1.30 thick x 2.62 dia.

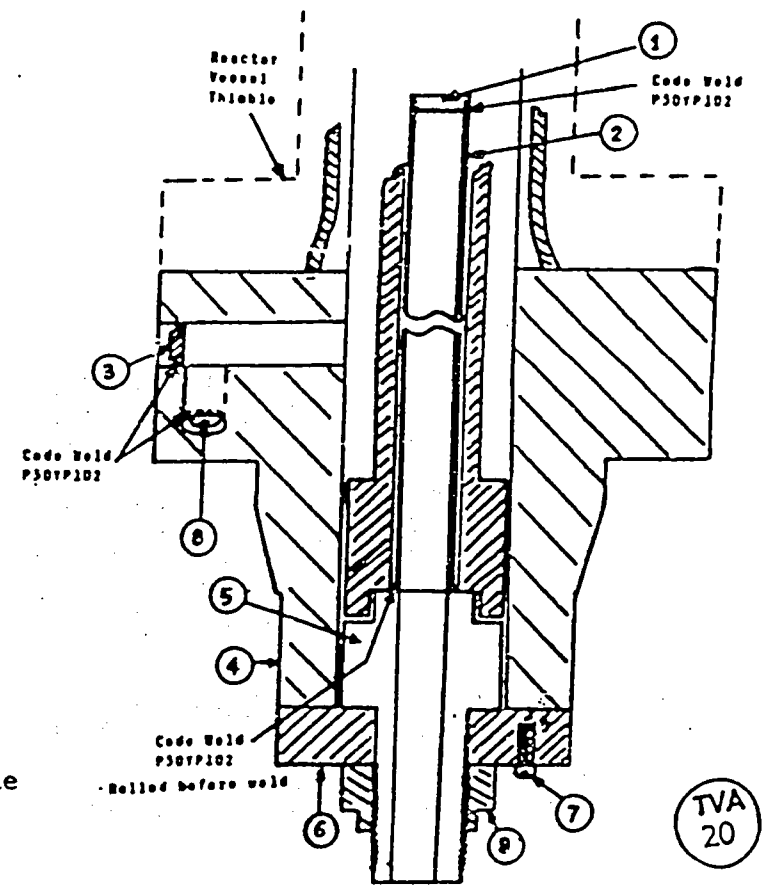

TVA 20

2 0 1 3 4 5 : 9 0 0 1

CORRECTED COPY

FORM N-2 NPT CERTIFICATE HOLDERS' DATA REPORT FOR NUCLEAR PART AND APPURTENANCES*
As required by the Provision of the ASME Code Rules, Section III, Div. I

1. Manufactured & Certified by: GE Company, 2117 Castle Hayne Rd., Wilmington, N.C. 28401
(Name and Address of NPT Certificate Holder)

(b) Manufactured for: BROWNS FERRY - 2, Near Athens, AL 35611
(Name and Address of N Certificate Holder for completed nuclear componen

2. Identification-Certificate Holders's S/N of Part: A5660 Nat'l Bd. No. N/A

(a) Constructed According to Drawing No: 768E534G006 Dwg. Prepared by D. L. Peterso

(b) Description of Part Inspected: CONTROL ROD DRIVE, MODEL # 7RDB144PG002

(c) Applicable ASME Code: Section III, Edition 1974, Addenda Date W'75, Case No. N207 1361-2 Class

3. REMARKS: Standard part for use with Reactor. Hydrostatically tested at 1825 psi min.
(Brief description of service for which component was designed)
CORRECTED COPY: CHANGED ITEM 2(a) and 2(b), Modified from 768E534G1 to G6 Drive.

SHEET 1 of 2

We certify that the statements in this report are correct and this vessel part or appurtenan as defined in the code conforms to the rules of construction of the ASME Code Section II (The applicable Designed Specification and Stress Report are not the responsibility of the N Certificate Holder for parts. An NPT Certification Holder for appurtenances is responsibl for furnishing a separate Design Specification and Stress Report if the appurtenance is n included in the component Design Specification and Stress Report).

DATE: 5/20, 19 88 Signed GE-NEBG-NF&CM-QA By
(NPT Certificate Holder)

Certificate Of Authorization Expires: 6/16/90 Certification of Authorization No.: NPT N-115

CERTIFICATION OF DESIGN FOR APPURTENANCE

Design information on file at GE COMPANY, SAN JOSE, CALIFORNIA

Stress analysis report on file at GE COMPANY, SAN JOSE, CALIFORNIA
DC22A6253 Rev. 0
Design specification certified by BJORN HAABERG Prof. Eng. State CALIF. Reg. No. 15570
DC22A4912 Rev. 2
Stress analysis report certified by BETTADAPUR SRIHAR Prof. Eng. State CALIF. Reg. No. 18345

CERTIFICATION OF SHOP INSPECTION

I, the undersigned, holding a valid commission by the National Board of Boiler and Pressur Inspectors and/or the State or Province of NORTH CAROLINA and employed by DEPARTMENT OF LABO of STATE OF NORTH CAROLINA have inspected the part of a pressure vessel described in thi Partial Data Report on 4/2 1982, and state that to the best of my knowledg and belief, the NPT Certificate Holder has constructed this part in accordance with the ASM Code Section III.

By signing this certificate, neither the Inspector nor his employer makes any warranty expressed or implied, concerning the part described in the Partial Data Report. Furthermore neither the Inspector nor his employer shall be liable in any manner for any personal injury or property damages or a loss of any kind arising from or connected with this inspection.

5/20, 19 88 N.C. 723, PA WC1766, Ohio

DATE Inspector's Signature National Board, State, Province and N

*Supplemental sheets in form of lists, sketches or drawing may be used provided (1) size is 8-1/2" X 11", (2) information in 1-2 on this Data Report is included on each sheet, and (3) each sheet is numbered and number of sheets is recorded in Item 3. "REMARKSs"

(10/77)

TV 20

2 0 1 3 4 5 3 9 0 1

CORRECTED COPY

FORM N-2 NPT CERTIFICATE HOLDERS' DATA REPORT FOR NUCLEAR PARTS AND APPURTENANCES

As required by the Provision of the ASME Code Rules, Section III, Div. I

1. Manufactured & Certified by: GE Company, 2117 Castle Hayne Rd., Wilmington, N.C. 28401
(Name and Address of NPT Certificate Holder)

(b) Manufactured for: BROWNS FERRY - 2, Near Athens, AL 35611
(Name and Address of N Certificate Holder for completed nuclear component

2. Identification-Certificate Holders's S/N of Part: A5660 Nat'l Bd. N. N/A

(a) Constructed According to Drawing No: 768E534G006 Dwg. Prepared by D. L. Peterson

(b) Description of Part Inspected: CONTROL ROD DRIVE, MODEL # 7RDB144FG002

(C) Applicable ASME Code: Section III, Edition 1974, Addenda Date W'75 Case No. N207 1361-2 Class

3. REMARKS: Standard part for use with Reactor. Hydrostatically tested at 1825 psi. min.
(Brief description of service for which component was designed)

CORRECTED COPY: Changed Items 2(a) and 2(b), Modified from 768E534G1 to G6 Drive.

Sheet 2 of 2

1. Cap 166B9274P1
SA182-F316
3/8 thick X 1 1/16 OD

2. Indicator Tube 166B9313P1
SA312-TP316
3/4 sch 40-seamless pipe
0.113 wall thickness
1.065 max. dia.

3. Plug 159A1176P1
SA182-F304
1/4 thick x 0.812 OD

4. Flange 919D610P1 (719E474)
SA182-F304
3.37 thick x 9 5/8 OD

5. Base 137C5311P1
XM-19 SA479
7/8 thick x 2.875 Dia.

6. Ring Flange 137C8151P2
SA182-F304
1" thick x 5.0 OD x 1.75 ID

7. Cap Screw 117C4516P2
SA193-B6
6 ea. 1/2 dia. on 4 1/8 bolt circle

8. Plug 175A7961P1
SA182-F304
0.38 thick x 1.307 dia.

9. Nut 137C5934P1
XM-19 SA479
1.30 thick x 2.62 dia.

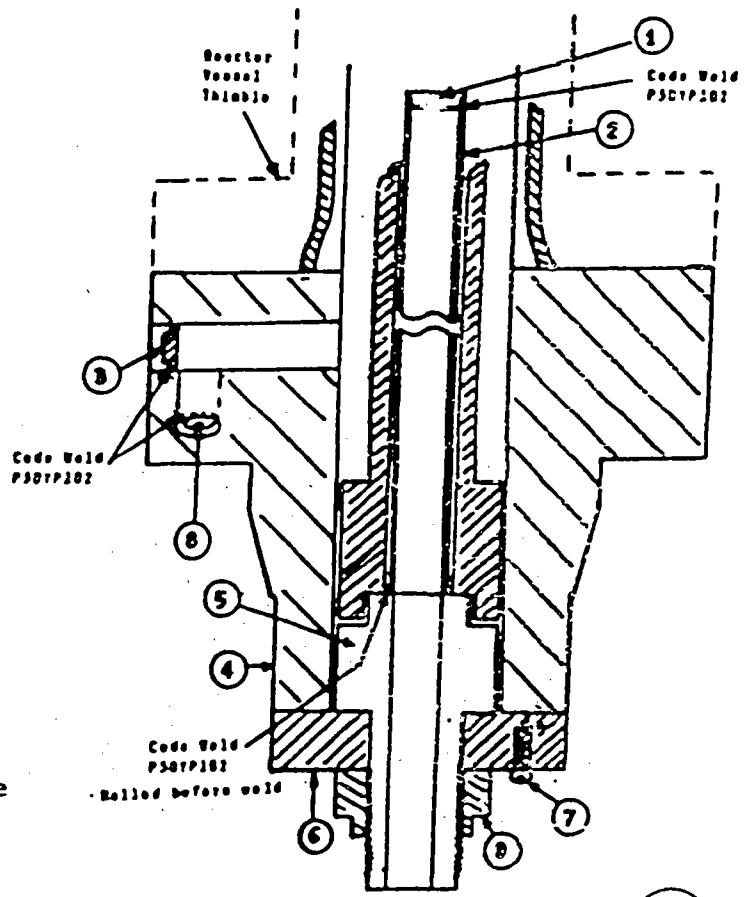

TVA 20

CORRECTED COPY

2 0 1 3 : 5 7 1 0 0

FORM N-2 NPT CERTIFICATE HOLDERS' DATA REPORT FOR NUCLEAR PART AND APPURTENANCES*
As required by the Provision of the ASME Code Rules, Section III, Div. I

1. Manufactured & Certified by: GE Company, 2117 Castle Hayne Rd., Wilmington, N.C. 28401
(Name and Address of NPT Certificate Holder)

(b) Manufactured for: BROWNS FERRY - 2, Near Athens, AL 35611
(Name and Address of N Certificate Holder for completed nuclear compone

2. Identification-Certificate Holders's S/N of Part: A4737 Nat'l Bd. No. N/A

(a) Constructed According to Drawing No: 768E534G006 Dwg. Prepared by D. L. Peters

(b) Description of Part Inspected: CONTROL ROD DRIVE, MODEL # 7RDB144FG002

(c) Applicable ASME Code: Section III, Edition 1974, Addenda Date W'75, Case No. N207 1361-2 Class

3. REMARKS: Standard part for use with Reactor. Hydrostatically tested at 1825 psi. min.
(Brief description of service for which component was designed)
CORRECTED COPY: CHANGED ITEM 2(a) and 2(b), Modified from 768E534G1 to G6 Drive.

SHEET 1 of 2

We certify that the statements in this report are correct and this vessel part or appurtenar as defined in the code conforms to the rules of construction of the ASME Code Section I: (The applicable Designed Specification and Stress Report are not the responsibility of the N Certificate Holder for parts. An NPT Certification Holder for appurtenances is responsib for furnishing a separate Design Specification and Stress Report if the appurtenance is r included in the component Design Specification and Stress Report).

DATE: 4/15, 19 88 Signed GE-NEBG-NF&CM-QA By J. Estadenmer
(NPT Certificate Holder)

Certificate Of Authorization Expires: 6/16/90 Certification of Authorization No.: NPT N-115

CERTIFICATION OF DESIGN FOR APPURTENANCE

Design information on file at GE COMPANY, SAN JOSE, CALIFORNIA

Stress analysis report on file at GE COMPANY, SAN JOSE, CALIFORNIA
DC22A6253 Rev. 0
Design specification certified by BJORN HAABERG Prof. Eng. State CALIF. Reg. No. 15570
DC22A4912 Rev. 2
Stress analysis report certified by BETTADAPUR SRDHAR Prof. Eng. State CALIF. Reg. No. 18345

CERTIFICATION OF SHOP INSPECTION

I, the undersigned, holding a valid commission by the National Board of Boiler and Pressur Inspectors and/or the State or Province of NORTH CAROLINA and employed by DEPARTMENT OF LABC of STATE OF NORTH CAROLINA have inspected the part of a pressure vessel described in thi Partial Data Report on 2/5 19 82, and state that to the best of my knowledg and belief, the NPT Certificate Holder has constructed this part in accordance with the ASM Code Section III.

By signing this certificate, neither the Inspector nor his employer makes any warranty expressed or implied, concerning the part described in the Partial Data Report. Furthermore neither the Inspector nor his employer shall be liable in any manner for any personal injury or property damages or a loss of any kind arising from or connected with this inspection.

DATE 4/15, 19 88 Inspector's Signature E E Merrill National Board, State, Province and N N.C. 723, PA.WC1766, OHIO

*Supplemental sheets in form of lists, sketches or drawing may be used provided (1) size is -1/2" X 11", (2) information in 1-2 on this Data Report is included on each sheet, and (3) ach sheet is numbered and number of sheets is recorded in Item 3. "REMARKSs"

(10/77)

63

1 of 17

FORM N-2 NPT CERTIFICATE HOLDERS' DATA REPORT FOR NUCLEAR PART AND APPURTENANCES*
As required by the Provision of the ASME Code Rules, Section III, Div. I

1. Manufactured & Certified by: GE Company, 2117 Castle Hayne Rd., Wilmington, N.C. 28401
(Name and Address of NPT Certificate Holder)

(b) Manufactured for: BROWNS FERRY - 2, Near Athens, AL 35611
(Name and Address of N Certificate Holder for completed nuclear componen

2. Identification-Certificate Holders's S/N of Part: A4737 Nat'l Bd. N. N/A

(a) Constructed According to Drawing No: 768E534G006 Dwg. Prepared by D. L. Peterso

(b) Description of Part Inspected: CONTROL ROD DRIVE, MODEL # 7RDB144FG002

(C) Applicable ASME Code: Section III, Edition 1974, Addenda Date W'75 Case No. 1361-2 Class N207

3. REMARKS: Standard part for use with Reactor. Hydrostatically tested at 1825 psi. min.
(Brief description of service for which component was designed'
CORRECTED COPY: Changed Items 2(a) and 2(b), Modified from 768E534G1 to G6 Drive.

Sheet 2 of 2

1. Cap 166B9274P1
SA182-F316
3/8 thick X 1 1/16 OD

2. Indicator Tube 166B9313P1
SA312-TP316
3/4 sch 40-seamless pipe
0.113 wall thickness
1.065 max. dia.

3. Plug 159A1176P1
SA182-F304
1/4 thick x 0.812 OD

4. Flange 919D610P1 (719E474)
SA182-F304
3.37 thick x 9 5/8 OD

5. Base 137C5311P1
XM-19 SA479
7/8 thick x 2.875 Dia.

6. Ring Flange 137C8151P2
SA182-F304
1" thick x 5.0 OD x 1.75 ID

7. Cap Screw 117C4516P2
SA193-B6
6 ea. 1/2 dia. on 4 1/8 bolt circle

8. Plug 175A7961P1
SA182-F304
0.38 thick x 1.307 dia.

9. Nut 137C5934P1
XM-19 SA479
1.30 thick x 2.62 dia.

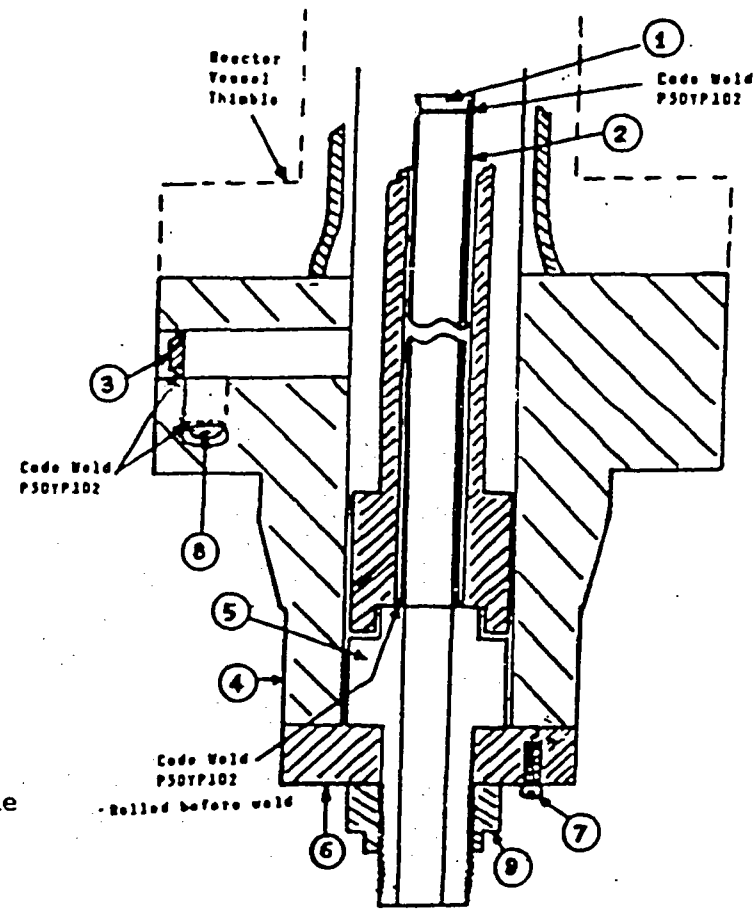

TVA 63

2 of 17

2 0 1 3 4 5 , 0 0 0 ;

CORRECTED COPY

FORM N-2 NPT CERTIFICATE HOLDERS' DATA REPORT FOR NUCLEAR PART AND APPURTENANCES*
As required by the Provision of the ASME Code Rules, Section III, Div. I

1. Manufactured & Certified by: GE Company, 2117 Castle Hayne Rd., Wilmington, N.C. 28401
(Name and Address of NPT Certificate Holder)

(b) Manufactured for: BROWNS FERRY - 2, Near Athens, AL 35611
(Name and Address of N Certificate Holder for completed nuclear componer

2. Identification-Certificate Holders's S/N of Part: A5553 Nat'l Bd. No. N/A

(a) Constructed According to Drawing No: 768E534G006 Dwg. Prepared by D. L. Petersc

(b) Description of Part Inspected: CONTROL ROD DRIVE, MODEL # 7RDB144FG002

(c) Applicable ASME Code: Section III, Edition 1974, Addenda Date W'75, Case No. N207 1361-2 Class

3. REMARKS: Standard part for use with Reactor. Hydrostatically tested at 1825 psi. min.
(Brief description of service for which component was designed)
CORRECTED COPY: CHANGED ITEM 2(a) and 2(b), Modified from 768E534G1 to G6 Drive.

SHEET 1 of 2

We certify that the statements in this report are correct and this vessel part or appurtenar as defined in the code conforms to the rules of construction of the ASME Code Section II (The applicable Designed Specification and Stress Report are not the responsibility of the N Certificate Holder for parts. An NPT Certification Holder for appurtenances is responsibl for furnishing a separate Design Specification and Stress Report if the appurtenance is r included in the component Design Specification and Stress Report).

DATE: 4/14, 19 88 Signed GE-NEBG-NF&CM-QA By J. E. Hrudemmi
(NPT Certificate Holder)

Certificate Of Authorization Expires: 6/16/90 Certification of Authorization No.: NPT N-115

CERTIFICATION OF DESIGN FOR APPURTENANCE

Design information on file at GE COMPANY, SAN JOSE, CALIFORNIA

Stress analysis report on file at GE COMPANY, SAN JOSE, CALIFORNIA
DC22A6253 Rev. 0
Design specification certified by BJORN HAABERG Prof. Eng. State CALIF. Reg. No. 15570
DC22A4912 Rev. 2
Stress analysis report certified by BETTADAPUR SRIHAR Prof. Eng. State CALIF. Reg. No. 18345

CERTIFICATION OF SHOP INSPECTION

I, the undersigned, holding a valid commission by the National Board of Boiler and Pressur Inspectors and/or the State or Province of NORTH CAROLINA and employed by DEPARTMENT OF LABO of STATE OF NORTH CAROLINA have inspected the part of a pressure vessel described in thi Partial Data Report on 3/12 19 82, and state that to the best of my knowledg and belief, the NPT Certificate Holder has constructed this part in accordance with the ASM Code Section III.

By signing this certificate, neither the Inspector nor his employer makes any warranty expressed or implied, concerning the part described in the Partial Data Report. Furthermore neither the Inspector nor his employer shall be liable in any manner for any personal injury or property damages or a loss of any kind arising from or connected with this inspection.

DATE 4/15, 19 88 E. L. Sherrill N.C. 723, PA.WC1766, OHIO
Inspector's Signature National Board, State, Province and N

*Supplemental sheets in form of lists, sketches or drawing may be used provided (1) size is 8-1/2" X 11", (2) information in 1-2 on this Data Report is included on each sheet, and (3) each sheet is numbered and number of sheets is recorded in Item 3. "REMARKSs"

(10/77)

TVA 63

1/7/17

CORRECTED COPY

2 0 1 3 4 5 0 2 0 1

FORM N-2 NPT CERTIFICATE HOLDERS' DATA REPORT FOR NUCLEAR PART AND APPURTENANCES*
As required by the Provision of the ASME Code Rules, Section III, Div. I

1. Manufactured & Certified by: GE Company, 2117 Castle Hayne Rd., Wilmington, N.C. 28401
(Name and Address of NPT Certificate Holder)

(b) Manufactured for: BROWNS FERRY - 2, Near Athens, AL 35611
(Name and Address of N Certificate Holder for completed nuclear component

2. Identification-Certificate Holders's S/N of Part: A5553 Nat'l Bd. N. N/A

(a) Constructed According to Drawing No: 768E534G006 Dwg. Prepared by D. L. Petersor

(b) Description of Part Inspected: CONTROL ROD DRIVE, MODEL # 7RDB144FG002

(C) Applicable ASME Code: Section III, Edition 1974, Addenda Date W'75 Case No. 1361-2 Class N207

3. REMARKS: Standard part for use with Reactor. Hydrostatically tested at 1825 psi. min.
(Brief description of service for which component was designed)

CORRECTED COPY: Changed Items 2(a) and 2(b), Modified from 768E534G1 to G6 Drive.

Sheet 2 of 2

1. Cap 166B9274P1
SA182-F316
3/8 thick X 1 1/16 OD

2. Indicator Tube 166B9313P1
SA312-TP316
3/4 sch 40-seamless pipe
0.113 wall thickness
1.065 max. dia.

3. Plug 159A1176P1
SA182-F304
1/4 thick x 0.812 OD

4. Flange 919D610P1 (719E474)
SA182-F304
3.37 thick x 9 5/8 OD

5. Base 137C5311P1
XM-19 SA479
7/8 thick x 2.875 Dia.

6. Ring Flange 137C8151P2
SA182-F304
1" thick x 5.0 OD x 1.75 ID

7. Cap Screw 117C4516P2
SA193-B6
6 ea. 1/2 dia. on 4 1/8 bolt circle

8. Plug 175A7961P1
SA182-F304
0.38 thick x 1.307 dia.

9. Nut 137C5934P1
XM-19 SA479
1.30 thick x 2.62 dia.

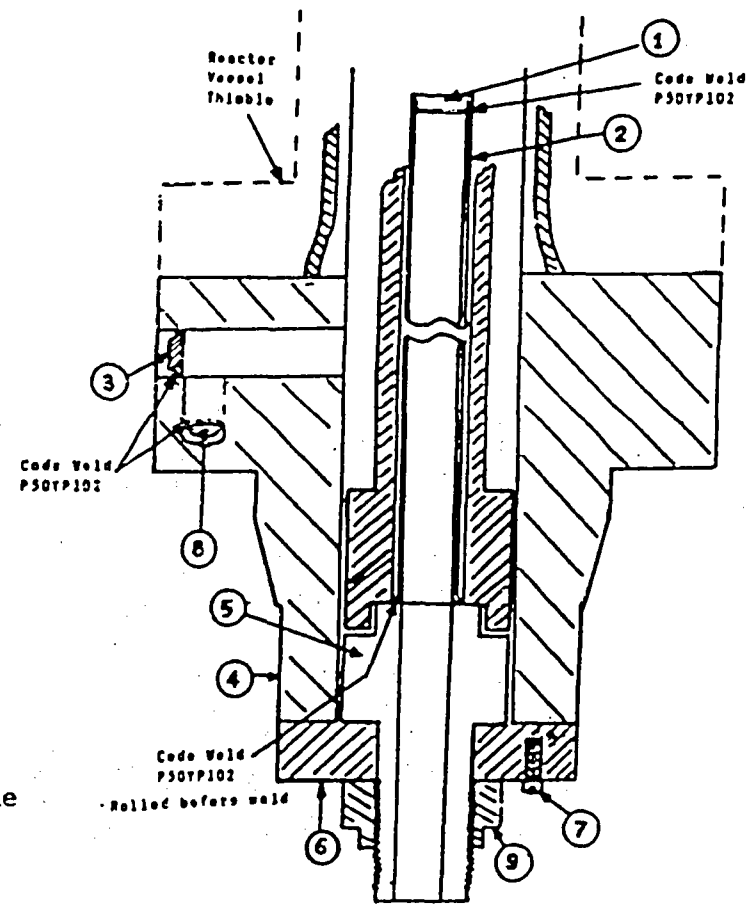

TVA 63

2717

2 0 1 3 4 5 5 9 0 0

CORRECTED COPY

FORM N-2 NPT CERTIFICATE HOLDERS' DATA REPORT FOR NUCLEAR PART AND APPURTENANCES*
As required by the Provision of the ASME Code Rules, Section III, Div. I

1. Manufactured & Certified by: GE Company, 2117 Castle Hayne Rd., Wilmington, N.C. 28401
(Name and Address of NPT Certificate Holder)

(b) Manufactured for: BROWNS FERRY - 2, Near Athens, AL 35611
(Name and Address of N Certificate Holder for completed nuclear component)

2. Identification-Certificate Holders's S/N of Part: A5624 Nat'l Bd. No. N/A

(a) Constructed According to Drawing No: 768E534G006 Dwg. Prepared by D. L. Peterson

(b) Description of Part Inspected: CONTROL ROD DRIVE, MODEL # 7RDB144FG002

(c) Applicable ASME Code: Section III, Edition 1974, Addenda Date W'75, Case No. N207 1361-2 Class 1

3. REMARKS: Standard part for use with Reactor. Hydrostatically tested at 1825 psi. min.
(Brief description of service for which component was designed)
CORRECTED COPY: CHANGED ITEM 2(a) and 2(b), Modified from 768E534G1 to G6 Drive.

SHEET 1 of 2

We certify that the statements in this report are correct and this vessel part or appurtenance as defined in the code conforms to the rules of construction of the ASME Code Section III. (The applicable Designed Specification and Stress Report are not the responsibility of the NPT Certificate Holder for parts. An NPT Certification Holder for appurtenances is responsible for furnishing a separate Design Specification and Stress Report if the appurtenance is not included in the component Design Specification and Stress Report).

DATE: 4/14, 19 88 Signed GE-NEBG-NF&CM-QA By [signature]
(NPT Certificate Holder)

Certificate Of Authorization Expires: 6/16/90 Certification of Authorization No.: NPT N-1151

CERTIFICATION OF DESIGN FOR APPURTENANCE

Design information on file at GE COMPANY, SAN JOSE, CALIFORNIA

Stress analysis report on file at GE COMPANY, SAN JOSE, CALIFORNIA
DC22A6253 Rev. 0
Design specification certified by BJORN HAABERG Prof. Eng. State CALIF. Reg. No. 15570
DC22A4912 Rev. 2
Stress analysis report certified by BETTADAPUR SRDHAR Prof. Eng. State CALIF. Reg. No. 18345

CERTIFICATION OF SHOP INSPECTION

I, the undersigned, holding a valid commission by the National Board of Boiler and Pressure Inspectors and/or the State or Province of NORTH CAROLINA and employed by DEPARTMENT OF LABOR of STATE OF NORTH CAROLINA have inspected the part of a pressure vessel described in this Partial Data Report on 4/2 19 82, and state that to the best of my knowledge and belief, the NPT Certificate Holder has constructed this part in accordance with the ASME Code Section III.

By signing this certificate, neither the Inspector nor his employer makes any warranty, expressed or implied, concerning the part described in the Partial Data Report. Furthermore, neither the Inspector nor his employer shall be liable in any manner for any personal injury or property damages or a loss of any kind arising from or connected with this inspection.

DATE 4/15, 19 88 [signature] Inspector's Signature

N.C. 723, PA.WC1766, OHIO
National Board, State, Province and No.

*Supplemental sheets in form of lists, sketches or drawing may be used provided (1) size is 8-1/2" X 11", (2) information in 1-2 on this Data Report is included on each sheet, and (3) each sheet is numbered and number of sheets is recorded in Item 3. "REMARKSs"

(10/77)

TVA 63

1 of 17

CORRECTED COPY

2013651 9001

FORM N-2 NPT CERTIFICATE HOLDERS' DATA REPORT FOR NUCLEAR PART AND APPURTENANCES*
As required by the Provision of the ASME Code Rules, Section III, Div. I

1. Manufactured & Certified by: GE Company, 2117 Castle Hayne Rd., Wilmington, N.C. 28401
(Name and Address of NPT Certificate Holder)

(b) Manufactured for: BROWNS FERRY - 2, Near Athens, AL 35611
(Name and Address of N Certificate Holder for completed nuclear component

2. Identification-Certificate Holders's S/N of Part: A5624 Nat'l Bd. N. N/A

(a) Constructed According to Drawing No: 768E534G006 Dwg. Prepared by D. L. Peterson

(b) Description of Part Inspected: CONTROL ROD DRIVE, MODEL # 7RDB144FG002

(C) Applicable ASME Code: Section III, Edition 1974, Addenda Date W'75 Case No. N207 1361-2 Class

3. REMARKS: Standard part for use with Reactor. Hydrostatically tested at 1825 psi. min.
(Brief description of service for which component was designed)

CORRECTED COPY: Changed Items 2(a) and 2(b), Modified from 768E534G1 to G6 Drive.

Sheet 2 of 2

1. Cap 166B9274P1
SA182-F316
3/8 thick X 1 1/16 OD

2. Indicator Tube 166B9313P1
SA312-TP316
3/4 sch 40-seamless pipe
0.113 wall thickness
1.065 max. dia.

3. Plug 159A1176P1
SA182-F304
1/4 thick x 0.812 OD

4. Flange 919D610P1 (719E474)
SA182-F304
3.37 thick x 9 5/8 OD

5. Base 137C5311P1
XM-19 SA479
7/8 thick x 2.875 Dia.

6. Ring Flange 137C8151P2
SA182-F304
1" thick x 5.0 OD x 1.75 ID

7. Cap Screw 117C4516P2
SA193-B6
6 ea. 1/2 dia. on 4 1/8 bolt circle

8. Plug 175A7961P1
SA182-F304
0.38 thick x 1.307 dia.

9. Nut 137C5934P1
XM-19 SA479
1.30 thick x 2.62 dia.

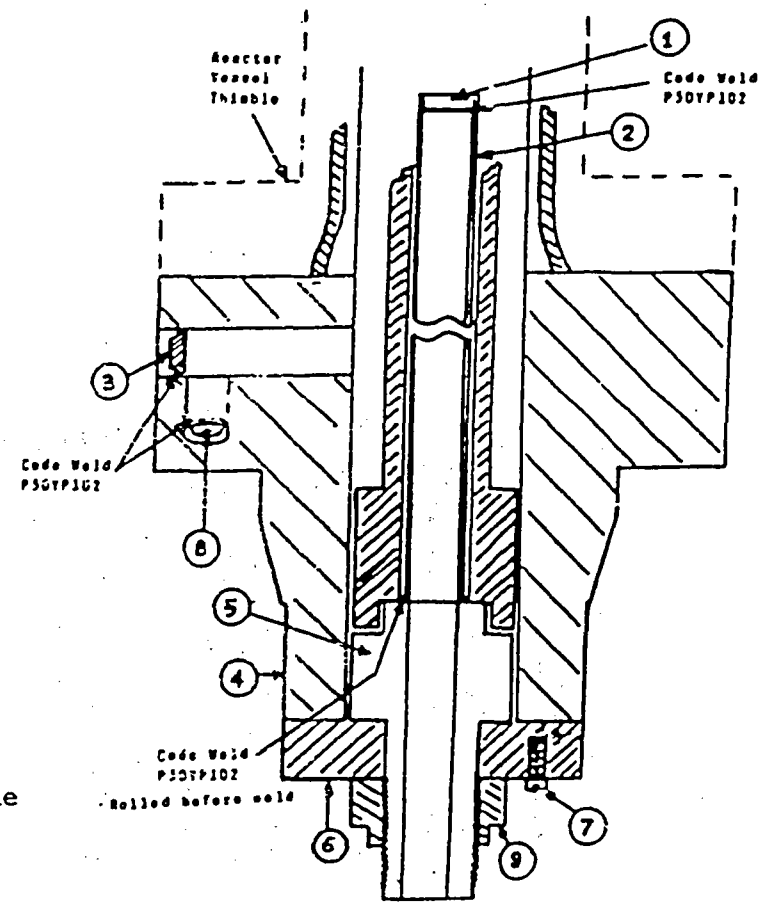

TVA 63

20/17

FORM N-2 NPT CERTIFICATE HOLDERS' DATA REPORT FOR NUCLEAR PART AND APPURTENANCES*
As required by the Provision of the ASME Code Rules, Section III, Div. I

1. Manufactured & Certified by : General Electric Company Nuclear Fuel & Components Manufacturing (GE NF & CM)
2117 Castle Hayne Road, Wilmington, North Carolina 28401
(Name and Address of NPT Certificate Holder)

(b) Manufactured for : TVA Chattanooga, Tennessee 37402-2127
(Name and Address of N Certificate Holder for completed nuclear component)

2. Identification - Certificate Holder's S/N of Part : A5394 Nat'l Bd. No. N/A

(a) Constructed According to Drawing No: 768E534G008 Rev 9 Dwg. Prepared by D. L. Peterson

(b) Description of Part Inspected: Control Rod Drive, Model # 7RDB144FG005

(c) Applicable ASME Code: Section III , Edition 1974 , Addenda Date W'75 , Case No. N207 1361-2 Class 1

3. REMARKS: Standard part for use with Reactor. Hydrostatically tested at 1825 psi, min.
(Brief description of service for which component was designed)

Sheet 1 of 2

We certify that the statements in this report are correct and this vessel part or appurtenance as defined in the code conforms to the rules of construction of the ASME Code Section III. (The applicable Designed Specification and Stress Report are not the responsibility of the NPT Certificate Holder for parts. An NPT Certification Holder for appurtenances is responsible for furnishing a separate Design Specification and Stress Report if the appurtenance is not included in the component Design Specification and Stress Report).

Date: 06/25/92 Signed GE - NEBG - NF & CM - QA By [signature]
(NPT Certificate Holder) (SC QA Representive)

Certificate of Authorization Expires: 6/16/93 Certification of Authorization No. : NPT N - 1151

Certification of Design for Appurtenance

Design information on file at GE Company, San Jose, California

Stress analysis report on file at GE Company, San Jose, California

DC22A6253 Rev. 1
Design specification certified by Blom Haaberg Prof. Eng. State Calif. Reg. No. 15570

DC22A6254 Rev 1
Stress analysis report certified by Edward Yoshio Prof. Eng. State Calif. Reg. No. M018646

Certification of Shop Inspection

I, the undersigned, holding a valid commission by the National Board of Boiler and Pressure Inspectors and/or the State or Province of North Carolina and employed by Department of Labor of State of North Carolina have inspected the part of a pressure vessel described in this Partial Data Report on 6/25, 1992, and state that to the best of my knowledge and belief, the NPT Certificate Holder has constructed this part in accordance with the ASME Code Section III.
By signing this certificate, neither the Inspector nor his employer makes any warranty, expressed or implied, concerning the part described in the Partial Data Report. Furthermore, neither the Inspector nor his employer shall be liable in any manner for any personal injury or property damages or a loss of any kind arising from or connected with this Inspection.

6/25, 1992 [signature] NC 1231, Ohio, WC 3686 PA
Date Inspector's Signature National Board, State, Province And No

*Supplemental sheets in form of lists, sketches or drawing may be used provided (1) size is 8-1/2" x 11", (2) information in 1-2 on this Data Report is included on each sheet, and (3) each sheet is numbered and number of sheets is recorded in Item 3. "REMARKS".

(07/90) 3/25/05

5022.1434

FORM N-2 NPT CERTIFICATE HOLDERS' DATA REPORT FOR NUCLEAR PART AND APPURTENANCES*
As required by the Provision of the ASME Code Rules, Section III, Div. I

1. Manufactured & Certified by : General Electric Company Nuclear Fuel & Components Manufacturing (GE NF & CM)
2117 Castle Hayne Road, Wilmington, North Carolina 28401
(Name and Address of NPT Certificate Holder)

(b) Manufactured for : TVA Chattanooga, Tennessee 37402-2127
(Name and Address of N Certificate Holder for completed nuclear component)

2. Identification - Certificate Holder's S/N of Part : A5394 Nat'l Bd. No. N/A

(a) Constructed According to Drawing No: 768E534G008 Rev 9 Dwg. Prepared by D. L. Peterson

(b) Description of Part Inspected: Control Rod Drive, Model # 7RDB144FG005

(c) Applicable ASME Code: Section III , Edition 1974 , Addenda Date W75 , Case No. N207 1361-2 Class 1

3. REMARKS: Standard part for use with Reactor. Hydrostatically tested at 1825 psi, min.
(Brief description of service for which component was designed)

Sheet 2 of 2

1. Cap 166B9274P001
SA182 - F304
3/8" thick x 1 1/16" OD

2. Indicator Tube 166B9313P001
SA312 - TP316
3/4" sch 40 - seamless pipe
0.113" wall thickness
1.065" max. dia.

3. Plug 159A1176P001
SA182 - F304
1/4" thick x 0.812" OD

4. Flange 919D610P001 (719E474)
SA182 - F304
3.37" thick x 9 5/8" OD

5. Base 137C5311P001
SA182 - F304
7/8" thick x 2.875" dia.

6. Ring Flange 114B5122P002, P003
137C8151P001, P002
SA182 - F304
1" thick x 5.0" OD x 1.75" ID

7. Cap Screw 117C4516P002
SA193 - B6
6 ea. 1/2" dia. on 4 1/8" bolt circle

8. Plug 175A7961P001
SA182 - F304
0.38" thick x 1.307" dia

9. Nut 137C5934P001
XM - 19 SA479
1.30" thick x 2.62" dia

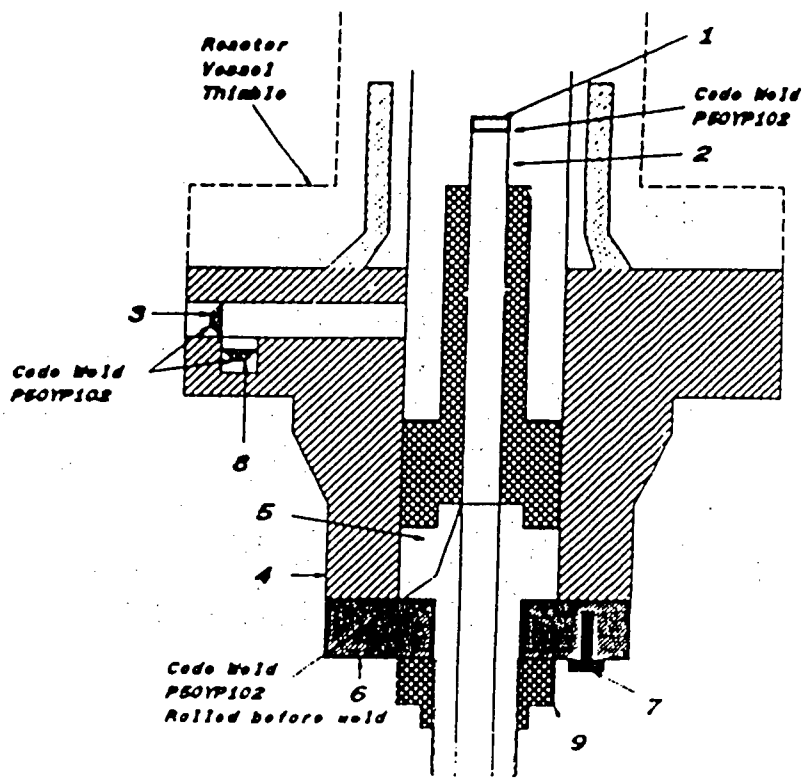

2 0 1 3 4 5 1 3 0 0 0 CORRECTED COPY

FORM N-2 NPT CERTIFICATE HOLDERS' DATA REPORT FOR NUCLEAR PART AND APPURTENANCES*
As required by the Provision of the ASME Code Rules, Section III, Div. I

1. Manufactured & Certified by: GE Company, 2117 Castle Hayne Rd., Wilmington, N.C. 28401
(Name and Address of NPT Certificate Holder)

(b) Manufactured for: BROWNS FERRY - 2, Near Athens, AL 35611
(Name and Address of N Certificate Holder for completed nuclear compone:

2. Identification-Certificate Holders's S/N of Part: A4638 Nat'l Bd. No. N/A

(a) Constructed According to Drawing No: 768E534G006 Dwg. Prepared by D. L. Peters

(b) Description of Part Inspected: CONTROL ROD DRIVE, MODEL # 7RDB144FG002

(c) Applicable ASME Code: Section III, Edition 1974, Addenda Date W'75, Case No. N207 1361-2 Class

3. REMARKS: Standard part for use with Reactor. Hydrostatically tested at 1825 psi. min.
(Brief description of service for which component was designed)
CORRECTED COPY: CHANGED ITEM 2(a) and 2(b), Modified from 768E534G1 to G6 Drive.

SHEET 1 of 2

We certify that the statements in this report are correct and this vessel part or appurtenar as defined in the code conforms to the rules of construction of the ASME Code Section I: (The applicable Designed Specification and Stress Report are not the responsibility of the N Certificate Holder for parts. An NPT Certification Holder for appurtenances is responsibl for furnishing a separate Design Specification and Stress Report if the appurtenance is r included in the component Design Specification and Stress Report).

DATE: 4/14, 19 88 Signed GE-NEBG-NF&CM-QA By J. E. Hardemann
(NPT Certificate Holder)

Certificate Of Authorization Expires: 6/16/90 Certification of Authorization No.: NPT N-115

CERTIFICATION OF DESIGN FOR APPURTENANCE

Design information on file at GE COMPANY, SAN JOSE, CALIFORNIA

Stress analysis report on file at GE COMPANY, SAN JOSE, CALIFORNIA
DC22A6253 Rev. 0
Design specification certified by BJORN HAABERG Prof. Eng. State CALIF. Reg. No. 15570
DC22A4912 Rev. 2
Stress analysis report certified by BETTADAPUR SRIHAR Prof. Eng. State CALIF. Reg. No. 18345

CERTIFICATION OF SHOP INSPECTION

I, the undersigned, holding a valid commission by the National Board of Boiler and Pressur Inspectors and/or the State or Province of NORTH CAROLINA and employed by DEPARTMENT OF LABO of STATE OF NORTH CAROLINA have inspected the part of a pressure vessel described in thi Partial Data Report on 5/5 19 82, and state that to the best of my knowledg and belief, the NPT Certificate Holder has constructed this part in accordance with the ASM Code Section III.

By signing this certificate, neither the Inspector nor his employer makes any warranty expressed or implied, concerning the part described in the Partial Data Report. Furthermore neither the Inspector nor his employer shall be liable in any manner for any personal injury or property damages or a loss of any kind arising from or connected with this inspection.

DATE 4/15, 19 88 Inspector's Signature E. L. Sherrill N.C. 723, PA.WC1766, OHIO National Board, State, Province and N

*Supplemental sheets in form of lists, sketches or drawing may be used provided (1) size is 8-1/2" X 11", (2) information in 1-2 on this Data Report is included on each sheet, and (3) each sheet is numbered and number of sheets is recorded in Item 3. "REMARKSs"

(10/77)

TVA 63 1/17

CORRECTED COPY

2 2 1 7 1 5 1 8 2 0 1

FORM N-2 NPT CERTIFICATE HOLDERS' DATA REPORT FOR NUCLEAR PART AND APPURTENANCES*
As required by the Provision of the ASME Code Rules, Section III, Div. I

1. Manufactured & Certified by: GE Company, 2117 Castle Hayne Rd., Wilmington, N.C. 28401
(Name and Address of NPT Certificate Holder)

(b) Manufactured for: BROWNS FERRY - 2, Near Athens, AL 35611
(Name and Address of N Certificate Holder for completed nuclear component

2. Identification-Certificate Holders's S/N of Part: A4638 Nat'l Bd. N. N/A

(a) Constructed According to Drawing No: 768E534G006 Dwg. Prepared by D. L. Peterson

(b) Description of Part Inspected: CONTROL ROD DRIVE, MODEL # 7RDB144FG002

(C) Applicable ASME Code: Section III, Edition 1974, Addenda Date W'75 Case No. 1361-2 Class N207

3. REMARKS: Standard part for use with Reactor. Hydrostatically tested at 1825 psi. min.
(Brief description of service for which component was designed)

CORRECTED COPY: Changed Items 2(a) and 2(b), Modified from 768E534G1 to G6 Drive.

Sheet 2 of 2

1. Cap 166B9274P1
SA182-F316
3/8 thick X 1 1/16 OD

2. Indicator Tube 166B9313P1
SA312-TP316
3/4 sch 40-seamless pipe
0.113 wall thickness
1.065 max. dia.

3. Plug 159A1176P1
SA182-F304
1/4 thick x 0.812 OD

4. Flange 919D610P1 (719E474)
SA182-F304
3.37 thick x 9 5/8 OD

5. Base 137C5311P1
XM-19 SA479
7/8 thick x 2.875 Dia.

6. Ring Flange 137C8151P2
SA182-F304
1" thick x 5.0 OD x 1.75 ID

7. Cap Screw 117C4516P2
SA193-B6
6 ea. 1/2 dia. on 4 1/8 bolt circle

8. Plug 175A7961P1
SA182-F304
0.38 thick x 1.307 dia.

9. Nut 137C5934P1
XM-19 SA479
1.30 thick x 2.62 dia.

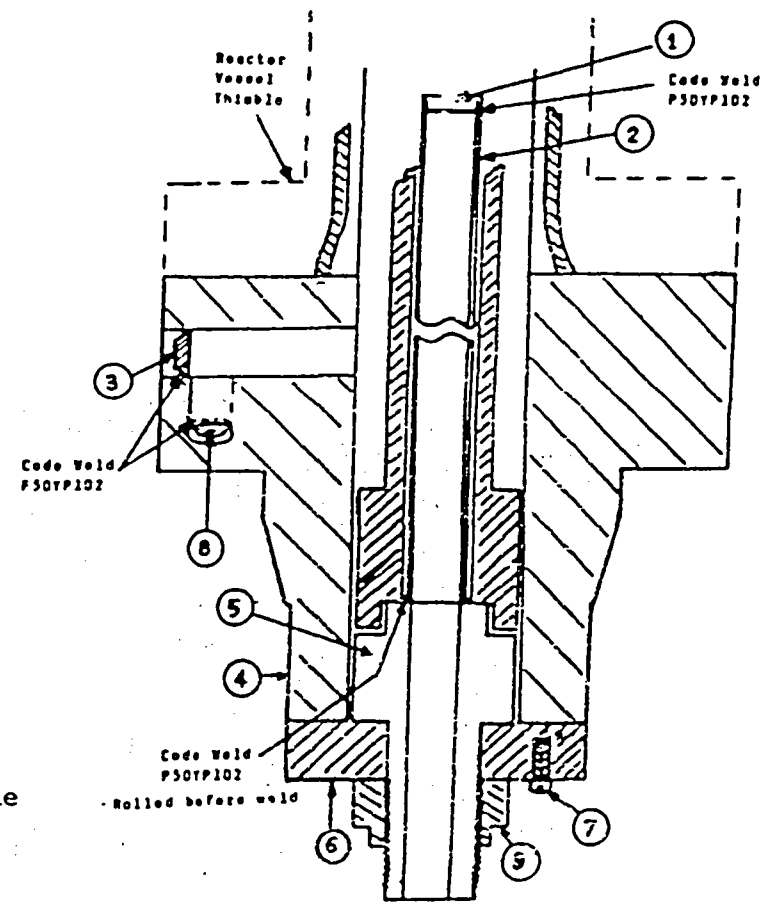

TVA 63

2 of 17

5022.0690

FORM N-2 NPT CERTIFICATE HOLDERS' DATA REPORT FOR NUCLEAR PART AND APPURTENANCES*
as required by the Provision of the ASME Code Rules, Section III, Div. I

1. Manufactured & Certified by : General Electric Company Nuclear Fuel & Components Manufacturing (GE NF & CM)
2117 Castle Hayne Road, Wilmington, North Carolina 28401
(Name and Address of NPT Certificate Holder)

(1) Manufactured for : TVA Chattanooga, Tennessee 37402-2127
(Name and Address of N Certificate Holder for completed nuclear component)

2. Identification - Certificate Holder's S/N of Part : A3841 Nat'l Bd. No. N/A

(a) Constructed According to Drawing No: 768E534G008 Rev 9 Dwg. Prepared by D. L. Peterson

(b) Description of Part Inspected: Control Rod Drive, Model # 7RDB144FG005

(c) Applicable ASME Code: Section III . Edition 1974 . Addenda Date W75 . Case No. N207 1361-2 Class 1

3. REMARKS: Standard part for use with Reactor. Hydrostatically tested at 1825 psi. min.
(Brief description of service for which component was designed)

Sheet 1 of 2

We certify that the statements in this report are correct and this vessel part or appurtenance as defined in the code conforms to the rules of construction of the ASME Code Section III. (The applicable Designed Specification and Stress Report are not the responsibility of the NPT Certificate Holder for parts. An NPT Certification Holder for appurtenances is responsible for furnishing a separate Design Specification and Stress Report if the appurtenance is not included in the component Design Specification and Stress Report).

Date: 10/06/92 Signed GE-NEBG-NF & CM-QA By [signature]
(NPT Certificate Holder) (SC QA Representative)

Certificate of Authorization Expires: 6/16/93 Certification of Authorization No. : NPT N-1151

Certification of Design for Appurtenance

Design information on file at GE Company, San Jose, California

Stress analysis report on file at GE Company, San Jose, California

DC22A8253 Rev. 1
Design specification certified by Blom Hasberg Prof. Eng. State Calif. Reg. No. 15570

DC22A8254 Rev 1
Stress analysis report certified by Edward Yoshio Prof. Eng. State Calif. Reg. No. M018646

Certification of Shop Inspection

I, the undersigned, holding a valid commission by the National Board of Boiler and Pressure Inspectors and/or the State or Province of North Carolina and employed by Department of Labor of State of North Carolina have inspected the part of a pressure vessel described in this Partial Data Report on 9/25, 1992, and state that to the best of my knowledge and belief, the NPT Certificate Holder has constructed this part in accordance with the ASME Code Section III.
By signing this certificate, neither the Inspector nor his employer makes any warranty, expressed or implied, concerning the part described in the Partial Data Report. Furthermore, neither the Inspector nor his employer shall be liable in any manner for any personal injury or property damages or a loss of any kind arising from or connected with this inspection.

10/6, 1992 [signature] NC 1231, Ohio, WC 3686 PA
Date Inspector's Signature National Board, State, Province And No

Supplemental sheets in form of lists, sketches or drawing may be used provided (1) size is 8-1/2" x 11", (2) information in 1-2 on this Data Report is included on each sheet, and (3) each sheet is numbered and number of sheets is recorded in Item 3. "REMARKS".

(07/93)

C/N 3/25/05

6022.0892

FORM N-2 NPT CERTIFICATE HOLDERS' DATA REPORT FOR NUCLEAR PART AND APPURTENANCES*
As required by the Provision of the ASME Code Rules, Section III, Div. I

1. Manufactured & Certified by : General Electric Company Nuclear Fuel & Components Manufacturing (GE NF & CM)
2117 Castle Hayne Road, Wilmington, North Carolina 28401
(Name and Address of NPT Certificate Holder)

(b) Manufactured for : TVA Chattanooga, Tennessee 37402-2127
(Name and Address of N Certificate Holder for completed nuclear component)

2. Identification - Certificate Holder's S/N of Part : A3841 Nat'l Bd. No. N/A

(a) Constructed According to Drawing No: 768E534G008 Rev 9 Dwg. Prepared by D. L. Peterson

(b) Description of Part Inspected: Control Rod Drive, Model # 7RDB144FG005

(c) Applicable ASME Code: Section III , Edition 1974 , Addenda Date W75 . Case No. N207 1361-2 Class 1

3. REMARKS: Standard part for use with Reactor. Hydrostatically tested at 1825 psi, min.
(Brief description of service for which component was designed)

Sheet 2 of 2

1. Cap 166B9274P001
SA182 - F304
3/8" thick x 1 1/16" OD

2. Indicator Tube 166B9313P001
SA312 - TP316
3/4" sch 40 - seamless pipe
0.113" wall thickness
1.065" max. dia.

3. Plug 158A1176P001
SA182 - F304
1/4" thick x 0.812" OD

4. Flange 919D610P001 (719E474)
SA182 - F304
3.37" thick x 9 5/8" OD

5. Base 137C5311P001
SA182 - F304
7/8" thick x 2.875" dia.

6. Ring Flange 114B5122P002, P003
137C8151P001, P002
SA182 - F304
1" thick x 5.0" OD x 1.75" ID

7. Cap Screw 117C4516P002
SA193 - B6
6 ea. 1/2" dia. on 4 1/8" bolt circle

8. Plug 175A7961P001
SA182 - F304
0.38" thick x 1.307" dia.

9 Nut 137C5934P001
XM - 19 SA479
1.30" thick x 2.62" dia

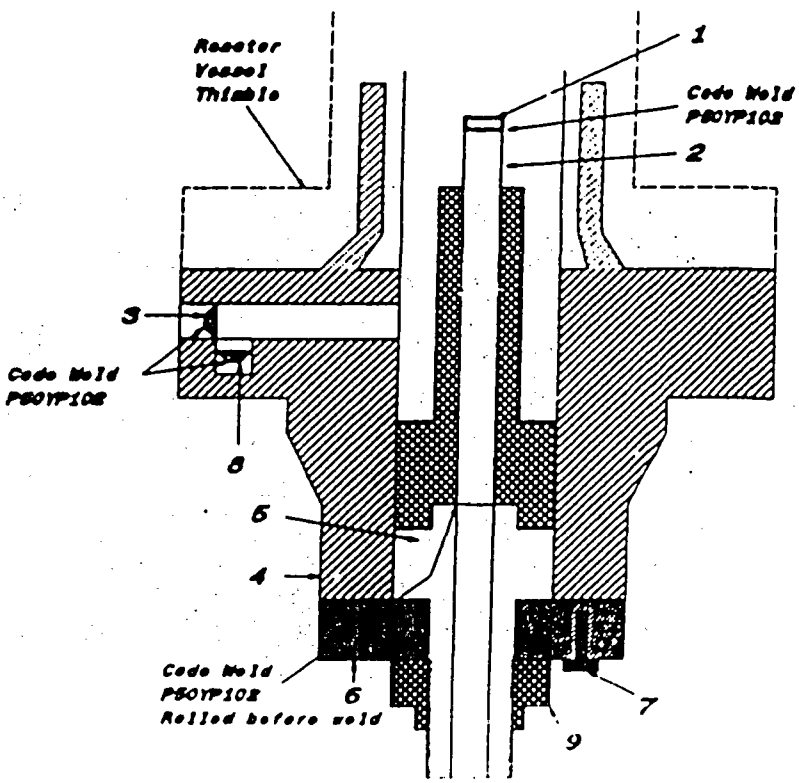

2 0 1 3 4 5 5 2 0 0 0

CORRECTED COPY

FORM N-2 NPT CERTIFICATE HOLDERS' DATA REPORT FOR NUCLEAR PART AND APPURTENANCES*
As required by the Provision of the ASME Code Rules, Section III, Div. I

1. Manufactured & Certified by: GE Company, 2117 Castle Hayne Rd., Wilmington, N.C. 28401
(Name and Address of NPT Certificate Holder)

(b) Manufactured for: BROWNS FERRY - 2, Near Athens, AL 35611
(Name and Address of N Certificate Holder for completed nuclear componer

2. Identification-Certificate Holders's S/N of Part: A5629 Nat'l Bd. No. N/A

(a) Constructed According to Drawing No: 768E534G006 Dwg. Prepared by D. L. Petersc

(b) Description of Part Inspected: CONTROL ROD DRIVE, MODEL # 7RDB144FG002

(c) Applicable ASME Code: Section III, Edition 1974, Addenda Date W'75, Case No. N207 1361-2 Class

3. REMARKS: Standard part for use with Reactor. Hydrostatically tested at 1825 psi. min.
(Brief description of service for which component was designed)
CORRECTED COPY: CHANGED ITEM 2(a) and 2(b), Modified from 768E534G1 to G6 Drive.

SHEET 1 of 2

We certify that the statements in this report are correct and this vessel part or appurtenar as defined in the code conforms to the rules of construction of the ASME Code Section II (The applicable Designed Specification and Stress Report are not the responsibility of the N Certificate Holder for parts. An NPT Certification Holder for appurtenances is responsibl for furnishing a separate Design Specification and Stress Report if the appurtenance is n included in the component Design Specification and Stress Report).

DATE: 4/14, 19 88 Signed GE-NEBG-NF&CM-QA By J. Stoudenmire
(NPT Certificate Holder)

Certificate Of Authorization Expires: 6/16/90 Certification of Authorization No.: NPT N-115

CERTIFICATION OF DESIGN FOR APPURTENANCE

Design information on file at GE COMPANY, SAN JOSE, CALIFORNIA

Stress analysis report on file at GE COMPANY, SAN JOSE, CALIFORNIA
DC22A6253 Rev. 0
Design specification certified by BJORN HAABERG Prof. Eng. State CALIF. Reg. No. 15570
DC22A4912 Rev. 2
Stress analysis report certified by BETTADAPUR SRDHAR Prof. Eng. State CALIF. Reg. No. 18345

CERTIFICATION OF SHOP INSPECTION

I, the undersigned, holding a valid commission by the National Board of Boiler and Pressur Inspectors and/or the State or Province of NORTH CAROLINA and employed by DEPARTMENT OF LABO of STATE OF NORTH CAROLINA have inspected the part of a pressure vessel described in thi Partial Data Report on 4/2 19 82, and state that to the best of my knowledg and belief, the NPT Certificate Holder has constructed this part in accordance with the ASM Code Section III.

By signing this certificate, neither the Inspector nor his employer makes any warranty expressed or implied, concerning the part described in the Partial Data Report. Furthermore neither the Inspector nor his employer shall be liable in any manner for any personal injury or property damages or a loss of any kind arising from or connected with this inspection.

DATE 4/15, 19 88 E. S. Sherrill N.C. 723, PA WC1766, OHIO
Inspector's Signature National Board, State, Province and N

*Supplemental sheets in form of lists, sketches or drawing may be used provided (1) size is 8-1/2" X 11", (2) information in 1-2 on this Data Report is included on each sheet, and (3) each sheet is numbered and number of sheets is recorded in Item 3. "REMARKSs"

(10/77)

TVA 63

1 of 17

CORRECTED COPY

2 0 1 5 1 5 2 2 0 1

FORM N-2 NPT CERTIFICATE HOLDERS' DATA REPORT FOR NUCLEAR PART AND APPURTENANCES*
As required by the Provision of the ASME Code Rules, Section III, Div. I

1. Manufactured & Certified by: GE Company, 2117 Castle Hayne Rd., Wilmington, N.C. 28401
(Name and Address of NPT Certificate Holder)

(b) Manufactured for: BROWNS FERRY - 2, Near Athens, AL 35611
(Name and Address of N Certificate Holder for completed nuclear component

2. Identification-Certificate Holders's S/N of Part: A5629 Nat'l Bd. N. N/A

(a) Constructed According to Drawing No: 768E534G006 Dwg. Prepared by D. L. Peterson

(b) Description of Part Inspected: CONTROL ROD DRIVE, MODEL # 7RDB144FG002

(C) Applicable ASME Code: Section III, Edition 1974, Addenda Date W'75 Case No. 1361-2 N207 Class

3. REMARKS: Standard part for use with Reactor. Hydrostatically tested at 1825 psi. min.
(Brief description of service for which component was designed)
CORRECTED COPY: Changed Items 2(a) and 2(b), Modified from 768E534G1 to G6 Drive.

Sheet 2 of 2

1. Cap 166B9274P1
SA182-F316
3/8 thick X 1 1/16 OD

2. Indicator Tube 166B9313P1
SA312-TP316
3/4 sch 40-seamless pipe
0.113 wall thickness
1.065 max. dia.

3. Plug 159A1176P1
SA182-F304
1/4 thick x 0.812 OD

4. Flange 919D610P1 (719E474)
SA182-F304
3.37 thick x 9 5/8 OD

5. Base 137C5311P1
XM-19 SA479
7/8 thick x 2.875 Dia.

6. Ring Flange 137C8151P2
SA182-F304
1" thick x 5.0 OD x 1.75 ID

7. Cap Screw 117C4516P2
SA193-B6
6 ea. 1/2 dia. on 4 1/8 bolt circle

8. Plug 175A7961P1
SA182-F304
0.38 thick x 1.307 dia.

9. Nut 137C5934P1
XM-19 SA479
1.30 thick x 2.62 dia.

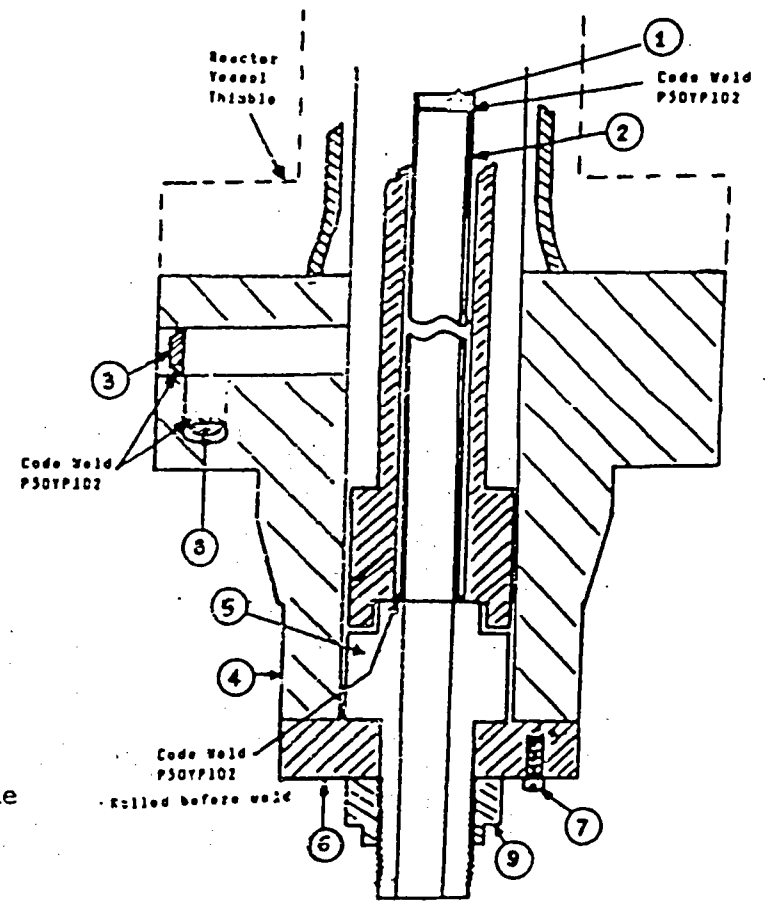

TVA 63

2 of 17

CORRECTED COPY

2 2 1 3 4 5 3 7 3 0

FORM N-2 NPT CERTIFICATE HOLDERS' DATA REPORT FOR NUCLEAR PART AND APPURTENANCES*
As required by the Provision of the ASME Code Rules, Section III, Div. I

1. Manufactured & Certified by: GE Company, 2117 Castle Hayne Rd., Wilmington, N.C. 28401
(Name and Address of NPT Certificate Holder)

(b) Manufactured for: BROWNS FERRY - 2, Near Athens, AL 35611
(Name and Address of N Certificate Holder for completed nuclear compone

2. Identification-Certificate Holders's S/N of Part: A4842 Nat'l Bd. No. N/A

(a) Constructed According to Drawing No: 768E534G006 Dwg. Prepared by D. L. Peters

(b) Description of Part Inspected: CONTROL ROD DRIVE, MODEL # 7RDB144FG002

(c) Applicable ASME Code: Section III, Edition 1974, Addenda Date W'75, Case No. N207 1361-2 Clas

3. REMARKS: Standard part for use with Reactor. Hydrostatically tested at 1825 psi. min.
(Brief description of service for which component was designed)
CORRECTED COPY: CHANGED ITEM 2(a) and 2(b), Modified from 768E534G1 to G6 Drive.

SHEET 1 of 2

We certify that the statements in this report are correct and this vessel part or appurtena as defined in the code conforms to the rules of construction of the ASME Code Section I (The applicable Designed Specification and Stress Report are not the responsibility of the Certificate Holder for parts. An NPT Certification Holder for appurtenances is responsib for furnishing a separate Design Specification and Stress Report if the appurtenance is included in the component Design Specification and Stress Report).

DATE: 4/15, 19 88 Signed GE-NEBG-NF&CM-QA By J. S. Hendermann
(NPT Certificate Holder)

Certificate Of Authorization Expires: 6/16/90 Certification of Authorization No.: NPT N-11

CERTIFICATION OF DESIGN FOR APPURTENANCE

Design information on file at GE COMPANY, SAN JOSE, CALIFORNIA

Stress analysis report on file at GE COMPANY, SAN JOSE, CALIFORNIA
DC22A6253 Rev. 0
Design specification certified by BJORN HAABERG Prof. Eng. State CALIF. Reg. No. 15570
DC22A4912 Rev. 2
Stress analysis report certified by BETTADAPUR SRIHAR Prof. Eng. State CALIF. Reg. No. 18345

CERTIFICATION OF SHOP INSPECTION

I, the undersigned, holding a valid commission by the National Board of Boiler and Pressu Inspectors and/or the State or Province of NORTH CAROLINA and employed by DEPARTMENT OF LAB of STATE OF NORTH CAROLINA have inspected the part of a pressure vessel described in th Partial Data Report on 2/5 19 82 and state that to the best of my knowled and belief, the NPT Certificate Holder has constructed this part in accordance with the AS Code Section III.

By signing this certificate, neither the Inspector nor his employer makes any warrant expressed or implied, concerning the part described in the Partial Data Report. Furthermor neither the Inspector nor his employer shall be liable in any manner for any personal injur or property damages or a loss of any kind arising from or connected with this inspection.

DATE 4/15, 19 88 Inspector's Signature N.C. 723, PA.WC1766, OHIO National Board, State, Province and

*Supplemental sheets in form of lists, sketches or drawing may be used provided (1) size is 8-1/2" X 11", (2) information in 1-2 on this Data Report is included on each sheet, and (3) each sheet is numbered and number of sheets is recorded in Item 3. "REMARKS".

(10/77)

TVA 63

10/17

FORM N-2 NPT CERTIFICATE HOLDERS' DATA REPORT FOR NUCLEAR PART AND APPURTENANCES*
As required by the Provision of the ASME Code Rules, Section III, Div. I

1. Manufactured & Certified by: GE Company, 2117 Castle Hayne Rd., Wilmington, N.C. 28401
(Name and Address of NPT Certificate Holder)
(b) Manufactured for: BROWNS FERRY - 2, Near Athens, AL 35611
(Name and Address of N Certificate Holder for completed nuclear componen

2. Identification-Certificate Holders's S/N of Part: A4842 Nat'l Bd. N. N/A

(a) Constructed According to Drawing No: 768E534G006 Dwg. Prepared by D. L. Peterso

(b) Description of Part Inspected: CONTROL ROD DRIVE, MODEL # 7RDB144FG002

(C) Applicable ASME Code: Section III, Edition 1974, Addenda Date W'75 Case No. 1361-2 N207 Class

3. REMARKS: Standard part for use with Reactor. Hydrostatically tested at 1825 psi. min.
(Brief description of service for which component was designed)
CORRECTED COPY: Changed Items 2(a) and 2(b), Modified from 768E534G1 to G6 Drive.

Sheet 2 of 2

1. Cap 166B9274P1
SA182-F316
3/8 thick X 1 1/16 OD

2. Indicator Tube 166B9313P1
SA312-TP316
3/4 sch 40-seamless pipe
0.113 wall thickness
1.065 max. dia.

3. Plug 159A1176P1
SA182-F304
1/4 thick x 0.812 OD

4. Flange 919D610P1 (719E474)
SA182-F304
3.37 thick x 9 5/8 OD

5. Base 137C5311P1
XM-19 SA479
7/8 thick x 2.875 Dia.

6. Ring Flange 137C8151P2
SA182-F304
1" thick x 5.0 OD x 1.75 ID

7. Cap Screw 117C4516P2
SA193-B6
6 ea. 1/2 dia. on 4 1/8 bolt circle

8. Plug 175A7961P1
SA182-F304
0.38 thick x 1.307 dia.

9. Nut 137C5934P1
XM-19 SA479
1.30 thick x 2.62 dia.

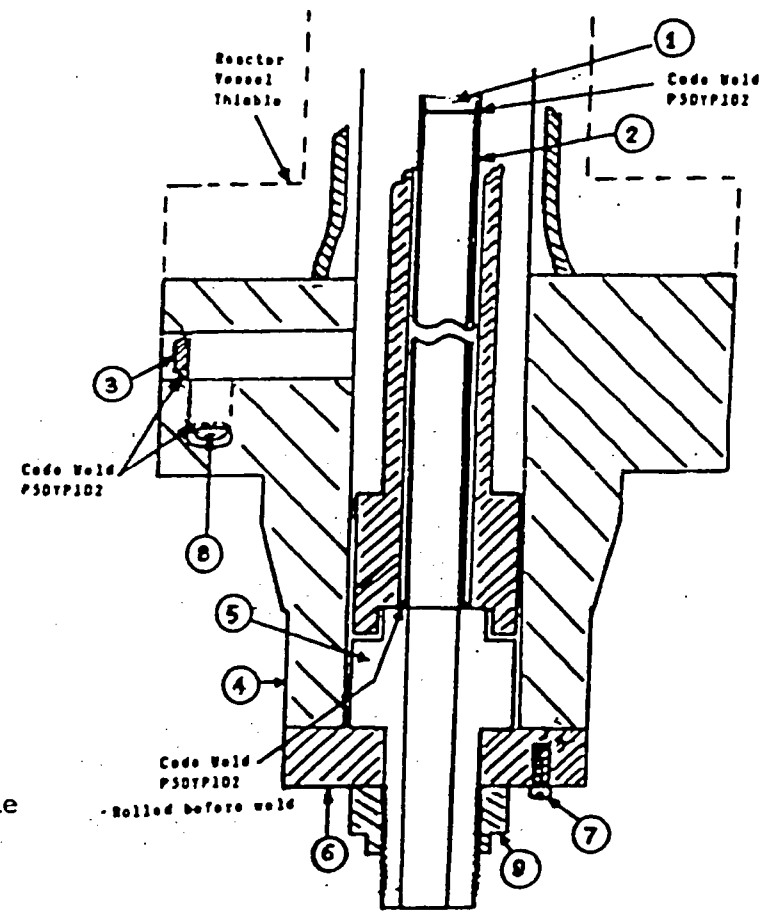

TVA 63

2 of 17

FORM NIS-2 OWNER'S REPORT FOR REPAIR/REPLACEMENT ACTIVITY
As Required by the Provisions of the ASME Code Section XI

1. Owner Tennessee Valley Authority (TVA) (Name)
   1101 Market Street
   Chattanooga, TN 37402-2801 (Address)

   Date May 18, 2006

   Sheet 1 of 1

2. Plant Browns Ferry Nuclear Plant (BFN) (Name)
   P. O. Box 2000, Decatur, AL 35609-2000 (Address)

   Unit 3

   Work Order (WO) 05-721003-000
   Repair/Replacement Organization P.O. No., Job No., etc.

3. Work Performed by TVA-BFN (Name)
   P. O. Box 2000, Decatur, AL 35609-2000 (Address)

   Type Code Symbol Stamp N/A
   Authorization No. N/A
   Expiration Date N/A

4. Identification of System System 001, Main Steam System (ASME Code Class 2 equivalent)

5. (a) Applicable Construction Code USAS B31.1.0 19 67 * Edition, N/A Addenda, N/A Code Case

   (b) Applicable Edition of Section XI Utilized for Repairs or Replacements 20 01 Edition, 2003 Addenda

   (c) Applicable Section XI Code Case(s)

6. Identification of Components

Name of Component	Name of Manufacturer	Manufacturer Serial No.	National Board No.	Other Identification	Year Built	Corrected, Removed, or Installed	ASME Code Stamped (Yes or No)
3B RFPT High Pressure Steam Stop Valve	General Electric	N/A	N/A	3-FCV-001-0135	N/A	‡	No
‡ Replaced valve stem/plug assembly and weld repaired steam cut on valve body							
stem/plug assembly	General Electric	N/A	N/A	3-FCV-001-0135	N/A	Removed	No
stem/plug assembly	General Electric	N/A	N/A	3-FCV-001-0135	N/A	Installed	No
steam cut on valve body	General Electric	N/A	N/A	3-FCV-001-0135	N/A	Corrected	No

7. Description of Work Replaced valve stem/plug assembly. Performed weld repair of steam cut on valve body at gasket area.

8. Tests Conducted: Hydrostatic ☐ Pneumatic ☐ Nominal Operating Pressure ☒ Exempt ☐
   Other ☐ Pressure N/A psi Test Temp. N/A °F

NOTE: Supplemental Sheets in form of lists, sketches, or drawings may be used, provided (1) size is 8½ in. X 11 in., (2) information in items 1 through 6 on this report is included on each sheet, and (3) each sheet is numbered and the number of sheets is recorded at the top of this form.

*as amended by additional quality assurance requirements found in Contract 1704/452 and Design Criteria BFN-50-7001 and BFN-50-C-7105.

FORM NIS-2 (Back)

WID: Work Order (WO) 05-721003-000

9. Remarks Replaced valve stem/plug assembly. Performed weld repair of steam cut on valve body at gasket area.
Applicable Manufacturer's Data Reports to be attached

CERTIFICATE OF COMPLIANCE

I certify that the statements made in the report are correct and that this conforms to the requirements of the ASME Code, Section XI.

Type Code Symbol Stamp N/A

Certificate of Authorization No. N/A Expiration Date N/A

Signed [signature], System Engineer Date 6-8, 2006
Owner or Owner's Designee, Title

CERTIFICATE OF INSERVICE INSPECTION

I, the undersigned, holding a valid commission issued by the National Board of Boiler and Pressure Vessel Inspectors and the State or Province of Tennessee and employed by HSB CT of Connecticut have inspected the components described in this Owner's Report during the period 1-12-06 to 6-9-06, and state that to the best of my knowledge and belief, the Owner has performed examinations and taken corrective measures described in this Owner's Report in accordance with the requirements of the ASME Code, Section XI.

By signing this certificate neither the Inspector nor his employer makes any warranty, expressed or implied, concerning the examinations and corrective measures described in this Owner's Report. Furthermore, neither the Inspector nor his employer shall be liable in any manner for any personal injury or property damage or a loss of any kind arising from or connected with this inspection.

[signature] Commissions TN4011
Inspector's Signature National Board, State, Province, and Endorsements

Date 6/9 20 06

BROWNS FERRY

NUCLEAR PLANT

UNIT 2 CYCLE 13

ASME SECTION XI

NIS-2 OWNER'S REPORT

(Supplemental Report)

UNIT 2

Owner:	TENNESSEE VALLEY AUTHORITY 1101 Market Street Chattanooga, TN 37402-2801	Plant:	Browns Ferry Nuclear Plant P. O. Box 2000 Decatur, AL 35609-2000
Unit:	Two	Certificate of Authorization:	Not Required
Commercial Service Date:	March 1, 1975		
National Board Number for Unit:	Not Required		

APPENDIX I

FORM NIS-2 OWNER'S REPORT FOR REPAIRS OR REPLACEMENTS

This appendix contains two NIS-2 reports addressing work performed on Unit 2 during the cycle 13 refueling outage in the spring of 2005.

One NIS-2 report covers work performed on the Control Rod Drive System (System 085). This report is a revision to an earlier report and it is being submitted to show three corrected serial numbers of components removed during that activity.

The other NIS-2 report covers the replacement of a snubber on the Residual Heat Removal System (System 074). The work originally planned for this support did not require a Section XI Repair/Replacement plan or an NIS-2 report however, during the job, a new snubber was installed and an NIS-2 report was not initially submitted.

Both of the issues above have been documented and are being tracked in TVA's Corrective Action Program. (Reference PERs 94047 and 96383)

FORM NIS-2 OWNER'S REPORT FOR REPAIR/REPLACEMENT ACTIVITY
As Required by the Provisions of the ASME Code Section XI

1. Owner Tennessee Valley Authority (TVA) (Name)
1101 Market Street
Chattanooga, TN 37402-2801 (Address)

Date R1 December 15, 2005 (R0 dated June 7, 2005)

Sheet 1 of 4

2. Plant Browns Ferry Nuclear Plant (BFN) (Name)
P. O. Box 2000, Decatur, AL 35609-2000 (Address)

Unit 2

Work Order (WO) 04-720767-000,
Design Change Notice (DCN) S18883A
(Repair/Replacement Organization P.O. No., Job No., etc.)

3. Work Performed by TVA-BFN (Name)
P. O. Box 2000, Decatur, AL 35609-2000 (Address)

Type Code Symbol Stamp N/A
Authorization No. N/A
Expiration Date N/A

4. Identification of System System 085, Control Rod Drive (CRD) System (ASME Code Class 1 equivalent)

5. (a) Applicable Construction Code ASME Section III 19 74 Edition, Winter 1975 Addenda, N207 1361-2 Code Case

(b) Applicable Edition of Section XI Utilized for Repairs or Replacements 19 95 Edition, 1996 Addenda

6. Identification of Components

Name of Component	Name of Manufacturer	Manufacturer Serial No.	National Board No.	Other Identification	Year Built	Corrected, Removed, or Installed	ASME Code Stamped (Yes or No)
Control Rod Drive Mechanism 42-15	General Electric Nuclear Energy	A4737	N/A	2-CRDM-085-42-15	1996	Removed	Yes
Control Rod Drive Mechanism 42-15	General Electric Nuclear Energy	A5417	N/A	2-CRDM-085-42-15	1992	Installed	Yes
Control Rod Drive Mechanism 42-47	General Electric Nuclear Energy	A5712	N/A	2-CRDM-085-42-47	1996	Removed	Yes
Control Rod Drive Mechanism 42-47	General Electric Nuclear Energy	A4176	N/A	2-CRDM-085-42-47	1992	Installed	Yes
Control Rod Drive Mechanism 10-39	General Electric Nuclear Energy	A5646	N/A	2-CRDM-085-10-39	1996	Removed	Yes
Control Rod Drive Mechanism 10-39	General Electric Nuclear Energy	A8993	N/A	2-CRDM-085-10-39	1992	Installed	Yes

Identification of Components continued on Page 2

7. Description of Work Replaced 20 Control Rod Drives (CRD) with refurbished BWR/6 CRDs.

8. Tests Conducted: Hydrostatic ☐ Pneumatic ☐ Nominal Operating Pressure ☒ Exempt ☐
Other ☐ Pressure N/A psi Test Temp. N/A °F

NOTE: Supplemental Sheets in form of lists, sketches, or drawings may be used, provided (1) size is 8½ in. X 11 in., (2) information in items 1 through 6 on this report is included on each sheet, and (3) each sheet is numbered and the number of sheets is recorded at the top of this form.

FORM NIS-2 (Back)

WID: 04-720767-000

9. Remarks Replaced 20 Control Rod Drives (CRD) with refurbished BWR/6 CRDs previously installed at BFN.
Applicable Manufacturer's Data Reports to be attached

CERTIFICATE OF COMPLIANCE

I certify that the statements made in the report are correct and this conforms to the rules of the ASME Code, Section XI.

Type Code Symbol Stamp N/A

Certificate of Authorization No. N/A Expiration Date N/A

Signed [signature], System Engineer Date 12-15, 20 05
Owner or Owner's Designee, Title

CERTIFICATE OF INSERVICE INSPECTION

I, the undersigned, holding a valid commission issued by the National Board of Boiler and Pressure Vessel Inspectors and the State or Province of Tennessee and employed by HSB CT of Connecticut have inspected the components described in this Owner's Report during the period 3-25-05 to 6-16-05, and state that to the best of my knowledge and belief, the Owner has performed examinations and taken corrective measures described in this Owner's Report in accordance with the requirements of the ASME Code, Section XI.

By signing this certificate neither the Inspector nor his employer makes any warranty, expressed or implied, concerning the examinations and corrective measures described in this Owner's Report. Furthermore, neither the Inspector nor his employer shall be liable in any manner for any personal injury or property damage or a loss of any kind arising from or connected with this inspection.

[signature] Commissions TN 4011
Inspector's Signature National Board State Province, and Endorsements

Date 12/15 20 05

FORM NIS-2 OWNER'S REPORT FOR REPAIRS/REPLACEMENT ACTIVITY
SUPPLEMENTAL SHEET

1. Owner Tennessee Valley Authority (TVA) (Name)
1101 Market Street
Chattanooga, TN 37402-2801 (Address)

Date R1 December 15, 2005 (R0 dated June 7, 2005)

Sheet 2 of 4

2. Plant Browns Ferry Nuclear Plant (BFN) (Name)
P. O. Box 2000, Decatur, AL 35609-2000 (Address)

Unit 2

Work Order (WO) 04-720767-000
Design Change Notice (DCN) S18883A (Repair/Replacement Organization P.O. No., Job No., etc)

3. Work Performed by TVA-BFN (Name)
P. O. Box 2000, Decatur, AL 35609-2000 (Address)

Type Code Symbol Stamp N/A
Authorization No. N/A
Expiration Date N/A

4. Identification of System System 085, Control Rod Drive System (ASME Code Class 1 equivalent)

5. (a) Applicable Construction Code ASME Section III 19 74 Edition, Winter 1975 Addenda, N207 1361-2 Code Case
Applicable Edition of Section XI Utilized for Repairs or Replacements 19 95, 1996 Addenda

6. Identification of Components

Name of Component	Name of Manufacturer	Manufacturer Serial No.	National Board No.	Other Identification	Year Built	Corrected, Removed, or Installed	ASME Code Stamped (Yes or No)
Control Rod Drive Mechanism 14-43	General Electric Nuclear Energy	A4702	N/A	2-CRDM-085-14-43	1996	Removed	Yes
Control Rod Drive Mechanism 14-43	General Electric Nuclear Energy	A5322	N/A	2-CRDM-085-14-43	1992	Installed	Yes
Control Rod Drive Mechanism 22-11	General Electric Nuclear Energy	A4141	N/A	2-CRDM-085-22-1	1996	Removed	Yes
Control Rod Drive Mechanism 22-11	General Electric Nuclear Energy	A4786	N/A	2-CRDM-085-22-1	1992	Installed	Yes
Control Rod Drive Mechanism 22-43	General Electric Nuclear Energy	A4846	N/A	2-CRDM-085-22-43	1996	Removed	Yes
Control Rod Drive Mechanism 22-43	General Electric Nuclear Energy	A3924	N/A	2-CRDM-085-22-43	1992	Installed	Yes
Control Rod Drive Mechanism 38-59	General Electric Nuclear Energy	A5553	N/A	2-CRDM-085-38-59	1996	Removed	Yes
Control Rod Drive Mechanism 38-59	General Electric Nuclear Energy	A3976	N/A	2-CRDM-085-38-59	1992	Installed	Yes
Control Rod Drive Mechanism 38-35	General Electric Nuclear Energy	A5660	N/A	2-CRDM-085-38-35	1996	Removed	Yes
Control Rod Drive Mechanism 38-35	General Electric Nuclear Energy	A5429	N/A	2-CRDM-085-38-35	1992	Installed	Yes

Identification of Components continued on Page 3

7. Description of Work Replaced 20 Control Rod Drives (CRD) with refurbished BWR/6 CRDs.

8. Tests Conducted: Hydrostatic ☐ Pneumatic ☐ Nominal Operating Pressure ☒ Exempt ☐
Other ☐ Pressure N/A psi Test Temp. N/A °F

FORM NIS-2, SUPPLEMENTAL SHEET (Back)

WID: 04-720767-000

Remarks See back of sheet 1.

FORM NIS-2 OWNER'S REPORT FOR REPAIRS/REPLACEMENT ACTIVITY
SUPPLEMENTAL SHEET

1. Owner Tennessee Valley Authority (TVA) (Name)
1101 Market Street
Chattanooga, TN 37402-2801 (Address)

Date R1 December 15, 2005 (R0 dated June 7, 2005)

Sheet 3 of 4

2. Plant Browns Ferry Nuclear Plant (BFN) (Name)
P. O. Box 2000, Decatur, AL 35609-2000 (Address)

Unit 2

Work Order (WO) 04-720767-000
Design Change Notice (DCN) S18883A (Repair/Replacement Organization P.O. No., Job No., etc)

3. Work Performed by TVA-BFN (Name)
P. O. Box 2000, Decatur, AL 35609-2000 (Address)

Type Code Symbol Stamp N/A
Authorization No. N/A
Expiration Date N/A

4. Identification of System System 085, Control Rod Drive System (ASME Code Class 1 equivalent)

5. (a) Applicable Construction Code ASME Section III 19 74 Edition, Winter 1975 Addenda, N207 1361-2 Code Case
Applicable Edition of Section XI Utilized for Repairs or Replacements 19 95, 1996 Addenda

6. Identification of Components

Name of Component	Name of Manufacturer	Manufacturer Serial No.	National Board No.	Other Identification	Year Built	Corrected, Removed, or Installed	ASME Code Stamped (Yes or No)
Control Rod Drive Mechanism 46-11	General Electric Nuclear Energy	A4638	N/A	2-CRDM-085-46-11	1996	Removed	Yes
Control Rod Drive Mechanism 46-11	General Electric Nuclear Energy	A5155	N/A	2-CRDM-085-46-11	1992	Installed	Yes
Control Rod Drive Mechanism 50-35	General Electric Nuclear Energy	A4812	N/A	2-CRDM-085-50-35	1996	Removed	Yes
Control Rod Drive Mechanism 50-35	General Electric Nuclear Energy	A4447	N/A	2-CRDM-085-50-35	1992	Installed	Yes
Control Rod Drive Mechanism 54-43	General Electric Nuclear Energy	A5624	N/A	2-CRDM-085-54-43	1996	Removed	Yes
Control Rod Drive Mechanism 54-43	General Electric Nuclear Energy	A4820	N/A	2-CRDM-085-54-43	1992	Installed	Yes
Control Rod Drive Mechanism 58-39	General Electric Nuclear Energy	A5629	N/A	2-CRDM-085-58-39	1996	Removed	Yes
Control Rod Drive Mechanism 58-39	General Electric Nuclear Energy	A4790	N/A	2-CRDM-085-58-39	1992	Installed	Yes
Control Rod Drive Mechanism 02-27	General Electric Nuclear Energy	A4091	N/A	2-CRDM-085-02-27	1996	Removed	Yes
Control Rod Drive Mechanism 02-27	General Electric Nuclear Energy	A4376	N/A	2-CRDM-085-02-27	1992	Installed	Yes

Identification of Components continued on Page 4

7. Description of Work Replaced 20 Control Rod Drives (CRD) with refurbished BWR/6 CRDs.

8. Tests Conducted: Hydrostatic ☐ Pneumatic ☐ Nominal Operating Pressure ☒ Exempt ☐
Other ☐ Pressure N/A psi Test Temp. N/A °F

FORM NIS-2, SUPPLEMENTAL SHEET (Back)

WID: 04-720767-000

Remarks See back of sheet 1.

FORM NIS-2 OWNER'S REPORT FOR REPAIRS/REPLACEMENT ACTIVITY
SUPPLEMENTAL SHEET

1. Owner Tennessee Valley Authority (TVA) (Name)
1101 Market Street
Chattanooga, TN 37402-2801 (Address)

Date R1 December 15, 2005 (R0 dated June 7, 2005)

Sheet 4 of 4

2. Plant Browns Ferry Nuclear Plant (BFN) (Name)
P. O. Box 2000, Decatur, AL 35609-2000 (Address)

Unit 2

Work Order (WO) 04-720767-000
Design Change Notice (DCN) S18883A
(Repair/Replacement Organization P.O. No., Job No., etc)

3. Work Performed by TVA-BFN (Name)
P. O. Box 2000, Decatur, AL 35609-2000 (Address)

Type Code Symbol Stamp N/A
Authorization No. N/A
Expiration Date N/A

4. Identification of System System 085, Control Rod Drive System (ASME Code Class 1 equivalent)

5. (a) Applicable Construction Code ASME Section III 19 74 Edition, Winter 1975 Addenda, N207 1361-2 Code Case
Applicable Edition of Section XI Utilized for Repairs or Replacements 19 95, 1996 Addenda

6. Identification of Components

Name of Component	Name of Manufacturer	Manufacturer Serial No.	National Board No.	Other Identification	Year Built	Corrected, Removed, or Installed	ASME Code Stamped (Yes or No)
Control Rod Drive Mechanism 06-15	General Electric Nuclear Energy	A4307	N/A	2-CRDM-085-06-15	1996	Removed	Yes
Control Rod Drive Mechanism 06-15	General Electric Nuclear Energy	A3834	N/A	2-CRDM-085-06-15	1992	Installed	Yes
Control Rod Drive Mechanism 10-43	General Electric Nuclear Energy	A4688	N/A	2-CRDM-085-10-43	1996	Removed	Yes
Control Rod Drive Mechanism 10-43	General Electric Nuclear Energy	A5312	N/A	2-CRDM-085-10-43	1996	Installed	Yes
Control Rod Drive Mechanism 22-07	General Electric Nuclear Energy	A3837	N/A	2-CRDM-085-22-07	1996	Removed	Yes
Control Rod Drive Mechanism 22-07	General Electric Nuclear Energy	A3877	N/A	2-CRDM-085-22-07	1992	Installed	Yes
Control Rod Drive Mechanism 26-07	General Electric Nuclear Energy	A5234	N/A	2-CRDM-085-26-07	1996	Removed	Yes
Control Rod Drive Mechanism 26-07	General Electric Nuclear Energy	A3707	N/A	2-CRDM-085-26-07	1992	Installed	Yes
Control Rod Drive Mechanism 30-35	General Electric Nuclear Energy	A4814	N/A	2-CRDM-085-30-35	1996	Removed	Yes
Control Rod Drive Mechanism 30-35	General Electric Nuclear Energy	A5450	N/A	2-CRDM-085-30-35	1996	Installed	Yes
Control Rod Drive Mechanism 34-59	General Electric Nuclear Energy	A4842	N/A	2-CRDM-085-34-59	1996	Removed	Yes
Control Rod Drive Mechanism 34-59	General Electric Nuclear Energy	A3987	N/A	2-CRDM-085-34-59	1992	Installed	Yes
Control Rod Drive Mechanism 46-51	General Electric Nuclear Energy	A5111	N/A	2-CRDM-085-46-51	1996	Removed	Yes
Control Rod Drive Mechanism 46-51	General Electric Nuclear Energy	A5036	N/A	2-CRDM-085-46-51	1992	Installed	Yes

7. Description of Work Replaced 20 Control Rod Drives (CRD) with refurbished BWR/6 CRDs.

8. Tests Conducted: Hydrostatic ☐ Pneumatic ☐ Nominal Operating Pressure ☒ Exempt ☐
Other ☐ Pressure N/A psi Test Temp. N/A °F

FORM NIS-2, SUPPLEMENTAL SHEET (Back)

WID: 04-720767-000

Remarks See back of sheet 1.

FORM NIS-2 OWNER'S REPORT FOR REPAIR/REPLACEMENT ACTIVITY
As Required by the Provisions of the ASME Code Section XI

1. Owner Tennessee Valley Authority (TVA) (Name)
   1101 Market Street
   Chattanooga, TN 37402-2801 (Address)

   Date February 3, 2006

   Sheet 1 of 1

2. Plant Browns Ferry Nuclear Plant (BFN) (Name)
   P. O. Box 2000, Decatur, AL 35609-2000 (Address)

   Unit 2

   Work Orders (WO) 04-718361-000
   Repair/Replacement Organization P.O. No., Job No., etc

3. Work Performed by TVA-BFN (Name)
   P. O. Box 2000, Decatur, AL 35609-2000 (Address)

   Type Code Symbol Stamp N/A
   Authorization No. N/A
   Expiration Date N/A

4. Identification of System System 074, Residual Heat Removal (RHR) System (ASME Code Class 2 equivalent)

5. (a) Applicable Construction Code USAS B31.1.0 19 67 * Edition, N/A Addenda, N/A Code Case

   (b) Applicable Edition of Section XI Utilized for Repairs or Replacements 19 95 Edition, 1996 Addenda

6. Identification of Components

Name of Component	Name of Manufacturer	Manufacturer Serial No.	National Board No.	Other Identification	Year Built	Corrected, Removed, or Installed	ASME Code Stamped (Yes or No)
Support (Snubber) R-61	Bergen-Patterson	TVA serial # M0392	N/A	2-SNUB-074-5029	N/A	Removed	No
Support (Snubber) R-61	Bergen-Patterson	2500-3-1086	N/A	2-SNUB-074-5029	N/A	Installed	No

7. Description of Work Replaced snubber with a like for like new snubber.

8. Tests Conducted: Hydrostatic ☐ Pneumatic ☐ Nominal Operating Pressure ☐ Exempt ☐

   Other ☒** Pressure N/A psi Test Temp. N/A °F ** - See Remarks

NOTE: Supplemental Sheets in form of lists, sketches, or drawings may be used, provided (1) size is 8½ in. X 11 in., (2) information in items 1 through 6 on this report is included on each sheet, and (3) each sheet is numbered and the number of sheets is recorded at the top of this form.

*as amended by additional quality assurance requirements found in P.O. 84-IP-0754 (ref. R40 060201 008) and Design Criteria BFN-50-7074 and BFN-50-C-7105.

FORM NIS-2 (Back)

9. Remarks WO 04-718361-000 - (2-SNUB-074-5029)

Applicable Manufacturer's Data Reports to be attached

The original snubber (M0392) was removed and tested as part of the 10 percent sample per the snubber program.

The replacement snubber (2500-3-1086) is a new snubber and was functionally tested per 2-SI-4.6.H-2A prior to installation.

Reference PER 96383.

CERTIFICATE OF COMPLIANCE

I certify that the statements made in the report are correct and this conforms to the rules of the ASME Code, Section XI.

Type Code Symbol Stamp N/A

Certificate of Authorization No. N/A Expiration Date N/A

Signed [signature], System Engineer Date 2-7, 20 06

Owner or Owner's Designee, Title

CERTIFICATE OF INSERVICE INSPECTION

I, the undersigned, holding a valid commission issued by the National Board of Boiler and Pressure Vessel Inspectors and the State or Province of Tennessee and employed by HSB CT of Connecticut have inspected the components described in this Owner's Report during the period 3-5-06 to 3-5-06, and state that to the best of my knowledge and belief, the Owner has performed examinations and taken corrective measures described in this Owner's Report in accordance with the requirements of the ASME Code, Section XI.

By signing this certificate neither the Inspector nor his employer makes any warranty, expressed or implied, concerning the examinations and corrective measures described in this Owner's Report. Furthermore, neither the Inspector nor his employer shall be liable in any manner for any personal injury or property damage or a loss of any kind arising from or connected with this inspection.

[signature] Commissions TN 4011

Inspector's Signature National Board, State, Province, and Endorsements

Date 3/5 20 06