ATTACHMENT 1
Design Analysis Cover Sheet

Design Analysis (Major Revision)		Last Page No. [5] 85 / Attachment I-4	
Analysis No.: [1]	LM-0546	Revision: [2]	2
Title: [3]	Re-analysis Of Loss of Coolant Accident (LOCA) Using Alternative Source Terms		
EC/ECR No.: [4]	04-00003	Revision: [6]	0

Station(s): [7]	Limerick	Component(s): [14]	
Unit No.: [8]	1 & 2	N/A	
Discipline: [9]	MEDC		
Descrip. Code/Keyword: [10]	H64 /AST, LOCA		
Safety/QA Class: [11]	SR		
System Code: [12]	912		
Structure: [13]	N/A		

CONTROLLED DOCUMENT REFERENCES [15]

Document No.:	From/To	Document No.:	From/To
LGS UFSAR, Tech Specs, and Bases	From/To	Design Analysis LM-0312	From
Design Analyses LM-0310, LM-0551, LM-0641, LM-0642, LM-0645, M-76-07	From	DBD No. L-S-06B	From
Design Analyses M-78-01 and M-76-01	From	DBD No. L-S-32	From
Procedure No. ST-4-LLR-001-1	From/To	DBD No. L-S-25A	From

Is this Design Analysis Safeguards Information? [16]	Yes ☐ No ☒	If yes, see SY-AA-101-106
Does this Design Analysis contain Unverified Assumptions? [17]	Yes ☐ No ☒	If yes, ATVAR#:
This Design Analysis SUPERCEDES: [18]	LM-0546, Rev. 1	In its entirety.

Description of Revision (list affected pages for partials): [19]

This revision incorporates additional responses to pertinent NRC Requests for Additional Information (RAIs) since the previous revision. The primary resulting changes were utilization of a more conservative stepwise Reactor Enclosure Recirculation System initial mixing assumption, with a corresponding reduction in assumed Control Room unfiltered inleakage rate. Additional clarifications are included for modeling of Main Steam Isolation Valve leakage iodine deposition and resuspension. Rev bars are used to show changes to the body of the analysis. Attachments A and G incorporate resulting new RADTRAD analyses for all analyzed cases, and Attachment C incorporates updates to account for cabinet position with respect to Core Spray pipe doses to accessible Control Room (CR) areas. Additionally, Attachment C incorporates a more conservative consideration of Reactor Enclosure cloud shine doses to the CR. Attachment E incorporates minor edits for clarity. Otherwise, the only other significant revisions are to update attachment footers.

Preparer: [20]	Paul Reichert / Aleem Boatright Print Name	Paul Reichert Sign Name	6/13/2006 Date
Method of Review: [21]	Detailed Review ☒	Alternate Calculations (attached) ☐	Testing ☐
Reviewer: [22]	Harold Rothstein Print Name	Harold L Rothstein Sign Name	6/13/2006 Date
Review Notes: [23]	Independent review ☒	Peer review ☐	
(For External Analyses Only) External Approver: [24]	RAM RAO Print Name	P. Rudat for Ram Rao Sign Name	6/14/06 Date
Exelon Reviewer: [25]	T.J. Mscisz Print Name	Mscisz Sign Name	6/14/06 Date
Is a Supplemental Review Required? [26]	Yes ☐ No ☒	If yes, complete Attachment 3	
Exelon Approver: [27]	F.G. Lentine Print Name	F.G. Lentine Sign Name	6/14/06 Date

Table of Contents

1. Purpose/Objective **5**
2. Acceptance Criteria **7**
3. Design Inputs and Assumptions **31**
4. Methodology and Acceptance Criteria **42**
4.1. Core Source Term *42*
4.2. Radioactivity Release Fraction and Timing *42*
4.3. Distribution of Activity Released from Containment *43*
4.3.1. Drywell and Suppression Pool Airspace Mixing 43
4.3.2. Releases to Suppression Pool 44
4.4. Airborne Activity Removal Mechanisms in Containment *44*
4.4.1. Natural Deposition (Credited) 44
4.4.2. Suppression Pool Scrubbing (Not Credited) 44
4.4.3. Decay Credited 45
4.4.4. Depletion from Leakage Credited 45
4.4.5. Containment Spray (Not Credited) 45
4.5. Containment Leakage Release Pathways *45*
4.5.1. Primary Containment Leakage Pathways 48
4.5.2. Secondary Containment Bypass Pathways 52
4.5.3. MSIV Leakage Alternate Drain Path Crediting Piping and Condenser Deposition Credit 52
4.5.4. ECCS Fluid Leakage 60
4.6. Control of pH to Prevent Iodine Re-evolution *61*
4.7. Direct Gamma Shine Dose to Control Room Assessment *61*
4.8. Control Room Dose Model *61*
4.8.1. Control Room Filtered Intake Flow and Filter Efficiencies 62
4.8.2. Control Room Unfiltered Inleakage 62
4.8.3. Control Room Exfiltration 62
4.9. Dispersion Factors *62*
4.9.1. EAB and LPZ 62
4.9.2. CR 62
4.10. Equipment Qualification *63*
4.11. Vital Area Accessibility *63*
5. References **64**
6. Calculations **66**
6.1. Control Room, EAB, and LPZ Dose Calculations from Airborne Releases *66*
6.1.1. PC Leakage [Analyzed as 100% of L_a] 67
6.1.2. MSIV Leakage (Not Including Resuspended Iodine) 69
6.1.3. MSIV Leakage (Resuspended Iodine Only) 72
6.1.4. ECCS Leakage 80
6.2. Other Dose Calculations *82*
6.2.1. Shine Doses to Control Room from External Sources 82
6.2.2. Vital Area Considerations 83
7. Summary and Conclusions **84**
7.1. DBA LOCA Dose Results for EAB, LPZ, and for CR as a Function of Unfiltered Inleakage *84*
7.2. Principal AST Supported Plant Operation and Parameter Changes *84*
8. Owner's Acceptance Review Checklist for External Design Analysis **86**

ATTACHMENTS:

A. RADTRAD Analyses for Design Basis LOCA Dose Assessment Summary and Output
   (1) Rad Mode Case - PC Leakage to Secondary Containment
   (2) Rad Mode Case - MSIV Leakage (No Condenser Tube Credit)
   (3) Rad Mode Case - MSIV Leakage (No Condenser Tube Credit) – Line A Resuspended Iodine
   (4) Rad Mode Case - MSIV Leakage (No Condenser Tube Credit) – Line B Resuspended Iodine
   (5) Rad Mode Case - MSIV Dose Margin due to 10% of Condenser Tubing Credit
   (6) Rad Mode Case - MSIV Dose Margin due to 10% of Condenser Tubing Credit - Line A Resuspended Iodine
   (7) Rad Mode Case - MSIV Dose Margin due to 10% of Condenser Tubing Credit - Line B Resuspended Iodine
   (8) Rad Mode Case - MSIV Dose Margin due to 100% of Condenser Tubing Credit
   (9) Rad Mode Case - MSIV Dose Margin due to 100% of Condenser Tubing Credit - Line A Resuspended Iodine
   (10) Rad Mode Case - MSIV Dose Margin due to 100% of Condenser Tubing Credit - Line B Resuspended Iodine
   (11) Rad Mode Case - ECCS Leakage
   (12) Chlorine Mode Case - PC Leakage to Secondary Containment
   (13) Chlorine Mode Case - MSIV Leakage (No Condenser Tube Credit)
   (14) Chlorine Mode Case - ECCS Leakage
   (15) RADTRAD Nuclide Inventory "NIF" Input Files
   (16) RADTRAD Release Fraction and Timing "RFT" Input File

B. Main Steam Piping and Condenser Deposition Credit; Condenser Characterization for Alternate Drain Pathway; and Piping Takeoffs

C. Reanalysis of External Source Gamma Shine to Control Room

D. Deleted

E. Evaluation of Containment Leak Rates vs. Time

F. Assessment of Steam Line Temperatures for Piping Deposition Credit Analysis

G. Evaluation of Post-LOCA Doses to Vital Areas

H. Evaluation of High Wind Speed Conditions

I. Computer Disclosure Sheets

FIGURES:

Figure 4.1: Radioactivity Transport Pathways
Figure 4.2: Post-LOCA MSIV Leakage Pathway Nodalization

Acronyms:

AST – Alternative Source Term (NUREG-1465)
CEDE – Committed Effective Dose Equivalent
CFR – Code of Federal Regulations
CR – Control Room
CREFAS – Control Room Emergency Fresh Air System
CST – Condensate Storage Tank
DBA – Design Basis Accident
DCF – Dose Conversion Factor
DG – Draft Guide
EAB – Exclusion Area Boundary
ECCS – Emergency Core Cooling System
EDE – Effective Dose Equivalent
EFPD – Effective Full Power Days
ERFDS – Emergency Response Facility Data System
ESF – Engineered Safety Features
FGR – Federal Guidance Report
FWIV – Feedwater Isolation Valve
GDC – General Design Criteria
GE – General Electric
HPCI – High Pressure Coolant Injection
HVAC – Heating, Ventilation and Air Conditioning
IPF – Iodine Protection Factor
L_a – Design Basis Containment Leak Rate against which LLRT leakages are evaluated
LGS - Limerick Generating Station
LLRT – Local Leak Rate Test
LOCA – Loss of Coolant Accident
LPZ – Low Population Zone
MCREV – Main Control Room Emergency Ventilation
MS – Main Steam
MSL – Main Steam Line
MSIV – Main Steam Isolation Valve
NIF – Nuclide Information File
NPS – Nominal Pipe Size
NRC – Nuclear Regulatory Commission
P_a – Design Basis Containment Pressure at which LLRT measurements are made
PBAPS – Peach Bottom Atomic Power Station
PC – Primary Containment {typically drywell + containment air space}
PCIG – Primary Containment Instrument Gas
RCIC – Reactor Core Isolation Cooling
RERS – Reactor Enclosure Recirculation System
RFT – Release Fraction and Timing File
RG – Regulatory Guide
RPV – Reactor Pressure Vessel
RSLB – Recirculation Suction Line Break
SC – Secondary Containment
SR – Surveillance Requirement
SER – Safety Evaluation Report
SGTS – Standby Gas Treatment System
SLCS – Standby Liquid Control System
SRP – Standard Review Plan
SSE – Safe Shutdown Earthquake
TB – Turbine Building
TID – Technical Information Document
TEDE – Total Effective Dose Equivalent
TS – Technical Specification
UFSAR – Updated Final Safety Analysis Report
χ/Q – Atmospheric Relative Concentration

1. Purpose/Objective

The objective of this calculation is to analyze the Limerick Generating Station design basis LOCA using the methodology established in Regulatory Guide 1.183, Rev. 0, "Alternative Radiological Source Terms for Evaluating Design Basis Accidents At Nuclear Power Reactors" [Ref. (4)], and in accordance with 10CFR50.67(b)(2) [Ref. (8)].

Key baseline parameters, associated changes in design basis accident analysis parameters, and associated objectives are:

- Primary Containment Leakage:
  - The containment leak rate (L_a) used for this accident analyses is the current 0.5% per day for the first 24 hours. For dose assessment purposes, this leak rate is reduced to 0.25% per day after 24 hours, based on expected reductions in containment pressure by that point in time as justified in this calculation.
  - To recognize the 2-minute delay before the start of gap release [Ref. (36)] in this accident analysis. This provides one element in evaluations of the potential for relaxation of Primary and Secondary Containment isolation valve closure time limits.
  - To recognize that LGS does not routinely purge containment and that, therefore, LOCA during containment purging is not considered credible.

- Secondary Containment Release Pathway:
  - To analyze the current Reactor Enclosure drawdown time of 15.5 minutes as from the start of gap release, with recognition that gap release does not commence for a minimum of 2 minutes from event initiation [Ref. (36)].

- Main Steam Isolation Valve Leakage Release Pathway:
  - The current MSIV leak limits of 100 scfh per steam line and a total of 200 scfh for all 4 lines [Ref. (23)] will be unchanged. For TID-14844 purposes, MSIV leakage was evaluated in 1994 using NEDC-31858P [Ref. (29)] methodology. LGS Radiological effects are reanalyzed in this calculation using Alternative Source Terms, and the methodology described herein.
  - This accident analysis will continue to credit the MSIV Leakage Alternate Drain Pathways that use existing main steam drain lines to the high pressure shell of the main condenser. This system has previously been shown to be seismically rugged as discussed in UFSAR Section 6.7.

- Control Room Emergency Fresh Air System (CREFAS) Parameters:
  - To increase the Radiation mode assumed unfiltered inleakage to a total of 225 cfm from the historical assumption of 50 cfm. This is in addition to the normal maximum filtered intake rate of 525 cfm.
  - These conditions will be shown to bound the historical chlorine isolation mode assumption of an isolated control room with a 525 cfm unfiltered Inleakage. This will eliminate any dose-based time limit on transfer from Chlorine Mode (e.g. for test) to Radiation mode in the event of a radiological accident.
  - To credit 99% removal efficiency for aerosols based on HEPA performance.

- Control Room Design for Gamma Shine from External Sources:

  - To re-assess the dominant sources, including the core spray pipe run located immediately outside of one Control Room wall, containing ECCS fluid, reflecting AST assumptions and all pertinent isotopes.
  - To identify a conservative post-LOCA dose rate for the Control Room.
  - To evaluate other external sources that were previously treated as negligible.

2. Acceptance Criteria

The following NRC regulatory requirement and guidance documents are applicable to this LGS Alternative Source Term LOCA Calculation:

- 10CFR50.67 [Ref. (8)]
- Standard Review Plan section 15.0.1 [Ref. (6)]
- Regulatory Guide 1.183 [Ref. (4)]

Dose Acceptance Criteria are:

Regulatory Dose Limits

Dose Type	Control Room (rem)	EAB and LPZ (rem)
TEDE Dose	5	25

The basis for conformance with the Regulatory Positions in Section C. of the body of Regulatory Guide 1.183 and each of its Appendix A "Assumptions for Evaluating the Radiological Consequences of a LWR Loss-of-Coolant Accident" is provided by this analysis, as shown in the Conformance Matrix Tables 2.1 and 2.2.

Table 2.1: Conformance with Regulatory Guide (RG) 1.183 Main Sections

RG Section	RG Position	LGS Analysis	Comments
3.1	The inventory of fission products in the reactor core and available for release to the containment should be based on the maximum full power operation of the core with, as a minimum, current licensed values for fuel enrichment, fuel burnup, and an assumed core power equal to the current licensed rated thermal power times the ECCS evaluation uncertainty. The period of irradiation should be of sufficient duration to allow the activity of dose-significant radionuclides to reach equilibrium or to reach maximum values. The core inventory should be determined using an appropriate isotope generation and depletion computer code such as ORIGEN 2 or ORIGEN-ARP. Core inventory factors (Ci/MWt) provided in TID 14844 and used in some analysis computer codes were derived for low burnup, low enrichment fuel and should not be used with higher burnup and higher enrichment fuels.	Conforms	ORIGEN 2.1 based methodology was used to determine core inventory. These source terms were evaluated at end-of-cycle and at beginning of cycle (100 effective full power days (EFPD), to achieve equilibrium) conditions and worst-case inventory used for the selected isotopes. This has been shown to be a conservative approach. The resulting values were converted to units of Ci/MWth. Accident analyses are based on a power level of 3527 MWth to account for two percent uncertainty (3458 x 1.02 = 3527). Fission product inventory is based on a 2-year fuel cycle with a nominal 711 EFPD per cycle.
3.1	For the DBA LOCA, all fuel assemblies in the core are assumed to be affected and the core average inventory should be used. For DBA events that do not involve the entire core, the fission product inventory of each of the damaged fuel rods is determined by dividing the total core inventory by the number of fuel rods in the core. To account for differences in power level across the core, radial peaking factors from the facility's core operating limits report (COLR) or technical specifications should be applied in determining the inventory of the damaged rods.	Conforms	This calculation addresses LOCA, and all fuel assemblies in the core are assumed to be affected and the core average inventory is used.

Table 2.1: Conformance with Regulatory Guide (RG) 1.183 Main Sections

RG Section	RG Position	LGS Analysis	Comments
3.1	No adjustment to the fission product inventory should be made for events postulated to occur during power operations at less than full rated power or those postulated to occur at the beginning of core life. For events postulated to occur while the facility is shutdown, e.g., a fuel handling accident, radioactive decay from the time of shutdown may be modeled.	Conforms	This calculation addresses LOCA. Fission product inventories reflect full power operation.
3.2	The core inventory release fractions, by radionuclide groups, for the gap release and early in-vessel damage phases for DBA LOCAs are listed in Table 1 for BWRs and Table 2 for PWRs. These fractions are applied to the equilibrium core inventory described in Regulatory Position 3.1. **Table 1** **BWR Core Inventory Fraction Released Into Containment** *Group* / *Gap Release Phase* / *Early In-Vessel Phase* / *Total* Noble Gases: 0.05 / 0.95 / 1.0 Halogens: 0.05 / 0.25 / 0.3 Alkali Metals: 0.05 / 0.20 / 0.25 Tellurium Metals: 0.00 / 0.05 / 0.05 Ba, Sr: 0.00 / 0.02 / 0.02 Noble Metals: 0.00 / 0.0025 / 0.0025 Cerium Group: 0.00 / 0.0005 / 0.0005 Lanthanides: 0.00 / 0.0002 / 0.0002	Conforms	The fractions from Table 1 are used.

Table 2.1: Conformance with Regulatory Guide (RG) 1.183 Main Sections

RG Section	RG Position	LGS Analysis	Comments
3.2	For non-LOCA events, the fractions of the core inventory assumed to be in the gap for the various radionuclides are given in Table 3. The release fractions from Table 3 are used in conjunction with the fission product inventory calculated with the maximum core radial peaking factor. **Table 3** **Non-LOCA Fraction of Fission Product Inventory in Gap** Group — Fraction I-131 — 0.08 Kr-85 — 0.10 Other Noble Gases — 0.05 Other Halogens — 0.05 Alkali Metals — 0.12	Conforms	Not Applicable to LOCA.
3.3	Table 4 tabulates the onset and duration of each sequential release phase for DBA LOCAs at PWRs and BWRs. The specified onset is the time following the initiation of the accident (i.e., time = 0). The early in-vessel phase immediately follows the gap release phase. The activity released from the core during each release phase should be modeled as increasing in a linear fashion over the duration of the phase. For non-LOCA DBAs, in which fuel damage is projected, the release from the fuel gap and the fuel pellet should be assumed to occur instantaneously with the onset of the projected damage. **Table 4** **LOCA Release Phases** *PWRs* — *BWRs* *Phase* — *Onset* — *Duration* — *Onset* — *Duration* Gap Release — 30 sec — 0.5 hr — 2 min — 0.5 hr Early In-Vessel — 0.5 hr — 1.3 hr — 0.5 hr — 1.5 hr	Conforms	The BWR durations from Table 4 are used. LOCA releases are modeled in a linear fashion using RADTRAD.

Table 2.1: Conformance with Regulatory Guide (RG) 1.183 Main Sections

RG Section	RG Position	LGS Analysis	Comments
3.3	For facilities licensed with leak-before-break methodology, the onset of the gap release phase may be assumed to be 10 minutes. A licensee may propose an alternative time for the onset of the gap release phase, based on facility-specific calculations using suitable analysis codes or on an accepted topical report shown to be applicable for the specific facility. In the absence of approved alternatives, the gap release phase onsets in Table 4 should be used.	Not Applicable	LGS does not use leak-before-break methodology for DBA analyses.
3.4	Table 5 lists the elements in each radionuclide group that should be considered in design basis analyses. **Table 5** **Radionuclide Groups** **Group** — **Elements** Noble Gases — Xe, Kr Halogens — I, Br Alkali Metals — Cs, Rb Tellurium Group — Te, Sb, Se, Ba, Sr Noble Metals — Ru, Rh, Pd, Mo, Tc, Co Lanthanides — La, Zr, Nd, Eu, Nb, Pm, Pr, Sm, Y, Cm, Am Cerium — Ce, Pu, Np	Conforms	Except for direct shine dose assessment, the nuclides used are the 60 identified as being potentially important dose contributors to total effective dose equivalent (TEDE) in the RADTRAD code, which encompasses those listed in RG 1.183, Table 5.
3.5	Of the radioiodine released from the reactor coolant system (RCS) to the containment in a postulated accident, 95 percent of the iodine released should be assumed to be cesium iodide (CsI), 4.85 percent elemental iodine, and 0.15 percent organic iodide. This includes releases from the gap and the fuel pellets. With the exception of elemental and organic iodine and noble gases, fission products should be assumed to be in particulate form. The same chemical form is assumed in releases from fuel pins in FHAs and from releases from the fuel pins through the RCS in DBAs other than FHAs or LOCAs. However, the transport of these iodine species following release from the fuel may affect these assumed fractions. The accident-specific appendices to this regulatory guide provide additional details.	Conforms	NRC guidance on chemical forms for fission products is applied for all accidents as specified here and in RG 1.183 appendices.

Table 2.1: Conformance with Regulatory Guide (RG) 1.183 Main Sections

RG Section	RG Position	LGS Analysis	Comments
3.6	The amount of fuel damage caused by non-LOCA design basis events should be analyzed to determine, for the case resulting in the highest radioactivity release, the fraction of the fuel that reaches or exceeds the initiation temperature of fuel melt and the fraction of fuel elements for which the fuel clad is breached. Although the NRC staff has traditionally relied upon the departure from nucleate boiling ratio (DNBR) as a fuel damage criterion, licensees may propose other methods to the NRC staff, such as those based upon enthalpy deposition, for estimating fuel damage for the purpose of establishing radioactivity releases.	Not applicable to LOCA.	
4.1.1	The dose calculations should determine the TEDE. TEDE is the sum of the committed effective dose equivalent (CEDE) from inhalation and the deep dose equivalent (DDE) from external exposure. The calculation of these two components of the TEDE should consider all radionuclides, including progeny from the decay of parent radionuclides, that are significant with regard to dose consequences and the released radioactivity.	Conforms	TEDE is calculated, with significant progeny included.
4.1.2	The exposure-to-CEDE factors for inhalation of radioactive material should be derived from the data provided in ICRP Publication 30, "Limits for Intakes of Radionuclides by Workers" (Ref. 19). Table 2.1 of Federal Guidance Report 11, "Limiting Values of Radionuclide Intake and Air Concentration and Dose Conversion Factors for Inhalation, Submersion, and Ingestion" (Ref. 20), provides tables of conversion factors acceptable to the NRC staff. The factors in the column headed "effective" yield doses corresponding to the CEDE.	Conforms	Federal Guidance Report 11 dose conversion factors (DCFs) are used.
4.1.3	For the first 8 hours, the breathing rate of persons offsite should be assumed to be 3.5×10^{-4} cubic meters per second. From 8 to 24 hours following the accident, the breathing rate should be assumed to be 1.8×10^{-4} cubic meters per second. After that and until the end of the accident, the rate should be assumed to be 2.3×10^{-4} cubic meters per second.	Conforms	The specified values are used in the analyses.
4.1.4	The DDE should be calculated assuming submergence in semi-infinite cloud assumptions with appropriate credit for attenuation by body tissue. The DDE is nominally equivalent to the effective dose equivalent (EDE)	Conforms	Federal Guidance Report 12 conversion factors are used.

Table 2.1: Conformance with Regulatory Guide (RG) 1.183 Main Sections

RG Section	RG Position	LGS Analysis	Comments
	from external exposure if the whole body is irradiated uniformly. Since this is a reasonable assumption for submergence exposure situations, EDE may be used in lieu of DDE in determining the contribution of external dose to the TEDE. Table III.1 of Federal Guidance Report 12, "External Exposure to Radionuclides in Air, Water, and Soil" (Ref. 21), provides external EDE conversion factors acceptable to the NRC staff. The factors in the column headed "effective" yield doses corresponding to the EDE.		
4.1.5	The TEDE should be determined for the most limiting person at the EAB. The maximum EAB TEDE for any two-hour period following the start of the radioactivity release should be determined and used in determining compliance with the dose criteria in 10 CFR 50.67. The maximum two-hour TEDE should be determined by calculating the postulated dose for a series of small time increments and performing a "sliding" sum over the increments for successive two-hour periods. The maximum TEDE obtained is submitted. The time increments should appropriately reflect the progression of the accident to capture the peak dose interval between the start of the event and the end of radioactivity release (see also Table 6).	Conforms	The maximum two hour EAB doses value are determined by RADTRAD for each release path. These results are added, even if the times do not coincide, for simplicity and conservatism. That is, worst case 2 hr results in each RADTRAD run are added to obtain the total EAB dose.
4.1.6	TEDE should be determined for the most limiting receptor at the outer boundary of the low population zone (LPZ) and should be used in determining compliance with the dose criteria in 10 CFR 50.67.	Conforms	Analyses are based on X/Qs determined at the LPZ distance in conformance with Regulatory Guide 1.145.
4.1.7	No correction should be made for depletion of the effluent plume by deposition on the ground.	Conforms	No such credit is taken.
4.2.1	The TEDE analysis should consider all sources of radiation that will cause exposure to control room personnel. The applicable sources will vary from facility to facility, but typically will include: • Contamination of the control room atmosphere by the intake or infiltration of the radioactive material contained in the radioactive plume released from the facility, • Contamination of the control room atmosphere by the intake or	Conforms	The principal source of dose within the control room is due to airborne activity. The dose estimates from post LOCA sources external to the control room were based on

Table 2.1: Conformance with Regulatory Guide (RG) 1.183 Main Sections

RG Section	RG Position	LGS Analysis	Comments
	infiltration of airborne radioactive material from areas and structures adjacent to the control room envelope, • Radiation shine from the external radioactive plume released from the facility, • Radiation shine from radioactive material in the reactor containment, • Radiation shine from radioactive material in systems and components inside or external to the control room envelope, e.g., radioactive material buildup in recirculation filters.		consideration of all shielding-significant isotopes and indicate that the contribution to CR dose is dominated by the ECCS piping in the Reactor Enclosure adjacent to the Unit 1 CR. See Attachment C.
4.2.2	The radioactive material releases and radiation levels used in the control room dose analysis should be determined using the same source term, transport, and release assumptions used for determining the EAB and the LPZ TEDE values, unless these assumptions would result in non-conservative results for the control room.	Conforms	The source term, transport, and release assumptions are the same for both the control room and offsite locations.
4.2.3	The models used to transport radioactive material into and through the control room, and the shielding models used to determine radiation dose rates from external sources, should be structured to provide suitably conservative estimates of the exposure to control room personnel.	Conforms	RADTRAD analyses are used to evaluate transport of material into and through the control room, and to determine the resulting personnel doses. Shielding models are as discussed in Attachment C.
4.2.4	Credit for engineered safety features that mitigate airborne radioactive material within the control room may be assumed. Such features may include control room isolation or pressurization, or intake or recirculation filtration. Refer to Section 6.5.1, "ESF Atmospheric Cleanup System," of the SRP (Ref. 3) and Regulatory Guide 1.52, "Design, Testing, and Maintenance Criteria for Post-accident Engineered-Safety-Feature Atmosphere Cleanup System Air Filtration and Adsorption Units of Light-Water-Cooled Nuclear Power Plants" (Ref. 25), for guidance.	Conforms	After the drawdown period, credit is taken for SGTS HEPA and charcoal adsorber filtration (99.0% each) and RERS HEPA (99.0%) and charcoal filtration (95%) CR intake and recirculation filtration by CREFAS are credited in the LOCA accident analysis with automatic

Table 2.1: Conformance with Regulatory Guide (RG) 1.183 Main Sections

RG Section	RG Position	LGS Analysis	Comments
			initiation of the Radiation Isolation Mode on a high rad signal, and filter efficiencies of 99.0% for HEPA/aerosols and 95.0% for charcoal adsorbers (elemental and organic iodine).
4.2.5	Credit should generally not be taken for the use of personal protective equipment or prophylactic drugs. Deviations may be considered on a case-by-case basis.	Conforms	Such credits are not taken.
4.2.6	The dose receptor for these analyses is the hypothetical maximum exposed individual who is present in the control room for 100% of the time during the first 24 hours after the event, 60% of the time between 1 and 4 days, and 40% of the time from 4 days to 30 days. For the duration of the event, the breathing rate of this individual should be assumed to be 3.5×10^{-4} cubic meters per second.	Conforms	The identified occupancy factors and breathing rate are used in dose analyses.
4.2.7	Control room doses should be calculated using dose conversion factors identified in Regulatory Position 4.1 above for use in offsite dose analyses. The DDE from photons may be corrected for the difference between finite cloud geometry in the control room and the semi-infinite cloud assumption used in calculating the dose conversion factors. The following expression may be used to correct the semi-infinite cloud dose, DDE_{∞}, to a finite cloud dose, DDE_{finite}, where the control room is modeled as a hemisphere that has a volume, V, in cubic feet, equivalent to that of the control room (Ref. 22). $$DDE_{finite} = \frac{DDE_{\infty} V^{0.338}}{1173}$$	Conforms	The equation given is utilized for finite cloud correction when calculating external doses due to the airborne activity inside the control room. This formula is also built into RADTRAD for use in control room dose assessments.
4.3	The guidance provided in Regulatory Positions 4.1 and 4.2 should be used, as applicable, in re-assessing the radiological analyses identified in Regulatory Position 1.3.1, such as those in NUREG-0737 (Ref. 2). Design envelope source terms provided in NUREG-0737 should be updated for consistency with the AST. In general, radiation exposures	Conforms	For the Technical Support Center and other areas requiring plant personnel access, assessments contained in Attachment G

Table 2.1: Conformance with Regulatory Guide (RG) 1.183 Main Sections

RG Section	RG Position	LGS Analysis	Comments
	to plant personnel identified in Regulatory Position 1.3.1 should be expressed in terms of TEDE. Integrated radiation exposure of plant equipment should be determined using the guidance of Appendix I of this guide.		indicate that with no new operator actions required, radiation exposures would be lower than currently reported.
5.1.1	The evaluations required by 10 CFR 50.67 are re-analyses of the design basis safety analyses and evaluations required by 10 CFR 50.34; they are considered to be a significant input to the evaluations required by 10 CFR 50.92 or 10 CFR 50.59. These analyses should be prepared, reviewed, and maintained in accordance with quality assurance programs that comply with Appendix B, "Quality Assurance Criteria for Nuclear Power Plants and Fuel Reprocessing Plants," to 10 CFR Part 50.	Conforms	Analyses are performed under quality assurance programs meeting Appendix B to 10 CFR Part 50.
5.1.2	Credit may be taken for accident mitigation features that are classified as safety-related, are required to be operable by technical specifications, are powered by emergency power sources, and are either automatically actuated or, in limited cases, have actuation requirements explicitly addressed in emergency operating procedures. The single active component failure that results in the most limiting radiological consequences should be assumed. Assumptions regarding the occurrence and timing of a loss of offsite power should be selected with the objective of maximizing the postulated radiological consequences.	Conforms	This analysis generally relies on the same safety related accident mitigation features historically credited for LOCA analyses. The analyses take credit for SLC System operation for post-LOCA pH control. The SLC System is safety-related, required to be operable by technical specifications, and powered by emergency power. The SLC System is manually initiated from the main control room, as directed by the emergency operating procedures. Ref. 20 addresses other criteria that have been established to assure the SLC system is reliable for this intended

Table 2.1: Conformance with Regulatory Guide (RG) 1.183 Main Sections

RG Section	RG Position	LGS Analysis	Comments
			service.
5.1.3	The numeric values that are chosen as inputs to the analyses required by 10 CFR 50.67 should be selected with the objective of determining a conservative postulated dose. In some instances, a particular parameter may be conservative in one portion of an analysis but be nonconservative in another portion of the same analysis.	Conforms	Conservative assumptions are used. See input parameter discussions for further information
5.1.4	Licensees should ensure that analysis assumptions and methods are compatible with the AST and the TEDE criteria.	Conforms	As documented in this calculation, analysis assumptions and methods were made per this guidance.
5.3	Atmospheric dispersion values (χ/Q) for the EAB, the LPZ, and the control room that were approved by the staff during initial facility licensing or in subsequent licensing proceedings may be used in performing the radiological analyses identified by this guide. Methodologies that have been used for determining χ/Q values are documented in Regulatory Guides 1.3 and 1.4, Regulatory Guide 1.145, "Atmospheric Dispersion Models for Potential Accident Consequence Assessments at Nuclear Power Plants," and the paper, "Nuclear Power Plant Control Room Ventilation System Design for Meeting General Criterion 19". The NRC computer code PAVAN implements Regulatory Guide 1.145 and its use is acceptable to the NRC staff. The methodology of the NRC computer code ARCON96 is generally acceptable to the NRC staff for use in determining control room χ/Q values.	Conforms	New atmospheric dispersion values (χ/Q) for the EAB, the LPZ, and the control room were developed, using meteorology data for the years 1996 through 2000. ARCON96 and PAVAN were used with these data to determine control room and EAB/LPZ atmospheric dispersion values, respectively. Worst-case X/Q's for all releases are used, with the North Stack, the closest stack to the control room intake, assumed. Review of pertinent drawings and site walkdowns have substantiated that there is no worse release pathway that could be expected to occur.

Table 2.2: Conformance with RG 1.183 Appendix A (Loss-of-Coolant Accident)

RG Section	RG Position	LGS Analysis	Comments
1	Acceptable assumptions regarding core inventory and the release of radionuclides from the fuel are provided in Regulatory Position 3 of this guide.	Conforms	*Fission Product Inventory:* Core source terms are developed using ORIGEN-2.1 based methodology. *Release Fractions:* Release fractions are per Table 1 of RG 1.183, and are implemented by RADTRAD. *Timing of Release Phases:* Release Phases are per Table 4 of RG 1.183, and are implemented by RADTRAD. *Radionuclide Composition:* Radionuclide grouping is per Table 5 of RG 1.183, as implemented in RADTRAD. *Chemical Form:* Treatment of release chemical form is per RG 1.183, Section 3.5.
2	If the sump or suppression pool pH is controlled at values of 7 or greater, the chemical form of radioiodine released to the containment should be assumed to be 95% cesium iodide (CsI), 4.85 percent elemental iodine, and 0.15 percent organic iodide. Iodine species, including those from iodine re-evolution, for sump or suppression pool pH values less than 7 will be evaluated on a case-by-case basis. Evaluations of pH should consider the effect of acids and bases created during the LOCA event, e.g., radiolysis products. With the exception of elemental and organic iodine and noble gases, fission products should be assumed to be in particulate form.	Conforms	The stated distributions of iodine chemical forms are used. The post-LOCA suppression pool pH has been evaluated [Ref. (20)], including consideration of the effects of acids and bases created during the LOCA event, the effects of key fission product releases, and the impact of SLCS injection. Suppression pool pH remains above 7 for at least 30 days.
3.1	The radioactivity released from the fuel should be assumed to mix instantaneously and homogeneously throughout the free air volume of the primary containment in PWRs or the drywell in BWRs as it is released. This distribution should be adjusted if there are internal compartments that have limited ventilation exchange. The suppression pool free air volume may be included provided there is a mechanism to ensure	Conforms	See Item 3.7 below.

Table 2.2: Conformance with RG 1.183 Appendix A (Loss-of-Coolant Accident)

RG Section	RG Position	LGS Analysis	Comments
	mixing between the drywell to the wetwell. The release into the containment or drywell should be assumed to terminate at the end of the early in-vessel phase.		
3.2	Reduction in airborne radioactivity in the containment by natural deposition within the containment may be credited. Acceptable models for removal of iodine and aerosols are described in Chapter 6.5.2, "Containment Spray as a Fission Product Cleanup System," of the Standard Review Plan (SRP), NUREG-0800 (Ref. A-1) and in NUREG/CR-6189, "A Simplified Model of Aerosol Removal by Natural Processes in Reactor Containments" (Ref. A-2). The latter model is incorporated into the analysis code RADTRAD (Ref. A-3).	Conforms	Credit is taken for natural deposition per the methodology of NUREG/CR-6189, as implemented in RADTRAD. No deterministically assumed initial plateout is credited.
3.3	Reduction in airborne radioactivity in the containment by containment spray systems that have been designed and are maintained in accordance with Chapter 6.5.2 of the SRP (Ref. A-1) may be credited. Acceptable models for the removal of iodine and aerosols are described in Chapter 6.5.2 of the SRP and NUREG/CR-5966, "A Simplified Model of Aerosol Removal by Containment Sprays"1 (Ref. A-4). This simplified model is incorporated into the analysis code RADTRAD (Refs. A-1 to A-3). The evaluation of the containment sprays should address areas within the primary containment that are not covered by the spray drops. The mixing rate attributed to natural convection between sprayed and unsprayed regions of the containment building, provided that adequate flow exists between these regions, is assumed to be two turnovers of the unsprayed regions per hour, unless other rates are justified. The containment building atmosphere may be considered a single, well-mixed volume if the spray covers at least 90% of the volume and if adequate mixing of unsprayed compartments can be shown.	Not Applicable	While containment sprays are a design feature that is available at LGS, no credit is taken for airborne activity removal by them in the LOCA AST reanalysis.

Table 2.2: Conformance with RG 1.183 Appendix A (Loss-of-Coolant Accident)

RG Section	RG Position	LGS Analysis	Comments
	The SRP sets forth a maximum decontamination factor (DF) for elemental iodine based on the maximum iodine activity in the primary containment atmosphere when the sprays actuate, divided by the activity of iodine remaining at some time after decontamination. The SRP also states that the particulate iodine removal rate should be reduced by a factor of 10 when a DF of 50 is reached. The reduction in the removal rate is not required if the removal rate is based on the calculated time-dependent airborne aerosol mass. There is no specified maximum DF for aerosol removal by sprays. The maximum activity to be used in determining the DF is defined as the iodine activity in the columns labeled "Total" in Tables 1 and 2 of this guide multiplied by 0.05 for elemental iodine and by 0.95 for particulate iodine (i.e., aerosol treated as particulate in SRP methodology).		
3.4	Reduction in airborne radioactivity in the containment by in-containment recirculation filter systems may be credited if these systems meet the guidance of Regulatory Guide 1.52 and Generic Letter 99-02 (Refs. A-5 and A-6). The filter media loading caused by the increased aerosol release associated with the revised source term should be addressed.	Conforms	No in-containment recirculation filter systems exist at LGS.
3.5	Reduction in airborne radioactivity in the containment by suppression pool scrubbing in BWRs should generally not be credited. However, the staff may consider such reduction on an individual case basis. The evaluation should consider the relative timing of the blowdown and the fission product release from the fuel, the force driving the release through the pool, and the potential for any bypass of the suppression pool (Ref. 7). Analyses should consider iodine re-evolution if the suppression pool liquid pH is not maintained greater than 7.	Conforms	No credit is taken for suppression pool scrubbing in the LOCA AST reanalysis. As indicated for Item 2. above, analyses have been performed that determined that the suppression pool liquid pH is maintained greater than 7, and that, therefore, iodine re-evolution is not expected.
3.6	Reduction in airborne radioactivity in the containment by retention in ice condensers, or other engineering safety features not addressed above, should be evaluated on an	Not Applicable	LGS does not have ice condensers. No other removal mechanisms are credited

Table 2.2: Conformance with RG 1.183 Appendix A (Loss-of-Coolant Accident)

RG Section	RG Position	LGS Analysis	Comments
	individual case basis. See Section 6.5.4 of the SRP (Ref. A-1).		other than natural deposition.
3.7	The primary containment (i.e., drywell for Mark I and II containment designs) should be assumed to leak at the peak pressure technical specification leak rate for the first 24 hours. For PWRs, the leak rate may be reduced after the first 24 hours to 50% of the technical specification leak rate. For BWRs, leakage may be reduced after the first 24 hours, if supported by plant configuration and analyses, to a value not less than 50% of the technical specification leak rate. Leakage from subatmospheric containments is assumed to terminate when the containment is brought to and maintained at a subatmospheric condition as defined by technical specifications. For BWRs with Mark III containments, the leakage from the drywell into the primary containment should be based on the steaming rate of the heated reactor core, with no credit for core debris relocation. This leakage should be assumed during the two-hour period between the initial blowdown and termination of the fuel radioactivity release (gap and early in-vessel release phases). After two hours, the radioactivity is assumed to be uniformly distributed throughout the drywell and the primary containment.	Conforms.	Credit is taken for the 50% leak rate reduction after 24 hours, based on containment pressure, as supported by the Attachment E Containment Response results for a Design Basis LOCA, indicating only a 50% Containment Leak Rate reduction at and after 1 day is conservative. LGS uses a Mark II containment, and leakage from the drywell into the suppression chamber is not credited for the first two hour period. Rapid mixing is considered thereafter due to ECCS restoration and associated steam production to provide the uniform distribution required, with flow from the suppression chamber air space to the drywell through vacuum breakers as steam condensation reduces drywell pressure relative to that in the suppression chamber. As noted, such mixing after two hours is contained within Regulatory Guide 1.183 for Mark III containments, and has been accepted by the NRC recently for the Clinton Power Station AST LOCA analysis of reference 35. The same mixing mechanisms apply for Mark I

Table 2.2: Conformance with RG 1.183 Appendix A (Loss-of-Coolant Accident)			
RG Section	RG Position	LGS Analysis	Comments
			and Mark II containments, and have been recently accepted by the NRC for Mark I containments at Fermi 1 and Vermont Yankee Nuclear Power plants. At Fermi 1, NRC's Safety Evaluation Report of September 28, 2004 states with respect to main steam isolation valve leakage that "The licensee's revised analysis assumes that the released fission products are dispersed throughout the drywell free volume, that there is no mixing of the drywell and wetwell volumes for the first two hours, and that there is complete mixing after that. The NRC staff finds this assumption acceptable as the AST is effectively based on a terminated LOCA in which core cooling is restored at the end of the early in-vessel release period." For Vermont Yankee, the NRC Safety Evaluation Report indicates: "Entergy conservatively assumes that the fission products released from the core are dispersed equally throughout the drywell. Following the initial blowdown of the RPV, the fuel heats up and fuel melt begins, and subsequently the steaming in the RPV carries fission products to the containment. When core cooling is restored, steam is rapidly generated in

Table 2.2: Conformance with RG 1.183 Appendix A (Loss-of-Coolant Accident)

RG Section	RG Position	LGS Analysis	Comments
			the core. This steam and the ECCS flow carry fission products from the core to the primary containment via the severed recirculation line, resulting in well-mixed RPV dome and containment fission product concentrations. Once the rapid steaming stops, the containment contents can flow back into the RPV through the severed line and would be available for release via the MSIVs."
3.8	If the primary containment is routinely purged during power operations, releases via the purge system prior to containment isolation should be analyzed and the resulting doses summed with the postulated doses from other release paths. The purge release evaluation should assume that 100% of the radionuclide inventory in the reactor coolant system liquid is released to the containment at the initiation of the LOCA. This inventory should be based on the technical specification reactor coolant system equilibrium activity. Iodine spikes need not be considered. If the purge system is not isolated before the onset of the gap release phase, the release fractions associated with the gap release and early in-vessel phases should be considered as applicable.	Conforms	The LGS primary containment is not routinely purged during power operation. Purging is limited to inerting, de-inerting, and occasional short pressure control activities.
4.1	Leakage from the primary containment should be considered to be collected, processed by engineered safety feature (ESF) filters, if any, and released to the environment via the secondary containment exhaust system during periods in which the secondary containment has a negative pressure as defined in technical specifications. Credit for an elevated release should be assumed only if the point of physical release is more than two and one-half times the height of any adjacent structure.	Conforms	Secondary Containment filtered release (via the North Stack) credit is taken at 15.5 minutes after the start of gap release. Gap release begins at ~ 2 minutes after LOCA initiation. Therefore, 17.5 minutes is available for achieving a negative pressure of 1/4" W.G. For EAB and LPZ doses, ground level releases are assumed. For Control Room doses, releases are based on zero-velocity

Table 2.2: Conformance with RG 1.183 Appendix A (Loss-of-Coolant Accident)

RG Section	RG Position	LGS Analysis	Comments
			vent release assumptions, yielding ground level release equivalent dispersion factors.
4.2	Leakage from the primary containment is assumed to be released directly to the environment as a ground-level release during any period in which the secondary containment does not have a negative pressure as defined in technical specifications.	Conforms	For EAB and LPZ doses, ground level releases are assumed. For Control Room doses, releases are based on zero-velocity vent release assumptions.
4.3	The effect of high wind speeds on the ability of the secondary containment to maintain a negative pressure should be evaluated on an individual case basis. The wind speed to be assumed is the 1-hour average value that is exceeded only 5% of the total number of hours in the data set. Ambient temperatures used in these assessments should be the 1-hour average value that is exceeded only 5% or 95% of the total numbers of hours in the data set, whichever is conservative for the intended use (e.g., if high temperatures are limiting, use those exceeded only 5%).	Conforms	The wind speed exceeded only 5% of the time at LGS in the secondary containment vicinity is approximately 19.7 mph (175' elevation of meteorological tower 2). It has been determined that a wind speed of greater than 35 mph would be required before the secondary containment pressures would be positive relative to outside air pressures at the downwind side of the reactor enclosure. See Attachment H.
4.4	Credit for dilution in the secondary containment may be allowed when adequate means to cause mixing can be demonstrated. Otherwise, the leakage from the primary containment should be assumed to be transported directly to exhaust systems without mixing. Credit for mixing, if found to be appropriate, should generally be limited to 50%. This evaluation should consider the magnitude of the containment leakage in relation to contiguous building volume or exhaust rate, the location of exhaust plenums relative to projected release locations, the recirculation ventilation systems, and internal walls and floors that impede stream flow between the release and the exhaust.	Conforms	A conservative mixing credit, increasing stepwise from the onset of the LOCA and not exceeding 50%, is taken for dilution/mixing in secondary containment, attributed to the RERS flow network.
4.5	Primary containment leakage that bypasses the secondary containment should be evaluated at the bypass leak rate incorporated in the technical specifications. If the bypass	Conforms	No primary containment leakage except for MSIV leakage has been identified which bypasses the secondary containment. Only

Table 2.2: Conformance with RG 1.183 Appendix A (Loss-of-Coolant Accident)

RG Section	RG Position	LGS Analysis	Comments
	leakage is through water, e.g., via a filled piping run that is maintained full, credit for retention of iodine and aerosols may be considered on a case-by-case basis. Similarly, deposition of aerosol radioactivity in gas-filled lines may be considered on a case-by-case basis.		the MSIV pathway leak rates are incorporated into the Tech. Specs.
4.6	Reduction in the amount of radioactive material released from the secondary containment because of ESF filter systems may be taken into account provided that these systems meet the guidance of Regulatory Guide 1.52 (Ref. A-5) and Generic Letter 99-02 (Ref. A-6).	Conforms	SGTS and RERS HEPA and charcoal adsorber filters meet these criteria and are therefore credited.
5.1	With the exception of noble gases, all the fission products released from the fuel to the containment (as defined in Tables 1 and 2 of this guide) should be assumed to instantaneously and homogeneously mix in the primary containment sump water (in PWRs) or suppression pool (in BWRs) at the time of release from the core. In lieu of this deterministic approach, suitably conservative mechanistic models for the transport of airborne activity in containment to the sump water may be used. Note that many of the parameters that make spray and deposition models conservative with regard to containment airborne leakage are nonconservative with regard to the buildup of sump activity.	Conforms	With the exception of noble gases, all the fission products released from the fuel to the containment are assumed to instantaneously and homogeneously mix in the suppression pool at the time of release from the core.
5.2	The leakage should be taken as two times the sum of the simultaneous leakage from all components in the ESF recirculation systems above which the technical specifications, or licensee commitments to item III.D.1.1 of NUREG-0737 (Ref. A-8), would require declaring such systems inoperable. The leakage should be assumed to start at the earliest time the recirculation flow occurs in these systems and end at the latest time the releases from these systems are terminated. Consideration should also be given to design leakage through valves isolating ESF recirculation systems from tanks vented to atmosphere, e.g., emergency	Conforms	The design basis 5 gpm leak rate is more than 2 times the acceptance criteria for the sum of the simultaneous leakage from all components in the ESF recirculation systems as addressed in the Program committed to in the T.S.6.8.4.a "Primary Coolant Sources Outside Containment". Since certain ECCS systems take suction immediately from the suppression pool, this leak path is assumed to start at time 0.

Table 2.2: Conformance with RG 1.183 Appendix A (Loss-of-Coolant Accident)

RG Section	RG Position	LGS Analysis	Comments
	core cooling system (ECCS) pump miniflow return to the refueling water storage tank.		Leakage to atmospheric tanks is credible only for lines connecting from ECCS pump discharges to such a tank, because of relative elevations. The sole leakage paths to a tank vented to atmosphere meeting this condition are the High Pressure Coolant Injection / Reactor Core Isolation Cooling test lines that discharge to the Condensate Storage tank (CST). These lines are isolated by two normally closed valves. Since the CST contents are demineralized water, ECCS leakage would quickly turn the water basic. Therefore, minimal elemental iodine is expected, and as a result, negligible iodine volatilization.
5.3	With the exception of iodine, all radioactive materials in the recirculating liquid should be assumed to be retained in the liquid phase.	Conforms	With the exception of iodine, all radioactive materials in ECCS liquids are assumed to be retained in the liquid phase.
5.4	If the temperature of the leakage exceeds 212°F, the fraction of total iodine in the liquid that becomes airborne should be assumed equal to the fraction of the leakage that flashes to vapor. This flash fraction, FF, should be determined using a constant enthalpy, h, process, based on the maximum time-dependent temperature of the sump water circulating outside the containment: $$FF = \frac{h_{f1} - h_{f2}}{h_{fg}}$$ *Where:* h_{f1} is the enthalpy of liquid at system design temperature and pressure; h_{f2} is the enthalpy of liquid at saturation conditions (14.7 psia, 212°F); and h_{fg} is the heat of	Not Applicable	The temperature of the leakage does not exceed 212°F.

Table 2.2: Conformance with RG 1.183 Appendix A (Loss-of-Coolant Accident)

RG Section	RG Position	LGS Analysis	Comments
	vaporization at 212°F.		
5.5	If the temperature of the leakage is less than 212°F or the calculated flash fraction is less than 10%, the amount of iodine that becomes airborne should be assumed to be 10% of the total iodine activity in the leaked fluid, unless a smaller amount can be justified based on the actual sump pH history and area ventilation rates.	Conforms	ESF leakage into Secondary Containment is assumed to flash such than 10% of the total iodine activity in the leaked fluid is assumed airborne.
5.6	The radioiodine that is postulated to be available for release to the environment is assumed to be 97% elemental and 3% organic. Reduction in release activity by dilution or holdup within buildings, or by ESF ventilation filtration systems, may be credited where applicable. Filter systems used in these applications should be evaluated against the guidance of Regulatory Guide 1.52 (Ref. A-5) and Generic Letter 99-02 (Ref. A-6).	Conforms	The credited SGTS, RERS and Control Room intake charcoal and HEPA filters meet the requirements of RG 1.52 and Generic Letter 99-02. These are credited at 95% efficiency for elemental and organic iodines, except for the SGTS which is credited at 99%. Aerosol removal efficiencies are assumed to be 99% based on the HEPA/charcoal combination. The above filter efficiencies are the historical design and Technical Specification basis, and are unchanged as a result of AST.
6.1	For the purpose of this analysis, the activity available for release via MSIV leakage should be assumed to be that activity determined to be in the drywell for evaluating containment leakage (see Regulatory Position 3). No credit should be assumed for activity reduction by the steam separators or by iodine partitioning in the reactor vessel.	Conforms	MSIV leakage will be considered an unfiltered radioactivity release pathway, with piping deposition credit, and the radiological consequences of such a release are analyzed. The radioactivity release from the fuel is assumed to instantaneously and homogeneously mix throughout the drywell air space. Mixing of this activity into the containment air space is as discussed under Item 3.7 above.
6.2	All the MSIVs should be assumed to leak at the maximum leak rate above which the technical specifications would require declaring the MSIVs inoperable. The leakage should	Conforms	MSIV leakage assumed in this accident analysis is 200 scfh for all steam lines and 100 scfh for any one line when tested at greater than or equal to 22 psig. A reduction in

Table 2.2: Conformance with RG 1.183 Appendix A (Loss-of-Coolant Accident)

RG Section	RG Position	LGS Analysis	Comments
	be assumed to continue for the duration of the accident. Postulated leakage may be reduced after the first 24 hours, if supported by site-specific analyses, to a value not less than 50% of the maximum leak rate.		leakage to 55.1% is assumed at 24 hours, based on expected containment pressures at that time as indicated in Attachment E. After 24 hours no further reduction is leak rate is credited.
6.3	Reduction of the amount of released radioactivity by deposition and plateout on steam system piping upstream of the outboard MSIVs may be credited, but the amount of reduction in concentration allowed will be evaluated on an individual case basis. Generally, the model should be based on the assumption of well-mixed volumes, but other models such as slug flow may be used if justified.	Conforms	Modeling of deposition and plateout for MSIV piping is based on the assumption of 2 well mixed volumes for any one pipe line providing a leak path, with one node from the reactor pressure vessel to the inboard MSIV (except for the assumed broken line, where deposition in this node is not credited), and the other node from the inboard MSIV to the Turbine Stop Valve that provides the seismically designed boundary of the MSIV alternate drain pathway. For aerosol settling, only horizontal piping runs are credited, and only the horizontal projected surface area is considered available. In addition, no credit is taken for aerosol settling after 24 hours. The formulation for determining elemental iodine activity removal from a well-mixed node is based on that developed in AEB-98-03, using a 20 group probability distribution of settling velocities (based on AEB-98-03 probability descriptions) with settling efficiencies determined for each group and a net weighted average efficiency. This process is significantly more conservative than use of a median settling velocity. Resuspension of deposited elemental iodine and immediate release as organic iodine is also modeled. Other phenomena, such as effects of

Table 2.2: Conformance with RG 1.183 Appendix A (Loss-of-Coolant Accident)

RG Section	RG Position	LGS Analysis	Comments
			depletion over time of more easily settled particle sizes are considered to be adequately addressed by the above conservatisms. For elemental iodine deposition, both horizontal and vertical piping is credited on all interior surfaces, as this deposition is not gravity dependent. The general negligibility of decay heat from fission product deposition on resulting temperatures for main steam lines was demonstrated for the Clinton Power Station LOCA analysis of reference 35, as recently accepted by the NRC. The general applicability of the Cline model for the temperature/time relationship was also demonstrated in that calculation, which is considered typical and therefore applicable as well to LGS.
6.4	In the absence of collection and treatment of releases by ESFs such as the MSIV leakage control system, or as described in paragraph 6.5 below, the MSIV leakage should be assumed to be released to the environment as an unprocessed, ground- level release. Holdup and dilution in the turbine building should not be assumed.	Conforms	No ESFs are assumed to be available to collect or treat MSIV leakage. Releases are assumed to be from the worst case North Vent Stack, without credit for holdup or dilution in the condenser or turbine building. This exhaust stack is <u>not</u> an elevated release, and is treated as a ground level release for dose assessment.
6.5	A reduction in MSIV releases that is due to holdup and deposition in main steam piping downstream of the MSIVs and in the main condenser, including the treatment of air ejector effluent by offgas systems, may be credited if the components and piping systems used in the release path are capable of performing their safety function during and	Conforms	Main steam piping between the outboard MSIVs and the turbine stop valves is credited as piping systems capable of performing their safety function during and following an SSE. This includes the condenser, which is seismically rugged and meets the

Table 2.2: Conformance with RG 1.183 Appendix A (Loss-of-Coolant Accident)

RG Section	RG Position	LGS Analysis	Comments
	following a safe shutdown earthquake (SSE). The amount of reduction allowed will be evaluated on an individual case basis. References A-9 and A-10 provide guidance on acceptable models.		requirements of 10CFR Part 100 Appendix A, as discussed in LGS UFSAR Section 6.7. For elemental iodine, RG 1.183's Reference A-9 is considered only in part since it is the basis for slug flow models. Reference A-9 provides elemental iodine deposition velocities, resuspension rates and fixation rates. The deposition velocities are used in the well-mixed model formulation in AEB-98-03 that is analogous for aerosols or elemental iodine. This modeling is described in detail in this calculation. Resuspension of deposited elemental iodine is conservatively treated as immediately released organic iodine.
7.0	The radiological consequences from post-LOCA primary containment purging as a combustible gas or pressure control measure should be analyzed. If the installed containment purging capabilities are maintained for purposes of severe accident management and are not credited in any design basis analysis, radiological consequences need not be evaluated. If the primary containment purging is required within 30 days of the LOCA, the results of this analysis should be combined with consequences postulated for other fission product release paths to determine the total calculated radiological consequences from the LOCA. Reduction in the amount of radioactive material released via ESF filter systems may be taken into account provided that these systems meet the guidance in Regulatory Guide 1.52 (Ref. A-5) and Generic Letter 99-02 (Ref. A-6).	Conforms	Containment purging as a combustible gas or pressure control measure is not required nor credited in any design basis analysis for 30 days following a design basis LOCA at LGS. Also see the RG Section 3.8 discussion in this Table.

3. Design Inputs and Assumptions

The design inputs used for this calculation were extracted from extensive review of LGS Licensing documents, UFSAR sections, existing calculations, Design Basis Documents, and regulatory guidance documents, including the Tables 2.1 and 2.2 in the previous section. These design inputs are listed in a tabular format with a description of the design input, units, values, comments and reference source documents. Table 3.1 provides general plant parameters applicable to this, and other, accident scenarios. Table 3.2 provides LOCA specific input used in this calculation. For specific details about the values used, the reference source document listed should be reviewed.

Generally, credit is taken only for those active accident mitigation features that are classified as safety-related, are required to be operable by technical specifications, are powered by emergency power sources, and are automatically actuated.

The numeric values that are chosen as inputs to analyses required by 10 CFR 50.67 are compatible to AST and TEDE dose criteria and selected with the objective of maximizing the postulated dose. The use of a 10% lower flow rate for the Control Room and a minimum Control Room recirculation flow rate, and use of worst-case ground release χ/Qs, demonstrate the inherent conservatisms in the plant design and post-accident response analysis.

Table 3.1: General AST Design Inputs and Assumptions

TABLE 3.1: General AST Analysis Design Inputs for LGS	AST Value	Referenced Source Document	Assumption/Comment
Core Power Level	3527 MWth	Facility Operating Licenses NPF-39 [Ref. (1)] and NPF-85 [Ref. (2)], for Rated Thermal Power. Regulatory Guide 1.49 [Ref. (5)] for 102% multiplier. UFSAR [Ref. (3)] Table 15.0-2A identifies the resulting analysis power.	This value corresponds to the DBA power level, including margin, above the Rated Thermal Power Level of 3458 MWth, to account for instrument uncertainty.
Core Source Terms			The ORIGEN 2.1 based source terms developed for AST application in the Referenced Source Document are applied to Limerick AST accident analysis, on a Curie per MWth basis, as justified in the referenced source document.
Immersion & Inhalation Assessment	Reg. Guide 1.183 based list of 60 Core Isotopes, with activities specific to burnup in LGS core	LGS Design Analysis No. LM-0645, Rev. 0, Attachment A [Ref.(18)]	
Shine Assessment	See Attachment C	***New Design Assumption***	
Dose Conversion Factors	FGR 11 and 12 for Inhalation CEDE and cloud submersion EDE. Values are built into RADTRAD file FGR11&12.INP for a total of 60 isotopes.	Federal Guidance Reports 11 and 12 [Ref.(30),(31)]. See Attachment A for RADTRAD output.	

TABLE 3.1: General AST Analysis Design Inputs for LGS	AST Value	Referenced Source Document	Assumption/Comment
EAB - χ/Q's			
Distance From North Vent Stack	731 meters	Limerick UFSAR, Table 2.3.4-4; LGS Accident X/Q Values [Ref.(3)]	
Dispersion Factors: 0 – 2 hr (or worst two hours)	3.18E-04 (sec/m^3)	LGS Calc. LM-0641, Rev.0. [Ref.(19)]	
LPZ - χ/Q's			
Distance From North Vent Stack	2043 meters	Limerick UFSAR, Table 2.3.4-4; LGS Accident X/Q Values [Ref.(3)]	
Dispersion Factors: 0 – 8 hrs 8 – 24 hrs 1 – 4 days 4 – 30 days	 5.79E-05 (sec/m^3) 4.10E-05 (sec/m^3) 1.95E-05 (sec/m^3) 6.68E-06 (sec/m^3)	LGS Calc. LM-0641, Rev.0. [Ref.(19)]	
CR - χ/Q's			
From North Vent Stack Dispersion Factors: 0 – 2 hrs 2 – 8 hrs 8 – 24 hrs 1 – 4 days 4 – 30 days	 6.88E-03 (sec/m^3) 5.17E-03 (sec/m^3) 2.04E-03 (sec/m^3) 1.29E-03 (sec/m^3) 9.63E-04 (sec/m^3)	LGS Calc. LM-0641, Rev.0. [Ref.(19)]	The North Vent Stack is relatively close to the control room intake such that its X/Qs are expected to bound all other potential release paths. This path clearly bounds any Reactor Enclosure openings due to significant differences in distances, and elevations. These X/Q are also clearly bounding for MSIV leakages, whose most likely release path is through the south stack, or possibly Turbine Building openings at, again, greater distances from the control room intake.

TABLE 3.1: General AST Analysis Design Inputs for LGS	AST Value	Referenced Source Document	Assumption/Comment
Control Room			
Volume	126,000 ft^3	Calc. M-78-01, Rev. 6. [Ref.(16)].	
Radiological Isolation Mode			
Unfiltered Inleakage Rate Filtered Intake Rate Total CREFAS Flow Filtered Recirc. Rate	215 + 10 = 225 cfm 525 cfm, maximum 3,000 – 10% cfm 2175 cfm minimum	DBD L-S-08B, [Ref.(12)], For Intake Rate and total CREFAS Flow commitments	The unfiltered inleakage assumption, which is maximized for Design Basis Accident impact, includes an allowance for a continuous 10 cfm of ingress/egress flow to the CR volume. This provides margin above tracer gas results, which were 77 cfm [Ref. (42)]. 10% Minimum Tech Spec CREFAS flow value used for conservatism, since it minimizes filtered recirculation. Analytically, unfiltered inleakage assumed to be into the Control Room Envelope from the control structure intake location.
Filter Efficiency	95% for all Elemental and Organic Iodines, 99% for Aerosols based on HEPA	Efficiencies per RG 1.52, Rev. 2 with conservative value for HEPA.	Current values for charcoal absorber and conservative for HEPA credit for aerosol removal.
Initiation Time	0 minutes		Automatic actuation on high rad signal; detectors located sufficiently upstream of dampers such that closure is assured before detected activity enters CR.

TABLE 3.1: General AST Analysis Design Inputs for LGS	AST Value	Referenced Source Document	Assumption/Comment
Chlorine Isolation Mode	Run Indefinitely		Previously, Mode assumed to last for 8 hours; Now assumed indefinite to maximize Design Basis Accident impacts. This also provides a lower bound for Radiation Mode filtered intake conditions
Unfiltered Inleakage Rate	225 cfm		
Filtered Intake Rate	0 cfm		
Filtered Recirc. Rate	3,000 – 10% cfm		
Filter Efficiency	95% for all elemental and organic iodines. 99% for aerosols, based on HEPA		Current values for charcoal absorber and conservative for HEPA credit for aerosol removal.

Table 3.2: Design Inputs and Assumptions Specific for AST Based LOCA

TABLE 3.2: LOCA AST Analysis Design Inputs for LGS	AST Value	Referenced Source Document	Assumption/Comment
Primary Containment Volume Containment (Drywell + Supp.Pool Airspace): Calculated Volume	(0.95x243,580 ft^3 + 147,670 ft^3) 379,071 ft^3	ST-4-LLR-001-1, "The LLRT Program and Accountability Test", Rev. 8. [Ref.(39), with a 5% reduction in drywell volume as an allowance for occupied space additions, and with a minimum Supp. Pool Airspace volume from DBD L-S-25A [Ref. (14)].	For Primary Containment Leakage purposes (except for MSIVs) the leak rate is effectively independent of containment volume. For MSIV leakage purposes only the drywell volume is credited for the first two hours. The drywell-wetwell volumes are thereafter treated as well mixed as a result of rapid steaming that would follow ECCS restoration that force drywell activity through downcomers into the suppression pool airspace. No credit is taken for suppression pool scrubbing.
Minimum Suppression Pool Water Volume	118,655 ft^3	DBD L-S-25A [Ref. (14)]	
Reactor Coolant Volume (for Dilution of ECCS Water)	13,108 ft^3 @ 552.6 °F = 9,663 ft^3 @ 95.0 °F	UFSAR Table 6.2-4A [Ref. (3)], and Ref. (37) Steam Table.	
Secondary Containment Volume	1,800,000 ft^3 (below refueling floor)	Calc. M-76-01, Rev. 7 [Ref.(15)]	Secondary Containment mixing is achieved by the RERS.

TABLE 3.2: LOCA AST Analysis Design Inputs for LGS	AST Value	Referenced Source Document	Assumption/Comment
Releases to Containment	No Core Activity Release for first two minutes. Release Fractions and Timing per NUREG-1465 as shown in RADTRAD File BWR_DEF.rft [Attachment A]	NRC Regulatory Guide 1.183 [Ref.(4)]	RADTRAD runs use a starting point of time 0, which is artificially the start of gap release. Credit for the ~2 minute delay can be credited as additional margin available for credited time dependent system responses. For instance, in the RADTRAD analyses, a drawdown time of 15.5 minutes is used. Actual available time would be 17.5 minutes. Containment isolation is assumed to be instantaneous in the RADTRAD analyses. The 2-minute delay can be used in evaluating the acceptability of actual isolation valve closure times.
Containment Activity Removal Mechanisms	Natural Deposition of Aerosols		Credit for Natural Deposition of Aerosols in Containment is achieved through the use of the Power's Model, as implemented in the RADTRAD code. No credit is taken for elemental or organic iodine natural deposition in containment.
SGTS Flow Rate	3,000 cfm pre-drawdown 2,500 cfm post-drawdown	DBD L-S-32 [Ref. (13)], LM-0551, Rev. 0 [Ref.(17)], and Tech Spec Surveillance Requirement 4.6.5.1.1 maximum SGTS flow	Attachment H provides an evaluation that confirms that the SGTS system maintains secondary containment negative pressure under high wind speed conditions in accordance with RG 1.183, Appendix A, Section 4.3 guidance.
Filter Efficiency HEPA Charcoal	99.0% 99.0%	Efficiencies per RG 1.52, Rev. 2 for four inch or greater charcoal adsorber, with conservative value for HEPA.	Current values for charcoal absorber and conservative for HEPA credit for aerosol removal.
Drawdown Timing	15.5 minutes	DBD L-S-32 [Ref. (13)]	

TABLE 3.2: LOCA AST Analysis Design Inputs for LGS	AST Value	Referenced Source Document	Assumption/Comment
RERS			
Flow Rate	60,000 –10% cfm	DBD L-S-32 [Ref. (13)], reduced to minimum of Tech Spec range.	
Filter Efficiency HEPA Charcoal	 99% 95%	 Efficiencies per RG 1.52, Rev. 2, with conservative value for HEPA.	 Current values for charcoal absorber and conservative for HEPA credit for aerosol removal.
Drawdown Timing	15.5 minutes	DBD L-S-32 [Ref. (13)]	
Primary Containment Leak Rate	0.5% per day, 0-1day.	Current design basis	
	0.25% per day, 1-30 days.	***New Design Assumption***	See Attachment E for the Containment Response results for a Design Basis LOCA, indicating only a 50% Containment Leak Rate reduction at and after 1 day is conservative.
Test Pressure	44 psig		
MSIV – Piping, Leakage, and Flow Parameters	Attachment B establishes: • Pipe parameters such as volume aerosol settling area, and elemental iodine deposition areas • Containment leak rates as a function of leak acceptance criteria; • inboard and	See Attachment B.	MSL A, B, C, and D piping volumes and inside surface areas were derived from system isometric drawings as detailed in Attachment B. Lines A and B were found to be the worst-case lines, with inboard line B determined to be the worst case postulated break location. These lines will have a leak acceptance criterion of 100 scfh per line, with 200 total for all lines. Though a Recirculation-Suction Line Break (RSLB) is historically assumed to be the most credible non-mechanistic

TABLE 3.2: LOCA AST Analysis Design Inputs for LGS	AST Value	Referenced Source Document	Assumption/Comment
	outboard flow rates		source of a LOCA, a Main Steam Line Break (MSLB) of the worst-case inboard line is conservatively assumed, in order to artificially limit deposition credit. Outboard MSIV failure is assumed as the Single Active Failure since this maximizes the volume of piping in which the fluid is depressurized, minimizing deposition. Only horizontal piping is credited, and only the horizontal projected area of the pipe is used as the settling area for aerosols. For elemental iodine, all piping and surfaces are credited. Two nodes, one for inboard, one for penetration and outboard pipe, are used to model each assessed steam line. Only seismically qualified piping is credited. This piping is from the reactor vessel through the Turbine Condenser.
Leak Rates Total Single Line	 200 scfh 100 scfh	 Ref. (23)	 Currently design basis, using Alternative Drain Pathway.
	Reduced to 55.1% of these values after 24 hours	***New Design Assumption***	See Attachment E, indicating a 55.1% MSIV Leak Rate reduction at 1 day compared to the design basis leak rate.
Test Pressure	22 psig	Ref. (23)	
MSIV Leakage Mitigating Factors	Deposition of aerosols and elemental iodines credited in seismically qualified steam line	Well-Mixed Modeling, Aerosol settling velocity from Ref. (11).	Deposition based on AEB-98-03 [Ref. (11)] well-mixed model and a probabilistic distribution of settling velocities. Only horizontal piping is credited, and only the

TABLE 3.2: LOCA AST Analysis Design Inputs for LGS	AST Value	Referenced Source Document	Assumption/Comment
	piping from the reactor vessel to the turbine stop valve.	Elemental Iodine and Organic Iodine deposition velocities based on Ref. (10). Organic iodine deposition not credited.	projected horizontal area as the settling area. For elemental iodine, deposition velocities from Ref. (32) are used and all piping and surfaces credited. Modeling is consistent with Ref. (29), and as used for the NRC-approved Ref. (35) analysis. Consistent with the latter, resuspension of deposited elemental iodine is conservatively treated as immediately released organic iodine.
	Release is through the HP condenser shell with well-mixed assumption and associated delay. Analysis of free volumes and surface areas for conservative evaluation of deposition is documented in Attachment B.	UFSAR Section 6.7 describes the seismically rugged MSIV Leakage Alternate Drain Pathway, with a manual actuation start time of 20 minutes.	Start time for Alternate Drain Pathway at 20 minutes evaluated and found to be of no significance.

TABLE 3.2: LOCA AST Analysis Design Inputs for LGS	AST Value	Referenced Source Document	Assumption/Comment
ECCS Leakage into Secondary Containment			
Leak Rate	5 gpm	LM-0551, Rev. 0 [Ref.(17)], UFSAR Section 15.6	Quantitative leak rate, with procedural acceptance criterion at 2.5 gpm, for ECCS systems, for Technical Specification 6.8.4.a Program for the Control of Primary Coolant Sources Outside Containment.
Fraction Flashed	10%	NRC Regulatory Guide 1.183 [Ref.(4)]	
Filtered by SGTS	Yes		Systems outside containment are contained within the Reactor Enclosure

4. Methodology and Acceptance Criteria

This calculation addresses the DBA-LOCA based on guidance in SRP 15.0.1 [Ref. (6)] and RG 1.183 [Ref. (4)], and demonstrates compliance with dose criteria in 10CFR50.67 [Ref. (8)].

For airborne releases this calculation uses the computer program RADTRAD, Version 3.03 [Ref. (10)] for radioactivity transport and onsite and offsite dose assessment.

This calculation evaluates doses for the standard RG 1.183 30-day post-LOCA period, with onsite χ/Q's determined using ARCON96, and offsite χ/Q's determined using PAVAN. Dispersion factors are derived in a separate analysis [Ref. (19)].

The methodology for use and treatment of individual parameters are described in the sections below.

4.1. Core Source Term

The AST values used in this analysis were derived using guidance outlined in Reg. Guide 1.183. Core activity is based on the Origen2.1 analysis as performed originally for Peach Bottom and then endorsed for Limerick use in Attachment A of LM-0645 [Ref. (18)] to develop a conservative equilibrium end-of-cycle condition for the Limerick 24 month fuel cycle. The calculated source terms, as utilized in this analysis, are reported in units of Ci/MWth, so then the DBA power level of 3527 MWth (which accounts for instrument uncertainty) can be applied in calculation of doses. The bounding isotopic inventory at either end of cycle or 100 EFPD near beginning of cycle conditions are used for each isotope. Results from these analyses were incorporated into the RADTRAD "nif" files contained in Attachment A of this analysis.

4.2. Radioactivity Release Fraction and Timing

Core release fractions used in this analysis are in conformance with RG 1.183 [Ref. (4)], Table 1, below:

RG 1.183, Table 1
BWR Core Inventory Fraction Released Into Containment

Group	Gap Release Phase	Early In-vessel Phase	Total
Noble Gases	0.05	0.95	1.0
Halogens	0.05	0.25	0.3
Alkali Metals	0.05	0.20	0.25
Tellurium Metals	0.00	0.05	0.05
Ba, Sr	0.00	0.02	0.02
Noble Metals	0.00	0.0025	0.0025
Cerium Group	0.00	0.0005	0.0005
Lanthanides	0.00	0.0002	0.0002

with timing in conformance with RG 1.183, Table 4, specifically,

	Start Time	Duration
Gap Release	2 min.	0.5 hrs
Early In-Vessel Release	0.5 hrs	1.5 hrs

These parameters are implemented by RADTRAD in file BWR_DBA.RFT as follows:

```
Release Fraction and Timing Name:
 BWR, NUREG-1465, Tables 3.11 & 3.13, June 1992
 Duration (h):   Design Basis Accident
  0.5000E+00  0.1500E+01  0.0000E+00  0.0000E+00
 Noble Gases:
  0.5000E-01  0.9500E+00  0.0000E+00  0.0000E+00
 Iodine:
  0.5000E-01  0.2500E+00  0.0000E+00  0.0000E+00
 Cesium:
  0.5000E-01  0.2000E+00  0.0000E+00  0.0000E+00
 Tellurium:
  0.0000E+00  0.0500E+00  0.0000E+00  0.0000E+00
 Strontium:
  0.0000E+00  0.2000E-01  0.0000E+00  0.0000E+00
 Barium:
  0.0000E+00  0.2000E-01  0.0000E+00  0.0000E+00
 Ruthenium:
  0.0000E+00  0.2500E-02  0.0000E+00  0.0000E+00
 Cerium:
  0.0000E+00  0.5000E-03  0.0000E+00  0.0000E+00
 Lanthanum:
  0.0000E+00  0.2000E-03  0.0000E+00  0.0000E+00
 Non-Radioactive Aerosols (kg):
  0.0000E+00  0.0000E+00  0.0000E+00  0.0000E+00
 End of Release File
```

RADTRAD runs are made with the gap activity release starting at time 0 for simplicity, but with recognition of no gap release during the first two minutes, where this is important. For instance, containment isolation is initiated by low water level and high drywell pressure, which occur very early in a LOCA. Therefore, these activities are credited before RADTRAD gap release, or analytically at time 0.

4.3. Distribution of Activity Released from Containment

As radioactivity is initially released from the reactor vessel it is conservatively distributed to the drywell, and except for non-noble gases, simultaneously to the suppression pool. The specifics of these mechanisms are discussed below and compared with regulatory guidance.

4.3.1. Drywell and Suppression Pool Airspace Mixing

RG 1.183, Appendix A guidance on this issue is:

> *"The radioactivity released from the fuel should be assumed to mix instantaneously and homogeneously throughout the free air volume of the primary containment in PWRs or the drywell in BWRs as it is released. This distribution should be adjusted if there are internal compartments that have limited ventilation exchange. The suppression pool free air volume may be included provided there is a mechanism to ensure mixing between the drywell to the wetwell."*

For LGS, the radioactivity release from the reactor is assumed to mix instantaneously and homogeneously throughout the drywell. No mixing between the drywell and the wetwell is assumed for the first two hours. This is based on an assumption that the initial blowdown occurs before fuel damage commences, and that AST source terms are

based on a non-mechanistic loss of ECCS flow to the reactor for two hours. After ECCS flow restoration the rapid steaming of ECCS liquids are assumed to quickly displace significant fractions of the airborne activity in the drywell through downcomers into the suppression chamber, providing the mixing mechanism. Conservatively, no credit is taken for suppression pool scrubbing during this flow. Therefore, after two hours, complete mixing of activity in the drywell volume to the suppression chamber airspace is assumed. The RADTRAD Containment compartment volume parameter and MSIV leakage flow rates implement this treatment.

4.3.2. Releases to Suppression Pool

RG 1.183, Appendix A guidance on this issue is:

> *"With the exception of noble gases, all the fission products released from the fuel to the containment should be assumed to instantaneously and homogeneously mix in the suppression pool at the time of release from the core. In lieu of this deterministic approach, suitably conservative mechanistic models for the transport of airborne activity in containment to the sump water may be used. Note that many of the parameters that make spray and deposition models conservative with regard to containment airborne leakage are nonconservative with regard to the buildup of sump activity."*

For LGS, with the exception of noble gases, all fission products released from the fuel to the containment are assumed to instantaneously and homogeneously mix in the suppression pool at the time of release. RADTRAD models for ECCS leakage treat the suppression pool water as the compartment to which core activity is released.

4.4. Airborne Activity Removal Mechanisms in Containment

Radioactivity in containment can be removed by natural deposition, containment spray, suppression pool scrubbing, decay, and leakage. As discussed below only natural deposition, decay, and leakage are credited.

4.4.1. Natural Deposition (Credited)

RG 1.183, Appendix A guidance on this issue is:

> *"Reduction in airborne radioactivity in the containment by natural deposition within the containment may be credited. Acceptable models for removal of iodine and aerosols are described in NUREG/CR-6189, "A Simplified Model of Aerosol Removal by Natural Processes in Reactor Containments". The latter model is incorporated into the analysis code RADTRAD. The prior practice of deterministically assuming that a 50% plateout of iodine is released from the fuel is no longer acceptable to the NRC staff as it is inconsistent with the characteristics of the revised source terms."*

For LGS, the RADTRAD computer program, including the Powers Natural Deposition algorithm based on NUREG/CR-6189, is used for modeling aerosol deposition in primary containment. No natural deposition is assumed for elemental or organic iodine. The lower bound (10%) level of deposition credit is used.

4.4.2. Suppression Pool Scrubbing (Not Credited)

RG 1.183, Appendix A guidance on this issue includes:

> *"Reduction in airborne radioactivity in the containment by suppression pool scrubbing in BWRs should generally not be credited. However, the staff may consider such reduction on an individual case basis. The evaluation should consider the relative*

> *timing of the blowdown and the fission product release from the fuel, the force driving the release through the pool, and the potential for any bypass of the suppression pool. Analyses should consider iodine re-evolution if the suppression pool liquid pH is not maintained greater than 7."*

For LGS, suppression pool scrubbing has not been analyzed and is not credited. Since it is not credited, suppression pool bypass is not a radiological release issue. Analyses in reference (20) demonstrate that suppression pool pH is maintained greater than 7 so iodine re-evolution is not of concern.

4.4.3. Decay Credited

Decay of radioactivity is credited in all compartments, prior to release. This is implemented in RADTRAD using the half-lives in the "nif" files. RADTRAD's decay plus daughter option is used. In reality, daughter products such as xenon from iodines or iodines from tellurium are unlikely to readily escape from the matrix in which the parent iodine or tellurium is contained. Nevertheless, the RADTRAD feature to include daughter effects is selected for conservatism.

4.4.4. Depletion from Leakage Credited

For analyses of doses due to release from containment, the dose is the result of leakage. It is reasonable to credit the small amount of depletion from the containment inventory associated with this leakage. This is done inherently by RADTRAD.

4.4.5. Containment Spray (Not Credited)

Neither Drywell nor Wetwell Spray is credited as a removal mechanism.

4.5. Containment Leakage Release Pathways

Release paths considered in this accident dose assessment are shown on the Figure 4.1 below and the associated Table 4.1. The detailed bases for analysis of the paths follows thereafter.

Figure 4.1: Radioactivity Transport Pathways

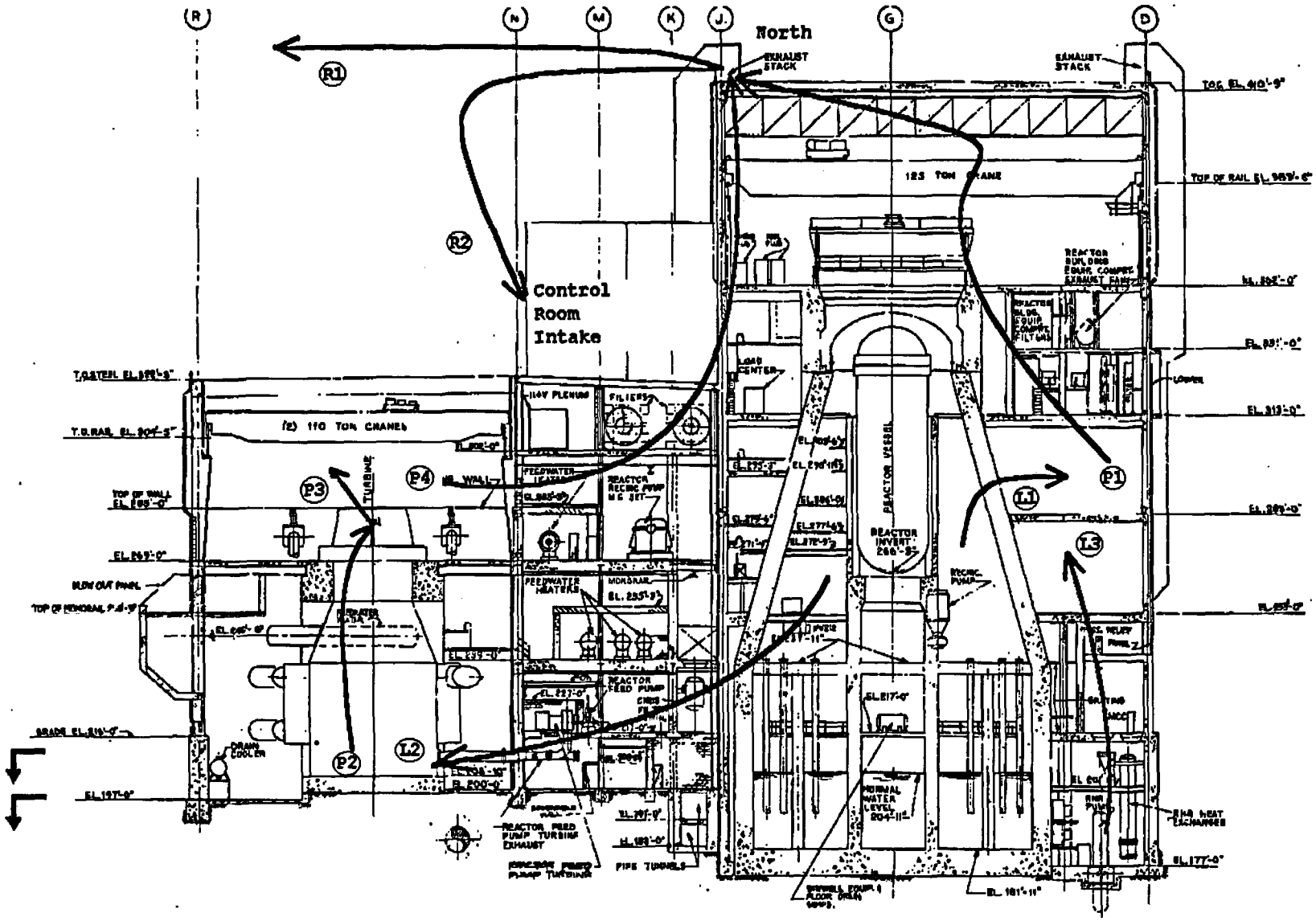

Table 4.1: Leak, Transport, and Release Path Layouts

Leakage Rates and Secondary Containment Mixing Parameters		
Path	**Description**	**Parameters & Values**
L_1	Primary Containment Leakage to Secondary Containment	Leak Rate: L_a = 0.50 %/day, 0 - 15.5 min after start of gap release. Release is unfiltered through the North Stack during drawdown period.
P_1	Release from Secondary Containment to Environment through SGTS Filter	L_a = 0.50 %/day, 15.5 min - 24hr Release is SGTS filtered through North Stack. 0.5 x L_a = 0.25 %/day, 1 - 30days Release is SGTS filtered through North Stack.
L_2	MSIV Leakage to Condenser Environment	Leak Rate: Based on LLRT acceptance criterion of 200 scfh for all main steam (MS) lines, 100 scfh maximum for any one MS line when measured at greater than or equal to 22 psig. Two Steam lines are each treated as two node well-mixed volumes each with 100 scfh flow, after various adjustments discussed below. Leak Rate reduced to 55.1% after 24 hours. Release is from Turbine Building, unfiltered through North Stack.
P_2	Leakage Well Mixed in HP Turbine/Condenser Shell. No credit for transport to other shells through available opening. No credit for substantial plateout potential on Condenser Tubing.	
P_3	Leak from Turbine Shaft Seals to Turbine Building Atmosphere	Analytically, flow is direct from the condenser to the North Stack.
P_4	Flow from Turbine Building to North Stack. No credit for mixing or holdup or deposition in Turbine Building. No filtration is provided for this flow.	
L_3	ECCS Leakage (Supp. Pool Water Source) to Secondary Containment	Leak Rate: 5 gpm, 0 - 15.5 min {2x administrative limit} Release is unfiltered through North Stack during drawdown period.
P_1	Release from Secondary Containment to Environment through SGTS Filter	5 gpm, 15.5 min - 30days {2x administrative limit} Release is SGTS filtered through North Stack.

Leakage Rates and Secondary Containment Mixing Parameters		
Path	**Description**	**Parameters & Values**
P_1	Release of Secondary Containment Atmosphere to the Environment	Secondary Containment mixing credit in 50% of Reactor Enclosure Volume. RERS provides the mixing mechanism, Volume = 1,800,000 cubic feet Outflow = 3000 cfm during drawdown period and 2500 cfm thereafter. However, for analysis simulation purposes, the flow input for modeling varies based on the methodology discussed in Section 4.5.1.1. For first 15.5 minutes, flow is directed through the North Stack without RERS or SGTS filter credit.
R_1	Control Room Intake from the Releases to the Environment	525 cfm Maximum filtered intake, plus 225 cfm of unfiltered inleakage. Total CREFAS flow is 2700 cfm, with recirculation being the balance after intake is subtracted. CREFAS filters credited at 99% for aerosols (based on HEPA) and 95% for charcoal absorbers (for elemental and organic iodine.)
	Control Room Exhaust to Environment	750 cfm, to balance with intake and inleakage.
R_2	Release to Environment for Offsite Dose Assessment Purposes	R_1 and R_2 include Primary Containment to Secondary Containment, ECCS Leakage, and MSIV Leakage related releases

4.5.1. Primary Containment Leakage Pathways

Design basis Primary Containment leakage is assumed to be controlled to an L_a rate of 0.5% per day. For RADTRAD radioactivity transport analysis this leak rate will be used for the first 24 hours, and then reduced by 50% thereafter. Attachment E provides justification for the reduction, based on containment pressure reductions.

The entire leakage is treated as being to the secondary containment. Because of the RERS recirculation fans after 3 minutes, credit is taken for mixing in Secondary Containment.

4.5.1.1.RERS Mixing Credit

The LGS RERS is a safety related, engineered safety feature (ESF) system that meets Regulatory Guide 1.183 [Ref. (4)] Section 5.1.2 requirements for credit for accident mitigation features. The RERS is an industry-unique system that provides forced mechanical mixing in the secondary containment. The system is available 3 minutes following the LOCA signal, is independent of secondary containment pressure, and provides filtration and recirculation of 60,000 cfm of air throughout the secondary containment. Note that 60,000 cfm is the

nominal system flow, and 54,000 cfm is utilized in this accident analysis because the Tech Spec tolerance of ± 10% is observed.

Regulatory Guide 1.183 [Ref. (4)] Section 5.1.2 states:

> *"Credit may be taken for accident mitigation features that are classified as safety-related, are required to be operable by technical specifications, are powered by emergency power sources, and are either automatically actuated or, in limited cases, have actuation requirements explicitly addressed in emergency operating procedures. The single active component failure that results in the most limiting radiological consequences should be assumed. Assumptions regarding the occurrence and timing of a loss of offsite power should be selected with the objective of maximizing the postulated radiological consequences."*

As stated above, the LGS RERS is a safety related, engineered safety feature (ESF) system that meets all of the above attributes. The RERS is designed to auto-start within 20 seconds; however, in the event that offsite power is not available, the RERS will auto-start within 3 minutes.

Regulatory Guide 1.183 [Ref. (4)] Appendix A, Section 4.1 states:

> *"Leakage from the primary containment should be considered to be collected, processed by engineered safety feature (ESF) filters, if any, and released to the environment via the secondary containment exhaust system during periods in which the secondary containment has a negative pressure as defined in technical specifications. Credit for an elevated release should be assumed only if the point of physical release is more than two and one-half times the height of any adjacent structure."*

Following the drawdown period, primary containment releases are processed through the RERS and SGTS, both of which are ESF systems. All releases at LGS are treated as ground-level releases in this analysis.

Regulatory Guide 1.183 [Ref. (4)] Appendix A, Section 4.2 states:

> *"Leakage from the primary containment is assumed to be released directly to the environment as a ground-level release during any period in which the secondary containment does not have a negative pressure as defined in technical specifications."*

For LGS, the RERS provides functions unlike at most other licensed U.S. nuclear plants. One RERS function is to deliver a portion of its filtered air to the SGTS for further filtration and exhaust to the environment via the North Stack (as a ground level release). Since the RERS has no operating restrictions related to negative differential pressure (with respect to the outside), the drawdown period has no affect on system performance. Therefore, mixing begins when the RERS starts. For the purpose of this evaluation, this is conservatively assumed at 3 minutes post-LOCA initiation.

The RERS takes suction from all secondary containment compartments at a nominal average rate of 2 air changes per hour. RERS is the dominant means by which airborne radioactivity exits from all compartments. RERS flow from all compartments is mixed in the filter intake plenum and ductwork, with approximately 5% of the RERS filtered flow directed to the SGTS for discharge, and the remaining filtered, mixed flow is distributed throughout the secondary containment. Therefore, RERS filtration and significant mixing is largely instantaneous within the plenum and ductwork.

Regulatory Guide 1.183 Appendix A, Section 4.4 states;

> *"Credit for dilution in the secondary containment may be allowed when adequate means to cause mixing can be demonstrated. Otherwise, the leakage from the primary containment should be assumed to be transported directly to exhaust systems without mixing. Credit for mixing, if found to be appropriate, should generally be limited to 50%. This evaluation should consider the magnitude of the containment leakage in relation to contiguous building volume or exhaust rate, the location of exhaust plenums relative to projected release locations, the recirculation ventilation systems, and internal walls and floors that impede stream flow between the release and the exhaust."*

The value of the LGS RERS relative to its mixing capabilities has previously been submitted and reviewed by the NRC (e.g., SER for Increased Secondary Containment Inleakage Rate). The system provides 60,000 cfm of filtered recirculation in the reactor enclosure (secondary containment). This flow rate provides one complete air change every 30 minutes.

Additionally, the exhaust registers are generally located high in compartments and away from walls and release points. However, even if a less than well-mixed and higher than average concentration is taken into the RERS system, only a 5% flow fraction would be discharged. This discharge would be to the SGTS system and through the 8" charcoal adsorber bed, even though it is not credited for the drawdown period. The well-mixed balance of RERS flow is filtered and distributed throughout secondary containment.

The attributes of a RG 1.183 based LOCA analysis that differ from the previously licensed TID-14844 based source terms (characterized by the composition and magnitude of the radioactive material, the chemical and physical properties of the material, and the timing of the release to the containment) have no affect on the design or function of the RERS. Therefore, continued mixing credit is appropriate. However, this analysis will take only limited mixing credit for the RERS system. This mixing credit is based on the M-76-07 [Ref. (43)] design analysis, and assumes a time-dependent, stepwise, percentage of mixing after the 3 minute RERS initiation and during the drawdown period, not to exceed 50%.

Reference (43) indicates that mixing behaves according to the following time dependent equation:

$$M = \left[1 - \left(1 - \frac{R}{V}\right)^n\right] \times 100$$

where:

M= percent of mixing
R= recirculation flow (cfm)
V= volume of secondary containment (ft^3)
n= time after mixing begins (minutes)

This equation was applied following the RERS initiation time at 3 minutes after the onset of the postulated LOCA, or 1 minute after the onset of gap release following the LOCA, as stated above. Seven time steps were used to simulate this stepwise mixing credit. Each step was taken at 2.5 minutes, with 50% finally being reached at 22.75 minutes. No increase in the percentage of mixing is taken after this step to 50%. To simulate the calculated mixing percentage in the RADTRAD code, adjustments need to be made to the actual 3000 cfm pre-drawdown and 2500 cfm post-drawdown secondary containment flowrates. The following equation is used to derive the flowrate input to RADTRAD that corresponds to and simulates the calculated percent mixing:

$$F_R = \frac{F_A}{M}$$

where:

F_R= RADTRAD model flowrate (cfm)
F_A= actual flowrate (cfm)
M= calculated percent mixing (fraction)

The following table shows the stepwise mixing credit, taken as a function of time, the actual flowrate, and the flowrate value used to simulate that mixing credit when input to the RADTRAD code (Note: at M=0 the flowrate would effectively be infinite, taking no mixing credit):

Time After Onset of Gap Release (minutes)	Time After Mixing Begins (minutes)	Actual Secondary Containment Flowrate (cfm)	Credited Mixing Percentage (%)	Flowrate Used in RADTRAD Model (cfm)
1.0	0.0	3000	0.00	∞
3.5	2.5	3000	7.33	4.0928E+04
6.0	5.0	3000	14.13	2.1231E+04
8.5	7.5	3000	20.42	1.4691E+04
11.0	10.0	3000	26.26	1.1425E+04
13.5	12.5	3000	31.66	9.4760E+03
15.5	14.5	2500	31.66	7.8960E+03
16.0	15.0	2500	36.67	6.8170E+03
23.75	22.75	2500	50.00	5.0000E+03

The exhaust from Secondary Containment is filtered through the RERS and SGTS filter trains, following a 15.5-minute drawdown period. After drawdown, RERS and SGTS HEPA and charcoal filters are available to reduce the release activity. The North Stack release point is treated as a zero velocity vent release (ground level equivalent) for Control Room X/Q determination, and as a ground level release for offsite dose assessment. Therefore, no elevated release is credited.

Based on the design and operation of the Containment Atmospheric Control System, and the Primary Containment Instrument Gas (PCIG) System, LGS does not routinely purge primary containment during power operations. Therefore, per reference (4), Paragraph 3.8, releases from containment purging prior to isolation during a DBA-LOCA are not considered. Generally, high volume purging is only used for Inerting and De-Inerting for outages. Low volume purge lines are available for pressure or oxygen concentration control, and the PCIG System draws gas from the drywell for instrument gas to minimize pressure buildup.

4.5.2. Secondary Containment Bypass Pathways

Secondary containment bypass leakage potential has historically been evaluated as discussed in UFSAR subsection 6.2.3.2.3, and UFSAR Table 6.2-15. The conclusions continue to apply with application of AST, with the exception of Containment Penetrations 7A-D Primary Steam, and Containment Penetration 8 Primary Steam Line Drain. Because of the use of the MSIV Leakage Alternate Drain Pathway, which is seismically rugged and meets the requirements of 10CFR Part 100 Appendix A, as discussed in LGS UFSAR Section 6.7, MSIV leakage bypasses secondary containment and is released through the Turbine Condenser System, as discussed below.

4.5.3. MSIV Leakage Alternate Drain Path Crediting Piping and Condenser Deposition Credit

As noted in Section 4.5.2, MSIV leakage is the only Secondary Containment bypass pathway analyzed for radiological dose consequences. The MSIV leakage flows and pathways considered are schematically indicated in Figure 4.2.

4.5.3.1. Consideration of Alternate Drain Path Release

The radioactivity associated with all MSIV leakage is assumed to be released directly from the Primary Containment and into the Main Steam Lines per RG 1.183, Appendix A, Section 6.1. MSIV leakage has separate limits and a separately analyzed dose assessment, therefore it is not included in the L_a fraction limit, and is instead separately controlled.

MSIV leakage assumed in this accident analysis is 200 scfh total for all steam lines and 100 scfh for any one line.

The leak rate and inboard piping flow rate associated with a 100 scfh leak rate Leak Rate Acceptance Criterion is:

*Leak Rate Acceptance Criterion (scfh) * [14.7 / ($P_{MSIVtest}$ +14.7)] * (276+460) / (68+460)*

where:

$P_{MSIVtest}$ = 22 psig MSIV Leak Test Pressure
276 °F is the peak drywell temperature at 2 minutes, per Attachment E.

Associated outboard piping flow rates are:

*Leak Rate Acceptance Criterion (scfh) * (550+460) / (68+460)*

where:

550 °F is the normal steam line operating temperature.
(As shown in Attachment F, credit is taken for temperature reductions to 410 °F at 24 hours, and to 200 °F at 96 hours when determining later flow rates.)

Flow rates out of the condenser are similarly calculated with the assumption of a condenser air space temperature of 120 °F for the accident duration.

Figure 4.2: Post-LOCA MSIV Leakage Pathway Nodalization

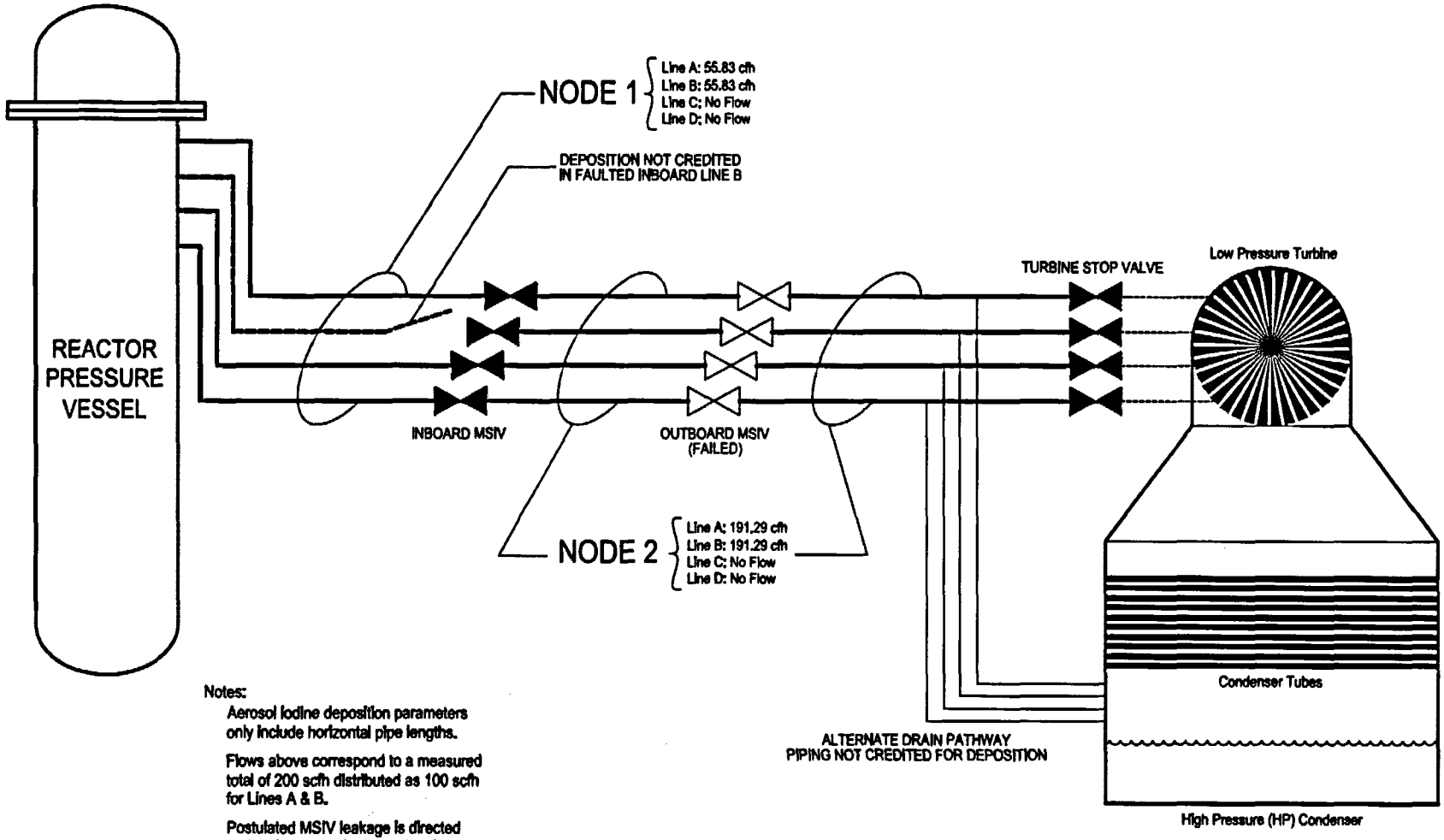

Notes:

Aerosol Iodine deposition parameters only include horizontal pipe lengths.

Flows above correspond to a measured total of 200 scfh distributed as 100 scfh for Lines A & B.

Postulated MSIV leakage is directed to the airspace below the tubes in HP Condesnser of the Low Pressure Turbine.

Determination of inboard steam line, outboard steam line and condenser effective filter efficiencies are shown in Attachment B, using reference (11) formulations and settling velocities, and deposition velocities based per reference (10).

4.5.3.2. Modeling of Deposition Credit in Pipes and Condenser

LGS has previously been analyzed and licensed to no longer credit a MSIV Leakage Control System, and to credit seismically analyzed portions of Turbine Condenser System. This historical evaluation is based on methodology described in NEDC-31858P, Rev. 2, "BWROG Report for Increasing MSIV Leakage Rate Limits and Elimination of Leakage Control Systems" [Ref. (29)], as cited in the LGS UFSAR Section 6.7. That analysis was based on a design basis recirculation line break and TID-14844 based source terms. In this calculation the analysis of MSIV leakage is updated to reflect AST parameters related to release timing and chemical makeup and more recent approaches regarding fission product settling and deposition.

4.5.3.2.1. Aerosol Settling

Modeling of aerosol settling is based on methodology used by NRC in the Perry AST SER in AEB-98-03 [Ref. (11)], with some additional conservatism. For aerosol settling, only horizontal piping runs are credited, and only the horizontal projected area of horizontal piping is considered as the settling area. NRC's AEB-98-03, states:

> *"The staff believes that, at this time, a well-mixed model is more appropriate than a plug flow model for settling in the main steam line. However complete mixing may not occur along the entire length of the pipe and, in some pipe segments, plug flow may exist. Given the conservatism associated with using a well-mixed model for the entire length of the pipe and a number of additional conservatisms inherent in the piping depositions analysis, use of a 10th percentile settling velocity with a well-mixed model is not appropriate. Additional conservatisms include additional deposition by thermophoresis, diffusiophoresis, and flow irregularities; addition deposition as a result of hygroscopicity and possible plugging of the leaking MSIV by aerosols. Given the conservatism of the well-mixed assumption, we believe it is acceptable then to utilize median values (as compared to more conservative values) for deposition parameters."*

LGS is somewhat different than Perry in that piping downstream from the outboard MSIV to and including the condenser is credited. Therefore, the AEB-98-03 model is applied in a more conservative manner.

As discussed in reference (11), aerosol removal is dependent on settling velocity. The recommended settling velocity is the median value determined from a defined distribution determination methodology. In AEB-98-03 use of the median value was deemed acceptable in light of other identified conservatisms. When this model was applied to Limerick Generating Station (LGS) the NRC Staff expressed concerns regarding the applicability of the median value since more piping, and the seismically rugged turbine-

condenser, were being credited. The concern was that "easier to remove" particles would settle in upstream piping and that, therefore, the median velocity would be non-conservative in determining removal downstream.

In response to this concern, this analysis implements a 20-group settling velocity distribution rather than the AEB-98-03 single, median value, model. The same settling velocity probability distribution function shown in reference (11) was applied. The following equation is used to conservatively calculate settling velocity as shown in Attachment A, page A-2, of AEB-98-03 [Ref. (11)]:

$$u_s = \frac{\rho \cdot d_e^2 \cdot g \cdot C_s}{18 \cdot \mu \cdot k}$$

where:

u_s= settling velocity (cm/sec)
ρ= particle density (g/cm^3)
d_e= particle diameter (cm)
g= gravitational acceleration (cm/sec^2)
C_s= Cunningham Slip Factor (dimensionless)
μ= viscosity (g/cm-sec)
k= shape factor (dimensionless)

As stated in AEB-98-03 and discussed above, this equation is conservative because it does not consider such phenomena as thermophoresis, diffusiophoresis, flow irregularities, and hygroscopicity, which would all serve to increase the rate of aerosol deposition and settling. As applied in this analysis, the settling velocity distribution is a function of this equation evaluated over a randomly sampled range of the 3 particle parameters, density (logarithmically distributed), diameter (uniformly distributed), and shape (uniformly distributed); and 3 constants, gravitational acceleration, Cunningham slip factor, and viscosity. The range of each particle parameter is referenced in AEB-98-03. A spreadsheet was developed to perform this random sampling, using 10,000 randomly generated histories to ultimately generate a settling velocity distribution. Each of the 10,000 calculated settling velocities was given a probability of 1/10,000th, thereby making the cumulative fraction total to 1. A conservative 20-group step function was developed to approximate the continuous settling velocity distribution function calculated from the 10,000 histories. To ensure conservatism, this step-wise representation of the maximum settling velocity of a group is never allowed to exceed the value that defines the continuous probability curve.

Using the following equations from AEB-98-03 [Ref. (11)], Attachment A, page A-2, settling velocity, settling area, volumetric flow rate, and the volume of the well-mixed region being modeled are used to calculate the aerosol particulate release fractions (RFs), based on initial activity concentration.

$$C = C_{in} \cdot \frac{1}{1 + \frac{\lambda_s \cdot V}{Q}} \qquad \lambda_s = \frac{u_s \cdot A}{V}$$

$$\eta_{filt} = 1 - \frac{C}{C_{in}}$$

where:

u_s= settling velocity (cm/sec)
A= settling area (cm^2)
V= volume of well-mixed region (cm^3)
C= concentration of nuclides in well-mixed volume (cm^{-3})
C_{in}= initial concentration of nuclides in well-mixed volume (cm^{-3})
λ_s= settling rate constant (sec^{-1})
Q= volumetric flow rate into well-mixed volume (cm^3/sec)
η_{filt}= filter efficiency

For each of the 20 groups, aerosol particulate RFs from each node or volume are calculated, as shown above, and then turned into removal efficiencies (REs) by subtracting them from 1. The set of 20 removal efficiencies, calculated for each volume, is combined to form a set of 20 Net Release Fractions (NRFs) for a given MSL. The NRF associated with a given group is the product of the RE for each volume, or node, and the probability associated with that specific settling velocity group. The set of 20 NRFs is summed, and again subtracted from 1, to calculate a total effective aerosol removal efficiency (TEARE) for input to the RADTRAD code, as discussed in Section 6. This is performed for each MSL being modeled.

By implementing a conservative, semi-continuous, probability-weighted, 20-group step function to simulate the varied population of particulate in a given main steam system volume, as opposed to a single median value, this model accounts for the uneven settling of "easier to remove particles" versus "difficult to remove particles". To transparently illustrate this, the settling velocity probability distribution exiting each volume or node can be re-calculated and compared to the initial distribution. The probability distribution successively shifts "weight" from the "easier to remove particles", when entering the piping, to the "difficult to remove particles", as flow moves through the main steam system. When the activity finally exits the system, the re-calculated probability distribution indicates a much more likely chance of seeing "difficult to remove particles" than was the case when entering the system. As shown on Page B-7 of Attachment B, the spreadsheet does not individually re-calculate the probability distribution exiting each node or volume; instead, it only re-calculates the final probability distribution exiting the condenser through the MSL A path, for illustration purposes. Because multiplication is the only affected mathematical operation in this model, and considering that multiplication is commutative and distributive, it is not necessary to individually re-calculate the distribution after each node or volume;

by applying just the initial probability distribution to the calculation of the NRF, the changing distribution through the system is accounted for. Recalculating each distribution exiting a node or volume, then using that to calculate the distribution entering the next node or volume, yields the same TEARE as that calculated in Attachment B.

In addition to the conservative implementation of the 20-group settling velocity distribution discussed above, the analysis takes no credit for any aerosol deposition after 24-hours. This conservative aerosol deposition treatment and the significant residual conservatism mentioned in the original AEB-98-03 conclusions, quoted above, account for uncertainty in the AEB-98-03 model.

4.5.3.2.2. Elemental Iodine Removal

For elemental iodine, RG 1.183's Reference A-9 is considered only in part since it is the basis for plug flow models. Reference A-9 provides elemental iodine deposition velocities. The deposition velocities are used in the well-mixed model formulation in AEB-98-03 that is analogous for aerosol settling velocities and elemental iodine deposition velocities. Because elemental iodine deposition is not gravity dependent, deposition is credited in both horizontal and vertical piping, on all surface areas.

Attachment B shows the derivation of piping volumes, surface areas for settling and deposition, and piping effective filter efficiencies for each piping node.

For conservatism, no credit is taken for deposition in the drain lines that provide the previously licensed Alternate Drain Path to the condenser. All MS drain lines are routed to a single penetration in the HP condenser at a point below the condenser tubing. Credit is taken for deposition in the condenser, but only the deposition area of the horizontal surface of the wetwell of the HP Condenser. The condenser tubing provides a surface area that is approximately 130 times that of the credited bottom surface area. It should also be noted that the HP, IP, and LP condensers are interconnected by substantial openings, but flow to the IP and LP condensers for further holdup is not credited.

No credit is taken for any organic iodine removal in piping or the condenser.

Flow rates out of the condenser are assumed to be at 120°F and atmospheric pressure. This leak rate is reduced to 55.1% after 24 hours, consistent with the change in Containment conditions shown in Attachment E.

Resuspension of deposited elemental iodine is conservatively treated as organic iodine and immediately released. Resuspension of iodine from steel surfaces was simulated by applying the model developed by J.E. Cline & Associates, Inc. and

Science Applications International Corporation (SAIC). This model is described in the "MSIV Leakage Iodine Transport Analysis", prepared for the U.S. Nuclear Regulatory Commission under contract NRC-03-87-029, Task Order 75, by J.E. Cline & Associates (1991) [Ref. (33)].

Based on experimental data for deposition, resuspension, and surface fixation of elemental and organic iodine in stainless steel, equations were developed in this report to calculate rate constants for these three phenomena, as a function of the steel temperature. For modeling of elemental iodine transport, these equations (shown below) were directly implemented, with site-specific post-LOCA available main steam line surface area and temperature characteristics, to calculate the deposition, resuspension, and surface fixation of elemental iodine. For organic iodine, only deposition was calculated in the Attachment B spreadsheets, but conservatively not credited. Because it is assumed that no organic iodine is removed from the total released iodine activity, it is therefore unnecessary to evaluate resuspension and surface fixation of this iodine form.

The following, taken directly from the above-mentioned J.E. Cline analysis [Ref. (33)], are the equations utilized to calculate rates of elemental and organic iodine deposition, elemental iodine resuspension, and elemental iodine surface fixation:

For Elemental Iodine Deposition:

$$d_{SI} = e^{\left(\frac{2809}{T}\right)-12.80(\pm 0.33)}$$

For Organic Iodine Deposition:

$$d_{SO} = e^{\left(\frac{2809}{T}\right)-19.30}$$

For Elemental Iodine Resuspension:

$$v_I = 2.32(\pm 2.00)\times 10^{-5} e^{\left(\frac{-600}{T}\right)}$$

For Elemental Iodine Surface Fixation:

$$\phi = 1.30(\pm 0.75)\times 10^{-4} e^{\left(\frac{-1185}{T}\right)}$$

where:

d_{SI}= elemental iodine disposition rate (hr^{-1})
d_{SO}=organic iodine disposition rate (hr^{-1})
v_I= elemental iodine resuspension rate (hr^{-1})
Φ= elemental iodine surface fixation rate (hr^{-1})
T= temperature (K)

As modeled from the above formulae, for deposition the negative uncertainty value is utilized, for resuspension the positive uncertainty is used, and for surface fixation the negative is used, as these result in more conservative calculations of rate constants.

After calculating the rates associated with each phenomenon for the specific plant characteristics in Attachment B, these values are applied to the MSIV leakage model developed for the RADTRAD code, as discussed in Section 6.1.3. These phenomena are simulated by first separating each credited steam line into a separately modeled case, then using holding volumes (i.e., "compartments" of nominal volume) to collect elemental iodine and immediately release organic iodine to either the environment compartment (resuspension), or another holding volume compartment that has no environmental release (surface fixation), at the respectively calculated rates. The effect of deposition of elemental iodines, settling of aerosols, and transmission of the balance of each along with organic iodine and noble gas transmission are addressed in single RADTRAD runs for each path, as shown in Attachment A. The RADTRAD models for resuspension are made with only elemental iodine entering the piping path. This is accomplished by using a special designed RFT file to eliminate noble gases, and using 100% efficiency filtration for aerosols and organic iodines upon entry into the pipe. The pipe walls are treated as separate compartments. Elemental iodine is transmitted to the surface using a deposition rate. Resuspended iodines are sent to the environment directly using the resuspension rate. The latter simulates conversion to organic with no further deposition.

The immediate release of resuspended iodine, directly to the environment, in organic form is a conservative assumption, due to inherent holdups in this release, and tortured paths through which this activity will be transported. Therefore, this simulation conservatively models the resuspension effects of elemental iodine.

4.5.4. ECCS Fluid Leakage

For this AST evaluation an ECCS liquid leak rate of 5 gpm is used. Per reference (4), Appendix A, Section 5.2, this value must be at least 2 times any administrative limits used as part of the Ref. (25) Program for control of "Primary Coolant Sources Outside Containment".

4.6. Control of pH to Prevent Iodine Re-evolution

Reference (20) evaluated suppression pool pH over the 30-day duration of the DBA LOCA and demonstrated that pH will remain above 7. Therefore, no iodine conversion to elemental with re-evolution is expected or considered in this calculation. This control of pH also significantly limits the potential for airborne release from (always subcooled) ECCS leakage inside and outside of Secondary Containment. As noted in reference (20) completion of the SLCS injection of its sodium pentaborate solution is required for pH control within 13 hours of the start of the LOCA. Injection would typically be expected sooner for an event that results in fuel damage comparable to that necessary for core radioactivity releases assumed in the DBA LOCA, both as an alternative water source, and for added subcriticality margin.

4.7. Direct Gamma Shine Dose to Control Room Assessment

LGS post-LOCA direct shine dose from sources outside of the control room is dominated by a Unit 1 core spray pipe with a 14" NPS, located 18 inches from the 36-inch thick shield wall between the control room and the Reactor Enclosure.

The dose from the pipe has been re-evaluated based on AST based ECCS fluid radionuclide concentrations integrated over the accident duration with standard control room occupancy credit for the 1 to 4 day and 4 to 30 day periods. However, because of the relatively thick shield wall involved, an investigation was performed to determine what additional isotopes merit consideration. This involved an ORIGEN2 core source term analysis, with time integration to determine relative importances. As a result, a total of 110 isotopes were evaluated in determining doses to CR areas accessible to personnel from shielded ECCS piping, as described in Attachment C. The resulting maximum integrated dose from this pipe is 1.48 rem at 1 foot from the interior surface of the control room perpendicular to that surface. As a measure of conservatism, this integrated dose at 1 foot is used for the entire control room.

Other external sources are also evaluated in Attachment C. The only other major dose contribution was for an RHR pipe located 50 to 60 feet from the control room occupied space. The calculated dose inside of the control room from this contributor was determined to be 0.18 rem. Reactor Enclosure airborne activity is also evaluated, and determined to be 0.039 rem. The dose is small due to the 3-foot thick shield wall between these zones. The RERS filters are separated from the control room by the drywell and spent fuel pool and do not contribute to control room doses. SGTS filters are separated from the control room by approximately 60 feet of distance and a minimum of 4.5 feet of concrete, and contribute no significant dose. Similarly, CREFAS filters are separated from the control room by approximately 30 feet and approximately 3.5 feet of concrete, and have significantly less activity than SGTS filters. Therefore, doses from SGTS and CREFAS filters are considered negligible. The control room has no external walls, so external plume contributions are also negligible.

4.8. Control Room Dose Model

The Limerick Control Room is designed with one filtered air intake.

4.8.1. Control Room Filtered Intake Flow and Filter Efficiencies

The Control Room HVAC ventilated volume is 126,000 ft^3. The bounding total flow through the CREFAS filters is 3000 cfm – 10% = 2700 cfm. In the Radiation Mode, 525 cfm of the CREFAS flow is filtered outside air, so 2175 cfm is recirculated air from the control room. In the Chlorine Mode the entire 2700 cfm is recirculation flow. The assumed intake filter efficiencies are a 99% HEPA filtration of aerosols, and a 95% charcoal efficiency for elemental and organic iodines.

4.8.2. Control Room Unfiltered Inleakage

This analysis assumes, and therefore provides margin for, up to 215 cfm of unfiltered intake into the control room from the control room intake vicinity, plus an additional 10 cfm ingress/egress allowance, for a total of 225 cfm of unfiltered CR inleakage. The control room intake plenum also provides the intake path for the auxiliary equipment room, which supplies the CR filter room. Though the traditional 10 cfm for ingress/egress is shown to be effectively eliminated by use of the main control room door seals, this is included for analysis conservatism.

4.8.3. Control Room Exfiltration

In the Radiation Mode the Control Room exfiltration is 750 cfm. In the Chlorine isolation mode the total exfiltration is 225 cfm.

4.9. Dispersion Factors

Figure 4.1 shows the Release Points and CR Intake Location.

Dispersion Factors are determined separately in reference (19). Onsite dispersion factors were determined using the computer program ARCON96 and associated guidance from Regulatory Guide 1.194. Offsite χ/Q's were determined using the computer program PAVAN and associated guidance in RG 1.145.

4.9.1. EAB and LPZ

The Table 3.1 χ/Q values for the EAB and LPZ χ/Q's are based on 731 meters and 2043 meters distances, respectively, from the Plant's North Stack.

The 0-2 hour EAB χ/Q is applied for 8 hours (or 24 hours, for the MSIV Leakage runs) to assure capturing of the 2-hour period of maximum dose effect.

4.9.2. CR

The control room intake is centered on the Control Structure north face at 124 feet above grade. Inleakage is assumed to be taken into the control room at the normal control room intake.

4.10. Equipment Qualification

Qualification of safety related equipment from the radiation environment resulting from a design basis LOCA will continue to be based on the original TID-14844 based accident treatment. This practice is recognized as acceptable because of the minimal public health and safety benefit and substantial cost of re-evaluation of radiation environment characterization with AST based assumptions of core releases and timing. NRC positions in support of this are in reference (40). The changes in plant parameters in this calculation do not impact conclusions reached in reference (40) or in the general underlying parameters.

4.11. Vital Area Accessibility

This evaluation is for establishing whether vital areas remain accessible. The following general conditions can be expected for sources impacting LGS vital areas:

1. Doses from ECCS piping source are bounded by TID-14844 based analyses, as discussed in reference (40).
2. Doses from airborne clouds in the Reactor Enclosure are principally from noble gases and are expected to be bounded by or comparable to TID-14844 based analyses. Typically, airborne activity contributions are small.

The impact of doses from intake of airborne activity taken into vital area structures are evaluated using the Security Center as a sample. This location has X/Q's that bound the TSC, and no air filtration. Doses are calculated inside and outside of the Security Center. The doses determined in Attachment G are less than those historically determined in reference (21), and are less than the 10CFR50.67 control room dose limits.

Based on this evaluation, the existing analyses included in UFSAR Section 1.13 can be considered conservative. Given compliance with GDC-19 limit of 5 rem, based on TID-14844 source terms, compliance can be expected with 10CFR 50.67 control room dose limits with AST.

5. References

(1) NPF-39, Limerick Generating Station, Unit 1, Facility Operating License, Section 2.C.(1), through Amendment 147.
(2) NPF-85, Limerick Generating Station, Unit 2, Facility Operating License, Section 2.C.(1), through Amendment 108.
(3) Limerick Atomic Power Station Units 1 & 2 UFSAR, Revision 11.
(4) Regulatory Guide 1.183, Rev. 0, "Alternative Radiological Source Terms for Evaluating Design Basis Accidents At Nuclear Power Reactors".
(5) Regulatory Guide 1.49, Rev. 1, "Power Levels of Nuclear Power Plants ". Rev. 1.
(6) Standard Review Plan Section 15.0.1, Rev. 0, July 2000.
(7) Limerick Atomic Power Station Units 1 & 2 Technical Specifications.
(8) 10CFR50.67(b)(2).
(9) 10CFR50, GDC-19.
(10) NUREG/CR-6604, "RADTRAD: A Simplified Model for RADionuclide Transport and Removal And Dose Estimation", 4/1998. Supplement 1, 6/1999. Supplement 2, 10/2002.
(11) AEB-98-03, "Assessment of Radiological Consequences for the Perry Pilot Plant Application using the Revised (NUREG-1465) Source Term", December 9, 1998.
(12) Design Basis Document DBD L-S-08B, Rev. 10, "Control Room HVAC".
(13) Design Basis Document DBD L-S-32, Rev. 9, "Standby Gas Treatment System and Reactor Enclosure Recirculation System".
(14) Design Basis Document DBD L-S-25A, Rev. 5, "Primary Containment Pressure Suppression System".
(15) LGS Design Analysis M-76-01, Rev. 7, "Reactor Building Volume".
(16) LGS Design Analysis M-78-01, Rev. 6, "Control Room Area - Room Volume".
(17) LGS Design Analysis LM-0551, Rev. 0, "Determine DBA-LOCA Doses to EAB, LPZ, and CR with a 2500 cfm RX. Encl. Inleakage rate and a 15.5 minute drawdown duration".
(18) LGS Design Analysis LM-0645, Rev. 1, "Re-analysis of Fuel Handling Accident (FHA) Using Alternative Source Terms".
(19) LGS Design Analysis LM-0641, Rev. 0, "Calculation of Alternate Source Term Onsite and Offsite χ/Q Values".
(20) LGS Design Analysis LM-0642, Rev. 1, "Suppression Pool pH Calculation for Alternative Source Term".
(21) LGS Design Analysis 1042, Rev. 3, "Airborne Doses in Vital Areas and North Stack Concentrations Post-LOCA".
(22) Regulatory Guide 1.3, Rev. 2, "Assumptions Used for Evaluating the Potential Radiological Consequences of a Loss of Coolant Accident for Boiling Water Reactors" June 1974.
(23) LGS Units 1 & 2 Technical Specification LCO 3.6.1.2.c, Through Amendment 177 for Unit 1 and Amendment 139 for Unit 2.
(24) LGS Units 2 & 3 Technical Specification SR 4.6.5.3.g.2, Through Amendment 177 for Unit 1 and Amendment 139 for Unit 2.
(25) LGS Units 2 & 3 Technical Specification 6.8.4.a, Through Amendment 177 for Unit 1 and Amendment 139 for Unit 2.
(26) LGS Units 2 & 3 Technical Specification SR 4.6.5.4.b.2, Through Amendment 177 for Unit 1 and Amendment 139 for Unit 2.
(27) LGS Units 2 & 3 Technical Specification 6.8.4.g, Through Amendment 177 for Unit 1 and Amendment 139 for Unit 2.

(28) LGS Units 2 & 3 Technical Specification Bases.
(29) NEDC-31858P, "BWROG Report for Increasing MSIV Leakage Rate Limits and Elimination of Leakage Control Systems", September 1993.
(30) Federal Guidance Report No. 11, "Limiting Values of Radionuclide Intake and Air Concentration and Dose Conversion Factors for Inhalation, Submersion, and Ingestion", 1988.
(31) Federal Guidance Report No. 12, "External Exposure to Radionuclides in Air, Water, and Soil", 1993.
(32) Cline, J.E. "MSIV Leakage - Iodine Transport Analysis", SAIC, August 20, 1990.
(33) Cline, J.E. "MSIV Leakage - Iodine Transport Analysis", Prepared for USNRC under Contract NRC-03-87-029, Task Order 74, March 26, 1991.
(34) Aerosol Measurement: Principles, Techniques, and Applications, 2nd Edition, K. Willeke and P. A. Baron, Eds., Van Nostrand Reinhold, New York, 2001.
(35) Clinton Power Station Design Analysis C-020, Rev. 3, "Re-analysis of Loss of Coolant Accident (LOCA) Using Alternative Source Terms".
(36) General Electric Nuclear Energy, NEDE-32963A, "Prediction of the Onset of Fission Gas Release from Fuel in Generic BWR," March 2000.
(37) Steam/ Its Generation and Use, Babcock & Wilcox, 38th Edition.
(38) TID-20583, "Leakage Characteristics of Steel Containment Vessels and the Analysis of Leakage Rate Determinations", May 1964, US Atomic Energy Commission.
(39) LGS Procedure No. ST-4-LLR-001-1, Rev. 9, The LLRT Program and Accountability Test.
(40) Memorandum to A. Thadani from J. Rosenthal, "Initial Screening of Candidate Generic Issue 187, 'The Potential Impact of Postulated Cesium Concentration on Equipment Qualification in the Containment Sump,'" April 30, 2001.
(41) NUREG-0800, Standard Review Plan, Section 6.5.5, "Pressure Suppression Pool as a Fission Product Cleanup System".
(42) Lagus Applied Technology, Inc./NCS Corporation Report "Control Room Envelope Inleakage Testing at Limerick Generating Station – 2004", November 15,2004.
(43) LGS Design Analysis M-76-07, Rev. 5, "Recirculation Air Mixing Study".

6. Calculations

6.1. Control Room, EAB, and LPZ Dose Calculations from Airborne Releases

The RADTRAD v. 3.03 computer code was used for this DBA LOCA calculation to determine CR, EAB, and LPZ doses. RADTRAD is a simplified model of RADionuclide Transport and Removal And Dose Estimation developed for the NRC and endorsed by the NRC as an acceptable methodology for reanalysis of the radiological consequences of design basis accidents.

The RADTRAD code uses a combination of tables and/or numerical models of source term reduction phenomena to determine the time-dependent dose at user-specified locations for a given accident scenario. The code system also provides the inventory, decay chain, and dose conversion factor tables needed for the dose calculation. The RADTRAD code can be used to assess occupational radiation exposures, typically in the control room; to estimate site boundary doses; and to estimate dose attenuation due to modification of a facility or accident sequence. The technical basis for the RADTRAD code is documented in Section 2 of NUREG/CR-6604 [Ref. (10)].

As discussed in Attachment I, RADTRAD 3.03 has been pre-qualified under the Washington Group International procedures for performing these types of analyses.

The methodologies significant to this analysis are:

- Transport and removal (Ref. (10), Section 2.1)
- Removal by Natural Deposition (Ref. (10), Section 2.2.2)
- Dose consequence analysis (Ref. (10), Section 2.3)
- Mathematical Solutions including decay (Ref. (10), Section 2.4).

The RADTRAD plug flow models for deposition in piping have not been used for main steam line deposition analysis. Instead, well-mixed modeling formulations described in AEB-98-03 [Ref. (11)] are used. The reasons that the well-mixed models are used are:

- Fluids in the inboard piping from the reactor vessel to the inboard MSIV may be thermally mixed. The potentially cooler gases from the reactor vessel entering the bottom of the elevated segments of the steam lines could drop through the vertical segments, be heated by the steam line pipe walls, and return to the vessel at the top of the steam lines.
- Fluids in the outboard piping from the inboard MSIV to the Turbine Stop Valve may be partially mixed by uneven heat transfer at pipe support locations relative to the simple conductive heat transfer through in between piping segments.
- The alternate drain pathway to the condenser comes from both ends of the outboard piping segments.
- The AEB-98-03 aerosol settling velocity for well-mixed modeling represents a Monte-Carlo calculated distribution, which is determined based on analyses of particle characteristics in containment. This distribution accounts for a spectrum of possible particles, and their potential for removal as they are transported. The RADTRAD models for aerosol settling use an artificially selected particle size and specific gravity that is at approximately a 2 percentile value of the identified AEB-98-03 particle settling velocity spectrum, and is, therefore, excessively conservative. In the model in this calculation, a

20-Group probabilistic settling velocity distribution is used, based on the AEB-98-03 model. See Section 4.5.3.2.1 for the detailed discussion of the application of this methodology to this analysis.

Leakage pathways include Primary Containment releases, ECCS leakage to secondary containment, and for MSIV leakage that is treated as separate from the analysis of L_a.

6.1.1. PC Leakage [Analyzed as 100% of L_a]

The following details the specific values supplied as input to RADTRAD 3.03 for the modeling of the Primary Containment leakage directly to Secondary Containment (SC) for an SGTS filtered, North Stack elevated release.

- Compartments
  - 1. Containment - Containment releases are through this volume
    - Compartment type – Other – since it is not the environment or control room.
    - Volume – 379,071 ft^3 – Primary Containment and Wetwell Airspace (minimums).
    - Source Term Fraction - 1.0
    - Compartment features - Natural Deposition only. Powers BWR – Design Basis Accident 10% (lower bound) deposition used. No elemental iodine removal coefficient.
  - 2. Reactor Enclosure
    - Compartment Type - Other
    - Volume – 1,800,000 ft^3
    - Source Term Fraction - 0.0
    - Compartment Features – Recirculation Filter, No filter credit during first 15.5 minute, then filtration for aerosols, elemental and organic iodines at 99, 95, and 95% efficiency, respectively, thereafter.
  - 3. Environment
    - Compartment type – Environment
  - 4. Control Room
    - Compartment type – Control Room
    - Volume – 126,000 ft^3
    - Source term fraction – 0.0
    - Compartment features – Recirculating Filter, for Radiation mode flow is 2175 cfm; for Chlorine mode flow is 2700 cfm. Filter efficiencies are 99% for aerosol (HEPA) and 95% for elemental and organic iodines (charcoal).
  - 5. SGTS Node
    - Compartment type – Control Room
    - Volume – 1ft^3
    - Source term fraction – 0.0
    - Compartment features – None - Compartment used to model condition of SGTS filter train in series with RERS filter train.

- Active Transfer Pathways
  - 1. Containment to Reactor Enclosure
    - From Compartment 1 – Containment
    - To Compartment 2 – Reactor Enclosure
    - Transfer mechanism – "Air Leakage" selected
    - Air Leakage Panel – Leak rate – 0-24 hours, 0.50%/day; 24-720 hours, 0.25%/day - These rates correspond to the L_a, analyzed in this calc, which leaks from the PC to the SC. Design basis credits a 50% reduction after 24 hours, as detailed in this analysis.
  - 2. Reactor Enclosure Exhaust to SGTS Node
    - From Compartment 2 – Reactor Enclosure

- To Compartment 5 – SGTS Node
- Transfer mechanism – "Filter" selected
- Filter Efficiency Panel - Flow rate - 0-1 minute, 9.00E7 cfm – artificially high flow rate to not credit the mixing effect associated with RERS startup (first two minutes are before gap release phase). Flow rates input to this pathway after 1 minute, which simulate the time-dependent credit for RERS mixing, are derived according to the discussion in Section 4.5.1.1. Filter Efficiency is 99% for aerosol (HEPA), and 95% for elemental and organic iodines (charcoal), after the first 15.5 minutes, and then for accident duration. Filter Efficiency 0% during 0 to 15.5 minute drawdown period, then 99% for aerosol (HEPA), and 95% for elemental and organic iodines (charcoal), thereafter. - This is an intermediary pathway to effectively model SGTS filtration in series.

➢ 3. Control Room Unfiltered Inleakage
- From Compartment 3 – Environment
- To Compartment 4 – Control Room
- Transfer mechanism – "Filter" selected
- Filter Efficiency Panel – Flow rate - 0-720 hours, 225 cfm – models the assumed bounding unfiltered inleakage. 0% efficiency of filter panel

➢ 4. Control Room Filtered Intake
- From Compartment 3 – Environment
- To Compartment 4 – Control Room
- Transfer mechanism – "Filter" selected
- Filter Efficiency Panel – Radiation Mode Flow rate - 0 -720 hours, 525 cfm – models the design CR filtered intake flow rate. Filter efficiencies are 99% for aerosol (HEPA) and 95% for elemental and organic iodines (charcoal). Chlorine Mode has no filtered intake.

➢ 5. Control Room Exhaust (Equilibrium)
- From Compartment 4 – Control Room
- To Compartment 3 – Environment
- Transfer mechanism – "Filter" selected
- Filter Efficiency Panel – Rad Mode Flow rate – 0-720 hours, 750 cfm – This equals the total flow that was taken into the CR volume, which includes inleakage (225 + 525 cfm). Chlorine Mode Flow Rate – 0-720 hours, 225 cfm – which balances the inleakage.
- Filter Efficiency Panel – Filter efficiency is entered as 100.0% for all chemical forms of iodine, for all time periods. This is the exit from the control room to the environment; the filtration prevents a double counting of the iodine release, although RADTRAD 3.03 documentation indicates that this effect has been eliminated.

➢ 6. SGTS Node to Environment
- From Compartment 5 – SGTS Node
- To Compartment 3 – Environment
- Transfer mechanism – "Filter" selected
- Filter Efficiency Panel - Flow rate - 0-1 minute, 9.00E7 cfm – artificially high flow rate to not credit the mixing effect associated with RERS startup (first two minutes are before gap release phase). Flow rates input to this pathway after 1 minute, which simulate the time-dependent credit for RERS mixing, are derived according to the discussion in Section 4.5.1.1. Filter Efficiency is 99% for aerosol (HEPA), and 95% for elemental and organic iodines (charcoal), after the first 15.5 minutes, and then for accident duration. Filter Efficiency 0% during 0 to 15.5 minute drawdown period, then 99% for aerosol (HEPA), and elemental and organic iodines (charcoal), thereafter.

❖ Dose Locations (PC Leakage)

➢ Control Room
- In Compartment 4 – Control Room
- Breathing Rate – RADTRAD Default – RG 1.183.
- Occupancy – RADTRAD Default – RG. 1.183
- χ/Q – **See Table 3.1.**

➢ Exclusion Area Boundary
- In Compartment 3 – Environment
- Breathing Rate - RADTRAD Default – RG 1.183.

- χ/Q – **See Table 3.1,** 0-2 hr accident χ/Q applied to maximum dose effective release period by extending the 2-hour value from 0 to 8 hours.

➢ Low Population Zone
- In Compartment 3 – Environment
- Breathing Rate – RADTRAD Default – RG 1.183.
- χ/Q – **See Table 3.1.**

❖ Source Terms and Dose Conversion Factor
- ➢ Nuclide Inventory – 3527 MWth, LGS Specific NIF for 60 MACCS isotopes; See Attachment A.
- ➢ Release Fractions and Timing – RADTRAD standard BWR-DBA values, no delay.
- ➢ Dose Conversion Factors – RADTRAD Library of FGR 11&12 values for 60 MACCS isotopes
- ➢ Decay & Daughter Products – Enabled - Decay / Daughter Products considered.
- ➢ Iodine Chemical Fractions – NUREG-1465 based Iodine Chemical Form fractions.

6.1.2. MSIV Leakage (Not Including Resuspended Iodine)

The following details the specific values supplied as input to RADTRAD 3.03 for the modeling of runs simulating the Primary Containment leakage, bypassing Secondary Containment, through the MSIV alternate drain pathways to the HP Condenser Shell. The total MSIV leak rate is analyzed at 200 scfh split into two steam lines.

❖ Compartments

➢ 1. Containment - Containment releases are through this volume
- Compartment type – Other – since it is not the environment or control room.
- Volume – 379,071 ft^3 – Primary Containment and Wetwell Airspace (minimum).
- Source Term Fraction - 1.0
- Compartment features - Natural Deposition only. Powers BWR – Design Basis Accident 10% (lower bound) deposition used. No elemental iodine removal coefficient.

➢ 2. (Node 1) Inboard MSL A Volume
- Compartment Type - Other
- Volume - 258 ft^3 - Minimum Steam Line Piping Volume from RPV to Inboard MSIV.
- Source Term Fraction - 0.0
- Compartment Features - None.

➢ 3. (Node 1) Inboard MSL B Volume
- Compartment Type - Other
- Volume - 306 ft^3, but treated as negligible (10E-8 ft^3) - Minimum Steam Line Piping Volume from RPV to Inboard MSIV.
- Source Term Fraction - 0.0
- Compartment Features - None.

➢ 4. (Node 2) Outboard MSL A Volume
- Compartment Type - Other
- Volume - 1,182 ft^3 - Steam Line Piping Volume from Inboard MSIV to Turbine Stop Valve.
- Source Term Fraction - 0.0
- Compartment Features - None.

➢ 5. (Node 2) Outboard MSL B Volume
- Compartment Type - Other
- Volume - 1,051 ft^3 - Steam Line Piping Volume from Inboard MSIV to Turbine Stop Valve.
- Source Term Fraction - 0.0
- Compartment Features - None.

➢ 6. HP Condenser
- Compartment Type - Other
- Volume - 54,750 ft^3 - HP Condenser Shell free air volume.

- Source Term Fraction - 0.0
- Compartment Features - None. No credit taken for deposition on condenser walls or on substantial surface of condenser tubing.

➢ 7. Environment
- Compartment type – Environment

➢ 8. Control Room
- Compartment type – Control Room
- Volume – 126,000 ft^3
- Source term fraction – 0.0
- Compartment features – Recirculating Filter, for Rad mode flow is 2175 cfm; for Chlorine mode flow is 2700 cfm. Filter efficiencies are 99% for aerosol (HEPA) and 95% for elemental and organic iodines (charcoal), from 0 - 720 hours.

➢ 9. Hold – Compartment holding PC leakage, so that impacts of releases are not double counted.

❖ Active Transfer Pathways

➢ 1. Containment to (Node 1) Inboard Piping MSL A Volume
- From Compartment 1 – Containment
- To Compartment 2 – Inboard MSL A Piping
- Transfer mechanism – "Filter" selected
- Filter Efficiency Panel – Flow rate – 0-2 hours, 1.5244cfm; 2-24hours, 0.9306cfm; 24-720hours, 0.5127cfm, 55.1% of first day value based on a conservatively assumed containment pressure at 24 hours. Flow rates derived according to methodology described in Attachment E and Section 4.5.3 above.
- Filter Efficiency Panel – All filtration associated with this pathway of Line A through the condenser is applied in this here, for detailed determination of these values, see Attachment B. The methodology used to determine these values is discussed in Section 4.5.3.2.

➢ 2. Containment to (Node 1) Inboard Piping MSL B Volume
- From Compartment 1 – Containment
- To Compartment 3 – Inboard MSL B Piping
- Transfer mechanism – "Filter" selected
- Filter Efficiency Panel – Flow rate - 0-2 hours, 1.5244cfm; 2-24hours, 0.9306cfm; 24-720hours, 0.5127cfm, 55.1% of first day value based on a conservatively assumed containment pressure at 24 hours. Flow rates derived according to methodology described in Attachment E and Section 4.5.3 above. However, as the Inboard MSL B Piping is treated as broken, the effective flow rate is zero.
- Filter Efficiency Panel – All filtration associated with this pathway of Line B through the condenser is applied here; for detailed determination of these values, see Attachment B. The methodology used to determine these values is discussed in Section 4.5.3.2. However, as the Inboard MSL B Piping is treated as broken, all deposition efficiencies are zero.

➢ 3. Containment to HOLD (PC Leakage)
- From Compartment 1 – Containment
- To Compartment 9 – HOLD
- Transfer mechanism – "Air Leakage" selected
- Air Leakage Rate Panel - Leakage rate - 0-24hrs, 0.5% per day; 24-720hrs, .25% per day – Flow from PC leakage other than through MSIVs is sent to HOLD compartment to prevent dose contribution in this run, as it is not a contributor to this MSIV release model.

➢ 4. (Node 1) Inboard Piping MSL A Volume to (Node 2) Outboard Piping MSL A Volume
- From Compartment 2 – Inboard MSL A Piping
- To Compartment 4 – Outboard MSL A Piping
- Transfer mechanism – "Filter" selected
- Filter Efficiency Panel – Flow rate - 0-24hrs, 0.9306cfm; 24-96hrs, 0.5127cfm; 96-720hrs, 0.5127cfm - Flow rates derived according to methodology described in Attachment E and Section 4.5.3 above. For detailed determination of values, see Attachment B.
- Filter Efficiency Panel – All filtration associated with this line is applied in Pathway 1.

➢ 5. (Node 1) Inboard Piping MSL B Volume to (Node 2) Outboard Piping MSL B Volume
- From Compartment 3 – Inboard MSL B Piping
- To Compartment 5 – Outboard MSL B Piping
- Transfer mechanism – "Filter" selected

- Filter Efficiency Panel – Flow rate - 0-24hrs, 0.9306cfm; 24-96hrs, 0.5127cfm; 96-720hrs, 0.5127cfm - Flow rates derived according to methodology described in Attachment E and Section 4.5.3 above. For detailed determination of values, see Attachment B.
- Filter Efficiency Panel – All filtration associated with this line is applied in Pathway 1.

➢ 6. (Node 2) Outboard Piping MSL A Volume to Condenser
- From Compartment 4 – Outboard MSL A Piping
- To Compartment 6 – Condenser
- Transfer mechanism – "Filter" selected
- Filter Efficiency Panel – Flow rate - 0-24hrs, 3.1881cfm; 24-96hrs, 1.5132cfm; 96-720hrs, 1.1479cfm - Flow rates derived according to methodology described in Attachment E and Section 4.5.3 above. For detailed determination of values, see Attachment B.
- Filter Efficiency Panel – All filtration associated with this line is applied in Pathway 1.

➢ 7. (Node 2) Outboard Piping MSL B Volume to Condenser
- From Compartment 5 – Outboard MSL B Piping
- To Compartment 6 – Condenser
- Transfer mechanism – "Filter" selected
- Filter Efficiency Panel – Flow rate - 0-24hrs, 3.1881cfm; 24-96hrs, 1.5132cfm; 96-720hrs, 1.1479cfm - Flow rates derived according to methodology described in Attachment E and Section 4.5.3 above. For detailed determination of values, see Attachment B.
- Filter Efficiency Panel – All filtration associated with this line is applied in Pathway 1.

➢ 8. Condenser Leak to Environment
- From Compartment 6 – Condenser
- To Compartment 7 – Environment
- Transfer mechanism – "Filter" selected
- Filter Efficiency Panel – Flow rate - 0-24hrs, 3.6616cfm; 24-96hrs, 2.0176cfm; 96-720hrs, 2.0176cfm - Flow rates derived according to methodology described in Attachment E and Section 4.5.3 above. For detailed determination of values, see Attachment B.
- Filter Efficiency Panel – Three different cases have been run: No Condenser Tube Credit, 10% of Condenser Tube Credit, and 100% of Condenser Tube Credit. See Attachment B for the determination of all pipe equivalent filter efficiencies. The methodology used to determine these values is discussed in Section 4.5.3.2.

➢ 9. Filtered Intake to Control Room
- From Compartment 3 – Environment
- To Compartment 4 – Control Room
- Transfer mechanism – "Filter" selected
- Filter Efficiency Panel – Flow rate – 0 - 720 hours, 525 cfm – models the normal CR filtered intake flow rate. Filter efficiencies are 99% for aerosol (HEPA) and 95% for elemental and organic iodines (charcoal). Chlorine Mode has no filtered intake. This corresponds to the current presence of the HEPA filter and the performance of charcoal with the CR in Radiation Mode.

➢ 10. Unfiltered Inleakage to Control Room
- From Compartment 3 – Environment
- To Compartment 4 – Control Room
- Transfer mechanism – "Filter" selected
- Filter Efficiency Panel – Flow rate - 0-720 hours, 225 cfm – models the normal Radiation Mode and Chlorine Mode CR unfiltered inleakage flow rate.
- Filter Efficiency Panel – Filter efficiency is entered as 0.0% for all chemical forms of iodine, for the accident duration, because this is an unfiltered path.

➢ 11. Control Room Exhaust (Equilibrium)
- From Compartment 4 – Control Room
- To Compartment 3 – Environment
- Transfer mechanism – "Filter" selected
- Filter Efficiency Panel – Radiation Mode Flow rate – 0 - 720 hours, 750 cfm – This equals the total flow that was taken into the CR volume, which includes inleakage (225 + 525 cfm). Chlorine Mode Flow Rate – 0-720 hours, 225 cfm – which balances the inleakage.
- Filter Efficiency Panel – Filter efficiency is entered as 100.0% for all chemical forms of iodine, for all time periods. This is the exit from the control room to the environment; the filtration prevents a double counting of the iodine release, although RADTRAD 3.03 documentation indicates that this effect has been eliminated.

- Dose Locations (MSIV Leakage)
  - Exclusion Area Boundary
    - In Compartment 2 – Environment
    - Breathing Rate - RADTRAD Default – RG 1.183.
    - χ/Q – **See Table 3.1,** 0-2 hr accident χ/Q applied to maximum dose effective release period.
  - Low Population Zone
    - In Compartment 2 – Environment
    - Breathing Rate – RADTRAD Default – RG 1.183.
    - χ/Q – **See Table 3.1.**
  - Control Room
    - In Compartment 3 – Control Room
    - Breathing Rate – RADTRAD Default – RG 1.183.
    - Occupancy – RADTRAD Default – RG. 1.183
    - χ/Q – **See Table 3.1.**
- Source Terms and Dose Conversion Factor
  - Nuclide Inventory – 3527 MWth, LGS Specific NIF for 60 MACCS isotopes; See Attachment A.
  - Release Fractions and Timing – RADTRAD standard BWR-DBA values, no delay.
  - Dose Conversion Factors – RADTRAD Library of FGR 11&12 values for 60 MACCS isotopes
  - Decay & Daughter Products – Enabled - Decay / Daughter Products considered.
  - Iodine Chemical Fractions – NUREG-1465 based Iodine Chemical Form fractions.

6.1.3. MSIV Leakage (Resuspended Iodine Only)

The following details the specific values supplied as input to RADTRAD 3.03 for the modeling of runs simulating the Primary Containment leakage, bypassing Secondary Containment, through the MSIV alternate drain pathways to the HP Condenser Shell. The simulation detailed in this Section only accounts for iodine resuspension effects, as runs simulating all other activity transport through the MSIVs are detailed in Section 6.1.2. The total MSIV leak rate is analyzed at 200 scfh, limited at 100 scfh per steam line, and divided between the two worst-case lines. Modeling of lines A and B was done separately, due to Compartment limitations in the RADTRAD code; this Section outlines both of these runs.

Leakage of Resuspended Iodine from Main Steam Line A

- Compartments
  - 1. Containment - Containment releases are through this volume
    - Compartment type – Other – since it is not the environment or control room.
    - Volume – 379,071 ft^3 – Primary Containment and Wetwell Airspace (minimum).
    - Source Term Fraction - 1.0
    - Compartment features - Natural Deposition only. Powers BWR – Design Basis Accident 10% (lower bound) deposition used. No elemental iodine removal coefficient.
  - 2. MSL A Inboard - Airborne
    - Compartment Type - Other
    - Volume - 258 ft^3 - Minimum Steam Line Piping Volume from RPV to Inboard MSIV.
    - Source Term Fraction - 0.0
    - Compartment Features - None.
  - 3. Environment
    - Compartment type – Environment
  - 4. Control Room
    - Compartment type – Control Room

- Volume – 126,000 ft^3
- Source term fraction – 0.0
- Compartment features – Recirculating Filter, for Rad mode flow is 2175 cfm; for Chlorine mode flow is 2700 cfm. Filter efficiencies are 99% for aerosol (HEPA) and 95% for elemental and organic iodines (charcoal), from 0 - 720 hours.

➢ 5. MSL A Outboard - Airborne
- Compartment Type - Other
- Volume - 1,182 ft^3 - Steam Line Piping Volume from Inboard MSIV to Turbine Stop Valve.
- Source Term Fraction - 0.0
- Compartment Features - None.

➢ 6. MSL A Inboard - Surface
- Compartment Type - Other
- Volume - 1 ft^3 – A nominal volume to model the inboard pipe surface on which deposition, resuspension, and surface fixation take place.
- Source Term Fraction - 0.0
- Compartment Features - None. No credit taken for deposition on condenser walls or on substantial surface of condenser tubing

➢ 7. MSL A Outboard - Surface
- Compartment Type - Other
- Volume - 1 ft^3 – A nominal volume to model the outboard pipe surface on which deposition, resuspension, and surface fixation take place.
- Source Term Fraction - 0.0
- Compartment Features - None. No credit taken for deposition on condenser walls or on substantial surface of condenser tubing

➢ 8. Hold (By Surface Fixation)
- Compartment type – Other
- Volume – 1 ft^3 – Models the removal of iodine from dose contribution availability by fixation to the surface of the condenser and inboard and outboard piping nodes. Activity sent to this compartment is prevented from contributing to dose.
- Source term fraction – 0.0
- Compartment features – None.

➢ 9. Condenser – Airborne
- Compartment Type - Other
- Volume - 54,750 ft^3 - HP Condenser Shell free air volume.
- Source Term Fraction - 0.0
- Compartment Features - None. No credit taken for deposition on condenser walls or on substantial surface of condenser tubing.

➢ 9. Condenser – Surface
- Compartment Type - Other
- Volume - 1 ft^3 - A nominal volume to model the Condenser surface on which deposition, resuspension, and surface fixation take place.
- Source Term Fraction - 0.0
- Compartment Features - None. No credit taken for deposition on condenser walls or on substantial surface of condenser tubing.

❖ Active Transfer Pathways

➢ 1. Filtered Environment to Control Room (Intake)
- From Compartment 3 – Environment
- To Compartment 4 – Control Room
- Transfer mechanism – "Filter" selected
- Filter Efficiency Panel – Flow rate – 0 - 720 hours, 525 cfm – models the normal CR filtered intake flow rate. Filter efficiencies are 99% for aerosol (HEPA) and 95% for elemental and organic iodines (charcoal). Chlorine Mode has no filtered intake. This corresponds to the current presence of the HEPA filter and the performance of charcoal with the CR in Radiation Mode.

- 2. Unfiltered Environment to Control Room (Inleakage)
  - From Compartment 3 – Environment
  - To Compartment 4 – Control Room
  - Transfer mechanism – "Filter" selected
  - Filter Efficiency Panel – Flow rate - 0-720 hours, 225 cfm – models the normal Radiation Mode and Chlorine Mode CR unfiltered inleakage flow rate.
  - Filter Efficiency Panel – Filter efficiency is entered as 0.0% for all chemical forms of iodine, for the accident duration, because this is an unfiltered path.

- 3. Control Room to Environment (Exhaust)
  - From Compartment 4 – Control Room
  - To Compartment 3 – Environment
  - Transfer mechanism – "Filter" selected
  - Filter Efficiency Panel – Radiation Mode Flow rate – 0 - 720 hours, 750 cfm – This equals the total flow that was taken into the CR volume, which includes inleakage (225 + 525 cfm). Chlorine Mode Flow Rate – 0-720 hours, 225 cfm – which balances the inleakage.
  - Filter Efficiency Panel – Filter efficiency is entered as 100.0% for all chemical forms of iodine, for all time periods. This is the exit from the control room to the environment; the filtration prevents a double counting of the iodine release, although RADTRAD 3.03 documentation indicates that this effect has been eliminated.

- 4. (Aerosol Transport 1) MSL A Inboard - Airborne to MSL A Outboard - Airborne
  - From Compartment 2 – MSL A Inboard - Airborne
  - To Compartment 5 – MSL A Inboard - Airborne
  - Transfer mechanism – "Filter" selected
  - Filter Efficiency Panel – Flow rate - 0-24hrs, 0.9306cfm; 24-96hrs, 0.5127cfm; 96-720hrs, 0.5127cfm - Flow rates derived according to methodology described in Attachment E and Section 4.5.3 above. For detailed determination of values, see Attachment B.
  - Filter Efficiency Panel – This pathway is intended to transfer only elemental iodine forms for purposes of modeling deposition related phenomena. Therefore, both aerosol and organic chemical forms are 100% filtered in this pathway, while there is 0% filtration of elemental.

- 5. (Deposition 1) MSL A Inboard - Airborne to MSL A Inboard - Surface
  - From Compartment 2 – MSL A Inboard - Airborne
  - To Compartment 6 – MSL A Inboard - Surface
  - Transfer mechanism – "Air Leakage" selected
  - Air Leakage Panel – Leak rate – Percent per day leakage rates corresponding to calculated rates of deposition, which are associated with the inboard piping node characteristics, are entered here. For the detailed determination of these values, see Attachment B.
- 6. (Resuspension 1) MSL A Inboard - Surface to Environment
  - From Compartment 6 – MSL A Inboard - Surface
  - To Compartment 3 – Environment
  - Transfer mechanism – "Air Leakage" selected
  - Air Leakage Panel – Leak rate – Percent per day leakage rates corresponding to calculated rates of resuspension, which are associated with the inboard piping node characteristics, are entered here. For the detailed determination of these values, see Attachment B. No credit is taken for deposition of resuspended iodine, as all activity from this pathway goes directly to the environment.
- 7. (Surface Fixation 1) MSL A Inboard - Surface to Hold (By Surface Fixation)
  - From Compartment 6 – MSL A Inboard - Surface
  - To Compartment 8 – Hold (By Surface Fixation)
  - Transfer mechanism – "Air Leakage" selected
  - Air Leakage Panel – Leak rate – Percent per day leakage rates corresponding to calculated rates of surface fixation, which are associated with the inboard piping node characteristics, are entered here. For the detailed determination of these values, see Attachment B. The Hold compartment models "fixation", by not allowing transport of activity sent there.

- 8. (Deposition 2) MSL A Outboard - Airborne to MSL A Outboard - Surface
  - From Compartment 5 – MSL A Outboard - Airborne
  - To Compartment 7 – MSL A Outboard - Surface
  - Transfer mechanism – "Air Leakage" selected
  - Air Leakage Panel – Leak rate – Percent per day leakage rates corresponding to calculated rates of deposition, which are associated with the outboard piping node characteristics, are entered here. For the detailed determination of these values, see Attachment B.

- 9. (Resuspension 2) MSL A Outboard - Surface to Environment
  - From Compartment 7 – MSL A Outboard - Surface
  - To Compartment 3 – Environment
  - Transfer mechanism – "Air Leakage" selected
  - Air Leakage Panel – Leak rate – Percent per day leakage rates corresponding to calculated rates of resuspension, which are associated with the outboard piping node characteristics, are entered here. For the detailed determination of these values, see Attachment B. No credit is taken for deposition of resuspended iodine, as all activity from this pathway goes directly to the environment.
- 10. (Surface Fixation 2) MSL A Outboard - Surface to Hold (By Surface Fixation)
  - From Compartment 7 – MSL A Inboard - Surface
  - To Compartment 8 – Hold (By Surface Fixation)
  - Transfer mechanism – "Air Leakage" selected
  - Air Leakage Panel – Leak rate – Percent per day leakage rates corresponding to calculated rates of surface fixation, which are associated with the outboard piping node characteristics, are entered here. For the detailed determination of these values, see Attachment B. The Hold compartment models "fixation", by not allowing transport of activity sent there.

- 11. (Aerosol Transport 2) MSL A Outboard - Airborne to Condenser - Airborne
  - From Compartment 5 – MSL A Outboard - Airborne
  - To Compartment 9 – Condenser - Airborne
  - Transfer mechanism – "Filter" selected
  - Filter Efficiency Panel – Flow rate - 0-24hrs, 3.1881cfm; 24-96hrs, 1.5132cfm; 96-720hrs, 1.1479cfm - Flow rates derived according to methodology described in Attachment E and Section 4.5.3 above. For detailed determination of values, see Attachment B.
  - Filter Efficiency Panel – This pathway is intended to transfer only elemental iodine forms for purposes of modeling deposition related phenomena. Therefore, both aerosol and organic chemical forms are 100% filtered in this pathway, while there is 0% filtration of elemental.

- 12. (Deposition 3) Condenser - Airborne to Condenser - Surface
  - From Compartment 9 – Condenser - Airborne
  - To Compartment 10 – Condenser - Surface
  - Transfer mechanism – "Air Leakage" selected
  - Air Leakage Panel – Leak rate – Percent per day leakage rates corresponding to calculated rates of deposition, which are associated with the Condenser characteristics, are entered here. For the detailed determination of these values, see Attachment B.
- 13. (Resuspension 3) MSL A Outboard - Surface to Environment
  - From Compartment 10 – Condenser - Surface
  - To Compartment 3 – Environment
  - Transfer mechanism – "Air Leakage" selected
  - Air Leakage Panel – Leak rate – Percent per day leakage rates corresponding to calculated rates of resuspension, which are associated with the Condenser characteristics, are entered here. For the detailed determination of these values, see Attachment B. No credit is taken for deposition of resuspended iodine, as all activity from this pathway goes directly to the environment.
- 14. (Surface Fixation 3) MSL A Outboard - Surface to Hold (By Surface Fixation)
  - From Compartment 10 – Condenser - Surface
  - To Compartment 8 – Hold (By Surface Fixation)
  - Transfer mechanism – "Air Leakage" selected
  - Air Leakage Panel – Leak rate – Percent per day leakage rates corresponding to calculated rates of surface fixation, which are associated with the Condenser characteristics, are entered here. For the detailed determination of these values, see Attachment B. The Hold compartment models "fixation", by not allowing transport of activity sent there.

- 15. Containment to MSL A Inboard - Airborne
  - From Compartment 1 – Containment
  - To Compartment 2 – MSL A Inboard - Airborne
  - Transfer mechanism – "Filter" selected
  - Filter Efficiency Panel – Flow rate – 0-2 hours, 1.5244cfm; 2-24hours, 0.9306cfm; 24-720hours, 0.5127cfm, 55.1% of first day value based on a conservatively assumed containment pressure at 24 hours. Flow rates derived according to methodology described in Attachment E and Section 4.5.3 above. For detailed determination of values, see Attachment B.
  - Filter Efficiency Panel – This pathway is intended to transfer only elemental iodine forms for purposes of modeling deposition related phenomena. Therefore, both aerosol and organic chemical forms are 100% filtered in this pathway, while there is 0% filtration of elemental.

- Dose Locations (MSIV Leakage)
  - Exclusion Area Boundary
    - In Compartment 2 – Environment
    - Breathing Rate - RADTRAD Default – RG 1.183.
    - χ/Q – **See Table 3.1,** 0-2 hr accident χ/Q applied to maximum dose effective release period.
  - Low Population Zone
    - In Compartment 2 – Environment
    - Breathing Rate – RADTRAD Default – RG 1.183.
    - χ/Q – **See Table 3.1.**
  - Control Room
    - In Compartment 3 – Control Room
    - Breathing Rate – RADTRAD Default – RG 1.183.
    - Occupancy – RADTRAD Default – RG. 1.183
    - χ/Q – **See Table 3.1.**
- Source Terms and Dose Conversion Factor
  - Nuclide Inventory – 3527 MWth, LGS Specific NIF for 60 MACCS isotopes; See Attachment A.
  - Release Fractions and Timing – RADTRAD "BWR-I" values, no delay. This RFT file is used because it only allows the transport of iodine activity. This simulation only accounts for dose effects of resuspended iodine.
  - Dose Conversion Factors – RADTRAD Library of FGR 11&12 values for 60 MACCS isotopes
  - Decay & Daughter Products – Enabled - Decay / Daughter Products considered.
  - Iodine Chemical Fractions – NUREG-1465 based Iodine Chemical Form fractions.

Leakage of Resuspended Iodine from Main Steam Line B

- Compartments
  - 1. Containment - Containment releases are through this volume
    - Compartment type – Other – since it is not the environment or control room.
    - Volume – 379,071 ft^3 – Primary Containment and Wetwell Airspace (minimum).
    - Source Term Fraction - 1.0
    - Compartment features - Natural Deposition only. Powers BWR – Design Basis Accident 10% (lower bound) deposition used. No elemental iodine removal coefficient.
  - 2. MSL B Inboard - Airborne
    - Compartment Type - Other
    - Volume – 1.000E-5 ft^3 – This nominal volume is essentially zero and is used to model the conservatively assumed faulted inboard segment of MSL B, thereby making it unavailable for deposition.
    - Source Term Fraction - 0.0
    - Compartment Features - None.
  - 3. Environment
    - Compartment type – Environment
  - 4. Control Room
    - Compartment type – Control Room
    - Volume – 126,000 ft^3
    - Source term fraction – 0.0
    - Compartment features – Recirculating Filter, for Rad mode flow is 2175 cfm; for Chlorine mode flow is 2700 cfm. Filter efficiencies are 99% for aerosol (HEPA) and 95% for elemental and organic iodines (charcoal), from 0 - 720 hours.
  - 5. MSL B Outboard - Airborne
    - Compartment Type - Other
    - Volume - 1,051 ft^3 - Steam Line Piping Volume from Inboard MSIV to Turbine Stop Valve.

- Source Term Fraction - 0.0
- Compartment Features - None.

➢ 6. MSL B Inboard - Surface
- Compartment Type - Other
- Volume - 1 ft^3 – A nominal volume to model the inboard pipe surface on which deposition, resuspension, and surface fixation take place.
- Source Term Fraction - 0.0
- Compartment Features - None. No credit taken for deposition on condenser walls or on substantial surface of condenser tubing

➢ 7. MSL B Outboard - Surface
- Compartment Type - Other
- Volume - 1 ft^3 – A nominal volume to model the outboard pipe surface on which deposition, resuspension, and surface fixation take place.
- Source Term Fraction - 0.0
- Compartment Features - None. No credit taken for deposition on condenser walls or on substantial surface of condenser tubing

➢ 8. Hold (By Surface Fixation)
- Compartment type – Other
- Volume – 1 ft^3 – Models the removal of iodine from dose contribution availability by fixation to the surface of the condenser and inboard and outboard piping nodes. Activity sent to this compartment is prevented from contributing to dose.
- Source term fraction – 0.0
- Compartment features – None.

➢ 9. Condenser – Airborne
- Compartment Type - Other
- Volume - 54,750 ft^3 - HP Condenser Shell free air volume.
- Source Term Fraction - 0.0
- Compartment Features - None. No credit taken for deposition on condenser walls or on substantial surface of condenser tubing.

➢ 9. Condenser – Surface
- Compartment Type - Other
- Volume - 1 ft^3 - A nominal volume to model the Condenser surface on which deposition, resuspension, and surface fixation take place.
- Source Term Fraction - 0.0
- Compartment Features - None. No credit taken for deposition on condenser walls or on substantial surface of condenser tubing.

❖ Active Transfer Pathways

➢ 1. Filtered Environment to Control Room (Intake)
- From Compartment 3 – Environment
- To Compartment 4 – Control Room
- Transfer mechanism – "Filter" selected
- Filter Efficiency Panel – Flow rate – 0 - 720 hours, 525 cfm – models the normal CR filtered intake flow rate. Filter efficiencies are 99% for aerosol (HEPA) and 95% for elemental and organic iodines (charcoal). Chlorine Mode has no filtered intake. This corresponds to the current presence of the HEPA filter and the performance of charcoal with the CR in Radiation Mode.

➢ 2. Unfiltered Environment to Control Room (Inleakage)
- From Compartment 3 – Environment
- To Compartment 4 – Control Room
- Transfer mechanism – "Filter" selected
- Filter Efficiency Panel – Flow rate - 0-720 hours, 225 cfm – models the normal Radiation Mode and Chlorine Mode CR unfiltered inleakage flow rate.
- Filter Efficiency Panel – Filter efficiency is entered as 0.0% for all chemical forms of iodine, for the accident duration, because this is an unfiltered path.

- 3. Control Room to Environment (Exhaust)
  - From Compartment 4 – Control Room
  - To Compartment 3 – Environment
  - Transfer mechanism – "Filter" selected
  - Filter Efficiency Panel – Radiation Mode Flow rate – 0 - 720 hours, 750 cfm – This equals the total flow that was taken into the CR volume, which includes inleakage (225 + 525 cfm). Chlorine Mode Flow Rate – 0-720 hours, 225 cfm – which balances the inleakage.
  - Filter Efficiency Panel – Filter efficiency is entered as 100.0% for all chemical forms of iodine, for all time periods. This is the exit from the control room to the environment; the filtration prevents a double counting of the iodine release, although RADTRAD 3.03 documentation indicates that this effect has been eliminated.

- 4. (Aerosol Transport 1) MSL B Inboard - Airborne to MSL B Outboard - Airborne
  - From Compartment 2 – MSL B Inboard - Airborne
  - To Compartment 5 – MSL B Inboard - Airborne
  - Transfer mechanism – "Filter" selected
  - Filter Efficiency Panel – Flow rate - 0-24hrs, 0.9306cfm; 24-96hrs, 0.5127cfm; 96-720hrs, 0.5127cfm - Flow rates derived according to methodology described in Attachment E and Section 4.5.3 above. For detailed determination of values, see Attachment B.
  - Filter Efficiency Panel – This pathway is intended to transfer only elemental iodine forms for purposes of modeling deposition related phenomena. Therefore, both aerosol and organic chemical forms are 100% filtered in this pathway, while there is 0% filtration of elemental.

- 5. (Deposition 1) MSL B Inboard - Airborne to MSL B Inboard - Surface
  - From Compartment 2 – MSL B Inboard - Airborne
  - To Compartment 6 – MSL B Inboard - Surface
  - Transfer mechanism – "Air Leakage" selected
  - Air Leakage Panel – Leak rate – Percent per day leakage rates corresponding to calculated rates of deposition, which are associated with the inboard piping node characteristics, are entered here. For the detailed determination of these values, see Attachment B.
- 6. (Resuspension 1) MSL B Inboard - Surface to Environment
  - From Compartment 6 – MSL B Inboard - Surface
  - To Compartment 3 – Environment
  - Transfer mechanism – "Air Leakage" selected
  - Air Leakage Panel – Leak rate – Percent per day leakage rates corresponding to calculated rates of resuspension, which are associated with the inboard piping node characteristics, are entered here. For the detailed determination of these values, see Attachment B. No credit is taken for deposition of resuspended iodine, as all activity from this pathway goes directly to the environment.
- 7. (Surface Fixation 1) MSL B Inboard - Surface to Hold (By Surface Fixation)
  - From Compartment 6 – MSL B Inboard - Surface
  - To Compartment 8 – Hold (By Surface Fixation)
  - Transfer mechanism – "Air Leakage" selected
  - Air Leakage Panel – Leak rate – Percent per day leakage rates corresponding to calculated rates of surface fixation, which are associated with the inboard piping node characteristics, are entered here. For the detailed determination of these values, see Attachment B. The Hold compartment models "fixation", by not allowing transport of activity sent there.

- 8. (Deposition 2) MSL B Outboard - Airborne to MSL B Outboard - Surface
  - From Compartment 5 – MSL B Outboard - Airborne
  - To Compartment 7 – MSL B Outboard - Surface
  - Transfer mechanism – "Air Leakage" selected
  - Air Leakage Panel – Leak rate – Percent per day leakage rates corresponding to calculated rates of deposition, which are associated with the outboard piping node characteristics, are entered here. For the detailed determination of these values, see Attachment B.
- 9. (Resuspension 2) MSL B Outboard - Surface to Environment
  - From Compartment 7 – MSL B Outboard - Surface
  - To Compartment 3 – Environment
  - Transfer mechanism – "Air Leakage" selected
  - Air Leakage Panel – Leak rate – Percent per day leakage rates corresponding to calculated rates of resuspension, which are associated with the outboard piping node characteristics, are entered here. For the detailed determination of these values, see Attachment B. No credit is taken for deposition of resuspended iodine, as all activity from this pathway goes directly to the environment.

- 10. (Surface Fixation 2) MSL B Outboard - Surface to Hold (By Surface Fixation)
  - From Compartment 7 – MSL B Inboard - Surface
  - To Compartment 8 – Hold (By Surface Fixation)
  - Transfer mechanism – "Air Leakage" selected
  - Air Leakage Panel – Leak rate – Percent per day leakage rates corresponding to calculated rates of surface fixation, which are associated with the outboard piping node characteristics, are entered here. For the detailed determination of these values, see Attachment B. The Hold compartment models "fixation", by not allowing transport of activity sent there.

- 11. (Aerosol Transport 2) MSL B Outboard - Airborne to Condenser - Airborne
  - From Compartment 5 – MSL B Outboard - Airborne
  - To Compartment 9 – Condenser - Airborne
  - Transfer mechanism – "Filter" selected
  - Filter Efficiency Panel – Flow rate - 0-24hrs, 3.1881cfm; 24-96hrs, 1.5132cfm; 96-720hrs, 1.1479cfm - Flow rates derived according to methodology described in Attachment E and Section 4.5.3 above. For detailed determination of values, see Attachment B.
  - Filter Efficiency Panel – This pathway is intended to transfer only elemental iodine forms for purposes of modeling deposition related phenomena. Therefore, both aerosol and organic chemical forms are 100% filtered in this pathway, while there is 0% filtration of elemental.

- 12. (Deposition 3) Condenser - Airborne to Condenser - Surface
  - From Compartment 9 – Condenser - Airborne
  - To Compartment 10 – Condenser - Surface
  - Transfer mechanism – "Air Leakage" selected
  - Air Leakage Panel – Leak rate – Percent per day leakage rates corresponding to calculated rates of deposition, which are associated with the Condenser characteristics, are entered here. For the detailed determination of these values, see Attachment B.
- 13. (Resuspension 3) MSL B Outboard - Surface to Environment
  - From Compartment 10 – Condenser - Surface
  - To Compartment 3 – Environment
  - Transfer mechanism – "Air Leakage" selected
  - Air Leakage Panel – Leak rate – Percent per day leakage rates corresponding to calculated rates of resuspension, which are associated with the Condenser characteristics, are entered here. For the detailed determination of these values, see Attachment B. No credit is taken for deposition of resuspended iodine, as all activity from this pathway goes directly to the environment.
- 14. (Surface Fixation 3) MSL B Outboard - Surface to Hold (By Surface Fixation)
  - From Compartment 10 – Condenser - Surface
  - To Compartment 8 – Hold (By Surface Fixation)
  - Transfer mechanism – "Air Leakage" selected
  - Air Leakage Panel – Leak rate – Percent per day leakage rates corresponding to calculated rates of surface fixation, which are associated with the Condenser characteristics, are entered here. For the detailed determination of these values, see Attachment B. The Hold compartment models "fixation", by not allowing transport of activity sent there.

- 15. Containment to MSL B Inboard - Airborne
  - From Compartment 1 – Containment
  - To Compartment 2 – MSL B Inboard - Airborne
  - Transfer mechanism – "Filter" selected
  - Filter Efficiency Panel – Flow rate – 0-2 hours, 1.5244cfm; 2-24hours, 0.9306cfm; 24-720hours, 0.5127cfm, 55.1% of first day value based on a conservatively assumed containment pressure at 24 hours. Flow rates derived according to methodology described in Attachment E and Section 4.5.3 above. For detailed determination of values, see Attachment B.
  - Filter Efficiency Panel – This pathway is intended to transfer only elemental iodine forms for purposes of modeling deposition related phenomena. Therefore, both aerosol and organic chemical forms are 100% filtered in this pathway, while there is 0% filtration of elemental.

- Dose Locations (MSIV Leakage)

  - Exclusion Area Boundary
    - In Compartment 2 – Environment
    - Breathing Rate - RADTRAD Default – RG 1.183.
    - χ/Q – **See Table 3.1,** 0-2 hr accident χ/Q applied to maximum dose effective release period.

  - Low Population Zone

- In Compartment 2 – Environment
- Breathing Rate – RADTRAD Default – RG 1.183.
- χ/Q – **See Table 3.1.**

➢ Control Room
- In Compartment 3 – Control Room
- Breathing Rate – RADTRAD Default – RG 1.183.
- Occupancy – RADTRAD Default – RG. 1.183
- χ/Q – **See Table 3.1.**

❖ Source Terms and Dose Conversion Factor
- ➢ Nuclide Inventory – 3527 MWth, LGS Specific NIF for 60 MACCS isotopes; See Attachment A.
- ➢ Release Fractions and Timing – RADTRAD "BWR-I" values, no delay. This RFT file is used because it only allows the transport of iodine activity. This simulation only accounts for dose effects of resuspended iodine.
- ➢ Dose Conversion Factors – RADTRAD Library of FGR 11&12 values for 60 MACCS isotopes
- ➢ Decay & Daughter Products – Enabled - Decay / Daughter Products considered.
- ➢ Iodine Chemical Fractions – NUREG-1465 based Iodine Chemical Form fractions.

6.1.4. ECCS Leakage

The following details the specific values supplied as input to RADTRAD 3.03 for the modeling of runs simulating the ECCS Fluid leakage pathway. Non-noble gas isotopes released from the core are assumed to instantly appear in the ECCS fluid, which includes the minimum suppression pool water.

❖ Compartments

➢ 1. ECCS Fluid – Releases from the core are to this compartment
- Compartment type – Other – since it is not the environment or control room.
- Volume – 118,655 cu. ft (suppression pool minimum) + 9,663 cu. ft. (reactor coolant) = rounded to 959,900 gallons – Includes Minimum Suppression Pool Water plus Reactor Coolant Volume at suppression pool temperature.
- Source Term Fraction - 1.0
- Compartment features - None.

➢ 2. Reactor Enclosure
- Compartment Type - Other
- Volume – 1,800,000 ft^3
- Source Term Fraction - 0.0
- Compartment Features – Recirculation Filter, No filter credit during first 15.5 minutes, Filtration for aerosols, elemental and organic iodines at 99, 95, and 95% efficiency, respectively, thereafter.

➢ 3. Environment
- Compartment type – Environment

➢ 4. Control Room
- Compartment type – Control Room
- Volume – 126,000 ft^3
- Source term fraction – 0.0
- Compartment features – Recirculating Filter, for RAD mode flow is 2175 cfm; for Chlorine mode flow is 2700 cfm. Filter efficiencies are 99% for aerosol (HEPA) and 95% for elemental and organic iodines (charcoal).

➢ 5. SGTS Node
- Compartment type – Control Room
- Volume – 1ft^3
- Source term fraction – 0.0
- Compartment features – None - Compartment used to model condition of SGTS filter train in series with RERS filter train.

- Active Transfer Pathways

  - 1. ECCS Fluid to Reactor Enclosure
    - From Compartment 1 – ECCS Fluid
    - To Compartment 2 – Reactor Enclosure
    - Transfer mechanism – "Filter" selected
    - Filter Efficiency Panel - Flow rate - 5 gpm - Because the gallon volume value was entered as the ECCS Fluid Volume, entering a gallon value here is correct.
    - Filter Efficiency Panel - 90% for Iodines - The "filter" is used to simulate a conservatively assumed 10% flashing fraction.
  - 2. Control Room Filtered Intake
    - From Compartment 3 – Environment
    - To Compartment 4 – Control Room
    - Transfer mechanism – "Filter" selected
    - Filter Efficiency Panel – Flow rate - 0 - 720 hours, 525 cfm – models the normal CR filtered intake flow rate. Filter efficiencies are 99% for aerosol (HEPA) and 95% for elemental and organic iodines (charcoal). Chlorine Mode has no filtered intake. This corresponds to the current presence of the HEPA filter and the performance of charcoal with the CR in Radiation Mode.
  - 3. Control Room Exhaust (Equilibrium)
    - From Compartment 4 – Control Room
    - To Compartment 3 – Environment
    - Transfer mechanism – "Filter" selected
    - Filter Efficiency Panel – Radiation Mode Flow rate – 0 - 720 hours, 750 cfm – This equals the total flow that was taken into the CR volume, which includes inleakage (225 + 525 cfm). Chlorine Mode Flow Rate – 0-720 hours, 225 cfm – which balances the inleakage.
    - Filter Efficiency Panel – Filter efficiency is entered as 100.0% for all chemical forms of iodine, for all time periods. This is the exit from the control room to the environment; the filtration prevents a double counting of the iodine release, although RADTRAD 3.03 documentation indicates that this effect has been eliminated.
  - 4. Control Room Unfiltered Inleakage
    - From Compartment 3 – Environment
    - To Compartment 4 – Control Room
    - Transfer mechanism – "Filter" selected
    - Filter Efficiency Panel – Flow rate - 0-720 hours, 225 cfm – models the normal Radiation Mode and Chlorine Mode CR unfiltered inleakage flow rate.
    - Filter Efficiency Panel – Filter efficiency is entered as 0.0% for all chemical forms of iodine, for the accident duration, because this is an unfiltered path.
  - 5. Reactor Enclosure Exhaust to SGTS Node
    - From Compartment 2 – Reactor Enclosure
    - To Compartment 5 – SGTS Node
    - Transfer mechanism – "Filter" selected
    - Filter Efficiency Panel - Flow rate - 0-1 minute, 9.00E7 cfm – artificially high flow rate to <u>not</u> credit the mixing effect associated with RERS startup (first two minutes are before gap release phase). Flow rates input to this pathway after 1 minute, which simulate the time-dependent credit for RERS mixing, are derived according to the discussion in Section 4.5.1.1. Filter Efficiency is 99% for aerosol (HEPA), and 95% for elemental and organic iodines (charcoal), after the first 15.5 minutes, and then for accident duration - This is an intermediary pathway to effectively model SGTS filtration in series.
  - 6. SGTS Node to Environment
    - From Compartment 5 – SGTS Node
    - To Compartment 3 – Environment
    - Transfer mechanism – "Filter" selected
    - Filter Efficiency Panel - Flow rate - 0-1 minute, 9.00E7 cfm – artificially high flow rate to <u>not</u> credit the mixing effect associated with RERS startup (first two minutes are before gap release phase). Flow rates input to this pathway after 1 minute, which simulate the time-dependent credit for RERS mixing, are derived according to the discussion in Section 4.5.1.1. Filter Efficiency 0% during 0 to 15.5 minute drawdown period, then 99% for aerosol (HEPA), and elemental and organic iodines (charcoal), thereafter.

- Dose Locations (ECCS Leakage)

- Exclusion Area Boundary
  - In Compartment 2 – Environment
  - Breathing Rate - RADTRAD Default – RG 1.183.
  - χ/Q – **See Table 3.1,** 0-2 hr accident χ/Q applied to maximum dose effective release period.

- Low Population Zone
  - In Compartment 2 – Environment
  - Breathing Rate – RADTRAD Default – RG 1.183.
  - χ/Q – **See Table 3.1.**

- Control Room
  - In Compartment 3 – Control Room
  - Breathing Rate – RADTRAD Default – RG 1.183.
  - Occupancy – RADTRAD Default – RG. 1.183
  - χ/Q – **See Table 3.1.**

- Source Terms and Dose Conversion Factor
  - Nuclide Inventory – 3527 MWth, LGS Specific NIF for 60 MACCS isotopes; Iodines only for ECCS leakage. See Attachment A.
  - Release Fractions and Timing – RADTRAD standard BWR-DBA values, no delay.
  - Dose Conversion Factors – RADTRAD Library of FGR 11&12 values for 60 MACCS isotopes
  - Decay/No Daughter Products – Enabled - Decay considered; Daughter Products from ECCS leakage considered separately and found to make a negligible dose contribution.
  - Iodine Chemical Fractions – NUREG-1465 based Iodine Chemical Form fractions, however, since produced by flashing, treated as 97% elemental and 3% organic.

6.2. *Other Dose Calculations*

6.2.1. Shine Doses to Control Room from External Sources

LGS post-LOCA direct shine dose from sources outside of the control room is dominated by a Unit 1 core spray pipe with a 14" NPS, located 18 inches from the 36-inch thick shield wall between the control room and the Reactor Enclosure.

The dose from the pipe has been re-evaluated based on AST based ECCS fluid radionuclide concentrations integrated over the accident duration with standard control room occupancy credit for the 1 to 4 day and 4 to 30 day periods. However, because of the relatively thick shield wall involved, an investigation was performed to determine what additional isotopes merit consideration. This involved an ORIGEN2 core source term analysis, with time integration to determine relative importances. As a result, a total of 110 isotopes were evaluated in determining doses to CR areas accessible to personnel from shielded ECCS piping, as described in Attachment C. The resulting maximum integrated dose from this pipe is 1.48 rem at 1 foot from the interior surface of the control room perpendicular to that surface. As a measure of conservatism, this integrated dose at 1 foot is used for the entire control room.

Other external sources are also evaluated in Attachment C. The only other major dose contribution was for an RHR pipe located 50 to 60 feet from the control room occupied space. The calculated dose inside of the control room from this contributor was determined to be 0.18 rem. Reactor Enclosure airborne activity is also evaluated, and determined to be 0.039 rem. The dose is small due to the 3-foot thick shield wall between these zones. The RERS filters are separated from the control room by the drywell and spent fuel pool and do not contribute to control room doses. SGTS filters are separated from the control room by approximately 60 feet of distance and a minimum of 4.5 feet of concrete, and contribute no significant dose. Similarly, CREFAS

filters are separated from the control room by approximately 30 feet and approximately 3.5 feet of concrete, and have significantly less activity than SGTS filters. Therefore, doses from SGTS and CREFAS filters are considered negligible. The control room has no external walls, so external plume contributions are also negligible.

6.2.2. Vital Area Considerations

Based on discussion in Section 4.11 and Attachment G, the existing analyses included in UFSAR Section 1.13 can be considered conservative. Given compliance with GDC-19 limit of 5 rem, based on TID-14844 source terms, compliance can be expected with 10CFR 50.67 control room dose limits with AST.

7. Summary and Conclusions

7.1. DBA LOCA Dose Results for EAB, LPZ, and for CR as a Function of Unfiltered Inleakage

The following Table summarizes calculated doses and related acceptance criteria for the EAB, LPZ and CR. All results are within regulatory limits.

LOCATION			DOSE CONTRIBUTOR
EAB (rem TEDE)	LPZ (rem TEDE)	Control Room (rem TEDE)	
0.867 (worst 2-hour period starts at 3.9 hours)	1.126	2.517	Filtered Primary Containment (PC) Leakage (unfiltered for 15.5 minutes, SGTS filtered thereafter) [100% of L_A], Control Room in Rad Mode
0.021 (worst 2-hour period starts at 10.4 hours)	0.145	0.550	MSIV Leakage with piping deposition credit, no condenser tube deposition credit, and resuspended iodine. *[200 scfh total all MS lines, 100 scfh max/line]*
0.005 (worst 2-hour period starts at 0.0 hours)	0.002	0.017	ECCS Leakage in Secondary Containment (SC) *[5 gpm]*
		1.70	Gamma Shine to Control Room General Area
0.893	**1.27**	**4.78**	**Total Calculated Value**
25	**25**	**5**	**Regulatory Limits**

The above control room doses are for the bounding Radiation Mode with 525 cfm of filtered fresh air intake for pressurization, and a total of 225 cfm of unfiltered Inleakage. As shown on Page A-1 of Attachment A, the calculated total control room dose for the unpressurized Chlorine Mode with 225 cfm of unfiltered inleakage is lower.

Attachment A also shows the calculational margin associated with crediting deposition on condenser tubing in the alternative drain pathway to the environment.

As shown in Attachment G for the Security Center accessibility analysis, AST based doses (1.37 rem TEDE) are bounded by TID-14844 release based estimated TEDE dose (3.08 rem). Therefore, vital areas remain accessible.

7.2. Principal AST Supported Plant Operation and Parameter Changes

The following plant changes are supported by this calculation:

- A 2-minute delay before the start of gap release [Ref. (36)] is a basis for this accident analysis. This provides one element in evaluations of the potential for relaxation of Primary and Secondary Containment isolation valve closure time limits.

- Based on the limited amount of time spent in high volume containment purging (principally for inerting and de-inerting), and the presence of the PCIG system which minimizes the need for low volume purging to control containment pressure, LGS is assumed to not use routine purging for purposes of compliance with RG 1.183 guidance.
- An allowance of 15.5 minutes for secondary containment drawdown is used in these analyses, not including the expected 2 minutes before the start of gap releases. Therefore, a safety limit of up to 17.5 minutes for SC drawdown is justified by this calculation.
- Control room inleakage assumptions have been selected to provide additional margin. The dose analyses are performed with an assumed total of 225 cfm of unfiltered Inleakage for the accident duration.
- The design basis for external radioactivity source external to the control room is now based on an extended set of isotopes, with AST assumptions of releases and timing.

8. Owner's Acceptance Review Checklist for External Design Analysis

DESIGN ANALYSIS NO. LM-0646 REV: 2

		Yes	No	N/A
1.	Do assumptions have sufficient rationale?	☑	☐	☐
2.	Are assumptions compatible with the way the plant is operated and with the licensing basis?	☑	☐	☐
3.	Do the design inputs have sufficient rationale?	☑	☐	☐
4.	Are design inputs correct and reasonable?	☑	☐	☐
5.	Are design inputs compatible with the way the plant is operated and with the licensing basis?	☑	☐	☐
6.	Are Engineering Judgments clearly documented and justified?	☑	☐	☐
7.	Are Engineering Judgments compatible with the way the plant is operated and with the licensing basis?	☑	☐	☐
8.	Do the results and conclusions satisfy the purpose and objective of the Design Analysis?	☑	☐	☐
9.	Are the results and conclusions compatible with the way the plant is operated and with the licensing basis?	☑	☐	☐
10.	Does the Design Analysis include the applicable design basis documentation?	☑	☐	☐
11.	Have any limitations on the use of the results been identified and transmitted to the appropriate organizations?	☐	☐	☑
12.	Are there any unverified assumptions?	☐	☑	☐
13.	Do all unverified assumptions have a tracking and closure mechanism in place?	☐	☐	☑
14.	Have all affected design analyses been documented on the Affected Documents List (ADL) for the associated Configuration Change?	☑	☐	☐
15.	Do the sources of inputs **and** analysis methodology used meet current technical requirements and regulatory commitments? (If the input sources **or** analysis methodology are based on an out-of-date methodology or code, additional reconciliation may be required if the site has since committed to a more recent code)	☑	☐	☐
16.	Have vendor supporting technical documents and references (including GE DRFs) been reviewed when necessary?	☑	☐	☐

EXELON REVIEWER: T.J. Mscisz / [signature] **DATE:** 6/14/06
Print / Sign

Calculation No. LM-0646, Rev. 2
"Re-analysis of Loss of Coolant Accident (LOCA) Using Alternative Source Term Methodology"
Attachment A
RADTRAD Runs for AST LOCA Dose Analysis

This attachment contains run outputs for all dose contributing cases that were modeled for this LGS LOCA analysis. The two tables below show a tabulation of doses from the various dose contributing activity leakage pathways that are associated with the analyzed DBA-LOCA. In the first table, dose consequences with the Control Room in Radiation Mode, the bounding Control Room mode of operation, are listed. These include the scoping runs that analyze possible, but unused, credit for Condenser Tubing. The second shows the Chlorine Mode dose consequences of only the DBA cases. The RADTRAD runs are listed in the order they appear in this attachment; the nuclide information files (NIF) and release fraction and timing (RFT) appear after the runs of this attachment, and are named "Limerick AST Source Terms.nif", "Limerick AST ECCS Source Terms.nif", "BWR_DBA.RFT", and "BWR_I.RFT, respectively.

Radiation Mode Runs

Activity Leakage Pathway	Dose Location			RADTRAD Run Output Filename
	Control Room (rem TEDE)	EAB (rem TEDE)	LPZ (rem TEDE)	
Primary Containment Leakage	2.5174E+00	8.6664E-01	1.1258E+00	LGS LOCA PC Leak - Stepwise RERS Mixing Case - 3,5 min Start - 225cfm CR Unfilt Inleak - Rad Mode.o0
MSIV Leakage (No Condenser Tube Credit)	4.9919E-01	2.1203E-02	1.3742E-01	LGS LOCA MSIV Leak (24-hr Settling Distribution) - New Design Basis - 225cfm CR Unfilt Inleak - Rad Mode.o0; LGS LOCA MSIV Leak (24-hr Settling Distribution) - New Design Basis - Line A Resuspension Only - 225cfm CR Unfilt Inleak - Rad Mode.o0; LGS LOCA MSIV Leak (24-hr Settling Distribution) - New Design Basis - Line B Resuspension Only - 225cfm CR Unfilt Inleak - Rad Mode.o0
Line A Resuspended Iodine	2.5989E-02	1.3034E-04	3.6349E-03	
Line B Resuspended Iodine	2.5038E-02	1.1875E-04	3.4830E-03	
MSIV Leakage (10% Condenser Tube Credit)	4.8383E-01	2.0731E-02	1.3505E-01	LGS LOCA MSIV Leak (24-hr Settling Distribution) – 10th of HP Condenser Tubes - 225cfm CR Unfilt Inleak - Rad Mode.o0; LGS LOCA MSIV Leak (24-hr Settling Distribution) – 10th of HP Condenser Tubes - Line A Resuspension Only - 225cfm CR Unfilt Inleak - Rad Mode.o0; LGS LOCA MSIV Leak (24-hr Settling Distribution) – 10th of HP Condenser Tubes - Line B Resuspension Only - 225cfm CR Unfilt Inleak - Rad Mode.o0
Line A Resuspended Iodine	2.6029E-02	1.3377E-04	3.6404E-03	
Line B Resuspended Iodine	2.5136E-02	1.2506E-04	3.4967E-03	
MSIV Leakage (100% Condenser Tube Credit)	4.8197E-01	2.0676E-02	1.3477E-01	LGS LOCA MSIV Leak (24-hr Settling Distribution) – All of HP Condenser Tubes - 225cfm CR Unfilt Inleak - Rad Mode.o0; LGS LOCA MSIV Leak (24-hr Settling Distribution) – All of HP Condenser Tubes - Line A Resuspension Only - 225cfm CR Unfilt Inleak - Rad Mode.o0; LGS LOCA MSIV Leak (24-hr Settling Distribution) – All of HP Condenser Tubes - Line B Resuspension Only - 225cfm CR Unfilt Inleak - Rad Mode.o0
Line A Resuspended Iodine	2.6040E-02	1.3459E-04	3.6419E-03	
Line B Resuspended Iodine	2.5162E-02	1.2652E-04	3.5003E-03	
ECCS Leakage	1.6587E-02	5.1027E-03	2.0905E-03	LGS LOCA ECCS Leak - New Design Basis - 225cfm CR Unfilt Inleak - Rad Mode.o0

Chlorine Mode Runs

Activity Leakage Pathway	Dose Location			RADTRAD Run Output Filename
	Control Room (rem TEDE)	EAB (rem TEDE)	LPZ (rem TEDE)	
Primary Containment Leakage	1.7698E+00	8.6664E-01	1.1258E+00	LGS LOCA PC Leak - Stepwise RERS Mixing Case - 3,5 min Start - 225cfm CR Unfilt Inleak - Chlorine Mode.o0
MSIV Leakage (No Condenser Tube Credit)	4.4963E-01	2.1203E-02	1.3742E-01	LGS LOCA MSIV Leak (24-hr Settling Distribution) - New Design Basis - 225cfm CR Unfilt Inleak - Chlorine Mode.o0
ECCS Leakage	1.4992E-02	5.1027E-03	2.0905E-03	LGS LOCA ECCS Leak - New Design Basis - 225cfm CR Unfilt Inleak - Chlorine Mode.o0

```
 ######################################################################
    RADTRAD Version 3.03 (Spring 2001) run on  6/13/2006  at 12:42:08
 ######################################################################

 ######################################################################
                      File information
 ######################################################################

 Plant file           = C:\Documents and Settings\Aleem Boatright\My Documents\My
Work\Exelon\AST\Limerick\LGS LOCA\RADTRAD\LGS LOCA PC Leak - Stepwise RERS Mixing
Case - 3,5 min Start - 225cfm CR Unfilt Inleak - Rad Mode.psf
 Inventory file       = c:\program files\radtrad3-03\defaults\limerick ast source
terms.nif
 Release file         = c:\program files\radtrad3-03\defaults\bwr_dba.rft
 Dose Conversion file = c:\program files\radtrad3-03\defaults\fgr11&12.inp



     #####    ####   #####    #  #     #  #####   #    #  #####
     #    #  #       #        #  ##    #  #    #  #    #    #
     #    #  #       #        #  # #   #  #    #  #    #    #
     #####    ####   ####     #  #  #  #  #####   #    #    #
     #            #  #        #  #   # #  #       #    #    #
     #            #  #        #  #    ##  #       #    #    #
     #        ####   #        #  #     #  #        ####     #


 Radtrad 3.03 4/15/2001
 LGS PC Leak; 99% Aerosol, 95% E & O RERS Filter; 50% Leak Reduct at 24 hrs; 99%
Filtration for SGTS; 99% Aerosol, 99% E&O Filtration for Control Room - No CREFAS
Delay - Control Room in Rad Mode - 3000cfm -10% (2175cfm CR Recirc)
 Nuclide Inventory File:
 c:\program files\radtrad3-03\defaults\limerick ast source terms.nif
 Plant Power Level:
  3.5270E+03
 Compartments:
   5
 Compartment 1:
 Primary Containment
   3
  3.7907E+05
   0
   0
   0
   1
   0
 Compartment 2:
 Reactor Enclosure
   3
  1.8000E+06
   0
   0
   1
   0
   0
 Compartment 3:
 Environment
```

```
  2
 0.0000E+00
  0
  0
  0
  0
  0
Compartment 4:
Control Room
  1
 1.2600E+05
  0
  0
  1
  0
  0
Compartment 5:
SGTS Node
  3
 1.0000E+00
  0
  0
  0
  0
  0
Pathways:
  6
Pathway 1:
Primary Containment to Reactor Enclosure
  1
  2
  4
Pathway 2:
Reactor Enclosure to SGTS Node
  2
  5
  2
Pathway 3:
Environment to Control Room - Unfiltered Inleakage
  3
  4
  2
Pathway 4:
Environment to Control Room - Filtered Intake
  3
  4
  2
Pathway 5:
Control Room to Environment
  4
  3
  2
Pathway 6:
SGTS Node to  Environment
  5
  3
  2
End of Plant Model File
Scenario Description Name:
```

```
Plant Model Filename:

Source Term:
  1
  1   1.0000E+00
c:\program files\radtrad3-03\defaults\fgr11&12.inp
c:\program files\radtrad3-03\defaults\bwr_dba.rft
  0.0000E+00
  1
  9.5000E-01   4.8500E-02   1.5000E-03   1.0000E+00
Overlying Pool:
  0
  0.0000E+00
  0
  0
  0
  0
Compartments:
  5
Compartment 1:
  0
  1
  0
  0
  0
  0
  0
  3
  3
  1.0000E+01
  1
  1
  0.0000E+00   0.0000E+00
Compartment 2:
  0
  1
  0
  0
  0
  0
  1
  5.1000E+04
  4
  0.0000E+00   0.0000E+00   0.0000E+00   0.0000E+00
  1.6700E-02   0.0000E+00   0.0000E+00   0.0000E+00
  2.5830E-01   9.9000E+01   9.5000E+01   9.5000E+01
  7.2000E+02   0.0000E+00   0.0000E+00   0.0000E+00
  0
  0
Compartment 3:
  0
  1
  0
  0
  0
  0
  0
  0
  0
Compartment 4:
```

```
  0
  1
  0
  0
  0
  0
  1
  2.1750E+03
  3
  0.0000E+00   9.9000E+01   9.5000E+01   9.5000E+01
  5.0000E-01   9.9000E+01   9.5000E+01   9.5000E+01
  7.2000E+02   0.0000E+00   0.0000E+00   0.0000E+00
  0
  0
Compartment 5:
  0
  1
  0
  0
  0
  0
  0
  0
  0
Pathways:
  6
Pathway 1:
  0
  0
  0
  0
  0
  0
  0
  0
  0
  1
  3
  0.0000E+00   5.0000E-01
  2.4000E+01   2.5000E-01
  7.2000E+02   0.0000E+00
  0
Pathway 2:
  0
  0
  0
  0
  0
  1
 10
  0.0000E+00   9.0000E+07   0.0000E+00   0.0000E+00   0.0000E+00
  1.6700E-02   9.0000E+07   0.0000E+00   0.0000E+00   0.0000E+00
  5.8300E-02   4.0930E+04   0.0000E+00   0.0000E+00   0.0000E+00
  1.0000E-01   2.1230E+04   0.0000E+00   0.0000E+00   0.0000E+00
  1.4170E-01   1.4690E+04   0.0000E+00   0.0000E+00   0.0000E+00
  1.8330E-01   1.1430E+04   0.0000E+00   0.0000E+00   0.0000E+00
  2.2500E-01   9.4760E+03   0.0000E+00   0.0000E+00   0.0000E+00
  2.5830E-01   7.8960E+03   9.9000E+01   9.5000E+01   9.5000E+01
  2.6670E-01   6.8170E+03   9.9000E+01   9.5000E+01   9.5000E+01
```

```
  3.9583E-01   5.0000E+03   9.9000E+01   9.5000E+01   9.5000E+01
  0
  0
  0
  0
  0
  0
Pathway 3:
  0
  0
  0
  0
  0
  1
  2
  0.0000E+00   2.2500E+02   0.0000E+00   0.0000E+00   0.0000E+00
  7.2000E+02   0.0000E+00   0.0000E+00   0.0000E+00   0.0000E+00
  0
  0
  0
  0
  0
  0
Pathway 4:
  0
  0
  0
  0
  0
  1
  3
  0.0000E+00   5.2500E+02   9.9000E+01   9.5000E+01   9.5000E+01
  5.0000E-01   5.2500E+02   9.9000E+01   9.5000E+01   9.5000E+01
  7.2000E+02   0.0000E+00   0.0000E+00   0.0000E+00   0.0000E+00
  0
  0
  0
  0
  0
  0
Pathway 5:
  0
  0
  0
  0
  0
  1
  3
  0.0000E+00   7.5000E+02   1.0000E+02   1.0000E+02   1.0000E+02
  5.0000E-01   7.5000E+02   1.0000E+02   1.0000E+02   1.0000E+02
  7.2000E+02   0.0000E+00   0.0000E+00   0.0000E+00   0.0000E+00
  0
  0
  0
  0
  0
  0
Pathway 6:
  0
  0
```

```
  0
  0
  0
  1
 10
  0.0000E+00   9.0000E+07   0.0000E+00   0.0000E+00   0.0000E+00
  1.6700E-02   9.0000E+07   0.0000E+00   0.0000E+00   0.0000E+00
  5.8300E-02   4.0930E+04   0.0000E+00   0.0000E+00   0.0000E+00
  1.0000E-01   2.1230E+04   0.0000E+00   0.0000E+00   0.0000E+00
  1.4170E-01   1.4690E+04   0.0000E+00   0.0000E+00   0.0000E+00
  1.8330E-01   1.1430E+04   0.0000E+00   0.0000E+00   0.0000E+00
  2.2500E-01   9.4760E+03   0.0000E+00   0.0000E+00   0.0000E+00
  2.5830E-01   7.8960E+03   9.9000E+01   9.9000E+01   9.9000E+01
  2.6670E-01   6.8170E+03   9.9000E+01   9.9000E+01   9.9000E+01
  3.9583E-01   5.0000E+03   9.9000E+01   9.9000E+01   9.9000E+01
  0
  0
  0
  0
  0
  0
Dose Locations:
  3
Location 1:
Control Room
  4
  0
  1
  2
  0.0000E+00   3.5000E-04
  7.2000E+02   0.0000E+00
  1
  4
  0.0000E+00   1.0000E+00
  2.4000E+01   6.0000E-01
  9.6000E+01   4.0000E-01
  7.2000E+02   0.0000E+00
Location 2:
EAB
  3
  1
  2
  0.0000E+00   3.1800E-04
  8.0000E+00   0.0000E+00
  1
  2
  0.0000E+00   3.5000E-04
  8.0000E+00   0.0000E+00
  0
Location 3:
LPZ
  3
  1
  5
  0.0000E+00   5.7900E-05
  8.0000E+00   4.1000E-05
  2.4000E+01   1.9500E-05
  9.6000E+01   6.6800E-06
  7.2000E+02   0.0000E+00
  1
```

```
   4
   0.0000E+00   3.5000E-04
   8.0000E+00   1.8000E-04
   2.4000E+01   2.3000E-04
   7.2000E+02   0.0000E+00
   0
 Effective Volume Location:
   1
   6
   0.0000E+00   6.8800E-03
   2.0000E+00   5.1700E-03
   8.0000E+00   2.0400E-03
   2.4000E+01   1.2900E-03
   9.6000E+01   9.6300E-04
   7.2000E+02   0.0000E+00
 Simulation Parameters:
   3
   0.0000E+00   1.6670E-03
   1.6700E-02   2.5000E-02
   2.5830E-01   0.0000E+00
 Output Filename:
 C:\Documents and Settings\Aleem Boatright\My Documents\My
Work\Exelon\AST\Limerick\LGS LOCA\RADTRAD\LGS LOCA PC Leak - Stepwise RERS Mixing
Case - 3,5 min Start - 225cfm CR Unfilt Inleak - Rad Mode.o0
   1
   1
   1
   0
   1
 End of Scenario File
```

```
#######################################################################
   RADTRAD Version 3.03 (Spring 2001) run on  6/13/2006  at 12:42:08
#######################################################################

#######################################################################
                     Plant Description
#######################################################################

Number of Nuclides =  60

Inventory Power =   1.0000E+00 MWth
Plant Power Level =   3.5270E+03 MWth

Number of compartments    =   5

Compartment information

Compartment number  1  (Source term fraction =   1.0000E+00
)
Name: Primary Containment
Compartment volume =   3.7907E+05 (Cubic feet)
Compartment type is Normal
Removal devices within compartment:
     Deposition
Pathways into and out of compartment  1
   Exit Pathway Number    1: Primary Containment to Reactor Enclosure

Compartment number  2
Name: Reactor Enclosure
Compartment volume =   1.8000E+06 (Cubic feet)
Compartment type is Normal
Removal devices within compartment:
     Filter(s)
Pathways into and out of compartment  2
   Inlet Pathway Number   1: Primary Containment to Reactor Enclosure
   Exit Pathway Number    2: Reactor Enclosure to SGTS Node

Compartment number  3
Name: Environment
Compartment type is Environment
Pathways into and out of compartment  3
   Inlet Pathway Number   5: Control Room to Environment
   Inlet Pathway Number   6: SGTS Node to  Environment
   Exit Pathway Number    3: Environment to Control Room - Unfiltered Inleakage
   Exit Pathway Number    4: Environment to Control Room - Filtered Intake

Compartment number  4
Name: Control Room
Compartment volume =   1.2600E+05 (Cubic feet)
Compartment type is Control Room
Removal devices within compartment:
     Filter(s)
Pathways into and out of compartment  4
   Inlet Pathway Number   3: Environment to Control Room - Unfiltered Inleakage
   Inlet Pathway Number   4: Environment to Control Room - Filtered Intake
   Exit Pathway Number    5: Control Room to Environment

Compartment number  5
Name: SGTS Node
```

```
Compartment volume =   1.0000E+00 (Cubic feet)
Compartment type is Normal
Pathways into and out of compartment  5
   Inlet Pathway Number   2: Reactor Enclosure to SGTS Node
   Exit Pathway Number    6: SGTS Node to  Environment

Total number of pathways =   6
```

```
#######################################################################
   RADTRAD Version 3.03 (Spring 2001) run on  6/13/2006  at 12:42:08
#######################################################################

#######################################################################
                    Scenario Description
#######################################################################
```

Radioactive Decay is enabled
Calculation of Daughters is enabled

Release Fractions and Timings

	GAP	EARLY IN-VESSEL	LATE RELEASE	RELEASE MASS
	0.500000 hr	1.5000 hrs	0.0000 hrs	(gm)
NOBLES	5.0000E-02	9.5000E-01	0.0000E+00	4.625E+03
IODINE	5.0000E-02	2.5000E-01	0.0000E+00	3.033E+02
CESIUM	5.0000E-02	2.0000E-01	0.0000E+00	5.099E+04
TELLURIUM	0.0000E+00	5.0000E-02	0.0000E+00	4.012E+01
STRONTIUM	0.0000E+00	2.0000E-02	0.0000E+00	1.712E+03
BARIUM	0.0000E+00	2.0000E-02	0.0000E+00	4.739E+01
RUTHENIUM	0.0000E+00	2.5000E-03	0.0000E+00	5.988E+01
CERIUM	0.0000E+00	5.0000E-04	0.0000E+00	5.914E+02
LANTHANUM	0.0000E+00	2.0000E-04	0.0000E+00	8.731E+00

Inventory Power = 3527. MWt

Nuclide Name	Group	Specific Inventory (Ci/MWt)	half life (s)	Whole Body DCF (Sv-m3/Bq-s)	Inhaled Thyroid (Sv/Bq)	Inhaled Effective (Sv/Bq)
Co-58	7	1.529E+02	6.117E+06	4.760E-14	8.720E-10	2.940E-09
Co-60	7	1.830E+02	1.663E+08	1.260E-13	1.620E-08	5.910E-08
Kr-85	1	3.946E+02	3.383E+08	1.190E-16	0.000E+00	0.000E+00
Kr-85m	1	8.313E+03	1.613E+04	7.480E-15	0.000E+00	0.000E+00
Kr-87	1	1.633E+04	4.578E+03	4.120E-14	0.000E+00	0.000E+00
Kr-88	1	2.303E+04	1.022E+04	1.020E-13	0.000E+00	0.000E+00
Rb-86	3	6.518E+01	1.612E+06	4.810E-15	1.330E-09	1.790E-09
Sr-89	5	2.798E+04	4.363E+06	7.730E-17	7.960E-12	1.120E-08
Sr-90	5	3.178E+03	9.190E+08	7.530E-18	2.690E-10	3.510E-07
Sr-91	5	3.801E+04	3.420E+04	4.924E-14	9.930E-12	4.547E-10
Sr-92	5	4.017E+04	9.756E+03	6.790E-14	3.920E-12	2.180E-10
Y-90	9	3.272E+03	2.304E+05	1.900E-16	5.170E-13	2.280E-09
Y-91	9	3.448E+04	5.055E+06	2.600E-16	8.500E-12	1.320E-08
Y-92	9	4.029E+04	1.274E+04	1.300E-14	1.050E-12	2.110E-10
Y-93	9	4.526E+04	3.636E+04	4.800E-15	9.260E-13	5.820E-10
Zr-95	9	4.489E+04	5.528E+06	3.600E-14	1.440E-09	6.390E-09
Zr-97	9	4.657E+04	6.084E+04	4.432E-14	2.315E-11	1.171E-09
Nb-95	9	4.512E+04	3.037E+06	3.740E-14	3.580E-10	1.570E-09
Mo-99	7	5.078E+04	2.376E+05	7.280E-15	1.520E-11	1.070E-09
Tc-99m	7	4.447E+04	2.167E+04	5.890E-15	5.010E-11	8.800E-12
Ru-103	7	4.202E+04	3.394E+06	2.251E-14	2.570E-10	2.421E-09
Ru-105	7	2.908E+04	1.598E+04	3.810E-14	4.150E-12	1.230E-10
Ru-106	7	1.730E+04	3.181E+07	1.040E-14	1.720E-09	1.290E-07
Rh-105	7	2.752E+04	1.273E+05	3.720E-15	2.880E-12	2.580E-10
Sb-127	4	2.896E+03	3.326E+05	3.330E-14	6.150E-11	1.630E-09
Sb-129	4	8.638E+03	1.555E+04	7.140E-14	9.720E-12	1.740E-10
Te-127	4	2.873E+03	3.366E+04	2.420E-16	1.840E-12	8.600E-11
Te-127m	4	3.855E+02	9.418E+06	1.470E-16	9.660E-11	5.810E-09
Te-129	4	8.501E+03	4.176E+03	2.750E-15	5.090E-13	2.090E-11
Te-129m	4	1.267E+03	2.903E+06	3.337E-15	1.563E-10	6.484E-09

Te-131m	4	3.869E+03	1.080E+05	7.463E-14	3.669E-08	1.758E-09
Te-132	4	3.821E+04	2.815E+05	1.030E-14	6.280E-08	2.550E-09
I-131	2	2.687E+04	6.947E+05	1.820E-14	2.920E-07	8.890E-09
I-132	2	3.881E+04	8.280E+03	1.120E-13	1.740E-09	1.030E-10
I-133	2	5.556E+04	7.488E+04	2.940E-14	4.860E-08	1.580E-09
I-134	2	6.165E+04	3.156E+03	1.300E-13	2.880E-10	3.550E-11
I-135	2	5.192E+04	2.380E+04	8.294E-14	8.460E-09	3.320E-10
Xe-133	1	5.491E+04	4.532E+05	1.560E-15	0.000E+00	0.000E+00
Xe-135	1	2.228E+04	3.272E+04	1.190E-14	0.000E+00	0.000E+00
Cs-134	3	7.280E+03	6.507E+07	7.570E-14	1.110E-08	1.250E-08
Cs-136	3	2.027E+03	1.132E+06	1.060E-13	1.730E-09	1.980E-09
Cs-137	3	4.538E+03	9.467E+08	2.725E-14	7.930E-09	8.630E-09
Ba-139	6	5.084E+04	4.962E+03	2.170E-15	2.400E-12	4.640E-11
Ba-140	6	4.896E+04	1.101E+06	8.580E-15	2.560E-10	1.010E-09
La-140	9	5.019E+04	1.450E+05	1.170E-13	6.870E-11	1.310E-09
La-141	9	4.640E+04	1.415E+04	2.390E-15	9.400E-12	1.570E-10
La-142	9	4.532E+04	5.550E+03	1.440E-13	8.740E-12	6.840E-11
Ce-141	8	4.492E+04	2.808E+06	3.430E-15	2.550E-11	2.420E-09
Ce-143	8	4.427E+04	1.188E+05	1.290E-14	6.230E-12	9.160E-10
Ce-144	8	3.596E+04	2.456E+07	2.773E-15	2.920E-10	1.010E-07
Pr-143	9	4.293E+04	1.172E+06	2.100E-17	1.680E-18	2.190E-09
Nd-147	9	1.838E+04	9.487E+05	6.190E-15	1.820E-11	1.850E-09
Np-239	8	5.397E+05	2.035E+05	7.690E-15	7.620E-12	6.780E-10
Pu-238	8	1.796E+02	2.769E+09	4.880E-18	3.860E-10	7.790E-05
Pu-239	8	1.200E+01	7.594E+11	4.240E-18	3.750E-10	8.330E-05
Pu-240	8	1.288E+01	2.063E+11	4.750E-18	3.760E-10	8.330E-05
Pu-241	8	6.182E+03	4.544E+08	7.250E-20	9.150E-12	1.340E-06
Am-241	9	9.528E+00	1.364E+10	8.180E-16	1.600E-09	1.200E-04
Cm-242	9	2.388E+03	1.407E+07	5.690E-18	9.410E-10	4.670E-06
Cm-244	9	2.602E+02	5.715E+08	4.910E-18	1.010E-09	6.700E-05

Nuclide	Daughter	Fraction	Daughter	Fraction	Daughter	Fraction
Kr-85m	Kr-85	0.21	none	0.00	none	0.00
Kr-87	Rb-87	1.00	none	0.00	none	0.00
Kr-88	Rb-88	1.00	none	0.00	none	0.00
Sr-90	Y-90	1.00	none	0.00	none	0.00
Sr-91	Y-91m	0.58	Y-91	0.42	none	0.00
Sr-92	Y-92	1.00	none	0.00	none	0.00
Y-93	Zr-93	1.00	none	0.00	none	0.00
Zr-95	Nb-95m	0.01	Nb-95	0.99	none	0.00
Zr-97	Nb-97m	0.95	Nb-97	0.05	none	0.00
Mo-99	Tc-99m	0.88	Tc-99	0.12	none	0.00
Tc-99m	Tc-99	1.00	none	0.00	none	0.00
Ru-103	Rh-103m	1.00	none	0.00	none	0.00
Ru-105	Rh-105	1.00	none	0.00	none	0.00
Ru-106	Rh-106	1.00	none	0.00	none	0.00
Sb-127	Te-127m	0.18	Te-127	0.82	none	0.00
Sb-129	Te-129m	0.22	Te-129	0.77	none	0.00
Te-127m	Te-127	0.98	none	0.00	none	0.00
Te-129	I-129	1.00	none	0.00	none	0.00
Te-129m	Te-129	0.65	I-129	0.35	none	0.00
Te-131m	Te-131	0.22	I-131	0.78	none	0.00
Te-132	I-132	1.00	none	0.00	none	0.00
I-131	Xe-131m	0.01	none	0.00	none	0.00
I-133	Xe-133m	0.03	Xe-133	0.97	none	0.00
I-135	Xe-135m	0.15	Xe-135	0.85	none	0.00
Xe-135	Cs-135	1.00	none	0.00	none	0.00
Cs-137	Ba-137m	0.95	none	0.00	none	0.00
Ba-140	La-140	1.00	none	0.00	none	0.00
La-141	Ce-141	1.00	none	0.00	none	0.00

Ce-143	Pr-143	1.00	none	0.00	none	0.00
Ce-144	Pr-144m	0.02	Pr-144	0.98	none	0.00
Nd-147	Pm-147	1.00	none	0.00	none	0.00
Np-239	Pu-239	1.00	none	0.00	none	0.00
Pu-238	U-234	1.00	none	0.00	none	0.00
Pu-239	U-235	1.00	none	0.00	none	0.00
Pu-240	U-236	1.00	none	0.00	none	0.00
Pu-241	U-237	0.00	Am-241	1.00	none	0.00
Am-241	Np-237	1.00	none	0.00	none	0.00
Cm-242	Pu-238	1.00	none	0.00	none	0.00
Cm-244	Pu-240	1.00	none	0.00	none	0.00

Iodine fractions
Aerosol = 9.5000E-01
Elemental = 4.8500E-02
Organic = 1.5000E-03

COMPARTMENT DATA

Compartment number 1: Primary Containment
Natural Deposition (Powers' model): Aerosol data
Reactor type: 3
Percentile = 10 (%)

Natural Deposition: Elemental Removal Data

Time (hr)	Removal Coef. (hr^-1)
0.0000E+00	0.0000E+00

Compartment number 2: Reactor Enclosure

Compartment Filter Data

Time (hr)	Flow Rate (cfm)	Filter Efficiencies (%) Aerosol	Elemental	Organic
0.0000E+00	5.1000E+04	0.0000E+00	0.0000E+00	0.0000E+00
1.6700E-02	5.1000E+04	0.0000E+00	0.0000E+00	0.0000E+00
2.5830E-01	5.1000E+04	9.9000E+01	9.5000E+01	9.5000E+01
7.2000E+02	5.1000E+04	0.0000E+00	0.0000E+00	0.0000E+00

Compartment number 3: Environment

Compartment number 4: Control Room

Compartment Filter Data

Time (hr)	Flow Rate (cfm)	Filter Efficiencies (%) Aerosol	Elemental	Organic
0.0000E+00	2.1750E+03	9.9000E+01	9.5000E+01	9.5000E+01
5.0000E-01	2.1750E+03	9.9000E+01	9.5000E+01	9.5000E+01
7.2000E+02	2.1750E+03	0.0000E+00	0.0000E+00	0.0000E+00

Compartment number 5: SGTS Node

PATHWAY DATA

Pathway number 1: Primary Containment to Reactor Enclosure

Convection Data

Time (hr)	Flow Rate (% / day)
0.0000E+00	5.0000E-01

2.4000E+01	2.5000E-01
7.2000E+02	0.0000E+00

Pathway number 2: Reactor Enclosure to SGTS Node

Pathway Filter: Removal Data

Time (hr)	Flow Rate (cfm)	Filter Efficiencies (%) Aerosol	Elemental	Organic
0.0000E+00	9.0000E+07	0.0000E+00	0.0000E+00	0.0000E+00
1.6700E-02	9.0000E+07	0.0000E+00	0.0000E+00	0.0000E+00
5.8300E-02	4.0930E+04	0.0000E+00	0.0000E+00	0.0000E+00
1.0000E-01	2.1230E+04	0.0000E+00	0.0000E+00	0.0000E+00
1.4170E-01	1.4690E+04	0.0000E+00	0.0000E+00	0.0000E+00
1.8330E-01	1.1430E+04	0.0000E+00	0.0000E+00	0.0000E+00
2.2500E-01	9.4760E+03	0.0000E+00	0.0000E+00	0.0000E+00
2.5830E-01	7.8960E+03	9.9000E+01	9.5000E+01	9.5000E+01
2.6670E-01	6.8170E+03	9.9000E+01	9.5000E+01	9.5000E+01
3.9583E-01	5.0000E+03	9.9000E+01	9.5000E+01	9.5000E+01

Pathway number 3: Environment to Control Room - Unfiltered Inleakage

Pathway Filter: Removal Data

Time (hr)	Flow Rate (cfm)	Filter Efficiencies (%) Aerosol	Elemental	Organic
0.0000E+00	2.2500E+02	0.0000E+00	0.0000E+00	0.0000E+00
7.2000E+02	0.0000E+00	0.0000E+00	0.0000E+00	0.0000E+00

Pathway number 4: Environment to Control Room - Filtered Intake

Pathway Filter: Removal Data

Time (hr)	Flow Rate (cfm)	Filter Efficiencies (%) Aerosol	Elemental	Organic
0.0000E+00	5.2500E+02	9.9000E+01	9.5000E+01	9.5000E+01
5.0000E-01	5.2500E+02	9.9000E+01	9.5000E+01	9.5000E+01
7.2000E+02	0.0000E+00	0.0000E+00	0.0000E+00	0.0000E+00

Pathway number 5: Control Room to Environment

Pathway Filter: Removal Data

Time (hr)	Flow Rate (cfm)	Filter Efficiencies (%) Aerosol	Elemental	Organic
0.0000E+00	7.5000E+02	1.0000E+02	1.0000E+02	1.0000E+02
5.0000E-01	7.5000E+02	1.0000E+02	1.0000E+02	1.0000E+02
7.2000E+02	0.0000E+00	0.0000E+00	0.0000E+00	0.0000E+00

Pathway number 6: SGTS Node to Environment

Pathway Filter: Removal Data

Time (hr)	Flow Rate (cfm)	Filter Efficiencies (%) Aerosol	Elemental	Organic
0.0000E+00	9.0000E+07	0.0000E+00	0.0000E+00	0.0000E+00
1.6700E-02	9.0000E+07	0.0000E+00	0.0000E+00	0.0000E+00
5.8300E-02	4.0930E+04	0.0000E+00	0.0000E+00	0.0000E+00
1.0000E-01	2.1230E+04	0.0000E+00	0.0000E+00	0.0000E+00
1.4170E-01	1.4690E+04	0.0000E+00	0.0000E+00	0.0000E+00

1.8330E-01	1.1430E+04	0.0000E+00	0.0000E+00	0.0000E+00
2.2500E-01	9.4760E+03	0.0000E+00	0.0000E+00	0.0000E+00
2.5830E-01	7.8960E+03	9.9000E+01	9.9000E+01	9.9000E+01
2.6670E-01	6.8170E+03	9.9000E+01	9.9000E+01	9.9000E+01
3.9583E-01	5.0000E+03	9.9000E+01	9.9000E+01	9.9000E+01

LOCATION DATA

Location Control Room is in compartment 4

Location X/Q Data

Time (hr)	X/Q (s * m^-3)
0.0000E+00	6.8800E-03
2.0000E+00	5.1700E-03
8.0000E+00	2.0400E-03
2.4000E+01	1.2900E-03
9.6000E+01	9.6300E-04
7.2000E+02	0.0000E+00

Location Breathing Rate Data

Time (hr)	Breathing Rate (m^3 * sec^-1)
0.0000E+00	3.5000E-04
7.2000E+02	0.0000E+00

Location Occupancy Factor Data

Time (hr)	Occupancy Factor
0.0000E+00	1.0000E+00
2.4000E+01	6.0000E-01
9.6000E+01	4.0000E-01
7.2000E+02	0.0000E+00

Location EAB is in compartment 3

Location X/Q Data

Time (hr)	X/Q (s * m^-3)
0.0000E+00	3.1800E-04
8.0000E+00	0.0000E+00

Location Breathing Rate Data

Time (hr)	Breathing Rate (m^3 * sec^-1)
0.0000E+00	3.5000E-04
8.0000E+00	0.0000E+00

Location LPZ is in compartment 3

Location X/Q Data

Time (hr)	X/Q (s * m^-3)
0.0000E+00	5.7900E-05
8.0000E+00	4.1000E-05
2.4000E+01	1.9500E-05
9.6000E+01	6.6800E-06
7.2000E+02	0.0000E+00

Location Breathing Rate Data

Time (hr)	Breathing Rate (m^3 * sec^-1)
0.0000E+00	3.5000E-04
8.0000E+00	1.8000E-04
2.4000E+01	2.3000E-04
7.2000E+02	0.0000E+00

USER SPECIFIED TIME STEP DATA - SUPPLEMENTAL TIME STEPS

Time	Time step
0.0000E+00	1.6670E-03

```
1.6700E-02        2.5000E-02
2.5830E-01        0.0000E+00
```

```
#######################################################################
   RADTRAD Version 3.03 (Spring 2001) run on  6/13/2006  at 12:42:08
#######################################################################



     ####   #    #  #####  #####   #    #  #####
    #    # #    #    #    #    #  #    #    #
    #    # #    #    #    #    #  #    #    #
    #    # #    #    #    #####   #    #    #
    #    # #    #    #    #       #    #    #
    #    # #    #    #    #       #    #    #
     ####    ####     #    #        ####     #


#######################################################################
                                Dose Output
#######################################################################

Detailed model information at time (H) =    0.0167

     Natural deposition - Powers' Model, Compartment  1
Deposition Lambda (1 / Hours)
     Noble      Elemental  Organic    Aerosol
     0.0000E+00 0.0000E+00 0.0000E+00 7.0466E-01
Deposition Net DF
     Noble      Elemental  Organic    Aerosol
     1.0000E+00 1.0000E+00 1.0000E+00 1.0059E+00

Control Room Doses:

Time (h) =   0.0167    Whole Body   Thyroid       TEDE
Delta dose (rem)        2.0857E-07  5.8807E-04  2.5629E-05
Accumulated dose (rem)  2.0857E-07  5.8807E-04  2.5629E-05

EAB Doses:

Time (h) =   0.0167    Whole Body   Thyroid       TEDE
Delta dose (rem)        2.6592E-04  4.5201E-02  2.2222E-03
Accumulated dose (rem)  2.6592E-04  4.5201E-02  2.2222E-03

LPZ Doses:

Time (h) =   0.0167    Whole Body   Thyroid       TEDE
Delta dose (rem)        4.8417E-05  8.2299E-03  4.0461E-04
Accumulated dose (rem)  4.8417E-05  8.2299E-03  4.0461E-04

Detailed model information at time (H) =    0.0583

     Natural deposition - Powers' Model, Compartment  1
Deposition Lambda (1 / Hours)
     Noble      Elemental  Organic    Aerosol
     0.0000E+00 0.0000E+00 0.0000E+00 7.0466E-01
Deposition Net DF
     Noble      Elemental  Organic    Aerosol
     1.0000E+00 1.0000E+00 1.0000E+00 1.0207E+00
```

```
Control Room Doses:

Time (h) =    0.0583    Whole Body   Thyroid       TEDE
Delta dose (rem)         9.1780E-06  2.5879E-02  1.1277E-03
Accumulated dose (rem)   9.3866E-06  2.6467E-02  1.1534E-03

EAB Doses:

Time (h) =    0.0583    Whole Body   Thyroid       TEDE
Delta dose (rem)         3.0196E-03  5.1619E-01  2.5357E-02
Accumulated dose (rem)   3.2855E-03  5.6139E-01  2.7579E-02

LPZ Doses:

Time (h) =    0.0583    Whole Body   Thyroid       TEDE
Delta dose (rem)         5.4979E-04  9.3985E-02  4.6169E-03
Accumulated dose (rem)   5.9820E-04  1.0221E-01  5.0215E-03

Detailed model information at time (H) =    0.1000

     Natural deposition - Powers' Model, Compartment  1
Deposition Lambda (1 / Hours)
     Noble      Elemental  Organic    Aerosol
     0.0000E+00 0.0000E+00 0.0000E+00 7.0466E-01
Deposition Net DF
     Noble      Elemental  Organic    Aerosol
     1.0000E+00 1.0000E+00 1.0000E+00 1.0356E+00

Control Room Doses:

Time (h) =    0.1000    Whole Body   Thyroid       TEDE
Delta dose (rem)         1.9041E-05  5.3783E-02  2.3436E-03
Accumulated dose (rem)   2.8428E-05  8.0249E-02  3.4969E-03

EAB Doses:

Time (h) =    0.1000    Whole Body   Thyroid       TEDE
Delta dose (rem)         1.6236E-04  2.8116E-02  1.3789E-03
Accumulated dose (rem)   3.4478E-03  5.8950E-01  2.8958E-02

LPZ Doses:

Time (h) =    0.1000    Whole Body   Thyroid       TEDE
Delta dose (rem)         2.9562E-05  5.1192E-03  2.5106E-04
Accumulated dose (rem)   6.2777E-04  1.0733E-01  5.2726E-03

Detailed model information at time (H) =    0.1417

     Natural deposition - Powers' Model, Compartment  1
Deposition Lambda (1 / Hours)
     Noble      Elemental  Organic    Aerosol
     0.0000E+00 0.0000E+00 0.0000E+00 7.0466E-01
Deposition Net DF
     Noble      Elemental  Organic    Aerosol
     1.0000E+00 1.0000E+00 1.0000E+00 1.0508E+00

Control Room Doses:

Time (h) =    0.1417    Whole Body   Thyroid       TEDE
Delta dose (rem)         1.9405E-05  5.4766E-02  2.3863E-03
```

```
Accumulated dose (rem)  4.7832E-05  1.3502E-01  5.8833E-03

EAB Doses:

Time (h) =   0.1417    Whole Body   Thyroid       TEDE
Delta dose (rem)        3.0512E-04  5.3528E-02  2.6210E-03
Accumulated dose (rem)  3.7530E-03  6.4303E-01  3.1579E-02

LPZ Doses:

Time (h) =   0.1417    Whole Body   Thyroid       TEDE
Delta dose (rem)        5.5555E-05  9.7462E-03  4.7722E-04
Accumulated dose (rem)  6.8332E-04  1.1708E-01  5.7498E-03

Detailed model information at time (H) =    0.1833

     Natural deposition - Powers' Model, Compartment  1
Deposition Lambda (1 / Hours)
     Noble      Elemental  Organic    Aerosol
     0.0000E+00 0.0000E+00 0.0000E+00 7.0466E-01
Deposition Net DF
     Noble      Elemental  Organic    Aerosol
     1.0000E+00 1.0000E+00 1.0000E+00 1.0660E+00

Control Room Doses:

Time (h) =   0.1833    Whole Body   Thyroid       TEDE
Delta dose (rem)        2.0434E-05  5.7723E-02  2.5151E-03
Accumulated dose (rem)  6.8266E-05  1.9274E-01  8.3984E-03

EAB Doses:

Time (h) =   0.1833    Whole Body   Thyroid       TEDE
Delta dose (rem)        4.1802E-04  7.4320E-02  3.6331E-03
Accumulated dose (rem)  4.1710E-03  7.1735E-01  3.5212E-02

LPZ Doses:

Time (h) =   0.1833    Whole Body   Thyroid       TEDE
Delta dose (rem)        7.6111E-05  1.3532E-02  6.6150E-04
Accumulated dose (rem)  7.5943E-04  1.3061E-01  6.4113E-03

Detailed model information at time (H) =    0.2250

     Natural deposition - Powers' Model, Compartment  1
Deposition Lambda (1 / Hours)
     Noble      Elemental  Organic    Aerosol
     0.0000E+00 0.0000E+00 0.0000E+00 7.0466E-01
Deposition Net DF
     Noble      Elemental  Organic    Aerosol
     1.0000E+00 1.0000E+00 1.0000E+00 1.0814E+00

Control Room Doses:

Time (h) =   0.2250    Whole Body   Thyroid       TEDE
Delta dose (rem)        2.2207E-05  6.2807E-02  2.7364E-03
Accumulated dose (rem)  9.0473E-05  2.5555E-01  1.1135E-02

EAB Doses:
```

```
Time (h) =    0.2250    Whole Body   Thyroid       TEDE
Delta dose (rem)         5.2850E-04  9.5099E-02  4.6421E-03
Accumulated dose (rem)   4.6995E-03  8.1245E-01  3.9854E-02

LPZ Doses:

Time (h) =    0.2250    Whole Body   Thyroid       TEDE
Delta dose (rem)         9.6227E-05  1.7315E-02  8.4521E-04
Accumulated dose (rem)   8.5566E-04  1.4793E-01  7.2565E-03

Detailed model information at time (H) =    0.2583

     Natural deposition - Powers' Model, Compartment  1
Deposition Lambda (1 / Hours)
     Noble      Elemental  Organic    Aerosol
     0.0000E+00 0.0000E+00 0.0000E+00 7.0466E-01
Deposition Net DF
     Noble      Elemental  Organic    Aerosol
     1.0000E+00 1.0000E+00 1.0000E+00 1.0938E+00

Control Room Doses:

Time (h) =    0.2583    Whole Body   Thyroid       TEDE
Delta dose (rem)         1.9334E-05  5.4836E-02  2.3890E-03
Accumulated dose (rem)   1.0981E-04  3.1038E-01  1.3524E-02

EAB Doses:

Time (h) =    0.2583    Whole Body   Thyroid       TEDE
Delta dose (rem)         4.9116E-04  8.9400E-02  4.3579E-03
Accumulated dose (rem)   5.1906E-03  9.0185E-01  4.4212E-02

LPZ Doses:

Time (h) =    0.2583    Whole Body   Thyroid       TEDE
Delta dose (rem)         8.9429E-05  1.6278E-02  7.9347E-04
Accumulated dose (rem)   9.4509E-04  1.6420E-01  8.0500E-03

Detailed model information at time (H) =    0.2667

     Natural deposition - Powers' Model, Compartment  1
Deposition Lambda (1 / Hours)
     Noble      Elemental  Organic    Aerosol
     0.0000E+00 0.0000E+00 0.0000E+00 7.0466E-01
Deposition Net DF
     Noble      Elemental  Organic    Aerosol
     1.0000E+00 1.0000E+00 1.0000E+00 1.0969E+00

Control Room Doses:

Time (h) =    0.2667    Whole Body   Thyroid       TEDE
Delta dose (rem)         5.0694E-06  1.4342E-02  6.2480E-04
Accumulated dose (rem)   1.1488E-04  3.2472E-01  1.4149E-02

EAB Doses:

Time (h) =    0.2667    Whole Body   Thyroid       TEDE
Delta dose (rem)         1.9425E-05  2.7255E-06  1.9537E-05
Accumulated dose (rem)   5.2101E-03  9.0185E-01  4.4232E-02
```

```
LPZ Doses:

Time (h) =    0.2667    Whole Body   Thyroid       TEDE
Delta dose (rem)         3.5368E-06  4.9624E-07  3.5573E-06
Accumulated dose (rem)   9.4862E-04  1.6421E-01  8.0535E-03

Detailed model information at time (H) =    0.3958

     Natural deposition - Powers' Model, Compartment  1
Deposition Lambda (1 / Hours)
     Noble       Elemental  Organic    Aerosol
     0.0000E+00 0.0000E+00 0.0000E+00 7.0466E-01
Deposition Net DF
     Noble       Elemental  Organic    Aerosol
     1.0000E+00 1.0000E+00 1.0000E+00 1.1459E+00

Control Room Doses:

Time (h) =    0.3958    Whole Body   Thyroid       TEDE
Delta dose (rem)         8.1441E-05  2.0093E-01  8.7639E-03
Accumulated dose (rem)   1.9632E-04  5.2565E-01  2.2912E-02

EAB Doses:

Time (h) =    0.3958    Whole Body   Thyroid       TEDE
Delta dose (rem)         4.1958E-04  5.2404E-05  4.2174E-04
Accumulated dose (rem)   5.6296E-03  9.0191E-01  4.4654E-02

LPZ Doses:

Time (h) =    0.3958    Whole Body   Thyroid       TEDE
Delta dose (rem)         7.6395E-05  9.5415E-06  7.6788E-05
Accumulated dose (rem)   1.0250E-03  1.6421E-01  8.1303E-03

Detailed model information at time (H) =    0.5000

     Natural deposition - Powers' Model, Compartment  1
Deposition Lambda (1 / Hours)
     Noble       Elemental  Organic    Aerosol
     0.0000E+00 0.0000E+00 0.0000E+00 7.0466E-01
Deposition Net DF
     Noble       Elemental  Organic    Aerosol
     1.0000E+00 1.0000E+00 1.0000E+00 1.1865E+00

Control Room Doses:

Time (h) =    0.5000    Whole Body   Thyroid       TEDE
Delta dose (rem)         7.2989E-05  1.3771E-01  6.0234E-03
Accumulated dose (rem)   2.6931E-04  6.6336E-01  2.8936E-02

EAB Doses:

Time (h) =    0.5000    Whole Body   Thyroid       TEDE
Delta dose (rem)         4.4344E-04  5.0674E-05  4.4552E-04
Accumulated dose (rem)   6.0731E-03  9.0196E-01  4.5099E-02

LPZ Doses:

Time (h) =    0.5000    Whole Body   Thyroid       TEDE
Delta dose (rem)         8.0739E-05  9.2265E-06  8.1118E-05
```

```
Accumulated dose (rem)  1.1058E-03  1.6422E-01  8.2114E-03

Detailed model information at time (H) =    2.0000

     Natural deposition - Powers' Model, Compartment  1
Deposition Lambda (1 / Hours)
     Noble      Elemental  Organic    Aerosol
     0.0000E+00 0.0000E+00 0.0000E+00 3.0681E-01
Deposition Net DF
     Noble      Elemental  Organic    Aerosol
     1.0000E+00 1.0000E+00 1.0000E+00 1.3635E+00

Control Room Doses:

Time (h) =   2.0000    Whole Body   Thyroid       TEDE
Delta dose (rem)        1.7587E-02  7.7506E-01  5.1111E-02
Accumulated dose (rem)  1.7856E-02  1.4384E+00  8.0047E-02

EAB Doses:

Time (h) =   2.0000    Whole Body   Thyroid       TEDE
Delta dose (rem)        1.3461E-01  4.8690E-03  1.3485E-01
Accumulated dose (rem)  1.4068E-01  9.0683E-01  1.7995E-01

LPZ Doses:

Time (h) =   2.0000    Whole Body   Thyroid       TEDE
Delta dose (rem)        2.4509E-02  8.8652E-04  2.4554E-02
Accumulated dose (rem)  2.5614E-02  1.6511E-01  3.2765E-02

Detailed model information at time (H) =    8.0000

     Natural deposition - Powers' Model, Compartment  1
Deposition Lambda (1 / Hours)
     Noble      Elemental  Organic    Aerosol
     0.0000E+00 0.0000E+00 0.0000E+00 6.2057E-01
Deposition Net DF
     Noble      Elemental  Organic    Aerosol
     1.0000E+00 1.0000E+00 1.0000E+00 1.8279E+02

Control Room Doses:

Time (h) =   8.0000    Whole Body   Thyroid       TEDE
Delta dose (rem)        8.4912E-01  1.4047E-01  8.5525E-01
Accumulated dose (rem)  8.6697E-01  1.5789E+00  9.3529E-01

EAB Doses:

Time (h) =   8.0000    Whole Body   Thyroid       TEDE
Delta dose (rem)        2.3657E+00  2.1676E-02  2.3666E+00
Accumulated dose (rem)  2.5064E+00  9.2850E-01  2.5466E+00

LPZ Doses:

Time (h) =   8.0000    Whole Body   Thyroid       TEDE
Delta dose (rem)        4.3073E-01  3.9467E-03  4.3090E-01
Accumulated dose (rem)  4.5635E-01  1.6906E-01  4.6367E-01

Detailed model information at time (H) =   24.0000
```

```
     Natural deposition - Powers' Model, Compartment  1
Deposition Lambda (1 / Hours)
     Noble      Elemental  Organic    Aerosol
     0.0000E+00 0.0000E+00 0.0000E+00 4.8360E-01
Deposition Net DF
     Noble      Elemental  Organic    Aerosol
     1.0000E+00 1.0000E+00 1.0000E+00 6.0637E+05

Control Room Doses:

Time (h) =  24.0000    Whole Body   Thyroid       TEDE
Delta dose (rem)        1.0590E+00  1.9293E-02  1.0596E+00
Accumulated dose (rem)  1.9259E+00  1.5982E+00  1.9949E+00

EAB Doses:

Time (h) =  24.0000    Whole Body   Thyroid       TEDE
Delta dose (rem)        0.0000E+00  0.0000E+00  0.0000E+00
Accumulated dose (rem)  2.5064E+00  9.2850E-01  2.5466E+00

LPZ Doses:

Time (h) =  24.0000    Whole Body   Thyroid       TEDE
Delta dose (rem)        4.2530E-01  2.0601E-03  4.2536E-01
Accumulated dose (rem)  8.8164E-01  1.7112E-01  8.8903E-01

Detailed model information at time (H) =   96.0000

     Natural deposition - Powers' Model, Compartment  1
Deposition Lambda (1 / Hours)
     Noble      Elemental  Organic    Aerosol
     0.0000E+00 0.0000E+00 0.0000E+00 1.0000E-01
Deposition Net DF
     Noble      Elemental  Organic    Aerosol
     1.0000E+00 1.0000E+00 1.0000E+00 8.2005E+08

Control Room Doses:

Time (h) =  96.0000    Whole Body   Thyroid       TEDE
Delta dose (rem)        3.1301E-01  1.1686E-02  3.1337E-01
Accumulated dose (rem)  2.2390E+00  1.6099E+00  2.3082E+00

EAB Doses:

Time (h) =  96.0000    Whole Body   Thyroid       TEDE
Delta dose (rem)        0.0000E+00  0.0000E+00  0.0000E+00
Accumulated dose (rem)  2.5064E+00  9.2850E-01  2.5466E+00

LPZ Doses:

Time (h) =  96.0000    Whole Body   Thyroid       TEDE
Delta dose (rem)        1.5697E-01  2.1059E-03  1.5704E-01
Accumulated dose (rem)  1.0386E+00  1.7322E-01  1.0461E+00

Detailed model information at time (H) =  720.0000

     Natural deposition - Powers' Model, Compartment  1
Deposition Lambda (1 / Hours)
     Noble      Elemental  Organic    Aerosol
     0.0000E+00 0.0000E+00 0.0000E+00 1.0000E-01
```

Deposition Net DF

Noble	Elemental	Organic	Aerosol
1.0000E+00	1.0000E+00	1.0000E+00	1.1106E+36

Control Room Doses:

Time (h) = 720.0000	Whole Body	Thyroid	TEDE
Delta dose (rem)	2.0868E-01	1.5432E-02	2.0915E-01
Accumulated dose (rem)	2.4476E+00	1.6253E+00	2.5174E+00

EAB Doses:

Time (h) = 720.0000	Whole Body	Thyroid	TEDE
Delta dose (rem)	0.0000E+00	0.0000E+00	0.0000E+00
Accumulated dose (rem)	2.5064E+00	9.2850E-01	2.5466E+00

LPZ Doses:

Time (h) = 720.0000	Whole Body	Thyroid	TEDE
Delta dose (rem)	7.9701E-02	1.9686E-03	7.9761E-02
Accumulated dose (rem)	1.1183E+00	1.7519E-01	1.1258E+00

862

##

I-131 Summary

##

Time (hr)	Primary Containment I-131 (Curies)	Reactor Enclosure I-131 (Curies)	Environment I-131 (Curies)
0.000	5.2640E+03	1.8766E-04	1.1699E-04
0.017	1.5738E+05	1.0712E-02	2.6357E-01
0.058	5.4176E+05	3.7412E-02	3.2742E+00
0.100	9.1639E+05	6.2144E+00	3.4383E+00
0.142	1.2806E+06	1.5451E+01	3.7508E+00
0.183	1.6340E+06	2.7651E+01	4.1850E+00
0.225	1.9783E+06	4.2787E+01	4.7409E+00
0.258	2.2465E+06	5.6917E+01	5.2637E+00
0.267	2.3132E+06	5.9952E+01	5.2637E+00
0.396	3.2929E+06	1.1432E+02	5.2641E+00
0.500	4.0239E+06	1.6682E+02	5.2644E+00
0.900	9.2485E+06	4.9174E+02	5.2669E+00
1.200	1.2852E+07	8.2149E+02	5.2710E+00
1.500	1.6204E+07	1.1771E+03	5.2772E+00
1.800	1.9322E+07	1.5359E+03	5.2857E+00
2.000	2.1277E+07	1.7706E+03	5.2926E+00
2.300	1.6059E+07	1.8947E+03	5.3045E+00
2.600	1.2210E+07	1.7534E+03	5.3165E+00
2.900	9.3722E+06	1.5157E+03	5.3278E+00
3.200	7.2788E+06	1.2637E+03	5.3378E+00
3.500	5.7347E+06	1.0340E+03	5.3468E+00
3.800	4.5957E+06	8.3928E+02	5.3547E+00
4.100	3.7554E+06	6.8121E+02	5.3617E+00
4.400	3.1353E+06	5.5630E+02	5.3680E+00
4.700	2.6777E+06	4.5939E+02	5.3738E+00
5.000	2.3398E+06	3.8515E+02	5.3792E+00
5.300	2.1770E+06	3.3123E+02	5.3842E+00
5.600	2.0416E+06	2.9325E+02	5.3890E+00
5.900	1.9292E+06	2.6558E+02	5.3937E+00
6.200	1.8356E+06	2.4483E+02	5.3982E+00

6.500	1.7578E+06	2.2887E+02	5.4026E+00
6.800	1.6930E+06	2.1633E+02	5.4070E+00
7.100	1.6390E+06	2.0632E+02	5.4113E+00
7.400	1.5939E+06	1.9822E+02	5.4155E+00
7.700	1.5563E+06	1.9162E+02	5.4197E+00
8.000	1.5249E+06	1.8619E+02	5.4239E+00
8.300	1.4985E+06	1.8171E+02	5.4280E+00
8.600	1.4789E+06	1.7805E+02	5.4322E+00
8.900	1.4620E+06	1.7508E+02	5.4363E+00
9.200	1.4474E+06	1.7263E+02	5.4403E+00
9.500	1.4348E+06	1.7058E+02	5.4444E+00
9.800	1.4238E+06	1.6883E+02	5.4485E+00
10.100	1.4143E+06	1.6734E+02	5.4525E+00
10.400	1.4059E+06	1.6606E+02	5.4565E+00
24.000	1.2984E+06	1.5185E+02	5.6331E+00
96.000	9.9499E+05	5.8177E+01	6.0358E+00
720.000	9.9109E+04	5.7948E+00	7.2146E+00

Time (hr)	Control Room I-131 (Curies)	SGTS Node I-131 (Curies)
0.000	8.7846E-08	1.0425E-10
0.017	1.9647E-04	5.9511E-09
0.058	2.3946E-03	2.0784E-08
0.100	2.3813E-03	3.4524E-06
0.142	2.4768E-03	8.5838E-06
0.183	2.6561E-03	1.5361E-05
0.225	2.9138E-03	2.3770E-05
0.258	3.1669E-03	3.1620E-05
0.267	3.1303E-03	4.0393E-07
0.396	2.6183E-03	7.7499E-07
0.500	2.2670E-03	1.1365E-06
0.900	1.3050E-03	3.3804E-06
1.200	8.6423E-04	5.6738E-06
1.500	5.7458E-04	8.1721E-06
1.800	3.8477E-04	1.0724E-05
2.000	2.9643E-04	1.2412E-05
2.300	2.0136E-04	1.3550E-05
2.600	1.3867E-04	1.3026E-05
2.900	9.6903E-05	1.1857E-05
3.200	6.8808E-05	1.0544E-05
3.500	4.9735E-05	9.3165E-06
3.800	3.6674E-05	8.2619E-06
4.100	2.7659E-05	7.3978E-06
4.400	2.1391E-05	6.7104E-06
4.700	1.7004E-05	6.1741E-06
5.000	1.3915E-05	5.7612E-06
5.300	1.1729E-05	5.4597E-06
5.600	1.0182E-05	5.2458E-06
5.900	9.0862E-06	5.0888E-06
6.200	8.3065E-06	4.9698E-06
6.500	7.7485E-06	4.8773E-06
6.800	7.3462E-06	4.8037E-06
7.100	7.0532E-06	4.7441E-06
7.400	6.8373E-06	4.6951E-06
7.700	6.6762E-06	4.6543E-06
8.000	6.5543E-06	4.6201E-06
8.300	5.1981E-06	4.5911E-06
8.600	4.2887E-06	4.5667E-06
8.900	3.6781E-06	4.5462E-06
9.200	3.2674E-06	4.5285E-06

9.500	2.9907E-06	4.5130E-06
9.800	2.8036E-06	4.4993E-06
10.100	2.6765E-06	4.4869E-06
10.400	2.5898E-06	4.4757E-06
24.000	2.2827E-06	4.2178E-06
96.000	5.5302E-07	1.6160E-06
720.000	4.1121E-08	1.6097E-07

##

Cumulative Dose Summary

##

	Control Room		EAB		LPZ	
Time (hr)	Thyroid (rem)	TEDE (rem)	Thyroid (rem)	TEDE (rem)	Thyroid (rem)	TEDE (rem)
0.000	0.0000E+00	0.0000E+00	0.0000E+00	0.0000E+00	0.0000E+00	0.0000E+00
0.017	5.8807E-04	2.5629E-05	4.5201E-02	2.2222E-03	8.2299E-03	4.0461E-04
0.058	2.6467E-02	1.1534E-03	5.6139E-01	2.7579E-02	1.0221E-01	5.0215E-03
0.100	8.0249E-02	3.4969E-03	5.8950E-01	2.8958E-02	1.0733E-01	5.2726E-03
0.142	1.3502E-01	5.8833E-03	6.4303E-01	3.1579E-02	1.1708E-01	5.7498E-03
0.183	1.9274E-01	8.3984E-03	7.1735E-01	3.5212E-02	1.3061E-01	6.4113E-03
0.225	2.5555E-01	1.1135E-02	8.1245E-01	3.9854E-02	1.4793E-01	7.2565E-03
0.258	3.1038E-01	1.3524E-02	9.0185E-01	4.4212E-02	1.6420E-01	8.0500E-03
0.267	3.2472E-01	1.4149E-02	9.0185E-01	4.4232E-02	1.6421E-01	8.0535E-03
0.396	5.2565E-01	2.2912E-02	9.0191E-01	4.4654E-02	1.6421E-01	8.1303E-03
0.500	6.6336E-01	2.8936E-02	9.0196E-01	4.5099E-02	1.6422E-01	8.2114E-03
0.900	1.0399E+00	4.5752E-02	9.0240E-01	5.1348E-02	1.6430E-01	9.3493E-03
1.200	1.2125E+00	5.4551E-02	9.0309E-01	6.6413E-02	1.6443E-01	1.2092E-02
1.500	1.3265E+00	6.2672E-02	9.0417E-01	9.5004E-02	1.6463E-01	1.7298E-02
1.800	1.4024E+00	7.2128E-02	9.0563E-01	1.3995E-01	1.6489E-01	2.5481E-02
2.000	1.4384E+00	8.0047E-02	9.0683E-01	1.7995E-01	1.6511E-01	3.2765E-02
2.300	1.4776E+00	9.4575E-02	9.0886E-01	2.5512E-01	1.6548E-01	4.6452E-02
2.600	1.5043E+00	1.1246E-01	9.1092E-01	3.4557E-01	1.6586E-01	6.2920E-02
2.900	1.5227E+00	1.3424E-01	9.1283E-01	4.4804E-01	1.6620E-01	8.1578E-02
3.200	1.5357E+00	1.6013E-01	9.1453E-01	5.5983E-01	1.6651E-01	1.0193E-01
3.500	1.5450E+00	1.9013E-01	9.1603E-01	6.7865E-01	1.6679E-01	1.2357E-01
3.800	1.5517E+00	2.2409E-01	9.1735E-01	8.0263E-01	1.6703E-01	1.4614E-01
4.100	1.5568E+00	2.6173E-01	9.1852E-01	9.3019E-01	1.6724E-01	1.6936E-01
4.400	1.5606E+00	3.0274E-01	9.1956E-01	1.0600E+00	1.6743E-01	1.9301E-01
4.700	1.5635E+00	3.4676E-01	9.2051E-01	1.1911E+00	1.6760E-01	2.1686E-01
5.000	1.5659E+00	3.9345E-01	9.2138E-01	1.3224E+00	1.6776E-01	2.4078E-01
5.300	1.5679E+00	4.4242E-01	9.2220E-01	1.4534E+00	1.6791E-01	2.6462E-01
5.600	1.5696E+00	4.9333E-01	9.2297E-01	1.5833E+00	1.6805E-01	2.8828E-01
5.900	1.5711E+00	5.4584E-01	9.2372E-01	1.7118E+00	1.6819E-01	3.1167E-01
6.200	1.5724E+00	5.9965E-01	9.2444E-01	1.8384E+00	1.6832E-01	3.3473E-01
6.500	1.5736E+00	6.5446E-01	9.2515E-01	1.9629E+00	1.6845E-01	3.5739E-01
6.800	1.5748E+00	7.1002E-01	9.2584E-01	2.0849E+00	1.6857E-01	3.7961E-01
7.100	1.5758E+00	7.6608E-01	9.2652E-01	2.2044E+00	1.6870E-01	4.0137E-01
7.400	1.5769E+00	8.2243E-01	9.2719E-01	2.3213E+00	1.6882E-01	4.2265E-01
7.700	1.5779E+00	8.7889E-01	9.2785E-01	2.4353E+00	1.6894E-01	4.4341E-01
8.000	1.5789E+00	9.3529E-01	9.2850E-01	2.5466E+00	1.6906E-01	4.6367E-01
8.300	1.5798E+00	9.8902E-01	9.2850E-01	2.5466E+00	1.6910E-01	4.7764E-01
8.600	1.5805E+00	1.0381E+00	9.2850E-01	2.5466E+00	1.6914E-01	4.9125E-01
8.900	1.5810E+00	1.0830E+00	9.2850E-01	2.5466E+00	1.6918E-01	5.0450E-01
9.200	1.5816E+00	1.1245E+00	9.2850E-01	2.5466E+00	1.6923E-01	5.1738E-01
9.500	1.5820E+00	1.1629E+00	9.2850E-01	2.5466E+00	1.6927E-01	5.2991E-01
9.800	1.5824E+00	1.1987E+00	9.2850E-01	2.5466E+00	1.6931E-01	5.4210E-01
10.100	1.5828E+00	1.2321E+00	9.2850E-01	2.5466E+00	1.6935E-01	5.5394E-01
10.400	1.5832E+00	1.2635E+00	9.2850E-01	2.5466E+00	1.6939E-01	5.6546E-01
24.000	1.5982E+00	1.9949E+00	9.2850E-01	2.5466E+00	1.7112E-01	8.8903E-01

```
  96.000 1.6099E+00 2.3082E+00 9.2850E-01 2.5466E+00 1.7322E-01 1.0461E+00
 720.000 1.6253E+00 2.5174E+00 9.2850E-01 2.5466E+00 1.7519E-01 1.1258E+00

#####################################################################
                        Worst Two-Hour Doses
#####################################################################

EAB
   Time    Whole Body    Thyroid        TEDE
   (hr)      (rem)        (rem)         (rem)
    3.9    8.6641E-01   5.9805E-03   8.6664E-01
```

```
#######################################################################
   RADTRAD Version 3.03 (Spring 2001) run on  5/26/2006  at  9:50:01
#######################################################################

#######################################################################
                      File information
#######################################################################

 Plant file           = C:\Documents and Settings\Aleem Boatright\My Documents\My
Work\Exelon\AST\Limerick\LGS LOCA\RADTRAD\LGS LOCA MSIV Leak (24-hr Settling
Distribution) - New Design Basis - 225cfm CR Unfilt Inleak - Rad Mode.psf
 Inventory file       = c:\program files\radtrad3-03\defaults\limerick ast source
terms.nif
 Release file         = c:\program files\radtrad3-03\defaults\bwr_dba.rft
 Dose Conversion file = c:\program files\radtrad3-03\defaults\fgrl1&12.inp
```

```
#####    ####   #####    #  #     #  #####   #    #  #####
#    #  #       #        #  ##    #  #    #  #    #    #
#    #  #       #        #  # #   #  #    #  #    #    #
#####    ####   ####     #  #  #  #  #####   #    #    #
#            #  #        #  #   # #  #       #    #    #
#            #  #        #  #    ##  #       #    #    #
#        ####   #        #  #     #  #        ####     #
```

```
 Radtrad 3.03 4/15/2001
 LGS LOCA 200scfh MSIV Leak - Leak to Condenser - MSL Pipe Deposition Credit (24-Hr
20-Group Aerosol Settling with Projected Area Assumption; 2-Hr Mixing Delay) - 95%
CREFAS Charcoal Eff. No Delay - Rad Mode 225cfm Control Room Inleakage - 3000cfm -
10% (217
 Nuclide Inventory File:
 c:\program files\radtrad3-03\defaults\limerick ast source terms.nif
 Plant Power Level:
  3.5270E+03
 Compartments:
   9
 Compartment 1:
 Containment
   3
  3.7907E+05
   0
   0
   0
   1
   0
 Compartment 2:
 (Node 1) Inboard MSL A Volume
   3
  2.5800E+02
   0
   0
   0
   0
   0
 Compartment 3:
```

```
(Node 1) Inboard MSL B Volume
  3
 1.0000E-08
  0
  0
  0
  0
  0
Compartment 4:
(Node 2) Outboard MSL A Volume
  3
 1.1820E+03
  0
  0
  0
  0
  0
Compartment 5:
(Node 2) Outboard MSL B Volume
  3
 1.0510E+03
  0
  0
  0
  0
  0
Compartment 6:
Condenser
  3
 5.4750E+04
  0
  0
  0
  0
  0
Compartment 7:
Environment
  2
 0.0000E+00
  0
  0
  0
  0
  0
Compartment 8:
Control Room
  1
 1.2600E+05
  0
  0
  1
  0
  0
Compartment 9:
Hold
  3
 1.0000E+00
  0
  0
  0
```

```
  0
  0
Pathways:
 11
Pathway 1:
Containment to (Node 1) Inboard MSL A Volume
  1
  2
  2
Pathway 2:
Containment to (Node 1) Inboard MSL B Volume
  1
  3
  2
Pathway 3:
Containment to Hold (PC Leakage)
  1
  9
  4
Pathway 4:
(Node 1) Inboard MSL A Volume to (Node 2) Outboard MSL A Volume
  2
  4
  2
Pathway 5:
(Node 1) Inboard MSL B Volume to (Node 2) Outboard MSL B Volume
  3
  5
  2
Pathway 6:
(Node 2) Outboard MSL A Volume to Condenser
  4
  6
  2
Pathway 7:
(Node 2) Outboard MSL B Volume to Condenser
  5
  6
  2
Pathway 8:
Condenser Leak to Environment
  6
  7
  2
Pathway 9:
Filtered Intake to Control Room
  7
  8
  2
Pathway 10:
Unfiltered Inleakage to Control Room
  7
  8
  2
Pathway 11:
Control Room Exhaust
  8
  7
  2
End of Plant Model File
```

```
Scenario Description Name:

Plant Model Filename:

Source Term:
  1
  1   1.0000E+00
c:\program files\radtrad3-03\defaults\fgr11&12.inp
c:\program files\radtrad3-03\defaults\bwr_dba.rft
  0.0000E+00
  1
  9.5000E-01   4.8500E-02   1.5000E-03   1.0000E+00
Overlying Pool:
  0
  0.0000E+00
  0
  0
  0
  0
Compartments:
  9
Compartment 1:
  0
  1
  0
  0
  0
  0
  0
  3
  3
  1.0000E+01
  1
  1
  0.0000E+00   0.0000E+00
Compartment 2:
  0
  1
  0
  0
  0
  0
  0
  0
  0
Compartment 3:
  0
  1
  0
  0
  0
  0
  0
  0
  0
Compartment 4:
  0
  1
  0
  0
```

```
  0
  0
  0
  0
  0
Compartment 5:
  0
  1
  0
  0
  0
  0
  0
  0
  0
Compartment 6:
  0
  1
  0
  0
  0
  0
  0
  0
  0
Compartment 7:
  0
  1
  0
  0
  0
  0
  0
  0
  0
Compartment 8:
  0
  1
  0
  0
  0
  0
  1
  2.1750E+03
  3
  0.0000E+00   9.9000E+01   9.5000E+01   9.5000E+01
  5.0000E-01   9.9000E+01   9.5000E+01   9.5000E+01
  7.2000E+02   0.0000E+00   0.0000E+00   0.0000E+00
  0
  0
Compartment 9:
  0
  1
  0
  0
  0
  0
  0
  0
  0
```

```
Pathways:
 11
Pathway 1:
  0
  0
  0
  0
  0
  1
  5
  0.0000E+00   1.5240E+00   9.9980E+01   9.9690E+01   0.0000E+00
  2.0000E+00   9.3060E-01   9.9980E+01   9.9690E+01   0.0000E+00
  2.4000E+01   5.1270E-01   0.0000E+00   9.9970E+01   0.0000E+00
  9.6000E+01   5.1270E-01   0.0000E+00   9.9990E+01   0.0000E+00
  7.2000E+02   0.0000E+00   0.0000E+00   0.0000E+00   0.0000E+00
  0
  0
  0
  0
  0
  0
Pathway 2:
  0
  0
  0
  0
  0
  1
  5
  0.0000E+00   1.5240E+00   9.9910E+01   9.9480E+01   0.0000E+00
  2.0000E+00   9.3060E-01   9.9910E+01   9.9480E+01   0.0000E+00
  2.4000E+01   5.1270E-01   0.0000E+00   9.9890E+01   0.0000E+00
  9.6000E+01   5.1270E-01   0.0000E+00   9.9980E+01   0.0000E+00
  7.2000E+02   0.0000E+00   0.0000E+00   0.0000E+00   0.0000E+00
  0
  0
  0
  0
  0
  0
Pathway 3:
  0
  0
  0
  0
  0
  0
  0
  0
  0
  0
  1
  3
  0.0000E+00   5.0000E-01
  2.4000E+01   2.5000E-01
  7.2000E+02   0.0000E+00
  0
Pathway 4:
  0
  0
```

```
  0
  0
  0
  1
  4
  0.0000E+00   9.3060E-01   0.0000E+00   0.0000E+00   0.0000E+00
  2.4000E+01   5.1270E-01   0.0000E+00   0.0000E+00   0.0000E+00
  9.6000E+01   5.1270E-01   0.0000E+00   0.0000E+00   0.0000E+00
  7.2000E+02   0.0000E+00   0.0000E+00   0.0000E+00   0.0000E+00
  0
  0
  0
  0
  0
  0
Pathway 5:
  0
  0
  0
  0
  0
  1
  4
  0.0000E+00   9.3060E-01   0.0000E+00   0.0000E+00   0.0000E+00
  2.4000E+01   5.1270E-01   0.0000E+00   0.0000E+00   0.0000E+00
  9.6000E+01   5.1270E-01   0.0000E+00   0.0000E+00   0.0000E+00
  7.2000E+02   0.0000E+00   0.0000E+00   0.0000E+00   0.0000E+00
  0
  0
  0
  0
  0
  0
Pathway 6:
  0
  0
  0
  0
  0
  1
  4
  0.0000E+00   3.1880E+00   0.0000E+00   0.0000E+00   0.0000E+00
  2.4000E+01   1.5130E+00   0.0000E+00   0.0000E+00   0.0000E+00
  9.6000E+01   1.1480E+00   0.0000E+00   0.0000E+00   0.0000E+00
  7.2000E+02   0.0000E+00   0.0000E+00   0.0000E+00   0.0000E+00
  0
  0
  0
  0
  0
  0
Pathway 7:
  0
  0
  0
  0
  0
  1
  4
  0.0000E+00   3.1880E+00   0.0000E+00   0.0000E+00   0.0000E+00
```

```
  2.4000E+01   1.5130E+00   0.0000E+00   0.0000E+00   0.0000E+00
  9.6000E+01   1.1480E+00   0.0000E+00   0.0000E+00   0.0000E+00
  7.2000E+02   0.0000E+00   0.0000E+00   0.0000E+00   0.0000E+00
  0
  0
  0
  0
  0
  0
Pathway 8:
  0
  0
  0
  0
  0
  1
  4
  0.0000E+00   3.6620E+00   0.0000E+00   0.0000E+00   0.0000E+00
  2.4000E+01   2.0180E+00   0.0000E+00   0.0000E+00   0.0000E+00
  9.6000E+01   2.0180E+00   0.0000E+00   0.0000E+00   0.0000E+00
  7.2000E+02   0.0000E+00   0.0000E+00   0.0000E+00   0.0000E+00
  0
  0
  0
  0
  0
  0
Pathway 9:
  0
  0
  0
  0
  0
  1
  3
  0.0000E+00   5.2500E+02   9.9000E+01   9.5000E+01   9.5000E+01
  5.0000E-01   5.2500E+02   9.9000E+01   9.5000E+01   9.5000E+01
  7.2000E+02   0.0000E+00   0.0000E+00   0.0000E+00   0.0000E+00
  0
  0
  0
  0
  0
  0
Pathway 10:
  0
  0
  0
  0
  0
  1
  2
  0.0000E+00   2.2500E+02   0.0000E+00   0.0000E+00   0.0000E+00
  7.2000E+02   0.0000E+00   0.0000E+00   0.0000E+00   0.0000E+00
  0
  0
  0
  0
  0
  0
```

```
Pathway 11:
  0
  0
  0
  0
  0
  1
  3
  0.0000E+00   7.5000E+02   1.0000E+02   1.0000E+02   1.0000E+02
  5.0000E-01   7.5000E+02   1.0000E+02   1.0000E+02   1.0000E+02
  7.2000E+02   0.0000E+00   0.0000E+00   0.0000E+00   0.0000E+00
  0
  0
  0
  0
  0
  0
Dose Locations:
  3
Location 1:
Exclusion Area Boundary (EAB)
  7
  1
  2
  0.0000E+00   3.1800E-04
  2.4000E+01   0.0000E+00
  1
  4
  0.0000E+00   3.5000E-04
  8.0000E+00   1.8000E-04
  2.4000E+01   2.3000E-04
  7.2000E+02   0.0000E+00
  0
Location 2:
Low Population Zone (LPZ)
  7
  1
 10
  0.0000E+00   5.7900E-05
  8.0000E+00   4.1000E-05
  2.4000E+01   1.9500E-05
  4.8000E+01   1.9500E-05
  7.2000E+01   1.9500E-05
  9.6000E+01   6.6800E-06
  1.2000E+02   6.6800E-06
  1.6800E+02   6.6800E-06
  3.3600E+02   6.6800E-06
  7.2000E+02   0.0000E+00
  1
  4
  0.0000E+00   3.5000E-04
  8.0000E+00   1.8000E-04
  2.4000E+01   2.3000E-04
  7.2000E+02   0.0000E+00
  0
Location 3:
Control Room (CR)
  8
  0
  1
```

```
   2
   0.0000E+00   3.5000E-04
   7.2000E+02   0.0000E+00
   1
   4
   0.0000E+00   1.0000E+00
   2.4000E+01   6.0000E-01
   9.6000E+01   4.0000E-01
   7.2000E+02   0.0000E+00
 Effective Volume Location:
   1
   6
   0.0000E+00   6.8800E-03
   2.0000E+00   5.1700E-03
   8.0000E+00   2.0400E-03
   2.4000E+01   1.2900E-03
   9.6000E+01   9.6300E-04
   7.2000E+02   0.0000E+00
 Simulation Parameters:
   1
   0.0000E+00   0.0000E+00
 Output Filename:
 C:\Documents and Settings\Aleem Boatright\My Documents\My
Work\Exelon\AST\Limerick\LGS LOCA\RADTRAD\LGS LOCA MSIV Leak (24-hr Settling
Distribution) - New Design Basis - 225cfm CR Unfilt Inleak - Rad Mode.o0
   1
   1
   1
   0
   0
 End of Scenario File
```

```
#######################################################################
   RADTRAD Version 3.03 (Spring 2001) run on  5/26/2006  at  9:50:01
#######################################################################

#######################################################################
                     Plant Description
#######################################################################

Number of Nuclides =  60

Inventory Power =   1.0000E+00 MWth
Plant Power Level =   3.5270E+03 MWth

Number of compartments    =   9

Compartment information

Compartment number  1  (Source term fraction =   1.0000E+00
)
Name: Containment
Compartment volume =   3.7907E+05 (Cubic feet)
Compartment type is Normal
Removal devices within compartment:
     Deposition
Pathways into and out of compartment  1
   Exit Pathway Number    1: Containment to (Node 1) Inboard MSL A Volume
   Exit Pathway Number    2: Containment to (Node 1) Inboard MSL B Volume
   Exit Pathway Number    3: Containment to Hold (PC Leakage)

Compartment number  2
Name: (Node 1) Inboard MSL A Volume
Compartment volume =   2.5800E+02 (Cubic feet)
Compartment type is Normal
Pathways into and out of compartment  2
   Inlet Pathway Number   1: Containment to (Node 1) Inboard MSL A Volume
   Exit Pathway Number    4: (Node 1) Inboard MSL A Volume to (Node 2) Outboard

Compartment number  3
Name: (Node 1) Inboard MSL B Volume
Compartment volume =   1.0000E-08 (Cubic feet)
Compartment type is Normal
Pathways into and out of compartment  3
   Inlet Pathway Number   2: Containment to (Node 1) Inboard MSL B Volume
   Exit Pathway Number    5: (Node 1) Inboard MSL B Volume to (Node 2) Outboard

Compartment number  4
Name: (Node 2) Outboard MSL A Volume
Compartment volume =   1.1820E+03 (Cubic feet)
Compartment type is Normal
Pathways into and out of compartment  4
   Inlet Pathway Number   4: (Node 1) Inboard MSL A Volume to (Node 2) Outboard
   Exit Pathway Number    6: (Node 2) Outboard MSL A Volume to Condenser

Compartment number  5
Name: (Node 2) Outboard MSL B Volume
Compartment volume =   1.0510E+03 (Cubic feet)
Compartment type is Normal
Pathways into and out of compartment  5
   Inlet Pathway Number   5: (Node 1) Inboard MSL B Volume to (Node 2) Outboard
```

```
   Exit Pathway Number    7: (Node 2) Outboard MSL B Volume to Condenser

Compartment number  6
Name: Condenser
Compartment volume =   5.4750E+04 (Cubic feet)
Compartment type is Normal
Pathways into and out of compartment  6
   Inlet Pathway Number   6: (Node 2) Outboard MSL A Volume to Condenser
   Inlet Pathway Number   7: (Node 2) Outboard MSL B Volume to Condenser
   Exit Pathway Number    8: Condenser Leak to Environment

Compartment number  7
Name: Environment
Compartment type is Environment
Pathways into and out of compartment  7
   Inlet Pathway Number   8: Condenser Leak to Environment
   Inlet Pathway Number  11: Control Room Exhaust
   Exit Pathway Number    9: Filtered Intake to Control Room
   Exit Pathway Number   10: Unfiltered Inleakage to Control Room

Compartment number  8
Name: Control Room
Compartment volume =   1.2600E+05 (Cubic feet)
Compartment type is Control Room
Removal devices within compartment:
     Filter(s)
Pathways into and out of compartment  8
   Inlet Pathway Number   9: Filtered Intake to Control Room
   Inlet Pathway Number  10: Unfiltered Inleakage to Control Room
   Exit Pathway Number   11: Control Room Exhaust

Compartment number  9
Name: Hold
Compartment volume =   1.0000E+00 (Cubic feet)
Compartment type is Normal
Pathways into and out of compartment  9
   Inlet Pathway Number   3: Containment to Hold (PC Leakage)

Total number of pathways =  11
```

```
#######################################################################
   RADTRAD Version 3.03 (Spring 2001) run on  5/26/2006  at  9:50:01
#######################################################################

#######################################################################
                      Scenario Description
#######################################################################
```

Radioactive Decay is enabled
Calculation of Daughters is enabled

Release Fractions and Timings

	GAP	EARLY IN-VESSEL	LATE RELEASE	RELEASE MASS
	0.500000 hr	1.5000 hrs	0.0000 hrs	(gm)
NOBLES	5.0000E-02	9.5000E-01	0.0000E+00	4.625E+03
IODINE	5.0000E-02	2.5000E-01	0.0000E+00	3.033E+02
CESIUM	5.0000E-02	2.0000E-01	0.0000E+00	5.099E+04
TELLURIUM	0.0000E+00	5.0000E-02	0.0000E+00	4.012E+01
STRONTIUM	0.0000E+00	2.0000E-02	0.0000E+00	1.712E+03
BARIUM	0.0000E+00	2.0000E-02	0.0000E+00	4.739E+01
RUTHENIUM	0.0000E+00	2.5000E-03	0.0000E+00	5.988E+01
CERIUM	0.0000E+00	5.0000E-04	0.0000E+00	5.914E+02
LANTHANUM	0.0000E+00	2.0000E-04	0.0000E+00	8.731E+00

Inventory Power = 3527. MWt

Nuclide Name	Group	Specific Inventory (Ci/MWt)	half life (s)	Whole Body DCF (Sv-m3/Bq-s)	Inhaled Thyroid (Sv/Bq)	Inhaled Effective (Sv/Bq)
Co-58	7	1.529E+02	6.117E+06	4.760E-14	8.720E-10	2.940E-09
Co-60	7	1.830E+02	1.663E+08	1.260E-13	1.620E-08	5.910E-08
Kr-85	1	3.946E+02	3.383E+08	1.190E-16	0.000E+00	0.000E+00
Kr-85m	1	8.313E+03	1.613E+04	7.480E-15	0.000E+00	0.000E+00
Kr-87	1	1.633E+04	4.578E+03	4.120E-14	0.000E+00	0.000E+00
Kr-88	1	2.303E+04	1.022E+04	1.020E-13	0.000E+00	0.000E+00
Rb-86	3	6.518E+01	1.612E+06	4.810E-15	1.330E-09	1.790E-09
Sr-89	5	2.798E+04	4.363E+06	7.730E-17	7.960E-12	1.120E-08
Sr-90	5	3.178E+03	9.190E+08	7.530E-18	2.690E-10	3.510E-07
Sr-91	5	3.801E+04	3.420E+04	4.924E-14	9.930E-12	4.547E-10
Sr-92	5	4.017E+04	9.756E+03	6.790E-14	3.920E-12	2.180E-10
Y-90	9	3.272E+03	2.304E+05	1.900E-16	5.170E-13	2.280E-09
Y-91	9	3.448E+04	5.055E+06	2.600E-16	8.500E-12	1.320E-08
Y-92	9	4.029E+04	1.274E+04	1.300E-14	1.050E-12	2.110E-10
Y-93	9	4.526E+04	3.636E+04	4.800E-15	9.260E-13	5.820E-10
Zr-95	9	4.489E+04	5.528E+06	3.600E-14	1.440E-09	6.390E-09
Zr-97	9	4.657E+04	6.084E+04	4.432E-14	2.315E-11	1.171E-09
Nb-95	9	4.512E+04	3.037E+06	3.740E-14	3.580E-10	1.570E-09
Mo-99	7	5.078E+04	2.376E+05	7.280E-15	1.520E-11	1.070E-09
Tc-99m	7	4.447E+04	2.167E+04	5.890E-15	5.010E-11	8.800E-12
Ru-103	7	4.202E+04	3.394E+06	2.251E-14	2.570E-10	2.421E-09
Ru-105	7	2.908E+04	1.598E+04	3.810E-14	4.150E-12	1.230E-10
Ru-106	7	1.730E+04	3.181E+07	1.040E-14	1.720E-09	1.290E-07
Rh-105	7	2.752E+04	1.273E+05	3.720E-15	2.880E-12	2.580E-10
Sb-127	4	2.896E+03	3.326E+05	3.330E-14	6.150E-11	1.630E-09
Sb-129	4	8.638E+03	1.555E+04	7.140E-14	9.720E-12	1.740E-10
Te-127	4	2.873E+03	3.366E+04	2.420E-16	1.840E-12	8.600E-11
Te-127m	4	3.855E+02	9.418E+06	1.470E-16	9.660E-11	5.810E-09
Te-129	4	8.501E+03	4.176E+03	2.750E-15	5.090E-13	2.090E-11
Te-129m	4	1.267E+03	2.903E+06	3.337E-15	1.563E-10	6.484E-09

Te-131m	4	3.869E+03	1.080E+05	7.463E-14	3.669E-08	1.758E-09
Te-132	4	3.821E+04	2.815E+05	1.030E-14	6.280E-08	2.550E-09
I-131	2	2.687E+04	6.947E+05	1.820E-14	2.920E-07	8.890E-09
I-132	2	3.881E+04	8.280E+03	1.120E-13	1.740E-09	1.030E-10
I-133	2	5.556E+04	7.488E+04	2.940E-14	4.860E-08	1.580E-09
I-134	2	6.165E+04	3.156E+03	1.300E-13	2.880E-10	3.550E-11
I-135	2	5.192E+04	2.380E+04	8.294E-14	8.460E-09	3.320E-10
Xe-133	1	5.491E+04	4.532E+05	1.560E-15	0.000E+00	0.000E+00
Xe-135	1	2.228E+04	3.272E+04	1.190E-14	0.000E+00	0.000E+00
Cs-134	3	7.280E+03	6.507E+07	7.570E-14	1.110E-08	1.250E-08
Cs-136	3	2.027E+03	1.132E+06	1.060E-13	1.730E-09	1.980E-09
Cs-137	3	4.538E+03	9.467E+08	2.725E-14	7.930E-09	8.630E-09
Ba-139	6	5.084E+04	4.962E+03	2.170E-15	2.400E-12	4.640E-11
Ba-140	6	4.896E+04	1.101E+06	8.580E-15	2.560E-10	1.010E-09
La-140	9	5.019E+04	1.450E+05	1.170E-13	6.870E-11	1.310E-09
La-141	9	4.640E+04	1.415E+04	2.390E-15	9.400E-12	1.570E-10
La-142	9	4.532E+04	5.550E+03	1.440E-13	8.740E-12	6.840E-11
Ce-141	8	4.492E+04	2.808E+06	3.430E-15	2.550E-11	2.420E-09
Ce-143	8	4.427E+04	1.188E+05	1.290E-14	6.230E-12	9.160E-10
Ce-144	8	3.596E+04	2.456E+07	2.773E-15	2.920E-10	1.010E-07
Pr-143	9	4.293E+04	1.172E+06	2.100E-17	1.680E-18	2.190E-09
Nd-147	9	1.838E+04	9.487E+05	6.190E-15	1.820E-11	1.850E-09
Np-239	8	5.397E+05	2.035E+05	7.690E-15	7.620E-12	6.780E-10
Pu-238	8	1.796E+02	2.769E+09	4.880E-18	3.860E-10	7.790E-05
Pu-239	8	1.200E+01	7.594E+11	4.240E-18	3.750E-10	8.330E-05
Pu-240	8	1.288E+01	2.063E+11	4.750E-18	3.760E-10	8.330E-05
Pu-241	8	6.182E+03	4.544E+08	7.250E-20	9.150E-12	1.340E-06
Am-241	9	9.528E+00	1.364E+10	8.180E-16	1.600E-09	1.200E-04
Cm-242	9	2.388E+03	1.407E+07	5.690E-18	9.410E-10	4.670E-06
Cm-244	9	2.602E+02	5.715E+08	4.910E-18	1.010E-09	6.700E-05

Nuclide	Daughter	Fraction	Daughter	Fraction	Daughter	Fraction
Kr-85m	Kr-85	0.21	none	0.00	none	0.00
Kr-87	Rb-87	1.00	none	0.00	none	0.00
Kr-88	Rb-88	1.00	none	0.00	none	0.00
Sr-90	Y-90	1.00	none	0.00	none	0.00
Sr-91	Y-91m	0.58	Y-91	0.42	none	0.00
Sr-92	Y-92	1.00	none	0.00	none	0.00
Y-93	Zr-93	1.00	none	0.00	none	0.00
Zr-95	Nb-95m	0.01	Nb-95	0.99	none	0.00
Zr-97	Nb-97m	0.95	Nb-97	0.05	none	0.00
Mo-99	Tc-99m	0.88	Tc-99	0.12	none	0.00
Tc-99m	Tc-99	1.00	none	0.00	none	0.00
Ru-103	Rh-103m	1.00	none	0.00	none	0.00
Ru-105	Rh-105	1.00	none	0.00	none	0.00
Ru-106	Rh-106	1.00	none	0.00	none	0.00
Sb-127	Te-127m	0.18	Te-127	0.82	none	0.00
Sb-129	Te-129m	0.22	Te-129	0.77	none	0.00
Te-127m	Te-127	0.98	none	0.00	none	0.00
Te-129	I-129	1.00	none	0.00	none	0.00
Te-129m	Te-129	0.65	I-129	0.35	none	0.00
Te-131m	Te-131	0.22	I-131	0.78	none	0.00
Te-132	I-132	1.00	none	0.00	none	0.00
I-131	Xe-131m	0.01	none	0.00	none	0.00
I-133	Xe-133m	0.03	Xe-133	0.97	none	0.00
I-135	Xe-135m	0.15	Xe-135	0.85	none	0.00
Xe-135	Cs-135	1.00	none	0.00	none	0.00
Cs-137	Ba-137m	0.95	none	0.00	none	0.00
Ba-140	La-140	1.00	none	0.00	none	0.00
La-141	Ce-141	1.00	none	0.00	none	0.00

Ce-143	Pr-143	1.00	none	0.00	none	0.00
Ce-144	Pr-144m	0.02	Pr-144	0.98	none	0.00
Nd-147	Pm-147	1.00	none	0.00	none	0.00
Np-239	Pu-239	1.00	none	0.00	none	0.00
Pu-238	U-234	1.00	none	0.00	none	0.00
Pu-239	U-235	1.00	none	0.00	none	0.00
Pu-240	U-236	1.00	none	0.00	none	0.00
Pu-241	U-237	0.00	Am-241	1.00	none	0.00
Am-241	Np-237	1.00	none	0.00	none	0.00
Cm-242	Pu-238	1.00	none	0.00	none	0.00
Cm-244	Pu-240	1.00	none	0.00	none	0.00

Iodine fractions
Aerosol = 9.5000E-01
Elemental = 4.8500E-02
Organic = 1.5000E-03

COMPARTMENT DATA

Compartment number 1: Containment
Natural Deposition (Powers' model): Aerosol data
Reactor type: 3
Percentile = 10 (%)

Natural Deposition: Elemental Removal Data

Time (hr)	Removal Coef. (hr^-1)
0.0000E+00	0.0000E+00

Compartment number 2: (Node 1) Inboard MSL A Volume

Compartment number 3: (Node 1) Inboard MSL B Volume

Compartment number 4: (Node 2) Outboard MSL A Volume

Compartment number 5: (Node 2) Outboard MSL B Volume

Compartment number 6: Condenser

Compartment number 7: Environment

Compartment number 8: Control Room

Compartment Filter Data

Time (hr)	Flow Rate (cfm)	Filter Efficiencies (%) Aerosol	Elemental	Organic
0.0000E+00	2.1750E+03	9.9000E+01	9.5000E+01	9.5000E+01
5.0000E-01	2.1750E+03	9.9000E+01	9.5000E+01	9.5000E+01
7.2000E+02	2.1750E+03	0.0000E+00	0.0000E+00	0.0000E+00

Compartment number 9: Hold

PATHWAY DATA

Pathway number 1: Containment to (Node 1) Inboard MSL A Volume

Pathway Filter: Removal Data

Time (hr)	Flow Rate (cfm)	Filter Efficiencies (%) Aerosol	Elemental	Organic

0.0000E+00	1.5240E+00	9.9980E+01	9.9690E+01	0.0000E+00
2.0000E+00	9.3060E-01	9.9980E+01	9.9690E+01	0.0000E+00
2.4000E+01	5.1270E-01	0.0000E+00	9.9970E+01	0.0000E+00
9.6000E+01	5.1270E-01	0.0000E+00	9.9990E+01	0.0000E+00
7.2000E+02	0.0000E+00	0.0000E+00	0.0000E+00	0.0000E+00

Pathway number 2: Containment to (Node 1) Inboard MSL B Volume

Pathway Filter: Removal Data

Time (hr)	Flow Rate (cfm)	Filter Efficiencies (%) Aerosol	Elemental	Organic
0.0000E+00	1.5240E+00	9.9910E+01	9.9480E+01	0.0000E+00
2.0000E+00	9.3060E-01	9.9910E+01	9.9480E+01	0.0000E+00
2.4000E+01	5.1270E-01	0.0000E+00	9.9890E+01	0.0000E+00
9.6000E+01	5.1270E-01	0.0000E+00	9.9980E+01	0.0000E+00
7.2000E+02	0.0000E+00	0.0000E+00	0.0000E+00	0.0000E+00

Pathway number 3: Containment to Hold (PC Leakage)

Convection Data

Time (hr)	Flow Rate (% / day)
0.0000E+00	5.0000E-01
2.4000E+01	2.5000E-01
7.2000E+02	0.0000E+00

Pathway number 4: (Node 1) Inboard MSL A Volume to (Node 2) Outboard

Pathway Filter: Removal Data

Time (hr)	Flow Rate (cfm)	Filter Efficiencies (%) Aerosol	Elemental	Organic
0.0000E+00	9.3060E-01	0.0000E+00	0.0000E+00	0.0000E+00
2.4000E+01	5.1270E-01	0.0000E+00	0.0000E+00	0.0000E+00
9.6000E+01	5.1270E-01	0.0000E+00	0.0000E+00	0.0000E+00
7.2000E+02	0.0000E+00	0.0000E+00	0.0000E+00	0.0000E+00

Pathway number 5: (Node 1) Inboard MSL B Volume to (Node 2) Outboard

Pathway Filter: Removal Data

Time (hr)	Flow Rate (cfm)	Filter Efficiencies (%) Aerosol	Elemental	Organic
0.0000E+00	9.3060E-01	0.0000E+00	0.0000E+00	0.0000E+00
2.4000E+01	5.1270E-01	0.0000E+00	0.0000E+00	0.0000E+00
9.6000E+01	5.1270E-01	0.0000E+00	0.0000E+00	0.0000E+00
7.2000E+02	0.0000E+00	0.0000E+00	0.0000E+00	0.0000E+00

Pathway number 6: (Node 2) Outboard MSL A Volume to Condenser

Pathway Filter: Removal Data

Time (hr)	Flow Rate (cfm)	Filter Efficiencies (%) Aerosol	Elemental	Organic
0.0000E+00	3.1880E+00	0.0000E+00	0.0000E+00	0.0000E+00
2.4000E+01	1.5130E+00	0.0000E+00	0.0000E+00	0.0000E+00
9.6000E+01	1.1480E+00	0.0000E+00	0.0000E+00	0.0000E+00
7.2000E+02	0.0000E+00	0.0000E+00	0.0000E+00	0.0000E+00

Pathway number 7: (Node 2) Outboard MSL B Volume to Condenser

Pathway Filter: Removal Data

Time (hr)	Flow Rate (cfm)	Filter Efficiencies (%) Aerosol	Elemental	Organic
0.0000E+00	3.1880E+00	0.0000E+00	0.0000E+00	0.0000E+00
2.4000E+01	1.5130E+00	0.0000E+00	0.0000E+00	0.0000E+00
9.6000E+01	1.1480E+00	0.0000E+00	0.0000E+00	0.0000E+00
7.2000E+02	0.0000E+00	0.0000E+00	0.0000E+00	0.0000E+00

Pathway number 8: Condenser Leak to Environment

Pathway Filter: Removal Data

Time (hr)	Flow Rate (cfm)	Filter Efficiencies (%) Aerosol	Elemental	Organic
0.0000E+00	3.6620E+00	0.0000E+00	0.0000E+00	0.0000E+00
2.4000E+01	2.0180E+00	0.0000E+00	0.0000E+00	0.0000E+00
9.6000E+01	2.0180E+00	0.0000E+00	0.0000E+00	0.0000E+00
7.2000E+02	0.0000E+00	0.0000E+00	0.0000E+00	0.0000E+00

Pathway number 9: Filtered Intake to Control Room

Pathway Filter: Removal Data

Time (hr)	Flow Rate (cfm)	Filter Efficiencies (%) Aerosol	Elemental	Organic
0.0000E+00	5.2500E+02	9.9000E+01	9.5000E+01	9.5000E+01
5.0000E-01	5.2500E+02	9.9000E+01	9.5000E+01	9.5000E+01
7.2000E+02	0.0000E+00	0.0000E+00	0.0000E+00	0.0000E+00

Pathway number 10: Unfiltered Inleakage to Control Room

Pathway Filter: Removal Data

Time (hr)	Flow Rate (cfm)	Filter Efficiencies (%) Aerosol	Elemental	Organic
0.0000E+00	2.2500E+02	0.0000E+00	0.0000E+00	0.0000E+00
7.2000E+02	0.0000E+00	0.0000E+00	0.0000E+00	0.0000E+00

Pathway number 11: Control Room Exhaust

Pathway Filter: Removal Data

Time (hr)	Flow Rate (cfm)	Filter Efficiencies (%) Aerosol	Elemental	Organic
0.0000E+00	7.5000E+02	1.0000E+02	1.0000E+02	1.0000E+02
5.0000E-01	7.5000E+02	1.0000E+02	1.0000E+02	1.0000E+02
7.2000E+02	0.0000E+00	0.0000E+00	0.0000E+00	0.0000E+00

LOCATION DATA

Location Exclusion Area Boundary (EAB) is in compartment 7

Location X/Q Data

Time (hr)	X/Q (s * m^-3)
0.0000E+00	3.1800E-04
2.4000E+01	0.0000E+00

Location Breathing Rate Data

Time (hr) Breathing Rate (m^3 * sec^-1)

```
  0.0000E+00                  3.5000E-04
  8.0000E+00                  1.8000E-04
  2.4000E+01                  2.3000E-04
  7.2000E+02                  0.0000E+00
Location Low Population Zone (LPZ)     is in compartment   7

Location X/Q Data
 Time (hr)          X/Q (s * m^-3)
  0.0000E+00           5.7900E-05
  8.0000E+00           4.1000E-05
  2.4000E+01           1.9500E-05
  4.8000E+01           1.9500E-05
  7.2000E+01           1.9500E-05
  9.6000E+01           6.6800E-06
  1.2000E+02           6.6800E-06
  1.6800E+02           6.6800E-06
  3.3600E+02           6.6800E-06
  7.2000E+02           0.0000E+00

Location Breathing Rate Data
 Time (hr)          Breathing Rate (m^3 * sec^-1)
  0.0000E+00                  3.5000E-04
  8.0000E+00                  1.8000E-04
  2.4000E+01                  2.3000E-04
  7.2000E+02                  0.0000E+00
Location Control Room (CR)     is in compartment   8

Location X/Q Data
 Time (hr)          X/Q (s * m^-3)
  0.0000E+00           6.8800E-03
  2.0000E+00           5.1700E-03
  8.0000E+00           2.0400E-03
  2.4000E+01           1.2900E-03
  9.6000E+01           9.6300E-04
  7.2000E+02           0.0000E+00

Location Breathing Rate Data
 Time (hr)          Breathing Rate (m^3 * sec^-1)
  0.0000E+00                  3.5000E-04
  7.2000E+02                  0.0000E+00

Location Occupancy Factor Data
 Time (hr)          Occupancy Factor
  0.0000E+00             1.0000E+00
  2.4000E+01             6.0000E-01
  9.6000E+01             4.0000E-01
  7.2000E+02             0.0000E+00

USER SPECIFIED TIME STEP DATA - SUPPLEMENTAL TIME STEPS
     Time            Time step
      0.0000E+00       0.0000E+00
```

```
#####################################################################
   RADTRAD Version 3.03 (Spring 2001) run on  5/26/2006  at  9:50:01
#####################################################################
```

```
 ####   #    #  #####  #####   #    #  #####
#    #  #    #    #    #    #  #    #    #
#    #  #    #    #    #    #  #    #    #
#    #  #    #    #    #####   #    #    #
#    #  #    #    #    #       #    #    #
#    #  #    #    #    #       #    #    #
 ####    ####     #    #        ####     #
```

```
#####################################################################
                                Dose Output
#####################################################################
```

Exclusion Area Boundary (EAB) Doses:

Time (h) = 0.5000	Whole Body	Thyroid	TEDE
Delta dose (rem)	6.0364E-07	1.8676E-06	6.6979E-07
Accumulated dose (rem)	6.0364E-07	1.8676E-06	6.6979E-07

Low Population Zone (LPZ) Doses:

Time (h) = 0.5000	Whole Body	Thyroid	TEDE
Delta dose (rem)	1.0991E-07	3.4004E-07	1.2195E-07
Accumulated dose (rem)	1.0991E-07	3.4004E-07	1.2195E-07

Control Room (CR) Doses:

Time (h) = 0.5000	Whole Body	Thyroid	TEDE
Delta dose (rem)	2.1485E-08	4.5013E-07	3.7332E-08
Accumulated dose (rem)	2.1485E-08	4.5013E-07	3.7332E-08

Exclusion Area Boundary (EAB) Doses:

Time (h) = 2.0000	Whole Body	Thyroid	TEDE
Delta dose (rem)	2.9759E-04	5.4263E-04	3.1800E-04
Accumulated dose (rem)	2.9819E-04	5.4450E-04	3.1867E-04

Low Population Zone (LPZ) Doses:

Time (h) = 2.0000	Whole Body	Thyroid	TEDE
Delta dose (rem)	5.4184E-05	9.8800E-05	5.7899E-05
Accumulated dose (rem)	5.4293E-05	9.9140E-05	5.8021E-05

Control Room (CR) Doses:

Time (h) = 2.0000	Whole Body	Thyroid	TEDE
Delta dose (rem)	3.1404E-05	3.6382E-04	4.4820E-05
Accumulated dose (rem)	3.1426E-05	3.6427E-04	4.4857E-05

Exclusion Area Boundary (EAB) Doses:

Time (h) = 8.0000	Whole Body	Thyroid	TEDE
Delta dose (rem)	2.4266E-02	6.4402E-02	2.6596E-02
Accumulated dose (rem)	2.4565E-02	6.4946E-02	2.6915E-02

Low Population Zone (LPZ) Doses:

Time (h) = 8.0000	Whole Body	Thyroid	TEDE
Delta dose (rem)	4.4183E-03	1.1726E-02	4.8425E-03
Accumulated dose (rem)	4.4726E-03	1.1825E-02	4.9005E-03

Control Room (CR) Doses:

Time (h) = 8.0000	Whole Body	Thyroid	TEDE
Delta dose (rem)	7.1029E-03	7.0643E-02	9.6441E-03
Accumulated dose (rem)	7.1343E-03	7.1007E-02	9.6889E-03

Exclusion Area Boundary (EAB) Doses:

Time (h) = 24.0000	Whole Body	Thyroid	TEDE
Delta dose (rem)	1.4433E-01	5.7042E-01	1.6302E-01
Accumulated dose (rem)	1.6889E-01	6.3536E-01	1.8994E-01

Low Population Zone (LPZ) Doses:

Time (h) = 24.0000	Whole Body	Thyroid	TEDE
Delta dose (rem)	1.8608E-02	7.3545E-02	2.1019E-02
Accumulated dose (rem)	2.3081E-02	8.5370E-02	2.5919E-02

Control Room (CR) Doses:

Time (h) = 24.0000	Whole Body	Thyroid	TEDE
Delta dose (rem)	3.3256E-02	6.0018E-01	5.2886E-02
Accumulated dose (rem)	4.0390E-02	6.7118E-01	6.2575E-02

Exclusion Area Boundary (EAB) Doses:

Time (h) = 48.0000	Whole Body	Thyroid	TEDE
Delta dose (rem)	0.0000E+00	0.0000E+00	0.0000E+00
Accumulated dose (rem)	1.6889E-01	6.3536E-01	1.8994E-01

Low Population Zone (LPZ) Doses:

Time (h) = 48.0000	Whole Body	Thyroid	TEDE
Delta dose (rem)	7.7231E-03	7.5043E-02	1.0103E-02
Accumulated dose (rem)	3.0804E-02	1.6041E-01	3.6022E-02

Control Room (CR) Doses:

Time (h) = 48.0000	Whole Body	Thyroid	TEDE
Delta dose (rem)	1.5190E-02	4.1761E-01	2.8400E-02
Accumulated dose (rem)	5.5580E-02	1.0888E+00	9.0975E-02

Exclusion Area Boundary (EAB) Doses:

Time (h) = 72.0000	Whole Body	Thyroid	TEDE
Delta dose (rem)	0.0000E+00	0.0000E+00	0.0000E+00
Accumulated dose (rem)	1.6889E-01	6.3536E-01	1.8994E-01

Low Population Zone (LPZ) Doses:

Time (h) = 72.0000	Whole Body	Thyroid	TEDE
Delta dose (rem)	8.3008E-03	9.7295E-02	1.1349E-02
Accumulated dose (rem)	3.9105E-02	2.5771E-01	4.7371E-02

Control Room (CR) Doses:

Time (h) = 72.0000	Whole Body	Thyroid	TEDE
Delta dose (rem)	1.4185E-02	5.1796E-01	3.0373E-02
Accumulated dose (rem)	6.9765E-02	1.6067E+00	1.2135E-01

Exclusion Area Boundary (EAB) Doses:

Time (h) = 96.0000	Whole Body	Thyroid	TEDE
Delta dose (rem)	0.0000E+00	0.0000E+00	0.0000E+00
Accumulated dose (rem)	1.6889E-01	6.3536E-01	1.8994E-01

Low Population Zone (LPZ) Doses:

Time (h) = 96.0000	Whole Body	Thyroid	TEDE
Delta dose (rem)	9.3414E-03	1.1404E-01	1.2891E-02
Accumulated dose (rem)	4.8446E-02	3.7175E-01	6.0262E-02

Control Room (CR) Doses:

Time (h) = 96.0000	Whole Body	Thyroid	TEDE
Delta dose (rem)	1.6179E-02	6.0921E-01	3.5102E-02
Accumulated dose (rem)	8.5944E-02	2.2160E+00	1.5645E-01

Exclusion Area Boundary (EAB) Doses:

Time (h) = 120.0000	Whole Body	Thyroid	TEDE
Delta dose (rem)	0.0000E+00	0.0000E+00	0.0000E+00
Accumulated dose (rem)	1.6889E-01	6.3536E-01	1.8994E-01

Low Population Zone (LPZ) Doses:

Time (h) = 120.0000	Whole Body	Thyroid	TEDE
Delta dose (rem)	3.3946E-03	4.2506E-02	4.7130E-03
Accumulated dose (rem)	5.1841E-02	4.1426E-01	6.4975E-02

Control Room (CR) Doses:

Time (h) = 120.0000	Whole Body	Thyroid	TEDE
Delta dose (rem)	8.9669E-03	3.3470E-01	1.9329E-02
Accumulated dose (rem)	9.4910E-02	2.5507E+00	1.7578E-01

Exclusion Area Boundary (EAB) Doses:

Time (h) = 168.0000	Whole Body	Thyroid	TEDE
Delta dose (rem)	0.0000E+00	0.0000E+00	0.0000E+00
Accumulated dose (rem)	1.6889E-01	6.3536E-01	1.8994E-01

Low Population Zone (LPZ) Doses:

Time (h) = 168.0000	Whole Body	Thyroid	TEDE
Delta dose (rem)	6.9973E-03	9.1603E-02	9.8294E-03
Accumulated dose (rem)	5.8838E-02	5.0586E-01	7.4805E-02

Control Room (CR) Doses:

Time (h) = 168.0000	Whole Body	Thyroid	TEDE
Delta dose (rem)	1.7856E-02	7.1364E-01	3.9885E-02
Accumulated dose (rem)	1.1277E-01	3.2643E+00	2.1566E-01

Exclusion Area Boundary (EAB) Doses:

Time (h) = 336.0000	Whole Body	Thyroid	TEDE
Delta dose (rem)	0.0000E+00	0.0000E+00	0.0000E+00
Accumulated dose (rem)	1.6889E-01	6.3536E-01	1.8994E-01

Low Population Zone (LPZ) Doses:

Time (h) = 336.0000	Whole Body	Thyroid	TEDE
Delta dose (rem)	2.0884E-02	3.2365E-01	3.0853E-02
Accumulated dose (rem)	7.9721E-02	8.2951E-01	1.0566E-01

Control Room (CR) Doses:

Time (h) = 336.0000	Whole Body	Thyroid	TEDE
Delta dose (rem)	5.3675E-02	2.5271E+00	1.3142E-01
Accumulated dose (rem)	1.6644E-01	5.7914E+00	3.4708E-01

Exclusion Area Boundary (EAB) Doses:

Time (h) = 720.0000	Whole Body	Thyroid	TEDE
Delta dose (rem)	0.0000E+00	0.0000E+00	0.0000E+00
Accumulated dose (rem)	1.6889E-01	6.3536E-01	1.8994E-01

Low Population Zone (LPZ) Doses:

Time (h) = 720.0000	Whole Body	Thyroid	TEDE
Delta dose (rem)	1.8351E-02	4.3578E-01	3.1761E-02
Accumulated dose (rem)	9.8073E-02	1.2653E+00	1.3742E-01

Control Room (CR) Doses:

Time (h) = 720.0000	Whole Body	Thyroid	TEDE
Delta dose (rem)	4.7338E-02	3.4084E+00	1.5210E-01
Accumulated dose (rem)	2.1378E-01	9.1998E+00	4.9919E-01

837

##

I-131 Summary

##

Time (hr)	Containment I-131 (Curies)	(Node 1) Inboard MSL I-131 (Curies)	(Node 1) Inboard MSL I-131 (Curies)
0.000	5.2640E+03	6.4922E-07	5.9299E-13
0.401	3.3308E+06	3.2537E-01	4.0944E-10
0.500	4.0234E+06	5.0079E-01	5.0526E-10
0.800	7.9873E+06	1.3710E+00	1.0074E-09
1.100	1.1677E+07	2.7806E+00	1.4981E-09
1.400	1.5110E+07	4.6902E+00	1.9780E-09
1.700	1.8302E+07	7.0631E+00	2.4477E-09
2.000	2.1269E+07	9.8652E+00	2.9079E-09
2.300	1.6051E+07	1.1371E+01	1.6502E-09
2.600	1.2203E+07	1.2740E+01	1.5573E-09
2.900	9.3660E+06	1.3991E+01	1.4884E-09
3.200	7.2733E+06	1.5139E+01	1.4372E-09

3.500	5.7299E+06	1.6195E+01	1.3990E-09
3.800	4.5914E+06	1.7171E+01	1.3705E-09
4.100	3.7515E+06	1.8073E+01	1.3490E-09
4.400	3.1318E+06	1.8909E+01	1.3327E-09
4.700	2.6745E+06	1.9685E+01	1.3203E-09
5.000	2.3368E+06	2.0405E+01	1.3108E-09
5.300	2.1739E+06	2.1075E+01	1.3054E-09
5.600	2.0386E+06	2.1699E+01	1.3007E-09
5.900	1.9261E+06	2.2279E+01	1.2965E-09
6.200	1.8326E+06	2.2819E+01	1.2927E-09
6.500	1.7547E+06	2.3321E+01	1.2893E-09
6.800	1.6899E+06	2.3788E+01	1.2863E-09
7.100	1.6358E+06	2.4223E+01	1.2835E-09
7.400	1.5907E+06	2.4627E+01	1.2809E-09
7.700	1.5530E+06	2.5002E+01	1.2784E-09
8.000	1.5215E+06	2.5351E+01	1.2762E-09
8.300	1.4951E+06	2.5675E+01	1.2740E-09
8.600	1.4754E+06	2.5975E+01	1.2720E-09
8.900	1.4584E+06	2.6254E+01	1.2701E-09
9.200	1.4437E+06	2.6513E+01	1.2683E-09
9.500	1.4310E+06	2.6753E+01	1.2664E-09
9.800	1.4199E+06	2.6974E+01	1.2647E-09
10.100	1.4103E+06	2.7180E+01	1.2629E-09
10.400	1.4018E+06	2.7369E+01	1.2612E-09
24.000	1.2895E+06	2.8867E+01	1.1920E-09
48.000	1.1754E+06	2.4409E+01	9.6338E-10
72.000	1.0714E+06	2.2145E+01	8.7811E-10
96.000	9.7667E+05	2.0181E+01	8.0044E-10
120.000	8.9030E+05	1.8285E+01	7.0915E-10
168.000	7.3978E+05	1.5188E+01	5.8926E-10
336.000	3.8690E+05	7.9432E+00	3.0818E-10
720.000	8.7935E+04	1.8053E+00	7.0043E-11

Time (hr)	(Node 2) Outboard MSL I-131 (Curies)	(Node 2) Outboard MSL I-131 (Curies)	Condenser I-131 (Curies)
0.000	2.6019E-11	9.1972E-07	3.0999E-11
0.401	9.3507E-03	4.5376E-01	1.1337E-02
0.500	1.7909E-02	6.9590E-01	2.1811E-02
0.800	7.3594E-02	1.8960E+00	9.0936E-02
1.100	1.9914E-01	3.8398E+00	2.5018E-01
1.400	4.2407E-01	6.4688E+00	5.4241E-01
1.700	7.7404E-01	9.7289E+00	1.0086E+00
2.000	1.2712E+00	1.3570E+01	1.6881E+00
2.300	1.8834E+00	1.5620E+01	2.5580E+00
2.600	2.5569E+00	1.7382E+01	3.5607E+00
2.900	3.2806E+00	1.8919E+01	4.6848E+00
3.200	4.0451E+00	2.0276E+01	5.9211E+00
3.500	4.8424E+00	2.1486E+01	7.2625E+00
3.800	5.6653E+00	2.2578E+01	8.7027E+00
4.100	6.5078E+00	2.3569E+01	1.0237E+01
4.400	7.3645E+00	2.4477E+01	1.1860E+01
4.700	8.2308E+00	2.5312E+01	1.3569E+01
5.000	9.1024E+00	2.6085E+01	1.5361E+01
5.300	9.9759E+00	2.6803E+01	1.7231E+01
5.600	1.0848E+01	2.7475E+01	1.9177E+01
5.900	1.1716E+01	2.8102E+01	2.1196E+01
6.200	1.2577E+01	2.8690E+01	2.3286E+01
6.500	1.3430E+01	2.9240E+01	2.5443E+01
6.800	1.4272E+01	2.9754E+01	2.7666E+01
7.100	1.5102E+01	3.0236E+01	2.9951E+01

7.400	1.5918E+01	3.0688E+01	3.2296E+01
7.700	1.6719E+01	3.1111E+01	3.4700E+01
8.000	1.7505E+01	3.1507E+01	3.7158E+01
8.300	1.8274E+01	3.1878E+01	3.9670E+01
8.600	1.9025E+01	3.2226E+01	4.2232E+01
8.900	1.9758E+01	3.2552E+01	4.4843E+01
9.200	2.0473E+01	3.2857E+01	4.7500E+01
9.500	2.1169E+01	3.3143E+01	5.0201E+01
9.800	2.1846E+01	3.3410E+01	5.2945E+01
10.100	2.2503E+01	3.3659E+01	5.5729E+01
10.400	2.3141E+01	3.3893E+01	5.8551E+01
24.000	3.6320E+01	3.6282E+01	2.0411E+02
48.000	3.7672E+01	3.4251E+01	3.1175E+02
72.000	3.4498E+01	3.1352E+01	3.9669E+02
96.000	3.1442E+01	2.8593E+01	4.5964E+02
120.000	3.5400E+01	3.1886E+01	4.9043E+02
168.000	3.1107E+01	2.7716E+01	5.3523E+02
336.000	1.6327E+01	1.4524E+01	4.7457E+02
720.000	3.7108E+00	3.3011E+00	1.6811E+02

Time (hr)	Environment I-131 (Curies)	Control Room I-131 (Curies)	Hold I-131 (Curies)
0.000	1.7278E-17	1.3707E-20	3.0465E-04
0.401	4.5875E-06	3.2804E-09	1.4535E+02
0.500	1.1016E-05	7.6853E-09	2.2112E+02
0.800	7.2043E-05	4.6835E-08	5.9764E+02
1.100	2.6613E-04	1.6236E-07	1.2127E+03
1.400	7.2773E-04	4.1796E-07	2.0494E+03
1.700	1.6418E-03	8.8917E-07	3.0920E+03
2.000	3.2416E-03	1.6581E-06	4.3258E+03
2.300	5.7832E-03	2.3731E-06	5.4786E+03
2.600	9.4531E-03	3.4086E-06	6.3492E+03
2.900	1.4404E-02	4.7335E-06	7.0116E+03
3.200	2.0777E-02	6.3215E-06	7.5206E+03
3.500	2.8701E-02	8.1505E-06	7.9163E+03
3.800	3.8300E-02	1.0202E-05	8.2285E+03
4.100	4.9690E-02	1.2461E-05	8.4790E+03
4.400	6.2981E-02	1.4914E-05	8.6840E+03
4.700	7.8278E-02	1.7550E-05	8.8554E+03
5.000	9.5682E-02	2.0360E-05	9.0020E+03
5.300	1.1529E-01	2.3335E-05	9.1332E+03
5.600	1.3719E-01	2.6468E-05	9.2549E+03
5.900	1.6149E-01	2.9752E-05	9.3688E+03
6.200	1.8825E-01	3.3182E-05	9.4762E+03
6.500	2.1757E-01	3.6751E-05	9.5781E+03
6.800	2.4953E-01	4.0454E-05	9.6755E+03
7.100	2.8420E-01	4.4286E-05	9.7690E+03
7.400	3.2166E-01	4.8242E-05	9.8594E+03
7.700	3.6198E-01	5.2318E-05	9.9470E+03
8.000	4.0522E-01	5.6507E-05	1.0032E+04
8.300	4.5146E-01	4.6811E-05	1.0116E+04
8.600	5.0074E-01	4.0951E-05	1.0198E+04
8.900	5.5315E-01	3.7661E-05	1.0279E+04
9.200	6.0872E-01	3.6096E-05	1.0358E+04
9.500	6.6752E-01	3.5694E-05	1.0437E+04
9.800	7.2959E-01	3.6077E-05	1.0515E+04
10.100	7.9500E-01	3.6994E-05	1.0592E+04
10.400	8.6377E-01	3.8277E-05	1.0669E+04
24.000	7.9410E+00	1.4090E-04	1.3846E+04
48.000	2.1687E+01	7.7487E-05	1.5656E+04

72.000	4.0559E+01	9.9062E-05	1.7053E+04
96.000	6.3332E+01	1.1508E-04	1.8096E+04
120.000	8.8475E+01	9.1831E-05	1.8835E+04
168.000	1.4316E+02	1.0038E-04	1.9576E+04
336.000	3.3731E+02	8.9219E-05	1.7631E+04
720.000	5.9887E+02	3.1645E-05	8.1416E+03

##

Cumulative Dose Summary

##

	Exclusion Area Bounda		Low Population Zone (		Control Room (CR)	
Time	Thyroid	TEDE	Thyroid	TEDE	Thyroid	TEDE
(hr)	(rem)	(rem)	(rem)	(rem)	(rem)	(rem)
0.000	0.0000E+00	0.0000E+00	0.0000E+00	0.0000E+00	0.0000E+00	0.0000E+00
0.401	7.7862E-07	2.8319E-07	1.4177E-07	5.1562E-08	1.5880E-07	1.3201E-08
0.500	1.8676E-06	6.6979E-07	3.4004E-07	1.2195E-07	4.5013E-07	3.7332E-08
0.800	1.2180E-05	4.5184E-06	2.2177E-06	8.2268E-07	4.2380E-06	3.5747E-07
1.100	4.4922E-05	1.9738E-05	8.1791E-06	3.5939E-06	1.9756E-05	1.8305E-06
1.400	1.2267E-04	6.2201E-05	2.2335E-05	1.1325E-05	6.4094E-05	6.6629E-06
1.700	2.7629E-04	1.5343E-04	5.0306E-05	2.7935E-05	1.6542E-04	1.8940E-05
2.000	5.4450E-04	3.1867E-04	9.9140E-05	5.8021E-05	3.6427E-04	4.4857E-05
2.300	9.6941E-04	5.8241E-04	1.7651E-04	1.0604E-04	6.8048E-04	8.8532E-05
2.600	1.5811E-03	9.5685E-04	2.8787E-04	1.7422E-04	1.1348E-03	1.5379E-04
2.900	2.4035E-03	1.4484E-03	4.3762E-04	2.6372E-04	1.7744E-03	2.4745E-04
3.200	3.4585E-03	2.0610E-03	6.2971E-04	3.7526E-04	2.6416E-03	3.7565E-04
3.500	4.7659E-03	2.7965E-03	8.6775E-04	5.0918E-04	3.7742E-03	5.4379E-04
3.800	6.3441E-03	3.6551E-03	1.1551E-03	6.6550E-04	5.2067E-03	7.5656E-04
4.100	8.2103E-03	4.6357E-03	1.4949E-03	8.4404E-04	6.9705E-03	1.0179E-03
4.400	1.0380E-02	5.7362E-03	1.8900E-03	1.0444E-03	9.0946E-03	1.3313E-03
4.700	1.2870E-02	6.9537E-03	2.3433E-03	1.2661E-03	1.1606E-02	1.6993E-03
5.000	1.5693E-02	8.2847E-03	2.8573E-03	1.5084E-03	1.4529E-02	2.1242E-03
5.300	1.8863E-02	9.7254E-03	3.4344E-03	1.7708E-03	1.7888E-02	2.6075E-03
5.600	2.2393E-02	1.1272E-02	4.0771E-03	2.0523E-03	2.1704E-02	3.1507E-03
5.900	2.6295E-02	1.2919E-02	4.7876E-03	2.3522E-03	2.6000E-02	3.7545E-03
6.200	3.0581E-02	1.4663E-02	5.5681E-03	2.6698E-03	3.0793E-02	4.4193E-03
6.500	3.5262E-02	1.6499E-02	6.4204E-03	3.0041E-03	3.6104E-02	5.1456E-03
6.800	4.0349E-02	1.8424E-02	7.3466E-03	3.3545E-03	4.1949E-02	5.9331E-03
7.100	4.5852E-02	2.0431E-02	8.3485E-03	3.7201E-03	4.8347E-02	6.7816E-03
7.400	5.1780E-02	2.2518E-02	9.4278E-03	4.1001E-03	5.5312E-02	7.6909E-03
7.700	5.8142E-02	2.4681E-02	1.0586E-02	4.4938E-03	6.2861E-02	8.6602E-03
8.000	6.4946E-02	2.6915E-02	1.1825E-02	4.9005E-03	7.1007E-02	9.6889E-03
8.300	6.8678E-02	2.9093E-02	1.2306E-02	5.1813E-03	7.8670E-02	1.0692E-02
8.600	7.2645E-02	3.1328E-02	1.2818E-02	5.4695E-03	8.5172E-02	1.1607E-02
8.900	7.6851E-02	3.3617E-02	1.3360E-02	5.7646E-03	9.0988E-02	1.2459E-02
9.200	8.1300E-02	3.5956E-02	1.3934E-02	6.0662E-03	9.6436E-02	1.3267E-02
9.500	8.5996E-02	3.8342E-02	1.4539E-02	6.3739E-03	1.0173E-01	1.4044E-02
9.800	9.0940E-02	4.0774E-02	1.5177E-02	6.6873E-03	1.0701E-01	1.4800E-02
10.100	9.6136E-02	4.3247E-02	1.5846E-02	7.0063E-03	1.1238E-01	1.5543E-02
10.400	1.0159E-01	4.5761E-02	1.6549E-02	7.3303E-03	1.1789E-01	1.6279E-02
24.000	6.3536E-01	1.8994E-01	8.5370E-02	2.5919E-02	6.7118E-01	6.2575E-02
48.000	6.3536E-01	1.8994E-01	1.6041E-01	3.6022E-02	1.0888E+00	9.0975E-02
72.000	6.3536E-01	1.8994E-01	2.5771E-01	4.7371E-02	1.6067E+00	1.2135E-01
96.000	6.3536E-01	1.8994E-01	3.7175E-01	6.0262E-02	2.2160E+00	1.5645E-01
120.000	6.3536E-01	1.8994E-01	4.1426E-01	6.4975E-02	2.5507E+00	1.7578E-01
168.000	6.3536E-01	1.8994E-01	5.0586E-01	7.4805E-02	3.2643E+00	2.1566E-01
336.000	6.3536E-01	1.8994E-01	8.2951E-01	1.0566E-01	5.7914E+00	3.4708E-01
720.000	6.3536E-01	1.8994E-01	1.2653E+00	1.3742E-01	9.1998E+00	4.9919E-01

##

Worst Two-Hour Doses

##

Exclusion Area Boundary (EAB)

Time (hr)	Whole Body (rem)	Thyroid (rem)	TEDE (rem)
10.4	1.8639E-02	7.8497E-02	2.1203E-02

```
#######################################################################
   RADTRAD Version 3.03 (Spring 2001) run on  5/26/2006  at  9:12:16
#######################################################################

#######################################################################
                    File information
#######################################################################

 Plant file           = RESUP-A.psf
 Inventory file       = c:\program files\radtrad3-03\defaults\limerick ast source
terms.nif
 Release file         = c:\program files\radtrad3-03\defaults\bwr_i.rft
 Dose Conversion file = c:\program files\radtrad3-03\defaults\fgr11&12.inp



    #####    ####   #####    #  #     #  #####   #    #  #####
    #    #  #       #        #  ##    #  #    #  #    #    #
    #    #  #       #        #  # #   #  #    #  #    #    #
    #####    ####   ####     #  #  #  #  #####   #    #    #
    #            #  #        #  #   # #  #       #    #    #
    #            #  #        #  #    ##  #       #    #    #
    #        ####   #        #  #     #  #        ####     #


 Radtrad 3.03 4/15/2001
 LGS LOCA 200scfh Line A MSIV Leak - Resuspension Only - Leak to Condenser - MSL
Pipe Deposition Credit (24-Hr 20-Group Aerosol Settling with Projected Area
Assumption; 2-Hr Mixing Delay) - 95% CREFAS Charcoal Eff. No Delay - Rad Mode
275cfm Control Room In
 Nuclide Inventory File:
 c:\program files\radtrad3-03\defaults\limerick ast source terms.nif
 Plant Power Level:
  3.5270E+03
 Compartments:
  10
 Compartment 1:
 Containment
   3
  3.7907E+05
   0
   0
   0
   1
   0
 Compartment 2:
 MSL A Inboard - Airborne
   3
  2.5800E+02
   0
   0
   0
   0
   0
 Compartment 3:
 Environment
   2
```

```
 0.0000E+00
  0
  0
  0
  0
  0
Compartment 4:
Control Room
  1
 1.2600E+05
  0
  0
  1
  0
  0
Compartment 5:
MSL A Outboard - Airborne
  3
 1.1820E+03
  0
  0
  0
  0
  0
Compartment 6:
MSL A Inboard - Surface
  3
 1.0000E+00
  0
  0
  0
  0
  0
Compartment 7:
MSL A Outboard - Surface
  3
 1.0000E+00
  0
  0
  0
  0
  0
Compartment 8:
Hold (By Surface Fixation)
  3
 1.0000E+00
  0
  0
  0
  0
  0
Compartment 9:
Condenser - Airborne
  3
 5.4746E+04
  0
  0
  0
  0
  0
```

```
Compartment 10:
Condenser - Surface
  3
 1.0000E+00
  0
  0
  0
  0
  0
Pathways:
 15
Pathway 1:
Filtered Environment to Control Room (Intake)
  3
  4
  2
Pathway 2:
Unfiltered Environment to Control Room (Inleakage)
  3
  4
  2
Pathway 3:
Control Room to Environment (Exhaust)
  4
  3
  2
Pathway 4:
(Aerosol Transport 1) MSL A Inboard - Airborne to MSL A Outboard - Airborne
  2
  5
  2
Pathway 5:
(Deposition 1) MSL A Inboard - Airborne to MSL A Inboard - Surface
  2
  6
  4
Pathway 6:
(Resuspension 1) MSL A Inboard - Surface to Environment
  6
  3
  4
Pathway 7:
(Surface Fixation 1) MSL A Inboard - Surface to Hold (By Surface Fixation)
  6
  8
  4
Pathway 8:
(Deposition 2) MSL A Outboard - Airborne to MSL A Outboard - Surface
  5
  7
  4
Pathway 9:
(Resuspension 2) MSL A Outboard - Surface to  Environment
  7
  3
  4
Pathway 10:
(Surface Fixation 2) MSL A Outboard - Surface to Hold (By Surface Fixation)
  7
  8
```

```
  4
Pathway 11:
(Aerosol Transport 2) MSL A Outboard - Airborne to  Condenser - Airborne
  5
  9
  2
Pathway 12:
(Deposition 3) Condenser - Airborne to Condenser - Surface
  9
 10
  4
Pathway 13:
(Resuspension 3) Condenser - Surface to  Environment
 10
  3
  4
Pathway 14:
(Surface Fixation 3) Condenser - Surface to  Hold (By Surface Fixation)
 10
  8
  4
Pathway 15:
Containment to  MSL A Inboard - Airborne
  1
  2
  2
End of Plant Model File
Scenario Description Name:

Plant Model Filename:

Source Term:
  1
  1   1.0000E+00
c:\program files\radtrad3-03\defaults\fgr11&12.inp
c:\program files\radtrad3-03\defaults\bwr_i.rft
  0.0000E+00
  1
  9.5000E-01   4.8500E-02   1.5000E-03   1.0000E+00
Overlying Pool:
  0
  0.0000E+00
  0
  0
  0
  0
Compartments:
 10
Compartment 1:
  0
  1
  0
  0
  0
  0
  0
  3
  3
  1.0000E+01
  1
```

```
  1
  0.0000E+00   0.0000E+00
Compartment 2:
  0
  1
  0
  0
  0
  0
  0
  0
  0
Compartment 3:
  0
  1
  0
  0
  0
  0
  0
  0
  0
Compartment 4:
  0
  1
  0
  0
  0
  0
  1
  2.1750E+03
  3
  0.0000E+00   9.9000E+01   9.5000E+01   9.5000E+01
  3.3330E-01   9.9000E+01   9.5000E+01   9.5000E+01
  7.2000E+02   0.0000E+00   0.0000E+00   0.0000E+00
  0
  0
Compartment 5:
  0
  1
  0
  0
  0
  0
  0
  0
  0
Compartment 6:
  0
  1
  0
  0
  0
  0
  0
  0
  0
Compartment 7:
  0
  1
```

```
  0
  0
  0
  0
  0
  0
  0
Compartment 8:
  0
  1
  0
  0
  0
  0
  0
  0
  0
Compartment 9:
  0
  1
  0
  0
  0
  0
  0
  0
  0
Compartment 10:
  0
  1
  0
  0
  0
  0
  0
  0
  0
Pathways:
 15
Pathway 1:
  0
  0
  0
  0
  0
  1
  3
  0.0000E+00   5.2500E+02   9.9000E+01   9.5000E+01   9.5000E+01
  5.0000E-01   5.2500E+02   9.9000E+01   9.5000E+01   9.5000E+01
  7.2000E+02   0.0000E+00   0.0000E+00   0.0000E+00   0.0000E+00
  0
  0
  0
  0
  0
  0
Pathway 2:
  0
  0
  0
```

```
  0
  0
  1
  2
  0.0000E+00   2.2500E+02   0.0000E+00   0.0000E+00   0.0000E+00
  7.2000E+02   0.0000E+00   0.0000E+00   0.0000E+00   0.0000E+00
  0
  0
  0
  0
  0
  0
Pathway 3:
  0
  0
  0
  0
  0
  1
  3
  0.0000E+00   7.5000E+02   1.0000E+02   1.0000E+02   1.0000E+02
  5.0000E-01   7.5000E+02   1.0000E+02   1.0000E+02   1.0000E+02
  7.2000E+02   0.0000E+00   0.0000E+00   0.0000E+00   0.0000E+00
  0
  0
  0
  0
  0
  0
Pathway 4:
  0
  0
  0
  0
  0
  1
  5
  0.0000E+00   9.3060E-01   1.0000E+02   0.0000E+00   1.0000E+02
  2.0000E+00   9.3060E-01   1.0000E+02   0.0000E+00   1.0000E+02
  2.4000E+01   5.1270E-01   1.0000E+02   0.0000E+00   1.0000E+02
  9.6000E+01   5.1270E-01   1.0000E+02   0.0000E+00   1.0000E+02
  7.2000E+02   0.0000E+00   0.0000E+00   0.0000E+00   0.0000E+00
  0
  0
  0
  0
  0
  0
Pathway 5:
  0
  0
  0
  0
  0
  0
  0
  0
  0
  0
  1
```

```
  4
  0.0000E+00   3.1420E+02
  2.4000E+01   7.0350E+02
  9.6000E+01   4.4780E+03
  7.2000E+02   0.0000E+00
  0
Pathway 6:
  0
  0
  0
  0
  0
  0
  0
  0
  0
  0
  1
  4
  0.0000E+00   3.5580E-02
  2.4000E+01   2.9950E-02
  9.6000E+01   2.0170E-02
  7.2000E+02   0.0000E+00
  0
Pathway 7:
  0
  0
  0
  0
  0
  0
  0
  0
  0
  0
  1
  4
  0.0000E+00   1.5960E-02
  2.4000E+01   1.1360E-02
  9.6000E+01   5.2000E-03
  7.2000E+02   0.0000E+00
  0
Pathway 8:
  0
  0
  0
  0
  0
  0
  0
  0
  0
  0
  1
  4
  0.0000E+00   3.1417E+02
  2.4000E+01   7.0352E+02
  9.6000E+01   4.4779E+03
  7.2000E+02   0.0000E+00
  0
```

```
Pathway 9:
  0
  0
  0
  0
  0
  0
  0
  0
  0
  0
  1
  4
  0.0000E+00   3.5580E-02
  2.4000E+01   2.9950E-02
  9.6000E+01   2.0170E-02
  7.2000E+02   0.0000E+00
  0
Pathway 10:
  0
  0
  0
  0
  0
  0
  0
  0
  0
  0
  1
  4
  0.0000E+00   1.5960E-02
  2.4000E+01   1.1360E-02
  9.6000E+01   5.2000E-03
  7.2000E+02   0.0000E+00
  0
Pathway 11:
  0
  0
  0
  0
  0
  1
  4
  0.0000E+00   3.1880E+00   1.0000E+02   0.0000E+00   1.0000E+02
  2.4000E+01   1.5130E+00   1.0000E+02   0.0000E+00   1.0000E+02
  9.6000E+01   1.1480E+00   1.0000E+02   0.0000E+00   1.0000E+02
  7.2000E+02   0.0000E+00   0.0000E+00   0.0000E+00   0.0000E+00
  0
  0
  0
  0
  0
  0
Pathway 12:
  0
  0
  0
  0
  0
```

```
  0
  0
  0
  0
  0
  1
  4
  0.0000E+00   1.0690E+03
  2.4000E+01   1.0690E+03
  9.6000E+01   1.0690E+03
  7.2000E+02   0.0000E+00
  0
Pathway 13:
  0
  0
  0
  0
  0
  0
  0
  0
  0
  0
  1
  4
  0.0000E+00   1.6090E-02
  2.4000E+01   1.6090E-02
  9.6000E+01   1.6090E-02
  7.2000E+02   0.0000E+00
  0
Pathway 14:
  0
  0
  0
  0
  0
  0
  0
  0
  0
  0
  1
  4
  0.0000E+00   3.3300E-03
  2.4000E+01   3.3300E-03
  9.6000E+01   3.3300E-03
  7.2000E+02   0.0000E+00
  0
Pathway 15:
  0
  0
  0
  0
  0
  1
  5
  0.0000E+00   1.5244E+00   1.0000E+02   0.0000E+00   1.0000E+02
  2.0000E+00   9.3060E-01   1.0000E+02   0.0000E+00   1.0000E+02
  2.4000E+01   5.1270E-01   1.0000E+02   0.0000E+00   1.0000E+02
  9.6000E+01   5.1270E-01   1.0000E+02   0.0000E+00   1.0000E+02
```

```
  7.2000E+02   0.0000E+00   0.0000E+00   0.0000E+00   0.0000E+00
  0
  0
  0
  0
  0
  0
Dose Locations:
  3
Location 1:
Control Room (CR)
  4
  0
  1
  2
  0.0000E+00   3.5000E-04
  7.2000E+02   0.0000E+00
  1
  4
  0.0000E+00   1.0000E+00
  2.4000E+01   6.0000E-01
  9.6000E+01   4.0000E-01
  7.2000E+02   0.0000E+00
Location 2:
Exclusion Area Boundary (EAB)
  3
  1
  2
  0.0000E+00   3.1800E-04
  2.4000E+01   0.0000E+00
  1
  4
  0.0000E+00   3.5000E-04
  8.0000E+00   1.8000E-04
  2.4000E+01   2.3000E-04
  7.2000E+02   0.0000E+00
  0
Location 3:
Low Population Zone (LPZ)
  3
  1
 10
  0.0000E+00   5.7900E-05
  8.0000E+00   4.1000E-05
  2.4000E+01   1.9500E-05
  4.8000E+01   1.9500E-05
  7.2000E+01   1.9500E-05
  9.6000E+01   6.6800E-06
  1.2000E+02   6.6800E-06
  1.6800E+02   6.6800E-06
  3.3600E+02   6.6800E-06
  7.2000E+02   0.0000E+00
  1
  4
  0.0000E+00   3.5000E-04
  8.0000E+00   1.8000E-04
  2.4000E+01   2.3000E-04
  7.2000E+02   0.0000E+00
  0
Effective Volume Location:
```

```
  1
  6
  0.0000E+00   6.8800E-03
  2.0000E+00   5.1700E-03
  8.0000E+00   2.0400E-03
  2.4000E+01   1.2900E-03
  9.6000E+01   9.6300E-04
  7.2000E+02   0.0000E+00
Simulation Parameters:
  1
  0.0000E+00   0.0000E+00
Output Filename:
C:\RESUP-A.o0
  1
  1
  1
  0
  0
End of Scenario File
```

```
#######################################################################
   RADTRAD Version 3.03 (Spring 2001) run on  5/26/2006  at  9:12:16
#######################################################################

#######################################################################
                     Plant Description
#######################################################################

Number of Nuclides =  60

Inventory Power =   1.0000E+00 MWth
Plant Power Level =   3.5270E+03 MWth

Number of compartments    =  10

Compartment information

Compartment number  1  (Source term fraction =   1.0000E+00
)
Name: Containment
Compartment volume =   3.7907E+05 (Cubic feet)
Compartment type is Normal
Removal devices within compartment:
     Deposition
Pathways into and out of compartment  1
   Exit Pathway Number   15: Containment to  MSL A Inboard - Airborne

Compartment number  2
Name: MSL A Inboard - Airborne
Compartment volume =   2.5800E+02 (Cubic feet)
Compartment type is Normal
Pathways into and out of compartment  2
   Inlet Pathway Number  15: Containment to  MSL A Inboard - Airborne
   Exit Pathway Number    4: (Aerosol Transport 1) MSL A Inboard - Airborne to
   Exit Pathway Number    5: (Deposition 1) MSL A Inboard - Airborne to MSL A I

Compartment number  3
Name: Environment
Compartment type is Environment
Pathways into and out of compartment  3
   Inlet Pathway Number   3: Control Room to Environment (Exhaust)
   Inlet Pathway Number   6: (Resuspension 1) MSL A Inboard - Surface to Enviro
   Inlet Pathway Number   9: (Resuspension 2) MSL A Outboard - Surface to  Envi
   Inlet Pathway Number  13: (Resuspension 3) Condenser - Surface to  Environme
   Exit Pathway Number    1: Filtered Environment to Control Room (Intake)
   Exit Pathway Number    2: Unfiltered Environment to Control Room (Inleakage)

Compartment number  4
Name: Control Room
Compartment volume =   1.2600E+05 (Cubic feet)
Compartment type is Control Room
Removal devices within compartment:
     Filter(s)
Pathways into and out of compartment  4
   Inlet Pathway Number   1: Filtered Environment to Control Room (Intake)
   Inlet Pathway Number   2: Unfiltered Environment to Control Room (Inleakage)
   Exit Pathway Number    3: Control Room to Environment (Exhaust)

Compartment number  5
```

```
Name: MSL A Outboard - Airborne
Compartment volume =   1.1820E+03 (Cubic feet)
Compartment type is Normal
Pathways into and out of compartment  5
   Inlet Pathway Number   4: (Aerosol Transport 1) MSL A Inboard - Airborne to
   Exit Pathway Number    8: (Deposition 2) MSL A Outboard - Airborne to MSL A
   Exit Pathway Number   11: (Aerosol Transport 2) MSL A Outboard - Airborne to

Compartment number  6
Name: MSL A Inboard - Surface
Compartment volume =   1.0000E+00 (Cubic feet)
Compartment type is Normal
Pathways into and out of compartment  6
   Inlet Pathway Number   5: (Deposition 1) MSL A Inboard - Airborne to MSL A I
   Exit Pathway Number    6: (Resuspension 1) MSL A Inboard - Surface to Enviro
   Exit Pathway Number    7: (Surface Fixation 1) MSL A Inboard - Surface to Ho

Compartment number  7
Name: MSL A Outboard - Surface
Compartment volume =   1.0000E+00 (Cubic feet)
Compartment type is Normal
Pathways into and out of compartment  7
   Inlet Pathway Number   8: (Deposition 2) MSL A Outboard - Airborne to MSL A
   Exit Pathway Number    9: (Resuspension 2) MSL A Outboard - Surface to  Envi
   Exit Pathway Number   10: (Surface Fixation 2) MSL A Outboard - Surface to H

Compartment number  8
Name: Hold (By Surface Fixation)
Compartment volume =   1.0000E+00 (Cubic feet)
Compartment type is Normal
Pathways into and out of compartment  8
   Inlet Pathway Number   7: (Surface Fixation 1) MSL A Inboard - Surface to Ho
   Inlet Pathway Number  10: (Surface Fixation 2) MSL A Outboard - Surface to H
   Inlet Pathway Number  14: (Surface Fixation 3) Condenser - Surface to  Hold

Compartment number  9
Name: Condenser - Airborne
Compartment volume =   5.4746E+04 (Cubic feet)
Compartment type is Normal
Pathways into and out of compartment  9
   Inlet Pathway Number  11: (Aerosol Transport 2) MSL A Outboard - Airborne to
   Exit Pathway Number   12: (Deposition 3) Condenser - Airborne to Condenser -

Compartment number 10
Name: Condenser - Surface
Compartment volume =   1.0000E+00 (Cubic feet)
Compartment type is Normal
Pathways into and out of compartment 10
   Inlet Pathway Number  12: (Deposition 3) Condenser - Airborne to Condenser -
   Exit Pathway Number   13: (Resuspension 3) Condenser - Surface to  Environme
   Exit Pathway Number   14: (Surface Fixation 3) Condenser - Surface to  Hold

Total number of pathways =  15
```

```
#######################################################################
   RADTRAD Version 3.03 (Spring 2001) run on  5/26/2006  at  9:12:16
#######################################################################

#######################################################################
                      Scenario Description
#######################################################################
```

Radioactive Decay is enabled
Calculation of Daughters is enabled

Release Fractions and Timings

	GAP	EARLY IN-VESSEL	LATE RELEASE	RELEASE MASS
	0.500000 hr	1.5000 hrs	0.0000 hrs	(gm)
NOBLES	0.0000E+00	0.0000E+00	0.0000E+00	0.000E+00
IODINE	5.0000E-02	2.5000E-01	0.0000E+00	3.033E+02
CESIUM	0.0000E+00	0.0000E+00	0.0000E+00	0.000E+00
TELLURIUM	0.0000E+00	0.0000E+00	0.0000E+00	0.000E+00
STRONTIUM	0.0000E+00	0.0000E+00	0.0000E+00	0.000E+00
BARIUM	0.0000E+00	0.0000E+00	0.0000E+00	0.000E+00
RUTHENIUM	0.0000E+00	0.0000E+00	0.0000E+00	0.000E+00
CERIUM	0.0000E+00	0.0000E+00	0.0000E+00	0.000E+00
LANTHANUM	0.0000E+00	0.0000E+00	0.0000E+00	0.000E+00

Inventory Power = 3527. MWt

Nuclide Name	Group	Specific Inventory (Ci/MWt)	half life (s)	Whole Body DCF (Sv-m3/Bq-s)	Inhaled Thyroid (Sv/Bq)	Inhaled Effective (Sv/Bq)
I-131	2	2.687E+04	6.947E+05	1.820E-14	2.920E-07	8.890E-09
I-132	2	3.881E+04	8.280E+03	1.120E-13	1.740E-09	1.030E-10
I-133	2	5.556E+04	7.488E+04	2.940E-14	4.860E-08	1.580E-09
I-134	2	6.165E+04	3.156E+03	1.300E-13	2.880E-10	3.550E-11
I-135	2	5.192E+04	2.380E+04	8.294E-14	8.460E-09	3.320E-10

Nuclide	Daughter	Fraction	Daughter	Fraction	Daughter	Fraction
Kr-85m	Kr-85	0.21	none	0.00	none	0.00
Kr-87	Rb-87	1.00	none	0.00	none	0.00
Kr-88	Rb-88	1.00	none	0.00	none	0.00
Sr-90	Y-90	1.00	none	0.00	none	0.00
Sr-91	Y-91m	0.58	Y-91	0.42	none	0.00
Sr-92	Y-92	1.00	none	0.00	none	0.00
Y-93	Zr-93	1.00	none	0.00	none	0.00
Zr-95	Nb-95m	0.01	Nb-95	0.99	none	0.00
Zr-97	Nb-97m	0.95	Nb-97	0.05	none	0.00
Mo-99	Tc-99m	0.88	Tc-99	0.12	none	0.00
Tc-99m	Tc-99	1.00	none	0.00	none	0.00
Ru-103	Rh-103m	1.00	none	0.00	none	0.00
Ru-105	Rh-105	1.00	none	0.00	none	0.00
Ru-106	Rh-106	1.00	none	0.00	none	0.00
Sb-127	Te-127m	0.18	Te-127	0.82	none	0.00
Sb-129	Te-129m	0.22	Te-129	0.77	none	0.00
Te-127m	Te-127	0.98	none	0.00	none	0.00
Te-129	I-129	1.00	none	0.00	none	0.00
Te-129m	Te-129	0.65	I-129	0.35	none	0.00
Te-131m	Te-131	0.22	I-131	0.78	none	0.00
Te-132	I-132	1.00	none	0.00	none	0.00
I-131	Xe-131m	0.01	none	0.00	none	0.00
I-133	Xe-133m	0.03	Xe-133	0.97	none	0.00

I-135	Xe-135m	0.15	Xe-135	0.85	none	0.00
Xe-135	Cs-135	1.00	none	0.00	none	0.00
Cs-137	Ba-137m	0.95	none	0.00	none	0.00
Ba-140	La-140	1.00	none	0.00	none	0.00
La-141	Ce-141	1.00	none	0.00	none	0.00
Ce-143	Pr-143	1.00	none	0.00	none	0.00
Ce-144	Pr-144m	0.02	Pr-144	0.98	none	0.00
Nd-147	Pm-147	1.00	none	0.00	none	0.00
Np-239	Pu-239	1.00	none	0.00	none	0.00
Pu-238	U-234	1.00	none	0.00	none	0.00
Pu-239	U-235	1.00	none	0.00	none	0.00
Pu-240	U-236	1.00	none	0.00	none	0.00
Pu-241	U-237	0.00	Am-241	1.00	none	0.00
Am-241	Np-237	1.00	none	0.00	none	0.00
Cm-242	Pu-238	1.00	none	0.00	none	0.00
Cm-244	Pu-240	1.00	none	0.00	none	0.00

Iodine fractions
Aerosol = 9.5000E-01
Elemental = 4.8500E-02
Organic = 1.5000E-03

COMPARTMENT DATA

Compartment number 1: Containment
Natural Deposition (Powers' model): Aerosol data
Reactor type: 3
Percentile = 10 (%)

Natural Deposition: Elemental Removal Data

Time (hr)	Removal Coef. (hr^-1)
0.0000E+00	0.0000E+00

Compartment number 2: MSL A Inboard - Airborne

Compartment number 3: Environment

Compartment number 4: Control Room

Compartment Filter Data

Time (hr)	Flow Rate (cfm)	Filter Efficiencies (%) Aerosol	Elemental	Organic
0.0000E+00	2.1750E+03	9.9000E+01	9.5000E+01	9.5000E+01
3.3330E-01	2.1750E+03	9.9000E+01	9.5000E+01	9.5000E+01
7.2000E+02	2.1750E+03	0.0000E+00	0.0000E+00	0.0000E+00

Compartment number 5: MSL A Outboard - Airborne

Compartment number 6: MSL A Inboard - Surface

Compartment number 7: MSL A Outboard - Surface

Compartment number 8: Hold (By Surface Fixation)

Compartment number 9: Condenser - Airborne

Compartment number 10: Condenser - Surface

PATHWAY DATA

Pathway number 1: Filtered Environment to Control Room (Intake)

Pathway Filter: Removal Data

Time (hr)	Flow Rate (cfm)	Filter Efficiencies (%) Aerosol	Elemental	Organic
0.0000E+00	5.2500E+02	9.9000E+01	9.5000E+01	9.5000E+01
5.0000E-01	5.2500E+02	9.9000E+01	9.5000E+01	9.5000E+01
7.2000E+02	0.0000E+00	0.0000E+00	0.0000E+00	0.0000E+00

Pathway number 2: Unfiltered Environment to Control Room (Inleakage)

Pathway Filter: Removal Data

Time (hr)	Flow Rate (cfm)	Filter Efficiencies (%) Aerosol	Elemental	Organic
0.0000E+00	2.2500E+02	0.0000E+00	0.0000E+00	0.0000E+00
7.2000E+02	0.0000E+00	0.0000E+00	0.0000E+00	0.0000E+00

Pathway number 3: Control Room to Environment (Exhaust)

Pathway Filter: Removal Data

Time (hr)	Flow Rate (cfm)	Filter Efficiencies (%) Aerosol	Elemental	Organic
0.0000E+00	7.5000E+02	1.0000E+02	1.0000E+02	1.0000E+02
5.0000E-01	7.5000E+02	1.0000E+02	1.0000E+02	1.0000E+02
7.2000E+02	0.0000E+00	0.0000E+00	0.0000E+00	0.0000E+00

Pathway number 4: (Aerosol Transport 1) MSL A Inboard - Airborne to

Pathway Filter: Removal Data

Time (hr)	Flow Rate (cfm)	Filter Efficiencies (%) Aerosol	Elemental	Organic
0.0000E+00	9.3060E-01	1.0000E+02	0.0000E+00	1.0000E+02
2.0000E+00	9.3060E-01	1.0000E+02	0.0000E+00	1.0000E+02
2.4000E+01	5.1270E-01	1.0000E+02	0.0000E+00	1.0000E+02
9.6000E+01	5.1270E-01	1.0000E+02	0.0000E+00	1.0000E+02
7.2000E+02	0.0000E+00	0.0000E+00	0.0000E+00	0.0000E+00

Pathway number 5: (Deposition 1) MSL A Inboard - Airborne to MSL A I

Convection Data

Time (hr)	Flow Rate (% / day)
0.0000E+00	3.1420E+02
2.4000E+01	7.0350E+02
9.6000E+01	4.4780E+03
7.2000E+02	0.0000E+00

Pathway number 6: (Resuspension 1) MSL A Inboard - Surface to Enviro

Convection Data

Time (hr)	Flow Rate (% / day)
0.0000E+00	3.5580E-02
2.4000E+01	2.9950E-02
9.6000E+01	2.0170E-02
7.2000E+02	0.0000E+00

Pathway number 7: (Surface Fixation 1) MSL A Inboard - Surface to Ho

Convection Data

Time (hr)	Flow Rate (% / day)
0.0000E+00	1.5960E-02
2.4000E+01	1.1360E-02
9.6000E+01	5.2000E-03
7.2000E+02	0.0000E+00

Pathway number 8: (Deposition 2) MSL A Outboard - Airborne to MSL A

Convection Data

Time (hr)	Flow Rate (% / day)
0.0000E+00	3.1417E+02
2.4000E+01	7.0352E+02
9.6000E+01	4.4779E+03
7.2000E+02	0.0000E+00

Pathway number 9: (Resuspension 2) MSL A Outboard - Surface to Envi

Convection Data

Time (hr)	Flow Rate (% / day)
0.0000E+00	3.5580E-02
2.4000E+01	2.9950E-02
9.6000E+01	2.0170E-02
7.2000E+02	0.0000E+00

Pathway number 10: (Surface Fixation 2) MSL A Outboard - Surface to H

Convection Data

Time (hr)	Flow Rate (% / day)
0.0000E+00	1.5960E-02
2.4000E+01	1.1360E-02
9.6000E+01	5.2000E-03
7.2000E+02	0.0000E+00

Pathway number 11: (Aerosol Transport 2) MSL A Outboard - Airborne to

Pathway Filter: Removal Data

Time (hr)	Flow Rate (cfm)	Filter Efficiencies (%) Aerosol	Elemental	Organic
0.0000E+00	3.1880E+00	1.0000E+02	0.0000E+00	1.0000E+02
2.4000E+01	1.5130E+00	1.0000E+02	0.0000E+00	1.0000E+02
9.6000E+01	1.1480E+00	1.0000E+02	0.0000E+00	1.0000E+02
7.2000E+02	0.0000E+00	0.0000E+00	0.0000E+00	0.0000E+00

Pathway number 12: (Deposition 3) Condenser - Airborne to Condenser -

Convection Data

Time (hr)	Flow Rate (% / day)
0.0000E+00	1.0690E+03
2.4000E+01	1.0690E+03
9.6000E+01	1.0690E+03
7.2000E+02	0.0000E+00

Pathway number 13: (Resuspension 3) Condenser - Surface to Environme

Convection Data

Time (hr)	Flow Rate (% / day)

0.0000E+00	1.6090E-02
2.4000E+01	1.6090E-02
9.6000E+01	1.6090E-02
7.2000E+02	0.0000E+00

Pathway number 14: (Surface Fixation 3) Condenser - Surface to Hold

Convection Data

Time (hr)	Flow Rate (% / day)
0.0000E+00	3.3300E-03
2.4000E+01	3.3300E-03
9.6000E+01	3.3300E-03
7.2000E+02	0.0000E+00

Pathway number 15: Containment to MSL A Inboard - Airborne

Pathway Filter: Removal Data

Time (hr)	Flow Rate (cfm)	Filter Efficiencies (%) Aerosol	Elemental	Organic
0.0000E+00	1.5244E+00	1.0000E+02	0.0000E+00	1.0000E+02
2.0000E+00	9.3060E-01	1.0000E+02	0.0000E+00	1.0000E+02
2.4000E+01	5.1270E-01	1.0000E+02	0.0000E+00	1.0000E+02
9.6000E+01	5.1270E-01	1.0000E+02	0.0000E+00	1.0000E+02
7.2000E+02	0.0000E+00	0.0000E+00	0.0000E+00	0.0000E+00

LOCATION DATA

Location Control Room (CR) is in compartment 4

Location X/Q Data

Time (hr)	X/Q (s * m^-3)
0.0000E+00	6.8800E-03
2.0000E+00	5.1700E-03
8.0000E+00	2.0400E-03
2.4000E+01	1.2900E-03
9.6000E+01	9.6300E-04
7.2000E+02	0.0000E+00

Location Breathing Rate Data

Time (hr)	Breathing Rate (m^3 * sec^-1)
0.0000E+00	3.5000E-04
7.2000E+02	0.0000E+00

Location Occupancy Factor Data

Time (hr)	Occupancy Factor
0.0000E+00	1.0000E+00
2.4000E+01	6.0000E-01
9.6000E+01	4.0000E-01
7.2000E+02	0.0000E+00

Location Exclusion Area Boundary (EAB) is in compartment 3

Location X/Q Data

Time (hr)	X/Q (s * m^-3)
0.0000E+00	3.1800E-04
2.4000E+01	0.0000E+00

Location Breathing Rate Data

Time (hr)	Breathing Rate (m^3 * sec^-1)
0.0000E+00	3.5000E-04
8.0000E+00	1.8000E-04

```
  2.4000E+01                  2.3000E-04
  7.2000E+02                  0.0000E+00
Location Low Population Zone (LPZ)     is in compartment   3

Location X/Q Data
 Time (hr)          X/Q (s * m^-3)
  0.0000E+00           5.7900E-05
  8.0000E+00           4.1000E-05
  2.4000E+01           1.9500E-05
  4.8000E+01           1.9500E-05
  7.2000E+01           1.9500E-05
  9.6000E+01           6.6800E-06
  1.2000E+02           6.6800E-06
  1.6800E+02           6.6800E-06
  3.3600E+02           6.6800E-06
  7.2000E+02           0.0000E+00

Location Breathing Rate Data
 Time (hr)          Breathing Rate (m^3 * sec^-1)
  0.0000E+00                  3.5000E-04
  8.0000E+00                  1.8000E-04
  2.4000E+01                  2.3000E-04
  7.2000E+02                  0.0000E+00

USER SPECIFIED TIME STEP DATA - SUPPLEMENTAL TIME STEPS
     Time            Time step
      0.0000E+00       0.0000E+00
```

```
#######################################################################
   RADTRAD Version 3.03 (Spring 2001) run on  5/26/2006  at  9:12:16
#######################################################################
```

```
 ####   #    #  #####  #####   #    #  #####
#    # #    #    #    #    #  #    #    #
#    # #    #    #    #    #  #    #    #
#    # #    #    #    #####   #    #    #
#    # #    #    #    #       #    #    #
#    # #    #    #    #       #    #    #
 ####    ####     #    #        ####     #
```

```
#######################################################################
                                Dose Output
#######################################################################
```

Control Room (CR) Doses:

Time (h) = 0.3333	Whole Body	Thyroid	TEDE
Delta dose (rem)	6.6736E-13	3.3085E-09	1.0515E-10
Accumulated dose (rem)	6.6736E-13	3.3085E-09	1.0515E-10

Exclusion Area Boundary (EAB) Doses:

Time (h) = 0.3333	Whole Body	Thyroid	TEDE
Delta dose (rem)	8.2706E-11	1.8546E-08	6.6841E-10
Accumulated dose (rem)	8.2706E-11	1.8546E-08	6.6841E-10

Low Population Zone (LPZ) Doses:

Time (h) = 0.3333	Whole Body	Thyroid	TEDE
Delta dose (rem)	1.5059E-11	3.3767E-09	1.2170E-10
Accumulated dose (rem)	1.5059E-11	3.3767E-09	1.2170E-10

Control Room (CR) Doses:

Time (h) = 0.5000	Whole Body	Thyroid	TEDE
Delta dose (rem)	3.7115E-12	1.9434E-08	6.1691E-10
Accumulated dose (rem)	4.3789E-12	2.2743E-08	7.2206E-10

Exclusion Area Boundary (EAB) Doses:

Time (h) = 0.5000	Whole Body	Thyroid	TEDE
Delta dose (rem)	3.1420E-10	7.4767E-08	2.6734E-09
Accumulated dose (rem)	3.9691E-10	9.3313E-08	3.3418E-09

Low Population Zone (LPZ) Doses:

Time (h) = 0.5000	Whole Body	Thyroid	TEDE
Delta dose (rem)	5.7208E-11	1.3613E-08	4.8676E-10
Accumulated dose (rem)	7.2267E-11	1.6990E-08	6.0846E-10

Control Room (CR) Doses:

Time (h) = 2.0000	Whole Body	Thyroid	TEDE
Delta dose (rem)	2.6813E-09	1.8823E-05	5.9386E-07
Accumulated dose (rem)	2.6857E-09	1.8846E-05	5.9458E-07

Exclusion Area Boundary (EAB) Doses:

Time (h) = 2.0000	Whole Body	Thyroid	TEDE
Delta dose (rem)	8.3049E-08	2.7307E-05	9.4089E-07
Accumulated dose (rem)	8.3446E-08	2.7400E-05	9.4423E-07

Low Population Zone (LPZ) Doses:

Time (h) = 2.0000	Whole Body	Thyroid	TEDE
Delta dose (rem)	1.5121E-08	4.9719E-06	1.7131E-07
Accumulated dose (rem)	1.5194E-08	4.9889E-06	1.7192E-07

Control Room (CR) Doses:

Time (h) = 8.0000	Whole Body	Thyroid	TEDE
Delta dose (rem)	3.9596E-07	3.7542E-03	1.1731E-04
Accumulated dose (rem)	3.9864E-07	3.7731E-03	1.1790E-04

Exclusion Area Boundary (EAB) Doses:

Time (h) = 8.0000	Whole Body	Thyroid	TEDE
Delta dose (rem)	5.5404E-06	3.3672E-03	1.1042E-04
Accumulated dose (rem)	5.6238E-06	3.3946E-03	1.1136E-04

Low Population Zone (LPZ) Doses:

Time (h) = 8.0000	Whole Body	Thyroid	TEDE
Delta dose (rem)	1.0088E-06	6.1308E-04	2.0105E-05
Accumulated dose (rem)	1.0240E-06	6.1806E-04	2.0277E-05

Control Room (CR) Doses:

Time (h) = 24.0000	Whole Body	Thyroid	TEDE
Delta dose (rem)	2.6397E-06	3.1104E-02	9.6305E-04
Accumulated dose (rem)	3.0384E-06	3.4877E-02	1.0809E-03

Exclusion Area Boundary (EAB) Doses:

Time (h) = 24.0000	Whole Body	Thyroid	TEDE
Delta dose (rem)	4.7459E-05	2.9274E-02	9.5130E-04
Accumulated dose (rem)	5.3083E-05	3.2669E-02	1.0627E-03

Low Population Zone (LPZ) Doses:

Time (h) = 24.0000	Whole Body	Thyroid	TEDE
Delta dose (rem)	6.1189E-06	3.7743E-03	1.2265E-04
Accumulated dose (rem)	7.1429E-06	4.3924E-03	1.4293E-04

Control Room (CR) Doses:

Time (h) = 48.0000	Whole Body	Thyroid	TEDE
Delta dose (rem)	1.7088E-06	3.8437E-02	1.1809E-03
Accumulated dose (rem)	4.7472E-06	7.3314E-02	2.2619E-03

Exclusion Area Boundary (EAB) Doses:

Time (h) = 48.0000	Whole Body	Thyroid	TEDE
Delta dose (rem)	0.0000E+00	0.0000E+00	0.0000E+00
Accumulated dose (rem)	5.3083E-05	3.2669E-02	1.0627E-03

Low Population Zone (LPZ) Doses:

Time (h) = 48.0000	Whole Body	Thyroid	TEDE
Delta dose (rem)	4.7955E-06	7.1474E-03	2.2406E-04
Accumulated dose (rem)	1.1938E-05	1.1540E-02	3.6699E-04

Control Room (CR) Doses:

Time (h) = 72.0000	Whole Body	Thyroid	TEDE
Delta dose (rem)	1.0766E-06	5.0828E-02	1.5544E-03
Accumulated dose (rem)	5.8238E-06	1.2414E-01	3.8163E-03

Exclusion Area Boundary (EAB) Doses:

Time (h) = 72.0000	Whole Body	Thyroid	TEDE
Delta dose (rem)	0.0000E+00	0.0000E+00	0.0000E+00
Accumulated dose (rem)	5.3083E-05	3.2669E-02	1.0627E-03

Low Population Zone (LPZ) Doses:

Time (h) = 72.0000	Whole Body	Thyroid	TEDE
Delta dose (rem)	4.1688E-06	9.5324E-03	2.9550E-04
Accumulated dose (rem)	1.6107E-05	2.1072E-02	6.6248E-04

Control Room (CR) Doses:

Time (h) = 96.0000	Whole Body	Thyroid	TEDE
Delta dose (rem)	9.1761E-07	6.0747E-02	1.8539E-03
Accumulated dose (rem)	6.7414E-06	1.8489E-01	5.6702E-03

Exclusion Area Boundary (EAB) Doses:

Time (h) = 96.0000	Whole Body	Thyroid	TEDE
Delta dose (rem)	0.0000E+00	0.0000E+00	0.0000E+00
Accumulated dose (rem)	5.3083E-05	3.2669E-02	1.0627E-03

Low Population Zone (LPZ) Doses:

Time (h) = 96.0000	Whole Body	Thyroid	TEDE
Delta dose (rem)	4.0209E-06	1.1362E-02	3.5061E-04
Accumulated dose (rem)	2.0128E-05	3.2434E-02	1.0131E-03

Control Room (CR) Doses:

Time (h) = 120.0000	Whole Body	Thyroid	TEDE
Delta dose (rem)	3.4264E-07	2.5226E-02	7.6908E-04
Accumulated dose (rem)	7.0841E-06	2.1011E-01	6.4393E-03

Exclusion Area Boundary (EAB) Doses:

Time (h) = 120.0000	Whole Body	Thyroid	TEDE
Delta dose (rem)	0.0000E+00	0.0000E+00	0.0000E+00
Accumulated dose (rem)	5.3083E-05	3.2669E-02	1.0627E-03

Low Population Zone (LPZ) Doses:

Time (h) = 120.0000	Whole Body	Thyroid	TEDE
Delta dose (rem)	9.9950E-07	3.1498E-03	9.6987E-05
Accumulated dose (rem)	2.1128E-05	3.5584E-02	1.1101E-03

Control Room (CR) Doses:

Time (h) = 168.0000	Whole Body	Thyroid	TEDE
Delta dose (rem)	6.8049E-07	5.5092E-02	1.6786E-03
Accumulated dose (rem)	7.7646E-06	2.6521E-01	8.1179E-03

Exclusion Area Boundary (EAB) Doses:

Time (h) = 168.0000	Whole Body	Thyroid	TEDE
Delta dose (rem)	0.0000E+00	0.0000E+00	0.0000E+00
Accumulated dose (rem)	5.3083E-05	3.2669E-02	1.0627E-03

Low Population Zone (LPZ) Doses:

Time (h) = 168.0000	Whole Body	Thyroid	TEDE
Delta dose (rem)	2.0870E-06	7.0704E-03	2.1742E-04
Accumulated dose (rem)	2.3215E-05	4.2655E-02	1.3275E-03

Control Room (CR) Doses:

Time (h) = 336.0000	Whole Body	Thyroid	TEDE
Delta dose (rem)	2.4440E-06	2.1504E-01	6.5496E-03
Accumulated dose (rem)	1.0209E-05	4.8025E-01	1.4668E-02

Exclusion Area Boundary (EAB) Doses:

Time (h) = 336.0000	Whole Body	Thyroid	TEDE
Delta dose (rem)	0.0000E+00	0.0000E+00	0.0000E+00
Accumulated dose (rem)	5.3083E-05	3.2669E-02	1.0627E-03

Low Population Zone (LPZ) Doses:

Time (h) = 336.0000	Whole Body	Thyroid	TEDE
Delta dose (rem)	7.7702E-06	2.7547E-02	8.4648E-04
Accumulated dose (rem)	3.0985E-05	7.0202E-02	2.1740E-03

Control Room (CR) Doses:

Time (h) = 720.0000	Whole Body	Thyroid	TEDE
Delta dose (rem)	3.7604E-06	3.7173E-01	1.1321E-02
Accumulated dose (rem)	1.3969E-05	8.5197E-01	2.5989E-02

Exclusion Area Boundary (EAB) Doses:

Time (h) = 720.0000	Whole Body	Thyroid	TEDE
Delta dose (rem)	0.0000E+00	0.0000E+00	0.0000E+00
Accumulated dose (rem)	5.3083E-05	3.2669E-02	1.0627E-03

Low Population Zone (LPZ) Doses:

Time (h) = 720.0000	Whole Body	Thyroid	TEDE
Delta dose (rem)	1.3185E-05	4.7552E-02	1.4609E-03
Accumulated dose (rem)	4.4170E-05	1.1775E-01	3.6349E-03

838

```
#######################################################################
                                I-131 Summary
#######################################################################
```

Time (hr)	Containment I-131 (Curies)	MSL A Inboard - Airbo I-131 (Curies)	Environment I-131 (Curies)
0.000	5.2640E+03	1.7114E-05	8.5433E-19
0.333	2.8290E+06	5.9220E+00	1.0961E-07
0.500	4.0239E+06	1.3070E+01	5.5249E-07
0.800	7.9884E+06	3.5530E+01	3.6382E-06
1.100	1.1679E+07	7.1455E+01	1.3487E-05
1.400	1.5113E+07	1.1946E+02	3.6935E-05
1.700	1.8307E+07	1.7832E+02	8.3380E-05
2.000	2.1276E+07	2.4689E+02	1.6468E-04
2.300	1.6058E+07	2.7960E+02	2.9380E-04
2.600	1.2209E+07	3.0897E+02	4.8021E-04
2.900	9.3713E+06	3.3535E+02	7.3204E-04
3.200	7.2781E+06	3.5902E+02	1.0571E-03
3.500	5.7342E+06	3.8027E+02	1.4627E-03
3.800	4.5953E+06	3.9933E+02	1.9562E-03
4.100	3.7551E+06	4.1642E+02	2.5443E-03
4.400	3.1351E+06	4.3174E+02	3.2335E-03
4.700	2.6775E+06	4.4546E+02	4.0300E-03
5.000	2.3396E+06	4.5775E+02	4.9398E-03
5.300	2.1768E+06	4.6874E+02	5.9684E-03
5.600	2.0415E+06	4.7858E+02	7.1211E-03
5.900	1.9291E+06	4.8737E+02	8.4031E-03
6.200	1.8355E+06	4.9521E+02	9.8190E-03
6.500	1.7577E+06	5.0221E+02	1.1373E-02
6.800	1.6930E+06	5.0845E+02	1.3070E-02
7.100	1.6390E+06	5.1400E+02	1.4914E-02
7.400	1.5940E+06	5.1893E+02	1.6909E-02
7.700	1.5564E+06	5.2331E+02	1.9057E-02
8.000	1.5249E+06	5.2718E+02	2.1362E-02
8.300	1.4986E+06	5.3061E+02	2.3828E-02
8.600	1.4790E+06	5.3363E+02	2.6458E-02
8.900	1.4622E+06	5.3629E+02	2.9253E-02
9.200	1.4476E+06	5.3861E+02	3.2217E-02
9.500	1.4350E+06	5.4065E+02	3.5351E-02
9.800	1.4240E+06	5.4241E+02	3.8659E-02
10.100	1.4145E+06	5.4394E+02	4.2141E-02
10.400	1.4061E+06	5.4525E+02	4.5801E-02
24.000	1.2997E+06	5.3471E+02	4.0907E-01
48.000	1.1900E+06	2.2722E+02	1.7210E+00
72.000	1.0896E+06	2.0804E+02	3.5717E+00
96.000	9.9764E+05	1.9048E+02	5.8421E+00
120.000	9.1346E+05	3.6224E+01	7.7062E+00
168.000	7.6580E+05	3.0368E+01	1.1929E+01
336.000	4.1314E+05	1.6384E+01	2.8457E+01
720.000	1.0081E+05	3.9977E+00	5.7001E+01

Time (hr)	Control Room I-131 (Curies)	MSL A Outboard - Airb I-131 (Curies)	MSL A Inboard - Surfa I-131 (Curies)
0.000	6.9687E-22	6.8585E-10	4.1491E-10
0.333	8.1965E-11	1.4029E-01	8.6958E-02
0.500	3.9624E-10	4.6105E-01	2.8927E-01
0.800	2.4313E-09	1.8683E+00	1.1965E+00
1.100	8.4564E-09	4.9831E+00	3.2534E+00
1.400	2.1796E-08	1.0452E+01	6.9597E+00
1.700	4.6389E-08	1.8787E+01	1.2763E+01

2.000	8.6512E-08	3.0380E+01	2.1065E+01
2.300	1.2384E-07	4.4183E+01	3.1387E+01
2.600	1.7783E-07	5.8737E+01	4.2916E+01
2.900	2.4703E-07	7.3781E+01	5.5524E+01
3.200	3.3032E-07	8.9098E+01	6.9101E+01
3.500	4.2678E-07	1.0450E+02	8.3544E+01
3.800	5.3563E-07	1.1985E+02	9.8761E+01
4.100	6.5620E-07	1.3501E+02	1.1467E+02
4.400	7.8788E-07	1.4989E+02	1.3120E+02
4.700	9.3010E-07	1.6440E+02	1.4828E+02
5.000	1.0823E-06	1.7848E+02	1.6585E+02
5.300	1.2441E-06	1.9209E+02	1.8386E+02
5.600	1.4149E-06	2.0519E+02	2.0225E+02
5.900	1.5943E-06	2.1775E+02	2.2100E+02
6.200	1.7818E-06	2.2976E+02	2.4005E+02
6.500	1.9770E-06	2.4120E+02	2.5936E+02
6.800	2.1794E-06	2.5208E+02	2.7892E+02
7.100	2.3888E-06	2.6241E+02	2.9869E+02
7.400	2.6046E-06	2.7218E+02	3.1864E+02
7.700	2.8266E-06	2.8140E+02	3.3875E+02
8.000	3.0543E-06	2.9010E+02	3.5901E+02
8.300	2.5324E-06	2.9829E+02	3.7938E+02
8.600	2.2163E-06	3.0597E+02	3.9986E+02
8.900	2.0382E-06	3.1318E+02	4.2042E+02
9.200	1.9528E-06	3.1994E+02	4.4107E+02
9.500	1.9298E-06	3.2625E+02	4.6177E+02
9.800	1.9489E-06	3.3214E+02	4.8253E+02
10.100	1.9964E-06	3.3763E+02	5.0333E+02
10.400	2.0635E-06	3.4275E+02	5.2416E+02
24.000	7.1184E-06	3.9367E+02	1.4459E+03
48.000	7.5686E-06	7.3353E+01	3.1124E+03
72.000	9.7927E-06	6.7066E+01	4.3188E+03
96.000	1.1591E-05	6.1407E+01	5.3015E+03
120.000	6.9351E-06	2.2449E+00	6.6159E+03
168.000	7.9074E-06	1.8820E+00	8.2897E+03
336.000	8.2490E-06	1.0153E+00	9.6918E+03
720.000	4.2780E-06	2.4775E-01	5.3333E+03

	MSL A Outboard - Surf Hold	(By Surface Fixa	Condenser - Airborne
Time (hr)	I-131 (Curies)	I-131 (Curies)	I-131 (Curies)
0.000	1.2470E-14	3.8322E-19	1.5415E-14
0.333	1.5466E-03	4.9156E-08	1.8561E-03
0.500	7.6649E-03	2.4771E-07	9.0645E-03
0.800	4.9005E-02	1.6304E-06	5.6477E-02
1.100	1.7669E-01	6.0402E-06	1.9875E-01
1.400	4.7083E-01	1.6530E-05	5.1707E-01
1.700	1.0341E+00	3.7285E-05	1.1085E+00
2.000	1.9867E+00	7.3572E-05	2.0784E+00
2.300	3.4450E+00	1.3113E-04	3.5134E+00
2.600	5.4591E+00	2.1408E-04	5.4131E+00
2.900	8.0527E+00	3.2593E-04	7.7467E+00
3.200	1.1240E+01	4.6997E-04	1.0477E+01
3.500	1.5027E+01	6.4934E-04	1.3561E+01
3.800	1.9414E+01	8.6700E-04	1.6955E+01
4.100	2.4396E+01	1.1258E-03	2.0615E+01
4.400	2.9962E+01	1.4282E-03	2.4496E+01
4.700	3.6098E+01	1.7770E-03	2.8555E+01
5.000	4.2790E+01	2.1742E-03	3.2753E+01
5.300	5.0018E+01	2.6222E-03	3.7050E+01
5.600	5.7762E+01	3.1230E-03	4.1412E+01

5.900	6.6001E+01	3.6785E-03	4.5806E+01
6.200	7.4714E+01	4.2906E-03	5.0205E+01
6.500	8.3877E+01	4.9608E-03	5.4581E+01
6.800	9.3469E+01	5.6908E-03	5.8913E+01
7.100	1.0347E+02	6.4820E-03	6.3180E+01
7.400	1.1385E+02	7.3358E-03	6.7365E+01
7.700	1.2459E+02	8.2533E-03	7.1454E+01
8.000	1.3567E+02	9.2358E-03	7.5435E+01
8.300	1.4707E+02	1.0284E-02	7.9297E+01
8.600	1.5878E+02	1.1400E-02	8.3032E+01
8.900	1.7076E+02	1.2583E-02	8.6635E+01
9.200	1.8300E+02	1.3835E-02	9.0100E+01
9.500	1.9548E+02	1.5157E-02	9.3425E+01
9.800	2.0819E+02	1.6549E-02	9.6608E+01
10.100	2.2111E+02	1.8011E-02	9.9648E+01
10.400	2.3423E+02	1.9545E-02	1.0255E+02
24.000	8.9289E+02	1.6649E-01	1.4203E+02
48.000	1.6226E+03	6.0120E-01	1.2709E+01
72.000	1.9602E+03	1.1940E+00	1.1566E+01
96.000	2.2299E+03	1.8900E+00	1.0590E+01
120.000	2.2063E+03	2.1861E+00	2.9402E-01
168.000	2.0247E+03	2.8274E+00	2.4627E-01
336.000	1.4255E+03	4.7247E+00	1.3286E-01
720.000	5.3732E+02	4.8777E+00	3.2419E-02

Time (hr)	Condenser - Surface I-131 (Curies)
0.000	7.6291E-19
0.333	5.5778E-05
0.500	4.1108E-04
0.800	4.1044E-03
1.100	1.9679E-02
1.400	6.4985E-02
1.700	1.6986E-01
2.000	3.7768E-01
2.300	7.4539E-01
2.600	1.3357E+00
2.900	2.2084E+00
3.200	3.4187E+00
3.500	5.0165E+00
3.800	7.0457E+00
4.100	9.5443E+00
4.400	1.2544E+01
4.700	1.6071E+01
5.000	2.0147E+01
5.300	2.4785E+01
5.600	2.9997E+01
5.900	3.5789E+01
6.200	4.2162E+01
6.500	4.9114E+01
6.800	5.6640E+01
7.100	6.4733E+01
7.400	7.3381E+01
7.700	8.2573E+01
8.000	9.2294E+01
8.300	1.0253E+02
8.600	1.1326E+02
8.900	1.2447E+02
9.200	1.3614E+02
9.500	1.4825E+02

9.800	1.6078E+02
10.100	1.7371E+02
10.400	1.8703E+02
24.000	9.6194E+02
48.000	1.2105E+03
72.000	1.2341E+03
96.000	1.2453E+03
120.000	1.1567E+03
168.000	9.7836E+02
336.000	5.4435E+02
720.000	1.4223E+02

##

Cumulative Dose Summary

##

	Control Room (CR)		Exclusion Area Bounda		Low Population Zone (	
Time	Thyroid	TEDE	Thyroid	TEDE	Thyroid	TEDE
(hr)	(rem)	(rem)	(rem)	(rem)	(rem)	(rem)
0.000	0.0000E+00	0.0000E+00	0.0000E+00	0.0000E+00	0.0000E+00	0.0000E+00
0.333	3.3085E-09	1.0515E-10	1.8546E-08	6.6841E-10	3.3767E-09	1.2170E-10
0.500	2.2743E-08	7.2206E-10	9.3313E-08	3.3418E-09	1.6990E-08	6.0846E-10
0.800	2.1828E-07	6.9194E-09	6.1263E-07	2.1726E-08	1.1154E-07	3.9558E-09
1.100	1.0218E-06	3.2346E-08	2.2641E-06	7.9593E-08	4.1223E-07	1.4492E-08
1.400	3.3184E-06	1.0491E-07	6.1816E-06	2.1567E-07	1.1255E-06	3.9268E-08
1.700	8.5627E-06	2.7042E-07	1.3914E-05	4.8224E-07	2.5333E-06	8.7805E-08
2.000	1.8846E-05	5.9458E-07	2.7400E-05	9.4423E-07	4.9889E-06	1.7192E-07
2.300	3.5189E-05	1.1093E-06	4.8748E-05	1.6714E-06	8.8757E-06	3.0433E-07
2.600	5.8655E-05	1.8477E-06	7.9462E-05	2.7125E-06	1.4468E-05	4.9387E-07
2.900	9.1683E-05	2.8861E-06	1.2082E-04	4.1077E-06	2.1997E-05	7.4791E-07
3.200	1.3649E-04	4.2937E-06	1.7401E-04	5.8952E-06	3.1683E-05	1.0734E-06
3.500	1.9511E-04	6.1342E-06	2.4019E-04	8.1109E-06	4.3733E-05	1.4768E-06
3.800	2.6945E-04	8.4664E-06	3.2044E-04	1.0789E-05	5.8345E-05	1.9643E-06
4.100	3.6126E-04	1.1345E-05	4.1578E-04	1.3960E-05	7.5703E-05	2.5418E-06
4.400	4.7219E-04	1.4821E-05	5.2716E-04	1.7655E-05	9.5983E-05	3.2145E-06
4.700	6.0379E-04	1.8943E-05	6.5550E-04	2.1902E-05	1.1935E-04	3.9878E-06
5.000	7.5751E-04	2.3755E-05	8.0165E-04	2.6726E-05	1.4596E-04	4.8662E-06
5.300	9.3473E-04	2.9299E-05	9.6640E-04	3.2153E-05	1.7596E-04	5.8542E-06
5.600	1.1367E-03	3.5616E-05	1.1505E-03	3.8205E-05	2.0948E-04	6.9561E-06
5.900	1.3647E-03	4.2742E-05	1.3547E-03	4.4903E-05	2.4665E-04	8.1757E-06
6.200	1.6197E-03	5.0711E-05	1.5795E-03	5.2267E-05	2.8760E-04	9.5165E-06
6.500	1.9029E-03	5.9556E-05	1.8257E-03	6.0315E-05	3.3242E-04	1.0982E-05
6.800	2.2152E-03	6.9307E-05	2.0938E-03	6.9065E-05	3.8123E-04	1.2575E-05
7.100	2.5576E-03	7.9992E-05	2.3842E-03	7.8531E-05	4.3411E-04	1.4299E-05
7.400	2.9308E-03	9.1638E-05	2.6975E-03	8.8728E-05	4.9116E-04	1.6155E-05
7.700	3.3357E-03	1.0427E-04	3.0342E-03	9.9668E-05	5.5245E-04	1.8147E-05
8.000	3.7731E-03	1.1790E-04	3.3946E-03	1.1136E-04	6.1806E-04	2.0277E-05
8.300	4.1848E-03	1.3074E-04	3.5923E-03	1.1803E-04	6.4356E-04	2.1136E-05
8.600	4.5344E-03	1.4163E-04	3.8026E-03	1.2510E-04	6.7067E-04	2.2047E-05
8.900	4.8473E-03	1.5138E-04	4.0256E-03	1.3258E-04	6.9942E-04	2.3012E-05
9.200	5.1404E-03	1.6052E-04	4.2615E-03	1.4048E-04	7.2984E-04	2.4031E-05
9.500	5.4251E-03	1.6938E-04	4.5104E-03	1.4881E-04	7.6193E-04	2.5104E-05
9.800	5.7090E-03	1.7823E-04	4.7724E-03	1.5755E-04	7.9571E-04	2.6232E-05
10.100	5.9972E-03	1.8720E-04	5.0476E-03	1.6672E-04	8.3119E-04	2.7414E-05
10.400	6.2932E-03	1.9641E-04	5.3361E-03	1.7633E-04	8.6839E-04	2.8652E-05
24.000	3.4877E-02	1.0809E-03	3.2669E-02	1.0627E-03	4.3924E-03	1.4293E-04
48.000	7.3314E-02	2.2619E-03	3.2669E-02	1.0627E-03	1.1540E-02	3.6699E-04
72.000	1.2414E-01	3.8163E-03	3.2669E-02	1.0627E-03	2.1072E-02	6.6248E-04
96.000	1.8489E-01	5.6702E-03	3.2669E-02	1.0627E-03	3.2434E-02	1.0131E-03
120.000	2.1011E-01	6.4393E-03	3.2669E-02	1.0627E-03	3.5584E-02	1.1101E-03

```
 168.000 2.6521E-01 8.1179E-03 3.2669E-02 1.0627E-03 4.2655E-02 1.3275E-03
 336.000 4.8025E-01 1.4668E-02 3.2669E-02 1.0627E-03 7.0202E-02 2.1740E-03
 720.000 8.5197E-01 2.5989E-02 3.2669E-02 1.0627E-03 1.1775E-01 3.6349E-03

#####################################################################
                        Worst Two-Hour Doses
#####################################################################

Exclusion Area Boundary (EAB)
   Time   Whole Body    Thyroid        TEDE
   (hr)     (rem)        (rem)         (rem)
   10.4   6.2869E-06   4.0195E-03   1.3034E-04
```

```
 ######################################################################
    RADTRAD Version 3.03 (Spring 2001) run on  5/26/2006  at  9:11:56
 ######################################################################

 ######################################################################
                      File information
 ######################################################################

 Plant file           = RESUP-B.psf
 Inventory file       = c:\program files\radtrad3-03\defaults\limerick ast source
terms.nif
 Release file         = c:\program files\radtrad3-03\defaults\bwr_i.rft
 Dose Conversion file = c:\program files\radtrad3-03\defaults\fgr11&12.inp
```

```
     #####    ####   #####    #  #     #  #####   #    #  #####
     #    #  #       #        #  ##    #  #    #  #    #    #
     #    #  #       #        #  # #   #  #    #  #    #    #
     #####    ####   ####     #  #  #  #  #####   #    #    #
     #            #  #        #  #   # #  #       #    #    #
     #            #  #        #  #    ##  #       #    #    #
     #        ####   #        #  #     #  #        ####     #
```

```
 Radtrad 3.03 4/15/2001
 LGS LOCA 200scfh Line B MSIV Leak - Resuspension Only - Leak to Condenser - MSL
Pipe Deposition Credit (24-Hr 20-Group Aerosol Settling with Projected Area
Assumption; 2-Hr Mixing Delay) - 95% CREFAS Charcoal Eff. No Delay - Rad Mode
275cfm Control Room In
 Nuclide Inventory File:
 c:\program files\radtrad3-03\defaults\limerick ast source terms.nif
 Plant Power Level:
  3.5270E+03
 Compartments:
  10
 Compartment 1:
 Containment
   3
  3.7907E+05
   0
   0
   0
   1
   0
 Compartment 2:
 MSL B Inboard - Airborne
   3
  1.0000E-05
   0
   0
   0
   0
   0
 Compartment 3:
 Environment
   2
```

```
 0.0000E+00
  0
  0
  0
  0
  0
Compartment 4:
Control Room
  1
 1.2600E+05
  0
  0
  1
  0
  0
Compartment 5:
MSL B Outboard - Airborne
  3
 1.0510E+03
  0
  0
  0
  0
  0
Compartment 6:
MSL B Inboard - Surface
  3
 1.0000E+00
  0
  0
  0
  0
  0
Compartment 7:
MSL B Outboard - Surface
  3
 1.0000E+00
  0
  0
  0
  0
  0
Compartment 8:
Hold (By Surface Fixation)
  3
 1.0000E+00
  0
  0
  0
  0
  0
Compartment 9:
Condenser - Airborne
  3
 5.4746E+04
  0
  0
  0
  0
  0
```

```
Compartment 10:
Condenser - Surface
  3
 1.0000E+00
  0
  0
  0
  0
  0
Pathways:
 15
Pathway 1:
Filtered Environment to Control Room (Intake)
  3
  4
  2
Pathway 2:
Unfiltered Environment to Control Room (Inleakage)
  3
  4
  2
Pathway 3:
Control Room to Environment (Exhaust)
  4
  3
  2
Pathway 4:
(Aerosol Transport 1) MSL B Inboard - Airborne to MSL B Outboard - Airborne
  2
  5
  2
Pathway 5:
(Deposition 1) MSL B Inboard - Airborne to MSL B Inboard - Surface
  2
  6
  4
Pathway 6:
(Resuspension 1) MSL B Inboard - Surface to Environment
  6
  3
  4
Pathway 7:
(Surface Fixation 1) MSL B Inboard - Surface to Hold (By Surface Fixation)
  6
  8
  4
Pathway 8:
(Deposition 2) MSL B Outboard - Airborne to MSL B Outboard - Surface
  5
  7
  4
Pathway 9:
(Resuspension 2) MSL B Outboard - Surface to  Environment
  7
  3
  4
Pathway 10:
(Surface Fixation 2) MSL B Outboard - Surface to Hold (By Surface Fixation)
  7
  8
```

```
  4
Pathway 11:
(Aerosol Transport 2) MSL B Outboard - Airborne to  Condenser - Airborne
  5
  9
  2
Pathway 12:
(Deposition 3) Condenser - Airborne to Condenser - Surface
  9
 10
  4
Pathway 13:
(Resuspension 3) Condenser - Surface to  Environment
 10
  3
  4
Pathway 14:
(Surface Fixation 3) Condenser - Surface to  Hold (By Surface Fixation)
 10
  8
  4
Pathway 15:
Containment to  MSL B Inboard - Airborne
  1
  2
  2
End of Plant Model File
Scenario Description Name:

Plant Model Filename:

Source Term:
  1
  1   1.0000E+00
c:\program files\radtrad3-03\defaults\fgr11&12.inp
c:\program files\radtrad3-03\defaults\bwr_i.rft
  0.0000E+00
  1
  9.5000E-01   4.8500E-02   1.5000E-03   1.0000E+00
Overlying Pool:
  0
  0.0000E+00
  0
  0
  0
  0
Compartments:
 10
Compartment 1:
  0
  1
  0
  0
  0
  0
  0
  3
  3
  1.0000E+01
  1
```

```
  1
  0.0000E+00   0.0000E+00
Compartment 2:
  0
  1
  0
  0
  0
  0
  0
  0
  0
Compartment 3:
  0
  1
  0
  0
  0
  0
  0
  0
  0
Compartment 4:
  0
  1
  0
  0
  0
  0
  1
  2.1750E+03
  3
  0.0000E+00   9.9000E+01   9.5000E+01   9.5000E+01
  3.3330E-01   9.9000E+01   9.5000E+01   9.5000E+01
  7.2000E+02   0.0000E+00   0.0000E+00   0.0000E+00
  0
  0
Compartment 5:
  0
  1
  0
  0
  0
  0
  0
  0
  0
Compartment 6:
  0
  1
  0
  0
  0
  0
  0
  0
  0
Compartment 7:
  0
  1
```

```
  0
  0
  0
  0
  0
  0
  0
Compartment 8:
  0
  1
  0
  0
  0
  0
  0
  0
  0
Compartment 9:
  0
  1
  0
  0
  0
  0
  0
  0
  0
Compartment 10:
  0
  1
  0
  0
  0
  0
  0
  0
  0
Pathways:
 15
Pathway 1:
  0
  0
  0
  0
  0
  1
  3
  0.0000E+00   5.2500E+02   9.9000E+01   9.5000E+01   9.5000E+01
  5.0000E-01   5.2500E+02   9.9000E+01   9.5000E+01   9.5000E+01
  7.2000E+02   0.0000E+00   0.0000E+00   0.0000E+00   0.0000E+00
  0
  0
  0
  0
  0
  0
Pathway 2:
  0
  0
  0
```

```
  0
  0
  1
  2
  0.0000E+00   2.2500E+02   0.0000E+00   0.0000E+00   0.0000E+00
  7.2000E+02   0.0000E+00   0.0000E+00   0.0000E+00   0.0000E+00
  0
  0
  0
  0
  0
  0
Pathway 3:
  0
  0
  0
  0
  0
  1
  3
  0.0000E+00   7.5000E+02   1.0000E+02   1.0000E+02   1.0000E+02
  5.0000E-01   7.5000E+02   1.0000E+02   1.0000E+02   1.0000E+02
  7.2000E+02   0.0000E+00   0.0000E+00   0.0000E+00   0.0000E+00
  0
  0
  0
  0
  0
  0
Pathway 4:
  0
  0
  0
  0
  0
  1
  5
  0.0000E+00   9.3060E-01   1.0000E+02   0.0000E+00   1.0000E+02
  2.0000E+00   9.3060E-01   1.0000E+02   0.0000E+00   1.0000E+02
  2.4000E+01   5.1270E-01   1.0000E+02   0.0000E+00   1.0000E+02
  9.6000E+01   5.1270E-01   1.0000E+02   0.0000E+00   1.0000E+02
  7.2000E+02   0.0000E+00   0.0000E+00   0.0000E+00   0.0000E+00
  0
  0
  0
  0
  0
  0
Pathway 5:
  0
  0
  0
  0
  0
  0
  0
  0
  0
  0
  1
```

```
  4
  0.0000E+00   3.1420E+02
  2.4000E+01   7.0350E+02
  9.6000E+01   4.4780E+03
  7.2000E+02   0.0000E+00
  0
Pathway 6:
  0
  0
  0
  0
  0
  0
  0
  0
  0
  0
  1
  4
  0.0000E+00   3.5580E-02
  2.4000E+01   2.9950E-02
  9.6000E+01   2.0170E-02
  7.2000E+02   0.0000E+00
  0
Pathway 7:
  0
  0
  0
  0
  0
  0
  0
  0
  0
  0
  1
  4
  0.0000E+00   1.5960E-02
  2.4000E+01   1.1360E-02
  9.6000E+01   5.2000E-03
  7.2000E+02   0.0000E+00
  0
Pathway 8:
  0
  0
  0
  0
  0
  0
  0
  0
  0
  0
  1
  4
  0.0000E+00   3.1417E+02
  2.4000E+01   7.0352E+02
  9.6000E+01   4.4779E+03
  7.2000E+02   0.0000E+00
  0
```

```
Pathway 9:
  0
  0
  0
  0
  0
  0
  0
  0
  0
  0
  1
  4
  0.0000E+00   3.5580E-02
  2.4000E+01   2.9950E-02
  9.6000E+01   2.0170E-02
  7.2000E+02   0.0000E+00
  0
Pathway 10:
  0
  0
  0
  0
  0
  0
  0
  0
  0
  0
  1
  4
  0.0000E+00   1.5960E-02
  2.4000E+01   1.1360E-02
  9.6000E+01   5.2000E-03
  7.2000E+02   0.0000E+00
  0
Pathway 11:
  0
  0
  0
  0
  0
  1
  4
  0.0000E+00   3.1880E+00   1.0000E+02   0.0000E+00   1.0000E+02
  2.4000E+01   1.5130E+00   1.0000E+02   0.0000E+00   1.0000E+02
  9.6000E+01   1.1480E+00   1.0000E+02   0.0000E+00   1.0000E+02
  7.2000E+02   0.0000E+00   0.0000E+00   0.0000E+00   0.0000E+00
  0
  0
  0
  0
  0
  0
Pathway 12:
  0
  0
  0
  0
  0
```

```
  0
  0
  0
  0
  0
  1
  4
  0.0000E+00   1.0690E+03
  2.4000E+01   1.0690E+03
  9.6000E+01   1.0690E+03
  7.2000E+02   0.0000E+00
  0
Pathway 13:
  0
  0
  0
  0
  0
  0
  0
  0
  0
  0
  1
  4
  0.0000E+00   1.6090E-02
  2.4000E+01   1.6090E-02
  9.6000E+01   1.6090E-02
  7.2000E+02   0.0000E+00
  0
Pathway 14:
  0
  0
  0
  0
  0
  0
  0
  0
  0
  0
  1
  4
  0.0000E+00   3.3300E-03
  2.4000E+01   3.3300E-03
  9.6000E+01   3.3300E-03
  7.2000E+02   0.0000E+00
  0
Pathway 15:
  0
  0
  0
  0
  0
  1
  5
  0.0000E+00   1.5240E+00   1.0000E+02   0.0000E+00   1.0000E+02
  2.0000E+00   9.3060E-01   1.0000E+02   0.0000E+00   1.0000E+02
  2.4000E+01   5.1270E-01   1.0000E+02   0.0000E+00   1.0000E+02
  9.6000E+01   5.1270E-01   1.0000E+02   0.0000E+00   1.0000E+02
```

```
  7.2000E+02   0.0000E+00   0.0000E+00   0.0000E+00   0.0000E+00
  0
  0
  0
  0
  0
  0
Dose Locations:
  3
Location 1:
Control Room (CR)
  4
  0
  1
  2
  0.0000E+00   3.5000E-04
  7.2000E+02   0.0000E+00
  1
  4
  0.0000E+00   1.0000E+00
  2.4000E+01   6.0000E-01
  9.6000E+01   4.0000E-01
  7.2000E+02   0.0000E+00
Location 2:
Exclusion Area Boundary (EAB)
  3
  1
  2
  0.0000E+00   3.1800E-04
  2.4000E+01   0.0000E+00
  1
  4
  0.0000E+00   3.5000E-04
  8.0000E+00   1.8000E-04
  2.4000E+01   2.3000E-04
  7.2000E+02   0.0000E+00
  0
Location 3:
Low Population Zone (LPZ)
  3
  1
 10
  0.0000E+00   5.7900E-05
  8.0000E+00   4.1000E-05
  2.4000E+01   1.9500E-05
  4.8000E+01   1.9500E-05
  7.2000E+01   1.9500E-05
  9.6000E+01   6.6800E-06
  1.2000E+02   6.6800E-06
  1.6800E+02   6.6800E-06
  3.3600E+02   6.6800E-06
  7.2000E+02   0.0000E+00
  1
  4
  0.0000E+00   3.5000E-04
  8.0000E+00   1.8000E-04
  2.4000E+01   2.3000E-04
  7.2000E+02   0.0000E+00
  0
Effective Volume Location:
```

```
  1
  6
  0.0000E+00   6.8800E-03
  2.0000E+00   5.1700E-03
  8.0000E+00   2.0400E-03
  2.4000E+01   1.2900E-03
  9.6000E+01   9.6300E-04
  7.2000E+02   0.0000E+00
Simulation Parameters:
  1
  0.0000E+00   0.0000E+00
Output Filename:
C:\RESUP-B.o0
  1
  1
  1
  0
  0
End of Scenario File
```

```
#######################################################################
   RADTRAD Version 3.03 (Spring 2001) run on  5/26/2006  at  9:11:56
#######################################################################

#######################################################################
                     Plant Description
#######################################################################

Number of Nuclides =  60

Inventory Power =   1.0000E+00 MWth
Plant Power Level =   3.5270E+03 MWth

Number of compartments    =  10

Compartment information

Compartment number  1  (Source term fraction =   1.0000E+00
)
Name: Containment
Compartment volume =   3.7907E+05 (Cubic feet)
Compartment type is Normal
Removal devices within compartment:
     Deposition
Pathways into and out of compartment  1
   Exit Pathway Number   15: Containment to  MSL B Inboard - Airborne

Compartment number  2
Name: MSL B Inboard - Airborne
Compartment volume =   1.0000E-05 (Cubic feet)
Compartment type is Normal
Pathways into and out of compartment  2
   Inlet Pathway Number  15: Containment to  MSL B Inboard - Airborne
   Exit Pathway Number    4: (Aerosol Transport 1) MSL B Inboard - Airborne to
   Exit Pathway Number    5: (Deposition 1) MSL B Inboard - Airborne to MSL B I

Compartment number  3
Name: Environment
Compartment type is Environment
Pathways into and out of compartment  3
   Inlet Pathway Number   3: Control Room to Environment (Exhaust)
   Inlet Pathway Number   6: (Resuspension 1) MSL B Inboard - Surface to Enviro
   Inlet Pathway Number   9: (Resuspension 2) MSL B Outboard - Surface to  Envi
   Inlet Pathway Number  13: (Resuspension 3) Condenser - Surface to  Environme
   Exit Pathway Number    1: Filtered Environment to Control Room (Intake)
   Exit Pathway Number    2: Unfiltered Environment to Control Room (Inleakage)

Compartment number  4
Name: Control Room
Compartment volume =   1.2600E+05 (Cubic feet)
Compartment type is Control Room
Removal devices within compartment:
     Filter(s)
Pathways into and out of compartment  4
   Inlet Pathway Number   1: Filtered Environment to Control Room (Intake)
   Inlet Pathway Number   2: Unfiltered Environment to Control Room (Inleakage)
   Exit Pathway Number    3: Control Room to Environment (Exhaust)

Compartment number  5
```

```
Name: MSL B Outboard - Airborne
Compartment volume =   1.0510E+03 (Cubic feet)
Compartment type is Normal
Pathways into and out of compartment  5
   Inlet Pathway Number   4: (Aerosol Transport 1) MSL B Inboard - Airborne to
   Exit Pathway Number    8: (Deposition 2) MSL B Outboard - Airborne to MSL B
   Exit Pathway Number   11: (Aerosol Transport 2) MSL B Outboard - Airborne to

Compartment number  6
Name: MSL B Inboard - Surface
Compartment volume =   1.0000E+00 (Cubic feet)
Compartment type is Normal
Pathways into and out of compartment  6
   Inlet Pathway Number   5: (Deposition 1) MSL B Inboard - Airborne to MSL B I
   Exit Pathway Number    6: (Resuspension 1) MSL B Inboard - Surface to Enviro
   Exit Pathway Number    7: (Surface Fixation 1) MSL B Inboard - Surface to Ho

Compartment number  7
Name: MSL B Outboard - Surface
Compartment volume =   1.0000E+00 (Cubic feet)
Compartment type is Normal
Pathways into and out of compartment  7
   Inlet Pathway Number   8: (Deposition 2) MSL B Outboard - Airborne to MSL B
   Exit Pathway Number    9: (Resuspension 2) MSL B Outboard - Surface to  Envi
   Exit Pathway Number   10: (Surface Fixation 2) MSL B Outboard - Surface to H

Compartment number  8
Name: Hold (By Surface Fixation)
Compartment volume =   1.0000E+00 (Cubic feet)
Compartment type is Normal
Pathways into and out of compartment  8
   Inlet Pathway Number   7: (Surface Fixation 1) MSL B Inboard - Surface to Ho
   Inlet Pathway Number  10: (Surface Fixation 2) MSL B Outboard - Surface to H
   Inlet Pathway Number  14: (Surface Fixation 3) Condenser - Surface to  Hold

Compartment number  9
Name: Condenser - Airborne
Compartment volume =   5.4746E+04 (Cubic feet)
Compartment type is Normal
Pathways into and out of compartment  9
   Inlet Pathway Number  11: (Aerosol Transport 2) MSL B Outboard - Airborne to
   Exit Pathway Number   12: (Deposition 3) Condenser - Airborne to Condenser -

Compartment number 10
Name: Condenser - Surface
Compartment volume =   1.0000E+00 (Cubic feet)
Compartment type is Normal
Pathways into and out of compartment 10
   Inlet Pathway Number  12: (Deposition 3) Condenser - Airborne to Condenser -
   Exit Pathway Number   13: (Resuspension 3) Condenser - Surface to  Environme
   Exit Pathway Number   14: (Surface Fixation 3) Condenser - Surface to  Hold

Total number of pathways =  15
```

```
#######################################################################
   RADTRAD Version 3.03 (Spring 2001) run on  5/26/2006  at  9:11:56
#######################################################################

#######################################################################
                      Scenario Description
#######################################################################
```

Radioactive Decay is enabled
Calculation of Daughters is enabled

Release Fractions and Timings

	GAP	EARLY IN-VESSEL	LATE RELEASE	RELEASE MASS
	0.500000 hr	1.5000 hrs	0.0000 hrs	(gm)
NOBLES	0.0000E+00	0.0000E+00	0.0000E+00	0.000E+00
IODINE	5.0000E-02	2.5000E-01	0.0000E+00	3.033E+02
CESIUM	0.0000E+00	0.0000E+00	0.0000E+00	0.000E+00
TELLURIUM	0.0000E+00	0.0000E+00	0.0000E+00	0.000E+00
STRONTIUM	0.0000E+00	0.0000E+00	0.0000E+00	0.000E+00
BARIUM	0.0000E+00	0.0000E+00	0.0000E+00	0.000E+00
RUTHENIUM	0.0000E+00	0.0000E+00	0.0000E+00	0.000E+00
CERIUM	0.0000E+00	0.0000E+00	0.0000E+00	0.000E+00
LANTHANUM	0.0000E+00	0.0000E+00	0.0000E+00	0.000E+00

Inventory Power = 3527. MWt

Nuclide Name	Group	Specific Inventory (Ci/MWt)	half life (s)	Whole Body DCF (Sv-m3/Bq-s)	Inhaled Thyroid (Sv/Bq)	Inhaled Effective (Sv/Bq)
I-131	2	2.687E+04	6.947E+05	1.820E-14	2.920E-07	8.890E-09
I-132	2	3.881E+04	8.280E+03	1.120E-13	1.740E-09	1.030E-10
I-133	2	5.556E+04	7.488E+04	2.940E-14	4.860E-08	1.580E-09
I-134	2	6.165E+04	3.156E+03	1.300E-13	2.880E-10	3.550E-11
I-135	2	5.192E+04	2.380E+04	8.294E-14	8.460E-09	3.320E-10

Nuclide	Daughter	Fraction	Daughter	Fraction	Daughter	Fraction
Kr-85m	Kr-85	0.21	none	0.00	none	0.00
Kr-87	Rb-87	1.00	none	0.00	none	0.00
Kr-88	Rb-88	1.00	none	0.00	none	0.00
Sr-90	Y-90	1.00	none	0.00	none	0.00
Sr-91	Y-91m	0.58	Y-91	0.42	none	0.00
Sr-92	Y-92	1.00	none	0.00	none	0.00
Y-93	Zr-93	1.00	none	0.00	none	0.00
Zr-95	Nb-95m	0.01	Nb-95	0.99	none	0.00
Zr-97	Nb-97m	0.95	Nb-97	0.05	none	0.00
Mo-99	Tc-99m	0.88	Tc-99	0.12	none	0.00
Tc-99m	Tc-99	1.00	none	0.00	none	0.00
Ru-103	Rh-103m	1.00	none	0.00	none	0.00
Ru-105	Rh-105	1.00	none	0.00	none	0.00
Ru-106	Rh-106	1.00	none	0.00	none	0.00
Sb-127	Te-127m	0.18	Te-127	0.82	none	0.00
Sb-129	Te-129m	0.22	Te-129	0.77	none	0.00
Te-127m	Te-127	0.98	none	0.00	none	0.00
Te-129	I-129	1.00	none	0.00	none	0.00
Te-129m	Te-129	0.65	I-129	0.35	none	0.00
Te-131m	Te-131	0.22	I-131	0.78	none	0.00
Te-132	I-132	1.00	none	0.00	none	0.00
I-131	Xe-131m	0.01	none	0.00	none	0.00
I-133	Xe-133m	0.03	Xe-133	0.97	none	0.00

I-135	Xe-135m	0.15	Xe-135	0.85	none	0.00
Xe-135	Cs-135	1.00	none	0.00	none	0.00
Cs-137	Ba-137m	0.95	none	0.00	none	0.00
Ba-140	La-140	1.00	none	0.00	none	0.00
La-141	Ce-141	1.00	none	0.00	none	0.00
Ce-143	Pr-143	1.00	none	0.00	none	0.00
Ce-144	Pr-144m	0.02	Pr-144	0.98	none	0.00
Nd-147	Pm-147	1.00	none	0.00	none	0.00
Np-239	Pu-239	1.00	none	0.00	none	0.00
Pu-238	U-234	1.00	none	0.00	none	0.00
Pu-239	U-235	1.00	none	0.00	none	0.00
Pu-240	U-236	1.00	none	0.00	none	0.00
Pu-241	U-237	0.00	Am-241	1.00	none	0.00
Am-241	Np-237	1.00	none	0.00	none	0.00
Cm-242	Pu-238	1.00	none	0.00	none	0.00
Cm-244	Pu-240	1.00	none	0.00	none	0.00

Iodine fractions
Aerosol = 9.5000E-01
Elemental = 4.8500E-02
Organic = 1.5000E-03

COMPARTMENT DATA

Compartment number 1: Containment
Natural Deposition (Powers' model): Aerosol data
Reactor type: 3
Percentile = 10 (%)

Natural Deposition: Elemental Removal Data

Time (hr)	Removal Coef. (hr^-1)
0.0000E+00	0.0000E+00

Compartment number 2: MSL B Inboard - Airborne

Compartment number 3: Environment

Compartment number 4: Control Room

Compartment Filter Data

Time (hr)	Flow Rate (cfm)	Filter Efficiencies (%) Aerosol	Elemental	Organic
0.0000E+00	2.1750E+03	9.9000E+01	9.5000E+01	9.5000E+01
3.3330E-01	2.1750E+03	9.9000E+01	9.5000E+01	9.5000E+01
7.2000E+02	2.1750E+03	0.0000E+00	0.0000E+00	0.0000E+00

Compartment number 5: MSL B Outboard - Airborne

Compartment number 6: MSL B Inboard - Surface

Compartment number 7: MSL B Outboard - Surface

Compartment number 8: Hold (By Surface Fixation)

Compartment number 9: Condenser - Airborne

Compartment number 10: Condenser - Surface

PATHWAY DATA

Pathway number 1: Filtered Environment to Control Room (Intake)

Pathway Filter: Removal Data

Time (hr)	Flow Rate (cfm)	Filter Efficiencies (%) Aerosol	Elemental	Organic
0.0000E+00	5.2500E+02	9.9000E+01	9.5000E+01	9.5000E+01
5.0000E-01	5.2500E+02	9.9000E+01	9.5000E+01	9.5000E+01
7.2000E+02	0.0000E+00	0.0000E+00	0.0000E+00	0.0000E+00

Pathway number 2: Unfiltered Environment to Control Room (Inleakage)

Pathway Filter: Removal Data

Time (hr)	Flow Rate (cfm)	Filter Efficiencies (%) Aerosol	Elemental	Organic
0.0000E+00	2.2500E+02	0.0000E+00	0.0000E+00	0.0000E+00
7.2000E+02	0.0000E+00	0.0000E+00	0.0000E+00	0.0000E+00

Pathway number 3: Control Room to Environment (Exhaust)

Pathway Filter: Removal Data

Time (hr)	Flow Rate (cfm)	Filter Efficiencies (%) Aerosol	Elemental	Organic
0.0000E+00	7.5000E+02	1.0000E+02	1.0000E+02	1.0000E+02
5.0000E-01	7.5000E+02	1.0000E+02	1.0000E+02	1.0000E+02
7.2000E+02	0.0000E+00	0.0000E+00	0.0000E+00	0.0000E+00

Pathway number 4: (Aerosol Transport 1) MSL B Inboard - Airborne to

Pathway Filter: Removal Data

Time (hr)	Flow Rate (cfm)	Filter Efficiencies (%) Aerosol	Elemental	Organic
0.0000E+00	9.3060E-01	1.0000E+02	0.0000E+00	1.0000E+02
2.0000E+00	9.3060E-01	1.0000E+02	0.0000E+00	1.0000E+02
2.4000E+01	5.1270E-01	1.0000E+02	0.0000E+00	1.0000E+02
9.6000E+01	5.1270E-01	1.0000E+02	0.0000E+00	1.0000E+02
7.2000E+02	0.0000E+00	0.0000E+00	0.0000E+00	0.0000E+00

Pathway number 5: (Deposition 1) MSL B Inboard - Airborne to MSL B I

Convection Data

Time (hr)	Flow Rate (% / day)
0.0000E+00	3.1420E+02
2.4000E+01	7.0350E+02
9.6000E+01	4.4780E+03
7.2000E+02	0.0000E+00

Pathway number 6: (Resuspension 1) MSL B Inboard - Surface to Enviro

Convection Data

Time (hr)	Flow Rate (% / day)
0.0000E+00	3.5580E-02
2.4000E+01	2.9950E-02
9.6000E+01	2.0170E-02
7.2000E+02	0.0000E+00

Pathway number 7: (Surface Fixation 1) MSL B Inboard - Surface to Ho

Convection Data

Time (hr)	Flow Rate (% / day)
0.0000E+00	1.5960E-02
2.4000E+01	1.1360E-02
9.6000E+01	5.2000E-03
7.2000E+02	0.0000E+00

Pathway number 8: (Deposition 2) MSL B Outboard - Airborne to MSL B

Convection Data

Time (hr)	Flow Rate (% / day)
0.0000E+00	3.1417E+02
2.4000E+01	7.0352E+02
9.6000E+01	4.4779E+03
7.2000E+02	0.0000E+00

Pathway number 9: (Resuspension 2) MSL B Outboard - Surface to Envi

Convection Data

Time (hr)	Flow Rate (% / day)
0.0000E+00	3.5580E-02
2.4000E+01	2.9950E-02
9.6000E+01	2.0170E-02
7.2000E+02	0.0000E+00

Pathway number 10: (Surface Fixation 2) MSL B Outboard - Surface to H

Convection Data

Time (hr)	Flow Rate (% / day)
0.0000E+00	1.5960E-02
2.4000E+01	1.1360E-02
9.6000E+01	5.2000E-03
7.2000E+02	0.0000E+00

Pathway number 11: (Aerosol Transport 2) MSL B Outboard - Airborne to

Pathway Filter: Removal Data

Time (hr)	Flow Rate (cfm)	Filter Efficiencies (%) Aerosol	Elemental	Organic
0.0000E+00	3.1880E+00	1.0000E+02	0.0000E+00	1.0000E+02
2.4000E+01	1.5130E+00	1.0000E+02	0.0000E+00	1.0000E+02
9.6000E+01	1.1480E+00	1.0000E+02	0.0000E+00	1.0000E+02
7.2000E+02	0.0000E+00	0.0000E+00	0.0000E+00	0.0000E+00

Pathway number 12: (Deposition 3) Condenser - Airborne to Condenser -

Convection Data

Time (hr)	Flow Rate (% / day)
0.0000E+00	1.0690E+03
2.4000E+01	1.0690E+03
9.6000E+01	1.0690E+03
7.2000E+02	0.0000E+00

Pathway number 13: (Resuspension 3) Condenser - Surface to Environme

Convection Data

Time (hr)	Flow Rate (% / day)

0.0000E+00	1.6090E-02
2.4000E+01	1.6090E-02
9.6000E+01	1.6090E-02
7.2000E+02	0.0000E+00

Pathway number 14: (Surface Fixation 3) Condenser - Surface to Hold

Convection Data

Time (hr)	Flow Rate (% / day)
0.0000E+00	3.3300E-03
2.4000E+01	3.3300E-03
9.6000E+01	3.3300E-03
7.2000E+02	0.0000E+00

Pathway number 15: Containment to MSL B Inboard - Airborne

Pathway Filter: Removal Data

Time (hr)	Flow Rate (cfm)	Filter Efficiencies (%) Aerosol	Elemental	Organic
0.0000E+00	1.5240E+00	1.0000E+02	0.0000E+00	1.0000E+02
2.0000E+00	9.3060E-01	1.0000E+02	0.0000E+00	1.0000E+02
2.4000E+01	5.1270E-01	1.0000E+02	0.0000E+00	1.0000E+02
9.6000E+01	5.1270E-01	1.0000E+02	0.0000E+00	1.0000E+02
7.2000E+02	0.0000E+00	0.0000E+00	0.0000E+00	0.0000E+00

LOCATION DATA

Location Control Room (CR) is in compartment 4

Location X/Q Data

Time (hr)	X/Q (s * m^-3)
0.0000E+00	6.8800E-03
2.0000E+00	5.1700E-03
8.0000E+00	2.0400E-03
2.4000E+01	1.2900E-03
9.6000E+01	9.6300E-04
7.2000E+02	0.0000E+00

Location Breathing Rate Data

Time (hr)	Breathing Rate (m^3 * sec^-1)
0.0000E+00	3.5000E-04
7.2000E+02	0.0000E+00

Location Occupancy Factor Data

Time (hr)	Occupancy Factor
0.0000E+00	1.0000E+00
2.4000E+01	6.0000E-01
9.6000E+01	4.0000E-01
7.2000E+02	0.0000E+00

Location Exclusion Area Boundary (EAB) is in compartment 3

Location X/Q Data

Time (hr)	X/Q (s * m^-3)
0.0000E+00	3.1800E-04
2.4000E+01	0.0000E+00

Location Breathing Rate Data

Time (hr)	Breathing Rate (m^3 * sec^-1)
0.0000E+00	3.5000E-04
8.0000E+00	1.8000E-04

```
  2.4000E+01                2.3000E-04
  7.2000E+02                0.0000E+00
Location Low Population Zone (LPZ)     is in compartment   3

Location X/Q Data
 Time (hr)          X/Q (s * m^-3)
  0.0000E+00           5.7900E-05
  8.0000E+00           4.1000E-05
  2.4000E+01           1.9500E-05
  4.8000E+01           1.9500E-05
  7.2000E+01           1.9500E-05
  9.6000E+01           6.6800E-06
  1.2000E+02           6.6800E-06
  1.6800E+02           6.6800E-06
  3.3600E+02           6.6800E-06
  7.2000E+02           0.0000E+00

Location Breathing Rate Data
 Time (hr)          Breathing Rate (m^3 * sec^-1)
  0.0000E+00                3.5000E-04
  8.0000E+00                1.8000E-04
  2.4000E+01                2.3000E-04
  7.2000E+02                0.0000E+00

USER SPECIFIED TIME STEP DATA - SUPPLEMENTAL TIME STEPS
Time            Time step
 0.0000E+00       0.0000E+00
```

```
#######################################################################
   RADTRAD Version 3.03 (Spring 2001) run on  5/26/2006  at  9:11:56
#######################################################################
```

```
 ####   #    #  #####  #####   #    #  #####
#    #  #    #    #    #    #  #    #    #
#    #  #    #    #    #    #  #    #    #
#    #  #    #    #    #####   #    #    #
#    #  #    #    #    #       #    #    #
#    #  #    #    #    #       #    #    #
 ####    ####     #    #        ####     #
```

```
#######################################################################
                                Dose Output
#######################################################################
```

Control Room (CR) Doses:

Time (h) = 0.3333	Whole Body	Thyroid	TEDE
Delta dose (rem)	6.7066E-13	3.3249E-09	1.0567E-10
Accumulated dose (rem)	6.7066E-13	3.3249E-09	1.0567E-10

Exclusion Area Boundary (EAB) Doses:

Time (h) = 0.3333	Whole Body	Thyroid	TEDE
Delta dose (rem)	8.3174E-11	1.8651E-08	6.7221E-10
Accumulated dose (rem)	8.3174E-11	1.8651E-08	6.7221E-10

Low Population Zone (LPZ) Doses:

Time (h) = 0.3333	Whole Body	Thyroid	TEDE
Delta dose (rem)	1.5144E-11	3.3959E-09	1.2239E-10
Accumulated dose (rem)	1.5144E-11	3.3959E-09	1.2239E-10

Control Room (CR) Doses:

Time (h) = 0.5000	Whole Body	Thyroid	TEDE
Delta dose (rem)	3.7398E-12	1.9583E-08	6.2164E-10
Accumulated dose (rem)	4.4105E-12	2.2908E-08	7.2731E-10

Exclusion Area Boundary (EAB) Doses:

Time (h) = 0.5000	Whole Body	Thyroid	TEDE
Delta dose (rem)	3.1703E-10	7.5443E-08	2.6975E-09
Accumulated dose (rem)	4.0020E-10	9.4094E-08	3.3697E-09

Low Population Zone (LPZ) Doses:

Time (h) = 0.5000	Whole Body	Thyroid	TEDE
Delta dose (rem)	5.7723E-11	1.3736E-08	4.9116E-10
Accumulated dose (rem)	7.2867E-11	1.7132E-08	6.1355E-10

Control Room (CR) Doses:

Time (h) = 2.0000	Whole Body	Thyroid	TEDE
Delta dose (rem)	2.7384E-09	1.9231E-05	6.0674E-07
Accumulated dose (rem)	2.7428E-09	1.9254E-05	6.0746E-07

Exclusion Area Boundary (EAB) Doses:

Time (h) = 2.0000	Whole Body	Thyroid	TEDE
Delta dose (rem)	8.4963E-08	2.7947E-05	9.6291E-07
Accumulated dose (rem)	8.5363E-08	2.8041E-05	9.6628E-07

Low Population Zone (LPZ) Doses:

Time (h) = 2.0000	Whole Body	Thyroid	TEDE
Delta dose (rem)	1.5470E-08	5.0885E-06	1.7532E-07
Accumulated dose (rem)	1.5542E-08	5.1056E-06	1.7594E-07

Control Room (CR) Doses:

Time (h) = 8.0000	Whole Body	Thyroid	TEDE
Delta dose (rem)	4.0206E-07	3.7989E-03	1.1871E-04
Accumulated dose (rem)	4.0480E-07	3.8182E-03	1.1932E-04

Exclusion Area Boundary (EAB) Doses:

Time (h) = 8.0000	Whole Body	Thyroid	TEDE
Delta dose (rem)	5.5984E-06	3.3933E-03	1.1130E-04
Accumulated dose (rem)	5.6838E-06	3.4214E-03	1.1226E-04

Low Population Zone (LPZ) Doses:

Time (h) = 8.0000	Whole Body	Thyroid	TEDE
Delta dose (rem)	1.0193E-06	6.1784E-04	2.0264E-05
Accumulated dose (rem)	1.0349E-06	6.2295E-04	2.0440E-05

Control Room (CR) Doses:

Time (h) = 24.0000	Whole Body	Thyroid	TEDE
Delta dose (rem)	2.4627E-06	2.8606E-02	8.8580E-04
Accumulated dose (rem)	2.8675E-06	3.2425E-02	1.0051E-03

Exclusion Area Boundary (EAB) Doses:

Time (h) = 24.0000	Whole Body	Thyroid	TEDE
Delta dose (rem)	4.3702E-05	2.6786E-02	8.7076E-04
Accumulated dose (rem)	4.9385E-05	3.0207E-02	9.8302E-04

Low Population Zone (LPZ) Doses:

Time (h) = 24.0000	Whole Body	Thyroid	TEDE
Delta dose (rem)	5.6345E-06	3.4535E-03	1.1227E-04
Accumulated dose (rem)	6.6693E-06	4.0764E-03	1.3271E-04

Control Room (CR) Doses:

Time (h) = 48.0000	Whole Body	Thyroid	TEDE
Delta dose (rem)	1.5180E-06	3.4052E-02	1.0462E-03
Accumulated dose (rem)	4.3855E-06	6.6476E-02	2.0513E-03

Exclusion Area Boundary (EAB) Doses:

Time (h) = 48.0000	Whole Body	Thyroid	TEDE
Delta dose (rem)	0.0000E+00	0.0000E+00	0.0000E+00
Accumulated dose (rem)	4.9385E-05	3.0207E-02	9.8302E-04

Low Population Zone (LPZ) Doses:

Time (h) = 48.0000	Whole Body	Thyroid	TEDE
Delta dose (rem)	4.2512E-06	6.3320E-03	1.9850E-04
Accumulated dose (rem)	1.0921E-05	1.0408E-02	3.3121E-04

Control Room (CR) Doses:

Time (h) = 72.0000	Whole Body	Thyroid	TEDE
Delta dose (rem)	9.6145E-07	4.5417E-02	1.3890E-03
Accumulated dose (rem)	5.3469E-06	1.1189E-01	3.4403E-03

Exclusion Area Boundary (EAB) Doses:

Time (h) = 72.0000	Whole Body	Thyroid	TEDE
Delta dose (rem)	0.0000E+00	0.0000E+00	0.0000E+00
Accumulated dose (rem)	4.9385E-05	3.0207E-02	9.8302E-04

Low Population Zone (LPZ) Doses:

Time (h) = 72.0000	Whole Body	Thyroid	TEDE
Delta dose (rem)	3.7254E-06	8.5203E-03	2.6412E-04
Accumulated dose (rem)	1.4646E-05	1.8929E-02	5.9533E-04

Control Room (CR) Doses:

Time (h) = 96.0000	Whole Body	Thyroid	TEDE
Delta dose (rem)	8.2613E-07	5.4695E-02	1.6692E-03
Accumulated dose (rem)	6.1730E-06	1.6659E-01	5.1095E-03

Exclusion Area Boundary (EAB) Doses:

Time (h) = 96.0000	Whole Body	Thyroid	TEDE
Delta dose (rem)	0.0000E+00	0.0000E+00	0.0000E+00
Accumulated dose (rem)	4.9385E-05	3.0207E-02	9.8302E-04

Low Population Zone (LPZ) Doses:

Time (h) = 96.0000	Whole Body	Thyroid	TEDE
Delta dose (rem)	3.6208E-06	1.0232E-02	3.1573E-04
Accumulated dose (rem)	1.8267E-05	2.9161E-02	9.1106E-04

Control Room (CR) Doses:

Time (h) = 120.0000	Whole Body	Thyroid	TEDE
Delta dose (rem)	3.2726E-07	2.4163E-02	7.3668E-04
Accumulated dose (rem)	6.5003E-06	1.9075E-01	5.8462E-03

Exclusion Area Boundary (EAB) Doses:

Time (h) = 120.0000	Whole Body	Thyroid	TEDE
Delta dose (rem)	0.0000E+00	0.0000E+00	0.0000E+00
Accumulated dose (rem)	4.9385E-05	3.0207E-02	9.8302E-04

Low Population Zone (LPZ) Doses:

Time (h) = 120.0000	Whole Body	Thyroid	TEDE
Delta dose (rem)	9.6102E-07	3.0286E-03	9.3257E-05
Accumulated dose (rem)	1.9228E-05	3.2189E-02	1.0043E-03

Control Room (CR) Doses:

Time (h) = 168.0000	Whole Body	Thyroid	TEDE
Delta dose (rem)	6.5912E-07	5.3366E-02	1.6260E-03
Accumulated dose (rem)	7.1594E-06	2.4412E-01	7.4722E-03

Exclusion Area Boundary (EAB) Doses:

Time (h) = 168.0000	Whole Body	Thyroid	TEDE
Delta dose (rem)	0.0000E+00	0.0000E+00	0.0000E+00
Accumulated dose (rem)	4.9385E-05	3.0207E-02	9.8302E-04

Low Population Zone (LPZ) Doses:

Time (h) = 168.0000	Whole Body	Thyroid	TEDE
Delta dose (rem)	2.0219E-06	6.8497E-03	2.1064E-04
Accumulated dose (rem)	2.1250E-05	3.9039E-02	1.2150E-03

Control Room (CR) Doses:

Time (h) = 336.0000	Whole Body	Thyroid	TEDE
Delta dose (rem)	2.3908E-06	2.1037E-01	6.4075E-03
Accumulated dose (rem)	9.5502E-06	4.5449E-01	1.3880E-02

Exclusion Area Boundary (EAB) Doses:

Time (h) = 336.0000	Whole Body	Thyroid	TEDE
Delta dose (rem)	0.0000E+00	0.0000E+00	0.0000E+00
Accumulated dose (rem)	4.9385E-05	3.0207E-02	9.8302E-04

Low Population Zone (LPZ) Doses:

Time (h) = 336.0000	Whole Body	Thyroid	TEDE
Delta dose (rem)	7.6018E-06	2.6951E-02	8.2814E-04
Accumulated dose (rem)	2.8851E-05	6.5990E-02	2.0431E-03

Control Room (CR) Doses:

Time (h) = 720.0000	Whole Body	Thyroid	TEDE
Delta dose (rem)	3.7061E-06	3.6638E-01	1.1158E-02
Accumulated dose (rem)	1.3256E-05	8.2087E-01	2.5038E-02

Exclusion Area Boundary (EAB) Doses:

Time (h) = 720.0000	Whole Body	Thyroid	TEDE
Delta dose (rem)	0.0000E+00	0.0000E+00	0.0000E+00
Accumulated dose (rem)	4.9385E-05	3.0207E-02	9.8302E-04

Low Population Zone (LPZ) Doses:

Time (h) = 720.0000	Whole Body	Thyroid	TEDE
Delta dose (rem)	1.2995E-05	4.6869E-02	1.4399E-03
Accumulated dose (rem)	4.1847E-05	1.1286E-01	3.4830E-03

838

```
#################################################################
                          I-131 Summary
#################################################################
```

Time (hr)	Containment I-131 (Curies)	MSL B Inboard - Airbo I-131 (Curies)	Environment I-131 (Curies)
0.000	5.2640E+03	1.1028E-08	8.5404E-19
0.333	2.8290E+06	6.6104E-06	1.1023E-07
0.500	4.0239E+06	9.9107E-06	5.5711E-07
0.800	7.9884E+06	1.9800E-05	3.6839E-06
1.100	1.1679E+07	2.9668E-05	1.3702E-05
1.400	1.5113E+07	3.9513E-05	3.7631E-05
1.700	1.8307E+07	4.9337E-05	8.5158E-05
2.000	2.1276E+07	5.9137E-05	1.6853E-04
2.300	1.6058E+07	3.6069E-05	3.0120E-04
2.600	1.2209E+07	3.6028E-05	4.9309E-04
2.900	9.3713E+06	3.5988E-05	7.5262E-04
3.200	7.2781E+06	3.5948E-05	1.0878E-03
3.500	5.7342E+06	3.5907E-05	1.5060E-03
3.800	4.5953E+06	3.5867E-05	2.0142E-03
4.100	3.7551E+06	3.5827E-05	2.6191E-03
4.400	3.1351E+06	3.5787E-05	3.3268E-03
4.700	2.6775E+06	3.5746E-05	4.1428E-03
5.000	2.3396E+06	3.5706E-05	5.0725E-03
5.300	2.1768E+06	3.5666E-05	6.1207E-03
5.600	2.0415E+06	3.5626E-05	7.2920E-03
5.900	1.9291E+06	3.5586E-05	8.5905E-03
6.200	1.8355E+06	3.5547E-05	1.0020E-02
6.500	1.7577E+06	3.5507E-05	1.1584E-02
6.800	1.6930E+06	3.5467E-05	1.3286E-02
7.100	1.6390E+06	3.5427E-05	1.5129E-02
7.400	1.5940E+06	3.5387E-05	1.7115E-02
7.700	1.5564E+06	3.5348E-05	1.9247E-02
8.000	1.5249E+06	3.5308E-05	2.1527E-02
8.300	1.4986E+06	3.5268E-05	2.3958E-02
8.600	1.4790E+06	3.5229E-05	2.6540E-02
8.900	1.4622E+06	3.5189E-05	2.9277E-02
9.200	1.4476E+06	3.5150E-05	3.2168E-02
9.500	1.4350E+06	3.5111E-05	3.5216E-02
9.800	1.4240E+06	3.5071E-05	3.8422E-02
10.100	1.4145E+06	3.5032E-05	4.1787E-02
10.400	1.4061E+06	3.4993E-05	4.5311E-02
24.000	1.2997E+06	3.3257E-05	3.7606E-01
48.000	1.1900E+06	3.0451E-05	1.5383E+00
72.000	1.0896E+06	2.7881E-05	3.1925E+00
96.000	9.9764E+05	2.5529E-05	5.2371E+00
120.000	9.1346E+05	2.3374E-05	7.0295E+00
168.000	7.6580E+05	1.9596E-05	1.1120E+01
336.000	4.1314E+05	1.0572E-05	2.7290E+01
720.000	1.0081E+05	2.5796E-06	5.5425E+01

Time (hr)	Control Room I-131 (Curies)	MSL B Outboard - Airb I-131 (Curies)	MSL B Inboard - Surfa I-131 (Curies)
0.000	6.9663E-22	1.7098E-05	4.0092E-13
0.333	8.2439E-11	5.9427E+00	1.4422E-07
0.500	3.9962E-10	1.3140E+01	3.2437E-07
0.800	2.4627E-09	3.5817E+01	9.0725E-07
1.100	8.5958E-09	7.2225E+01	1.8773E-06
1.400	2.2222E-08	1.2109E+02	3.2331E-06
1.700	4.7417E-08	1.8124E+02	4.9735E-06

2.000	8.8621E-08	2.5162E+02	7.0972E-06
2.300	1.2707E-07	2.8649E+02	8.5061E-06
2.600	1.8278E-07	3.1815E+02	9.9120E-06
2.900	2.5427E-07	3.4687E+02	1.1315E-05
3.200	3.4030E-07	3.7293E+02	1.2714E-05
3.500	4.3981E-07	3.9656E+02	1.4111E-05
3.800	5.5185E-07	4.1799E+02	1.5504E-05
4.100	6.7556E-07	4.3741E+02	1.6895E-05
4.400	8.1013E-07	4.5501E+02	1.8282E-05
4.700	9.5481E-07	4.7095E+02	1.9666E-05
5.000	1.1089E-06	4.8538E+02	2.1047E-05
5.300	1.2717E-06	4.9844E+02	2.2425E-05
5.600	1.4427E-06	5.1026E+02	2.3800E-05
5.900	1.6211E-06	5.2094E+02	2.5172E-05
6.200	1.8065E-06	5.3059E+02	2.6541E-05
6.500	1.9984E-06	5.3930E+02	2.7907E-05
6.800	2.1961E-06	5.4715E+02	2.9269E-05
7.100	2.3992E-06	5.5424E+02	3.0629E-05
7.400	2.6074E-06	5.6062E+02	3.1986E-05
7.700	2.8201E-06	5.6635E+02	3.3339E-05
8.000	3.0370E-06	5.7151E+02	3.4690E-05
8.300	2.5137E-06	5.7613E+02	3.6038E-05
8.600	2.1945E-06	5.8027E+02	3.7382E-05
8.900	2.0118E-06	5.8397E+02	3.8724E-05
9.200	1.9207E-06	5.8728E+02	4.0062E-05
9.500	1.8910E-06	5.9022E+02	4.1398E-05
9.800	1.9026E-06	5.9283E+02	4.2731E-05
10.100	1.9420E-06	5.9515E+02	4.4060E-05
10.400	2.0001E-06	5.9719E+02	4.5387E-05
24.000	6.3383E-06	5.9337E+02	1.0247E-04
48.000	6.7223E-06	2.4691E+02	3.0836E-04
72.000	8.7892E-06	2.2605E+02	4.7907E-04
96.000	1.0463E-05	2.0697E+02	6.1905E-04
120.000	6.6881E-06	3.7232E+01	1.6154E-03
168.000	7.6862E-06	3.1213E+01	3.1168E-03
336.000	8.1029E-06	1.6840E+01	5.0352E-03
720.000	4.2272E-06	4.1090E+00	3.1359E-03

	MSL B Outboard - Surf Hold	(By Surface Fixa	Condenser - Airborne
Time (hr)	I-131 (Curies)	I-131 (Curies)	I-131 (Curies)
0.000	4.1436E-10	3.8309E-19	5.7605E-10
0.333	8.7173E-02	4.8963E-08	1.1681E-01
0.500	2.9038E-01	2.4629E-07	3.8205E-01
0.800	1.2038E+00	1.6157E-06	1.5360E+00
1.100	3.2802E+00	5.9670E-06	4.0672E+00
1.400	7.0318E+00	1.6278E-05	8.4695E+00
1.700	1.2922E+01	3.6598E-05	1.5112E+01
2.000	2.1371E+01	7.1977E-05	2.4262E+01
2.300	3.1920E+01	1.2784E-04	3.4983E+01
2.600	4.3761E+01	2.0794E-04	4.6048E+01
2.900	5.6774E+01	3.1530E-04	5.7259E+01
3.200	7.0847E+01	4.5273E-04	6.8453E+01
3.500	8.5879E+01	6.2285E-04	7.9503E+01
3.800	1.0178E+02	8.2803E-04	9.0309E+01
4.100	1.1846E+02	1.0705E-03	1.0080E+02
4.400	1.3585E+02	1.3522E-03	1.1090E+02
4.700	1.5388E+02	1.6751E-03	1.2059E+02
5.000	1.7249E+02	2.0409E-03	1.2983E+02
5.300	1.9161E+02	2.4510E-03	1.3861E+02
5.600	2.1121E+02	2.9070E-03	1.4692E+02

5.900	2.3122E+02	3.4100E-03	1.5475E+02
6.200	2.5161E+02	3.9614E-03	1.6212E+02
6.500	2.7233E+02	4.5620E-03	1.6902E+02
6.800	2.9336E+02	5.2130E-03	1.7548E+02
7.100	3.1466E+02	5.9150E-03	1.8150E+02
7.400	3.3620E+02	6.6691E-03	1.8711E+02
7.700	3.5796E+02	7.4757E-03	1.9232E+02
8.000	3.7990E+02	8.3356E-03	1.9715E+02
8.300	4.0201E+02	9.2493E-03	2.0162E+02
8.600	4.2427E+02	1.0217E-02	2.0575E+02
8.900	4.4666E+02	1.1240E-02	2.0956E+02
9.200	4.6917E+02	1.2318E-02	2.1307E+02
9.500	4.9177E+02	1.3451E-02	2.1629E+02
9.800	5.1445E+02	1.4640E-02	2.1926E+02
10.100	5.3721E+02	1.5885E-02	2.2197E+02
10.400	5.6003E+02	1.7187E-02	2.2445E+02
24.000	1.5803E+03	1.3490E-01	2.4219E+02
48.000	3.4167E+03	4.8569E-01	4.7922E+01
72.000	4.7247E+03	9.7764E-01	4.3843E+01
96.000	5.7898E+03	1.5648E+00	4.0143E+01
120.000	7.1262E+03	1.8564E+00	5.4801E+00
168.000	8.7947E+03	2.4947E+00	4.5935E+00
336.000	1.0111E+04	4.4222E+00	2.4782E+00
720.000	5.5191E+03	4.7109E+00	6.0469E-01

Time (hr)	Condenser - Surface I-131 (Curies)
0.000	3.5626E-14
0.333	4.3900E-03
0.500	2.1674E-02
0.800	1.3767E-01
1.100	4.9335E-01
1.400	1.3069E+00
1.700	2.8537E+00
2.000	5.4510E+00
2.300	9.3963E+00
2.600	1.4795E+01
2.900	2.1677E+01
3.200	3.0049E+01
3.500	3.9899E+01
3.800	5.1198E+01
4.100	6.3908E+01
4.400	7.7981E+01
4.700	9.3360E+01
5.000	1.0999E+02
5.300	1.2780E+02
5.600	1.4673E+02
5.900	1.6673E+02
6.200	1.8771E+02
6.500	2.0962E+02
6.800	2.3241E+02
7.100	2.5600E+02
7.400	2.8034E+02
7.700	3.0538E+02
8.000	3.3106E+02
8.300	3.5734E+02
8.600	3.8416E+02
8.900	4.1148E+02
9.200	4.3926E+02
9.500	4.6746E+02

9.800	4.9604E+02
10.100	5.2497E+02
10.400	5.5422E+02
24.000	1.9553E+03
48.000	2.5475E+03
72.000	2.8057E+03
96.000	3.0030E+03
120.000	2.8495E+03
168.000	2.4957E+03
336.000	1.5496E+03
720.000	4.9377E+02

##

Cumulative Dose Summary

##

	Control Room (CR)		Exclusion Area Bounda		Low Population Zone (	
Time	Thyroid	TEDE	Thyroid	TEDE	Thyroid	TEDE
(hr)	(rem)	(rem)	(rem)	(rem)	(rem)	(rem)
0.000	0.0000E+00	0.0000E+00	0.0000E+00	0.0000E+00	0.0000E+00	0.0000E+00
0.333	3.3249E-09	1.0567E-10	1.8651E-08	6.7221E-10	3.3959E-09	1.2239E-10
0.500	2.2908E-08	7.2731E-10	9.4094E-08	3.3697E-09	1.7132E-08	6.1355E-10
0.800	2.2070E-07	6.9962E-09	6.2033E-07	2.1999E-08	1.1295E-07	4.0055E-09
1.100	1.0365E-06	3.2809E-08	2.3002E-06	8.0861E-08	4.1881E-07	1.4723E-08
1.400	3.3751E-06	1.0671E-07	6.2981E-06	2.1973E-07	1.1467E-06	4.0007E-08
1.700	8.7300E-06	2.7570E-07	1.4210E-05	4.9250E-07	2.5873E-06	8.9673E-08
2.000	1.9254E-05	6.0746E-07	2.8041E-05	9.6628E-07	5.1056E-06	1.7594E-07
2.300	3.6010E-05	1.1352E-06	4.9975E-05	1.7134E-06	9.0992E-06	3.1198E-07
2.600	6.0111E-05	1.8935E-06	8.1591E-05	2.7850E-06	1.4856E-05	5.0708E-07
2.900	9.4085E-05	2.9617E-06	1.2421E-04	4.2230E-06	2.2616E-05	7.6890E-07
3.200	1.4023E-04	4.4113E-06	1.7906E-04	6.0661E-06	3.2603E-05	1.1045E-06
3.500	2.0064E-04	6.3078E-06	2.4729E-04	8.3503E-06	4.5025E-05	1.5204E-06
3.800	2.7724E-04	8.7109E-06	3.2995E-04	1.1108E-05	6.0075E-05	2.0226E-06
4.100	3.7179E-04	1.1676E-05	4.2801E-04	1.4371E-05	7.7930E-05	2.6165E-06
4.400	4.8592E-04	1.5252E-05	5.4237E-04	1.8164E-05	9.8752E-05	3.3073E-06
4.700	6.2113E-04	1.9487E-05	6.7385E-04	2.2515E-05	1.2269E-04	4.0994E-06
5.000	7.7878E-04	2.4422E-05	8.2320E-04	2.7445E-05	1.4988E-04	4.9971E-06
5.300	9.6013E-04	3.0096E-05	9.9110E-04	3.2976E-05	1.8046E-04	6.0041E-06
5.600	1.1663E-03	3.6545E-05	1.1782E-03	3.9125E-05	2.1452E-04	7.1237E-06
5.900	1.3984E-03	4.3800E-05	1.3850E-03	4.5910E-05	2.5217E-04	8.3591E-06
6.200	1.6574E-03	5.1892E-05	1.6120E-03	5.3345E-05	2.9351E-04	9.7129E-06
6.500	1.9441E-03	6.0847E-05	1.8597E-03	6.1445E-05	3.3861E-04	1.1188E-05
6.800	2.2593E-03	7.0688E-05	2.1285E-03	7.0219E-05	3.8756E-04	1.2785E-05
7.100	2.6037E-03	8.1437E-05	2.4188E-03	7.9680E-05	4.4041E-04	1.4508E-05
7.400	2.9779E-03	9.3113E-05	2.7309E-03	8.9836E-05	4.9722E-04	1.6357E-05
7.700	3.3826E-03	1.0573E-04	3.0650E-03	1.0069E-04	5.5806E-04	1.8334E-05
8.000	3.8182E-03	1.1932E-04	3.4214E-03	1.1226E-04	6.2295E-04	2.0440E-05
8.300	4.2273E-03	1.3207E-04	3.6162E-03	1.1883E-04	6.4807E-04	2.1287E-05
8.600	4.5739E-03	1.4287E-04	3.8228E-03	1.2577E-04	6.7470E-04	2.2182E-05
8.900	4.8832E-03	1.5251E-04	4.0411E-03	1.3310E-04	7.0285E-04	2.3127E-05
9.200	5.1720E-03	1.6151E-04	4.2712E-03	1.4081E-04	7.3252E-04	2.4121E-05
9.500	5.4515E-03	1.7022E-04	4.5133E-03	1.4891E-04	7.6373E-04	2.5165E-05
9.800	5.7292E-03	1.7886E-04	4.7672E-03	1.5738E-04	7.9647E-04	2.6258E-05
10.100	6.0101E-03	1.8761E-04	5.0331E-03	1.6625E-04	8.3075E-04	2.7401E-05
10.400	6.2975E-03	1.9655E-04	5.3110E-03	1.7550E-04	8.6658E-04	2.8593E-05
24.000	3.2425E-02	1.0051E-03	3.0207E-02	9.8302E-04	4.0764E-03	1.3271E-04
48.000	6.6476E-02	2.0513E-03	3.0207E-02	9.8302E-04	1.0408E-02	3.3121E-04
72.000	1.1189E-01	3.4403E-03	3.0207E-02	9.8302E-04	1.8929E-02	5.9533E-04
96.000	1.6659E-01	5.1095E-03	3.0207E-02	9.8302E-04	2.9161E-02	9.1106E-04
120.000	1.9075E-01	5.8462E-03	3.0207E-02	9.8302E-04	3.2189E-02	1.0043E-03

```
 168.000 2.4412E-01 7.4722E-03 3.0207E-02 9.8302E-04 3.9039E-02 1.2150E-03
 336.000 4.5449E-01 1.3880E-02 3.0207E-02 9.8302E-04 6.5990E-02 2.0431E-03
 720.000 8.2087E-01 2.5038E-02 3.0207E-02 9.8302E-04 1.1286E-01 3.4830E-03

#####################################################################
                        Worst Two-Hour Doses
#####################################################################

Exclusion Area Boundary (EAB)
   Time    Whole Body    Thyroid        TEDE
   (hr)      (rem)        (rem)         (rem)
   10.4   5.7517E-06   3.6612E-03   1.1875E-04
```

```
 ######################################################################
    RADTRAD Version 3.03 (Spring 2001) run on  6/08/2006  at 16:12:15
 ######################################################################

 ######################################################################
                      File information
 ######################################################################

 Plant file           = P:\Users\Nuc\Exelon EOC\Discipline
Files\Process\AST\Limerick AST\LGS LOCA\RADTRAD\Rev 2 Final DBA Runs\LGS LOCA MSIV
Leak (24-hr Settling Distribution) - 10th of HP Condenser Tubes - 225cfm CR Unfilt
Inleak - Rad Mode.psf
 Inventory file       = c:\program files\radtrad3-03\defaults\limerick ast source
terms.nif
 Release file         = c:\program files\radtrad3-03\defaults\bwr_dba.rft
 Dose Conversion file = c:\program files\radtrad3-03\defaults\fgrl1&12.inp
```

```
 #####    ####   #####    #  #     #  #####   #    #  #####
 #    #  #       #        #  ##    #  #    #  #    #    #
 #    #  #       #        #  # #   #  #    #  #    #    #
 #####    ####   ####     #  #  #  #  #####   #    #    #
 #            #  #        #  #   # #  #       #    #    #
 #            #  #        #  #    ##  #       #    #    #
 #        ####   #        #  #     #  #        ####     #
```

```
 Radtrad 3.03 4/15/2001
 LGS LOCA 200scfh MSIV Leak - Leak to Condenser - MSL Pipe Deposition Credit (24-Hr
20-Group Aerosol Settling with Projected Area Assumption; 2-Hr Mixing Delay) - 95%
CREFAS Charcoal Eff. No Delay - Rad Mode 225cfm Control Room Inleakage - 3000cfm -
10% (217
 Nuclide Inventory File:
 c:\program files\radtrad3-03\defaults\limerick ast source terms.nif
 Plant Power Level:
  3.5270E+03
 Compartments:
   9
 Compartment 1:
 Containment
   3
  3.7907E+05
   0
   0
   0
   1
   0
 Compartment 2:
 (Node 1) Inboard MSL A Volume
   3
  2.5800E+02
   0
   0
   0
   0
   0
```

```
Compartment 3:
(Node 1) Inboard MSL B Volume
  3
 1.0000E-08
  0
  0
  0
  0
  0
Compartment 4:
(Node 2) Outboard MSL A Volume
  3
 1.1820E+03
  0
  0
  0
  0
  0
Compartment 5:
(Node 2) Outboard MSL B Volume
  3
 1.0510E+03
  0
  0
  0
  0
  0
Compartment 6:
Condenser
  3
 5.4750E+04
  0
  0
  0
  0
  0
Compartment 7:
Environment
  2
 0.0000E+00
  0
  0
  0
  0
  0
Compartment 8:
Control Room
  1
 1.2600E+05
  0
  0
  1
  0
  0
Compartment 9:
Hold
  3
 1.0000E+00
  0
  0
```

```
  0
  0
  0
Pathways:
 11
Pathway 1:
Containment to (Node 1) Inboard MSL A Volume
  1
  2
  2
Pathway 2:
Containment to (Node 1) Inboard MSL B Volume
  1
  3
  2
Pathway 3:
Containment to Hold (PC Leakage)
  1
  9
  4
Pathway 4:
(Node 1) Inboard MSL A Volume to (Node 2) Outboard MSL A Volume
  2
  4
  2
Pathway 5:
(Node 1) Inboard MSL B Volume to (Node 2) Outboard MSL B Volume
  3
  5
  2
Pathway 6:
(Node 2) Outboard MSL A Volume to Condenser
  4
  6
  2
Pathway 7:
(Node 2) Outboard MSL B Volume to Condenser
  5
  6
  2
Pathway 8:
Condenser Leak to Environment
  6
  7
  2
Pathway 9:
Filtered Intake to Control Room
  7
  8
  2
Pathway 10:
Unfiltered Inleakage to Control Room
  7
  8
  2
Pathway 11:
Control Room Exhaust
  8
  7
  2
```

```
End of Plant Model File
Scenario Description Name:

Plant Model Filename:

Source Term:
  1
  1   1.0000E+00
c:\program files\radtrad3-03\defaults\fgr11&12.inp
c:\program files\radtrad3-03\defaults\bwr_dba.rft
  0.0000E+00
  1
  9.5000E-01   4.8500E-02   1.5000E-03   1.0000E+00
Overlying Pool:
  0
  0.0000E+00
  0
  0
  0
  0
Compartments:
  9
Compartment 1:
  0
  1
  0
  0
  0
  0
  0
  3
  3
  1.0000E+01
  1
  1
  0.0000E+00   0.0000E+00
Compartment 2:
  0
  1
  0
  0
  0
  0
  0
  0
  0
Compartment 3:
  0
  1
  0
  0
  0
  0
  0
  0
  0
Compartment 4:
  0
  1
  0
```

```
  0
  0
  0
  0
  0
  0
Compartment 5:
  0
  1
  0
  0
  0
  0
  0
  0
  0
Compartment 6:
  0
  1
  0
  0
  0
  0
  0
  0
  0
Compartment 7:
  0
  1
  0
  0
  0
  0
  0
  0
  0
Compartment 8:
  0
  1
  0
  0
  0
  0
  1
  2.1750E+03
  3
  0.0000E+00   9.9000E+01   9.5000E+01   9.5000E+01
  5.0000E-01   9.9000E+01   9.5000E+01   9.5000E+01
  7.2000E+02   0.0000E+00   0.0000E+00   0.0000E+00
  0
  0
Compartment 9:
  0
  1
  0
  0
  0
  0
  0
  0
```

```
  0
Pathways:
 11
Pathway 1:
  0
  0
  0
  0
  0
  1
  5
  0.0000E+00   1.5240E+00   9.9990E+01   9.9940E+01   0.0000E+00
  2.0000E+00   9.3060E-01   9.9990E+01   9.9940E+01   0.0000E+00
  2.4000E+01   5.1270E-01   0.0000E+00   9.9990E+01   0.0000E+00
  9.6000E+01   5.1270E-01   0.0000E+00   9.9990E+01   0.0000E+00
  7.2000E+02   0.0000E+00   0.0000E+00   0.0000E+00   0.0000E+00
  0
  0
  0
  0
  0
  0
Pathway 2:
  0
  0
  0
  0
  0
  1
  5
  0.0000E+00   1.5240E+00   9.9990E+01   9.9890E+01   0.0000E+00
  2.0000E+00   9.3060E-01   9.9990E+01   9.9890E+01   0.0000E+00
  2.4000E+01   5.1270E-01   0.0000E+00   9.9980E+01   0.0000E+00
  9.6000E+01   5.1270E-01   0.0000E+00   9.9990E+01   0.0000E+00
  7.2000E+02   0.0000E+00   0.0000E+00   0.0000E+00   0.0000E+00
  0
  0
  0
  0
  0
  0
Pathway 3:
  0
  0
  0
  0
  0
  0
  0
  0
  0
  0
  1
  3
  0.0000E+00   5.0000E-01
  2.4000E+01   2.5000E-01
  7.2000E+02   0.0000E+00
  0
Pathway 4:
  0
```

```
  0
  0
  0
  0
  1
  4
  0.0000E+00   9.3060E-01   0.0000E+00   0.0000E+00   0.0000E+00
  2.4000E+01   5.1270E-01   0.0000E+00   0.0000E+00   0.0000E+00
  9.6000E+01   5.1270E-01   0.0000E+00   0.0000E+00   0.0000E+00
  7.2000E+02   0.0000E+00   0.0000E+00   0.0000E+00   0.0000E+00
  0
  0
  0
  0
  0
  0
Pathway 5:
  0
  0
  0
  0
  0
  1
  4
  0.0000E+00   9.3060E-01   0.0000E+00   0.0000E+00   0.0000E+00
  2.4000E+01   5.1270E-01   0.0000E+00   0.0000E+00   0.0000E+00
  9.6000E+01   5.1270E-01   0.0000E+00   0.0000E+00   0.0000E+00
  7.2000E+02   0.0000E+00   0.0000E+00   0.0000E+00   0.0000E+00
  0
  0
  0
  0
  0
  0
Pathway 6:
  0
  0
  0
  0
  0
  1
  4
  0.0000E+00   3.1880E+00   0.0000E+00   0.0000E+00   0.0000E+00
  2.4000E+01   1.5130E+00   0.0000E+00   0.0000E+00   0.0000E+00
  9.6000E+01   1.1480E+00   0.0000E+00   0.0000E+00   0.0000E+00
  7.2000E+02   0.0000E+00   0.0000E+00   0.0000E+00   0.0000E+00
  0
  0
  0
  0
  0
  0
Pathway 7:
  0
  0
  0
  0
  0
  1
  4
```

```
  0.0000E+00   3.1880E+00   0.0000E+00   0.0000E+00   0.0000E+00
  2.4000E+01   1.5130E+00   0.0000E+00   0.0000E+00   0.0000E+00
  9.6000E+01   1.1480E+00   0.0000E+00   0.0000E+00   0.0000E+00
  7.2000E+02   0.0000E+00   0.0000E+00   0.0000E+00   0.0000E+00
  0
  0
  0
  0
  0
  0
Pathway 8:
  0
  0
  0
  0
  0
  1
  4
  0.0000E+00   3.6620E+00   0.0000E+00   0.0000E+00   0.0000E+00
  2.4000E+01   2.0180E+00   0.0000E+00   0.0000E+00   0.0000E+00
  9.6000E+01   2.0180E+00   0.0000E+00   0.0000E+00   0.0000E+00
  7.2000E+02   0.0000E+00   0.0000E+00   0.0000E+00   0.0000E+00
  0
  0
  0
  0
  0
  0
Pathway 9:
  0
  0
  0
  0
  0
  1
  3
  0.0000E+00   5.2500E+02   9.9000E+01   9.5000E+01   9.5000E+01
  5.0000E-01   5.2500E+02   9.9000E+01   9.5000E+01   9.5000E+01
  7.2000E+02   0.0000E+00   0.0000E+00   0.0000E+00   0.0000E+00
  0
  0
  0
  0
  0
  0
Pathway 10:
  0
  0
  0
  0
  0
  1
  2
  0.0000E+00   2.2500E+02   0.0000E+00   0.0000E+00   0.0000E+00
  7.2000E+02   0.0000E+00   0.0000E+00   0.0000E+00   0.0000E+00
  0
  0
  0
  0
  0
```

```
  0
Pathway 11:
  0
  0
  0
  0
  0
  1
  3
  0.0000E+00   7.5000E+02   1.0000E+02   1.0000E+02   1.0000E+02
  5.0000E-01   7.5000E+02   1.0000E+02   1.0000E+02   1.0000E+02
  7.2000E+02   0.0000E+00   0.0000E+00   0.0000E+00   0.0000E+00
  0
  0
  0
  0
  0
  0
Dose Locations:
  3
Location 1:
Exclusion Area Boundary (EAB)
  7
  1
  2
  0.0000E+00   3.1800E-04
  2.4000E+01   0.0000E+00
  1
  4
  0.0000E+00   3.5000E-04
  8.0000E+00   1.8000E-04
  2.4000E+01   2.3000E-04
  7.2000E+02   0.0000E+00
  0
Location 2:
Low Population Zone (LPZ)
  7
  1
 10
  0.0000E+00   5.7900E-05
  8.0000E+00   4.1000E-05
  2.4000E+01   1.9500E-05
  4.8000E+01   1.9500E-05
  7.2000E+01   1.9500E-05
  9.6000E+01   6.6800E-06
  1.2000E+02   6.6800E-06
  1.6800E+02   6.6800E-06
  3.3600E+02   6.6800E-06
  7.2000E+02   0.0000E+00
  1
  4
  0.0000E+00   3.5000E-04
  8.0000E+00   1.8000E-04
  2.4000E+01   2.3000E-04
  7.2000E+02   0.0000E+00
  0
Location 3:
Control Room (CR)
  8
  0
```

```
   1
   2
   0.0000E+00   3.5000E-04
   7.2000E+02   0.0000E+00
   1
   4
   0.0000E+00   1.0000E+00
   2.4000E+01   6.0000E-01
   9.6000E+01   4.0000E-01
   7.2000E+02   0.0000E+00
 Effective Volume Location:
   1
   6
   0.0000E+00   6.8800E-03
   2.0000E+00   5.1700E-03
   8.0000E+00   2.0400E-03
   2.4000E+01   1.2900E-03
   9.6000E+01   9.6300E-04
   7.2000E+02   0.0000E+00
 Simulation Parameters:
   1
   0.0000E+00   0.0000E+00
 Output Filename:
 P:\Users\Nuc\Exelon EOC\Discipline Files\Process\AST\Limerick AST\LGS
LOCA\RADTRAD\Rev 2 Final DBA Runs\LGS LOCA MSIV Leak (24-hr Settling Distribution)
- 10th of HP Condenser Tubes - 225cfm CR Unfilt Inleak - Rad Mode.o0
   1
   1
   1
   0
   0
 End of Scenario File
```

```
#######################################################################
   RADTRAD Version 3.03 (Spring 2001) run on  6/08/2006  at 16:12:15
#######################################################################

#######################################################################
                      Plant Description
#######################################################################

Number of Nuclides =  60

Inventory Power =   1.0000E+00 MWth
Plant Power Level =   3.5270E+03 MWth

Number of compartments    =   9

Compartment information

Compartment number  1  (Source term fraction =   1.0000E+00
)
Name: Containment
Compartment volume =   3.7907E+05 (Cubic feet)
Compartment type is Normal
Removal devices within compartment:
     Deposition
Pathways into and out of compartment  1
   Exit Pathway Number    1: Containment to (Node 1) Inboard MSL A Volume
   Exit Pathway Number    2: Containment to (Node 1) Inboard MSL B Volume
   Exit Pathway Number    3: Containment to Hold (PC Leakage)

Compartment number  2
Name: (Node 1) Inboard MSL A Volume
Compartment volume =   2.5800E+02 (Cubic feet)
Compartment type is Normal
Pathways into and out of compartment  2
   Inlet Pathway Number   1: Containment to (Node 1) Inboard MSL A Volume
   Exit Pathway Number    4: (Node 1) Inboard MSL A Volume to (Node 2) Outboard

Compartment number  3
Name: (Node 1) Inboard MSL B Volume
Compartment volume =   1.0000E-08 (Cubic feet)
Compartment type is Normal
Pathways into and out of compartment  3
   Inlet Pathway Number   2: Containment to (Node 1) Inboard MSL B Volume
   Exit Pathway Number    5: (Node 1) Inboard MSL B Volume to (Node 2) Outboard

Compartment number  4
Name: (Node 2) Outboard MSL A Volume
Compartment volume =   1.1820E+03 (Cubic feet)
Compartment type is Normal
Pathways into and out of compartment  4
   Inlet Pathway Number   4: (Node 1) Inboard MSL A Volume to (Node 2) Outboard
   Exit Pathway Number    6: (Node 2) Outboard MSL A Volume to Condenser

Compartment number  5
Name: (Node 2) Outboard MSL B Volume
Compartment volume =   1.0510E+03 (Cubic feet)
Compartment type is Normal
Pathways into and out of compartment  5
   Inlet Pathway Number   5: (Node 1) Inboard MSL B Volume to (Node 2) Outboard
```

```
   Exit Pathway Number    7: (Node 2) Outboard MSL B Volume to Condenser

Compartment number  6
Name: Condenser
Compartment volume =   5.4750E+04 (Cubic feet)
Compartment type is Normal
Pathways into and out of compartment  6
   Inlet Pathway Number   6: (Node 2) Outboard MSL A Volume to Condenser
   Inlet Pathway Number   7: (Node 2) Outboard MSL B Volume to Condenser
   Exit Pathway Number    8: Condenser Leak to Environment

Compartment number  7
Name: Environment
Compartment type is Environment
Pathways into and out of compartment  7
   Inlet Pathway Number   8: Condenser Leak to Environment
   Inlet Pathway Number  11: Control Room Exhaust
   Exit Pathway Number    9: Filtered Intake to Control Room
   Exit Pathway Number   10: Unfiltered Inleakage to Control Room

Compartment number  8
Name: Control Room
Compartment volume =   1.2600E+05 (Cubic feet)
Compartment type is Control Room
Removal devices within compartment:
     Filter(s)
Pathways into and out of compartment  8
   Inlet Pathway Number   9: Filtered Intake to Control Room
   Inlet Pathway Number  10: Unfiltered Inleakage to Control Room
   Exit Pathway Number   11: Control Room Exhaust

Compartment number  9
Name: Hold
Compartment volume =   1.0000E+00 (Cubic feet)
Compartment type is Normal
Pathways into and out of compartment  9
   Inlet Pathway Number   3: Containment to Hold (PC Leakage)

Total number of pathways =  11
```

```
#######################################################################
   RADTRAD Version 3.03 (Spring 2001) run on  6/08/2006  at 16:12:15
#######################################################################

#######################################################################
                    Scenario Description
#######################################################################
```

Radioactive Decay is enabled
Calculation of Daughters is enabled

Release Fractions and Timings

	GAP	EARLY IN-VESSEL	LATE RELEASE	RELEASE MASS
	0.500000 hr	1.5000 hrs	0.0000 hrs	(gm)
NOBLES	5.0000E-02	9.5000E-01	0.0000E+00	4.625E+03
IODINE	5.0000E-02	2.5000E-01	0.0000E+00	3.033E+02
CESIUM	5.0000E-02	2.0000E-01	0.0000E+00	5.099E+04
TELLURIUM	0.0000E+00	5.0000E-02	0.0000E+00	4.012E+01
STRONTIUM	0.0000E+00	2.0000E-02	0.0000E+00	1.712E+03
BARIUM	0.0000E+00	2.0000E-02	0.0000E+00	4.739E+01
RUTHENIUM	0.0000E+00	2.5000E-03	0.0000E+00	5.988E+01
CERIUM	0.0000E+00	5.0000E-04	0.0000E+00	5.914E+02
LANTHANUM	0.0000E+00	2.0000E-04	0.0000E+00	8.731E+00

Inventory Power = 3527. MWt

Nuclide Name	Group	Specific Inventory (Ci/MWt)	half life (s)	Whole Body DCF (Sv-m3/Bq-s)	Inhaled Thyroid (Sv/Bq)	Inhaled Effective (Sv/Bq)
Co-58	7	1.529E+02	6.117E+06	4.760E-14	8.720E-10	2.940E-09
Co-60	7	1.830E+02	1.663E+08	1.260E-13	1.620E-08	5.910E-08
Kr-85	1	3.946E+02	3.383E+08	1.190E-16	0.000E+00	0.000E+00
Kr-85m	1	8.313E+03	1.613E+04	7.480E-15	0.000E+00	0.000E+00
Kr-87	1	1.633E+04	4.578E+03	4.120E-14	0.000E+00	0.000E+00
Kr-88	1	2.303E+04	1.022E+04	1.020E-13	0.000E+00	0.000E+00
Rb-86	3	6.518E+01	1.612E+06	4.810E-15	1.330E-09	1.790E-09
Sr-89	5	2.798E+04	4.363E+06	7.730E-17	7.960E-12	1.120E-08
Sr-90	5	3.178E+03	9.190E+08	7.530E-18	2.690E-10	3.510E-07
Sr-91	5	3.801E+04	3.420E+04	4.924E-14	9.930E-12	4.547E-10
Sr-92	5	4.017E+04	9.756E+03	6.790E-14	3.920E-12	2.180E-10
Y-90	9	3.272E+03	2.304E+05	1.900E-16	5.170E-13	2.280E-09
Y-91	9	3.448E+04	5.055E+06	2.600E-16	8.500E-12	1.320E-08
Y-92	9	4.029E+04	1.274E+04	1.300E-14	1.050E-12	2.110E-10
Y-93	9	4.526E+04	3.636E+04	4.800E-15	9.260E-13	5.820E-10
Zr-95	9	4.489E+04	5.528E+06	3.600E-14	1.440E-09	6.390E-09
Zr-97	9	4.657E+04	6.084E+04	4.432E-14	2.315E-11	1.171E-09
Nb-95	9	4.512E+04	3.037E+06	3.740E-14	3.580E-10	1.570E-09
Mo-99	7	5.078E+04	2.376E+05	7.280E-15	1.520E-11	1.070E-09
Tc-99m	7	4.447E+04	2.167E+04	5.890E-15	5.010E-11	8.800E-12
Ru-103	7	4.202E+04	3.394E+06	2.251E-14	2.570E-10	2.421E-09
Ru-105	7	2.908E+04	1.598E+04	3.810E-14	4.150E-12	1.230E-10
Ru-106	7	1.730E+04	3.181E+07	1.040E-14	1.720E-09	1.290E-07
Rh-105	7	2.752E+04	1.273E+05	3.720E-15	2.880E-12	2.580E-10
Sb-127	4	2.896E+03	3.326E+05	3.330E-14	6.150E-11	1.630E-09
Sb-129	4	8.638E+03	1.555E+04	7.140E-14	9.720E-12	1.740E-10
Te-127	4	2.873E+03	3.366E+04	2.420E-16	1.840E-12	8.600E-11
Te-127m	4	3.855E+02	9.418E+06	1.470E-16	9.660E-11	5.810E-09
Te-129	4	8.501E+03	4.176E+03	2.750E-15	5.090E-13	2.090E-11
Te-129m	4	1.267E+03	2.903E+06	3.337E-15	1.563E-10	6.484E-09

Te-131m	4	3.869E+03	1.080E+05	7.463E-14	3.669E-08	1.758E-09
Te-132	4	3.821E+04	2.815E+05	1.030E-14	6.280E-08	2.550E-09
I-131	2	2.687E+04	6.947E+05	1.820E-14	2.920E-07	8.890E-09
I-132	2	3.881E+04	8.280E+03	1.120E-13	1.740E-09	1.030E-10
I-133	2	5.556E+04	7.488E+04	2.940E-14	4.860E-08	1.580E-09
I-134	2	6.165E+04	3.156E+03	1.300E-13	2.880E-10	3.550E-11
I-135	2	5.192E+04	2.380E+04	8.294E-14	8.460E-09	3.320E-10
Xe-133	1	5.491E+04	4.532E+05	1.560E-15	0.000E+00	0.000E+00
Xe-135	1	2.228E+04	3.272E+04	1.190E-14	0.000E+00	0.000E+00
Cs-134	3	7.280E+03	6.507E+07	7.570E-14	1.110E-08	1.250E-08
Cs-136	3	2.027E+03	1.132E+06	1.060E-13	1.730E-09	1.980E-09
Cs-137	3	4.538E+03	9.467E+08	2.725E-14	7.930E-09	8.630E-09
Ba-139	6	5.084E+04	4.962E+03	2.170E-15	2.400E-12	4.640E-11
Ba-140	6	4.896E+04	1.101E+06	8.580E-15	2.560E-10	1.010E-09
La-140	9	5.019E+04	1.450E+05	1.170E-13	6.870E-11	1.310E-09
La-141	9	4.640E+04	1.415E+04	2.390E-15	9.400E-12	1.570E-10
La-142	9	4.532E+04	5.550E+03	1.440E-13	8.740E-12	6.840E-11
Ce-141	8	4.492E+04	2.808E+06	3.430E-15	2.550E-11	2.420E-09
Ce-143	8	4.427E+04	1.188E+05	1.290E-14	6.230E-12	9.160E-10
Ce-144	8	3.596E+04	2.456E+07	2.773E-15	2.920E-10	1.010E-07
Pr-143	9	4.293E+04	1.172E+06	2.100E-17	1.680E-18	2.190E-09
Nd-147	9	1.838E+04	9.487E+05	6.190E-15	1.820E-11	1.850E-09
Np-239	8	5.397E+05	2.035E+05	7.690E-15	7.620E-12	6.780E-10
Pu-238	8	1.796E+02	2.769E+09	4.880E-18	3.860E-10	7.790E-05
Pu-239	8	1.200E+01	7.594E+11	4.240E-18	3.750E-10	8.330E-05
Pu-240	8	1.288E+01	2.063E+11	4.750E-18	3.760E-10	8.330E-05
Pu-241	8	6.182E+03	4.544E+08	7.250E-20	9.150E-12	1.340E-06
Am-241	9	9.528E+00	1.364E+10	8.180E-16	1.600E-09	1.200E-04
Cm-242	9	2.388E+03	1.407E+07	5.690E-18	9.410E-10	4.670E-06
Cm-244	9	2.602E+02	5.715E+08	4.910E-18	1.010E-09	6.700E-05

Nuclide	Daughter	Fraction	Daughter	Fraction	Daughter	Fraction
Kr-85m	Kr-85	0.21	none	0.00	none	0.00
Kr-87	Rb-87	1.00	none	0.00	none	0.00
Kr-88	Rb-88	1.00	none	0.00	none	0.00
Sr-90	Y-90	1.00	none	0.00	none	0.00
Sr-91	Y-91m	0.58	Y-91	0.42	none	0.00
Sr-92	Y-92	1.00	none	0.00	none	0.00
Y-93	Zr-93	1.00	none	0.00	none	0.00
Zr-95	Nb-95m	0.01	Nb-95	0.99	none	0.00
Zr-97	Nb-97m	0.95	Nb-97	0.05	none	0.00
Mo-99	Tc-99m	0.88	Tc-99	0.12	none	0.00
Tc-99m	Tc-99	1.00	none	0.00	none	0.00
Ru-103	Rh-103m	1.00	none	0.00	none	0.00
Ru-105	Rh-105	1.00	none	0.00	none	0.00
Ru-106	Rh-106	1.00	none	0.00	none	0.00
Sb-127	Te-127m	0.18	Te-127	0.82	none	0.00
Sb-129	Te-129m	0.22	Te-129	0.77	none	0.00
Te-127m	Te-127	0.98	none	0.00	none	0.00
Te-129	I-129	1.00	none	0.00	none	0.00
Te-129m	Te-129	0.65	I-129	0.35	none	0.00
Te-131m	Te-131	0.22	I-131	0.78	none	0.00
Te-132	I-132	1.00	none	0.00	none	0.00
I-131	Xe-131m	0.01	none	0.00	none	0.00
I-133	Xe-133m	0.03	Xe-133	0.97	none	0.00
I-135	Xe-135m	0.15	Xe-135	0.85	none	0.00
Xe-135	Cs-135	1.00	none	0.00	none	0.00
Cs-137	Ba-137m	0.95	none	0.00	none	0.00
Ba-140	La-140	1.00	none	0.00	none	0.00
La-141	Ce-141	1.00	none	0.00	none	0.00

Ce-143	Pr-143	1.00	none	0.00	none	0.00
Ce-144	Pr-144m	0.02	Pr-144	0.98	none	0.00
Nd-147	Pm-147	1.00	none	0.00	none	0.00
Np-239	Pu-239	1.00	none	0.00	none	0.00
Pu-238	U-234	1.00	none	0.00	none	0.00
Pu-239	U-235	1.00	none	0.00	none	0.00
Pu-240	U-236	1.00	none	0.00	none	0.00
Pu-241	U-237	0.00	Am-241	1.00	none	0.00
Am-241	Np-237	1.00	none	0.00	none	0.00
Cm-242	Pu-238	1.00	none	0.00	none	0.00
Cm-244	Pu-240	1.00	none	0.00	none	0.00

Iodine fractions
Aerosol = 9.5000E-01
Elemental = 4.8500E-02
Organic = 1.5000E-03

COMPARTMENT DATA

Compartment number 1: Containment
Natural Deposition (Powers' model): Aerosol data
Reactor type: 3
Percentile = 10 (%)

Natural Deposition: Elemental Removal Data

Time (hr)	Removal Coef. (hr^-1)
0.0000E+00	0.0000E+00

Compartment number 2: (Node 1) Inboard MSL A Volume

Compartment number 3: (Node 1) Inboard MSL B Volume

Compartment number 4: (Node 2) Outboard MSL A Volume

Compartment number 5: (Node 2) Outboard MSL B Volume

Compartment number 6: Condenser

Compartment number 7: Environment

Compartment number 8: Control Room

Compartment Filter Data

Time (hr)	Flow Rate (cfm)	Filter Efficiencies (%) Aerosol	Elemental	Organic
0.0000E+00	2.1750E+03	9.9000E+01	9.5000E+01	9.5000E+01
5.0000E-01	2.1750E+03	9.9000E+01	9.5000E+01	9.5000E+01
7.2000E+02	2.1750E+03	0.0000E+00	0.0000E+00	0.0000E+00

Compartment number 9: Hold

PATHWAY DATA

Pathway number 1: Containment to (Node 1) Inboard MSL A Volume

Pathway Filter: Removal Data

Time (hr)	Flow Rate (cfm)	Filter Efficiencies (%) Aerosol	Elemental	Organic

0.0000E+00	1.5240E+00	9.9990E+01	9.9940E+01	0.0000E+00
2.0000E+00	9.3060E-01	9.9990E+01	9.9940E+01	0.0000E+00
2.4000E+01	5.1270E-01	0.0000E+00	9.9990E+01	0.0000E+00
9.6000E+01	5.1270E-01	0.0000E+00	9.9990E+01	0.0000E+00
7.2000E+02	0.0000E+00	0.0000E+00	0.0000E+00	0.0000E+00

Pathway number 2: Containment to (Node 1) Inboard MSL B Volume

Pathway Filter: Removal Data

Time (hr)	Flow Rate (cfm)	Filter Efficiencies (%) Aerosol	Elemental	Organic
0.0000E+00	1.5240E+00	9.9990E+01	9.9890E+01	0.0000E+00
2.0000E+00	9.3060E-01	9.9990E+01	9.9890E+01	0.0000E+00
2.4000E+01	5.1270E-01	0.0000E+00	9.9980E+01	0.0000E+00
9.6000E+01	5.1270E-01	0.0000E+00	9.9990E+01	0.0000E+00
7.2000E+02	0.0000E+00	0.0000E+00	0.0000E+00	0.0000E+00

Pathway number 3: Containment to Hold (PC Leakage)

Convection Data

Time (hr)	Flow Rate (% / day)
0.0000E+00	5.0000E-01
2.4000E+01	2.5000E-01
7.2000E+02	0.0000E+00

Pathway number 4: (Node 1) Inboard MSL A Volume to (Node 2) Outboard

Pathway Filter: Removal Data

Time (hr)	Flow Rate (cfm)	Filter Efficiencies (%) Aerosol	Elemental	Organic
0.0000E+00	9.3060E-01	0.0000E+00	0.0000E+00	0.0000E+00
2.4000E+01	5.1270E-01	0.0000E+00	0.0000E+00	0.0000E+00
9.6000E+01	5.1270E-01	0.0000E+00	0.0000E+00	0.0000E+00
7.2000E+02	0.0000E+00	0.0000E+00	0.0000E+00	0.0000E+00

Pathway number 5: (Node 1) Inboard MSL B Volume to (Node 2) Outboard

Pathway Filter: Removal Data

Time (hr)	Flow Rate (cfm)	Filter Efficiencies (%) Aerosol	Elemental	Organic
0.0000E+00	9.3060E-01	0.0000E+00	0.0000E+00	0.0000E+00
2.4000E+01	5.1270E-01	0.0000E+00	0.0000E+00	0.0000E+00
9.6000E+01	5.1270E-01	0.0000E+00	0.0000E+00	0.0000E+00
7.2000E+02	0.0000E+00	0.0000E+00	0.0000E+00	0.0000E+00

Pathway number 6: (Node 2) Outboard MSL A Volume to Condenser

Pathway Filter: Removal Data

Time (hr)	Flow Rate (cfm)	Filter Efficiencies (%) Aerosol	Elemental	Organic
0.0000E+00	3.1880E+00	0.0000E+00	0.0000E+00	0.0000E+00
2.4000E+01	1.5130E+00	0.0000E+00	0.0000E+00	0.0000E+00
9.6000E+01	1.1480E+00	0.0000E+00	0.0000E+00	0.0000E+00
7.2000E+02	0.0000E+00	0.0000E+00	0.0000E+00	0.0000E+00

Pathway number 7: (Node 2) Outboard MSL B Volume to Condenser

Pathway Filter: Removal Data

Time (hr)	Flow Rate (cfm)	Filter Efficiencies (%) Aerosol	Elemental	Organic
0.0000E+00	3.1880E+00	0.0000E+00	0.0000E+00	0.0000E+00
2.4000E+01	1.5130E+00	0.0000E+00	0.0000E+00	0.0000E+00
9.6000E+01	1.1480E+00	0.0000E+00	0.0000E+00	0.0000E+00
7.2000E+02	0.0000E+00	0.0000E+00	0.0000E+00	0.0000E+00

Pathway number 8: Condenser Leak to Environment

Pathway Filter: Removal Data

Time (hr)	Flow Rate (cfm)	Filter Efficiencies (%) Aerosol	Elemental	Organic
0.0000E+00	3.6620E+00	0.0000E+00	0.0000E+00	0.0000E+00
2.4000E+01	2.0180E+00	0.0000E+00	0.0000E+00	0.0000E+00
9.6000E+01	2.0180E+00	0.0000E+00	0.0000E+00	0.0000E+00
7.2000E+02	0.0000E+00	0.0000E+00	0.0000E+00	0.0000E+00

Pathway number 9: Filtered Intake to Control Room

Pathway Filter: Removal Data

Time (hr)	Flow Rate (cfm)	Filter Efficiencies (%) Aerosol	Elemental	Organic
0.0000E+00	5.2500E+02	9.9000E+01	9.5000E+01	9.5000E+01
5.0000E-01	5.2500E+02	9.9000E+01	9.5000E+01	9.5000E+01
7.2000E+02	0.0000E+00	0.0000E+00	0.0000E+00	0.0000E+00

Pathway number 10: Unfiltered Inleakage to Control Room

Pathway Filter: Removal Data

Time (hr)	Flow Rate (cfm)	Filter Efficiencies (%) Aerosol	Elemental	Organic
0.0000E+00	2.2500E+02	0.0000E+00	0.0000E+00	0.0000E+00
7.2000E+02	0.0000E+00	0.0000E+00	0.0000E+00	0.0000E+00

Pathway number 11: Control Room Exhaust

Pathway Filter: Removal Data

Time (hr)	Flow Rate (cfm)	Filter Efficiencies (%) Aerosol	Elemental	Organic
0.0000E+00	7.5000E+02	1.0000E+02	1.0000E+02	1.0000E+02
5.0000E-01	7.5000E+02	1.0000E+02	1.0000E+02	1.0000E+02
7.2000E+02	0.0000E+00	0.0000E+00	0.0000E+00	0.0000E+00

LOCATION DATA

Location Exclusion Area Boundary (EAB) is in compartment 7

Location X/Q Data

Time (hr)	X/Q (s * m^-3)
0.0000E+00	3.1800E-04
2.4000E+01	0.0000E+00

Location Breathing Rate Data

Time (hr) Breathing Rate (m^3 * sec^-1)

```
  0.0000E+00                  3.5000E-04
  8.0000E+00                  1.8000E-04
  2.4000E+01                  2.3000E-04
  7.2000E+02                  0.0000E+00
Location Low Population Zone (LPZ)     is in compartment   7

Location X/Q Data
 Time (hr)          X/Q (s * m^-3)
  0.0000E+00           5.7900E-05
  8.0000E+00           4.1000E-05
  2.4000E+01           1.9500E-05
  4.8000E+01           1.9500E-05
  7.2000E+01           1.9500E-05
  9.6000E+01           6.6800E-06
  1.2000E+02           6.6800E-06
  1.6800E+02           6.6800E-06
  3.3600E+02           6.6800E-06
  7.2000E+02           0.0000E+00

Location Breathing Rate Data
 Time (hr)          Breathing Rate (m^3 * sec^-1)
  0.0000E+00                  3.5000E-04
  8.0000E+00                  1.8000E-04
  2.4000E+01                  2.3000E-04
  7.2000E+02                  0.0000E+00
Location Control Room (CR)     is in compartment   8

Location X/Q Data
 Time (hr)          X/Q (s * m^-3)
  0.0000E+00           6.8800E-03
  2.0000E+00           5.1700E-03
  8.0000E+00           2.0400E-03
  2.4000E+01           1.2900E-03
  9.6000E+01           9.6300E-04
  7.2000E+02           0.0000E+00

Location Breathing Rate Data
 Time (hr)          Breathing Rate (m^3 * sec^-1)
  0.0000E+00                  3.5000E-04
  7.2000E+02                  0.0000E+00

Location Occupancy Factor Data
 Time (hr)          Occupancy Factor
  0.0000E+00            1.0000E+00
  2.4000E+01            6.0000E-01
  9.6000E+01            4.0000E-01
  7.2000E+02            0.0000E+00

USER SPECIFIED TIME STEP DATA - SUPPLEMENTAL TIME STEPS
     Time            Time step
      0.0000E+00       0.0000E+00
```

```
#######################################################################
   RADTRAD Version 3.03 (Spring 2001) run on  6/08/2006  at 16:12:15
#######################################################################
```

```
 ####   #    #  #####  #####   #    #  #####
#    #  #    #    #    #    #  #    #    #
#    #  #    #    #    #    #  #    #    #
#    #  #    #    #    #####   #    #    #
#    #  #    #    #    #       #    #    #
#    #  #    #    #    #       #    #    #
 ####    ####     #    #        ####     #
```

```
#######################################################################
                                Dose Output
#######################################################################
```

Exclusion Area Boundary (EAB) Doses:

Time (h) = 0.5000	Whole Body	Thyroid	TEDE
Delta dose (rem)	6.0073E-07	1.2050E-06	6.3957E-07
Accumulated dose (rem)	6.0073E-07	1.2050E-06	6.3957E-07

Low Population Zone (LPZ) Doses:

Time (h) = 0.5000	Whole Body	Thyroid	TEDE
Delta dose (rem)	1.0938E-07	2.1940E-07	1.1645E-07
Accumulated dose (rem)	1.0938E-07	2.1940E-07	1.1645E-07

Control Room (CR) Doses:

Time (h) = 0.5000	Whole Body	Thyroid	TEDE
Delta dose (rem)	2.1454E-08	2.9628E-07	3.0989E-08
Accumulated dose (rem)	2.1454E-08	2.9628E-07	3.0989E-08

Exclusion Area Boundary (EAB) Doses:

Time (h) = 2.0000	Whole Body	Thyroid	TEDE
Delta dose (rem)	2.9702E-04	3.6231E-04	3.0879E-04
Accumulated dose (rem)	2.9762E-04	3.6351E-04	3.0943E-04

Low Population Zone (LPZ) Doses:

Time (h) = 2.0000	Whole Body	Thyroid	TEDE
Delta dose (rem)	5.4080E-05	6.5967E-05	5.6224E-05
Accumulated dose (rem)	5.4189E-05	6.6187E-05	5.6340E-05

Control Room (CR) Doses:

Time (h) = 2.0000	Whole Body	Thyroid	TEDE
Delta dose (rem)	3.1388E-05	2.4749E-04	3.9392E-05
Accumulated dose (rem)	3.1409E-05	2.4778E-04	3.9423E-05

Exclusion Area Boundary (EAB) Doses:

Time (h) = 8.0000	Whole Body	Thyroid	TEDE
Delta dose (rem)	2.4239E-02	4.9014E-02	2.5810E-02
Accumulated dose (rem)	2.4536E-02	4.9377E-02	2.6119E-02

Low Population Zone (LPZ) Doses:

Time (h) = 8.0000	Whole Body	Thyroid	TEDE
Delta dose (rem)	4.4133E-03	8.9242E-03	4.6993E-03
Accumulated dose (rem)	4.4675E-03	8.9903E-03	4.7557E-03

Control Room (CR) Doses:

Time (h) = 8.0000	Whole Body	Thyroid	TEDE
Delta dose (rem)	7.1015E-03	5.4053E-02	8.8310E-03
Accumulated dose (rem)	7.1329E-03	5.4301E-02	8.8704E-03

Exclusion Area Boundary (EAB) Doses:

Time (h) = 24.0000	Whole Body	Thyroid	TEDE
Delta dose (rem)	1.4418E-01	4.8943E-01	1.5947E-01
Accumulated dose (rem)	1.6872E-01	5.3881E-01	1.8559E-01

Low Population Zone (LPZ) Doses:

Time (h) = 24.0000	Whole Body	Thyroid	TEDE
Delta dose (rem)	1.8589E-02	6.3103E-02	2.0561E-02
Accumulated dose (rem)	2.3057E-02	7.2093E-02	2.5317E-02

Control Room (CR) Doses:

Time (h) = 24.0000	Whole Body	Thyroid	TEDE
Delta dose (rem)	3.3251E-02	5.1562E-01	4.9353E-02
Accumulated dose (rem)	4.0384E-02	5.6992E-01	5.8224E-02

Exclusion Area Boundary (EAB) Doses:

Time (h) = 48.0000	Whole Body	Thyroid	TEDE
Delta dose (rem)	0.0000E+00	0.0000E+00	0.0000E+00
Accumulated dose (rem)	1.6872E-01	5.3881E-01	1.8559E-01

Low Population Zone (LPZ) Doses:

Time (h) = 48.0000	Whole Body	Thyroid	TEDE
Delta dose (rem)	7.7165E-03	6.6840E-02	9.7812E-03
Accumulated dose (rem)	3.0773E-02	1.3893E-01	3.5098E-02

Control Room (CR) Doses:

Time (h) = 48.0000	Whole Body	Thyroid	TEDE
Delta dose (rem)	1.5189E-02	3.7225E-01	2.6683E-02
Accumulated dose (rem)	5.5573E-02	9.4217E-01	8.4906E-02

Exclusion Area Boundary (EAB) Doses:

Time (h) = 72.0000	Whole Body	Thyroid	TEDE
Delta dose (rem)	0.0000E+00	0.0000E+00	0.0000E+00
Accumulated dose (rem)	1.6872E-01	5.3881E-01	1.8559E-01

Low Population Zone (LPZ) Doses:

Time (h) = 72.0000	Whole Body	Thyroid	TEDE
Delta dose (rem)	8.2960E-03	8.9201E-02	1.1036E-02
Accumulated dose (rem)	3.9069E-02	2.2813E-01	4.6134E-02

Control Room (CR) Doses:

Time (h) = 72.0000	Whole Body	Thyroid	TEDE
Delta dose (rem)	1.4184E-02	4.7527E-01	2.8776E-02
Accumulated dose (rem)	6.9756E-02	1.4174E+00	1.1368E-01

Exclusion Area Boundary (EAB) Doses:

Time (h) = 96.0000	Whole Body	Thyroid	TEDE
Delta dose (rem)	0.0000E+00	0.0000E+00	0.0000E+00
Accumulated dose (rem)	1.6872E-01	5.3881E-01	1.8559E-01

Low Population Zone (LPZ) Doses:

Time (h) = 96.0000	Whole Body	Thyroid	TEDE
Delta dose (rem)	9.3376E-03	1.0653E-01	1.2601E-02
Accumulated dose (rem)	4.8407E-02	3.3467E-01	5.8735E-02

Control Room (CR) Doses:

Time (h) = 96.0000	Whole Body	Thyroid	TEDE
Delta dose (rem)	1.6178E-02	5.6950E-01	3.3615E-02
Accumulated dose (rem)	8.5935E-02	1.9869E+00	1.4730E-01

Exclusion Area Boundary (EAB) Doses:

Time (h) = 120.0000	Whole Body	Thyroid	TEDE
Delta dose (rem)	0.0000E+00	0.0000E+00	0.0000E+00
Accumulated dose (rem)	1.6872E-01	5.3881E-01	1.8559E-01

Low Population Zone (LPZ) Doses:

Time (h) = 120.0000	Whole Body	Thyroid	TEDE
Delta dose (rem)	3.3936E-03	4.0164E-02	4.6219E-03
Accumulated dose (rem)	5.1801E-02	3.7483E-01	6.3357E-02

Control Room (CR) Doses:

Time (h) = 120.0000	Whole Body	Thyroid	TEDE
Delta dose (rem)	8.9666E-03	3.1642E-01	1.8640E-02
Accumulated dose (rem)	9.4901E-02	2.3034E+00	1.6594E-01

Exclusion Area Boundary (EAB) Doses:

Time (h) = 168.0000	Whole Body	Thyroid	TEDE
Delta dose (rem)	0.0000E+00	0.0000E+00	0.0000E+00
Accumulated dose (rem)	1.6872E-01	5.3881E-01	1.8559E-01

Low Population Zone (LPZ) Doses:

Time (h) = 168.0000	Whole Body	Thyroid	TEDE
Delta dose (rem)	6.9955E-03	8.7720E-02	9.6752E-03
Accumulated dose (rem)	5.8796E-02	4.6255E-01	7.3032E-02

Control Room (CR) Doses:

Time (h) = 168.0000	Whole Body	Thyroid	TEDE
Delta dose (rem)	1.7856E-02	6.8369E-01	3.8734E-02
Accumulated dose (rem)	1.1276E-01	2.9870E+00	2.0467E-01

Exclusion Area Boundary (EAB) Doses:

Time (h) = 336.0000	Whole Body	Thyroid	TEDE
Delta dose (rem)	0.0000E+00	0.0000E+00	0.0000E+00
Accumulated dose (rem)	1.6872E-01	5.3881E-01	1.8559E-01

Low Population Zone (LPZ) Doses:

Time (h) = 336.0000	Whole Body	Thyroid	TEDE
Delta dose (rem)	2.0880E-02	3.1590E-01	3.0520E-02
Accumulated dose (rem)	7.9676E-02	7.7845E-01	1.0355E-01

Control Room (CR) Doses:

Time (h) = 336.0000	Whole Body	Thyroid	TEDE
Delta dose (rem)	5.3674E-02	2.4672E+00	1.2895E-01
Accumulated dose (rem)	1.6643E-01	5.4543E+00	3.3362E-01

Exclusion Area Boundary (EAB) Doses:

Time (h) = 720.0000	Whole Body	Thyroid	TEDE
Delta dose (rem)	0.0000E+00	0.0000E+00	0.0000E+00
Accumulated dose (rem)	1.6872E-01	5.3881E-01	1.8559E-01

Low Population Zone (LPZ) Doses:

Time (h) = 720.0000	Whole Body	Thyroid	TEDE
Delta dose (rem)	1.8348E-02	4.3116E-01	3.1502E-02
Accumulated dose (rem)	9.8024E-02	1.2096E+00	1.3505E-01

Control Room (CR) Doses:

Time (h) = 720.0000	Whole Body	Thyroid	TEDE
Delta dose (rem)	4.7337E-02	3.3726E+00	1.5021E-01
Accumulated dose (rem)	2.1377E-01	8.8269E+00	4.8383E-01

837

##
I-131 Summary
##

Time (hr)	Containment I-131 (Curies)	(Node 1) Inboard MSL I-131 (Curies)	(Node 1) Inboard MSL I-131 (Curies)
0.000	5.2640E+03	5.7294E-07	3.7493E-13
0.401	3.3308E+06	2.8828E-01	2.6828E-10
0.500	4.0234E+06	4.4412E-01	3.3374E-10
0.800	7.9873E+06	1.2176E+00	6.6653E-10
1.100	1.1677E+07	2.4716E+00	9.9740E-10
1.400	1.5110E+07	4.1722E+00	1.3264E-09
1.700	1.8302E+07	6.2882E+00	1.6537E-09
2.000	2.1269E+07	8.7901E+00	1.9792E-09
2.300	1.6051E+07	1.0145E+01	1.1934E-09
2.600	1.2203E+07	1.1393E+01	1.1818E-09
2.900	9.3660E+06	1.2544E+01	1.1729E-09
3.200	7.2733E+06	1.3609E+01	1.1660E-09

3.500	5.7299E+06	1.4596E+01	1.1606E-09
3.800	4.5914E+06	1.5513E+01	1.1562E-09
4.100	3.7515E+06	1.6364E+01	1.1526E-09
4.400	3.1318E+06	1.7156E+01	1.1496E-09
4.700	2.6745E+06	1.7892E+01	1.1470E-09
5.000	2.3368E+06	1.8578E+01	1.1447E-09
5.300	2.1739E+06	1.9216E+01	1.1429E-09
5.600	2.0386E+06	1.9811E+01	1.1411E-09
5.900	1.9261E+06	2.0365E+01	1.1394E-09
6.200	1.8326E+06	2.0881E+01	1.1378E-09
6.500	1.7547E+06	2.1362E+01	1.1362E-09
6.800	1.6899E+06	2.1809E+01	1.1347E-09
7.100	1.6358E+06	2.2226E+01	1.1331E-09
7.400	1.5907E+06	2.2613E+01	1.1316E-09
7.700	1.5530E+06	2.2973E+01	1.1301E-09
8.000	1.5215E+06	2.3308E+01	1.1287E-09
8.300	1.4951E+06	2.3619E+01	1.1272E-09
8.600	1.4754E+06	2.3908E+01	1.1258E-09
8.900	1.4584E+06	2.4176E+01	1.1244E-09
9.200	1.4437E+06	2.4425E+01	1.1230E-09
9.500	1.4310E+06	2.4656E+01	1.1216E-09
9.800	1.4199E+06	2.4870E+01	1.1202E-09
10.100	1.4103E+06	2.5067E+01	1.1188E-09
10.400	1.4018E+06	2.5250E+01	1.1174E-09
24.000	1.2895E+06	2.6741E+01	1.0568E-09
48.000	1.1754E+06	2.4150E+01	9.3632E-10
72.000	1.0714E+06	2.1998E+01	8.5343E-10
96.000	9.7667E+05	2.0052E+01	7.7795E-10
120.000	8.9030E+05	1.8278E+01	7.0687E-10
168.000	7.3978E+05	1.5188E+01	5.8737E-10
336.000	3.8690E+05	7.9432E+00	3.0719E-10
720.000	8.7935E+04	1.8053E+00	6.9818E-11

Time (hr)	(Node 2) Outboard MSL I-131 (Curies)	(Node 2) Outboard MSL I-131 (Curies)	Condenser I-131 (Curies)
0.000	2.2962E-11	5.8149E-07	1.9599E-11
0.401	8.2770E-03	2.9394E-01	7.3375E-03
0.500	1.5864E-02	4.5335E-01	1.4193E-02
0.800	6.5298E-02	1.2465E+00	5.9963E-02
1.100	1.7686E-01	2.5372E+00	1.6639E-01
1.400	3.7688E-01	4.2956E+00	3.6331E-01
1.700	6.8836E-01	6.4934E+00	6.8011E-01
2.000	1.1313E+00	9.1040E+00	1.1456E+00
2.300	1.6772E+00	1.0567E+01	1.7478E+00
2.600	2.2789E+00	1.1929E+01	2.4534E+00
2.900	2.9275E+00	1.3201E+01	3.2596E+00
3.200	3.6148E+00	1.4391E+01	4.1634E+00
3.500	4.3337E+00	1.5507E+01	5.1622E+00
3.800	5.0780E+00	1.6555E+01	6.2531E+00
4.100	5.8423E+00	1.7539E+01	7.4335E+00
4.400	6.6215E+00	1.8464E+01	8.7008E+00
4.700	7.4114E+00	1.9335E+01	1.0052E+01
5.000	8.2080E+00	2.0155E+01	1.1485E+01
5.300	9.0080E+00	2.0927E+01	1.2997E+01
5.600	9.8083E+00	2.1654E+01	1.4585E+01
5.900	1.0606E+01	2.2339E+01	1.6246E+01
6.200	1.1399E+01	2.2985E+01	1.7979E+01
6.500	1.2186E+01	2.3593E+01	1.9780E+01
6.800	1.2963E+01	2.4165E+01	2.1647E+01
7.100	1.3730E+01	2.4704E+01	2.3578E+01

7.400	1.4486E+01	2.5211E+01	2.5570E+01
7.700	1.5229E+01	2.5688E+01	2.7620E+01
8.000	1.5957E+01	2.6137E+01	2.9727E+01
8.300	1.6671E+01	2.6559E+01	3.1887E+01
8.600	1.7369E+01	2.6956E+01	3.4100E+01
8.900	1.8052E+01	2.7330E+01	3.6361E+01
9.200	1.8717E+01	2.7680E+01	3.8670E+01
9.500	1.9365E+01	2.8010E+01	4.1024E+01
9.800	1.9996E+01	2.8319E+01	4.3421E+01
10.100	2.0610E+01	2.8609E+01	4.5859E+01
10.400	2.1206E+01	2.8882E+01	4.8337E+01
24.000	3.3603E+01	3.2071E+01	1.7915E+02
48.000	3.6564E+01	3.2921E+01	2.8221E+02
72.000	3.4124E+01	3.0428E+01	3.6782E+02
96.000	3.1217E+01	2.7785E+01	4.3238E+02
120.000	3.5305E+01	3.1647E+01	4.6584E+02
168.000	3.1102E+01	2.7622E+01	5.1618E+02
336.000	1.6327E+01	1.4478E+01	4.6695E+02
720.000	3.7108E+00	3.2905E+00	1.6710E+02

Time (hr)	Environment I-131 (Curies)	Control Room I-131 (Curies)	Hold I-131 (Curies)
0.000	1.0924E-17	8.8678E-21	3.0465E-04
0.401	2.9556E-06	2.1627E-09	1.4535E+02
0.500	7.1285E-06	5.0896E-09	2.2112E+02
0.800	4.7187E-05	3.1402E-08	5.9764E+02
1.100	1.7583E-04	1.0983E-07	1.2127E+03
1.400	4.8408E-04	2.8471E-07	2.0494E+03
1.700	1.0986E-03	6.0949E-07	3.0920E+03
2.000	2.1811E-03	1.1433E-06	4.3258E+03
2.300	3.9121E-03	1.6453E-06	5.4786E+03
2.600	6.4304E-03	2.3783E-06	6.3492E+03
2.900	9.8589E-03	3.3272E-06	7.0116E+03
3.200	1.4317E-02	4.4805E-06	7.5206E+03
3.500	1.9920E-02	5.8285E-06	7.9163E+03
3.800	2.6782E-02	7.3632E-06	8.2285E+03
4.100	3.5010E-02	9.0779E-06	8.4790E+03
4.400	4.4712E-02	1.0966E-05	8.6840E+03
4.700	5.5991E-02	1.3022E-05	8.8554E+03
5.000	6.8945E-02	1.5241E-05	9.0020E+03
5.300	8.3672E-02	1.7616E-05	9.1332E+03
5.600	1.0027E-01	2.0144E-05	9.2549E+03
5.900	1.1881E-01	2.2819E-05	9.3688E+03
6.200	1.3941E-01	2.5636E-05	9.4762E+03
6.500	1.6213E-01	2.8590E-05	9.5781E+03
6.800	1.8705E-01	3.1677E-05	9.6755E+03
7.100	2.1427E-01	3.4892E-05	9.7690E+03
7.400	2.4384E-01	3.8230E-05	9.8594E+03
7.700	2.7585E-01	4.1687E-05	9.9470E+03
8.000	3.1036E-01	4.5258E-05	1.0032E+04
8.300	3.4744E-01	3.7610E-05	1.0116E+04
8.600	3.8715E-01	3.3026E-05	1.0198E+04
8.900	4.2955E-01	3.0500E-05	1.0279E+04
9.200	4.7470E-01	2.9362E-05	1.0358E+04
9.500	5.2266E-01	2.9160E-05	1.0437E+04
9.800	5.7348E-01	2.9594E-05	1.0515E+04
10.100	6.2721E-01	3.0464E-05	1.0592E+04
10.400	6.8390E-01	3.1634E-05	1.0669E+04
24.000	6.7946E+00	1.2390E-04	1.3846E+04
48.000	1.9054E+01	7.0208E-05	1.5656E+04

72.000	3.6370E+01	9.1915E-05	1.7053E+04
96.000	5.7655E+01	1.0832E-04	1.8096E+04
120.000	8.1422E+01	8.7269E-05	1.8835E+04
168.000	1.3380E+02	9.6838E-05	1.9576E+04
336.000	3.2333E+02	8.7801E-05	1.7631E+04
720.000	5.8214E+02	3.1457E-05	8.1416E+03

##

Cumulative Dose Summary

##

	Exclusion Area Bounda		Low Population Zone (		Control Room (CR)	
Time (hr)	Thyroid (rem)	TEDE (rem)	Thyroid (rem)	TEDE (rem)	Thyroid (rem)	TEDE (rem)
0.000	0.0000E+00	0.0000E+00	0.0000E+00	0.0000E+00	0.0000E+00	0.0000E+00
0.401	5.0015E-07	2.7045E-07	9.1064E-08	4.9242E-08	1.0414E-07	1.0945E-08
0.500	1.2050E-06	6.3957E-07	2.1940E-07	1.1645E-07	2.9628E-07	3.0989E-08
0.800	7.9514E-06	4.3251E-06	1.4478E-06	7.8749E-07	2.8187E-06	2.9875E-07
1.100	2.9545E-05	1.9014E-05	5.3795E-06	3.4620E-06	1.3241E-05	1.5539E-06
1.400	8.1118E-05	6.0178E-05	1.4770E-05	1.0957E-05	4.3202E-05	5.7444E-06
1.700	1.8359E-04	1.4879E-04	3.3428E-05	2.7091E-05	1.1203E-04	1.6515E-05
2.000	3.6351E-04	3.0943E-04	6.6187E-05	5.6340E-05	2.4778E-04	3.9423E-05
2.300	6.5025E-04	5.6588E-04	1.1839E-04	1.0303E-04	4.6471E-04	7.8269E-05
2.600	1.0660E-03	9.2991E-04	1.9410E-04	1.6931E-04	7.7811E-04	1.3657E-04
2.900	1.6302E-03	1.4077E-03	2.9682E-04	2.5631E-04	1.2223E-03	2.2049E-04
3.200	2.3614E-03	2.0031E-03	4.2995E-04	3.6471E-04	1.8292E-03	3.3563E-04
3.500	3.2774E-03	2.7178E-03	5.9674E-04	4.9484E-04	2.6287E-03	4.8701E-04
3.800	4.3955E-03	3.5519E-03	8.0031E-04	6.4672E-04	3.6493E-03	6.7903E-04
4.100	5.7321E-03	4.5045E-03	1.0437E-03	8.2017E-04	4.9179E-03	9.1548E-04
4.400	7.3031E-03	5.5735E-03	1.3297E-03	1.0148E-03	6.4601E-03	1.1996E-03
4.700	9.1237E-03	6.7560E-03	1.6612E-03	1.2301E-03	8.3007E-03	1.5340E-03
5.000	1.1209E-02	8.0486E-03	2.0408E-03	1.4654E-03	1.0463E-02	1.9208E-03
5.300	1.3572E-02	9.4475E-03	2.4710E-03	1.7201E-03	1.2970E-02	2.3617E-03
5.600	1.6226E-02	1.0949E-02	2.9544E-03	1.9935E-03	1.5843E-02	2.8580E-03
5.900	1.9185E-02	1.2548E-02	3.4931E-03	2.2846E-03	1.9102E-02	3.4106E-03
6.200	2.2461E-02	1.4240E-02	4.0895E-03	2.5928E-03	2.2768E-02	4.0200E-03
6.500	2.6064E-02	1.6022E-02	4.7457E-03	2.9172E-03	2.6859E-02	4.6866E-03
6.800	3.0008E-02	1.7888E-02	5.4636E-03	3.2570E-03	3.1394E-02	5.4102E-03
7.100	3.4301E-02	1.9835E-02	6.2453E-03	3.6115E-03	3.6389E-02	6.1909E-03
7.400	3.8954E-02	2.1859E-02	7.0925E-03	3.9800E-03	4.1862E-02	7.0281E-03
7.700	4.3976E-02	2.3955E-02	8.0070E-03	4.3616E-03	4.7827E-02	7.9215E-03
8.000	4.9377E-02	2.6119E-02	8.9903E-03	4.7557E-03	5.4301E-02	8.8704E-03
8.300	5.2354E-02	2.8259E-02	9.3741E-03	5.0316E-03	6.0416E-02	9.8003E-03
8.600	5.5534E-02	3.0455E-02	9.7841E-03	5.3147E-03	6.5622E-02	1.0654E-02
8.900	5.8921E-02	3.2703E-02	1.0221E-02	5.6045E-03	7.0299E-02	1.1452E-02
9.200	6.2519E-02	3.5000E-02	1.0685E-02	5.9007E-03	7.4700E-02	1.2211E-02
9.500	6.6331E-02	3.7343E-02	1.1176E-02	6.2028E-03	7.8996E-02	1.2941E-02
9.800	7.0361E-02	3.9730E-02	1.1696E-02	6.5105E-03	8.3301E-02	1.3652E-02
10.100	7.4612E-02	4.2157E-02	1.2244E-02	6.8235E-03	8.7693E-02	1.4350E-02
10.400	7.9086E-02	4.4623E-02	1.2821E-02	7.1414E-03	9.2225E-02	1.5041E-02
24.000	5.3881E-01	1.8559E-01	7.2093E-02	2.5317E-02	5.6992E-01	5.8224E-02
48.000	5.3881E-01	1.8559E-01	1.3893E-01	3.5098E-02	9.4217E-01	8.4906E-02
72.000	5.3881E-01	1.8559E-01	2.2813E-01	4.6134E-02	1.4174E+00	1.1368E-01
96.000	5.3881E-01	1.8559E-01	3.3467E-01	5.8735E-02	1.9869E+00	1.4730E-01
120.000	5.3881E-01	1.8559E-01	3.7483E-01	6.3357E-02	2.3034E+00	1.6594E-01
168.000	5.3881E-01	1.8559E-01	4.6255E-01	7.3032E-02	2.9870E+00	2.0467E-01
336.000	5.3881E-01	1.8559E-01	7.7845E-01	1.0355E-01	5.4543E+00	3.3362E-01
720.000	5.3881E-01	1.8559E-01	1.2096E+00	1.3505E-01	8.8269E+00	4.8383E-01

##

Worst Two-Hour Doses

##

Exclusion Area Boundary (EAB)

Time (hr)	Whole Body (rem)	Thyroid (rem)	TEDE (rem)
10.4	1.8620E-02	6.7606E-02	2.0731E-02

```
 ######################################################################
    RADTRAD Version 3.03 (Spring 2001) run on  6/08/2006  at 16:59:39
 ######################################################################

 ######################################################################
                        File information
 ######################################################################

 Plant file           = RESUP2-A.psf
 Inventory file       = c:\program files\radtrad3-03\defaults\limerick ast source
terms.nif
 Release file         = c:\program files\radtrad3-03\defaults\bwr_i.rft
 Dose Conversion file = c:\program files\radtrad3-03\defaults\fgr11&12.inp



     #####    ####   #####    #  #     #  #####   #    #  #####
     #    #  #       #        #  ##    #  #    #  #    #    #
     #    #  #       #        #  # #   #  #    #  #    #    #
     #####    ####   ####     #  #  #  #  #####   #    #    #
     #            #  #        #  #   # #  #       #    #    #
     #            #  #        #  #    ##  #       #    #    #
     #        ####   #        #  #     #  #        ####     #


 Radtrad 3.03 4/15/2001
 LGS LOCA 200scfh Line A MSIV Leak - Resuspension Only - Leak to Condenser - MSL
Pipe Deposition Credit (24-Hr 20-Group Aerosol Settling with Projected Area
Assumption; 2-Hr Mixing Delay) - 95% CREFAS Charcoal Eff. No Delay - Rad Mode
225cfm Control Room In
 Nuclide Inventory File:
 c:\program files\radtrad3-03\defaults\limerick ast source terms.nif
 Plant Power Level:
  3.5270E+03
 Compartments:
  10
 Compartment 1:
 Containment
   3
  3.7907E+05
   0
   0
   0
   1
   0
 Compartment 2:
 MSL A Inboard - Airborne
   3
  2.5800E+02
   0
   0
   0
   0
   0
 Compartment 3:
 Environment
   2
```

```
 0.0000E+00
  0
  0
  0
  0
  0
Compartment 4:
Control Room
  1
 1.2600E+05
  0
  0
  1
  0
  0
Compartment 5:
MSL A Outboard - Airborne
  3
 1.1820E+03
  0
  0
  0
  0
  0
Compartment 6:
MSL A Inboard - Surface
  3
 1.0000E+00
  0
  0
  0
  0
  0
Compartment 7:
MSL A Outboard - Surface
  3
 1.0000E+00
  0
  0
  0
  0
  0
Compartment 8:
Hold (By Surface Fixation)
  3
 1.0000E+00
  0
  0
  0
  0
  0
Compartment 9:
Condenser - Airborne
  3
 5.4746E+04
  0
  0
  0
  0
  0
```

```
Compartment 10:
Condenser - Surface
  3
 1.0000E+00
  0
  0
  0
  0
  0
Pathways:
 15
Pathway 1:
Filtered Environment to Control Room (Intake)
  3
  4
  2
Pathway 2:
Unfiltered Environment to Control Room (Inleakage)
  3
  4
  2
Pathway 3:
Control Room to Environment (Exhaust)
  4
  3
  2
Pathway 4:
(Aerosol Transport 1) MSL A Inboard - Airborne to MSL A Outboard - Airborne
  2
  5
  2
Pathway 5:
(Deposition 1) MSL A Inboard - Airborne to MSL A Inboard - Surface
  2
  6
  4
Pathway 6:
(Resuspension 1) MSL A Inboard - Surface to Environment
  6
  3
  4
Pathway 7:
(Surface Fixation 1) MSL A Inboard - Surface to Hold (By Surface Fixation)
  6
  8
  4
Pathway 8:
(Deposition 2) MSL A Outboard - Airborne to MSL A Outboard - Surface
  5
  7
  4
Pathway 9:
(Resuspension 2) MSL A Outboard - Surface to  Environment
  7
  3
  4
Pathway 10:
(Surface Fixation 2) MSL A Outboard - Surface to Hold (By Surface Fixation)
  7
  8
```

```
  4
Pathway 11:
(Aerosol Transport 2) MSL A Outboard - Airborne to  Condenser - Airborne
  5
  9
  2
Pathway 12:
(Deposition 3) Condenser - Airborne to Condenser - Surface
  9
 10
  4
Pathway 13:
(Resuspension 3) Condenser - Surface to  Environment
 10
  3
  4
Pathway 14:
(Surface Fixation 3) Condenser - Surface to  Hold (By Surface Fixation)
 10
  8
  4
Pathway 15:
Containment to  MSL A Inboard - Airborne
  1
  2
  2
End of Plant Model File
Scenario Description Name:

Plant Model Filename:

Source Term:
  1
  1   1.0000E+00
c:\program files\radtrad3-03\defaults\fgr11&12.inp
c:\program files\radtrad3-03\defaults\bwr_i.rft
  0.0000E+00
  1
  9.5000E-01   4.8500E-02   1.5000E-03   1.0000E+00
Overlying Pool:
  0
  0.0000E+00
  0
  0
  0
  0
Compartments:
 10
Compartment 1:
  0
  1
  0
  0
  0
  0
  0
  3
  3
  1.0000E+01
  1
```

```
  1
  0.0000E+00   0.0000E+00
Compartment 2:
  0
  1
  0
  0
  0
  0
  0
  0
  0
Compartment 3:
  0
  1
  0
  0
  0
  0
  0
  0
  0
Compartment 4:
  0
  1
  0
  0
  0
  0
  1
  2.1750E+03
  3
  0.0000E+00   9.9000E+01   9.5000E+01   9.5000E+01
  3.3330E-01   9.9000E+01   9.5000E+01   9.5000E+01
  7.2000E+02   0.0000E+00   0.0000E+00   0.0000E+00
  0
  0
Compartment 5:
  0
  1
  0
  0
  0
  0
  0
  0
  0
Compartment 6:
  0
  1
  0
  0
  0
  0
  0
  0
  0
Compartment 7:
  0
  1
```

```
  0
  0
  0
  0
  0
  0
  0
Compartment 8:
  0
  1
  0
  0
  0
  0
  0
  0
  0
Compartment 9:
  0
  1
  0
  0
  0
  0
  0
  0
  0
Compartment 10:
  0
  1
  0
  0
  0
  0
  0
  0
  0
Pathways:
 15
Pathway 1:
  0
  0
  0
  0
  0
  1
  3
  0.0000E+00   5.2500E+02   9.9000E+01   9.5000E+01   9.5000E+01
  5.0000E-01   5.2500E+02   9.9000E+01   9.5000E+01   9.5000E+01
  7.2000E+02   0.0000E+00   0.0000E+00   0.0000E+00   0.0000E+00
  0
  0
  0
  0
  0
  0
Pathway 2:
  0
  0
  0
```

```
  0
  0
  1
  2
  0.0000E+00   2.2500E+02   0.0000E+00   0.0000E+00   0.0000E+00
  7.2000E+02   0.0000E+00   0.0000E+00   0.0000E+00   0.0000E+00
  0
  0
  0
  0
  0
  0
Pathway 3:
  0
  0
  0
  0
  0
  1
  3
  0.0000E+00   7.5000E+02   1.0000E+02   1.0000E+02   1.0000E+02
  5.0000E-01   7.5000E+02   1.0000E+02   1.0000E+02   1.0000E+02
  7.2000E+02   0.0000E+00   0.0000E+00   0.0000E+00   0.0000E+00
  0
  0
  0
  0
  0
  0
Pathway 4:
  0
  0
  0
  0
  0
  1
  5
  0.0000E+00   9.3060E-01   1.0000E+02   0.0000E+00   1.0000E+02
  2.0000E+00   9.3060E-01   1.0000E+02   0.0000E+00   1.0000E+02
  2.4000E+01   5.1270E-01   1.0000E+02   0.0000E+00   1.0000E+02
  9.6000E+01   5.1270E-01   1.0000E+02   0.0000E+00   1.0000E+02
  7.2000E+02   0.0000E+00   0.0000E+00   0.0000E+00   0.0000E+00
  0
  0
  0
  0
  0
  0
Pathway 5:
  0
  0
  0
  0
  0
  0
  0
  0
  0
  0
  1
```

```
  4
  0.0000E+00   3.1420E+02
  2.4000E+01   7.0350E+02
  9.6000E+01   4.4780E+03
  7.2000E+02   0.0000E+00
  0
Pathway 6:
  0
  0
  0
  0
  0
  0
  0
  0
  0
  0
  1
  4
  0.0000E+00   3.5580E-02
  2.4000E+01   2.9950E-02
  9.6000E+01   2.0170E-02
  7.2000E+02   0.0000E+00
  0
Pathway 7:
  0
  0
  0
  0
  0
  0
  0
  0
  0
  0
  1
  4
  0.0000E+00   1.5960E-02
  2.4000E+01   1.1360E-02
  9.6000E+01   5.2000E-03
  7.2000E+02   0.0000E+00
  0
Pathway 8:
  0
  0
  0
  0
  0
  0
  0
  0
  0
  0
  1
  4
  0.0000E+00   3.1417E+02
  2.4000E+01   7.0352E+02
  9.6000E+01   4.4779E+03
  7.2000E+02   0.0000E+00
  0
```

```
Pathway 9:
  0
  0
  0
  0
  0
  0
  0
  0
  0
  0
  1
  4
  0.0000E+00   3.5580E-02
  2.4000E+01   2.9950E-02
  9.6000E+01   2.0170E-02
  7.2000E+02   0.0000E+00
  0
Pathway 10:
  0
  0
  0
  0
  0
  0
  0
  0
  0
  0
  1
  4
  0.0000E+00   1.5960E-02
  2.4000E+01   1.1360E-02
  9.6000E+01   5.2000E-03
  7.2000E+02   0.0000E+00
  0
Pathway 11:
  0
  0
  0
  0
  0
  1
  4
  0.0000E+00   3.1880E+00   1.0000E+02   0.0000E+00   1.0000E+02
  2.4000E+01   1.5130E+00   1.0000E+02   0.0000E+00   1.0000E+02
  9.6000E+01   1.1480E+00   1.0000E+02   0.0000E+00   1.0000E+02
  7.2000E+02   0.0000E+00   0.0000E+00   0.0000E+00   0.0000E+00
  0
  0
  0
  0
  0
  0
Pathway 12:
  0
  0
  0
  0
  0
```

```
  0
  0
  0
  0
  0
  1
  4
  0.0000E+00   5.2212E+03
  2.4000E+01   5.2212E+03
  9.6000E+01   5.2212E+03
  7.2000E+02   0.0000E+00
  0
Pathway 13:
  0
  0
  0
  0
  0
  0
  0
  0
  0
  0
  1
  4
  0.0000E+00   1.6090E-02
  2.4000E+01   1.6090E-02
  9.6000E+01   1.6090E-02
  7.2000E+02   0.0000E+00
  0
Pathway 14:
  0
  0
  0
  0
  0
  0
  0
  0
  0
  0
  1
  4
  0.0000E+00   3.3300E-03
  2.4000E+01   3.3300E-03
  9.6000E+01   3.3300E-03
  7.2000E+02   0.0000E+00
  0
Pathway 15:
  0
  0
  0
  0
  0
  1
  5
  0.0000E+00   1.5244E+00   1.0000E+02   0.0000E+00   1.0000E+02
  2.0000E+00   9.3060E-01   1.0000E+02   0.0000E+00   1.0000E+02
  2.4000E+01   5.1270E-01   1.0000E+02   0.0000E+00   1.0000E+02
  9.6000E+01   5.1270E-01   1.0000E+02   0.0000E+00   1.0000E+02
```

```
  7.2000E+02   0.0000E+00   0.0000E+00   0.0000E+00   0.0000E+00
  0
  0
  0
  0
  0
  0
Dose Locations:
  3
Location 1:
Control Room (CR)
  4
  0
  1
  2
  0.0000E+00   3.5000E-04
  7.2000E+02   0.0000E+00
  1
  4
  0.0000E+00   1.0000E+00
  2.4000E+01   6.0000E-01
  9.6000E+01   4.0000E-01
  7.2000E+02   0.0000E+00
Location 2:
Exclusion Area Boundary (EAB)
  3
  1
  2
  0.0000E+00   3.1800E-04
  2.4000E+01   0.0000E+00
  1
  4
  0.0000E+00   3.5000E-04
  8.0000E+00   1.8000E-04
  2.4000E+01   2.3000E-04
  7.2000E+02   0.0000E+00
  0
Location 3:
Low Population Zone (LPZ)
  3
  1
 10
  0.0000E+00   5.7900E-05
  8.0000E+00   4.1000E-05
  2.4000E+01   1.9500E-05
  4.8000E+01   1.9500E-05
  7.2000E+01   1.9500E-05
  9.6000E+01   6.6800E-06
  1.2000E+02   6.6800E-06
  1.6800E+02   6.6800E-06
  3.3600E+02   6.6800E-06
  7.2000E+02   0.0000E+00
  1
  4
  0.0000E+00   3.5000E-04
  8.0000E+00   1.8000E-04
  2.4000E+01   2.3000E-04
  7.2000E+02   0.0000E+00
  0
Effective Volume Location:
```

```
  1
  6
  0.0000E+00   6.8800E-03
  2.0000E+00   5.1700E-03
  8.0000E+00   2.0400E-03
  2.4000E+01   1.2900E-03
  9.6000E+01   9.6300E-04
  7.2000E+02   0.0000E+00
Simulation Parameters:
  1
  0.0000E+00   0.0000E+00
Output Filename:
C:\RESUP2-A.o0
  1
  1
  1
  0
  0
End of Scenario File
```

```
#######################################################################
   RADTRAD Version 3.03 (Spring 2001) run on  6/08/2006  at 16:59:39
#######################################################################

#######################################################################
                     Plant Description
#######################################################################

Number of Nuclides =  60

Inventory Power =   1.0000E+00 MWth
Plant Power Level =   3.5270E+03 MWth

Number of compartments    =  10

Compartment information

Compartment number  1  (Source term fraction =   1.0000E+00
)
Name: Containment
Compartment volume =   3.7907E+05 (Cubic feet)
Compartment type is Normal
Removal devices within compartment:
     Deposition
Pathways into and out of compartment  1
   Exit Pathway Number   15: Containment to  MSL A Inboard - Airborne

Compartment number  2
Name: MSL A Inboard - Airborne
Compartment volume =   2.5800E+02 (Cubic feet)
Compartment type is Normal
Pathways into and out of compartment  2
   Inlet Pathway Number  15: Containment to  MSL A Inboard - Airborne
   Exit Pathway Number    4: (Aerosol Transport 1) MSL A Inboard - Airborne to
   Exit Pathway Number    5: (Deposition 1) MSL A Inboard - Airborne to MSL A I

Compartment number  3
Name: Environment
Compartment type is Environment
Pathways into and out of compartment  3
   Inlet Pathway Number   3: Control Room to Environment (Exhaust)
   Inlet Pathway Number   6: (Resuspension 1) MSL A Inboard - Surface to Enviro
   Inlet Pathway Number   9: (Resuspension 2) MSL A Outboard - Surface to  Envi
   Inlet Pathway Number  13: (Resuspension 3) Condenser - Surface to  Environme
   Exit Pathway Number    1: Filtered Environment to Control Room (Intake)
   Exit Pathway Number    2: Unfiltered Environment to Control Room (Inleakage)

Compartment number  4
Name: Control Room
Compartment volume =   1.2600E+05 (Cubic feet)
Compartment type is Control Room
Removal devices within compartment:
     Filter(s)
Pathways into and out of compartment  4
   Inlet Pathway Number   1: Filtered Environment to Control Room (Intake)
   Inlet Pathway Number   2: Unfiltered Environment to Control Room (Inleakage)
   Exit Pathway Number    3: Control Room to Environment (Exhaust)

Compartment number  5
```

```
Name: MSL A Outboard - Airborne
Compartment volume =   1.1820E+03 (Cubic feet)
Compartment type is Normal
Pathways into and out of compartment  5
   Inlet Pathway Number   4: (Aerosol Transport 1) MSL A Inboard - Airborne to
   Exit Pathway Number    8: (Deposition 2) MSL A Outboard - Airborne to MSL A
   Exit Pathway Number   11: (Aerosol Transport 2) MSL A Outboard - Airborne to

Compartment number  6
Name: MSL A Inboard - Surface
Compartment volume =   1.0000E+00 (Cubic feet)
Compartment type is Normal
Pathways into and out of compartment  6
   Inlet Pathway Number   5: (Deposition 1) MSL A Inboard - Airborne to MSL A I
   Exit Pathway Number    6: (Resuspension 1) MSL A Inboard - Surface to Enviro
   Exit Pathway Number    7: (Surface Fixation 1) MSL A Inboard - Surface to Ho

Compartment number  7
Name: MSL A Outboard - Surface
Compartment volume =   1.0000E+00 (Cubic feet)
Compartment type is Normal
Pathways into and out of compartment  7
   Inlet Pathway Number   8: (Deposition 2) MSL A Outboard - Airborne to MSL A
   Exit Pathway Number    9: (Resuspension 2) MSL A Outboard - Surface to  Envi
   Exit Pathway Number   10: (Surface Fixation 2) MSL A Outboard - Surface to H

Compartment number  8
Name: Hold (By Surface Fixation)
Compartment volume =   1.0000E+00 (Cubic feet)
Compartment type is Normal
Pathways into and out of compartment  8
   Inlet Pathway Number   7: (Surface Fixation 1) MSL A Inboard - Surface to Ho
   Inlet Pathway Number  10: (Surface Fixation 2) MSL A Outboard - Surface to H
   Inlet Pathway Number  14: (Surface Fixation 3) Condenser - Surface to  Hold

Compartment number  9
Name: Condenser - Airborne
Compartment volume =   5.4746E+04 (Cubic feet)
Compartment type is Normal
Pathways into and out of compartment  9
   Inlet Pathway Number  11: (Aerosol Transport 2) MSL A Outboard - Airborne to
   Exit Pathway Number   12: (Deposition 3) Condenser - Airborne to Condenser -

Compartment number 10
Name: Condenser - Surface
Compartment volume =   1.0000E+00 (Cubic feet)
Compartment type is Normal
Pathways into and out of compartment 10
   Inlet Pathway Number  12: (Deposition 3) Condenser - Airborne to Condenser -
   Exit Pathway Number   13: (Resuspension 3) Condenser - Surface to  Environme
   Exit Pathway Number   14: (Surface Fixation 3) Condenser - Surface to  Hold

Total number of pathways =  15
```

```
#######################################################################
   RADTRAD Version 3.03 (Spring 2001) run on  6/08/2006  at 16:59:39
#######################################################################

#######################################################################
                      Scenario Description
#######################################################################
```

Radioactive Decay is enabled
Calculation of Daughters is enabled

Release Fractions and Timings

	GAP	EARLY IN-VESSEL	LATE RELEASE	RELEASE MASS
	0.500000 hr	1.5000 hrs	0.0000 hrs	(gm)
NOBLES	0.0000E+00	0.0000E+00	0.0000E+00	0.000E+00
IODINE	5.0000E-02	2.5000E-01	0.0000E+00	3.033E+02
CESIUM	0.0000E+00	0.0000E+00	0.0000E+00	0.000E+00
TELLURIUM	0.0000E+00	0.0000E+00	0.0000E+00	0.000E+00
STRONTIUM	0.0000E+00	0.0000E+00	0.0000E+00	0.000E+00
BARIUM	0.0000E+00	0.0000E+00	0.0000E+00	0.000E+00
RUTHENIUM	0.0000E+00	0.0000E+00	0.0000E+00	0.000E+00
CERIUM	0.0000E+00	0.0000E+00	0.0000E+00	0.000E+00
LANTHANUM	0.0000E+00	0.0000E+00	0.0000E+00	0.000E+00

Inventory Power = 3527. MWt

Nuclide Name	Group	Specific Inventory (Ci/MWt)	half life (s)	Whole Body DCF (Sv-m3/Bq-s)	Inhaled Thyroid (Sv/Bq)	Inhaled Effective (Sv/Bq)
I-131	2	2.687E+04	6.947E+05	1.820E-14	2.920E-07	8.890E-09
I-132	2	3.881E+04	8.280E+03	1.120E-13	1.740E-09	1.030E-10
I-133	2	5.556E+04	7.488E+04	2.940E-14	4.860E-08	1.580E-09
I-134	2	6.165E+04	3.156E+03	1.300E-13	2.880E-10	3.550E-11
I-135	2	5.192E+04	2.380E+04	8.294E-14	8.460E-09	3.320E-10

Nuclide	Daughter	Fraction	Daughter	Fraction	Daughter	Fraction
Kr-85m	Kr-85	0.21	none	0.00	none	0.00
Kr-87	Rb-87	1.00	none	0.00	none	0.00
Kr-88	Rb-88	1.00	none	0.00	none	0.00
Sr-90	Y-90	1.00	none	0.00	none	0.00
Sr-91	Y-91m	0.58	Y-91	0.42	none	0.00
Sr-92	Y-92	1.00	none	0.00	none	0.00
Y-93	Zr-93	1.00	none	0.00	none	0.00
Zr-95	Nb-95m	0.01	Nb-95	0.99	none	0.00
Zr-97	Nb-97m	0.95	Nb-97	0.05	none	0.00
Mo-99	Tc-99m	0.88	Tc-99	0.12	none	0.00
Tc-99m	Tc-99	1.00	none	0.00	none	0.00
Ru-103	Rh-103m	1.00	none	0.00	none	0.00
Ru-105	Rh-105	1.00	none	0.00	none	0.00
Ru-106	Rh-106	1.00	none	0.00	none	0.00
Sb-127	Te-127m	0.18	Te-127	0.82	none	0.00
Sb-129	Te-129m	0.22	Te-129	0.77	none	0.00
Te-127m	Te-127	0.98	none	0.00	none	0.00
Te-129	I-129	1.00	none	0.00	none	0.00
Te-129m	Te-129	0.65	I-129	0.35	none	0.00
Te-131m	Te-131	0.22	I-131	0.78	none	0.00
Te-132	I-132	1.00	none	0.00	none	0.00
I-131	Xe-131m	0.01	none	0.00	none	0.00
I-133	Xe-133m	0.03	Xe-133	0.97	none	0.00

I-135	Xe-135m	0.15	Xe-135	0.85	none	0.00
Xe-135	Cs-135	1.00	none	0.00	none	0.00
Cs-137	Ba-137m	0.95	none	0.00	none	0.00
Ba-140	La-140	1.00	none	0.00	none	0.00
La-141	Ce-141	1.00	none	0.00	none	0.00
Ce-143	Pr-143	1.00	none	0.00	none	0.00
Ce-144	Pr-144m	0.02	Pr-144	0.98	none	0.00
Nd-147	Pm-147	1.00	none	0.00	none	0.00
Np-239	Pu-239	1.00	none	0.00	none	0.00
Pu-238	U-234	1.00	none	0.00	none	0.00
Pu-239	U-235	1.00	none	0.00	none	0.00
Pu-240	U-236	1.00	none	0.00	none	0.00
Pu-241	U-237	0.00	Am-241	1.00	none	0.00
Am-241	Np-237	1.00	none	0.00	none	0.00
Cm-242	Pu-238	1.00	none	0.00	none	0.00
Cm-244	Pu-240	1.00	none	0.00	none	0.00

Iodine fractions

```
     Aerosol     =   9.5000E-01
     Elemental   =   4.8500E-02
     Organic     =   1.5000E-03
```

COMPARTMENT DATA

```
Compartment number   1: Containment
Natural Deposition (Powers' model):  Aerosol data
      Reactor type:   3
      Percentile =  10 (%)

     Natural Deposition:  Elemental Removal Data
      Time (hr)          Removal Coef. (hr^-1)
       0.0000E+00          0.0000E+00

Compartment number   2: MSL A Inboard - Airborne

Compartment number   3: Environment

Compartment number   4: Control Room

     Compartment Filter Data

      Time (hr)       Flow Rate          Filter Efficiencies (%)
                        (cfm)        Aerosol     Elemental    Organic
       0.0000E+00    2.1750E+03   9.9000E+01   9.5000E+01   9.5000E+01
       3.3330E-01    2.1750E+03   9.9000E+01   9.5000E+01   9.5000E+01
       7.2000E+02    2.1750E+03   0.0000E+00   0.0000E+00   0.0000E+00

Compartment number   5: MSL A Outboard - Airborne

Compartment number   6: MSL A Inboard - Surface

Compartment number   7: MSL A Outboard - Surface

Compartment number   8: Hold (By Surface Fixation)

Compartment number   9: Condenser - Airborne

Compartment number  10: Condenser - Surface

PATHWAY DATA
```

Pathway number 1: Filtered Environment to Control Room (Intake)

Pathway Filter: Removal Data

Time (hr)	Flow Rate (cfm)	Filter Efficiencies (%) Aerosol	Elemental	Organic
0.0000E+00	5.2500E+02	9.9000E+01	9.5000E+01	9.5000E+01
5.0000E-01	5.2500E+02	9.9000E+01	9.5000E+01	9.5000E+01
7.2000E+02	0.0000E+00	0.0000E+00	0.0000E+00	0.0000E+00

Pathway number 2: Unfiltered Environment to Control Room (Inleakage)

Pathway Filter: Removal Data

Time (hr)	Flow Rate (cfm)	Filter Efficiencies (%) Aerosol	Elemental	Organic
0.0000E+00	2.2500E+02	0.0000E+00	0.0000E+00	0.0000E+00
7.2000E+02	0.0000E+00	0.0000E+00	0.0000E+00	0.0000E+00

Pathway number 3: Control Room to Environment (Exhaust)

Pathway Filter: Removal Data

Time (hr)	Flow Rate (cfm)	Filter Efficiencies (%) Aerosol	Elemental	Organic
0.0000E+00	7.5000E+02	1.0000E+02	1.0000E+02	1.0000E+02
5.0000E-01	7.5000E+02	1.0000E+02	1.0000E+02	1.0000E+02
7.2000E+02	0.0000E+00	0.0000E+00	0.0000E+00	0.0000E+00

Pathway number 4: (Aerosol Transport 1) MSL A Inboard - Airborne to

Pathway Filter: Removal Data

Time (hr)	Flow Rate (cfm)	Filter Efficiencies (%) Aerosol	Elemental	Organic
0.0000E+00	9.3060E-01	1.0000E+02	0.0000E+00	1.0000E+02
2.0000E+00	9.3060E-01	1.0000E+02	0.0000E+00	1.0000E+02
2.4000E+01	5.1270E-01	1.0000E+02	0.0000E+00	1.0000E+02
9.6000E+01	5.1270E-01	1.0000E+02	0.0000E+00	1.0000E+02
7.2000E+02	0.0000E+00	0.0000E+00	0.0000E+00	0.0000E+00

Pathway number 5: (Deposition 1) MSL A Inboard - Airborne to MSL A I

Convection Data

Time (hr)	Flow Rate (% / day)
0.0000E+00	3.1420E+02
2.4000E+01	7.0350E+02
9.6000E+01	4.4780E+03
7.2000E+02	0.0000E+00

Pathway number 6: (Resuspension 1) MSL A Inboard - Surface to Enviro

Convection Data

Time (hr)	Flow Rate (% / day)
0.0000E+00	3.5580E-02
2.4000E+01	2.9950E-02
9.6000E+01	2.0170E-02
7.2000E+02	0.0000E+00

Pathway number 7: (Surface Fixation 1) MSL A Inboard - Surface to Ho

Convection Data

Time (hr)	Flow Rate (% / day)
0.0000E+00	1.5960E-02
2.4000E+01	1.1360E-02
9.6000E+01	5.2000E-03
7.2000E+02	0.0000E+00

Pathway number 8: (Deposition 2) MSL A Outboard - Airborne to MSL A

Convection Data

Time (hr)	Flow Rate (% / day)
0.0000E+00	3.1417E+02
2.4000E+01	7.0352E+02
9.6000E+01	4.4779E+03
7.2000E+02	0.0000E+00

Pathway number 9: (Resuspension 2) MSL A Outboard - Surface to Envi

Convection Data

Time (hr)	Flow Rate (% / day)
0.0000E+00	3.5580E-02
2.4000E+01	2.9950E-02
9.6000E+01	2.0170E-02
7.2000E+02	0.0000E+00

Pathway number 10: (Surface Fixation 2) MSL A Outboard - Surface to H

Convection Data

Time (hr)	Flow Rate (% / day)
0.0000E+00	1.5960E-02
2.4000E+01	1.1360E-02
9.6000E+01	5.2000E-03
7.2000E+02	0.0000E+00

Pathway number 11: (Aerosol Transport 2) MSL A Outboard - Airborne to

Pathway Filter: Removal Data

Time (hr)	Flow Rate (cfm)	Filter Efficiencies (%) Aerosol	Elemental	Organic
0.0000E+00	3.1880E+00	1.0000E+02	0.0000E+00	1.0000E+02
2.4000E+01	1.5130E+00	1.0000E+02	0.0000E+00	1.0000E+02
9.6000E+01	1.1480E+00	1.0000E+02	0.0000E+00	1.0000E+02
7.2000E+02	0.0000E+00	0.0000E+00	0.0000E+00	0.0000E+00

Pathway number 12: (Deposition 3) Condenser - Airborne to Condenser -

Convection Data

Time (hr)	Flow Rate (% / day)
0.0000E+00	5.2212E+03
2.4000E+01	5.2212E+03
9.6000E+01	5.2212E+03
7.2000E+02	0.0000E+00

Pathway number 13: (Resuspension 3) Condenser - Surface to Environme

Convection Data

Time (hr)	Flow Rate (% / day)

0.0000E+00	1.6090E-02
2.4000E+01	1.6090E-02
9.6000E+01	1.6090E-02
7.2000E+02	0.0000E+00

Pathway number 14: (Surface Fixation 3) Condenser - Surface to Hold

Convection Data

Time (hr)	Flow Rate (% / day)
0.0000E+00	3.3300E-03
2.4000E+01	3.3300E-03
9.6000E+01	3.3300E-03
7.2000E+02	0.0000E+00

Pathway number 15: Containment to MSL A Inboard - Airborne

Pathway Filter: Removal Data

Time (hr)	Flow Rate (cfm)	Filter Efficiencies (%) Aerosol	Elemental	Organic
0.0000E+00	1.5244E+00	1.0000E+02	0.0000E+00	1.0000E+02
2.0000E+00	9.3060E-01	1.0000E+02	0.0000E+00	1.0000E+02
2.4000E+01	5.1270E-01	1.0000E+02	0.0000E+00	1.0000E+02
9.6000E+01	5.1270E-01	1.0000E+02	0.0000E+00	1.0000E+02
7.2000E+02	0.0000E+00	0.0000E+00	0.0000E+00	0.0000E+00

LOCATION DATA

Location Control Room (CR) is in compartment 4

Location X/Q Data

Time (hr)	X/Q (s * m^-3)
0.0000E+00	6.8800E-03
2.0000E+00	5.1700E-03
8.0000E+00	2.0400E-03
2.4000E+01	1.2900E-03
9.6000E+01	9.6300E-04
7.2000E+02	0.0000E+00

Location Breathing Rate Data

Time (hr)	Breathing Rate (m^3 * sec^-1)
0.0000E+00	3.5000E-04
7.2000E+02	0.0000E+00

Location Occupancy Factor Data

Time (hr)	Occupancy Factor
0.0000E+00	1.0000E+00
2.4000E+01	6.0000E-01
9.6000E+01	4.0000E-01
7.2000E+02	0.0000E+00

Location Exclusion Area Boundary (EAB) is in compartment 3

Location X/Q Data

Time (hr)	X/Q (s * m^-3)
0.0000E+00	3.1800E-04
2.4000E+01	0.0000E+00

Location Breathing Rate Data

Time (hr)	Breathing Rate (m^3 * sec^-1)
0.0000E+00	3.5000E-04
8.0000E+00	1.8000E-04

```
  2.4000E+01                2.3000E-04
  7.2000E+02                0.0000E+00
Location Low Population Zone (LPZ)     is in compartment   3

Location X/Q Data
 Time (hr)          X/Q (s * m^-3)
  0.0000E+00           5.7900E-05
  8.0000E+00           4.1000E-05
  2.4000E+01           1.9500E-05
  4.8000E+01           1.9500E-05
  7.2000E+01           1.9500E-05
  9.6000E+01           6.6800E-06
  1.2000E+02           6.6800E-06
  1.6800E+02           6.6800E-06
  3.3600E+02           6.6800E-06
  7.2000E+02           0.0000E+00

Location Breathing Rate Data
 Time (hr)          Breathing Rate (m^3 * sec^-1)
  0.0000E+00                3.5000E-04
  8.0000E+00                1.8000E-04
  2.4000E+01                2.3000E-04
  7.2000E+02                0.0000E+00

USER SPECIFIED TIME STEP DATA - SUPPLEMENTAL TIME STEPS
     Time            Time step
      0.0000E+00       0.0000E+00
```

```
#######################################################################
   RADTRAD Version 3.03 (Spring 2001) run on  6/08/2006  at 16:59:39
#######################################################################
```

```
 ####   #    #  #####  #####   #    #  #####
#    #  #    #    #    #    #  #    #    #
#    #  #    #    #    #    #  #    #    #
#    #  #    #    #    #####   #    #    #
#    #  #    #    #    #       #    #    #
#    #  #    #    #    #       #    #    #
 ####    ####     #    #        ####     #
```

```
#######################################################################
                                 Dose Output
#######################################################################
```

Control Room (CR) Doses:

Time (h) = 0.3333	Whole Body	Thyroid	TEDE
Delta dose (rem)	6.6771E-13	3.3102E-09	1.0520E-10
Accumulated dose (rem)	6.6771E-13	3.3102E-09	1.0520E-10

Exclusion Area Boundary (EAB) Doses:

Time (h) = 0.3333	Whole Body	Thyroid	TEDE
Delta dose (rem)	8.2761E-11	1.8558E-08	6.6885E-10
Accumulated dose (rem)	8.2761E-11	1.8558E-08	6.6885E-10

Low Population Zone (LPZ) Doses:

Time (h) = 0.3333	Whole Body	Thyroid	TEDE
Delta dose (rem)	1.5069E-11	3.3790E-09	1.2178E-10
Accumulated dose (rem)	1.5069E-11	3.3790E-09	1.2178E-10

Control Room (CR) Doses:

Time (h) = 0.5000	Whole Body	Thyroid	TEDE
Delta dose (rem)	3.7159E-12	1.9457E-08	6.1765E-10
Accumulated dose (rem)	4.3836E-12	2.2768E-08	7.2285E-10

Exclusion Area Boundary (EAB) Doses:

Time (h) = 0.5000	Whole Body	Thyroid	TEDE
Delta dose (rem)	3.1470E-10	7.4886E-08	2.6776E-09
Accumulated dose (rem)	3.9746E-10	9.3444E-08	3.3465E-09

Low Population Zone (LPZ) Doses:

Time (h) = 0.5000	Whole Body	Thyroid	TEDE
Delta dose (rem)	5.7299E-11	1.3635E-08	4.8753E-10
Accumulated dose (rem)	7.2367E-11	1.7014E-08	6.0931E-10

Control Room (CR) Doses:

Time (h) = 2.0000	Whole Body	Thyroid	TEDE
Delta dose (rem)	2.7078E-09	1.9016E-05	5.9994E-07
Accumulated dose (rem)	2.7121E-09	1.9038E-05	6.0066E-07

Exclusion Area Boundary (EAB) Doses:

Time (h) = 2.0000	Whole Body	Thyroid	TEDE
Delta dose (rem)	8.4023E-08	2.7639E-05	9.5228E-07
Accumulated dose (rem)	8.4420E-08	2.7732E-05	9.5562E-07

Low Population Zone (LPZ) Doses:

Time (h) = 2.0000	Whole Body	Thyroid	TEDE
Delta dose (rem)	1.5298E-08	5.0323E-06	1.7339E-07
Accumulated dose (rem)	1.5371E-08	5.0493E-06	1.7400E-07

Control Room (CR) Doses:

Time (h) = 8.0000	Whole Body	Thyroid	TEDE
Delta dose (rem)	4.1236E-07	3.9166E-03	1.2238E-04
Accumulated dose (rem)	4.1507E-07	3.9356E-03	1.2298E-04

Exclusion Area Boundary (EAB) Doses:

Time (h) = 8.0000	Whole Body	Thyroid	TEDE
Delta dose (rem)	5.7796E-06	3.5161E-03	1.1530E-04
Accumulated dose (rem)	5.8640E-06	3.5439E-03	1.1625E-04

Low Population Zone (LPZ) Doses:

Time (h) = 8.0000	Whole Body	Thyroid	TEDE
Delta dose (rem)	1.0523E-06	6.4020E-04	2.0993E-05
Accumulated dose (rem)	1.0677E-06	6.4525E-04	2.1167E-05

Control Room (CR) Doses:

Time (h) = 24.0000	Whole Body	Thyroid	TEDE
Delta dose (rem)	2.7243E-06	3.1996E-02	9.9069E-04
Accumulated dose (rem)	3.1394E-06	3.5932E-02	1.1137E-03

Exclusion Area Boundary (EAB) Doses:

Time (h) = 24.0000	Whole Body	Thyroid	TEDE
Delta dose (rem)	4.8843E-05	3.0075E-02	9.7743E-04
Accumulated dose (rem)	5.4707E-05	3.3619E-02	1.0937E-03

Low Population Zone (LPZ) Doses:

Time (h) = 24.0000	Whole Body	Thyroid	TEDE
Delta dose (rem)	6.2973E-06	3.8776E-03	1.2602E-04
Accumulated dose (rem)	7.3650E-06	4.5229E-03	1.4719E-04

Control Room (CR) Doses:

Time (h) = 48.0000	Whole Body	Thyroid	TEDE
Delta dose (rem)	1.7208E-06	3.8598E-02	1.1859E-03
Accumulated dose (rem)	4.8602E-06	7.4530E-02	2.2995E-03

Exclusion Area Boundary (EAB) Doses:

```
Time (h) =  48.0000     Whole Body   Thyroid       TEDE
Delta dose (rem)         0.0000E+00  0.0000E+00  0.0000E+00
Accumulated dose (rem)   5.4707E-05  3.3619E-02  1.0937E-03

Low Population Zone (LPZ) Doses:

Time (h) =  48.0000     Whole Body   Thyroid       TEDE
Delta dose (rem)         4.8154E-06  7.1723E-03  2.2484E-04
Accumulated dose (rem)   1.2180E-05  1.1695E-02  3.7203E-04

Control Room (CR) Doses:

Time (h) =  72.0000     Whole Body   Thyroid       TEDE
Delta dose (rem)         1.0776E-06  5.0870E-02  1.5558E-03
Accumulated dose (rem)   5.9377E-06  1.2540E-01  3.8553E-03

Exclusion Area Boundary (EAB) Doses:

Time (h) =  72.0000     Whole Body   Thyroid       TEDE
Delta dose (rem)         0.0000E+00  0.0000E+00  0.0000E+00
Accumulated dose (rem)   5.4707E-05  3.3619E-02  1.0937E-03

Low Population Zone (LPZ) Doses:

Time (h) =  72.0000     Whole Body   Thyroid       TEDE
Delta dose (rem)         4.1723E-06  9.5404E-03  2.9574E-04
Accumulated dose (rem)   1.6353E-05  2.1236E-02  6.6777E-04

Control Room (CR) Doses:

Time (h) =  96.0000     Whole Body   Thyroid       TEDE
Delta dose (rem)         9.1820E-07  6.0786E-02  1.8551E-03
Accumulated dose (rem)   6.8559E-06  1.8619E-01  5.7104E-03

Exclusion Area Boundary (EAB) Doses:

Time (h) =  96.0000     Whole Body   Thyroid       TEDE
Delta dose (rem)         0.0000E+00  0.0000E+00  0.0000E+00
Accumulated dose (rem)   5.4707E-05  3.3619E-02  1.0937E-03

Low Population Zone (LPZ) Doses:

Time (h) =  96.0000     Whole Body   Thyroid       TEDE
Delta dose (rem)         4.0234E-06  1.1369E-02  3.5083E-04
Accumulated dose (rem)   2.0376E-05  3.2605E-02  1.0186E-03

Control Room (CR) Doses:

Time (h) = 120.0000     Whole Body   Thyroid       TEDE
Delta dose (rem)         3.4270E-07  2.5229E-02  7.6919E-04
Accumulated dose (rem)   7.1986E-06  2.1141E-01  6.4796E-03

Exclusion Area Boundary (EAB) Doses:

Time (h) = 120.0000     Whole Body   Thyroid       TEDE
Delta dose (rem)         0.0000E+00  0.0000E+00  0.0000E+00
Accumulated dose (rem)   5.4707E-05  3.3619E-02  1.0937E-03

Low Population Zone (LPZ) Doses:
```

Time (h) = 120.0000	Whole Body	Thyroid	TEDE
Delta dose (rem)	9.9961E-07	3.1501E-03	9.6997E-05
Accumulated dose (rem)	2.1376E-05	3.5755E-02	1.1156E-03

Control Room (CR) Doses:

Time (h) = 168.0000	Whole Body	Thyroid	TEDE
Delta dose (rem)	6.8050E-07	5.5093E-02	1.6786E-03
Accumulated dose (rem)	7.8791E-06	2.6651E-01	8.1582E-03

Exclusion Area Boundary (EAB) Doses:

Time (h) = 168.0000	Whole Body	Thyroid	TEDE
Delta dose (rem)	0.0000E+00	0.0000E+00	0.0000E+00
Accumulated dose (rem)	5.4707E-05	3.3619E-02	1.0937E-03

Low Population Zone (LPZ) Doses:

Time (h) = 168.0000	Whole Body	Thyroid	TEDE
Delta dose (rem)	2.0871E-06	7.0705E-03	2.1743E-04
Accumulated dose (rem)	2.3463E-05	4.2825E-02	1.3330E-03

Control Room (CR) Doses:

Time (h) = 336.0000	Whole Body	Thyroid	TEDE
Delta dose (rem)	2.4440E-06	2.1504E-01	6.5497E-03
Accumulated dose (rem)	1.0323E-05	4.8155E-01	1.4708E-02

Exclusion Area Boundary (EAB) Doses:

Time (h) = 336.0000	Whole Body	Thyroid	TEDE
Delta dose (rem)	0.0000E+00	0.0000E+00	0.0000E+00
Accumulated dose (rem)	5.4707E-05	3.3619E-02	1.0937E-03

Low Population Zone (LPZ) Doses:

Time (h) = 336.0000	Whole Body	Thyroid	TEDE
Delta dose (rem)	7.7703E-06	2.7548E-02	8.4649E-04
Accumulated dose (rem)	3.1233E-05	7.0373E-02	2.1795E-03

Control Room (CR) Doses:

Time (h) = 720.0000	Whole Body	Thyroid	TEDE
Delta dose (rem)	3.7604E-06	3.7173E-01	1.1321E-02
Accumulated dose (rem)	1.4084E-05	8.5328E-01	2.6029E-02

Exclusion Area Boundary (EAB) Doses:

Time (h) = 720.0000	Whole Body	Thyroid	TEDE
Delta dose (rem)	0.0000E+00	0.0000E+00	0.0000E+00
Accumulated dose (rem)	5.4707E-05	3.3619E-02	1.0937E-03

Low Population Zone (LPZ) Doses:

Time (h) = 720.0000	Whole Body	Thyroid	TEDE
Delta dose (rem)	1.3185E-05	4.7553E-02	1.4609E-03
Accumulated dose (rem)	4.4418E-05	1.1793E-01	3.6404E-03

838

```
#################################################################
                          I-131 Summary
#################################################################
```

Time (hr)	Containment I-131 (Curies)	MSL A Inboard - Airbo I-131 (Curies)	Environment I-131 (Curies)
0.000	5.2640E+03	1.7114E-05	8.5433E-19
0.333	2.8290E+06	5.9220E+00	1.0968E-07
0.500	4.0239E+06	1.3070E+01	5.5326E-07
0.800	7.9884E+06	3.5530E+01	3.6497E-06
1.100	1.1679E+07	7.1455E+01	1.3557E-05
1.400	1.5113E+07	1.1946E+02	3.7208E-05
1.700	1.8307E+07	1.7832E+02	8.4191E-05
2.000	2.1276E+07	2.4689E+02	1.6667E-04
2.300	1.6058E+07	2.7960E+02	2.9808E-04
2.600	1.2209E+07	3.0897E+02	4.8848E-04
2.900	9.3713E+06	3.3535E+02	7.4664E-04
3.200	7.2781E+06	3.5902E+02	1.0810E-03
3.500	5.7342E+06	3.8027E+02	1.4997E-03
3.800	4.5953E+06	3.9933E+02	2.0105E-03
4.100	3.7551E+06	4.1642E+02	2.6208E-03
4.400	3.1351E+06	4.3174E+02	3.3375E-03
4.700	2.6775E+06	4.4546E+02	4.1672E-03
5.000	2.3396E+06	4.5775E+02	5.1163E-03
5.300	2.1768E+06	4.6874E+02	6.1907E-03
5.600	2.0415E+06	4.7858E+02	7.3958E-03
5.900	1.9291E+06	4.8737E+02	8.7369E-03
6.200	1.8355E+06	4.9521E+02	1.0219E-02
6.500	1.7577E+06	5.0221E+02	1.1846E-02
6.800	1.6930E+06	5.0845E+02	1.3623E-02
7.100	1.6390E+06	5.1400E+02	1.5554E-02
7.400	1.5940E+06	5.1893E+02	1.7642E-02
7.700	1.5564E+06	5.2331E+02	1.9891E-02
8.000	1.5249E+06	5.2718E+02	2.2304E-02
8.300	1.4986E+06	5.3061E+02	2.4883E-02
8.600	1.4790E+06	5.3363E+02	2.7633E-02
8.900	1.4622E+06	5.3629E+02	3.0554E-02
9.200	1.4476E+06	5.3861E+02	3.3650E-02
9.500	1.4350E+06	5.4065E+02	3.6922E-02
9.800	1.4240E+06	5.4241E+02	4.0373E-02
10.100	1.4145E+06	5.4394E+02	4.4005E-02
10.400	1.4061E+06	5.4525E+02	4.7818E-02
24.000	1.2997E+06	5.3471E+02	4.2055E-01
48.000	1.1900E+06	2.2722E+02	1.7370E+00
72.000	1.0896E+06	2.0804E+02	3.5892E+00
96.000	9.9764E+05	1.9048E+02	5.8610E+00
120.000	9.1346E+05	3.6224E+01	7.7253E+00
168.000	7.6580E+05	3.0368E+01	1.1948E+01
336.000	4.1314E+05	1.6384E+01	2.8476E+01
720.000	1.0081E+05	3.9977E+00	5.7021E+01

Time (hr)	Control Room I-131 (Curies)	MSL A Outboard - Airb I-131 (Curies)	MSL A Inboard - Surfa I-131 (Curies)
0.000	6.9687E-22	6.8585E-10	4.1491E-10
0.333	8.2021E-11	1.4029E-01	8.6958E-02
0.500	3.9681E-10	4.6105E-01	2.8927E-01
0.800	2.4393E-09	1.8683E+00	1.1965E+00
1.100	8.5030E-09	4.9831E+00	3.2534E+00
1.400	2.1969E-08	1.0452E+01	6.9597E+00
1.700	4.6876E-08	1.8787E+01	1.2763E+01

2.000	8.7652E-08	3.0380E+01	2.1065E+01
2.300	1.2578E-07	4.4183E+01	3.1387E+01
2.600	1.8117E-07	5.8737E+01	4.2916E+01
2.900	2.5250E-07	7.3781E+01	5.5524E+01
3.200	3.3876E-07	8.9098E+01	6.9101E+01
3.500	4.3906E-07	1.0450E+02	8.3544E+01
3.800	5.5266E-07	1.1985E+02	9.8761E+01
4.100	6.7885E-07	1.3501E+02	1.1467E+02
4.400	8.1697E-07	1.4989E+02	1.3120E+02
4.700	9.6641E-07	1.6440E+02	1.4828E+02
5.000	1.1266E-06	1.7848E+02	1.6585E+02
5.300	1.2968E-06	1.9209E+02	1.8386E+02
5.600	1.4766E-06	2.0519E+02	2.0225E+02
5.900	1.6655E-06	2.1775E+02	2.2100E+02
6.200	1.8628E-06	2.2976E+02	2.4005E+02
6.500	2.0680E-06	2.4120E+02	2.5936E+02
6.800	2.2807E-06	2.5208E+02	2.7892E+02
7.100	2.5004E-06	2.6241E+02	2.9869E+02
7.400	2.7266E-06	2.7218E+02	3.1864E+02
7.700	2.9589E-06	2.8140E+02	3.3875E+02
8.000	3.1969E-06	2.9010E+02	3.5901E+02
8.300	2.6504E-06	2.9829E+02	3.7938E+02
8.600	2.3191E-06	3.0597E+02	3.9986E+02
8.900	2.1320E-06	3.1318E+02	4.2042E+02
9.200	2.0418E-06	3.1994E+02	4.4107E+02
9.500	2.0167E-06	3.2625E+02	4.6177E+02
9.800	2.0355E-06	3.3214E+02	4.8253E+02
10.100	2.0840E-06	3.3763E+02	5.0333E+02
10.400	2.1526E-06	3.4275E+02	5.2416E+02
24.000	7.2543E-06	3.9367E+02	1.4459E+03
48.000	7.5764E-06	7.3353E+01	3.1124E+03
72.000	9.7998E-06	6.7066E+01	4.3188E+03
96.000	1.1598E-05	6.1407E+01	5.3015E+03
120.000	6.9352E-06	2.2449E+00	6.6159E+03
168.000	7.9075E-06	1.8820E+00	8.2897E+03
336.000	8.2490E-06	1.0153E+00	9.6918E+03
720.000	4.2780E-06	2.4775E-01	5.3333E+03

	MSL A Outboard - Surf Hold	(By Surface Fixa	Condenser - Airborne
Time (hr)	I-131 (Curies)	I-131 (Curies)	I-131 (Curies)
0.000	1.2470E-14	3.8322E-19	1.5412E-14
0.333	1.5466E-03	4.9171E-08	1.6634E-03
0.500	7.6649E-03	2.4787E-07	7.7206E-03
0.800	4.9005E-02	1.6328E-06	4.4270E-02
1.100	1.7669E-01	6.0547E-06	1.4503E-01
1.400	4.7083E-01	1.6586E-05	3.5324E-01
1.700	1.0341E+00	3.7453E-05	7.1172E-01
2.000	1.9867E+00	7.3985E-05	1.2585E+00
2.300	3.4450E+00	1.3201E-04	2.0072E+00
2.600	5.4591E+00	2.1579E-04	2.9042E+00
2.900	8.0527E+00	3.2894E-04	3.8998E+00
3.200	1.1240E+01	4.7492E-04	4.9597E+00
3.500	1.5027E+01	6.5698E-04	6.0591E+00
3.800	1.9414E+01	8.7822E-04	7.1792E+00
4.100	2.4396E+01	1.1416E-03	8.3054E+00
4.400	2.9962E+01	1.4497E-03	9.4261E+00
4.700	3.6098E+01	1.8053E-03	1.0532E+01
5.000	4.2790E+01	2.2106E-03	1.1616E+01
5.300	5.0018E+01	2.6681E-03	1.2673E+01
5.600	5.7762E+01	3.1797E-03	1.3697E+01

5.900	6.6001E+01	3.7474E-03	1.4686E+01
6.200	7.4714E+01	4.3730E-03	1.5637E+01
6.500	8.3877E+01	5.0582E-03	1.6549E+01
6.800	9.3469E+01	5.8047E-03	1.7420E+01
7.100	1.0347E+02	6.6137E-03	1.8250E+01
7.400	1.1385E+02	7.4867E-03	1.9038E+01
7.700	1.2459E+02	8.4249E-03	1.9786E+01
8.000	1.3567E+02	9.4294E-03	2.0493E+01
8.300	1.4707E+02	1.0501E-02	2.1160E+01
8.600	1.5878E+02	1.1641E-02	2.1789E+01
8.900	1.7076E+02	1.2851E-02	2.2381E+01
9.200	1.8300E+02	1.4130E-02	2.2937E+01
9.500	1.9548E+02	1.5480E-02	2.3457E+01
9.800	2.0819E+02	1.6901E-02	2.3945E+01
10.100	2.2111E+02	1.8394E-02	2.4401E+01
10.400	2.3423E+02	1.9959E-02	2.4826E+01
24.000	8.9289E+02	1.6880E-01	2.9265E+01
48.000	1.6226E+03	6.0419E-01	2.5904E+00
72.000	1.9602E+03	1.1971E+00	2.3677E+00
96.000	2.2299E+03	1.8931E+00	2.1679E+00
120.000	2.2063E+03	2.1889E+00	6.0134E-02
168.000	2.0247E+03	2.8298E+00	5.0414E-02
336.000	1.4255E+03	4.7260E+00	2.7198E-02
720.000	5.3732E+02	4.8780E+00	6.6365E-03

Time (hr)	Condenser - Surface I-131 (Curies)
0.000	3.7256E-18
0.333	2.4854E-04
0.500	1.7550E-03
0.800	1.6311E-02
1.100	7.3401E-02
1.400	2.2881E-01
1.700	5.6666E-01
2.000	1.1975E+00
2.300	2.2516E+00
2.600	3.8446E+00
2.900	6.0553E+00
3.200	8.9356E+00
3.500	1.2518E+01
3.800	1.6822E+01
4.100	2.1854E+01
4.400	2.7614E+01
4.700	3.4095E+01
5.000	4.1283E+01
5.300	4.9162E+01
5.600	5.7711E+01
5.900	6.6908E+01
6.200	7.6728E+01
6.500	8.7145E+01
6.800	9.8133E+01
7.100	1.0966E+02
7.400	1.2171E+02
7.700	1.3424E+02
8.000	1.4723E+02
8.300	1.6066E+02
8.600	1.7450E+02
8.900	1.8872E+02
9.200	2.0330E+02
9.500	2.1821E+02

9.800	2.3344E+02
10.100	2.4896E+02
10.400	2.6474E+02
24.000	1.0747E+03
48.000	1.2206E+03
72.000	1.2433E+03
96.000	1.2537E+03
120.000	1.1569E+03
168.000	9.7855E+02
336.000	5.4444E+02
720.000	1.4225E+02

##

Cumulative Dose Summary

##

	Control Room (CR)		Exclusion Area Bounda		Low Population Zone (	
Time	Thyroid	TEDE	Thyroid	TEDE	Thyroid	TEDE
(hr)	(rem)	(rem)	(rem)	(rem)	(rem)	(rem)
0.000	0.0000E+00	0.0000E+00	0.0000E+00	0.0000E+00	0.0000E+00	0.0000E+00
0.333	3.3102E-09	1.0520E-10	1.8558E-08	6.6885E-10	3.3790E-09	1.2178E-10
0.500	2.2768E-08	7.2285E-10	9.3444E-08	3.3465E-09	1.7014E-08	6.0931E-10
0.800	2.1883E-07	6.9368E-09	6.1457E-07	2.1795E-08	1.1190E-07	3.9683E-09
1.100	1.0261E-06	3.2482E-08	2.2758E-06	8.0004E-08	4.1437E-07	1.4567E-08
1.400	3.3386E-06	1.0555E-07	6.2273E-06	2.1726E-07	1.1338E-06	3.9558E-08
1.700	8.6321E-06	2.7261E-07	1.4049E-05	4.8691E-07	2.5580E-06	8.8655E-08
2.000	1.9038E-05	6.0066E-07	2.7732E-05	9.5562E-07	5.0493E-06	1.7400E-07
2.300	3.5618E-05	1.1228E-06	4.9458E-05	1.6957E-06	9.0050E-06	3.0874E-07
2.600	5.9490E-05	1.8740E-06	8.0828E-05	2.7589E-06	1.4717E-05	5.0233E-07
2.900	9.3197E-05	2.9337E-06	1.2322E-04	4.1892E-06	2.2436E-05	7.6275E-07
3.200	1.3908E-04	4.3751E-06	1.7795E-04	6.0281E-06	3.2400E-05	1.0976E-06
3.500	1.9930E-04	6.2657E-06	2.4626E-04	8.3150E-06	4.4838E-05	1.5140E-06
3.800	2.7589E-04	8.6686E-06	3.2932E-04	1.1087E-05	5.9962E-05	2.0186E-06
4.100	3.7075E-04	1.1643E-05	4.2825E-04	1.4377E-05	7.7974E-05	2.6178E-06
4.400	4.8565E-04	1.5243E-05	5.4408E-04	1.8220E-05	9.9064E-05	3.3174E-06
4.700	6.2226E-04	1.9522E-05	6.7778E-04	2.2643E-05	1.2341E-04	4.1228E-06
5.000	7.8213E-04	2.4526E-05	8.3025E-04	2.7676E-05	1.5117E-04	5.0392E-06
5.300	9.6672E-04	3.0302E-05	1.0023E-03	3.3344E-05	1.8250E-04	6.0712E-06
5.600	1.1774E-03	3.6890E-05	1.1948E-03	3.9671E-05	2.1754E-04	7.2231E-06
5.900	1.4154E-03	4.4331E-05	1.4084E-03	4.6678E-05	2.5643E-04	8.4989E-06
6.200	1.6820E-03	5.2659E-05	1.6437E-03	5.4386E-05	2.9928E-04	9.9023E-06
6.500	1.9781E-03	6.1909E-05	1.9015E-03	6.2812E-05	3.4621E-04	1.1436E-05
6.800	2.3049E-03	7.2112E-05	2.1822E-03	7.1973E-05	3.9732E-04	1.3105E-05
7.100	2.6632E-03	8.3295E-05	2.4863E-03	8.1885E-05	4.5269E-04	1.4909E-05
7.400	3.0539E-03	9.5485E-05	2.8143E-03	9.2562E-05	5.1242E-04	1.6853E-05
7.700	3.4778E-03	1.0871E-04	3.1667E-03	1.0401E-04	5.7659E-04	1.8938E-05
8.000	3.9356E-03	1.2298E-04	3.5439E-03	1.1625E-04	6.4525E-04	2.1167E-05
8.300	4.3665E-03	1.3641E-04	3.7507E-03	1.2322E-04	6.7192E-04	2.2066E-05
8.600	4.7324E-03	1.4782E-04	3.9706E-03	1.3062E-04	7.0027E-04	2.3019E-05
8.900	5.0597E-03	1.5802E-04	4.2037E-03	1.3844E-04	7.3032E-04	2.4027E-05
9.200	5.3663E-03	1.6757E-04	4.4501E-03	1.4669E-04	7.6209E-04	2.5092E-05
9.500	5.6638E-03	1.7684E-04	4.7099E-03	1.5538E-04	7.9559E-04	2.6212E-05
9.800	5.9605E-03	1.8607E-04	4.9833E-03	1.6451E-04	8.3084E-04	2.7388E-05
10.100	6.2614E-03	1.9544E-04	5.2703E-03	1.7407E-04	8.6784E-04	2.8622E-05
10.400	6.5703E-03	2.0506E-04	5.5709E-03	1.8408E-04	9.0660E-04	2.9912E-05
24.000	3.5932E-02	1.1137E-03	3.3619E-02	1.0937E-03	4.5229E-03	1.4719E-04
48.000	7.4530E-02	2.2995E-03	3.3619E-02	1.0937E-03	1.1695E-02	3.7203E-04
72.000	1.2540E-01	3.8553E-03	3.3619E-02	1.0937E-03	2.1236E-02	6.6777E-04
96.000	1.8619E-01	5.7104E-03	3.3619E-02	1.0937E-03	3.2605E-02	1.0186E-03
120.000	2.1141E-01	6.4796E-03	3.3619E-02	1.0937E-03	3.5755E-02	1.1156E-03

```
 168.000 2.6651E-01 8.1582E-03 3.3619E-02 1.0937E-03 4.2825E-02 1.3330E-03
 336.000 4.8155E-01 1.4708E-02 3.3619E-02 1.0937E-03 7.0373E-02 2.1795E-03
 720.000 8.5328E-01 2.6029E-02 3.3619E-02 1.0937E-03 1.1793E-01 3.6404E-03

#####################################################################
                         Worst Two-Hour Doses
#####################################################################

Exclusion Area Boundary (EAB)
   Time    Whole Body    Thyroid        TEDE
   (hr)      (rem)        (rem)         (rem)
   10.4   6.4598E-06   4.1247E-03   1.3377E-04
```

```
 ######################################################################
    RADTRAD Version 3.03 (Spring 2001) run on  6/08/2006  at 17:03:52
 ######################################################################

 ######################################################################
                      File information
 ######################################################################

 Plant file           = RESUP2-B.psf
 Inventory file       = c:\program files\radtrad3-03\defaults\limerick ast source
terms.nif
 Release file         = c:\program files\radtrad3-03\defaults\bwr_i.rft
 Dose Conversion file = c:\program files\radtrad3-03\defaults\fgr11&12.inp



     #####    ####   #####    #  #     #  #####   #    #  #####
     #    #  #       #        #  ##    #  #    #  #    #    #
     #    #  #       #        #  # #   #  #    #  #    #    #
     #####    ####   ####     #  #  #  #  #####   #    #    #
     #            #  #        #  #   # #  #       #    #    #
     #            #  #        #  #    ##  #       #    #    #
     #        ####   #        #  #     #  #        ####     #


 Radtrad 3.03 4/15/2001
 LGS LOCA 200scfh Line B MSIV Leak - Resuspension Only - Leak to Condenser - MSL
Pipe Deposition Credit (24-Hr 20-Group Aerosol Settling with Projected Area
Assumption; 2-Hr Mixing Delay) - 95% CREFAS Charcoal Eff. No Delay - Rad Mode
225cfm Control Room In
 Nuclide Inventory File:
 c:\program files\radtrad3-03\defaults\limerick ast source terms.nif
 Plant Power Level:
  3.5270E+03
 Compartments:
  10
 Compartment 1:
 Containment
   3
  3.7907E+05
   0
   0
   0
   1
   0
 Compartment 2:
 MSL B Inboard - Airborne
   3
  1.0000E-05
   0
   0
   0
   0
   0
 Compartment 3:
 Environment
   2
```

```
 0.0000E+00
  0
  0
  0
  0
  0
Compartment 4:
Control Room
  1
 1.2600E+05
  0
  0
  1
  0
  0
Compartment 5:
MSL B Outboard - Airborne
  3
 1.0510E+03
  0
  0
  0
  0
  0
Compartment 6:
MSL B Inboard - Surface
  3
 1.0000E+00
  0
  0
  0
  0
  0
Compartment 7:
MSL B Outboard - Surface
  3
 1.0000E+00
  0
  0
  0
  0
  0
Compartment 8:
Hold (By Surface Fixation)
  3
 1.0000E+00
  0
  0
  0
  0
  0
Compartment 9:
Condenser - Airborne
  3
 5.4746E+04
  0
  0
  0
  0
  0
```

```
Compartment 10:
Condenser - Surface
  3
 1.0000E+00
  0
  0
  0
  0
  0
Pathways:
 15
Pathway 1:
Filtered Environment to Control Room (Intake)
  3
  4
  2
Pathway 2:
Unfiltered Environment to Control Room (Inleakage)
  3
  4
  2
Pathway 3:
Control Room to Environment (Exhaust)
  4
  3
  2
Pathway 4:
(Aerosol Transport 1) MSL B Inboard - Airborne to MSL B Outboard - Airborne
  2
  5
  2
Pathway 5:
(Deposition 1) MSL B Inboard - Airborne to MSL B Inboard - Surface
  2
  6
  4
Pathway 6:
(Resuspension 1) MSL B Inboard - Surface to Environment
  6
  3
  4
Pathway 7:
(Surface Fixation 1) MSL B Inboard - Surface to Hold (By Surface Fixation)
  6
  8
  4
Pathway 8:
(Deposition 2) MSL B Outboard - Airborne to MSL B Outboard - Surface
  5
  7
  4
Pathway 9:
(Resuspension 2) MSL B Outboard - Surface to  Environment
  7
  3
  4
Pathway 10:
(Surface Fixation 2) MSL B Outboard - Surface to Hold (By Surface Fixation)
  7
  8
```

```
  4
Pathway 11:
(Aerosol Transport 2) MSL B Outboard - Airborne to  Condenser - Airborne
  5
  9
  2
Pathway 12:
(Deposition 3) Condenser - Airborne to Condenser - Surface
  9
 10
  4
Pathway 13:
(Resuspension 3) Condenser - Surface to  Environment
 10
  3
  4
Pathway 14:
(Surface Fixation 3) Condenser - Surface to  Hold (By Surface Fixation)
 10
  8
  4
Pathway 15:
Containment to  MSL B Inboard - Airborne
  1
  2
  2
End of Plant Model File
Scenario Description Name:

Plant Model Filename:

Source Term:
  1
  1   1.0000E+00
c:\program files\radtrad3-03\defaults\fgr11&12.inp
c:\program files\radtrad3-03\defaults\bwr_i.rft
  0.0000E+00
  1
  9.5000E-01   4.8500E-02   1.5000E-03   1.0000E+00
Overlying Pool:
  0
  0.0000E+00
  0
  0
  0
  0
Compartments:
 10
Compartment 1:
  0
  1
  0
  0
  0
  0
  0
  3
  3
  1.0000E+01
  1
```

```
  1
  0.0000E+00   0.0000E+00
Compartment 2:
  0
  1
  0
  0
  0
  0
  0
  0
  0
Compartment 3:
  0
  1
  0
  0
  0
  0
  0
  0
  0
Compartment 4:
  0
  1
  0
  0
  0
  0
  1
  2.1750E+03
  3
  0.0000E+00   9.9000E+01   9.5000E+01   9.5000E+01
  3.3330E-01   9.9000E+01   9.5000E+01   9.5000E+01
  7.2000E+02   0.0000E+00   0.0000E+00   0.0000E+00
  0
  0
Compartment 5:
  0
  1
  0
  0
  0
  0
  0
  0
  0
Compartment 6:
  0
  1
  0
  0
  0
  0
  0
  0
  0
Compartment 7:
  0
  1
```

```
  0
  0
  0
  0
  0
  0
  0
Compartment 8:
  0
  1
  0
  0
  0
  0
  0
  0
  0
Compartment 9:
  0
  1
  0
  0
  0
  0
  0
  0
  0
Compartment 10:
  0
  1
  0
  0
  0
  0
  0
  0
  0
Pathways:
 15
Pathway 1:
  0
  0
  0
  0
  0
  1
  3
  0.0000E+00   5.2500E+02   9.9000E+01   9.5000E+01   9.5000E+01
  5.0000E-01   5.2500E+02   9.9000E+01   9.5000E+01   9.5000E+01
  7.2000E+02   0.0000E+00   0.0000E+00   0.0000E+00   0.0000E+00
  0
  0
  0
  0
  0
  0
Pathway 2:
  0
  0
  0
```

```
  0
  0
  1
  2
  0.0000E+00   2.2500E+02   0.0000E+00   0.0000E+00   0.0000E+00
  7.2000E+02   0.0000E+00   0.0000E+00   0.0000E+00   0.0000E+00
  0
  0
  0
  0
  0
  0
Pathway 3:
  0
  0
  0
  0
  0
  1
  3
  0.0000E+00   7.5000E+02   1.0000E+02   1.0000E+02   1.0000E+02
  5.0000E-01   7.5000E+02   1.0000E+02   1.0000E+02   1.0000E+02
  7.2000E+02   0.0000E+00   0.0000E+00   0.0000E+00   0.0000E+00
  0
  0
  0
  0
  0
  0
Pathway 4:
  0
  0
  0
  0
  0
  1
  5
  0.0000E+00   9.3060E-01   1.0000E+02   0.0000E+00   1.0000E+02
  2.0000E+00   9.3060E-01   1.0000E+02   0.0000E+00   1.0000E+02
  2.4000E+01   5.1270E-01   1.0000E+02   0.0000E+00   1.0000E+02
  9.6000E+01   5.1270E-01   1.0000E+02   0.0000E+00   1.0000E+02
  7.2000E+02   0.0000E+00   0.0000E+00   0.0000E+00   0.0000E+00
  0
  0
  0
  0
  0
  0
Pathway 5:
  0
  0
  0
  0
  0
  0
  0
  0
  0
  0
  1
```

```
  4
  0.0000E+00   3.1420E+02
  2.4000E+01   7.0350E+02
  9.6000E+01   4.4780E+03
  7.2000E+02   0.0000E+00
  0
Pathway 6:
  0
  0
  0
  0
  0
  0
  0
  0
  0
  0
  1
  4
  0.0000E+00   3.5580E-02
  2.4000E+01   2.9950E-02
  9.6000E+01   2.0170E-02
  7.2000E+02   0.0000E+00
  0
Pathway 7:
  0
  0
  0
  0
  0
  0
  0
  0
  0
  0
  1
  4
  0.0000E+00   1.5960E-02
  2.4000E+01   1.1360E-02
  9.6000E+01   5.2000E-03
  7.2000E+02   0.0000E+00
  0
Pathway 8:
  0
  0
  0
  0
  0
  0
  0
  0
  0
  0
  1
  4
  0.0000E+00   3.1417E+02
  2.4000E+01   7.0352E+02
  9.6000E+01   4.4779E+03
  7.2000E+02   0.0000E+00
  0
```

```
Pathway 9:
  0
  0
  0
  0
  0
  0
  0
  0
  0
  0
  1
  4
  0.0000E+00   3.5580E-02
  2.4000E+01   2.9950E-02
  9.6000E+01   2.0170E-02
  7.2000E+02   0.0000E+00
  0
Pathway 10:
  0
  0
  0
  0
  0
  0
  0
  0
  0
  0
  1
  4
  0.0000E+00   1.5960E-02
  2.4000E+01   1.1360E-02
  9.6000E+01   5.2000E-03
  7.2000E+02   0.0000E+00
  0
Pathway 11:
  0
  0
  0
  0
  0
  1
  4
  0.0000E+00   3.1880E+00   1.0000E+02   0.0000E+00   1.0000E+02
  2.4000E+01   1.5130E+00   1.0000E+02   0.0000E+00   1.0000E+02
  9.6000E+01   1.1480E+00   1.0000E+02   0.0000E+00   1.0000E+02
  7.2000E+02   0.0000E+00   0.0000E+00   0.0000E+00   0.0000E+00
  0
  0
  0
  0
  0
  0
Pathway 12:
  0
  0
  0
  0
  0
```

```
  0
  0
  0
  0
  0
  1
  4
  0.0000E+00   5.2212E+03
  2.4000E+01   5.2212E+03
  9.6000E+01   5.2212E+03
  7.2000E+02   0.0000E+00
  0
Pathway 13:
  0
  0
  0
  0
  0
  0
  0
  0
  0
  0
  1
  4
  0.0000E+00   1.6090E-02
  2.4000E+01   1.6090E-02
  9.6000E+01   1.6090E-02
  7.2000E+02   0.0000E+00
  0
Pathway 14:
  0
  0
  0
  0
  0
  0
  0
  0
  0
  0
  1
  4
  0.0000E+00   3.3300E-03
  2.4000E+01   3.3300E-03
  9.6000E+01   3.3300E-03
  7.2000E+02   0.0000E+00
  0
Pathway 15:
  0
  0
  0
  0
  0
  1
  5
  0.0000E+00   1.5240E+00   1.0000E+02   0.0000E+00   1.0000E+02
  2.0000E+00   9.3060E-01   1.0000E+02   0.0000E+00   1.0000E+02
  2.4000E+01   5.1270E-01   1.0000E+02   0.0000E+00   1.0000E+02
  9.6000E+01   5.1270E-01   1.0000E+02   0.0000E+00   1.0000E+02
```

```
  7.2000E+02   0.0000E+00   0.0000E+00   0.0000E+00   0.0000E+00
  0
  0
  0
  0
  0
  0
Dose Locations:
  3
Location 1:
Control Room (CR)
  4
  0
  1
  2
  0.0000E+00   3.5000E-04
  7.2000E+02   0.0000E+00
  1
  4
  0.0000E+00   1.0000E+00
  2.4000E+01   6.0000E-01
  9.6000E+01   4.0000E-01
  7.2000E+02   0.0000E+00
Location 2:
Exclusion Area Boundary (EAB)
  3
  1
  2
  0.0000E+00   3.1800E-04
  2.4000E+01   0.0000E+00
  1
  4
  0.0000E+00   3.5000E-04
  8.0000E+00   1.8000E-04
  2.4000E+01   2.3000E-04
  7.2000E+02   0.0000E+00
  0
Location 3:
Low Population Zone (LPZ)
  3
  1
 10
  0.0000E+00   5.7900E-05
  8.0000E+00   4.1000E-05
  2.4000E+01   1.9500E-05
  4.8000E+01   1.9500E-05
  7.2000E+01   1.9500E-05
  9.6000E+01   6.6800E-06
  1.2000E+02   6.6800E-06
  1.6800E+02   6.6800E-06
  3.3600E+02   6.6800E-06
  7.2000E+02   0.0000E+00
  1
  4
  0.0000E+00   3.5000E-04
  8.0000E+00   1.8000E-04
  2.4000E+01   2.3000E-04
  7.2000E+02   0.0000E+00
  0
Effective Volume Location:
```

```
  1
  6
  0.0000E+00   6.8800E-03
  2.0000E+00   5.1700E-03
  8.0000E+00   2.0400E-03
  2.4000E+01   1.2900E-03
  9.6000E+01   9.6300E-04
  7.2000E+02   0.0000E+00
Simulation Parameters:
  1
  0.0000E+00   0.0000E+00
Output Filename:
C:\RESUP2-B.o0
  1
  1
  1
  0
  0
End of Scenario File
```

```
#######################################################################
   RADTRAD Version 3.03 (Spring 2001) run on  6/08/2006  at 17:03:52
#######################################################################

#######################################################################
                    Plant Description
#######################################################################

Number of Nuclides =  60

Inventory Power =   1.0000E+00 MWth
Plant Power Level =   3.5270E+03 MWth

Number of compartments    =  10

Compartment information

Compartment number  1  (Source term fraction =   1.0000E+00
)
Name: Containment
Compartment volume =   3.7907E+05 (Cubic feet)
Compartment type is Normal
Removal devices within compartment:
     Deposition
Pathways into and out of compartment  1
   Exit Pathway Number   15: Containment to  MSL B Inboard - Airborne

Compartment number  2
Name: MSL B Inboard - Airborne
Compartment volume =   1.0000E-05 (Cubic feet)
Compartment type is Normal
Pathways into and out of compartment  2
   Inlet Pathway Number  15: Containment to  MSL B Inboard - Airborne
   Exit Pathway Number    4: (Aerosol Transport 1) MSL B Inboard - Airborne to
   Exit Pathway Number    5: (Deposition 1) MSL B Inboard - Airborne to MSL B I

Compartment number  3
Name: Environment
Compartment type is Environment
Pathways into and out of compartment  3
   Inlet Pathway Number   3: Control Room to Environment (Exhaust)
   Inlet Pathway Number   6: (Resuspension 1) MSL B Inboard - Surface to Enviro
   Inlet Pathway Number   9: (Resuspension 2) MSL B Outboard - Surface to  Envi
   Inlet Pathway Number  13: (Resuspension 3) Condenser - Surface to  Environme
   Exit Pathway Number    1: Filtered Environment to Control Room (Intake)
   Exit Pathway Number    2: Unfiltered Environment to Control Room (Inleakage)

Compartment number  4
Name: Control Room
Compartment volume =   1.2600E+05 (Cubic feet)
Compartment type is Control Room
Removal devices within compartment:
     Filter(s)
Pathways into and out of compartment  4
   Inlet Pathway Number   1: Filtered Environment to Control Room (Intake)
   Inlet Pathway Number   2: Unfiltered Environment to Control Room (Inleakage)
   Exit Pathway Number    3: Control Room to Environment (Exhaust)

Compartment number  5
```

```
Name: MSL B Outboard - Airborne
Compartment volume =   1.0510E+03 (Cubic feet)
Compartment type is Normal
Pathways into and out of compartment  5
   Inlet Pathway Number   4: (Aerosol Transport 1) MSL B Inboard - Airborne to
   Exit Pathway Number    8: (Deposition 2) MSL B Outboard - Airborne to MSL B
   Exit Pathway Number   11: (Aerosol Transport 2) MSL B Outboard - Airborne to

Compartment number  6
Name: MSL B Inboard - Surface
Compartment volume =   1.0000E+00 (Cubic feet)
Compartment type is Normal
Pathways into and out of compartment  6
   Inlet Pathway Number   5: (Deposition 1) MSL B Inboard - Airborne to MSL B I
   Exit Pathway Number    6: (Resuspension 1) MSL B Inboard - Surface to Enviro
   Exit Pathway Number    7: (Surface Fixation 1) MSL B Inboard - Surface to Ho

Compartment number  7
Name: MSL B Outboard - Surface
Compartment volume =   1.0000E+00 (Cubic feet)
Compartment type is Normal
Pathways into and out of compartment  7
   Inlet Pathway Number   8: (Deposition 2) MSL B Outboard - Airborne to MSL B
   Exit Pathway Number    9: (Resuspension 2) MSL B Outboard - Surface to  Envi
   Exit Pathway Number   10: (Surface Fixation 2) MSL B Outboard - Surface to H

Compartment number  8
Name: Hold (By Surface Fixation)
Compartment volume =   1.0000E+00 (Cubic feet)
Compartment type is Normal
Pathways into and out of compartment  8
   Inlet Pathway Number   7: (Surface Fixation 1) MSL B Inboard - Surface to Ho
   Inlet Pathway Number  10: (Surface Fixation 2) MSL B Outboard - Surface to H
   Inlet Pathway Number  14: (Surface Fixation 3) Condenser - Surface to  Hold

Compartment number  9
Name: Condenser - Airborne
Compartment volume =   5.4746E+04 (Cubic feet)
Compartment type is Normal
Pathways into and out of compartment  9
   Inlet Pathway Number  11: (Aerosol Transport 2) MSL B Outboard - Airborne to
   Exit Pathway Number   12: (Deposition 3) Condenser - Airborne to Condenser -

Compartment number 10
Name: Condenser - Surface
Compartment volume =   1.0000E+00 (Cubic feet)
Compartment type is Normal
Pathways into and out of compartment 10
   Inlet Pathway Number  12: (Deposition 3) Condenser - Airborne to Condenser -
   Exit Pathway Number   13: (Resuspension 3) Condenser - Surface to  Environme
   Exit Pathway Number   14: (Surface Fixation 3) Condenser - Surface to  Hold

Total number of pathways =  15
```

```
#######################################################################
   RADTRAD Version 3.03 (Spring 2001) run on  6/08/2006  at 17:03:52
#######################################################################

#######################################################################
                      Scenario Description
#######################################################################
```

Radioactive Decay is enabled
Calculation of Daughters is enabled

Release Fractions and Timings

	GAP	EARLY IN-VESSEL	LATE RELEASE	RELEASE MASS
	0.500000 hr	1.5000 hrs	0.0000 hrs	(gm)
NOBLES	0.0000E+00	0.0000E+00	0.0000E+00	0.000E+00
IODINE	5.0000E-02	2.5000E-01	0.0000E+00	3.033E+02
CESIUM	0.0000E+00	0.0000E+00	0.0000E+00	0.000E+00
TELLURIUM	0.0000E+00	0.0000E+00	0.0000E+00	0.000E+00
STRONTIUM	0.0000E+00	0.0000E+00	0.0000E+00	0.000E+00
BARIUM	0.0000E+00	0.0000E+00	0.0000E+00	0.000E+00
RUTHENIUM	0.0000E+00	0.0000E+00	0.0000E+00	0.000E+00
CERIUM	0.0000E+00	0.0000E+00	0.0000E+00	0.000E+00
LANTHANUM	0.0000E+00	0.0000E+00	0.0000E+00	0.000E+00

Inventory Power = 3527. MWt

Nuclide Name	Group	Specific Inventory (Ci/MWt)	half life (s)	Whole Body DCF (Sv-m3/Bq-s)	Inhaled Thyroid (Sv/Bq)	Inhaled Effective (Sv/Bq)
I-131	2	2.687E+04	6.947E+05	1.820E-14	2.920E-07	8.890E-09
I-132	2	3.881E+04	8.280E+03	1.120E-13	1.740E-09	1.030E-10
I-133	2	5.556E+04	7.488E+04	2.940E-14	4.860E-08	1.580E-09
I-134	2	6.165E+04	3.156E+03	1.300E-13	2.880E-10	3.550E-11
I-135	2	5.192E+04	2.380E+04	8.294E-14	8.460E-09	3.320E-10

Nuclide	Daughter	Fraction	Daughter	Fraction	Daughter	Fraction
Kr-85m	Kr-85	0.21	none	0.00	none	0.00
Kr-87	Rb-87	1.00	none	0.00	none	0.00
Kr-88	Rb-88	1.00	none	0.00	none	0.00
Sr-90	Y-90	1.00	none	0.00	none	0.00
Sr-91	Y-91m	0.58	Y-91	0.42	none	0.00
Sr-92	Y-92	1.00	none	0.00	none	0.00
Y-93	Zr-93	1.00	none	0.00	none	0.00
Zr-95	Nb-95m	0.01	Nb-95	0.99	none	0.00
Zr-97	Nb-97m	0.95	Nb-97	0.05	none	0.00
Mo-99	Tc-99m	0.88	Tc-99	0.12	none	0.00
Tc-99m	Tc-99	1.00	none	0.00	none	0.00
Ru-103	Rh-103m	1.00	none	0.00	none	0.00
Ru-105	Rh-105	1.00	none	0.00	none	0.00
Ru-106	Rh-106	1.00	none	0.00	none	0.00
Sb-127	Te-127m	0.18	Te-127	0.82	none	0.00
Sb-129	Te-129m	0.22	Te-129	0.77	none	0.00
Te-127m	Te-127	0.98	none	0.00	none	0.00
Te-129	I-129	1.00	none	0.00	none	0.00
Te-129m	Te-129	0.65	I-129	0.35	none	0.00
Te-131m	Te-131	0.22	I-131	0.78	none	0.00
Te-132	I-132	1.00	none	0.00	none	0.00
I-131	Xe-131m	0.01	none	0.00	none	0.00
I-133	Xe-133m	0.03	Xe-133	0.97	none	0.00

I-135	Xe-135m	0.15	Xe-135	0.85	none	0.00
Xe-135	Cs-135	1.00	none	0.00	none	0.00
Cs-137	Ba-137m	0.95	none	0.00	none	0.00
Ba-140	La-140	1.00	none	0.00	none	0.00
La-141	Ce-141	1.00	none	0.00	none	0.00
Ce-143	Pr-143	1.00	none	0.00	none	0.00
Ce-144	Pr-144m	0.02	Pr-144	0.98	none	0.00
Nd-147	Pm-147	1.00	none	0.00	none	0.00
Np-239	Pu-239	1.00	none	0.00	none	0.00
Pu-238	U-234	1.00	none	0.00	none	0.00
Pu-239	U-235	1.00	none	0.00	none	0.00
Pu-240	U-236	1.00	none	0.00	none	0.00
Pu-241	U-237	0.00	Am-241	1.00	none	0.00
Am-241	Np-237	1.00	none	0.00	none	0.00
Cm-242	Pu-238	1.00	none	0.00	none	0.00
Cm-244	Pu-240	1.00	none	0.00	none	0.00

Iodine fractions

Aerosol = 9.5000E-01
Elemental = 4.8500E-02
Organic = 1.5000E-03

COMPARTMENT DATA

Compartment number 1: Containment
Natural Deposition (Powers' model): Aerosol data
Reactor type: 3
Percentile = 10 (%)

Natural Deposition: Elemental Removal Data

Time (hr)	Removal Coef. (hr^-1)
0.0000E+00	0.0000E+00

Compartment number 2: MSL B Inboard - Airborne

Compartment number 3: Environment

Compartment number 4: Control Room

Compartment Filter Data

Time (hr)	Flow Rate (cfm)	Filter Efficiencies (%) Aerosol	Elemental	Organic
0.0000E+00	2.1750E+03	9.9000E+01	9.5000E+01	9.5000E+01
3.3330E-01	2.1750E+03	9.9000E+01	9.5000E+01	9.5000E+01
7.2000E+02	2.1750E+03	0.0000E+00	0.0000E+00	0.0000E+00

Compartment number 5: MSL B Outboard - Airborne

Compartment number 6: MSL B Inboard - Surface

Compartment number 7: MSL B Outboard - Surface

Compartment number 8: Hold (By Surface Fixation)

Compartment number 9: Condenser - Airborne

Compartment number 10: Condenser - Surface

PATHWAY DATA

Pathway number 1: Filtered Environment to Control Room (Intake)

Pathway Filter: Removal Data

Time (hr)	Flow Rate (cfm)	Filter Efficiencies (%) Aerosol	Elemental	Organic
0.0000E+00	5.2500E+02	9.9000E+01	9.5000E+01	9.5000E+01
5.0000E-01	5.2500E+02	9.9000E+01	9.5000E+01	9.5000E+01
7.2000E+02	0.0000E+00	0.0000E+00	0.0000E+00	0.0000E+00

Pathway number 2: Unfiltered Environment to Control Room (Inleakage)

Pathway Filter: Removal Data

Time (hr)	Flow Rate (cfm)	Filter Efficiencies (%) Aerosol	Elemental	Organic
0.0000E+00	2.2500E+02	0.0000E+00	0.0000E+00	0.0000E+00
7.2000E+02	0.0000E+00	0.0000E+00	0.0000E+00	0.0000E+00

Pathway number 3: Control Room to Environment (Exhaust)

Pathway Filter: Removal Data

Time (hr)	Flow Rate (cfm)	Filter Efficiencies (%) Aerosol	Elemental	Organic
0.0000E+00	7.5000E+02	1.0000E+02	1.0000E+02	1.0000E+02
5.0000E-01	7.5000E+02	1.0000E+02	1.0000E+02	1.0000E+02
7.2000E+02	0.0000E+00	0.0000E+00	0.0000E+00	0.0000E+00

Pathway number 4: (Aerosol Transport 1) MSL B Inboard - Airborne to

Pathway Filter: Removal Data

Time (hr)	Flow Rate (cfm)	Filter Efficiencies (%) Aerosol	Elemental	Organic
0.0000E+00	9.3060E-01	1.0000E+02	0.0000E+00	1.0000E+02
2.0000E+00	9.3060E-01	1.0000E+02	0.0000E+00	1.0000E+02
2.4000E+01	5.1270E-01	1.0000E+02	0.0000E+00	1.0000E+02
9.6000E+01	5.1270E-01	1.0000E+02	0.0000E+00	1.0000E+02
7.2000E+02	0.0000E+00	0.0000E+00	0.0000E+00	0.0000E+00

Pathway number 5: (Deposition 1) MSL B Inboard - Airborne to MSL B I

Convection Data

Time (hr)	Flow Rate (% / day)
0.0000E+00	3.1420E+02
2.4000E+01	7.0350E+02
9.6000E+01	4.4780E+03
7.2000E+02	0.0000E+00

Pathway number 6: (Resuspension 1) MSL B Inboard - Surface to Enviro

Convection Data

Time (hr)	Flow Rate (% / day)
0.0000E+00	3.5580E-02
2.4000E+01	2.9950E-02
9.6000E+01	2.0170E-02
7.2000E+02	0.0000E+00

Pathway number 7: (Surface Fixation 1) MSL B Inboard - Surface to Ho

Convection Data

Time (hr)	Flow Rate (% / day)
0.0000E+00	1.5960E-02
2.4000E+01	1.1360E-02
9.6000E+01	5.2000E-03
7.2000E+02	0.0000E+00

Pathway number 8: (Deposition 2) MSL B Outboard - Airborne to MSL B

Convection Data

Time (hr)	Flow Rate (% / day)
0.0000E+00	3.1417E+02
2.4000E+01	7.0352E+02
9.6000E+01	4.4779E+03
7.2000E+02	0.0000E+00

Pathway number 9: (Resuspension 2) MSL B Outboard - Surface to Envi

Convection Data

Time (hr)	Flow Rate (% / day)
0.0000E+00	3.5580E-02
2.4000E+01	2.9950E-02
9.6000E+01	2.0170E-02
7.2000E+02	0.0000E+00

Pathway number 10: (Surface Fixation 2) MSL B Outboard - Surface to H

Convection Data

Time (hr)	Flow Rate (% / day)
0.0000E+00	1.5960E-02
2.4000E+01	1.1360E-02
9.6000E+01	5.2000E-03
7.2000E+02	0.0000E+00

Pathway number 11: (Aerosol Transport 2) MSL B Outboard - Airborne to

Pathway Filter: Removal Data

Time (hr)	Flow Rate (cfm)	Filter Efficiencies (%) Aerosol	Elemental	Organic
0.0000E+00	3.1880E+00	1.0000E+02	0.0000E+00	1.0000E+02
2.4000E+01	1.5130E+00	1.0000E+02	0.0000E+00	1.0000E+02
9.6000E+01	1.1480E+00	1.0000E+02	0.0000E+00	1.0000E+02
7.2000E+02	0.0000E+00	0.0000E+00	0.0000E+00	0.0000E+00

Pathway number 12: (Deposition 3) Condenser - Airborne to Condenser -

Convection Data

Time (hr)	Flow Rate (% / day)
0.0000E+00	5.2212E+03
2.4000E+01	5.2212E+03
9.6000E+01	5.2212E+03
7.2000E+02	0.0000E+00

Pathway number 13: (Resuspension 3) Condenser - Surface to Environme

Convection Data

Time (hr)	Flow Rate (% / day)

0.0000E+00	1.6090E-02
2.4000E+01	1.6090E-02
9.6000E+01	1.6090E-02
7.2000E+02	0.0000E+00

Pathway number 14: (Surface Fixation 3) Condenser - Surface to Hold

Convection Data

Time (hr)	Flow Rate (% / day)
0.0000E+00	3.3300E-03
2.4000E+01	3.3300E-03
9.6000E+01	3.3300E-03
7.2000E+02	0.0000E+00

Pathway number 15: Containment to MSL B Inboard - Airborne

Pathway Filter: Removal Data

Time (hr)	Flow Rate (cfm)	Filter Efficiencies (%) Aerosol	Elemental	Organic
0.0000E+00	1.5240E+00	1.0000E+02	0.0000E+00	1.0000E+02
2.0000E+00	9.3060E-01	1.0000E+02	0.0000E+00	1.0000E+02
2.4000E+01	5.1270E-01	1.0000E+02	0.0000E+00	1.0000E+02
9.6000E+01	5.1270E-01	1.0000E+02	0.0000E+00	1.0000E+02
7.2000E+02	0.0000E+00	0.0000E+00	0.0000E+00	0.0000E+00

LOCATION DATA

Location Control Room (CR) is in compartment 4

Location X/Q Data

Time (hr)	X/Q (s * m^-3)
0.0000E+00	6.8800E-03
2.0000E+00	5.1700E-03
8.0000E+00	2.0400E-03
2.4000E+01	1.2900E-03
9.6000E+01	9.6300E-04
7.2000E+02	0.0000E+00

Location Breathing Rate Data

Time (hr)	Breathing Rate (m^3 * sec^-1)
0.0000E+00	3.5000E-04
7.2000E+02	0.0000E+00

Location Occupancy Factor Data

Time (hr)	Occupancy Factor
0.0000E+00	1.0000E+00
2.4000E+01	6.0000E-01
9.6000E+01	4.0000E-01
7.2000E+02	0.0000E+00

Location Exclusion Area Boundary (EAB) is in compartment 3

Location X/Q Data

Time (hr)	X/Q (s * m^-3)
0.0000E+00	3.1800E-04
2.4000E+01	0.0000E+00

Location Breathing Rate Data

Time (hr)	Breathing Rate (m^3 * sec^-1)
0.0000E+00	3.5000E-04
8.0000E+00	1.8000E-04

```
  2.4000E+01                2.3000E-04
  7.2000E+02                0.0000E+00
Location Low Population Zone (LPZ)     is in compartment   3

Location X/Q Data
 Time (hr)          X/Q (s * m^-3)
  0.0000E+00           5.7900E-05
  8.0000E+00           4.1000E-05
  2.4000E+01           1.9500E-05
  4.8000E+01           1.9500E-05
  7.2000E+01           1.9500E-05
  9.6000E+01           6.6800E-06
  1.2000E+02           6.6800E-06
  1.6800E+02           6.6800E-06
  3.3600E+02           6.6800E-06
  7.2000E+02           0.0000E+00

Location Breathing Rate Data
 Time (hr)          Breathing Rate (m^3 * sec^-1)
  0.0000E+00                3.5000E-04
  8.0000E+00                1.8000E-04
  2.4000E+01                2.3000E-04
  7.2000E+02                0.0000E+00

USER SPECIFIED TIME STEP DATA - SUPPLEMENTAL TIME STEPS
     Time            Time step
      0.0000E+00       0.0000E+00
```

```
#######################################################################
   RADTRAD Version 3.03 (Spring 2001) run on  6/08/2006  at 17:03:52
#######################################################################
```

```
 ####   #    #  #####  #####   #    #  #####
#    #  #    #    #    #    #  #    #    #
#    #  #    #    #    #    #  #    #    #
#    #  #    #    #    #####   #    #    #
#    #  #    #    #    #       #    #    #
#    #  #    #    #    #       #    #    #
 ####    ####     #    #        ####     #
```

```
#######################################################################
                                 Dose Output
#######################################################################
```

Control Room (CR) Doses:

Time (h) = 0.3333	Whole Body	Thyroid	TEDE
Delta dose (rem)	7.0742E-13	3.5079E-09	1.1149E-10
Accumulated dose (rem)	7.0742E-13	3.5079E-09	1.1149E-10

Exclusion Area Boundary (EAB) Doses:

Time (h) = 0.3333	Whole Body	Thyroid	TEDE
Delta dose (rem)	8.8306E-11	1.9808E-08	7.1388E-10
Accumulated dose (rem)	8.8306E-11	1.9808E-08	7.1388E-10

Low Population Zone (LPZ) Doses:

Time (h) = 0.3333	Whole Body	Thyroid	TEDE
Delta dose (rem)	1.6078E-11	3.6066E-09	1.2998E-10
Accumulated dose (rem)	1.6078E-11	3.6066E-09	1.2998E-10

Control Room (CR) Doses:

Time (h) = 0.5000	Whole Body	Thyroid	TEDE
Delta dose (rem)	4.0382E-12	2.1151E-08	6.7142E-10
Accumulated dose (rem)	4.7456E-12	2.4659E-08	7.8291E-10

Exclusion Area Boundary (EAB) Doses:

Time (h) = 0.5000	Whole Body	Thyroid	TEDE
Delta dose (rem)	3.4623E-10	8.2415E-08	2.9467E-09
Accumulated dose (rem)	4.3454E-10	1.0222E-07	3.6606E-09

Low Population Zone (LPZ) Doses:

Time (h) = 0.5000	Whole Body	Thyroid	TEDE
Delta dose (rem)	6.3040E-11	1.5006E-08	5.3653E-10
Accumulated dose (rem)	7.9118E-11	1.8612E-08	6.6651E-10

Control Room (CR) Doses:

Time (h) = 2.0000	Whole Body	Thyroid	TEDE
Delta dose (rem)	3.2252E-09	2.2698E-05	7.1609E-07
Accumulated dose (rem)	3.2300E-09	2.2723E-05	7.1688E-07

Exclusion Area Boundary (EAB) Doses:

Time (h) = 2.0000	Whole Body	Thyroid	TEDE
Delta dose (rem)	1.0091E-07	3.3257E-05	1.1457E-06
Accumulated dose (rem)	1.0135E-07	3.3360E-05	1.1493E-06

Low Population Zone (LPZ) Doses:

Time (h) = 2.0000	Whole Body	Thyroid	TEDE
Delta dose (rem)	1.8374E-08	6.0554E-06	2.0860E-07
Accumulated dose (rem)	1.8453E-08	6.0740E-06	2.0926E-07

Control Room (CR) Doses:

Time (h) = 8.0000	Whole Body	Thyroid	TEDE
Delta dose (rem)	4.7412E-07	4.4511E-03	1.3910E-04
Accumulated dose (rem)	4.7735E-07	4.4738E-03	1.3981E-04

Exclusion Area Boundary (EAB) Doses:

Time (h) = 8.0000	Whole Body	Thyroid	TEDE
Delta dose (rem)	6.5482E-06	3.9499E-03	1.2959E-04
Accumulated dose (rem)	6.6496E-06	3.9832E-03	1.3074E-04

Low Population Zone (LPZ) Doses:

Time (h) = 8.0000	Whole Body	Thyroid	TEDE
Delta dose (rem)	1.1923E-06	7.1917E-04	2.3595E-05
Accumulated dose (rem)	1.2107E-06	7.2525E-04	2.3804E-05

Control Room (CR) Doses:

Time (h) = 24.0000	Whole Body	Thyroid	TEDE
Delta dose (rem)	2.6482E-06	3.0370E-02	9.4050E-04
Accumulated dose (rem)	3.1256E-06	3.4844E-02	1.0803E-03

Exclusion Area Boundary (EAB) Doses:

Time (h) = 24.0000	Whole Body	Thyroid	TEDE
Delta dose (rem)	4.6422E-05	2.8312E-02	9.2066E-04
Accumulated dose (rem)	5.3072E-05	3.2296E-02	1.0514E-03

Low Population Zone (LPZ) Doses:

Time (h) = 24.0000	Whole Body	Thyroid	TEDE
Delta dose (rem)	5.9852E-06	3.6503E-03	1.1870E-04
Accumulated dose (rem)	7.1960E-06	4.3756E-03	1.4250E-04

Control Room (CR) Doses:

Time (h) = 48.0000	Whole Body	Thyroid	TEDE
Delta dose (rem)	1.5409E-06	3.4391E-02	1.0566E-03
Accumulated dose (rem)	4.6665E-06	6.9235E-02	2.1369E-03

Exclusion Area Boundary (EAB) Doses:

Time (h) = 48.0000	Whole Body	Thyroid	TEDE
Delta dose (rem)	0.0000E+00	0.0000E+00	0.0000E+00
Accumulated dose (rem)	5.3072E-05	3.2296E-02	1.0514E-03

Low Population Zone (LPZ) Doses:

Time (h) = 48.0000	Whole Body	Thyroid	TEDE
Delta dose (rem)	4.2931E-06	6.3871E-03	2.0024E-04
Accumulated dose (rem)	1.1489E-05	1.0763E-02	3.4274E-04

Control Room (CR) Doses:

Time (h) = 72.0000	Whole Body	Thyroid	TEDE
Delta dose (rem)	9.6503E-07	4.5579E-02	1.3939E-03
Accumulated dose (rem)	5.6315E-06	1.1481E-01	3.5309E-03

Exclusion Area Boundary (EAB) Doses:

Time (h) = 72.0000	Whole Body	Thyroid	TEDE
Delta dose (rem)	0.0000E+00	0.0000E+00	0.0000E+00
Accumulated dose (rem)	5.3072E-05	3.2296E-02	1.0514E-03

Low Population Zone (LPZ) Doses:

Time (h) = 72.0000	Whole Body	Thyroid	TEDE
Delta dose (rem)	3.7387E-06	8.5505E-03	2.6505E-04
Accumulated dose (rem)	1.5228E-05	1.9313E-02	6.0779E-04

Control Room (CR) Doses:

Time (h) = 96.0000	Whole Body	Thyroid	TEDE
Delta dose (rem)	8.2835E-07	5.4840E-02	1.6736E-03
Accumulated dose (rem)	6.4599E-06	1.6965E-01	5.2045E-03

Exclusion Area Boundary (EAB) Doses:

Time (h) = 96.0000	Whole Body	Thyroid	TEDE
Delta dose (rem)	0.0000E+00	0.0000E+00	0.0000E+00
Accumulated dose (rem)	5.3072E-05	3.2296E-02	1.0514E-03

Low Population Zone (LPZ) Doses:

Time (h) = 96.0000	Whole Body	Thyroid	TEDE
Delta dose (rem)	3.6303E-06	1.0259E-02	3.1656E-04
Accumulated dose (rem)	1.8858E-05	2.9572E-02	9.2435E-04

Control Room (CR) Doses:

Time (h) = 120.0000	Whole Body	Thyroid	TEDE
Delta dose (rem)	3.2756E-07	2.4182E-02	7.3727E-04
Accumulated dose (rem)	6.7874E-06	1.9384E-01	5.9418E-03

Exclusion Area Boundary (EAB) Doses:

Time (h) = 120.0000	Whole Body	Thyroid	TEDE
Delta dose (rem)	0.0000E+00	0.0000E+00	0.0000E+00
Accumulated dose (rem)	5.3072E-05	3.2296E-02	1.0514E-03

Low Population Zone (LPZ) Doses:

Time (h) = 120.0000	Whole Body	Thyroid	TEDE
Delta dose (rem)	9.6172E-07	3.0308E-03	9.3324E-05
Accumulated dose (rem)	1.9820E-05	3.2603E-02	1.0177E-03

Control Room (CR) Doses:

Time (h) = 168.0000	Whole Body	Thyroid	TEDE
Delta dose (rem)	6.5933E-07	5.3383E-02	1.6265E-03
Accumulated dose (rem)	7.4468E-06	2.4722E-01	7.5683E-03

Exclusion Area Boundary (EAB) Doses:

Time (h) = 168.0000	Whole Body	Thyroid	TEDE
Delta dose (rem)	0.0000E+00	0.0000E+00	0.0000E+00
Accumulated dose (rem)	5.3072E-05	3.2296E-02	1.0514E-03

Low Population Zone (LPZ) Doses:

Time (h) = 168.0000	Whole Body	Thyroid	TEDE
Delta dose (rem)	2.0225E-06	6.8519E-03	2.1070E-04
Accumulated dose (rem)	2.1842E-05	3.9455E-02	1.2284E-03

Control Room (CR) Doses:

Time (h) = 336.0000	Whole Body	Thyroid	TEDE
Delta dose (rem)	2.3913E-06	2.1041E-01	6.4087E-03
Accumulated dose (rem)	9.8380E-06	4.5763E-01	1.3977E-02

Exclusion Area Boundary (EAB) Doses:

Time (h) = 336.0000	Whole Body	Thyroid	TEDE
Delta dose (rem)	0.0000E+00	0.0000E+00	0.0000E+00
Accumulated dose (rem)	5.3072E-05	3.2296E-02	1.0514E-03

Low Population Zone (LPZ) Doses:

Time (h) = 336.0000	Whole Body	Thyroid	TEDE
Delta dose (rem)	7.6032E-06	2.6956E-02	8.2830E-04
Accumulated dose (rem)	2.9446E-05	6.6410E-02	2.0567E-03

Control Room (CR) Doses:

Time (h) = 720.0000	Whole Body	Thyroid	TEDE
Delta dose (rem)	3.7065E-06	3.6641E-01	1.1159E-02
Accumulated dose (rem)	1.3545E-05	8.2405E-01	2.5136E-02

Exclusion Area Boundary (EAB) Doses:

Time (h) = 720.0000	Whole Body	Thyroid	TEDE
Delta dose (rem)	0.0000E+00	0.0000E+00	0.0000E+00
Accumulated dose (rem)	5.3072E-05	3.2296E-02	1.0514E-03

Low Population Zone (LPZ) Doses:

Time (h) = 720.0000	Whole Body	Thyroid	TEDE
Delta dose (rem)	1.2996E-05	4.6873E-02	1.4401E-03
Accumulated dose (rem)	4.2442E-05	1.1328E-01	3.4967E-03

```
#####################################################################
                              I-131 Summary
#####################################################################
```

Time (hr)	Containment I-131 (Curies)	MSL B Inboard - Airbo I-131 (Curies)	Environment I-131 (Curies)
0.000	5.2640E+03	1.1028E-08	8.5414E-19
0.333	2.8290E+06	6.6104E-06	1.1707E-07
0.500	4.0239E+06	9.9107E-06	6.0525E-07
0.800	7.9884E+06	1.9800E-05	4.1288E-06
1.100	1.1679E+07	2.9668E-05	1.5693E-05
1.400	1.5113E+07	3.9513E-05	4.3806E-05
1.700	1.8307E+07	4.9337E-05	1.0037E-04
2.000	2.1276E+07	5.9137E-05	2.0051E-04
2.300	1.6058E+07	3.6069E-05	3.6101E-04
2.600	1.2209E+07	3.6028E-05	5.9465E-04
2.900	9.3713E+06	3.5988E-05	9.1165E-04
3.200	7.2781E+06	3.5948E-05	1.3210E-03
3.500	5.7342E+06	3.5907E-05	1.8307E-03
3.800	4.5953E+06	3.5867E-05	2.4479E-03
4.100	3.7551E+06	3.5827E-05	3.1791E-03
4.400	3.1351E+06	3.5787E-05	4.0300E-03
4.700	2.6775E+06	3.5746E-05	5.0059E-03
5.000	2.3396E+06	3.5706E-05	6.1115E-03
5.300	2.1768E+06	3.5666E-05	7.3511E-03
5.600	2.0415E+06	3.5626E-05	8.7284E-03
5.900	1.9291E+06	3.5586E-05	1.0247E-02
6.200	1.8355E+06	3.5547E-05	1.1910E-02
6.500	1.7577E+06	3.5507E-05	1.3720E-02
6.800	1.6930E+06	3.5467E-05	1.5679E-02
7.100	1.6390E+06	3.5427E-05	1.7791E-02
7.400	1.5940E+06	3.5387E-05	2.0056E-02
7.700	1.5564E+06	3.5348E-05	2.2476E-02
8.000	1.5249E+06	3.5308E-05	2.5054E-02
8.300	1.4986E+06	3.5268E-05	2.7791E-02
8.600	1.4790E+06	3.5229E-05	3.0687E-02
8.900	1.4622E+06	3.5189E-05	3.3744E-02
9.200	1.4476E+06	3.5150E-05	3.6964E-02
9.500	1.4350E+06	3.5111E-05	4.0345E-02
9.800	1.4240E+06	3.5071E-05	4.3891E-02
10.100	1.4145E+06	3.5032E-05	4.7600E-02
10.400	1.4061E+06	3.4993E-05	5.1474E-02
24.000	1.2997E+06	3.3257E-05	3.9961E-01
48.000	1.1900E+06	3.0451E-05	1.5718E+00
72.000	1.0896E+06	2.7881E-05	3.2319E+00
96.000	9.9764E+05	2.5529E-05	5.2818E+00
120.000	9.1346E+05	2.3374E-05	7.0755E+00
168.000	7.6580E+05	1.9596E-05	1.1167E+01
336.000	4.1314E+05	1.0572E-05	2.7341E+01
720.000	1.0081E+05	2.5796E-06	5.5478E+01

Time (hr)	Control Room I-131 (Curies)	MSL B Outboard - Airb I-131 (Curies)	MSL B Inboard - Surfa I-131 (Curies)
0.000	6.9671E-22	1.7098E-05	4.0092E-13
0.333	8.7619E-11	5.9427E+00	1.4422E-07
0.500	4.3476E-10	1.3140E+01	3.2437E-07
0.800	2.7670E-09	3.5817E+01	9.0725E-07
1.100	9.8771E-09	7.2225E+01	1.8773E-06
1.400	2.5969E-08	1.2109E+02	3.2331E-06
1.700	5.6127E-08	1.8124E+02	4.9735E-06

2.000	1.0591E-07	2.5162E+02	7.0972E-06
2.300	1.5288E-07	2.8649E+02	8.5061E-06
2.600	2.2134E-07	3.1815E+02	9.9120E-06
2.900	3.0930E-07	3.4687E+02	1.1315E-05
3.200	4.1481E-07	3.7293E+02	1.2714E-05
3.500	5.3605E-07	3.9656E+02	1.4111E-05
3.800	6.7140E-07	4.1799E+02	1.5504E-05
4.100	8.1943E-07	4.3741E+02	1.6895E-05
4.400	9.7883E-07	4.5501E+02	1.8282E-05
4.700	1.1485E-06	4.7095E+02	1.9666E-05
5.000	1.3273E-06	4.8538E+02	2.1047E-05
5.300	1.5144E-06	4.9844E+02	2.2425E-05
5.600	1.7090E-06	5.1026E+02	2.3800E-05
5.900	1.9103E-06	5.2094E+02	2.5172E-05
6.200	2.1176E-06	5.3059E+02	2.6541E-05
6.500	2.3304E-06	5.3930E+02	2.7907E-05
6.800	2.5481E-06	5.4715E+02	2.9269E-05
7.100	2.7701E-06	5.5424E+02	3.0629E-05
7.400	2.9961E-06	5.6062E+02	3.1986E-05
7.700	3.2256E-06	5.6635E+02	3.3339E-05
8.000	3.4582E-06	5.7151E+02	3.4690E-05
8.300	2.8561E-06	5.7613E+02	3.6038E-05
8.600	2.4857E-06	5.8027E+02	3.7382E-05
8.900	2.2703E-06	5.8397E+02	3.8724E-05
9.200	2.1586E-06	5.8728E+02	4.0062E-05
9.500	2.1165E-06	5.9022E+02	4.1398E-05
9.800	2.1208E-06	5.9283E+02	4.2731E-05
10.100	2.1564E-06	5.9515E+02	4.4060E-05
10.400	2.2129E-06	5.9719E+02	4.5387E-05
24.000	6.5710E-06	5.9337E+02	1.0247E-04
48.000	6.7514E-06	2.4691E+02	3.0836E-04
72.000	8.8158E-06	2.2605E+02	4.7907E-04
96.000	1.0487E-05	2.0697E+02	6.1905E-04
120.000	6.6906E-06	3.7232E+01	1.6154E-03
168.000	7.6883E-06	3.1213E+01	3.1168E-03
336.000	8.1040E-06	1.6840E+01	5.0352E-03
720.000	4.2274E-06	4.1090E+00	3.1359E-03

	MSL B Outboard - Surf Hold	(By Surface Fixa	Condenser - Airborne
Time (hr)	I-131 (Curies)	I-131 (Curies)	I-131 (Curies)
0.000	4.1436E-10	3.8311E-19	5.7592E-10
0.333	8.7173E-02	5.0378E-08	1.0198E-01
0.500	2.9038E-01	2.5625E-07	3.1348E-01
0.800	1.2038E+00	1.7078E-06	1.1456E+00
1.100	3.2802E+00	6.3788E-06	2.7967E+00
1.400	7.0318E+00	1.7555E-05	5.3953E+00
1.700	1.2922E+01	3.9743E-05	8.9596E+00
2.000	2.1371E+01	7.8588E-05	1.3455E+01
2.300	3.1920E+01	1.4021E-04	1.7869E+01
2.600	4.3761E+01	2.2892E-04	2.1490E+01
2.900	5.6774E+01	3.4815E-04	2.4576E+01
3.200	7.0847E+01	5.0091E-04	2.7272E+01
3.500	8.5879E+01	6.8990E-04	2.9664E+01
3.800	1.0178E+02	9.1755E-04	3.1806E+01
4.100	1.1846E+02	1.1860E-03	3.3733E+01
4.400	1.3585E+02	1.4973E-03	3.5473E+01
4.700	1.5388E+02	1.8531E-03	3.7046E+01
5.000	1.7249E+02	2.2551E-03	3.8469E+01
5.300	1.9161E+02	2.7046E-03	3.9757E+01
5.600	2.1121E+02	3.2029E-03	4.0922E+01

5.900	2.3122E+02	3.7511E-03	4.1976E+01
6.200	2.5161E+02	4.3504E-03	4.2929E+01
6.500	2.7233E+02	5.0014E-03	4.3790E+01
6.800	2.9336E+02	5.7052E-03	4.4568E+01
7.100	3.1466E+02	6.4623E-03	4.5270E+01
7.400	3.3620E+02	7.2735E-03	4.5904E+01
7.700	3.5796E+02	8.1392E-03	4.6474E+01
8.000	3.7990E+02	9.0600E-03	4.6988E+01
8.300	4.0201E+02	1.0036E-02	4.7449E+01
8.600	4.2427E+02	1.1068E-02	4.7864E+01
8.900	4.4666E+02	1.2157E-02	4.8236E+01
9.200	4.6917E+02	1.3301E-02	4.8569E+01
9.500	4.9177E+02	1.4503E-02	4.8866E+01
9.800	5.1445E+02	1.5761E-02	4.9131E+01
10.100	5.3721E+02	1.7076E-02	4.9367E+01
10.400	5.6003E+02	1.8448E-02	4.9576E+01
24.000	1.5803E+03	1.3962E-01	4.9639E+01
48.000	3.4167E+03	4.9198E-01	9.8040E+00
72.000	4.7247E+03	9.8457E-01	8.9752E+00
96.000	5.7898E+03	1.5723E+00	8.2178E+00
120.000	7.1262E+03	1.8635E+00	1.1217E+00
168.000	8.7947E+03	2.5009E+00	9.4035E-01
336.000	1.0111E+04	4.4260E+00	5.0731E-01
720.000	5.5191E+03	4.7121E+00	1.2379E-01

Time (hr)	Condenser - Surface I-131 (Curies)
0.000	1.7397E-13
0.333	1.9222E-02
0.500	9.0242E-02
0.800	5.2807E-01
1.100	1.7638E+00
1.400	4.3811E+00
1.700	9.0066E+00
2.000	1.6258E+01
2.300	2.6510E+01
2.600	3.9353E+01
2.900	5.4359E+01
3.200	7.1229E+01
3.500	8.9737E+01
3.800	1.0970E+02
4.100	1.3097E+02
4.400	1.5341E+02
4.700	1.7690E+02
5.000	2.0135E+02
5.300	2.2665E+02
5.600	2.5273E+02
5.900	2.7950E+02
6.200	3.0689E+02
6.500	3.3485E+02
6.800	3.6331E+02
7.100	3.9223E+02
7.400	4.2154E+02
7.700	4.5122E+02
8.000	4.8122E+02
8.300	5.1150E+02
8.600	5.4204E+02
8.900	5.7280E+02
9.200	6.0375E+02
9.500	6.3488E+02

9.800	6.6616E+02
10.100	6.9757E+02
10.400	7.2909E+02
24.000	2.1478E+03
48.000	2.5855E+03
72.000	2.8406E+03
96.000	3.0349E+03
120.000	2.8538E+03
168.000	2.4993E+03
336.000	1.5516E+03
720.000	4.9424E+02

##

Cumulative Dose Summary

##

	Control Room (CR)		Exclusion Area Bounda		Low Population Zone (	
Time	Thyroid	TEDE	Thyroid	TEDE	Thyroid	TEDE
(hr)	(rem)	(rem)	(rem)	(rem)	(rem)	(rem)
0.000	0.0000E+00	0.0000E+00	0.0000E+00	0.0000E+00	0.0000E+00	0.0000E+00
0.333	3.5079E-09	1.1149E-10	1.9808E-08	7.1388E-10	3.6066E-09	1.2998E-10
0.500	2.4659E-08	7.8291E-10	1.0222E-07	3.6606E-09	1.8612E-08	6.6651E-10
0.800	2.4473E-07	7.7577E-09	6.9522E-07	2.4652E-08	1.2658E-07	4.4885E-09
1.100	1.1746E-06	3.7182E-08	2.6343E-06	9.2592E-08	4.7965E-07	1.6859E-08
1.400	3.8898E-06	1.2297E-07	7.3310E-06	2.5572E-07	1.3348E-06	4.6559E-08
1.700	1.0196E-05	3.2197E-07	1.6747E-05	5.8032E-07	3.0493E-06	1.0566E-07
2.000	2.2723E-05	7.1688E-07	3.3360E-05	1.1493E-06	6.0740E-06	2.0926E-07
2.300	4.2818E-05	1.3497E-06	5.9895E-05	2.0531E-06	1.0905E-05	3.7383E-07
2.600	7.1917E-05	2.2654E-06	9.8390E-05	3.3578E-06	1.7914E-05	6.1137E-07
2.900	1.1317E-04	3.5622E-06	1.5045E-04	5.1141E-06	2.7393E-05	9.3115E-07
3.200	1.6937E-04	5.3278E-06	2.1745E-04	7.3655E-06	3.9592E-05	1.3411E-06
3.500	2.4301E-04	7.6397E-06	3.0060E-04	1.0149E-05	5.4732E-05	1.8480E-06
3.800	3.3629E-04	1.0566E-05	4.0098E-04	1.3499E-05	7.3008E-05	2.4578E-06
4.100	4.5115E-04	1.4168E-05	5.1951E-04	1.7442E-05	9.4590E-05	3.1758E-06
4.400	5.8932E-04	1.8497E-05	6.5703E-04	2.2004E-05	1.1963E-04	4.0065E-06
4.700	7.5231E-04	2.3602E-05	8.1427E-04	2.7208E-05	1.4826E-04	4.9539E-06
5.000	9.4146E-04	2.9523E-05	9.9188E-04	3.3071E-05	1.8060E-04	6.0215E-06
5.300	1.1580E-03	3.6297E-05	1.1904E-03	3.9612E-05	2.1675E-04	7.2123E-06
5.600	1.4029E-03	4.3956E-05	1.4104E-03	4.6843E-05	2.5680E-04	8.5290E-06
5.900	1.6771E-03	5.2528E-05	1.6522E-03	5.4778E-05	3.0083E-04	9.9738E-06
6.200	1.9814E-03	6.2038E-05	1.9163E-03	6.3428E-05	3.4892E-04	1.1549E-05
6.500	2.3166E-03	7.2507E-05	2.2030E-03	7.2801E-05	4.0111E-04	1.3255E-05
6.800	2.6832E-03	8.3954E-05	2.5125E-03	8.2904E-05	4.5746E-04	1.5095E-05
7.100	3.0818E-03	9.6395E-05	2.8451E-03	9.3745E-05	5.1802E-04	1.7069E-05
7.400	3.5128E-03	1.0984E-04	3.2010E-03	1.0533E-04	5.8282E-04	1.9178E-05
7.700	3.9767E-03	1.2431E-04	3.5803E-03	1.1766E-04	6.5188E-04	2.1423E-05
8.000	4.4738E-03	1.3981E-04	3.9832E-03	1.3074E-04	7.2525E-04	2.3804E-05
8.300	4.9392E-03	1.5432E-04	4.2026E-03	1.3813E-04	7.5354E-04	2.4757E-05
8.600	5.3325E-03	1.6658E-04	4.4343E-03	1.4592E-04	7.8340E-04	2.5762E-05
8.900	5.6822E-03	1.7748E-04	4.6782E-03	1.5411E-04	8.1485E-04	2.6817E-05
9.200	6.0075E-03	1.8761E-04	4.9344E-03	1.6269E-04	8.4789E-04	2.7924E-05
9.500	6.3209E-03	1.9738E-04	5.2029E-03	1.7167E-04	8.8251E-04	2.9082E-05
9.800	6.6311E-03	2.0704E-04	5.4838E-03	1.8105E-04	9.1871E-04	3.0291E-05
10.100	6.9436E-03	2.1677E-04	5.7769E-03	1.9082E-04	9.5651E-04	3.1551E-05
10.400	7.2621E-03	2.2668E-04	6.0824E-03	2.0099E-04	9.9589E-04	3.2862E-05
24.000	3.4844E-02	1.0803E-03	3.2296E-02	1.0514E-03	4.3756E-03	1.4250E-04
48.000	6.9235E-02	2.1369E-03	3.2296E-02	1.0514E-03	1.0763E-02	3.4274E-04
72.000	1.1481E-01	3.5309E-03	3.2296E-02	1.0514E-03	1.9313E-02	6.0779E-04
96.000	1.6965E-01	5.2045E-03	3.2296E-02	1.0514E-03	2.9572E-02	9.2435E-04
120.000	1.9384E-01	5.9418E-03	3.2296E-02	1.0514E-03	3.2603E-02	1.0177E-03

```
 168.000 2.4722E-01 7.5683E-03 3.2296E-02 1.0514E-03 3.9455E-02 1.2284E-03
 336.000 4.5763E-01 1.3977E-02 3.2296E-02 1.0514E-03 6.6410E-02 2.0567E-03
 720.000 8.2405E-01 2.5136E-02 3.2296E-02 1.0514E-03 1.1328E-01 3.4967E-03

#####################################################################
                        Worst Two-Hour Doses
#####################################################################

Exclusion Area Boundary (EAB)
   Time   Whole Body    Thyroid        TEDE
   (hr)     (rem)        (rem)         (rem)
   10.4   6.0756E-06   3.8549E-03   1.2506E-04
```

```
 ######################################################################
    RADTRAD Version 3.03 (Spring 2001) run on  6/08/2006  at 16:15:53
 ######################################################################

 ######################################################################
                      File information
 ######################################################################

 Plant file           = P:\Users\Nuc\Exelon EOC\Discipline
Files\Process\AST\Limerick AST\LGS LOCA\RADTRAD\Rev 2 Final DBA Runs\LGS LOCA MSIV
Leak (24-hr Settling Distribution) - All of HP Condenser Tubes - 225cfm CR Unfilt
Inleak - Rad Mode.psf
 Inventory file       = c:\program files\radtrad3-03\defaults\limerick ast source
terms.nif
 Release file         = c:\program files\radtrad3-03\defaults\bwr_dba.rft
 Dose Conversion file = c:\program files\radtrad3-03\defaults\fgr11&12.inp
```

```
 #####    ####   #####    #  #     #  #####   #    #  #####
 #    #  #       #        #  ##    #  #    #  #    #    #
 #    #  #       #        #  # #   #  #    #  #    #    #
 #####    ####   ####     #  #  #  #  #####   #    #    #
 #            #  #        #  #   # #  #       #    #    #
 #            #  #        #  #    ##  #       #    #    #
 #        ####   #        #  #     #  #        ####     #
```

```
 Radtrad 3.03 4/15/2001
 LGS LOCA 200scfh MSIV Leak - Leak to Condenser - MSL Pipe Deposition Credit (24-Hr
20-Group Aerosol Settling with Projected Area Assumption; 2-Hr Mixing Delay) - 95%
CREFAS Charcoal Eff. No Delay - Rad Mode 225cfm Control Room Inleakage - 3000cfm -
10% (217
 Nuclide Inventory File:
 c:\program files\radtrad3-03\defaults\limerick ast source terms.nif
 Plant Power Level:
  3.5270E+03
 Compartments:
   9
 Compartment 1:
 Containment
   3
  3.7907E+05
   0
   0
   0
   1
   0
 Compartment 2:
 (Node 1) Inboard MSL A Volume
   3
  2.5800E+02
   0
   0
   0
   0
   0
```

```
Compartment 3:
(Node 1) Inboard MSL B Volume
  3
 1.0000E-08
  0
  0
  0
  0
  0
Compartment 4:
(Node 2) Outboard MSL A Volume
  3
 1.1820E+03
  0
  0
  0
  0
  0
Compartment 5:
(Node 2) Outboard MSL B Volume
  3
 1.0510E+03
  0
  0
  0
  0
  0
Compartment 6:
Condenser
  3
 5.4750E+04
  0
  0
  0
  0
  0
Compartment 7:
Environment
  2
 0.0000E+00
  0
  0
  0
  0
  0
Compartment 8:
Control Room
  1
 1.2600E+05
  0
  0
  1
  0
  0
Compartment 9:
Hold
  3
 1.0000E+00
  0
  0
```

```
  0
  0
  0
Pathways:
 11
Pathway 1:
Containment to (Node 1) Inboard MSL A Volume
  1
  2
  2
Pathway 2:
Containment to (Node 1) Inboard MSL B Volume
  1
  3
  2
Pathway 3:
Containment to Hold (PC Leakage)
  1
  9
  4
Pathway 4:
(Node 1) Inboard MSL A Volume to (Node 2) Outboard MSL A Volume
  2
  4
  2
Pathway 5:
(Node 1) Inboard MSL B Volume to (Node 2) Outboard MSL B Volume
  3
  5
  2
Pathway 6:
(Node 2) Outboard MSL A Volume to Condenser
  4
  6
  2
Pathway 7:
(Node 2) Outboard MSL B Volume to Condenser
  5
  6
  2
Pathway 8:
Condenser Leak to Environment
  6
  7
  2
Pathway 9:
Filtered Intake to Control Room
  7
  8
  2
Pathway 10:
Unfiltered Inleakage to Control Room
  7
  8
  2
Pathway 11:
Control Room Exhaust
  8
  7
  2
```

```
End of Plant Model File
Scenario Description Name:

Plant Model Filename:

Source Term:
  1
  1   1.0000E+00
c:\program files\radtrad3-03\defaults\fgrl1&12.inp
c:\program files\radtrad3-03\defaults\bwr_dba.rft
  0.0000E+00
  1
  9.5000E-01   4.8500E-02   1.5000E-03   1.0000E+00
Overlying Pool:
  0
  0.0000E+00
  0
  0
  0
  0
Compartments:
  9
Compartment 1:
  0
  1
  0
  0
  0
  0
  0
  3
  3
  1.0000E+01
  1
  1
  0.0000E+00   0.0000E+00
Compartment 2:
  0
  1
  0
  0
  0
  0
  0
  0
  0
Compartment 3:
  0
  1
  0
  0
  0
  0
  0
  0
  0
Compartment 4:
  0
  1
  0
```

```
  0
  0
  0
  0
  0
  0
Compartment 5:
  0
  1
  0
  0
  0
  0
  0
  0
  0
Compartment 6:
  0
  1
  0
  0
  0
  0
  0
  0
  0
Compartment 7:
  0
  1
  0
  0
  0
  0
  0
  0
  0
Compartment 8:
  0
  1
  0
  0
  0
  0
  1
  2.1750E+03
  3
  0.0000E+00   9.9000E+01   9.5000E+01   9.5000E+01
  5.0000E-01   9.9000E+01   9.5000E+01   9.5000E+01
  7.2000E+02   0.0000E+00   0.0000E+00   0.0000E+00
  0
  0
Compartment 9:
  0
  1
  0
  0
  0
  0
  0
  0
```

```
  0
Pathways:
 11
Pathway 1:
  0
  0
  0
  0
  0
  1
  5
  0.0000E+00   1.5240E+00   9.9990E+01   9.9990E+01   0.0000E+00
  2.0000E+00   9.3060E-01   9.9990E+01   9.9990E+01   0.0000E+00
  2.4000E+01   5.1270E-01   0.0000E+00   9.9990E+01   0.0000E+00
  9.6000E+01   5.1270E-01   0.0000E+00   9.9990E+01   0.0000E+00
  7.2000E+02   0.0000E+00   0.0000E+00   0.0000E+00   0.0000E+00
  0
  0
  0
  0
  0
  0
Pathway 2:
  0
  0
  0
  0
  0
  1
  5
  0.0000E+00   1.5240E+00   9.9990E+01   9.9990E+01   0.0000E+00
  2.0000E+00   9.3060E-01   9.9990E+01   9.9990E+01   0.0000E+00
  2.4000E+01   5.1270E-01   0.0000E+00   9.9990E+01   0.0000E+00
  9.6000E+01   5.1270E-01   0.0000E+00   9.9990E+01   0.0000E+00
  7.2000E+02   0.0000E+00   0.0000E+00   0.0000E+00   0.0000E+00
  0
  0
  0
  0
  0
  0
Pathway 3:
  0
  0
  0
  0
  0
  0
  0
  0
  0
  0
  1
  3
  0.0000E+00   5.0000E-01
  2.4000E+01   2.5000E-01
  7.2000E+02   0.0000E+00
  0
Pathway 4:
  0
```

```
  0
  0
  0
  0
  1
  4
  0.0000E+00   9.3060E-01   0.0000E+00   0.0000E+00   0.0000E+00
  2.4000E+01   5.1270E-01   0.0000E+00   0.0000E+00   0.0000E+00
  9.6000E+01   5.1270E-01   0.0000E+00   0.0000E+00   0.0000E+00
  7.2000E+02   0.0000E+00   0.0000E+00   0.0000E+00   0.0000E+00
  0
  0
  0
  0
  0
  0
Pathway 5:
  0
  0
  0
  0
  0
  1
  4
  0.0000E+00   9.3060E-01   0.0000E+00   0.0000E+00   0.0000E+00
  2.4000E+01   5.1270E-01   0.0000E+00   0.0000E+00   0.0000E+00
  9.6000E+01   5.1270E-01   0.0000E+00   0.0000E+00   0.0000E+00
  7.2000E+02   0.0000E+00   0.0000E+00   0.0000E+00   0.0000E+00
  0
  0
  0
  0
  0
  0
Pathway 6:
  0
  0
  0
  0
  0
  1
  4
  0.0000E+00   3.1880E+00   0.0000E+00   0.0000E+00   0.0000E+00
  2.4000E+01   1.5130E+00   0.0000E+00   0.0000E+00   0.0000E+00
  9.6000E+01   1.1480E+00   0.0000E+00   0.0000E+00   0.0000E+00
  7.2000E+02   0.0000E+00   0.0000E+00   0.0000E+00   0.0000E+00
  0
  0
  0
  0
  0
  0
Pathway 7:
  0
  0
  0
  0
  0
  1
  4
```

```
  0.0000E+00   3.1880E+00   0.0000E+00   0.0000E+00   0.0000E+00
  2.4000E+01   1.5130E+00   0.0000E+00   0.0000E+00   0.0000E+00
  9.6000E+01   1.1480E+00   0.0000E+00   0.0000E+00   0.0000E+00
  7.2000E+02   0.0000E+00   0.0000E+00   0.0000E+00   0.0000E+00
  0
  0
  0
  0
  0
  0
Pathway 8:
  0
  0
  0
  0
  0
  1
  4
  0.0000E+00   3.6620E+00   0.0000E+00   0.0000E+00   0.0000E+00
  2.4000E+01   2.0180E+00   0.0000E+00   0.0000E+00   0.0000E+00
  9.6000E+01   2.0180E+00   0.0000E+00   0.0000E+00   0.0000E+00
  7.2000E+02   0.0000E+00   0.0000E+00   0.0000E+00   0.0000E+00
  0
  0
  0
  0
  0
  0
Pathway 9:
  0
  0
  0
  0
  0
  1
  3
  0.0000E+00   5.2500E+02   9.9000E+01   9.5000E+01   9.5000E+01
  5.0000E-01   5.2500E+02   9.9000E+01   9.5000E+01   9.5000E+01
  7.2000E+02   0.0000E+00   0.0000E+00   0.0000E+00   0.0000E+00
  0
  0
  0
  0
  0
  0
Pathway 10:
  0
  0
  0
  0
  0
  1
  2
  0.0000E+00   2.2500E+02   0.0000E+00   0.0000E+00   0.0000E+00
  7.2000E+02   0.0000E+00   0.0000E+00   0.0000E+00   0.0000E+00
  0
  0
  0
  0
  0
```

```
  0
Pathway 11:
  0
  0
  0
  0
  0
  1
  3
  0.0000E+00   7.5000E+02   1.0000E+02   1.0000E+02   1.0000E+02
  5.0000E-01   7.5000E+02   1.0000E+02   1.0000E+02   1.0000E+02
  7.2000E+02   0.0000E+00   0.0000E+00   0.0000E+00   0.0000E+00
  0
  0
  0
  0
  0
  0
Dose Locations:
  3
Location 1:
Exclusion Area Boundary (EAB)
  7
  1
  2
  0.0000E+00   3.1800E-04
  2.4000E+01   0.0000E+00
  1
  4
  0.0000E+00   3.5000E-04
  8.0000E+00   1.8000E-04
  2.4000E+01   2.3000E-04
  7.2000E+02   0.0000E+00
  0
Location 2:
Low Population Zone (LPZ)
  7
  1
 10
  0.0000E+00   5.7900E-05
  8.0000E+00   4.1000E-05
  2.4000E+01   1.9500E-05
  4.8000E+01   1.9500E-05
  7.2000E+01   1.9500E-05
  9.6000E+01   6.6800E-06
  1.2000E+02   6.6800E-06
  1.6800E+02   6.6800E-06
  3.3600E+02   6.6800E-06
  7.2000E+02   0.0000E+00
  1
  4
  0.0000E+00   3.5000E-04
  8.0000E+00   1.8000E-04
  2.4000E+01   2.3000E-04
  7.2000E+02   0.0000E+00
  0
Location 3:
Control Room (CR)
  8
  0
```

```
  1
  2
  0.0000E+00   3.5000E-04
  7.2000E+02   0.0000E+00
  1
  4
  0.0000E+00   1.0000E+00
  2.4000E+01   6.0000E-01
  9.6000E+01   4.0000E-01
  7.2000E+02   0.0000E+00
 Effective Volume Location:
  1
  6
  0.0000E+00   6.8800E-03
  2.0000E+00   5.1700E-03
  8.0000E+00   2.0400E-03
  2.4000E+01   1.2900E-03
  9.6000E+01   9.6300E-04
  7.2000E+02   0.0000E+00
 Simulation Parameters:
  1
  0.0000E+00   0.0000E+00
 Output Filename:
 P:\Users\Nuc\Exelon EOC\Discipline Files\Process\AST\Limerick AST\LGS
LOCA\RADTRAD\Rev 2 Final DBA Runs\LGS LOCA MSIV Leak (24-hr Settling Distribution)
- All of HP Condenser Tubes - 225cfm CR Unfilt Inleak - Rad Mode.o0
  1
  1
  1
  0
  0
 End of Scenario File
```

```
#######################################################################
   RADTRAD Version 3.03 (Spring 2001) run on  6/08/2006  at 16:15:53
#######################################################################

#######################################################################
                     Plant Description
#######################################################################

Number of Nuclides =  60

Inventory Power =   1.0000E+00 MWth
Plant Power Level =   3.5270E+03 MWth

Number of compartments    =   9

Compartment information

Compartment number  1  (Source term fraction =   1.0000E+00
)
Name: Containment
Compartment volume =   3.7907E+05 (Cubic feet)
Compartment type is Normal
Removal devices within compartment:
     Deposition
Pathways into and out of compartment  1
   Exit Pathway Number    1: Containment to (Node 1) Inboard MSL A Volume
   Exit Pathway Number    2: Containment to (Node 1) Inboard MSL B Volume
   Exit Pathway Number    3: Containment to Hold (PC Leakage)

Compartment number  2
Name: (Node 1) Inboard MSL A Volume
Compartment volume =   2.5800E+02 (Cubic feet)
Compartment type is Normal
Pathways into and out of compartment  2
   Inlet Pathway Number   1: Containment to (Node 1) Inboard MSL A Volume
   Exit Pathway Number    4: (Node 1) Inboard MSL A Volume to (Node 2) Outboard

Compartment number  3
Name: (Node 1) Inboard MSL B Volume
Compartment volume =   1.0000E-08 (Cubic feet)
Compartment type is Normal
Pathways into and out of compartment  3
   Inlet Pathway Number   2: Containment to (Node 1) Inboard MSL B Volume
   Exit Pathway Number    5: (Node 1) Inboard MSL B Volume to (Node 2) Outboard

Compartment number  4
Name: (Node 2) Outboard MSL A Volume
Compartment volume =   1.1820E+03 (Cubic feet)
Compartment type is Normal
Pathways into and out of compartment  4
   Inlet Pathway Number   4: (Node 1) Inboard MSL A Volume to (Node 2) Outboard
   Exit Pathway Number    6: (Node 2) Outboard MSL A Volume to Condenser

Compartment number  5
Name: (Node 2) Outboard MSL B Volume
Compartment volume =   1.0510E+03 (Cubic feet)
Compartment type is Normal
Pathways into and out of compartment  5
   Inlet Pathway Number   5: (Node 1) Inboard MSL B Volume to (Node 2) Outboard
```

```
   Exit Pathway Number    7: (Node 2) Outboard MSL B Volume to Condenser

Compartment number  6
Name: Condenser
Compartment volume =   5.4750E+04 (Cubic feet)
Compartment type is Normal
Pathways into and out of compartment  6
   Inlet Pathway Number   6: (Node 2) Outboard MSL A Volume to Condenser
   Inlet Pathway Number   7: (Node 2) Outboard MSL B Volume to Condenser
   Exit Pathway Number    8: Condenser Leak to Environment

Compartment number  7
Name: Environment
Compartment type is Environment
Pathways into and out of compartment  7
   Inlet Pathway Number   8: Condenser Leak to Environment
   Inlet Pathway Number  11: Control Room Exhaust
   Exit Pathway Number    9: Filtered Intake to Control Room
   Exit Pathway Number   10: Unfiltered Inleakage to Control Room

Compartment number  8
Name: Control Room
Compartment volume =   1.2600E+05 (Cubic feet)
Compartment type is Control Room
Removal devices within compartment:
     Filter(s)
Pathways into and out of compartment  8
   Inlet Pathway Number   9: Filtered Intake to Control Room
   Inlet Pathway Number  10: Unfiltered Inleakage to Control Room
   Exit Pathway Number   11: Control Room Exhaust

Compartment number  9
Name: Hold
Compartment volume =   1.0000E+00 (Cubic feet)
Compartment type is Normal
Pathways into and out of compartment  9
   Inlet Pathway Number   3: Containment to Hold (PC Leakage)

Total number of pathways =  11
```

```
#######################################################################
   RADTRAD Version 3.03 (Spring 2001) run on  6/08/2006  at 16:15:53
#######################################################################

#######################################################################
                    Scenario Description
#######################################################################
```

Radioactive Decay is enabled
Calculation of Daughters is enabled

Release Fractions and Timings

	GAP	EARLY IN-VESSEL	LATE RELEASE	RELEASE MASS
	0.500000 hr	1.5000 hrs	0.0000 hrs	(gm)
NOBLES	5.0000E-02	9.5000E-01	0.0000E+00	4.625E+03
IODINE	5.0000E-02	2.5000E-01	0.0000E+00	3.033E+02
CESIUM	5.0000E-02	2.0000E-01	0.0000E+00	5.099E+04
TELLURIUM	0.0000E+00	5.0000E-02	0.0000E+00	4.012E+01
STRONTIUM	0.0000E+00	2.0000E-02	0.0000E+00	1.712E+03
BARIUM	0.0000E+00	2.0000E-02	0.0000E+00	4.739E+01
RUTHENIUM	0.0000E+00	2.5000E-03	0.0000E+00	5.988E+01
CERIUM	0.0000E+00	5.0000E-04	0.0000E+00	5.914E+02
LANTHANUM	0.0000E+00	2.0000E-04	0.0000E+00	8.731E+00

Inventory Power = 3527. MWt

Nuclide Name	Group	Specific Inventory (Ci/MWt)	half life (s)	Whole Body DCF (Sv-m3/Bq-s)	Inhaled Thyroid (Sv/Bq)	Inhaled Effective (Sv/Bq)
Co-58	7	1.529E+02	6.117E+06	4.760E-14	8.720E-10	2.940E-09
Co-60	7	1.830E+02	1.663E+08	1.260E-13	1.620E-08	5.910E-08
Kr-85	1	3.946E+02	3.383E+08	1.190E-16	0.000E+00	0.000E+00
Kr-85m	1	8.313E+03	1.613E+04	7.480E-15	0.000E+00	0.000E+00
Kr-87	1	1.633E+04	4.578E+03	4.120E-14	0.000E+00	0.000E+00
Kr-88	1	2.303E+04	1.022E+04	1.020E-13	0.000E+00	0.000E+00
Rb-86	3	6.518E+01	1.612E+06	4.810E-15	1.330E-09	1.790E-09
Sr-89	5	2.798E+04	4.363E+06	7.730E-17	7.960E-12	1.120E-08
Sr-90	5	3.178E+03	9.190E+08	7.530E-18	2.690E-10	3.510E-07
Sr-91	5	3.801E+04	3.420E+04	4.924E-14	9.930E-12	4.547E-10
Sr-92	5	4.017E+04	9.756E+03	6.790E-14	3.920E-12	2.180E-10
Y-90	9	3.272E+03	2.304E+05	1.900E-16	5.170E-13	2.280E-09
Y-91	9	3.448E+04	5.055E+06	2.600E-16	8.500E-12	1.320E-08
Y-92	9	4.029E+04	1.274E+04	1.300E-14	1.050E-12	2.110E-10
Y-93	9	4.526E+04	3.636E+04	4.800E-15	9.260E-13	5.820E-10
Zr-95	9	4.489E+04	5.528E+06	3.600E-14	1.440E-09	6.390E-09
Zr-97	9	4.657E+04	6.084E+04	4.432E-14	2.315E-11	1.171E-09
Nb-95	9	4.512E+04	3.037E+06	3.740E-14	3.580E-10	1.570E-09
Mo-99	7	5.078E+04	2.376E+05	7.280E-15	1.520E-11	1.070E-09
Tc-99m	7	4.447E+04	2.167E+04	5.890E-15	5.010E-11	8.800E-12
Ru-103	7	4.202E+04	3.394E+06	2.251E-14	2.570E-10	2.421E-09
Ru-105	7	2.908E+04	1.598E+04	3.810E-14	4.150E-12	1.230E-10
Ru-106	7	1.730E+04	3.181E+07	1.040E-14	1.720E-09	1.290E-07
Rh-105	7	2.752E+04	1.273E+05	3.720E-15	2.880E-12	2.580E-10
Sb-127	4	2.896E+03	3.326E+05	3.330E-14	6.150E-11	1.630E-09
Sb-129	4	8.638E+03	1.555E+04	7.140E-14	9.720E-12	1.740E-10
Te-127	4	2.873E+03	3.366E+04	2.420E-16	1.840E-12	8.600E-11
Te-127m	4	3.855E+02	9.418E+06	1.470E-16	9.660E-11	5.810E-09
Te-129	4	8.501E+03	4.176E+03	2.750E-15	5.090E-13	2.090E-11
Te-129m	4	1.267E+03	2.903E+06	3.337E-15	1.563E-10	6.484E-09

Te-131m	4	3.869E+03	1.080E+05	7.463E-14	3.669E-08	1.758E-09
Te-132	4	3.821E+04	2.815E+05	1.030E-14	6.280E-08	2.550E-09
I-131	2	2.687E+04	6.947E+05	1.820E-14	2.920E-07	8.890E-09
I-132	2	3.881E+04	8.280E+03	1.120E-13	1.740E-09	1.030E-10
I-133	2	5.556E+04	7.488E+04	2.940E-14	4.860E-08	1.580E-09
I-134	2	6.165E+04	3.156E+03	1.300E-13	2.880E-10	3.550E-11
I-135	2	5.192E+04	2.380E+04	8.294E-14	8.460E-09	3.320E-10
Xe-133	1	5.491E+04	4.532E+05	1.560E-15	0.000E+00	0.000E+00
Xe-135	1	2.228E+04	3.272E+04	1.190E-14	0.000E+00	0.000E+00
Cs-134	3	7.280E+03	6.507E+07	7.570E-14	1.110E-08	1.250E-08
Cs-136	3	2.027E+03	1.132E+06	1.060E-13	1.730E-09	1.980E-09
Cs-137	3	4.538E+03	9.467E+08	2.725E-14	7.930E-09	8.630E-09
Ba-139	6	5.084E+04	4.962E+03	2.170E-15	2.400E-12	4.640E-11
Ba-140	6	4.896E+04	1.101E+06	8.580E-15	2.560E-10	1.010E-09
La-140	9	5.019E+04	1.450E+05	1.170E-13	6.870E-11	1.310E-09
La-141	9	4.640E+04	1.415E+04	2.390E-15	9.400E-12	1.570E-10
La-142	9	4.532E+04	5.550E+03	1.440E-13	8.740E-12	6.840E-11
Ce-141	8	4.492E+04	2.808E+06	3.430E-15	2.550E-11	2.420E-09
Ce-143	8	4.427E+04	1.188E+05	1.290E-14	6.230E-12	9.160E-10
Ce-144	8	3.596E+04	2.456E+07	2.773E-15	2.920E-10	1.010E-07
Pr-143	9	4.293E+04	1.172E+06	2.100E-17	1.680E-18	2.190E-09
Nd-147	9	1.838E+04	9.487E+05	6.190E-15	1.820E-11	1.850E-09
Np-239	8	5.397E+05	2.035E+05	7.690E-15	7.620E-12	6.780E-10
Pu-238	8	1.796E+02	2.769E+09	4.880E-18	3.860E-10	7.790E-05
Pu-239	8	1.200E+01	7.594E+11	4.240E-18	3.750E-10	8.330E-05
Pu-240	8	1.288E+01	2.063E+11	4.750E-18	3.760E-10	8.330E-05
Pu-241	8	6.182E+03	4.544E+08	7.250E-20	9.150E-12	1.340E-06
Am-241	9	9.528E+00	1.364E+10	8.180E-16	1.600E-09	1.200E-04
Cm-242	9	2.388E+03	1.407E+07	5.690E-18	9.410E-10	4.670E-06
Cm-244	9	2.602E+02	5.715E+08	4.910E-18	1.010E-09	6.700E-05

Nuclide	Daughter	Fraction	Daughter	Fraction	Daughter	Fraction
Kr-85m	Kr-85	0.21	none	0.00	none	0.00
Kr-87	Rb-87	1.00	none	0.00	none	0.00
Kr-88	Rb-88	1.00	none	0.00	none	0.00
Sr-90	Y-90	1.00	none	0.00	none	0.00
Sr-91	Y-91m	0.58	Y-91	0.42	none	0.00
Sr-92	Y-92	1.00	none	0.00	none	0.00
Y-93	Zr-93	1.00	none	0.00	none	0.00
Zr-95	Nb-95m	0.01	Nb-95	0.99	none	0.00
Zr-97	Nb-97m	0.95	Nb-97	0.05	none	0.00
Mo-99	Tc-99m	0.88	Tc-99	0.12	none	0.00
Tc-99m	Tc-99	1.00	none	0.00	none	0.00
Ru-103	Rh-103m	1.00	none	0.00	none	0.00
Ru-105	Rh-105	1.00	none	0.00	none	0.00
Ru-106	Rh-106	1.00	none	0.00	none	0.00
Sb-127	Te-127m	0.18	Te-127	0.82	none	0.00
Sb-129	Te-129m	0.22	Te-129	0.77	none	0.00
Te-127m	Te-127	0.98	none	0.00	none	0.00
Te-129	I-129	1.00	none	0.00	none	0.00
Te-129m	Te-129	0.65	I-129	0.35	none	0.00
Te-131m	Te-131	0.22	I-131	0.78	none	0.00
Te-132	I-132	1.00	none	0.00	none	0.00
I-131	Xe-131m	0.01	none	0.00	none	0.00
I-133	Xe-133m	0.03	Xe-133	0.97	none	0.00
I-135	Xe-135m	0.15	Xe-135	0.85	none	0.00
Xe-135	Cs-135	1.00	none	0.00	none	0.00
Cs-137	Ba-137m	0.95	none	0.00	none	0.00
Ba-140	La-140	1.00	none	0.00	none	0.00
La-141	Ce-141	1.00	none	0.00	none	0.00

Ce-143	Pr-143	1.00	none	0.00	none	0.00
Ce-144	Pr-144m	0.02	Pr-144	0.98	none	0.00
Nd-147	Pm-147	1.00	none	0.00	none	0.00
Np-239	Pu-239	1.00	none	0.00	none	0.00
Pu-238	U-234	1.00	none	0.00	none	0.00
Pu-239	U-235	1.00	none	0.00	none	0.00
Pu-240	U-236	1.00	none	0.00	none	0.00
Pu-241	U-237	0.00	Am-241	1.00	none	0.00
Am-241	Np-237	1.00	none	0.00	none	0.00
Cm-242	Pu-238	1.00	none	0.00	none	0.00
Cm-244	Pu-240	1.00	none	0.00	none	0.00

Iodine fractions
Aerosol = 9.5000E-01
Elemental = 4.8500E-02
Organic = 1.5000E-03

COMPARTMENT DATA

Compartment number 1: Containment
Natural Deposition (Powers' model): Aerosol data
Reactor type: 3
Percentile = 10 (%)

Natural Deposition: Elemental Removal Data

Time (hr)	Removal Coef. (hr^-1)
0.0000E+00	0.0000E+00

Compartment number 2: (Node 1) Inboard MSL A Volume

Compartment number 3: (Node 1) Inboard MSL B Volume

Compartment number 4: (Node 2) Outboard MSL A Volume

Compartment number 5: (Node 2) Outboard MSL B Volume

Compartment number 6: Condenser

Compartment number 7: Environment

Compartment number 8: Control Room

Compartment Filter Data

Time (hr)	Flow Rate (cfm)	Filter Efficiencies (%) Aerosol	Elemental	Organic
0.0000E+00	2.1750E+03	9.9000E+01	9.5000E+01	9.5000E+01
5.0000E-01	2.1750E+03	9.9000E+01	9.5000E+01	9.5000E+01
7.2000E+02	2.1750E+03	0.0000E+00	0.0000E+00	0.0000E+00

Compartment number 9: Hold

PATHWAY DATA

Pathway number 1: Containment to (Node 1) Inboard MSL A Volume

Pathway Filter: Removal Data

Time (hr)	Flow Rate (cfm)	Filter Efficiencies (%) Aerosol	Elemental	Organic

0.0000E+00	1.5240E+00	9.9990E+01	9.9990E+01	0.0000E+00
2.0000E+00	9.3060E-01	9.9990E+01	9.9990E+01	0.0000E+00
2.4000E+01	5.1270E-01	0.0000E+00	9.9990E+01	0.0000E+00
9.6000E+01	5.1270E-01	0.0000E+00	9.9990E+01	0.0000E+00
7.2000E+02	0.0000E+00	0.0000E+00	0.0000E+00	0.0000E+00

Pathway number 2: Containment to (Node 1) Inboard MSL B Volume

Pathway Filter: Removal Data

Time (hr)	Flow Rate (cfm)	Filter Efficiencies (%) Aerosol	Elemental	Organic
0.0000E+00	1.5240E+00	9.9990E+01	9.9990E+01	0.0000E+00
2.0000E+00	9.3060E-01	9.9990E+01	9.9990E+01	0.0000E+00
2.4000E+01	5.1270E-01	0.0000E+00	9.9990E+01	0.0000E+00
9.6000E+01	5.1270E-01	0.0000E+00	9.9990E+01	0.0000E+00
7.2000E+02	0.0000E+00	0.0000E+00	0.0000E+00	0.0000E+00

Pathway number 3: Containment to Hold (PC Leakage)

Convection Data

Time (hr)	Flow Rate (% / day)
0.0000E+00	5.0000E-01
2.4000E+01	2.5000E-01
7.2000E+02	0.0000E+00

Pathway number 4: (Node 1) Inboard MSL A Volume to (Node 2) Outboard

Pathway Filter: Removal Data

Time (hr)	Flow Rate (cfm)	Filter Efficiencies (%) Aerosol	Elemental	Organic
0.0000E+00	9.3060E-01	0.0000E+00	0.0000E+00	0.0000E+00
2.4000E+01	5.1270E-01	0.0000E+00	0.0000E+00	0.0000E+00
9.6000E+01	5.1270E-01	0.0000E+00	0.0000E+00	0.0000E+00
7.2000E+02	0.0000E+00	0.0000E+00	0.0000E+00	0.0000E+00

Pathway number 5: (Node 1) Inboard MSL B Volume to (Node 2) Outboard

Pathway Filter: Removal Data

Time (hr)	Flow Rate (cfm)	Filter Efficiencies (%) Aerosol	Elemental	Organic
0.0000E+00	9.3060E-01	0.0000E+00	0.0000E+00	0.0000E+00
2.4000E+01	5.1270E-01	0.0000E+00	0.0000E+00	0.0000E+00
9.6000E+01	5.1270E-01	0.0000E+00	0.0000E+00	0.0000E+00
7.2000E+02	0.0000E+00	0.0000E+00	0.0000E+00	0.0000E+00

Pathway number 6: (Node 2) Outboard MSL A Volume to Condenser

Pathway Filter: Removal Data

Time (hr)	Flow Rate (cfm)	Filter Efficiencies (%) Aerosol	Elemental	Organic
0.0000E+00	3.1880E+00	0.0000E+00	0.0000E+00	0.0000E+00
2.4000E+01	1.5130E+00	0.0000E+00	0.0000E+00	0.0000E+00
9.6000E+01	1.1480E+00	0.0000E+00	0.0000E+00	0.0000E+00
7.2000E+02	0.0000E+00	0.0000E+00	0.0000E+00	0.0000E+00

Pathway number 7: (Node 2) Outboard MSL B Volume to Condenser

Pathway Filter: Removal Data

Time (hr)	Flow Rate (cfm)	Filter Efficiencies (%) Aerosol	Elemental	Organic
0.0000E+00	3.1880E+00	0.0000E+00	0.0000E+00	0.0000E+00
2.4000E+01	1.5130E+00	0.0000E+00	0.0000E+00	0.0000E+00
9.6000E+01	1.1480E+00	0.0000E+00	0.0000E+00	0.0000E+00
7.2000E+02	0.0000E+00	0.0000E+00	0.0000E+00	0.0000E+00

Pathway number 8: Condenser Leak to Environment

Pathway Filter: Removal Data

Time (hr)	Flow Rate (cfm)	Filter Efficiencies (%) Aerosol	Elemental	Organic
0.0000E+00	3.6620E+00	0.0000E+00	0.0000E+00	0.0000E+00
2.4000E+01	2.0180E+00	0.0000E+00	0.0000E+00	0.0000E+00
9.6000E+01	2.0180E+00	0.0000E+00	0.0000E+00	0.0000E+00
7.2000E+02	0.0000E+00	0.0000E+00	0.0000E+00	0.0000E+00

Pathway number 9: Filtered Intake to Control Room

Pathway Filter: Removal Data

Time (hr)	Flow Rate (cfm)	Filter Efficiencies (%) Aerosol	Elemental	Organic
0.0000E+00	5.2500E+02	9.9000E+01	9.5000E+01	9.5000E+01
5.0000E-01	5.2500E+02	9.9000E+01	9.5000E+01	9.5000E+01
7.2000E+02	0.0000E+00	0.0000E+00	0.0000E+00	0.0000E+00

Pathway number 10: Unfiltered Inleakage to Control Room

Pathway Filter: Removal Data

Time (hr)	Flow Rate (cfm)	Filter Efficiencies (%) Aerosol	Elemental	Organic
0.0000E+00	2.2500E+02	0.0000E+00	0.0000E+00	0.0000E+00
7.2000E+02	0.0000E+00	0.0000E+00	0.0000E+00	0.0000E+00

Pathway number 11: Control Room Exhaust

Pathway Filter: Removal Data

Time (hr)	Flow Rate (cfm)	Filter Efficiencies (%) Aerosol	Elemental	Organic
0.0000E+00	7.5000E+02	1.0000E+02	1.0000E+02	1.0000E+02
5.0000E-01	7.5000E+02	1.0000E+02	1.0000E+02	1.0000E+02
7.2000E+02	0.0000E+00	0.0000E+00	0.0000E+00	0.0000E+00

LOCATION DATA

Location Exclusion Area Boundary (EAB) is in compartment 7

Location X/Q Data

Time (hr)	X/Q (s * m^-3)
0.0000E+00	3.1800E-04
2.4000E+01	0.0000E+00

Location Breathing Rate Data

Time (hr)	Breathing Rate (m^3 * sec^-1)

```
  0.0000E+00                  3.5000E-04
  8.0000E+00                  1.8000E-04
  2.4000E+01                  2.3000E-04
  7.2000E+02                  0.0000E+00
Location Low Population Zone (LPZ)     is in compartment   7

Location X/Q Data
 Time (hr)          X/Q (s * m^-3)
  0.0000E+00           5.7900E-05
  8.0000E+00           4.1000E-05
  2.4000E+01           1.9500E-05
  4.8000E+01           1.9500E-05
  7.2000E+01           1.9500E-05
  9.6000E+01           6.6800E-06
  1.2000E+02           6.6800E-06
  1.6800E+02           6.6800E-06
  3.3600E+02           6.6800E-06
  7.2000E+02           0.0000E+00

Location Breathing Rate Data
 Time (hr)          Breathing Rate (m^3 * sec^-1)
  0.0000E+00                  3.5000E-04
  8.0000E+00                  1.8000E-04
  2.4000E+01                  2.3000E-04
  7.2000E+02                  0.0000E+00
Location Control Room (CR)     is in compartment   8

Location X/Q Data
 Time (hr)          X/Q (s * m^-3)
  0.0000E+00           6.8800E-03
  2.0000E+00           5.1700E-03
  8.0000E+00           2.0400E-03
  2.4000E+01           1.2900E-03
  9.6000E+01           9.6300E-04
  7.2000E+02           0.0000E+00

Location Breathing Rate Data
 Time (hr)          Breathing Rate (m^3 * sec^-1)
  0.0000E+00                  3.5000E-04
  7.2000E+02                  0.0000E+00

Location Occupancy Factor Data
 Time (hr)          Occupancy Factor
  0.0000E+00            1.0000E+00
  2.4000E+01            6.0000E-01
  9.6000E+01            4.0000E-01
  7.2000E+02            0.0000E+00

USER SPECIFIED TIME STEP DATA - SUPPLEMENTAL TIME STEPS
     Time            Time step
      0.0000E+00       0.0000E+00
```

```
#######################################################################
   RADTRAD Version 3.03 (Spring 2001) run on  6/08/2006  at 16:15:53
#######################################################################
```

```
 ####   #    #  #####  #####   #    #  #####
#    #  #    #    #    #    #  #    #    #
#    #  #    #    #    #    #  #    #    #
#    #  #    #    #    #####   #    #    #
#    #  #    #    #    #       #    #    #
#    #  #    #    #    #       #    #    #
 ####    ####     #    #        ####     #
```

```
#######################################################################
                                Dose Output
#######################################################################
```

Exclusion Area Boundary (EAB) Doses:

Time (h) = 0.5000	Whole Body	Thyroid	TEDE
Delta dose (rem)	6.0058E-07	1.1697E-06	6.3831E-07
Accumulated dose (rem)	6.0058E-07	1.1697E-06	6.3831E-07

Low Population Zone (LPZ) Doses:

Time (h) = 0.5000	Whole Body	Thyroid	TEDE
Delta dose (rem)	1.0935E-07	2.1298E-07	1.1622E-07
Accumulated dose (rem)	1.0935E-07	2.1298E-07	1.1622E-07

Control Room (CR) Doses:

Time (h) = 0.5000	Whole Body	Thyroid	TEDE
Delta dose (rem)	2.1453E-08	2.8757E-07	3.0713E-08
Accumulated dose (rem)	2.1453E-08	2.8757E-07	3.0713E-08

Exclusion Area Boundary (EAB) Doses:

Time (h) = 2.0000	Whole Body	Thyroid	TEDE
Delta dose (rem)	2.9699E-04	3.5190E-04	3.0844E-04
Accumulated dose (rem)	2.9759E-04	3.5307E-04	3.0907E-04

Low Population Zone (LPZ) Doses:

Time (h) = 2.0000	Whole Body	Thyroid	TEDE
Delta dose (rem)	5.4074E-05	6.4073E-05	5.6159E-05
Accumulated dose (rem)	5.4184E-05	6.4286E-05	5.6275E-05

Control Room (CR) Doses:

Time (h) = 2.0000	Whole Body	Thyroid	TEDE
Delta dose (rem)	3.1387E-05	2.4033E-04	3.9166E-05
Accumulated dose (rem)	3.1408E-05	2.4061E-04	3.9197E-05

Exclusion Area Boundary (EAB) Doses:

Time (h) = 8.0000	Whole Body	Thyroid	TEDE
Delta dose (rem)	2.4237E-02	4.7693E-02	2.5767E-02
Accumulated dose (rem)	2.4534E-02	4.8046E-02	2.6076E-02

Low Population Zone (LPZ) Doses:

Time (h) = 8.0000	Whole Body	Thyroid	TEDE
Delta dose (rem)	4.4129E-03	8.6837E-03	4.6915E-03
Accumulated dose (rem)	4.4671E-03	8.7480E-03	4.7478E-03

Control Room (CR) Doses:

Time (h) = 8.0000	Whole Body	Thyroid	TEDE
Delta dose (rem)	7.1013E-03	5.2585E-02	8.7852E-03
Accumulated dose (rem)	7.1328E-03	5.2826E-02	8.8244E-03

Exclusion Area Boundary (EAB) Doses:

Time (h) = 24.0000	Whole Body	Thyroid	TEDE
Delta dose (rem)	1.4416E-01	4.7716E-01	1.5908E-01
Accumulated dose (rem)	1.6870E-01	5.2520E-01	1.8515E-01

Low Population Zone (LPZ) Doses:

Time (h) = 24.0000	Whole Body	Thyroid	TEDE
Delta dose (rem)	1.8587E-02	6.1520E-02	2.0510E-02
Accumulated dose (rem)	2.3054E-02	7.0268E-02	2.5258E-02

Control Room (CR) Doses:

Time (h) = 24.0000	Whole Body	Thyroid	TEDE
Delta dose (rem)	3.3251E-02	5.0263E-01	4.8952E-02
Accumulated dose (rem)	4.0383E-02	5.5545E-01	5.7776E-02

Exclusion Area Boundary (EAB) Doses:

Time (h) = 48.0000	Whole Body	Thyroid	TEDE
Delta dose (rem)	0.0000E+00	0.0000E+00	0.0000E+00
Accumulated dose (rem)	1.6870E-01	5.2520E-01	1.8515E-01

Low Population Zone (LPZ) Doses:

Time (h) = 48.0000	Whole Body	Thyroid	TEDE
Delta dose (rem)	7.7156E-03	6.5367E-02	9.7351E-03
Accumulated dose (rem)	3.0770E-02	1.3563E-01	3.4993E-02

Control Room (CR) Doses:

Time (h) = 48.0000	Whole Body	Thyroid	TEDE
Delta dose (rem)	1.5189E-02	3.6393E-01	2.6427E-02
Accumulated dose (rem)	5.5572E-02	9.1938E-01	8.4203E-02

Exclusion Area Boundary (EAB) Doses:

Time (h) = 72.0000	Whole Body	Thyroid	TEDE
Delta dose (rem)	0.0000E+00	0.0000E+00	0.0000E+00
Accumulated dose (rem)	1.6870E-01	5.2520E-01	1.8515E-01

Low Population Zone (LPZ) Doses:

Time (h) = 72.0000	Whole Body	Thyroid	TEDE
Delta dose (rem)	8.2954E-03	8.7758E-02	1.0992E-02
Accumulated dose (rem)	3.9065E-02	2.2339E-01	4.5984E-02

Control Room (CR) Doses:

Time (h) = 72.0000	Whole Body	Thyroid	TEDE
Delta dose (rem)	1.4184E-02	4.6750E-01	2.8539E-02
Accumulated dose (rem)	6.9755E-02	1.3869E+00	1.1274E-01

Exclusion Area Boundary (EAB) Doses:

Time (h) = 96.0000	Whole Body	Thyroid	TEDE
Delta dose (rem)	0.0000E+00	0.0000E+00	0.0000E+00
Accumulated dose (rem)	1.6870E-01	5.2520E-01	1.8515E-01

Low Population Zone (LPZ) Doses:

Time (h) = 96.0000	Whole Body	Thyroid	TEDE
Delta dose (rem)	9.3372E-03	1.0524E-01	1.2561E-02
Accumulated dose (rem)	4.8402E-02	3.2863E-01	5.8545E-02

Control Room (CR) Doses:

Time (h) = 96.0000	Whole Body	Thyroid	TEDE
Delta dose (rem)	1.6178E-02	5.6250E-01	3.3401E-02
Accumulated dose (rem)	8.5933E-02	1.9494E+00	1.4614E-01

Exclusion Area Boundary (EAB) Doses:

Time (h) = 120.0000	Whole Body	Thyroid	TEDE
Delta dose (rem)	0.0000E+00	0.0000E+00	0.0000E+00
Accumulated dose (rem)	1.6870E-01	5.2520E-01	1.8515E-01

Low Population Zone (LPZ) Doses:

Time (h) = 120.0000	Whole Body	Thyroid	TEDE
Delta dose (rem)	3.3934E-03	3.9770E-02	4.6098E-03
Accumulated dose (rem)	5.1796E-02	3.6840E-01	6.3155E-02

Control Room (CR) Doses:

Time (h) = 120.0000	Whole Body	Thyroid	TEDE
Delta dose (rem)	8.9666E-03	3.1330E-01	1.8545E-02
Accumulated dose (rem)	9.4900E-02	2.2627E+00	1.6469E-01

Exclusion Area Boundary (EAB) Doses:

Time (h) = 168.0000	Whole Body	Thyroid	TEDE
Delta dose (rem)	0.0000E+00	0.0000E+00	0.0000E+00
Accumulated dose (rem)	1.6870E-01	5.2520E-01	1.8515E-01

Low Population Zone (LPZ) Doses:

Time (h) = 168.0000	Whole Body	Thyroid	TEDE
Delta dose (rem)	6.9953E-03	8.7079E-02	9.6555E-03
Accumulated dose (rem)	5.8791E-02	4.5548E-01	7.2810E-02

Control Room (CR) Doses:

Time (h) = 168.0000	Whole Body	Thyroid	TEDE
Delta dose (rem)	1.7856E-02	6.7866E-01	3.8581E-02
Accumulated dose (rem)	1.1276E-01	2.9413E+00	2.0327E-01

Exclusion Area Boundary (EAB) Doses:

Time (h) = 336.0000	Whole Body	Thyroid	TEDE
Delta dose (rem)	0.0000E+00	0.0000E+00	0.0000E+00
Accumulated dose (rem)	1.6870E-01	5.2520E-01	1.8515E-01

Low Population Zone (LPZ) Doses:

Time (h) = 336.0000	Whole Body	Thyroid	TEDE
Delta dose (rem)	2.0880E-02	3.1466E-01	3.0482E-02
Accumulated dose (rem)	7.9671E-02	7.7014E-01	1.0329E-01

Control Room (CR) Doses:

Time (h) = 336.0000	Whole Body	Thyroid	TEDE
Delta dose (rem)	5.3674E-02	2.4575E+00	1.2865E-01
Accumulated dose (rem)	1.6643E-01	5.3989E+00	3.3192E-01

Exclusion Area Boundary (EAB) Doses:

Time (h) = 720.0000	Whole Body	Thyroid	TEDE
Delta dose (rem)	0.0000E+00	0.0000E+00	0.0000E+00
Accumulated dose (rem)	1.6870E-01	5.2520E-01	1.8515E-01

Low Population Zone (LPZ) Doses:

Time (h) = 720.0000	Whole Body	Thyroid	TEDE
Delta dose (rem)	1.8348E-02	4.3049E-01	3.1482E-02
Accumulated dose (rem)	9.8019E-02	1.2006E+00	1.3477E-01

Control Room (CR) Doses:

Time (h) = 720.0000	Whole Body	Thyroid	TEDE
Delta dose (rem)	4.7337E-02	3.3674E+00	1.5005E-01
Accumulated dose (rem)	2.1377E-01	8.7663E+00	4.8197E-01

837

##
I-131 Summary
##

Time (hr)	Containment I-131 (Curies)	(Node 1) Inboard MSL I-131 (Curies)	(Node 1) Inboard MSL I-131 (Curies)
0.000	5.2640E+03	5.6438E-07	3.6390E-13
0.401	3.3308E+06	2.8396E-01	2.6033E-10
0.500	4.0234E+06	4.3745E-01	3.2383E-10
0.800	7.9873E+06	1.1993E+00	6.4673E-10
1.100	1.1677E+07	2.4343E+00	9.6773E-10
1.400	1.5110E+07	4.1093E+00	1.2869E-09
1.700	1.8302E+07	6.1932E+00	1.6044E-09
2.000	2.1269E+07	8.6572E+00	1.9201E-09
2.300	1.6051E+07	9.9918E+00	1.1573E-09
2.600	1.2203E+07	1.1220E+01	1.1458E-09
2.900	9.3660E+06	1.2353E+01	1.1370E-09
3.200	7.2733E+06	1.3401E+01	1.1301E-09

3.500	5.7299E+06	1.4373E+01	1.1247E-09
3.800	4.5914E+06	1.5274E+01	1.1203E-09
4.100	3.7515E+06	1.6111E+01	1.1168E-09
4.400	3.1318E+06	1.6890E+01	1.1138E-09
4.700	2.6745E+06	1.7615E+01	1.1113E-09
5.000	2.3368E+06	1.8289E+01	1.1090E-09
5.300	2.1739E+06	1.8917E+01	1.1072E-09
5.600	2.0386E+06	1.9502E+01	1.1055E-09
5.900	1.9261E+06	2.0047E+01	1.1039E-09
6.200	1.8326E+06	2.0555E+01	1.1023E-09
6.500	1.7547E+06	2.1028E+01	1.1008E-09
6.800	1.6899E+06	2.1468E+01	1.0992E-09
7.100	1.6358E+06	2.1877E+01	1.0978E-09
7.400	1.5907E+06	2.2258E+01	1.0963E-09
7.700	1.5530E+06	2.2612E+01	1.0949E-09
8.000	1.5215E+06	2.2942E+01	1.0935E-09
8.300	1.4951E+06	2.3248E+01	1.0920E-09
8.600	1.4754E+06	2.3532E+01	1.0907E-09
8.900	1.4584E+06	2.3796E+01	1.0893E-09
9.200	1.4437E+06	2.4040E+01	1.0879E-09
9.500	1.4310E+06	2.4267E+01	1.0865E-09
9.800	1.4199E+06	2.4477E+01	1.0852E-09
10.100	1.4103E+06	2.4672E+01	1.0838E-09
10.400	1.4018E+06	2.4852E+01	1.0825E-09
24.000	1.2895E+06	2.6317E+01	1.0238E-09
48.000	1.1754E+06	2.4128E+01	9.3331E-10
72.000	1.0714E+06	2.1997E+01	8.5069E-10
96.000	9.7667E+05	2.0051E+01	7.7545E-10
120.000	8.9030E+05	1.8278E+01	7.0687E-10
168.000	7.3978E+05	1.5188E+01	5.8737E-10
336.000	3.8690E+05	7.9432E+00	3.0719E-10
720.000	8.7935E+04	1.8053E+00	6.9818E-11

Time (hr)	(Node 2) Outboard MSL I-131 (Curies)	(Node 2) Outboard MSL I-131 (Curies)	Condenser I-131 (Curies)
0.000	2.2619E-11	5.6438E-07	1.9022E-11
0.401	8.1529E-03	2.8525E-01	7.1228E-03
0.500	1.5626E-02	4.3993E-01	1.3779E-02
0.800	6.4316E-02	1.2095E+00	5.8217E-02
1.100	1.7420E-01	2.4619E+00	1.6157E-01
1.400	3.7120E-01	4.1680E+00	3.5283E-01
1.700	6.7798E-01	6.3002E+00	6.6058E-01
2.000	1.1142E+00	8.8328E+00	1.1129E+00
2.300	1.6518E+00	1.0252E+01	1.6981E+00
2.600	2.2445E+00	1.1572E+01	2.3840E+00
2.900	2.8831E+00	1.2805E+01	3.1679E+00
3.200	3.5599E+00	1.3958E+01	4.0469E+00
3.500	4.2678E+00	1.5039E+01	5.0184E+00
3.800	5.0007E+00	1.6053E+01	6.0798E+00
4.100	5.7531E+00	1.7006E+01	7.2283E+00
4.400	6.5203E+00	1.7902E+01	8.4616E+00
4.700	7.2978E+00	1.8745E+01	9.7769E+00
5.000	8.0821E+00	1.9539E+01	1.1172E+01
5.300	8.8695E+00	2.0286E+01	1.2643E+01
5.600	9.6572E+00	2.0990E+01	1.4190E+01
5.900	1.0443E+01	2.1653E+01	1.5808E+01
6.200	1.1223E+01	2.2278E+01	1.7495E+01
6.500	1.1997E+01	2.2866E+01	1.9250E+01
6.800	1.2762E+01	2.3420E+01	2.1068E+01
7.100	1.3518E+01	2.3942E+01	2.2949E+01

7.400	1.4261E+01	2.4432E+01	2.4890E+01
7.700	1.4992E+01	2.4894E+01	2.6888E+01
8.000	1.5709E+01	2.5329E+01	2.8940E+01
8.300	1.6412E+01	2.5738E+01	3.1046E+01
8.600	1.7099E+01	2.6122E+01	3.3202E+01
8.900	1.7770E+01	2.6483E+01	3.5407E+01
9.200	1.8425E+01	2.6823E+01	3.7657E+01
9.500	1.9063E+01	2.7141E+01	3.9952E+01
9.800	1.9684E+01	2.7441E+01	4.2289E+01
10.100	2.0288E+01	2.7722E+01	4.4666E+01
10.400	2.0874E+01	2.7985E+01	4.7082E+01
24.000	3.3071E+01	3.1070E+01	1.7474E+02
48.000	3.6376E+01	3.2711E+01	2.7683E+02
72.000	3.4091E+01	3.0318E+01	3.6270E+02
96.000	3.1212E+01	2.7694E+01	4.2772E+02
120.000	3.5303E+01	3.1630E+01	4.6172E+02
168.000	3.1102E+01	2.7621E+01	5.1305E+02
336.000	1.6327E+01	1.4478E+01	4.6576E+02
720.000	3.7108E+00	3.2905E+00	1.6698E+02

Time (hr)	Environment I-131 (Curies)	Control Room I-131 (Curies)	Hold I-131 (Curies)
0.000	1.0603E-17	8.6056E-21	3.0465E-04
0.401	2.8690E-06	2.0990E-09	1.4535E+02
0.500	6.9199E-06	4.9399E-09	2.2112E+02
0.800	4.5810E-05	3.0481E-08	5.9764E+02
1.100	1.7072E-04	1.0662E-07	1.2127E+03
1.400	4.7006E-04	2.7643E-07	2.0494E+03
1.700	1.0669E-03	5.9184E-07	3.0920E+03
2.000	2.1184E-03	1.1103E-06	4.3258E+03
2.300	3.8000E-03	1.5980E-06	5.4786E+03
2.600	6.2469E-03	2.3102E-06	6.3492E+03
2.900	9.5787E-03	3.2326E-06	7.0116E+03
3.200	1.3912E-02	4.3536E-06	7.5206E+03
3.500	1.9359E-02	5.6642E-06	7.9163E+03
3.800	2.6029E-02	7.1568E-06	8.2285E+03
4.100	3.4030E-02	8.8245E-06	8.4790E+03
4.400	4.3465E-02	1.0661E-05	8.6840E+03
4.700	5.4434E-02	1.2662E-05	8.8554E+03
5.000	6.7035E-02	1.4821E-05	9.0020E+03
5.300	8.1361E-02	1.7132E-05	9.1332E+03
5.600	9.7503E-02	1.9593E-05	9.2549E+03
5.900	1.1555E-01	2.2197E-05	9.3688E+03
6.200	1.3559E-01	2.4939E-05	9.4762E+03
6.500	1.5770E-01	2.7816E-05	9.5781E+03
6.800	1.8196E-01	3.0822E-05	9.6755E+03
7.100	2.0844E-01	3.3953E-05	9.7690E+03
7.400	2.3723E-01	3.7204E-05	9.8594E+03
7.700	2.6839E-01	4.0572E-05	9.9470E+03
8.000	3.0198E-01	4.4051E-05	1.0032E+04
8.300	3.3808E-01	3.6608E-05	1.0116E+04
8.600	3.7674E-01	3.2148E-05	1.0198E+04
8.900	4.1803E-01	2.9691E-05	1.0279E+04
9.200	4.6200E-01	2.8585E-05	1.0358E+04
9.500	5.0871E-01	2.8391E-05	1.0437E+04
9.800	5.5820E-01	2.8816E-05	1.0515E+04
10.100	6.1053E-01	2.9665E-05	1.0592E+04
10.400	6.6575E-01	3.0806E-05	1.0669E+04
24.000	6.6236E+00	1.2084E-04	1.3846E+04
48.000	1.8613E+01	6.8854E-05	1.5656E+04

72.000	3.5649E+01	9.0625E-05	1.7053E+04
96.000	5.6675E+01	1.0714E-04	1.8096E+04
120.000	8.0209E+01	8.6491E-05	1.8835E+04
168.000	1.3221E+02	9.6247E-05	1.9576E+04
336.000	3.2099E+02	8.7578E-05	1.7631E+04
720.000	5.7940E+02	3.1433E-05	8.1416E+03

##

Cumulative Dose Summary

##

	Exclusion Area Bounda		Low Population Zone (		Control Room (CR)	
Time	Thyroid	TEDE	Thyroid	TEDE	Thyroid	TEDE
(hr)	(rem)	(rem)	(rem)	(rem)	(rem)	(rem)
0.000	0.0000E+00	0.0000E+00	0.0000E+00	0.0000E+00	0.0000E+00	0.0000E+00
0.401	4.8550E-07	2.6992E-07	8.8398E-08	4.9146E-08	1.0108E-07	1.0848E-08
0.500	1.1697E-06	6.3831E-07	2.1298E-07	1.1622E-07	2.8757E-07	3.0713E-08
0.800	7.7196E-06	4.3169E-06	1.4055E-06	7.8599E-07	2.7361E-06	2.9613E-07
1.100	2.8687E-05	1.8984E-05	5.2232E-06	3.4565E-06	1.2854E-05	1.5417E-06
1.400	7.8770E-05	6.0096E-05	1.4342E-05	1.0942E-05	4.1944E-05	5.7046E-06
1.700	1.7830E-04	1.4861E-04	3.2464E-05	2.7058E-05	1.0877E-04	1.6413E-05
2.000	3.5307E-04	3.0907E-04	6.4286E-05	5.6275E-05	2.4061E-04	3.9197E-05
2.300	6.3165E-04	5.6525E-04	1.1501E-04	1.0292E-04	4.5130E-04	7.7846E-05
2.600	1.0357E-03	9.2888E-04	1.8857E-04	1.6913E-04	7.5573E-04	1.3587E-04
2.900	1.5840E-03	1.4062E-03	2.8840E-04	2.5603E-04	1.1873E-03	2.1939E-04
3.200	2.2947E-03	2.0008E-03	4.1781E-04	3.6430E-04	1.7770E-03	3.3399E-04
3.500	3.1852E-03	2.7147E-03	5.7994E-04	4.9427E-04	2.5540E-03	4.8466E-04
3.800	4.2722E-03	3.5478E-03	7.7787E-04	6.4597E-04	3.5459E-03	6.7579E-04
4.100	5.5719E-03	4.4992E-03	1.0145E-03	8.1919E-04	4.7791E-03	9.1113E-04
4.400	7.0997E-03	5.5667E-03	1.2927E-03	1.0136E-03	6.2785E-03	1.1939E-03
4.700	8.8705E-03	6.7475E-03	1.6151E-03	1.2286E-03	8.0680E-03	1.5267E-03
5.000	1.0898E-02	8.0383E-03	1.9843E-03	1.4636E-03	1.0171E-02	1.9116E-03
5.300	1.3197E-02	9.4350E-03	2.4029E-03	1.7179E-03	1.2609E-02	2.3504E-03
5.600	1.5780E-02	1.0934E-02	2.8731E-03	1.9908E-03	1.5403E-02	2.8443E-03
5.900	1.8659E-02	1.2530E-02	3.3973E-03	2.2814E-03	1.8573E-02	3.3941E-03
6.200	2.1846E-02	1.4220E-02	3.9777E-03	2.5891E-03	2.2139E-02	4.0004E-03
6.500	2.5353E-02	1.5998E-02	4.6162E-03	2.9129E-03	2.6120E-02	4.6634E-03
6.800	2.9191E-02	1.7861E-02	5.3150E-03	3.2521E-03	3.0532E-02	5.3833E-03
7.100	3.3370E-02	1.9805E-02	6.0758E-03	3.6060E-03	3.5393E-02	6.1597E-03
7.400	3.7899E-02	2.1824E-02	6.9004E-03	3.9737E-03	4.0719E-02	6.9924E-03
7.700	4.2788E-02	2.3916E-02	7.7906E-03	4.3545E-03	4.6525E-02	7.8808E-03
8.000	4.8046E-02	2.6076E-02	8.7480E-03	4.7478E-03	5.2826E-02	8.8244E-03
8.300	5.0944E-02	2.8213E-02	9.1217E-03	5.0233E-03	5.8778E-02	9.7491E-03
8.600	5.4041E-02	3.0406E-02	9.5209E-03	5.3061E-03	6.3846E-02	1.0599E-02
8.900	5.7339E-02	3.2651E-02	9.9461E-03	5.5955E-03	6.8398E-02	1.1393E-02
9.200	6.0843E-02	3.4945E-02	1.0398E-02	5.8913E-03	7.2683E-02	1.2148E-02
9.500	6.4555E-02	3.7285E-02	1.0877E-02	6.1929E-03	7.6865E-02	1.2875E-02
9.800	6.8480E-02	3.9668E-02	1.1383E-02	6.5002E-03	8.1057E-02	1.3582E-02
10.100	7.2620E-02	4.2092E-02	1.1916E-02	6.8127E-03	8.5334E-02	1.4277E-02
10.400	7.6979E-02	4.4554E-02	1.2478E-02	7.1302E-03	8.9748E-02	1.4964E-02
24.000	5.2520E-01	1.8515E-01	7.0268E-02	2.5258E-02	5.5545E-01	5.7776E-02
48.000	5.2520E-01	1.8515E-01	1.3563E-01	3.4993E-02	9.1938E-01	8.4203E-02
72.000	5.2520E-01	1.8515E-01	2.2339E-01	4.5984E-02	1.3869E+00	1.1274E-01
96.000	5.2520E-01	1.8515E-01	3.2863E-01	5.8545E-02	1.9494E+00	1.4614E-01
120.000	5.2520E-01	1.8515E-01	3.6840E-01	6.3155E-02	2.2627E+00	1.6469E-01
168.000	5.2520E-01	1.8515E-01	4.5548E-01	7.2810E-02	2.9413E+00	2.0327E-01
336.000	5.2520E-01	1.8515E-01	7.7014E-01	1.0329E-01	5.3989E+00	3.3192E-01
720.000	5.2520E-01	1.8515E-01	1.2006E+00	1.3477E-01	8.7663E+00	4.8197E-01

##

Worst Two-Hour Doses

##

Exclusion Area Boundary (EAB)

Time (hr)	Whole Body (rem)	Thyroid (rem)	TEDE (rem)
10.4	1.8618E-02	6.5915E-02	2.0676E-02

```
 ######################################################################
    RADTRAD Version 3.03 (Spring 2001) run on  6/08/2006  at 17:05:28
 ######################################################################

 ######################################################################
                      File information
 ######################################################################

 Plant file           = RESUP3-A.psf
 Inventory file       = c:\program files\radtrad3-03\defaults\limerick ast source
terms.nif
 Release file         = c:\program files\radtrad3-03\defaults\bwr_i.rft
 Dose Conversion file = c:\program files\radtrad3-03\defaults\fgr11&12.inp



     #####    ####   #####    #  #     #  #####   #    #  #####
     #    #  #       #        #  ##    #  #    #  #    #    #
     #    #  #       #        #  # #   #  #    #  #    #    #
     #####    ####   ####     #  #  #  #  #####   #    #    #
     #            #  #        #  #   # #  #       #    #    #
     #            #  #        #  #    ##  #       #    #    #
     #        ####   #        #  #     #  #        ####     #


 Radtrad 3.03 4/15/2001
 LGS LOCA 200scfh Line A MSIV Leak - Resuspension Only - Leak to Condenser - MSL
Pipe Deposition Credit (24-Hr 20-Group Aerosol Settling with Projected Area
Assumption; 2-Hr Mixing Delay) - 95% CREFAS Charcoal Eff. No Delay - Rad Mode
225cfm Control Room In
 Nuclide Inventory File:
 c:\program files\radtrad3-03\defaults\limerick ast source terms.nif
 Plant Power Level:
  3.5270E+03
 Compartments:
  10
 Compartment 1:
 Containment
   3
  3.7907E+05
   0
   0
   0
   1
   0
 Compartment 2:
 MSL A Inboard - Airborne
   3
  2.5800E+02
   0
   0
   0
   0
   0
 Compartment 3:
 Environment
   2
```

```
 0.0000E+00
  0
  0
  0
  0
  0
Compartment 4:
Control Room
  1
 1.2600E+05
  0
  0
  1
  0
  0
Compartment 5:
MSL A Outboard - Airborne
  3
 1.1820E+03
  0
  0
  0
  0
  0
Compartment 6:
MSL A Inboard - Surface
  3
 1.0000E+00
  0
  0
  0
  0
  0
Compartment 7:
MSL A Outboard - Surface
  3
 1.0000E+00
  0
  0
  0
  0
  0
Compartment 8:
Hold (By Surface Fixation)
  3
 1.0000E+00
  0
  0
  0
  0
  0
Compartment 9:
Condenser - Airborne
  3
 5.4746E+04
  0
  0
  0
  0
  0
```

```
Compartment 10:
Condenser - Surface
  3
 1.0000E+00
  0
  0
  0
  0
  0
Pathways:
 15
Pathway 1:
Filtered Environment to Control Room (Intake)
  3
  4
  2
Pathway 2:
Unfiltered Environment to Control Room (Inleakage)
  3
  4
  2
Pathway 3:
Control Room to Environment (Exhaust)
  4
  3
  2
Pathway 4:
(Aerosol Transport 1) MSL A Inboard - Airborne to MSL A Outboard - Airborne
  2
  5
  2
Pathway 5:
(Deposition 1) MSL A Inboard - Airborne to MSL A Inboard - Surface
  2
  6
  4
Pathway 6:
(Resuspension 1) MSL A Inboard - Surface to Environment
  6
  3
  4
Pathway 7:
(Surface Fixation 1) MSL A Inboard - Surface to Hold (By Surface Fixation)
  6
  8
  4
Pathway 8:
(Deposition 2) MSL A Outboard - Airborne to MSL A Outboard - Surface
  5
  7
  4
Pathway 9:
(Resuspension 2) MSL A Outboard - Surface to  Environment
  7
  3
  4
Pathway 10:
(Surface Fixation 2) MSL A Outboard - Surface to Hold (By Surface Fixation)
  7
  8
```

```
  4
Pathway 11:
(Aerosol Transport 2) MSL A Outboard - Airborne to  Condenser - Airborne
  5
  9
  2
Pathway 12:
(Deposition 3) Condenser - Airborne to Condenser - Surface
  9
 10
  4
Pathway 13:
(Resuspension 3) Condenser - Surface to  Environment
 10
  3
  4
Pathway 14:
(Surface Fixation 3) Condenser - Surface to  Hold (By Surface Fixation)
 10
  8
  4
Pathway 15:
Containment to  MSL A Inboard - Airborne
  1
  2
  2
End of Plant Model File
Scenario Description Name:

Plant Model Filename:

Source Term:
  1
  1   1.0000E+00
c:\program files\radtrad3-03\defaults\fgr11&12.inp
c:\program files\radtrad3-03\defaults\bwr_i.rft
  0.0000E+00
  1
  9.5000E-01   4.8500E-02   1.5000E-03   1.0000E+00
Overlying Pool:
  0
  0.0000E+00
  0
  0
  0
  0
Compartments:
 10
Compartment 1:
  0
  1
  0
  0
  0
  0
  0
  3
  3
  1.0000E+01
  1
```

```
  1
  0.0000E+00   0.0000E+00
Compartment 2:
  0
  1
  0
  0
  0
  0
  0
  0
  0
Compartment 3:
  0
  1
  0
  0
  0
  0
  0
  0
  0
Compartment 4:
  0
  1
  0
  0
  0
  0
  1
  2.1750E+03
  3
  0.0000E+00   9.9000E+01   9.5000E+01   9.5000E+01
  3.3330E-01   9.9000E+01   9.5000E+01   9.5000E+01
  7.2000E+02   0.0000E+00   0.0000E+00   0.0000E+00
  0
  0
Compartment 5:
  0
  1
  0
  0
  0
  0
  0
  0
  0
Compartment 6:
  0
  1
  0
  0
  0
  0
  0
  0
  0
Compartment 7:
  0
  1
```

```
  0
  0
  0
  0
  0
  0
  0
Compartment 8:
  0
  1
  0
  0
  0
  0
  0
  0
  0
Compartment 9:
  0
  1
  0
  0
  0
  0
  0
  0
  0
Compartment 10:
  0
  1
  0
  0
  0
  0
  0
  0
  0
Pathways:
 15
Pathway 1:
  0
  0
  0
  0
  0
  1
  3
  0.0000E+00   5.2500E+02   9.9000E+01   9.5000E+01   9.5000E+01
  5.0000E-01   5.2500E+02   9.9000E+01   9.5000E+01   9.5000E+01
  7.2000E+02   0.0000E+00   0.0000E+00   0.0000E+00   0.0000E+00
  0
  0
  0
  0
  0
  0
Pathway 2:
  0
  0
  0
```

```
  0
  0
  1
  2
  0.0000E+00   2.2500E+02   0.0000E+00   0.0000E+00   0.0000E+00
  7.2000E+02   0.0000E+00   0.0000E+00   0.0000E+00   0.0000E+00
  0
  0
  0
  0
  0
  0
Pathway 3:
  0
  0
  0
  0
  0
  1
  3
  0.0000E+00   7.5000E+02   1.0000E+02   1.0000E+02   1.0000E+02
  5.0000E-01   7.5000E+02   1.0000E+02   1.0000E+02   1.0000E+02
  7.2000E+02   0.0000E+00   0.0000E+00   0.0000E+00   0.0000E+00
  0
  0
  0
  0
  0
  0
Pathway 4:
  0
  0
  0
  0
  0
  1
  5
  0.0000E+00   9.3060E-01   1.0000E+02   0.0000E+00   1.0000E+02
  2.0000E+00   9.3060E-01   1.0000E+02   0.0000E+00   1.0000E+02
  2.4000E+01   5.1270E-01   1.0000E+02   0.0000E+00   1.0000E+02
  9.6000E+01   5.1270E-01   1.0000E+02   0.0000E+00   1.0000E+02
  7.2000E+02   0.0000E+00   0.0000E+00   0.0000E+00   0.0000E+00
  0
  0
  0
  0
  0
  0
Pathway 5:
  0
  0
  0
  0
  0
  0
  0
  0
  0
  0
  1
```

```
  4
  0.0000E+00   3.1420E+02
  2.4000E+01   7.0350E+02
  9.6000E+01   4.4780E+03
  7.2000E+02   0.0000E+00
  0
Pathway 6:
  0
  0
  0
  0
  0
  0
  0
  0
  0
  0
  1
  4
  0.0000E+00   3.5580E-02
  2.4000E+01   2.9950E-02
  9.6000E+01   2.0170E-02
  7.2000E+02   0.0000E+00
  0
Pathway 7:
  0
  0
  0
  0
  0
  0
  0
  0
  0
  0
  1
  4
  0.0000E+00   1.5960E-02
  2.4000E+01   1.1360E-02
  9.6000E+01   5.2000E-03
  7.2000E+02   0.0000E+00
  0
Pathway 8:
  0
  0
  0
  0
  0
  0
  0
  0
  0
  0
  1
  4
  0.0000E+00   3.1417E+02
  2.4000E+01   7.0352E+02
  9.6000E+01   4.4779E+03
  7.2000E+02   0.0000E+00
  0
```

```
Pathway 9:
  0
  0
  0
  0
  0
  0
  0
  0
  0
  0
  1
  4
  0.0000E+00   3.5580E-02
  2.4000E+01   2.9950E-02
  9.6000E+01   2.0170E-02
  7.2000E+02   0.0000E+00
  0
Pathway 10:
  0
  0
  0
  0
  0
  0
  0
  0
  0
  0
  1
  4
  0.0000E+00   1.5960E-02
  2.4000E+01   1.1360E-02
  9.6000E+01   5.2000E-03
  7.2000E+02   0.0000E+00
  0
Pathway 11:
  0
  0
  0
  0
  0
  1
  4
  0.0000E+00   3.1880E+00   1.0000E+02   0.0000E+00   1.0000E+02
  2.4000E+01   1.5130E+00   1.0000E+02   0.0000E+00   1.0000E+02
  9.6000E+01   1.1480E+00   1.0000E+02   0.0000E+00   1.0000E+02
  7.2000E+02   0.0000E+00   0.0000E+00   0.0000E+00   0.0000E+00
  0
  0
  0
  0
  0
  0
Pathway 12:
  0
  0
  0
  0
  0
```

```
  0
  0
  0
  0
  0
  1
  4
  0.0000E+00   4.2591E+04
  2.4000E+01   4.2591E+04
  9.6000E+01   4.2591E+04
  7.2000E+02   0.0000E+00
  0
Pathway 13:
  0
  0
  0
  0
  0
  0
  0
  0
  0
  0
  1
  4
  0.0000E+00   1.6090E-02
  2.4000E+01   1.6090E-02
  9.6000E+01   1.6090E-02
  7.2000E+02   0.0000E+00
  0
Pathway 14:
  0
  0
  0
  0
  0
  0
  0
  0
  0
  0
  1
  4
  0.0000E+00   3.3300E-03
  2.4000E+01   3.3300E-03
  9.6000E+01   3.3300E-03
  7.2000E+02   0.0000E+00
  0
Pathway 15:
  0
  0
  0
  0
  0
  1
  5
  0.0000E+00   1.5244E+00   1.0000E+02   0.0000E+00   1.0000E+02
  2.0000E+00   9.3060E-01   1.0000E+02   0.0000E+00   1.0000E+02
  2.4000E+01   5.1270E-01   1.0000E+02   0.0000E+00   1.0000E+02
  9.6000E+01   5.1270E-01   1.0000E+02   0.0000E+00   1.0000E+02
```

```
  7.2000E+02   0.0000E+00   0.0000E+00   0.0000E+00   0.0000E+00
  0
  0
  0
  0
  0
  0
Dose Locations:
  3
Location 1:
Control Room (CR)
  4
  0
  1
  2
  0.0000E+00   3.5000E-04
  7.2000E+02   0.0000E+00
  1
  4
  0.0000E+00   1.0000E+00
  2.4000E+01   6.0000E-01
  9.6000E+01   4.0000E-01
  7.2000E+02   0.0000E+00
Location 2:
Exclusion Area Boundary (EAB)
  3
  1
  2
  0.0000E+00   3.1800E-04
  2.4000E+01   0.0000E+00
  1
  4
  0.0000E+00   3.5000E-04
  8.0000E+00   1.8000E-04
  2.4000E+01   2.3000E-04
  7.2000E+02   0.0000E+00
  0
Location 3:
Low Population Zone (LPZ)
  3
  1
 10
  0.0000E+00   5.7900E-05
  8.0000E+00   4.1000E-05
  2.4000E+01   1.9500E-05
  4.8000E+01   1.9500E-05
  7.2000E+01   1.9500E-05
  9.6000E+01   6.6800E-06
  1.2000E+02   6.6800E-06
  1.6800E+02   6.6800E-06
  3.3600E+02   6.6800E-06
  7.2000E+02   0.0000E+00
  1
  4
  0.0000E+00   3.5000E-04
  8.0000E+00   1.8000E-04
  2.4000E+01   2.3000E-04
  7.2000E+02   0.0000E+00
  0
Effective Volume Location:
```

```
  1
  6
  0.0000E+00   6.8800E-03
  2.0000E+00   5.1700E-03
  8.0000E+00   2.0400E-03
  2.4000E+01   1.2900E-03
  9.6000E+01   9.6300E-04
  7.2000E+02   0.0000E+00
Simulation Parameters:
  1
  0.0000E+00   0.0000E+00
Output Filename:
C:\RESUP3-A.o0
  1
  1
  1
  0
  0
End of Scenario File
```

```
#######################################################################
   RADTRAD Version 3.03 (Spring 2001) run on  6/08/2006  at 17:05:28
#######################################################################

#######################################################################
                     Plant Description
#######################################################################

Number of Nuclides =  60

Inventory Power =   1.0000E+00 MWth
Plant Power Level =   3.5270E+03 MWth

Number of compartments    =  10

Compartment information

Compartment number  1  (Source term fraction =   1.0000E+00
)
Name: Containment
Compartment volume =   3.7907E+05 (Cubic feet)
Compartment type is Normal
Removal devices within compartment:
     Deposition
Pathways into and out of compartment  1
   Exit Pathway Number   15: Containment to  MSL A Inboard - Airborne

Compartment number  2
Name: MSL A Inboard - Airborne
Compartment volume =   2.5800E+02 (Cubic feet)
Compartment type is Normal
Pathways into and out of compartment  2
   Inlet Pathway Number  15: Containment to  MSL A Inboard - Airborne
   Exit Pathway Number    4: (Aerosol Transport 1) MSL A Inboard - Airborne to
   Exit Pathway Number    5: (Deposition 1) MSL A Inboard - Airborne to MSL A I

Compartment number  3
Name: Environment
Compartment type is Environment
Pathways into and out of compartment  3
   Inlet Pathway Number   3: Control Room to Environment (Exhaust)
   Inlet Pathway Number   6: (Resuspension 1) MSL A Inboard - Surface to Enviro
   Inlet Pathway Number   9: (Resuspension 2) MSL A Outboard - Surface to  Envi
   Inlet Pathway Number  13: (Resuspension 3) Condenser - Surface to  Environme
   Exit Pathway Number    1: Filtered Environment to Control Room (Intake)
   Exit Pathway Number    2: Unfiltered Environment to Control Room (Inleakage)

Compartment number  4
Name: Control Room
Compartment volume =   1.2600E+05 (Cubic feet)
Compartment type is Control Room
Removal devices within compartment:
     Filter(s)
Pathways into and out of compartment  4
   Inlet Pathway Number   1: Filtered Environment to Control Room (Intake)
   Inlet Pathway Number   2: Unfiltered Environment to Control Room (Inleakage)
   Exit Pathway Number    3: Control Room to Environment (Exhaust)

Compartment number  5
```

```
Name: MSL A Outboard - Airborne
Compartment volume =   1.1820E+03 (Cubic feet)
Compartment type is Normal
Pathways into and out of compartment  5
   Inlet Pathway Number   4: (Aerosol Transport 1) MSL A Inboard - Airborne to
   Exit Pathway Number    8: (Deposition 2) MSL A Outboard - Airborne to MSL A
   Exit Pathway Number   11: (Aerosol Transport 2) MSL A Outboard - Airborne to

Compartment number  6
Name: MSL A Inboard - Surface
Compartment volume =   1.0000E+00 (Cubic feet)
Compartment type is Normal
Pathways into and out of compartment  6
   Inlet Pathway Number   5: (Deposition 1) MSL A Inboard - Airborne to MSL A I
   Exit Pathway Number    6: (Resuspension 1) MSL A Inboard - Surface to Enviro
   Exit Pathway Number    7: (Surface Fixation 1) MSL A Inboard - Surface to Ho

Compartment number  7
Name: MSL A Outboard - Surface
Compartment volume =   1.0000E+00 (Cubic feet)
Compartment type is Normal
Pathways into and out of compartment  7
   Inlet Pathway Number   8: (Deposition 2) MSL A Outboard - Airborne to MSL A
   Exit Pathway Number    9: (Resuspension 2) MSL A Outboard - Surface to  Envi
   Exit Pathway Number   10: (Surface Fixation 2) MSL A Outboard - Surface to H

Compartment number  8
Name: Hold (By Surface Fixation)
Compartment volume =   1.0000E+00 (Cubic feet)
Compartment type is Normal
Pathways into and out of compartment  8
   Inlet Pathway Number   7: (Surface Fixation 1) MSL A Inboard - Surface to Ho
   Inlet Pathway Number  10: (Surface Fixation 2) MSL A Outboard - Surface to H
   Inlet Pathway Number  14: (Surface Fixation 3) Condenser - Surface to  Hold

Compartment number  9
Name: Condenser - Airborne
Compartment volume =   5.4746E+04 (Cubic feet)
Compartment type is Normal
Pathways into and out of compartment  9
   Inlet Pathway Number  11: (Aerosol Transport 2) MSL A Outboard - Airborne to
   Exit Pathway Number   12: (Deposition 3) Condenser - Airborne to Condenser -

Compartment number 10
Name: Condenser - Surface
Compartment volume =   1.0000E+00 (Cubic feet)
Compartment type is Normal
Pathways into and out of compartment 10
   Inlet Pathway Number  12: (Deposition 3) Condenser - Airborne to Condenser -
   Exit Pathway Number   13: (Resuspension 3) Condenser - Surface to  Environme
   Exit Pathway Number   14: (Surface Fixation 3) Condenser - Surface to  Hold

Total number of pathways =  15
```

```
#######################################################################
   RADTRAD Version 3.03 (Spring 2001) run on  6/08/2006  at 17:05:28
#######################################################################

#######################################################################
                      Scenario Description
#######################################################################
```

Radioactive Decay is enabled
Calculation of Daughters is enabled

Release Fractions and Timings

	GAP	EARLY IN-VESSEL	LATE RELEASE	RELEASE MASS
	0.500000 hr	1.5000 hrs	0.0000 hrs	(gm)
NOBLES	0.0000E+00	0.0000E+00	0.0000E+00	0.000E+00
IODINE	5.0000E-02	2.5000E-01	0.0000E+00	3.033E+02
CESIUM	0.0000E+00	0.0000E+00	0.0000E+00	0.000E+00
TELLURIUM	0.0000E+00	0.0000E+00	0.0000E+00	0.000E+00
STRONTIUM	0.0000E+00	0.0000E+00	0.0000E+00	0.000E+00
BARIUM	0.0000E+00	0.0000E+00	0.0000E+00	0.000E+00
RUTHENIUM	0.0000E+00	0.0000E+00	0.0000E+00	0.000E+00
CERIUM	0.0000E+00	0.0000E+00	0.0000E+00	0.000E+00
LANTHANUM	0.0000E+00	0.0000E+00	0.0000E+00	0.000E+00

Inventory Power = 3527. MWt

Nuclide Name	Group	Specific Inventory (Ci/MWt)	half life (s)	Whole Body DCF (Sv-m3/Bq-s)	Inhaled Thyroid (Sv/Bq)	Inhaled Effective (Sv/Bq)
I-131	2	2.687E+04	6.947E+05	1.820E-14	2.920E-07	8.890E-09
I-132	2	3.881E+04	8.280E+03	1.120E-13	1.740E-09	1.030E-10
I-133	2	5.556E+04	7.488E+04	2.940E-14	4.860E-08	1.580E-09
I-134	2	6.165E+04	3.156E+03	1.300E-13	2.880E-10	3.550E-11
I-135	2	5.192E+04	2.380E+04	8.294E-14	8.460E-09	3.320E-10

Nuclide	Daughter	Fraction	Daughter	Fraction	Daughter	Fraction
Kr-85m	Kr-85	0.21	none	0.00	none	0.00
Kr-87	Rb-87	1.00	none	0.00	none	0.00
Kr-88	Rb-88	1.00	none	0.00	none	0.00
Sr-90	Y-90	1.00	none	0.00	none	0.00
Sr-91	Y-91m	0.58	Y-91	0.42	none	0.00
Sr-92	Y-92	1.00	none	0.00	none	0.00
Y-93	Zr-93	1.00	none	0.00	none	0.00
Zr-95	Nb-95m	0.01	Nb-95	0.99	none	0.00
Zr-97	Nb-97m	0.95	Nb-97	0.05	none	0.00
Mo-99	Tc-99m	0.88	Tc-99	0.12	none	0.00
Tc-99m	Tc-99	1.00	none	0.00	none	0.00
Ru-103	Rh-103m	1.00	none	0.00	none	0.00
Ru-105	Rh-105	1.00	none	0.00	none	0.00
Ru-106	Rh-106	1.00	none	0.00	none	0.00
Sb-127	Te-127m	0.18	Te-127	0.82	none	0.00
Sb-129	Te-129m	0.22	Te-129	0.77	none	0.00
Te-127m	Te-127	0.98	none	0.00	none	0.00
Te-129	I-129	1.00	none	0.00	none	0.00
Te-129m	Te-129	0.65	I-129	0.35	none	0.00
Te-131m	Te-131	0.22	I-131	0.78	none	0.00
Te-132	I-132	1.00	none	0.00	none	0.00
I-131	Xe-131m	0.01	none	0.00	none	0.00
I-133	Xe-133m	0.03	Xe-133	0.97	none	0.00

I-135	Xe-135m	0.15	Xe-135	0.85	none	0.00
Xe-135	Cs-135	1.00	none	0.00	none	0.00
Cs-137	Ba-137m	0.95	none	0.00	none	0.00
Ba-140	La-140	1.00	none	0.00	none	0.00
La-141	Ce-141	1.00	none	0.00	none	0.00
Ce-143	Pr-143	1.00	none	0.00	none	0.00
Ce-144	Pr-144m	0.02	Pr-144	0.98	none	0.00
Nd-147	Pm-147	1.00	none	0.00	none	0.00
Np-239	Pu-239	1.00	none	0.00	none	0.00
Pu-238	U-234	1.00	none	0.00	none	0.00
Pu-239	U-235	1.00	none	0.00	none	0.00
Pu-240	U-236	1.00	none	0.00	none	0.00
Pu-241	U-237	0.00	Am-241	1.00	none	0.00
Am-241	Np-237	1.00	none	0.00	none	0.00
Cm-242	Pu-238	1.00	none	0.00	none	0.00
Cm-244	Pu-240	1.00	none	0.00	none	0.00

Iodine fractions
Aerosol = 9.5000E-01
Elemental = 4.8500E-02
Organic = 1.5000E-03

COMPARTMENT DATA

Compartment number 1: Containment
Natural Deposition (Powers' model): Aerosol data
Reactor type: 3
Percentile = 10 (%)

Natural Deposition: Elemental Removal Data

Time (hr)	Removal Coef. (hr^-1)
0.0000E+00	0.0000E+00

Compartment number 2: MSL A Inboard - Airborne

Compartment number 3: Environment

Compartment number 4: Control Room

Compartment Filter Data

Time (hr)	Flow Rate (cfm)	Filter Efficiencies (%) Aerosol	Elemental	Organic
0.0000E+00	2.1750E+03	9.9000E+01	9.5000E+01	9.5000E+01
3.3330E-01	2.1750E+03	9.9000E+01	9.5000E+01	9.5000E+01
7.2000E+02	2.1750E+03	0.0000E+00	0.0000E+00	0.0000E+00

Compartment number 5: MSL A Outboard - Airborne

Compartment number 6: MSL A Inboard - Surface

Compartment number 7: MSL A Outboard - Surface

Compartment number 8: Hold (By Surface Fixation)

Compartment number 9: Condenser - Airborne

Compartment number 10: Condenser - Surface

PATHWAY DATA

Pathway number 1: Filtered Environment to Control Room (Intake)

Pathway Filter: Removal Data

Time (hr)	Flow Rate (cfm)	Filter Efficiencies (%) Aerosol	Elemental	Organic
0.0000E+00	5.2500E+02	9.9000E+01	9.5000E+01	9.5000E+01
5.0000E-01	5.2500E+02	9.9000E+01	9.5000E+01	9.5000E+01
7.2000E+02	0.0000E+00	0.0000E+00	0.0000E+00	0.0000E+00

Pathway number 2: Unfiltered Environment to Control Room (Inleakage)

Pathway Filter: Removal Data

Time (hr)	Flow Rate (cfm)	Filter Efficiencies (%) Aerosol	Elemental	Organic
0.0000E+00	2.2500E+02	0.0000E+00	0.0000E+00	0.0000E+00
7.2000E+02	0.0000E+00	0.0000E+00	0.0000E+00	0.0000E+00

Pathway number 3: Control Room to Environment (Exhaust)

Pathway Filter: Removal Data

Time (hr)	Flow Rate (cfm)	Filter Efficiencies (%) Aerosol	Elemental	Organic
0.0000E+00	7.5000E+02	1.0000E+02	1.0000E+02	1.0000E+02
5.0000E-01	7.5000E+02	1.0000E+02	1.0000E+02	1.0000E+02
7.2000E+02	0.0000E+00	0.0000E+00	0.0000E+00	0.0000E+00

Pathway number 4: (Aerosol Transport 1) MSL A Inboard - Airborne to

Pathway Filter: Removal Data

Time (hr)	Flow Rate (cfm)	Filter Efficiencies (%) Aerosol	Elemental	Organic
0.0000E+00	9.3060E-01	1.0000E+02	0.0000E+00	1.0000E+02
2.0000E+00	9.3060E-01	1.0000E+02	0.0000E+00	1.0000E+02
2.4000E+01	5.1270E-01	1.0000E+02	0.0000E+00	1.0000E+02
9.6000E+01	5.1270E-01	1.0000E+02	0.0000E+00	1.0000E+02
7.2000E+02	0.0000E+00	0.0000E+00	0.0000E+00	0.0000E+00

Pathway number 5: (Deposition 1) MSL A Inboard - Airborne to MSL A I

Convection Data

Time (hr)	Flow Rate (% / day)
0.0000E+00	3.1420E+02
2.4000E+01	7.0350E+02
9.6000E+01	4.4780E+03
7.2000E+02	0.0000E+00

Pathway number 6: (Resuspension 1) MSL A Inboard - Surface to Enviro

Convection Data

Time (hr)	Flow Rate (% / day)
0.0000E+00	3.5580E-02
2.4000E+01	2.9950E-02
9.6000E+01	2.0170E-02
7.2000E+02	0.0000E+00

Pathway number 7: (Surface Fixation 1) MSL A Inboard - Surface to Ho

Convection Data

Time (hr)	Flow Rate (% / day)
0.0000E+00	1.5960E-02
2.4000E+01	1.1360E-02
9.6000E+01	5.2000E-03
7.2000E+02	0.0000E+00

Pathway number 8: (Deposition 2) MSL A Outboard - Airborne to MSL A

Convection Data

Time (hr)	Flow Rate (% / day)
0.0000E+00	3.1417E+02
2.4000E+01	7.0352E+02
9.6000E+01	4.4779E+03
7.2000E+02	0.0000E+00

Pathway number 9: (Resuspension 2) MSL A Outboard - Surface to Envi

Convection Data

Time (hr)	Flow Rate (% / day)
0.0000E+00	3.5580E-02
2.4000E+01	2.9950E-02
9.6000E+01	2.0170E-02
7.2000E+02	0.0000E+00

Pathway number 10: (Surface Fixation 2) MSL A Outboard - Surface to H

Convection Data

Time (hr)	Flow Rate (% / day)
0.0000E+00	1.5960E-02
2.4000E+01	1.1360E-02
9.6000E+01	5.2000E-03
7.2000E+02	0.0000E+00

Pathway number 11: (Aerosol Transport 2) MSL A Outboard - Airborne to

Pathway Filter: Removal Data

Time (hr)	Flow Rate (cfm)	Filter Efficiencies (%) Aerosol	Elemental	Organic
0.0000E+00	3.1880E+00	1.0000E+02	0.0000E+00	1.0000E+02
2.4000E+01	1.5130E+00	1.0000E+02	0.0000E+00	1.0000E+02
9.6000E+01	1.1480E+00	1.0000E+02	0.0000E+00	1.0000E+02
7.2000E+02	0.0000E+00	0.0000E+00	0.0000E+00	0.0000E+00

Pathway number 12: (Deposition 3) Condenser - Airborne to Condenser -

Convection Data

Time (hr)	Flow Rate (% / day)
0.0000E+00	4.2591E+04
2.4000E+01	4.2591E+04
9.6000E+01	4.2591E+04
7.2000E+02	0.0000E+00

Pathway number 13: (Resuspension 3) Condenser - Surface to Environme

Convection Data

Time (hr)	Flow Rate (% / day)

0.0000E+00	1.6090E-02
2.4000E+01	1.6090E-02
9.6000E+01	1.6090E-02
7.2000E+02	0.0000E+00

Pathway number 14: (Surface Fixation 3) Condenser - Surface to Hold

Convection Data

Time (hr)	Flow Rate (% / day)
0.0000E+00	3.3300E-03
2.4000E+01	3.3300E-03
9.6000E+01	3.3300E-03
7.2000E+02	0.0000E+00

Pathway number 15: Containment to MSL A Inboard - Airborne

Pathway Filter: Removal Data

Time (hr)	Flow Rate (cfm)	Filter Efficiencies (%) Aerosol	Elemental	Organic
0.0000E+00	1.5244E+00	1.0000E+02	0.0000E+00	1.0000E+02
2.0000E+00	9.3060E-01	1.0000E+02	0.0000E+00	1.0000E+02
2.4000E+01	5.1270E-01	1.0000E+02	0.0000E+00	1.0000E+02
9.6000E+01	5.1270E-01	1.0000E+02	0.0000E+00	1.0000E+02
7.2000E+02	0.0000E+00	0.0000E+00	0.0000E+00	0.0000E+00

LOCATION DATA

Location Control Room (CR) is in compartment 4

Location X/Q Data

Time (hr)	X/Q (s * m^-3)
0.0000E+00	6.8800E-03
2.0000E+00	5.1700E-03
8.0000E+00	2.0400E-03
2.4000E+01	1.2900E-03
9.6000E+01	9.6300E-04
7.2000E+02	0.0000E+00

Location Breathing Rate Data

Time (hr)	Breathing Rate (m^3 * sec^-1)
0.0000E+00	3.5000E-04
7.2000E+02	0.0000E+00

Location Occupancy Factor Data

Time (hr)	Occupancy Factor
0.0000E+00	1.0000E+00
2.4000E+01	6.0000E-01
9.6000E+01	4.0000E-01
7.2000E+02	0.0000E+00

Location Exclusion Area Boundary (EAB) is in compartment 3

Location X/Q Data

Time (hr)	X/Q (s * m^-3)
0.0000E+00	3.1800E-04
2.4000E+01	0.0000E+00

Location Breathing Rate Data

Time (hr)	Breathing Rate (m^3 * sec^-1)
0.0000E+00	3.5000E-04
8.0000E+00	1.8000E-04

```
  2.4000E+01                  2.3000E-04
  7.2000E+02                  0.0000E+00
Location Low Population Zone (LPZ)     is in compartment   3

Location X/Q Data
 Time (hr)          X/Q (s * m^-3)
  0.0000E+00           5.7900E-05
  8.0000E+00           4.1000E-05
  2.4000E+01           1.9500E-05
  4.8000E+01           1.9500E-05
  7.2000E+01           1.9500E-05
  9.6000E+01           6.6800E-06
  1.2000E+02           6.6800E-06
  1.6800E+02           6.6800E-06
  3.3600E+02           6.6800E-06
  7.2000E+02           0.0000E+00

Location Breathing Rate Data
 Time (hr)          Breathing Rate (m^3 * sec^-1)
  0.0000E+00                  3.5000E-04
  8.0000E+00                  1.8000E-04
  2.4000E+01                  2.3000E-04
  7.2000E+02                  0.0000E+00

USER SPECIFIED TIME STEP DATA - SUPPLEMENTAL TIME STEPS
Time            Time step
 0.0000E+00       0.0000E+00
```

```
#######################################################################
   RADTRAD Version 3.03 (Spring 2001) run on  6/08/2006  at 17:05:28
#######################################################################
```

```
 ####   #    #  #####  #####   #    #  #####
#    #  #    #    #    #    #  #    #    #
#    #  #    #    #    #    #  #    #    #
#    #  #    #    #    #####   #    #    #
#    #  #    #    #    #       #    #    #
#    #  #    #    #    #       #    #    #
 ####    ####     #    #        ####     #
```

```
#######################################################################
                                Dose Output
#######################################################################
```

Control Room (CR) Doses:

Time (h) = 0.3333	Whole Body	Thyroid	TEDE
Delta dose (rem)	6.6948E-13	3.3191E-09	1.0549E-10
Accumulated dose (rem)	6.6948E-13	3.3191E-09	1.0549E-10

Exclusion Area Boundary (EAB) Doses:

Time (h) = 0.3333	Whole Body	Thyroid	TEDE
Delta dose (rem)	8.3025E-11	1.8618E-08	6.7100E-10
Accumulated dose (rem)	8.3025E-11	1.8618E-08	6.7100E-10

Low Population Zone (LPZ) Doses:

Time (h) = 0.3333	Whole Body	Thyroid	TEDE
Delta dose (rem)	1.5117E-11	3.3898E-09	1.2217E-10
Accumulated dose (rem)	1.5117E-11	3.3898E-09	1.2217E-10

Control Room (CR) Doses:

Time (h) = 0.5000	Whole Body	Thyroid	TEDE
Delta dose (rem)	3.7337E-12	1.9551E-08	6.2062E-10
Accumulated dose (rem)	4.4032E-12	2.2870E-08	7.2611E-10

Exclusion Area Boundary (EAB) Doses:

Time (h) = 0.5000	Whole Body	Thyroid	TEDE
Delta dose (rem)	3.1656E-10	7.5332E-08	2.6936E-09
Accumulated dose (rem)	3.9959E-10	9.3950E-08	3.3646E-09

Low Population Zone (LPZ) Doses:

Time (h) = 0.5000	Whole Body	Thyroid	TEDE
Delta dose (rem)	5.7638E-11	1.3716E-08	4.9044E-10
Accumulated dose (rem)	7.2755E-11	1.7106E-08	6.1261E-10

Control Room (CR) Doses:

Time (h) = 2.0000	Whole Body	Thyroid	TEDE
Delta dose (rem)	2.7501E-09	1.9319E-05	6.0951E-07
Accumulated dose (rem)	2.7545E-09	1.9342E-05	6.1024E-07

Exclusion Area Boundary (EAB) Doses:

Time (h) = 2.0000	Whole Body	Thyroid	TEDE
Delta dose (rem)	8.5444E-08	2.8114E-05	9.6863E-07
Accumulated dose (rem)	8.5843E-08	2.8208E-05	9.7200E-07

Low Population Zone (LPZ) Doses:

Time (h) = 2.0000	Whole Body	Thyroid	TEDE
Delta dose (rem)	1.5557E-08	5.1189E-06	1.7636E-07
Accumulated dose (rem)	1.5630E-08	5.1360E-06	1.7698E-07

Control Room (CR) Doses:

Time (h) = 8.0000	Whole Body	Thyroid	TEDE
Delta dose (rem)	4.2020E-07	3.9886E-03	1.2463E-04
Accumulated dose (rem)	4.2295E-07	4.0079E-03	1.2524E-04

Exclusion Area Boundary (EAB) Doses:

Time (h) = 8.0000	Whole Body	Thyroid	TEDE
Delta dose (rem)	5.8847E-06	3.5784E-03	1.1734E-04
Accumulated dose (rem)	5.9705E-06	3.6066E-03	1.1832E-04

Low Population Zone (LPZ) Doses:

Time (h) = 8.0000	Whole Body	Thyroid	TEDE
Delta dose (rem)	1.0715E-06	6.5154E-04	2.1366E-05
Accumulated dose (rem)	1.0871E-06	6.5668E-04	2.1543E-05

Control Room (CR) Doses:

Time (h) = 24.0000	Whole Body	Thyroid	TEDE
Delta dose (rem)	2.7475E-06	3.2222E-02	9.9770E-04
Accumulated dose (rem)	3.1704E-06	3.6230E-02	1.1229E-03

Exclusion Area Boundary (EAB) Doses:

Time (h) = 24.0000	Whole Body	Thyroid	TEDE
Delta dose (rem)	4.9192E-05	3.0273E-02	9.8388E-04
Accumulated dose (rem)	5.5162E-05	3.3879E-02	1.1022E-03

Low Population Zone (LPZ) Doses:

Time (h) = 24.0000	Whole Body	Thyroid	TEDE
Delta dose (rem)	6.3424E-06	3.9031E-03	1.2685E-04
Accumulated dose (rem)	7.4294E-06	4.5598E-03	1.4840E-04

Control Room (CR) Doses:

Time (h) = 48.0000	Whole Body	Thyroid	TEDE
Delta dose (rem)	1.7229E-06	3.8624E-02	1.1867E-03
Accumulated dose (rem)	4.8934E-06	7.4854E-02	2.3096E-03

Exclusion Area Boundary (EAB) Doses:

Time (h) = 48.0000	Whole Body	Thyroid	TEDE
Delta dose (rem)	0.0000E+00	0.0000E+00	0.0000E+00
Accumulated dose (rem)	5.5162E-05	3.3879E-02	1.1022E-03

Low Population Zone (LPZ) Doses:

Time (h) = 48.0000	Whole Body	Thyroid	TEDE
Delta dose (rem)	4.8184E-06	7.1761E-03	2.2496E-04
Accumulated dose (rem)	1.2248E-05	1.1736E-02	3.7336E-04

Control Room (CR) Doses:

Time (h) = 72.0000	Whole Body	Thyroid	TEDE
Delta dose (rem)	1.0778E-06	5.0880E-02	1.5561E-03
Accumulated dose (rem)	5.9711E-06	1.2573E-01	3.8657E-03

Exclusion Area Boundary (EAB) Doses:

Time (h) = 72.0000	Whole Body	Thyroid	TEDE
Delta dose (rem)	0.0000E+00	0.0000E+00	0.0000E+00
Accumulated dose (rem)	5.5162E-05	3.3879E-02	1.1022E-03

Low Population Zone (LPZ) Doses:

Time (h) = 72.0000	Whole Body	Thyroid	TEDE
Delta dose (rem)	4.1731E-06	9.5422E-03	2.9580E-04
Accumulated dose (rem)	1.6421E-05	2.1278E-02	6.6916E-04

Control Room (CR) Doses:

Time (h) = 96.0000	Whole Body	Thyroid	TEDE
Delta dose (rem)	9.1833E-07	6.0794E-02	1.8554E-03
Accumulated dose (rem)	6.8895E-06	1.8653E-01	5.7210E-03

Exclusion Area Boundary (EAB) Doses:

Time (h) = 96.0000	Whole Body	Thyroid	TEDE
Delta dose (rem)	0.0000E+00	0.0000E+00	0.0000E+00
Accumulated dose (rem)	5.5162E-05	3.3879E-02	1.1022E-03

Low Population Zone (LPZ) Doses:

Time (h) = 96.0000	Whole Body	Thyroid	TEDE
Delta dose (rem)	4.0240E-06	1.1371E-02	3.5088E-04
Accumulated dose (rem)	2.0445E-05	3.2649E-02	1.0200E-03

Control Room (CR) Doses:

Time (h) = 120.0000	Whole Body	Thyroid	TEDE
Delta dose (rem)	3.4270E-07	2.5230E-02	7.6920E-04
Accumulated dose (rem)	7.2322E-06	2.1176E-01	6.4902E-03

Exclusion Area Boundary (EAB) Doses:

Time (h) = 120.0000	Whole Body	Thyroid	TEDE
Delta dose (rem)	0.0000E+00	0.0000E+00	0.0000E+00
Accumulated dose (rem)	5.5162E-05	3.3879E-02	1.1022E-03

Low Population Zone (LPZ) Doses:

Time (h) = 120.0000	Whole Body	Thyroid	TEDE
Delta dose (rem)	9.9962E-07	3.1502E-03	9.6998E-05
Accumulated dose (rem)	2.1444E-05	3.5799E-02	1.1170E-03

Control Room (CR) Doses:

Time (h) = 168.0000	Whole Body	Thyroid	TEDE
Delta dose (rem)	6.8050E-07	5.5093E-02	1.6786E-03
Accumulated dose (rem)	7.9127E-06	2.6685E-01	8.1688E-03

Exclusion Area Boundary (EAB) Doses:

Time (h) = 168.0000	Whole Body	Thyroid	TEDE
Delta dose (rem)	0.0000E+00	0.0000E+00	0.0000E+00
Accumulated dose (rem)	5.5162E-05	3.3879E-02	1.1022E-03

Low Population Zone (LPZ) Doses:

Time (h) = 168.0000	Whole Body	Thyroid	TEDE
Delta dose (rem)	2.0871E-06	7.0705E-03	2.1743E-04
Accumulated dose (rem)	2.3532E-05	4.2870E-02	1.3345E-03

Control Room (CR) Doses:

Time (h) = 336.0000	Whole Body	Thyroid	TEDE
Delta dose (rem)	2.4440E-06	2.1504E-01	6.5497E-03
Accumulated dose (rem)	1.0357E-05	4.8190E-01	1.4719E-02

Exclusion Area Boundary (EAB) Doses:

Time (h) = 336.0000	Whole Body	Thyroid	TEDE
Delta dose (rem)	0.0000E+00	0.0000E+00	0.0000E+00
Accumulated dose (rem)	5.5162E-05	3.3879E-02	1.1022E-03

Low Population Zone (LPZ) Doses:

Time (h) = 336.0000	Whole Body	Thyroid	TEDE
Delta dose (rem)	7.7703E-06	2.7548E-02	8.4649E-04
Accumulated dose (rem)	3.1302E-05	7.0417E-02	2.1809E-03

Control Room (CR) Doses:

Time (h) = 720.0000	Whole Body	Thyroid	TEDE
Delta dose (rem)	3.7604E-06	3.7173E-01	1.1321E-02
Accumulated dose (rem)	1.4117E-05	8.5362E-01	2.6040E-02

Exclusion Area Boundary (EAB) Doses:

Time (h) = 720.0000	Whole Body	Thyroid	TEDE
Delta dose (rem)	0.0000E+00	0.0000E+00	0.0000E+00
Accumulated dose (rem)	5.5162E-05	3.3879E-02	1.1022E-03

Low Population Zone (LPZ) Doses:

Time (h) = 720.0000	Whole Body	Thyroid	TEDE
Delta dose (rem)	1.3185E-05	4.7553E-02	1.4609E-03
Accumulated dose (rem)	4.4487E-05	1.1797E-01	3.6419E-03

838

```
#######################################################################
                                I-131 Summary
#######################################################################
```

Time (hr)	Containment I-131 (Curies)	MSL A Inboard - Airbo I-131 (Curies)	Environment I-131 (Curies)
0.000	5.2640E+03	1.7114E-05	8.5433E-19
0.333	2.8290E+06	5.9220E+00	1.1004E-07
0.500	4.0239E+06	1.3070E+01	5.5626E-07
0.800	7.9884E+06	3.5530E+01	3.6823E-06
1.100	1.1679E+07	7.1455E+01	1.3715E-05
1.400	1.5113E+07	1.1946E+02	3.7726E-05
1.700	1.8307E+07	1.7832E+02	8.5514E-05
2.000	2.1276E+07	2.4689E+02	1.6953E-04
2.300	1.6058E+07	2.7960E+02	3.0356E-04
2.600	1.2209E+07	3.0897E+02	4.9798E-04
2.900	9.3713E+06	3.3535E+02	7.6181E-04
3.200	7.2781E+06	3.5902E+02	1.1036E-03
3.500	5.7342E+06	3.8027E+02	1.5317E-03
3.800	4.5953E+06	3.9933E+02	2.0538E-03
4.100	3.7551E+06	4.1642E+02	2.6773E-03
4.400	3.1351E+06	4.3174E+02	3.4093E-03
4.700	2.6775E+06	4.4546E+02	4.2563E-03
5.000	2.3396E+06	4.5775E+02	5.2246E-03
5.300	2.1768E+06	4.6874E+02	6.3200E-03
5.600	2.0415E+06	4.7858E+02	7.5480E-03
5.900	1.9291E+06	4.8737E+02	8.9139E-03
6.200	1.8355E+06	4.9521E+02	1.0422E-02
6.500	1.7577E+06	5.0221E+02	1.2078E-02
6.800	1.6930E+06	5.0845E+02	1.3884E-02
7.100	1.6390E+06	5.1400E+02	1.5846E-02
7.400	1.5940E+06	5.1893E+02	1.7967E-02
7.700	1.5564E+06	5.2331E+02	2.0250E-02
8.000	1.5249E+06	5.2718E+02	2.2698E-02
8.300	1.4986E+06	5.3061E+02	2.5314E-02
8.600	1.4790E+06	5.3363E+02	2.8101E-02
8.900	1.4622E+06	5.3629E+02	3.1061E-02
9.200	1.4476E+06	5.3861E+02	3.4197E-02
9.500	1.4350E+06	5.4065E+02	3.7510E-02
9.800	1.4240E+06	5.4241E+02	4.1003E-02
10.100	1.4145E+06	5.4394E+02	4.4677E-02
10.400	1.4061E+06	5.4525E+02	4.8533E-02
24.000	1.2997E+06	5.3471E+02	4.2354E-01
48.000	1.1900E+06	2.2722E+02	1.7406E+00
72.000	1.0896E+06	2.0804E+02	3.5932E+00
96.000	9.9764E+05	1.9048E+02	5.8654E+00
120.000	9.1346E+05	3.6224E+01	7.7297E+00
168.000	7.6580E+05	3.0368E+01	1.1952E+01
336.000	4.1314E+05	1.6384E+01	2.8481E+01
720.000	1.0081E+05	3.9977E+00	5.7025E+01

Time (hr)	Control Room I-131 (Curies)	MSL A Outboard - Airb I-131 (Curies)	MSL A Inboard - Surfa I-131 (Curies)
0.000	6.9687E-22	6.8585E-10	4.1491E-10
0.333	8.2290E-11	1.4029E-01	8.6958E-02
0.500	3.9902E-10	4.6105E-01	2.8927E-01
0.800	2.4619E-09	1.8683E+00	1.1965E+00
1.100	8.6059E-09	4.9831E+00	3.2534E+00
1.400	2.2286E-08	1.0452E+01	6.9597E+00
1.700	4.7642E-08	1.8787E+01	1.2763E+01

2.000	8.9217E-08	3.0380E+01	2.1065E+01
2.300	1.2817E-07	4.4183E+01	3.1387E+01
2.600	1.8482E-07	5.8737E+01	4.2916E+01
2.900	2.5783E-07	7.3781E+01	5.5524E+01
3.200	3.4611E-07	8.9098E+01	6.9101E+01
3.500	4.4873E-07	1.0450E+02	8.3544E+01
3.800	5.6485E-07	1.1985E+02	9.8761E+01
4.100	6.9373E-07	1.3501E+02	1.1467E+02
4.400	8.3465E-07	1.4989E+02	1.3120E+02
4.700	9.8695E-07	1.6440E+02	1.4828E+02
5.000	1.1500E-06	1.7848E+02	1.6585E+02
5.300	1.3231E-06	1.9209E+02	1.8386E+02
5.600	1.5058E-06	2.0519E+02	2.0225E+02
5.900	1.6975E-06	2.1775E+02	2.2100E+02
6.200	1.8975E-06	2.2976E+02	2.4005E+02
6.500	2.1054E-06	2.4120E+02	2.5936E+02
6.800	2.3207E-06	2.5208E+02	2.7892E+02
7.100	2.5429E-06	2.6241E+02	2.9869E+02
7.400	2.7715E-06	2.7218E+02	3.1864E+02
7.700	3.0061E-06	2.8140E+02	3.3875E+02
8.000	3.2462E-06	2.9010E+02	3.5901E+02
8.300	2.6906E-06	2.9829E+02	3.7938E+02
8.600	2.3535E-06	3.0597E+02	3.9986E+02
8.900	2.1627E-06	3.1318E+02	4.2042E+02
9.200	2.0703E-06	3.1994E+02	4.4107E+02
9.500	2.0439E-06	3.2625E+02	4.6177E+02
9.800	2.0619E-06	3.3214E+02	4.8253E+02
10.100	2.1101E-06	3.3763E+02	5.0333E+02
10.400	2.1787E-06	3.4275E+02	5.2416E+02
24.000	7.2853E-06	3.9367E+02	1.4459E+03
48.000	7.5781E-06	7.3353E+01	3.1124E+03
72.000	9.8014E-06	6.7066E+01	4.3188E+03
96.000	1.1599E-05	6.1407E+01	5.3015E+03
120.000	6.9353E-06	2.2449E+00	6.6159E+03
168.000	7.9075E-06	1.8820E+00	8.2897E+03
336.000	8.2490E-06	1.0153E+00	9.6918E+03
720.000	4.2780E-06	2.4775E-01	5.3333E+03

	MSL A Outboard - Surf Hold	(By Surface Fixa	Condenser - Airborne
Time (hr)	I-131 (Curies)	I-131 (Curies)	I-131 (Curies)
0.000	1.2470E-14	3.8322E-19	1.5385E-14
0.333	1.5466E-03	4.9244E-08	8.1728E-04
0.500	7.6649E-03	2.4849E-07	3.0866E-03
0.800	4.9005E-02	1.6395E-06	1.3876E-02
1.100	1.7669E-01	6.0874E-06	3.8971E-02
1.400	4.7083E-01	1.6693E-05	8.4502E-02
1.700	1.0341E+00	3.7727E-05	1.5535E-01
2.000	1.9867E+00	7.4577E-05	2.5529E-01
2.300	3.4450E+00	1.3315E-04	3.7873E-01
2.600	5.4591E+00	2.1776E-04	5.1028E-01
2.900	8.0527E+00	3.3208E-04	6.4672E-01
3.200	1.1240E+01	4.7959E-04	7.8600E-01
3.500	1.5027E+01	6.6358E-04	9.2640E-01
3.800	1.9414E+01	8.8716E-04	1.0665E+00
4.100	2.4396E+01	1.1532E-03	1.2051E+00
4.400	2.9962E+01	1.4645E-03	1.3413E+00
4.700	3.6098E+01	1.8236E-03	1.4742E+00
5.000	4.2790E+01	2.2330E-03	1.6034E+00
5.300	5.0018E+01	2.6947E-03	1.7283E+00
5.600	5.7762E+01	3.2110E-03	1.8486E+00

5.900	6.6001E+01	3.7838E-03	1.9640E+00
6.200	7.4714E+01	4.4149E-03	2.0744E+00
6.500	8.3877E+01	5.1059E-03	2.1798E+00
6.800	9.3469E+01	5.8584E-03	2.2799E+00
7.100	1.0347E+02	6.6739E-03	2.3750E+00
7.400	1.1385E+02	7.5536E-03	2.4650E+00
7.700	1.2459E+02	8.4987E-03	2.5501E+00
8.000	1.3567E+02	9.5104E-03	2.6303E+00
8.300	1.4707E+02	1.0590E-02	2.7058E+00
8.600	1.5878E+02	1.1738E-02	2.7767E+00
8.900	1.7076E+02	1.2955E-02	2.8432E+00
9.200	1.8300E+02	1.4242E-02	2.9056E+00
9.500	1.9548E+02	1.5600E-02	2.9639E+00
9.800	2.0819E+02	1.7030E-02	3.0183E+00
10.100	2.2111E+02	1.8531E-02	3.0691E+00
10.400	2.3423E+02	2.0106E-02	3.1163E+00
24.000	8.9289E+02	1.6940E-01	3.5896E+00
48.000	1.6226E+03	6.0487E-01	3.1747E-01
72.000	1.9602E+03	1.1978E+00	2.9025E-01
96.000	2.2299E+03	1.8938E+00	2.6576E-01
120.000	2.2063E+03	2.1896E+00	7.3716E-03
168.000	2.0247E+03	2.8304E+00	6.1800E-03
336.000	1.4255E+03	4.7263E+00	3.3341E-03
720.000	5.3732E+02	4.8781E+00	8.1354E-04

Time (hr)	Condenser - Surface I-131 (Curies)
0.000	3.0347E-17
0.333	1.0946E-03
0.500	6.3889E-03
0.800	4.6705E-02
1.100	1.7946E-01
1.400	4.9755E-01
1.700	1.1230E+00
2.000	2.2008E+00
2.300	3.8801E+00
2.600	6.2385E+00
2.900	9.3083E+00
3.200	1.3109E+01
3.500	1.7651E+01
3.800	2.2934E+01
4.100	2.8954E+01
4.400	3.5699E+01
4.700	4.3152E+01
5.000	5.1296E+01
5.300	6.0106E+01
5.600	6.9560E+01
5.900	7.9630E+01
6.200	9.0291E+01
6.500	1.0151E+02
6.800	1.1327E+02
7.100	1.2554E+02
7.400	1.3828E+02
7.700	1.5148E+02
8.000	1.6510E+02
8.300	1.7912E+02
8.600	1.9351E+02
8.900	2.0826E+02
9.200	2.2333E+02
9.500	2.3871E+02

9.800	2.5436E+02
10.100	2.7029E+02
10.400	2.8645E+02
24.000	1.1004E+03
48.000	1.2229E+03
72.000	1.2454E+03
96.000	1.2556E+03
120.000	1.1569E+03
168.000	9.7859E+02
336.000	5.4447E+02
720.000	1.4226E+02

##

Cumulative Dose Summary

##

	Control Room (CR)		Exclusion Area Bounda		Low Population Zone (	
Time	Thyroid	TEDE	Thyroid	TEDE	Thyroid	TEDE
(hr)	(rem)	(rem)	(rem)	(rem)	(rem)	(rem)
0.000	0.0000E+00	0.0000E+00	0.0000E+00	0.0000E+00	0.0000E+00	0.0000E+00
0.333	3.3191E-09	1.0549E-10	1.8618E-08	6.7100E-10	3.3898E-09	1.2217E-10
0.500	2.2870E-08	7.2611E-10	9.3950E-08	3.3646E-09	1.7106E-08	6.1261E-10
0.800	2.2052E-07	6.9902E-09	6.2006E-07	2.1989E-08	1.1290E-07	4.0037E-09
1.100	1.0368E-06	3.2818E-08	2.3024E-06	8.0938E-08	4.1921E-07	1.4737E-08
1.400	3.3805E-06	1.0687E-07	6.3139E-06	2.2027E-07	1.1496E-06	4.0106E-08
1.700	8.7564E-06	2.7653E-07	1.4270E-05	4.9455E-07	2.5981E-06	9.0045E-08
2.000	1.9342E-05	6.1024E-07	2.8208E-05	9.7200E-07	5.1360E-06	1.7698E-07
2.300	3.6227E-05	1.1420E-06	5.0366E-05	1.7268E-06	9.1705E-06	3.1441E-07
2.600	6.0568E-05	1.9079E-06	8.2400E-05	2.8125E-06	1.5003E-05	5.1208E-07
2.900	9.4972E-05	2.9896E-06	1.2572E-04	4.2741E-06	2.2891E-05	7.7822E-07
3.200	1.4184E-04	4.4618E-06	1.8167E-04	6.1541E-06	3.3078E-05	1.1205E-06
3.500	2.0338E-04	6.3939E-06	2.5151E-04	8.4920E-06	4.5793E-05	1.5462E-06
3.800	2.8166E-04	8.8498E-06	3.3641E-04	1.1325E-05	6.1252E-05	2.0620E-06
4.100	3.7860E-04	1.1889E-05	4.3749E-04	1.4687E-05	7.9657E-05	2.6742E-06
4.400	4.9600E-04	1.5568E-05	5.5579E-04	1.8612E-05	1.0120E-04	3.3887E-06
4.700	6.3554E-04	1.9938E-05	6.9226E-04	2.3127E-05	1.2604E-04	4.2109E-06
5.000	7.9878E-04	2.5048E-05	8.4781E-04	2.8262E-05	1.5437E-04	5.1458E-06
5.300	9.8716E-04	3.0942E-05	1.0233E-03	3.4041E-05	1.8631E-04	6.1981E-06
5.600	1.2021E-03	3.7663E-05	1.2194E-03	4.0488E-05	2.2202E-04	7.3719E-06
5.900	1.4447E-03	4.5248E-05	1.4369E-03	4.7624E-05	2.6163E-04	8.6712E-06
6.200	1.7163E-03	5.3734E-05	1.6765E-03	5.5469E-05	3.0524E-04	1.0100E-05
6.500	2.0179E-03	6.3154E-05	1.9387E-03	6.4041E-05	3.5298E-04	1.1660E-05
6.800	2.3505E-03	7.3538E-05	2.2240E-03	7.3356E-05	4.0494E-04	1.3356E-05
7.100	2.7150E-03	8.4915E-05	2.5331E-03	8.3428E-05	4.6121E-04	1.5190E-05
7.400	3.1122E-03	9.7309E-05	2.8663E-03	9.4271E-05	5.2188E-04	1.7164E-05
7.700	3.5430E-03	1.1074E-04	3.2240E-03	1.0590E-04	5.8701E-04	1.9281E-05
8.000	4.0079E-03	1.2524E-04	3.6066E-03	1.1832E-04	6.5668E-04	2.1543E-05
8.300	4.4455E-03	1.3888E-04	3.8164E-03	1.2538E-04	6.8372E-04	2.2454E-05
8.600	4.8168E-03	1.5045E-04	4.0393E-03	1.3288E-04	7.1246E-04	2.3420E-05
8.900	5.1490E-03	1.6080E-04	4.2755E-03	1.4080E-04	7.4291E-04	2.4442E-05
9.200	5.4598E-03	1.7049E-04	4.5251E-03	1.4917E-04	7.7509E-04	2.5520E-05
9.500	5.7615E-03	1.7989E-04	4.7881E-03	1.5796E-04	8.0901E-04	2.6654E-05
9.800	6.0620E-03	1.8925E-04	5.0648E-03	1.6720E-04	8.4468E-04	2.7845E-05
10.100	6.3668E-03	1.9873E-04	5.3551E-03	1.7688E-04	8.8211E-04	2.9093E-05
10.400	6.6795E-03	2.0847E-04	5.6592E-03	1.8699E-04	9.2132E-04	3.0397E-05
24.000	3.6230E-02	1.1229E-03	3.3879E-02	1.1022E-03	4.5598E-03	1.4840E-04
48.000	7.4854E-02	2.3096E-03	3.3879E-02	1.1022E-03	1.1736E-02	3.7336E-04
72.000	1.2573E-01	3.8657E-03	3.3879E-02	1.1022E-03	2.1278E-02	6.6916E-04
96.000	1.8653E-01	5.7210E-03	3.3879E-02	1.1022E-03	3.2649E-02	1.0200E-03
120.000	2.1176E-01	6.4902E-03	3.3879E-02	1.1022E-03	3.5799E-02	1.1170E-03

```
 168.000 2.6685E-01 8.1688E-03 3.3879E-02 1.1022E-03 4.2870E-02 1.3345E-03
 336.000 4.8190E-01 1.4719E-02 3.3879E-02 1.1022E-03 7.0417E-02 2.1809E-03
 720.000 8.5362E-01 2.6040E-02 3.3879E-02 1.1022E-03 1.1797E-01 3.6419E-03

#####################################################################
                         Worst Two-Hour Doses
#####################################################################

Exclusion Area Boundary (EAB)
   Time    Whole Body    Thyroid        TEDE
   (hr)      (rem)        (rem)         (rem)
   10.4   6.5019E-06   4.1500E-03   1.3459E-04
```

```
 ######################################################################
    RADTRAD Version 3.03 (Spring 2001) run on  6/08/2006  at 17:07:50
 ######################################################################

 ######################################################################
                      File information
 ######################################################################

 Plant file           = RESUP3-B.psf
 Inventory file       = c:\program files\radtrad3-03\defaults\limerick ast source
terms.nif
 Release file         = c:\program files\radtrad3-03\defaults\bwr_i.rft
 Dose Conversion file = c:\program files\radtrad3-03\defaults\fgr11&12.inp
```

```
     #####    ####   #####    #  #     #  #####   #    #  #####
     #    #  #       #        #  ##    #  #    #  #    #    #
     #    #  #       #        #  # #   #  #    #  #    #    #
     #####    ####   ####     #  #  #  #  #####   #    #    #
     #            #  #        #  #   # #  #       #    #    #
     #            #  #        #  #    ##  #       #    #    #
     #        ####   #        #  #     #  #        ####     #
```

```
 Radtrad 3.03 4/15/2001
 LGS LOCA 200scfh Line B MSIV Leak - Resuspension Only - Leak to Condenser - MSL
Pipe Deposition Credit (24-Hr 20-Group Aerosol Settling with Projected Area
Assumption; 2-Hr Mixing Delay) - 95% CREFAS Charcoal Eff. No Delay - Rad Mode
225cfm Control Room In
 Nuclide Inventory File:
 c:\program files\radtrad3-03\defaults\limerick ast source terms.nif
 Plant Power Level:
  3.5270E+03
 Compartments:
  10
 Compartment 1:
 Containment
   3
  3.7907E+05
   0
   0
   0
   1
   0
 Compartment 2:
 MSL B Inboard - Airborne
   3
  1.0000E-05
   0
   0
   0
   0
   0
 Compartment 3:
 Environment
   2
```

```
 0.0000E+00
  0
  0
  0
  0
  0
Compartment 4:
Control Room
  1
 1.2600E+05
  0
  0
  1
  0
  0
Compartment 5:
MSL B Outboard - Airborne
  3
 1.0510E+03
  0
  0
  0
  0
  0
Compartment 6:
MSL B Inboard - Surface
  3
 1.0000E+00
  0
  0
  0
  0
  0
Compartment 7:
MSL B Outboard - Surface
  3
 1.0000E+00
  0
  0
  0
  0
  0
Compartment 8:
Hold (By Surface Fixation)
  3
 1.0000E+00
  0
  0
  0
  0
  0
Compartment 9:
Condenser - Airborne
  3
 5.4746E+04
  0
  0
  0
  0
  0
```

```
Compartment 10:
Condenser - Surface
  3
 1.0000E+00
  0
  0
  0
  0
  0
Pathways:
 15
Pathway 1:
Filtered Environment to Control Room (Intake)
  3
  4
  2
Pathway 2:
Unfiltered Environment to Control Room (Inleakage)
  3
  4
  2
Pathway 3:
Control Room to Environment (Exhaust)
  4
  3
  2
Pathway 4:
(Aerosol Transport 1) MSL B Inboard - Airborne to MSL B Outboard - Airborne
  2
  5
  2
Pathway 5:
(Deposition 1) MSL B Inboard - Airborne to MSL B Inboard - Surface
  2
  6
  4
Pathway 6:
(Resuspension 1) MSL B Inboard - Surface to Environment
  6
  3
  4
Pathway 7:
(Surface Fixation 1) MSL B Inboard - Surface to Hold (By Surface Fixation)
  6
  8
  4
Pathway 8:
(Deposition 2) MSL B Outboard - Airborne to MSL B Outboard - Surface
  5
  7
  4
Pathway 9:
(Resuspension 2) MSL B Outboard - Surface to  Environment
  7
  3
  4
Pathway 10:
(Surface Fixation 2) MSL B Outboard - Surface to Hold (By Surface Fixation)
  7
  8
```

```
  4
Pathway 11:
(Aerosol Transport 2) MSL B Outboard - Airborne to  Condenser - Airborne
  5
  9
  2
Pathway 12:
(Deposition 3) Condenser - Airborne to Condenser - Surface
  9
 10
  4
Pathway 13:
(Resuspension 3) Condenser - Surface to  Environment
 10
  3
  4
Pathway 14:
(Surface Fixation 3) Condenser - Surface to  Hold (By Surface Fixation)
 10
  8
  4
Pathway 15:
Containment to  MSL B Inboard - Airborne
  1
  2
  2
End of Plant Model File
Scenario Description Name:

Plant Model Filename:

Source Term:
  1
  1   1.0000E+00
c:\program files\radtrad3-03\defaults\fgr11&12.inp
c:\program files\radtrad3-03\defaults\bwr_i.rft
  0.0000E+00
  1
  9.5000E-01   4.8500E-02   1.5000E-03   1.0000E+00
Overlying Pool:
  0
  0.0000E+00
  0
  0
  0
  0
Compartments:
 10
Compartment 1:
  0
  1
  0
  0
  0
  0
  0
  3
  3
  1.0000E+01
  1
```

```
  1
  0.0000E+00   0.0000E+00
Compartment 2:
  0
  1
  0
  0
  0
  0
  0
  0
  0
Compartment 3:
  0
  1
  0
  0
  0
  0
  0
  0
  0
Compartment 4:
  0
  1
  0
  0
  0
  0
  1
  2.1750E+03
  3
  0.0000E+00   9.9000E+01   9.5000E+01   9.5000E+01
  3.3330E-01   9.9000E+01   9.5000E+01   9.5000E+01
  7.2000E+02   0.0000E+00   0.0000E+00   0.0000E+00
  0
  0
Compartment 5:
  0
  1
  0
  0
  0
  0
  0
  0
  0
Compartment 6:
  0
  1
  0
  0
  0
  0
  0
  0
  0
Compartment 7:
  0
  1
```

```
  0
  0
  0
  0
  0
  0
  0
Compartment 8:
  0
  1
  0
  0
  0
  0
  0
  0
  0
Compartment 9:
  0
  1
  0
  0
  0
  0
  0
  0
  0
Compartment 10:
  0
  1
  0
  0
  0
  0
  0
  0
  0
Pathways:
 15
Pathway 1:
  0
  0
  0
  0
  0
  1
  3
  0.0000E+00   5.2500E+02   9.9000E+01   9.5000E+01   9.5000E+01
  5.0000E-01   5.2500E+02   9.9000E+01   9.5000E+01   9.5000E+01
  7.2000E+02   0.0000E+00   0.0000E+00   0.0000E+00   0.0000E+00
  0
  0
  0
  0
  0
  0
Pathway 2:
  0
  0
  0
```

```
  0
  0
  1
  2
  0.0000E+00   2.2500E+02   0.0000E+00   0.0000E+00   0.0000E+00
  7.2000E+02   0.0000E+00   0.0000E+00   0.0000E+00   0.0000E+00
  0
  0
  0
  0
  0
  0
Pathway 3:
  0
  0
  0
  0
  0
  1
  3
  0.0000E+00   7.5000E+02   1.0000E+02   1.0000E+02   1.0000E+02
  5.0000E-01   7.5000E+02   1.0000E+02   1.0000E+02   1.0000E+02
  7.2000E+02   0.0000E+00   0.0000E+00   0.0000E+00   0.0000E+00
  0
  0
  0
  0
  0
  0
Pathway 4:
  0
  0
  0
  0
  0
  1
  5
  0.0000E+00   9.3060E-01   1.0000E+02   0.0000E+00   1.0000E+02
  2.0000E+00   9.3060E-01   1.0000E+02   0.0000E+00   1.0000E+02
  2.4000E+01   5.1270E-01   1.0000E+02   0.0000E+00   1.0000E+02
  9.6000E+01   5.1270E-01   1.0000E+02   0.0000E+00   1.0000E+02
  7.2000E+02   0.0000E+00   0.0000E+00   0.0000E+00   0.0000E+00
  0
  0
  0
  0
  0
  0
Pathway 5:
  0
  0
  0
  0
  0
  0
  0
  0
  0
  0
  1
```

```
  4
  0.0000E+00   3.1420E+02
  2.4000E+01   7.0350E+02
  9.6000E+01   4.4780E+03
  7.2000E+02   0.0000E+00
  0
Pathway 6:
  0
  0
  0
  0
  0
  0
  0
  0
  0
  0
  1
  4
  0.0000E+00   3.5580E-02
  2.4000E+01   2.9950E-02
  9.6000E+01   2.0170E-02
  7.2000E+02   0.0000E+00
  0
Pathway 7:
  0
  0
  0
  0
  0
  0
  0
  0
  0
  0
  1
  4
  0.0000E+00   1.5960E-02
  2.4000E+01   1.1360E-02
  9.6000E+01   5.2000E-03
  7.2000E+02   0.0000E+00
  0
Pathway 8:
  0
  0
  0
  0
  0
  0
  0
  0
  0
  0
  1
  4
  0.0000E+00   3.1417E+02
  2.4000E+01   7.0352E+02
  9.6000E+01   4.4779E+03
  7.2000E+02   0.0000E+00
  0
```

```
Pathway 9:
  0
  0
  0
  0
  0
  0
  0
  0
  0
  0
  1
  4
  0.0000E+00   3.5580E-02
  2.4000E+01   2.9950E-02
  9.6000E+01   2.0170E-02
  7.2000E+02   0.0000E+00
  0
Pathway 10:
  0
  0
  0
  0
  0
  0
  0
  0
  0
  0
  1
  4
  0.0000E+00   1.5960E-02
  2.4000E+01   1.1360E-02
  9.6000E+01   5.2000E-03
  7.2000E+02   0.0000E+00
  0
Pathway 11:
  0
  0
  0
  0
  0
  1
  4
  0.0000E+00   3.1880E+00   1.0000E+02   0.0000E+00   1.0000E+02
  2.4000E+01   1.5130E+00   1.0000E+02   0.0000E+00   1.0000E+02
  9.6000E+01   1.1480E+00   1.0000E+02   0.0000E+00   1.0000E+02
  7.2000E+02   0.0000E+00   0.0000E+00   0.0000E+00   0.0000E+00
  0
  0
  0
  0
  0
  0
Pathway 12:
  0
  0
  0
  0
  0
```

```
  0
  0
  0
  0
  0
  1
  4
  0.0000E+00   4.2591E+04
  2.4000E+01   4.2591E+04
  9.6000E+01   4.2591E+04
  7.2000E+02   0.0000E+00
  0
Pathway 13:
  0
  0
  0
  0
  0
  0
  0
  0
  0
  0
  1
  4
  0.0000E+00   1.6090E-02
  2.4000E+01   1.6090E-02
  9.6000E+01   1.6090E-02
  7.2000E+02   0.0000E+00
  0
Pathway 14:
  0
  0
  0
  0
  0
  0
  0
  0
  0
  0
  1
  4
  0.0000E+00   3.3300E-03
  2.4000E+01   3.3300E-03
  9.6000E+01   3.3300E-03
  7.2000E+02   0.0000E+00
  0
Pathway 15:
  0
  0
  0
  0
  0
  1
  5
  0.0000E+00   1.5240E+00   1.0000E+02   0.0000E+00   1.0000E+02
  2.0000E+00   9.3060E-01   1.0000E+02   0.0000E+00   1.0000E+02
  2.4000E+01   5.1270E-01   1.0000E+02   0.0000E+00   1.0000E+02
  9.6000E+01   5.1270E-01   1.0000E+02   0.0000E+00   1.0000E+02
```

```
  7.2000E+02   0.0000E+00   0.0000E+00   0.0000E+00   0.0000E+00
  0
  0
  0
  0
  0
  0
Dose Locations:
  3
Location 1:
Control Room (CR)
  4
  0
  1
  2
  0.0000E+00   3.5000E-04
  7.2000E+02   0.0000E+00
  1
  4
  0.0000E+00   1.0000E+00
  2.4000E+01   6.0000E-01
  9.6000E+01   4.0000E-01
  7.2000E+02   0.0000E+00
Location 2:
Exclusion Area Boundary (EAB)
  3
  1
  2
  0.0000E+00   3.1800E-04
  2.4000E+01   0.0000E+00
  1
  4
  0.0000E+00   3.5000E-04
  8.0000E+00   1.8000E-04
  2.4000E+01   2.3000E-04
  7.2000E+02   0.0000E+00
  0
Location 3:
Low Population Zone (LPZ)
  3
  1
 10
  0.0000E+00   5.7900E-05
  8.0000E+00   4.1000E-05
  2.4000E+01   1.9500E-05
  4.8000E+01   1.9500E-05
  7.2000E+01   1.9500E-05
  9.6000E+01   6.6800E-06
  1.2000E+02   6.6800E-06
  1.6800E+02   6.6800E-06
  3.3600E+02   6.6800E-06
  7.2000E+02   0.0000E+00
  1
  4
  0.0000E+00   3.5000E-04
  8.0000E+00   1.8000E-04
  2.4000E+01   2.3000E-04
  7.2000E+02   0.0000E+00
  0
Effective Volume Location:
```

```
  1
  6
  0.0000E+00   6.8800E-03
  2.0000E+00   5.1700E-03
  8.0000E+00   2.0400E-03
  2.4000E+01   1.2900E-03
  9.6000E+01   9.6300E-04
  7.2000E+02   0.0000E+00
Simulation Parameters:
  1
  0.0000E+00   0.0000E+00
Output Filename:
C:\RESUP3-B.o0
  1
  1
  1
  0
  0
End of Scenario File
```

```
#######################################################################
   RADTRAD Version 3.03 (Spring 2001) run on  6/08/2006  at 17:07:50
#######################################################################

#######################################################################
                      Plant Description
#######################################################################

Number of Nuclides =  60

Inventory Power =   1.0000E+00 MWth
Plant Power Level =   3.5270E+03 MWth

Number of compartments    =  10

Compartment information

Compartment number  1  (Source term fraction =   1.0000E+00
)
Name: Containment
Compartment volume =   3.7907E+05 (Cubic feet)
Compartment type is Normal
Removal devices within compartment:
     Deposition
Pathways into and out of compartment  1
   Exit Pathway Number   15: Containment to  MSL B Inboard - Airborne

Compartment number  2
Name: MSL B Inboard - Airborne
Compartment volume =   1.0000E-05 (Cubic feet)
Compartment type is Normal
Pathways into and out of compartment  2
   Inlet Pathway Number  15: Containment to  MSL B Inboard - Airborne
   Exit Pathway Number    4: (Aerosol Transport 1) MSL B Inboard - Airborne to
   Exit Pathway Number    5: (Deposition 1) MSL B Inboard - Airborne to MSL B I

Compartment number  3
Name: Environment
Compartment type is Environment
Pathways into and out of compartment  3
   Inlet Pathway Number   3: Control Room to Environment (Exhaust)
   Inlet Pathway Number   6: (Resuspension 1) MSL B Inboard - Surface to Enviro
   Inlet Pathway Number   9: (Resuspension 2) MSL B Outboard - Surface to  Envi
   Inlet Pathway Number  13: (Resuspension 3) Condenser - Surface to  Environme
   Exit Pathway Number    1: Filtered Environment to Control Room (Intake)
   Exit Pathway Number    2: Unfiltered Environment to Control Room (Inleakage)

Compartment number  4
Name: Control Room
Compartment volume =   1.2600E+05 (Cubic feet)
Compartment type is Control Room
Removal devices within compartment:
     Filter(s)
Pathways into and out of compartment  4
   Inlet Pathway Number   1: Filtered Environment to Control Room (Intake)
   Inlet Pathway Number   2: Unfiltered Environment to Control Room (Inleakage)
   Exit Pathway Number    3: Control Room to Environment (Exhaust)

Compartment number  5
```

```
Name: MSL B Outboard - Airborne
Compartment volume =   1.0510E+03 (Cubic feet)
Compartment type is Normal
Pathways into and out of compartment  5
   Inlet Pathway Number   4: (Aerosol Transport 1) MSL B Inboard - Airborne to
   Exit Pathway Number    8: (Deposition 2) MSL B Outboard - Airborne to MSL B
   Exit Pathway Number   11: (Aerosol Transport 2) MSL B Outboard - Airborne to

Compartment number  6
Name: MSL B Inboard - Surface
Compartment volume =   1.0000E+00 (Cubic feet)
Compartment type is Normal
Pathways into and out of compartment  6
   Inlet Pathway Number   5: (Deposition 1) MSL B Inboard - Airborne to MSL B I
   Exit Pathway Number    6: (Resuspension 1) MSL B Inboard - Surface to Enviro
   Exit Pathway Number    7: (Surface Fixation 1) MSL B Inboard - Surface to Ho

Compartment number  7
Name: MSL B Outboard - Surface
Compartment volume =   1.0000E+00 (Cubic feet)
Compartment type is Normal
Pathways into and out of compartment  7
   Inlet Pathway Number   8: (Deposition 2) MSL B Outboard - Airborne to MSL B
   Exit Pathway Number    9: (Resuspension 2) MSL B Outboard - Surface to  Envi
   Exit Pathway Number   10: (Surface Fixation 2) MSL B Outboard - Surface to H

Compartment number  8
Name: Hold (By Surface Fixation)
Compartment volume =   1.0000E+00 (Cubic feet)
Compartment type is Normal
Pathways into and out of compartment  8
   Inlet Pathway Number   7: (Surface Fixation 1) MSL B Inboard - Surface to Ho
   Inlet Pathway Number  10: (Surface Fixation 2) MSL B Outboard - Surface to H
   Inlet Pathway Number  14: (Surface Fixation 3) Condenser - Surface to  Hold

Compartment number  9
Name: Condenser - Airborne
Compartment volume =   5.4746E+04 (Cubic feet)
Compartment type is Normal
Pathways into and out of compartment  9
   Inlet Pathway Number  11: (Aerosol Transport 2) MSL B Outboard - Airborne to
   Exit Pathway Number   12: (Deposition 3) Condenser - Airborne to Condenser -

Compartment number 10
Name: Condenser - Surface
Compartment volume =   1.0000E+00 (Cubic feet)
Compartment type is Normal
Pathways into and out of compartment 10
   Inlet Pathway Number  12: (Deposition 3) Condenser - Airborne to Condenser -
   Exit Pathway Number   13: (Resuspension 3) Condenser - Surface to  Environme
   Exit Pathway Number   14: (Surface Fixation 3) Condenser - Surface to  Hold

Total number of pathways =  15
```

```
#######################################################################
   RADTRAD Version 3.03 (Spring 2001) run on  6/08/2006  at 17:07:50
#######################################################################

#######################################################################
                      Scenario Description
#######################################################################
```

Radioactive Decay is enabled
Calculation of Daughters is enabled

Release Fractions and Timings

	GAP	EARLY IN-VESSEL	LATE RELEASE	RELEASE MASS
	0.500000 hr	1.5000 hrs	0.0000 hrs	(gm)
NOBLES	0.0000E+00	0.0000E+00	0.0000E+00	0.000E+00
IODINE	5.0000E-02	2.5000E-01	0.0000E+00	3.033E+02
CESIUM	0.0000E+00	0.0000E+00	0.0000E+00	0.000E+00
TELLURIUM	0.0000E+00	0.0000E+00	0.0000E+00	0.000E+00
STRONTIUM	0.0000E+00	0.0000E+00	0.0000E+00	0.000E+00
BARIUM	0.0000E+00	0.0000E+00	0.0000E+00	0.000E+00
RUTHENIUM	0.0000E+00	0.0000E+00	0.0000E+00	0.000E+00
CERIUM	0.0000E+00	0.0000E+00	0.0000E+00	0.000E+00
LANTHANUM	0.0000E+00	0.0000E+00	0.0000E+00	0.000E+00

Inventory Power = 3527. MWt

Nuclide Name	Group	Specific Inventory (Ci/MWt)	half life (s)	Whole Body DCF (Sv-m3/Bq-s)	Inhaled Thyroid (Sv/Bq)	Inhaled Effective (Sv/Bq)
I-131	2	2.687E+04	6.947E+05	1.820E-14	2.920E-07	8.890E-09
I-132	2	3.881E+04	8.280E+03	1.120E-13	1.740E-09	1.030E-10
I-133	2	5.556E+04	7.488E+04	2.940E-14	4.860E-08	1.580E-09
I-134	2	6.165E+04	3.156E+03	1.300E-13	2.880E-10	3.550E-11
I-135	2	5.192E+04	2.380E+04	8.294E-14	8.460E-09	3.320E-10

Nuclide	Daughter	Fraction	Daughter	Fraction	Daughter	Fraction
Kr-85m	Kr-85	0.21	none	0.00	none	0.00
Kr-87	Rb-87	1.00	none	0.00	none	0.00
Kr-88	Rb-88	1.00	none	0.00	none	0.00
Sr-90	Y-90	1.00	none	0.00	none	0.00
Sr-91	Y-91m	0.58	Y-91	0.42	none	0.00
Sr-92	Y-92	1.00	none	0.00	none	0.00
Y-93	Zr-93	1.00	none	0.00	none	0.00
Zr-95	Nb-95m	0.01	Nb-95	0.99	none	0.00
Zr-97	Nb-97m	0.95	Nb-97	0.05	none	0.00
Mo-99	Tc-99m	0.88	Tc-99	0.12	none	0.00
Tc-99m	Tc-99	1.00	none	0.00	none	0.00
Ru-103	Rh-103m	1.00	none	0.00	none	0.00
Ru-105	Rh-105	1.00	none	0.00	none	0.00
Ru-106	Rh-106	1.00	none	0.00	none	0.00
Sb-127	Te-127m	0.18	Te-127	0.82	none	0.00
Sb-129	Te-129m	0.22	Te-129	0.77	none	0.00
Te-127m	Te-127	0.98	none	0.00	none	0.00
Te-129	I-129	1.00	none	0.00	none	0.00
Te-129m	Te-129	0.65	I-129	0.35	none	0.00
Te-131m	Te-131	0.22	I-131	0.78	none	0.00
Te-132	I-132	1.00	none	0.00	none	0.00
I-131	Xe-131m	0.01	none	0.00	none	0.00
I-133	Xe-133m	0.03	Xe-133	0.97	none	0.00

I-135	Xe-135m	0.15	Xe-135	0.85	none	0.00
Xe-135	Cs-135	1.00	none	0.00	none	0.00
Cs-137	Ba-137m	0.95	none	0.00	none	0.00
Ba-140	La-140	1.00	none	0.00	none	0.00
La-141	Ce-141	1.00	none	0.00	none	0.00
Ce-143	Pr-143	1.00	none	0.00	none	0.00
Ce-144	Pr-144m	0.02	Pr-144	0.98	none	0.00
Nd-147	Pm-147	1.00	none	0.00	none	0.00
Np-239	Pu-239	1.00	none	0.00	none	0.00
Pu-238	U-234	1.00	none	0.00	none	0.00
Pu-239	U-235	1.00	none	0.00	none	0.00
Pu-240	U-236	1.00	none	0.00	none	0.00
Pu-241	U-237	0.00	Am-241	1.00	none	0.00
Am-241	Np-237	1.00	none	0.00	none	0.00
Cm-242	Pu-238	1.00	none	0.00	none	0.00
Cm-244	Pu-240	1.00	none	0.00	none	0.00

Iodine fractions
Aerosol = 9.5000E-01
Elemental = 4.8500E-02
Organic = 1.5000E-03

COMPARTMENT DATA

Compartment number 1: Containment
Natural Deposition (Powers' model): Aerosol data
Reactor type: 3
Percentile = 10 (%)

Natural Deposition: Elemental Removal Data

Time (hr)	Removal Coef. (hr^-1)
0.0000E+00	0.0000E+00

Compartment number 2: MSL B Inboard - Airborne

Compartment number 3: Environment

Compartment number 4: Control Room

Compartment Filter Data

Time (hr)	Flow Rate (cfm)	Filter Efficiencies (%) Aerosol	Elemental	Organic
0.0000E+00	2.1750E+03	9.9000E+01	9.5000E+01	9.5000E+01
3.3330E-01	2.1750E+03	9.9000E+01	9.5000E+01	9.5000E+01
7.2000E+02	2.1750E+03	0.0000E+00	0.0000E+00	0.0000E+00

Compartment number 5: MSL B Outboard - Airborne

Compartment number 6: MSL B Inboard - Surface

Compartment number 7: MSL B Outboard - Surface

Compartment number 8: Hold (By Surface Fixation)

Compartment number 9: Condenser - Airborne

Compartment number 10: Condenser - Surface

PATHWAY DATA

Pathway number 1: Filtered Environment to Control Room (Intake)

Pathway Filter: Removal Data

Time (hr)	Flow Rate (cfm)	Filter Efficiencies (%) Aerosol	Elemental	Organic
0.0000E+00	5.2500E+02	9.9000E+01	9.5000E+01	9.5000E+01
5.0000E-01	5.2500E+02	9.9000E+01	9.5000E+01	9.5000E+01
7.2000E+02	0.0000E+00	0.0000E+00	0.0000E+00	0.0000E+00

Pathway number 2: Unfiltered Environment to Control Room (Inleakage)

Pathway Filter: Removal Data

Time (hr)	Flow Rate (cfm)	Filter Efficiencies (%) Aerosol	Elemental	Organic
0.0000E+00	2.2500E+02	0.0000E+00	0.0000E+00	0.0000E+00
7.2000E+02	0.0000E+00	0.0000E+00	0.0000E+00	0.0000E+00

Pathway number 3: Control Room to Environment (Exhaust)

Pathway Filter: Removal Data

Time (hr)	Flow Rate (cfm)	Filter Efficiencies (%) Aerosol	Elemental	Organic
0.0000E+00	7.5000E+02	1.0000E+02	1.0000E+02	1.0000E+02
5.0000E-01	7.5000E+02	1.0000E+02	1.0000E+02	1.0000E+02
7.2000E+02	0.0000E+00	0.0000E+00	0.0000E+00	0.0000E+00

Pathway number 4: (Aerosol Transport 1) MSL B Inboard - Airborne to

Pathway Filter: Removal Data

Time (hr)	Flow Rate (cfm)	Filter Efficiencies (%) Aerosol	Elemental	Organic
0.0000E+00	9.3060E-01	1.0000E+02	0.0000E+00	1.0000E+02
2.0000E+00	9.3060E-01	1.0000E+02	0.0000E+00	1.0000E+02
2.4000E+01	5.1270E-01	1.0000E+02	0.0000E+00	1.0000E+02
9.6000E+01	5.1270E-01	1.0000E+02	0.0000E+00	1.0000E+02
7.2000E+02	0.0000E+00	0.0000E+00	0.0000E+00	0.0000E+00

Pathway number 5: (Deposition 1) MSL B Inboard - Airborne to MSL B I

Convection Data

Time (hr)	Flow Rate (% / day)
0.0000E+00	3.1420E+02
2.4000E+01	7.0350E+02
9.6000E+01	4.4780E+03
7.2000E+02	0.0000E+00

Pathway number 6: (Resuspension 1) MSL B Inboard - Surface to Enviro

Convection Data

Time (hr)	Flow Rate (% / day)
0.0000E+00	3.5580E-02
2.4000E+01	2.9950E-02
9.6000E+01	2.0170E-02
7.2000E+02	0.0000E+00

Pathway number 7: (Surface Fixation 1) MSL B Inboard - Surface to Ho

Convection Data

Time (hr)	Flow Rate (% / day)
0.0000E+00	1.5960E-02
2.4000E+01	1.1360E-02
9.6000E+01	5.2000E-03
7.2000E+02	0.0000E+00

Pathway number 8: (Deposition 2) MSL B Outboard - Airborne to MSL B

Convection Data

Time (hr)	Flow Rate (% / day)
0.0000E+00	3.1417E+02
2.4000E+01	7.0352E+02
9.6000E+01	4.4779E+03
7.2000E+02	0.0000E+00

Pathway number 9: (Resuspension 2) MSL B Outboard - Surface to Envi

Convection Data

Time (hr)	Flow Rate (% / day)
0.0000E+00	3.5580E-02
2.4000E+01	2.9950E-02
9.6000E+01	2.0170E-02
7.2000E+02	0.0000E+00

Pathway number 10: (Surface Fixation 2) MSL B Outboard - Surface to H

Convection Data

Time (hr)	Flow Rate (% / day)
0.0000E+00	1.5960E-02
2.4000E+01	1.1360E-02
9.6000E+01	5.2000E-03
7.2000E+02	0.0000E+00

Pathway number 11: (Aerosol Transport 2) MSL B Outboard - Airborne to

Pathway Filter: Removal Data

Time (hr)	Flow Rate (cfm)	Filter Efficiencies (%) Aerosol	Elemental	Organic
0.0000E+00	3.1880E+00	1.0000E+02	0.0000E+00	1.0000E+02
2.4000E+01	1.5130E+00	1.0000E+02	0.0000E+00	1.0000E+02
9.6000E+01	1.1480E+00	1.0000E+02	0.0000E+00	1.0000E+02
7.2000E+02	0.0000E+00	0.0000E+00	0.0000E+00	0.0000E+00

Pathway number 12: (Deposition 3) Condenser - Airborne to Condenser -

Convection Data

Time (hr)	Flow Rate (% / day)
0.0000E+00	4.2591E+04
2.4000E+01	4.2591E+04
9.6000E+01	4.2591E+04
7.2000E+02	0.0000E+00

Pathway number 13: (Resuspension 3) Condenser - Surface to Environme

Convection Data

Time (hr)	Flow Rate (% / day)

0.0000E+00	1.6090E-02
2.4000E+01	1.6090E-02
9.6000E+01	1.6090E-02
7.2000E+02	0.0000E+00

Pathway number 14: (Surface Fixation 3) Condenser - Surface to Hold

Convection Data

Time (hr)	Flow Rate (% / day)
0.0000E+00	3.3300E-03
2.4000E+01	3.3300E-03
9.6000E+01	3.3300E-03
7.2000E+02	0.0000E+00

Pathway number 15: Containment to MSL B Inboard - Airborne

Pathway Filter: Removal Data

Time (hr)	Flow Rate (cfm)	Filter Efficiencies (%) Aerosol	Elemental	Organic
0.0000E+00	1.5240E+00	1.0000E+02	0.0000E+00	1.0000E+02
2.0000E+00	9.3060E-01	1.0000E+02	0.0000E+00	1.0000E+02
2.4000E+01	5.1270E-01	1.0000E+02	0.0000E+00	1.0000E+02
9.6000E+01	5.1270E-01	1.0000E+02	0.0000E+00	1.0000E+02
7.2000E+02	0.0000E+00	0.0000E+00	0.0000E+00	0.0000E+00

LOCATION DATA

Location Control Room (CR) is in compartment 4

Location X/Q Data

Time (hr)	X/Q (s * m^-3)
0.0000E+00	6.8800E-03
2.0000E+00	5.1700E-03
8.0000E+00	2.0400E-03
2.4000E+01	1.2900E-03
9.6000E+01	9.6300E-04
7.2000E+02	0.0000E+00

Location Breathing Rate Data

Time (hr)	Breathing Rate (m^3 * sec^-1)
0.0000E+00	3.5000E-04
7.2000E+02	0.0000E+00

Location Occupancy Factor Data

Time (hr)	Occupancy Factor
0.0000E+00	1.0000E+00
2.4000E+01	6.0000E-01
9.6000E+01	4.0000E-01
7.2000E+02	0.0000E+00

Location Exclusion Area Boundary (EAB) is in compartment 3

Location X/Q Data

Time (hr)	X/Q (s * m^-3)
0.0000E+00	3.1800E-04
2.4000E+01	0.0000E+00

Location Breathing Rate Data

Time (hr)	Breathing Rate (m^3 * sec^-1)
0.0000E+00	3.5000E-04
8.0000E+00	1.8000E-04

```
  2.4000E+01                2.3000E-04
  7.2000E+02                0.0000E+00
Location Low Population Zone (LPZ)     is in compartment   3

Location X/Q Data
 Time (hr)          X/Q (s * m^-3)
  0.0000E+00          5.7900E-05
  8.0000E+00          4.1000E-05
  2.4000E+01          1.9500E-05
  4.8000E+01          1.9500E-05
  7.2000E+01          1.9500E-05
  9.6000E+01          6.6800E-06
  1.2000E+02          6.6800E-06
  1.6800E+02          6.6800E-06
  3.3600E+02          6.6800E-06
  7.2000E+02          0.0000E+00

Location Breathing Rate Data
 Time (hr)          Breathing Rate (m^3 * sec^-1)
  0.0000E+00                3.5000E-04
  8.0000E+00                1.8000E-04
  2.4000E+01                2.3000E-04
  7.2000E+02                0.0000E+00

USER SPECIFIED TIME STEP DATA - SUPPLEMENTAL TIME STEPS
     Time            Time step
      0.0000E+00       0.0000E+00
```

```
#######################################################################
   RADTRAD Version 3.03 (Spring 2001) run on  6/08/2006  at 17:07:50
#######################################################################
```

```
 ####   #    #  #####  #####   #    #  #####
#    #  #    #    #    #    #  #    #    #
#    #  #    #    #    #    #  #    #    #
#    #  #    #    #    #####   #    #    #
#    #  #    #    #    #       #    #    #
#    #  #    #    #    #       #    #    #
 ####    ####     #    #        ####     #
```

```
#######################################################################
                                Dose Output
#######################################################################
```

Control Room (CR) Doses:

Time (h) = 0.3333	Whole Body	Thyroid	TEDE
Delta dose (rem)	8.8005E-13	4.3658E-09	1.3875E-10
Accumulated dose (rem)	8.8005E-13	4.3658E-09	1.3875E-10

Exclusion Area Boundary (EAB) Doses:

Time (h) = 0.3333	Whole Body	Thyroid	TEDE
Delta dose (rem)	1.1094E-10	2.4896E-08	8.9718E-10
Accumulated dose (rem)	1.1094E-10	2.4896E-08	8.9718E-10

Low Population Zone (LPZ) Doses:

Time (h) = 0.3333	Whole Body	Thyroid	TEDE
Delta dose (rem)	2.0199E-11	4.5329E-09	1.6335E-10
Accumulated dose (rem)	2.0199E-11	4.5329E-09	1.6335E-10

Control Room (CR) Doses:

Time (h) = 0.5000	Whole Body	Thyroid	TEDE
Delta dose (rem)	5.1358E-12	2.6906E-08	8.5409E-10
Accumulated dose (rem)	6.0158E-12	3.1272E-08	9.9284E-10

Exclusion Area Boundary (EAB) Doses:

Time (h) = 0.5000	Whole Body	Thyroid	TEDE
Delta dose (rem)	4.4296E-10	1.0545E-07	3.7703E-09
Accumulated dose (rem)	5.5389E-10	1.3035E-07	4.6675E-09

Low Population Zone (LPZ) Doses:

Time (h) = 0.5000	Whole Body	Thyroid	TEDE
Delta dose (rem)	8.0652E-11	1.9200E-08	6.8648E-10
Accumulated dose (rem)	1.0085E-10	2.3733E-08	8.4984E-10

Control Room (CR) Doses:

Time (h) = 2.0000	Whole Body	Thyroid	TEDE
Delta dose (rem)	3.9190E-09	2.7515E-05	8.6810E-07
Accumulated dose (rem)	3.9250E-09	2.7546E-05	8.6909E-07

Exclusion Area Boundary (EAB) Doses:

Time (h) = 2.0000	Whole Body	Thyroid	TEDE
Delta dose (rem)	1.2126E-07	3.9863E-05	1.3736E-06
Accumulated dose (rem)	1.2182E-07	3.9993E-05	1.3782E-06

Low Population Zone (LPZ) Doses:

Time (h) = 2.0000	Whole Body	Thyroid	TEDE
Delta dose (rem)	2.2079E-08	7.2581E-06	2.5009E-07
Accumulated dose (rem)	2.2180E-08	7.2818E-06	2.5094E-07

Control Room (CR) Doses:

Time (h) = 8.0000	Whole Body	Thyroid	TEDE
Delta dose (rem)	5.0480E-07	4.7034E-03	1.4699E-04
Accumulated dose (rem)	5.0873E-07	4.7310E-03	1.4786E-04

Exclusion Area Boundary (EAB) Doses:

Time (h) = 8.0000	Whole Body	Thyroid	TEDE
Delta dose (rem)	6.9148E-06	4.1510E-03	1.3623E-04
Accumulated dose (rem)	7.0366E-06	4.1910E-03	1.3760E-04

Low Population Zone (LPZ) Doses:

Time (h) = 8.0000	Whole Body	Thyroid	TEDE
Delta dose (rem)	1.2590E-06	7.5579E-04	2.4803E-05
Accumulated dose (rem)	1.2812E-06	7.6307E-04	2.5054E-05

Control Room (CR) Doses:

Time (h) = 24.0000	Whole Body	Thyroid	TEDE
Delta dose (rem)	2.6964E-06	3.0793E-02	9.5364E-04
Accumulated dose (rem)	3.2051E-06	3.5524E-02	1.1015E-03

Exclusion Area Boundary (EAB) Doses:

Time (h) = 24.0000	Whole Body	Thyroid	TEDE
Delta dose (rem)	4.7071E-05	2.8671E-02	9.3240E-04
Accumulated dose (rem)	5.4107E-05	3.2862E-02	1.0700E-03

Low Population Zone (LPZ) Doses:

Time (h) = 24.0000	Whole Body	Thyroid	TEDE
Delta dose (rem)	6.0689E-06	3.6966E-03	1.2021E-04
Accumulated dose (rem)	7.3500E-06	4.4597E-03	1.4527E-04

Control Room (CR) Doses:

Time (h) = 48.0000	Whole Body	Thyroid	TEDE
Delta dose (rem)	1.5453E-06	3.4453E-02	1.0585E-03
Accumulated dose (rem)	4.7504E-06	6.9977E-02	2.1600E-03

Exclusion Area Boundary (EAB) Doses:

Time (h) = 48.0000	Whole Body	Thyroid	TEDE
Delta dose (rem)	0.0000E+00	0.0000E+00	0.0000E+00
Accumulated dose (rem)	5.4107E-05	3.2862E-02	1.0700E-03

Low Population Zone (LPZ) Doses:

Time (h) = 48.0000	Whole Body	Thyroid	TEDE
Delta dose (rem)	4.3002E-06	6.3968E-03	2.0054E-04
Accumulated dose (rem)	1.1650E-05	1.0856E-02	3.4581E-04

Control Room (CR) Doses:

Time (h) = 72.0000	Whole Body	Thyroid	TEDE
Delta dose (rem)	9.6584E-07	4.5616E-02	1.3951E-03
Accumulated dose (rem)	5.7162E-06	1.1559E-01	3.5551E-03

Exclusion Area Boundary (EAB) Doses:

Time (h) = 72.0000	Whole Body	Thyroid	TEDE
Delta dose (rem)	0.0000E+00	0.0000E+00	0.0000E+00
Accumulated dose (rem)	5.4107E-05	3.2862E-02	1.0700E-03

Low Population Zone (LPZ) Doses:

Time (h) = 72.0000	Whole Body	Thyroid	TEDE
Delta dose (rem)	3.7417E-06	8.5573E-03	2.6527E-04
Accumulated dose (rem)	1.5392E-05	1.9414E-02	6.1107E-04

Control Room (CR) Doses:

Time (h) = 96.0000	Whole Body	Thyroid	TEDE
Delta dose (rem)	8.2885E-07	5.4872E-02	1.6746E-03
Accumulated dose (rem)	6.5451E-06	1.7047E-01	5.2297E-03

Exclusion Area Boundary (EAB) Doses:

Time (h) = 96.0000	Whole Body	Thyroid	TEDE
Delta dose (rem)	0.0000E+00	0.0000E+00	0.0000E+00
Accumulated dose (rem)	5.4107E-05	3.2862E-02	1.0700E-03

Low Population Zone (LPZ) Doses:

Time (h) = 96.0000	Whole Body	Thyroid	TEDE
Delta dose (rem)	3.6324E-06	1.0265E-02	3.1675E-04
Accumulated dose (rem)	1.9024E-05	2.9678E-02	9.2782E-04

Control Room (CR) Doses:

Time (h) = 120.0000	Whole Body	Thyroid	TEDE
Delta dose (rem)	3.2761E-07	2.4186E-02	7.3737E-04
Accumulated dose (rem)	6.8727E-06	1.9465E-01	5.9671E-03

Exclusion Area Boundary (EAB) Doses:

Time (h) = 120.0000	Whole Body	Thyroid	TEDE
Delta dose (rem)	0.0000E+00	0.0000E+00	0.0000E+00
Accumulated dose (rem)	5.4107E-05	3.2862E-02	1.0700E-03

Low Population Zone (LPZ) Doses:

Time (h) = 120.0000	Whole Body	Thyroid	TEDE
Delta dose (rem)	9.6183E-07	3.0312E-03	9.3334E-05
Accumulated dose (rem)	1.9986E-05	3.2710E-02	1.0212E-03

Control Room (CR) Doses:

Time (h) = 168.0000	Whole Body	Thyroid	TEDE
Delta dose (rem)	6.5937E-07	5.3387E-02	1.6266E-03
Accumulated dose (rem)	7.5321E-06	2.4804E-01	7.5937E-03

Exclusion Area Boundary (EAB) Doses:

Time (h) = 168.0000	Whole Body	Thyroid	TEDE
Delta dose (rem)	0.0000E+00	0.0000E+00	0.0000E+00
Accumulated dose (rem)	5.4107E-05	3.2862E-02	1.0700E-03

Low Population Zone (LPZ) Doses:

Time (h) = 168.0000	Whole Body	Thyroid	TEDE
Delta dose (rem)	2.0226E-06	6.8523E-03	2.1072E-04
Accumulated dose (rem)	2.2009E-05	3.9562E-02	1.2319E-03

Control Room (CR) Doses:

Time (h) = 336.0000	Whole Body	Thyroid	TEDE
Delta dose (rem)	2.3914E-06	2.1042E-01	6.4090E-03
Accumulated dose (rem)	9.9234E-06	4.5846E-01	1.4003E-02

Exclusion Area Boundary (EAB) Doses:

Time (h) = 336.0000	Whole Body	Thyroid	TEDE
Delta dose (rem)	0.0000E+00	0.0000E+00	0.0000E+00
Accumulated dose (rem)	5.4107E-05	3.2862E-02	1.0700E-03

Low Population Zone (LPZ) Doses:

Time (h) = 336.0000	Whole Body	Thyroid	TEDE
Delta dose (rem)	7.6036E-06	2.6957E-02	8.2833E-04
Accumulated dose (rem)	2.9612E-05	6.6519E-02	2.0602E-03

Control Room (CR) Doses:

Time (h) = 720.0000	Whole Body	Thyroid	TEDE
Delta dose (rem)	3.7066E-06	3.6642E-01	1.1159E-02
Accumulated dose (rem)	1.3630E-05	8.2488E-01	2.5162E-02

Exclusion Area Boundary (EAB) Doses:

Time (h) = 720.0000	Whole Body	Thyroid	TEDE
Delta dose (rem)	0.0000E+00	0.0000E+00	0.0000E+00
Accumulated dose (rem)	5.4107E-05	3.2862E-02	1.0700E-03

Low Population Zone (LPZ) Doses:

Time (h) = 720.0000	Whole Body	Thyroid	TEDE
Delta dose (rem)	1.2997E-05	4.6874E-02	1.4401E-03
Accumulated dose (rem)	4.2609E-05	1.1339E-01	3.5003E-03

```
#######################################################################
                                I-131 Summary
#######################################################################
```

Time (hr)	Containment I-131 (Curies)	MSL B Inboard - Airbo I-131 (Curies)	Environment I-131 (Curies)
0.000	5.2640E+03	1.1028E-08	8.5506E-19
0.333	2.8290E+06	6.6104E-06	1.4714E-07
0.500	4.0239E+06	9.9107E-06	7.7178E-07
0.800	7.9884E+06	1.9800E-05	5.2433E-06
1.100	1.1679E+07	2.9668E-05	1.9659E-05
1.400	1.5113E+07	3.9513E-05	5.4053E-05
1.700	1.8307E+07	4.9337E-05	1.2202E-04
2.000	2.1276E+07	5.9137E-05	2.4036E-04
2.300	1.6058E+07	3.6069E-05	4.2713E-04
2.600	1.2209E+07	3.6028E-05	6.9434E-04
2.900	9.3713E+06	3.5988E-05	1.0510E-03
3.200	7.2781E+06	3.5948E-05	1.5052E-03
3.500	5.7342E+06	3.5907E-05	2.0644E-03
3.800	4.5953E+06	3.5867E-05	2.7351E-03
4.100	3.7551E+06	3.5827E-05	3.5235E-03
4.400	3.1351E+06	3.5787E-05	4.4349E-03
4.700	2.6775E+06	3.5746E-05	5.4742E-03
5.000	2.3396E+06	3.5706E-05	6.6460E-03
5.300	2.1768E+06	3.5666E-05	7.9541E-03
5.600	2.0415E+06	3.5626E-05	9.4022E-03
5.900	1.9291E+06	3.5586E-05	1.0994E-02
6.200	1.8355E+06	3.5547E-05	1.2731E-02
6.500	1.7577E+06	3.5507E-05	1.4617E-02
6.800	1.6930E+06	3.5467E-05	1.6654E-02
7.100	1.6390E+06	3.5427E-05	1.8845E-02
7.400	1.5940E+06	3.5387E-05	2.1190E-02
7.700	1.5564E+06	3.5348E-05	2.3692E-02
8.000	1.5249E+06	3.5308E-05	2.6352E-02
8.300	1.4986E+06	3.5268E-05	2.9172E-02
8.600	1.4790E+06	3.5229E-05	3.2152E-02
8.900	1.4622E+06	3.5189E-05	3.5294E-02
9.200	1.4476E+06	3.5150E-05	3.8598E-02
9.500	1.4350E+06	3.5111E-05	4.2066E-02
9.800	1.4240E+06	3.5071E-05	4.5698E-02
10.100	1.4145E+06	3.5032E-05	4.9494E-02
10.400	1.4061E+06	3.4993E-05	5.3455E-02
24.000	1.2997E+06	3.3257E-05	4.0561E-01
48.000	1.1900E+06	3.0451E-05	1.5795E+00
72.000	1.0896E+06	2.7881E-05	3.2409E+00
96.000	9.9764E+05	2.5529E-05	5.2921E+00
120.000	9.1346E+05	2.3374E-05	7.0860E+00
168.000	7.6580E+05	1.9596E-05	1.1178E+01
336.000	4.1314E+05	1.0572E-05	2.7352E+01
720.000	1.0081E+05	2.5796E-06	5.5490E+01

Time (hr)	Control Room I-131 (Curies)	MSL B Outboard - Airb I-131 (Curies)	MSL B Inboard - Surfa I-131 (Curies)
0.000	6.9747E-22	1.7098E-05	4.0092E-13
0.333	1.1025E-10	5.9427E+00	1.4422E-07
0.500	5.5483E-10	1.3140E+01	3.2437E-07
0.800	3.5120E-09	3.5817E+01	9.0725E-07
1.100	1.2348E-08	7.2225E+01	1.8773E-06
1.400	3.1933E-08	1.2109E+02	3.2331E-06
1.700	6.7901E-08	1.8124E+02	4.9735E-06

2.000	1.2617E-07	2.5162E+02	7.0972E-06
2.300	1.7980E-07	2.8649E+02	8.5061E-06
2.600	2.5638E-07	3.1815E+02	9.9120E-06
2.900	3.5281E-07	3.4687E+02	1.1315E-05
3.200	4.6659E-07	3.7293E+02	1.2714E-05
3.500	5.9566E-07	3.9656E+02	1.4111E-05
3.800	7.3830E-07	4.1799E+02	1.5504E-05
4.100	8.9303E-07	4.3741E+02	1.6895E-05
4.400	1.0586E-06	4.5501E+02	1.8282E-05
4.700	1.2338E-06	4.7095E+02	1.9666E-05
5.000	1.4177E-06	4.8538E+02	2.1047E-05
5.300	1.6095E-06	4.9844E+02	2.2425E-05
5.600	1.8082E-06	5.1026E+02	2.3800E-05
5.900	2.0133E-06	5.2094E+02	2.5172E-05
6.200	2.2241E-06	5.3059E+02	2.6541E-05
6.500	2.4400E-06	5.3930E+02	2.7907E-05
6.800	2.6605E-06	5.4715E+02	2.9269E-05
7.100	2.8851E-06	5.5424E+02	3.0629E-05
7.400	3.1134E-06	5.6062E+02	3.1986E-05
7.700	3.3450E-06	5.6635E+02	3.3339E-05
8.000	3.5795E-06	5.7151E+02	3.4690E-05
8.300	2.9537E-06	5.7613E+02	3.6038E-05
8.600	2.5676E-06	5.8027E+02	3.7382E-05
8.900	2.3419E-06	5.8397E+02	3.8724E-05
9.200	2.2234E-06	5.8728E+02	4.0062E-05
9.500	2.1768E-06	5.9022E+02	4.1398E-05
9.800	2.1783E-06	5.9283E+02	4.2731E-05
10.100	2.2121E-06	5.9515E+02	4.4060E-05
10.400	2.2675E-06	5.9719E+02	4.5387E-05
24.000	6.6236E-06	5.9337E+02	1.0247E-04
48.000	6.7580E-06	2.4691E+02	3.0836E-04
72.000	8.8218E-06	2.2605E+02	4.7907E-04
96.000	1.0493E-05	2.0697E+02	6.1905E-04
120.000	6.6911E-06	3.7232E+01	1.6154E-03
168.000	7.6888E-06	3.1213E+01	3.1168E-03
336.000	8.1043E-06	1.6840E+01	5.0352E-03
720.000	4.2275E-06	4.1090E+00	3.1359E-03

	MSL B Outboard - Surf Hold	(By Surface Fixa	Condenser - Airborne
Time (hr)	I-131 (Curies)	I-131 (Curies)	I-131 (Curies)
0.000	4.1436E-10	3.8330E-19	5.7467E-10
0.333	8.7173E-02	5.6601E-08	4.3987E-02
0.500	2.9038E-01	2.9071E-07	1.0829E-01
0.800	1.2038E+00	1.9383E-06	3.1497E-01
1.100	3.2802E+00	7.1990E-06	6.6266E-01
1.400	7.0318E+00	1.9674E-05	1.1404E+00
1.700	1.2922E+01	4.4218E-05	1.7361E+00
2.000	2.1371E+01	8.6825E-05	2.4386E+00
2.300	3.1920E+01	1.5387E-04	2.8721E+00
2.600	4.3761E+01	2.4952E-04	3.2030E+00
2.900	5.6774E+01	3.7692E-04	3.5030E+00
3.200	7.0847E+01	5.3893E-04	3.7752E+00
3.500	8.5879E+01	7.3811E-04	4.0220E+00
3.800	1.0178E+02	9.7678E-04	4.2458E+00
4.100	1.1846E+02	1.2570E-03	4.4487E+00
4.400	1.3585E+02	1.5807E-03	4.6326E+00
4.700	1.5388E+02	1.9496E-03	4.7991E+00
5.000	1.7249E+02	2.3651E-03	4.9499E+00
5.300	1.9161E+02	2.8287E-03	5.0864E+00
5.600	2.1121E+02	3.3415E-03	5.2099E+00

5.900	2.3122E+02	3.9047E-03	5.3215E+00
6.200	2.5161E+02	4.5192E-03	5.4224E+00
6.500	2.7233E+02	5.1858E-03	5.5134E+00
6.800	2.9336E+02	5.9055E-03	5.5956E+00
7.100	3.1466E+02	6.6787E-03	5.6697E+00
7.400	3.3620E+02	7.5063E-03	5.7364E+00
7.700	3.5796E+02	8.3885E-03	5.7964E+00
8.000	3.7990E+02	9.3261E-03	5.8503E+00
8.300	4.0201E+02	1.0319E-02	5.8987E+00
8.600	4.2427E+02	1.1368E-02	5.9421E+00
8.900	4.4666E+02	1.2474E-02	5.9809E+00
9.200	4.6917E+02	1.3636E-02	6.0155E+00
9.500	4.9177E+02	1.4855E-02	6.0464E+00
9.800	5.1445E+02	1.6130E-02	6.0738E+00
10.100	5.3721E+02	1.7463E-02	6.0981E+00
10.400	5.6003E+02	1.8853E-02	6.1195E+00
24.000	1.5803E+03	1.4082E-01	6.0854E+00
48.000	3.4167E+03	4.9342E-01	1.2018E+00
72.000	4.7247E+03	9.8616E-01	1.1002E+00
96.000	5.7898E+03	1.5740E+00	1.0074E+00
120.000	7.1262E+03	1.8651E+00	1.3750E-01
168.000	8.7947E+03	2.5023E+00	1.1527E-01
336.000	1.0111E+04	4.4269E+00	6.2189E-02
720.000	5.5191E+03	4.7124E+00	1.5175E-02

Time (hr)	Condenser - Surface I-131 (Curies)
0.000	1.4167E-12
0.333	7.7210E-02
0.500	2.9543E-01
0.800	1.3587E+00
1.100	3.8979E+00
1.400	8.6360E+00
1.700	1.6230E+01
2.000	2.7275E+01
2.300	4.1507E+01
2.600	5.7640E+01
2.900	7.5432E+01
3.200	9.4726E+01
3.500	1.1538E+02
3.800	1.3726E+02
4.100	1.6025E+02
4.400	1.8425E+02
4.700	2.0915E+02
5.000	2.3487E+02
5.300	2.6132E+02
5.600	2.8844E+02
5.900	3.1615E+02
6.200	3.4440E+02
6.500	3.7313E+02
6.800	4.0228E+02
7.100	4.3182E+02
7.400	4.6171E+02
7.700	4.9189E+02
8.000	5.2235E+02
8.300	5.5305E+02
8.600	5.8396E+02
8.900	6.1505E+02
9.200	6.4630E+02
9.500	6.7770E+02

9.800	7.0921E+02
10.100	7.4083E+02
10.400	7.7254E+02
24.000	2.1913E+03
48.000	2.5941E+03
72.000	2.8484E+03
96.000	3.0421E+03
120.000	2.8548E+03
168.000	2.5001E+03
336.000	1.5520E+03
720.000	4.9435E+02

##

Cumulative Dose Summary

##

	Control Room (CR)		Exclusion Area Bounda		Low Population Zone (	
Time (hr)	Thyroid (rem)	TEDE (rem)	Thyroid (rem)	TEDE (rem)	Thyroid (rem)	TEDE (rem)
0.000	0.0000E+00	0.0000E+00	0.0000E+00	0.0000E+00	0.0000E+00	0.0000E+00
0.333	4.3658E-09	1.3875E-10	2.4896E-08	8.9718E-10	4.5329E-09	1.6335E-10
0.500	3.1272E-08	9.9284E-10	1.3035E-07	4.6675E-09	2.3733E-08	8.4984E-10
0.800	3.1148E-07	9.8737E-09	8.8289E-07	3.1307E-08	1.6075E-07	5.7002E-09
1.100	1.4809E-06	4.6877E-08	3.3001E-06	1.1600E-07	6.0086E-07	2.1121E-08
1.400	4.8423E-06	1.5309E-07	9.0464E-06	3.1560E-07	1.6471E-06	5.7463E-08
1.700	1.2523E-05	3.9550E-07	2.0361E-05	7.0568E-07	3.7072E-06	1.2849E-07
2.000	2.7546E-05	8.6909E-07	3.9993E-05	1.3782E-06	7.2818E-06	2.5094E-07
2.300	5.1328E-05	1.6181E-06	7.0872E-05	2.4302E-06	1.2904E-05	4.4247E-07
2.600	8.5276E-05	2.6863E-06	1.1490E-04	3.9225E-06	2.0920E-05	7.1419E-07
2.900	1.3266E-04	4.1761E-06	1.7347E-04	5.8988E-06	3.1584E-05	1.0740E-06
3.200	1.9629E-04	6.1751E-06	2.4781E-04	8.3972E-06	4.5120E-05	1.5289E-06
3.500	2.7858E-04	8.7587E-06	3.3903E-04	1.1452E-05	6.1730E-05	2.0851E-06
3.800	3.8166E-04	1.1993E-05	4.4811E-04	1.5092E-05	8.1590E-05	2.7479E-06
4.100	5.0737E-04	1.5934E-05	5.7592E-04	1.9344E-05	1.0486E-04	3.5221E-06
4.400	6.5734E-04	2.0634E-05	7.2322E-04	2.4231E-05	1.3168E-04	4.4119E-06
4.700	8.3299E-04	2.6135E-05	8.9068E-04	2.9774E-05	1.6217E-04	5.4210E-06
5.000	1.0356E-03	3.2477E-05	1.0789E-03	3.5988E-05	1.9644E-04	6.5526E-06
5.300	1.2662E-03	3.9694E-05	1.2884E-03	4.2891E-05	2.3460E-04	7.8094E-06
5.600	1.5259E-03	4.7815E-05	1.5197E-03	5.0495E-05	2.7671E-04	9.1939E-06
5.900	1.8154E-03	5.6867E-05	1.7732E-03	5.8811E-05	3.2285E-04	1.0708E-05
6.200	2.1356E-03	6.6872E-05	2.0491E-03	6.7849E-05	3.7309E-04	1.2354E-05
6.500	2.4871E-03	7.7850E-05	2.3478E-03	7.7617E-05	4.2748E-04	1.4132E-05
6.800	2.8704E-03	8.9819E-05	2.6696E-03	8.8121E-05	4.8607E-04	1.6045E-05
7.100	3.2860E-03	1.0279E-04	3.0146E-03	9.9368E-05	5.4889E-04	1.8093E-05
7.400	3.7345E-03	1.1678E-04	3.3831E-03	1.1136E-04	6.1598E-04	2.0276E-05
7.700	4.2160E-03	1.3180E-04	3.7752E-03	1.2411E-04	6.8737E-04	2.2597E-05
8.000	4.7310E-03	1.4786E-04	4.1910E-03	1.3760E-04	7.6307E-04	2.5054E-05
8.300	5.2125E-03	1.6287E-04	4.4171E-03	1.4522E-04	7.9222E-04	2.6037E-05
8.600	5.6190E-03	1.7554E-04	4.6554E-03	1.5324E-04	8.2295E-04	2.7070E-05
8.900	5.9800E-03	1.8680E-04	4.9061E-03	1.6165E-04	8.5527E-04	2.8155E-05
9.200	6.3153E-03	1.9724E-04	5.1691E-03	1.7047E-04	8.8918E-04	2.9291E-05
9.500	6.6379E-03	2.0729E-04	5.4444E-03	1.7968E-04	9.2468E-04	3.0479E-05
9.800	6.9567E-03	2.1722E-04	5.7321E-03	1.8928E-04	9.6177E-04	3.1717E-05
10.100	7.2775E-03	2.2721E-04	6.0321E-03	1.9928E-04	1.0005E-03	3.3007E-05
10.400	7.6041E-03	2.3738E-04	6.3444E-03	2.0968E-04	1.0407E-03	3.4347E-05
24.000	3.5524E-02	1.1015E-03	3.2862E-02	1.0700E-03	4.4597E-03	1.4527E-04
48.000	6.9977E-02	2.1600E-03	3.2862E-02	1.0700E-03	1.0856E-02	3.4581E-04
72.000	1.1559E-01	3.5551E-03	3.2862E-02	1.0700E-03	1.9414E-02	6.1107E-04
96.000	1.7047E-01	5.2297E-03	3.2862E-02	1.0700E-03	2.9678E-02	9.2782E-04
120.000	1.9465E-01	5.9671E-03	3.2862E-02	1.0700E-03	3.2710E-02	1.0212E-03

```
 168.000 2.4804E-01 7.5937E-03 3.2862E-02 1.0700E-03 3.9562E-02 1.2319E-03
 336.000 4.5846E-01 1.4003E-02 3.2862E-02 1.0700E-03 6.6519E-02 2.0602E-03
 720.000 8.2488E-01 2.5162E-02 3.2862E-02 1.0700E-03 1.1339E-01 3.5003E-03

#####################################################################
                        Worst Two-Hour Doses
#####################################################################

Exclusion Area Boundary (EAB)
   Time   Whole Body    Thyroid        TEDE
   (hr)     (rem)        (rem)         (rem)
   10.4   6.1509E-06   3.8997E-03   1.2652E-04
```

```
 ######################################################################
    RADTRAD Version 3.03 (Spring 2001) run on  6/13/2006  at 12:42:55
 ######################################################################

 ######################################################################
                      File information
 ######################################################################

 Plant file           = C:\Documents and Settings\Aleem Boatright\My Documents\My
Work\Exelon\AST\Limerick\LGS LOCA\RADTRAD\LGS LOCA ECCS Leak - New Design Basis -
225cfm CR Unfilt Inleak - Rad Mode.psf
 Inventory file       = c:\program files\radtrad3-03\defaults\limerick ast eccs
source terms.nif
 Release file         = c:\program files\radtrad3-03\defaults\bwr_dba.rft
 Dose Conversion file = c:\program files\radtrad3-03\defaults\fgr11&12.inp




     #####    ####   #####    #  #     #  #####   #    #  #####
     #    #  #       #        #  ##    #  #    #  #    #    #
     #    #  #       #        #  # #   #  #    #  #    #    #
     #####    ####   ####     #  #  #  #  #####   #    #    #
     #            #  #        #  #   # #  #       #    #    #
     #            #  #        #  #    ##  #       #    #    #
     #        ####   #        #  #     #  #        ####     #


 Radtrad 3.03 4/15/2001
 ECCS Leak, 15.5 minute SC Drawdown - 10% Flashing Fraction - 99% Aerosol, 95% E&O
RERS Filters - 99% SGTS Filters - 99% Aerosol, 99% E&O CREFAS Filters - 225cfm
Unfiltered Inleakage - No CREFAS Delay - Control Room in Rad Mode - 3000cfm -10%
(2175cfm CR Re
 Nuclide Inventory File:
 c:\program files\radtrad3-03\defaults\limerick ast eccs source terms.nif
 Plant Power Level:
  3.5270E+03
 Compartments:
   5
 Compartment 1:
 ECCS Fluid
   3
  9.5989E+05
   0
   0
   0
   0
   0
 Compartment 2:
 Reactor Enclosure
   3
  1.8000E+06
   0
   0
   1
   0
   0
 Compartment 3:
```

```
Environment
  2
 0.0000E+00
  0
  0
  0
  0
  0
Compartment 4:
Control Room
  1
 1.2600E+05
  0
  0
  1
  0
  0
Compartment 5:
SGTS Node
  3
 1.0000E+00
  0
  0
  0
  0
  0
Pathways:
  6
Pathway 1:
ECCS Fluid to Reactor Enclosure
  1
  2
  2
Pathway 2:
Filtered Environment to Control Room
  3
  4
  2
Pathway 3:
Control Room to  Environment
  4
  3
  2
Pathway 4:
Unfiltered Environment to Control Room
  3
  4
  2
Pathway 5:
Reactor Enclosure to SGTS Node
  2
  5
  2
Pathway 6:
SGTS Node to  Environment
  5
  3
  2
End of Plant Model File
Scenario Description Name:
```

```
Plant Model Filename:

Source Term:
  1
  1   1.0000E+00
c:\program files\radtrad3-03\defaults\fgr11&12.inp
c:\program files\radtrad3-03\defaults\bwr_dba.rft
  0.0000E+00
  0
  0.0000E+00   9.7000E-01   3.0000E-02   1.0000E+00
Overlying Pool:
  0
  0.0000E+00
  0
  0
  0
  0
Compartments:
  5
Compartment 1:
  0
  1
  0
  0
  0
  0
  0
  0
  0
Compartment 2:
  0
  1
  0
  0
  0
  0
  1
  5.1000E+04
  4
  0.0000E+00   0.0000E+00   0.0000E+00   0.0000E+00
  1.6700E-02   0.0000E+00   0.0000E+00   0.0000E+00
  2.5830E-01   9.9000E+01   9.5000E+01   9.5000E+01
  7.2000E+02   0.0000E+00   0.0000E+00   0.0000E+00
  0
  0
Compartment 3:
  0
  1
  0
  0
  0
  0
  0
  0
  0
Compartment 4:
  0
  1
  0
```

```
  0
  0
  0
  1
  2.1750E+03
  3
  0.0000E+00   9.9000E+01   9.5000E+01   9.5000E+01
  5.0000E-01   9.9000E+01   9.5000E+01   9.5000E+01
  7.2000E+02   0.0000E+00   0.0000E+00   0.0000E+00
  0
  0
Compartment 5:
  0
  1
  0
  0
  0
  0
  0
  0
  0
Pathways:
  6
Pathway 1:
  0
  0
  0
  0
  0
  1
  3
  0.0000E+00   5.0000E+00   9.0000E+01   9.0000E+01   9.0000E+01
  2.4000E+01   5.0000E+00   9.0000E+01   9.0000E+01   9.0000E+01
  7.2000E+02   0.0000E+00   0.0000E+00   0.0000E+00   0.0000E+00
  0
  0
  0
  0
  0
  0
Pathway 2:
  0
  0
  0
  0
  0
  1
  3
  0.0000E+00   5.2500E+02   9.9000E+01   9.5000E+01   9.5000E+01
  5.0000E-01   5.2500E+02   9.9000E+01   9.5000E+01   9.5000E+01
  7.2000E+02   0.0000E+00   0.0000E+00   0.0000E+00   0.0000E+00
  0
  0
  0
  0
  0
  0
Pathway 3:
  0
  0
```

```
  0
  0
  0
  1
  3
  0.0000E+00   7.5000E+02   1.0000E+02   1.0000E+02   1.0000E+02
  5.0000E-01   7.5000E+02   1.0000E+02   1.0000E+02   1.0000E+02
  7.2000E+02   0.0000E+00   0.0000E+00   0.0000E+00   0.0000E+00
  0
  0
  0
  0
  0
  0
Pathway 4:
  0
  0
  0
  0
  0
  1
  2
  0.0000E+00   2.2500E+02   0.0000E+00   0.0000E+00   0.0000E+00
  7.2000E+02   0.0000E+00   0.0000E+00   0.0000E+00   0.0000E+00
  0
  0
  0
  0
  0
  0
Pathway 5:
  0
  0
  0
  0
  0
  1
 10
  0.0000E+00   9.0000E+07   0.0000E+00   0.0000E+00   0.0000E+00
  1.6700E-02   9.0000E+07   0.0000E+00   0.0000E+00   0.0000E+00
  5.8300E-02   4.0930E+04   0.0000E+00   0.0000E+00   0.0000E+00
  1.0000E-01   2.1230E+04   0.0000E+00   0.0000E+00   0.0000E+00
  1.4170E-01   1.4690E+04   0.0000E+00   0.0000E+00   0.0000E+00
  1.8330E-01   1.1430E+04   0.0000E+00   0.0000E+00   0.0000E+00
  2.2500E-01   9.4760E+03   0.0000E+00   0.0000E+00   0.0000E+00
  2.5830E-01   7.8960E+03   9.9000E+01   9.5000E+01   9.5000E+01
  2.6670E-01   6.8170E+03   9.9000E+01   9.5000E+01   9.5000E+01
  3.9583E-01   5.0000E+03   9.9000E+01   9.5000E+01   9.5000E+01
  0
  0
  0
  0
  0
  0
Pathway 6:
  0
  0
  0
  0
  0
```

```
  1
 10
  0.0000E+00   9.0000E+07   0.0000E+00   0.0000E+00   0.0000E+00
  1.6700E-02   9.0000E+07   0.0000E+00   0.0000E+00   0.0000E+00
  5.8300E-02   4.0930E+04   0.0000E+00   0.0000E+00   0.0000E+00
  1.0000E-01   2.1230E+04   0.0000E+00   0.0000E+00   0.0000E+00
  1.4170E-01   1.4690E+04   0.0000E+00   0.0000E+00   0.0000E+00
  1.8330E-01   1.1430E+04   0.0000E+00   0.0000E+00   0.0000E+00
  2.2500E-01   9.4760E+03   0.0000E+00   0.0000E+00   0.0000E+00
  2.5830E-01   7.8960E+03   9.9000E+01   9.9000E+01   9.9000E+01
  2.6670E-01   6.8170E+03   9.9000E+01   9.9000E+01   9.9000E+01
  3.9583E-01   5.0000E+03   9.9000E+01   9.9000E+01   9.9000E+01
  0
  0
  0
  0
  0
  0
Dose Locations:
  3
Location 1:
EAB
  3
  1
  2
  0.0000E+00   3.1800E-04
  8.0000E+00   0.0000E+00
  1
  2
  0.0000E+00   3.5000E-04
  8.0000E+00   0.0000E+00
  0
Location 2:
LPZ
  3
  1
  5
  0.0000E+00   5.7900E-05
  8.0000E+00   4.1000E-05
  2.4000E+01   1.9500E-05
  9.6000E+01   6.6800E-06
  7.2000E+02   2.6200E-06
  1
  4
  0.0000E+00   3.5000E-04
  8.0000E+00   1.8000E-04
  2.4000E+01   2.3000E-04
  7.2000E+02   0.0000E+00
  0
Location 3:
Control Room
  4
  0
  1
  2
  0.0000E+00   3.5000E-04
  7.2000E+02   0.0000E+00
  1
  4
  0.0000E+00   1.0000E+00
```

```
  2.4000E+01   6.0000E-01
  9.6000E+01   4.0000E-01
  7.2000E+02   0.0000E+00
 Effective Volume Location:
  1
  6
  0.0000E+00   6.8800E-03
  2.0000E+00   5.1700E-03
  8.0000E+00   2.0400E-03
  2.4000E+01   1.2900E-03
  9.6000E+01   9.6300E-04
  7.2000E+02   0.0000E+00
 Simulation Parameters:
  4
  0.0000E+00   1.6670E-03
  1.6700E-02   2.5000E-02
  2.5830E-01   1.0000E-01
  1.2000E+01   0.0000E+00
 Output Filename:
 C:\Documents and Settings\Aleem Boatright\My Documents\My
Work\Exelon\AST\Limerick\LGS LOCA\RADTRAD\LGS LOCA ECCS Leak - New Design Basis -
225cfm CR Unfilt Inleak - Rad Mode.o0
  1
  2
  1
  0
  1
 End of Scenario File
```

```
#######################################################################
   RADTRAD Version 3.03 (Spring 2001) run on  6/13/2006  at 12:42:55
#######################################################################

#######################################################################
                     Plant Description
#######################################################################

Number of Nuclides =  60

Inventory Power =   1.0000E+00 MWth
Plant Power Level =   3.5270E+03 MWth

Number of compartments    =   5

Compartment information

Compartment number  1  (Source term fraction =   1.0000E+00
)
Name: ECCS Fluid
Compartment volume =   9.5989E+05 (Cubic feet)
Compartment type is Normal
Pathways into and out of compartment  1
   Exit Pathway Number    1: ECCS Fluid to Reactor Enclosure

Compartment number  2
Name: Reactor Enclosure
Compartment volume =   1.8000E+06 (Cubic feet)
Compartment type is Normal
Removal devices within compartment:
     Filter(s)
Pathways into and out of compartment  2
   Inlet Pathway Number   1: ECCS Fluid to Reactor Enclosure
   Exit Pathway Number    5: Reactor Enclosure to SGTS Node

Compartment number  3
Name: Environment
Compartment type is Environment
Pathways into and out of compartment  3
   Inlet Pathway Number   3: Control Room to  Environment
   Inlet Pathway Number   6: SGTS Node to  Environment
   Exit Pathway Number    2: Filtered Environment to Control Room
   Exit Pathway Number    4: Unfiltered Environment to Control Room

Compartment number  4
Name: Control Room
Compartment volume =   1.2600E+05 (Cubic feet)
Compartment type is Control Room
Removal devices within compartment:
     Filter(s)
Pathways into and out of compartment  4
   Inlet Pathway Number   2: Filtered Environment to Control Room
   Inlet Pathway Number   4: Unfiltered Environment to Control Room
   Exit Pathway Number    3: Control Room to  Environment

Compartment number  5
Name: SGTS Node
Compartment volume =   1.0000E+00 (Cubic feet)
Compartment type is Normal
```

```
Pathways into and out of compartment  5
   Inlet Pathway Number   5: Reactor Enclosure to SGTS Node
   Exit Pathway Number    6: SGTS Node to  Environment

Total number of pathways =   6
```

```
#######################################################################
   RADTRAD Version 3.03 (Spring 2001) run on  6/13/2006  at 12:42:55
#######################################################################
```

```
 ####   #    #  #####  #####   #    #  #####
#    #  #    #    #    #    #  #    #    #
#    #  #    #    #    #    #  #    #    #
#    #  #    #    #    #####   #    #    #
#    #  #    #    #    #       #    #    #
#    #  #    #    #    #       #    #    #
 ####    ####     #    #        ####     #
```

```
#######################################################################
                                Dose Output
#######################################################################
```

Detailed model information at time (H) = 0.0167

EAB Doses:

Time (h) = 0.0167	Whole Body	Thyroid	TEDE
Delta dose (rem)	3.2507E-05	6.7324E-03	2.4539E-04
Accumulated dose (rem)	3.2507E-05	6.7324E-03	2.4539E-04

LPZ Doses:

Time (h) = 0.0167	Whole Body	Thyroid	TEDE
Delta dose (rem)	5.9187E-06	1.2258E-03	4.4679E-05
Accumulated dose (rem)	5.9187E-06	1.2258E-03	4.4679E-05

Control Room Doses:

Time (h) = 0.0167	Whole Body	Thyroid	TEDE
Delta dose (rem)	2.0714E-08	9.5078E-05	3.0271E-06
Accumulated dose (rem)	2.0714E-08	9.5078E-05	3.0271E-06

Detailed model information at time (H) = 0.0583

EAB Doses:

Time (h) = 0.0583	Whole Body	Thyroid	TEDE
Delta dose (rem)	3.7174E-04	7.7657E-02	2.8269E-03
Accumulated dose (rem)	4.0424E-04	8.4389E-02	3.0723E-03

LPZ Doses:

Time (h) = 0.0583	Whole Body	Thyroid	TEDE
Delta dose (rem)	6.7684E-05	1.4139E-02	5.1472E-04
Accumulated dose (rem)	7.3603E-05	1.5365E-02	5.5939E-04

Control Room Doses:

Time (h) = 0.0583	Whole Body	Thyroid	TEDE
Delta dose (rem)	9.1070E-07	4.2182E-03	1.3427E-04

```
Accumulated dose (rem)  9.3142E-07  4.3133E-03  1.3730E-04

Detailed model information at time (H) =    0.1000

EAB Doses:

Time (h) =   0.1000    Whole Body   Thyroid       TEDE
Delta dose (rem)        2.0122E-05  4.2755E-03  1.5526E-04
Accumulated dose (rem)  4.2436E-04  8.8665E-02  3.2276E-03

LPZ Doses:

Time (h) =   0.1000    Whole Body   Thyroid       TEDE
Delta dose (rem)        3.6637E-06  7.7846E-04  2.8269E-05
Accumulated dose (rem)  7.7266E-05  1.6144E-02  5.8766E-04

Control Room Doses:

Time (h) =   0.1000    Whole Body   Thyroid       TEDE
Delta dose (rem)        1.8726E-06  8.7980E-03  2.7997E-04
Accumulated dose (rem)  2.8040E-06  1.3111E-02  4.1726E-04

Detailed model information at time (H) =    0.1417

EAB Doses:

Time (h) =   0.1417    Whole Body   Thyroid       TEDE
Delta dose (rem)        3.7962E-05  8.1988E-03  2.9704E-04
Accumulated dose (rem)  4.6233E-04  9.6864E-02  3.5246E-03

LPZ Doses:

Time (h) =   0.1417    Whole Body   Thyroid       TEDE
Delta dose (rem)        6.9120E-06  1.4928E-03  5.4084E-05
Accumulated dose (rem)  8.4178E-05  1.7637E-02  6.4175E-04

Control Room Doses:

Time (h) =   0.1417    Whole Body   Thyroid       TEDE
Delta dose (rem)        1.8794E-06  8.9816E-03  2.8570E-04
Accumulated dose (rem)  4.6833E-06  2.2093E-02  7.0297E-04

Detailed model information at time (H) =    0.1833

EAB Doses:

Time (h) =   0.1833    Whole Body   Thyroid       TEDE
Delta dose (rem)        5.2248E-05  1.1477E-02  4.1484E-04
Accumulated dose (rem)  5.1457E-04  1.0834E-01  3.9395E-03

LPZ Doses:

Time (h) =   0.1833    Whole Body   Thyroid       TEDE
Delta dose (rem)        9.5130E-06  2.0898E-03  7.5533E-05
Accumulated dose (rem)  9.3691E-05  1.9726E-02  7.1728E-04

Control Room Doses:

Time (h) =   0.1833    Whole Body   Thyroid       TEDE
Delta dose (rem)        1.9534E-06  9.5002E-03  3.0209E-04
```

```
Accumulated dose (rem)  6.6368E-06  3.1593E-02  1.0051E-03

Detailed model information at time (H) =    0.2250

EAB Doses:

Time (h) =   0.2250    Whole Body   Thyroid       TEDE
Delta dose (rem)        6.6379E-05  1.4812E-02  5.3422E-04
Accumulated dose (rem)  5.8095E-04  1.2315E-01  4.4737E-03

LPZ Doses:

Time (h) =   0.2250    Whole Body   Thyroid       TEDE
Delta dose (rem)        1.2086E-05  2.6969E-03  9.7268E-05
Accumulated dose (rem)  1.0578E-04  2.2423E-02  8.1455E-04

Control Room Doses:

Time (h) =   0.2250    Whole Body   Thyroid       TEDE
Delta dose (rem)        2.1015E-06  1.0384E-02  3.3009E-04
Accumulated dose (rem)  8.7382E-06  4.1978E-02  1.3351E-03

Detailed model information at time (H) =    0.2583

EAB Doses:

Time (h) =   0.2583    Whole Body   Thyroid       TEDE
Delta dose (rem)        6.1955E-05  1.4032E-02  5.0507E-04
Accumulated dose (rem)  6.4291E-04  1.3719E-01  4.9788E-03

LPZ Doses:

Time (h) =   0.2583    Whole Body   Thyroid       TEDE
Delta dose (rem)        1.1281E-05  2.5549E-03  9.1960E-05
Accumulated dose (rem)  1.1706E-04  2.4978E-02  9.0651E-04

Control Room Doses:

Time (h) =   0.2583    Whole Body   Thyroid       TEDE
Delta dose (rem)        1.8164E-06  9.1113E-03  2.8953E-04
Accumulated dose (rem)  1.0555E-05  5.1089E-02  1.6247E-03

Detailed model information at time (H) =    0.2667

EAB Doses:

Time (h) =   0.2667    Whole Body   Thyroid       TEDE
Delta dose (rem)        7.6411E-09  1.7487E-06  6.2852E-08
Accumulated dose (rem)  6.4292E-04  1.3719E-01  4.9788E-03

LPZ Doses:

Time (h) =   0.2667    Whole Body   Thyroid       TEDE
Delta dose (rem)        1.3913E-09  3.1839E-07  1.1444E-08
Accumulated dose (rem)  1.1706E-04  2.4978E-02  9.0652E-04

Control Room Doses:

Time (h) =   0.2667    Whole Body   Thyroid       TEDE
Delta dose (rem)        4.7125E-07  2.3888E-03  7.5894E-05
```

```
Accumulated dose (rem)  1.1026E-05  5.3478E-02  1.7006E-03

Detailed model information at time (H) =    0.3958

EAB Doses:

Time (h) =   0.3958    Whole Body   Thyroid       TEDE
Delta dose (rem)        1.4963E-07  3.4714E-05  1.2454E-06
Accumulated dose (rem)  6.4307E-04  1.3722E-01  4.9801E-03

LPZ Doses:

Time (h) =   0.3958    Whole Body   Thyroid       TEDE
Delta dose (rem)        2.7244E-08  6.3205E-06  2.2676E-07
Accumulated dose (rem)  1.1709E-04  2.4985E-02  9.0675E-04

Control Room Doses:

Time (h) =   0.3958    Whole Body   Thyroid       TEDE
Delta dose (rem)        6.5354E-06  3.3550E-02  1.0656E-03
Accumulated dose (rem)  1.7561E-05  8.7028E-02  2.7662E-03

Detailed model information at time (H) =    0.5000

EAB Doses:

Time (h) =   0.5000    Whole Body   Thyroid       TEDE
Delta dose (rem)        1.4236E-07  3.4395E-05  1.2275E-06
Accumulated dose (rem)  6.4321E-04  1.3726E-01  4.9813E-03

LPZ Doses:

Time (h) =   0.5000    Whole Body   Thyroid       TEDE
Delta dose (rem)        2.5920E-08  6.2625E-06  2.2349E-07
Accumulated dose (rem)  1.1711E-04  2.4991E-02  9.0697E-04

Control Room Doses:

Time (h) =   0.5000    Whole Body   Thyroid       TEDE
Delta dose (rem)        4.3182E-06  2.3110E-02  7.3341E-04
Accumulated dose (rem)  2.1879E-05  1.1014E-01  3.4996E-03

Detailed model information at time (H) =    2.0000

EAB Doses:

Time (h) =   2.0000    Whole Body   Thyroid       TEDE
Delta dose (rem)        1.0509E-05  3.5296E-03  1.2138E-04
Accumulated dose (rem)  6.5372E-04  1.4079E-01  5.1027E-03

LPZ Doses:

Time (h) =   2.0000    Whole Body   Thyroid       TEDE
Delta dose (rem)        1.9134E-06  6.4266E-04  2.2101E-05
Accumulated dose (rem)  1.1903E-04  2.5634E-02  9.2907E-04

Control Room Doses:

Time (h) =   2.0000    Whole Body   Thyroid       TEDE
Delta dose (rem)        2.0983E-05  1.3528E-01  4.2779E-03
```

```
Accumulated dose (rem)  4.2863E-05  2.4541E-01  7.7775E-03

Detailed model information at time (H) =    8.0000

EAB Doses:

Time (h) =   8.0000    Whole Body   Thyroid       TEDE
Delta dose (rem)        6.2283E-05  3.8135E-02  1.2515E-03
Accumulated dose (rem)  7.1600E-04  1.7892E-01  6.3542E-03

LPZ Doses:

Time (h) =   8.0000    Whole Body   Thyroid       TEDE
Delta dose (rem)        1.1340E-05  6.9434E-03  2.2787E-04
Accumulated dose (rem)  1.3037E-04  3.2577E-02  1.1569E-03

Control Room Doses:

Time (h) =   8.0000    Whole Body   Thyroid       TEDE
Delta dose (rem)        5.7494E-06  7.1704E-02  2.2439E-03
Accumulated dose (rem)  4.8612E-05  3.1712E-01  1.0021E-02

Detailed model information at time (H) =   24.0000

EAB Doses:

Time (h) =  24.0000    Whole Body   Thyroid       TEDE
Delta dose (rem)        0.0000E+00  0.0000E+00  0.0000E+00
Accumulated dose (rem)  7.1600E-04  1.7892E-01  6.3542E-03

LPZ Doses:

Time (h) =  24.0000    Whole Body   Thyroid       TEDE
Delta dose (rem)        9.5225E-06  6.1914E-03  2.0095E-04
Accumulated dose (rem)  1.3989E-04  3.8768E-02  1.3579E-03

Control Room Doses:

Time (h) =  24.0000    Whole Body   Thyroid       TEDE
Delta dose (rem)        2.1114E-06  5.7548E-02  1.7819E-03
Accumulated dose (rem)  5.0724E-05  3.7466E-01  1.1803E-02

Detailed model information at time (H) =   96.0000

EAB Doses:

Time (h) =  96.0000    Whole Body   Thyroid       TEDE
Delta dose (rem)        0.0000E+00  0.0000E+00  0.0000E+00
Accumulated dose (rem)  7.1600E-04  1.7892E-01  6.3542E-03

LPZ Doses:

Time (h) =  96.0000    Whole Body   Thyroid       TEDE
Delta dose (rem)        5.9473E-06  1.2504E-02  3.8856E-04
Accumulated dose (rem)  1.4584E-04  5.1272E-02  1.7465E-03

Control Room Doses:

Time (h) =  96.0000    Whole Body   Thyroid       TEDE
Delta dose (rem)        9.8285E-07  6.8756E-02  2.1052E-03
```

Accumulated dose (rem) 5.1707E-05 4.4342E-01 1.3908E-02

Detailed model information at time (H) = 720.0000

EAB Doses:

Time (h) = 720.0000	Whole Body	Thyroid	TEDE
Delta dose (rem)	0.0000E+00	0.0000E+00	0.0000E+00
Accumulated dose (rem)	7.1600E-04	1.7892E-01	6.3542E-03

LPZ Doses:

Time (h) = 720.0000	Whole Body	Thyroid	TEDE
Delta dose (rem)	3.1051E-06	1.1198E-02	3.4409E-04
Accumulated dose (rem)	1.4894E-04	6.2470E-02	2.0905E-03

Control Room Doses:

Time (h) = 720.0000	Whole Body	Thyroid	TEDE
Delta dose (rem)	7.2377E-07	8.7945E-02	2.6787E-03
Accumulated dose (rem)	5.2430E-05	5.3136E-01	1.6587E-02

333

##

I-131 Summary

##

Time (hr)	ECCS Fluid I-131 (Curies)	Reactor Enclosure I-131 (Curies)	Environment I-131 (Curies)
0.000	5.2650E+03	2.8156E-05	1.7552E-05
0.017	1.5826E+05	1.6158E-03	3.9685E-02
0.058	5.5239E+05	5.7218E-03	4.9755E-01
0.100	9.4735E+05	9.5773E-01	5.2277E-01
0.142	1.3422E+06	2.4010E+00	5.7117E-01
0.183	1.7359E+06	4.3338E+00	6.3896E-01
0.225	2.1305E+06	6.7650E+00	7.2649E-01
0.258	2.4456E+06	9.0623E+00	8.0946E-01
0.267	2.5250E+06	9.5676E+00	8.0947E-01
0.396	3.7457E+06	1.8885E+01	8.0968E-01
0.500	4.7297E+06	2.8315E+01	8.0988E-01
0.800	9.4488E+06	6.9565E+01	8.1106E-01
1.100	1.4157E+07	1.2793E+02	8.1350E-01
1.400	1.8855E+07	1.9623E+02	8.1754E-01
1.700	2.3543E+07	2.7027E+02	8.2336E-01
2.000	2.8220E+07	3.4759E+02	8.3107E-01
2.300	2.8186E+07	4.0818E+02	8.4059E-01
2.600	2.8153E+07	4.4341E+02	8.5127E-01
2.900	2.8121E+07	4.6379E+02	8.6263E-01
3.200	2.8088E+07	4.7548E+02	8.7438E-01
3.500	2.8055E+07	4.8208E+02	8.8636E-01
3.800	2.8022E+07	4.8571E+02	8.9846E-01
4.100	2.7989E+07	4.8759E+02	9.1063E-01
4.400	2.7956E+07	4.8846E+02	9.2283E-01
4.700	2.7924E+07	4.8873E+02	9.3504E-01
5.000	2.7891E+07	4.8865E+02	9.4725E-01
5.300	2.7858E+07	4.8836E+02	9.5947E-01
5.600	2.7826E+07	4.8796E+02	9.7167E-01
5.900	2.7793E+07	4.8749E+02	9.8386E-01
6.200	2.7761E+07	4.8697E+02	9.9604E-01

6.500	2.7728E+07	4.8644E+02	1.0082E+00
6.800	2.7696E+07	4.8589E+02	1.0204E+00
7.100	2.7663E+07	4.8533E+02	1.0325E+00
7.400	2.7631E+07	4.8477E+02	1.0446E+00
7.700	2.7598E+07	4.8420E+02	1.0567E+00
8.000	2.7566E+07	4.8364E+02	1.0688E+00
8.300	2.7534E+07	4.8307E+02	1.0809E+00
8.600	2.7502E+07	4.8251E+02	1.0930E+00
8.900	2.7469E+07	4.8195E+02	1.1050E+00
9.200	2.7437E+07	4.8138E+02	1.1171E+00
9.500	2.7405E+07	4.8082E+02	1.1291E+00
9.800	2.7373E+07	4.8026E+02	1.1411E+00
10.100	2.7341E+07	4.7969E+02	1.1531E+00
10.400	2.7309E+07	4.7913E+02	1.1651E+00
24.000	2.5897E+07	4.5435E+02	1.6914E+00
96.000	1.9550E+07	3.4300E+02	4.0508E+00
720.000	1.7099E+06	3.0000E+01	1.0683E+01

Time (hr)	Control Room I-131 (Curies)	SGTS Node I-131 (Curies)
0.000	1.4317E-08	1.5642E-11
0.017	3.2139E-05	8.9766E-10
0.058	3.9557E-04	3.1788E-09
0.100	3.9421E-04	5.3207E-07
0.142	4.1127E-04	1.3339E-06
0.183	4.4283E-04	2.4076E-06
0.225	4.8827E-04	3.7583E-06
0.258	5.3316E-04	5.0346E-06
0.267	5.2718E-04	2.6576E-07
0.396	4.4331E-04	5.2456E-07
0.500	3.8552E-04	7.8652E-07
0.800	2.5836E-04	1.9324E-06
1.100	1.7427E-04	3.5535E-06
1.400	1.1917E-04	5.4507E-06
1.700	8.3559E-05	7.5074E-06
2.000	6.1046E-05	9.6553E-06
2.300	4.5607E-05	1.1338E-05
2.600	3.5872E-05	1.2317E-05
2.900	2.9705E-05	1.2883E-05
3.200	2.5779E-05	1.3208E-05
3.500	2.3267E-05	1.3391E-05
3.800	2.1650E-05	1.3492E-05
4.100	2.0603E-05	1.3544E-05
4.400	1.9920E-05	1.3568E-05
4.700	1.9470E-05	1.3576E-05
5.000	1.9170E-05	1.3573E-05
5.300	1.8967E-05	1.3566E-05
5.600	1.8827E-05	1.3554E-05
5.900	1.8728E-05	1.3541E-05
6.200	1.8656E-05	1.3527E-05
6.500	1.8601E-05	1.3512E-05
6.800	1.8557E-05	1.3497E-05
7.100	1.8521E-05	1.3481E-05
7.400	1.8490E-05	1.3466E-05
7.700	1.8462E-05	1.3450E-05
8.000	1.8436E-05	1.3434E-05
8.300	1.4722E-05	1.3419E-05
8.600	1.2237E-05	1.3403E-05
8.900	1.0575E-05	1.3387E-05
9.200	9.4612E-06	1.3372E-05

9.500	8.7146E-06	1.3356E-05
9.800	8.2130E-06	1.3340E-05
10.100	7.8751E-06	1.3325E-05
10.400	7.6465E-06	1.3309E-05
24.000	6.8311E-06	1.2621E-05
96.000	3.2610E-06	9.5278E-06
720.000	2.1292E-07	8.3333E-07

##

Cumulative Dose Summary

##

	EAB		LPZ		Control Room	
Time (hr)	Thyroid (rem)	TEDE (rem)	Thyroid (rem)	TEDE (rem)	Thyroid (rem)	TEDE (rem)
0.000	0.0000E+00	0.0000E+00	0.0000E+00	0.0000E+00	0.0000E+00	0.0000E+00
0.017	6.7324E-03	2.4539E-04	1.2258E-03	4.4679E-05	9.5078E-05	3.0271E-06
0.058	8.4389E-02	3.0723E-03	1.5365E-02	5.5939E-04	4.3133E-03	1.3730E-04
0.100	8.8665E-02	3.2276E-03	1.6144E-02	5.8766E-04	1.3111E-02	4.1726E-04
0.142	9.6864E-02	3.5246E-03	1.7637E-02	6.4175E-04	2.2093E-02	7.0297E-04
0.183	1.0834E-01	3.9395E-03	1.9726E-02	7.1728E-04	3.1593E-02	1.0051E-03
0.225	1.2315E-01	4.4737E-03	2.2423E-02	8.1455E-04	4.1978E-02	1.3351E-03
0.258	1.3719E-01	4.9788E-03	2.4978E-02	9.0651E-04	5.1089E-02	1.6247E-03
0.267	1.3719E-01	4.9788E-03	2.4978E-02	9.0652E-04	5.3478E-02	1.7006E-03
0.396	1.3722E-01	4.9801E-03	2.4985E-02	9.0675E-04	8.7028E-02	2.7662E-03
0.500	1.3726E-01	4.9813E-03	2.4991E-02	9.0697E-04	1.1014E-01	3.4996E-03
0.800	1.3745E-01	4.9883E-03	2.5027E-02	9.0825E-04	1.6110E-01	5.1148E-03
1.100	1.3786E-01	5.0026E-03	2.5102E-02	9.1085E-04	1.9521E-01	6.1937E-03
1.400	1.3854E-01	5.0259E-03	2.5224E-02	9.1509E-04	2.1826E-01	6.9216E-03
1.700	1.3951E-01	5.0591E-03	2.5401E-02	9.2114E-04	2.3413E-01	7.4220E-03
2.000	1.4079E-01	5.1027E-03	2.5634E-02	9.2907E-04	2.4541E-01	7.7775E-03
2.300	1.4236E-01	5.1558E-03	2.5920E-02	9.3875E-04	2.5372E-01	8.0387E-03
2.600	1.4412E-01	5.2150E-03	2.6240E-02	9.4953E-04	2.6005E-01	8.2378E-03
2.900	1.4598E-01	5.2775E-03	2.6580E-02	9.6090E-04	2.6514E-01	8.3976E-03
3.200	1.4790E-01	5.3416E-03	2.6930E-02	9.7257E-04	2.6944E-01	8.5324E-03
3.500	1.4986E-01	5.4064E-03	2.7285E-02	9.8437E-04	2.7323E-01	8.6513E-03
3.800	1.5182E-01	5.4715E-03	2.7643E-02	9.9623E-04	2.7670E-01	8.7599E-03
4.100	1.5379E-01	5.5366E-03	2.8002E-02	1.0081E-03	2.7995E-01	8.8617E-03
4.400	1.5577E-01	5.6014E-03	2.8361E-02	1.0199E-03	2.8306E-01	8.9591E-03
4.700	1.5773E-01	5.6660E-03	2.8719E-02	1.0316E-03	2.8608E-01	9.0534E-03
5.000	1.5969E-01	5.7303E-03	2.9076E-02	1.0433E-03	2.8903E-01	9.1457E-03
5.300	1.6165E-01	5.7942E-03	2.9432E-02	1.0550E-03	2.9193E-01	9.2364E-03
5.600	1.6360E-01	5.8578E-03	2.9787E-02	1.0666E-03	2.9480E-01	9.3260E-03
5.900	1.6554E-01	5.9210E-03	3.0140E-02	1.0781E-03	2.9765E-01	9.4148E-03
6.200	1.6747E-01	5.9838E-03	3.0493E-02	1.0895E-03	3.0047E-01	9.5029E-03
6.500	1.6940E-01	6.0464E-03	3.0843E-02	1.1009E-03	3.0328E-01	9.5904E-03
6.800	1.7132E-01	6.1086E-03	3.1193E-02	1.1122E-03	3.0607E-01	9.6775E-03
7.100	1.7323E-01	6.1704E-03	3.1541E-02	1.1235E-03	3.0885E-01	9.7640E-03
7.400	1.7513E-01	6.2320E-03	3.1887E-02	1.1347E-03	3.1162E-01	9.8502E-03
7.700	1.7703E-01	6.2932E-03	3.2233E-02	1.1458E-03	3.1437E-01	9.9360E-03
8.000	1.7892E-01	6.3542E-03	3.2577E-02	1.1569E-03	3.1712E-01	1.0021E-02
8.300	1.7892E-01	6.3542E-03	3.2702E-02	1.1611E-03	3.1956E-01	1.0097E-02
8.600	1.7892E-01	6.3542E-03	3.2826E-02	1.1652E-03	3.2154E-01	1.0159E-02
8.900	1.7892E-01	6.3542E-03	3.2950E-02	1.1693E-03	3.2322E-01	1.0211E-02
9.200	1.7892E-01	6.3542E-03	3.3074E-02	1.1734E-03	3.2469E-01	1.0257E-02
9.500	1.7892E-01	6.3542E-03	3.3197E-02	1.1775E-03	3.2602E-01	1.0298E-02
9.800	1.7892E-01	6.3542E-03	3.3320E-02	1.1816E-03	3.2726E-01	1.0337E-02
10.100	1.7892E-01	6.3542E-03	3.3442E-02	1.1856E-03	3.2844E-01	1.0373E-02
10.400	1.7892E-01	6.3542E-03	3.3564E-02	1.1896E-03	3.2957E-01	1.0408E-02
24.000	1.7892E-01	6.3542E-03	3.8768E-02	1.3579E-03	3.7466E-01	1.1803E-02

```
  96.000 1.7892E-01 6.3542E-03 5.1272E-02 1.7465E-03 4.4342E-01 1.3908E-02
 720.000 1.7892E-01 6.3542E-03 6.2470E-02 2.0905E-03 5.3136E-01 1.6587E-02

#####################################################################
                        Worst Two-Hour Doses
#####################################################################

EAB
   Time    Whole Body    Thyroid        TEDE
   (hr)      (rem)        (rem)         (rem)
    0.0    6.5372E-04   1.4079E-01   5.1027E-03
```

```
#######################################################################
   RADTRAD Version 3.03 (Spring 2001) run on  6/13/2006  at 12:43:42
#######################################################################

#######################################################################
                     File information
#######################################################################

 Plant file           = C:\Documents and Settings\Aleem Boatright\My Documents\My
Work\Exelon\AST\Limerick\LGS LOCA\RADTRAD\LGS LOCA PC Leak - Stepwise RERS Mixing
Case - 3,5 min Start - 225cfm CR Unfilt Inleak - Chlorine Mode.psf
 Inventory file       = c:\program files\radtrad3-03\defaults\limerick ast source
terms.nif
 Release file         = c:\program files\radtrad3-03\defaults\bwr_dba.rft
 Dose Conversion file = c:\program files\radtrad3-03\defaults\fgr11&12.inp



     #####    ####   #####    #  #     #  #####   #    #  #####
     #    #  #       #        #  ##    #  #    #  #    #    #
     #    #  #       #        #  # #   #  #    #  #    #    #
     #####    ####   ####     #  #  #  #  #####   #    #    #
     #            #  #        #  #   # #  #       #    #    #
     #            #  #        #  #    ##  #       #    #    #
     #        ####   #        #  #     #  #        ####     #


 Radtrad 3.03 4/15/2001
 LGS PC Leak; 99% Aerosol, 95% E & O RERS Filter; 50% Leak Reduct at 24 hrs; 99%
Filtration for SGTS; 99% Aerosol, 99% E&O Filtration for Control Room - No CREFAS
Delay - Control Room in Chlorine Mode - 3000cfm -10% (2700cfm CR Recirc)
 Nuclide Inventory File:
 c:\program files\radtrad3-03\defaults\limerick ast source terms.nif
 Plant Power Level:
  3.5270E+03
 Compartments:
   5
 Compartment 1:
 Primary Containment
   3
  3.7907E+05
   0
   0
   0
   1
   0
 Compartment 2:
 Reactor Enclosure
   3
  1.8000E+06
   0
   0
   1
   0
   0
 Compartment 3:
 Environment
```

```
  2
 0.0000E+00
  0
  0
  0
  0
  0
Compartment 4:
Control Room
  1
 1.2600E+05
  0
  0
  1
  0
  0
Compartment 5:
SGTS Node
  3
 1.0000E+00
  0
  0
  0
  0
  0
Pathways:
  6
Pathway 1:
Primary Containment to Reactor Enclosure
  1
  2
  4
Pathway 2:
Reactor Enclosure to SGTS Node
  2
  5
  2
Pathway 3:
Environment to Control Room - Unfiltered Inleakage
  3
  4
  2
Pathway 4:
Environment to Control Room - Filtered Intake
  3
  4
  2
Pathway 5:
Control Room to Environment
  4
  3
  2
Pathway 6:
SGTS Node to  Environment
  5
  3
  2
End of Plant Model File
Scenario Description Name:
```

```
Plant Model Filename:

Source Term:
  1
  1   1.0000E+00
c:\program files\radtrad3-03\defaults\fgr11&12.inp
c:\program files\radtrad3-03\defaults\bwr_dba.rft
  0.0000E+00
  1
  9.5000E-01   4.8500E-02   1.5000E-03   1.0000E+00
Overlying Pool:
  0
  0.0000E+00
  0
  0
  0
  0
Compartments:
  5
Compartment 1:
  0
  1
  0
  0
  0
  0
  0
  3
  3
  1.0000E+01
  1
  1
  0.0000E+00   0.0000E+00
Compartment 2:
  0
  1
  0
  0
  0
  0
  1
  5.1000E+04
  4
  0.0000E+00   0.0000E+00   0.0000E+00   0.0000E+00
  1.6700E-02   0.0000E+00   0.0000E+00   0.0000E+00
  2.5830E-01   9.9000E+01   9.5000E+01   9.5000E+01
  7.2000E+02   0.0000E+00   0.0000E+00   0.0000E+00
  0
  0
Compartment 3:
  0
  1
  0
  0
  0
  0
  0
  0
  0
Compartment 4:
```

```
  0
  1
  0
  0
  0
  0
  1
  2.7000E+03
  3
  0.0000E+00   9.9000E+01   9.5000E+01   9.5000E+01
  5.0000E-01   9.9000E+01   9.5000E+01   9.5000E+01
  7.2000E+02   0.0000E+00   0.0000E+00   0.0000E+00
  0
  0
Compartment 5:
  0
  1
  0
  0
  0
  0
  0
  0
  0
Pathways:
  6
Pathway 1:
  0
  0
  0
  0
  0
  0
  0
  0
  0
  0
  1
  3
  0.0000E+00   5.0000E-01
  2.4000E+01   2.5000E-01
  7.2000E+02   0.0000E+00
  0
Pathway 2:
  0
  0
  0
  0
  0
  1
 10
  0.0000E+00   9.0000E+07   0.0000E+00   0.0000E+00   0.0000E+00
  1.6700E-02   9.0000E+07   0.0000E+00   0.0000E+00   0.0000E+00
  5.8300E-02   4.0930E+04   0.0000E+00   0.0000E+00   0.0000E+00
  1.0000E-01   2.1230E+04   0.0000E+00   0.0000E+00   0.0000E+00
  1.4170E-01   1.4690E+04   0.0000E+00   0.0000E+00   0.0000E+00
  1.8330E-01   1.1430E+04   0.0000E+00   0.0000E+00   0.0000E+00
  2.2500E-01   9.4760E+03   0.0000E+00   0.0000E+00   0.0000E+00
  2.5830E-01   7.8960E+03   9.9000E+01   9.5000E+01   9.5000E+01
  2.6670E-01   6.8170E+03   9.9000E+01   9.5000E+01   9.5000E+01
```

```
  3.9580E-01   5.0000E+03   9.9000E+01   9.5000E+01   9.5000E+01
  0
  0
  0
  0
  0
  0
Pathway 3:
  0
  0
  0
  0
  0
  1
  2
  0.0000E+00   2.2500E+02   0.0000E+00   0.0000E+00   0.0000E+00
  7.2000E+02   0.0000E+00   0.0000E+00   0.0000E+00   0.0000E+00
  0
  0
  0
  0
  0
  0
Pathway 4:
  0
  0
  0
  0
  0
  1
  3
  0.0000E+00   0.0000E+00   9.9000E+01   9.5000E+01   9.5000E+01
  5.0000E-01   0.0000E+00   9.9000E+01   9.5000E+01   9.5000E+01
  7.2000E+02   0.0000E+00   0.0000E+00   0.0000E+00   0.0000E+00
  0
  0
  0
  0
  0
  0
Pathway 5:
  0
  0
  0
  0
  0
  1
  3
  0.0000E+00   2.2500E+02   1.0000E+02   1.0000E+02   1.0000E+02
  5.0000E-01   2.2500E+02   1.0000E+02   1.0000E+02   1.0000E+02
  7.2000E+02   0.0000E+00   0.0000E+00   0.0000E+00   0.0000E+00
  0
  0
  0
  0
  0
  0
Pathway 6:
  0
  0
```

```
  0
  0
  0
  1
 10
  0.0000E+00   9.0000E+07   0.0000E+00   0.0000E+00   0.0000E+00
  1.6700E-02   9.0000E+07   0.0000E+00   0.0000E+00   0.0000E+00
  5.8300E-02   4.0930E+04   0.0000E+00   0.0000E+00   0.0000E+00
  1.0000E-01   2.1230E+04   0.0000E+00   0.0000E+00   0.0000E+00
  1.4170E-01   1.4690E+04   0.0000E+00   0.0000E+00   0.0000E+00
  1.8330E-01   1.1430E+04   0.0000E+00   0.0000E+00   0.0000E+00
  2.2500E-01   9.4760E+03   0.0000E+00   0.0000E+00   0.0000E+00
  2.5830E-01   7.8960E+03   9.9000E+01   9.9000E+01   9.9000E+01
  2.6670E-01   6.8170E+03   9.9000E+01   9.9000E+01   9.9000E+01
  3.9580E-01   5.0000E+03   9.9000E+01   9.9000E+01   9.9000E+01
  0
  0
  0
  0
  0
  0
Dose Locations:
  3
Location 1:
Control Room
  4
  0
  1
  2
  0.0000E+00   3.5000E-04
  7.2000E+02   0.0000E+00
  1
  4
  0.0000E+00   1.0000E+00
  2.4000E+01   6.0000E-01
  9.6000E+01   4.0000E-01
  7.2000E+02   0.0000E+00
Location 2:
EAB
  3
  1
  2
  0.0000E+00   3.1800E-04
  8.0000E+00   0.0000E+00
  1
  2
  0.0000E+00   3.5000E-04
  8.0000E+00   0.0000E+00
  0
Location 3:
LPZ
  3
  1
  5
  0.0000E+00   5.7900E-05
  8.0000E+00   4.1000E-05
  2.4000E+01   1.9500E-05
  9.6000E+01   6.6800E-06
  7.2000E+02   0.0000E+00
  1
```

```
  4
  0.0000E+00   3.5000E-04
  8.0000E+00   1.8000E-04
  2.4000E+01   2.3000E-04
  7.2000E+02   0.0000E+00
  0
Effective Volume Location:
  1
  6
  0.0000E+00   6.8800E-03
  2.0000E+00   5.1700E-03
  8.0000E+00   2.0400E-03
  2.4000E+01   1.2900E-03
  9.6000E+01   9.6300E-04
  7.2000E+02   0.0000E+00
Simulation Parameters:
  3
  0.0000E+00   1.6670E-03
  1.6700E-02   2.5000E-02
  2.5830E-01   0.0000E+00
Output Filename:
C:\Documents and Settings\Aleem Boatright\My Documents\My
Work\Exelon\AST\Limerick\LGS LOCA\RADTRAD\LGS LOCA PC Leak - Stepwise RERS Mixing
Case - 3,5 min Start - 225cfm CR Unfilt Inleak - Chlorine Mode.o0
  1
  1
  1
  0
  1
End of Scenario File
```

```
#######################################################################
   RADTRAD Version 3.03 (Spring 2001) run on  6/13/2006  at 12:43:42
#######################################################################

#######################################################################
                     Plant Description
#######################################################################

Number of Nuclides =  60

Inventory Power =   1.0000E+00 MWth
Plant Power Level =   3.5270E+03 MWth

Number of compartments    =   5

Compartment information

Compartment number  1  (Source term fraction =   1.0000E+00
)
Name: Primary Containment
Compartment volume =   3.7907E+05 (Cubic feet)
Compartment type is Normal
Removal devices within compartment:
     Deposition
Pathways into and out of compartment  1
   Exit Pathway Number    1: Primary Containment to Reactor Enclosure

Compartment number  2
Name: Reactor Enclosure
Compartment volume =   1.8000E+06 (Cubic feet)
Compartment type is Normal
Removal devices within compartment:
     Filter(s)
Pathways into and out of compartment  2
   Inlet Pathway Number   1: Primary Containment to Reactor Enclosure
   Exit Pathway Number    2: Reactor Enclosure to SGTS Node

Compartment number  3
Name: Environment
Compartment type is Environment
Pathways into and out of compartment  3
   Inlet Pathway Number   5: Control Room to Environment
   Inlet Pathway Number   6: SGTS Node to  Environment
   Exit Pathway Number    3: Environment to Control Room - Unfiltered Inleakage
   Exit Pathway Number    4: Environment to Control Room - Filtered Intake

Compartment number  4
Name: Control Room
Compartment volume =   1.2600E+05 (Cubic feet)
Compartment type is Control Room
Removal devices within compartment:
     Filter(s)
Pathways into and out of compartment  4
   Inlet Pathway Number   3: Environment to Control Room - Unfiltered Inleakage
   Inlet Pathway Number   4: Environment to Control Room - Filtered Intake
   Exit Pathway Number    5: Control Room to Environment

Compartment number  5
Name: SGTS Node
```

```
Compartment volume =   1.0000E+00 (Cubic feet)
Compartment type is Normal
Pathways into and out of compartment  5
   Inlet Pathway Number   2: Reactor Enclosure to SGTS Node
   Exit Pathway Number    6: SGTS Node to  Environment

Total number of pathways =   6
```

```
#######################################################################
   RADTRAD Version 3.03 (Spring 2001) run on  6/13/2006  at 12:43:42
#######################################################################

#######################################################################
                      Scenario Description
#######################################################################
```

Radioactive Decay is enabled
Calculation of Daughters is enabled

Release Fractions and Timings

	GAP	EARLY IN-VESSEL	LATE RELEASE	RELEASE MASS
	0.500000 hr	1.5000 hrs	0.0000 hrs	(gm)
NOBLES	5.0000E-02	9.5000E-01	0.0000E+00	4.625E+03
IODINE	5.0000E-02	2.5000E-01	0.0000E+00	3.033E+02
CESIUM	5.0000E-02	2.0000E-01	0.0000E+00	5.099E+04
TELLURIUM	0.0000E+00	5.0000E-02	0.0000E+00	4.012E+01
STRONTIUM	0.0000E+00	2.0000E-02	0.0000E+00	1.712E+03
BARIUM	0.0000E+00	2.0000E-02	0.0000E+00	4.739E+01
RUTHENIUM	0.0000E+00	2.5000E-03	0.0000E+00	5.988E+01
CERIUM	0.0000E+00	5.0000E-04	0.0000E+00	5.914E+02
LANTHANUM	0.0000E+00	2.0000E-04	0.0000E+00	8.731E+00

Inventory Power = 3527. MWt

Nuclide Name	Group	Specific Inventory (Ci/MWt)	half life (s)	Whole Body DCF (Sv-m3/Bq-s)	Inhaled Thyroid (Sv/Bq)	Inhaled Effective (Sv/Bq)
Co-58	7	1.529E+02	6.117E+06	4.760E-14	8.720E-10	2.940E-09
Co-60	7	1.830E+02	1.663E+08	1.260E-13	1.620E-08	5.910E-08
Kr-85	1	3.946E+02	3.383E+08	1.190E-16	0.000E+00	0.000E+00
Kr-85m	1	8.313E+03	1.613E+04	7.480E-15	0.000E+00	0.000E+00
Kr-87	1	1.633E+04	4.578E+03	4.120E-14	0.000E+00	0.000E+00
Kr-88	1	2.303E+04	1.022E+04	1.020E-13	0.000E+00	0.000E+00
Rb-86	3	6.518E+01	1.612E+06	4.810E-15	1.330E-09	1.790E-09
Sr-89	5	2.798E+04	4.363E+06	7.730E-17	7.960E-12	1.120E-08
Sr-90	5	3.178E+03	9.190E+08	7.530E-18	2.690E-10	3.510E-07
Sr-91	5	3.801E+04	3.420E+04	4.924E-14	9.930E-12	4.547E-10
Sr-92	5	4.017E+04	9.756E+03	6.790E-14	3.920E-12	2.180E-10
Y-90	9	3.272E+03	2.304E+05	1.900E-16	5.170E-13	2.280E-09
Y-91	9	3.448E+04	5.055E+06	2.600E-16	8.500E-12	1.320E-08
Y-92	9	4.029E+04	1.274E+04	1.300E-14	1.050E-12	2.110E-10
Y-93	9	4.526E+04	3.636E+04	4.800E-15	9.260E-13	5.820E-10
Zr-95	9	4.489E+04	5.528E+06	3.600E-14	1.440E-09	6.390E-09
Zr-97	9	4.657E+04	6.084E+04	4.432E-14	2.315E-11	1.171E-09
Nb-95	9	4.512E+04	3.037E+06	3.740E-14	3.580E-10	1.570E-09
Mo-99	7	5.078E+04	2.376E+05	7.280E-15	1.520E-11	1.070E-09
Tc-99m	7	4.447E+04	2.167E+04	5.890E-15	5.010E-11	8.800E-12
Ru-103	7	4.202E+04	3.394E+06	2.251E-14	2.570E-10	2.421E-09
Ru-105	7	2.908E+04	1.598E+04	3.810E-14	4.150E-12	1.230E-10
Ru-106	7	1.730E+04	3.181E+07	1.040E-14	1.720E-09	1.290E-07
Rh-105	7	2.752E+04	1.273E+05	3.720E-15	2.880E-12	2.580E-10
Sb-127	4	2.896E+03	3.326E+05	3.330E-14	6.150E-11	1.630E-09
Sb-129	4	8.638E+03	1.555E+04	7.140E-14	9.720E-12	1.740E-10
Te-127	4	2.873E+03	3.366E+04	2.420E-16	1.840E-12	8.600E-11
Te-127m	4	3.855E+02	9.418E+06	1.470E-16	9.660E-11	5.810E-09
Te-129	4	8.501E+03	4.176E+03	2.750E-15	5.090E-13	2.090E-11
Te-129m	4	1.267E+03	2.903E+06	3.337E-15	1.563E-10	6.484E-09

Te-131m	4	3.869E+03	1.080E+05	7.463E-14	3.669E-08	1.758E-09
Te-132	4	3.821E+04	2.815E+05	1.030E-14	6.280E-08	2.550E-09
I-131	2	2.687E+04	6.947E+05	1.820E-14	2.920E-07	8.890E-09
I-132	2	3.881E+04	8.280E+03	1.120E-13	1.740E-09	1.030E-10
I-133	2	5.556E+04	7.488E+04	2.940E-14	4.860E-08	1.580E-09
I-134	2	6.165E+04	3.156E+03	1.300E-13	2.880E-10	3.550E-11
I-135	2	5.192E+04	2.380E+04	8.294E-14	8.460E-09	3.320E-10
Xe-133	1	5.491E+04	4.532E+05	1.560E-15	0.000E+00	0.000E+00
Xe-135	1	2.228E+04	3.272E+04	1.190E-14	0.000E+00	0.000E+00
Cs-134	3	7.280E+03	6.507E+07	7.570E-14	1.110E-08	1.250E-08
Cs-136	3	2.027E+03	1.132E+06	1.060E-13	1.730E-09	1.980E-09
Cs-137	3	4.538E+03	9.467E+08	2.725E-14	7.930E-09	8.630E-09
Ba-139	6	5.084E+04	4.962E+03	2.170E-15	2.400E-12	4.640E-11
Ba-140	6	4.896E+04	1.101E+06	8.580E-15	2.560E-10	1.010E-09
La-140	9	5.019E+04	1.450E+05	1.170E-13	6.870E-11	1.310E-09
La-141	9	4.640E+04	1.415E+04	2.390E-15	9.400E-12	1.570E-10
La-142	9	4.532E+04	5.550E+03	1.440E-13	8.740E-12	6.840E-11
Ce-141	8	4.492E+04	2.808E+06	3.430E-15	2.550E-11	2.420E-09
Ce-143	8	4.427E+04	1.188E+05	1.290E-14	6.230E-12	9.160E-10
Ce-144	8	3.596E+04	2.456E+07	2.773E-15	2.920E-10	1.010E-07
Pr-143	9	4.293E+04	1.172E+06	2.100E-17	1.680E-18	2.190E-09
Nd-147	9	1.838E+04	9.487E+05	6.190E-15	1.820E-11	1.850E-09
Np-239	8	5.397E+05	2.035E+05	7.690E-15	7.620E-12	6.780E-10
Pu-238	8	1.796E+02	2.769E+09	4.880E-18	3.860E-10	7.790E-05
Pu-239	8	1.200E+01	7.594E+11	4.240E-18	3.750E-10	8.330E-05
Pu-240	8	1.288E+01	2.063E+11	4.750E-18	3.760E-10	8.330E-05
Pu-241	8	6.182E+03	4.544E+08	7.250E-20	9.150E-12	1.340E-06
Am-241	9	9.528E+00	1.364E+10	8.180E-16	1.600E-09	1.200E-04
Cm-242	9	2.388E+03	1.407E+07	5.690E-18	9.410E-10	4.670E-06
Cm-244	9	2.602E+02	5.715E+08	4.910E-18	1.010E-09	6.700E-05

Nuclide	Daughter	Fraction	Daughter	Fraction	Daughter	Fraction
Kr-85m	Kr-85	0.21	none	0.00	none	0.00
Kr-87	Rb-87	1.00	none	0.00	none	0.00
Kr-88	Rb-88	1.00	none	0.00	none	0.00
Sr-90	Y-90	1.00	none	0.00	none	0.00
Sr-91	Y-91m	0.58	Y-91	0.42	none	0.00
Sr-92	Y-92	1.00	none	0.00	none	0.00
Y-93	Zr-93	1.00	none	0.00	none	0.00
Zr-95	Nb-95m	0.01	Nb-95	0.99	none	0.00
Zr-97	Nb-97m	0.95	Nb-97	0.05	none	0.00
Mo-99	Tc-99m	0.88	Tc-99	0.12	none	0.00
Tc-99m	Tc-99	1.00	none	0.00	none	0.00
Ru-103	Rh-103m	1.00	none	0.00	none	0.00
Ru-105	Rh-105	1.00	none	0.00	none	0.00
Ru-106	Rh-106	1.00	none	0.00	none	0.00
Sb-127	Te-127m	0.18	Te-127	0.82	none	0.00
Sb-129	Te-129m	0.22	Te-129	0.77	none	0.00
Te-127m	Te-127	0.98	none	0.00	none	0.00
Te-129	I-129	1.00	none	0.00	none	0.00
Te-129m	Te-129	0.65	I-129	0.35	none	0.00
Te-131m	Te-131	0.22	I-131	0.78	none	0.00
Te-132	I-132	1.00	none	0.00	none	0.00
I-131	Xe-131m	0.01	none	0.00	none	0.00
I-133	Xe-133m	0.03	Xe-133	0.97	none	0.00
I-135	Xe-135m	0.15	Xe-135	0.85	none	0.00
Xe-135	Cs-135	1.00	none	0.00	none	0.00
Cs-137	Ba-137m	0.95	none	0.00	none	0.00
Ba-140	La-140	1.00	none	0.00	none	0.00
La-141	Ce-141	1.00	none	0.00	none	0.00

Ce-143	Pr-143	1.00	none	0.00	none	0.00
Ce-144	Pr-144m	0.02	Pr-144	0.98	none	0.00
Nd-147	Pm-147	1.00	none	0.00	none	0.00
Np-239	Pu-239	1.00	none	0.00	none	0.00
Pu-238	U-234	1.00	none	0.00	none	0.00
Pu-239	U-235	1.00	none	0.00	none	0.00
Pu-240	U-236	1.00	none	0.00	none	0.00
Pu-241	U-237	0.00	Am-241	1.00	none	0.00
Am-241	Np-237	1.00	none	0.00	none	0.00
Cm-242	Pu-238	1.00	none	0.00	none	0.00
Cm-244	Pu-240	1.00	none	0.00	none	0.00

Iodine fractions
Aerosol = 9.5000E-01
Elemental = 4.8500E-02
Organic = 1.5000E-03

COMPARTMENT DATA

Compartment number 1: Primary Containment
Natural Deposition (Powers' model): Aerosol data
Reactor type: 3
Percentile = 10 (%)

Natural Deposition: Elemental Removal Data

Time (hr)	Removal Coef. (hr^-1)
0.0000E+00	0.0000E+00

Compartment number 2: Reactor Enclosure

Compartment Filter Data

Time (hr)	Flow Rate (cfm)	Filter Efficiencies (%) Aerosol	Elemental	Organic
0.0000E+00	5.1000E+04	0.0000E+00	0.0000E+00	0.0000E+00
1.6700E-02	5.1000E+04	0.0000E+00	0.0000E+00	0.0000E+00
2.5830E-01	5.1000E+04	9.9000E+01	9.5000E+01	9.5000E+01
7.2000E+02	5.1000E+04	0.0000E+00	0.0000E+00	0.0000E+00

Compartment number 3: Environment

Compartment number 4: Control Room

Compartment Filter Data

Time (hr)	Flow Rate (cfm)	Filter Efficiencies (%) Aerosol	Elemental	Organic
0.0000E+00	2.7000E+03	9.9000E+01	9.5000E+01	9.5000E+01
5.0000E-01	2.7000E+03	9.9000E+01	9.5000E+01	9.5000E+01
7.2000E+02	2.7000E+03	0.0000E+00	0.0000E+00	0.0000E+00

Compartment number 5: SGTS Node

PATHWAY DATA

Pathway number 1: Primary Containment to Reactor Enclosure

Convection Data

Time (hr)	Flow Rate (% / day)
0.0000E+00	5.0000E-01

2.4000E+01	2.5000E-01
7.2000E+02	0.0000E+00

Pathway number 2: Reactor Enclosure to SGTS Node

Pathway Filter: Removal Data

Time (hr)	Flow Rate (cfm)	Filter Efficiencies (%) Aerosol	Elemental	Organic
0.0000E+00	9.0000E+07	0.0000E+00	0.0000E+00	0.0000E+00
1.6700E-02	9.0000E+07	0.0000E+00	0.0000E+00	0.0000E+00
5.8300E-02	4.0930E+04	0.0000E+00	0.0000E+00	0.0000E+00
1.0000E-01	2.1230E+04	0.0000E+00	0.0000E+00	0.0000E+00
1.4170E-01	1.4690E+04	0.0000E+00	0.0000E+00	0.0000E+00
1.8330E-01	1.1430E+04	0.0000E+00	0.0000E+00	0.0000E+00
2.2500E-01	9.4760E+03	0.0000E+00	0.0000E+00	0.0000E+00
2.5830E-01	7.8960E+03	9.9000E+01	9.5000E+01	9.5000E+01
2.6670E-01	6.8170E+03	9.9000E+01	9.5000E+01	9.5000E+01
3.9580E-01	5.0000E+03	9.9000E+01	9.5000E+01	9.5000E+01

Pathway number 3: Environment to Control Room - Unfiltered Inleakage

Pathway Filter: Removal Data

Time (hr)	Flow Rate (cfm)	Filter Efficiencies (%) Aerosol	Elemental	Organic
0.0000E+00	2.2500E+02	0.0000E+00	0.0000E+00	0.0000E+00
7.2000E+02	0.0000E+00	0.0000E+00	0.0000E+00	0.0000E+00

Pathway number 4: Environment to Control Room - Filtered Intake

Pathway Filter: Removal Data

Time (hr)	Flow Rate (cfm)	Filter Efficiencies (%) Aerosol	Elemental	Organic
0.0000E+00	0.0000E+00	9.9000E+01	9.5000E+01	9.5000E+01
5.0000E-01	0.0000E+00	9.9000E+01	9.5000E+01	9.5000E+01
7.2000E+02	0.0000E+00	0.0000E+00	0.0000E+00	0.0000E+00

Pathway number 5: Control Room to Environment

Pathway Filter: Removal Data

Time (hr)	Flow Rate (cfm)	Filter Efficiencies (%) Aerosol	Elemental	Organic
0.0000E+00	2.2500E+02	1.0000E+02	1.0000E+02	1.0000E+02
5.0000E-01	2.2500E+02	1.0000E+02	1.0000E+02	1.0000E+02
7.2000E+02	0.0000E+00	0.0000E+00	0.0000E+00	0.0000E+00

Pathway number 6: SGTS Node to Environment

Pathway Filter: Removal Data

Time (hr)	Flow Rate (cfm)	Filter Efficiencies (%) Aerosol	Elemental	Organic
0.0000E+00	9.0000E+07	0.0000E+00	0.0000E+00	0.0000E+00
1.6700E-02	9.0000E+07	0.0000E+00	0.0000E+00	0.0000E+00
5.8300E-02	4.0930E+04	0.0000E+00	0.0000E+00	0.0000E+00
1.0000E-01	2.1230E+04	0.0000E+00	0.0000E+00	0.0000E+00
1.4170E-01	1.4690E+04	0.0000E+00	0.0000E+00	0.0000E+00

```
  1.8330E-01    1.1430E+04    0.0000E+00    0.0000E+00    0.0000E+00
  2.2500E-01    9.4760E+03    0.0000E+00    0.0000E+00    0.0000E+00
  2.5830E-01    7.8960E+03    9.9000E+01    9.9000E+01    9.9000E+01
  2.6670E-01    6.8170E+03    9.9000E+01    9.9000E+01    9.9000E+01
  3.9580E-01    5.0000E+03    9.9000E+01    9.9000E+01    9.9000E+01

LOCATION DATA
     Location Control Room     is in compartment   4

     Location X/Q Data
      Time (hr)          X/Q (s * m^-3)
       0.0000E+00           6.8800E-03
       2.0000E+00           5.1700E-03
       8.0000E+00           2.0400E-03
       2.4000E+01           1.2900E-03
       9.6000E+01           9.6300E-04
       7.2000E+02           0.0000E+00

     Location Breathing Rate Data
      Time (hr)          Breathing Rate (m^3 * sec^-1)
       0.0000E+00                 3.5000E-04
       7.2000E+02                 0.0000E+00

     Location Occupancy Factor Data
      Time (hr)          Occupancy Factor
       0.0000E+00            1.0000E+00
       2.4000E+01            6.0000E-01
       9.6000E+01            4.0000E-01
       7.2000E+02            0.0000E+00
     Location EAB     is in compartment   3

     Location X/Q Data
      Time (hr)          X/Q (s * m^-3)
       0.0000E+00           3.1800E-04
       8.0000E+00           0.0000E+00

     Location Breathing Rate Data
      Time (hr)          Breathing Rate (m^3 * sec^-1)
       0.0000E+00                 3.5000E-04
       8.0000E+00                 0.0000E+00
     Location LPZ     is in compartment   3

     Location X/Q Data
      Time (hr)          X/Q (s * m^-3)
       0.0000E+00           5.7900E-05
       8.0000E+00           4.1000E-05
       2.4000E+01           1.9500E-05
       9.6000E+01           6.6800E-06
       7.2000E+02           0.0000E+00

     Location Breathing Rate Data
      Time (hr)          Breathing Rate (m^3 * sec^-1)
       0.0000E+00                 3.5000E-04
       8.0000E+00                 1.8000E-04
       2.4000E+01                 2.3000E-04
       7.2000E+02                 0.0000E+00

USER SPECIFIED TIME STEP DATA - SUPPLEMENTAL TIME STEPS
     Time             Time step
      0.0000E+00        1.6670E-03
```

```
1.6700E-02        2.5000E-02
2.5830E-01        0.0000E+00
```

```
#######################################################################
   RADTRAD Version 3.03 (Spring 2001) run on  6/13/2006  at 12:43:42
#######################################################################
```

```
 ####   #    #  #####  #####   #    #  #####
#    #  #    #    #    #    #  #    #    #
#    #  #    #    #    #    #  #    #    #
#    #  #    #    #    #####   #    #    #
#    #  #    #    #    #       #    #    #
#    #  #    #    #    #       #    #    #
 ####    ####     #    #        ####     #
```

```
#######################################################################
                                Dose Output
#######################################################################

Detailed model information at time (H) =    0.0167

     Natural deposition - Powers' Model, Compartment  1
Deposition Lambda (1 / Hours)
     Noble      Elemental  Organic    Aerosol
     0.0000E+00 0.0000E+00 0.0000E+00 7.0466E-01
Deposition Net DF
     Noble      Elemental  Organic    Aerosol
     1.0000E+00 1.0000E+00 1.0000E+00 1.0059E+00

Control Room Doses:

Time (h) =   0.0167    Whole Body   Thyroid       TEDE
Delta dose (rem)        1.5195E-07  5.7208E-04  2.4912E-05
Accumulated dose (rem)  1.5195E-07  5.7208E-04  2.4912E-05

EAB Doses:

Time (h) =   0.0167    Whole Body   Thyroid       TEDE
Delta dose (rem)        2.6592E-04  4.5201E-02  2.2222E-03
Accumulated dose (rem)  2.6592E-04  4.5201E-02  2.2222E-03

LPZ Doses:

Time (h) =   0.0167    Whole Body   Thyroid       TEDE
Delta dose (rem)        4.8417E-05  8.2299E-03  4.0461E-04
Accumulated dose (rem)  4.8417E-05  8.2299E-03  4.0461E-04

Detailed model information at time (H) =    0.0583

     Natural deposition - Powers' Model, Compartment  1
Deposition Lambda (1 / Hours)
     Noble      Elemental  Organic    Aerosol
     0.0000E+00 0.0000E+00 0.0000E+00 7.0466E-01
Deposition Net DF
     Noble      Elemental  Organic    Aerosol
     1.0000E+00 1.0000E+00 1.0000E+00 1.0207E+00
```

```
Control Room Doses:

Time (h) =    0.0583    Whole Body   Thyroid       TEDE
Delta dose (rem)         6.6581E-06  2.5175E-02  1.0961E-03
Accumulated dose (rem)   6.8101E-06  2.5747E-02  1.1210E-03

EAB Doses:

Time (h) =    0.0583    Whole Body   Thyroid       TEDE
Delta dose (rem)         3.0196E-03  5.1619E-01  2.5357E-02
Accumulated dose (rem)   3.2855E-03  5.6139E-01  2.7579E-02

LPZ Doses:

Time (h) =    0.0583    Whole Body   Thyroid       TEDE
Delta dose (rem)         5.4979E-04  9.3985E-02  4.6169E-03
Accumulated dose (rem)   5.9820E-04  1.0221E-01  5.0215E-03

Detailed model information at time (H) =    0.1000

     Natural deposition - Powers' Model, Compartment  1
Deposition Lambda (1 / Hours)
     Noble      Elemental  Organic    Aerosol
     0.0000E+00 0.0000E+00 0.0000E+00 7.0466E-01
Deposition Net DF
     Noble      Elemental  Organic    Aerosol
     1.0000E+00 1.0000E+00 1.0000E+00 1.0356E+00

Control Room Doses:

Time (h) =    0.1000    Whole Body   Thyroid       TEDE
Delta dose (rem)         1.3734E-05  5.2323E-02  2.2779E-03
Accumulated dose (rem)   2.0544E-05  7.8070E-02  3.3990E-03

EAB Doses:

Time (h) =    0.1000    Whole Body   Thyroid       TEDE
Delta dose (rem)         1.6236E-04  2.8116E-02  1.3789E-03
Accumulated dose (rem)   3.4478E-03  5.8950E-01  2.8958E-02

LPZ Doses:

Time (h) =    0.1000    Whole Body   Thyroid       TEDE
Delta dose (rem)         2.9562E-05  5.1192E-03  2.5106E-04
Accumulated dose (rem)   6.2777E-04  1.0733E-01  5.2726E-03

Detailed model information at time (H) =    0.1417

     Natural deposition - Powers' Model, Compartment  1
Deposition Lambda (1 / Hours)
     Noble      Elemental  Organic    Aerosol
     0.0000E+00 0.0000E+00 0.0000E+00 7.0466E-01
Deposition Net DF
     Noble      Elemental  Organic    Aerosol
     1.0000E+00 1.0000E+00 1.0000E+00 1.0508E+00

Control Room Doses:

Time (h) =    0.1417    Whole Body   Thyroid       TEDE
Delta dose (rem)         1.3883E-05  5.3285E-02  2.3196E-03
```

```
Accumulated dose (rem)  3.4426E-05  1.3135E-01  5.7186E-03

EAB Doses:

Time (h) =   0.1417    Whole Body   Thyroid       TEDE
Delta dose (rem)        3.0512E-04  5.3528E-02  2.6210E-03
Accumulated dose (rem)  3.7530E-03  6.4303E-01  3.1579E-02

LPZ Doses:

Time (h) =   0.1417    Whole Body   Thyroid       TEDE
Delta dose (rem)        5.5555E-05  9.7462E-03  4.7722E-04
Accumulated dose (rem)  6.8332E-04  1.1708E-01  5.7498E-03

Detailed model information at time (H) =    0.1833

     Natural deposition - Powers' Model, Compartment  1
Deposition Lambda (1 / Hours)
     Noble      Elemental  Organic    Aerosol
     0.0000E+00 0.0000E+00 0.0000E+00 7.0466E-01
Deposition Net DF
     Noble      Elemental  Organic    Aerosol
     1.0000E+00 1.0000E+00 1.0000E+00 1.0660E+00

Control Room Doses:

Time (h) =   0.1833    Whole Body   Thyroid       TEDE
Delta dose (rem)        1.4512E-05  5.6167E-02  2.4449E-03
Accumulated dose (rem)  4.8938E-05  1.8752E-01  8.1635E-03

EAB Doses:

Time (h) =   0.1833    Whole Body   Thyroid       TEDE
Delta dose (rem)        4.1802E-04  7.4320E-02  3.6331E-03
Accumulated dose (rem)  4.1710E-03  7.1735E-01  3.5212E-02

LPZ Doses:

Time (h) =   0.1833    Whole Body   Thyroid       TEDE
Delta dose (rem)        7.6111E-05  1.3532E-02  6.6150E-04
Accumulated dose (rem)  7.5943E-04  1.3061E-01  6.4113E-03

Detailed model information at time (H) =    0.2250

     Natural deposition - Powers' Model, Compartment  1
Deposition Lambda (1 / Hours)
     Noble      Elemental  Organic    Aerosol
     0.0000E+00 0.0000E+00 0.0000E+00 7.0466E-01
Deposition Net DF
     Noble      Elemental  Organic    Aerosol
     1.0000E+00 1.0000E+00 1.0000E+00 1.0814E+00

Control Room Doses:

Time (h) =   0.2250    Whole Body   Thyroid       TEDE
Delta dose (rem)        1.5670E-05  6.1116E-02  2.6601E-03
Accumulated dose (rem)  6.4608E-05  2.4864E-01  1.0824E-02

EAB Doses:
```

```
Time (h) =    0.2250    Whole Body   Thyroid       TEDE
Delta dose (rem)         5.2850E-04  9.5099E-02  4.6421E-03
Accumulated dose (rem)   4.6995E-03  8.1245E-01  3.9854E-02

LPZ Doses:

Time (h) =    0.2250    Whole Body   Thyroid       TEDE
Delta dose (rem)         9.6227E-05  1.7315E-02  8.4521E-04
Accumulated dose (rem)   8.5566E-04  1.4793E-01  7.2565E-03

Detailed model information at time (H) =    0.2583

     Natural deposition - Powers' Model, Compartment  1
Deposition Lambda (1 / Hours)
     Noble      Elemental  Organic    Aerosol
     0.0000E+00 0.0000E+00 0.0000E+00 7.0466E-01
Deposition Net DF
     Noble      Elemental  Organic    Aerosol
     1.0000E+00 1.0000E+00 1.0000E+00 1.0938E+00

Control Room Doses:

Time (h) =    0.2583    Whole Body   Thyroid       TEDE
Delta dose (rem)         1.3572E-05  5.3362E-02  2.3223E-03
Accumulated dose (rem)   7.8180E-05  3.0200E-01  1.3146E-02

EAB Doses:

Time (h) =    0.2583    Whole Body   Thyroid       TEDE
Delta dose (rem)         4.9116E-04  8.9400E-02  4.3579E-03
Accumulated dose (rem)   5.1906E-03  9.0185E-01  4.4212E-02

LPZ Doses:

Time (h) =    0.2583    Whole Body   Thyroid       TEDE
Delta dose (rem)         8.9429E-05  1.6278E-02  7.9347E-04
Accumulated dose (rem)   9.4509E-04  1.6420E-01  8.0500E-03

Detailed model information at time (H) =    0.2667

     Natural deposition - Powers' Model, Compartment  1
Deposition Lambda (1 / Hours)
     Noble      Elemental  Organic    Aerosol
     0.0000E+00 0.0000E+00 0.0000E+00 7.0466E-01
Deposition Net DF
     Noble      Elemental  Organic    Aerosol
     1.0000E+00 1.0000E+00 1.0000E+00 1.0969E+00

Control Room Doses:

Time (h) =    0.2667    Whole Body   Thyroid       TEDE
Delta dose (rem)         3.5360E-06  1.3956E-02  6.0736E-04
Accumulated dose (rem)   8.1716E-05  3.1596E-01  1.3753E-02

EAB Doses:

Time (h) =    0.2667    Whole Body   Thyroid       TEDE
Delta dose (rem)         1.9425E-05  2.7255E-06  1.9537E-05
Accumulated dose (rem)   5.2101E-03  9.0185E-01  4.4232E-02
```

```
LPZ Doses:

Time (h) =    0.2667    Whole Body   Thyroid       TEDE
Delta dose (rem)         3.5368E-06  4.9624E-07  3.5573E-06
Accumulated dose (rem)   9.4862E-04  1.6421E-01  8.0535E-03

Detailed model information at time (H) =    0.3958

     Natural deposition - Powers' Model, Compartment  1
Deposition Lambda (1 / Hours)
     Noble      Elemental  Organic    Aerosol
     0.0000E+00 0.0000E+00 0.0000E+00 7.0466E-01
Deposition Net DF
     Noble      Elemental  Organic    Aerosol
     1.0000E+00 1.0000E+00 1.0000E+00 1.1459E+00

Control Room Doses:

Time (h) =    0.3958    Whole Body   Thyroid       TEDE
Delta dose (rem)         5.2594E-05  1.9553E-01  8.5119E-03
Accumulated dose (rem)   1.3431E-04  5.1148E-01  2.2265E-02

EAB Doses:

Time (h) =    0.3958    Whole Body   Thyroid       TEDE
Delta dose (rem)         4.1944E-04  5.2388E-05  4.2160E-04
Accumulated dose (rem)   5.6295E-03  9.0191E-01  4.4653E-02

LPZ Doses:

Time (h) =    0.3958    Whole Body   Thyroid       TEDE
Delta dose (rem)         7.6371E-05  9.5386E-06  7.6763E-05
Accumulated dose (rem)   1.0250E-03  1.6421E-01  8.1303E-03

Detailed model information at time (H) =    0.5000

     Natural deposition - Powers' Model, Compartment  1
Deposition Lambda (1 / Hours)
     Noble      Elemental  Organic    Aerosol
     0.0000E+00 0.0000E+00 0.0000E+00 7.0466E-01
Deposition Net DF
     Noble      Elemental  Organic    Aerosol
     1.0000E+00 1.0000E+00 1.0000E+00 1.1865E+00

Control Room Doses:

Time (h) =    0.5000    Whole Body   Thyroid       TEDE
Delta dose (rem)         4.0865E-05  1.3412E-01  5.8432E-03
Accumulated dose (rem)   1.7517E-04  6.4560E-01  2.8108E-02

EAB Doses:

Time (h) =    0.5000    Whole Body   Thyroid       TEDE
Delta dose (rem)         4.4353E-04  5.0686E-05  4.4562E-04
Accumulated dose (rem)   6.0730E-03  9.0196E-01  4.5099E-02

LPZ Doses:

Time (h) =    0.5000    Whole Body   Thyroid       TEDE
Delta dose (rem)         8.0757E-05  9.2287E-06  8.1136E-05
```

```
Accumulated dose (rem)  1.1058E-03  1.6422E-01  8.2114E-03

Detailed model information at time (H) =    2.0000

     Natural deposition - Powers' Model, Compartment  1
Deposition Lambda (1 / Hours)
     Noble      Elemental  Organic    Aerosol
     0.0000E+00 0.0000E+00 0.0000E+00 3.0681E-01
Deposition Net DF
     Noble      Elemental  Organic    Aerosol
     1.0000E+00 1.0000E+00 1.0000E+00 1.3635E+00

Control Room Doses:

Time (h) =   2.0000    Whole Body   Thyroid       TEDE
Delta dose (rem)        5.8097E-03  7.5576E-01  3.8539E-02
Accumulated dose (rem)  5.9849E-03  1.4014E+00  6.6647E-02

EAB Doses:

Time (h) =   2.0000    Whole Body   Thyroid       TEDE
Delta dose (rem)        1.3461E-01  4.8690E-03  1.3485E-01
Accumulated dose (rem)  1.4068E-01  9.0683E-01  1.7995E-01

LPZ Doses:

Time (h) =   2.0000    Whole Body   Thyroid       TEDE
Delta dose (rem)        2.4509E-02  8.8652E-04  2.4554E-02
Accumulated dose (rem)  2.5614E-02  1.6511E-01  3.2765E-02

Detailed model information at time (H) =    8.0000

     Natural deposition - Powers' Model, Compartment  1
Deposition Lambda (1 / Hours)
     Noble      Elemental  Organic    Aerosol
     0.0000E+00 0.0000E+00 0.0000E+00 6.2057E-01
Deposition Net DF
     Noble      Elemental  Organic    Aerosol
     1.0000E+00 1.0000E+00 1.0000E+00 1.8279E+02

Control Room Doses:

Time (h) =   8.0000    Whole Body   Thyroid       TEDE
Delta dose (rem)        3.5676E-01  1.3632E-01  3.6272E-01
Accumulated dose (rem)  3.6274E-01  1.5377E+00  4.2937E-01

EAB Doses:

Time (h) =   8.0000    Whole Body   Thyroid       TEDE
Delta dose (rem)        2.3657E+00  2.1676E-02  2.3666E+00
Accumulated dose (rem)  2.5064E+00  9.2850E-01  2.5466E+00

LPZ Doses:

Time (h) =   8.0000    Whole Body   Thyroid       TEDE
Delta dose (rem)        4.3073E-01  3.9467E-03  4.3090E-01
Accumulated dose (rem)  4.5635E-01  1.6906E-01  4.6367E-01

Detailed model information at time (H) =   24.0000
```

```
     Natural deposition - Powers' Model, Compartment  1
Deposition Lambda (1 / Hours)
     Noble      Elemental  Organic    Aerosol
     0.0000E+00 0.0000E+00 0.0000E+00 4.8360E-01
Deposition Net DF
     Noble      Elemental  Organic    Aerosol
     1.0000E+00 1.0000E+00 1.0000E+00 6.0637E+05

Control Room Doses:

Time (h) =  24.0000    Whole Body   Thyroid       TEDE
Delta dose (rem)        7.7078E-01  1.7468E-02  7.7133E-01
Accumulated dose (rem)  1.1335E+00  1.5552E+00  1.2007E+00

EAB Doses:

Time (h) =  24.0000    Whole Body   Thyroid       TEDE
Delta dose (rem)        0.0000E+00  0.0000E+00  0.0000E+00
Accumulated dose (rem)  2.5064E+00  9.2850E-01  2.5466E+00

LPZ Doses:

Time (h) =  24.0000    Whole Body   Thyroid       TEDE
Delta dose (rem)        4.2530E-01  2.0601E-03  4.2536E-01
Accumulated dose (rem)  8.8164E-01  1.7112E-01  8.8903E-01

Detailed model information at time (H) =   96.0000

     Natural deposition - Powers' Model, Compartment  1
Deposition Lambda (1 / Hours)
     Noble      Elemental  Organic    Aerosol
     0.0000E+00 0.0000E+00 0.0000E+00 1.0000E-01
Deposition Net DF
     Noble      Elemental  Organic    Aerosol
     1.0000E+00 1.0000E+00 1.0000E+00 8.2005E+08

Control Room Doses:

Time (h) =  96.0000    Whole Body   Thyroid       TEDE
Delta dose (rem)        3.5705E-01  1.0566E-02  3.5737E-01
Accumulated dose (rem)  1.4906E+00  1.5657E+00  1.5581E+00

EAB Doses:

Time (h) =  96.0000    Whole Body   Thyroid       TEDE
Delta dose (rem)        0.0000E+00  0.0000E+00  0.0000E+00
Accumulated dose (rem)  2.5064E+00  9.2850E-01  2.5466E+00

LPZ Doses:

Time (h) =  96.0000    Whole Body   Thyroid       TEDE
Delta dose (rem)        1.5697E-01  2.1059E-03  1.5704E-01
Accumulated dose (rem)  1.0386E+00  1.7322E-01  1.0461E+00

Detailed model information at time (H) =  720.0000

     Natural deposition - Powers' Model, Compartment  1
Deposition Lambda (1 / Hours)
     Noble      Elemental  Organic    Aerosol
     0.0000E+00 0.0000E+00 0.0000E+00 1.0000E-01
```

Deposition Net DF

Noble	Elemental	Organic	Aerosol
1.0000E+00	1.0000E+00	1.0000E+00	1.1106E+36

Control Room Doses:

Time (h) = 720.0000	Whole Body	Thyroid	TEDE
Delta dose (rem)	2.1133E-01	1.3949E-02	2.1175E-01
Accumulated dose (rem)	1.7019E+00	1.5797E+00	1.7698E+00

EAB Doses:

Time (h) = 720.0000	Whole Body	Thyroid	TEDE
Delta dose (rem)	0.0000E+00	0.0000E+00	0.0000E+00
Accumulated dose (rem)	2.5064E+00	9.2850E-01	2.5466E+00

LPZ Doses:

Time (h) = 720.0000	Whole Body	Thyroid	TEDE
Delta dose (rem)	7.9701E-02	1.9686E-03	7.9761E-02
Accumulated dose (rem)	1.1183E+00	1.7519E-01	1.1258E+00

862

##

I-131 Summary

##

Time (hr)	Primary Containment I-131 (Curies)	Reactor Enclosure I-131 (Curies)	Environment I-131 (Curies)
0.000	5.2640E+03	1.8766E-04	1.1699E-04
0.017	1.5738E+05	1.0712E-02	2.6357E-01
0.058	5.4176E+05	3.7412E-02	3.2742E+00
0.100	9.1639E+05	6.2144E+00	3.4383E+00
0.142	1.2806E+06	1.5451E+01	3.7508E+00
0.183	1.6340E+06	2.7651E+01	4.1850E+00
0.225	1.9783E+06	4.2787E+01	4.7409E+00
0.258	2.2465E+06	5.6917E+01	5.2637E+00
0.267	2.3132E+06	5.9952E+01	5.2637E+00
0.396	3.2927E+06	1.1431E+02	5.2641E+00
0.500	4.0239E+06	1.6682E+02	5.2644E+00
0.900	9.2485E+06	4.9174E+02	5.2669E+00
1.200	1.2852E+07	8.2149E+02	5.2710E+00
1.500	1.6204E+07	1.1771E+03	5.2772E+00
1.800	1.9322E+07	1.5359E+03	5.2857E+00
2.000	2.1277E+07	1.7706E+03	5.2926E+00
2.300	1.6059E+07	1.8947E+03	5.3045E+00
2.600	1.2210E+07	1.7534E+03	5.3165E+00
2.900	9.3722E+06	1.5157E+03	5.3278E+00
3.200	7.2788E+06	1.2637E+03	5.3378E+00
3.500	5.7347E+06	1.0340E+03	5.3468E+00
3.800	4.5957E+06	8.3928E+02	5.3547E+00
4.100	3.7554E+06	6.8121E+02	5.3617E+00
4.400	3.1353E+06	5.5630E+02	5.3680E+00
4.700	2.6777E+06	4.5939E+02	5.3738E+00
5.000	2.3398E+06	3.8515E+02	5.3792E+00
5.300	2.1770E+06	3.3123E+02	5.3842E+00
5.600	2.0416E+06	2.9325E+02	5.3890E+00
5.900	1.9292E+06	2.6558E+02	5.3937E+00
6.200	1.8356E+06	2.4483E+02	5.3982E+00

6.500	1.7578E+06	2.2887E+02	5.4026E+00
6.800	1.6930E+06	2.1633E+02	5.4070E+00
7.100	1.6390E+06	2.0632E+02	5.4113E+00
7.400	1.5939E+06	1.9822E+02	5.4155E+00
7.700	1.5563E+06	1.9162E+02	5.4197E+00
8.000	1.5249E+06	1.8619E+02	5.4239E+00
8.300	1.4985E+06	1.8171E+02	5.4280E+00
8.600	1.4789E+06	1.7805E+02	5.4322E+00
8.900	1.4620E+06	1.7508E+02	5.4363E+00
9.200	1.4474E+06	1.7263E+02	5.4403E+00
9.500	1.4348E+06	1.7058E+02	5.4444E+00
9.800	1.4238E+06	1.6883E+02	5.4485E+00
10.100	1.4143E+06	1.6734E+02	5.4525E+00
10.400	1.4059E+06	1.6606E+02	5.4565E+00
24.000	1.2984E+06	1.5185E+02	5.6331E+00
96.000	9.9499E+05	5.8177E+01	6.0358E+00
720.000	9.9109E+04	5.7948E+00	7.2146E+00

Time (hr)	Control Room I-131 (Curies)	SGTS Node I-131 (Curies)
0.000	8.5454E-08	1.0425E-10
0.017	1.9111E-04	5.9511E-09
0.058	2.3293E-03	2.0784E-08
0.100	2.3167E-03	3.4524E-06
0.142	2.4098E-03	8.5838E-06
0.183	2.5844E-03	1.5361E-05
0.225	2.8353E-03	2.3770E-05
0.258	3.0816E-03	3.1620E-05
0.267	3.0461E-03	4.0393E-07
0.396	2.5489E-03	7.7490E-07
0.500	2.2075E-03	1.1365E-06
0.900	1.2721E-03	3.3804E-06
1.200	8.4315E-04	5.6738E-06
1.500	5.6097E-04	8.1721E-06
1.800	3.7587E-04	1.0724E-05
2.000	2.8964E-04	1.2412E-05
2.300	1.9680E-04	1.3550E-05
2.600	1.3550E-04	1.3026E-05
2.900	9.4618E-05	1.1857E-05
3.200	6.7092E-05	1.0544E-05
3.500	4.8387E-05	9.3165E-06
3.800	3.5568E-05	8.2619E-06
4.100	2.6714E-05	7.3978E-06
4.400	2.0554E-05	6.7104E-06
4.700	1.6240E-05	6.1741E-06
5.000	1.3200E-05	5.7612E-06
5.300	1.1050E-05	5.4597E-06
5.600	9.5274E-06	5.2458E-06
5.900	8.4482E-06	5.0888E-06
6.200	7.6805E-06	4.9698E-06
6.500	7.1313E-06	4.8773E-06
6.800	6.7353E-06	4.8037E-06
7.100	6.4471E-06	4.7441E-06
7.400	6.2349E-06	4.6951E-06
7.700	6.0768E-06	4.6543E-06
8.000	5.9572E-06	4.6201E-06
8.300	4.7304E-06	4.5911E-06
8.600	3.9047E-06	4.5667E-06
8.900	3.3482E-06	4.5462E-06
9.200	2.9727E-06	4.5285E-06

9.500	2.7186E-06	4.5130E-06
9.800	2.5462E-06	4.4993E-06
10.100	2.4287E-06	4.4869E-06
10.400	2.3482E-06	4.4757E-06
24.000	2.0635E-06	4.2178E-06
96.000	4.9990E-07	1.6160E-06
720.000	3.7171E-08	1.6097E-07

##

Cumulative Dose Summary

##

	Control Room		EAB		LPZ	
Time (hr)	Thyroid (rem)	TEDE (rem)	Thyroid (rem)	TEDE (rem)	Thyroid (rem)	TEDE (rem)
0.000	0.0000E+00	0.0000E+00	0.0000E+00	0.0000E+00	0.0000E+00	0.0000E+00
0.017	5.7208E-04	2.4912E-05	4.5201E-02	2.2222E-03	8.2299E-03	4.0461E-04
0.058	2.5747E-02	1.1210E-03	5.6139E-01	2.7579E-02	1.0221E-01	5.0215E-03
0.100	7.8070E-02	3.3990E-03	5.8950E-01	2.8958E-02	1.0733E-01	5.2726E-03
0.142	1.3135E-01	5.7186E-03	6.4303E-01	3.1579E-02	1.1708E-01	5.7498E-03
0.183	1.8752E-01	8.1635E-03	7.1735E-01	3.5212E-02	1.3061E-01	6.4113E-03
0.225	2.4864E-01	1.0824E-02	8.1245E-01	3.9854E-02	1.4793E-01	7.2565E-03
0.258	3.0200E-01	1.3146E-02	9.0185E-01	4.4212E-02	1.6420E-01	8.0500E-03
0.267	3.1596E-01	1.3753E-02	9.0185E-01	4.4232E-02	1.6421E-01	8.0535E-03
0.396	5.1148E-01	2.2265E-02	9.0191E-01	4.4653E-02	1.6421E-01	8.1303E-03
0.500	6.4560E-01	2.8108E-02	9.0196E-01	4.5099E-02	1.6422E-01	8.2114E-03
0.900	1.0125E+00	4.4199E-02	9.0240E-01	5.1348E-02	1.6430E-01	9.3493E-03
1.200	1.1808E+00	5.1927E-02	9.0309E-01	6.6413E-02	1.6443E-01	1.2092E-02
1.500	1.2921E+00	5.7785E-02	9.0417E-01	9.5004E-02	1.6463E-01	1.7298E-02
1.800	1.3661E+00	6.3015E-02	9.0563E-01	1.3995E-01	1.6489E-01	2.5481E-02
2.000	1.4014E+00	6.6647E-02	9.0683E-01	1.7995E-01	1.6511E-01	3.2765E-02
2.300	1.4396E+00	7.2632E-02	9.0886E-01	2.5512E-01	1.6548E-01	4.6452E-02
2.600	1.4657E+00	7.9528E-02	9.1092E-01	3.4557E-01	1.6586E-01	6.2920E-02
2.900	1.4838E+00	8.7683E-02	9.1283E-01	4.4804E-01	1.6620E-01	8.1578E-02
3.200	1.4964E+00	9.7303E-02	9.1453E-01	5.5983E-01	1.6651E-01	1.0193E-01
3.500	1.5055E+00	1.0849E-01	9.1603E-01	6.7865E-01	1.6679E-01	1.2357E-01
3.800	1.5120E+00	1.2129E-01	9.1735E-01	8.0263E-01	1.6703E-01	1.4614E-01
4.100	1.5169E+00	1.3568E-01	9.1852E-01	9.3019E-01	1.6724E-01	1.6936E-01
4.400	1.5205E+00	1.5162E-01	9.1956E-01	1.0600E+00	1.6743E-01	1.9301E-01
4.700	1.5234E+00	1.6902E-01	9.2051E-01	1.1911E+00	1.6760E-01	2.1686E-01
5.000	1.5257E+00	1.8781E-01	9.2138E-01	1.3224E+00	1.6776E-01	2.4078E-01
5.300	1.5276E+00	2.0788E-01	9.2220E-01	1.4534E+00	1.6791E-01	2.6462E-01
5.600	1.5291E+00	2.2913E-01	9.2297E-01	1.5833E+00	1.6805E-01	2.8828E-01
5.900	1.5305E+00	2.5145E-01	9.2372E-01	1.7118E+00	1.6819E-01	3.1167E-01
6.200	1.5317E+00	2.7474E-01	9.2444E-01	1.8384E+00	1.6832E-01	3.3473E-01
6.500	1.5329E+00	2.9889E-01	9.2515E-01	1.9629E+00	1.6845E-01	3.5739E-01
6.800	1.5339E+00	3.2382E-01	9.2584E-01	2.0849E+00	1.6857E-01	3.7961E-01
7.100	1.5349E+00	3.4941E-01	9.2652E-01	2.2044E+00	1.6870E-01	4.0137E-01
7.400	1.5359E+00	3.7559E-01	9.2719E-01	2.3213E+00	1.6882E-01	4.2265E-01
7.700	1.5368E+00	4.0227E-01	9.2785E-01	2.4353E+00	1.6894E-01	4.4341E-01
8.000	1.5377E+00	4.2937E-01	9.2850E-01	2.5466E+00	1.6906E-01	4.6367E-01
8.300	1.5385E+00	4.5607E-01	9.2850E-01	2.5466E+00	1.6910E-01	4.7764E-01
8.600	1.5391E+00	4.8163E-01	9.2850E-01	2.5466E+00	1.6914E-01	4.9125E-01
8.900	1.5396E+00	5.0616E-01	9.2850E-01	2.5466E+00	1.6918E-01	5.0450E-01
9.200	1.5401E+00	5.2973E-01	9.2850E-01	2.5466E+00	1.6923E-01	5.1738E-01
9.500	1.5405E+00	5.5241E-01	9.2850E-01	2.5466E+00	1.6927E-01	5.2991E-01
9.800	1.5409E+00	5.7426E-01	9.2850E-01	2.5466E+00	1.6931E-01	5.4210E-01
10.100	1.5413E+00	5.9534E-01	9.2850E-01	2.5466E+00	1.6935E-01	5.5394E-01
10.400	1.5416E+00	6.1571E-01	9.2850E-01	2.5466E+00	1.6939E-01	5.6546E-01
24.000	1.5552E+00	1.2007E+00	9.2850E-01	2.5466E+00	1.7112E-01	8.8903E-01

```
  96.000 1.5657E+00 1.5581E+00 9.2850E-01 2.5466E+00 1.7322E-01 1.0461E+00
 720.000 1.5797E+00 1.7698E+00 9.2850E-01 2.5466E+00 1.7519E-01 1.1258E+00

#####################################################################
                        Worst Two-Hour Doses
#####################################################################

EAB
   Time    Whole Body    Thyroid        TEDE
   (hr)      (rem)        (rem)         (rem)
    3.9    8.6641E-01   5.9805E-03   8.6664E-01
```

```
#######################################################################
   RADTRAD Version 3.03 (Spring 2001) run on  6/08/2006  at 17:54:55
#######################################################################

#######################################################################
                    File information
#######################################################################

 Plant file           = P:\Users\Nuc\Exelon EOC\Discipline
Files\Process\AST\Limerick AST\LGS LOCA\RADTRAD\Rev 2 Final DBA Runs\LGS LOCA MSIV
Leak (24-hr Settling Distribution) - New Design Basis - 225cfm CR Unfilt Inleak -
Chlorine Mode.psf
 Inventory file       = c:\program files\radtrad3-03\defaults\limerick ast source
terms.nif
 Release file         = c:\program files\radtrad3-03\defaults\bwr_dba.rft
 Dose Conversion file = c:\program files\radtrad3-03\defaults\fgr11&12.inp
```

```
#####    ####   #####    #  #     #  #####   #    #  #####
#    #  #       #        #  ##    #  #    #  #    #    #
#    #  #       #        #  # #   #  #    #  #    #    #
#####    ####   ####     #  #  #  #  #####   #    #    #
#            #  #        #  #   # #  #       #    #    #
#            #  #        #  #    ##  #       #    #    #
#        ####   #        #  #     #  #        ####     #
```

```
 Radtrad 3.03 4/15/2001
 LGS LOCA 200scfh MSIV Leak - Leak to Condenser - MSL Pipe Deposition Credit (24-Hr
20-Group Aerosol Settling with Projected Area Assumption; 2-Hr Mixing Delay) - 95%
CREFAS Charcoal Eff. No Delay - Chlorine Mode 225cfm Control Room Inleakage -
3000cfm -10%
 Nuclide Inventory File:
 c:\program files\radtrad3-03\defaults\limerick ast source terms.nif
 Plant Power Level:
  3.5270E+03
 Compartments:
   9
 Compartment 1:
 Containment
   3
  3.7907E+05
   0
   0
   0
   1
   0
 Compartment 2:
 (Node 1) Inboard MSL A Volume
   3
  2.5800E+02
   0
   0
   0
   0
   0
```

```
Compartment 3:
(Node 1) Inboard MSL B Volume
  3
 1.0000E-08
  0
  0
  0
  0
  0
Compartment 4:
(Node 2) Outboard MSL A Volume
  3
 1.1820E+03
  0
  0
  0
  0
  0
Compartment 5:
(Node 2) Outboard MSL B Volume
  3
 1.0510E+03
  0
  0
  0
  0
  0
Compartment 6:
Condenser
  3
 5.4750E+04
  0
  0
  0
  0
  0
Compartment 7:
Environment
  2
 0.0000E+00
  0
  0
  0
  0
  0
Compartment 8:
Control Room
  1
 1.2600E+05
  0
  0
  1
  0
  0
Compartment 9:
Hold
  3
 1.0000E+00
  0
  0
```

```
  0
  0
  0
Pathways:
 11
Pathway 1:
Containment to (Node 1) Inboard MSL A Volume
  1
  2
  2
Pathway 2:
Containment to (Node 1) Inboard MSL B Volume
  1
  3
  2
Pathway 3:
Containment to Hold (PC Leakage)
  1
  9
  4
Pathway 4:
(Node 1) Inboard MSL A Volume to (Node 2) Outboard MSL A Volume
  2
  4
  2
Pathway 5:
(Node 1) Inboard MSL B Volume to (Node 2) Outboard MSL B Volume
  3
  5
  2
Pathway 6:
(Node 2) Outboard MSL A Volume to Condenser
  4
  6
  2
Pathway 7:
(Node 2) Outboard MSL B Volume to Condenser
  5
  6
  2
Pathway 8:
Condenser Leak to Environment
  6
  7
  2
Pathway 9:
Filtered Intake to Control Room
  7
  8
  2
Pathway 10:
Unfiltered Inleakage to Control Room
  7
  8
  2
Pathway 11:
Control Room Exhaust
  8
  7
  2
```

```
End of Plant Model File
Scenario Description Name:

Plant Model Filename:

Source Term:
  1
  1   1.0000E+00
c:\program files\radtrad3-03\defaults\fgr11&12.inp
c:\program files\radtrad3-03\defaults\bwr_dba.rft
  0.0000E+00
  1
  9.5000E-01   4.8500E-02   1.5000E-03   1.0000E+00
Overlying Pool:
  0
  0.0000E+00
  0
  0
  0
  0
Compartments:
  9
Compartment 1:
  0
  1
  0
  0
  0
  0
  0
  3
  3
  1.0000E+01
  1
  1
  0.0000E+00   0.0000E+00
Compartment 2:
  0
  1
  0
  0
  0
  0
  0
  0
  0
Compartment 3:
  0
  1
  0
  0
  0
  0
  0
  0
  0
Compartment 4:
  0
  1
  0
```

```
  0
  0
  0
  0
  0
  0
Compartment 5:
  0
  1
  0
  0
  0
  0
  0
  0
  0
Compartment 6:
  0
  1
  0
  0
  0
  0
  0
  0
  0
Compartment 7:
  0
  1
  0
  0
  0
  0
  0
  0
  0
Compartment 8:
  0
  1
  0
  0
  0
  0
  1
  2.7000E+03
  3
  0.0000E+00   9.9000E+01   9.5000E+01   9.5000E+01
  5.0000E-01   9.9000E+01   9.5000E+01   9.5000E+01
  7.2000E+02   0.0000E+00   0.0000E+00   0.0000E+00
  0
  0
Compartment 9:
  0
  1
  0
  0
  0
  0
  0
  0
```

```
  0
Pathways:
 11
Pathway 1:
  0
  0
  0
  0
  0
  1
  5
  0.0000E+00   1.5240E+00   9.9980E+01   9.9690E+01   0.0000E+00
  2.0000E+00   9.3060E-01   9.9980E+01   9.9690E+01   0.0000E+00
  2.4000E+01   5.1270E-01   0.0000E+00   9.9970E+01   0.0000E+00
  9.6000E+01   5.1270E-01   0.0000E+00   9.9990E+01   0.0000E+00
  7.2000E+02   0.0000E+00   0.0000E+00   0.0000E+00   0.0000E+00
  0
  0
  0
  0
  0
  0
Pathway 2:
  0
  0
  0
  0
  0
  1
  5
  0.0000E+00   1.5240E+00   9.9910E+01   9.9480E+01   0.0000E+00
  2.0000E+00   9.3060E-01   9.9910E+01   9.9480E+01   0.0000E+00
  2.4000E+01   5.1270E-01   0.0000E+00   9.9890E+01   0.0000E+00
  9.6000E+01   5.1270E-01   0.0000E+00   9.9980E+01   0.0000E+00
  7.2000E+02   0.0000E+00   0.0000E+00   0.0000E+00   0.0000E+00
  0
  0
  0
  0
  0
  0
Pathway 3:
  0
  0
  0
  0
  0
  0
  0
  0
  0
  0
  1
  3
  0.0000E+00   5.0000E-01
  2.4000E+01   2.5000E-01
  7.2000E+02   0.0000E+00
  0
Pathway 4:
  0
```

```
  0
  0
  0
  0
  1
  4
  0.0000E+00   9.3060E-01   0.0000E+00   0.0000E+00   0.0000E+00
  2.4000E+01   5.1270E-01   0.0000E+00   0.0000E+00   0.0000E+00
  9.6000E+01   5.1270E-01   0.0000E+00   0.0000E+00   0.0000E+00
  7.2000E+02   0.0000E+00   0.0000E+00   0.0000E+00   0.0000E+00
  0
  0
  0
  0
  0
  0
Pathway 5:
  0
  0
  0
  0
  0
  1
  4
  0.0000E+00   9.3060E-01   0.0000E+00   0.0000E+00   0.0000E+00
  2.4000E+01   5.1270E-01   0.0000E+00   0.0000E+00   0.0000E+00
  9.6000E+01   5.1270E-01   0.0000E+00   0.0000E+00   0.0000E+00
  7.2000E+02   0.0000E+00   0.0000E+00   0.0000E+00   0.0000E+00
  0
  0
  0
  0
  0
  0
Pathway 6:
  0
  0
  0
  0
  0
  1
  4
  0.0000E+00   3.1880E+00   0.0000E+00   0.0000E+00   0.0000E+00
  2.4000E+01   1.5130E+00   0.0000E+00   0.0000E+00   0.0000E+00
  9.6000E+01   1.1480E+00   0.0000E+00   0.0000E+00   0.0000E+00
  7.2000E+02   0.0000E+00   0.0000E+00   0.0000E+00   0.0000E+00
  0
  0
  0
  0
  0
  0
Pathway 7:
  0
  0
  0
  0
  0
  1
  4
```

```
  0.0000E+00   3.1880E+00   0.0000E+00   0.0000E+00   0.0000E+00
  2.4000E+01   1.5130E+00   0.0000E+00   0.0000E+00   0.0000E+00
  9.6000E+01   1.1480E+00   0.0000E+00   0.0000E+00   0.0000E+00
  7.2000E+02   0.0000E+00   0.0000E+00   0.0000E+00   0.0000E+00
  0
  0
  0
  0
  0
  0
Pathway 8:
  0
  0
  0
  0
  0
  1
  4
  0.0000E+00   3.6620E+00   0.0000E+00   0.0000E+00   0.0000E+00
  2.4000E+01   2.0180E+00   0.0000E+00   0.0000E+00   0.0000E+00
  9.6000E+01   2.0180E+00   0.0000E+00   0.0000E+00   0.0000E+00
  7.2000E+02   0.0000E+00   0.0000E+00   0.0000E+00   0.0000E+00
  0
  0
  0
  0
  0
  0
Pathway 9:
  0
  0
  0
  0
  0
  1
  3
  0.0000E+00   0.0000E+00   9.9000E+01   9.5000E+01   9.5000E+01
  5.0000E-01   0.0000E+00   9.9000E+01   9.5000E+01   9.5000E+01
  7.2000E+02   0.0000E+00   0.0000E+00   0.0000E+00   0.0000E+00
  0
  0
  0
  0
  0
  0
Pathway 10:
  0
  0
  0
  0
  0
  1
  2
  0.0000E+00   2.2500E+02   0.0000E+00   0.0000E+00   0.0000E+00
  7.2000E+02   0.0000E+00   0.0000E+00   0.0000E+00   0.0000E+00
  0
  0
  0
  0
  0
```

```
  0
Pathway 11:
  0
  0
  0
  0
  0
  1
  3
  0.0000E+00   2.2500E+02   1.0000E+02   1.0000E+02   1.0000E+02
  5.0000E-01   2.2500E+02   1.0000E+02   1.0000E+02   1.0000E+02
  7.2000E+02   0.0000E+00   0.0000E+00   0.0000E+00   0.0000E+00
  0
  0
  0
  0
  0
  0
Dose Locations:
  3
Location 1:
Exclusion Area Boundary (EAB)
  7
  1
  2
  0.0000E+00   3.1800E-04
  2.4000E+01   0.0000E+00
  1
  4
  0.0000E+00   3.5000E-04
  8.0000E+00   1.8000E-04
  2.4000E+01   2.3000E-04
  7.2000E+02   0.0000E+00
  0
Location 2:
Low Population Zone (LPZ)
  7
  1
 10
  0.0000E+00   5.7900E-05
  8.0000E+00   4.1000E-05
  2.4000E+01   1.9500E-05
  4.8000E+01   1.9500E-05
  7.2000E+01   1.9500E-05
  9.6000E+01   6.6800E-06
  1.2000E+02   6.6800E-06
  1.6800E+02   6.6800E-06
  3.3600E+02   6.6800E-06
  7.2000E+02   0.0000E+00
  1
  4
  0.0000E+00   3.5000E-04
  8.0000E+00   1.8000E-04
  2.4000E+01   2.3000E-04
  7.2000E+02   0.0000E+00
  0
Location 3:
Control Room (CR)
  8
  0
```

```
   1
   2
   0.0000E+00   3.5000E-04
   7.2000E+02   0.0000E+00
   1
   4
   0.0000E+00   1.0000E+00
   2.4000E+01   6.0000E-01
   9.6000E+01   4.0000E-01
   7.2000E+02   0.0000E+00
 Effective Volume Location:
   1
   6
   0.0000E+00   6.8800E-03
   2.0000E+00   5.1700E-03
   8.0000E+00   2.0400E-03
   2.4000E+01   1.2900E-03
   9.6000E+01   9.6300E-04
   7.2000E+02   0.0000E+00
 Simulation Parameters:
   1
   0.0000E+00   0.0000E+00
 Output Filename:
 P:\Users\Nuc\Exelon EOC\Discipline Files\Process\AST\Limerick AST\LGS
LOCA\RADTRAD\Rev 2 Final DBA Runs\LGS LOCA MSIV Leak (24-hr Settling Distribution)
- New Design Basis - 225cfm CR Unfilt Inleak - Chlorine Mode.o0
   1
   1
   1
   0
   0
 End of Scenario File
```

```
#######################################################################
   RADTRAD Version 3.03 (Spring 2001) run on  6/08/2006  at 17:54:55
#######################################################################

#######################################################################
                      Plant Description
#######################################################################

Number of Nuclides =  60

Inventory Power =   1.0000E+00 MWth
Plant Power Level =   3.5270E+03 MWth

Number of compartments    =   9

Compartment information

Compartment number  1  (Source term fraction =   1.0000E+00
)
Name: Containment
Compartment volume =   3.7907E+05 (Cubic feet)
Compartment type is Normal
Removal devices within compartment:
     Deposition
Pathways into and out of compartment  1
   Exit Pathway Number    1: Containment to (Node 1) Inboard MSL A Volume
   Exit Pathway Number    2: Containment to (Node 1) Inboard MSL B Volume
   Exit Pathway Number    3: Containment to Hold (PC Leakage)

Compartment number  2
Name: (Node 1) Inboard MSL A Volume
Compartment volume =   2.5800E+02 (Cubic feet)
Compartment type is Normal
Pathways into and out of compartment  2
   Inlet Pathway Number   1: Containment to (Node 1) Inboard MSL A Volume
   Exit Pathway Number    4: (Node 1) Inboard MSL A Volume to (Node 2) Outboard

Compartment number  3
Name: (Node 1) Inboard MSL B Volume
Compartment volume =   1.0000E-08 (Cubic feet)
Compartment type is Normal
Pathways into and out of compartment  3
   Inlet Pathway Number   2: Containment to (Node 1) Inboard MSL B Volume
   Exit Pathway Number    5: (Node 1) Inboard MSL B Volume to (Node 2) Outboard

Compartment number  4
Name: (Node 2) Outboard MSL A Volume
Compartment volume =   1.1820E+03 (Cubic feet)
Compartment type is Normal
Pathways into and out of compartment  4
   Inlet Pathway Number   4: (Node 1) Inboard MSL A Volume to (Node 2) Outboard
   Exit Pathway Number    6: (Node 2) Outboard MSL A Volume to Condenser

Compartment number  5
Name: (Node 2) Outboard MSL B Volume
Compartment volume =   1.0510E+03 (Cubic feet)
Compartment type is Normal
Pathways into and out of compartment  5
   Inlet Pathway Number   5: (Node 1) Inboard MSL B Volume to (Node 2) Outboard
```

```
   Exit Pathway Number    7: (Node 2) Outboard MSL B Volume to Condenser

Compartment number  6
Name: Condenser
Compartment volume =   5.4750E+04 (Cubic feet)
Compartment type is Normal
Pathways into and out of compartment  6
   Inlet Pathway Number   6: (Node 2) Outboard MSL A Volume to Condenser
   Inlet Pathway Number   7: (Node 2) Outboard MSL B Volume to Condenser
   Exit Pathway Number    8: Condenser Leak to Environment

Compartment number  7
Name: Environment
Compartment type is Environment
Pathways into and out of compartment  7
   Inlet Pathway Number   8: Condenser Leak to Environment
   Inlet Pathway Number  11: Control Room Exhaust
   Exit Pathway Number    9: Filtered Intake to Control Room
   Exit Pathway Number   10: Unfiltered Inleakage to Control Room

Compartment number  8
Name: Control Room
Compartment volume =   1.2600E+05 (Cubic feet)
Compartment type is Control Room
Removal devices within compartment:
     Filter(s)
Pathways into and out of compartment  8
   Inlet Pathway Number   9: Filtered Intake to Control Room
   Inlet Pathway Number  10: Unfiltered Inleakage to Control Room
   Exit Pathway Number   11: Control Room Exhaust

Compartment number  9
Name: Hold
Compartment volume =   1.0000E+00 (Cubic feet)
Compartment type is Normal
Pathways into and out of compartment  9
   Inlet Pathway Number   3: Containment to Hold (PC Leakage)

Total number of pathways =  11
```

```
#######################################################################
   RADTRAD Version 3.03 (Spring 2001) run on  6/08/2006  at 17:54:55
#######################################################################

#######################################################################
                    Scenario Description
#######################################################################
```

Radioactive Decay is enabled
Calculation of Daughters is enabled

Release Fractions and Timings

	GAP	EARLY IN-VESSEL	LATE RELEASE	RELEASE MASS
	0.500000 hr	1.5000 hrs	0.0000 hrs	(gm)
NOBLES	5.0000E-02	9.5000E-01	0.0000E+00	4.625E+03
IODINE	5.0000E-02	2.5000E-01	0.0000E+00	3.033E+02
CESIUM	5.0000E-02	2.0000E-01	0.0000E+00	5.099E+04
TELLURIUM	0.0000E+00	5.0000E-02	0.0000E+00	4.012E+01
STRONTIUM	0.0000E+00	2.0000E-02	0.0000E+00	1.712E+03
BARIUM	0.0000E+00	2.0000E-02	0.0000E+00	4.739E+01
RUTHENIUM	0.0000E+00	2.5000E-03	0.0000E+00	5.988E+01
CERIUM	0.0000E+00	5.0000E-04	0.0000E+00	5.914E+02
LANTHANUM	0.0000E+00	2.0000E-04	0.0000E+00	8.731E+00

Inventory Power = 3527. MWt

Nuclide Name	Group	Specific Inventory (Ci/MWt)	half life (s)	Whole Body DCF (Sv-m3/Bq-s)	Inhaled Thyroid (Sv/Bq)	Inhaled Effective (Sv/Bq)
Co-58	7	1.529E+02	6.117E+06	4.760E-14	8.720E-10	2.940E-09
Co-60	7	1.830E+02	1.663E+08	1.260E-13	1.620E-08	5.910E-08
Kr-85	1	3.946E+02	3.383E+08	1.190E-16	0.000E+00	0.000E+00
Kr-85m	1	8.313E+03	1.613E+04	7.480E-15	0.000E+00	0.000E+00
Kr-87	1	1.633E+04	4.578E+03	4.120E-14	0.000E+00	0.000E+00
Kr-88	1	2.303E+04	1.022E+04	1.020E-13	0.000E+00	0.000E+00
Rb-86	3	6.518E+01	1.612E+06	4.810E-15	1.330E-09	1.790E-09
Sr-89	5	2.798E+04	4.363E+06	7.730E-17	7.960E-12	1.120E-08
Sr-90	5	3.178E+03	9.190E+08	7.530E-18	2.690E-10	3.510E-07
Sr-91	5	3.801E+04	3.420E+04	4.924E-14	9.930E-12	4.547E-10
Sr-92	5	4.017E+04	9.756E+03	6.790E-14	3.920E-12	2.180E-10
Y-90	9	3.272E+03	2.304E+05	1.900E-16	5.170E-13	2.280E-09
Y-91	9	3.448E+04	5.055E+06	2.600E-16	8.500E-12	1.320E-08
Y-92	9	4.029E+04	1.274E+04	1.300E-14	1.050E-12	2.110E-10
Y-93	9	4.526E+04	3.636E+04	4.800E-15	9.260E-13	5.820E-10
Zr-95	9	4.489E+04	5.528E+06	3.600E-14	1.440E-09	6.390E-09
Zr-97	9	4.657E+04	6.084E+04	4.432E-14	2.315E-11	1.171E-09
Nb-95	9	4.512E+04	3.037E+06	3.740E-14	3.580E-10	1.570E-09
Mo-99	7	5.078E+04	2.376E+05	7.280E-15	1.520E-11	1.070E-09
Tc-99m	7	4.447E+04	2.167E+04	5.890E-15	5.010E-11	8.800E-12
Ru-103	7	4.202E+04	3.394E+06	2.251E-14	2.570E-10	2.421E-09
Ru-105	7	2.908E+04	1.598E+04	3.810E-14	4.150E-12	1.230E-10
Ru-106	7	1.730E+04	3.181E+07	1.040E-14	1.720E-09	1.290E-07
Rh-105	7	2.752E+04	1.273E+05	3.720E-15	2.880E-12	2.580E-10
Sb-127	4	2.896E+03	3.326E+05	3.330E-14	6.150E-11	1.630E-09
Sb-129	4	8.638E+03	1.555E+04	7.140E-14	9.720E-12	1.740E-10
Te-127	4	2.873E+03	3.366E+04	2.420E-16	1.840E-12	8.600E-11
Te-127m	4	3.855E+02	9.418E+06	1.470E-16	9.660E-11	5.810E-09
Te-129	4	8.501E+03	4.176E+03	2.750E-15	5.090E-13	2.090E-11
Te-129m	4	1.267E+03	2.903E+06	3.337E-15	1.563E-10	6.484E-09

Te-131m	4	3.869E+03	1.080E+05	7.463E-14	3.669E-08	1.758E-09
Te-132	4	3.821E+04	2.815E+05	1.030E-14	6.280E-08	2.550E-09
I-131	2	2.687E+04	6.947E+05	1.820E-14	2.920E-07	8.890E-09
I-132	2	3.881E+04	8.280E+03	1.120E-13	1.740E-09	1.030E-10
I-133	2	5.556E+04	7.488E+04	2.940E-14	4.860E-08	1.580E-09
I-134	2	6.165E+04	3.156E+03	1.300E-13	2.880E-10	3.550E-11
I-135	2	5.192E+04	2.380E+04	8.294E-14	8.460E-09	3.320E-10
Xe-133	1	5.491E+04	4.532E+05	1.560E-15	0.000E+00	0.000E+00
Xe-135	1	2.228E+04	3.272E+04	1.190E-14	0.000E+00	0.000E+00
Cs-134	3	7.280E+03	6.507E+07	7.570E-14	1.110E-08	1.250E-08
Cs-136	3	2.027E+03	1.132E+06	1.060E-13	1.730E-09	1.980E-09
Cs-137	3	4.538E+03	9.467E+08	2.725E-14	7.930E-09	8.630E-09
Ba-139	6	5.084E+04	4.962E+03	2.170E-15	2.400E-12	4.640E-11
Ba-140	6	4.896E+04	1.101E+06	8.580E-15	2.560E-10	1.010E-09
La-140	9	5.019E+04	1.450E+05	1.170E-13	6.870E-11	1.310E-09
La-141	9	4.640E+04	1.415E+04	2.390E-15	9.400E-12	1.570E-10
La-142	9	4.532E+04	5.550E+03	1.440E-13	8.740E-12	6.840E-11
Ce-141	8	4.492E+04	2.808E+06	3.430E-15	2.550E-11	2.420E-09
Ce-143	8	4.427E+04	1.188E+05	1.290E-14	6.230E-12	9.160E-10
Ce-144	8	3.596E+04	2.456E+07	2.773E-15	2.920E-10	1.010E-07
Pr-143	9	4.293E+04	1.172E+06	2.100E-17	1.680E-18	2.190E-09
Nd-147	9	1.838E+04	9.487E+05	6.190E-15	1.820E-11	1.850E-09
Np-239	8	5.397E+05	2.035E+05	7.690E-15	7.620E-12	6.780E-10
Pu-238	8	1.796E+02	2.769E+09	4.880E-18	3.860E-10	7.790E-05
Pu-239	8	1.200E+01	7.594E+11	4.240E-18	3.750E-10	8.330E-05
Pu-240	8	1.288E+01	2.063E+11	4.750E-18	3.760E-10	8.330E-05
Pu-241	8	6.182E+03	4.544E+08	7.250E-20	9.150E-12	1.340E-06
Am-241	9	9.528E+00	1.364E+10	8.180E-16	1.600E-09	1.200E-04
Cm-242	9	2.388E+03	1.407E+07	5.690E-18	9.410E-10	4.670E-06
Cm-244	9	2.602E+02	5.715E+08	4.910E-18	1.010E-09	6.700E-05

Nuclide	Daughter	Fraction	Daughter	Fraction	Daughter	Fraction
Kr-85m	Kr-85	0.21	none	0.00	none	0.00
Kr-87	Rb-87	1.00	none	0.00	none	0.00
Kr-88	Rb-88	1.00	none	0.00	none	0.00
Sr-90	Y-90	1.00	none	0.00	none	0.00
Sr-91	Y-91m	0.58	Y-91	0.42	none	0.00
Sr-92	Y-92	1.00	none	0.00	none	0.00
Y-93	Zr-93	1.00	none	0.00	none	0.00
Zr-95	Nb-95m	0.01	Nb-95	0.99	none	0.00
Zr-97	Nb-97m	0.95	Nb-97	0.05	none	0.00
Mo-99	Tc-99m	0.88	Tc-99	0.12	none	0.00
Tc-99m	Tc-99	1.00	none	0.00	none	0.00
Ru-103	Rh-103m	1.00	none	0.00	none	0.00
Ru-105	Rh-105	1.00	none	0.00	none	0.00
Ru-106	Rh-106	1.00	none	0.00	none	0.00
Sb-127	Te-127m	0.18	Te-127	0.82	none	0.00
Sb-129	Te-129m	0.22	Te-129	0.77	none	0.00
Te-127m	Te-127	0.98	none	0.00	none	0.00
Te-129	I-129	1.00	none	0.00	none	0.00
Te-129m	Te-129	0.65	I-129	0.35	none	0.00
Te-131m	Te-131	0.22	I-131	0.78	none	0.00
Te-132	I-132	1.00	none	0.00	none	0.00
I-131	Xe-131m	0.01	none	0.00	none	0.00
I-133	Xe-133m	0.03	Xe-133	0.97	none	0.00
I-135	Xe-135m	0.15	Xe-135	0.85	none	0.00
Xe-135	Cs-135	1.00	none	0.00	none	0.00
Cs-137	Ba-137m	0.95	none	0.00	none	0.00
Ba-140	La-140	1.00	none	0.00	none	0.00
La-141	Ce-141	1.00	none	0.00	none	0.00

Ce-143	Pr-143	1.00	none	0.00	none	0.00
Ce-144	Pr-144m	0.02	Pr-144	0.98	none	0.00
Nd-147	Pm-147	1.00	none	0.00	none	0.00
Np-239	Pu-239	1.00	none	0.00	none	0.00
Pu-238	U-234	1.00	none	0.00	none	0.00
Pu-239	U-235	1.00	none	0.00	none	0.00
Pu-240	U-236	1.00	none	0.00	none	0.00
Pu-241	U-237	0.00	Am-241	1.00	none	0.00
Am-241	Np-237	1.00	none	0.00	none	0.00
Cm-242	Pu-238	1.00	none	0.00	none	0.00
Cm-244	Pu-240	1.00	none	0.00	none	0.00

Iodine fractions
Aerosol = 9.5000E-01
Elemental = 4.8500E-02
Organic = 1.5000E-03

COMPARTMENT DATA

Compartment number 1: Containment
Natural Deposition (Powers' model): Aerosol data
Reactor type: 3
Percentile = 10 (%)

Natural Deposition: Elemental Removal Data

Time (hr)	Removal Coef. (hr^-1)
0.0000E+00	0.0000E+00

Compartment number 2: (Node 1) Inboard MSL A Volume

Compartment number 3: (Node 1) Inboard MSL B Volume

Compartment number 4: (Node 2) Outboard MSL A Volume

Compartment number 5: (Node 2) Outboard MSL B Volume

Compartment number 6: Condenser

Compartment number 7: Environment

Compartment number 8: Control Room

Compartment Filter Data

Time (hr)	Flow Rate (cfm)	Filter Efficiencies (%) Aerosol	Elemental	Organic
0.0000E+00	2.7000E+03	9.9000E+01	9.5000E+01	9.5000E+01
5.0000E-01	2.7000E+03	9.9000E+01	9.5000E+01	9.5000E+01
7.2000E+02	2.7000E+03	0.0000E+00	0.0000E+00	0.0000E+00

Compartment number 9: Hold

PATHWAY DATA

Pathway number 1: Containment to (Node 1) Inboard MSL A Volume

Pathway Filter: Removal Data

Time (hr)	Flow Rate (cfm)	Filter Efficiencies (%) Aerosol	Elemental	Organic

0.0000E+00	1.5240E+00	9.9980E+01	9.9690E+01	0.0000E+00
2.0000E+00	9.3060E-01	9.9980E+01	9.9690E+01	0.0000E+00
2.4000E+01	5.1270E-01	0.0000E+00	9.9970E+01	0.0000E+00
9.6000E+01	5.1270E-01	0.0000E+00	9.9990E+01	0.0000E+00
7.2000E+02	0.0000E+00	0.0000E+00	0.0000E+00	0.0000E+00

Pathway number 2: Containment to (Node 1) Inboard MSL B Volume

Pathway Filter: Removal Data

Time (hr)	Flow Rate (cfm)	Filter Efficiencies (%) Aerosol	Elemental	Organic
0.0000E+00	1.5240E+00	9.9910E+01	9.9480E+01	0.0000E+00
2.0000E+00	9.3060E-01	9.9910E+01	9.9480E+01	0.0000E+00
2.4000E+01	5.1270E-01	0.0000E+00	9.9890E+01	0.0000E+00
9.6000E+01	5.1270E-01	0.0000E+00	9.9980E+01	0.0000E+00
7.2000E+02	0.0000E+00	0.0000E+00	0.0000E+00	0.0000E+00

Pathway number 3: Containment to Hold (PC Leakage)

Convection Data

Time (hr)	Flow Rate (% / day)
0.0000E+00	5.0000E-01
2.4000E+01	2.5000E-01
7.2000E+02	0.0000E+00

Pathway number 4: (Node 1) Inboard MSL A Volume to (Node 2) Outboard

Pathway Filter: Removal Data

Time (hr)	Flow Rate (cfm)	Filter Efficiencies (%) Aerosol	Elemental	Organic
0.0000E+00	9.3060E-01	0.0000E+00	0.0000E+00	0.0000E+00
2.4000E+01	5.1270E-01	0.0000E+00	0.0000E+00	0.0000E+00
9.6000E+01	5.1270E-01	0.0000E+00	0.0000E+00	0.0000E+00
7.2000E+02	0.0000E+00	0.0000E+00	0.0000E+00	0.0000E+00

Pathway number 5: (Node 1) Inboard MSL B Volume to (Node 2) Outboard

Pathway Filter: Removal Data

Time (hr)	Flow Rate (cfm)	Filter Efficiencies (%) Aerosol	Elemental	Organic
0.0000E+00	9.3060E-01	0.0000E+00	0.0000E+00	0.0000E+00
2.4000E+01	5.1270E-01	0.0000E+00	0.0000E+00	0.0000E+00
9.6000E+01	5.1270E-01	0.0000E+00	0.0000E+00	0.0000E+00
7.2000E+02	0.0000E+00	0.0000E+00	0.0000E+00	0.0000E+00

Pathway number 6: (Node 2) Outboard MSL A Volume to Condenser

Pathway Filter: Removal Data

Time (hr)	Flow Rate (cfm)	Filter Efficiencies (%) Aerosol	Elemental	Organic
0.0000E+00	3.1880E+00	0.0000E+00	0.0000E+00	0.0000E+00
2.4000E+01	1.5130E+00	0.0000E+00	0.0000E+00	0.0000E+00
9.6000E+01	1.1480E+00	0.0000E+00	0.0000E+00	0.0000E+00
7.2000E+02	0.0000E+00	0.0000E+00	0.0000E+00	0.0000E+00

Pathway number 7: (Node 2) Outboard MSL B Volume to Condenser

Pathway Filter: Removal Data

Time (hr)	Flow Rate (cfm)	Filter Efficiencies (%) Aerosol	Elemental	Organic
0.0000E+00	3.1880E+00	0.0000E+00	0.0000E+00	0.0000E+00
2.4000E+01	1.5130E+00	0.0000E+00	0.0000E+00	0.0000E+00
9.6000E+01	1.1480E+00	0.0000E+00	0.0000E+00	0.0000E+00
7.2000E+02	0.0000E+00	0.0000E+00	0.0000E+00	0.0000E+00

Pathway number 8: Condenser Leak to Environment

Pathway Filter: Removal Data

Time (hr)	Flow Rate (cfm)	Filter Efficiencies (%) Aerosol	Elemental	Organic
0.0000E+00	3.6620E+00	0.0000E+00	0.0000E+00	0.0000E+00
2.4000E+01	2.0180E+00	0.0000E+00	0.0000E+00	0.0000E+00
9.6000E+01	2.0180E+00	0.0000E+00	0.0000E+00	0.0000E+00
7.2000E+02	0.0000E+00	0.0000E+00	0.0000E+00	0.0000E+00

Pathway number 9: Filtered Intake to Control Room

Pathway Filter: Removal Data

Time (hr)	Flow Rate (cfm)	Filter Efficiencies (%) Aerosol	Elemental	Organic
0.0000E+00	0.0000E+00	9.9000E+01	9.5000E+01	9.5000E+01
5.0000E-01	0.0000E+00	9.9000E+01	9.5000E+01	9.5000E+01
7.2000E+02	0.0000E+00	0.0000E+00	0.0000E+00	0.0000E+00

Pathway number 10: Unfiltered Inleakage to Control Room

Pathway Filter: Removal Data

Time (hr)	Flow Rate (cfm)	Filter Efficiencies (%) Aerosol	Elemental	Organic
0.0000E+00	2.2500E+02	0.0000E+00	0.0000E+00	0.0000E+00
7.2000E+02	0.0000E+00	0.0000E+00	0.0000E+00	0.0000E+00

Pathway number 11: Control Room Exhaust

Pathway Filter: Removal Data

Time (hr)	Flow Rate (cfm)	Filter Efficiencies (%) Aerosol	Elemental	Organic
0.0000E+00	2.2500E+02	1.0000E+02	1.0000E+02	1.0000E+02
5.0000E-01	2.2500E+02	1.0000E+02	1.0000E+02	1.0000E+02
7.2000E+02	0.0000E+00	0.0000E+00	0.0000E+00	0.0000E+00

LOCATION DATA

Location Exclusion Area Boundary (EAB) is in compartment 7

Location X/Q Data

Time (hr)	X/Q (s * m^-3)
0.0000E+00	3.1800E-04
2.4000E+01	0.0000E+00

Location Breathing Rate Data

Time (hr)	Breathing Rate (m^3 * sec^-1)

```
  0.0000E+00                  3.5000E-04
  8.0000E+00                  1.8000E-04
  2.4000E+01                  2.3000E-04
  7.2000E+02                  0.0000E+00
Location Low Population Zone (LPZ)     is in compartment   7

Location X/Q Data
 Time (hr)          X/Q (s * m^-3)
  0.0000E+00           5.7900E-05
  8.0000E+00           4.1000E-05
  2.4000E+01           1.9500E-05
  4.8000E+01           1.9500E-05
  7.2000E+01           1.9500E-05
  9.6000E+01           6.6800E-06
  1.2000E+02           6.6800E-06
  1.6800E+02           6.6800E-06
  3.3600E+02           6.6800E-06
  7.2000E+02           0.0000E+00

Location Breathing Rate Data
 Time (hr)          Breathing Rate (m^3 * sec^-1)
  0.0000E+00                  3.5000E-04
  8.0000E+00                  1.8000E-04
  2.4000E+01                  2.3000E-04
  7.2000E+02                  0.0000E+00
Location Control Room (CR)     is in compartment   8

Location X/Q Data
 Time (hr)          X/Q (s * m^-3)
  0.0000E+00           6.8800E-03
  2.0000E+00           5.1700E-03
  8.0000E+00           2.0400E-03
  2.4000E+01           1.2900E-03
  9.6000E+01           9.6300E-04
  7.2000E+02           0.0000E+00

Location Breathing Rate Data
 Time (hr)          Breathing Rate (m^3 * sec^-1)
  0.0000E+00                  3.5000E-04
  7.2000E+02                  0.0000E+00

Location Occupancy Factor Data
 Time (hr)          Occupancy Factor
  0.0000E+00            1.0000E+00
  2.4000E+01            6.0000E-01
  9.6000E+01            4.0000E-01
  7.2000E+02            0.0000E+00

USER SPECIFIED TIME STEP DATA - SUPPLEMENTAL TIME STEPS
     Time            Time step
      0.0000E+00       0.0000E+00
```

```
#######################################################################
   RADTRAD Version 3.03 (Spring 2001) run on  6/08/2006  at 17:54:55
#######################################################################
```

```
 ####   #    #  #####  #####   #    #  #####
#    #  #    #    #    #    #  #    #    #
#    #  #    #    #    #    #  #    #    #
#    #  #    #    #    #####   #    #    #
#    #  #    #    #    #       #    #    #
#    #  #    #    #    #       #    #    #
 ####    ####     #    #        ####     #
```

```
#######################################################################
                                Dose Output
#######################################################################
```

Exclusion Area Boundary (EAB) Doses:

Time (h) = 0.5000	Whole Body	Thyroid	TEDE
Delta dose (rem)	6.0364E-07	1.8676E-06	6.6979E-07
Accumulated dose (rem)	6.0364E-07	1.8676E-06	6.6979E-07

Low Population Zone (LPZ) Doses:

Time (h) = 0.5000	Whole Body	Thyroid	TEDE
Delta dose (rem)	1.0991E-07	3.4004E-07	1.2195E-07
Accumulated dose (rem)	1.0991E-07	3.4004E-07	1.2195E-07

Control Room (CR) Doses:

Time (h) = 0.5000	Whole Body	Thyroid	TEDE
Delta dose (rem)	6.6363E-09	4.1427E-07	2.1315E-08
Accumulated dose (rem)	6.6363E-09	4.1427E-07	2.1315E-08

Exclusion Area Boundary (EAB) Doses:

Time (h) = 2.0000	Whole Body	Thyroid	TEDE
Delta dose (rem)	2.9759E-04	5.4263E-04	3.1800E-04
Accumulated dose (rem)	2.9819E-04	5.4450E-04	3.1867E-04

Low Population Zone (LPZ) Doses:

Time (h) = 2.0000	Whole Body	Thyroid	TEDE
Delta dose (rem)	5.4184E-05	9.8800E-05	5.7899E-05
Accumulated dose (rem)	5.4293E-05	9.9140E-05	5.8021E-05

Control Room (CR) Doses:

Time (h) = 2.0000	Whole Body	Thyroid	TEDE
Delta dose (rem)	1.0111E-05	3.3460E-04	2.2565E-05
Accumulated dose (rem)	1.0118E-05	3.3502E-04	2.2586E-05

Exclusion Area Boundary (EAB) Doses:

```
Time (h) =    8.0000    Whole Body   Thyroid       TEDE
Delta dose (rem)         2.4266E-02  6.4402E-02  2.6596E-02
Accumulated dose (rem)   2.4565E-02  6.4946E-02  2.6915E-02

Low Population Zone (LPZ) Doses:

Time (h) =    8.0000    Whole Body   Thyroid       TEDE
Delta dose (rem)         4.4183E-03  1.1726E-02  4.8425E-03
Accumulated dose (rem)   4.4726E-03  1.1825E-02  4.9005E-03

Control Room (CR) Doses:

Time (h) =    8.0000    Whole Body   Thyroid       TEDE
Delta dose (rem)         2.8267E-03  6.4628E-02  5.1732E-03
Accumulated dose (rem)   2.8368E-03  6.4963E-02  5.1958E-03

Exclusion Area Boundary (EAB) Doses:

Time (h) =   24.0000    Whole Body   Thyroid       TEDE
Delta dose (rem)         1.4433E-01  5.7042E-01  1.6302E-01
Accumulated dose (rem)   1.6889E-01  6.3536E-01  1.8994E-01

Low Population Zone (LPZ) Doses:

Time (h) =   24.0000    Whole Body   Thyroid       TEDE
Delta dose (rem)         1.8608E-02  7.3545E-02  2.1019E-02
Accumulated dose (rem)   2.3081E-02  8.5370E-02  2.5919E-02

Control Room (CR) Doses:

Time (h) =   24.0000    Whole Body   Thyroid       TEDE
Delta dose (rem)         1.9896E-02  5.4482E-01  3.7794E-02
Accumulated dose (rem)   2.2732E-02  6.0978E-01  4.2990E-02

Exclusion Area Boundary (EAB) Doses:

Time (h) =   48.0000    Whole Body   Thyroid       TEDE
Delta dose (rem)         0.0000E+00  0.0000E+00  0.0000E+00
Accumulated dose (rem)   1.6889E-01  6.3536E-01  1.8994E-01

Low Population Zone (LPZ) Doses:

Time (h) =   48.0000    Whole Body   Thyroid       TEDE
Delta dose (rem)         7.7231E-03  7.5043E-02  1.0103E-02
Accumulated dose (rem)   3.0804E-02  1.6041E-01  3.6022E-02

Control Room (CR) Doses:

Time (h) =   48.0000    Whole Body   Thyroid       TEDE
Delta dose (rem)         1.4547E-02  3.7835E-01  2.6544E-02
Accumulated dose (rem)   3.7279E-02  9.8813E-01  6.9533E-02

Exclusion Area Boundary (EAB) Doses:

Time (h) =   72.0000    Whole Body   Thyroid       TEDE
Delta dose (rem)         0.0000E+00  0.0000E+00  0.0000E+00
Accumulated dose (rem)   1.6889E-01  6.3536E-01  1.8994E-01

Low Population Zone (LPZ) Doses:
```

Time (h) = 72.0000	Whole Body	Thyroid	TEDE
Delta dose (rem)	8.3008E-03	9.7295E-02	1.1349E-02
Accumulated dose (rem)	3.9105E-02	2.5771E-01	4.7371E-02

Control Room (CR) Doses:

Time (h) = 72.0000	Whole Body	Thyroid	TEDE
Delta dose (rem)	1.2917E-02	4.6878E-01	2.7594E-02
Accumulated dose (rem)	5.0195E-02	1.4569E+00	9.7128E-02

Exclusion Area Boundary (EAB) Doses:

Time (h) = 96.0000	Whole Body	Thyroid	TEDE
Delta dose (rem)	0.0000E+00	0.0000E+00	0.0000E+00
Accumulated dose (rem)	1.6889E-01	6.3536E-01	1.8994E-01

Low Population Zone (LPZ) Doses:

Time (h) = 96.0000	Whole Body	Thyroid	TEDE
Delta dose (rem)	9.3414E-03	1.1404E-01	1.2891E-02
Accumulated dose (rem)	4.8446E-02	3.7175E-01	6.0262E-02

Control Room (CR) Doses:

Time (h) = 96.0000	Whole Body	Thyroid	TEDE
Delta dose (rem)	1.5015E-02	5.5118E-01	3.2161E-02
Accumulated dose (rem)	6.5210E-02	2.0081E+00	1.2929E-01

Exclusion Area Boundary (EAB) Doses:

Time (h) = 120.0000	Whole Body	Thyroid	TEDE
Delta dose (rem)	0.0000E+00	0.0000E+00	0.0000E+00
Accumulated dose (rem)	1.6889E-01	6.3536E-01	1.8994E-01

Low Population Zone (LPZ) Doses:

Time (h) = 120.0000	Whole Body	Thyroid	TEDE
Delta dose (rem)	3.3946E-03	4.2506E-02	4.7130E-03
Accumulated dose (rem)	5.1841E-02	4.1426E-01	6.4975E-02

Control Room (CR) Doses:

Time (h) = 120.0000	Whole Body	Thyroid	TEDE
Delta dose (rem)	9.1293E-03	3.0278E-01	1.8515E-02
Accumulated dose (rem)	7.4340E-02	2.3109E+00	1.4780E-01

Exclusion Area Boundary (EAB) Doses:

Time (h) = 168.0000	Whole Body	Thyroid	TEDE
Delta dose (rem)	0.0000E+00	0.0000E+00	0.0000E+00
Accumulated dose (rem)	1.6889E-01	6.3536E-01	1.8994E-01

Low Population Zone (LPZ) Doses:

Time (h) = 168.0000	Whole Body	Thyroid	TEDE
Delta dose (rem)	6.9973E-03	9.1603E-02	9.8294E-03
Accumulated dose (rem)	5.8838E-02	5.0586E-01	7.4805E-02

Control Room (CR) Doses:

Time (h) = 168.0000	Whole Body	Thyroid	TEDE
Delta dose (rem)	1.7231E-02	6.4543E-01	3.7176E-02
Accumulated dose (rem)	9.1571E-02	2.9563E+00	1.8498E-01

Exclusion Area Boundary (EAB) Doses:

Time (h) = 336.0000	Whole Body	Thyroid	TEDE
Delta dose (rem)	0.0000E+00	0.0000E+00	0.0000E+00
Accumulated dose (rem)	1.6889E-01	6.3536E-01	1.8994E-01

Low Population Zone (LPZ) Doses:

Time (h) = 336.0000	Whole Body	Thyroid	TEDE
Delta dose (rem)	2.0884E-02	3.2365E-01	3.0853E-02
Accumulated dose (rem)	7.9721E-02	8.2951E-01	1.0566E-01

Control Room (CR) Doses:

Time (h) = 336.0000	Whole Body	Thyroid	TEDE
Delta dose (rem)	5.2532E-02	2.2850E+00	1.2289E-01
Accumulated dose (rem)	1.4410E-01	5.2413E+00	3.0787E-01

Exclusion Area Boundary (EAB) Doses:

Time (h) = 720.0000	Whole Body	Thyroid	TEDE
Delta dose (rem)	0.0000E+00	0.0000E+00	0.0000E+00
Accumulated dose (rem)	1.6889E-01	6.3536E-01	1.8994E-01

Low Population Zone (LPZ) Doses:

Time (h) = 720.0000	Whole Body	Thyroid	TEDE
Delta dose (rem)	1.8351E-02	4.3578E-01	3.1761E-02
Accumulated dose (rem)	9.8073E-02	1.2653E+00	1.3742E-01

Control Room (CR) Doses:

Time (h) = 720.0000	Whole Body	Thyroid	TEDE
Delta dose (rem)	4.6974E-02	3.0814E+00	1.4176E-01
Accumulated dose (rem)	1.9108E-01	8.3227E+00	4.4963E-01

837

##
I-131 Summary
##

Time (hr)	Containment I-131 (Curies)	(Node 1) Inboard MSL I-131 (Curies)	(Node 1) Inboard MSL I-131 (Curies)
0.000	5.2640E+03	6.4922E-07	5.9299E-13
0.401	3.3308E+06	3.2537E-01	4.0944E-10
0.500	4.0234E+06	5.0079E-01	5.0526E-10
0.800	7.9873E+06	1.3710E+00	1.0074E-09
1.100	1.1677E+07	2.7806E+00	1.4981E-09
1.400	1.5110E+07	4.6902E+00	1.9780E-09
1.700	1.8302E+07	7.0631E+00	2.4477E-09
2.000	2.1269E+07	9.8652E+00	2.9079E-09
2.300	1.6051E+07	1.1371E+01	1.6502E-09
2.600	1.2203E+07	1.2740E+01	1.5573E-09
2.900	9.3660E+06	1.3991E+01	1.4884E-09
3.200	7.2733E+06	1.5139E+01	1.4372E-09

3.500	5.7299E+06	1.6195E+01	1.3990E-09
3.800	4.5914E+06	1.7171E+01	1.3705E-09
4.100	3.7515E+06	1.8073E+01	1.3490E-09
4.400	3.1318E+06	1.8909E+01	1.3327E-09
4.700	2.6745E+06	1.9685E+01	1.3203E-09
5.000	2.3368E+06	2.0405E+01	1.3108E-09
5.300	2.1739E+06	2.1075E+01	1.3054E-09
5.600	2.0386E+06	2.1699E+01	1.3007E-09
5.900	1.9261E+06	2.2279E+01	1.2965E-09
6.200	1.8326E+06	2.2819E+01	1.2927E-09
6.500	1.7547E+06	2.3321E+01	1.2893E-09
6.800	1.6899E+06	2.3788E+01	1.2863E-09
7.100	1.6358E+06	2.4223E+01	1.2835E-09
7.400	1.5907E+06	2.4627E+01	1.2809E-09
7.700	1.5530E+06	2.5002E+01	1.2784E-09
8.000	1.5215E+06	2.5351E+01	1.2762E-09
8.300	1.4951E+06	2.5675E+01	1.2740E-09
8.600	1.4754E+06	2.5975E+01	1.2720E-09
8.900	1.4584E+06	2.6254E+01	1.2701E-09
9.200	1.4437E+06	2.6513E+01	1.2683E-09
9.500	1.4310E+06	2.6753E+01	1.2664E-09
9.800	1.4199E+06	2.6974E+01	1.2647E-09
10.100	1.4103E+06	2.7180E+01	1.2629E-09
10.400	1.4018E+06	2.7369E+01	1.2612E-09
24.000	1.2895E+06	2.8867E+01	1.1920E-09
48.000	1.1754E+06	2.4409E+01	9.6338E-10
72.000	1.0714E+06	2.2145E+01	8.7811E-10
96.000	9.7667E+05	2.0181E+01	8.0044E-10
120.000	8.9030E+05	1.8285E+01	7.0915E-10
168.000	7.3978E+05	1.5188E+01	5.8926E-10
336.000	3.8690E+05	7.9432E+00	3.0818E-10
720.000	8.7935E+04	1.8053E+00	7.0043E-11

Time (hr)	(Node 2) Outboard MSL I-131 (Curies)	(Node 2) Outboard MSL I-131 (Curies)	Condenser I-131 (Curies)
0.000	2.6019E-11	9.1972E-07	3.0999E-11
0.401	9.3507E-03	4.5376E-01	1.1337E-02
0.500	1.7909E-02	6.9590E-01	2.1811E-02
0.800	7.3594E-02	1.8960E+00	9.0936E-02
1.100	1.9914E-01	3.8398E+00	2.5018E-01
1.400	4.2407E-01	6.4688E+00	5.4241E-01
1.700	7.7404E-01	9.7289E+00	1.0086E+00
2.000	1.2712E+00	1.3570E+01	1.6881E+00
2.300	1.8834E+00	1.5620E+01	2.5580E+00
2.600	2.5569E+00	1.7382E+01	3.5607E+00
2.900	3.2806E+00	1.8919E+01	4.6848E+00
3.200	4.0451E+00	2.0276E+01	5.9211E+00
3.500	4.8424E+00	2.1486E+01	7.2625E+00
3.800	5.6653E+00	2.2578E+01	8.7027E+00
4.100	6.5078E+00	2.3569E+01	1.0237E+01
4.400	7.3645E+00	2.4477E+01	1.1860E+01
4.700	8.2308E+00	2.5312E+01	1.3569E+01
5.000	9.1024E+00	2.6085E+01	1.5361E+01
5.300	9.9759E+00	2.6803E+01	1.7231E+01
5.600	1.0848E+01	2.7475E+01	1.9177E+01
5.900	1.1716E+01	2.8102E+01	2.1196E+01
6.200	1.2577E+01	2.8690E+01	2.3286E+01
6.500	1.3430E+01	2.9240E+01	2.5443E+01
6.800	1.4272E+01	2.9754E+01	2.7666E+01
7.100	1.5102E+01	3.0236E+01	2.9951E+01

7.400	1.5918E+01	3.0688E+01	3.2296E+01
7.700	1.6719E+01	3.1111E+01	3.4700E+01
8.000	1.7505E+01	3.1507E+01	3.7158E+01
8.300	1.8274E+01	3.1878E+01	3.9670E+01
8.600	1.9025E+01	3.2226E+01	4.2232E+01
8.900	1.9758E+01	3.2552E+01	4.4843E+01
9.200	2.0473E+01	3.2857E+01	4.7500E+01
9.500	2.1169E+01	3.3143E+01	5.0201E+01
9.800	2.1846E+01	3.3410E+01	5.2945E+01
10.100	2.2503E+01	3.3659E+01	5.5729E+01
10.400	2.3141E+01	3.3893E+01	5.8551E+01
24.000	3.6320E+01	3.6282E+01	2.0411E+02
48.000	3.7672E+01	3.4251E+01	3.1175E+02
72.000	3.4498E+01	3.1352E+01	3.9669E+02
96.000	3.1442E+01	2.8593E+01	4.5964E+02
120.000	3.5400E+01	3.1886E+01	4.9043E+02
168.000	3.1107E+01	2.7716E+01	5.3523E+02
336.000	1.6327E+01	1.4524E+01	4.7457E+02
720.000	3.7108E+00	3.3011E+00	1.6811E+02

Time (hr)	Environment I-131 (Curies)	Control Room I-131 (Curies)	Hold I-131 (Curies)
0.000	1.7278E-17	1.2621E-20	3.0465E-04
0.401	4.5875E-06	3.0186E-09	1.4535E+02
0.500	1.1016E-05	7.0708E-09	2.2112E+02
0.800	7.2043E-05	4.3072E-08	5.9764E+02
1.100	2.6613E-04	1.4928E-07	1.2127E+03
1.400	7.2773E-04	3.8424E-07	2.0494E+03
1.700	1.6418E-03	8.1735E-07	3.0920E+03
2.000	3.2416E-03	1.5240E-06	4.3258E+03
2.300	5.7832E-03	2.1817E-06	5.4786E+03
2.600	9.4531E-03	3.1332E-06	6.3492E+03
2.900	1.4404E-02	4.3498E-06	7.0116E+03
3.200	2.0777E-02	5.8070E-06	7.5206E+03
3.500	2.8701E-02	7.4841E-06	7.9163E+03
3.800	3.8300E-02	9.3637E-06	8.2285E+03
4.100	4.9690E-02	1.1431E-05	8.4790E+03
4.400	6.2981E-02	1.3675E-05	8.6840E+03
4.700	7.8278E-02	1.6084E-05	8.8554E+03
5.000	9.5682E-02	1.8649E-05	9.0020E+03
5.300	1.1529E-01	2.1364E-05	9.1332E+03
5.600	1.3719E-01	2.4220E-05	9.2549E+03
5.900	1.6149E-01	2.7213E-05	9.3688E+03
6.200	1.8825E-01	3.0336E-05	9.4762E+03
6.500	2.1757E-01	3.3584E-05	9.5781E+03
6.800	2.4953E-01	3.6953E-05	9.6755E+03
7.100	2.8420E-01	4.0437E-05	9.7690E+03
7.400	3.2166E-01	4.4032E-05	9.8594E+03
7.700	3.6198E-01	4.7734E-05	9.9470E+03
8.000	4.0522E-01	5.1539E-05	1.0032E+04
8.300	4.5146E-01	4.2756E-05	1.0116E+04
8.600	5.0074E-01	3.7425E-05	1.0198E+04
8.900	5.5315E-01	3.4416E-05	1.0279E+04
9.200	6.0872E-01	3.2971E-05	1.0358E+04
9.500	6.6752E-01	3.2581E-05	1.0437E+04
9.800	7.2959E-01	3.2907E-05	1.0515E+04
10.100	7.9500E-01	3.3721E-05	1.0592E+04
10.400	8.6377E-01	3.4870E-05	1.0669E+04
24.000	7.9410E+00	1.2766E-04	1.3846E+04
48.000	2.1687E+01	7.0143E-05	1.5656E+04

72.000	4.0559E+01	8.9634E-05	1.7053E+04
96.000	6.3332E+01	1.0410E-04	1.8096E+04
120.000	8.8475E+01	8.3060E-05	1.8835E+04
168.000	1.4316E+02	9.0771E-05	1.9576E+04
336.000	3.3731E+02	8.0663E-05	1.7631E+04
720.000	5.9887E+02	2.8607E-05	8.1416E+03

##

Cumulative Dose Summary

##

	Exclusion Area Bounda		Low Population Zone (		Control Room (CR)	
Time (hr)	Thyroid (rem)	TEDE (rem)	Thyroid (rem)	TEDE (rem)	Thyroid (rem)	TEDE (rem)
0.000	0.0000E+00	0.0000E+00	0.0000E+00	0.0000E+00	0.0000E+00	0.0000E+00
0.401	7.7862E-07	2.8319E-07	1.4177E-07	5.1562E-08	1.4617E-07	7.5257E-09
0.500	1.8676E-06	6.6979E-07	3.4004E-07	1.2195E-07	4.1427E-07	2.1315E-08
0.800	1.2180E-05	4.5184E-06	2.2177E-06	8.2268E-07	3.8990E-06	2.0305E-07
1.100	4.4922E-05	1.9738E-05	8.1791E-06	3.5939E-06	1.8172E-05	1.0044E-06
1.400	1.2267E-04	6.2201E-05	2.2335E-05	1.1325E-05	5.8951E-05	3.5171E-06
1.700	2.7629E-04	1.5343E-04	5.0306E-05	2.7935E-05	1.5214E-04	9.7155E-06
2.000	5.4450E-04	3.1867E-04	9.9140E-05	5.8021E-05	3.3502E-04	2.2586E-05
2.300	9.6941E-04	5.8241E-04	1.7651E-04	1.0604E-04	6.2588E-04	4.4090E-05
2.600	1.5811E-03	9.5685E-04	2.8787E-04	1.7422E-04	1.0438E-03	7.6143E-05
2.900	2.4035E-03	1.4484E-03	4.3762E-04	2.6372E-04	1.6321E-03	1.2224E-04
3.200	3.4585E-03	2.0610E-03	6.2971E-04	3.7526E-04	2.4293E-03	1.8559E-04
3.500	4.7659E-03	2.7965E-03	8.6775E-04	5.0918E-04	3.4702E-03	2.6912E-04
3.800	6.3441E-03	3.6551E-03	1.1551E-03	6.6550E-04	4.7862E-03	3.7548E-04
4.100	8.2103E-03	4.6357E-03	1.4949E-03	8.4404E-04	6.4057E-03	5.0703E-04
4.400	1.0380E-02	5.7362E-03	1.8900E-03	1.0444E-03	8.3550E-03	6.6589E-04
4.700	1.2870E-02	6.9537E-03	2.3433E-03	1.2661E-03	1.0658E-02	8.5394E-04
5.000	1.5693E-02	8.2847E-03	2.8573E-03	1.5084E-03	1.3338E-02	1.0728E-03
5.300	1.8863E-02	9.7254E-03	3.4344E-03	1.7708E-03	1.6416E-02	1.3240E-03
5.600	2.2393E-02	1.1272E-02	4.0771E-03	2.0523E-03	1.9911E-02	1.6087E-03
5.900	2.6295E-02	1.2919E-02	4.7876E-03	2.3522E-03	2.3843E-02	1.9280E-03
6.200	3.0581E-02	1.4663E-02	5.5681E-03	2.6698E-03	2.8229E-02	2.2829E-03
6.500	3.5262E-02	1.6499E-02	6.4204E-03	3.0041E-03	3.3086E-02	2.6742E-03
6.800	4.0349E-02	1.8424E-02	7.3466E-03	3.3545E-03	3.8429E-02	3.1025E-03
7.100	4.5852E-02	2.0431E-02	8.3485E-03	3.7201E-03	4.4275E-02	3.5684E-03
7.400	5.1780E-02	2.2518E-02	9.4278E-03	4.1001E-03	5.0637E-02	4.0723E-03
7.700	5.8142E-02	2.4681E-02	1.0586E-02	4.4938E-03	5.7528E-02	4.6147E-03
8.000	6.4946E-02	2.6915E-02	1.1825E-02	4.9005E-03	6.4963E-02	5.1958E-03
8.300	6.8678E-02	2.9093E-02	1.2306E-02	5.1813E-03	7.1961E-02	5.7669E-03
8.600	7.2645E-02	3.1328E-02	1.2818E-02	5.4695E-03	7.7904E-02	6.2933E-03
8.900	7.6851E-02	3.3617E-02	1.3360E-02	5.7646E-03	8.3221E-02	6.7914E-03
9.200	8.1300E-02	3.5956E-02	1.3934E-02	6.0662E-03	8.8201E-02	7.2725E-03
9.500	8.5996E-02	3.8342E-02	1.4539E-02	6.3739E-03	9.3037E-02	7.7445E-03
9.800	9.0940E-02	4.0774E-02	1.5177E-02	6.6873E-03	9.7858E-02	8.2127E-03
10.100	9.6136E-02	4.3247E-02	1.5846E-02	7.0063E-03	1.0275E-01	8.6810E-03
10.400	1.0159E-01	4.5761E-02	1.6549E-02	7.3303E-03	1.0778E-01	9.1522E-03
24.000	6.3536E-01	1.8994E-01	8.5370E-02	2.5919E-02	6.0978E-01	4.2990E-02
48.000	6.3536E-01	1.8994E-01	1.6041E-01	3.6022E-02	9.8813E-01	6.9533E-02
72.000	6.3536E-01	1.8994E-01	2.5771E-01	4.7371E-02	1.4569E+00	9.7128E-02
96.000	6.3536E-01	1.8994E-01	3.7175E-01	6.0262E-02	2.0081E+00	1.2929E-01
120.000	6.3536E-01	1.8994E-01	4.1426E-01	6.4975E-02	2.3109E+00	1.4780E-01
168.000	6.3536E-01	1.8994E-01	5.0586E-01	7.4805E-02	2.9563E+00	1.8498E-01
336.000	6.3536E-01	1.8994E-01	8.2951E-01	1.0566E-01	5.2413E+00	3.0787E-01
720.000	6.3536E-01	1.8994E-01	1.2653E+00	1.3742E-01	8.3227E+00	4.4963E-01

##

Worst Two-Hour Doses

##

Exclusion Area Boundary (EAB)

Time (hr)	Whole Body (rem)	Thyroid (rem)	TEDE (rem)
10.4	1.8639E-02	7.8497E-02	2.1203E-02

```
#######################################################################
   RADTRAD Version 3.03 (Spring 2001) run on  6/13/2006  at 12:44:35
#######################################################################

#######################################################################
                    File information
#######################################################################

 Plant file           = C:\Documents and Settings\Aleem Boatright\My Documents\My
Work\Exelon\AST\Limerick\LGS LOCA\RADTRAD\LGS LOCA ECCS Leak - New Design Basis -
225cfm CR Unfilt Inleak - Chlorine Mode.psf
 Inventory file       = c:\program files\radtrad3-03\defaults\limerick ast eccs
source terms.nif
 Release file         = c:\program files\radtrad3-03\defaults\bwr_dba.rft
 Dose Conversion file = c:\program files\radtrad3-03\defaults\fgr11&12.inp



     #####    ####   #####    #  #     #  #####   #    #  #####
     #    #  #       #        #  ##    #  #    #  #    #    #
     #    #  #       #        #  # #   #  #    #  #    #    #
     #####    ####   ####     #  #  #  #  #####   #    #    #
     #            #  #        #  #   # #  #       #    #    #
     #            #  #        #  #    ##  #       #    #    #
     #        ####   #        #  #     #  #        ####     #


 Radtrad 3.03 4/15/2001
 ECCS Leak, 15.5 minute SC Drawdown - 10% Flashing Fraction - 99% Aerosol, 95% E&O
RERS Filters - 99% SGTS Filters - 99% Aerosol, 99% E&O CREFAS Filters - 225cfm
Unfiltered Inleakage - No CREFAS Delay - Control Room in Chlorine Mode - 3000cfm -
10% (2700cfm
 Nuclide Inventory File:
 c:\program files\radtrad3-03\defaults\limerick ast eccs source terms.nif
 Plant Power Level:
  3.5270E+03
 Compartments:
   5
 Compartment 1:
 ECCS Fluid
   3
  9.5989E+05
   0
   0
   0
   0
   0
 Compartment 2:
 Reactor Enclosure
   3
  1.8000E+06
   0
   0
   1
   0
   0
 Compartment 3:
```

```
Environment
  2
 0.0000E+00
  0
  0
  0
  0
  0
Compartment 4:
Control Room
  1
 1.2600E+05
  0
  0
  1
  0
  0
Compartment 5:
SGTS Node
  3
 1.0000E+00
  0
  0
  0
  0
  0
Pathways:
  6
Pathway 1:
ECCS Fluid to Reactor Enclosure
  1
  2
  2
Pathway 2:
Filtered Environment to Control Room
  3
  4
  2
Pathway 3:
Control Room to  Environment
  4
  3
  2
Pathway 4:
Unfiltered Environment to Control Room
  3
  4
  2
Pathway 5:
Reactor Enclosure to SGTS Node
  2
  5
  2
Pathway 6:
SGTS Node to  Environment
  5
  3
  2
End of Plant Model File
Scenario Description Name:
```

```
Plant Model Filename:

Source Term:
  1
  1   1.0000E+00
c:\program files\radtrad3-03\defaults\fgr11&12.inp
c:\program files\radtrad3-03\defaults\bwr_dba.rft
  0.0000E+00
  0
  0.0000E+00   9.7000E-01   3.0000E-02   1.0000E+00
Overlying Pool:
  0
  0.0000E+00
  0
  0
  0
  0
Compartments:
  5
Compartment 1:
  0
  1
  0
  0
  0
  0
  0
  0
  0
Compartment 2:
  0
  1
  0
  0
  0
  0
  1
  5.1000E+04
  4
  0.0000E+00   0.0000E+00   0.0000E+00   0.0000E+00
  1.6700E-02   0.0000E+00   0.0000E+00   0.0000E+00
  2.5830E-01   9.9000E+01   9.5000E+01   9.5000E+01
  7.2000E+02   0.0000E+00   0.0000E+00   0.0000E+00
  0
  0
Compartment 3:
  0
  1
  0
  0
  0
  0
  0
  0
  0
Compartment 4:
  0
  1
  0
```

```
  0
  0
  0
  1
  2.7000E+03
  3
  0.0000E+00   9.9000E+01   9.5000E+01   9.5000E+01
  5.0000E-01   9.9000E+01   9.5000E+01   9.5000E+01
  7.2000E+02   0.0000E+00   0.0000E+00   0.0000E+00
  0
  0
Compartment 5:
  0
  1
  0
  0
  0
  0
  0
  0
  0
Pathways:
  6
Pathway 1:
  0
  0
  0
  0
  0
  1
  3
  0.0000E+00   5.0000E+00   9.0000E+01   9.0000E+01   9.0000E+01
  2.4000E+01   5.0000E+00   9.0000E+01   9.0000E+01   9.0000E+01
  7.2000E+02   0.0000E+00   0.0000E+00   0.0000E+00   0.0000E+00
  0
  0
  0
  0
  0
  0
Pathway 2:
  0
  0
  0
  0
  0
  1
  3
  0.0000E+00   0.0000E+00   9.9000E+01   9.5000E+01   9.5000E+01
  5.0000E-01   0.0000E+00   9.9000E+01   9.5000E+01   9.5000E+01
  7.2000E+02   0.0000E+00   0.0000E+00   0.0000E+00   0.0000E+00
  0
  0
  0
  0
  0
  0
Pathway 3:
  0
  0
```

```
  0
  0
  0
  1
  3
  0.0000E+00   2.2500E+02   1.0000E+02   1.0000E+02   1.0000E+02
  5.0000E-01   2.2500E+02   1.0000E+02   1.0000E+02   1.0000E+02
  7.2000E+02   0.0000E+00   0.0000E+00   0.0000E+00   0.0000E+00
  0
  0
  0
  0
  0
  0
Pathway 4:
  0
  0
  0
  0
  0
  1
  2
  0.0000E+00   2.2500E+02   0.0000E+00   0.0000E+00   0.0000E+00
  7.2000E+02   0.0000E+00   0.0000E+00   0.0000E+00   0.0000E+00
  0
  0
  0
  0
  0
  0
Pathway 5:
  0
  0
  0
  0
  0
  1
 10
  0.0000E+00   9.0000E+07   0.0000E+00   0.0000E+00   0.0000E+00
  1.6700E-02   9.0000E+07   0.0000E+00   0.0000E+00   0.0000E+00
  5.8300E-02   4.0930E+04   0.0000E+00   0.0000E+00   0.0000E+00
  1.0000E-01   2.1230E+04   0.0000E+00   0.0000E+00   0.0000E+00
  1.4170E-01   1.4690E+04   0.0000E+00   0.0000E+00   0.0000E+00
  1.8330E-01   1.1430E+04   0.0000E+00   0.0000E+00   0.0000E+00
  2.2500E-01   9.4760E+03   0.0000E+00   0.0000E+00   0.0000E+00
  2.5830E-01   7.8960E+03   9.9000E+01   9.5000E+01   9.5000E+01
  2.6670E-01   6.8170E+03   9.9000E+01   9.5000E+01   9.5000E+01
  3.9583E-01   5.0000E+03   9.9000E+01   9.5000E+01   9.5000E+01
  0
  0
  0
  0
  0
  0
Pathway 6:
  0
  0
  0
  0
  0
```

```
  1
 10
  0.0000E+00   9.0000E+07   0.0000E+00   0.0000E+00   0.0000E+00
  1.6700E-02   9.0000E+07   0.0000E+00   0.0000E+00   0.0000E+00
  5.8300E-02   4.0930E+04   0.0000E+00   0.0000E+00   0.0000E+00
  1.0000E-01   2.1230E+04   0.0000E+00   0.0000E+00   0.0000E+00
  1.4170E-01   1.4690E+04   0.0000E+00   0.0000E+00   0.0000E+00
  1.8330E-01   1.1430E+04   0.0000E+00   0.0000E+00   0.0000E+00
  2.2500E-01   9.4760E+03   0.0000E+00   0.0000E+00   0.0000E+00
  2.5830E-01   7.8960E+03   9.9000E+01   9.9000E+01   9.9000E+01
  2.6670E-01   6.8170E+03   9.9000E+01   9.9000E+01   9.9000E+01
  3.9580E-01   5.0000E+03   9.9000E+01   9.9000E+01   9.9000E+01
  0
  0
  0
  0
  0
  0
Dose Locations:
  3
Location 1:
EAB
  3
  1
  2
  0.0000E+00   3.1800E-04
  8.0000E+00   0.0000E+00
  1
  2
  0.0000E+00   3.5000E-04
  8.0000E+00   0.0000E+00
  0
Location 2:
LPZ
  3
  1
  5
  0.0000E+00   5.7900E-05
  8.0000E+00   4.1000E-05
  2.4000E+01   1.9500E-05
  9.6000E+01   6.6800E-06
  7.2000E+02   2.6200E-06
  1
  4
  0.0000E+00   3.5000E-04
  8.0000E+00   1.8000E-04
  2.4000E+01   2.3000E-04
  7.2000E+02   0.0000E+00
  0
Location 3:
Control Room
  4
  0
  1
  2
  0.0000E+00   3.5000E-04
  7.2000E+02   0.0000E+00
  1
  4
  0.0000E+00   1.0000E+00
```

```
  2.4000E+01   6.0000E-01
  9.6000E+01   4.0000E-01
  7.2000E+02   0.0000E+00
 Effective Volume Location:
  1
  6
  0.0000E+00   6.8800E-03
  2.0000E+00   5.1700E-03
  8.0000E+00   2.0400E-03
  2.4000E+01   1.2900E-03
  9.6000E+01   9.6300E-04
  7.2000E+02   0.0000E+00
 Simulation Parameters:
  4
  0.0000E+00   1.6670E-03
  1.6700E-02   2.5000E-02
  2.5830E-01   1.0000E-01
  1.2000E+01   0.0000E+00
 Output Filename:
 C:\Documents and Settings\Aleem Boatright\My Documents\My
Work\Exelon\AST\Limerick\LGS LOCA\RADTRAD\LGS LOCA ECCS Leak - New Design Basis -
225cfm CR Unfilt Inleak - Chlorine Mode.o0
  1
  2
  1
  0
  1
 End of Scenario File
```

```
#######################################################################
   RADTRAD Version 3.03 (Spring 2001) run on  6/13/2006  at 12:44:35
#######################################################################

#######################################################################
                     Plant Description
#######################################################################

Number of Nuclides =  60

Inventory Power =   1.0000E+00 MWth
Plant Power Level =   3.5270E+03 MWth

Number of compartments    =   5

Compartment information

Compartment number  1  (Source term fraction =   1.0000E+00
)
Name: ECCS Fluid
Compartment volume =   9.5989E+05 (Cubic feet)
Compartment type is Normal
Pathways into and out of compartment  1
   Exit Pathway Number    1: ECCS Fluid to Reactor Enclosure

Compartment number  2
Name: Reactor Enclosure
Compartment volume =   1.8000E+06 (Cubic feet)
Compartment type is Normal
Removal devices within compartment:
     Filter(s)
Pathways into and out of compartment  2
   Inlet Pathway Number   1: ECCS Fluid to Reactor Enclosure
   Exit Pathway Number    5: Reactor Enclosure to SGTS Node

Compartment number  3
Name: Environment
Compartment type is Environment
Pathways into and out of compartment  3
   Inlet Pathway Number   3: Control Room to  Environment
   Inlet Pathway Number   6: SGTS Node to  Environment
   Exit Pathway Number    2: Filtered Environment to Control Room
   Exit Pathway Number    4: Unfiltered Environment to Control Room

Compartment number  4
Name: Control Room
Compartment volume =   1.2600E+05 (Cubic feet)
Compartment type is Control Room
Removal devices within compartment:
     Filter(s)
Pathways into and out of compartment  4
   Inlet Pathway Number   2: Filtered Environment to Control Room
   Inlet Pathway Number   4: Unfiltered Environment to Control Room
   Exit Pathway Number    3: Control Room to  Environment

Compartment number  5
Name: SGTS Node
Compartment volume =   1.0000E+00 (Cubic feet)
Compartment type is Normal
```

```
Pathways into and out of compartment  5
   Inlet Pathway Number   5: Reactor Enclosure to SGTS Node
   Exit Pathway Number    6: SGTS Node to  Environment

Total number of pathways =   6
```

```
#######################################################################
   RADTRAD Version 3.03 (Spring 2001) run on  6/13/2006  at 12:44:35
#######################################################################
```

```
 ####   #    #  #####  #####   #    #  #####
#    #  #    #    #    #    #  #    #    #
#    #  #    #    #    #    #  #    #    #
#    #  #    #    #    #####   #    #    #
#    #  #    #    #    #       #    #    #
#    #  #    #    #    #       #    #    #
 ####    ####     #    #        ####     #
```

```
#######################################################################
                                Dose Output
#######################################################################
```

Detailed model information at time (H) = 0.0167

EAB Doses:

Time (h) = 0.0167	Whole Body	Thyroid	TEDE
Delta dose (rem)	3.2507E-05	6.7324E-03	2.4539E-04
Accumulated dose (rem)	3.2507E-05	6.7324E-03	2.4539E-04

LPZ Doses:

Time (h) = 0.0167	Whole Body	Thyroid	TEDE
Delta dose (rem)	5.9187E-06	1.2258E-03	4.4679E-05
Accumulated dose (rem)	5.9187E-06	1.2258E-03	4.4679E-05

Control Room Doses:

Time (h) = 0.0167	Whole Body	Thyroid	TEDE
Delta dose (rem)	1.8551E-08	8.5149E-05	2.7110E-06
Accumulated dose (rem)	1.8551E-08	8.5149E-05	2.7110E-06

Detailed model information at time (H) = 0.0583

EAB Doses:

Time (h) = 0.0583	Whole Body	Thyroid	TEDE
Delta dose (rem)	3.7174E-04	7.7657E-02	2.8269E-03
Accumulated dose (rem)	4.0424E-04	8.4389E-02	3.0723E-03

LPZ Doses:

Time (h) = 0.0583	Whole Body	Thyroid	TEDE
Delta dose (rem)	6.7684E-05	1.4139E-02	5.1472E-04
Accumulated dose (rem)	7.3603E-05	1.5365E-02	5.5939E-04

Control Room Doses:

Time (h) = 0.0583	Whole Body	Thyroid	TEDE
Delta dose (rem)	8.1571E-07	3.7783E-03	1.2027E-04

```
Accumulated dose (rem)  8.3426E-07  3.8634E-03  1.2298E-04

Detailed model information at time (H) =    0.1000

EAB Doses:

Time (h) =   0.1000    Whole Body   Thyroid       TEDE
Delta dose (rem)        2.0122E-05  4.2755E-03  1.5526E-04
Accumulated dose (rem)  4.2436E-04  8.8665E-02  3.2276E-03

LPZ Doses:

Time (h) =   0.1000    Whole Body   Thyroid       TEDE
Delta dose (rem)        3.6637E-06  7.7846E-04  2.8269E-05
Accumulated dose (rem)  7.7266E-05  1.6144E-02  5.8766E-04

Control Room Doses:

Time (h) =   0.1000    Whole Body   Thyroid       TEDE
Delta dose (rem)        1.6777E-06  7.8827E-03  2.5084E-04
Accumulated dose (rem)  2.5120E-06  1.1746E-02  3.7382E-04

Detailed model information at time (H) =    0.1417

EAB Doses:

Time (h) =   0.1417    Whole Body   Thyroid       TEDE
Delta dose (rem)        3.7962E-05  8.1988E-03  2.9704E-04
Accumulated dose (rem)  4.6233E-04  9.6864E-02  3.5246E-03

LPZ Doses:

Time (h) =   0.1417    Whole Body   Thyroid       TEDE
Delta dose (rem)        6.9120E-06  1.4928E-03  5.4084E-05
Accumulated dose (rem)  8.4178E-05  1.7637E-02  6.4175E-04

Control Room Doses:

Time (h) =   0.1417    Whole Body   Thyroid       TEDE
Delta dose (rem)        1.6846E-06  8.0509E-03  2.5610E-04
Accumulated dose (rem)  4.1966E-06  1.9797E-02  6.2991E-04

Detailed model information at time (H) =    0.1833

EAB Doses:

Time (h) =   0.1833    Whole Body   Thyroid       TEDE
Delta dose (rem)        5.2248E-05  1.1477E-02  4.1484E-04
Accumulated dose (rem)  5.1457E-04  1.0834E-01  3.9395E-03

LPZ Doses:

Time (h) =   0.1833    Whole Body   Thyroid       TEDE
Delta dose (rem)        9.5130E-06  2.0898E-03  7.5533E-05
Accumulated dose (rem)  9.3691E-05  1.9726E-02  7.1728E-04

Control Room Doses:

Time (h) =   0.1833    Whole Body   Thyroid       TEDE
Delta dose (rem)        1.7517E-06  8.5190E-03  2.7089E-04
```

```
Accumulated dose (rem)  5.9483E-06  2.8316E-02  9.0080E-04

Detailed model information at time (H) =    0.2250

EAB Doses:

Time (h) =   0.2250    Whole Body   Thyroid       TEDE
Delta dose (rem)        6.6379E-05  1.4812E-02  5.3422E-04
Accumulated dose (rem)  5.8095E-04  1.2315E-01  4.4737E-03

LPZ Doses:

Time (h) =   0.2250    Whole Body   Thyroid       TEDE
Delta dose (rem)        1.2086E-05  2.6969E-03  9.7268E-05
Accumulated dose (rem)  1.0578E-04  2.2423E-02  8.1455E-04

Control Room Doses:

Time (h) =   0.2250    Whole Body   Thyroid       TEDE
Delta dose (rem)        1.8850E-06  9.3148E-03  2.9609E-04
Accumulated dose (rem)  7.8333E-06  3.7631E-02  1.1969E-03

Detailed model information at time (H) =    0.2583

EAB Doses:

Time (h) =   0.2583    Whole Body   Thyroid       TEDE
Delta dose (rem)        6.1955E-05  1.4032E-02  5.0507E-04
Accumulated dose (rem)  6.4291E-04  1.3719E-01  4.9788E-03

LPZ Doses:

Time (h) =   0.2583    Whole Body   Thyroid       TEDE
Delta dose (rem)        1.1281E-05  2.5549E-03  9.1960E-05
Accumulated dose (rem)  1.1706E-04  2.4978E-02  9.0651E-04

Control Room Doses:

Time (h) =   0.2583    Whole Body   Thyroid       TEDE
Delta dose (rem)        1.6297E-06  8.1745E-03  2.5976E-04
Accumulated dose (rem)  9.4630E-06  4.5805E-02  1.4567E-03

Detailed model information at time (H) =    0.2667

EAB Doses:

Time (h) =   0.2667    Whole Body   Thyroid       TEDE
Delta dose (rem)        7.6411E-09  1.7487E-06  6.2852E-08
Accumulated dose (rem)  6.4292E-04  1.3719E-01  4.9788E-03

LPZ Doses:

Time (h) =   0.2667    Whole Body   Thyroid       TEDE
Delta dose (rem)        1.3913E-09  3.1839E-07  1.1444E-08
Accumulated dose (rem)  1.1706E-04  2.4978E-02  9.0652E-04

Control Room Doses:

Time (h) =   0.2667    Whole Body   Thyroid       TEDE
Delta dose (rem)        4.2285E-07  2.1435E-03  6.8100E-05
```

```
Accumulated dose (rem)  9.8858E-06  4.7949E-02  1.5248E-03

Detailed model information at time (H) =    0.3958

EAB Doses:

Time (h) =   0.3958    Whole Body   Thyroid       TEDE
Delta dose (rem)        1.4959E-07  3.4703E-05  1.2450E-06
Accumulated dose (rem)  6.4307E-04  1.3722E-01  4.9801E-03

LPZ Doses:

Time (h) =   0.3958    Whole Body   Thyroid       TEDE
Delta dose (rem)        2.7236E-08  6.3185E-06  2.2669E-07
Accumulated dose (rem)  1.1709E-04  2.4985E-02  9.0675E-04

Control Room Doses:

Time (h) =   0.3958    Whole Body   Thyroid       TEDE
Delta dose (rem)        5.8678E-06  3.0123E-02  9.5677E-04
Accumulated dose (rem)  1.5754E-05  7.8072E-02  2.4815E-03

Detailed model information at time (H) =    0.3958

EAB Doses:

Time (h) =   0.3958    Whole Body   Thyroid       TEDE
Delta dose (rem)        4.3685E-11  1.0539E-08  3.7617E-10
Accumulated dose (rem)  6.4307E-04  1.3722E-01  4.9801E-03

LPZ Doses:

Time (h) =   0.3958    Whole Body   Thyroid       TEDE
Delta dose (rem)        7.9540E-12  1.9188E-09  6.8492E-11
Accumulated dose (rem)  1.1709E-04  2.4985E-02  9.0675E-04

Control Room Doses:

Time (h) =   0.3958    Whole Body   Thyroid       TEDE
Delta dose (rem)        1.1976E-09  6.3997E-06  2.0310E-07
Accumulated dose (rem)  1.5755E-05  7.8078E-02  2.4817E-03

Detailed model information at time (H) =    0.5000

EAB Doses:

Time (h) =   0.5000    Whole Body   Thyroid       TEDE
Delta dose (rem)        1.4236E-07  3.4395E-05  1.2275E-06
Accumulated dose (rem)  6.4321E-04  1.3726E-01  4.9813E-03

LPZ Doses:

Time (h) =   0.5000    Whole Body   Thyroid       TEDE
Delta dose (rem)        2.5920E-08  6.2625E-06  2.2350E-07
Accumulated dose (rem)  1.1711E-04  2.4991E-02  9.0697E-04

Control Room Doses:

Time (h) =   0.5000    Whole Body   Thyroid       TEDE
Delta dose (rem)        3.8835E-06  2.0784E-02  6.5959E-04
```

```
Accumulated dose (rem)  1.9638E-05  9.8862E-02  3.1413E-03

Detailed model information at time (H) =    2.0000

EAB Doses:

Time (h) =   2.0000    Whole Body   Thyroid       TEDE
Delta dose (rem)        1.0509E-05  3.5296E-03  1.2138E-04
Accumulated dose (rem)  6.5372E-04  1.4079E-01  5.1027E-03

LPZ Doses:

Time (h) =   2.0000    Whole Body   Thyroid       TEDE
Delta dose (rem)        1.9134E-06  6.4266E-04  2.2101E-05
Accumulated dose (rem)  1.1903E-04  2.5634E-02  9.2907E-04

Control Room Doses:

Time (h) =   2.0000    Whole Body   Thyroid       TEDE
Delta dose (rem)        1.8992E-05  1.2250E-01  3.8739E-03
Accumulated dose (rem)  3.8630E-05  2.2136E-01  7.0152E-03

Detailed model information at time (H) =    8.0000

EAB Doses:

Time (h) =   8.0000    Whole Body   Thyroid       TEDE
Delta dose (rem)        6.2283E-05  3.8135E-02  1.2515E-03
Accumulated dose (rem)  7.1600E-04  1.7892E-01  6.3542E-03

LPZ Doses:

Time (h) =   8.0000    Whole Body   Thyroid       TEDE
Delta dose (rem)        1.1340E-05  6.9434E-03  2.2787E-04
Accumulated dose (rem)  1.3037E-04  3.2577E-02  1.1569E-03

Control Room Doses:

Time (h) =   8.0000    Whole Body   Thyroid       TEDE
Delta dose (rem)        5.2342E-06  6.5199E-02  2.0403E-03
Accumulated dose (rem)  4.3864E-05  2.8656E-01  9.0556E-03

Detailed model information at time (H) =   24.0000

EAB Doses:

Time (h) =  24.0000    Whole Body   Thyroid       TEDE
Delta dose (rem)        0.0000E+00  0.0000E+00  0.0000E+00
Accumulated dose (rem)  7.1600E-04  1.7892E-01  6.3542E-03

LPZ Doses:

Time (h) =  24.0000    Whole Body   Thyroid       TEDE
Delta dose (rem)        9.5225E-06  6.1914E-03  2.0095E-04
Accumulated dose (rem)  1.3989E-04  3.8768E-02  1.3579E-03

Control Room Doses:

Time (h) =  24.0000    Whole Body   Thyroid       TEDE
Delta dose (rem)        1.9103E-06  5.2055E-02  1.6119E-03
```

```
Accumulated dose (rem)  4.5775E-05  3.3862E-01  1.0667E-02

Detailed model information at time (H) =   96.0000

EAB Doses:

Time (h) =  96.0000    Whole Body   Thyroid       TEDE
Delta dose (rem)        0.0000E+00  0.0000E+00  0.0000E+00
Accumulated dose (rem)  7.1600E-04  1.7892E-01  6.3542E-03

LPZ Doses:

Time (h) =  96.0000    Whole Body   Thyroid       TEDE
Delta dose (rem)        5.9473E-06  1.2504E-02  3.8856E-04
Accumulated dose (rem)  1.4584E-04  5.1272E-02  1.7465E-03

Control Room Doses:

Time (h) =  96.0000    Whole Body   Thyroid       TEDE
Delta dose (rem)        8.8846E-07  6.2152E-02  1.9030E-03
Accumulated dose (rem)  4.6663E-05  4.0077E-01  1.2570E-02

Detailed model information at time (H) =  720.0000

EAB Doses:

Time (h) = 720.0000    Whole Body   Thyroid       TEDE
Delta dose (rem)        0.0000E+00  0.0000E+00  0.0000E+00
Accumulated dose (rem)  7.1600E-04  1.7892E-01  6.3542E-03

LPZ Doses:

Time (h) = 720.0000    Whole Body   Thyroid       TEDE
Delta dose (rem)        3.1051E-06  1.1198E-02  3.4409E-04
Accumulated dose (rem)  1.4894E-04  6.2470E-02  2.0905E-03

Control Room Doses:

Time (h) = 720.0000    Whole Body   Thyroid       TEDE
Delta dose (rem)        6.5425E-07  7.9498E-02  2.4214E-03
Accumulated dose (rem)  4.7317E-05  4.8027E-01  1.4992E-02

    334

#####################################################################
                          I-131 Summary
#####################################################################

                ECCS Fluid          Reactor Enclosure        Environment
Time (hr)    I-131 (Curies)          I-131 (Curies)        I-131 (Curies)
   0.000       5.2650E+03             2.8156E-05            1.7552E-05
   0.017       1.5826E+05             1.6158E-03            3.9685E-02
   0.058       5.5239E+05             5.7218E-03            4.9755E-01
   0.100       9.4735E+05             9.5773E-01            5.2277E-01
   0.142       1.3422E+06             2.4010E+00            5.7117E-01
   0.183       1.7359E+06             4.3338E+00            6.3896E-01
   0.225       2.1305E+06             6.7650E+00            7.2649E-01
   0.258       2.4456E+06             9.0623E+00            8.0946E-01
   0.267       2.5250E+06             9.5676E+00            8.0947E-01
   0.396       3.7455E+06             1.8882E+01            8.0968E-01
```

0.396	3.7457E+06	1.8885E+01	8.0968E-01
0.500	4.7297E+06	2.8315E+01	8.0988E-01
0.800	9.4488E+06	6.9565E+01	8.1106E-01
1.100	1.4157E+07	1.2793E+02	8.1350E-01
1.400	1.8855E+07	1.9623E+02	8.1754E-01
1.700	2.3543E+07	2.7027E+02	8.2336E-01
2.000	2.8220E+07	3.4759E+02	8.3107E-01
2.300	2.8186E+07	4.0818E+02	8.4059E-01
2.600	2.8153E+07	4.4341E+02	8.5127E-01
2.900	2.8121E+07	4.6379E+02	8.6263E-01
3.200	2.8088E+07	4.7548E+02	8.7438E-01
3.500	2.8055E+07	4.8208E+02	8.8636E-01
3.800	2.8022E+07	4.8571E+02	8.9846E-01
4.100	2.7989E+07	4.8759E+02	9.1063E-01
4.400	2.7956E+07	4.8846E+02	9.2283E-01
4.700	2.7924E+07	4.8873E+02	9.3504E-01
5.000	2.7891E+07	4.8865E+02	9.4725E-01
5.300	2.7858E+07	4.8836E+02	9.5947E-01
5.600	2.7826E+07	4.8796E+02	9.7167E-01
5.900	2.7793E+07	4.8749E+02	9.8386E-01
6.200	2.7761E+07	4.8697E+02	9.9604E-01
6.500	2.7728E+07	4.8644E+02	1.0082E+00
6.800	2.7696E+07	4.8589E+02	1.0204E+00
7.100	2.7663E+07	4.8533E+02	1.0325E+00
7.400	2.7631E+07	4.8477E+02	1.0446E+00
7.700	2.7598E+07	4.8420E+02	1.0567E+00
8.000	2.7566E+07	4.8364E+02	1.0688E+00
8.300	2.7534E+07	4.8307E+02	1.0809E+00
8.600	2.7502E+07	4.8251E+02	1.0930E+00
8.900	2.7469E+07	4.8195E+02	1.1050E+00
9.200	2.7437E+07	4.8138E+02	1.1171E+00
9.500	2.7405E+07	4.8082E+02	1.1291E+00
9.800	2.7373E+07	4.8026E+02	1.1411E+00
10.100	2.7341E+07	4.7969E+02	1.1531E+00
10.400	2.7309E+07	4.7913E+02	1.1651E+00
24.000	2.5897E+07	4.5435E+02	1.6914E+00
96.000	1.9550E+07	3.4300E+02	4.0508E+00
720.000	1.7099E+06	3.0000E+01	1.0683E+01

Time (hr)	Control Room I-131 (Curies)	SGTS Node I-131 (Curies)
0.000	1.2821E-08	1.5642E-11
0.017	2.8783E-05	8.9766E-10
0.058	3.5433E-04	3.1788E-09
0.100	3.5329E-04	5.3207E-07
0.142	3.6873E-04	1.3339E-06
0.183	3.9716E-04	2.4076E-06
0.225	4.3803E-04	3.7583E-06
0.258	4.7838E-04	5.0346E-06
0.267	4.7307E-04	2.6576E-07
0.396	3.9846E-04	5.2450E-07
0.396	3.9844E-04	7.1517E-07
0.500	3.4696E-04	7.8652E-07
0.800	2.3338E-04	1.9324E-06
1.100	1.5800E-04	3.5535E-06
1.400	1.0841E-04	5.4507E-06
1.700	7.6238E-05	7.5074E-06
2.000	5.5809E-05	9.6553E-06
2.300	4.1752E-05	1.1338E-05
2.600	3.2845E-05	1.2317E-05

2.900	2.7175E-05	1.2883E-05
3.200	2.3546E-05	1.3208E-05
3.500	2.1212E-05	1.3391E-05
3.800	1.9702E-05	1.3492E-05
4.100	1.8719E-05	1.3544E-05
4.400	1.8075E-05	1.3568E-05
4.700	1.7648E-05	1.3576E-05
5.000	1.7363E-05	1.3573E-05
5.300	1.7170E-05	1.3566E-05
5.600	1.7036E-05	1.3554E-05
5.900	1.6942E-05	1.3541E-05
6.200	1.6873E-05	1.3527E-05
6.500	1.6820E-05	1.3512E-05
6.800	1.6779E-05	1.3497E-05
7.100	1.6745E-05	1.3481E-05
7.400	1.6716E-05	1.3466E-05
7.700	1.6690E-05	1.3450E-05
8.000	1.6667E-05	1.3434E-05
8.300	1.3334E-05	1.3419E-05
8.600	1.1096E-05	1.3403E-05
8.900	9.5933E-06	1.3387E-05
9.200	8.5830E-06	1.3372E-05
9.500	7.9031E-06	1.3356E-05
9.800	7.4446E-06	1.3340E-05
10.100	7.1347E-06	1.3325E-05
10.400	6.9243E-06	1.3309E-05
24.000	6.1750E-06	1.2621E-05
96.000	2.9478E-06	9.5278E-06
720.000	1.9247E-07	8.3333E-07

```
#####################################################################
                    Cumulative Dose Summary
#####################################################################
```

	EAB		LPZ		Control Room	
Time (hr)	Thyroid (rem)	TEDE (rem)	Thyroid (rem)	TEDE (rem)	Thyroid (rem)	TEDE (rem)
0.000	0.0000E+00	0.0000E+00	0.0000E+00	0.0000E+00	0.0000E+00	0.0000E+00
0.017	6.7324E-03	2.4539E-04	1.2258E-03	4.4679E-05	8.5149E-05	2.7110E-06
0.058	8.4389E-02	3.0723E-03	1.5365E-02	5.5939E-04	3.8634E-03	1.2298E-04
0.100	8.8665E-02	3.2276E-03	1.6144E-02	5.8766E-04	1.1746E-02	3.7382E-04
0.142	9.6864E-02	3.5246E-03	1.7637E-02	6.4175E-04	1.9797E-02	6.2991E-04
0.183	1.0834E-01	3.9395E-03	1.9726E-02	7.1728E-04	2.8316E-02	9.0080E-04
0.225	1.2315E-01	4.4737E-03	2.2423E-02	8.1455E-04	3.7631E-02	1.1969E-03
0.258	1.3719E-01	4.9788E-03	2.4978E-02	9.0651E-04	4.5805E-02	1.4567E-03
0.267	1.3719E-01	4.9788E-03	2.4978E-02	9.0652E-04	4.7949E-02	1.5248E-03
0.396	1.3722E-01	4.9801E-03	2.4985E-02	9.0675E-04	7.8072E-02	2.4815E-03
0.396	1.3722E-01	4.9801E-03	2.4985E-02	9.0675E-04	7.8078E-02	2.4817E-03
0.500	1.3726E-01	4.9813E-03	2.4991E-02	9.0697E-04	9.8862E-02	3.1413E-03
0.800	1.3745E-01	4.9883E-03	2.5027E-02	9.0825E-04	1.4481E-01	4.5974E-03
1.100	1.3786E-01	5.0026E-03	2.5102E-02	9.1085E-04	1.7567E-01	5.5737E-03
1.400	1.3854E-01	5.0259E-03	2.5224E-02	9.1509E-04	1.9660E-01	6.2347E-03
1.700	1.3951E-01	5.0591E-03	2.5401E-02	9.2114E-04	2.1106E-01	6.6906E-03
2.000	1.4079E-01	5.1027E-03	2.5634E-02	9.2907E-04	2.2136E-01	7.0152E-03
2.300	1.4236E-01	5.1558E-03	2.5920E-02	9.3875E-04	2.2896E-01	7.2542E-03
2.600	1.4412E-01	5.2150E-03	2.6240E-02	9.4953E-04	2.3476E-01	7.4365E-03
2.900	1.4598E-01	5.2775E-03	2.6580E-02	9.6090E-04	2.3942E-01	7.5827E-03
3.200	1.4790E-01	5.3416E-03	2.6930E-02	9.7257E-04	2.4335E-01	7.7060E-03
3.500	1.4986E-01	5.4064E-03	2.7285E-02	9.8437E-04	2.4681E-01	7.8145E-03
3.800	1.5182E-01	5.4715E-03	2.7643E-02	9.9623E-04	2.4997E-01	7.9134E-03

4.100	1.5379E-01	5.5366E-03	2.8002E-02	1.0081E-03	2.5292E-01	8.0060E-03
4.400	1.5577E-01	5.6014E-03	2.8361E-02	1.0199E-03	2.5575E-01	8.0944E-03
4.700	1.5773E-01	5.6660E-03	2.8719E-02	1.0316E-03	2.5848E-01	8.1800E-03
5.000	1.5969E-01	5.7303E-03	2.9076E-02	1.0433E-03	2.6116E-01	8.2635E-03
5.300	1.6165E-01	5.7942E-03	2.9432E-02	1.0550E-03	2.6379E-01	8.3457E-03
5.600	1.6360E-01	5.8578E-03	2.9787E-02	1.0666E-03	2.6639E-01	8.4268E-03
5.900	1.6554E-01	5.9210E-03	3.0140E-02	1.0781E-03	2.6896E-01	8.5071E-03
6.200	1.6747E-01	5.9838E-03	3.0493E-02	1.0895E-03	2.7152E-01	8.5868E-03
6.500	1.6940E-01	6.0464E-03	3.0843E-02	1.1009E-03	2.7405E-01	8.6660E-03
6.800	1.7132E-01	6.1086E-03	3.1193E-02	1.1122E-03	2.7658E-01	8.7447E-03
7.100	1.7323E-01	6.1704E-03	3.1541E-02	1.1235E-03	2.7909E-01	8.8229E-03
7.400	1.7513E-01	6.2320E-03	3.1887E-02	1.1347E-03	2.8159E-01	8.9008E-03
7.700	1.7703E-01	6.2932E-03	3.2233E-02	1.1458E-03	2.8408E-01	8.9784E-03
8.000	1.7892E-01	6.3542E-03	3.2577E-02	1.1569E-03	2.8656E-01	9.0556E-03
8.300	1.7892E-01	6.3542E-03	3.2702E-02	1.1611E-03	2.8877E-01	9.1244E-03
8.600	1.7892E-01	6.3542E-03	3.2826E-02	1.1652E-03	2.9057E-01	9.1803E-03
8.900	1.7892E-01	6.3542E-03	3.2950E-02	1.1693E-03	2.9209E-01	9.2276E-03
9.200	1.7892E-01	6.3542E-03	3.3074E-02	1.1734E-03	2.9343E-01	9.2690E-03
9.500	1.7892E-01	6.3542E-03	3.3197E-02	1.1775E-03	2.9463E-01	9.3066E-03
9.800	1.7892E-01	6.3542E-03	3.3320E-02	1.1816E-03	2.9576E-01	9.3415E-03
10.100	1.7892E-01	6.3542E-03	3.3442E-02	1.1856E-03	2.9682E-01	9.3745E-03
10.400	1.7892E-01	6.3542E-03	3.3564E-02	1.1896E-03	2.9785E-01	9.4064E-03
24.000	1.7892E-01	6.3542E-03	3.8768E-02	1.3579E-03	3.3862E-01	1.0667E-02
96.000	1.7892E-01	6.3542E-03	5.1272E-02	1.7465E-03	4.0077E-01	1.2570E-02
720.000	1.7892E-01	6.3542E-03	6.2470E-02	2.0905E-03	4.8027E-01	1.4992E-02

```
#################################################################
                    Worst Two-Hour Doses
#################################################################
```

EAB

Time (hr)	Whole Body (rem)	Thyroid (rem)	TEDE (rem)
0.0	6.5372E-04	1.4079E-01	5.1027E-03

```
Nuclide Inventory Name:  Source Terms per this calculation
 Limerick (LGS) AST - in Ci/MW
 Power Level:
  0.1000E+01
 Nuclides:
  60
 Nuclide 001:
 Co-58
   7
  0.6117120000E+07
  0.5800E+02
  0.1529E+03
 none      0.0000E+00
 none      0.0000E+00
 none      0.0000E+00
 Nuclide 002:
 Co-60
   7
  0.1663401096E+09
  0.6000E+02
  0.1830E+03
 none      0.0000E+00
 none      0.0000E+00
 none      0.0000E+00
 Nuclide 003:
 Kr-85
   1
  0.3382974720E+09
  0.8500E+02
  0.3946E+03
 none      0.0000E+00
 none      0.0000E+00
 none      0.0000E+00
 Nuclide 004:
 Kr-85m
   1
  0.1612800000E+05
  0.8500E+02
  0.8313E+04
 Kr-85     0.2100E+00
 none      0.0000E+00
 none      0.0000E+00
 Nuclide 005:
 Kr-87
   1
  0.4578000000E+04
  0.8700E+02
  0.1633E+05
 Rb-87     0.1000E+01
 none      0.0000E+00
 none      0.0000E+00
 Nuclide 006:
 Kr-88
   1
  0.1022400000E+05
  0.8800E+02
  0.2303E+05
 Rb-88     0.1000E+01
 none      0.0000E+00
 none      0.0000E+00
```

```
Nuclide 007:
Rb-86
  3
 0.1612224000E+07
 0.8600E+02
 0.6518E+02
none      0.0000E+00
none      0.0000E+00
none      0.0000E+00
Nuclide 008:
Sr-89
  5
 0.4363200000E+07
 0.8900E+02
 0.2798E+05
none      0.0000E+00
none      0.0000E+00
none      0.0000E+00
Nuclide 009:
Sr-90
  5
 0.9189573120E+09
 0.9000E+02
 0.3178E+04
Y-90      0.1000E+01
none      0.0000E+00
none      0.0000E+00
Nuclide 010:
Sr-91
  5
 0.3420000000E+05
 0.9100E+02
 0.3801E+05
Y-91m     0.5800E+00
Y-91      0.4200E+00
none      0.0000E+00
Nuclide 011:
Sr-92
  5
 0.9756000000E+04
 0.9200E+02
 0.4017E+05
Y-92      0.1000E+01
none      0.0000E+00
none      0.0000E+00
Nuclide 012:
Y-90
  9
 0.2304000000E+06
 0.9000E+02
 0.3272E+04
none      0.0000E+00
none      0.0000E+00
none      0.0000E+00
Nuclide 013:
Y-91
  9
 0.5055264000E+07
 0.9100E+02
 0.3448E+05
```

```
none      0.0000E+00
none      0.0000E+00
none      0.0000E+00
Nuclide 014:
Y-92
  9
 0.1274400000E+05
 0.9200E+02
 0.4029E+05
none      0.0000E+00
none      0.0000E+00
none      0.0000E+00
Nuclide 015:
Y-93
  9
 0.3636000000E+05
 0.9300E+02
 0.4526E+05
Zr-93     0.1000E+01
none      0.0000E+00
none      0.0000E+00
Nuclide 016:
Zr-95
  9
 0.5527872000E+07
 0.9500E+02
 0.4489E+05
Nb-95m    0.7000E-02
Nb-95     0.9900E+00
none      0.0000E+00
Nuclide 017:
Zr-97
  9
 0.6084000000E+05
 0.9700E+02
 0.4657E+05
Nb-97m    0.9500E+00
Nb-97     0.5300E-01
none      0.0000E+00
Nuclide 018:
Nb-95
  9
 0.3036960000E+07
 0.9500E+02
 0.4512E+05
none      0.0000E+00
none      0.0000E+00
none      0.0000E+00
Nuclide 019:
Mo-99
  7
 0.2376000000E+06
 0.9900E+02
 0.5078+05
Tc-99m    0.8800E+00
Tc-99     0.1200E+00
none      0.0000E+00
Nuclide 020:
Tc-99m
  7
```

```
 0.2167200000E+05
 0.9900E+02
 0.4447E+05
Tc-99     0.1000E+01
none      0.0000E+00
none      0.0000E+00
Nuclide 021:
Ru-103
  7
 0.3393792000E+07
 0.1030E+03
 0.4202E+05
Rh-103m  0.1000E+01
none      0.0000E+00
none      0.0000E+00
Nuclide 022:
Ru-105
  7
 0.1598400000E+05
 0.1050E+03
 0.2908E+05
Rh-105   0.1000E+01
none      0.0000E+00
none      0.0000E+00
Nuclide 023:
Ru-106
  7
 0.3181248000E+08
 0.1060E+03
 0.1730E+05
Rh-106   0.1000E+01
none      0.0000E+00
none      0.0000E+00
Nuclide 024:
Rh-105
  7
 0.1272960000E+06
 0.1050E+03
 0.2752E+05
none      0.0000E+00
none      0.0000E+00
none      0.0000E+00
Nuclide 025:
Sb-127
  4
 0.3326400000E+06
 0.1270E+03
 0.2896E+04
Te-127m  0.1800E+00
Te-127   0.8200E+00
none      0.0000E+00
Nuclide 026:
Sb-129
  4
 0.1555200000E+05
 0.1290E+03
 0.8638E+04
Te-129m  0.2200E+00
Te-129   0.7700E+00
none      0.0000E+00
```

```
Nuclide 027:
Te-127
  4
 0.3366000000E+05
 0.1270E+03
 0.2873E+04
none      0.0000E+00
none      0.0000E+00
none      0.0000E+00
Nuclide 028:
Te-127m
  4
 0.9417600000E+07
 0.1270E+03
 0.3855E+03
Te-127    0.9800E+00
none      0.0000E+00
none      0.0000E+00
Nuclide 029:
Te-129
  4
 0.4176000000E+04
 0.1290E+03
 0.8501E+04
I-129     0.1000E+01
none      0.0000E+00
none      0.0000E+00
Nuclide 030:
Te-129m
  4
 0.2903040000E+07
 0.1290E+03
 0.1267E+04
Te-129    0.6500E+00
I-129     0.3500E+00
none      0.0000E+00
Nuclide 031:
Te-131m
  4
 0.1080000000E+06
 0.1310E+03
 0.3869E+04
Te-131    0.2200E+00
I-131     0.7800E+00
none      0.0000E+00
Nuclide 032:
Te-132
  4
 0.2815200000E+06
 0.1320E+03
 0.3821E+05
I-132     0.1000E+01
none      0.0000E+00
none      0.0000E+00
Nuclide 033:
I-131
  2
 0.6946560000E+06
 0.1310E+03
 0.2687E+05
```

```
Xe-131m  0.1100E-01
none     0.0000E+00
none     0.0000E+00
Nuclide 034:
I-132
  2
 0.8280000000E+04
 0.1320E+03
 0.3881E+05
none     0.0000E+00
none     0.0000E+00
none     0.0000E+00
Nuclide 035:
I-133
  2
 0.7488000000E+05
 0.1330E+03
 0.5556E+05
Xe-133m  0.2900E-01
Xe-133   0.9700E+00
none     0.0000E+00
Nuclide 036:
I-134
  2
 0.3156000000E+04
 0.1340E+03
 0.6165E+05
none     0.0000E+00
none     0.0000E+00
none     0.0000E+00
Nuclide 037:
I-135
  2
 0.2379600000E+05
 0.1350E+03
 0.5192E+05
Xe-135m  0.1500E+00
Xe-135   0.8500E+00
none     0.0000E+00
Nuclide 038:
Xe-133
  1
 0.4531680000E+06
 0.1330E+03
 0.5491E+05
none     0.0000E+00
none     0.0000E+00
none     0.0000E+00
Nuclide 039:
Xe-135
  1
 0.3272400000E+05
 0.1350E+03
 0.2228E+05
Cs-135   0.1000E+01
none     0.0000E+00
none     0.0000E+00
Nuclide 040:
Cs-134
  3
```

```
 0.6507177120E+08
 0.1340E+03
 0.7280E+04
none      0.0000E+00
none      0.0000E+00
none      0.0000E+00
Nuclide 041:
Cs-136
  3
 0.1131840000E+07
 0.1360E+03
 0.2027E+04
none      0.0000E+00
none      0.0000E+00
none      0.0000E+00
Nuclide 042:
Cs-137
  3
 0.9467280000E+09
 0.1370E+03
 0.4538E+04
Ba-137m   0.9500E+00
none      0.0000E+00
none      0.0000E+00
Nuclide 043:
Ba-139
  6
 0.4962000000E+04
 0.1390E+03
 0.5084E+05
none      0.0000E+00
none      0.0000E+00
none      0.0000E+00
Nuclide 044:
Ba-140
  6
 0.1100736000E+07
 0.1400E+03
 0.4896E+05
La-140    0.1000E+01
none      0.0000E+00
none      0.0000E+00
Nuclide 045:
La-140
  9
 0.1449792000E+06
 0.1400E+03
 0.5019E+05
none      0.0000E+00
none      0.0000E+00
none      0.0000E+00
Nuclide 046:
La-141
  9
 0.1414800000E+05
 0.1410E+03
 0.4640E+05
Ce-141    0.1000E+01
none      0.0000E+00
none      0.0000E+00
```

```
Nuclide 047:
La-142
  9
 0.5550000000E+04
 0.1420E+03
 0.4532E+05
none      0.0000E+00
none      0.0000E+00
none      0.0000E+00
Nuclide 048:
Ce-141
  8
 0.2808086400E+07
 0.1410E+03
 0.4492E+05
none      0.0000E+00
none      0.0000E+00
none      0.0000E+00
Nuclide 049:
Ce-143
  8
 0.1188000000E+06
 0.1430E+03
 0.4427E+05
Pr-143    0.1000E+01
none      0.0000E+00
none      0.0000E+00
Nuclide 050:
Ce-144
  8
 0.2456352000E+08
 0.1440E+03
 0.3596E+05
Pr-144m   0.1800E-01
Pr-144    0.9800E+00
none      0.0000E+00
Nuclide 051:
Pr-143
  9
 0.1171584000E+07
 0.1430E+03
 0.4293E+05
none      0.0000E+00
none      0.0000E+00
none      0.0000E+00
Nuclide 052:
Nd-147
  9
 0.9486720000E+06
 0.1470E+03
 0.1838E+05
Pm-147    0.1000E+01
none      0.0000E+00
none      0.0000E+00
Nuclide 053:
Np-239
  8
 0.2034720000E+06
 0.2390E+03
 0.5397E+06
```

```
Pu-239    0.1000E+01
none      0.0000E+00
none      0.0000E+00
Nuclide 054:
Pu-238
  8
 0.2768863824E+10
 0.2380E+03
 0.1796E+03
U-234     0.1000E+01
none      0.0000E+00
none      0.0000E+00
Nuclide 055:
Pu-239
  8
 0.7594336440E+12
 0.2390E+03
 0.1200E+02
U-235     0.1000E+01
none      0.0000E+00
none      0.0000E+00
Nuclide 056:
Pu-240
  8
 0.2062920312E+12
 0.2400E+03
 0.1288E+02
U-236     0.1000E+01
none      0.0000E+00
none      0.0000E+00
Nuclide 057:
Pu-241
  8
 0.4544294400E+09
 0.2410E+03
 0.6182E+04
U-237     0.2400E-04
Am-241    0.1000E+01
none      0.0000E+00
Nuclide 058:
Am-241
  9
 0.1363919472E+11
 0.2410E+03
 0.9528E+01
Np-237    0.1000E+01
none      0.0000E+00
none      0.0000E+00
Nuclide 059:
Cm-242
  9
 0.1406592000E+08
 0.2420E+03
 0.2388E+04
Pu-238    0.1000E+01
none      0.0000E+00
none      0.0000E+00
Nuclide 060:
Cm-244
  9
```

```
 0.5715081360E+09
 0.2440E+03
 0.2602E+03
Pu-240    0.1000E+01
none      0.0000E+00
none      0.0000E+00
End of Nuclear Inventory File
```

```
Nuclide Inventory Name:  Source Terms per this calculation
 Limerick Gnerating Station (LGS) ECCS Source Terms AST - in Ci/MW
 Power Level:
  0.1000E+01
 Nuclides:
  60
 Nuclide 001:
 Co-58
   7
  0.6117120000E+07
  0.5800E+02
  0.0000E+00
 none      0.0000E+00
 none      0.0000E+00
 none      0.0000E+00
 Nuclide 002:
 Co-60
   7
  0.1663401096E+09
  0.6000E+02
  0.0000E+00
 none      0.0000E+00
 none      0.0000E+00
 none      0.0000E+00
 Nuclide 003:
 Kr-85
   1
  0.3382974720E+09
  0.8500E+02
  0.0000E+00
 none      0.0000E+00
 none      0.0000E+00
 none      0.0000E+00
 Nuclide 004:
 Kr-85m
   1
  0.1612800000E+05
  0.8500E+02
  0.0000E+00
 Kr-85     0.2100E+00
 none      0.0000E+00
 none      0.0000E+00
 Nuclide 005:
 Kr-87
   1
  0.4578000000E+04
  0.8700E+02
  0.0000E+00
 Rb-87     0.1000E+01
 none      0.0000E+00
 none      0.0000E+00
 Nuclide 006:
 Kr-88
   1
  0.1022400000E+05
  0.8800E+02
  0.0000E+00
 Rb-88     0.1000E+01
 none      0.0000E+00
 none      0.0000E+00
```

```
Nuclide 007:
Rb-86
  3
 0.1612224000E+07
 0.8600E+02
 0.0000E+00
none      0.0000E+00
none      0.0000E+00
none      0.0000E+00
Nuclide 008:
Sr-89
  5
 0.4363200000E+07
 0.8900E+02
 0.0000E+00
none      0.0000E+00
none      0.0000E+00
none      0.0000E+00
Nuclide 009:
Sr-90
  5
 0.9189573120E+09
 0.9000E+02
 0.0000E+00
Y-90      0.1000E+01
none      0.0000E+00
none      0.0000E+00
Nuclide 010:
Sr-91
  5
 0.3420000000E+05
 0.9100E+02
 0.0000E+00
Y-91m     0.5800E+00
Y-91      0.4200E+00
none      0.0000E+00
Nuclide 011:
Sr-92
  5
 0.9756000000E+04
 0.9200E+02
 0.0000E+00
Y-92      0.1000E+01
none      0.0000E+00
none      0.0000E+00
Nuclide 012:
Y-90
  9
 0.2304000000E+06
 0.9000E+02
 0.0000E+00
none      0.0000E+00
none      0.0000E+00
none      0.0000E+00
Nuclide 013:
Y-91
  9
 0.5055264000E+07
 0.9100E+02
 0.0000E+00
```

```
none      0.0000E+00
none      0.0000E+00
none      0.0000E+00
Nuclide 014:
Y-92
  9
 0.1274400000E+05
 0.9200E+02
 0.0000E+00
none      0.0000E+00
none      0.0000E+00
none      0.0000E+00
Nuclide 015:
Y-93
  9
 0.3636000000E+05
 0.9300E+02
 0.0000E+00
Zr-93     0.1000E+01
none      0.0000E+00
none      0.0000E+00
Nuclide 016:
Zr-95
  9
 0.5527872000E+07
 0.9500E+02
 0.0000E+00
Nb-95m    0.7000E-02
Nb-95     0.9900E+00
none      0.0000E+00
Nuclide 017:
Zr-97
  9
 0.6084000000E+05
 0.9700E+02
 0.0000E+00
Nb-97m    0.9500E+00
Nb-97     0.5300E-01
none      0.0000E+00
Nuclide 018:
Nb-95
  9
 0.3036960000E+07
 0.9500E+02
 0.0000E+00
none      0.0000E+00
none      0.0000E+00
none      0.0000E+00
Nuclide 019:
Mo-99
  7
 0.2376000000E+06
 0.9900E+02
 0.0000E+00
Tc-99m    0.8800E+00
Tc-99     0.1200E+00
none      0.0000E+00
Nuclide 020:
Tc-99m
  7
```

```
 0.2167200000E+05
 0.9900E+02
 0.0000E+00
Tc-99     0.1000E+01
none      0.0000E+00
none      0.0000E+00
Nuclide 021:
Ru-103
  7
 0.3393792000E+07
 0.1030E+03
 0.0000E+00
Rh-103m   0.1000E+01
none      0.0000E+00
none      0.0000E+00
Nuclide 022:
Ru-105
  7
 0.1598400000E+05
 0.1050E+03
 0.0000E+00
Rh-105    0.1000E+01
none      0.0000E+00
none      0.0000E+00
Nuclide 023:
Ru-106
  7
 0.3181248000E+08
 0.1060E+03
 0.0000E+00
Rh-106    0.1000E+01
none      0.0000E+00
none      0.0000E+00
Nuclide 024:
Rh-105
  7
 0.1272960000E+06
 0.1050E+03
 0.0000E+00
none      0.0000E+00
none      0.0000E+00
none      0.0000E+00
Nuclide 025:
Sb-127
  4
 0.3326400000E+06
 0.1270E+03
 0.0000E+00
Te-127m   0.1800E+00
Te-127    0.8200E+00
none      0.0000E+00
Nuclide 026:
Sb-129
  4
 0.1555200000E+05
 0.1290E+03
 0.0000E+00
Te-129m   0.2200E+00
Te-129    0.7700E+00
none      0.0000E+00
```

```
Nuclide 027:
Te-127
  4
 0.3366000000E+05
 0.1270E+03
 0.0000E+00
none      0.0000E+00
none      0.0000E+00
none      0.0000E+00
Nuclide 028:
Te-127m
  4
 0.9417600000E+07
 0.1270E+03
 0.0000E+00
Te-127    0.9800E+00
none      0.0000E+00
none      0.0000E+00
Nuclide 029:
Te-129
  4
 0.4176000000E+04
 0.1290E+03
 0.0000E+00
I-129     0.1000E+01
none      0.0000E+00
none      0.0000E+00
Nuclide 030:
Te-129m
  4
 0.2903040000E+07
 0.1290E+03
 0.0000E+00
Te-129    0.6500E+00
I-129     0.3500E+00
none      0.0000E+00
Nuclide 031:
Te-131m
  4
 0.1080000000E+06
 0.1310E+03
 0.0000E+00
Te-131    0.2200E+00
I-131     0.7800E+00
none      0.0000E+00
Nuclide 032:
Te-132
  4
 0.2815200000E+06
 0.1320E+03
 0.0000E+00
I-132     0.1000E+01
none      0.0000E+00
none      0.0000E+00
Nuclide 033:
I-131
  2
 0.6946560000E+06
 0.1310E+03
 0.2687E+05
```

```
Xe-131m  0.1100E-01
none     0.0000E+00
none     0.0000E+00
Nuclide 034:
I-132
  2
 0.8280000000E+04
 0.1320E+03
 0.3881E+05
none     0.0000E+00
none     0.0000E+00
none     0.0000E+00
Nuclide 035:
I-133
  2
 0.7488000000E+05
 0.1330E+03
 0.5556E+05
Xe-133m  0.2900E-01
Xe-133   0.9700E+00
none     0.0000E+00
Nuclide 036:
I-134
  2
 0.3156000000E+04
 0.1340E+03
 0.6165E+05
none     0.0000E+00
none     0.0000E+00
none     0.0000E+00
Nuclide 037:
I-135
  2
 0.2379600000E+05
 0.1350E+03
 0.5192E+05
Xe-135m  0.1500E+00
Xe-135   0.8500E+00
none     0.0000E+00
Nuclide 038:
Xe-133
  1
 0.4531680000E+06
 0.1330E+03
 0.0000E+00
none     0.0000E+00
none     0.0000E+00
none     0.0000E+00
Nuclide 039:
Xe-135
  1
 0.3272400000E+05
 0.1350E+03
 0.0000E+00
Cs-135   0.1000E+01
none     0.0000E+00
none     0.0000E+00
Nuclide 040:
Cs-134
  3
```

```
 0.6507177120E+08
 0.1340E+03
 0.0000E+00
none      0.0000E+00
none      0.0000E+00
none      0.0000E+00
Nuclide 041:
Cs-136
  3
 0.1131840000E+07
 0.1360E+03
 0.0000E+00
none      0.0000E+00
none      0.0000E+00
none      0.0000E+00
Nuclide 042:
Cs-137
  3
 0.9467280000E+09
 0.1370E+03
 0.0000E+00
Ba-137m  0.9500E+00
none      0.0000E+00
none      0.0000E+00
Nuclide 043:
Ba-139
  6
 0.4962000000E+04
 0.1390E+03
 0.0000E+00
none      0.0000E+00
none      0.0000E+00
none      0.0000E+00
Nuclide 044:
Ba-140
  6
 0.1100736000E+07
 0.1400E+03
 0.0000E+00
La-140    0.1000E+01
none      0.0000E+00
none      0.0000E+00
Nuclide 045:
La-140
  9
 0.1449792000E+06
 0.1400E+03
 0.0000E+00
none      0.0000E+00
none      0.0000E+00
none      0.0000E+00
Nuclide 046:
La-141
  9
 0.1414800000E+05
 0.1410E+03
 0.0000E+00
Ce-141    0.1000E+01
none      0.0000E+00
none      0.0000E+00
```

```
Nuclide 047:
La-142
  9
 0.5550000000E+04
 0.1420E+03
 0.0000E+00
none      0.0000E+00
none      0.0000E+00
none      0.0000E+00
Nuclide 048:
Ce-141
  8
 0.2808086400E+07
 0.1410E+03
 0.0000E+00
none      0.0000E+00
none      0.0000E+00
none      0.0000E+00
Nuclide 049:
Ce-143
  8
 0.1188000000E+06
 0.1430E+03
 0.0000E+00
Pr-143    0.1000E+01
none      0.0000E+00
none      0.0000E+00
Nuclide 050:
Ce-144
  8
 0.2456352000E+08
 0.1440E+03
 0.0000E+00
Pr-144m   0.1800E-01
Pr-144    0.9800E+00
none      0.0000E+00
Nuclide 051:
Pr-143
  9
 0.1171584000E+07
 0.1430E+03
 0.0000E+00
none      0.0000E+00
none      0.0000E+00
none      0.0000E+00
Nuclide 052:
Nd-147
  9
 0.9486720000E+06
 0.1470E+03
 0.0000E+00
Pm-147    0.1000E+01
none      0.0000E+00
none      0.0000E+00
Nuclide 053:
Np-239
  8
 0.2034720000E+06
 0.2390E+03
 0.0000E+00
```

```
 Pu-239    0.1000E+01
 none      0.0000E+00
 none      0.0000E+00
 Nuclide 054:
 Pu-238
   8
  0.2768863824E+10
  0.2380E+03
  0.0000E+00
 U-234     0.1000E+01
 none      0.0000E+00
 none      0.0000E+00
 Nuclide 055:
 Pu-239
   8
  0.7594336440E+12
  0.2390E+03
  0.0000E+00
 U-235     0.1000E+01
 none      0.0000E+00
 none      0.0000E+00
 Nuclide 056:
 Pu-240
   8
  0.2062920312E+12
  0.2400E+03
  0.0000E+00
 U-236     0.1000E+01
 none      0.0000E+00
 none      0.0000E+00
 Nuclide 057:
 Pu-241
   8
  0.4544294400E+09
  0.2410E+03
  0.0000E+00
 U-237     0.2400E-04
 Am-241    0.1000E+01
 none      0.0000E+00
 Nuclide 058:
 Am-241
   9
  0.1363919472E+11
  0.2410E+03
  0.0000E+00
 Np-237    0.1000E+01
 none      0.0000E+00
 none      0.0000E+00
 Nuclide 059:
 Cm-242
   9
  0.1406592000E+08
  0.2420E+03
  0.0000E+00
 Pu-238    0.1000E+01
 none      0.0000E+00
 none      0.0000E+00
 Nuclide 060:
 Cm-244
   9
```

```
 0.5715081360E+09
 0.2440E+03
 0.0000E+00
Pu-240   0.1000E+01
none     0.0000E+00
none     0.0000E+00
End of Nuclear Inventory File
```

```
Release Fraction and Timing Name:
 BWR, RG 1.183, Table 1 Section 3.2
 Duration (h):   Design Basis Accident
  0.5000E+00  0.1500E+01  0.0000E+00  0.0000E+00
 Noble Gases:
  0.5000E-01  0.9500E+00  0.0000E+00  0.0000E+00
 Iodine:
  0.5000E-01  0.2500E+00  0.0000E+00  0.0000E+00
 Cesium:
  0.5000E-01  0.2000E+00  0.0000E+00  0.0000E+00
 Tellurium:
  0.0000E+00  0.0500E+00  0.0000E+00  0.0000E+00
 Strontium:
  0.0000E+00  0.2000E-01  0.0000E+00  0.0000E+00
 Barium:
  0.0000E+00  0.2000E-01  0.0000E+00  0.0000E+00
 Ruthenium:
  0.0000E+00  0.2500E-02  0.0000E+00  0.0000E+00
 Cerium:
  0.0000E+00  0.5000E-03  0.0000E+00  0.0000E+00
 Lanthanum:
  0.0000E+00  0.2000E-03  0.0000E+00  0.0000E+00
 Non-Radioactive Aerosols (kg):
  0.0000E+00  0.0000E+00  0.0000E+00  0.0000E+00
 End of Release File
```

```
Release Fraction and Timing Name: Iodine only
 NUREG 1465  BWR
 Duration (h):
  0.5000E+00  1.5000E+00  0.0000E+00  0.0000E+00
 Noble Gases:
  0.0000E+00  0.0000E+00  0.0000E+00  0.0000E+00
 Iodine:
  0.0500E+00  0.2500E+00  0.0000E+00  0.0000E+00
 Cesium:
  0.0000E+00  0.0000E+00  0.0000E+00  0.0000E+00
 Tellurium:
  0.0000E+00  0.0000E+00  0.0000E+00  0.0000E+00
 Strontium:
  0.0000E+00  0.0000E+00  0.0000E+00  0.0000E+00
 Barium:
  0.0000E+00  0.0000E+00  0.0000E+00  0.0000E+00
 Ruthenium:
  0.0000E+00  0.0000E+00  0.0000E+00  0.0000E+00
 Cerium:
  0.0000E+00  0.0000E+00  0.0000E+00  0.0000E+00
 Lanthanum:
  0.0000E+00  0.0000E+00  0.0000E+00  0.0000E+00
 Non-Radioactive Aerosols (kg):
  0.0000E+00  0.0000E+00  0.0000E+00  0.0000E+00
 End of Release File
```