Final Submittal
(Blue Paper)

ST. LUCIE RETAKE EXAM

05000335/2004302 & 05000389/2004302

DECEMBER 21, 2004

FINAL JPMS & OUTLINE

DRAFT & FINAL

Facility:		Date of Examination:		
Item	Task Description	Initials a	b*	c#
1. WRITTEN	a. Verify that the outline(s) fit(s) the appropriate model, in accordance with ES-401.	N/A	N/A	N/A
	b. Assess whether the outline was systematically and randomly prepared in accordance with Section D.1 of ES-401 and whether all K/A categories are appropriately sampled.	↓	↓	↓
	c. Assess whether the outline over-emphasizes any systems, evolutions, or generic topics.	↓	↓	↓
	d. Assess whether the justifications for deselected or rejected K/A statements are appropriate.	↓	↓	↓
2. SIMULATOR	a. Using Form ES-301-5, verify that the proposed scenario sets cover the required number of normal evolutions, instrument and component failures, technical specifications, and major transients.	↓	↓	↓
	b. Assess whether there are enough scenario sets (and spares) to test the projected number and mix of applicants in accordance with the expected crew composition and rotation schedule without compromising exam integrity, and ensure that each applicant can be tested using at least one new or significantly modified scenario, that no scenarios are duplicated from the applicants' audit test(s), and that scenarios will not be repeated on subsequent days.	↓	↓	↓
	c. To the extent possible, assess whether the outline(s) conform(s) with the qualitative and quantitative criteria specified on Form ES-301-4 and described in Appendix D.	↓	↓	↓
3. W/T	a. Verify that the systems walk-through outline meets the criteria specified on Form ES-301-2: (1) the outline(s) contain(s) the required number of control room and in-plant tasks distributed among the safety functions as specified on the form (2) task repetition from the last two NRC examinations is within the limits specified on the form (3) no tasks are duplicated from the applicants' audit test(s) (4) the number of new or modified tasks meets or exceeds the minimums specified on the form (5) the number of alternate path, low-power, emergency, and RCA tasks meet the criteria on the form.	N/A	N/A	N/A
	b. Verify that the administrative outline meets the criteria specified on Form ES-301-1: (*) (1) the tasks are distributed among the topics as specified on the form ✓ (2) at least one task is new or significantly modified ✓ (3) no more than one task is repeated from the last two NRC licensing examinations ✓	L	JM	✓
	c. Determine if there are enough different outlines to test the projected number and mix of applicants and ensure that no items are duplicated on subsequent days.	L	JM	NA
4. GENERAL	a. Assess whether plant-specific priorities (including PRA and IPE insights) are covered in the appropriate exam sections.	L	JM	✓
	b. Assess whether the 10 CFR 55.41/43 and 55.45 sampling is appropriate.	L	JM	✓
	c. Ensure that K/A importance ratings (except for plant-specific priorities) are at least 2.5.	L	JM	✓
	d. Check for duplication and overlap among exam sections.	L	NA	NA
	e. Check the entire exam for balance of coverage.	L	JM	✓
	f. Assess whether the exam fits the appropriate job level (RO or SRO).	L	JM	✓

	Printed Name/Signature	Date
a. Author	Ronald J. Lauver / [signature]	10-28-04
b. Facility Reviewer (*)	THOMAS HUNT / [signature]	10/28/04
c. NRC Chief Examiner (#)	R Arello / [signature]	11/04/04
d. NRC Supervisor	Edwin Lea / Edwin Lea for [signature]	11/15/04

Note: # Independent NRC reviewer initial items in Column "c"; chief examiner concurrence required.

(*) TWO TOPICS IN WRING CATEGORY BUT CAN SWAP OK

NOV 9 2005

FINAL

Facility: Saint Lucie
Examination Level (circle one): RO / SRO

Date of Examination: 12-21-04
Operating Test Number: _____

Administrative Topic (see Note)	Type Code*	Describe activity to be performed
Conduct of Operations 2.1.12	N	FCV-26-2 Fails Open, apply Tech Specs
Conduct of Operations 2.1.24	N	Use Control Wiring Diagrams
Equipment Control 2.2.26	N	Refueling Administrative Requirements
Radiation Control 2.3.6	N	Release 1B Waste Monitor Tank
Emergency Plan 2.4.32	N	Loss of Control Room Annunicators

NOTE: All items (5 total) are required for SROs. RO applicants require only 4 items unless they are retaking only the administrative topics, when 5 are required.

*Type Codes & Criteria:
(C)ontrol room
(D)irect from bank (≤ 3 for ROs; ≤4 for SROs & RO retakes)
(N)ew or (M)odified form bank (≥ 1)
(P)revious 2 exams (≤ 1; randomly selected)
(S)imulator

FINAL

Facility: ST. LUCIE Date of Examination: 12/20-21/04 Operating Test Number:

	1. General Criteria	Initials a	Initials b*	Initials c#
a.	The operating test conforms with the previously approved outline; changes are consistent with sampling requirements (e.g., 10 CFR 55.45, operational importance, safety function distribution).	L	MB	
b.	There is no day-to-day repetition between this and other operating tests to be administered during this examination.	N/A	N/A	N/A
c.	The operating test shall not duplicate items from the applicants' audit test(s). (see Section D.1.a.)	L	MB	
d.	Overlap with the written examination and between different parts of the operating test is within acceptable limits.	N/A	N/A	N/A
e.	It appears that the operating test will differentiate between competent and less-than-competent applicants at the designated license level.	L	MB	
	2. Walk-Through Criteria	–	–	–
a.	Each JPM includes the following, as applicable: • initial conditions • initiating cues • references and tools, including associated procedures • reasonable and validated time limits (average time allowed for completion) and specific designation if deemed to be time-critical by the facility licensee • operationally important specific performance criteria that include: – detailed expected actions with exact criteria and nomenclature – system response and other examiner cues – statements describing important observations to be made by the applicant – criteria for successful completion of the task – identification of critical steps and their associated performance standards – restrictions on the sequence of steps, if applicable	L	MB	
b.	Ensure that any changes from the previously approved systems and administrative walk-through outlines (Forms ES-301-1 and 2) have not caused the test to deviate from any of the acceptance criteria (e.g., item distribution, bank use, repetition from the last 2 NRC examinations) specified on those forms and Form ES-201-2.	L	MB	
	3. Simulator Criteria	–	–	–
	The associated simulator operating tests (scenario sets) have been reviewed in accordance with Form ES-301-4 and a copy is attached.	N/A	N/A	N/A

		Printed Name / Signature	Date
a.	Author	Ronald J. Lauver / [signature]	12-21-04
b.	Facility Reviewer(*)	THOMAS H. HUNT / [signature]	12-21-04
c.	NRC Chief Examiner (#)	[signature]	12-21-04
d.	NRC Supervisor	James H Moorman III / [signature]	12.22.04

NOTE: * The facility signature is not applicable for NRC-developed tests.
Independent NRC reviewer initial items in Column "c"; chief examiner concurrence required.

REGION II
ST. LUCIE NUCLEAR PLANT
INITIAL LICENSE EXAMINATION
ADMINISTRATIVE JPM

APPLY APPLICABLE TECH SPECS - UNIT 1

CANDIDATE _____

EXAMINER _____

REGION II
ST LUCIE NUCLEAR PLANT
INITIAL LICENSE EXAMINATION
ADMINISTRATIVE JPM

APPLY APPLICABLE TECHNICAL SPECIFICATIONS UNIT 1

KA Statement: Ability to apply technical specifications for a system.

KA #: 2.1.12 (2.9 / 4.0)

References: OP-1-0010125A, Surveillance Data Sheets
OPS-503, Operations Department Policy, Tech Spec Guidance
ADM-68.01, Containment Leakage Rate Testing Program
U2 FSAR Table 6.3-52 and Design Bases
Unit 1 Technical Specifications

Candidate: _____ Time Start _____
Name
Time Finish _____

Performance Rating: Sat _____ Unsat _____

Validation Time 15 minutes

Examiner: _____ **Signature:** _____

Comments

REGION II
ST LUCIE NUCLEAR PLANT
INITIAL LICENSE EXAMINATION
ADMINISTRATIVE JPM

APPLY APPLICABLE TECHNICAL SPECIFICATIONS UNIT 1

Directions to the candidate for Administrative JPMS:

I will explain the initial conditions and state the task to be performed. You will be allowed to use any reference normally available in the Control Room to complete the task. Ensure you indicate to me when you finish your assigned task by returning the material needed for the task that I provided to you.

Initial Conditions

Unit 1 is at approximately 100% power. While stroke testing was being performed it is determined that FCV-26-5, Isolation Valve (Penetration P-25C) for Containment Air Radiation Monitor Common Return, will not close. E/M has determined that the valve will take at least 6 hours to repair.

Initiating Cue

You are the Unit Supervisor. You are tasked to determine which Technical Specifications are applicable.

START TIME: _____

Consult OPS-503, Operations Department Policy, Technical Specification Guidance 3 / 4.6.3 Containment Isolation Valves. 1. Any valve on a line that penetrates the containment may be a containment isolation valve. STEP 1: A. To determine if it is a containment isolation valve reference ADM-68.01, Containment Leakage Rate Testing Program, Unit #1 UFSAR table 6.2-16 and Unit #2 tables 6.2-52 & 53. STANDARD: **DETERMINE** FCV-26-5 is listed in Table 1 Unit 1 Containment Isolation Valves. COMMENTS: V6565 isolates return flow from the Containment Air Monitoring System back to Containment. (Drawing 8770-G-092)	_____ SAT _____ UNSAT
STEP 2: If the valve in question is listed in ADM-68.01, then apply Tech Spec 3.6.3.1. STANDARD: **APPLY** Tech Spec 3.6.3.1 COMMENTS:	_____ SAT _____ UNSAT

STEP 3: 3.6.3.1 The containment isolation valves shall be OPERABLE: APPLICABILITY: MODES 1, 2, 3 and 4. ACTION: With one or more of the isolation valve(s) inoperable, either: a. Restore the inoperable valve(s) to OPERABLE status within 4 hours, or b. Isolate each affected penetration within 4 hours by use of at least one deactivated automatic valve secured in the isolation position, or c. Isolate each affected penetration within 4 hours by use of at least one closed manual valve or blind flange; or d. Be in at least HOT STANDBY within the next 6 hours and in COLD SHUTDOWN within the following 30 hours. STANDARD: **ACTION** b. Isolate each affected penetration within 4 hours by use of at least one deactivated automatic valve secured in the isolation position. (Remove power to FCV-26-6 solenoid, preferred) or c. Isolate each affected penetration within 4 hours by use of at least one closed manual valve or blind flange. COMMENTS:	**CRITICAL STEP** _____ SAT _____ UNSAT
Consult OPS-503, Operations Department Policy, Technical Specification Guidance 3 / 4.6.3 Containment Isolation Valves. 1. Any valve on a line that penetrates the containment may be a containment isolation valve. STEP 4: G. For any inoperable containment isolation valve, consider any system Tech Specs that may apply. STANDARD: **DETERMINE** atmosphere radioactivity monitor is **INOPERABLE** Per T.S. 3.4.6.1 The following RCS leakage detection systems will be OPERABLE COMMENTS: V6565 isolates return flow from the Containment Air Monitoring System back to Containment. (Drawing 8770-G-092)	_____ SAT _____ UNSAT

RCS Leakage Detection T.S. 3.4.6.1.b STEP 5: With the required radioactivity monitor inoperable, analyze grab samples of the containment atmosphere or perform a RCS water inventory balance at least once per 24 hours, and restore the required radioactivity monitor to OPERABLE status within 30 days; otherwise, be in at least HOT STANDBY within the next 6 hours and in COLD SHUTDOWN within the following 30 hours. STANDARD: **DETERMINE** that an RCS inventory balance (DS #1) or grab samples need to be performed every 24 hours and restore the radioactivity monitor within 30 days. EVALUATOR NOTE: (Data Sheet #30, Unscheduled Surveillance and Evolutions Tracking would be filled out to track this) . COMMENTS:	**CRITICAL STEP** _____ SAT _____ UNSAT
STEP (done): Inform Candidate JPM is complete. STANDARD: **EXAMINER'S CUE: THIS JPM IS COMPLETE.** COMMENTS: **END OF TASK**	_____ SAT _____ UNSAT

STOP TIME: _____

CANDIDATE COPY
(TO BE RETURNED TO THE EXAMINER UPON COMPLETION OF ANSWER)

Initial Conditions

Unit 1 is at approximately 100% power. While stroke testing was being performed it is determined that FCV-26-5, Isolation Valve (Penetration P-25C) for Containment Air Radiation Monitor Common Return, will not close. E/M has determined that the valve will take at least 6 hours to repair.

Initiating Cue

You are the Unit Supervisor. You are tasked to determine which Technical Specifications are applicable.

Operational Guidance for Section 3 / 4.6

3 / 4.6.6.1 Shield Building Ventilation System

When complying with action statement for Technical Specification 3.6.6.1c the Spent Fuel Handling Machine is considered to have no load when no load is attached to the grapple. With no load attached to the grapple the Spent Fuel Handling Machine May be operated over the Spent Fuel Pool.

3 / 4.6.3 Containment Isolation Valves

NOTE

- The inoperable containment isolation valve may be used to provide containment isolation in order to comply with Tech Spec 3.6.3.1.
- Containment penetration check valves are typically not found in the DBD. Tech Spec 3.6.3.1 applies to all containment isolation check valves.

1. Any valve on a line that penetrates the containment may be a containment isolation valve.

   A. To determine if it is a containment isolation valve reference ADM-68.01, Containment Leakage Rate Testing Program, Unit #1 UFSAR table 6.2-16 and Unit #2 tables 6.2-52 & 53.

   B. If the valve in question is listed in ADM-68.01, then apply Tech Spec 3.6.3.1.

   C. If the valve in question is determined to be a containment isolation valve, but not listed in ADM 68.01, then consult the DBD (Design Basis Documents) to determine its safety related function(s).

   D. If any one of the DBD safety related functions require the valve to be closed, then apply Tech Spec 3.6.3.1 Containment Isolation Valves.

   E. If all of the DBD safety related function(s) require the valve to be open, (for example: FCV-07-1A), then Tech Specs 3.6.1.1 and 3.6.3.1 are not applicable.

   F. If the valve is required to be closed by the DBD and/or Tech Spec 3.6.3.1 and needs to be opened for any reason, then apply Tech Spec 3.6.1.1 Containment Vessel Integrity and refer to ADM-25.04 Technical Specification Bases for required contingency actions.

   G. For any inoperable containment isolation valve, consider any system specific Tech Specs that may apply.

Operational Guidance for Section 3 / 4.6
(continued)

3 / 4.6.3 Containment Isolation Valves (continued)

2. If DC power is lost to SE-07-5A / B / C or D, Containment Pressure Transmitter Isolation Valves, the associated valve will fail open and can NOT be operated by the operator. Loss of power does not negatively impact the ability to maintain an intact containment pressure boundary. Therefore, these valves are not considered out of service.

3 / 4.6.5 Vacuum Relief Valves

1. The Primary Containment Vessel to Annulus Vacuum Relief Valves are OPERABLE when the actuation setpoint is between 9.5 to 10.2 inches of water gauge differential. Activation within the setpoint range ensures both containment relief and containment isolation functions of these valves.

2. If a primary containment vessel to annulus vacuum relief valve is inoperable, then Tech. Spec. 3.6.3 for one isolation valve inoperable and Tech. Spec. 3.6.5 for one primary containment vessel to annulus vacuum relief valve shall be entered simultaneously.

3. Quarterly stroke testing of the Vacuum Relief valves in accordance with plant procedures does not render the valves inoperable. The open signal is momentary and does not prevent the vacuum reliefs from performing their design function.

3 / 4.6.6.2 Shield Building Integrity

1. Maintenance Hatch Seals

   A. With one of the two hatch seals inoperable, the operability of the shield building can be maintained by closure of the manual isolation valve on the functioning seal.

   B. Closure of the manual isolation valve (V18263 / V18248) directly upstream of the supply check valve precludes an active failure of the check valve, but must be performed in accordance with AP 1/2-0010123, Administrative Control of Valves, Locks and Switches.

TABLE 1
UNIT 1 CONTAINMENT ISOLATION VALVES
(Page 2 of 2)

Valve Tag Number	Penetration Number	Function	Testable During Plant Operation	Isolation Time (Sec)
B. Manual or Remote Manual				
1. V18794 V18796	8	Station air supply, Manual	Yes	NA
2. V-25-11,12	56	Hydrogen purge outside air make-up, Manual (NC)	Yes	NA
3. V-25-13,14,15,16	57 & 58	Hydrogen purge exhaust, Manual (NC)	Yes	NA
4. V3463	41	Safety injection tank test line, Manual (NC)	Yes	NA*
5. V07009	41	Safety injection tank test line, Manual (NC)	Yes	NA*
6. V07206, V07189	46	Refueling cavity purification flow inlet, Manual (NC)	Yes	NA
7. V07170, V07188	47	Refueling cavity purification flow outlet, Manual (NC)	Yes	NA
8. FSE-27-1,2,3,4,8,11	48a & 48c	Hydrogen sampling line, Remote manual	Yes	NA*
9. FSE-27-5,6,7,9,10	51a & 51c	Hydrogen sampling line, Remote manual	Yes	NA*
10. FCV-26-1 & 2	52a	Radiation monitoring	Yes	NA
11. FCV-26-3 & 4	52b	Radiation monitoring	Yes	NA
12. FCV-26-5 & 6	52c	Radiation monitoring, return	Yes	NA
13. V00140 V00143	52d	ILRT test tap	Yes	NA
14. V00139 V00144	52e	ILRT test tap	Yes	NA
15. V00101	54	ILRT pressure connection	Yes	NA
16. FCV-03-1E & 1F	28	SI Tank Sample	Yes	NA**

NA- Manual Valve-Isolation time not applicable.
* May be opened on an intermittent basis under administrative control.
** Normally closed valves - Isolation time not applicable.

END OF TABLE 1

3/4.6.3 CONTAINMENT ISOLATION VALVES

LIMITING CONDITION FOR OPERATION

3.6.3.1 The containment isolation valves shall be OPERABLE:

APPLICABILITY: MODES 1, 2, 3 and 4.

ACTION:

With one or more of the isolation valve(s) inoperable, either:

a. Restore the inoperable valve(s) to OPERABLE status within 4 hours, or

b. Isolate each affected penetration within 4 hours by use of at least one deactivated automatic valve secured in the isolation position, or

c. Isolate each affected penetration within 4 hours by use of at least one closed manual valve or blind flange; or

d. Be in at least HOT STANDBY within the next 6 hours and in COLD SHUTDOWN within the following 30 hours.

SURVEILLANCE REQUIREMENTS

4.6.3.1.1 The isolation valves shall be demonstrated OPERABLE prior to returning the valve to service after maintenance, repair or replacement work is performed on the valve or its associated actuator, control or power circuit by performance of the cycling test, and verification of isolation time.

TABLE 3.3-6

RADIATION MONITORING INSTRUMENTATION

INSTRUMENT	MINIMUM CHANNELS OPERABLE	APPLICABLE MODES	ALARM SETPOINT	MEASUREMENT RANGE	ACTION
1. AREA MONITORS					
a. Fuel Storage Pool Area	1	*	≤ 15 mR/hr	$10^{-1} - 10^{4}$ mR/hr	13
b. Containment (CIS)	3	6	≤ 90 mR/hr	$1 - 10^{5}$ mR/hr	16
c. Containment Area – Hi Range	1	1, 2, 3, & 4	≤ 10 R/hr	$1 - 10^{7}$ R/hr	15
2. PROCESS MONITORS					
a. Containment					
i. Gaseous Activity RCS Leakage Detection	1	1, 2, 3 & 4	Not Applicable	$10 - 10^{6}$ cpm	14
ii. Particulate Activity RCS Leakage Detection	1	1, 2, 3 & 4	Not Applicable	$10 - 10^{6}$ cpm	14
b. Fuel Storage Pool Area Ventilation System					
i. Gaseous Activity	1	**	***	$10^{-7} - 10^{5}$ μCi/cc	12
ii. Particulate Activity	1	**	***	$1 - 10^{6}$ cpm	12

* With fuel in the storage pool or building.

** With irradiated fuel in the storage pool or whenever there is fuel movement within the pool or crane operation with loads over the storage pool.

*** The Alarm Setpoints are determined and set in accordance with requirements of the Offsite Dose Calculation Manual.

TABLE 3.3-6 (Continued)

TABLE NOTATION

ACTION 12 - With the number of channels OPERABLE less than required by the Minimum Channels OPERABLE requirement, comply with the ACTION requirements of Specification 3.9.12.

ACTION 13 - With the number of channels OPERABLE less than required by the Minimum Channels OPERABLE requirement, perform area surveys of the monitored area with portable monitoring instrumentation at least once per 24 hours.

ACTION 14 - With the number of channels OPERABLE less than required by the Minimum Channels OPERABLE requirement, comply with the ACTION requirements of Specification 3.4.6.1.

ACTION 15 - With the number of channels OPERABLE less than required by the Minimum Channels OPERABLE requirement, either restore the inoperable Channel(s) to OPERABLE status within 72 hours, or:

1) Initiate the preplanned alternate method of monitoring the appropriate parameter(s), and

2) Prepare and submit a Special Report to the Commission pursuant to Specification 6.9.2 within 14 days following the event outlining the action taken, the cause of the inoperability and the plans and schedule for restoring the system to OPERABLE status.

ACTION 16 - With the number of channels OPERABLE less than required by the Minimum Channels OPERABLE requirements, comply with the ACTION requirements of Specification 3.9.9.

3/4.4.6 REACTOR COOLANT SYSTEM LEAKAGE

LEAKAGE DETECTION SYSTEMS

LIMITING CONDITION FOR OPERATION

3.4.6.1 The following RCS leakage detection systems will be OPERABLE:

a. The reactor cavity sump inlet flow monitoring system; and

b. One containment atmosphere radioactivity monitor (gaseous or particulate).

APPLICABILITY: MODES 1, 2, 3, and 4.

ACTION:

a. With the required reactor cavity sump inlet flow monitoring system inoperable, perform a RCS water inventory balance at least once per 24 hours and restore the sump inlet flow monitoring system to OPERABLE status within 30 days; otherwise, be in at least HOT STANDBY within the next 6 hours and in COLD SHUTDOWN within the following 30 hours.

b. With the required radioactivity monitor inoperable, analyze grab samples of the containment atmosphere or perform a RCS water inventory balance at least once per 24 hours, and restore the required radioactivity monitor to OPERABLE status within 30 days; otherwise, be in at least HOT STANDBY within the next 6 hours and in COLD SHUTDOWN within the following 30 hours.

c. With all required monitors inoperable, enter LCO 3.0.3 immediately.

d. The provisions of Specification 3.0.4 are not applicable if at least one of the required monitors is OPERABLE.

SURVEILLANCE REQUIREMENTS

4.4.6.1 The RCS leakage detection instruments shall be demonstrated OPERABLE by:

a. Performance of the CHANNEL CHECK, CHANNEL FUNCTIONAL TEST, and CHANNEL CALIBRATION of the required containment atmosphere radioactivity monitor at the frequencies specified in Table 4.3-3.

b. Performance of the CHANNEL CALIBRATION of the required reactor cavity sump inlet flow monitoring system at least once per 18 months.

REGION II
ST. LUCIE NUCLEAR PLANT
INITIAL LICENSE EXAMINATION
ADMINISTRATIVE JPM

REFUELING ADMINISTRATIVE REQUIREMENTS

CANDIDATE _____

EXAMINER _____

REGION II
ST LUCIE NUCLEAR PLANT
INITIAL LICENSE EXAMINATION
ADMINISTRATIVE JPM

REFUELING ADMINISTRATIVE REQUIREMENTS UNIT 1

KA Statement: Knowledge of refueling administrative requirements.

KA #: 2.2.26 (2.5 / 3.7)

References:
- Plant Physics Curve Figure D.3
- AP 1-0010250, Guidelines for use of the Unit 1 High Density Spent Fuel Racks

Candidate: _____ Time Start _____
Name
Time Finish _____

Performance Rating: Sat _____ Unsat _____

Validation Time 15 minutes

Examiner: _____ **Signature:** _____

Comments

REGION II
ST LUCIE NUCLEAR PLANT
INITIAL LICENSE EXAMINATION
ADMINISTRATIVE JPM

REFUELING ADMINISTRATIVE REQUIREMENTS UNIT 1

Directions to the candidate for Administrative JPMS:

I will explain the initial conditions and state the task to be performed. You will be allowed to use any reference normally available in the Control Room to complete the task. Ensure you indicate to me when you finish your assigned task by returning the material needed for the task that I provided to you.

Initial Conditions

Reactor Engineering has provided a Recommended Move List to move 2 fuel assemblies in the Unit 1 Spent Fuel Pool. All equipment to perform fuel movement in the Spent Fuel Pool is operable. All funnels have been verified in the correct positions and Nuclear Fuels has verified fuel burnup history is correct for fuel storage requirements.

Initiating Cue

You are the Unit 1 Refueling Supervisor. Given the following Recommended Moves, determine if the moves are allowable.

RECOMMENDED MOVE LIST

	From						To						
Step	Assembly	Insert	Orient	Core	Bridge	Trolley	SFP	NFS	Upndr	Core	Bridge	Trolly	SFP
1	U48						L33						R5
2	R53	205					D28						Q13

START TIME: _____

STEP 1: Retrieves a controlled copy of Plant Physics Curve D.3 Spent Fuel Map (Present Configuration) from the Control Room STANDARD: **OBTAINS** copy of Plant Physics Curve D.3. EXAMINER'S NOTE: **HAND STUDENT Plant Physics Curve D.3 Spent Fuel Map (Present Configuration) Page 1 of 2** COMMENTS:	_____ SAT _____ UNSAT
STEP 2: Obtains current revision of AP 1-0010250, *Guidelines for use of the Unit 1 High Density Spent Fuel Racks* STANDARD: **OBTAINS** and **VERIFIES** current copy of procedure. EXAMINER'S NOTE: **HAND STUDENT AP 1-0010250, *Guidelines for use of the Unit 1 High Density Spent Fuel Racks*** COMMENTS:	_____ SAT _____ UNSAT
STEP 3: Reviews Step 8.2 Rack Loading Restrictions STANDARD: **DETERMINES** for move to R5, does meet >75% load restrictions and **MOVE IS ALLOWABLE**. (60 non-restricted / 79 total assemblies = 75.9%) COMMENTS:	**CRITICAL STEP** _____ SAT _____ UNSAT

STEP 4: Reviews Step 8.2 Rack Loading Restrictions STANDARD: **DETERMINES** for move to Q13, does NOT meet >75% load restrictions and **MOVE IS NOT ALLOWABLE**. (45 non-restricted / 61 total assemblies = 73.8%) COMMENTS:	**CRITICAL STEP** _____ SAT _____ UNSAT
STEP (done): Inform Candidate JPM is complete. STANDARD: **EXAMINER'S CUE: THIS JPM IS COMPLETE.** COMMENTS: **END OF TASK**	_____ SAT _____ UNSAT

STOP TIME: _____

CANDIDATE COPY
(TO BE RETURNED TO THE EXAMINER UPON COMPLETION OF ANSWER)

Initial Conditions

Reactor Engineering has provided a Recommended Move List to move 2 fuel assemblies in the Unit 1 Spent Fuel Pool. All equipment to perform fuel movement in the Spent Fuel Pool is operable. All funnels have been verified in the correct positions and Nuclear Fuels has verified fuel burnup history is correct for fuel storage requirements.

Initiating Cue

You are the Unit 1 Refueling Supervisor. Given the following Recommended Moves, determine if the moves are allowable.

RECOMMENDED MOVE LIST

	From						To						
Step	Assembly	Insert	Orient	Core	Bridge	Trolley	SFP	NFS	Upndr	Core	Bridge	Trolly	SFP
1	U48						L33						R5
2	R53	205					D28						Q13

FPL	ST. LUCIE UNIT 1 ADMINISTRATIVE PROCEDURE SAFETY RELATED	Procedure No. 1-0010250 Current Revision No. 5C Effective Date 10/26/04

Title:

GUIDELINES FOR USE OF THE UNIT 1 HIGH DENSITY SPENT FUEL RACKS

Responsible Department: **REACTOR ENGINEERING**

REVISION SUMMARY:

Revision 5C - Incorporated PCR 04-2964 to convert document from Word Perfect DOS 5.1 to Microsoft Word. (Helga Baranowsky, 10/18/04)

Revision 5B - Incorporated PCR 03-1056 to change AF17 to AG17. (W. Mead, 04/16/03)

Revision 5A - Changed Fuel Resources to Nuclear Fuels in Step 5.3. (Ray Klein, 05/07/99)

Revision	FRG Review Date	Approved By	Approval Date
0	11/29/88	G. J. Boissy Plant General Manager	01/30/89
5C	02/24, 03/26/97	J. Scarola Plant General Manager	03/26/97
		N/A Designated Approver	
		T. L. Patterson Designated Approver (Minor Correction)	10/18/04

S_1_OPS	
DATE	
DOCT	PROCEDURE
DOCN	1-0010250
SYS	
COM	COMPLETED
ITM	5C

TABLE OF CONTENTS

SECTION PAGE

1.0 TITLE 3

2.0 REVIEW AND APPROVAL 3

3.0 SCOPE 3

4.0 PRECAUTIONS 5

5.0 RESPONSIBILITIES 6

6.0 REFERENCES 6

7.0 RECORDS AND NOTIFICATIONS 7

8.0 INSTRUCTIONS 8

8.1 Fuel Funnels 8
8.2 Rack Loading Restrictions 9
8.3 Rack Indexing System 10
8.4 Spent Fuel Pool Underwater Lighting 11
8.5 Spent Fuel Funnel Handling Tool 12
8.6 Boraflex Coupon Surveillance Program 13

FIGURES

FIGURE 1 UNIT 1 HIGH DENSITY SPENT FUEL RACKS 14

FIGURE 2 INITIAL ENRICHMENT VS BURNUP REQUIREMENTS FOR REGION 2 SPENT FUEL STORAGE 15

FIGURE 3 REGION 1 FUNNEL 16

FIGURE 4 REGION 2 FUNNEL 17

FIGURE 5 FUNNEL HANDLING TOOL GENERAL ARRANGEMENT DRAWING 18

FIGURE 6 BORAFLEX SURVEILLANCE COUPON AND COUPON ASSEMBLY 19

FIGURE 7 T-BAR LIGHT AND LOCATION OF T-BAR LIGHT HANGERS 20

FIGURE 8 TOP VIEW SHOWING ADJACENT CELLS BLOCKED BY FUNNELS 21

FIGURE 9 INDEXING SYSTEM 22

FIGURE 10 FUNNEL HANDLING TOOL ALIGNMENT PLATE (CORRECT POSITION ON FUNNEL) 23

FIGURE 11 FUNNEL FULLY SEATED IN SPENT FUEL STORAGE RACK 24

1.0 TITLE

GUIDELINES FOR USE OF THE UNIT 1 HIGH DENSITY SPENT FUEL RACKS

2.0 REVIEW AND APPROVAL

See cover page.

3.0 SCOPE

3.1 Purpose

1. This procedure provides guidelines for use of the Unit 1 high density spent fuel racks and associated components and tools.

3.2 Discussion

1. To ensure that sufficient spent fuel storage continues to exist at St. Lucie Unit 1, new high density storage racks have been installed. Each cell of the new spent fuel storage racks has an 8.65 inch (nominal) square cross-section, which will accommodate a single Combustion Engineering, Advanced Nuclear Fuels or equivalent fuel assembly, from either St. Lucie Unit 1 or Unit 2. A total of 1706 cells are arranged in seventeen distinct modules of various sizes and divided into two regions.

2. The new position rack design allows for increased storage density of spent fuel.

3. This procedure will provide guidelines for use of the racks and its associated components.

3.3 Authority

1. This procedure implements plant guidelines intended to aid Operations in the use of the high density spent fuel racks and related components. Operations will utilize this procedure with Reactor Engineering guidance.

3.4 Definitions

1. REGION 1 - Designed to store fuel assemblies with enrichments up to 4.5 wt. % U235 with no minimum burnup restrictions. Region 1 consists of racks A1, A2, B1 and B2. Region 1 contains 342 cells with a nominal center to center pitch of 10.12 inches. Figure 1 shows a plan view of Region 1.

2. REGION 2 - Designed to store spent fuel assemblies with various initial enrichments which have accumulated the minimum acceptable burnups as required by Tech. Spec. Figure 5.6-1 (Figure 2 of this OP). Region 2 consists of racks C1, C2, C3, C4, D1, D2, D3, E1, E2, F1, G1, G2 and H1 as shown in Figure 1. Region 2 contains 1364 cells with a nominal center to center spacing of 8.86 inches.

NOTE
Region 1 funnels are not interchangeable with Region 2 funnels.

3. REGION 1 FUNNEL - Provides lead-in guidance during insertion of a fuel assembly into a storage cell. The funnels are a duplex design as shown in Figure 3. Assemblies may be withdrawn through the duplex funnels without first removing the funnel. There are two variants of the Region 1 funnel. Funnels for cells on the interior of a rack are identified by a solid square tab. Funnels for cells on the periphery of a rack have a hole drilled through the square tab.

4. REGION 2 FUNNEL - Provides lead-in guidance during insertion of a fuel assembly into a storage cell. The funnels are a duplex design as shown in Figure 4. Assemblies may be withdrawn through the duplex funnels without first removing the funnel.

5. FUNNEL HANDLING TOOLS - The funnel handling tool is used to install and remove individual funnels. Region 1 and Region 2 have the specific funnel handling tools differing only in dimension (due to cell pitch difference between Region 1 and Region 2). The otherwise identical funnel handling tools are mechanically actuated, lightweight aluminum hand held tools designed for use by one individual from the spent fuel machine bridge (see Figure 5).

6. BORAFLEX - Boraflex is a brand name silicone based polymer containing fine particles of boron carbide in homogeneous, stable matrix and is an integral part of every cell wall.

7. POISON RACK DESIGN - Boraflex strips are sandwiched into the rack walls between the stainless steel plates to ensure K-effective remains below 0.95 in case flooding of the Spent Fuel Pool with pure unborated water occurs.

3.4 Definitions (continued)

8. SURVEILLANCE COUPON - 5 x 15 inch boraflex coupons attached to support assemblies (see Figure 6) and placed in rack cell locations as designated by separate procedure to track possible boraflex degradation.

9. UNDERWATER LIGHTS - Moveable lights with handles which fit into corresponding hangers on the side of the spent fuel pool walls (see Figure 7).

4.0 PRECAUTIONS

GENERAL

NOTE

Rack locations marked with an X on Figure 1 of this procedure shall be used to store Unit 1 fuel only until dispositioned by FPL Engineering to accept Unit 2 fuel or consolidation canisters. Rack locations AG17, AH17 marked with an * (asterisk) shall receive no fuel.

4.1 Prior to inserting a fuel assembly into a rack location, verification of the correct rack location via the rack indexing system, as well as the presence of a funnel (required on Region 2), shall be obtained by the spent fuel machine operator.

4.2 Fuel assemblies shall be inserted into Region 2 only into rack locations that have funnels in place. Fuel assemblies may be placed into Region 1 without funnels if the Region 1 funnels or tool is inoperable.

STORAGE REQUIREMENTS

4.3 Region 1 of the spent fuel storage racks can be used to store fuel which has a U-235 enrichment less than or equal to 4.5 weight percent. Region 2 can be used to store fuel which has achieved sufficient burnup such that storage in Region 1 is not required. The initial enrichment versus burnup requirements of Figure 5.6-1 of the Tech. Specs. and Figure 2 of this Administrative Procedure shall be met prior to storage of fuel assemblies in Region 2.

FUEL FUNNELS

4.4 Prior to fuel movement within the spent fuel pool, funnel placement needs shall be determined and satisfied.

4.5 The Region 1 and Region 2 funnels are not interchangeable. For details on funnel design and purpose see definitions 3.4.3 and 3.4.4.

4.6 Funnels effectively block all cells adjacent to the locations for which they provide lead-in surfaces (see Figure 8). Fuel funnels cannot be placed side by side. A minimum clearance of one rack cell location is required between lead-in funnels.

5.0 RESPONSIBILITIES

5.1 The Operations Department is responsible for the administration and execution of this procedure.

5.2 Reactor Engineering is responsible for the determination of individual funnel locations prior to fuel movement in the spent fuel pool.

5.3 Nuclear Fuels will provide the burnup histories of spent fuel to determine the spent fuel storage requirements. /R5A

6.0 REFERENCES

NOTE

One or more of the following symbols may be used in this procedure:

§ Indicates a Regulatory commitment made by Technical Specifications, Condition of License, Audit, LER, Bulletin, Operating Experience, License Renewal, etc. and shall NOT be revised without Facility Review Group review and Plant General Manager approval.

¶ Indicates a management directive, vendor recommendation, plant practice or other non-regulatory commitment that should NOT be revised without consultation with the plant staff.

Ψ Indicates a step that requires a sign off on an attachment.

6.1 Technical Specifications

- Section 5.6 - Fuel Storage

6.2 Updated Final Safety Analysis Report (UFSAR)

- Section 9.1.2.2.3

6.3 Procedures

- POP 3200090, Unit 1 Refueling Operation
- QI-5-PSL-1, Preparation, Revision, Review / Approval of Procedures

6.4 PCM-18-186, Spent Fuel Rerack

6.5 PCM-142-186, Modifications to Support Rerack

6.6 1-LOI-RE-09, Unit 1 Boraflex Blackness Testing

6.7 Technical Manual, HPS-1000/Q Lighting System Remote Ocean Systems, Inc

6.8 JPN-PSL-SEFT-93-014, St. Lucie Unit 1 Safety Evaluation of Spent Fuel Pool (SFP) Coupon Surveillance Program

7.0 RECORDS AND NOTIFICATIONS

7.1 None

8.0 INSTRUCTIONS

CAUTION

Prior to fuel movement, obtain the following information from Reactor Engineering:

A) Procedure Data Sheet(s) outlining desired fuel movement
B) Region burnup requirements
C) Individual funnel placements needed

8.1 Fuel Funnels

1. Prior to inserting a fuel assembly into a rack cell location, visually verify that a lead-in funnel is in proper position over that location.

NOTE

Fuel may be inserted into Region 1 rack cell locations without funnels since slight lead-in surfaces are built into the racks.

2. Movement of individual funnels should be accomplished using the hand held tools described in Section 8.5.

NOTE

For Region 1 there are two types of lead-in funnels. One type for interior cells of individual racks, the other for peripheral cells of individual racks. Peripheral cell funnels have a hole drilled through the square identification tab.

3. Fuel may be withdrawn through lead-in funnels, therefore funnels can be used as inspection funnels.

END OF SECTION 8.1

8.2 Rack Loading Restrictions

1. Loading racks E1, E2 and G1 shall be accomplished as outlined below:

A. Rack locations 17A through 17M, 18A through 18M of rack G1 and locations Q1 through Q16, R1 through R16, S1 through S16 of racks E1 and E2 are subject to the loading restrictions given below.

1. Restricted locations of racks E1, E2 and G1 shall not be filled unless 75% of the total fuel assemblies loaded into each individual rack are placed into the non-restricted locations first.

In support of this, loading rack G1 west to east and racks E1 and E2 south to north is recommended.

2. No fuel shall be placed in locations AG17, AH17. *

/R5B

END OF SECTION 8.2

8.3 Rack Indexing System

> **NOTE**
> The indexing system in a approximate indication of rack storage cell location. Final adjustments in fuel assembly position should be made by the SFM operator, if required, to ensure smooth fuel assembly insertion into the rack.

1. Region 1 and Region 2 have separate indexing systems (see Figure 9). Region 1 index numbers and letters are red on white and are pre-fixed by an X. Region 2 index numbers and letters are black on white.

END OF SECTION 8.3

8.4 Spent Fuel Pool Underwater Lighting

1. The underwater lighting for the Unit 1 high density racks consists of hangers mounted to the spent fuel pool walls from which moveable underwater lights are hung. See Figure 7 for details on the hangers and underwater lights.

2. Each light assembly consists of a single positionable reflector light and weighs approximately 70 lbs.

3. Moving the underwater lights will be accomplished in the following manner:

   A. Notify Health Physics for support if pulling lights out of pool.

   B. Disconnect electrical cord from outlet.

   C. Lift the light up and out from hanger and move light to desired hanger.

   D. Re-connect electrical cord to closest outlet.

END OF SECTION 8.4

8.5 Spent Fuel Funnel Handling Tool

1. The funnel handling tools are designed for one man operation and is mechanically actuated. (See Figure 5, showing funnel handling tool design). Tool weighs about 45 lbs. Funnels weigh about 20 lbs. (Weights given are dry weights.)

2. Funnels are moved in the following manner:

A. Insert funnel tool into center plug on the duplex funnel. Ensure the tool alignment plate is positioned as shown in Figure 10.

B. When the tool latches, a positive click will be felt as the tool seats.

C. Pull up on the tool, observing the funnel to determine if the funnel is moving squarely out of its rack cell location. If not properly latched the funnel will tilt over to one side. To recover push down on the tool to latch both sides. Attempt to move the funnel again.

D. Move funnel to its new location.

E. Insert center plug into rack cell. Some side to side movement of the funnel may be necessary to get the chamfered plug to start into a cell. Insert funnel until fully seated as shown in side view, Figure 11.

F. Pull up on the release bar and remove tool. Repeat Steps A to F for each desired funnel move.

END OF SECTION 8.5

8.6 Boraflex Coupon Surveillance Program

1. The inservice Boraflex Surveillance Program is part of FPL's commitment to the NRC to allow the reracking of the Unit 1 spent fuel pool. The Surveillance Program is intended to track and verify the integrity of the boraflex neutron absorber contained in the Region 1 and Region 2 high density racks. The Boraflex Surveillance Program consists of gamma dose determination to the boraflex and periodic blackness testing which replaced the Inservice Accelerated and Longterm Coupon Testing Program. Refer to reference 6.8.

END OF SECTION 8.6

FIGURE 2

INITIAL ENRICHMENT VS BURNUP REQUIREMENTS FOR REGION 2 SPENT FUEL STORAGE

(Page 1 of 1)

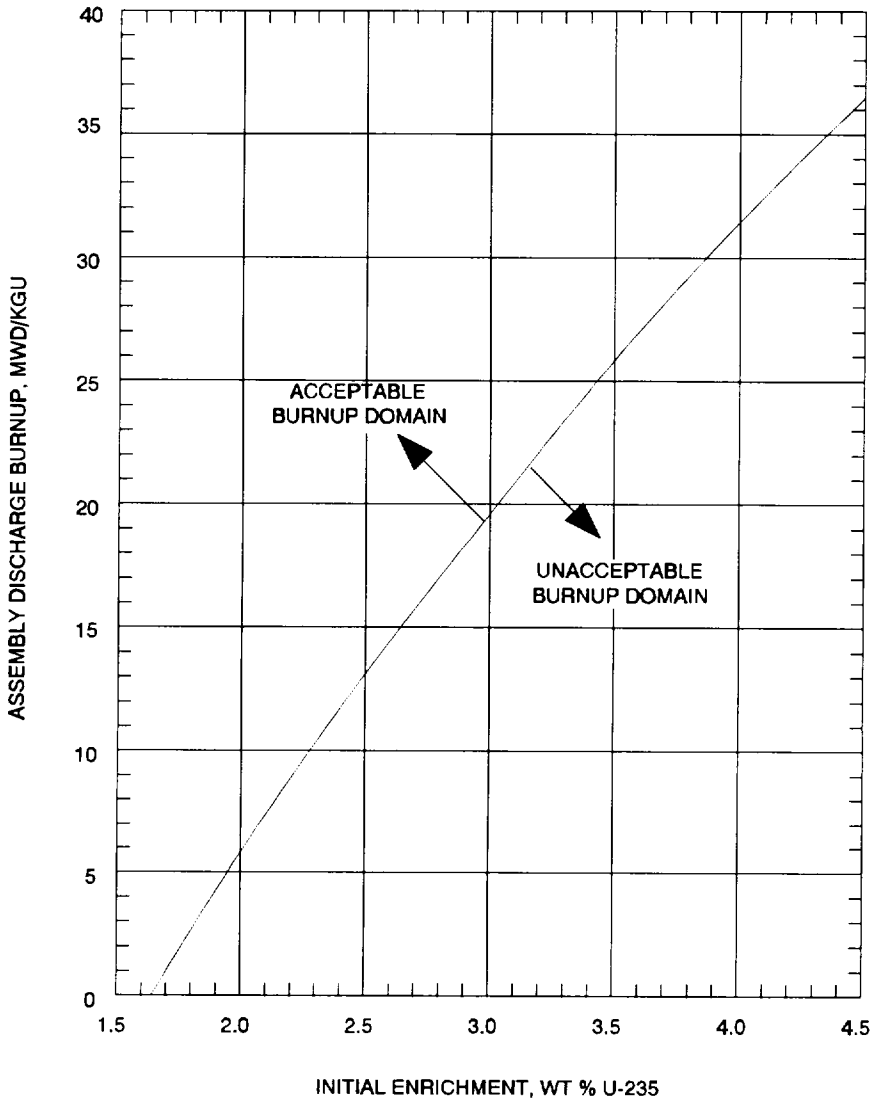

(P/AP/1-0010250/F2-R0)

FIGURE 3
REGION 1 FUNNEL
(Page 1 of 1)

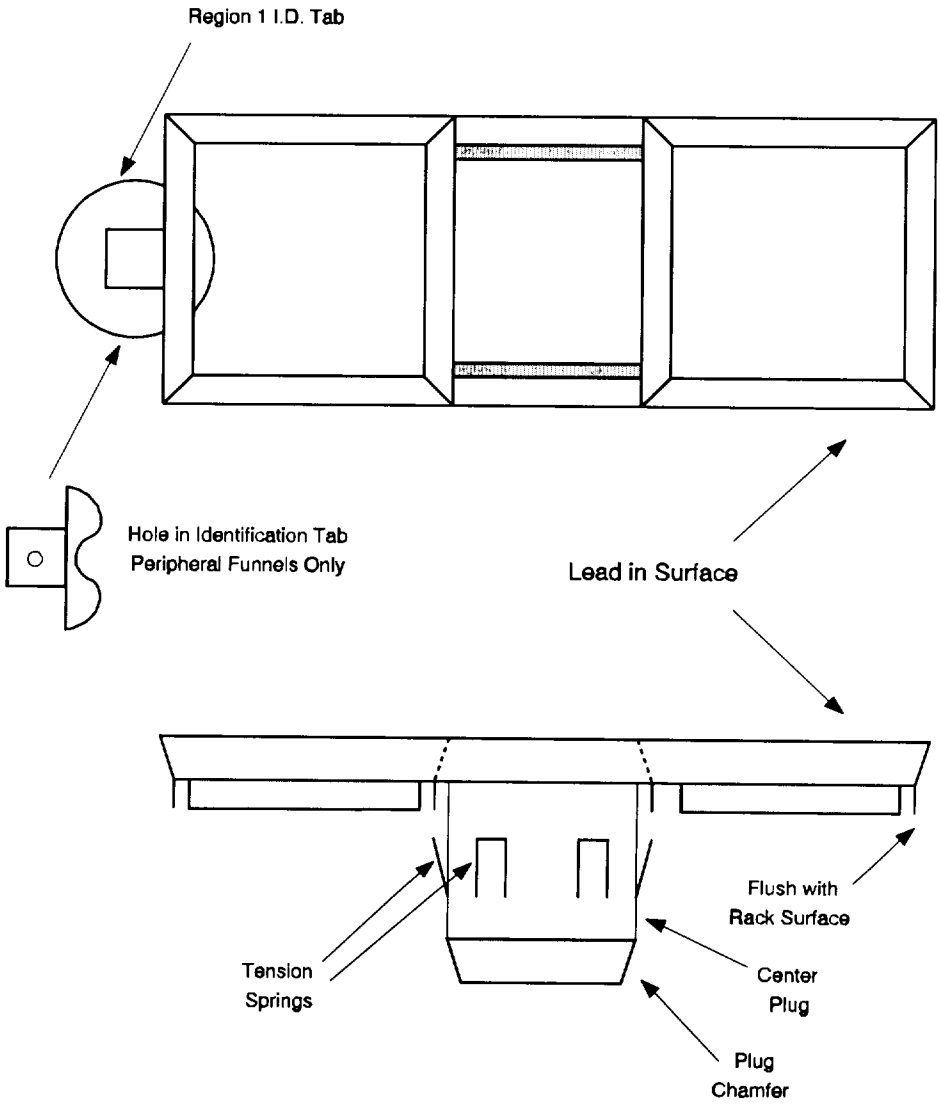

(P/AP/1-0010250/F3-R0)

FIGURE 4
REGION 2 FUNNEL
(Page 1 of 1)

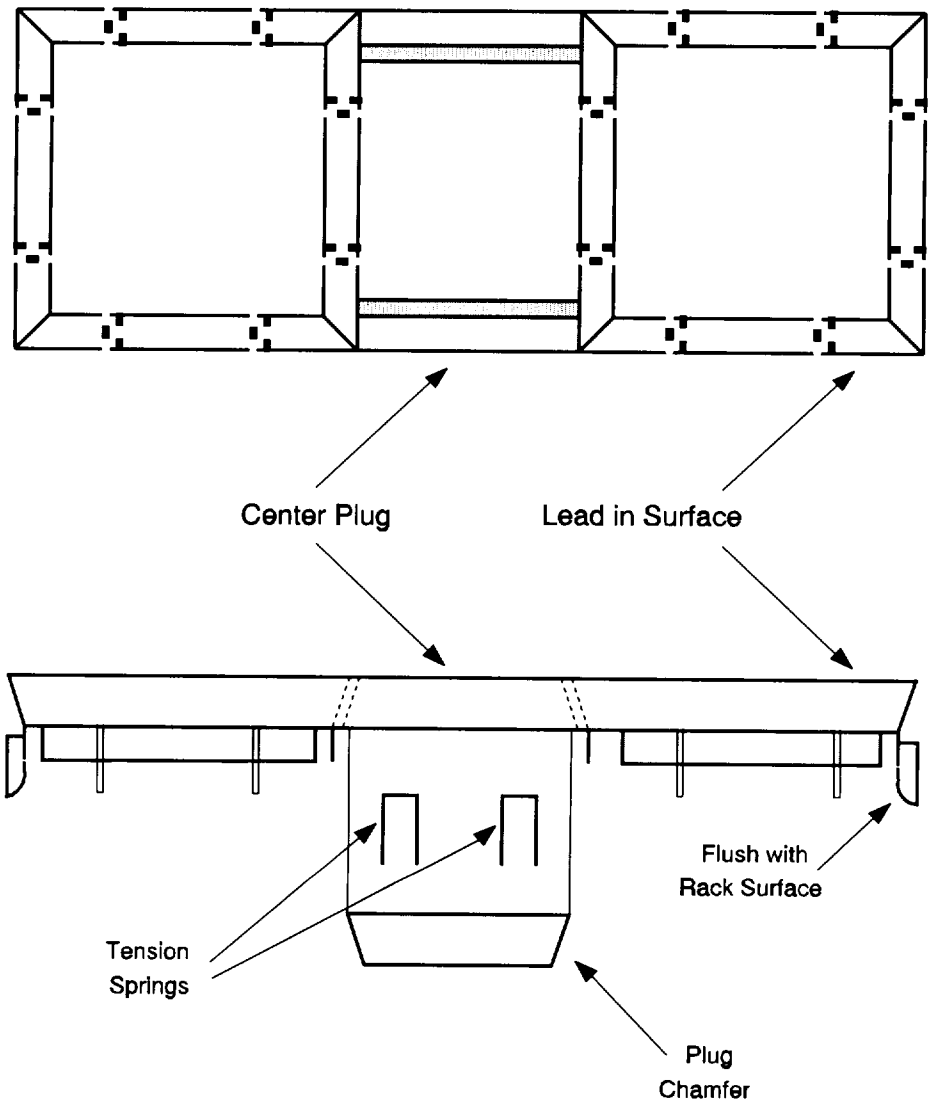

(P/AP/1-0010250/F4-R0)

FIGURE 5
FUNNEL HANDLING TOOL GENERAL ARRANGEMENT DRAWING
(Page 1 of 1)

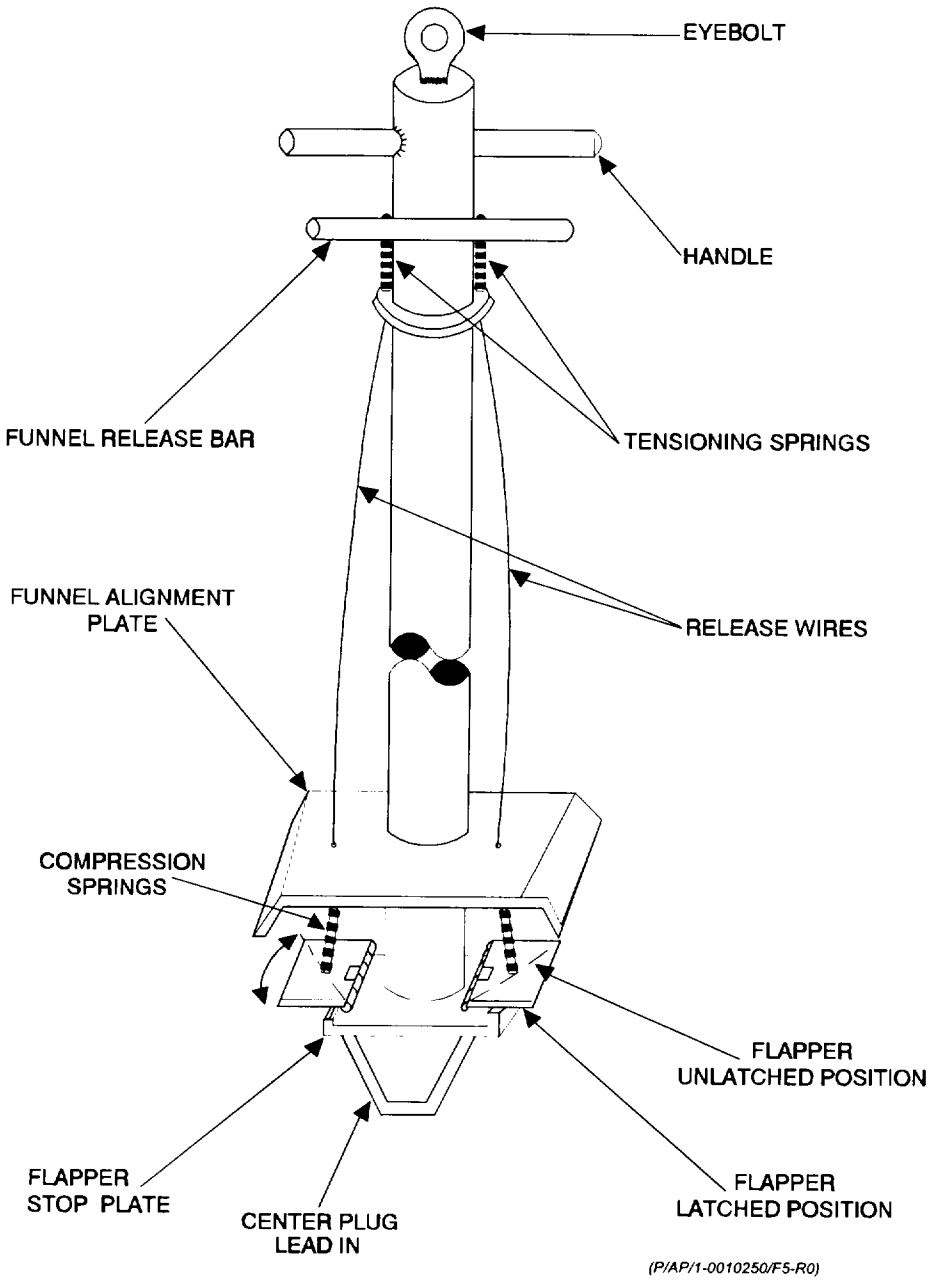

FIGURE 6
BORAFLEX SURVEILLANCE COUPON AND COUPON ASSEMBLY
(Page 1 of 1)

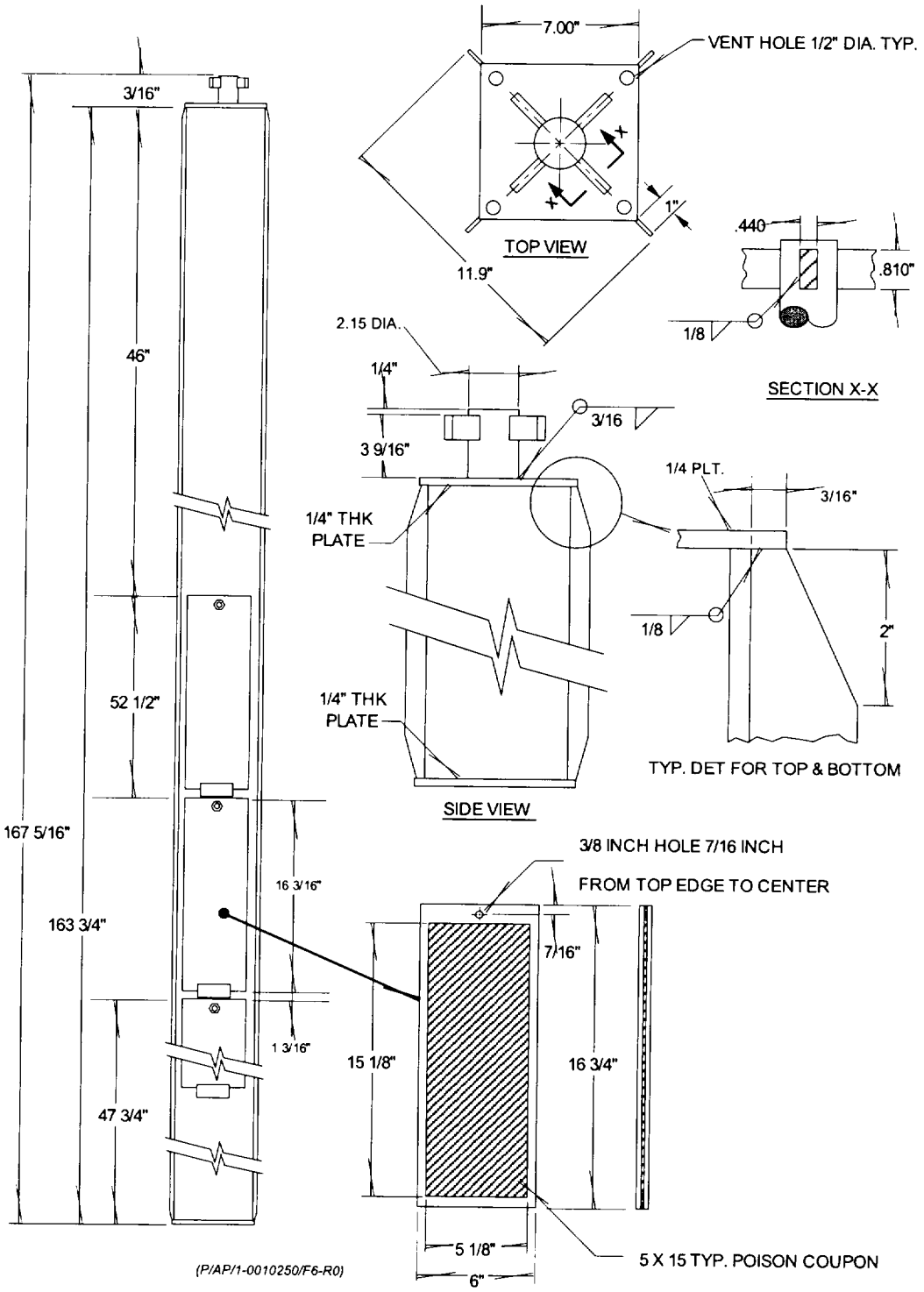

(P/AP/1-0010250/F6-R0)

FIGURE 7
T-BAR LIGHT AND LOCATION OF T-BAR LIGHT HANGERS
(Page 1 of 1)

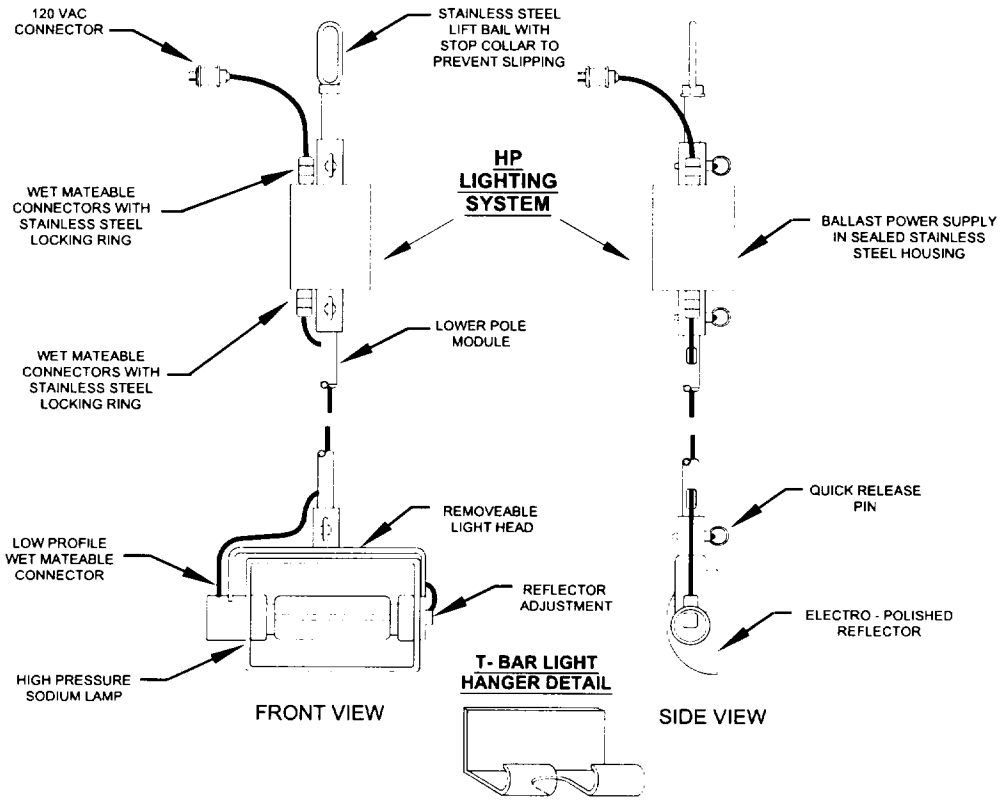

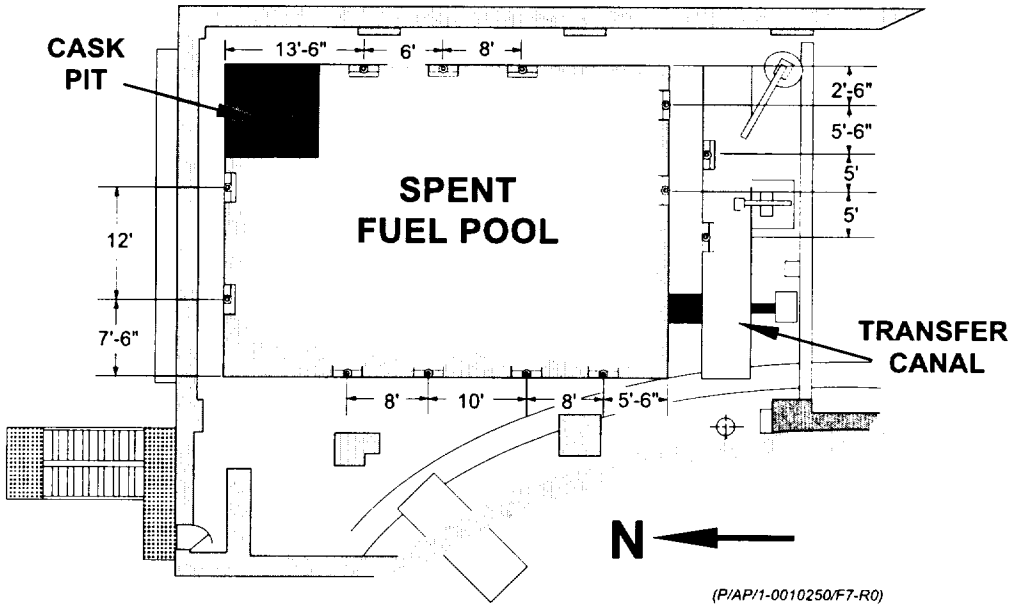

(P/AP/1-0010250/F7-R0)

FIGURE 8
TOP VIEW SHOWING ADJACENT CELLS BLOCKED BY FUNNELS
(Page 1 of 1)

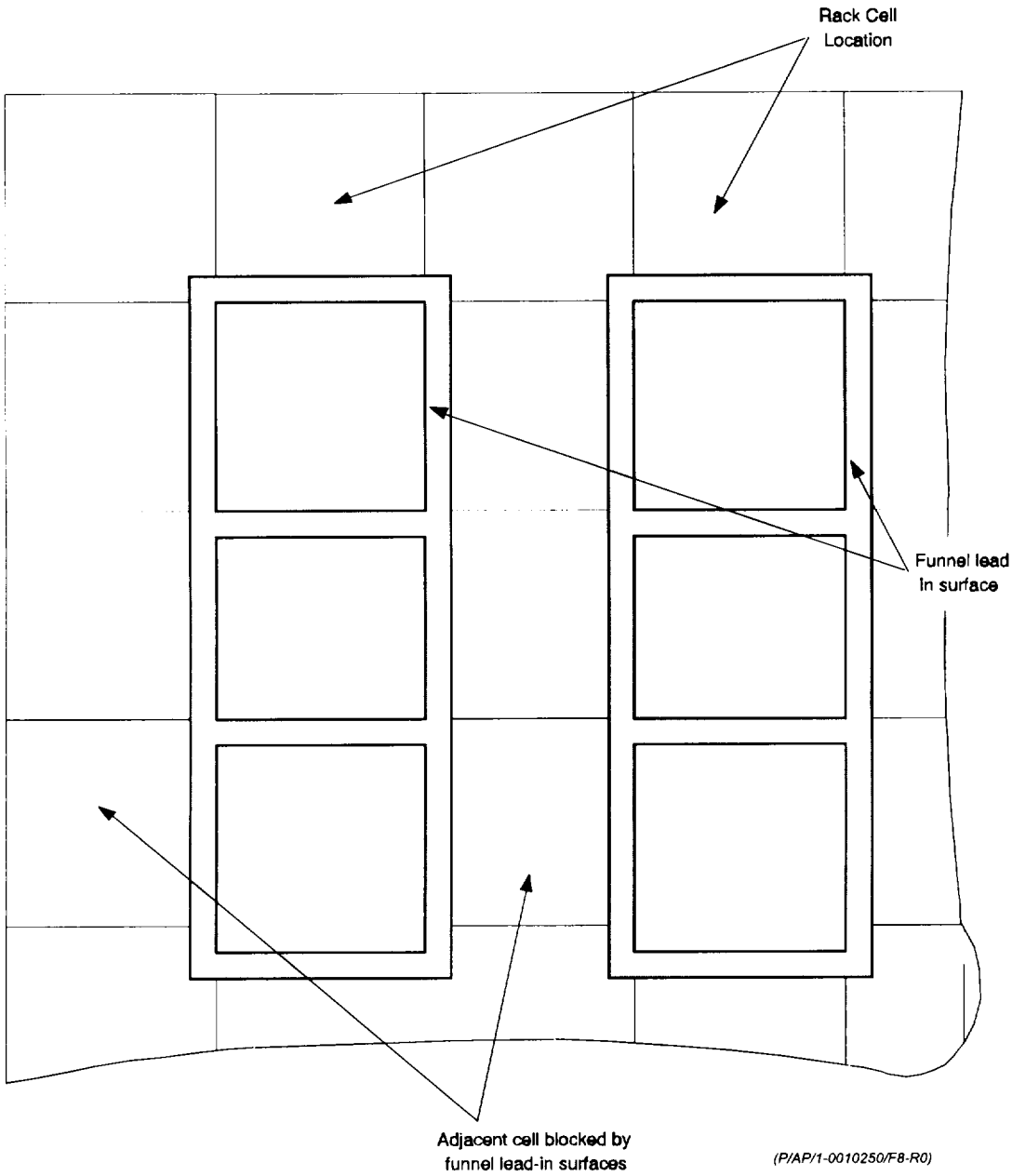

(P/AP/1-0010250/F8-R0)

FIGURE 9
INDEXING SYSTEM
(Page 1 of 1)

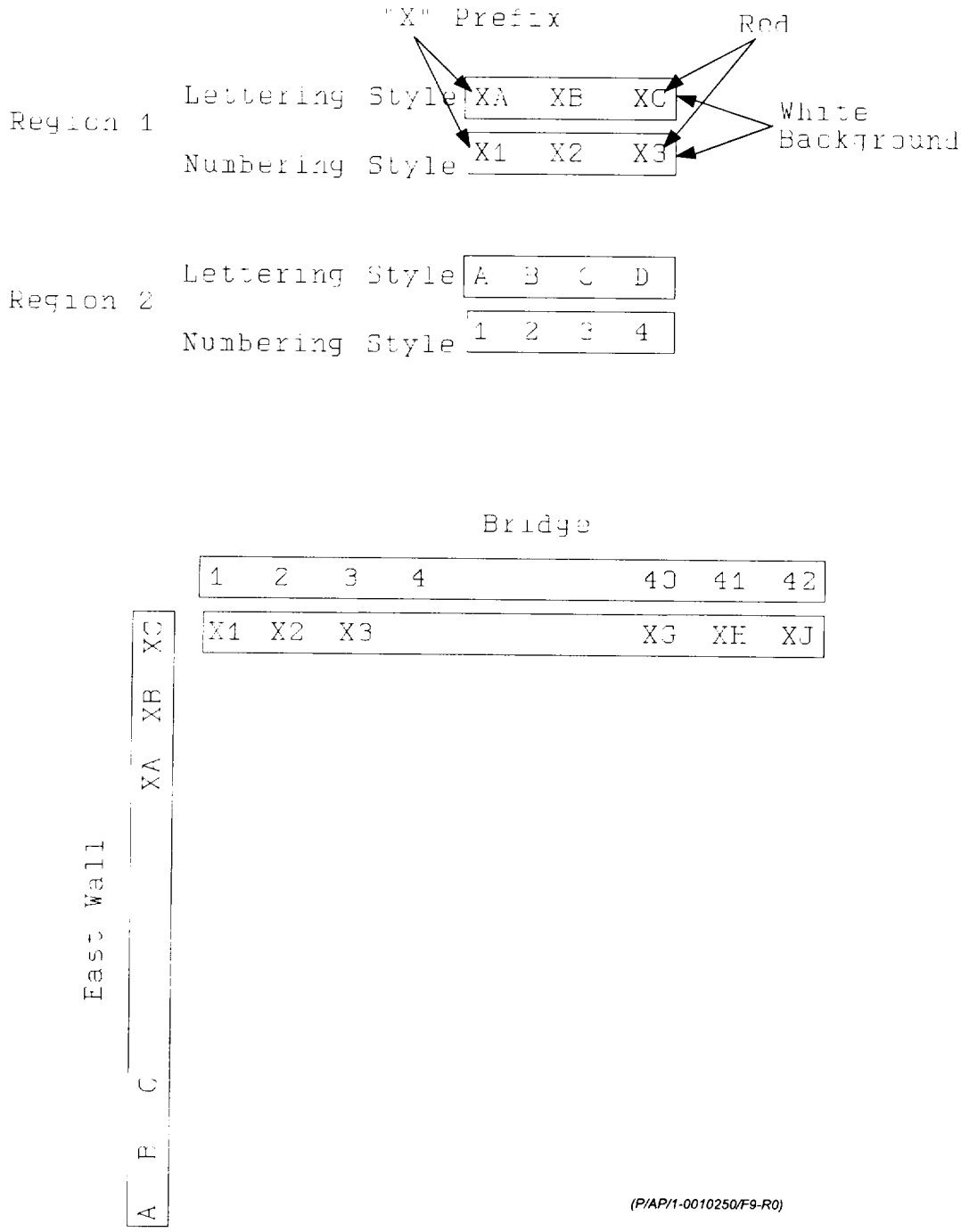

(P/AP/1-0010250/F9-R0)

FIGURE 10

FUNNEL HANDLING TOOL ALIGNMENT PLATE (CORRECT POSITION ON FUNNEL)

(Page 1 of 1)

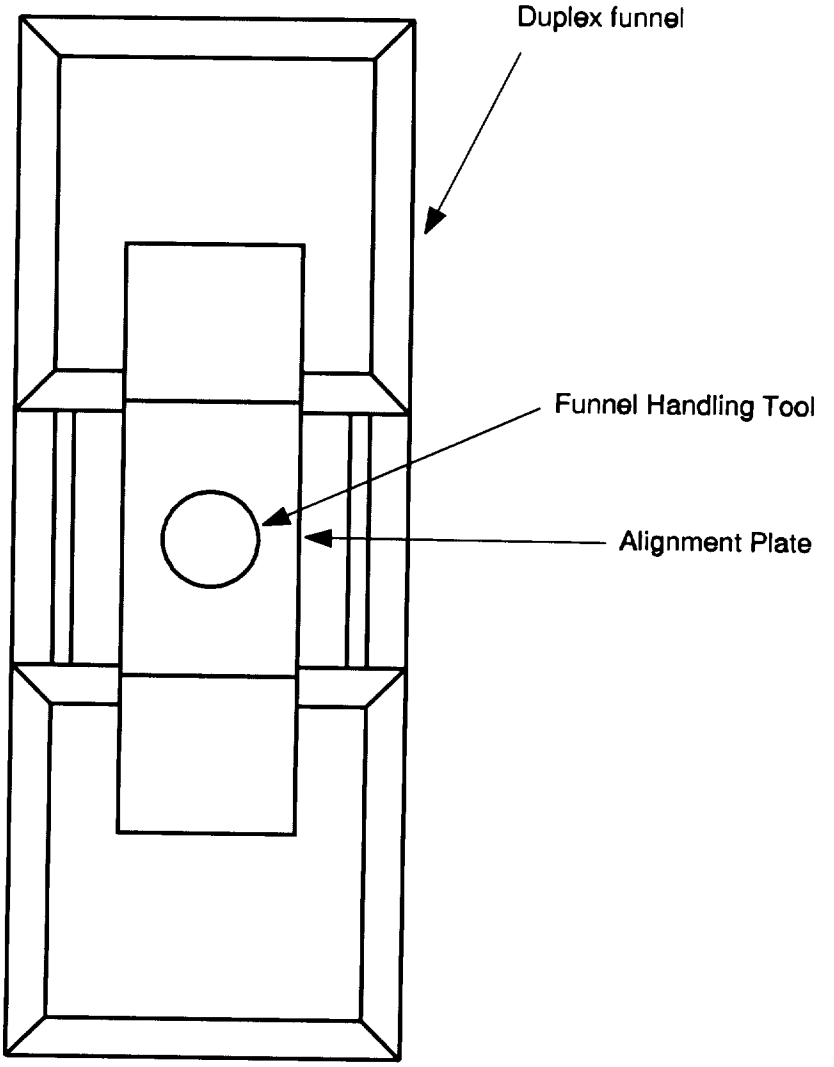

TOP VIEW

(P/AP/1-0010250/F10-R0)

FIGURE 11
FUNNEL FULLY SEATED IN SPENT FUEL STORAGE RACK
(Page 1 of 1)

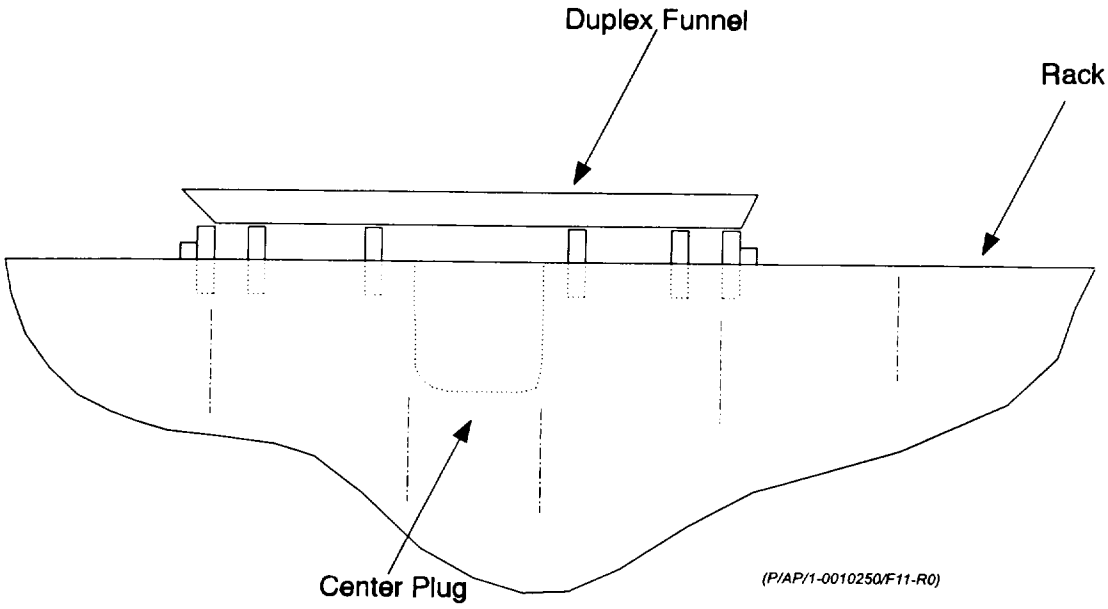

REGION II
ST. LUCIE NUCLEAR PLANT
INITIAL LICENSE EXAMINATION
ADMINISTRATIVE JPM

USE CONTROL WIRING DIAGRAMS - UNIT 1

CANDIDATE _____

EXAMINER _____

REGION II
ST LUCIE NUCLEAR PLANT
INITIAL LICENSE EXAMINATION
ADMINISTRATIVE JPM

USE CONTROL WIRING DIAGRAMS UNIT 1

KA Statement: Ability to obtain and interpret station electrical and mechanical drawings.

KA #: 2.1.24 (2.8 / 3.1)

References:

Control Wiring Diagram 8770-B-327 Sheet 564
Control Wiring Diagram 8770-B-327 Sheet 501
Control Wiring Diagram 8770-B-327 Sheet 502
Control Wiring Diagram 8770-B-327 Sheet 645

Candidate: _____ Time Start _____
Name
Time Finish _____

Performance Rating: Sat _____ Unsat _____

Validation Time 15 minutes

Examiner: _____ **Signature:** _____

Comments

REGION II
ST LUCIE NUCLEAR PLANT
INITIAL LICENSE EXAMINATION
ADMINISTRATIVE JPM

USE CONTROL WIRING DIAGRAMS UNIT 1

Directions to the candidate for Administrative JPMS:

I will explain the initial conditions and state the task to be performed. You will be allowed to use any reference normally available in the Control Room to complete the task. Ensure you indicate to me when you finish your assigned task by returning the material needed for the task that I provided to you.

Initial Conditions

I&C would like to inspect the solenoid for Waste Gas Stop Valve V6565 on Unit 1. This will require the solenoid to be de-energized.

Initiating Cue

You are the Unit 1 Unit Supervisor. Independently verify the components that need to be operated to de-energize the solenoid for Waste Gas Stop Valve V6565.

START TIME: _____

STEP 1: STANDARD: COMMENTS:	Determines from one of the following which CWD shows the solenoid of V6565: ▪ Control Wiring Diagram (CWD) Index 8770-B-327 Sheet 1 ▪ Lotus Notes on a PC ▪ FPL Mainframe on a PC DETERMINES solenoid of V6565 is on 8770-B-327 Sheet 564. Answer Key Attachment 1	**CRITICAL STEP** _____ SAT _____ UNSAT
STEP 2: STANDARD:	8770-B-327 Sheet 564 Identifies the other CWD that are connected to the solenoid of V6565 is powered from. DETERMINES solenoid of V6565 is on 8770-B-327 Sheet 564 is connected to the following CWDs: • SH 645: P15B and N15B, 125 VDC • SH 501: DDD 87 & 88 • SH 502: CC 38 & 39 COMMENTS: Answer Key Attachment 1	**CRITICAL STEP** _____ SAT _____ UNSAT
STEP 3: STANDARD: COMMENTS:	8770-B-327 Sheet 501 Determines from where the solenoid of V6565 is powered from: DETERMINES Sheet 501 does not provide power to V6565. Answer Key Attachment 2	_____ SAT _____ UNSAT

	8770-B-327 Sheet 502	
STEP 4:	Determines from where the solenoid of V6565 is powered from:	
STANDARD:	DETERMINES Sheet 502 does not provide power to V6565.	_____ SAT
COMMENTS:	Answer Key Attachment 3	_____ UNSAT
	8770-B-327 Sheet 645	
STEP 5:	Determines from CWD where on RTGB the solenoid of V6565 is powered from.	**CRITICAL STEP**
STANDARD:	DETERMINES from Sheet 645 to remove fuses in RTGB-105, EE F47 & F48 125VDC.	_____ SAT
COMMENTS:	Answer Key Attachment 4	_____ UNSAT
STEP (done):	Inform Candidate JPM is complete.	
STANDARD:	**EXAMINER'S CUE: THIS JPM IS COMPLETE.**	_____ SAT
COMMENTS:		_____ UNSAT
	END OF TASK	

STOP TIME: _____

CANDIDATE COPY
(TO BE RETURNED TO THE EXAMINER UPON COMPLETION OF ANSWER)

Initial Conditions

I&C would like to inspect the solenoid for Waste Gas Stop Valve V6565 on Unit 1. This will require the solenoid to be de-energized.

Initiating Cue

You are the Unit 1 Unit Supervisor. Independently verify the components that need to be operated to de-energize the solenoid for Waste Gas Stop Valve V6565.

REGION II
ST. LUCIE NUCLEAR PLANT
INITIAL LICENSE EXAMINATION
ADMINISTRATIVE JPM

LIQUID RELEASE REQUIREMENTS

CANDIDATE _____

EXAMINER _____

REGION II
ST LUCIE NUCLEAR PLANT
INITIAL LICENSE EXAMINATION
ADMINISTRATIVE JPM

LIQUID RELEASE REQUIREMENTS UNIT 1

KA Statement: Knowledge of the requirements for reviewing and approving release permits.

KA #: 2.3.6 (2.1 / 3.1)

References:
- 1-NOP-06.01, Controlled Liquid Release to Circulating Water Discharge
- Chemistry Pre-Release Calculations
- C-200, Offsite Dose Calculation Manual

Candidate: _____ Time Start _____
Name
Time Finish _____

Performance Rating: Sat _____ Unsat _____

Validation Time 10 minutes

Examiner: _____ **Signature:** _____

Comments

REGION II
ST LUCIE NUCLEAR PLANT
INITIAL LICENSE EXAMINATION
ADMINISTRATIVE JPM

LIQUID RELEASE REQUIREMENTS UNIT 1

Directions to the candidate for Administrative JPMS:

I will explain the initial conditions and state the task to be performed. You will be allowed to use any reference normally available in the Control Room to complete the task. Ensure you indicate to me when you finish your assigned task by returning the material needed for the task that I provided to you.

Initial Conditions

Unit 1 is at 100% power. Chemistry has requested a release of the 1B WMT per LRP Permit # 1-04-55. All equipment is operable with the exception of Liquid Waste Monitor R-6627 which is out of service.

Initiating Cue

You are the Unit 1 Unit Supervisor. Process the Liquid Release Permit # 1-04-55 for this release.

START TIME: _____

1-NOP-06.01, *Controlled Liquid Release to Circulating Water Discharge* STEP 1: ENSURE Section 3.0, Prerequisites, completed. STANDARD: **INITIAL** Electrical power available and step after reviewing Section 3.0 EVALUATOR NOTE: All equipment is operable per initial conditions COMMENTS:	_____ SAT _____ UNSAT
STEP 2: ENSURE Section 4.0, Prerequisites, completed. STANDARD: **INITIAL** after reviewing Section 4.0 COMMENTS:	_____ SAT _____ UNSAT
STEP 3: REVIEW the Liquid Release Permit for appropriate signatures under AUTHORIZATION. STANDARD: **VERIFIES** signatures and **ENTERs** 1-04-55 for Permit Number and **ENTERs** 1B WMT for Tank releasing COMMENTS:	_____ SAT _____ UNSAT

STEP 4: REVIEW the Equipment Out of Service Log and determine if Channel R-6627, Liquid Waste Monitor has been declared Out of Service. STANDARD: **DETERMINES** R-6627 is Out of Service EVALUATOR NOTE: R-6627 is not operable per initial conditions COMMENTS:	_____ SAT _____ UNSAT
If Channel R-6627 is Out of Service, Then PERFORM the following: STEP 5: Has Chemistry attached two independent Radioactivity analysis of the tank to the Release Permit? STANDARD: **CHECK** No COMMENTS:	_____ SAT _____ UNSAT
If Channel R-6627 is Out of Service, Then PERFORM the following: STEP 6: Has Chemistry attached two independent Release Rate Calculations for the tank on the Release Permit? STANDARD: **CHECK** No COMMENTS:	_____ SAT _____ UNSAT

If Channel R-6627 is Out of Service, Then PERFORM the following: STEP 7: Have you arranged for independent verification of the discharge valve alignment? STANDARD: **CHECK** No COMMENTS: Unit Supervisor is the person who would arrange to this step done	_____ SAT _____ UNSAT
STEP 8: If the answer to any of the above questions is "No", Then STOP, do not approve the Liquid Release Permit. STANDARD: **STOPS**, does not approve the Liquid Release Permit. COMMENTS:	**CRITCAL STEP** _____ SAT _____ UNSAT
STEP (done): Inform Candidate JPM is complete. STANDARD: **EXAMINER'S CUE: THIS JPM IS COMPLETE.** COMMENTS: **END OF TASK**	_____ SAT _____ UNSAT

STOP TIME: _____

UNIT 1 LIQUID RELEASE PERMIT

I TANK DATA

A. LRP Permit #	B. Date and Time	C. Tank Name	D. Discharge Volume (Gallons)
1-04-55	21-DEC-2004 03:45	1B WMT	4.0000E+04

II PRERELEASE DATA

(μCi/ml = micro curies per milliliter)

A. Total Concentration Of Solids 3.574E+06 μCi/ml
B. Total Activity Of Solids 5.411E+02 μCi
C. Tank Recirced As Per COP-01.05 I Initials
D. Minimum Pumps During Release 3 CWP's
E. Maximum Release Rate During Rele 0E+02 GPM
F. Fraction Of 10 CFR 20 Limits At C 3-02 Fl
Canal (Solids) (Admin Limit <0.8)
G. Total Noble Gas Activity After Dilu 00 Fg
(Gases) (Admin Limit < 1.60E-04)
H. Liquid Radwaste Monitor Settings
Alert Setting 4.500E-03 μCi/ml
I Have Verified These Settings Are En
Monitors Control Module In The Contr Initials
I. Liquid Rad Waste Monitor Source Chec Initials
J. LRP LIMS Number 234878 Monitor

Ron. This is another handout to student that we can print on green if you need us to. Tom

III. AUTHORIZATION

A. Permit Preparer Verifies Release Will . Signature
B. Release Approved By Permit Preparer 1 Ron Lauver Signature
C. Release Approved By Chemistry Supr. 1 <= 25000 μCi N/A Signature

D. Release Conditions Approved By ANPS Signature

IV. ACTUAL RELEASE DATA

A. Number Of Pumps Running CWP's ICWP's
B. Tank Level At Start Of Release
C. Date and Time At Start Of Release
D. Date and Time At End Of Release
E. Tank Level At End Of Release

F. Reviewed By ANPS Signature

V. POST RELEASE DATA

A. Total Volume This Release Gallons
B. Total Activity Of Solids Released μCi

C. Release Conditions Approved By ANPS Signature

FLORIDA POWER & LIGHT CO. ST. LUCIE PLANT CHEMISTRY DEPARTMENT
LIQUID RELEASE PERMIT 1-04- 55
FINAL ACTIVITY REPORT FOR PRE-RELEASE CALCULATIONS

SAMPLE I.D. : 1B WMT FILE: LRP.DAT SAMPLE # 36
SAMOPLE TIME : 12-21-2004 @ 8:10 RELEASE VOLUME: 4.0000E+04 gal.
GEOMETRY FILE: 3GT67.CLB RELEASE RATE : 1.7000E+02 GPM
COUNT TIME : 1.0000E+03 SEC DILUTION PUMPS: 1 ICWP 3 CWP
SAMPLE VOLUME: 1.0000E+03 mls. DILUTION RATE : 3.7750E+05 GPM

** LRP PROGRAM Q.C. O.K. **

NUCLIDE SYMBOL		SAMPLE UCI/ML	E.C.L. UCI/ML	E.C.L. FRACTION	TANK UCI PRERELEAS	TANK UCI POSTRELEA	NUCLIDE SYMBOL
SB-125		5.583E-07	3.E-05	8.381E-06	8.453E+01		SB-125
C0-60		1.783E-06	3.E-06	2.677E-04	2.700E+02		-60
H-3	C	5.520E-02	1.E-03	2.486E-02			
FE-55	C	9.880E-06	1.E-04	4.449E-05			
SR-89	C	2.400E-08	8.E-06	1.351E-06			
Y-90	C	5.000E-09	5.E-07	4.503E-06			
Y-90	C	5.000E-09	7.E-06	3.217E-07			
TOTALS		2.342E-06		2.519E-02	3.545E+02		
		LRP II.A.		F SUB L	LRP II.B.		

C - denotes composite - only used for F SUB L

NUCLIDE SYMBOL	SAMPLE UCI/ML	DIL. CONC @ CANAL	TANK UCI PRERELEAS	TANK UCI POSTRELEA	NUCLIDE SYMBOL
TOTALS	0.000E+00	0.000E+00	0.000E+00		
		F SUB G			

CANDIDATE COPY
(TO BE RETURNED TO THE EXAMINER UPON COMPLETION OF ANSWER)

Initial Conditions

Unit 1 is at 100% power. Chemistry has requested a release of the 1B WMT per LRP Permit # 1-04-55. All equipment is operable with the exception of Liquid Waste Monitor R-6627 which is out of service.

Initiating Cue

You are the Unit 1 Unit Supervisor. Process the Liquid Release Permit # 1-04-55 for this release.

FPL	ST. LUCIE UNIT 1 NORMAL OPERATING PROCEDURE SAFETY RELATED	Procedure No. 1-NOP-06.01 Current Revision No. 7A Effective Date 10/11/04

Title:

CONTROLLED LIQUID RELEASE TO THE CIRCULATING WATER DISCHARGE

Responsible Department: **OPERATIONS**

REVISION SUMMARY:

Revision 7A - Incorporated PCR 04-2909 to delete step F. of Page 13 of 15 as it is redundant to Step G. (Clyde Price, 10/06/04)

Revision 7 - Incorporated PCR 04-0105 for CR 03-4573, PM03-12-154 to correct switch positions and modify steps 6.3.11 and 6.3.13. (David Albritton, 01/21/04)

AND

Incorporated PCR 04-0079 to renumber steps, reword steps, add steps and renumber accordingly. (Winston Ryley, 01/14/04)

Revision 6 - Incorporated TC 03-083 to adjust FIC-6627 to minimum setting and adjust flow. (Bill Green, 10/30/03)

Revision 5A – Incorporated PCR #03-0353 to add appropriate missing lines. (Clyde Price, 02/14/03)

REVISION 5 – Added note regarding low WMT level and guidance to adjust recirc to maintain flow. (William Green, 08/13/02)

REVISION 4 – Removed 14-day requirement for restoration of rad monitor per change in ODCM (C-200). (Kelly Korth, 05/14/02)

Revision	FRG Review Date	Approved By	Approval Date
0	09/21/99	R. G. West Plant General Manager	09/21/99
Revision 7A	FRG Review Date	Approved By	Approval Date
		N/A Plant General Manager	
		J. R. Martin Designated Approver	01/21/04
		J. R. Martin Designated Approver (Minor Correction)	10/06/04

S_1_OPS	
DATE	
DOCT	PROCEDURE
DOCN	1-NOP-06.01
SYS	
COM	COMPLETED
ITM	7A

TABLE OF CONTENTS

SECTION PAGE

1.0 PURPOSE 3

2.0 REFERENCES 3

3.0 PREREQUISITES 4

4.0 PRECAUTIONS / LIMITATIONS 4

5.0 RECORDS REQUIRED 5

6.0 INSTRUCTIONS 6

6.1 Initial Conditions 6
6.2 Valve Alignment 7
6.3 Starting the Liquid Release 10
6.4 Completing the Liquid Release 14

FIGURES

FIGURE 1 LIQUID RELEASE PERMIT - UNIT 1 15

1.0 PURPOSE

1.1 This procedure provides instructions for the controlled release of liquid from the Waste Monitor Tanks (WMT).

2.0 REFERENCES

NOTE

One or more of the following symbols may be used in this procedure:

§ Indicates a Regulatory commitment made by Technical Specifications, Condition of License, Audit, LER, Bulletin, Operating Experience, License Renewal, etc. and shall NOT be revised without Facility Review Group review and Plant General Manager approval.

¶ Indicates a management directive, vendor recommendation, plant practice or other non-regulatory commitment that should NOT be revised without consultation with the plant staff.

Ψ Indicates a step that requires a sign off on an attachment.

2.1 Technical Specifications

- Appendix B part 2
- Technical Requirements Manual

2.2 Updated Final Safety Analysis Report (UFSAR)

- Section 11.2.2.2

2.3 Management Directives and Regulatory Commitments

- $¶_1$ CR-1045

2.4 Procedures

- Chemistry Procedure C-200, Offsite Dose Calculation Manual (ODCM)
- Radiation Protection Manual
- COP-01.05, Processing Aerated Liquid Waste

2.5 Miscellaneous Documents

- P&ID 8770-G-078, Sheets 161, 162, 164, 165

3.0 PREREQUISITES — INITIAL

3.1 Electrical power is available to the following pumps:

1. 1A Waste Monitor Pump Bkr. 1-40948 _____
2. 1B Waste Monitor Pump Bkr. 1-41756 _____
3. Liquid Waste Control Panel (LWCP) PP-109, Ckt. 18 _____

4.0 PRECAUTIONS / LIMITATIONS

4.1 Prior to release, the tank contents shall be sampled, analyzed and a Liquid Release Permit (LRP) prepared and approved. Once a sample has been drawn for release purposes, radioactive waste shall NOT be added to the tank.

4.2 The Operator shall perform a release only after receipt of an approved Liquid Release Permit. Form similar to Figure 1.

4.3 The Liquid Waste Monitor shall be in service during a release and frequently observed to assure that the count rate is below the trip point settings as noted on the Release Permit. If the Liquid Waste Monitor is determined to be inoperable, refer to C-200, Offsite Dose Calculation Manual (ODCM), Section 3.3.3.9 for required actions and provisions to proceed with the release.

4.4 If activity reaches the high rate trip setpoint as indicated on the Release Permit, an alarm is activated in the Control Room and Flow Control Valve FCV-6627X trips closed. FCV-6627X may be closed from RTGB-105 to terminate the release at the Operator's discretion. Do not re-initiate a liquid release that has been terminated by a monitor alarm until authorized by the Chemistry Department.

4.5 The minimum number of circulating water (CWP) and/or Intake Cooling Water Pumps (ICWP) should be in service during a release as specified by the Liquid Release Permit. Even though not desirable, a release may be made with only ICW pumps for dilution if administrative limits are not exceeded.

4.6 The ODCM limits for liquid releases are the following:

1. The concentration of radioactive material released from the site shall be limited to the concentrations specified in 10 CFR Part 20, Appendix B, Table 2, Column 2 for radionuclides other than dissolved or entrained noble gases. For dissolved or entrained noble gases, the concentration shall be limited to 2×10^{-4} microcuries / ml total activity.

2. To ensure that the sum of radioactive releases from multiple release points on site do not exceed the site limits:

A. No more than one batch release shall be made on site at the same time.

B. Administrative limits of 80% of the site limits shall be used for a batch release liquid release permit.

C. Chemistry Department shall ensure as per COP-01.05 that the sum of all continuous and any batch release shall not exceed the site limit. A continuous release is Steam Generator Blowdown to the discharge canal with primary-to-secondary leakage. A batch release is from a tank identified in the respective reactor unit's operating procedure for controlled liquid release to the circulating water discharge i.e. this procedure.

4.7 Applicable radiation protection, precautions and procedures shall be observed.

5.0 RECORDS REQUIRED

5.1 A completed Liquid Release Permit with the final activity page attachment and this procedure with signed off steps shall be maintained in the plant files in accordance with QI-17-PSL-1, Quality Assurance Records.

5.2 Normal Log Entries

6.0 INSTRUCTIONS — INITIAL

6.1 Initial Conditions

1. ENSURE Section 3.0, Prerequisites, completed. _____

2. REVIEW Section 4.0, Precautions / Limitations. _____

3. REVIEW the Liquid Release Permit for appropriate signatures under AUTHORIZATION.

   Permit Number_____

   Tank releasing_____

> **CAUTION**
> If the Liquid Waste Monitor is Out of Service, C-200, ODCM Control 3.3.3.9 requires two independent tank sample / analysis and two independent valve alignments to verify the discharge line valving.

4. ¶1 REVIEW the Equipment Out of Service Log and determine if Channel R-6627, Liquid Waste Monitor has been declared Out of Service.

5. If Channel R-6627 is Out of Service, Then PERFORM the following:

		YES	NO
A.	Has Chemistry attached two independent Radioactivity analysis of the tank to the Release Permit?	____	____
B.	Has Chemistry attached two independent Release Rate Calculations for the tank on the Release Permit?	____	____
C.	Have you arranged for independent verification of the discharge valve alignment?	____	____

If the answer to any of the above questions is "No", Then **STOP**, do not approve the Liquid Release Permit.

END OF SECTION 6.1

6.2 Valve Alignment

CAUTION
If the Liquid Waste Monitor is Out of Service, two independent valve alignments shall be performed to verify the discharge line valving.

1. PERFORM the following valve alignment.

AT CCW PLATFORM

VALVE NUMBER	DESCRIPTION	POSITION	INITIAL
V21462	Waste Monitor Pumps Disch to Disch Canal Isol	LOCKED CLOSED	
V06247	Waste Monitor Tanks Inlet Isol	OPEN	
V06238	Waste Monitor Pumps Discharge Recirc Isol	CLOSED	
V06239	RE-6627 Upstrm Root	OPEN	
V06240	RE-6627 Dwnstrm Root	OPEN	
V06241	FE-6627 Upstrm Root	OPEN	
V06242	FE-6627 Dwnstrm Root	OPEN	
V38175	RE-6627 Demineralized Water Flush	CLOSED	

AT WASTE MONITOR PUMPS

VALVE NUMBER	DESCRIPTION	POSITION	INITIAL
V06221	1A/1B Waste Monitor Tank Outlet Crossover Isol	CLOSED	
V06222	1A/1B Waste Monitor Pump Recirc Crossover Isol	CLOSED	

2. PERFORM the following valve alignment for the appropriate tank to be discharged: Valve alignment for the non-discharged tank is not necessary. (Check appropriate tank.)

6.2 Valve Alignment (continued)

2. (continued)

A. If 1A Waste Monitor Tank is being discharged with the 1A Waste Monitor Pump, Then PERFORM the following alignment:

VALVE NUMBER	DESCRIPTION	POSITION	INITIAL
V06231	1B Waste Monitor Pump Disch Isol	CLOSED	
V06207	1A Waste Monitor Tank Outlet Isol	OPEN	
V06208	1A Waste Monitor Pump Suct Isol	OPEN	
V06215	1A Waste Monitor Pump Disch Isol	CLOSED	
V06220	1A Waste Monitor Pump Disch Recirc Isol	OPEN	
HCV-06-6	Waste Monitor Tanks Inlet	Selected to 1B WMT	

B. If 1B Waste Monitor Tank is being discharged with the 1B Waste Monitor Pump, Then PERFORM the following alignment:

VALVE NUMBER	DESCRIPTION	POSITION	INITIAL
V06215	1A Waste Monitor Pump Discharge Isol	CLOSED	
V06223	1B Waste Monitor Tank Outlet Isol	OPEN	
V06224	1B Waste Monitor Pump Suct Isol	OPEN	
V06231	1B Waste Monitor Pump Discharge Isol	CLOSED	
V06235	1B Waste Monitor Pump Disch Recirc Isol	OPEN	
HCV-06-6	Waste Monitor Tanks Inlet	Selected to 1A WMT	

6.2 Valve Alignment (continued)

2. (continued)

C. If 1A Waste Monitor Tank is being discharged with the 1B waste monitor pump, Then PERFORM the following alignment:

VALVE NUMBER	DESCRIPTION	POSITION	INITIAL
V06215	1A Waste Monitor Pump Disch Isol	CLOSED	
V06223	1B Waste Monitor Tank Outlet Isol	CLOSED	
V06224	1B Waste Monitor Pump Suct Isol	OPEN	
V06231	1B Waste Monitor Pump Disch Isol	CLOSED	
V06235	1B Waste Monitor Pump Disch Recirc Isol	CLOSED	
HCV-06-6	Waste Monitor Tanks Inlet	Selected to 1B WMT	
V06221	1A/1B Waste Monitor Tank Outlet Crossover Isol	OPEN	
V06207	1A Waste Monitor Tank Outlet Isol	OPEN	
V06222	1A/1B Waste Monitor Pump Recirc Crossover Isol	OPEN	
V06220	1A Waste Monitor Pump Disch Recirc Isol	OPEN	

D. If 1B Waste Monitor Tank is being discharged with the 1A waste monitor pump, Then PERFORM the following alignment:

VALVE NUMBER	DESCRIPTION	POSITION	INITIAL
V06231	1B Waste Monitor Pump Disch Isol	CLOSED	
V06207	1A Waste Monitor Tank Outlet Isol	CLOSED	
V06208	1A Waste Monitor Pump Suct Isol	OPEN	
V06215	1A Waste Monitor Pump Disch Isol	CLOSED	
V06220	1A Waste Monitor Pump Disch Recirc Isol	CLOSED	
HCV-06-6	Waste Monitor Tanks Inlet	Selected to 1A WMT	
V06221	1A/1B Waste Monitor Tank Outlet Crossover Isol	OPEN	
V06223	1B Waste Monitor Tank Outlet Isol	OPEN	
V06222	1A/1B Waste Monitor Pump Recirc Crossover Isol	OPEN	
V06235	1B Waste Monitor Pump Disch Recirc Isol	OPEN	

END OF SECTION 6.2

6.3 Starting the Liquid Release

NOTE
Low WMT level may cause the flow switch for RE-6627 to actuate.

1. VERIFY that the minimum number of CW or ICW Pumps required by Liquid Release Permit is in service.

2. ENTER the pumps in operation in section IV of permit.

3. ENSURE FIC-6627 Manual Control Knob is FULL counterclockwise.

4. ENSURE FIC-6627 is in MANUAL.

5. PLACE Liquid Waste Flow Valve Selector to FCV-6627X position.

6. OPEN FCV-6627X using FIC-6627 Manual Control Knob.

7. If Waste Monitor Pump 1A is to be used, Then PERFORM the following:

   A. START 1A Waste Monitor Pump

      1. If releasing the 1A Waste Monitor Tank, Then THROTTLE CLOSE V06220, 1A Waste Monitor Pump Discharge Recirc Isol, to attain 20 to 25 psig on PI-06-47A, 1A Waste Monitor Pump Press.

      2. If releasing the 1B Waste Monitor Tank, Then THROTTLE CLOSED V06235, 1B Waste Monitor Pump Discharge Recirc Isolation, to attain 20 to 25 psig on PI-06-47A, 1A Waste Monitor Pump Pressure.

   B. OPEN V06215, 1A Waste Monitor Pump Discharge Isol.

   C. If pump discharge pressure does not return to approximately 20 to 25 psig after the discharge valve is opened, Then PERFORM the following:

      1. CLOSE V06215, 1A Waste Monitor Pump Discharge Isolation.

      2. STOP 1A Waste Monitor Pump.

      3. VERIFY correct valve lineup before continuing.

6.3 Starting the Liquid Release (continue)

8. If Waste Monitor Pump 1B is to be used, Then PERFORM the following:

A. START 1B Waste Monitor Pump.

1. If releasing 1B Waste Monitor Tank, Then THROTTLE CLOSED V06235, 1B Waste Monitor Pump Discharge Recirc Isolation, to attain 20 to 25 psig on PI-06-47B, 1B Waste Monitor Pump Press.

2. If releasing 1A Waste Monitor Tank, Then THROTTLE CLOSED V06220, 1A Waste Monitor Pump Discharge Recirc Isolation, to attain 20 to 25 psig on PI-06-47B, 1B Waste Monitor Pump Pressure.

B. OPEN V06231, 1B Waste Monitor Pump Discharge Isolation.

C. If pump discharge pressure does not return to approximately 20 to 25 psig after the discharge valve is opened, Then PERFORM the following:

1. CLOSE V06231, 1B Waste Monitor Pump Disch Isol.

2. STOP 1B Waste Monitor Pump.

3. VERIFY correct valve lineup before continuing.

9. RECORD the following liquid release data in Section IV of LRP:

A. Start date and time

B. Starting tank level.

10. LOCK OPEN V21462, Waste Monitor Pumps Disch to Disch Canal Isol

11. MONITOR FR-6627 and ADJUST FIC-6627 to maintain release flow:

A. If releasing 1B Waste Monitor Tank, Then THROTTLE FCV-6627X by adjusting FIC-6627 Manual Control Knob, to attain no greater than 50 gpm on FR-6627. /R7

B. If releasing 1A Waste Monitor Tank, Then THROTTLE FCV-6627X by adjusting FIC-6627 Manual Control Knob, to attain no greater than 50 gpm on FR-6627. /R7

6.3 Starting the Liquid Release (continue)

12. MONITOR liquid radwaste effluent radiation monitor activity (uCi/ml) to ensure rate below those specified on the LRP, for the first few minutes of the release.

13. MONITOR the Liquid Waste Control Panel for the following:

A. Local Alarm

B. ENSURE the Waste Monitor pump stops at Lo-Level setpoint. /R7

> **NOTE**
> If the liquid waste monitor is out of service the release may continue until the Unit Supervisor determines that the release is complete.

/R7

C. When the liquid waste monitor, R-6627, alarms on low sample flow (annunciator X-5), Then PERFORM the following: /R7

1. If the 1A Waste Monitor Pump is being used for liquid release, Then CLOSE V06215, 1A Waste Monitor Pump Discharge Isolation.

OR

If the 1B Waste Monitor Pump is being used for liquid release, Then CLOSE V06231, 1B Waste Monitor Pump Discharge Isolation.

D. If the Liquid Release Permit requests a RE-6627 Demin Flush, Then PERFORM the following: /R7

1. PLACE V06239, RE-6627 Upstrm Root, in the CLOSED position.

2. NOTIFY the Control Room that Channel RE-6627 is OOS.

3. PLACE V38175, DMW to RE-6627 Isol, in the OPEN (or throttled OPEN as needed) position.

4. FLUSH RE-6627 with Demineralized Water for approximately 4 minutes.

5. PLACE V38175, DMW to RE-6627 Isol, in the CLOSED position.

6.3 Starting the Liquid Release (continue) INITIAL /IV

13. **D.** (continued)

6. PLACE V06239, RE-6627 Upstrm Root, in the OPEN position. ___/___

7. NOTIFY the Control Room that Channel RE-6627 is back in service.

E. PLACE FCV-6627X Selector switch to the CLOSED position.

F. PLACE FIC-6627 Manual Control Knob full counter clockwise. /R7A

G. OPEN the Waste Monitor Pump Discharge Isolation:

- V06215, 1A Waste Monitor Pump Discharge Isolation

OR

- V06231, 1B Waste Monitor Pump Discharge Isolation

END OF SECTION 6.3

/R7

6.4 Completing the Liquid Release

1. If the Liquid release is complete, Then RECORD the following data in Section IV on Release Permit:

   A. Release stop date and time

   B. Monitor Tank ending level

2. If the Liquid release is complete, Then PERFORM the following valve alignment:

VALVE NUMBER	DESCRIPTION	POSITION	INITIAL
V06207	1A Waste Monitor Tank Outlet Isol	OPEN	
V06208	1A Waste Monitor Pump Suct Isol	OPEN	
V06215	1A Waste Monitor Pump Disch Isol	CLOSED	
V06220	1A Waste Monitor Pump Disch Recirc Isol	OPEN	
V21462	Waste Monitor Pumps Disch to Disch Canal Isol	LOCKED CLOSED	
V06221	1A/1B Waste Monitor Tank Outlet Crossover Isol	CLOSED	
V06222	1A/1B Waste Monitor Pump Recirc Crossover Isol	CLOSED	
V06223	1B Waste Monitor Tank Outlet Isol	OPEN	
V06224	1B Waste Monitor Pump Suct Isol	OPEN	
V06231	1B Waste Monitor Pump Disch Isol	CLOSED	
V06235	1B Waste Monitor Pump Disch Recirc Isol	OPEN	

3. ROUTE completed release package to Nuclear Plant Supervisor / Assistant Nuclear Plant Supervisor for review.

END OF SECTION 6.4

FIGURE 1
LIQUID RELEASE PERMIT - UNIT 1
(Page 1 of 1)

I. TANK DATA

A. IRP Permit # B. Date and Time C. Tank Name D. Discharge Volume (Gallons)

II. PRE-RELEASE DATA (µCi/ml = micro curies per milliliter)

A. Total Concentration Of Solids _____ µCi/ml
B. Total Activity Of Solids _____ µCi
C. Tank Recirced As Per COP-01.05 _____ Initials
D. Minimum Pumps During Release _____ CWPs _____ ICWPs
E. Maximum Release Rate During Release _____ GPM
F. Fraction Of 10 CFR 20 Limits At Canal _____ FI
Canal (Solids) (Admin Limit < 0.8)
G. Total Noble Gas Activity After Dilution _____ Fg
(Gases) (Admin Limit < 1.60E-04)
H. Liquid Radwaste Monitor Settings
Alert Setting _____ µCi/ml High Setting _____ µCi/ml
I Have Verified These Settings Are Entered On The
Monitors Control Module In The Control Room. _____ Initials
I. Liquid Rad Waste Monitor Source Check Performed By: _____ Initials
J. LRP LIMS Number _____ Monitor Source Check LIMS Number _____

III. AUTHORIZATION

A. Permit Preparer Verifies Release Will Not Exceed Admin Limits _____ Signature
B. Release Approved By Permit Preparer If II.B Is 25000 µCi _____ Signature
C. Release Approved By Chemistry Supv If II.B Is > 25000 µCi _____ Signature
D. Release Conditions Approved by ANPS: _____ Signature

IV. ACTUAL RELEASE DATA

A. Number Of Pumps Running _____CWPs _____ ICWPs
B. Tank Level At Start Of Release _____
C. Date And Time At Start Of Release _____
D. Date And Time At End Of Release _____
E. Tank Level At End Of Release _____
F. Reviewed By ANPS _____ Signature

V. POST RELEASE DATA

A. Total Volume This Release _____ Gallons
B. Total Activity Of Solids Released _____ µCi
C. Post Release Reviewed By Chemistry Supervisor _____ Signature

S__OPS

DATE_____
DOCT_____
DOCN_____
SYS_____
COMP_____
ITM_____

INSTRUMENTATION

RADIOACTIVE LIQUID EFFLUENT MONITORING INSTRUMENTATION

CONTROLS

3.3.3.9 In accordance with St. Lucie Plant TS 6.8.4.f.1), the radioactive liquid effluent monitoring instrumentation channels shown in Table 3.3-12 shall be OPERABLE with their Alarm/Trip Setpoints set to ensure that the limits of Control 3.11.1.1 are not exceeded. The Alarm/Trip Setpoints of these channels shall be determined and adjusted in accordance with the methodology and parameters in the OFFSITE DOSE CALCULATION MANUAL (ODCM).

APPLICABILITY: At all times.

ACTION:

a. With a radioactive liquid effluent monitoring instrumentation channel Alarm/Trip Setpoint less conservative than required by the above control, immediately suspend the release of radioactive liquid effluents monitored by the affected channel or declare the channel inoperable or change the setpoint so it is acceptably conservative.

b. With less than the minimum number of radioactive liquid effluent monitoring instrumentation channels OPERABLE, take the ACTION shown in Table 3.3-12. Restore the inoperable instrumentation to OPERABLE status within 30 days and, if unsuccessful, explain in the next Annual Radioactive Effluent Release Report why this inoperability was not corrected in a timely manner.

c. Report all deviations in the Annual Radioactive Effluent Release Report.

SURVEILLANCE REQUIREMENTS

4.3.3.9 Each radioactive liquid effluent monitoring instrumentation channel shall be demonstrated OPERABLE by performance of the CHANNEL CHECK, SOURCE CHECK, CHANNEL CALIBRATION and CHANNEL FUNCTIONAL TEST at the frequencies shown in Table 4.3-8.

ST. LUCIE PLANT
CHEMISTRY OPERATING PROCEDURE NO. C-200, REVISION 25
OFFSITE DOSE CALCULATION MANUAL (ODCM)

TABLE 3.3-12

RADIOACTIVE LIQUID EFFLUENT MONITORING INSTRUMENTATION

INSTRUMENT	MINIMUM CHANNELS OPERABLE	ACTION
1. Radioactivity Monitors Providing Alarm and Automatic Termination of Release		
a) Liquid Radwaste Effluent Line	1	35
b) Steam Generator Blowdown Effluent Line	1/SG	36, 37
2. Flow Rate Measurement Devices		
a) Liquid Radwaste Effluent Line	N.A.	38
b) Discharge Canal	N.A.	38
c) Steam Generator Blowdown Effluent Lines	N.A.	38

SG - Denotes Steam Generator

TABLE 3.3-12 (Continued)

ACTION STATEMENTS

ACTION 35 - With the number of channels OPERABLE less than required by the Minimum Channels OPERABLE requirement, effluent releases may continue provided that prior to initiating a release: /R25

a. At least two independent samples are analyzed in accordance with the Surveillance Requirement for concentration limit of Control 4.11.1.1.1. and

b. At least two technically qualified members of the Facility Staff independently verify the release rate calculations and discharge line valving.

Otherwise, suspend release of radioactive effluents via this pathway.

ACTION 36 - With the number of channels OPERABLE less than required by the Minimum Channels OPERABLE requirement, effluent releases via this pathway may continue for up to 30 days provided grab samples are analyzed for gross radioactivity (beta or gamma) at a limit of detection of at least 2.E-07 micro-Curie/ml:

a. At least once per 8 hours[1] when the specific activity of the secondary coolant is greater than 0.01 micro-Curies/gram DOSE EQUIVALENT I-131 or

b. At least once per 24 hours[1] when the specific activity of the secondary coolant is less than or equal to 0.01 micro-Curies/gram DOSE EQUIVALENT I-131.

REGION II
ST. LUCIE NUCLEAR PLANT
INITIAL LICENSE EXAMINATION
ADMINISTRATIVE JPM

LOSS OF CONTROL ROOM ANNUNICATORS UNIT 1

CANDIDATE _____

EXAMINER _____

REGION II
ST LUCIE NUCLEAR PLANT
INITIAL LICENSE EXAMINATION
ADMINISTRATIVE JPM

LOSS OF CONTROL ROOM ANNUNICATORS UNIT 1

KA Statement: Knowledge of operator response to loss of all annunciators.

KA #: 2.4.32 (3.3 / 3.5)

References: ONP 2-100.03, Partial or Complete Loss of Annunicators
EPIP-01, Classification of Emergencies
EPIP-08, Off-Site Notifications and Protective Action Recommendations

Candidate: _____ Time Start _____
Name
Time Finish _____

Performance Rating: Sat _____ Unsat _____

Validation Time 30 minutes **(Time Critical)**

Examiner: _____ **Signature:** _____

Comments

REGION II
ST LUCIE NUCLEAR PLANT
INITIAL LICENSE EXAMINATION
ADMINISTRATIVE JPM

LOSS OF CONTROL ROOM ANNUNICATORS UNIT 1

Directions to the candidate for Administrative JPMS:

I will explain the initial conditions and state the task to be performed. You will be allowed to use any reference normally available in the Control Room to complete the task. Ensure you indicate to me when you finish your assigned task by returning the material needed for the task that I provided to you.

Initial Conditions

Unit 1 is at 90% power performing a downpower to 45% due to electrical bus problems. The Reactor Operator has just reported that numerous annunicators are not working.

Initiating Cue

You are the Shift Manager. Unit 1 has just tested all annunicators and determined that the annunicators A, B, C, D, K, L, M, N, P, Q, R & S are not functioning. 10 Meter wind speed is 12 mph and direction is 90°. Complete the appropriate procedures as necessary. ***This is a time-critical JPM.***

START TIME: _____

ONP 2-100.03, Partial or Complete Loss of Annunicators": STEP 1: RECORD the time that annunciators were lost. STANDARD: **RECORD** current time. COMMENTS:	_____ SAT _____ UNSAT
STEP 2: TEST all Control Room alarm panels to determine the extent of any malfunction. STANDARD: **DETERMINE** annunicators A, B, C, D, K, L, M, N, P, Q, R & S are not functioning. COMMENTS:	_____ SAT _____ UNSAT
STEP 3: DETERMINE the affected annunciator panels (A, B, C, LR, etc.). STANDARD: **DETERMINE** annunicators A, B, C, D, K, L, M, N, P, Q, R & S are not functioning.. COMMENTS:	_____ SAT _____ UNSAT

STEP 4:	From the table below, DETERMINE the percentage of Safety System Annunciators that are lost by adding the percent of total for each affected panel.	**CRITICAL STEP**
STANDARD:	**DETERMINE** the percentage > 75%	_____ SAT _____ UNSAT

A	8.6%
B	8.6%
C	0.8%
D	0.0%
K	4.8%
L	6.3%
M	6.3%
N	4.2%
P	6.7%
Q	10.3%
R	10.9%
S	10.3%
TOTAL	77.9%

COMMENTS:

STEP 5:	If the percentage of safety system annunciators exceeds 50%, Then EVALUATE and IMPLEMENT the E-Plan as required in EPIP-01, Classification of Emergencies.	**CRITICAL STEP**
STANDARD:	**IMPLEMENT** EPIP-01, Classification of Emergencies 8.B. LOSS OF ALARMS / COMMUNICATION /MONITORING	_____ SAT _____ UNSAT

COMMENTS:

	EPIP-01 Attachment 1 Step 8.B Loss of Alarms/Communication/Monitoring	**CRITICAL STEP**
STEP 6:	Classifies EAL ALERT per EPIP-01	
STANDARD:	**CLASSIFIES** ALERT due to Unplanned loss of most (greater than 75%) or all safety system annunicators and Plant transient in progress.	_____ SAT
	EXAMINER'S NOTE: **Record the time initial event Declaration is made _____. This must be within 15 of JPM Start Time**	_____ UNSAT
	EXAMINER'S CUE: **Your task is to now complete a FLORIDA NUCLEAR PLANT NOTIFICATION FORM using EPIP-08.**	
	EXAMINER'S NOTE: **HAND STUDENT EPIP-08**	
COMMENTS:		
	EPIP-08 Attachment 1 Step 1A	**CRITICAL STEP**
STEP 7:	Check appropriate box for drill or actual emergency as the case may be. During exercises, drills, or tests, each message shall be checked **THIS IS A DRILL.**	_____ SAT
STANDARD:	**CHECK** THIS IS A DRILL	_____ UNSAT
COMMENTS:		

EPIP-08 Attachment 1 Step 2A STEP 8: Enter today's date. STANDARD: **ENTER** the current date. **EVALUATOR'S NOTE: 2B is completed when contact with State Warning Point is made** COMMENTS:	**CRITICAL STEP** _____ SAT _____ UNSAT
EPIP-08 Attachment 1 Step 2C STEP 9: Enter the name of the person making the notification call. STANDARD: **ENTER** Candidates name. COMMENTS:	**CRITICAL STEP** _____ SAT _____ UNSAT
EPIP-08 Attachment 1 Step 2D STEP 10: Enter the message number. STANDARD: **ENTER 1** COMMENTS:	**CRITICAL STEP** _____ SAT _____ UNSAT

EPIP-08 Attachment 1 Step 2E STEP 11: Check where notification is being made from. STANDARD: **CHECK Control Room** COMMENTS:	**CRITICAL STEP** _____ SAT _____ UNSAT
EPIP-08 Attachment 1 Step 3B STEP 12: Check the box for the facility from which the notification is being made. STANDARD: **CHECK** St. Lucie Unit 1 COMMENTS:	**CRITICAL STEP** _____ SAT _____ UNSAT
EPIP-08 Attachment 1 Step 4A STEP 13: Check the box corresponding to current accident classification declared. STANDARD: **CHECK** Alert COMMENTS:	**CRITICAL STEP** _____ SAT _____ UNSAT

	EPIP-08 Attachment 1 Step 5A	
STEP 14:	Check the box for the appropriate plant site for the emergency declaration.	**CRITICAL STEP**
STANDARD:	**CHECK** Emergency Declaration.	_____ SAT _____ UNSAT
COMMENTS:		
	EPIP-08 Attachment 1 Step 5	
STEP 15:	Enter the **date** and **time** when the current emergency classification was declared	**CRITICAL STEP**
STANDARD:	**ENTER** Date and Time **EXAMINER'S NOTE: Should be same time as Step 1 of JPM**	_____ SAT _____ UNSAT
COMMENTS:		
	EPIP-08 Attachment 1 Step 6B	
STEP 16:	Reason for Emergency Declaration	**CRITICAL STEP**
STANDARD:	**CHECK** "B" Description **ENTER** Unplanned loss of most (greater than 75%) or all safety system annunicators and plant transient in progress.	_____ SAT _____ UNSAT
COMMENTS:		

EPIP-08 Attachment 1 Step 7A STEP 17: Additional Information or Update STANDARD: **CHECK** "A" None COMMENTS:	_____ SAT _____ UNSAT
EPIP-08 Attachment 1 Step 8 STEP 18: Weather Data. STANDARD: **A. Wind direction 90° B. Downwind Sectors Affected M , N , P** COMMENTS:	**CRITICAL STEP** _____ SAT _____ UNSAT
EPIP-08 Attachment 1 Step 9A STEP 19: Release Status STANDARD: **CHECK "A" None (Go To Item 11)** COMMENTS:	**CRITICAL STEP** _____ SAT _____ UNSAT

EPIP-08 Attachment 1 Step 10 STEP 20: Release Significance Category STANDARD: **Do Not Check Any Box in Item 10** COMMENTS:	_____ SAT _____ UNSAT
EPIP-08 Attachment 1 Step 11A STEP 21: Determination of Protective Actions Recommendations (PARs) STANDARD: **CHECK "A" No recommended Actions at this time** COMMENTS:	**CRITICAL STEP** _____ SAT _____ UNSAT
EPIP-08 Attachment 1 Step 11B STEP 22: Utility Recommended Protective Actions STANDARD: **Leave "B" blank** COMMENTS:	**CRITICAL STEP** _____ SAT _____ UNSAT

EPIP-08 Attachment 1 Step 11C STEP 23: Consideration Issuance of KI: STANDARD: **CHECK NO** COMMENTS: Requires G.E. and Release in Progress to check YES	**CRITICAL STEP** _____ SAT _____ UNSAT
EPIP-08 Attachment 1 Step 12 STEP 24: Plant Conditions STANDARD: **Leave Blank** COMMENTS:	_____ SAT _____ UNSAT
STEP 25: EC or RM Approval STANDARD: **Sign, Date and Time on EC Approval Signature** **EXAMINER'S NOTE: RECORD THE TIME _____*** **TASK IS COMPLETE, COLLECT THE STATE NOTIFICATION FORM.** ***MUST BE ≤ 15 MINUTES FROM STEP 6 CLASSIFICATION TIME.** COMMENTS: **END OF TASK**	**CRITICAL STEP** _____ SAT _____ UNSAT

STOP TIME: _____

ANSWER KEY

ATTACHMENT 1
FLORIDA NUCLEAR PLANT EMERGENCY NOTIFICATION FORM
(Page 1 of 1)

On-line Verification: ☐ SWP/DEM ☐ St. Lucie County ☐ Martin County

1. A. ☒ THIS IS A DRILL B. ☐ THIS IS AN EMERGENCY

2. A. Date: D / AT / E B. Contact Time: _____ C. Reported by: (Name) Candidate
   D. Message Number: 1 E. Reported from: ☒ Control Room ☐ TSC ☐ EOF

3. Site: A. ☐ Crystal River Unit 3 B. ☒ St. Lucie Unit 1 C. ☐ St. Lucie Unit 2
   D. ☐ Turkey Point Unit 3 E. ☐ Turkey Point Unit 4

4. Emergency Classification: A. ☐ Notification of Unusual Event C. ☐ Site Area Emergency
   B. ☒ Alert D. ☐ General Emergency

5. A. ☒ Emergency Declaration: B. ☐ Emergency Termination: Date: D / AT / E Time: TIME

6. Reason for Emergency Declaration:* A. ☐ EAL Number OR B. ☒ Description:
   Unplanned loss of most (greater than 75%) or all safety system annunicators and Plant transient in progress.

7. Additional Information or Update: A. ☒ None OR B. ☐

8. Weather Data: A. Wind direction from 90 degrees B. Downwind Sectors Affected: M, N, P

9. Release Status: A. ☒ None (Go to Item 11) B. ☐ Is occurring C. ☐ Has occurred, but stopped

10. Release Significance Category (at the Site Boundary):
    A. ☐ Information not available at this time.
    B. ☐ Release within normal operating limits (≤ 3.5 E-1 Ci/sec noble gas, ≤ 4.6 E-5 Ci/sec iodine)
    C. ☐ Non-Significant Fraction of PAG Range (release is > normal limits and < 500 mrem TEDE and 1000 mrem CDE)
    D. ☐ PAG Range (≥ 500 mrem TEDE or ≥ 1000 mrem CDE)

11. Utility Recommended Protective Actions:
    A. ☒ No recommended actions at this time.
    B. ☐ The utility recommends the following protective actions:

☐ Miles	No Action Sectors	Evacuate Sectors	Shelter Sectors
0 – 2	_____	_____	_____
2 – 5	_____	_____	_____
5 – 10	_____	_____	_____

    OR
    Shelter Zones / Areas: _____
    Evacuate Zones / Areas: _____
    C. Consider Issuance of KI: ☐ Yes ☒ No

If form is completed in the Control Room, go to Item 15. If completed in the TSC or EOF, continue with item 12.

12. Plant Conditions: A. Reactor Shutdown? ☐ Yes ☐ No B. Core Adequately Cooled? ☐ Yes ☐ No
    C. Containment Intact? ☐ Yes ☐ No D. Core Condition: ☐ Stable ☐ Degrading

13. Weather Data: A. Wind Speed _____ mph B. Stability Class _____

14. Additional Release Information: ☐ N/A OR
    A. ☐ Noble Gases _____ Curies per second B. ☐ Iodines _____ Curies per second
    C. Airborne: Date Started ___/___/___ Time Started _____ Date Stopped ___/___/___ Time Stopped _____
    D. Liquid: Date Started ___/___/___ Time Started _____ Date Stopped ___/___/___ Time Stopped _____

Distance	Projected Thyroid Dose (CDE) for 1 Hour	Projected Total Dose (TEDE) for 1 Hour
1 Mile (Site Boundary)	E. _____ mrem	F. _____ mrem
2 Miles	G. _____ mrem	H. _____ mrem
5 Miles	I. _____ mrem	J. _____ mrem
10 Miles	K. _____ mrem	L. _____ mrem

EC or RM Approval Signature: Candidate Date: D / AT / E Time: Time

15. Message Received By: Name: _____ Date: ___/___/___ Time: _____

* If emergency class escalation is known to be necessary and a new notification form will be transmitted within 15 minutes, then you may go to line 15.

ANSWER KEY

CANDIDATE COPY
(TO BE RETURNED TO THE EXAMINER UPON COMPLETION OF ANSWER)

Initial Conditions

Unit 1 is at 90% power performing a downpower to 45% due to electrical bus problems. The Reactor Operator has just reported that numerous annunicators are not working.

Initiating Cue

You are the Shift Manager. Unit 1 has just tested all annunicators and determined that the annunicators A, B, C, D, K, L, M, N, P, Q, R & S are not functioning. 10 Meter wind speed is 12 mph and direction is 90°. Complete the appropriate procedures as necessary. ***This is a time-critical JPM.***

TABLE OF CONTENTS

SECTION	PAGE
1.0 PURPOSE	3
2.0 REFERENCES	3
3.0 RECORDS REQUIRED	3
4.0 ENTRY CONDITIONS	3
5.0 EXIT CONDITIONS	3
6.0 OPERATOR ACTIONS	4
APPENDICES	
APPENDIX A SAFETY SYSTEM ANNUNCIATORS	5
APPENDIX B POWER SUPPLIES	6

1.0 PURPOSE

1.1 This procedure provides guidance for resolving conditions resulting from the loss of Control Room annunciators. The actions listed are intended to be a guide in responding to the loss of annunciators and are NOT intended to be a substitute for good judgement based on plant conditions.

2.0 REFERENCES

NOTE

One or more of the following symbols may be used in this procedure:

§ Indicates a Regulatory commitment made by Technical Specifications, Condition of License, Audit, LER, Bulletin, Operating Experience, License Renewal, etc. and shall NOT be revised without Facility Review Group review and Plant General Manager approval.

¶ Indicates a management directive, vendor recommendation, plant practice or other non-regulatory commitment that should NOT be revised without consultation with the plant staff.

Ψ Indicates a step that requires a sign off on an attachment.

2.1 UFSAR Section 7.5.1.6.3

2.2 $§_1$ EPIP-01, Classification of Emergencies.

2.3 CWD 8770-B-327.

2.4 Annunciator Response Procedures

3.0 RECORDS REQUIRED

3.1 RCO Chronological log.

4.0 ENTRY CONDITIONS

4.1 Plant parameters exceed alarm setpoints without annunciation.

4.2 Annunciator check indicates a complete or partial loss of annunciation.

5.0 EXIT CONDITIONS

5.1 All annunciators have been returned to operation and are functioning properly.

6.0 OPERATOR ACTIONS

INSTRUCTIONS	CONTINGENCY ACTIONS
1. RECORD the time that annunciators were lost.	
2. TEST all Control Room alarm panels to determine the extent of any malfunction.	
3. §1 IMPLEMENT Appendix A.	
4. PERFORM the following: • INCREASE the frequency of monitoring RTGB <u>and</u> local indications for plant equipment affected. • Periodically EXAMINE available reflash panels on the affected annunciator panels.	
5. CHECK the annunciator power supplies in accordance with Appendix B.	
6. CONTACT I&C for trouble-shooting and repair.	

END OF SECTION 6.0

APPENDIX A
SAFETY SYSTEM ANNUNCIATORS
(Page 1 of 1)

NOTE
The total below assumes a complete loss of an annunciator panel(s) resulting in the loss of all the safety system annunciators associated with that panel.

/R1

1. DETERMINE the affected annunciator panels (A, B, C, LR, etc.).

2. From the table below, DETERMINE the percentage of Safety System Annunciators that are lost by adding the percent of total for each affected panel.

3. If the percentage of safety system annunciators exceeds 50%, Then EVALUATE and IMPLEMENT the E-Plan as required in EPIP-01, Classification of Emergencies. /R1A /R1

PERCENTAGE OF SAFETY SYSTEM ANNUNICATORS PER PANEL

PANEL	% OF TOTAL
A	8.6%
B	8.6%
C	0.8%
D	0.0%
E	2.3%
F	2.7%
G	3.4%
H	5.5%
J	1.3%
K	4.8%
L	6.3%

PANEL	% OF TOTAL
M	6.3%
N	4.2%
P	6.7%
Q	10.3%
R	10.9%
S	10.3%
LR	0.8%
X	2.3%
Y	3.1%
Z	0.8%

END OF APPENDIX A

APPENDIX B
POWER SUPPLIES
(Page 1 of 1)

NOTE
The neon light on the back of RTGB alarm panels indicates the DC converter is operating. After power is removed from the panel, it may be necessary to remove and replace the fuse to restart the converter.

1. VERIFY the following power supplies to the affected Control Room annunciators and reset as required.

RTGB	ANN. PAN.	POWER SUPPLY	GROUND DET.
101	A, B, C, D	RTGB 101 KKK F-4, F-12 1AB DC CKT 6	GD-1
102	E, F, G	RTGB 101 KKK F-3, F-11 1AB DC CKT 6	GD-2
103	H, J	RTGB 101 KKK F-5, F-13 1AB DC CKT 3	GD-3
104	K, L	RTGB 101 KKK F-6, F-14 1AB DC CKT 3	GD-4
105	M, N	RTGB 101 KKK F-8, F-16 1AB DC CKT 3	GD-5
106	P, Q, R, S	RTGB 101 KKK F-7, F-15 1AB DC CKT 3	GD-6

NOTE
Power supply RTGB 101 KKK F-7, F-15 1AB DC Ckt. 3 also supplies seismic monitoring.

CRAC Panel Y	Fuses 11F5, 11F7	1B DC CKT 25
CRAC Panel Z	Fuses 11F10, 11F12	1B DC CKT 25
Rad. Monitor	F-10 in Rad. Mon. Cabinet	DC PP 119 CKT 1

2. TEST all the Control Room annunciator panels from the Control Room test panels.

3. TEST all the reflash modules feeding annunciators on the affected panels.

NOTE
I&C Department assistance may be required.

4. SELECT an annunciator on each affected panel <u>and</u> functionally CHECK by generating the annunciator from the field.

5. CONTACT I&C Department to investigate and troubleshoot the problem.

END OF APPENDIX B

FPL	ST. LUCIE PLANT EMERGENCY PLAN IMPLEMENTING PROCEDURE SAFETY RELATED	Procedure No. **EPIP-01** Current Revision No. **8** Effective Date **10/29/04**

Title:

CLASSIFICATION OF EMERGENCIES

Responsible Department: **EMERGENCY PLANNING**

REVISION SUMMARY:

Revision 8 – Incorporated PCR 04-3018 to revise classification table to incorporate changes resulting from the New Safeguards Contingency Plan. (J. R. Walker, 10/27/04)

Revision 7 – Incorporated PCR #04-2011 to incorporate instructions from NRC Safe Guards Advisory for Operating Power Reactors, SA-04-07. (J. R. Walker, 06/28/04)

Revision 6 – Incorporated PCR #03-0403 to delete wording regarding technical specification limits and correctly place symbols. (J. R. Walker, 02/21/03)

Revision 5 – Clarified EALs under alert. (J. R. Walker, 07/25/02)

Revision 4 - Revised IAW revision to E-Plan (R40). Revised initiating condition for RCS leakage. Added EALs under security threat initiating condition. Added definitions for EAL and IC. Added guidance for multiple and dual unit events. Made editorial and administrative changes. (J.R. Walker, 05/23/02)

Revision 3 - Added PMAI references, added definitions for OCA, PA and power block, clarified classification guidance and made editorial/administrative changes. (J. R. Walker, 02/09/01)

Revision 2 - Clarified initiating conditions and emergency action levels to correspond to changes in the PSL emergency plan in accordance with PMAI PM99-09-154, defined classification table and made editorial changes. (J. R. Walker, 10/13/00)

Revision	FRG Review Date	Approved By	Approval Date
0	12/15/97	J. Scarola Plant General Manager	12/15/97
8	10/27/04	G. L. Johnston Plant General Manager	10/27/04
		N/A Designated Approver	
		N/A Designated Approver (Minor Correction)	

S___OPS	
DATE	
DOCT	PROCEDURE
DOCN	EPIP-01
SYS	
COM	COMPLETED
ITM	8

TABLE OF CONTENTS

SECTION PAGE

1.0 PURPOSE 3

2.0 REFERENCES / RECORDS REQUIRED / COMMITMENT DOCUMENTS .. 3

3.0 RESPONSIBILITIES 4

4.0 DEFINITIONS 5

5.0 INSTRUCTIONS 9

ATTACHMENTS

ATTACHMENT 1 EMERGENCY CLASSIFICATION TABLE 13

1.0 PURPOSE

This procedure provides instructions on the classification of emergencies at St. Lucie Plant.

Emergency classifications in order of increasing seriousness are:

- Unusual Event
- Alert
- Site Area Emergency
- General Emergency

Specific criteria are provided to assure proper escalation and de-escalation between emergency classification levels.

2.0 REFERENCES / RECORDS REQUIRED / COMMITMENT DOCUMENTS

NOTE

One or more of the following symbols may be used in this procedure:

§ Indicates a Regulatory commitment made by Technical Specifications, Condition of License, Audit, LER, Bulletin, Operating Experience, License Renewal, etc. and shall NOT be revised without Facility Review Group review and Plant General Manager approval.

¶ Indicates a management directive, vendor recommendation, plant practice or other non-regulatory commitment that should NOT be revised without consultation with the plant staff.

Ψ Indicates a step that requires a sign off on an attachment.

2.1 References

1. St. Lucie Plant Radiological Emergency Plan (E-Plan)
2. E-Plan Implementing Procedures (EPIP 00-13)
3. C-200, Offsite Dose Calculation Manual (ODCM)
4. AP 0010502, Oil and Hazardous Material Emergency Response Plan
5. $¶_1$ NUREG-1022, Section 3.1.1

2.1 References (continued)

6. ¶2 NRC IEN No. 85-80, Timely Declaration of an Emergency Class, Implementation of an Emergency Plan, and Emergency Notifications, October 15, 1985

7. ¶3 NRC EPPOS No. 2, Emergency Preparedness Position (EPPOS) on Timeliness of Classification of Emergency Conditions, August, 1995

8. ¶4 PMAI PM98-01-017, Loss of Seismic Monitoring Capability

2.2 Records Required

The basis for classifying an emergency condition shall be recorded in appropriate emergency logs.

2.3 Commitment Documents

- §1 CR 00-0614 (RCS leakage during shutdown cooling)
- §2 PMAI PM99-09-154 (IC and EAL changes submitted under FPL letter L-98-2000)
- ¶5 NRC Safeguards Advisory for Operating Power Reactors, SA-04-07

3.0 RESPONSIBILITIES

3.1 Shift Manager (SM)

1. The Shift Manager is responsible to promptly classify abnormal situations into one of the four defined categories.

2. If an emergency has been declared, the Shift Manager is responsible for assuming the position of Emergency Coordinator and retaining this position until relieved.

3.2 Emergency Coordinator (EC)

The Emergency Coordinator is responsible to continually evaluate changes in plant conditions against the classification table in this procedure.

4.0 DEFINITIONS

4.1 Emergency Action Level (EAL)

1. A pre-determined, site-specific, observable threshold for a plant Initiating Condition that places the plant in a given emergency class. An EAL can be: an instrument reading; an equipment status indicator; a measurable parameter (on-site or off-site); a discrete, observable event; results of analyses; entry into specific emergency operating procedures; or another phenomenon which, if it occurs, indicates entry into a particular emergency class.

4.2 Emergency Classes

1. Unusual Event

   This classification is represented by off-normal events or conditions at the plant for which no significant degradation of the level of safety of the plant has occurred or is expected. Any releases of radioactive material which may have occurred or which may be expected are minor and constitute no appreciable health hazard.

2. Alert

   This classification is represented by events which involve an actual or potential substantial degradation of the level of safety of the plant combined with a potential for limited uncontrolled releases of radioactivity from the plant.

3. Site Area Emergency

   This classification is composed of events which involve actual or likely major failures of plant functions needed for protection of the public combined with a potential for significant uncontrolled releases of radioactivity from the plant.

4. General Emergency

   This classification is composed of events which involve actual or imminent substantial core degradation and potential loss of containment integrity combined with a likelihood of significant uncontrolled releases of radioactivity from the plant.

4.3 Classification Table

A composite of Initiating Conditions (ICs) and their Emergency Action Levels (EALs) used to evaluate off normal/emergency conditions resulting in declaration of one of the four Emergency Classes, as appropriate. The Table is arranged in the following categories:

1. Events Affecting Primary Pressure
   - A. Abnormal Primary Leak Rate
   - B. Abnormal Primary/Secondary Leak Rate
   - C. Loss of Secondary Coolant
2. Abnormal Radiation, Contamination and Effluent Releases
   - A. Uncontrolled Effluent Release
   - B. High Radiation Levels in Plant
3. Fires, Explosions
4. Accident Involving Fuel
   - A. Fuel Element Failure
   - B. Fuel Handling
5. Natural Emergencies
   - A. Earthquake
   - B. Hurricane
   - C. Tornado
   - D. Abnormal Water Level
6. Miscellaneous Events
   - A. Increased Awareness or Potential Core Melt
7. Electrical Malfunctions
   - A. Loss of Power

4.3 Classification Table (continued)

8. Degradation of Control Capabilities

A. Loss of Plant Control Functions

B. Loss of Alarms, Communications, Monitoring

9. Hazards to Station Operation

A. Aircraft, Missile

B. Turbine Failure

C. Toxic or Flammable Gas

10. Security Threat

4.4 Initiating Condition (IC)

1. One of a predetermined subset of nuclear power plant conditions where either the potential exists for a radiological emergency, or such an emergency has occurred.

4.5 **Plant** - The St. Lucie Plant, Unit 1 and Unit 2

4.6 **Site** - A general term referring to the location of the St. Lucie Nuclear Power Plant. Other terms related to the site are given below:

1. **Owner Controlled Area** - That portion of FPL property surrounding and including the St. Lucie Nuclear Power Plant which is subject to limited access and control as deemed appropriate by FPL.

2. **Protected Area** - The area (within the Owner Controlled Area) occupied by the nuclear units and associated equipment and facilities enclosed with the security perimeter fence. The area within which accountability of personnel is maintained in an emergency.

4.6 Site (continued)

3. §2 **Power Block** - Structures, systems or components in the areas listed below that support the production of power. This includes any equipment needed for the direct generation of power or necessary for safe operation and/or shutdown of one or both of the reactors.

A. Reactor Containment and Shield Buildings

B. Reactor Auxiliary Buildings including the following areas:

1. Refueling Water Tank (RWT)

2. Component Cooling Water (CCW) platform area

3. Diesel Generator Buildings and Fuel Oil Storage Tanks

4. Fuel Handling Building

5. Primary Water Tank and Pumps

C. Intake Area

D. Discharge Canal & Headwall

E. Ultimate Heat Sink Structure

F. Fire Protection System including the fire pumps and the City Water Storage Tanks (CWST), but not including parts of the system associated with the North or South Service Buildings or other outlying facilities.

G. Turbine Buildings (all levels)

H. Condensate Storage Tanks (CST)

I. Main, Auxiliary and Startup Transformers

J. Steam Trestles

K. Turbine Lube Oil Storage Tanks

L. Gas House

5.0 INSTRUCTIONS

5.1 Direct Initial Investigative and Mitigating Actions to Address the Event

1. If the event involves entry into the Off-Normal Operating Procedures (ONOPs) or Emergency Operating Procedures (EOPs), Then perform steps per ONOPs or EOPs until appropriate or directed to classify event.

2. If the event involves a release of hazardous materials to the environment, Then respond per AP 0010502, Oil and Hazardous Material Emergency Response Plan.

3. If the event involves a release of radioactive material to the environment, Then direct Chemistry personnel to implement EPIP-09, Off-site Dose Calculations.

END OF SECTION 5.1

NOTE
Initiating Conditions / Emergency Action Levels are applicable to all modes unless otherwise indicated.

5.2 Classifying the Event

1. ¶3 A goal of fifteen (15) minutes should be used for assessing and classifying an emergency once indications (Emergency Action Levels (EALs)) are available to Control Room Operators that an Initiating Condition (IC) has been met and/or exceeded.

A. This goal should allow time for determination of indications (leak rate, etc.) and detailed review of Attachment 1, Emergency Classification Table.

2. Use the best information available when working through the Emergency Classification Table. When confronted with conflicting information for which resolution is not apparent, classify the condition at the highest appropriate emergency class.

3. If, in the judgement of the Shift Manager (SM) /Emergency Coordinator (EC), a situation is more serious than indicated by instrument readings or other parameters, Then classify the emergency condition at the more serious level (i.e., at the highest appropriate emergency class).

4. ¶5 Security Event

If the Control Room is contacted by any of the following: Security, NRC, FBI or NORAD that a terrorist attack on the plant site is imminent or is occurring, Then perform the actions in the applicable Appendix to Security Force Instruction (SFI) #4, Appendix C, Unit 1 Operations Department Recommended Defensive Strategy or Appendix D, Unit 2 Operations Department Recommended Defensive Strategy.

5. Multiple and Dual Unit Events

CAUTION
There can not be two concurrent declared emergency classes under the St. Lucie Plant Radiological Emergency Plan.

A. If one Unit is in a classified event and the same or the other Unit enters into an event where the same or lesser Emergency Class would apply, Then a new classification should NOT be declared. The event should be documented on a SNF as "Additional Information or Update" and issued as soon as practicable.

5.2 Classifying the Event (continued)

5. (continued)

B. If one Unit is in a classified event and the other Unit enters into a more severe event in which a higher Emergency Class would apply, Then the new classification shall be declared and promptly, within the regulatory time limits, issued to the State, Counties and the NRC.

6. ¶2 If an EAL was met and the condition completely cleared prior to an emergency classification being declared, Then:

A. Classify the event in accordance with Attachment 1.

B. Termination of the event

1. An event classified as an Unusual Event or Alert may be terminated at the time of declaration by the EC.

2. An event classified as a Site Area Emergency or General Emergency may only be downgraded and/or terminated by the Recovery Manager (RM).

END OF SECTION 5.2

5.3 §1 ¶1 Classification of An Event Based On Subsequent Information

1. If subsequent information of a more detailed nature (e.g., sampling results) becomes available after the initial classification has been made, Then reclassify as appropriate.

2. If results of a protracted review (i.e., Engineering Evaluation, CR disposition, etc.) of an event indicate that conditions were met for an Emergency Classification, and the condition has completely cleared prior to recognition of possible classification, Then notify NRC within one hour of discovery of the undeclared event.

   A. Contact Emergency Preparedness for briefing of state and local agencies.

END OF SECTION 5.3

ATTACHMENT 1
EMERGENCY CLASSIFICATION TABLE
(Page 1 of 20)

CAUTION
§2 Section 1.A should not be used for a steam generator tube leak / rupture.

EVENT/CLASS	UNUSUAL EVENT	ALERT	SITE AREA EMERGENCY	GENERAL EMERGENCY
1.A. ABNORMAL PRIMARY LEAK RATE (Page 1 of 2)	Reactor Coolant System (RCS) Leakage 1. RCS leakage GREATER THAN 10 gpm as indicated by: A. Control Room observation OR B. Inventory balance calculation OR C. Field observation OR D. Emergency Coordinator judgement OR 2. Indication of leaking RCS safety or relief valve which causes RCS pressure to drop below setpoints: - Unit 1 - 1600 psia - Unit 2 - 1736 psia	§1 RCS Leakage GREATER THAN 50 gpm 1. Unisolable RCS leakage as indicated by Charging/letdown mismatch greater than 50 gpm but less than available charging pump capacity. OR 2. Unisolable measured RCS leakage indicating greater than 50 gpm but less than available charging pump capacity.	LOCA GREATER THAN capacity of charging pumps 1. RCS leakage greater than available charging pump capacity occurring with RCS pressure above HPSI shutoff head. OR 2. RCS leakage greater than available makeup occurring with RCS pressure below HPSI shutoff head. OR 3. Loss of RCS subcooled margin due to RCS leakage (saturated conditions). OR 4. Containment High Range Radiation Monitors indicate 7.3 X 10^3 R/hr (If CHRRM inoperable, Post-LOCA monitors indicate between 100 and 1000 mR/hr).	A release has occurred or is in progress resulting in: 1. Containment High Range Radiation monitor greater than 1.46 X 10^5 R/hr (If CHRRM inoperable, Post-LOCA monitors greater than 1000 mR/hr). OR 2. Performance of EPIP-09 (Off-site Dose Calculations) or measured dose rates from off-site surveys indicate site boundary (1 mile) exposure levels have been exceeded as indicated by either A, B, C or D below: A. 1000 mrem/hr (total dose rate) B. 1000 mrem (total dose - TEDE) C. 5000 mrem/hr (thyroid dose rate) D. 5000 mrem (thyroid dose - CDE) (continued on next page)

1.A. ABNORMAL PRIMARY LEAK RATE

AFTER CLASSIFYING, GO TO EPIP-02, DUTIES AND RESPONSIBILITIES OF THE EMERGENCY COORDINATOR

ATTACHMENT 1
EMERGENCY CLASSIFICATION TABLE
(Page 2 of 20)

EVENT/CLASS	UNUSUAL EVENT	ALERT	SITE AREA EMERGENCY	GENERAL EMERGENCY
1.A. ABNORMAL PRIMARY LEAK RATE (Page 2 of 2)				Loss of 2 of the 3 fission product barriers with imminent loss of the third (any two of the following exist and the third is imminent). 1. Fuel element failure (confirmed DEQ I-131 activity greater than 275 µCi/mL). AND 2. LOCA or Tube rupture on unisolable steam generator. AND 3. Containment Integrity Breached. **NOTE** Also refer to Potential Core Melt Event / Class 6.A.
1.A. ABNORMAL PRIMARY LEAK RATE				

AFTER CLASSIFYING, GO TO EPIP-02, DUTIES AND RESPONSIBILITIES OF THE EMERGENCY COORDINATOR

ATTACHMENT 1
EMERGENCY CLASSIFICATION TABLE
(Page 3 of 20)

EVENT/CLASS	UNUSUAL EVENT	ALERT	SITE AREA EMERGENCY	GENERAL EMERGENCY
1.B. ABNORMAL PRIMARY TO SECONDARY LEAK RATE (Page 1 of 2)	RCS PRI/SEC Leakage 1. Measured RCS to secondary leakage exceeds Tech. Spec. limits. AND 2. Secondary plant activity is detected.	Rapid gross failure of one steam generator tube (WITHIN charging pump capacity) with loss of offsite power 1. Measured RCS to secondary leakage greater than Tech. Spec. Limits and within charging pump capacity. AND 2. Secondary plant activity is detected. AND 3. Loss of both Non-Vital 4.16 KV buses. (continued on next page)	Rapid gross failure of steam generator tubes (GREATER THAN charging pump capacity) with a loss of offsite power 1. Measured RCS to secondary leakage is greater than charging pump capacity. AND 2. Secondary plant activity is detected. AND 3. Loss of both Non-Vital 4.16 KV buses. (continued on next page)	Loss of 2 of the 3 fission product barriers with imminent loss of the third (any two of the following exist and the third is imminent). 1. Fuel element failure (confirmed DEQ I-131 activity greater than 275 µCi/mL). AND 2. LOCA or Tube rupture on unisolable steam generator. AND 3. Containment integrity breached. **NOTE** Also refer to Potential Core Melt Event/Class 6.A.

1.B. ABNORMAL PRIMARY TO SECONDARY LEAK RATE

AFTER CLASSIFYING, GO TO EPIP-02, DUTIES AND RESPONSIBILITIES OF THE EMERGENCY COORDINATOR

ATTACHMENT 1
EMERGENCY CLASSIFICATION TABLE
(Page 4 of 20)

EVENT/CLASS	UNUSUAL EVENT	ALERT	SITE AREA EMERGENCY	GENERAL EMERGENCY
1.B. ABNORMAL PRIMARY TO SECONDARY LEAK RATE (Page 2 of 2)		Rapid failure of steam generator tubes (GREATER THAN charging pump capacity) 1. Measured RCS to secondary leakage greater than charging pump capacity. AND 2. Secondary plant activity is detected.	§2 Rapid failure of steam generator tube(s) (GREATER THAN charging pump capacity) with steam release in progress 1. Measured RCS to secondary leakage greater than charging pump capacity. AND 2. Secondary plant activity is detected. AND 3. Secondary steam release in progress from affected generator (i.e., ADVs, stuck steam safety(s) or unisolable leak.)	

1.B. ABNORMAL PRIMARY TO SECONDARY LEAK RATE

AFTER CLASSIFYING, GO TO EPIP-02, DUTIES AND RESPONSIBILITIES OF THE EMERGENCY COORDINATOR

ATTACHMENT 1
EMERGENCY CLASSIFICATION TABLE
(Page 5 of 20)

EVENT/CLASS	UNUSUAL EVENT	ALERT	SITE AREA EMERGENCY	GENERAL EMERGENCY
1.C. LOSS OF SECONDARY COOLANT (Page 1 of 2)	Rapid depressurization of secondary plant 1. Rapid drop in either steam generator pressure to less than 600 psia.	Major steam leak with GREATER THAN 10 gpm primary/secondary leakage 1. Rapid drop in either steam generator pressure to less than 600 psia. AND 2. Known pri/sec leak of greater than 10 gpm. AND 3. Secondary plant activity is detected. --- Total loss of feedwater 1. No main or auxiliary feedwater flow available for greater than 15 minutes when required for heat removal. AND 2. Steam Generator levels are less than 40% wide range.	Major steam leak with GREATER THAN 50 gpm primary/secondary leakage and fuel damage indicated 1. Rapid drop in either steam generator pressure to less than 600 psia. AND 2. Known pri/sec leak of greater than 50 gpm. AND 3. Secondary plant activity is detected. AND 4. Fuel element damage is indicated (Refer to Fuel Element Failure Event/Class 4.A). --- TLOF with once-through cooling initiated 1. No main or auxiliary feedwater flow available. AND 2. PORV(s) have been opened to facilitate core heat removal.	A release has occurred or is in progress resulting in: 1. Containment High Range Radiation monitor greater than 1.46×10^5 R/hr (If CHRRM inoperable, Post-LOCA monitors greater than 1000 mR/hr). OR 2. Performance of EPIP-09 (Off-site Dose Calculations) or measured dose rates from off-site surveys indicate site boundary (1 mile) exposure levels have been exceeded as indicated by either A, B, C or D below: A. 1000 mrem/hr (total dose rate) B. 1000 mrem (total dose - TEDE) C. 5000 mrem/hr (thyroid dose rate) D. 5000 mrem (thyroid dose-CDE) (continued on next page)
1.C. LOSS OF SECONDARY COOLANT				

AFTER CLASSIFYING, GO TO EPIP-02, DUTIES AND RESPONSIBILITIES OF THE EMERGENCY COORDINATOR

ATTACHMENT 1
EMERGENCY CLASSIFICATION TABLE
(Page 6 of 20)

EVENT/CLASS	UNUSUAL EVENT	ALERT	SITE AREA EMERGENCY	GENERAL EMERGENCY
1.C. LOSS OF SECONDARY COOLANT (Page 2 of 2)				Loss of 2 of the 3 fission product barriers with imminent loss of the third (any two of the following exist and the third is imminent). 1. Fuel element failure (confirmed DEQ I-131 activity greater than 275 µCi/mL). AND 2. LOCA or Tube rupture on unisolable steam generator. AND 3. Containment Integrity Breached. **NOTE** Also refer to Potential Core Melt Event/Class 6.A.

1.C. LOSS OF SECONDARY COOLANT

AFTER CLASSIFYING, GO TO EPIP-02, DUTIES AND RESPONSIBILITIES OF THE EMERGENCY COORDINATOR

ATTACHMENT 1
EMERGENCY CLASSIFICATION TABLE
(Page 7 of 20)

EVENT/CLASS	UNUSUAL EVENT	ALERT	SITE AREA EMERGENCY	GENERAL EMERGENCY
2.A. UNCONTROLLED EFFLUENT RELEASE	Radiological effluent limits exceeded 1. Plant effluent monitor(s) exceed alarm setpoint(s). AND 2. Confirmed analysis results for gaseous or liquid release which exceeds ODCM limits. **NOTE** If analysis is not available within one hour and it is expected that release is greater than ODCM limit, classify as UNUSUAL EVENT.	A release has occurred or is in progress that is 10 times the effluent limit 1. Plant effluent monitor(s) significantly exceed alarm setpoints. AND 2. Confirmed analysis results for gaseous or liquid release which exceeds 10 times ODCM limits. **NOTE** If analysis is not available within one hour and it is expected that release is equal to or greater than 10 times ODCM limit, classify as ALERT.	§2 A release has occurred or is in progress resulting in: 1. Containment High Range Radiation Monitor greater than 7.3×10^3 R/hr (Post-LOCA monitors indicate between 100 and 1000 mR/hr, if CHRRM inoperable). OR 2. Measured Dose Rates or Offsite Dose Calculation (EPIP-09) worksheet values at one mile in excess of: A. 50 mrem/hr (total dose rate) or 250 mrem/hr (thyroid dose rate) for 1/2 hour. OR B. 500 mrem/hr (total dose rate) or 2500 mrem/hr (thyroid dose rate) for two minutes at one mile.	A release has occurred or is in progress resulting in: 1. Containment High Range Radiation monitor greater than 1.46×10^5 R/hr (If CHRRM inoperable, Post-LOCA monitors greater than 1000 mR/hr). OR 2. Performance of EPIP-09 (Off-site Dose Calculations) or measured dose rates from off-site surveys indicate site boundary (1 mile) exposure levels have been exceeded as indicated by either A, B, C or D below: A. 1000 mrem/hr (total dose rate) B. 1000 mrem (total dose - TEDE) C. 5000 mrem/hr (thyroid dose rate) D. 5000 mrem (thyroid dose-CDE)

ODCM - refers to Chemistry Procedure C-200, Offsite Dose Calculation Manual (ODCM)

2.A. UNCONTROLLED EFFLUENT RELEASE

AFTER CLASSIFYING, GO TO EPIP-02, DUTIES AND RESPONSIBILITIES OF THE EMERGENCY COORDINATOR

ATTACHMENT 1
EMERGENCY CLASSIFICATION TABLE
(Page 8 of 20)

EVENT/CLASS	UNUSUAL EVENT	ALERT	SITE AREA EMERGENCY	GENERAL EMERGENCY
2.B. HIGH RADIATION LEVELS IN PLANT		High radiation levels or high airborne contamination which indicates a severe degradation in the control of radioactive materials 1. Any valid area monitor alarm from an unplanned source with meter near or greater than full scale deflection (10^3 mR/hr). OR 2. Unexpected plant iodine or particulate airborne concentration of 1000 DAC as seen in routine surveying or sampling. OR 3. Unexpected direct radiation dose rate reading or unexpected airborne radioactivity concentration from an unplanned source in excess of 1000 times normal levels.		

2.B. HIGH RADIATION LEVELS IN PLANT

AFTER CLASSIFYING, GO TO EPIP-02, DUTIES AND RESPONSIBILITIES OF THE EMERGENCY COORDINATOR

ATTACHMENT 1
EMERGENCY CLASSIFICATION TABLE
(Page 9 of 20)

EVENT/CLASS	UNUSUAL EVENT	ALERT	SITE AREA EMERGENCY	GENERAL EMERGENCY
3. FIRE	§2 Uncontrolled fire within the Power Block lasting more than 10 minutes.	Uncontrolled fire 1. Potentially affecting safety systems. AND 2. Requiring off-site support in the opinion of the SM/EC.	§2 Fire compromising the function of safety systems (e.g., both trains rendered inoperable).	**NOTE** Refer to Potential Core Melt Event/Class 6.A.
	NOTE §2 Explosion is defined as a rapid chemical reaction resulting in noise, heat and rapid expansion of gas.			
EXPLOSION	Occurrence of an explosion within the Owner Controlled Area.	§2 Damage to structures/components in the Protected Area by explosion which affects plant operation.	§2 Severe damage to safe shutdown equipment from explosion (e.g., both trains rendered inoperable.	

3. FIRE

EXPLOSION

AFTER CLASSIFYING, GO TO EPIP-02, DUTIES AND RESPONSIBILITIES OF THE EMERGENCY COORDINATOR

ATTACHMENT 1
EMERGENCY CLASSIFICATION TABLE
(Page 10 of 20)

EVENT/CLASS	UNUSUAL EVENT	ALERT	SITE AREA EMERGENCY	GENERAL EMERGENCY
4.A. FUEL ELEMENT FAILURE	Fuel element damage 1. Process monitors or area radiation surveys indicate increased letdown activity AND 2. Confirmed RCS sample indicating: A. Coolant activity greater than the Tech Spec limit for iodine spike (Tech Spec Figure 3.4-1.). OR B. Coolant activity greater than 100/Ē µCi/gram specific activity. **NOTE** If analysis is not available within one hour and it is expected that activity is greater than Tech Spec limit, classify as UNUSUAL EVENT.	Fuel element failure 1. Process monitors or area radiation surveys indicate increased letdown activity and confirmed RCS Samples indicating DEQ I-131 activity greater than or equal to 275 µCi/mL. **NOTE** If analysis is not available within one hour and it is expected that RCS activity for DEQ I-131 is greater than 275 µCi/mL, classify as an ALERT.	Fuel element failure with inadequate core cooling 1. RCS DEQ I-131 activity greater than or equal to 275 µCi/mL. AND 2. Highest CET per core quadrant indicates greater than 10°F superheat or 700°F.	A release has occurred or is in progress resulting in: 1. Containment High Range Radiation monitor greater than 1.46×10^5 R/hr (If CHRRM inoperable, Post-LOCA monitors greater than 1000 mR/hr). OR 2. Performance of EPIP-09 (Off-site Dose Calculations) or measured dose rates from off-site surveys indicate site boundary (1 mile) exposure levels have been exceeded as indicated by either A, B, C or D below: A. 1000 mrem/hr (total dose rate) B. 1000 mrem (total dose - TEDE) C. 5000 mrem/hr (thyroid dose rate) D. 5000 mrem (thyroid dose - CDE)

4.A FUEL ELEMENT FAILURE

AFTER CLASSIFYING, GO TO EPIP-02, DUTIES AND RESPONSIBILITIES OF THE EMERGENCY COORDINATOR

ATTACHMENT 1
EMERGENCY CLASSIFICATION TABLE
(Page 11 of 20)

EVENT/CLASS	UNUSUAL EVENT	ALERT	SITE AREA EMERGENCY	GENERAL EMERGENCY
4.B. FUEL HANDLING ACCIDENT		Fuel handling accident which results in the release of radioactivity to Containment or Fuel Handling Building: 1. SM/EC determines that an irradiated fuel assembly may have been damaged. AND 2. Associated area or process radiation monitors are in alarm.	§2 Major damage to irradiated fuel in Containment or Fuel Handling Building 1. Affected area radiation monitor greater than 1000 mrem/hr. AND 2. Damage to more than one irradiated fuel assembly. OR Major damage resulting from uncovering of one or more irradiated fuel assemblies in the Spent Fuel Pool.	

4.B. FUEL HANDLING ACCIDENT

AFTER CLASSIFYING, GO TO EPIP-02, DUTIES AND RESPONSIBILITIES OF THE EMERGENCY COORDINATOR

ATTACHMENT 1
EMERGENCY CLASSIFICATION TABLE
(Page 12 of 20)

EVENT/CLASS	UNUSUAL EVENT	ALERT	SITE AREA EMERGENCY	GENERAL EMERGENCY
5.A. EARTHQUAKE	§2 A confirmed earthquake has occurred 1. A confirmed earthquake has been experienced within the Owner Controlled Area. OR 2. ¶4 An earthquake is detected by plant seismic monitor instruments or other means.	§2 A confirmed earthquake has occurred. 1. A confirmed earthquake has occurred which registered GREATER THAN 0.05g within the Owner Controlled Area. OR 2. A confirmed earthquake has occurred that could or has caused trip of the turbine generator or reactor.	§2 A confirmed earthquake has occurred. 1. A confirmed earthquake has occurred which registered GREATER THAN 0.1g within the Owner Controlled Area and the plant not in Cold Shutdown. OR 2. A confirmed earthquake has occurred that has caused loss of any safety system function (e.g., both trains inoperable).	NOTE Refer to Potential Core Melt Event / Class 6.A.
5.B. HURRICANE	Hurricane Warning 1. Confirmed hurricane warning is in effect.	Hurricane warning with winds near design basis 1. Confirmed hurricane warning is in effect and winds are expected to exceed 175 mph within the Owner Controlled Area. NOTE At FPL's request, NOAA will provide an accurate projection of wind speeds onsite 24 hours prior to the onset of hurricane force winds. If that projection is not available within 12 hours of entering into the warning, classify the event using current track and wind speeds to project onsite conditions. For example, projected onsite wind speed would be less than maximum hurricane wind speed if the track is away from PSL.	Hurricane warning with winds GREATER THAN design basis 1. Plant not at cold shutdown. AND 2. Confirmed hurricane warning is in effect and winds are expected to exceed 194 mph within the Owner Controlled Area. NOTE At FPL's request, NOAA will provide an accurate projection of wind speeds onsite 24 hours prior to the onset of hurricane force winds. If that projection is not available within 12 hours of entering into the warning, classify the event using current track and wind speeds to project onsite conditions. For example, projected onsite wind speed would be less than maximum hurricane wind speed if the track is away from PSL.	NOTE Refer to Potential Core Melt Event / Class 6.A.

5.A. EARTHQUAKE
5.B. HURRICANE

AFTER CLASSIFYING, GO TO EPIP-02, DUTIES AND RESPONSIBILITIES OF THE EMERGENCY COORDINATOR

ATTACHMENT 1
EMERGENCY CLASSIFICATION TABLE
(Page 13 of 20)

EVENT/CLASS	UNUSUAL EVENT	ALERT	SITE AREA EMERGENCY	GENERAL EMERGENCY
5.C. TORNADO	Notification of a tornado sighted in the Owner Controlled Area	§2 Any tornado striking the Power Block.		**NOTE** Refer to Potential Core Melt Event / Class 6.A.
5.D. ABNORMAL WATER LEVEL	Abnormal water level conditions are expected or occurring 1. Low intake canal level of -10.5 ft. MLW for 1 hour or more. OR 2. Visual sightings by station personnel that water levels are approaching storm drain system capacity.	Flood, low water, hurricane surge or other abnormal water level conditions 1. The storm drain capacity is exceeded during hurricane surge or known flood conditions. OR 2. Low intake canal level of -10.5 ft. MLW for 1 hour or more with emergency barrier valves open.	Flood, low water, hurricane surge or other abnormal water level conditions causing failure of vital equipment 1. Flood/surge water level reaching elevation +19.5 ft. (turbine building / RAB ground floor). OR 2. Low intake canal level has caused the loss of all ICW flow.	

5.C. TORNADO

5.D. ABNORMAL WATER LEVEL

AFTER CLASSIFYING, GO TO EPIP-02, DUTIES AND RESPONSIBILITIES OF THE EMERGENCY COORDINATOR

ATTACHMENT 1
EMERGENCY CLASSIFICATION TABLE
(Page 14 of 20)

NOTE
Activation of the Emergency Response Facilities does not require declaration of an emergency or entry into a specific emergency classification.

EVENT/CLASS	UNUSUAL EVENT	ALERT	SITE AREA EMERGENCY	GENERAL EMERGENCY
6.A. INCREASED AWARENESS OR POTENTIAL CORE MELT (Page 1 of 2)	Emergency Coordinator's judgement that plant conditions exist which warrant increased awareness on the part of the operating staff and/or local authorities. 1. The plant is shutdown under abnormal conditions (e.g., exceeding cooldown rates or primary system pipe cracks are found during operation). OR 2. Any plant shutdown required by Technical Specifications in which the required shutdown is not reached within action limits.	§2 Emergency Coordinator's judgement that plant conditions exist which have a potential to degrade the level of safety at the plant.	§2 Emergency Coordinator's judgement that plant conditions exist which are significantly degrading in an uncontrollable manner.	§2 Emergency Coordinator's judgement that plant conditions exist that make release of large amounts of radioactivity in a short period appear possible or likely. (Any core melt situation.) 1. LOCA with failure of ECCS leading to severe core degradation or melt. OR 2. LOCA with initially successful ECCS and subsequent failure of containment heat removal systems for greater than 2 hours. OR 3. Total loss of feedwater followed by failure of once-through-cooling (ECCS) to adequately cool the core. OR 4. Failure of off-site and on-site power along with total loss of feedwater makeup capability for greater than 2 hours. OR 5. ATWS occurs which results in core damage or causes failure of core cooling and make-up systems. OR 6. Any major internal or external event (e.g., fire, earthquake or tornado substantially beyond design basis) which in the ECs opinion has or could cause massive damage to plant systems resulting in any of the above. (continued on next page)

6.A. INCREASED AWARENESS OR POTENTIAL CORE MELT

AFTER CLASSIFYING, GO TO EPIP-02, DUTIES AND RESPONSIBILITIES OF THE EMERGENCY COORDINATOR

ATTACHMENT 1
EMERGENCY CLASSIFICATION TABLE
(Page 15 of 20)

EVENT/CLASS	UNUSUAL EVENT	ALERT	SITE AREA EMERGENCY	GENERAL EMERGENCY
6.A. INCREASED AWARENESS OR POTENTIAL CORE MELT (Page 2 of 2)				
6.A. INCREASED AWARENESS OR POTENTIAL CORE MELT				

NOTES

1. Most likely containment failure mode is melt-through with release of gases only. Quicker releases are expected for failure of containment isolation system.
2. General Emergency must be declared for the above listed events. The likelihood of corrective action (repair of AFW pump, etc.) should not be considered.

AFTER CLASSIFYING, GO TO EPIP-02, DUTIES AND RESPONSIBILITIES OF THE EMERGENCY COORDINATOR

ATTACHMENT 1
EMERGENCY CLASSIFICATION TABLE
(Page 16 of 20)

EVENT/CLASS	UNUSUAL EVENT	ALERT	SITE AREA EMERGENCY	GENERAL EMERGENCY
7.A. LOSS OF POWER	Loss of off-site power or loss of all on-site AC power capability. 1. Loss of off-site AC power. OR 2. Loss of capability to power at least one vital 4.16 kv bus from any available emergency diesel generator.	§2 Station Blackout (Total Loss of AC) 1. Loss of off-site AC power. AND 2. Failure of both emergency diesel generators to start or load. Loss of all on-site DC power 1. Drop in A and B DC bus voltages to less than 70 VDC.	§2 Station Blackout (Total Loss of AC) for GREATER THAN 15 minutes 1. Loss of offsite AC power. AND 2. Sustained failure of both emergency diesel generators to start or load. AND 3. Failure to restore AC power to at least one vital 4.16 kv bus within 15 minutes. Loss of all vital on-site DC for greater than 15 minutes 1. Sustained drop in A and B DC bus voltages to 70 VDC for greater than 15 minutes.	**NOTE** Refer to Potential Core Melt Event / Class 6.A.

7.A. LOSS OF POWER

AFTER CLASSIFYING, GO TO EPIP-02, DUTIES AND RESPONSIBILITIES OF THE EMERGENCY COORDINATOR

ATTACHMENT 1
EMERGENCY CLASSIFICATION TABLE
(Page 17 of 20)

EVENT/CLASS	UNUSUAL EVENT	ALERT	SITE AREA EMERGENCY	GENERAL EMERGENCY
8.A. LOSS OF PLANT CONTROL FUNCTIONS		Loss of Plant Control Functions 1. Complete loss of any function needed for plant cold shutdown. OR 2. Failure of the Reactor Protection System to bring the reactor subcritical when needed. OR 3. Control Room is evacuated (for other than drill purposes) with control established locally at the Hot Shutdown Control Panel.	Critical Loss of Plant Control Functions 1. Loss of any function or system which, in the opinion of the Emergency Coordinator, precludes placing the plant in Hot Shutdown. OR 2. Failure of the RPS to trip the reactor when needed and operator actions fail to bring the reactor subcritical. OR 3. Control Room is evacuated (for other than drill purposes) and control cannot be established locally at the Hot Shutdown Control Panel within 15 minutes.	**NOTE** Refer to Potential Core Melt Event / Class 6.A.
		Loss of Shutdown Cooling 1. Complete loss of functions needed to maintain cold shutdown. A. Failure of shutdown cooling systems, resulting in loss of cold shutdown conditions. AND B. RCS subcooling can NOT be maintained greater than 0°F.		
8.A. LOSS OF PLANT CONTROL FUNCTIONS				

AFTER CLASSIFYING, GO TO EPIP-02, DUTIES AND RESPONSIBILITIES OF THE EMERGENCY COORDINATOR

ATTACHMENT 1
EMERGENCY CLASSIFICATION TABLE
(Page 18 of 20)

EVENT/CLASS	UNUSUAL EVENT	ALERT	SITE AREA EMERGENCY	GENERAL EMERGENCY
8.B. LOSS OF ALARMS / COMMUNICATION / MONITORING	§2 Significant loss of effluent monitoring capability, communications, indication and alarm panels, etc., which impairs ability to perform accident or emergency assessment. 1. Loss of effluent or radiological monitoring capability requiring plant shutdown. OR 2. Loss of all primary and backup communication capability with offsite locations. OR 3. Unplanned loss of most (greater than 75%) or all Safety System annunciators for greater than 15 minutes.	§2 Loss of alarms 1. Unplanned loss of most (greater than 75%) or all safety system annunciators. AND 2. Plant transient in progress.	Loss of alarms/monitoring 1. Inability to monitor* a significant transient in progress. *Monitoring means loss of ERDADS, QSPDS and/or the inability to determine any one of the following: reactivity control, core cooling, RCS status or containment integrity.	
8.B. LOSS OF ALARMS / COMMUNICATION / MONITORING				

AFTER CLASSIFYING, GO TO EPIP-02, DUTIES AND RESPONSIBILITIES OF THE EMERGENCY COORDINATOR

ATTACHMENT 1
EMERGENCY CLASSIFICATION TABLE
(Page 19 of 20)

EVENT/CLASS	UNUSUAL EVENT	ALERT	SITE AREA EMERGENCY	GENERAL EMERGENCY
9.A. AIRCRAFT / MISSILE	Unusual aircraft activity 1. Aircraft crash in the Owner Controlled Area or unusual aircraft activity over facility that in the opinion of the SM/EC, could threaten the safety of the plant or personnel.	§2 Aircraft/missile impact 1. Aircraft crash into the Power Block. OR 2. Visual or audible indication of missile impact on the Power Block.	§2 Damage to vital systems from aircraft/missiles 1. Aircraft crash into the Power Block damaging vital plant systems. OR 2. Damage resulting in loss of safe shutdown equipment from any missile.	
9.B. TURBINE FAILURE	Turbine rotating component failure causing rapid plant shutdown.	Visual indication that the turbine casing has been penetrated by blading.		
9.C. TOXIC OR FLAMMABLE GAS	Unplanned/uncontrolled toxic or flammable gas release in the Owner Controlled Area that could affect plant/personnel safety.	Entry of toxic or flammable gas into areas potentially affecting plant operation.	§2 Toxic or flammable gas has diffused into vital areas compromising the function of safety related equipment (e.g., both trains rendered inoperable).	

9.A. AIRCRAFT / MISSILE

9.B. TURBINE FAILURE

9.C. TOXIC OR FLAMMABLE GAS

AFTER CLASSIFYING, GO TO EPIP-02, DUTIES AND RESPONSIBILITIES OF THE EMERGENCY COORDINATOR

ATTACHMENT 1
EMERGENCY CLASSIFICATION TABLE
(Page 20 of 20)

EVENT/CLASS	UNUSUAL EVENT	ALERT	SITE AREA EMERGENCY	GENERAL EMERGENCY
10. SECURITY THREAT	A SECURITY ALERT has been called by the Security Force in response to one or more of the items listed below. 1. Bomb threat 2. Attack threat - Land/Vehicle - Waterborne - Airborne - Insider 3. Security Threat 4. Protected Area intrusion attempt or breach 5. Sabotage attempt 6. Internal disturbance 7. Civil disturbance 8. Vital Area intrusion 9. Security Force strike 10. Credible site-specific Security Threat notification 11. Extortion/Coercion/Hostage Threat against plant 12. Sniper attack	A SECURITY EMERGENCY has been called by the Security Force as defined in the Safeguards Contingency Plan.	A SECURITY EMERGENCY involving imminent occupancy of the control room or other area(s) vital to the operation of the reactor as defined in the Safeguards Contingency Plan.	A successful takeover of the plant including the Control Room or any other area(s) vital to the operation of the reactor as defined in the Safeguards Contingency Plan.

10. SECURITY THREAT

AFTER CLASSIFYING, GO TO EPIP-02, DUTIES AND RESPONSIBILITIES OF THE EMERGENCY COORDINATOR

/R8

FPL	ST. LUCIE PLANT EMERGENCY PLAN IMPLEMENTING PROCEDURE SAFETY RELATED	Procedure No. **EPIP-08** Current Revision No. **6A** Effective Date **01/08/04**

Title:

OFF-SITE NOTIFICATIONS AND PROTECTIVE ACTION RECOMMENDATIONS

Responsible Department: **EMERGENCY PLANNING**

REVISION SUMMARY:

Revision 6A - Incorporated PCR 03-3535 to put Attachment 2 in forms database. (M. Cooper, 12/10/03)

Revision 6 – Incorporated PCR 03-2272 for CR 03-2568 to revise State Notification form. Delete supplemental data sheet. Revise instructions for completing State form. Improve guidance relative to changing PARs (RIS 2003-12). (J.R. Walker, 08/29/03)

AND

Incorporated PCR 03-1637 for MA 03-04-082 to incorporate shift communicator position. (A. Terezakis, 08/06/03)

Revision 5 – Clarified duties, made editorial / administrative changes and removed local government radio. (J. R. Walker, 07/26/02)

Revision 4 – Clarified instructions regarding notification of rapidly degrading events. Clarified stability class instructions. Made administrative/editorial changes. (J.R. Walker, 10/11/01)

Revision	FRG Review Date	Approved By	Approval Date
0	05/30/00	R. G. West Plant General Manager	05/31/00
6A	08/28/03	R.E. Rose Plant General Manager	08/29/03
		N/A Designated Approver	
		D. Calabrese Designated Approver (Minor Correction)	12/10/03

S___OPS	
DATE	
DOCT	PROCEDURE
DOCN	EPIP-08
SYS	
COM	COMPLETED
ITM	6A

TABLE OF CONTENTS

SECTION PAGE

1.0 PURPOSE 3

2.0 REFERENCES / RECORDS REQUIRED / COMMITMENT DOCUMENTS 8

3.0 RESPONSIBILITIES 9

4.0 DEFINITIONS 11

5.0 INSTRUCTIONS 13
- 5.1 State and County Notification 13
- 5.2 Nuclear Regulatory Commission (NRC) Notification 16
- 5.3 Erroneous Information 17

APPENDICES

APPENDIX A NOTIFICATIONS FROM THE AFFECTED CONTROL ROOM 18

APPENDIX B NOTIFICATIONS FROM THE TECHNICAL SUPPORT CENTER (TSC) 22

APPENDIX C NOTIFICATIONS FROM THE EMERGENCY OPERATIONS FACILITY (EOF) 27

ATTACHMENTS

ATTACHMENT 1 FLORIDA NUCLEAR PLANT EMERGENCY NOTIFICATION FORM 33

ATTACHMENT 1A DIRECTIONS FOR COMPLETING THE FLORIDA NUCLEAR PLANT EMERGENCY NOTIFICATION FORM 34

ATTACHMENT 2 DETERMINATION OF PROTECTIVE ACTION RECOMMENDATIONS (PARs) 41

ATTACHMENT 3 NRC REACTOR PLANT EVENT NOTIFICATION WORKSHEET 46

ATTACHMENT 3A DIRECTIONS FOR COMPLETING THE NRC REACTOR PLANT EVENT NOTIFICATION WORKSHEET 48

1.0 PURPOSE

1.1 Discussion

1. This procedure provides information and instructions for undertaking notifications of the State Warning Point (SWP) and the Nuclear Regulatory Commission (NRC) and for determination of Protective Action Recommendations (PARS).

2. This procedure is for use in the Control Room, Technical Support Center (TSC) and Emergency Operations Facility (EOF).

3. Upon declaration of an emergency classification the Nuclear Plant Supervisor (NPS) assumes the duties of the Emergency Coordinator (EC). The EC has initial responsibility for off-site notifications and PARs.

4. Once the EOF is operational and proper turnover has been conducted, the Recovery Manager (RM) assumes responsibility for off-site notifications and PARs from the EC.

5. At an Alert or higher level emergency, communications with the NRC transition to an open phone line from the TSC and the EOF (at a Site Area Emergency of higher level emergency).

6. The following table illustrates which facility has a responsibility for Classification, Notification or PARs.

	Control Room (**X** until EC function transfers to the TSC)	**TSC** (**X** when operational)	**EOF** (**X** when operational)
Classifications	**X** transfers →	**X**	
Notifications	**X** transfers →	**X** transfers →	**X**
PARs	**X** transfers →	**X** transfers →	**X**

7. Off-site Notification

   A. Purpose of Off-Site Notifications

   FPL is required to notify off-site agencies in the event of any emergency that could threaten the health and safety of the public. These notifications provide an early warning to agencies responsible for public protection.

1.1 Discussion (continued)

7. (continued)

NOTE

The State Department of Health (Bureau of Radiation Control) may not have their office staffed on a 24-hour basis. In the event that they do not answer the Hot Ring Down (HRD) telephone, the State Warning Point (SWP) assumes responsibility for notifying their duty officer.

B. Who Shall Be Notified

- State Division of Emergency Management
- State Department of Health (Bureau of Radiation Control)
- St. Lucie County Emergency Operations Center
- Martin County Emergency Operations Center
- NRC

1. State and County Notification

a. State and local agencies are notified by using the Hot Ring Down (HRD) telephone. The HRD rings the State Warning Point (SWP). The SWP puts the other agencies on line and reduces the need for individual calls.

b. ¶4 After the State Coordinating Officer (SCO) arrives in the EOF, he / she can transfer "NET Control" to the EOF. When this occurs, the Recovery Manager's PAR Briefing becomes the primary notification method for the State and Counties. The Florida Nuclear Plant Emergency Notification Form (form similar to Attachment 1) shall still be completed and provided to the SCO or his / her designee in the EOF. The EOP HRD Communicator should no longer contact the State Warning Point (SWP).

/R6

1.1 Discussion (continued)

7. B. (continued)

2. NRC Notification

a. The NRC is notified using the Emergency Notification System (ENS) telephone.

b. NRC notifications occur through an open line of communication in the TSC and, when operational, the EOF.

C. Emergency Follow-up Information Requests from State and local agencies.

1. Incoming calls should come via the SWP over the HRD phone. If the HRD is inoperable, the SWP may use commercial telephone or ESATCOM (emergency satellite phone). If an off-site authority contacts the plant without going through the SWP, request that they contact the SWP. SWP shall verify that the agency calling is a risk county or the Department of Health (DOH) and shall notify other county and state agencies of the updated information, thus reducing the number of calls that may be directed to the plant.

2. Long, detailed explanations of plant systems or reactor theory should be avoided. If prompted for this kind of information by the State Duty Officer, he / she should be referred to the Nuclear Division Duty Officer (NDDO).

3. If the State or one of the Counties provides either the TSC or EOF with new or pertinent information, Then bring that information to the attention of the EC or EC Assistant / Logkeeper in the TSC or the RM or the RM OPS Advisor / Logkeeper in the EOF.

1.1 Discussion (continued)

8. Protective Action Recommendations

A. Protective actions for the general public are ordinarily NOT required prior to declaration of a General Emergency. It is possible however, that due to unusually stable and constant meteorological conditions, protective actions could be recommended at a Site Area Emergency based on projected doses. This is the exception rather than the rule.

Protective actions for the general public are required to be recommended if a General Emergency is declared. Initial Protective Action Recommendations (PARs) are normally based on plant conditions. This would NOT be true if the General Emergency was declared based on off-site dose (either measured or projected) or a Security Emergency (per the Security Plan). The predetermined minimum PARs (based on plant conditions) are as given below.

B. General Emergency - Minimum PARs

1. In any case where a GENERAL EMERGENCY has been declared, the minimum PAR shall be:

Shelter all people within a 2-mile radius and out to 5 miles in the sectors affected. The sectors affected are at least three, the downwind sector plus the two adjacent sectors.

2. If a GENERAL EMERGENCY has been declared due to actual or projected severe core damage, the minimum PAR shall be:

Evacuate all people within a 2-mile radius from the plant and out to 5 miles in the sectors affected. Shelter all people in the remaining sectors from 2 to 5 miles and from 5 to 10 miles from the plant.

3. If a GENERAL EMERGENCY has been declared due to loss of physical control of the plant to intruders, including the Control Room or any other area(s) vital to the operation of the reactor system (as defined in the Security Plan), the minimum PAR shall be:

Evacuate all people within a 2-mile radius from the plant and out to 5 miles in the sectors affected. Shelter all people in the remaining sectors from 2 to 5 miles and from 5 to 10 miles from the plant.

1.1 Discussion (continued)

8. (continued)

C. Once a release of radioactive material occurs, dose assessment should be utilized when evaluating PARs. The final determination of the PAR should consider all available information including off-site dose projections, plant conditions and field monitoring data. The most conservative recommendation shall be made.

D. If it is anticipated that a PAR threshold will be exceeded, DO NOT wait until the threshold is exceeded to make that PAR.

E. ¶12 Conditions (plant information, dose projections and field monitoring results) are to be continually assessed and PARs expanded, as necessary, to ensure that adequate (most conservative) PARs are issued. /R6

F. ¶12 Previously issued PARs, unless found to be less conservative, are to remain in effect until the threat is fully under control and the event is being de-escalated. /R6

G. ¶12 Only State and County officials can implement, change and/or terminate protective actions. /R6

2.0 REFERENCES / RECORDS REQUIRED / COMMITMENT DOCUMENTS

NOTE

One or more of the following symbols may be used in this procedure:

§ Indicates a Regulatory commitment made by Technical Specifications, Condition of License, Audit, LER, Bulletin, Operating Experience, License Renewal, etc. and shall NOT be revised without Facility Review Group review and Plant General Manager approval.

¶ Indicates a management directive, vendor recommendation, plant practice or other non-regulatory commitment that should NOT be revised without consultation with the plant staff.

Ψ Indicates a step that requires a sign off on a data sheet.

2.1 References

1. St. Lucie Plant Updated Final Safety Analysis Report (UFSAR) Unit 1 and Unit 2
2. St. Lucie Plant Technical Specifications Unit 1 and Unit 2
3. $§_1$ St. Lucie Plant Radiological Emergency Plan (E-Plan)
4. E-Plan Implementing Procedures (EPIP 00 – 13)
5. St. Lucie Plant Emergency Response Directory (ERD)
6. QI-17-PSL-1, Quality Assurance Records

2.2 Records Required

1. All PAR worksheets and notifications forms (all attachments) shall be maintained in plant files in accordance with QI-17-PSL-1.

2.3 Commitment Documents

1. $¶_1$ PMAI PM96-04-165, "ITR 96-006" (Unusual Event Declared Due to Dropped Rod)
2. $¶_2$ PMAI PM96-09-185, Condition Report CR-96-1750 (Off-site Notification Using Commercial Phone)
3. $¶_3$ NRC Inspection Report 91-01, Closure of IFIs 89-31-03 and 89-31-01
4. $¶_4$ Condition Report CR-00-0428 (Evaluated Exercise Critique)

2.3 Commitment Documents (continued)

5. ¶6 PMAI PM96-05-233 (Off-site Notification Process)

6. ¶7 PMAI PM99-09-016 (PARs Based on FMT Data, Completion of NRC Notification Form)

7. ¶8 NUREG-1022, Event Reporting Guidelines 10 CFR 50.72 and 50.73, Section 4.2.4, ENS Event Notification Worksheet (NRC Form 361).

8. ¶9 Condition Reports CR-01-0726 and CR-01-0742 (NOUEs Associated with SDC During SL1-17 Outage)

9. ¶10 Condition Report CR-01-0389 (Alternate Met Data Source)

10. ¶11 Condition Report CR-02-0333 (Role of Duty Call Supervisor)

11. ¶12 Condition Report CR-03-2568 (Response to RIS 2003-12 Regarding PARs) /R6

3.0 RESPONSIBILITIES

3.1 Emergency Coordinator – Responsible for classifications, notifications and PARs.

3.2 Recovery Manager – Responsible for notifications and PARs.

3.3 ¶11 Duty Call Supervisor – Assists the EC as a phonetalker. /R6

3.4 TSC EC Assistant / Logkeeper or TSC OPS Coordinator – Prepares notification forms (Attachment 1, Florida Nuclear Plant Emergency Notification Form, and if necessary, Attachment 3, NRC Reactor Plant Event Notification Worksheets) for EC approval when the TSC is operational. /R6

3.5 EOF RM OPS Advisor / Logkeeper – Prepares notification forms (Attachment 1 and if necessary, Attachment 3) for RM approval when the EOF is operational. /R6

3.6 TSC HRD Communicator – Assists the TSC EC Assistant / Logkeeper or TSC OPS Coordinator with notification form preparation and makes calls to complete notifications to the SWP.

3.7 EOF HRD Communicator – Assists the EOF RM OPS Advisor with form preparation and makes calls to complete notifications to the SWP and the SCO following transfer of Net Control by the Division of Emergency Management (DEM).

3.8 TSC Chemistry Supervisor (in his absence, TSC Dose Assessor) – Assists the EC with radiological dose assessment data and PARS.

3.9 EOF HP Manager (in his absence, EOF Dose Assessor) – Assists the RM with radiological dose assessment data and PARS.

3.10 TSC Supervisor – Oversees communications performed by the TSC Communicators (HRD, ENS, Health Physics Network (HPN), Sound-Powered Phonetalker, EOF and Field Monitoring Team).

3.11 EOF Nuclear Licensing Manager – Oversees EOF communications performed by the EOF Communicators (HRD, ENS, HPN and TSC).

3.12 Information Services – Maintains user copies, in the Unit 1 and Unit 2 Control Rooms, of the following checklist and supporting attachments for making notifications and developing Protective Action Recommendations:

- Appendix A, Notifications from the Affected Control Room
- Attachment 1 – Florida Nuclear Plant Emergency Notification Form
- Attachment 1A – Directions for Completing the Florida Nuclear Plant Emergency Notification Form
- Attachment 2 – Determination of Protective Action Recommendations (PARs) /R6
- Attachment 3 – NRC Reactor Plant Event Notification Worksheet /R6
- Attachment 3A – Directions for Completing the NRC Reactor Plant Event Notification Worksheet /R6

3.13 Shift Communicator – Assists the Nuclear Plant Supervisor/Emergency Coordinator in making emergency off-site notifications and performing other activities, as directed. /R6

4.0 DEFINITIONS

4.1 **Conservative** – Means more extensive or comprehensive action under a given set of circumstances to provide a greater measure of safety. For example, evacuation is more conservative than sheltering.

4.2 **Emergency** – Any off-normal event or condition which is classified into one of the four emergency classes (Unusual Event, Alert, Site Area Emergency, or General Emergency) by the NPS in accordance with EPIP-01, Classification of Emergencies.

4.3 **Emergency Coordinator (EC)** – The title initially assumed by the NPS, until relieved by plant management through proper turnover, in the event of plant conditions that trigger implementation of the Emergency Plan. The EC is responsible for notifying off-site authorities, emergency responders both inside and outside the company and has full authority and responsibility for on-site emergency response actions. The EC is also responsible for Protective Action Recommendations during the initial stages of an emergency.

4.4 **Florida Nuclear Plant Emergency Notification Form** – A predetermined format used by nuclear power plants throughout the State for notification and local authorities.

4.5 **Operational** (status for an emergency facility) – The mandatory minimum staff is present and the facility has taken responsibility for its procedurally assigned functions.

4.6 **Protective Action Recommendations** (PARs) – Recommendations, for action instructions to protect the public, made by the Emergency Coordinator or Recovery Manager to State and County officials. FPL may recommend No Action, Sheltering or Evacuation.

4.7 **Recovery Manager** (RM) – A designated company officer or senior manager, who will have responsibility for the direction and control of the EOF. He / she has the authority to establish policy and to expend funds necessary to cope with emergency situations that trigger the implementation of the Emergency Plan.

4.8 **Release** (during any declared emergency)

1. Any effluent monitor increase of (approximately) 10 times or one decade above pre-transient values.

OR

2. Health Physics detecting airborne radioactivity levels in excess of 25% derived air concentration (DAC) outside of plant buildings due to failure of equipment associated with the declared emergency.

/R6

4.9 **Shift Communicator** – A specific shiftly designated individual trained and qualified to assist the Nuclear Plant Supervisor/Emergency Coordinator in the control room in making emergency off-site notifications, and performing other activities as directed.

4.10 **State Notification Form (SNF)** – Less formal, more concise expression used in lieu of Florida Nuclear plant Emergency Notification Form.

5.0 INSTRUCTIONS

5.1 State and County Notification

1. Time Limits

A. Notification shall be initiated within 15 minutes of any of the following:

1. Recognition of entry into the Emergency Plan.

2. Escalation in Emergency Class.

3. De-escalation of the Emergency Class.

4. Protective Action Recommendation.

5. Change in Protective Action Recommendation.

B. Notification shall be initiated within 60 minutes of any of the following:

1. At an Alert or higher Emergency Class, the time of the last update (unless a different frequency has been agreed to by the off-site agencies as during a hurricane).

2. A radiological release has been initiated.

3. A radiological release has been terminated.

4. A significant change in plant conditions has occurred (e.g., loss or restoration of off-site power or major plant equipment).

5. Termination of the emergency.

5.1 State and County Notification (continued)

2. Forms Required for Notifications

CAUTION
Notifications require the use of a form similar to Attachment 1, Florida Nuclear Plant Emergency Notification Form.

/R6

A. Notifications with 15 minute time limits shall be made using a form similar to Attachment 1, Florida Nuclear Plant Emergency Notification Form.

B. Notifications with 60 minute time limits shall be made using a form similar to Attachment 1, Florida Nuclear Plant Emergency Notification Form. /R6 /R6

3. Special instructions due to extraordinary circumstances.

A. If Emergency Class escalation is necessary due to rapidly degrading conditions, Then provide the State and County authorities with the initial notification information by transmitting lines 1-6, at a minimum, of the SNF and terminate the phone call by stating that a new notification form will be provided within 15 minutes.

CAUTION
There can not be two concurrent declared emergency classes under the St. Lucie Plant Radiological Emergency Plan.

B. If one Unit is in a classified event and the same or the other Unit enters into an event where the same or lesser Emergency Class would apply, Then a new classification should NOT be declared. The event should be documented on a SNF as "Additional Information or Update" and issued as soon as practicable.

C. If one Unit is in a classified event and the other Unit enters into a more severe event in which a higher Emergency Class would apply, Then the new classification shall be declared and promptly, within the regulatory time limits, issued to the State, Counties and the NRC.

5.1 State and County Notification (continued)

4. ¶4 Transfer of NET Control

A. The State Coordinating Officer (SCO) can transfer the control of Hot Ring Down (HRD) NET from the State Warning Point (SWP) to the EOF. When this occurs;

1. The RM shall do face to face communication to satisfy off-site notification requirements for the State and Counties. Calls to the SWP are no longer necessary.

2. The Florida Nuclear Plant Emergency Notification Form (Attachment 1) shall continue to be filled out. /R6

3. Completed notification forms are to be provided to the SCO or his / her designee in the EOF.

END OF SECTION 5.1

5.2 Nuclear Regulatory Commission (NRC) Notification

1. Time Limits

> **NOTE**
> Notification of the NRC is expected immediately after notification of State and local agencies. The one-hour time limit in 10 CFR 50.72 (a)(3) is to ensure timely NRC notification in cases where notification of State and local agencies is delayed or prolonged.

A. The licensee shall notify the NRC immediately after notification of the appropriate State or local agencies and not later than one hour after the time the licensee declares one of the Emergency Classes (10 CFR 50.72 (a)(3)).

2. Special Instructions

A. Initial notification to the NRC using the Emergency Notification System (ENS) (usually done from the Control Room) should use Attachment 3, NRC Reactor Plant Event Notification Worksheet.

B. At an Alert or higher emergency class, the NRC will want to establish an open line of communication with the Control Room, utilizing an ENS conference bridge tying in the licensee with NRC Headquarters and region personnel. Once the Technical Support Center (TSC) is operational, the Control Room should transfer responsibility for NRC communications to the TSC.

C. The Emergency Operations Facility (EOF) should join the TSC on the ENS conference bridge and take the lead for NRC communications.

D. The TSC and EOF should also utilize the Health Physics Network (HPN) line in a manner similar to the ENS (i.e., establish a conference bridge with the NRC).

E. Both the ENS and HPN Communicators in both facilities should keep logs of information transmitted and received from the NRC in accordance with procedures.

/R6

END OF SECTION 5.2

5.3 ¶1 Erroneous Information

1. If erroneous information is transmitted to off-site agencies and the error is discovered prior to event termination, a correction should be provided in an update. The need for and urgency of providing the update is dependent upon the importance of the error.

2. If erroneous information is transmitted to off-site agencies and the error is discovered after event termination, the Licensing Department should be consulted to determine the need and method for contacting the off-site agencies with corrected information.

END OF SECTION 5.3

APPENDIX A
NOTIFICATIONS FROM THE AFFECTED CONTROL ROOM
(Page 1 of 4)

INITIAL

CAUTION

- §1 Notification of State and local agencies shall be made as soon as practicable within 15 minutes of declaration of an Emergency Class.
- ¶3 A new Florida Nuclear Plant Emergency Notification Form shall be completed for all updates.

NOTE

¶9 1. Completion of this checklist requires the following Attachments (all from EPIP-08):

Attachment 1 – Florida Nuclear Plant Emergency Notification Form

Attachment 1A – Directions for Completing the Florida Nuclear Plant Emergency Notification Form

Attachment 2 – Determination of Protective Action Recommendations (PARs)

Attachment 3 – NRC Reactor Plant Event Notification Worksheet

Attachment 3A – Directions for Completing the NRC Reactor Plant Event Notification Worksheet

2. Checklist Part 1 is for State Warning Point notification.

3. Checklist Part 2 is for NRC notification.

1. State Warning Point Notification

A. Prepare the Florida Nuclear Plant Emergency Notification Form (form similar to Attachment 1) in accordance with Attachment 1A, Directions for Completing the Florida Nuclear Plant Emergency Notification Form. _____

B. Emergency Coordinator (EC) approval. _____

/R6

APPENDIX A
NOTIFICATIONS FROM THE AFFECTED CONTROL ROOM
(Page 2 of 4)

1. (continued) INITIAL

NOTE

1. Primary notification method to the State Warning Point (SWP) is to use the Hot Ring Down (HRD) phone.
2. If the HRD is out-of-service, alternate notification methods are provided in Section E, below.

C. Using the State HOT RING DOWN (HRD) Phone, dial 100. _____

D. Hold down the button on the handset while talking. This must be done each time you talk. Release the button in order to listen. When the State Duty Officer answers, announce "This is St. Lucie Nuclear Plant [as applicable (Unit 1, 2)] with an emergency message. I am standing by to transmit the Florida Nuclear Plant Emergency Notification Form when you are ready to copy." Allow the Duty Officer to contact St. Lucie County, Martin County and the Bureau of Radiation Control prior to transmitting the information from the notification form. When the parties are on line, provide the information slowly (e.g., in three word intervals) and deliberately, providing time for the information to be written down. _____

E. Alternate Notification Methods (in order of priority)

NOTE

Use of the commercial telephone as an alternate notification method requires callback verification from the State Warning Point. Use of ESATCOM as an alternate notification method should include a callback verification number if available (e.g., cellular phone).

1. Alternate 1 – Commercial Phone

a. Call the State Warning Point using the phone number in the St. Lucie Plant Emergency Response Directory (ERD). Announce "This is St. Lucie Nuclear Plant [as applicable (Unit 1 / 2)] with an emergency declaration. My callback number is _____." _____

/R6

APPENDIX A
NOTIFICATIONS FROM THE AFFECTED CONTROL ROOM
(Page 3 of 4)

1. E. 1. (continued) INITIAL

b. Hang up the phone and standby for the callback. When the State Warning Point gives the go-ahead, provide the information from the Florida Nuclear Plant Emergency Notification Form. _____

c. ¶2 Request callback from the State Warning Point to verify that they notified St. Lucie County, Martin County and the Bureau of Radiation Control. _____

2. Alternate 2 - ESATCOM

NOTE
Use ESATCOM only if Alternate 1 – commercial phone is not available.

a. Hold down the "push-to-talk" button on the handset and wait 3-5 seconds to hear a beep before you start talking. This must be done each time you talk. _____

b. Announce "State Warning Point, this is St. Lucie Nuclear Plant [as applicable (Unit 1 / 2)] with an emergency declaration." Then release the "push-to-talk" button in order to listen. _____

c. When the State Warning Point acknowledges, announce "State Warning Point, this is St. Lucie Nuclear Plant [as applicable (Unit 1 / 2)] declaring a / an (classification), repeat (classification). I am standing by to transmit Florida Nuclear Plant Emergency Notification Form information when you are ready to copy. When the State Warning Point gives the go-ahead, provide the information from the Florida Nuclear Plant Emergency Notification Form. _____

d. Announce "St. Lucie clear" at the end of the conversation. _____

APPENDIX A
NOTIFICATIONS FROM THE AFFECTED CONTROL ROOM
(Page 4 of 4)

INITIAL

CAUTION
Notification of the NRC is expected immediately after notification of State and local agencies. The one hour time limit in 10 CFR 50.72 (a)(3) is to ensure timely NRC notification in cases where notification of State and local agencies is delayed or prolonged.

2. §1 NRC Notification

A. Prepare the NRC Reactor Plant Event Notification Worksheet (form similar to Attachment 3) in accordance with Attachment 3A, Directions for Completing the NRC Reactor Plant Event Notification Worksheet. _____

B. EC approval. _____

NOTE
1. Primary notification method to the NRC is to use the Emergency Notification System (ENS) phone.
2. If the ENS is out-of-service an alternate notification method is provided in Section D, below.

C. Transmit the form by dialing one of the numbers shown on the phone or in the Emergency Response Directory (ERD). _____

D. Alternate Notification Method

1. If the ENS is out-of-service, Then use a commercial phone to accomplish the above. _____

/R6

END OF APPENDIX A

APPENDIX B
NOTIFICATIONS FROM THE TECHNICAL SUPPORT CENTER (TSC)
(Page 1 of 5)

INITIAL

CAUTION

- §1 Notification of State and local agencies shall be made as soon as practicable within 15 minutes of declaration of an Emergency Class.
- ¶3 A new Florida Nuclear Plant Emergency Notification Form shall be completed for all updates.

NOTE

- Checklist Part 1 is for HRD Communications.
- Checklist Part 2 is for ENS Communications.

1. State Warning Point Notification

   A. Prepare the Florida Nuclear Plant Emergency Notification Form (form similar to Attachment 1) in accordance with Attachment 1A, Directions for Completing the Florida Nuclear Plant Emergency Notification Form.

   B. Verify the Emergency Coordinator (EC) approval. _____

NOTE

1. Primary notification method to the State Warning Point (SWP) is to use the Hot Ring Down (HRD) phone.
2. If the HRD is out-of-service, alternate notification methods are provided in Section E, below.

   C. Using the State HOT RING DOWN (HRD) Phone, dial 100. _____

APPENDIX B
NOTIFICATIONS FROM THE TECHNICAL SUPPORT CENTER (TSC)
(Page 2 of 5)

1. (continued) INITIAL

D. Hold down the button on the handset while talking. This must be done each time you talk. Release the button in order to listen. When the State Duty Officer answers, announce "This is St. Lucie Nuclear Plant Technical Support Center with an emergency message. I am standing by to transmit the Florida Nuclear Plant Emergency Notification Form when you are ready to copy." Allow the Duty Officer to contact St. Lucie County, Martin County and the Bureau of Radiation Control prior to transmitting the information from the notification forms. When the parties are on line, provide the information slowly (e.g., in three word intervals) and deliberately, providing time for the information to be written down. _____

E. Alternate Notification Methods (in order of priority)

> **NOTE**
> Use of the commercial telephone as an alternate notification method requires callback verification from the State Warning Point. Use of ESATCOM as an alternate notification method should include a callback verification number if available (e.g., cellular phone).

1. Alternate 1 – Commercial Phone

a. Call the State Warning Point using the phone number in the St. Lucie Plant Emergency Response Directory (ERD). Announce "This is St. Lucie Nuclear Plant Technical Support Center with an emergency declaration. My callback number is _____." _____

b. Hang up the phone and standby for the callback. When the State Warning Point gives the go-ahead, provide the information from the Florida Nuclear Plant Emergency Notification Form. _____

c. ¶2 Request callback from the State Warning Point to verify that they notified St. Lucie County, Martin County and the Bureau of Radiation Control. _____

/R6

APPENDIX B
NOTIFICATIONS FROM THE TECHNICAL SUPPORT CENTER (TSC)
(Page 3 of 5)

1. **E.** (continued) INITIAL

2. Alternate 2 - ESATCOM

NOTE
Use ESATCOM only if Alternate 1 – commercial phone is not available.

a. Hold down the "push-to-talk" button on the handset and wait 3-5 seconds to hear a beep before you start talking. This must be done each time you talk. _____

b. Announce "State Warning Point, this is St. Lucie Nuclear Plant Technical Support Center with an emergency declaration." Then release the "push-to-talk" button in order to listen. _____

c. When the State Warning Point acknowledges, announce "State Warning Point, this is St. Lucie Nuclear Plant Technical Support Center declaring a / an (classification), repeat (classification). I am standing by to transmit the Florida Nuclear Plant Emergency Notification Form when you are ready to copy. When the State Warning Point gives the go-ahead, provide the information from the Florida Nuclear Plant Emergency Notification Form. _____

d. Announce "St. Lucie clear" at the end of the conversation. _____

/R6

APPENDIX B
NOTIFICATIONS FROM THE TECHNICAL SUPPORT CENTER (TSC)
(Page 4 of 5)

INITIAL

CAUTION
Notification of the NRC is expected immediately after notification of State and local agencies. The one-hour time limit in 10 CFR 50.72 (a)(3) is to ensure timely NRC notification in cases where notification of State and local agencies is delayed or prolonged.

NOTE
1. Primary notification method to the NRC is to use the Emergency Notification System (ENS) phone.
2. If the ENS is out-of-service, an alternate notification method is provided in Section B, below.

2. §1 NRC Notification

A. Choose and complete the appropriate steps, below:

1. If the NRC Reactor Plant Event Notification Worksheet has NOT previously been transmitted from the Control Room, Then request that the EC Assistant / Logkeeper prepare the form. _____

2. Verify EC approval. _____

3. Transmit the form by dialing one of the numbers shown on the phone or in the Emergency Response Directory (ERD), then GO TO the next step to establish an open line of communication with the NRC. _____

OR

4. If the NRC Reactor Plant Event Notification Worksheet has previously been transmitted by the Control Room, Then initiate an open line of communication with the NRC by dialing one of the numbers shown on the phone or in the ERD and request to be placed on the Conference Bridge with the NRC. _____

5. As requested, provide information to the NRC. _____

APPENDIX B
NOTIFICATIONS FROM THE TECHNICAL SUPPORT CENTER (TSC)
(Page 5 of 5)

2. (continued) INITIAL

B. Alternate Notification Method

1. If the ENS is out-of-service, Then use a commercial phone to accomplish the above. _____

END OF APPENDIX B

APPENDIX C
NOTIFICATIONS FROM THE EMERGENCY OPERATIONS FACILITY (EOF)
(Page 1 of 6)

INITIAL

CAUTION

- §1 Notification of State and local agencies shall be made as soon as practicable within 15 minutes of declaration of Emergency Class or change in Protective Action Recommendation (PAR).
- ¶3 A new Florida Nuclear Plant Emergency Notification Form shall be completed for all updates.

NOTE

- Checklist Part 1 is for HRD Communications.
- Checklist Part 2 is for ENS Communications.

1. State Warning Point Notification

   A. Prepare the Florida Nuclear Plant Emergency Notification Form (form similar to Attachment 1) in accordance with Attachment 1A, Directions for Completing the Florida Nuclear Plant Emergency Notification Form.

   B. Verify the Recovery Manager (RM) approval. _____

APPENDIX C

NOTIFICATIONS FROM THE EMERGENCY OPERATIONS FACILITY (EOF)

(Page 2 of 6)

1. (continued) INITIAL

NOTE

1. Primary notification method to the State Warning Point (SWP) is to use the Hot Ring Down (HRD) phone.
2. If the HRD is out-of-service, alternate notification methods are provided in Section D, below.
3. State and County representatives means Florida Division of Emergency Management (DEM), Florida Department of Health (DOH), St. Lucie County Department of Public Safety (DPS) and Martin County Department of Emergency Services (DES).
4. Notification forms means the Florida Nuclear Plant Emergency Notification Form.

/R6

C. Choose and complete the appropriate step below:

1. If State and County representatives are NOT co-located with the FPL Emergency Response Organization (ERO) in the EOF, Then call the SWP and transmit the notification forms. To contact the SWP, dial 100. Hold down the button on the handset while talking. This must be done each time you talk. Release the button in order to listen. When the State Duty Officer answers, announce "this is St. Lucie Nuclear Plant Emergency Operations Facility with an emergency message. I am standing by to transmit the Florida Nuclear Plant Emergency Notification Form when you are ready to copy." Allow the Duty Officer to contact the Bureau of Radiation Control, St. Lucie County DPS and Martin County DES prior to transmitting the information from the notification forms. When the parties are on line, transmit the information slowly, (e.g., in three word intervals) and deliberately, providing time for the information to be written down. _____ /R6

OR

APPENDIX C
NOTIFICATIONS FROM THE EMERGENCY OPERATIONS FACILITY (EOF)
(Page 3 of 6)

1. C. (continued) INITIAL

2. If State and County representatives are co-located with the FPL ERO in the EOF and the State Coordinating Officer (SCO) has NOT assumed Net Control, Then call the SWP and transmit the notification forms – "Time of Contact" corresponds to the start time of the Recovery Manager's Protective Action Recommendation (PAR) Briefing. To contact the SWP, dial 100. Hold down the button on the handset while talking. This must be done each time you talk. Release the button in order to listen. When the State Duty Officer answers, announce "this is St. Lucie Nuclear Plant Emergency Operations Facility with an emergency message. I am standing by to transmit the Florida Nuclear Plant Emergency Notification Form when you are ready to copy." Allow the Duty Officer to contact the Bureau of Radiation Control, St. Lucie County DPS and Martin County DES prior to transmitting the information from the notification forms. When the parties are on line, transmit the information slowly, (e.g., in three word intervals) and deliberately, providing time for the information to be written down. _____

OR

3. If State and County representatives are co-located with the FPL ERO in the EOF and the SCO has transferred Net Control to the EOF, Then the SWP is not called (completed notification forms are given to the SCO – may be accomplished by the RM or RM OPS Advisor / Logkeeper). _____

D. Alternate Notification Methods (in order of priority)

NOTE
Use of the commercial telephone as an alternate notification method requires callback verification from the State Warning Point. Use of ESATCOM as an alternate notification method should include a callback verification number if available (e.g., cellular phone).

1. Alternate 1 – Commercial Phone

/R6

APPENDIX C

NOTIFICATIONS FROM THE EMERGENCY OPERATIONS FACILITY (EOF)

(Page 4 of 6)

1. D. 1. (continued) INITIAL

a. Call the State Warning Point using the phone number in the St. Lucie Plant Emergency Response Directory (ERD). Announce "This is St. Lucie Nuclear Plant Emergency Operations Facility with an emergency declaration. My callback number is _____." _____

b. Hang up the phone and standby for the callback. When the State Warning Point gives the go-ahead, provide the information from the Florida Nuclear Plant Emergency Notification Form. _____

c. ¶2 Request callback from the State Warning Point to verify that they notified St. Lucie County, Martin County and the Bureau of Radiation Control. _____

2. Alternate 2 - ESATCOM

NOTE

Use ESATCOM only if Alternate 1 – commercial phone is not available.

a. Hold down the "push-to-talk" button on the handset and wait 3-5 seconds to hear a beep before you start talking. This must be done each time you talk. _____

b. Announce "State Warning Point, this is St. Lucie Nuclear Plant Emergency Operations Facility with an emergency declaration." Then release the "push-to-talk" button in order to listen. _____

c. When the State Warning Point acknowledges, announce "State Warning Point, this is St. Lucie Nuclear Plant Emergency Operations Facility declaring a / an (classification), repeat (classification). I am standing by to transmit the Florida Nuclear Plant Emergency Notification Form when you are ready to copy." When the State Warning Point gives the go-ahead, provide the information from the Florida Nuclear Plant Emergency Notification Form. _____

/R6

APPENDIX C

NOTIFICATIONS FROM THE EMERGENCY OPERATIONS FACILITY (EOF)

(Page 5 of 6)

1. D. 2. (continued) INITIAL

d. Announce "St. Lucie clear" at the end of the conversation. _____

CAUTION

Notification of the NRC is expected immediately after notification of State and local agencies. The one-hour time limit in 10 CFR 50.72 (a)(3) is to ensure timely NRC notification in cases where notification of State and local agencies is delayed or prolonged.

2. §1 NRC Notification

NOTE

1. Primary notification method to the NRC is to use the Emergency Notification System (ENS) phone.
2. If the ENS is out-of-service, an alternate notification method is provided in Section B, below.

A. Choose and complete the appropriate steps, below:

1. If the NRC Reactor Plant Event Notification Worksheet has NOT previously been transmitted from either the Control Room or Technical Support Center (TSC), Then request that the RM OPS Advisor prepare the form. _____

2. Verify RM approval. _____

3. Transmit the form by dialing one of the numbers shown on the phone or in the Emergency Response Directory (ERD), then GO TO the next step to establish an open line of communication with the NRC. _____

OR

4. If the NRC Reactor Plant Event Notification Worksheet has previously been transmitted by either the Control Room or the TSC, Then initiate an open line of communication with the NRC by dialing one of the numbers shown on the phone or in the ERD and request to be placed on the Conference Bridge with the NRC and the St. Lucie TSC. _____

APPENDIX C

NOTIFICATIONS FROM THE EMERGENCY OPERATIONS FACILITY (EOF)

(Page 6 of 6)

2. **A.** (continued) INITIAL

5. Take the lead in providing information to the NRC. _____

B. Alternate Notification Method

1. If the ENS is out-of-service, Then use a commercial phone to accomplish the above. _____

END OF APPENDIX C

ATTACHMENT 1
FLORIDA NUCLEAR PLANT EMERGENCY NOTIFICATION FORM
(Page 1 of 1)

On-line Verification: ☐ SWP/DEM ☐ St. Lucie County ☐ Martin County

1. A. ☐ THIS IS A DRILL B. ☐ THIS IS AN EMERGENCY

2. A. Date: __/__/__ B. Contact Time: _____ C. Reported by: (Name) _____
   D. Message Number: _____ E. Reported from: ☐ Control Room ☐ TSC ☐ EOF

3. Site: A. ☐ Crystal River Unit 3 B. ☐ St. Lucie Unit 1 C. ☐ St. Lucie Unit 2
   D. ☐ Turkey Point Unit 3 E. ☐ Turkey Point Unit 4

4. Emergency Classification: A. ☐ Notification of Unusual Event C. ☐ Site Area Emergency
   B. ☐ Alert D. ☐ General Emergency

5. A. ☐ Emergency Declaration: B. ☐ Emergency Termination: Date: __/__/__ Time: _____

6. Reason for Emergency Declaration:* A. ☐ EAL Number OR B. ☐ Description:
   _____
   _____

7. Additional Information or Update: A. ☐ None OR B. ☐
   _____
   _____

8. Weather Data: A. Wind direction from _____ degrees B. Downwind Sectors Affected: _____, _____, _____

9. Release Status: A. ☐ None (Go to Item 11) B. ☐ Is occurring C. ☐ Has occurred, but stopped

10. Release Significance Category (at the Site Boundary):
    A. ☐ Information not available at this time.
    B. ☐ Release within normal operating limits (≤ 3.5 E-1 Ci/sec noble gas, ≤ 4.6 E-5 Ci/sec iodine)
    C. ☐ Non-Significant Fraction of PAG Range (release is > normal limits and < 500 mrem TEDE and 1000 mrem CDE)
    D. ☐ PAG Range (≥ 500 mrem TEDE or ≥ 1000 mrem CDE)

11. Utility Recommended Protective Actions:
    A. ☐ No recommended actions at this time.
    B. ☐ The utility recommends the following protective actions:

☐ Miles	No Action Sectors	Evacuate Sectors	Shelter Sectors
0 – 2	_____	_____	_____
2 – 5	_____	_____	_____
5 – 10	_____	_____	_____

    OR
    Shelter Zones / Areas: _____
    Evacuate Zones / Areas: _____
    C. Consider Issuance of KI: ☐ Yes ☐ No

If form is completed in the Control Room, go to Item 15. If completed in the TSC or EOF, continue with item 12.

12. Plant Conditions: A. Reactor Shutdown? ☐ Yes ☐ No B. Core Adequately Cooled? ☐ Yes ☐ No
    C. Containment Intact? ☐ Yes ☐ No D. Core Condition: ☐ Stable ☐ Degrading

13. Weather Data: A. Wind Speed _____ mph B. Stability Class _____

14. Additional Release Information: ☐ N/A OR
    A. ☐ Noble Gases _____ Curies per second B. ☐ Iodines _____ Curies per second
    C. Airborne: Date Started __/__/__ Time Started _____ Date Stopped __/__/__ Time Stopped _____
    D. Liquid: Date Started __/__/__ Time Started _____ Date Stopped __/__/__ Time Stopped _____

Distance	Projected Thyroid Dose (CDE) for 1 Hour	Projected Total Dose (TEDE) for 1 Hour
1 Mile (Site Boundary)	E. _____ mrem	F. _____ mrem
2 Miles	G. _____ mrem	H. _____ mrem
5 Miles	I. _____ mrem	J. _____ mrem
10 Miles	K. _____ mrem	L. _____ mrem

    EC or RM Approval Signature: _____ Date: __/__/__ Time: _____

15. Message Received By: Name: _____ Date: __/__/__ Time: _____

* If emergency class escalation is known to be necessary and a new notification form will be transmitted within 15 minutes, then you may go to line 15.

END OF ATTACHMENT 1

/R6

¶6 ATTACHMENT 1A
DIRECTIONS FOR COMPLETING THE FLORIDA NUCLEAR PLANT EMERGENCY NOTIFICATION FORM
(Page 1 of 7)

ITEM ENTRY

On-line Verification - Check the appropriate boxes as the State Warning Point (Florida Division of Emergency Management) requests that St. Lucie County Department of Public Safety and the Martin County Division of Emergency Management get on the line, prior to initiating the notification. All three agencies must be notified through the SWP or alternate means.

1. Check appropriate box for drill or actual emergency as the case may be. During exercises, drills, or tests, each message shall be checked **THIS IS A DRILL.**

2A. Enter today's date.

2B. Enter the time (using the official time, normally synchronized with ERDADS) when contact is made with the State Warning Point or the start time of the RM PAR Briefing. For initial notification of classification, this shall be within 15 minutes of the "Emergency Declaration" time in item 5.

2C. Enter the name of the person making the notification call.

2D. Enter the message number beginning with #1 and following sequentially in all facilities (e.g., if the Control Room transmitted two messages the TSC would start with #3).

2E. Check the box for the facility from which the notification is being made.

3. Site
Check the box for the appropriate plant site for the emergency declaration (both St Lucie boxes might need to be checked for dual unit events such as approach of a hurricane).

4. Emergency Classification
Check the box corresponding to current accident classification declared.

5. Emergency Declaration or Emergency Termination
Enter the **date** and **time** when the current emergency classification was declared (A) or (B) when the emergency was terminated.

/R6

ATTACHMENT 1A
DIRECTIONS FOR COMPLETING THE FLORIDA NUCLEAR PLANT EMERGENCY NOTIFICATION FORM
(Page 2 of 7)

6. Reason for Emergency Declaration
Enter the Emergency Action Level (EAL) number (A) (This option is currently not being used at Plant St. Lucie) or (B) enter wording like that found in the EAL information in EPIP-01, Classification Of Emergencies. Wording should be brief yet descriptive enough for the off-site agencies to gain an understanding of the event. It should be clear from the incident description which EAL has necessitated the emergency declaration. Wording should be as non-technical as possible with no acronyms or abbreviations. This information should remain the same throughout update messages, unless there is a classification change.

"*" asterisk and instruction provided at the bottom of form - If Emergency Class escalation is necessary due to rapidly degrading conditions, Then provide the State and County authorities with the initial notification information by transmitting lines 1-6, at a minimum, on the State Notification Form (SNF) and terminate the call by stating that a new notification form will be provided within 15 minutes.

7. Additional Information or Update
Check "None" (A) or (B) Description and enter additional information, if necessary, or reason for update here. For example:

- Protective Action Recommendations (PARs) change
- An occurrence that would otherwise result in a lower emergency classification, on other unit
- Weather changes affecting public safety
- Radiation level changes
- Loss of off-site power, etc.

/R6

ATTACHMENT 1A
DIRECTIONS FOR COMPLETING THE FLORIDA NUCLEAR PLANT EMERGENCY NOTIFICATION FORM
(Page 3 of 7)

NOTE
If the Class A Model (dose projection model) is being used, a 'State Notification Form Summary Sheet' is available which provides information for items 8-11, 13 and 14. The information is in a format similar to that found on the Florida Nuclear Plant Emergency Notification Form. /R6

8. Weather Data

NOTE
10 meter data should be used.

A. ¶10 Wind direction can be obtained from ERDADS by depressing the "EPIP" key, on the top row of the keyboard. The Met Tower Indicator Panel in the Unit 1 Control Room is an alternate source. If these two sources are not available, refer to Attachment 1, Meteorological Data, in EPIP-09, Off-Site Dose Calculations.

B. If the wind direction is greater than 360° the wind direction is determined by subtracting 360° from the indicated number. Wind direction should be rounded to the nearest whole number.

C. Wind direction is always given as "wind from" (an easterly wind, or wind direction 90°, means that the wind is blowing from east to west).

D. When determining the sectors affected, the adjacent sectors on both sides of the actual downwind sector are included. Three sectors will typically be listed.

E. If the wind is located on the edge of a sector (i.e., 11°, 33°, etc.) an additional (fourth) sector should be added. /R6

F. Enter the wind direction (wind from) in degrees in item "A."

ATTACHMENT 1A
DIRECTIONS FOR COMPLETING THE FLORIDA NUCLEAR PLANT EMERGENCY NOTIFICATION FORM
(Page 4 of 7)

8. (continued)

G. Enter the downwind sectors in item "B."

Wind From	Sectors Affected	Wind From	Sectors Affected	Wind From	Sectors Affected
348-11	HJK	123-146	PQR	236-258	CDE
11-33	JKL	146-168	QRA	258-281	DEF
33-56	KLM	168-191	RAB	281-303	EFG
56-78	LMN	191-213	ABC	303-326	FGH
78-101	MNP	213-236	BCD	326-348	GHJ
101-123	NPQ	There is no "O" sector		There is no "I" sector	

9. Release Status

A. If there are no indications of a release of radioactive material, check box "A" and go to item 11. /R6

A release of radioactive material (during any declared emergency) is defined as:

- Any effluent monitor increase of (approximately) 10 times or one decade above pre-transient values

OR

- Health Physics detecting airborne radioactivity levels in excess of 25% derived air concentration (DAC) outside of plant buildings due to failure of equipment associated with the declared emergency.

B. If a release of radioactive material is occurring, even though it may be less than normal operating limits, check box "B."

C. If a release has occurred but stopped, check box "C." /R6

Dose Assessment personnel in the TSC or EOF will have this information. The TSC Chemistry Supervisor, TSC HP Supervisor or EOF HP Manager should be contacted for the data.

ATTACHMENT 1A

DIRECTIONS FOR COMPLETING THE FLORIDA NUCLEAR PLANT EMERGENCY NOTIFICATION FORM

(Page 5 of 7)

10. Release Significance Category

Do Not Check Any Box in Item 10 if you Checked Box 9 "A" No Release

A. If a release is occurring or has occurred and dose information is not available at the time of notification, check box "A" and follow up as soon as information becomes available.

B. Check box "B" if both noble gas and iodine release rates are less than or equal to the following:

Noble Gas release $\leq$ 3.5 E+5 µCi/sec (3.5 E-1 Ci/sec)
Iodine release $\leq$ 4.6 E+1 µCi/sec (4.6 E-5 Ci/sec)

C. Check box "C" if either noble gas or iodine release rates exceed the values in "B" (above) but forecasted 1 mile doses are less than either 500 mrem TEDE or 1000 mrem Thyroid CDE. These doses are less than the state's Protective Action Guide (PAG) levels.

D. Check box "D" if forecasted 1 mile doses are greater than or equal to either 500 mrem TEDE or 1000 mrem Thyroid CDE. These PAG levels require state and county action.

11. Utility Recommended Protective Actions

A. If there are no Protective Action Recommendations (PARs), check Box "A."

B. If PARs are necessary, check Box "B". Two formats are provided to record PARs. Use the "sector" format and determine appropriate PARs using the guidance in Attachment 2 to this procedure. Copy the PARs into item 11 "C." Indicate PARs using only the words NONE, ALL, ALL REMAINING or by listing the letters of the sectors affected. Protective Action Recommendations shall be approved by the Emergency Coordinator (EC) or the Recovery Manager (RM). The "zone" format is for Crystal River Unit 3 use only.

C. Check the "Yes" box (to consider issuance of potassium iodide (KI) only if:

(1) A General Emergency has been declared

AND

(2) A release of radioactive material is occurring.

/R6

ATTACHMENT 1A
DIRECTIONS FOR COMPLETING THE FLORIDA NUCLEAR PLANT EMERGENCY NOTIFICATION FORM
(Page 6 of 7)

12. Plant Conditions

Answer the three questions "Yes" or "No" by checking the appropriate box.

A. Is the reactor shut down?

B. Is the core adequately cooled?

C. Is the containment intact?

Answer the question regarding the condition of the core as either stable or degrading.

13. Weather Data

NOTE
10 meter data should be used.

A. ¶10 Temperature, wind speed and wind direction can be obtained from ERDADS by depressing the "EPIP" key, on the top row of the keyboard. The Met Tower Indicator Panel in the Unit 1 Control Room is an alternate source. If these two sources are not available, refer to Attachment 7, Meteorological Data, in EPIP-09, Off-site Dose Calculations.

B. Enter wind speed in Miles Per Hour (MPH) in item "A".

C. Stability Class - Enter the stability class as determined by using the figure below. The figure shows the relationship between the Delta T displayed by ERDADS and the stability class.

If Delta-T is	Then Stability Class is
Less than or equal to -1.7	A
-1.6 to -1.5	B
-1.4	C
-1.3 to -0.5	D
-0.4 to +1.4	E
+1.5 to +3.6	F
Greater than +3.6	G

ATTACHMENT 1A

DIRECTIONS FOR COMPLETING THE FLORIDA NUCLEAR PLANT EMERGENCY NOTIFICATION FORM

(Page 7 of 7)

14. Additional Release Information

This section requires that a release be in progress and completed results of dose assessment be available. Check the "N/A" box if no release is occurring and/or if dose information is not available. Otherwise, provide all information that applies.

A. Enter the noble gas release rate in curies per second.

B. Enter the iodine release rate in curies per second.

C. For an airborne release, enter the date and time started and when terminated, the date and stopped.

D. For a liquid release, enter the date and time started and when terminated, the date and time stopped.

Projected Dose Information - Enter the projected Thyroid Dose (CDE) in mrem for 1 hour (EPIP-09, Manual Dose Calculation Worksheet, Line 5) and the projected Total Dose (TEDE) in mrem for 1 hour (EPIP-09, Manual Dose Calculation Worksheet, Line 16) for the site boundary 2, 5 and 10 miles.

15. Message Received By

Enter the name of the State Warning Point Duty Officer or the individual that receives the notification. Enter the time at the State Warning Point (request it from the Duty Officer) and indicate the date the call is completed.

END OF ATTACHMENT 1A

ATTACHMENT 2
DETERMINATION OF PROTECTIVE ACTION RECOMMENDATIONS (PARs)
(Page 1 of 5)

/R6

NOTE

- **Initial** notification from the Control Room may utilize PARs based on **plant** conditions.
- **Once** dose assessment begins, PARs should be made utilizing all **available** data including off-site dose projections, plant conditions and **field** monitoring data.
- **Both plant conditions and off-site doses shall be considered for PARs.**
- The most conservative recommendations should be made.
- If it is anticipated that a threshold for a PAR will be exceeded, it is neither necessary nor desirable to wait until the threshold is exceeded to make that PAR.
- ¶12 Conditions (plant information, dose projections and field monitoring results) are to be continually assessed and PARs expanded, as necessary, to ensure that adequate (most conservative) PARs are issued.
- ¶12 Previously issued PARs, unless found to be less conservative, are to remain in effect until the threat is fully under control and the event is being de-escalated.
- ¶12 Only State and County officials can implement, change and/or terminate protective actions.

/R6

1. PAR Flowchart

A. PARs Based on Plant Conditions

1. Begin in the upper left hand corner of the chart by answering the General Emergency (GE) question.

2. Correctly answer the questions until you reach one of the boxes that provides PAR information based on plant conditions.

3. If there is no release, Then go to the PAR Worksheet and fill-in the PARs based on plant conditions. The sectors affected can be determined by referring to number 8, Weather Data, in Attachment 1A, Directions for Completing the Florida Nuclear Plant Emergency Notification Form.

/R6

4. If a release is involved, Then go to Section B, PARs Based on Off-site Dose, below.

/R6A

ATTACHMENT 2
DETERMINATION OF PROTECTIVE ACTION RECOMMENDATIONS (PARs)
(Page 2 of 5)

1. (continued)

NOTE

- If the Class A Model printout, State Notification Form Summary Sheet is available, it should be used to compare dose-based PARs against PARs based on plant conditions.
- Calculated off-site doses should be compared to field monitoring data when determining PARs.

B. PARs Based on Off-site Dose

1. PARs are based on the Total Effective Dose Equivalent (TEDE or total dose) and / or the Committed Dose Equivalent (CDE, thyroid dose). Do NOT use dose rate values.

2. If using the Class A Model, Then in Forecast Mode, print the State Notification Form Summary for computer generated PARs.

a. Go to Section C, PAR Worksheet

3. If using EPIP-09, Off-site Dose Calculations, Then calculate TEDE and CDE in accordance with the procedure.

a. Compare the TEDE dose at 1 mile with the values on the Flowchart. Enter the chart at the appropriate dose level by determining if the dose is between 500 and 999 mrem or between 1000 and 4999 mrem or 5000 mrem or greater.

b. From the selected dose level, move to the right on the chart to the first column, 0-2 miles. The PAR provided corresponds to the calculated TEDE at 1 mile.

c. Enter the PAR in the 0-2 miles block on the TEDE DOSE table below the PAR Flowchart. The sectors affected can be determined by referring to number 8, Weather Data, in Attachment 1A, Directions for Completing the Florida Nuclear Plant Emergency Notification Form.

d. Continue to determine the corresponding PAR at 2-5 miles using the calculated 2 mile TEDE, at 5-10 miles using the calculated 5 mile TEDE and the 10 miles plus (To Be Determined (TBD) distance) using the calculated 10 mile TEDE, as necessary.

e. Enter the PAR information in the appropriate blocks of the TEDE DOSE table.

/R6

ATTACHMENT 2
DETERMINATION OF PROTECTIVE ACTION RECOMMENDATIONS (PARs)
(Page 3 of 5)

1. B. 3. (continued)

f. Follow the same methodology for determining the PARs corresponding to the calculated CDE values beginning with the calculated value at 1 mile.

g. Enter each of the determined PARs in the CDE (Thyroid) DOSE table below the PAR Flowchart.

h. Go to Section C, PAR Worksheet.

C. PAR Worksheet

1. Fill-in the time / date and emergency class.

2. In Part A, determine the most conservative PARs by comparing the PARs based on plant conditions against those based on off-site dose. It is important to compare PARs at each distance (0-2, 2-5, 5-10) because the basis of the most conservative PAR could be different at different distances.

3. Enter the most conservative PARs into the table in Part B, Protective Actions Recommended by FPL. Use the word(s) NONE, ALL, ALL REMAINING or list the individual affected sectors by letter.

4. Obtain review and approval.

5. Transfer the approved PARs to the Florida Nuclear Plant Emergency Notification Form.

ATTACHMENT 2
DETERMINATION OF PROTECTIVE ACTION RECOMMENDATIONS (PARs)
(Page 4 of 5)

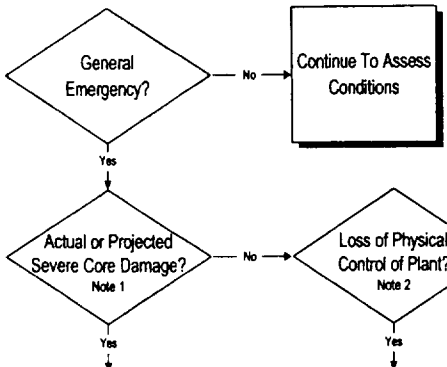

MILES	NO ACTION	EVACUATE	SHELTER
0-2	None	All	None
2-5	None	(Sectors Affected)	All Remaining
5-10	None	None	All

MILES	NO ACTION	EVACUATE	SHELTER
0-2	None	None	All
2-5	All Remaining	None	(Sectors Affected)
5-10	All	None	None

Notes
1. Severe core damage is indicated by:
   - Loss of critical functions required for core protection (e.g., loss of injection with LOCA) OR
   - High core temperatures (valid CET greater than 700° F) OR
   - CHRRM reading greater than 4.2 E4 R/hr.
2. Loss of physical control of Control Room or vital reactor operating areas to intruders.

PARs Based on Off-Site Dose
(For use with manual dose calculation only. Not to be completed when Class A Model is used)

TEDE DOSE	CDE (Thyroid) DOSE	0-2 Miles Use 1 mile value	2-5 Miles Use 2 mile value	5-10 Miles Use 5 mile value (Beyond 10 miles Use this Column and the 10 mile Dose Value)
TEDE 500*-999 mrem	CDE 1000*-4999 mrem	Shelter All	Shelter (Sectors Affected)	Shelter (Sectors Affected)
TEDE 1000-4999 mrem	CDE 5000-24999 mrem	Evacuate All	Evacuate (Sectors Affected) + Shelter All Remaining	Evacuate (Sectors Affected) + Shelter All Remaining
TEDE 5000 mrem or Greater	CDE 25000 mrem or Greater	Evacuate All	Evacuate All	Evacuate (Sectors Affected) + Shelter All Remaining

*Dose below this level requires NO ACTION

TEDE DOSE Use the following terms in this table: **NONE, ALL, ALL REMAINING or fill in the letters of the sectors affected.**

Miles	NO ACTION	EVACUATE	SHELTER
0-2			
2-5			
5-10			
> 10			

CDE (Thyroid) DOSE Use the following terms in this table: **NONE, ALL, ALL REMAINING or fill in the letters of the sectors affected.**

Miles	NO ACTION	EVACUATE	SHELTER
0-2			
2-5			
5-10			
> 10			

(P/EP/EPIP-08/APP C-R1)

ATTACHMENT 2
DETERMINATION OF PROTECTIVE ACTION RECOMMENDATIONS (PARs)
(Page 5 of 5)

PAR WORKSHEET

Time / Date _____ Emergency Class: ☐ **SAE** ☐ **GE**

A. PAR Comparison

After comparing the possible recommendations from the PARs flowchart, the most conservative PARs are based on: (check one)

☐ PLANT CONDITIONS ☐ OFF-SITE DOSE

B. Protective Actions Recommended by FPL:

Use the following terms in this table: **NONE, ALL, ALL REMAINING Or fill in the letters of the sectors affected.**

	NO ACTION SECTORS	EVACUATE SECTORS	SHELTER SECTORS
0-2 miles			
2-5 miles			
5-10 miles			
10-TBD miles*			

*If necessary, add to State Notification Form.

Control Room

Signature_____
Emergency Coordinator

Technical Support Center

Signature _____ _____
TSC EC Assistant / Logkeeper TSC HP Supervisor or TSC Chemistry Supervisor

---

Emergency Operations Facility

Signature _____ _____
EOF RM OPS Advisor / Logkeeper EOF HP Manager

END OF ATTACHMENT 2

/R6

ATTACHMENT 3
¶8 NRC REACTOR PLANT EVENT NOTIFICATION WORKSHEET
(Page 1 of 2)

NRC FORM 361
(12-2000)

U.S. NUCLEAR REGULATORY COMMISSION
OPERATIONS CENTER

REACTOR PLANT
EVENT NOTIFICATION WORKSHEET

EN #

NOTIFICATION TIME	FACILITY OR ORGANIZATION	UNIT	NAME OF CALLER	CALL BACK #

EVENT TIME & ZONE	EVENT DATE	POWERMODE BEFORE	POWERMODE AFTER

EVENT CLASSIFICATIONS			1-Hr. Non-Emergency 10 CFR 50.72(b)(1)					
	GENERAL EMERGENCY	GEN/AAEC		TS Deviation	ADEV		(v)(A)	Safe S/D Capability	AINA
	SITE AREA EMERGENCY	SIT/AAEC	4-Hr. Non-Emergency 10 CFR 50.72(b)(2)				(v)(B)	RHR Capability	AINB
	ALERT	ALE/AAEC		(i)	TS Required S/D	ASHU	(v)(C)	Control of Rad Release	AINC
	UNUSUAL EVENT	UNU/AAEC		(iv)(A)	ECCS Discharge to RCS	ACCS	(v)(D)	Accident Mitigation	AIND
	50.72 NON-EMERGENCY	(see next columns)		(iv)(B)	RPS Actuation (scram)	ARPS	(xii)	Offsite Medical	AMED
	PHYSICAL SECURITY (73.71)	DDDD		(xi)	Offsite Notification	APRE	(xiii)	Loss Comm/Asmt/Resp	ACOM
	MATERIAL/EXPOSURE	B???	8-Hr. Non-Emergency 10 CFR 50.72(b)(3)				60-Day Optional 10 CFR 50.73(a)(1)		
	FITNESS FOR DUTY	HFIT		(ii)(A)	Degraded Condition	ADEG		Invalid Specified System Actuation	AINA
	OTHER UNSPECIFIED REQMT.	(see last column)		(ii)(B)	Unanalyzed Condition	AUNA	Other Unspecified Requirement (Identify)		
	INFORMATION ONLY	NNF		(iv)(A)	Specified System Actuation	AESF			NONR
									NONR

DESCRIPTION

Include: Systems affected, actuations and their initiating signals, causes, effect of event on plant, actions taken or planned, etc. (Continue on back)

NOTIFICATIONS	YES	NO	WILL BE
NRC RESIDENT			
STATE(s)			
LOCAL			
OTHER GOV AGENCIES			
MEDIA/PRESS RELEASE			

ANYTHING UNUSUAL OR NOT UNDERSTOOD?	☐ YES (Explain above)	☐ NO
DID ALL SYSTEMS FUNCTION AS REQUIRED?	☐ YES	☐ NO (Explain above)
MODE OF OPERATION UNTIL CORRECTED:	ESTIMATED RESTART DATE:	ADDITIONAL INFO ON BACK ☐ YES ☐ NO

ATTACHMENT 3
¶8 NRC REACTOR PLANT EVENT NOTIFICATION WORKSHEET
(Page 2 of 2)

RADIOLOGICAL RELEASES: CHECK OR FILL IN APPLICABLE ITEMS (specific details/explanations should be covered in event description)

☐ LIQUID RELEASE	☐ GASEOUS RELEASE	☐ UNPLANNED RELEASE	☐ PLANNED RELEASE	☐ ONGOING	☐ TERMINATED
☐ MONITORED	☐ UNMONITORED	☐ OFFSITE RELEASE	☐ T.S. EXCEEDED	☐ RM ALARMS	☐ AREAS EVACUATED
☐ PERSONNEL EXPOSED OR CONTAMINATED		☐ OFFSITE PROTECTIVE ACTIONS RECOMMENDED		☐ *State release path in description	

	Release Rate (Ci/sec)	% T.S. LIMIT	HOO GUIDE	Total Activity (Ci)	% T.S. LIMIT	HOO GUIDE
Noble Gas			0.1 Ci/sec			1000 Ci
Iodine			10 uCi/sec			0.01 Ci
Particulate			1 uCi/sec			1 mCi
Liquid (excluding tritium and dissolved noble gases)			10 uCi/min			0.1 Ci
Liquid (tritium)			0.2 Ci/min			5 Ci
Total Activity						

	PLANT STACK	CONDENSER/AIR EJECTOR	MAIN STEAM LINE	SG BLOWDOWN	OTHER
RAD MONITOR READINGS					
ALARM SETPOINTS					
% T.S. LIMIT (if applicable)					

RCS OR SG TUBE LEAKS: CHECK OR FILL IN APPLICABLE ITEMS: (specific details/explanations should be covered in event description)

LOCATION OF THE LEAK (e.g., SG #, valve, pipe, etc.)

LEAK RATE	UNITS: gpm/gpd	T.S. LIMITS	SUDDEN OR LONG-TERM DEVELOPMENT
LEAK START DATE	TIME	COOLANT ACTIVITY AND UNITS:	PRIMARY / SECONDARY

LIST OF SAFETY RELATED EQUIPMENT NOT OPERATIONAL

EVENT DESCRIPTION (Continued from front)

END OF ATTACHMENT 3

/R6

¶7 ATTACHMENT 3A
DIRECTIONS FOR COMPLETING THE NRC REACTOR PLANT EVENT NOTIFICATION WORKSHEET
(Page 1 of 2)

A. Contact information - to be completed following contact

1. Name of the person contacting the NRC or other designated FPL contact.

2. NRC Contacts Name - will be provided upon contact. Also obtain the event number and notification time as received from the HOO should be recorded on the top of the worksheet.

B. Reactor Plant Event Notification Worksheet, Page 1

> **NOTE**
> The "EN #" is provided by the NRC.

1. Notification Time - enter the time contact is made.

2. Unit - enter the appropriate unit number: Enter "0" for a classification common to both units.

3. Callers Name - enter the name of the person making the call.

4. Call back # - enter the number of the ENS phone that you are calling from and the commercial phone number at which you can be reached.

5. Event time and Zone - enter the military time, the zone will be "EST" for Easter Standard Time or "EDT" for Eastern Daylight-savings Time.

6. Event Date - enter the date the event is occurring.

7. Power / Mode Before & Power / Mode After - enter the power in percent and the mode number (1-6) before and after the event.

> **NOTE**
> Abbreviations / acronyms (e.g., UNU / AAEC, SIT / AAEC, etc.) are for NRC use only.

8. Event Classifications - check one of the four blocks for General Emergency, Site Area Emergency, Alert, or Notification of Unusual Event.

¶7 ATTACHMENT 3A
DIRECTIONS FOR COMPLETING THE NRC REACTOR PLANT EVENT NOTIFICATION WORKSHEET
(Page 2 of 2)

B. (continued)

> **NOTE**
> No other blocks in the upper half of the form are required.

9. Description - provide a written description of the event.

> **NOTE**
> Check the blocks in the lower portion of the form based on current conditions.

10. Mode of operation until corrected - provided if known.

11. Estimate for restart date - enter "unknown".

12. Additional info on Page 2 - enter yes or no.

C. Reactor Plant Event Notification Worksheet, Page 2

1. Fill in as much of the information on the form as is immediately available - do not create undue delay in making the notification. This information can be gained once the open line of communication is established.

D. Approval

1. Information entered on the worksheet shall be reviewed and approved by the EC or RM (if used in the EOF), prior to transmission.

2. The EC / RM may initial on the worksheet to indicate approval. There is no formal sign-off location on the worksheet.

END OF ATTACHMENT 3A