MA α HANGER - SILAS MASON CO., I
IOWA ARMY AMMUNITION PLANT
Middletown, Iowa

ATTACHMENT NO. 5 SHEETS 1, 2, 3,

Safety Department

Date 8 FEB 1990

RADIATION SURVEY - Bldg. 3-10

Instrument Vic 440 S/N 872

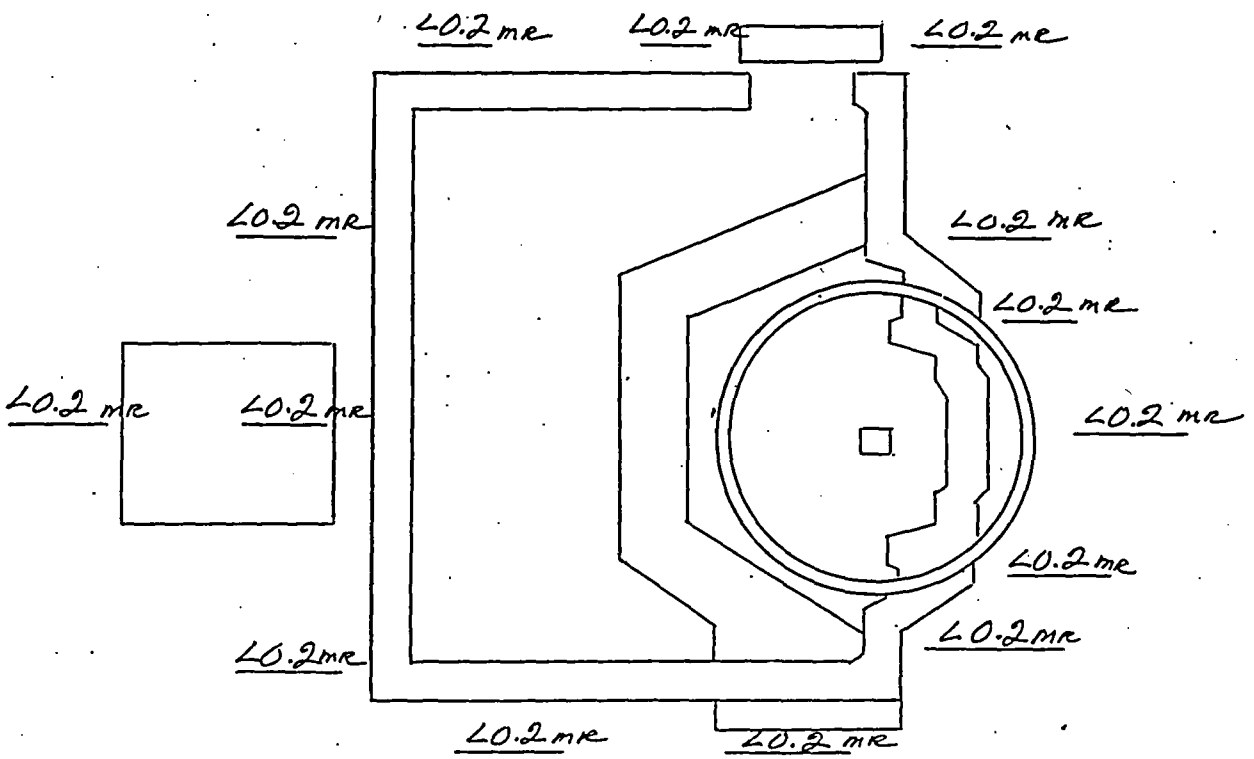

Basement Readings - 1 _____
2 _____
3 _____

Cobalt 60 Source Co-60 Curies 637 @ 2/6/90

1. S. O. P. OK
2. Film Badges OK
3. Elevator Blocked UP - ZMS
4. Signs OK
5. Control Room OK
6. Warning Lights OK
7. Interlocks OK
8. Elevator Interlocks Not USED - ZMS
9. Emergency Switches OK
10. Basement NOT USED - DOOR LOCKED

2-15-90 RO Harris C. Reid G. Morris

REMARKS: Source vault door - hydraulic cylinder is leaking large amts of fluid each time the door is opened. Emergency maintenance called 2/14/90 Will repair 2/19/90 - prod. on nights

Jon E Shearer
Nicholas M. Kuik 648

SD-66 (Rev. 2) (7/89)

Signature B-5

MAS ...ANGER - SILAS MASON CO., II
IOWA ARMY AMMUNITION PLANT
Middletown, Iowa

Safety Department

Date 4 JAN 1990 **RADIATION SURVEY - Bldg. 3-10** Instrument 440S/N872

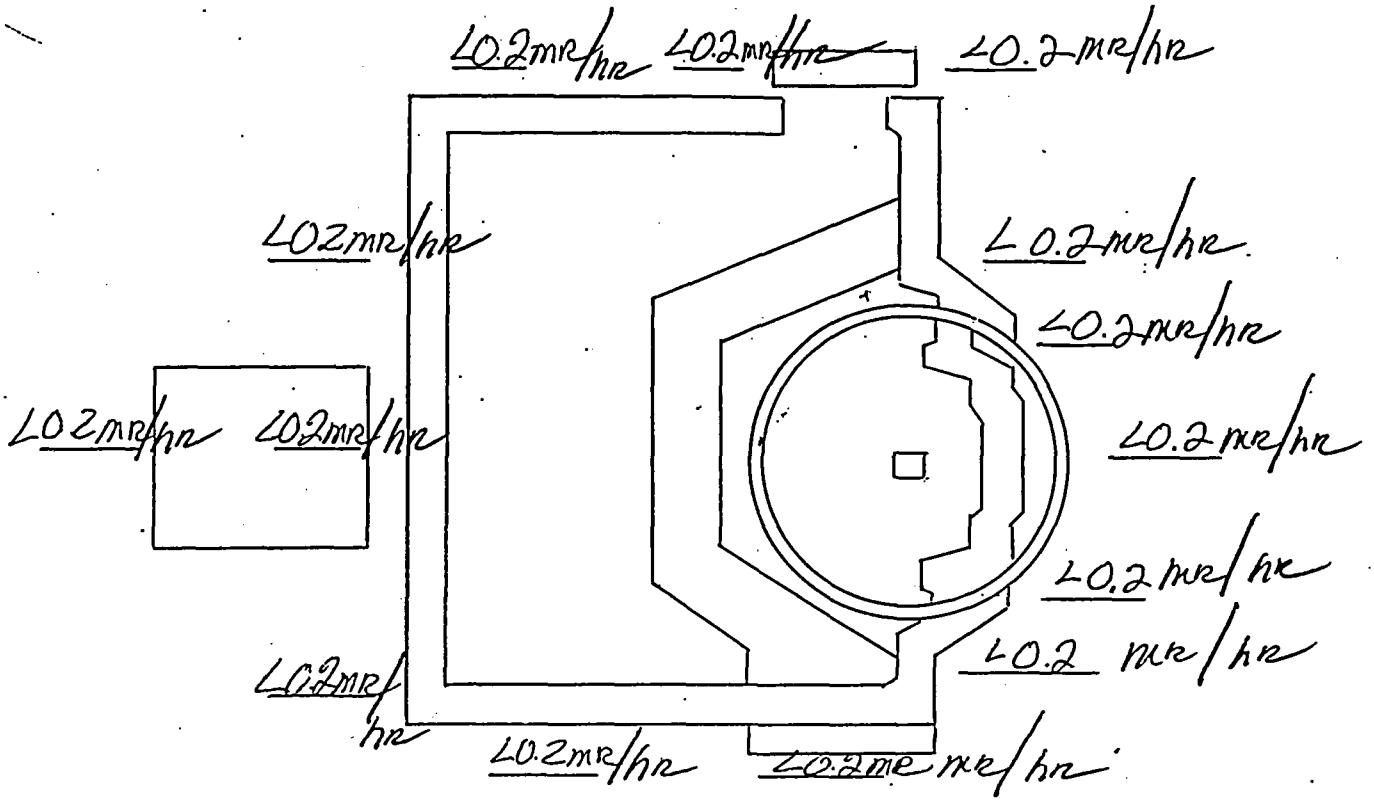

Basement Readings - 1 ~~_____~~
2 ~~_____~~
3 ~~_____~~

Cobalt 60 Source _____ Curies 644.65

1. S. O. P. OK
2. Film Badges ~~Blocked up~~
3. Elevator Blocked up
4. Signs OK
5. Control Room OK
6. Warning Lights OK
7. Interlocks OK
8. Elevator Interlocks ZMS
9. Emergency Switches OK
10. Basement NOT USED

REMARKS:

1-16-90
R O'Haines
C. Beaird
S. Morrison

Jay E Thomas
Nicholas McKelle
Signature

SD-66 (Rev. 2) (7/89)

Source recall

MASON & HANGER - SILAS MASON CO., INC.
Iowa Army Ammunition Plant
Middletown, Iowa

RADIATION SURVEY

3A-100 Co^{60} Source Installation

Date 15 FEB 1990 Inspector Nicholas M. Kiela Instrument Vic 440 S/N 8722

491 ci @ 2/6/90 Carl W Bernard

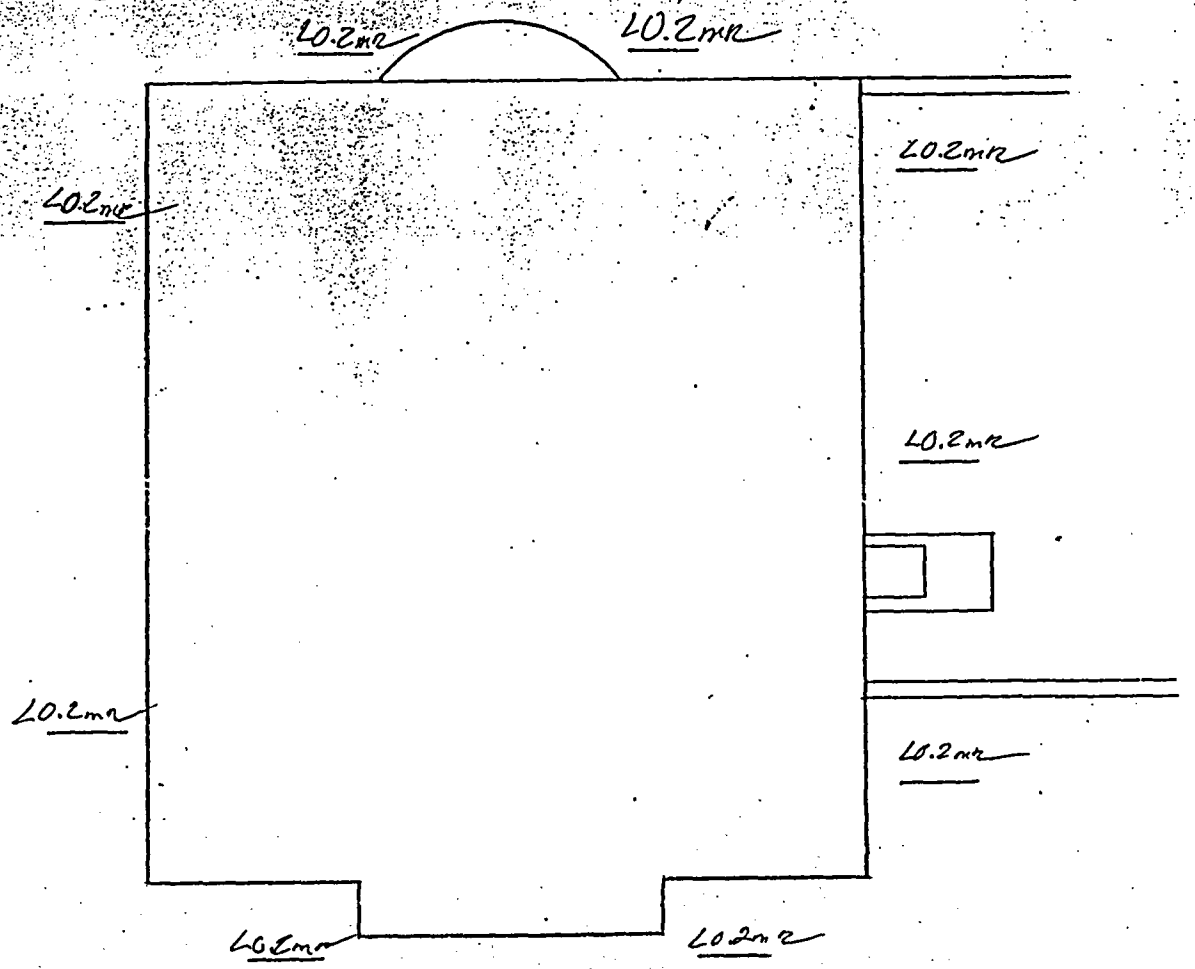

Basement Not USED

Door to control room OK

Red warning lights OK

Indicating lights Blue light out + South side

Control box locked OK

Door control locked OK

Log book OK

Instruments OK

Dosimeters OK

Film badges NO BADGES - NO RADIOGRAPHIC OPERATIONS At time OF INSPECTION

Remarks:
E.M CALLED TO REPAIR LIGHT @ 15 FEB 1990

2/16/90

MASON & HANGER - SILAS MASON CO., INC.
Iowa Army Ammunition Plant
Middletown, Iowa

RADIATION SURVEY

3A-100 Co^{60} Source Installation

Date 10 JAN. 1990 Inspector JOE SHANNAN/Nick Kieler Instrument Vic 440 S/N 872

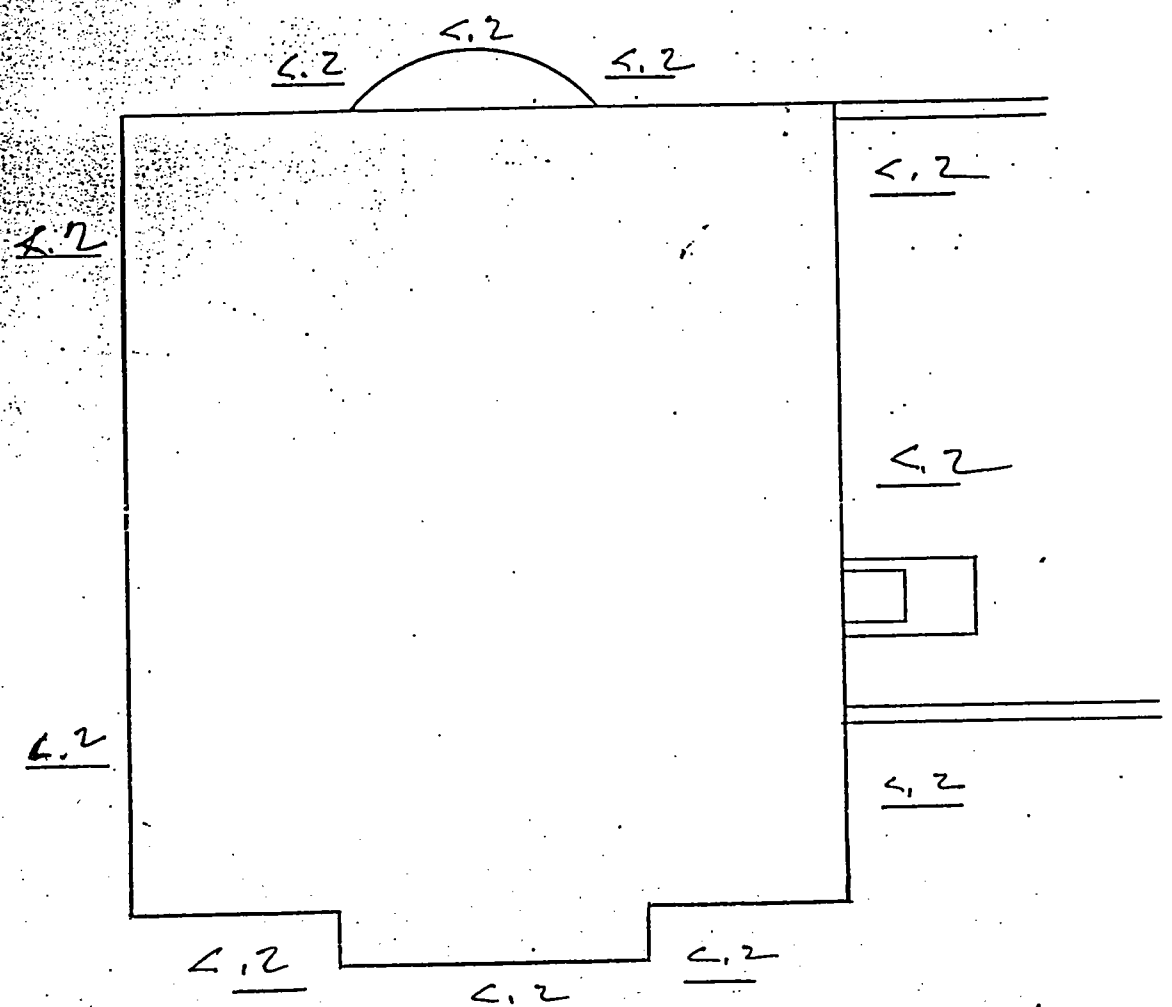

Basement NOT USED

Door to control room N/A

Red warning lights OK

Indicating lights OK

Control box locked Keyed

Door control locked N/A

Log book OK

Instruments OK

Dosimeters OK

Film badges OK

Remarks: Signs OK - Interlocks OK

Nicholas Kieler 648

1-11-90
R Hawkins
G. Morrison