APRIL 1999

REVISION 3

NAC-MPC

SAFETY ANALYSIS REPORT

for the

NAC Multi-Purpose Canister System

Docket No. 72-1025

9905060038 990430
PDR ADOCK 07201025
C PDR

NAC INTERNATIONAL

Atlanta Corporate Headquarters
655 Engineering Drive, Norcross, Georgia 30092
Phone 770-447-1144, Fax 770-447-1797
www.nacintl.com

List of Effective Pages

List of Effective Pages

1 ..... Revision 3
2 ..... Revision 3
3 ..... Revision 3
4 ..... Revision 3
5 ..... Revision 3
6 ..... Revision 3
7 ..... Revision 3
8 ..... Revision 3
9 ..... Revision 3
10 ..... Revision 3
11 ..... Revision 3
12 ..... Revision 3
13 ..... Revision 3
14 ..... Revision 3

Master Table of Contents

i ..... Revision 1
ii ..... Revision 1
iii ..... Revision 1
iv ..... Revision 1
v ..... Revision 1
vi ..... Revision 1
vii ..... Revision 1
viii ..... Revision 3
ix ..... Revision 3
x ..... Revision 3
xi ..... Revision 3
xii ..... Revision 3
xiii ..... Revision 3
xiv ..... Revision 3
xv ..... Revision 3

Chapter 1

1-i ..... Revision 1
1-ii ..... Revision 1
1-1 ..... Revision 1
1-2 ..... Revision 1
1-3 ..... Revision 1
1-4 ..... Revision 1
1-5 ..... Revision 1
1-6 ..... Revision 1
1-7 ..... Revision 1
1-8 ..... Revision 1
1-9 ..... Revision 1
1-10 ..... Revision 1
1-11 ..... Revision 1
1-12 ..... Revision 1
1-13 ..... Revision 1
1-14 ..... Revision 1
1-15 ..... Revision 1
1-16 ..... Revision 1
1-17 ..... Revision 1
1-18 ..... Revision 1
1-19 ..... Revision 1
1-20 ..... Revision 1
1-21 ..... Revision 1
1-22 ..... Revision 1
1-23 ..... Revision 1
1-24 ..... Revision 1
1-25 ..... Revision 1
1-26 ..... Revision 1
1-27 ..... Revision 1
1-28 ..... Revision 1
1-29 ..... Revision 1
1-30 ..... Revision 1
1-31 ..... Revision 1
1-32 ..... Revision 1
1-33 ..... Revision 1
1-34 ..... Revision 1
1-35 ..... Revision 1
1-36 ..... Revision 1

List of Effective Pages (Continued)

1-37 ..... Revision 1
1-38 ..... Revision 1
1-39 ..... Revision 1
1-40 ..... Revision 1
1-41 ..... Revision 1
1-42 ..... Revision 1
1-43 ..... Revision 1
1-44 ..... Revision 1
1-45 ..... Revision 1
1-46 ..... Revision 1
1-47 ..... Revision 1
1-48 ..... Revision 1
1-49 ..... Revision 1
1-50 ..... Revision 1
1-51 ..... Revision 1
1-52 ..... Revision 1
1-53 ..... Revision 1
1-54 ..... Revision 1
1-55 ..... Revision 1
1-56 ..... Revision 1
1-57 ..... Revision 1
1-58 ..... Revision 1
1-59 ..... Revision 1
1.1-1 ..... Revision 1
1.1-2 ..... Revision 1
1.1-3 ..... Revision 1
1.1-4 ..... Revision 1
1.1-5 ..... Revision 1
1.1-6 ..... Revision 1
1.2-1 ..... Revision 1
1.2-2 ..... Revision 1
1.2-3 ..... Revision 1
1.2-4 ..... Revision 1
1.2-5 ..... Revision 1
1.2-6 ..... Revision 1
1.2-7 ..... Revision 1
1.2-8 ..... Revision 1
1.2-9 ..... Revision 1
1.2-10 ..... Revision 1
1.2-11 ..... Revision 1
1.2-12 ..... Revision 1
1.2-13 ..... Revision 1
1.2-14 ..... Revision 1
1.2-15 ..... Revision 1
1.2-16 ..... Revision 1
1.2-17 ..... Revision 1
1.2-18 ..... Revision 1
1.2-19 ..... Revision 1
1.2-20 ..... Revision 1
1.2-21 ..... Revision 1
1.2-22 ..... Revision 1
1.2-23 ..... Revision 1
1.2-24 ..... Revision 1
1.2-25 ..... Revision 1
1.3-1 ..... Revision 1
1.3-2 ..... Revision 1
1.4-1 ..... Revision 1
1.4-2 ..... Revision 1
1.5-1 ..... Revision 2
1.5-2 ..... Revision 1
26 drawings (see pages 1.5-1 and 1.5-2)

Chapter 2

2-i ..... Revision 1
2-ii ..... Revision 1
2-iii ..... Revision 1
2-1 ..... Revision 1
2-2 ..... Revision 1
2-3 ..... Revision 1
2.1-1 ..... Revision 1
2.1-2 ..... Revision 1
2.1-3 ..... Revision 1

List of Effective Pages (Continued)

2.1-4 ..... Revision 1
2.1-5 ..... Revision 1
2.1-6 ..... Revision 1
2.2-1 ..... Revision 1
2.2-2 ..... Revision 1
2.2-3 ..... Revision 1
2.2-4 ..... Revision 1
2.2-5 ..... Revision 1
2.2-6 ..... Revision 1
2.2-7 ..... Revision 1
2.2-8 ..... Revision 1
2.2-9 ..... Revision 1
2.2-10 ..... Revision 1
2.2-11 ..... Revision 1
2.2-12 ..... Revision 1
2.3-1 ..... Revision 1
2.3-2 ..... Revision 1
2.3-3 ..... Revision 1
2.3-4 ..... Revision 1
2.3-5 ..... Revision 1
2.3-6 ..... Revision 1
2.3-7 ..... Revision 1
2.3-8 ..... Revision 1
2.3-9 ..... Revision 1
2.3-10 ..... Revision 1
2.3-11 ..... Revision 1
2.3-12 ..... Revision 1
2.4-1 ..... Revision 1
2.4-2 ..... Revision 1
2.4-3 ..... Revision 1
2.4-4 ..... Revision 1

Chapter 3

3-i ..... Revision 1
3-ii ..... Revision 1
3-iii ..... Revision 1
3-iv ..... Revision 1
3-v ..... Revision 1
3.1-1 ..... Revision 1
3.1-2 ..... Revision 1
3.1-3 ..... Revision 1
3.1-4 ..... Revision 1
3.1-5 ..... Revision 1
3.2-1 ..... Revision 1
3.2-2 ..... Revision 1
3.3-1 ..... Revision 1
3.3-2 ..... Revision 1
3.3-3 ..... Revision 1
3.3-4 ..... Revision 1
3.3-5 ..... Revision 1
3.3-6 ..... Revision 1
3.3-7 ..... Revision 1
3.3-8 ..... Revision 1
3.3-9 ..... Revision 1
3.3-10 ..... Revision 1
3.3-11 ..... Revision 1
3.3-12 ..... Revision 1
3.3-13 ..... Revision 1
3.3-14 ..... Revision 1
3.4-1 ..... Revision 1
3.4-2 ..... Revision 1
3.4-3 ..... Revision 1
3.4-4 ..... Revision 1
3.4-5 ..... Revision 1
3.4-6 ..... Revision 1
3.4-7 ..... Revision 1
3.4-8 ..... Revision 1
3.4-9 ..... Revision 1
3.4-10 ..... Revision 1
3.4-11 ..... Revision 1
3.4-12 ..... Revision 1
3.4-13 ..... Revision 1

List of Effective Pages (Continued)

3.4-14 ..... Revision 1
3.4-15 ..... Revision 1
3.4-16 ..... Revision 1
3.4-17 ..... Revision 1
3.4-18 ..... Revision 1
3.4-19 ..... Revision 1
3.4-20 ..... Revision 1
3.4-21 ..... Revision 1
3.4-22 ..... Revision 1
3.4-23 ..... Revision 1
3.4-24 ..... Revision 1
3.4-25 ..... Revision 1
3.4-26 ..... Revision 1
3.4-27 ..... Revision 1
3.4-28 ..... Revision 1
3.4-29 ..... Revision 1
3.4-30 ..... Revision 1
3.4-31 ..... Revision 1
3.4-32 ..... Revision 1
3.4-33 ..... Revision 1
3.4-34 ..... Revision 1
3.4-35 ..... Revision 1
3.4-36 ..... Revision 1
3.4-37 ..... Revision 1
3.4-38 ..... Revision 1
3.4-39 ..... Revision 1
3.4-40 ..... Revision 1
3.4-41 ..... Revision 1
3.4-42 ..... Revision 1
3.4-43 ..... Revision 1
3.4-44 ..... Revision 1
3.4-45 ..... Revision 1
3.4-46 ..... Revision 1
3.4-47 ..... Revision 1
3.4-48 ..... Revision 1
3.4-49 ..... Revision 1
3.4-50 ..... Revision 1
3.4-51 ..... Revision 1
3.4-52 ..... Revision 1
3.4-53 ..... Revision 1
3.4-54 ..... Revision 1
3.4-55 ..... Revision 1
3.4-56 ..... Revision 1
3.4-57 ..... Revision 1
3.4-58 ..... Revision 1
3.4-59 ..... Revision 1
3.4-60 ..... Revision 1
3.4-61 ..... Revision 1
3.4-62 ..... Revision 1
3.4-63 ..... Revision 1
3.4-64 ..... Revision 1
3.4-65 ..... Revision 1
3.4-66 ..... Revision 1
3.4-67 ..... Revision 1
3.4-68 ..... Revision 1
3.4-69 ..... Revision 1
3.4-70 ..... Revision 1
3.4-71 ..... Revision 1
3.4-72 ..... Revision 1
3.4-73 ..... Revision 1
3.4-74 ..... Revision 1
3.4-75 ..... Revision 1
3.4-76 ..... Revision 1
3.4-77 ..... Revision [redacted]
3.4-78 ..... Revision [redacted]
3.4-79 ..... Revision [redacted]
3.4-80 ..... Revision 1
3.4-81 ..... Revision 1
3.4-82 ..... Revision 1
3.4-83 ..... Revision 1
3.4-84 ..... Revision 1
3.4-85 ..... Revision 1

List of Effective Pages (Continued)

3.4-86 ..... Revision 1
3.4-87 ..... Revision 1
3.4-88 ..... Revision 1
3.4-89 ..... Revision 1
3.4-90 ..... Revision 1
3.4-91 ..... Revision 1
3.5-1 ..... Revision 1
3.6-1 ..... Revision 1
3.6-2 ..... Revision 1
3.7-1 ..... Revision 1
3.7-2 ..... Revision 1
3.8-1 ..... Revision 1
3.8.1-1 ..... Revision 1
3.8.1-2 ..... Revision 1
3.8.1-3 ..... Revision 1
3.8.1-4 ..... Revision 1
3.8.2-1 ..... Revision 1
3.8.2-2 ..... Revision 1
3.8.2-3 ..... Revision 1
3.8.2-4 ..... Revision 1

Chapter 4

4-i ..... Revision 1
4-ii ..... Revision 1
4-iii ..... Revision 1
4.1-1 ..... Revision 1
4.1-2 ..... Revision 1
4.1-3 ..... Revision 1
4.1-4 ..... Revision 1
4.1-5 ..... Revision 1
4.2-1 ..... Revision 1
4.2-2 ..... Revision 1
4.2-3 ..... Revision 1
4.2-4 ..... Revision 1
4.2-5 ..... Revision 1
4.2-6 ..... Revision 1
4.2-7 ..... Revision 1
4.2-8 ..... Revision 1
4.2-9 ..... Revision 1
4.2-10 ..... Revision 1
4.2-11 ..... Revision 1
4.2-12 ..... Revision 1
4.3-1 ..... Revision 1
4.4-1 ..... Revision 1
4.4-2 ..... Revision 1
4.4-3 ..... Revision 1
4.4-4 ..... Revision 1
4.4-5 ..... Revision 1
4.4-6 ..... Revision 1
4.4-7 ..... Revision 1
4.4-8 ..... Revision 1
4.4-9 ..... Revision 1
4.4-10 ..... Revision 1
4.4-11 ..... Revision 1
4.4-12 ..... Revision 1
4.4-13 ..... Revision 1
4.4-14 ..... Revision 1
4.4-15 ..... Revision 1
4.4-16 ..... Revision 1
4.4-17 ..... Revision 1
4.4-18 ..... Revision 1
4.4-19 ..... Revision 1
4.4-20 ..... Revision 1
4.4-21 ..... Revision 1
4.4-22 ..... Revision 1
4.4-23 ..... Revision 1
4.4-24 ..... Revision 1
4.4-25 ..... Revision 1
4.4-26 ..... Revision 1
4.4-27 ..... Revision 1
4.4-28 ..... Revision 1
4.4-29 ..... Revision 1

List of Effective Pages (Continued)

4.4-30 ..... Revision 1
4.4-31 ..... Revision 1
4.4-32 ..... Revision 1
4.4-33 ..... Revision 1
4.4-34 ..... Revision 1
4.4-35 ..... Revision 1
4.4-36 ..... Revision 1
4.4-37 ..... Revision 1
4.4-38 ..... Revision 1
4.4-39 ..... Revision 1
4.4-40 ..... Revision 1
4.4-41 ..... Revision 1
4.4-42 ..... Revision 1
4.4-43 ..... Revision 1
4.4-44 ..... Revision 1
4.4-45 ..... Revision 1
4.4-46 ..... Revision 1
4.4-47 ..... Revision 1
4.4-48 ..... Revision 1
4.5-1 ..... Revision 1
4.5-2 ..... Revision 1
4.5-3 ..... Revision 1

Chapter 5

5-i ..... Revision 1
5-ii ..... Revision 1
5-iii ..... Revision 1
5.1-1 ..... Revision 1
5.1-2 ..... Revision 1
5.1-3 ..... Revision 1
5.1-4 ..... Revision 1
5.1-5 ..... Revision 1
5.2-1 ..... Revision 1
5.2-2 ..... Revision 1
5.2-3 ..... Revision 1
5.2-4 ..... Revision 1
5.2-5 ..... Revision 1
5.2-6 ..... Revision 1
5.2-7 ..... Revision 1
5.2-8 ..... Revision 1
5.2-9 ..... Revision 1
5.2-10 ..... Revision 1
5.2-11 ..... Revision 1
5.2-12 ..... Revision 1
5.3-1 ..... Revision 1
5.3-2 ..... Revision 1
5.3-3 ..... Revision 1
5.3-4 ..... Revision 1
5.3-5 ..... Revision 1
5.3-6 ..... Revision 1
5.3-7 ..... Revision 1
5.3-8 ..... Revision 1
5.3-9 ..... Revision 1
5.3-10 ..... Revision 1
5.3-11 ..... Revision 1
5.3-12 ..... Revision 1
5.3-13 ..... Revision 1
5.3-14 ..... Revision 1
5.3-15 ..... Revision 1
5.3-16 ..... Revision 1
5.4-1 ..... Revision 1
5.4-2 ..... Revision 1
5.4-3 ..... Revision 1
5.4-4 ..... Revision 1
5.4-5 ..... Revision 1
5.4-6 ..... Revision 1
5.4-7 ..... Revision 1
5.4-8 ..... Revision 1
5.4-9 ..... Revision 1
5.4-10 ..... Revision 1
5.4-11 ..... Revision 1
5.4-12 ..... Revision 1

List of Effective Pages (Continued)

5.4-13 ..... Revision 1
5.4-14 ..... Revision 1
5.4-15 ..... Revision 1
5.4-16 ..... Revision 1
5.4-17 ..... Revision 1
5.4-18 ..... Revision 1
5.4-19 ..... Revision 1
5.4-20 ..... Revision 1
5.4-21 ..... Revision 1
5.4-22 ..... Revision 1
5.4-23 ..... Revision 1
5.4-24 ..... Revision 1
5.4-25 ..... Revision 1
5.4-26 ..... Revision 1
5.5-1 ..... Revision 1
5.5-2 ..... Revision 1

Chapter 6

6-i ..... Revision 1
6-ii ..... Revision 1
6-iii ..... Revision 1
6.1-1 ..... Revision 1
6.1-2 ..... Revision 1
6.1-3 ..... Revision 1
6.2-1 ..... Revision 1
6.2-2 ..... Revision 1
6.2-3 ..... Revision 1
6.2-4 ..... Revision 1
6.2-5 ..... Revision 1
6.2-6 ..... Revision 1
6.2-7 ..... Revision 1
6.3-1 ..... Revision 1
6.3-2 ..... Revision 1
6.3-3 ..... Revision 1
6.3-4 ..... Revision 1
6.3-5 ..... Revision 1
6.3-6 ..... Revision 1
6.3-7 ..... Revision 1
6.3-8 ..... Revision 1
6.4-1 ..... Revision 1
6.4-2 ..... Revision 1
6.4-3 ..... Revision 1
6.4-4 ..... Revision 1
6.4-5 ..... Revision 1
6.4-6 ..... Revision 1
6.4-7 ..... Revision 1
6.4-8 ..... Revision 1
6.4-9 ..... Revision 1
6.4-10 ..... Revision 1
6.5-1 ..... Revision 1
6.5-2 ..... Revision 1
6.5-3 ..... Revision 1
6.5-4 ..... Revision 1
6.5-5 ..... Revision 1
6.5-6 ..... Revision 1
6.5-7 ..... Revision 1
6.5-8 ..... Revision 1
6.5-9 ..... Revision 1
6.5-10 ..... Revision 1
6.5-11 ..... Revision 1
6.5-12 ..... Revision 1
6.5-13 ..... Revision 1
6.5-14 ..... Revision 1
6.5-15 ..... Revision 1
6.5-16 ..... Revision 1
6.5-17 ..... Revision 1
6.5-18 ..... Revision 1
6.5-19 ..... Revision 1
6.5-20 ..... Revision 1
6.5-21 ..... Revision 1
6.5-22 ..... Revision 1
6.6-1 ..... Revision 1

List of Effective Pages (Continued)

6.6-2 ..... Revision 1
6.7-1 ..... Revision 1
6.7-2 ..... Revision 1
6.7-3 ..... Revision 1
6.7-4 ..... Revision 1
6.7-5 ..... Revision 1
6.7-6 ..... Revision 1
6.7-7 ..... Revision 1
6.7-8 ..... Revision 1
6.7-9 ..... Revision 1
6.7-10 ..... Revision 1
6.7-11 ..... Revision 1
6.7-12 ..... Revision 1
6.7-13 ..... Revision 1
6.7-14 ..... Revision 1
6.7-15 ..... Revision 1
6.7-16 ..... Revision 1
6.7-17 ..... Revision 1
6.7-18 ..... Revision 1
6.7-19 ..... Revision 1
6.7-20 ..... Revision 1
6.7-21 ..... Revision 1
6.7-22 ..... Revision 1
6.7-23 ..... Revision 1
6.7-24 ..... Revision 1
6.7-25 ..... Revision 1
6.7-26 ..... Revision 1
6.7-27 ..... Revision 1
6.7-28 ..... Revision 1
6.7-29 ..... Revision 1
6.7-30 ..... Revision 1
6.7-31 ..... Revision 1
6.7-32 ..... Revision 1
6.7-33 ..... Revision 1
6.7-34 ..... Revision 1
6.7-35 ..... Revision 1
6.7-36 ..... Revision 1
6.7-37 ..... Revision 1
6.7-38 ..... Revision 1
6.7-39 ..... Revision 1
6.7-40 ..... Revision 1
6.7-41 ..... Revision 1
6.7-42 ..... Revision 1
6.7-43 ..... Revision 1
6.7-44 ..... Revision 1
6.7-45 ..... Revision 1
6.7-46 ..... Revision 1
6.7-47 ..... Revision 1
6.7-48 ..... Revision 1
6.7-49 ..... Revision 1
6.7-50 ..... Revision 1
6.7-51 ..... Revision 1
6.7-52 ..... Revision 1
6.7-53 ..... Revision 1
6.7-54 ..... Revision 1
6.7-55 ..... Revision 1
6.7-56 ..... Revision 1
6.7-57 ..... Revision 1
6.7-58 ..... Revision 1
6.7-59 ..... Revision 1
6.7-60 ..... Revision 1
6.7-61 ..... Revision 1
6.7-62 ..... Revision 1
6.7-63 ..... Revision 1
6.7-64 ..... Revision 1
6.7-65 ..... Revision 1
6.7-66 ..... Revision 1
6.7-67 ..... Revision 1
6.7-68 ..... Revision 1
6.7-69 ..... Revision 1
6.7-70 ..... Revision 1
6.7-71 ..... Revision 1

List of Effective Pages (Continued)

6.7-72 ..... Revision 1
6.7-73 ..... Revision 1
6.7-74 ..... Revision 1
6.7-75 ..... Revision 1
6.7-76 ..... Revision 1
6.7-77 ..... Revision 1
6.7-78 ..... Revision 1
6.7-79 ..... Revision 1
6.7-80 ..... Revision 1
6.7-81 ..... Revision 1
6.7-82 ..... Revision 1
6.7-83 ..... Revision 1
6.7-84 ..... Revision 1
6.7-85 ..... Revision 1
6.7-86 ..... Revision 1
6.7-87 ..... Revision 1
6.7-88 ..... Revision 1
6.7-89 ..... Revision 1
6.7-90 ..... Revision 1
6.7-91 ..... Revision 1
6.7-92 ..... Revision 1
6.7-93 ..... Revision 1
6.7-94 ..... Revision 1
6.7-95 ..... Revision 1
6.7-96 ..... Revision 1
6.7-97 ..... Revision 1
6.7-98 ..... Revision 1

Chapter 7

7-i ..... Revision 1
7-ii ..... Revision 1
7-1 ..... Revision 1
7.1-1 ..... Revision 1
7.1-2 ..... Revision 1
7.1-3 ..... Revision 1
7.1-4 ..... Revision 1
7.1-5 ..... Revision 1
7.1-6 ..... Revision 1
7.1-7 ..... Revision 1
7.1-8 ..... Revision 1
7.1-9 ..... Revision 1
7.2-1 ..... Revision 1
7.2-2 ..... Revision 1
7.3-1 ..... Revision 1

Chapter 8

8-i ..... Revision 1
8-ii ..... Revision 1
8-1 ..... Revision 1
8.1-1 ..... Revision 2
8.1-2 ..... Revision 1
8.1-3 ..... Revision 2
8.1-4 ..... Revision 1
8.1-5 ..... Revision 2
8.1-6 ..... Revision 2
8.1-7 ..... Revision 2
8.1-8 ..... Revision 1
8.1-9 ..... Revision 1
8.1-10 ..... Revision 1
8.2-1 ..... Revision 2
8.2-2 ..... Revision 1
8.3-1 ..... Revision 1
8.3-2 ..... Revision 1
8.3-3 ..... Revision 2
8.3-4 ..... Revision 1

Chapter 9

9-i ..... Revision 3
9-1 ..... Revision 1
9.1-1 ..... Revision 1
9.1-2 ..... Revision 1
9.1-3 ..... Revision 1

List of Effective Pages (Continued)

9.1-4 ..... Revision 2
9.1-5 ..... Revision 1
9.1-6 ..... Revision 3
9.1-7 ..... Revision 3
9.1-8 ..... Revision 3
9.2-1 ..... Revision 1
9.2-2 ..... Revision 1

Chapter 10

10-i ..... Revision 1
10-ii ..... Revision 1
10.1-1 ..... Revision 1
10.1-2 ..... Revision 1
10.2-1 ..... Revision 1
10.2-2 ..... Revision 1
10.3-1 ..... Revision 1
10.3-2 ..... Revision 1
10.3-3 ..... Revision 1
10.3-4 ..... Revision 1
10.3-5 ..... Revision 1
10.3-6 ..... Revision 1
10.3-7 ..... Revision 1
10.3-8 ..... Revision 1
10.4-1 ..... Revision 1
10.4-2 ..... Revision 1
10.4-3 ..... Revision 1
10.4-4 ..... Revision 1

Chapter 11

11-i ..... Revision 1
11-ii ..... Revision 1
11-iii ..... Revision 1
11-iv ..... Revision 1
11-v ..... Revision 1
11-vi ..... Revision 1
11-vii ..... Revision 1
11-viii ..... Revision 1
11-ix ..... Revision 1
11-1 ..... Revision 1
11.1-1 ..... Revision 1
11.1-2 ..... Revision 1
11.1-3 ..... Revision 1
11.1-4 ..... Revision 1
11.1-5 ..... Revision 1
11.1-6 ..... Revision 1
11.1-7 ..... Revision 1
11.1-8 ..... Revision 1
11.1-9 ..... Revision 1
11.1-10 ..... Revision 1
11.1-11 ..... Revision 1
11.1-12 ..... Revision 1
11.1-13 ..... Revision 1
11.1-14 ..... Revision 1
11.1-15 ..... Revision 1
11.1-16 ..... Revision 1
11.2-1 ..... Revision 1
11.2-2 ..... Revision 1
11.2-3 ..... Revision 1
11.2-4 ..... Revision 1
11.2-5 ..... Revision 1
11.2-6 ..... Revision 1
11.2-7 ..... Revision 1
11.2-8 ..... Revision 1
11.2-9 ..... Revision 1
11.2-10 ..... Revision 1
11.2-11 ..... Revision 1
11.2-12 ..... Revision 3
11.2-13 ..... Revision 1
11.2-14 ..... Revision 1
11.2-15 ..... Revision 1
11.2-16 ..... Revision 1
11.2-17 ..... Revision 1

List of Effective Pages (Continued)

11.2-18 ..... Revision 1
11.2-19 ..... Revision 1
11.2-20 ..... Revision 1
11.2-21 ..... Revision 1
11.2-22 ..... Revision 1
11.2-23 ..... Revision 1
11.2-24 ..... Revision 1
11.2-25 ..... Revision 1
11.2-26 ..... Revision 1
11.2-27 ..... Revision 1
11.2-28 ..... Revision 1
11.2-29 ..... Revision 1
11.2-30 ..... Revision 1
11.2-31 ..... Revision 1
11.2-32 ..... Revision 1
11.2-33 ..... Revision 1
11.2-34 ..... Revision 1
11.2-35 ..... Revision 1
11.2-36 ..... Revision 1
11.2-37 ..... Revision 1
11.2-38 ..... Revision 1
11.2-39 ..... Revision 1
11.2-40 ..... Revision 1
11.2-41 ..... Revision 1
11.2-42 ..... Revision 1
11.2-43 ..... Revision 1
11.2-44 ..... Revision 3
11.2-45 ..... Revision 1
11.2-46 ..... Revision 1
11.2-47 ..... Revision 1
11.2-48 ..... Revision 1
11.2-49 ..... Revision 1
11.2-50 ..... Revision 1
11.2-51 ..... Revision 3
11.2-52 ..... Revision 1
11.2-53 ..... Revision 1
11.2-54 ..... Revision 1
11.2-55 ..... Revision 1
11.2-56 ..... Revision 1
11.2-57 ..... Revision 1
11.2-58 ..... Revision 1
11.2-59 ..... Revision 1
11.2-60 ..... Revision 1
11.2-61 ..... Revision 1
11.2-62 ..... Revision 1
11.2-63 ..... Revision 1
11.2-64 ..... Revision 1
11.2-65 ..... Revision 1
11.2-66 ..... Revision 1
11.2-67 ..... Revision 1
11.2-68 ..... Revision 1
11.2-69 ..... Revision 3
11.2-70 ..... Revision 1
11.2-71 ..... Revision 1
11.2-72 ..... Revision 1
11.2-73 ..... Revision 1
11.2-74 ..... Revision 1
11.2-75 ..... Revision 1
11.2-76 ..... Revision 1
11.2-77 ..... Revision 1
11.2-78 ..... Revision 1
11.2-79 ..... Revision 1
11.2-80 ..... Revision 1
11.2-81 ..... Revision 1
11.2-82 ..... Revision 1
11.2-83 ..... Revision 1
11.2-84 ..... Revision 1
11.2-85 ..... Revision 1
11.2-86 ..... Revision 1
11.2-87 ..... Revision 1
11.2-88 ..... Revision 1
11.2-89 ..... Revision 1

List of Effective Pages (Continued)

11.2-90 ..... Revision 1
11.2-91 ..... Revision 1
11.2-92 ..... Revision 1
11.2-93 ..... Revision 1
11.2-94 ..... Revision 1
11.2-95 ..... Revision 1
11.2-96 ..... Revision 1
11.2-97 ..... Revision 1
11.2-98 ..... Revision 1
11.2-99 ..... Revision 1
11.2-100 ..... Revision 1
11.2-101 ..... Revision 1
11.2-102 ..... Revision 1
11.3-1 ..... Revision 1
11.3-2 ..... Revision 1
11.3-3 ..... Revision 1
11.3-4 ..... Revision 1
11.3-5 ..... Revision 1
11.3-6 ..... Revision 1
11.3-7 ..... Revision 1
11.3-8 ..... Revision 1
11.3-9 ..... Revision 1
11.3-10 ..... Revision 1
11.3-11 ..... Revision 1
11.3-12 ..... Revision 1
11.3-13 ..... Revision 1
11.3-14 ..... Revision 1
11.3-15 ..... Revision 1
11.3-16 ..... Revision 1
11.3-17 ..... Revision 1
11.3-18 ..... Revision 1
11.3-19 ..... Revision 1
11.3-20 ..... Revision 1
11.3-21 ..... Revision 1
11.3-22 ..... Revision 1
11.3-23 ..... Revision 1
11.3-24 ..... Revision 1
11.3-25 ..... Revision 1
11.3-26 ..... Revision 1
11.3-27 ..... Revision 1
11.3-28 ..... Revision 1
11.3-29 ..... Revision 1
11.3-30 ..... Revision 1
11.3-31 ..... Revision 1
11.3-32 ..... Revision 1
11.3-33 ..... Revision 1
11.3-34 ..... Revision 1
11.3-35 ..... Revision 1
11.3-36 ..... Revision 1
11.3-37 ..... Revision 1
11.3-38 ..... Revision 1
11.3-39 ..... Revision 1
11.3-40 ..... Revision 1
11.3-41 ..... Revision 1
11.4-1 ..... Revision 1
11.4-2 ..... Revision 1
11.4-3 ..... Revision 1
11.4-4 ..... Revision 1
11.4-5 ..... Revision 1
11.4-6 ..... Revision 1
11.4-7 ..... Revision 1
11.4-8 ..... Revision 1
11.4-9 ..... Revision 1
11.4-10 ..... Revision 1
11.4-11 ..... Revision 1
11.4-12 ..... Revision 1
11.4-13 ..... Revision 1
11.4-14 ..... Revision 1
11.4-15 ..... Revision 1
11.4-16 ..... Revision 1
11.4-17 ..... Revision 1
11.4-18 ..... Revision 1

List of Effective Pages (Continued)

11.4-19 ..... Revision 1
11.5-1 ..... Revision [redacted]
11.5-2 ..... Revision 1
11.6-1 ..... Revision 1
11.6-2 ..... Revision 1
11.6-3 ..... Revision 1

Chapter 12

12-i ..... Revision 1
12-ii ..... Revision 1
12-1 ..... Revision 2
12-2 ..... Revision 1
12-3 ..... Revision 1
12-4 ..... Revision 2
12A-1 ..... Revision 1
12A-2 ..... Revision 2
12A-3 ..... Revision 2
12A1-1 ..... Revision 1
12A1-2 ..... Revision 1
12A1-3 ..... Revision 1
12A1-4 ..... Revision 1
12A1-5 ..... Revision 1
12A1-6 ..... Revision 1
12A1-7 ..... Revision 1
12A1-8 ..... Revision 1
12A1-9 ..... Revision 1
12A1-10 ..... Revision 1
12A1-11 ..... Revision 1
12A1-12 ..... Revision 1
12A1-13 ..... Revision 1
12A1-14 ..... Revision 1
12A1-15 ..... Revision 1
12A2-1 ..... Revision 1
12A2-2 ..... Revision 1
12A2-3 ..... Revision 1
12A2-4 ..... Revision 1
12A2-5 ..... Revision 1
12A2-6 ..... Revision 1
12A3-1 ..... Revision [redacted]
12A3-2 ..... Revision [redacted]
12A3-3 ..... Revision 1
12A3-4 ..... Revision 1
12A3-5 ..... Revision 1
12A3-6 ..... Revision 1
12A3-7 ..... Revision 1
12A3-8 ..... Revision 1
12A3-9 ..... Revision 1
12A3-10 ..... Revision 2
12A3-11 ..... Revision 1
12A3-12 ..... Revision 1
12A3-13 ..... Revision 1
12A3-14 ..... Revision 1
12A3-15 ..... Revision 1
12A3-16 ..... Revision 2
12A3-17 ..... Revision 2
12A3-18 ..... Revision 2
12A3-19 ..... Revision 2
12A3-20 ..... Revision 2
12A3-21 ..... Revision [redacted]
12A3-22 ..... Revision 2
12A3-23 ..... Revision 2
12A4-1 ..... Revision 1
12A4-2 ..... Revision 1
12A4-3 ..... Revision 1
12A4-4 ..... Revision 1
12A4-5 ..... Revision 2
12A4-6 ..... Revision 1
12A4-7 ..... Revision 1
12A4-8 ..... Revision 1
12A4-9 ..... Revision 1
12A5-1 ..... Revision 1
12A5-2 ..... Revision 1

List of Effective Pages (Continued)

12A5-3 ..... Revision 3
12A5-4 ..... Revision 2
12B-1 ..... Revision 2
12B-2 ..... Revision 1
12B1-1 ..... Revision 1
12B2-1 ..... Revision 1
12B2-2 ..... Revision 1
12B3-1 ..... Revision 1
12B3-2 ..... Revision 1
12B3-3 ..... Revision 1
12B3-4 ..... Revision 1
12B3-5 ..... Revision 1
12B3-6 ..... Revision 1
12B3-7 ..... Revision 1
12B3-8 ..... Revision 1
12B3-9 ..... Revision 2
12B3-10 ..... Revision 1
12B3-11 ..... Revision 1
12B3-12 ..... Revision 1
12B3-13 ..... Revision 1
12B3-14 ..... Revision 1
12B3-15 ..... Revision 1
12B3-16 ..... Revision 1
12B3-17 ..... Revision 1
12B3-18 ..... Revision 1
12B3-19 ..... Revision 1
12B3-20 ..... Revision 1
12B3-21 ..... Revision 1
12B3-22 ..... Revision 1
12B3-23 ..... Revision 1
12B3-24 ..... Revision 1
12B3-25 ..... Revision 1
12B3-26 ..... Revision 1
12B3-27 ..... Revision 1
12B3-28 ..... Revision 1
12B3-29 ..... Revision 1
12B3-30 ..... Revision 1
12B3-31 ..... Revision 1
12B3-32 ..... Revision 2
12B3-33 ..... Revision 2
12B3-34 ..... Revision 2
12B3-35 ..... Revision 2
12B3-36 ..... Revision 2
12B3-37 ..... Revision 2
12B3-38 ..... Revision 2
12B3-39 ..... Revision 2
12B3-40 ..... Revision 2
12B3-41 ..... Revision 2

Chapter 13

13-i ..... Revision 1
13.1-1 ..... Revision 1
13.1-2 ..... Revision 1
13.2-1 ..... Revision 1
13.2-2 ..... Revision 1
13.2-3 ..... Revision 1
13.2-4 ..... Revision 1
13.2-5 ..... Revision 1
13.2-6 ..... Revision 1
13.2-7 ..... Revision 1
13.2-8 ..... Revision 1
13.2-9 ..... Revision 1

MASTER TABLE OF CONTENTS (CONTINUED)

6.6 References 6.6-1

6.7 Supplemental Data 6.7-1

7.0 **CONFINEMENT** 7-1

7.1 Confinement Boundary 7.1-1
- 7.1.1 Confinement Vessel 7.1-1
  - 7.1.1.1 Confinement Vessel - Canister 7.1-1
  - 7.1.1.2 Design Documents, Codes, and Standards 7.1-2
  - 7.1.1.3 Technical Requirements for the Canister 7.1-2
  - 7.1.1.4 Release Rate 7.1-3
- 7.1.2 Confinement Penetrations 7.1-3
- 7.1.3 Seals and Welds 7.1-3
  - 7.1.3.1 Fabrication 7.1-4
  - 7.1.3.2 Welding Specifications 7.1-4
  - 7.1.3.3 Testing, Inspection, and Examination 7.1-5
- 7.1.4 Closure 7.1-6

7.2 Requirements for Normal Conditions of Storage 7.2-1
- 7.2.1 Release of Radioactive Material 7.2.1
- 7.2.2 Pressurization of Confinement Vessel 7.2-1

7.3 Confinement Requirements for Hypothetical Accident Conditions 7.3-1

8.0 **OPERATING PROCEDURES** 8-1

8.1 Loading the NAC-MPC Storage System 8.1-1
- 8.1.1 Loading and Closing the Transportable Storage Canister 8.1-1
- 8.1.2 Loading the Vertical Concrete Cask 8.1-5
- 8.1.3 Transporting the Vertical Concrete Cask 8.1-7

MASTER TABLE OF CONTENTS (CONTINUED)

8.2 Removal of the Transportable Storage Canister from the Vertical Concrete Cask 8.2-1
8.3 Unloading the Transportable Storage Canister 8.3-1

9.0 ACCEPTANCE TESTS AND MAINTENANCE PROGRAM 9-1

9.1 Acceptance Tests 9.1-1
9.1.1 Visual and Nondestructive Examination Inspection 9.1-1
9.1.1.1 Nondestructive Weld Examination 9.1-2
9.1.1.2 Fabrication Inspections 9.1-3
9.1.2 Structural and Pressure Test 9.1-4
9.1.3 Leak Tests 9.1-5
9.1.4 Component Tests 9.1-5
9.1.4.1 Valves, Rupture Disks and Fluid Transport Devices 9.1-5
9.1.4.2 Gaskets 9.1-5
9.1.5 Shielding Tests 9.1-5
9.1.6 Neutron-Absorber Tests 9.1-6
9.1.6.1 General 9.1-6
9.1.6.2 Preparation of Samples 9.1-6
9.1.6.3 Wet Chemistry Test Performance 9.1-6
9.1.6.4 Neutron Absorption Test Performance 9.1-7
9.1.6.5 Acceptance Criteria 9.1-7
9.1.7 Thermal Tests 9.1-8
9.1.8 Cask Identification 9.1-8

9.2 Maintenance Program 9.2-1
9.2.1 Continuing Maintenance Requirements 9.2-1
9.2.2 Required Maintenance of First Storage System Placed in Service 9.2-2

MASTER TABLE OF CONTENTS (CONTINUED)

10.0 **RADIATION PROTECTION** 10.1-1

10.1 Ensuring That Occupational Radiation Exposures Are As Low As Reasonably Achievable (ALARA) 10.1-1
10.1.1 Policy Considerations 10.1-1
10.1.2 Design Considerations 10.1-1
10.1.3 Operational Considerations 10.1-2

10.2 Radiation Protection Design Features 10.2-1
10.2.1 Design Basis for Normal Storage Conditions 10.2-1
10.2.2 Design Basis for Accident Conditions 10.2-2

10.3 Estimated On-Site Collective Dose Assessment 10.3-1
10.3.1 Estimated Collective Dose for Loading a Single NAC-MPC 10.3-1
10.3.2 Estimated Annual Dose Due to Routine Operations 10.3-2
10.3.3 Estimated Collective Dose for Unloading a Single NAC-MPC 10.3-3

10.4 Exposures to the Public 10.4-1

11.0 **ACCIDENT ANALYSIS** 11-1

11.1 Off-Normal Events 11.1-1
11.1.1 Blockage of Half of the Air Inlets 11.1-1
11.1.1.1 Cause of Event 11.1-1
11.1.1.2 Analysis of the Blockage Event 11.1-1
11.1.1.3 Radiological Consequences 11.1-2
11.1.1.4 NAC-MPC Performance 11.1-2
11.1.1.5 Recovery and/or Corrective Actions 11.1-2
11.1.2 Canister Off-Normal Handling Load 11.1-3
11.1.2.1 Cause of Event 11.1-3
11.1.2.2 Analysis of the Canister Off-Normal Handling Load Event 11.1-3
11.1.2.3 Radiological Consequences 11.1-6
11.1.2.4 NAC-MPC Performance 11.1-6

MASTER TABLE OF CONTENTS (CONTINUED)

11.1.2.5 Recovery and/or Corrective Actions 11.1.6
11.1.3 Failure of Instrumentation 11.1-6
11.1.3.1 Cause of Accident 11.1-7
11.1.3.2 Analysis of Instrumentation Failure 11.1-7
11.1.3.3 Radiological Consequences for This Accident 11.1-7
11.1.3.4 NAC-MPC Performance 11.1-8
11.1.3.5 Recovery and Corrective Actions 11.1-8
11.1.4 Severe Environmental Conditions (100°F and -40°F) 11.1-8
11.1.4.1 Cause of Event 11.1-8
11.1.4.2 Analysis of the Off-Normal Ambient Temperature Event 11.1-9
11.1.4.3 Radiological Consequences 11.1-10
11.1.4.4 NAC-MPC Performance 11.1-10
11.1.4.5 Corrective Actions 11.1.10
11.1.5 Small Release of Radioactive Particulate From the Canister Exterior 11.1-15
11.1.5.1 Cause of Event 11.1-15
11.1.5.2 Analysis 11.1-15
11.1.5.3 Radiological Consequences 11.1-16
11.1.5.4 NAC-MPC Performance 11.1-16
11.1.5.5 Corrective Actions 11.1.16

11.2 Accidents 11.2-1
11.2.1 Accident Pressurization 11.2-1
11.2.1.1 Cause of Pressurization 11.2-1
11.2.1.2 Analysis of Accident Pressurization 11.2-1
11.2.1.3 Radiological Consequences 11.2-3
11.2.1.4 NAC-MPC Performance 11.2-3
11.2.1.5 Recovery and/or Corrective Actions 11.2-3
11.2.2 Earthquake Event 11.2-7
11.2.2.1 Cause of Earthquake 11.2-7
11.2.2.2 Earthquake Analysis 11.2-7
11.2.2.3 Radiological Consequences 11.2-13
11.2.2.4 NAC-MPC Performance 11.2-13
11.2.2.5 Recovery and/or Corrective Actions 11.2-13

MASTER TABLE OF CONTENTS (CONTINUED)

11.2.3 Explosion 11.2-14
11.2.3.1 Cause of Accident 11.2-14
11.2.3.2 Evaluation of the Explosion Event 11.2-14
11.2.3.3 Radiological Consequences 11.2-15
11.2.3.4 NAC-MPC Performance 11.2-15
11.2.3.5 Recovery and/or Corrective Actions 11.2-15
11.2.4 Failure of All Fuel Rods With a Subsequent Ground Level Breach of the Canister 11.2-15
11.2.5 Fire Accident 11.2-16
11.2.5.1 Cause of Accident 11.2-16
11.2.5.2 Accident Analysis 11.2-16
11.2.5.3 Radiological Consequences 11.2-19
11.2.5.4 NAC-MPC Performance 11.2-19
11.2.5.5 Recovery and/or Corrective Actions 11.2-19
11.2.6 Flood 11.2-20
11.2.6.1 Cause of Flood 11.2-20
11.2.6.2 Flood Analysis 11.2-20
11.2.6.3 Radiological Consequences 11.2-24
11.2.6.4 NAC-MPC Performance 11.2-24
11.2.6.5 Recovery and/or Corrective Actions 11.2-24
11.2.7 Fresh Fuel Loading in the Canister 11.2-24
11.2.7.1 Cause of Accident 11.2-25
11.2.7.2 Analysis of Fresh Fuel Loading in the Canister 11.2-25
11.2.7.3 Radiological Consequences For This Accident 11.2-25
11.2.7.4 NAC-MPC Performance 11.2-25
11.2.7.5 Recovery and Corrective Actions 11.2-25
11.2.8 Full Blockage of Air Inlets and Outlets 11.2-26
11.2.8.1 Cause of Event 11.2-26
11.2.8.2 Analysis of the Blockage Event 11.2-26
11.2.8.3 Radiological Consequences 11.2-27
11.2.8.4 NAC-MPC Performance 11.2-27
11.2.8.5 Recovery and/or Corrective Actions 11.2-27
11.2.9 Lightning 11.2-28

MASTER TABLE OF CONTENTS (CONTINUED)

11.2.9.1 Cause of Accident 11.2-28
11.2.9.2 Analysis of the Lightning Strike Event 11.2-28
11.2.9.3 Radiological Consequences 11.2-32
11.2.9.4 NAC-MPC Performance 11.2-32
11.2.9.5 Recovery and/or Corrective Actions 11.2-32
11.2.10 Maximum Anticipated Heat Load (125°F Ambient Temperature) 11.2-32
11.2.10.1 Cause of Accident 11.2-33
11.2.10.2 Analysis of the 125°F Ambient Temperature Event 11.2-33
11.2.10.3 Radiological Consequences 11.2-34
11.2.10.4 NAC-MPC Performance 11.2-34
11.2.10.5 Corrective Actions 11.2-34
11.2.11 Storage Cask 6-Inch Drop 11.2-34
11.2.11.1 Cause of Accident 11.2-35
11.2.11.2 Analysis of the 6-Inch Drop Event 11.2-35
11.2.11.3 Radiological Consequences 11.2-38
11.2.11.4 NAC-MPC Performance 11.2-38
11.2.11.5 Recovery and/or Corrective Actions 11.2-39
11.2.12 Tip Over of the Vertical Concrete Cask 11.2-41
11.2.12.1 Cause of Tip Over 11.2-41
11.2.12.2 Analysis of the Tip Over Event 11.2-41
11.2.12.3 Analysis of the Canister and Basket 11.2-48
11.2.12.4 Radiological Consequences 11.2-57
11.2.12.5 NAC-MPC Performance 11.2-57
11.2.12.6 Recovery and/or Corrective Actions 11.2-58
11.2.13 Tornado and Tornado Driven Missile 11.2-88
11.2.13.1 Cause of Tornado Event 11.2-88
11.2.13.2 Analysis of the Tornado Event 11.2-88
11.2.13.3 Radiological Consequences 11.2-101
11.2.13.4 NAC-MPC Performance 11.2-101
11.2.13.5 Recovery and/or Corrective Actions 11.2-102

11.3 Design Basis Loading of the Transportable Storage Canister 11.3-1
11.3.1 Canister Impact Analysis 11.3-1

MASTER TABLE OF CONTENTS (CONTINUED)

11.3.1.1 Finite Element Model Description - Canister 11.3-2
11.3.1.2 Canister Bottom and Side Impact Analysis 11.3-9
11.3.1.3 Canister Buckling Evaluation for the Bottom End Impact 11.3-16
11.3.2 Canister Fuel Basket End Impact Analysis 11.3-17
11.3.2.1 Stress Evaluation of Support Disk in the End Impact 11.3-18
11.3.2.2 Evaluation of Tie Rods and Spacers for an End Impact Condition 11.3-20
11.3.2.3 Fuel Tube Analysis 11.3-32
11.3.2.4 Fuel Basket Weldment Analysis for End Impact Conditions 11.3-34

11.4 Reconfigured Fuel Assembly Evaluation 11.4-1
11.4.1 Shell Casing Weldment Evaluation 11.4-1
11.4.1.1 Shell Casing Side Impact 11.4-1
11.4.1.2 Shell Casing End Impact 11.4-6
11.4.1.3 Lifting Tab Welds 11.4-7
11.4.2 Basket Assembly and Fuel Tube Evaluation 11.4-9
11.4.2.1 Corner Angle Side Impact 11.4-9
11.4.2.2 Corner Angle End Impact 11.4-10
11.4.2.3 Fuel Tube Side Impact 11.4-11
11.4.2.4 Fuel Tube End Impact 11.4-12
11.4.2.5 Tie Plate End Impact 11.4-14
11.4.2.6 Tie Plate Side Impact 11.4-17
11.4.2.7 Tie Plate Thermal Stress Analysis 11.4-19

11.5 Canister Closure Weld Evaluation - Accident Conditions 11.5-1
11.5.1 Stress Evaluation for the Canister Closure Weld 11.5-1
11.5.2 Critical Flaw Size for the Canister Closure Weld 11.5-1

11.6 References 11.6-1

MASTER TABLE OF CONTENTS (CONTINUED)

12.0 **OPERATING CONTROLS AND LIMITS** 12-1

12.1 Proposed Operating Controls and Limits 12-1

12.2 Proposed Training Topics for the NAC-MPC SYSTEM 12-2

12.3 Special Requirements for the First System Placed in Service 12-2

12.4 Surveillance After a Natural Phenomena Off-Normal or Accident Event 12-2

12.5 Administrative Contols 12-3

Technical Specifications 12A-1

Technical Specification Bases 12B-1

13.0 **QUALITY ASSURANCE** 13.1-1

13.1 Introduction 13.1-1

13.2 NAC Quality Assurance Program Synopsis 13.2-1
- 13.2.1 Organization 13.2-1
- 13.2.2 Quality Assurance Program 13.2-1
- 13.2.3 Design Control 13.2-2
- 13.2.4 Procurement Document Control 13.2-3
- 13.2.5 Procedures, Instructions, and Drawings 13.2-3
- 13.2.6 Document Control 13.2-3
- 13.2.7 Control of Purchased Items and Services 13.2-4
- 13.2.8 Identification and Control of Material, Parts, and Components 13.2-4
- 13.2.9 Control of Special Processes 13.2-4
- 13.2.10 Inspection 13.2-5
- 13.2.11 Test Control 13.2-5
- 13.2.12 Control of Measuring and Testing Equipment 13.2-6

MASTER TABLE OF CONTENTS (CONTINUED)

13.2.13 Handling, Storage and Shipping 13.2-6
13.2.14 Inspection, Test and Operating Status 13.2-6
13.2.15 Control of Nonconforming Items 13.2-7
13.2.16 Corrective Action 13.2-7
13.2.17 Records 13.2-7
13.2.18 Audits 13.2-8

THIS PAGE INTENTIONALLY LEFT BLANK

Table 3.4.4.1-8 Summary of Maximum Canister Combined Load Primary Membrane (P_m) Stresses (ksi)

Location No.[1]	SX	SY	SZ	SXY	SYZ	SXZ	Stress Intensity	Allowable Stress[2]	Margin of Safety
1	-1.3	6.1	1.9	-1.4	0.6	0.2	8.02	16.70	1.08
2	3.2	-2.5	-2.1	-1.2	0.2	-0.3	6.16	16.70	1.71
3	< 0.1	0.7	0.6	< 0.1	< 0.1	< 0.1	0.71	14.50	19.42
4	< 0.1	0.8	0.6	< 0.1	< 0.1	< 0.1	0.76	14.50	18.08
5	< 0.1	0.8	0.6	< 0.1	< 0.1	< 0.1	0.84	14.50	16.26
6	< 0.1	0.9	0.6	< 0.1	< 0.1	0.1	0.94	14.50	14.43
7	< 0.1	1.2	0.3	< 0.1	0.1	< 0.1	1.23	16.70	12.63
8	0.1	1.1	0.4	0.1	0.1	< 0.1	1.06	16.70	14.77
9	-0.3	1.3	0.4	< 0.1	0.1	0.1	1.67	16.70	9.00
10	< 0.1	0.5	0.8	-0.2	< 0.1	0.1	0.86	16.70	18.31
11	-0.1	0.9	0.3	< 0.1	0.1	0.1	0.98	16.70	15.97
12	0.1	0.3	1.1	-0.3	< 0.1	0.1	1.19	10.69[4]	7.98
13	1.4	0.1	1.3	-1.5	-4.5	< 0.1	9.47	16.70	0.76
14[3]	-0.1	< 0.1	-0.1	< 0.1	< 0.1	< 0.1	0.09	20.00	221.22
15	< 0.1	< 0.1	< 0.1	< 0.1	0.1	< 0.1	0.14	16.70	121.34

1 See Figure 3.4.4.1-4 for definition of locations of stress sections.

2 Allowable stresses for bottom plate region (location no. 1-2, 13) taken at 250°F; allowable stresses for canister shell region between shield lid and bottom plate (location no. 3-6) taken at 550°F; allowable stresses for structural/shield lid region (location no. 7-12, 14-15) taken at 250°F.

3 The allowable stress for SA240, Type 304 stainless steel was used for location No. 14. The allowable stress for SA240, Type 304L stainless steel was used for all other locations.

4 Includes two stress reduction factors for weld = 0.8 x 0.8 = 0.64 (See Section 3.6.1).

Table 3.4.4.1-9 Summary of Maximum Canister Combined Load Primary Membrane Plus Primary Bending ($P_m + P_b$) Stresses (ksi)

Location No.[1]	SX	SY	SZ	SXY	SYZ	SXZ	Stress Intensity	Allowable Stress[2]	Margin of Safety
1	-8.5	0.7	1.3	-2.0	0.8	0.4	10.77	25.05	1.33
2	1.4	-18.8	-7.0	-1.5	< 0.1	-0.6	20.50	25.05	0.22
3	< 0.1	0.9	0.6	< 0.1	< 0.1	< 0.1	0.92	21.75	22.64
4	< 0.1	0.8	0.7	< 0.1	< 0.1	0.1	0.79	21.75	26.53
5	< 0.1	0.9	0.8	< 0.1	< 0.1	0.1	0.88	21.75	23.72
6	< 0.1	1.0	0.8	< 0.1	< 0.1	0.1	1.00	21.75	20.75
7	< 0.1	1.3	0.3	< 0.1	< 0.1	< 0.1	1.31	25.05	18.14
8	0.1	1.2	0.4	0.1	0.1	< 0.1	1.17	25.05	20.45
9	-0.4	1.4	0.4	< 0.1	0.1	0.1	1.85	25.05	12.53
10	-0.1	1.7	1.1	-0.5	0.1	0.1	2.06	25.05	11.14
11	-0.4	1.0	0.3	< 0.1	0.1	0.1	1.45	25.05	16.26
12	0.3	-0.3	1.3	-0.1	-0.1	0.2	1.66	16.03[4]	8.66
13	21.2	3.7	20.5	-1.4	-4.5	< 0.1	19.33	25.05	0.30
14[3]	-0.5	-0.1	-0.5	< 0.1	< 0.1	< 0.1	0.43	30.00	68.77
15	0.8	0.1	0.8	< 0.1	0.1	< 0.1	0.67	25.05	36.12

1 See Figure 3.4.4.1-4 for definition of locations of stress sections.

2 Allowable stresses for bottom plate region (location no. 1-2, 13) taken at 250°F; allowable stresses for canister shell region between shield lid and bottom plate (location no. 3-6) taken at 550°F; allowable stresses for structural/shield lid region (location no. 7-12, 14-15) taken at 250°F.

3 The allowable stress for SA240, Type 304 stainless steel was used for location no. 14. The allowable stress for SA240, Type 304L stainless steel was used for all other locations.

4 Includes two stress reduction factors for weld = 0.8 x 0.8 = 0.64 (See Section 3.6.1).

Table 3.4.4.1-10 Summary of Maximum Canister Combined Load Primary Membrane Plus Primary Bending Plus Secondary ($P_m + P_b + Q$) Stresses (ksi)

Location No.[1]	SX	SY	SZ	SXY	SYZ	SXZ	Stress Intensity	Allowable Stress[2]	Margin of Safety
1	-9.1	0.6	3.6	2.1	0.8	-0.6	13.38	50.10	2.74
2	2.1	-22.9	-5.4	-1.5	0.1	-0.5	25.20	50.10	0.99
3	< 0.1	0.9	0.6	< 0.1	< 0.1	< 0.1	0.90	43.50	47.33
4	-0.1	0.7	1.0	< 0.1	< 0.1	-0.1	1.11	43.50	38.19
5	-0.1	0.7	0.9	< 0.1	< 0.1	-0.1	1.01	43.50	42.07
6	< 0.1	1.0	0.8	< 0.1	< 0.1	0.1	1.02	43.50	41.65
7	< 0.1	1.8	-0.6	-0.1	0.1	-0.1	2.43	50.10	19.59
8	1.2	-2.3	-0.5	-1.2	-0.1	0.1	4.22	50.10	10.86
9	-2.3	10.8	2.6	0.3	0.1	0.3	13.14	50.10	2.81
10	2.8	-12.4	-1.8	-0.8	-0.2	0.7	15.32	50.10	2.27
11	-5.0	-5.5	-2.8	0.9	< 0.1	-0.1	3.34	50.10	14.01
12	-4.9	1.8	< 0.1	-0.9	-0.1	-0.3	6.99	32.06[4]	3.59
13	-26.4	0.5	-25.2	-1.4	-4.0	< 0.1	27.74	50.10	0.81
14[3]	1.7	3.9	1.8	< 0.1	-0.1	0.1	2.21	60.00	26.15
15	1.7	3.9	1.8	< 0.1	-0.1	0.1	2.21	50.10	21.68

1 See Figure 3.4.4.1-4 for definition of locations of stress sections.

2 Allowable stresses for bottom plate region (location no. 1-2, 13) taken at 250°F; allowable stresses for canister shell region between shield lid and bottom plate (location no. 3-6) taken at 550°F; allowable stresses for structural/shield lid region (location no. 7-12, 14-15) taken at 250°F.

3 The allowable stress for SA240, Type 304 stainless steel was used for location no. 14. The allowable stress for SA240, Type 304L stainless steel was used for all other locations.

4 Includes two stress reduction factors for weld = 0.8 x 0.8 = 0.64 (See Section 3.6.1).

Table 3.4.4.1-11 Summary of Maximum Stresses for the Fuel Basket Weldments and Support Disks

Component	Load Condition	Stress Intensity		Allowable Stress		Margin of Safety
		Reported	Value (psi)	Criteria	Value (psi)	
Top Weldment	Dead Load	P_m	0	S_m	16,299	—
		$P_m + P_b$	3,297	$1.5S_m$	24,449	6.42
	Dead Load + Thermal	$P_m + P_b + Q$	32,364	$3.0S_m$	48,898	0.51
	Dead Load + Handling	P_m	0	S_m	16,299	—
		$P_m + P_b$	3,626	$1.5S_m$	24,449	5.74
	Dead Load + Handling + Thermal	$P_m + P_b + Q$	32,521	$3.0S_m$	48,898	0.50
Bottom Weldment	Dead Load	P_m	0	S_m	16,269	—
		$P_m + P_b$	857	$1.5S_m$	24,403	27.47
	Dead Load + Thermal	$P_m + P_b + Q$	44,094	$3.0S_m$	48,806	0.11
	Dead Load + Handling	P_m	0	S_m	16,269	—
		$P_m + P_b$	942	$1.5S_m$	24,403	24.89
	Dead Load + Handling + Thermal	$P_m + P_b + Q$	44,119	$3.0S_m$	48,806	0.11
Support Disks	Dead Load	P_m	0	S_m	41,528	—
		$P_m + P_b$	870	$1.5S_m$	62,292	70.60
	Dead Load + Thermal	$P_m + P_b + Q$	35,427	$3.0S_m$	124,584	2.52
	Dead Load + Handling	P_m	0	S_m	41,528	—
		$P_m + P_b$	958	$1.5S_m$	62,292	64.02
	Dead Load + Handling + Thermal	$P_m + P_b + Q$	35,495	$3.0S_m$	124,584	2.51

3.6 Canister Closure Weld Evaluation – Normal Conditions

3.6.1 Stress Evaluation for the Canister Closure Weld

The closure weld for the canister is a partial penetration weld with a thickness of 0.9 inches. The evaluation of this weld, in accordance with NRC guidance, is to incorporate two separate weld stress reduction factors: a 0.8 factor per NRC ISG-4, Item 5, and an additional 0.8 factor to provide conservative consideration of the weld configuration. These two stress reduction factors are incorporated by applying a factor of 0.64 (0.8 x 0.8) to the stress allowable for this weld.

The stresses for the canister are evaluated using sectional stresses as permitted by Subsection NB. The location of the section for the canister weld evaluation is shown in Figure 3.4.4.1-4 and corresponds to Section 12. The governing P_m, $P_m + P_b$, and P + Q stress intensity for Section 12 and the associated allowables are listed in Table 3.4.4.1-8, Table 3.4.4.1-9, and Table 3.4.4.1-10, respectively. The factored allowables, incorporating a 0.64 stress reduction factor, and the resulting controlling Margin of Safeties are:

Stress Type	Analysis Stress Intensity (ksi)	0.64 x Allowable Stress (ksi)	Margin of Safety
P_m	1.19	10.69	7.98
$P_m + P_b$	1.66	16.03	8.66
P + Q	6.99	32.06	3.59

This confirms that the canister closure weld is acceptable for normal operation conditions.

3.6.2 Critical Flaw Size for the Canister Closure Weld

The closure weld for the canister is comprised of multiple weld beads using a compatible weld material for Type 304L stainless steel. An allowable (critical) flaw evaluation has been performed to determine the critical flaw size in the weld region. The result of the flaw evaluation is used to define the minimum flaw size, which must be identifiable in the nondestructive examination of the weld. Due to the inherent toughness associated with Type 304L stainless steel, a limit load analysis is used in conjunction with a J-integral/tearing modulus approach.

The safety margins used in this evaluation correspond to the stress limits contained in Section XI of the ASME Code.

One of the stress components used in the evaluation for the critical flaw size is the radial stress component in the weld region of the structural lid. For the normal operation condition, in accordance with ASME Code Section XI, a safety factor of 3 is required. For the purpose of identifying the stress for the flaw evaluation, the weld region corresponds to Section 12 Figure 3.4.4.1-4 is considered. The radial stress corresponds to SX in Tables 3.4.4.1-1 through 3.4.4.1-10 for the normal operating condition. The maximum reported radial tensile stress is 0.7 ksi. To perform the flaw evaluation, a 10 ksi stress is conservatively used, resulting in a significantly larger safety factor than the required safety factor of 3. Using 10 ksi as the basis for the evaluation, the critical flaw size is 0.52 inch for a flaw that extends 360 degrees around the circumference of the canister. Stress components for the circumferential and axial directions are also reported in the above tables, which would be associated with flaws oriented in the radial or horizontal directions, respectively. The maximum stress reported for these components is 1.8 ksi, which is also enveloped by the stress value of 10 ksi for radial stresses. The 360-degree flaw employed for the circumferential direction is considered to be bounding with respect to any partial flaw in the weld, which could occur in the radial and horizontal directions. Therefore, using a minimum detectable flaw size of 0.375 inch is acceptable, since it is less than the very conservatively determined 0.52-inch critical flaw size.

Table of Contents

9.0 ACCEPTANCE TESTS AND MAINTENANCE PROGRAM 9-1

9.1 Acceptance Tests 9.1-1
9.1.1 Visual and Nondestructive Examination Inspection 9.1-1
9.1.1.1 Nondestructive Weld Examination 9.1-2
9.1.1.2 Fabrication Inspections 9.1-3
9.1.2 Structural and Pressure Test 9.1-4
9.1.3 Leak Tests 9.1-5
9.1.4 Component Tests 9.1-5
9.1.4.1 Valves, Rupture Disks and Fluid Transport Devices 9.1-5
9.1.4.2 Gaskets 9.1-5
9.1.5 Shielding Tests 9.1-5
9.1.6 Neutron-Absorber Tests 9.1-6
9.1.6.1 General 9.1-6
9.1.6.2 Preparation of Samples 9.1-6
9.1.6.3 Wet Chemistry Test Performance 9.1-6
9.1.6.4 Neutron Absorption Test Performance 9.1-7
9.1.6.5 Acceptance Criteria 9.1-7
9.1.7 Thermal Tests 9.1-8
9.1.8 Cask Identification 9.1-8

9.2 Maintenance Program 9.2-1
9.2.1 Continuing Maintenance Requirements 9.2-1
9.2.2 Required Maintenance of First Storage System Placed in Service 9.2-2

THIS PAGE INTENTIONALLY LEFT BLANK

9.1.3 Leak Tests

The canister is leak tested at the time of use. After the pressure test described in Section 9.1.2, the canister is drained of residual water, vacuum dried and backfilled with helium. The canister is pressurized with helium to 22 psia. The shield lid to canister shell weld is helium leak tested. The leak test is performed at a sensitivity of at least 4.0×10^{-8} cm^3/sec (helium). Any indication of a leak is unacceptable and repair of the leak is required.

9.1.4 Component Tests

The components of the NAC-MPC do not require any special tests in addition to the material receipt, dimensional, and form and fit tests described above, or as described below.

9.1.4.1 Valves, Rupture Disks and Fluid Transport Devices

The NAC-MPC canister and storage cask do not contain rupture disks or fluid transport devices. There are no valves that are part of the confinement boundary for transport or storage. Quick-disconnect valves are installed in the canister vent and drain ports of the shield lid. These valves are intended to be convenience items for the operator, as they provide a means of quickly connecting (or disconnecting) ancillary drain and vent lines to the canister. The quick-disconnect fittings consist of male and female halves. The male fitting is installed in the canister and the female fitting is used as the connecting piece. The male fitting is automatically closes when the mating fitting is removed; however, no credit is taken for this sealing feature. During storage and transport, these fittings are not accessible, as port covers that are welded in place cover them when the canister is closed. As presented for storage, the canister has no accessible valves or fittings.

9.1.4.2 Gaskets

The NAC-MPC canister and concrete cask have no mechanical seals or gaskets that form an integral part of the package, and there are no mechanical seals or gaskets in the confinement boundary.

9.1.5 Shielding Tests

Based on the conservative design of the NAC-MPC storage cask for shielding criteria and the detailed construction requirements, no shielding tests of the concrete storage cask are required.

9.1.6 Neutron-Absorber Tests

9.1.6.1 General

Neutron absorber material (commercially available as BORAL®) in the form of sheets consisting of boron-carbide evenly dispersed within a matrix of aluminum and clad with aluminum is used in the NAC-MPC transportable storage canister fuel baskets. BORAL® is manufactured by AAR Advanced Structures (AAR) of Livonia, Michigan, under a Quality Assurance/Quality Control program in conformance with the requirements of 10 CFR 50, Appendix B. The computer-aided manufacturing process consists of several steps - the first being the mixing of the aluminum and boron-carbide powders that form the core of the finished material, with the amount of each powder a function of the desired ^{10}B areal density. The methods used to control the weight and blend the powders are patented and proprietary processes of AAR.

After manufacturing, test samples from each batch of BORAL® neutron absorber (poison) sheets shall be tested using wet chemistry and/or neutron absorption techniques to verify the presence, proper distribution, and minimum weight percent of ^{10}B. The tests shall be performed in accordance with approved written procedures.

9.1.6.2 Preparation of Samples

Detailed written procedures to perform wet chemistry and/or neutron absorption tests of each batch of BORAL® sheets shall be established by the manufacturer and approved by NAC. For each batch of BORAL® sheets, a sample shall be taken from each end of randomly selected sheets. The samples shall be indelibly marked and recorded for identification. At least 2 percent of the sheets in a batch shall be fully tested as described, with the remaining sheets to be tested at one location to ensure the presence of boron in those sheets.

9.1.6.3 Wet Chemistry Test Performance

An approved facility with chemical analysis capability shall be selected to perform the wet chemistry tests. The tests will ensure the presence of boron and enable the calculation of the ^{10}B areal density.

The most common method of verifying the acceptability of neutron absorber material is the wet chemistry method—a chemical analysis where the aluminum is separated from a sample with known thickness and volume. The remaining boron-carbide material is weighed and the areal density of ^{10}B is computed. A statistical conclusion about the BORAL® sheet from which the sample was taken and that batch of BORAL® sheets may then be drawn based on the test results and the established manufacturing processes previously noted.

9.1.6.4 Neutron Absorption Test Performance

An approved facility with a neutron source and neutron detection capability shall be selected to perform the described tests. The tests will assure that the neutron absorption capacity of the material tested is equal to, or higher than, the given reference value and will verify the uniformity of boron distribution. The principle of measurement of neutron absorption is that the presence of boron results in a slowing down of neutron flux between the neutron sources, the reflector, and the neutron detector—depending on the material thickness and boron content.

Typical test equipment will consist of a neutron source/neutron detector, a reflector, and a counting instrument. The test equipment is calibrated using approved reference sheet(s), whose ^{10}B content has been checked and verified by an independent method such as chemical analysis. The highest permissible counting rate is determined from the neutron counting rates of the reference sheet(s), which should be ground to the minimum allowable plate thickness. This calibration process shall be repeated daily (every 24 hours) while tests are being performed.

9.1.6.5 Acceptance Criteria

The wet chemistry test results shall be considered acceptable if the ^{10}B areal density is determined to be equal to, or greater than, that specified on the fuel tube drawings.

The neutron absorption test shall be considered acceptable if the neutron count determined for each test specimen is less than or equal to the highest permissible neutron count rate determined from the reference sheet(s), which are based on the ^{10}B areal density specified on the fuel tube drawings.

Any specimen not meeting the acceptance criteria shall be rejected and all of the sheets from that batch shall be similarly rejected.

9.1.7 Thermal Tests

No thermal acceptance testing of the NAC-MPC system is required during construction. Temperature measurements are taken at the air outlets of the storage cask during operation in accordance with Chapter 12.0 as verification of the thermal performance of the storage system.

9.1.8 Cask Identification

A stamped stainless steel nameplate, as shown on Drawing No. 455-856, is permanently attached on the outer surface of the storage cask. The nameplate includes the following information:

Vertical Concrete Cask

Owner:	(Utility Name)
Designer:	NAC International Inc.
Fabricator:	(Vendor Name)
Date of Manufacture:	(mm/dd/yy)
Model Number:	(MPC-YR)
Cask No.:	(XXX)
Date of Loading:	(mm/dd/yy)
Empty Weight:	(Pounds [kilograms])

Therefore, the minimum acceleration that may cause a tip over of a fully loaded concrete cask is 0.559g. Since the 0.25g design basis earthquake acceleration is less than 0.559g, the concrete cask will not tip over.

The factor of safety is 0.559 / 0.25 = 2.24, which is greater than the factor of safety of 1.1 required by ANSI /ANS-57.9.

To keep the cask from sliding, the force holding the cask (F_s) has to be greater than or equal to the force trying to move the cask. Based on the equation for static friction:

$$F_s = \mu N \geq G_h W$$

$$\mu (1-G_v)W \geq G_h W$$

where: μ = coefficient of friction
N = normal force
W = weight of the concrete cask
G_v = vertical acceleration component
G_h = resultant of horizontal acceleration component

Substituting for G_h and G_v for the two combination conditions:

1) $\mu(1-0.667a) \geq 0.566\,a$

$$\mu \geq \frac{0.566a}{1-0.667a}$$

2) $\mu(1-0.267a) \geq 1.077\,a$

$$\mu \geq \frac{1.077a}{1-0.267a}$$

For a = 0.25g

1) $\mu \geq 0.17$

2) $\mu \geq 0.29$

The analysis shows that the minimum coefficient of friction, μ, required to prevent sliding of the concrete cask is 0.29. The coefficient of friction between the steel bottom plate of the concrete cask and the concrete surface of the storage pad, 0.35 (Funk), is greater than the coefficient of friction required to prevent sliding of the concrete cask. Therefore, the concrete cask will not slide under design-basis earthquake conditions. The factor of safety is 0.35 / 0.29 =1.21 which is greater than the factor of safety of 1.1 required by ANSI/ANS-57.9.

The stresses in the concrete due to the design basis G-loads are conservatively calculated below. The fully loaded concrete cask is considered to be fixed at its base and subjected to seismic loads equal to 0.25 g in the two orthogonal horizontal directions and the vertical direction.

The accelerations are:

$a_x = (0.25^2 + 0.25^2)^{0.5} = 0.354$ g (horizontal direction)

$a_y = \pm 0.25$ g (vertical direction)

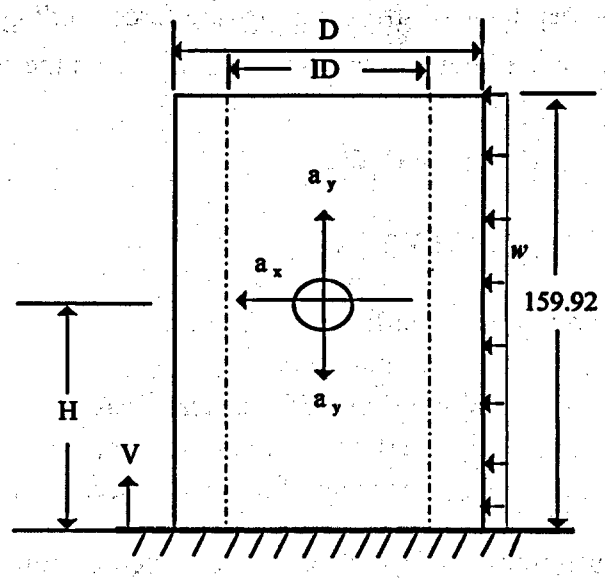

The following parameters are used in the calculation:

H	= 83.2 in. (Location of Center of Gravity)	
W_{vcc}	= 206,100 lb. (VCC weight)	
D	= 128 in. (concrete exterior diameter)	
ID	= 86 in. (concrete interior diameter)	
A	$= \pi (D^2 - ID^2) / 4$	= 7,059.2 in.^{2}
I	$= \pi (D^4 - ID^4) / 64$	= 10.492×10^6 in.^{4}
S_{outer}	= 2I /D	= 163,937.5 in.^{3}
S_{inner}	= 2I / (ID)	= 244,000.0 in.^{3}
w	$= a_x W_{vcc} / 159.92$	= 456.22 lb / in.

The maximum bending moment (M) at support is:

$$M = w (159.92)^2 / 2 = 5.834 \times 10^6 \text{ in.-lb}$$

Density = 100 pcf
Poisson's Ratio (υ) = 0.4

$$\text{Modulus of Elasticity} = \frac{1-\upsilon^2}{\alpha} k \sqrt{A_{pad}} \text{ psi}$$

(EPRI-TR-108760)

where:

A_{pad} = the area of the concrete pad in square inches,
k = 250 psi/in., is the soil stiffness for the soil under the pad,
α = 1.08 for a square area.

For the 30 x 30 square foot pad, the modulus of elasticity of the soil is calculated as 70,000 psi. The concrete cask steel liner has the properties:

Density = 0.284 lb/in^3
Poisson's ratio = 0.31
Modulus of elasticity = 2.9E7 psi

To account for the weight of the shield plug, the loaded canister, and the concrete cask pedestal, effective densities are used for the elements in the first row of the steel liner model adjacent to the impact plane of symmetry. These densities represent the regions (6° in the circumferential direction) of the steel liner subjected to the weight of the shield plug, the loaded canister and the pedestal, during the side impact (tip over) condition. The contact angle (6°) is determined based on the canister/basket analysis for the tip over condition (Section 11.2.12.3). Based on the status of the gap elements at the outer surface of the canister shell (representing the interface between the canister shell and the concrete cask steel liner) in the finite element model used in Section 11.2.12.3, the contact angle between the canister shell and the concrete cask liner is between 4.5° and 9° for the half-symmetry model.

11.2.12.2.3 Boundary Conditions and Initial Conditions

A friction coefficient of 0.25 is used at the interface between the steel liner and the concrete shell, between the concrete cask and the pad, and between the pad and the soil. For all the embedded faces (three side surfaces and the bottom surface) of the soil in the model, the displacements in the direction normal to the surface are restrained. The symmetry boundary conditions are applied for all nodes at the plane of symmetry.

The initial condition corresponds to the concrete cask in a horizontal position with an initial vertical velocity into the concrete pad. The pad and soil are initially at rest.

The initial velocity is simulated by applying an angular velocity (ω) of 1.516 radians/sec to the entire cask. The angular velocity value is computed by considering energy conservation at the cask "center of gravity over corner" tip condition versus the side impact condition.

From energy conservation:

$$mgh = \frac{I\omega^2}{2}$$

where:

mg = total weight of the loaded concrete cask = 206,094 lbs

h = height change of the concrete cask center of gravity (L_{CG}) = $\sqrt{R^2 + \left(\frac{L_{CG}}{2}\right)^2} - R$

= 40.97 inches

where:

L_{CG} = location of the center of gravity above the pad for the concrete cask = 83.2 inches
R = radius of the concrete cask = 64 inches
I = total mass moment of inertia of the concrete cask about the pivot point
= 7,352,751 lb-sec^2-inch

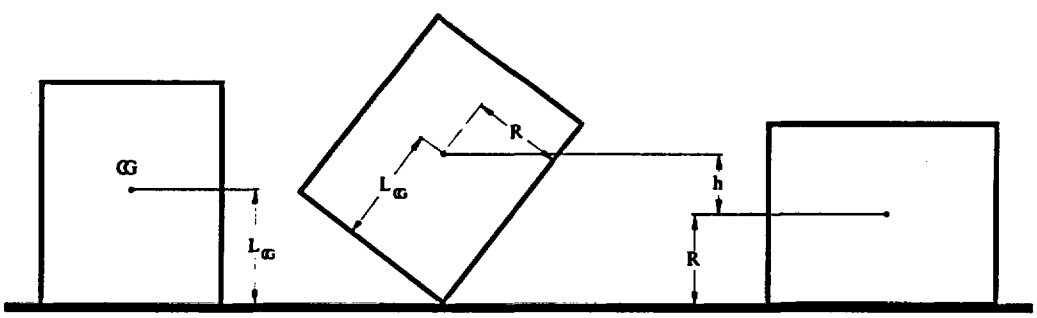

Concrete Cask Tip-Over Height Change

The stress evaluation for the canister is performed in accordance with the ASME Code, Section III, Subsection NB, by comparing the linearized stresses of cross sections of the structure against the allowable stresses. Allowable stresses are conservatively taken at a temperature of 372°F (maximum canister temperature is 319°F for normal condition of storage). The allowable stresses for accident conditions are taken from Subsection NB as shown below. S_m and S_u are 16.05 ksi and 59.17 ksi, respectively, for Type 304L stainless steel (canister shell and structural lid). S_m and S_u are 19.06 ksi and 64.85 ksi, respectively, for Type 304 stainless steel (shield lid).

	Accident (Level D) Allowable Stress
P_m	Lesser of 0.7 S_u or 2.4 S_m
P_m+P_b	Lesser of 1.0 S_u or 3.6 S_m

During the tip over accident, the canister shell at the structural and shield lids is subjected to the inertial load of the lids, which results in highly localized bearing stresses (Sections 8 through 12 at angular locations of 0 and 4.5 degrees). This stress is predominant because the weights of the structural and shielding lids are transferred to the canister shell through the thickness of the weld (7/8 inch weld for structural lid and 1 inch weld for shield lid). According to ASME Section III, Appendix F, bearing stresses need not be evaluated for Level D service (accident) conditions. Therefore, the P_m stresses are not presented for the region local to the impact (angular locations of 0 and 4.5 degree) for Sections 8, 9, [redacted] and [redacted] in Table 11.2.12.3-1. Stresses are conservatively presented for all locations (including bearing region) for Sections 11.

The inertial load of the shield lid also results in localized bending stresses at the canister shell (at the shield lid weld, i.e., Section 8). This stress state is identified as the case of a cylindrical shell at the junction with a head, as shown in Table NB-3217-1 of the ASME Code, Section III, Subsection NB. The localized bending stress at the structural discontinuity is classified as secondary (Q) stress. In accordance with ASME Section III, Appendix F, secondary stresses are not considered for the stress evaluation for Level D (accident) conditions. Therefore, the P_m+P_b stresses are not presented for the region local to the impact for Section 8 (angular locations of 0 and 4.5 degree) in Table 11.2.12.3-2.

The stress evaluation results for tip-over accident conditions show that the minimum margin of safety in the canister is [redacted] for P_m (Section [redacted]) and +0.10 for P_m+P_b (Section 10).

11.2.12.3.3 Analysis Results for the Support Disk

To evaluate the most critical regions of the support disk, a series of cross sections are considered. To aid in the identification of these sections, Figure 11.2.12.3-5 shows the locations on a support disk. Table 11.2.12.3-3 lists the cross sections versus Point 1 and Point 2, which spans the cross section of the ligament in the plane of the support disk.

The stress evaluation for the support disk is performed according to ASME, Section III, Subsection NG. According to this subsection, linearized stresses of cross sections of the structure are to be compared against the allowable stresses. The allowable stresses for tip over accident conditions are taken from Subsection NG as shown below at the maximum support disk temperature of 575°F (accident-extreme heat). The S_m and S_u are 42.3 ksi and 127.1 ksi, respectively, for 17-4 PH stainless steel.

	Accident (Level D) Allowable Stresses
P_m	Lesser of 0.7 S_u or 2.4 S_m
P_m+P_b	Lesser of 1.0 S_u or 3.6 S_m

The stress evaluation results for the support disks for tip-over impact condition are presented in Tables 11.2.12.3-4 through 11.2.12.3-13. The tables list the 40 highest P_m and P_m+P_b stress intensities for Disks 1 through 5. The minimum margin of safety is +0.21, which occurs in Disk 5 (See Figure 11.2.12.3-4 for identification of support disks). The highest P_m and P_m+P_b stresses occur in Disk 5, with the minimum margin of safety of 1.51 and 0.21, respectively. Locations of the 10 highest P_m and P_m+P_b linearized stresses for Disk 5 are given in Figure 11.2.12.3-6 and 11.2.12.3-7.

11.2.12.3.4 Support Disk Buckling Evaluation

The fuel basket support disks are subjected to compressive and/or inertial loads during impact conditions. For the tip-over accident, the support disks experience in-plane loads. The in-plane loads apply compressive forces and in-plane bending moments on the support disk. Buckling of the support disk is evaluated in accordance with the methods and acceptance criteria of NUREG/CR-6322. Because the ASME Code identifies 17-4PH disk material as ferritic steel, the formulas for non-austenitic steel are used.

Table 11.2.12.3-1 Canister Primary Membrane Stresses[1]

Section	Angle (deg)	Sx (ksi)	Sy (ksi)	Sz (ksi)	Sxy (ksi)	Syz (ksi)	Sxz (ksi)	Stress Intensity (ksi)	Allowable Stress (ksi)	Margin of Safety
1	0.00	-4.10	6.60	3.80	1.70	0.10	0.90	21.67	38.52	0.78
2	0.00	-1.20	5.20	3.30	0.00	0.20	0.60	18.67	38.52	1.06
3	0.00	-1.80	2.50	2.80	0.30	0.20	0.30	15.40	38.52	1.50
4	99.00	0.00	1.10	3.90	0.00	7.20	0.20	16.43	38.52	1.34
5	94.50	0.10	1.80	2.00	0.00	2.40	0.00	19.63	38.52	0.96
6	90.00	0.00	1.40	0.50	0.10	1.50	0.00	23.08	38.52	0.67
7	85.50	0.00	0.40	0.40	0.00	1.40	0.00	22.85	38.52	0.69
8[2]	9.00	0.07	0.79	3.71	3.16	5.83	1.10	16.13	38.52	1.39
9[2]	9.00	1.41	0.51	5.04	0.45	3.07	1.77	9.36	38.52	3.12
10[2]	9.00	1.81	3.21	1.56	1.88	3.33	0.50	10.53	38.52	2.66
11	0.00	-37.60	22.30	37.70	0.60	2.40	9.70	25.84	38.52	0.49
12	0.0-4.5	31.18	15.03	8.88	1.89	1.41	1.22	24.25	24.65[3]	0.02
13	0.00	-1.10	0.40	0.00	0.00	0.00	0.10	1.55	45.74	28.51
14	0.00	-1.50	0.40	0.00	0.00	0.00	0.00	1.97	38.52	18.57

Notes:

1. Stresses are in cylindrical coordinate system (x-radial, y-circumferential, z-axial).
2. Stresses are not presented for the region with localized bearing stresses. Per ASME Section III, Appendix F, bearing stresses need not be evaluated for Level D service (accident) conditions.
3. Includes two stress reduction factors for weld = 0.8 x 0.8 = 0.64 (See Section 11.5.1).

Table 11.2.12.3-2 Canister Primary Membrane + Bending Stresses[1]

Section	Angle (deg)	Sx (ksi)	Sy (ksi)	Sz (ksi)	Sxy (ksi)	Syz (ksi)	Sxz (ksi)	Stress Intensity (ksi)	Allowable Stress (ksi)	Margin of Safety
1	0.00	-4.40	32.20	-0.50	1.20	-0.30	0.90	36.87	57.79	0.57
2	0.00	-1.90	29.50	0.70	-0.60	-0.50	-0.60	31.63	57.79	0.83
3	0.00	-2.70	25.90	1.60	-0.80	-0.20	0.40	28.72	57.79	1.01
4	0.00	-2.10	24.90	-0.20	-0.60	0.00	0.10	26.96	57.79	1.14
5	0.00	-2.90	22.60	2.00	0.40	0.10	0.00	25.51	57.79	1.27
6	90.00	0.00	1.80	2.00	-0.10	14.40	0.00	28.89	57.79	1.00
7	0.00	-1.50	-42.70	-27.80	5.20	-2.20	1.10	42.76	57.79	0.35
8[2]	9.00	0.43	10.41	29.77	0.37	2.53	0.86	45.14	57.79	0.28
9	0.00	-16.50	-11.60	27.90	-1.80	-2.80	-10.2	49.72	57.79	0.16
10	0.00	-30.60	-17.90	21.20	-2.10	-2.30	8.00	52.62	57.79	0.10
11	0.00	-21.60	-13.00	19.10	0.90	-0.90	15.00	30.23	57.79	0.91
12	0.0-4.5	30.92	-13.32	-6.14	5.70	-0.80	1.30	26.66	36.99[3]	0.37
13	0.00	-1.30	0.70	0.00	0.00	0.00	-0.10	1.94	57.79	28.76
14	0.00	-0.90	1.50	0.00	0.00	0.00	0.00	2.44	57.79	22.73

Notes:

1. Stresses are in cylindrical coordinate system (x-radial, y-circumferential, z-axial).
2. Stresses are not presented for the region with bearing stress (membrane) and secondary (Q) stress (bending). Per ASME Section III, Appendix F, both bearing stresses and secondary stresses are not required for evaluation for Level D service (accident) conditions.
3. Includes two stress reduction factors for weld = 0.8 x 0.8 = 0.64 (See Section 11.5.1).

Table 11.2.12.3-3 Listing of Cross Sections for Stress Evaluation of Support Disk

Section Number	Point 1	Point 2	Coordinates (in.)			
			Point 1		Point 2	
			X	Y	X	Y
1	1	2	22.15	22.15	24.39	24.39
2	3	4	5.84	0	6.46	-0.62
3	5	6	6.46	-0.62	7.07	0
4	7	8	7.07	0	6.46	0.62
5	9	10	6.46	0.62	5.84	0
6	11	12	12.29	6.46	12.91	5.84
7	13	14	12.91	5.84	13.48	6.41
8	15	16	13.48	6.41	12.86	7.03
9	17	18	12.86	7.03	12.29	6.46
10	19	20	18.7	12.86	19.32	12.25
11	21	22	19.32	12.25	19.85	12.78
12	23	24	19.85	12.78	19.23	13.4
13	25	26	19.23	13.4	18.7	12.86
14	27	28	25.07	19.23	25.69	18.61
15	29	30	25.07	19.23	27.13	21.3
16	31	32	25.69	18.61	27.67	20.59
17	33	34	12.29	-6.46	12.86	-7.03
18	35	36	12.86	-7.03	13.48	-6.41
19	37	38	13.48	-6.41	12.91	-5.84
20	39	40	12.91	-5.84	12.29	-6.46
21	41	42	18.75	0	19.32	-0.57
22	43	44	19.32	-0.57	19.89	0
23	45	46	19.89	0	19.32	0.57
24	47	48	19.32	0.57	18.75	0
25	49	50	25.16	6.41	25.73	5.84
26	51	52	25.16	6.41	25.69	6.94
27	53	54	31.52	12.78	31.97	12.96
28	55	56	18.7	-12.86	19.23	-13.4
29	57	58	19.23	-13.4	19.85	-12.78
30	59	60	19.85	-12.78	19.32	-12.25
31	61	62	19.32	-12.25	18.7	-12.86
32	63	64	25.16	-6.41	25.69	-6.94
33	65	66	25.16	-6.41	25.73	-5.84
34	67	68	31.57	0	34.49	0
35	69	70	22.15	-22.15	24.39	-24.39
36	71	72	25.07	-19.23	27.13	-21.3
37	73	74	25.07	-19.23	25.69	-18.61
38	75	76	25.69	-18.61	27.67	-20.59
39	77	78	31.52	-12.78	31.95	-12.9
40	79	80	0	-5.84	0.62	-6.46
41	81	82	0.62	-6.46	0	-7.07
42	83	84	6.46	-12.29	7.03	-12.86
43	85	86	7.03	-12.86	6.41	-13.48
44	87	88	6.41	-13.48	5.84	-12.91

Figure 11.3.2.3-1 Yankee Class Fuel Basket Tube Configuration

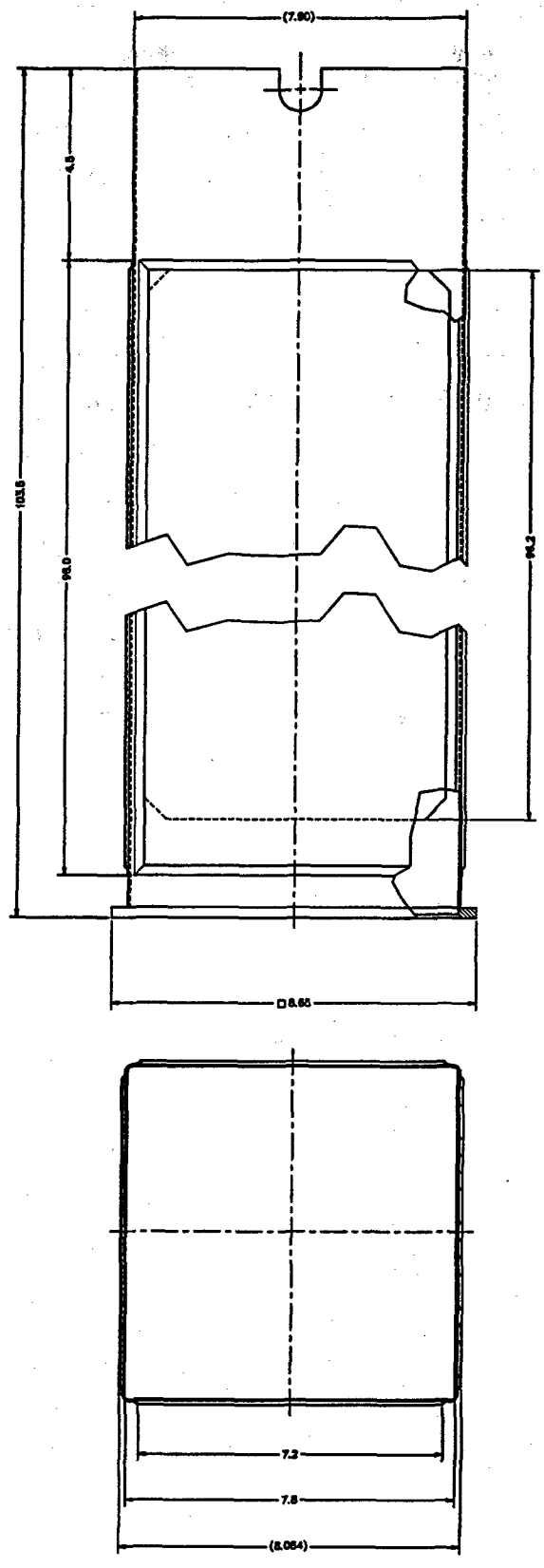

11.3.2.4 Fuel Basket Weldment Analysis for End Impact Conditions

The response of the top and the bottom weldment plates of the fuel basket assembly to a 56.1g accident impact load are examined. The top and bottom weldment are 0.5-inch thick plates constructed of SA240, Type 304 stainless steel. The weldments support their own weight plus the weight of 36 fuel assembly tubes.

A finite element analysis is performed for both plates, since the support for each weldment is different due to the location of the welded ribs for each. Eight structural ribs, eight tie-rod ends, and a circumferential ring support the top weldment and its loads during a top end drop. These structural components are modeled as zero-translation restraints in the direction of the end drop. The load from the fuel tube (2,108 pounds) are represented as point forces applied to the nodes at the periphery of the fuel assembly slots. An average point force is applied. The application of the nodal loads at the slot periphery is accurate since the tube weight is transmitted to the edge of the slot, which provides support to the fuel tubes in the end drop condition. Both models use the SHELL63 element which permits out of plane loading. The finite element models represent one-quarter sections of the weldments. Figures 11.3.2.4-1 through 11.3.2.4-4 show the finite element models for the weldments.

11.5 Canister Closure Weld Evaluation – Accident Conditions

11.5.1 Stress Evaluation for the Canister Closure Weld

The closure weld for the canister is a partial penetration weld with a thickness of 0.9 inches. The evaluation of this weld, in accordance with NRC guidance, is to incorporate two separate weld stress reduction factors: a 0.8 factor based on weld type and a second 0.8 factor based on NRC ISG-4, Item 5. These two weld stress reduction factors are incorporated by applying a factor of 0.64 (0.8 x 0.8) to the stress allowable for this weld.

The stresses for the canister are evaluated using sectional stresses as permitted by Subsection NB. The canister stress results from the VCC tip-over accident evaluation (Section 11.2.12.3) are used for evaluation. The location of the section for the canister weld evaluation is shown in Figure 11.2.12.3-4 and corresponds to Section 12. The P_m and $P_m + P_b$ stress intensity for Section 12 and the associated allowables are listed in Table 11.2.12.3-1 and Table 11.2.12.3-2, respectively. The factored allowables, incorporating a 0.64 stress reduction factor, and the resulting controlling Margin of Safeties are:

Stress Type	Analysis Stress Intensity (ksi)	0.64 x Allowable Stress (ksi)	Margin of Safety
P_m	24.25	24.65	0.02
$P_m + P_b$	26.66	36.99	0.37

This confirms that the canister closure weld is acceptable for the accident conditions.

11.5.2 Critical Flaw Size for the Canister Closure Weld

The closure weld for the canister is comprised of multiple weld beads using a compatible weld material for Type 304L stainless steel. An allowable (critical) flaw evaluation has been performed to determine the critical flaw size in the weld region. The result of the flaw evaluation is used to define the minimum flaw size, which must be identifiable in the nondestructive examination of the weld. Due to the inherent toughness associated with Type 304L stainless steel, a limit load analysis is used in conjunction with a J-integral/tearing modulus approach. The safety margins used in this evaluation correspond to the stress limits contained in Section XI of the ASME Code.

The stress component used in the evaluation for the critical flaw size is the radial stress component in the weld region of the structural lid. For an accident (Level D) event, in accordance with ASME Code Section XI, a safety factor of $\sqrt{2}$ is required. For the purpose of identifying the stress for the flaw evaluation, the weld region corresponds to Section 12 in Figure 11.2.12.3-4 is considered. From additional post processing of the tipover analysis, the maximum tensile radial stress is 3.8 ksi. To perform the flaw evaluation, a 10 ksi stress is conservatively used, resulting in a significantly larger safety factor than the required safety factor of $\sqrt{2}$. Using 10 ksi as the basis for the evaluation, the minimum detectable flaw size is 0.52 inch for a flaw that extends 360 degrees around the circumference of the canister. Stress components for the circumferential and axial directions are also determined, which would be associated with flaws oriented in the radial or horizontal directions respectively. The maximum stress for these components is 1.7 ksi, which is enveloped by the stress value of ksi used for the critical flaw evaluation for radial directions. The 360-degree flaw employed for the circumferential direction is considered to be bounding with respect to any partial flaw in the weld, which could occur in the radial and horizontal directions. Therefore, using a minimum detectable flaw size of 0.375 inch is acceptable, since it is less than the very conservatively determined 0.52-inch critical flaw size.

3.0 LIMITING CONDITION FOR OPERATION (LCO) APPLICABILITY

LCO 3.0.1	LCOs shall be met during specified conditions in the Applicability, except as provided in LCO 3.0.2.
LCO 3.0.2	Upon discovery of a failure to meet an LCO, the Required Actions of the associated Conditions shall be met, except as provided in LCO 3.0.5. If the LCO is met or is no longer applicable prior to expiration of the specified Completion Time(s), completion of the Required Action(s) is not required, unless otherwise stated.
LCO 3.0.3	Not applicable to an NAC-MPC SYSTEM.
LCO 3.0.4	When an LCO is not met, entry into a specified condition in the Applicability shall not be made except when the associated ACTIONS to be entered permit continued operation in the specified condition in the Applicability for an unlimited period of time. This Specification shall not prevent changes in specified conditions in the Applicability that are required to comply with ACTIONS or that are related to the unloading of an NAC-MPC SYSTEM. Exceptions to this Specification are stated in the individual Specifications. These exceptions allow entry into specified conditions in the Applicability where the associated ACTIONS to be entered allow operation in the specified conditions in the Applicability only for a limited period of time.
LCO 3.0.5	Equipment removed from service or not in service in compliance with ACTIONS may be returned to service under administrative control solely to perform testing required to demonstrate it meets the LCO or that other equipment meets the LCO. This is an exception to LCO 3.0.2 for the System to return to service under administrative control to perform the testing.

LCO 3.0.6	Not applicable to an NAC-MPC SYSTEM.
LCO 3.0.7	Not applicable to an NAC-MPC SYSTEM.

Figure 12A3-1
CONCRETE CASK Surface Dose Rate Measurement

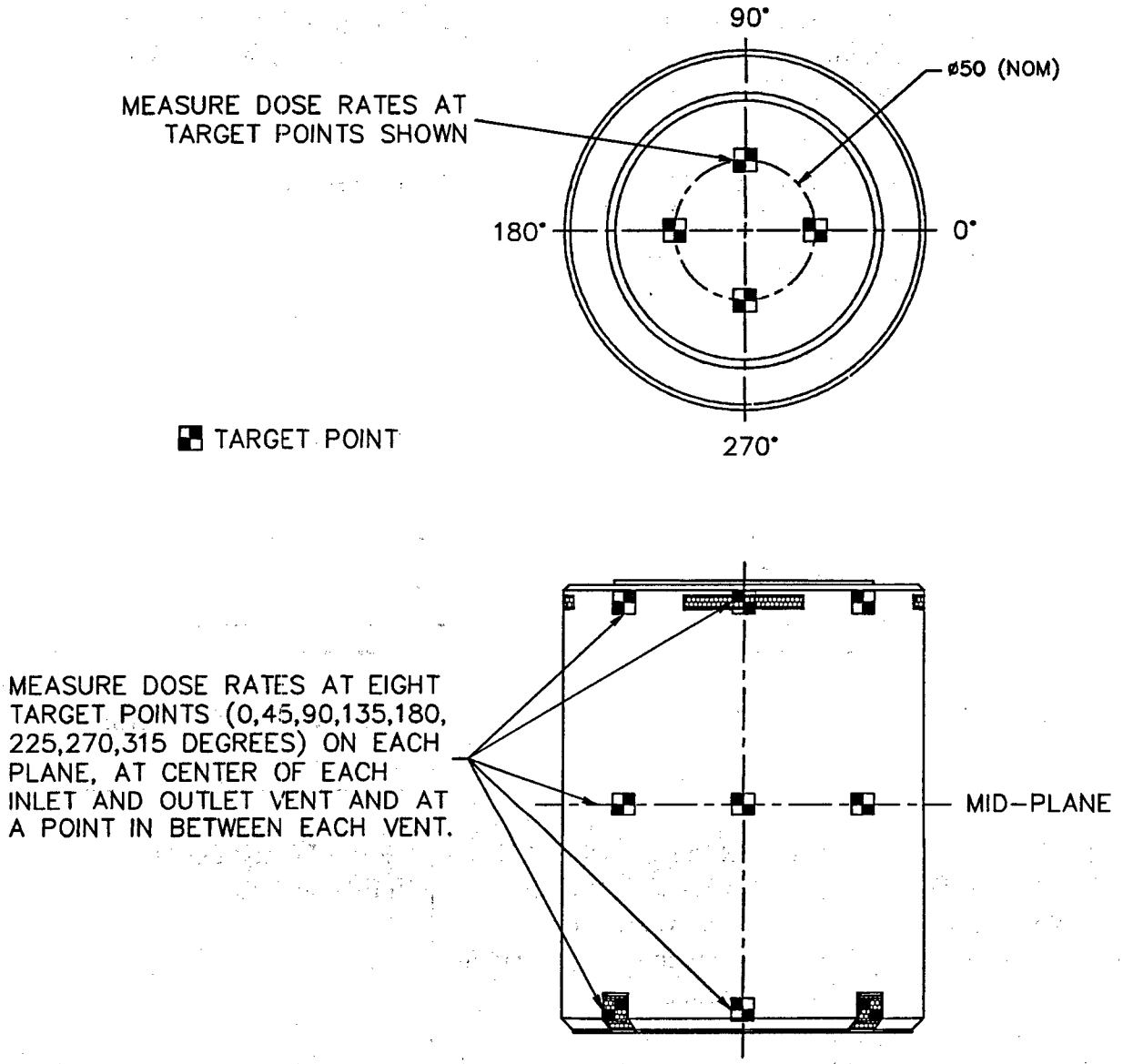

3.2 NAC-MPC SYSTEM Radiation Protection

3.2.2 CANISTER Surface Contamination

LCO 3.2.2 Removable contamination on the accessible exterior surfaces of the CANISTER or accessible interior surfaces of the TRANSFER CASK shall each not exceed:

a. 1000 dpm/100 cm^2 from beta and gamma sources and

b. 20 dpm/100 cm^2 from alpha sources.

APPLICABILITY: During LOADING OPERATIONS

ACTIONS

----------NOTE----------

Separate Condition entry is allowed for each NAC-MPC SYSTEM.

CONDITION	REQUIRED ACTION	COMPLETION TIME
A. CANISTER or TRANSFER CASK removable surface contamination limits not met.	A.1 Restore CANISTER and TRANSFER CASK removable surface contamination to within limits.	Prior to TRANSPORT OPERATIONS

5.3 Special Requirements for First NAC-MPC SYSTEM Placed in Service

The heat transfer characteristics of the NAC-MPC SYSTEM will be recorded by temperature measurements of the first NAC-MPC SYSTEM placed in service with a heat load equal to or greater than 7.5 kW.

5.4 Programs

5.4.1 CONCRETE CASK Thermal Monitoring Program

The following programs shall be established, implemented and maintained.

This program provides guidance for the temperature measurement and visual inspection activities that are used to monitor the thermal performance of each CONCRETE CASK.

a. The ambient air temperature and the air outlet temperatures are measured and compared every 24 hours. The temperature difference between the air outlet temperatures and the ambient air temperature is calculated and recorded. The air inlets and outlets are inspected and verified to be free of blockage every 24 hours.

b. If any air outlet temperature, or temperature difference between air outlet and ambient temperature shows an unexplained reading, appropriate actions are taken to determine the cause and to return the outlet temperatures to acceptable values. One of the immediate actions will be to increase the frequency of temperature monitoring until normal conditions are returned.

c. If an air outlet temperature exceeds the ambient air temperature by 92°F, the NRC will be notified and actions will be taken to evaluate the effects and impact of the elevated temperature on the CONCRETE CASK and CANISTER. A temperature differential of 92°F corresponds to a concrete temperature of 165°F. The long-term normal concrete temperature limit for the CONCRETE CASK is 200°F and the short-term bulk concrete temperature limit is 350°F.