71-9225

NAC INTERNATIONAL

Atlanta Corporate Headquarters
3930 East Jones Bridge Road, Suite 200
Norcross, GA 30092
Phone 770-447-1144
Fax 770-447-1797
www.nacintl.com

June 9, 2006

U.S. Nuclear Regulatory Commission
11555 Rockville Pike
Rockville, MD 20852-2738

Attn: Document Control Desk

Subject: Responses to Request for Additional Information (RAI) on the Amendment Application for Certificate of Compliance (CoC) No. 9225 for the NAC-LWT Cask to Incorporate as Approved Contents the Australian Nuclear Science and Technology Organization's (ANSTO) Spiral Fuel and MOATA Plate Bundles

Docket No. 71-9225

References:
1. Model No. NAC-LWT Package, Certificate of Compliance (CoC) No. 9225, Revision 40, U.S. Nuclear Regulatory Commission (NRC), December 30, 2005
2. Safety Analysis Report (SAR) for the NAC Legal Weight Truck Cask, Revision 37, NAC International, June, 2005
3. Submittal of a Request for an Amendment of Certificate of Compliance (CoC) No. 9225 for the NAC-LWT Cask to Incorporate as Approved Contents the Australian Nuclear Science and Technology Organization's (ANSTO) Spiral Fuel and MOATA Plate Bundles, NAC International, April 17, 2006
4. Request for Additional Information for Review of the Certificate of Compliance No. 9225, Revision 41, for the Model No. NAC-LWT Package, U. S. NRC, June 2, 2006

NAC International (NAC) herewith provides responses to the RAI (Reference 4) on NAC's application for an amendment to Reference 1 to incorporate as approved contents up to 42 spiral fuel assemblies (also referred to as Mark III spiral fuel) and up to 42 MOATA plate bundles, or any combination of both up to a total of 42 assemblies/bundles contained in ANSTO basket modules (Reference 3).

This submittal has been prepared in accordance with NRC/NAC discussions and includes four copies of this transmittal letter, four copies of the RAI questions with the NAC responses presented in the standard NAC RAI response format, and four copies of the Revision LWT-06C changed SAR pages for Reference 2. The changed NAC-LWT SAR pages incorporate the requested information. In addition to the requested information, some minor editorial changes have been included on the changed SAR pages to improve clarity of the information presented.

Consistent with NAC administrative practice, the enclosed proposed revision is numbered to uniquely identify the applicable changed pages. Revision bars mark the SAR text changes (on Revision LWT-06C pages) that are proposed in this submittal. Upon final approval, the changed pages will be reformatted, assigned the next appropriate revision number, and incorporated into the NAC-LWT SAR. A List of Effective Pages is included for clarity.

ED20060037

NMSS01

Timely completion of the technical review and approval of this amendment request will permit the shipment of the proposed contents in the NAC-LWT cask in support of the DOE NNSA Foreign Research Reactor (FRR) program. To support equipment preparation and project planning, NAC respectfully requests approval of this amendment request by July 31, 2006. In support of this request, NAC will provide proposed revised wording of the CoC by June 19, 2006.

If you have any comments or questions, please contact me on my direct line at 678-328-1274.

Sincerely,

Anthony L. Patko
Director, Licensing
Engineering

Enclosures

NAC INTERNATIONAL

RESPONSE TO THE

UNITED STATES
NUCLEAR REGULATORY COMMISSION

REQUEST FOR ADDITIONAL INFORMATION

JUNE 2, 2006

LEGAL WEIGHT TRUCK CASK (NAC-LWT)

ANSTO FUEL AMENDMENT

(TAC. NO. L23964, DOCKET NO. 71-9225)

JUNE 2006

TABLE OF CONTENTS
FOR NAC-LWT ANSTO FUEL RAI RESPONSES

Chapter 1 GENERAL DESCRIPTION ..... Page 3

Chapter 2 STRUCTURAL EVALUATION ..... Page 4

Chapter 6 CRITICALITY EVALUATION ..... Page 6

Chapter 7 OPERATING PROCEDURES ..... Page 7

CHAPTER 1 GENERAL DESCRIPTION

1-1 Clarify whether or not the MOATA fuel bundles, Mark III (Spiral fuel), and Mark IV (DIDO fuel) designs are subject to failure.

Page 1-3 does not provide any definition for damaged fuel for these designs.

Under the hypothetical accident conditions of transportation, the licensee must assure that design loads imposed upon the fuel assemblies do not lead to a failure that would invalidate design assumptions used to satisfy the criticality control requirements of 10 CFR 71.55 and the shielding and containment requirements of 10 CFR 71.51.

NAC International Response

Damaged fuel definitions in Table 1-1, SAR pages 1-2 and 1-3, are limited to those fuel types for which damaged fuel is requested as a payload type. The additional payloads requested in the ANSTO fuel amendment submittal, spiral fuel assemblies and MOATA plate bundles, do not contain damaged fuel and were, therefore, not included in this section.

The package content listing in Table 1-1, SAR page 1-2, and the ANSTO payload description in Section 1.2.3.9, page 1.2-16, are revised to specify the "intact fuel" limitation. Note that spiral fuel assemblies may be cropped by removing nonfuel-bearing hardware to fit within the basket structure and are classified as intact fuel for loading. No fuel meat is exposed by the cropping operation. This approach is consistent with previously licensed MTR and DIDO assembly loadings in the NAC-LWT cask.

In addition, the minimum clad thickness information contained in Table 1.2-4, Fuel Characteristics (Continued), on page 1.2-36, is corrected to 0.00984 inch for consistency.

The above changes are reflected in the appropriate LWT-06C revised pages.

CHAPTER 2 STRUCTURAL EVALUATION

2-1 Provide a drawing that shows the total net cross-sectional areas for the seven fuel tubes welded at the base plate as calculated by the expressions given on Pages 2.6.12-79 and 2.7.7-101. Show how these equations were derived based on the drawing.

The staff performed confirmatory calculations taking into account the cut-out slots. Staff's results differ significantly from the applicant's results.

The application must include a description of the proposed package in sufficient detail to identify the package accurately and provide a sufficient basis for the evaluation of the package per 10 CFR 71.33.

NAC International Response

Section 2.6.12.11.2 evaluates the ANSTO basket for the 1-foot end drop condition. The calculation of the cross-sectional area is shown on Page 2.6.12-101. (The calculation of the cross-sectional area for the 30-foot end drop in Section 2.7.7.13.2, page 2.7.7-79, uses the same methodology.) The dimensions used in this calculation are consistent with the dimensions shown on license drawings 315-40-140, 315-40-141 and 315-40-142, Section B-B. Section B-B depicts the areas where the tubes are in contact (welded) with the base plate, Item 6.

The first half of the equation on page 2.6.12-101 represents the 6 peripheral (Items 1-3) tubes where each has been cut 0.3-inch deep, such that only a 2.2-inch wide section of the tube wall remains in contact with the base plate (Item 6). The 2.2-inch dimension is treated conservatively as half of the tube width (2.1875 inches), or 180 degrees, which is represented in the calculation as division by two (2).

$\left[\frac{\Pi}{4}\left(D_o^2 - D_i^2\right)\times 6\right]$ is the total area of the peripheral tube contact. Dividing it by 2 compensates for the 180 degree effect of the 0.3-inch cutout.

The second half of the equation describes the center tube and compensates for the six 1.0-inch wide cutouts, 0.3-inch deep.

$$\left[\frac{\Pi}{4}\left(D_o^2 - D_i^2\right) - 6\times l_c \times t_t\right]$$

NAC International Response to RAI 2-1 (continued)

The cutouts in Item 4, center fuel tube, are not explicitly shown on the drawing due to the projected elevation hiding the center tube from view, but the 0.3-inch dimension is noted as typical for Items 1 through 4.

The following sketch is derived from Section B-B on license drawings 315-40-140, 315-40-141 and 315-40-142. The shaded sections identify the areas of evaluation.

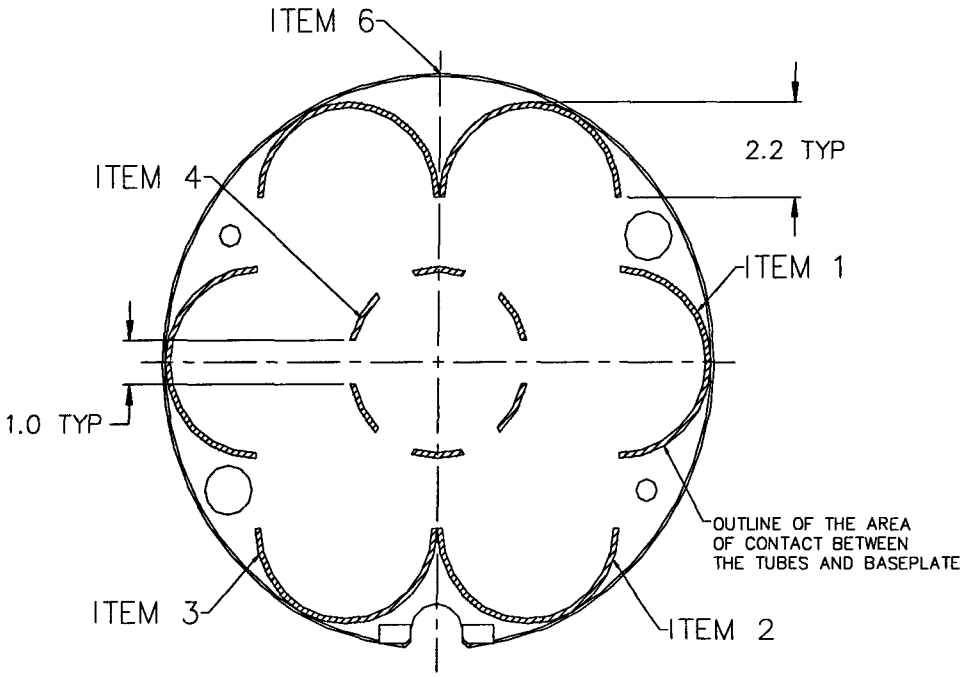

Additional clarification has been made to the SAR text on page 2.6.12-102. The first paragraph, first sentence, is revised to remove the words "base and" for clarification of the analysis that assesses the ability of the support disks to maintain their position during the end drop event. Also, the first paragraph, third sentence, of Section 2.6.12.11.3 on page 2.6.12.-102 is changed editorially from "basket support plate, which is" to "basket support plates, which are."

Two other clarifications have been made to the SAR text: page 2.6.12-101, last paragraph, first sentence, the words "base plate and" are removed; page 2.6.12-103, last paragraph, second sentence, "support plate" is changed to "support plates."

The above changes are reflected in the appropriate LWT-06C revised pages.

CHAPTER 6 CRITICALITY EVALUATION

6-1 Explain why the methodology of tying the plate width to the active fuel width is bounding for your criticality analysis.

No dimensional tolerance information is available for the active fuel width of the MOATA fuel plates as stated in Section 6.4.10.2, Page 6.4-148.

This information is necessary to ensure compliance with 10 CFR 71.33.

NAC International Response

A minimum distance between active fuel and plate width is a typical dimension for MTR (MOATA) type plates. Since no information was available on the minimum value for the MOATA plates, an approach was adopted of specifying the active fuel width tolerance by tying it to the distance between active fuel and plate width. Fuel assembly parameter studies documented in Table 6.4.10-8 indicate a rise in system reactivity with increasing active fuel width. Based on the tolerance approach taken in the analysis, increasing plate width increases active fuel width and, therefore, has the potential to affect system reactivity.

A bullet is added to the text description in Section 6.4.10.2, SAR page 6.4-148, to specify maximum active fuel width as a bounding (reactivity maximizing) parameter. Included in this bullet is the bounding active fuel width evaluated. The active fuel width is echoed in the critical parameter set at the end of Section 6.4.10.2. Note that in the analysis approach taken, the maximum evaluated active fuel width is the bounding criticality analysis parameter independent of the approach taken to set the variable.

The above addition is reflected in the appropriate LWT-06C revised page.

CHAPTER 7 OPERATING PROCEDURES

7-1 Clarify the reference to the MEU DIDO procedure in footnote 4 to Table 1.2-10.

The footnote references the MEU DIDO loading procedure, in Section 7.1.4, for loading of fuel down to 180 day cool time. It is not clear that there is an explicit procedure in Section 7.1.4 for loading MEU DIDO fuel with such a short cool time. Additionally, the spiral fuel is constrained to the MEU DIDO cool time limits as a function of burn-up. It is not clear that the range of Figure 7.1-9 is sufficient to envelop all of the burn-up percentages in Table 5.3-134.

This information is needed to satisfy the requirements of 10 CFR 71.47.

NAC International Response

Footnote 4 to Table 1.2-10, SAR page 1.2-42, is revised to refer to the loading procedure for DIDO elements (Section 7.1.4) and, within this procedure, to obtain data from the 18 watt MEU figure set. This procedure specifically invokes Figure 7.1-9 for cool time as a function of burnup (MWd/MTU) and Figure 7.1-11 for cool time as a function of ^{235}U depletion. For the 18 watt DIDO curves, the minimum cool time is 270 days, not the 180 days listed in the SAR Table 1.2-10 footnote. The 180 day value represents the minimum cool time for the 25 watt DIDO pattern, which is not applicable to the spiral fuel assembly. The footnote is, therefore, revised to list a minimum 270 day cool time. Similar text on SAR page 5.1-10 is also revised and included as a change in the LWT-06C revised pages.

Section 7.1.4, SAR page 7.1-13, is revised to clearly specify applicable loading curves for DIDO LEU, MEU and HEU fuel assembly types, rather than requiring the system user to locate the relevant curves based on the figure headings. This change is reflected in the LWT-06C revised pages.

As observed by the NRC review staff, the MEU minimum cool time curve, as a function of burnup in MWd/MTU (Figure 7.1-9), may not extend to the maximum depletion (max. 70 % ^{235}U) evaluated in Chapter 5 for the spiral fuel. As the spiral fuel contains a similar ^{235}U loading (grams) as the DIDO fuel at a significantly lower total uranium mass (due to 75 wt. % ^{235}U enrichment evaluated for the spiral fuel versus 40 wt % enrichment for the generic MEU DIDO fuel), the burnup for the spiral fuel in MWd/MTU may exceed the Figure 7.1-9 upper boundary.

NAC International Response to RAI 7-1 (continued)

Figure 7.1-11, listing minimum cool time as a function of depletion, is provided to the system user as an optional tool for verifying heat load/minimum cool time, should this occur. Note that at an identical energy generation (MWd or % ^{235}U depletion), any fuel assembly loaded with a significantly lower MTU mass than the design basis will result in a shift up in MWd/MTU, resulting in a conservative minimum cool time. Use of Figure 7.1-11 for these fuel assemblies will provide cool times consistent with the source term calculations in Chapter 5 (i.e., research reactor source term at the evaluated depletion levels is primarily correlated to energy produced, MWd or ^{235}U depleted, and not significantly correlated to total uranium mass, as demonstrated by the virtually identical depletion curves for DIDO LEU, MEU and HEU assemblies).

June 2006

Revision LWT-06C

NAC-LWT

Legal Weight Truck Cask System

SAFETY ANALYSIS REPORT

Docket No. 71-9225

NAC INTERNATIONAL

Atlanta Corporate Headquarters: 3930 East Jones Bridge Road, Norcross, Georgia 30092 USA
Phone 770-447-1144, Fax 770-447-1797, www.nacintl.com

List of Effective Pages

LIST OF EFFECTIVE PAGES

Chapter 1

1-i ..... Revision LWT-06A
1-ii ..... Revision LWT-06A
1-iii ..... Revision 37
1-iv ..... Revision LWT-06A
1-1 ..... Revision LWT-06A
1-2 .....Revision LWT-06C
1-3 ..... Revision LWT-06A
1.1-1 ..... Revision LWT-06A
1.1-2 ..... Revision LWT-06A
1.2-1 ..... Revision 36
1.2-2 ..... Revision 36
1.2-3 ..... Revision 36
1.2-4 ..... Revision 36
1.2-5 ..... Revision LWT-06A
1.2-6 ..... Revision LWT-06A
1.2-7 ..... Revision LWT-06A
1.2-8 ..... Revision LWT-06A
1.2-9 ..... Revision LWT-06A
1.2-10 ..... Revision LWT-06A
1.2-11 ..... Revision LWT-06A
1.2-12 ..... Revision 37
1.2-13 ..... Revision 37
1.2-14 ..... Revision 37
1.2-15 ..... Revision 37
1.2-16 .....Revision LWT-06C
1.2-17 ..... Revision LWT-06A
1.2-18 ..... Revision LWT-06A
1.2-19 ..... Revision LWT-06A
1.2-20 ..... Revision LWT-06A
1.2-21 ..... Revision LWT-06A
1.2-22 ..... Revision LWT-06A
1.2-23 ..... Revision LWT-06A
1.2-24 ..... Revision LWT-06A
1.2-25 ..... Revision LWT-06A
1.2-26 ..... Revision LWT-06A
1.2-27 ..... Revision LWT-06A
1.2-28 ..... Revision LWT-06A
1.2-29 ..... Revision LWT-06A
1.2-30 ..... Revision LWT-06A
1.2-31 ..... Revision LWT-06A
1.2-32 ..... Revision LWT-06A
1.2-33 ..... Revision LWT-06A
1.2-34 ..... Revision LWT-06A
1.2-35 ..... Revision LWT-06A
1.2-36 .....Revision LWT-06C
1.2-37 ..... Revision LWT-06A
1.2-38 ..... Revision LWT-06A
1.2-39 ..... Revision LWT-06A
1.2-40 ..... Revision LWT-06A
1.2-41 ..... Revision LWT-06A
1.2-42 .....Revision LWT-06C
1.2-43 ..... Revision LWT-06A
1.3-1 ..... Revision 36
1.4-1 ..... Revision 36
1.5-1 ..... Revision 36
1.5-2 ..... Revision 36
1.5-3 ..... Revision 36
1.5-4 ..... Revision 36
1.5-5 ..... Revision 36
1.5-6 ..... Revision 36
1.5-7 ..... Revision 36
1.5-8 ..... Revision 36
1.5-9 ..... Revision 36
1.5-10 ..... Revision 36
1.5-11 ..... Revision 36
1.5-12 ..... Revision 36
1.5-13 ..... Revision 36
1.5-14 ..... Revision 36
1.5-15 ..... Revision 36
1.5-16 ..... Revision 36

LIST OF EFFECTIVE PAGES (Continued)

1.5-17 ..... Revision 36
1.5-18 ..... Revision 36
1.5-19 ..... Revision 36
1.5-20 ..... Revision 36
1.5-21 ..... Revision 36
1.5-22 ..... Revision 36
1.5-23 ..... Revision 36
1.5-24 ..... Revision 36
1.5-25 ..... Revision 36
1.5-26 ..... Revision 36
1.5-27 ..... Revision 36
1.5-28 ..... Revision 36
1.5-29 ..... Revision 36
1.5-30 ..... Revision 36
1.5-31 ..... Revision 36
1.5-32 ..... Revision 36
1.5-33 ..... Revision 36
1.5-34 ..... Revision 36
1.5-35 ..... Revision 36
1.5-36 ..... Revision 36
1.5-37 ..... Revision 36
1.5-38 ..... Revision 36
1.5-39 ..... Revision 36
1.5-40 ..... Revision 36
1.5-41 ..... Revision 36
1.5-42 ..... Revision 36
1.5-43 ..... Revision 36
1.5-44 ..... Revision 36
1.5-45 ..... Revision 36
1.5-46 ..... Revision 36
1.5-47 ..... Revision 36
1.5-48 ..... Revision 36
1.5-49 ..... Revision 36
1.5-50 ..... Revision 36
1.5-51 ..... Revision 36
1.5-52 ..... Revision 36
1.5-53 ..... Revision 36
1.5-54 ..... Revision 36
1.5-55 ..... Revision 36
1.5-56 ..... Revision 36
1.5-57 ..... Revision 36
1.5-58 ..... Revision 36
1.5-59 ..... Revision 36
1.5-60 ..... Revision 36
1.5-61 ..... Revision 36

79 drawings in the
Chapter 1 List of Drawings

Chapter 2

2-i ..... Revision 36
2-ii ..... Revision 36
2-iii ..... Revision LWT-06A
2-iv ..... Revision LWT-06A
2-v ..... Revision LWT-06A
2-vi ..... Revision LWT-06A
2-vii ..... Revision LWT-06A
2-viii ..... Revision 36
2-ix ..... Revision 37
2-x ..... Revision 37
2-xi ..... Revision 37
2-xii ..... Revision 37
2-xiii ..... Revision 37
2-xiv ..... Revision 37
2-xv ..... Revision 36
2-xvi ..... Revision 36
2-xvii ..... Revision 37
2-xviii ..... Revision 36
2-xix ..... Revision 36
2-xx ..... Revision 36

LIST OF EFFECTIVE PAGES (Continued)

2-xxi ..... Revision 36
2-xxii ..... Revision 36
2-xxiii ..... Revision 36
2-xxiv ..... Revision 36
2-xxv ..... Revision 36
2-xxvi ..... Revision 36
2-xxvii ..... Revision 36
2-xxviii ..... Revision 36
2-xxix ..... Revision 36
2-1 ..... Revision 36
2.1.1-1 ..... Revision 36
2.1.1-2 ..... Revision 36
2.1.1-3 ..... Revision 36
2.1.2-1 ..... Revision 36
2.1.2-2 ..... Revision 36
2.1.2-3 ..... Revision 36
2.1.3-1 ..... Revision 36
2.1.3-2 ..... Revision 36
2.1.3-3 ..... Revision 36
2.1.3-4 ..... Revision 36
2.1.3-5 ..... Revision 36
2.1.3-6 ..... Revision 36
2.1.3-7 ..... Revision 36
2.1.3-8 ..... Revision 36
2.1.3-9 ..... Revision 36
2.2-1 ..... Revision 36
2.2-2 ..... Revision LWT-06A
2.2-3 ..... Revision LWT-06A
2.3-1 ..... Revision 36
2.3.1-1 ..... Revision 36
2.3.1-2 ..... Revision 36
2.3.1-3 ..... Revision 36
2.3.1-4 ..... Revision 36
2.3.1-5 ..... Revision 36
2.3.1-6 ..... Revision 36
2.3.1-7 ..... Revision 36
2.3.1-8 ..... Revision 36
2.3.1-9 ..... Revision 36
2.3.1-10 ..... Revision 36
2.3.1-11 ..... Revision 36
2.3.1-12 ..... Revision 36
2.3.1-13 ..... Revision 36
2.3.1-14 ..... Revision 36
2.4-1 ..... Revision 36
2.4.1-1 ..... Revision 36
2.4.2-1 ..... Revision 36
2.4.3-1 ..... Revision 36
2.4.4-1 ..... Revision 36
2.4.5-1 ..... Revision 36
2.4.6-1 ..... Revision 36
2.5.1-1 ..... Revision 36
2.5.1-2 ..... Revision 36
2.5.1-3 ..... Revision 36
2.5.1-4 ..... Revision 36
2.5.1-5 ..... Revision 36
2.5.1-6 ..... Revision 36
2.5.1-7 ..... Revision 36
2.5.1-8 ..... Revision 36
2.5.1-9 ..... Revision 36
2.5.1-10 ..... Revision 36
2.5.1-11 ..... Revision 36
2.5.1-12 ..... Revision 36
2.5.2-1 ..... Revision 36
2.5.2-2 ..... Revision 36
2.5.2-3 ..... Revision 36
2.5.2-4 ..... Revision 36
2.5.2-5 ..... Revision 36
2.5.2-6 ..... Revision 36
2.5.2-7 ..... Revision 36
2.5.2-8 ..... Revision 36

LIST OF EFFECTIVE PAGES (Continued)

2.5.2-9 ..... Revision 36
2.5.2-10 ..... Revision 36
2.5.2-11 ..... Revision 36
2.5.2-12 ..... Revision 36
2.5.2-13 ..... Revision 36
2.5.2-14 ..... Revision 36
2.5.2-15 ..... Revision 36
2.5.2-16 ..... Revision 36
2.5.2-17 ..... Revision 36
2.5.2-18 ..... Revision 36
2.5.2-19 ..... Revision 36
2.5.2-20 ..... Revision 36
2.6.1-1 ..... Revision 36
2.6.1-2 ..... Revision 36
2.6.1-3 ..... Revision 36
2.6.1-4 ..... Revision 36
2.6.1-5 ..... Revision 37
2.6.1-6 ..... Revision 37
2.6.1-7 ..... Revision 37
2.6.2-1 ..... Revision 36
2.6.2-2 ..... Revision 36
2.6.2-3 ..... Revision 36
2.6.2-4 ..... Revision 36
2.6.2-5 ..... Revision 37
2.6.2-6 ..... Revision 37
2.6.2-7 ..... Revision 37
2.6.3-1 ..... Revision 36
2.6.4-1 ..... Revision 36
2.6.5-1 ..... Revision 36
2.6.5-2 ..... Revision 36
2.6.6-1 ..... Revision 36
2.6.7-1 ..... Revision 36
2.6.7-2 ..... Revision 36
2.6.7-3 ..... Revision 36
2.6.7-4 ..... Revision 36
2.6.7-5 ..... Revision 36
2.6.7-6 ..... Revision 36
2.6.7-7 ..... Revision 36
2.6.7-8 ..... Revision 36
2.6.7-9 ..... Revision 36
2.6.7-10 ..... Revision 36
2.6.7-11 ..... Revision 36
2.6.7-12 ..... Revision 36
2.6.7-13 ..... Revision 36
2.6.7-14 ..... Revision 36
2.6.7-15 ..... Revision 36
2.6.7-16 ..... Revision 36
2.6.7-17 ..... Revision 36
2.6.7-18 ..... Revision 36
2.6.7-19 ..... Revision 36
2.6.7-20 ..... Revision 36
2.6.7-21 ..... Revision 36
2.6.7-22 ..... Revision 36
2.6.7-23 ..... Revision 36
2.6.7-24 ..... Revision 36
2.6.7-25 ..... Revision 36
2.6.7-26 ..... Revision 36
2.6.7-27 ..... Revision 36
2.6.7-28 ..... Revision 36
2.6.7-29 ..... Revision 36
2.6.7-30 ..... Revision 36
2.6.7-31 ..... Revision 36
2.6.7-32 ..... Revision 36
2.6.7-33 ..... Revision 36
2.6.7-34 ..... Revision 36
2.6.7-35 ..... Revision 36
2.6.7-36 ..... Revision 36
2.6.7-37 ..... Revision 36
2.6.7-38 ..... Revision 36
2.6.7-39 ..... Revision 36

LIST OF EFFECTIVE PAGES (Continued)

2.6.7-40 ..... Revision 36
2.6.7-41 ..... Revision 36
2.6.7-42 ..... Revision 36
2.6.7-43 ..... Revision 36
2.6.7-44 ..... Revision 36
2.6.7-45 ..... Revision 36
2.6.7-46 ..... Revision 36
2.6.7-47 ..... Revision 36
2.6.7-48 ..... Revision 36
2.6.7-49 ..... Revision 36
2.6.7-50 ..... Revision 36
2.6.7-51 ..... Revision 36
2.6.7-52 ..... Revision 36
2.6.7-53 ..... Revision 36
2.6.7-54 ..... Revision 36
2.6.7-55 ..... Revision 36
2.6.7-56 ..... Revision 36
2.6.7-57 ..... Revision 36
2.6.7-58 ..... Revision 36
2.6.7-59 ..... Revision 36
2.6.7-60 ..... Revision 36
2.6.7-61 ..... Revision 36
2.6.7-62 ..... Revision 36
2.6.7-63 ..... Revision 36
2.6.7-64 ..... Revision 36
2.6.7-65 ..... Revision 36
2.6.7-66 ..... Revision 36
2.6.7-67 ..... Revision 36
2.6.7-68 ..... Revision 36
2.6.7-69 ..... Revision 36
2.6.7-70 ..... Revision 36
2.6.7-71 ..... Revision 36
2.6.7-72 ..... Revision 36
2.6.7-73 ..... Revision 36
2.6.7-74 ..... Revision 36
2.6.7-75 ..... Revision 36
2.6.7-76 ..... Revision 36
2.6.7-77 ..... Revision 36
2.6.7-78 ..... Revision 36
2.6.7-79 ..... Revision 36
2.6.7-80 ..... Revision 36
2.6.7-81 ..... Revision 36
2.6.7-82 ..... Revision 36
2.6.7-83 ..... Revision 36
2.6.7-84 ..... Revision 36
2.6.7-85 ..... Revision 36
2.6.7-86 ..... Revision 36
2.6.7-87 ..... Revision 36
2.6.7-88 ..... Revision 36
2.6.7-89 ..... Revision 36
2.6.7-90 ..... Revision 36
2.6.7-91 ..... Revision 36
2.6.7-92 ..... Revision 36
2.6.7-93 ..... Revision 36
2.6.7-94 ..... Revision 36
2.6.7-95 ..... Revision 36
2.6.7-96 ..... Revision 36
2.6.7-97 ..... Revision 36
2.6.7-98 ..... Revision 36
2.6.7-99 ..... Revision 36
2.6.7-100 ..... Revision 36
2.6.7-101 ..... Revision 36
2.6.7-102 ..... Revision 36
2.6.7-103 ..... Revision 36
2.6.7-104 ..... Revision 36
2.6.7-105 ..... Revision 36
2.6.7-106 ..... Revision 36
2.6.7-107 ..... Revision 36
2.6.7-108 ..... Revision 37
2.6.7-109 ..... Revision 37

LIST OF EFFECTIVE PAGES (Continued)

2.6.7-110 ..... Revision 37
2.6.7-111 ..... Revision 37
2.6.7-112 ..... Revision 37
2.6.7-113 ..... Revision 37
2.6.7-114 ..... Revision 37
2.6.7-115 ..... Revision 37
2.6.7-116 ..... Revision 37
2.6.7-117 ..... Revision 37
2.6.7-118 ..... Revision 37
2.6.7-119 ..... Revision 37
2.6.7-120 ..... Revision 37
2.6.7-121 ..... Revision 37
2.6.7-122 ..... Revision 37
2.6.7-123 ..... Revision 37
2.6.7-124 ..... Revision 37
2.6.7-125 ..... Revision 37
2.6.7-126 ..... Revision 37
2.6.7-127 ..... Revision 37
2.6.7-128 ..... Revision 37
2.6.7-129 ..... Revision 37
2.6.7-130 ..... Revision 37
2.6.7-131 ..... Revision 37
2.6.7-132 ..... Revision 37
2.6.7-133 ..... Revision 37
2.6.7-134 ..... Revision 37
2.6.7-135 ..... Revision 37
2.6.7-136 ..... Revision 37
2.6.7-137 ..... Revision 37
2.6.7-138 ..... Revision 37
2.6.7-139 ..... Revision 36
2.6.7-140 ..... Revision 36
2.6.7-141 ..... Revision 36
2.6.7-142 ..... Revision 36
2.6.7-143 ..... Revision 36
2.6.7-144 ..... Revision 36
2.6.7-145 ..... Revision 36
2.6.7-146 ..... Revision 36
2.6.7-147 ..... Revision 36
2.6.7-148 ..... Revision 36
2.6.7-149 ..... Revision 36
2.6.8-1 ..... Revision 36
2.6.9-1 ..... Revision 36
2.6.10-1 ..... Revision 36
2.6.10-2 ..... Revision 36
2.6.10-3 ..... Revision 36
2.6.10-4 ..... Revision 36
2.6.10-5 ..... Revision 36
2.6.10-6 ..... Revision 36
2.6.10-7 ..... Revision 36
2.6.10-8 ..... Revision 36
2.6.10-9 ..... Revision 36
2.6.10-10 ..... Revision 36
2.6.10-11 ..... Revision 36
2.6.10-12 ..... Revision 36
2.6.10-13 ..... Revision 36
2.6.10-14 ..... Revision 36
2.6.10-15 ..... Revision 36
2.6.10-16 ..... Revision 36
2.6.10-17 ..... Revision 36
2.6.10-18 ..... Revision 36
2.6.11-1 ..... Revision 36
2.6.11-2 ..... Revision 36
2.6.11-3 ..... Revision 36
2.6.11-4 ..... Revision 36
2.6.11-5 ..... Revision 36
2.6.11-6 ..... Revision 36
2.6.11-7 ..... Revision 36
2.6.11-8 ..... Revision 36
2.6.11-9 ..... Revision 36
2.6.11-10 ..... Revision 36

LIST OF EFFECTIVE PAGES (Continued)

2.6.11-11 ..... Revision 36
2.6.11-12 ..... Revision 36
2.6.11-13 ..... Revision 36
2.6.11-14 ..... Revision 36
2.6.11-15 ..... Revision 36
2.6.11-16 ..... Revision 36
2.6.12-1 ..... Revision 36
2.6.12-2 ..... Revision 36
2.6.12-3 ..... Revision 36
2.6.12-4 ..... Revision 36
2.6.12-5 ..... Revision 36
2.6.12-6 ..... Revision 36
2.6.12-7 ..... Revision 36
2.6.12-8 ..... Revision 36
2.6.12-9 ..... Revision 37
2.6.12-10 ..... Revision 37
2.6.12-11 ..... Revision 37
2.6.12-12 ..... Revision 37
2.6.12-13 ..... Revision 37
2.6.12-14 ..... Revision 37
2.6.12-15 ..... Revision 37
2.6.12-16 ..... Revision 37
2.6.12-17 ..... Revision 37
2.6.12-18 ..... Revision 37
2.6.12-19 ..... Revision 37
2.6.12-20 ..... Revision 37
2.6.12-21 ..... Revision 37
2.6.12-22 ..... Revision 37
2.6.12-23 ..... Revision 37
2.6.12-24 ..... Revision 37
2.6.12-25 ..... Revision 37
2.6.12-26 ..... Revision 37
2.6.12-27 ..... Revision 37
2.6.12-28 ..... Revision 37
2.6.12-29 ..... Revision 37
2.6.12-30 ..... Revision 37
2.6.12-31 ..... Revision 37
2.6.12-32 ..... Revision 37
2.6.12-33 ..... Revision 37
2.6.12-34 ..... Revision 37
2.6.12-35 ..... Revision 37
2.6.12-36 ..... Revision 37
2.6.12-37 ..... Revision 37
2.6.12-38 ..... Revision 37
2.6.12-39 ..... Revision 37
2.6.12-40 ..... Revision 37
2.6.12-41 ..... Revision 37
2.6.12-42 ..... Revision 37
2.6.12-43 ..... Revision 37
2.6.12-44 ..... Revision 37
2.6.12-45 ..... Revision 37
2.6.12-46 ..... Revision 37
2.6.12-47 ..... Revision 37
2.6.12-48 ..... Revision 37
2.6.12-49 ..... Revision 37
2.6.12-50 ..... Revision 37
2.6.12-51 ..... Revision 37
2.6.12-52 ..... Revision 37
2.6.12-53 ..... Revision 37
2.6.12-54 ..... Revision 37
2.6.12-55 ..... Revision 37
2.6.12-56 ..... Revision 37
2.6.12-57 ..... Revision 37
2.6.12-58 ..... Revision 37
2.6.12-59 ..... Revision 37
2.6.12-60 ..... Revision 37
2.6.12-61 ..... Revision 37
2.6.12-62 ..... Revision 37
2.6.12-63 ..... Revision 37
2.6.12-64 ..... Revision 37

LIST OF EFFECTIVE PAGES (Continued)

2.6.12-65 ..... Revision 37
2.6.12-66 ..... Revision 37
2.6.12-67 ..... Revision 37
2.6.12-68 ..... Revision 37
2.6.12-69 ..... Revision 37
2.6.12-70 ..... Revision 37
2.6.12-71 ..... Revision 37
2.6.12-72 ..... Revision 37
2.6.12-73 ..... Revision 37
2.6.12-74 ..... Revision 37
2.6.12-75 ..... Revision 37
2.6.12-76 ..... Revision 37
2.6.12-77 ..... Revision 37
2.6.12-78 ..... Revision 37
2.6.12-79 ..... Revision 37
2.6.12-80 ..... Revision 37
2.6.12-81 ..... Revision 37
2.6.12-82 ..... Revision 37
2.6.12-83 ..... Revision 37
2.6.12-84 ..... Revision 37
2.6.12-85 ..... Revision 37
2.6.12-86 ..... Revision 37
2.6.12-87 ..... Revision 37
2.6.12-88 ..... Revision 37
2.6.12-89 ..... Revision 37
2.6.12-90 ..... Revision 37
2.6.12-91 ..... Revision 37
2.6.12-92 ..... Revision 37
2.6.12-93 ..... Revision 37
2.6.12-94 ..... Revision 37
2.6.12-95 ..... Revision 37
2.6.12-96 ..... Revision 37
2.6.12-97 ..... Revision LWT-06A
2.6.12-98 ..... Revision LWT-06A
2.6.12-99 ..... Revision LWT-06A
2.6.12-100 ..... Revision LWT-06A
2.6.12-101 .....Revision LWT-06C
2.6.12-102 .....Revision LWT-06C
2.6.12-103 .....Revision LWT-06C
2.6.12-104 ..... Revision LWT-06A
2.6.12-105 ..... Revision LWT-06A
2.6.12-106 ..... Revision LWT-06A
2.7-1 ..... Revision 36
2.7.1-1 ..... Revision 36
2.7.1-2 ..... Revision 36
2.7.1-3 ..... Revision 36
2.7.1-4 ..... Revision 36
2.7.1-5 ..... Revision 36
2.7.1-6 ..... Revision 36
2.7.1-7 ..... Revision 36
2.7.1-8 ..... Revision 36
2.7.1-9 ..... Revision 36
2.7.1-10 ..... Revision 36
2.7.1-11 ..... Revision 36
2.7.1-12 ..... Revision 36
2.7.1-13 ..... Revision 36
2.7.1-14 ..... Revision 36
2.7.1-15 ..... Revision 36
2.7.1-16 ..... Revision 36
2.7.1-17 ..... Revision 36
2.7.1-18 ..... Revision 36
2.7.1-19 ..... Revision 36
2.7.1-20 ..... Revision 36
2.7.1-21 ..... Revision 36
2.7.1-22 ..... Revision 36
2.7.1-23 ..... Revision 36
2.7.1-24 ..... Revision 36
2.7.1-25 ..... Revision 36
2.7.1-26 ..... Revision 36
2.7.1-27 ..... Revision 36

LIST OF EFFECTIVE PAGES (Continued)

2.7.1-28 ..... Revision 36
2.7.1-29 ..... Revision 36
2.7.1-30 ..... Revision 36
2.7.1-31 ..... Revision 36
2.7.1-32 ..... Revision 36
2.7.1-33 ..... Revision 36
2.7.1-34 ..... Revision 36
2.7.1-35 ..... Revision 36
2.7.1-36 ..... Revision 36
2.7.1-37 ..... Revision 36
2.7.1-38 ..... Revision 36
2.7.1-39 ..... Revision 36
2.7.1-40 ..... Revision 36
2.7.1-41 ..... Revision 36
2.7.1-42 ..... Revision 36
2.7.1-43 ..... Revision 36
2.7.1-44 ..... Revision 36
2.7.1-45 ..... Revision 36
2.7.1-46 ..... Revision 36
2.7.1-47 ..... Revision 36
2.7.1-48 ..... Revision 36
2.7.1-49 ..... Revision 36
2.7.1-50 ..... Revision 36
2.7.1-51 ..... Revision 36
2.7.1-52 ..... Revision 36
2.7.1-53 ..... Revision 36
2.7.1-54 ..... Revision 36
2.7.1-55 ..... Revision 36
2.7.1-56 ..... Revision 36
2.7.1-57 ..... Revision 36
2.7.1-58 ..... Revision 36
2.7.1-59 ..... Revision 36
2.7.1-60 ..... Revision 36
2.7.1-61 ..... Revision 36
2.7.1-62 ..... Revision 36
2.7.1-63 ..... Revision 36
2.7.1-64 ..... Revision 37
2.7.1-65 ..... Revision 37
2.7.1-66 ..... Revision 37
2.7.1-67 ..... Revision 37
2.7.1-68 ..... Revision 37
2.7.1-69 ..... Revision 37
2.7.1-70 ..... Revision 37
2.7.1-71 ..... Revision 37
2.7.1-72 ..... Revision 37
2.7.1-73 ..... Revision 37
2.7.1-74 ..... Revision 37
2.7.1-75 ..... Revision 37
2.7.1-76 ..... Revision 37
2.7.1-77 ..... Revision 37
2.7.1-78 ..... Revision 37
2.7.1-79 ..... Revision 36
2.7.1-80 ..... Revision 37
2.7.1-81 ..... Revision 37
2.7.1-82 ..... Revision 37
2.7.1-83 ..... Revision 36
2.7.1-84 ..... Revision 36
2.7.1-85 ..... Revision 36
2.7.1-86 ..... Revision 36
2.7.1-87 ..... Revision 37
2.7.1-88 ..... Revision 37
2.7.1-89 ..... Revision 37
2.7.1-90 ..... Revision 37
2.7.1-91 ..... Revision 37
2.7.1-92 ..... Revision 37
2.7.1-93 ..... Revision 37
2.7.1-94 ..... Revision 37
2.7.1-95 ..... Revision 37
2.7.1-96 ..... Revision 37
2.7.1-97 ..... Revision 37

LIST OF EFFECTIVE PAGES (Continued)

2.7.1-98 ..... Revision 37
2.7.1-99 ..... Revision 37
2.7.1-100 ..... Revision 37
2.7.1-101 ..... Revision 37
2.7.1-102 ..... Revision 37
2.7.1-103 ..... Revision 37
2.7.1-104 ..... Revision 37
2.7.1-105 ..... Revision 37
2.7.1-106 ..... Revision 37
2.7.1-107 ..... Revision 37
2.7.1-108 ..... Revision 37
2.7.1-109 ..... Revision 37
2.7.1-110 ..... Revision 37
2.7.1-111 ..... Revision 37
2.7.1-112 ..... Revision 37
2.7.1-113 ..... Revision 37
2.7.1-114 ..... Revision 37
2.7.1-115 ..... Revision 37
2.7.1-116 ..... Revision 37
2.7.1-117 ..... Revision 37
2.7.1-118 ..... Revision 37
2.7.1-119 ..... Revision 37
2.7.1-120 ..... Revision 37
2.7.1-121 ..... Revision 37
2.7.1-122 ..... Revision 37
2.7.1-123 ..... Revision 36
2.7.1-124 ..... Revision 36
2.7.2-1 ..... Revision 36
2.7.2-2 ..... Revision 36
2.7.2-3 ..... Revision 36
2.7.2-4 ..... Revision 36
2.7.2-5 ..... Revision 36
2.7.2-6 ..... Revision 36
2.7.2-7 ..... Revision 36
2.7.2-8 ..... Revision 36
2.7.2-9 ..... Revision 36
2.7.2-10 ..... Revision 36
2.7.2-11 ..... Revision 36
2.7.2-12 ..... Revision 36
2.7.2-13 ..... Revision 36
2.7.2-14 ..... Revision 36
2.7.2-15 ..... Revision 36
2.7.2-16 ..... Revision 36
2.7.2-17 ..... Revision 36
2.7.2-18 ..... Revision 36
2.7.2-19 ..... Revision 36
2.7.2-20 ..... Revision 36
2.7.2-21 ..... Revision 36
2.7.2-22 ..... Revision 36
2.7.2-23 ..... Revision 36
2.7.2-24 ..... Revision 36
2.7.2-25 ..... Revision 36
2.7.2-26 ..... Revision 36
2.7.3-1 ..... Revision 36
2.7.3-2 ..... Revision 36
2.7.3-3 ..... Revision 36
2.7.3-4 ..... Revision 36
2.7.3-5 ..... Revision 36
2.7.3-6 ..... Revision 36
2.7.4-1 ..... Revision 36
2.7.5-1 ..... Revision 36
2.7.5-2 ..... Revision 36
2.7.5-3 ..... Revision 36
2.7.5-4 ..... Revision 36
2.7.5-5 ..... Revision 36
2.7.5-6 ..... Revision 36
2.7.5-7 ..... Revision 36
2.7.6-1 ..... Revision 36
2.7.6-2 ..... Revision 36
2.7.6-3 ..... Revision 36

LIST OF EFFECTIVE PAGES (Continued)

2.7.6-4 ..... Revision 36
2.7.7-1 ..... Revision 36
2.7.7-2 ..... Revision 36
2.7.7-3 ..... Revision 36
2.7.7-4 ..... Revision 36
2.7.7-5 ..... Revision 36
2.7.7-6 ..... Revision 36
2.7.7-7 ..... Revision 36
2.7.7-8 ..... Revision 37
2.7.7-9 ..... Revision 37
2.7.7-10 ..... Revision 37
2.7.7-11 ..... Revision 37
2.7.7-12 ..... Revision 37
2.7.7-13 ..... Revision 37
2.7.7-14 ..... Revision 37
2.7.7-15 ..... Revision 37
2.7.7-16 ..... Revision 37
2.7.7-17 ..... Revision 37
2.7.7-18 ..... Revision 37
2.7.7-19 ..... Revision 37
2.7.7-20 ..... Revision 37
2.7.7-21 ..... Revision 37
2.7.7-22 ..... Revision 37
2.7.7-23 ..... Revision 37
2.7.7-24 ..... Revision 37
2.7.7-25 ..... Revision 37
2.7.7-26 ..... Revision 36
2.7.7-27 ..... Revision 36
2.7.7-28 ..... Revision 36
2.7.7-29 ..... Revision 36
2.7.7-30 ..... Revision 36
2.7.7-31 ..... Revision 36
2.7.7-32 ..... Revision 36
2.7.7-33 ..... Revision 36
2.7.7-34 ..... Revision 36
2.7.7-35 ..... Revision 36
2.7.7-36 ..... Revision 36
2.7.7-37 ..... Revision 36
2.7.7-38 ..... Revision 36
2.7.7-39 ..... Revision 36
2.7.7-40 ..... Revision 36
2.7.7-41 ..... Revision 36
2.7.7-42 ..... Revision 36
2.7.7-43 ..... Revision 36
2.7.7-44 ..... Revision 36
2.7.7-45 ..... Revision 36
2.7.7-46 ..... Revision 36
2.7.7-47 ..... Revision 36
2.7.7-48 ..... Revision 36
2.7.7-49 ..... Revision 36
2.7.7-50 ..... Revision 36
2.7.7-51 ..... Revision 36
2.7.7-52 ..... Revision 36
2.7.7-53 ..... Revision 36
2.7.7-54 ..... Revision 36
2.7.7-55 ..... Revision 36
2.7.7-56 ..... Revision 36
2.7.7-57 ..... Revision 36
2.7.7-58 ..... Revision 36
2.7.7-59 ..... Revision 36
2.7.7-60 ..... Revision 36
2.7.7-61 ..... Revision 36
2.7.7-62 ..... Revision 36
2.7.7-63 ..... Revision 36
2.7.7-64 ..... Revision 36
2.7.7-65 ..... Revision 36
2.7.7-66 ..... Revision 36
2.7.7-67 ..... Revision 36
2.7.7-68 ..... Revision 36
2.7.7-69 ..... Revision 36

LIST OF EFFECTIVE PAGES (Continued)

2.7.7-70 ..... Revision 36
2.7.7-71 ..... Revision 36
2.7.7-72 ..... Revision 36
2.7.7-73 ..... Revision 36
2.7.7-74 ..... Revision 36
2.7.7-75 ..... Revision 36
2.7.7-76 ..... Revision LWT-06A
2.7.7-77 ..... Revision LWT-06A
2.7.7-78 ..... Revision LWT-06A
2.7.7-79 ..... Revision LWT-06A
2.7.7-80 ..... Revision LWT-06A
2.8-1 ..... Revision 36
2.9-1 ..... Revision 36
2.9-2 ..... Revision 36
2.9-3 ..... Revision 36
2.9-4 ..... Revision 36
2.9-5 ..... Revision 37
2.9-6 ..... Revision LWT-06A
2.9-7 ..... Revision LWT-06A
2.9-8 ..... Revision LWT-06A
2.9-9 ..... Revision LWT-06A
2.9-10 ..... Revision LWT-06A
2.9-11 ..... Revision LWT-06A
2.9-12 ..... Revision LWT-06A
2.9-13 ..... Revision LWT-06A
2.9-14 ..... Revision LWT-06A
2.10.1-1 ..... Revision 36
2.10.1-2 ..... Revision 36
2.10.1-3 ..... Revision 36
2.10.2-1 ..... Revision 36
2.10.2-2 ..... Revision 36
2.10.2-3 ..... Revision 36
2.10.2-4 ..... Revision 36
2.10.2-5 ..... Revision 36
2.10.2-6 ..... Revision 36
2.10.2-7 ..... Revision 36
2.10.2-8 ..... Revision 36
2.10.2-9 ..... Revision 36
2.10.2-10 ..... Revision 36
2.10.2-11 ..... Revision 36
2.10.2-12 ..... Revision 36
2.10.2-13 ..... Revision 36
2.10.2-14 ..... Revision 36
2.10.2-15 ..... Revision 36
2.10.2-16 ..... Revision 36
2.10.2-17 ..... Revision 36
2.10.2-18 ..... Revision 36
2.10.2-19 ..... Revision 36
2.10.2-20 ..... Revision 36
2.10.2-21 ..... Revision 36
2.10.2-22 ..... Revision 36
2.10.2-23 ..... Revision 36
2.10.2-24 ..... Revision 36
2.10.2-25 ..... Revision 36
2.10.2-26 ..... Revision 36
2.10.2-27 ..... Revision 36
2.10.2-28 ..... Revision 36
2.10.2-29 ..... Revision 36
2.10.2-30 ..... Revision 36
2.10.2-31 ..... Revision 36
2.10.2-32 ..... Revision 36
2.10.2-33 ..... Revision 36
2.10.2-34 ..... Revision 36
2.10.2-35 ..... Revision 36
2.10.2-36 ..... Revision 36
2.10.2-37 ..... Revision 36
2.10.2-38 ..... Revision 36
2.10.2-39 ..... Revision 36
2.10.2-40 ..... Revision 36
2.10.2-41 ..... Revision 36

LIST OF EFFECTIVE PAGES (Continued)

2.10.2-42 ..... Revision 36
2.10.2-43 ..... Revision 36
2.10.2-44 ..... Revision 36
2.10.2-45 ..... Revision 36
2.10.2-46 ..... Revision 36
2.10.2-47 ..... Revision 36
2.10.2-48 ..... Revision 36
2.10.2-49 ..... Revision 36
2.10.3-1 ..... Revision 36
2.10.3-2 ..... Revision 36
2.10.3-3 ..... Revision 36
2.10.3-4 ..... Revision 36
2.10.3-5 ..... Revision 36
2.10.3-6 ..... Revision 36
2.10.3-7 ..... Revision 36
2.10.3-8 ..... Revision 36
2.10.3-9 ..... Revision 36
2.10.3-10 ..... Revision 36
2.10.3-11 ..... Revision 36
2.10.3-12 ..... Revision 36
2.10.3-13 ..... Revision 36
2.10.3-14 ..... Revision 36
2.10.3-15 ..... Revision 36
2.10.3-16 ..... Revision 36
2.10.3-17 ..... Revision 36
2.10.3-18 ..... Revision 36
2.10.4-1 ..... Revision 36
2.10.4-2 ..... Revision 36
2.10.4-3 ..... Revision 36
2.10.4-4 ..... Revision 36
2.10.4-5 ..... Revision 36
2.10.4-6 ..... Revision 36
2.10.4-7 ..... Revision 36
2.10.4-8 ..... Revision 36
2.10.4-9 ..... Revision 36
2.10.4-10 ..... Revision 36
2.10.4-11 ..... Revision 36
2.10.4-12 ..... Revision 36
2.10.5-1 ..... Revision 36
2.10.6-1 ..... Revision 36
2.10.6-2 ..... Revision 36
2.10.6-3 ..... Revision 36
2.10.6-4 ..... Revision 36
2.10.6-5 ..... Revision 36
2.10.6-6 ..... Revision 36
2.10.6-7 ..... Revision 36
2.10.6-8 ..... Revision 36
2.10.6-9 ..... Revision 36
2.10.6-10 ..... Revision 36
2.10.6-11 ..... Revision 36
2.10.6-12 ..... Revision 36
2.10.6-13 ..... Revision 36
2.10.6-14 ..... Revision 36
2.10.6-15 ..... Revision 36
2.10.6-16 ..... Revision 36
2.10.6-17 ..... Revision 36
2.10.6-18 ..... Revision 36
2.10.6-19 ..... Revision 36
2.10.6-20 ..... Revision 36
2.10.6-21 ..... Revision 36
2.10.6-22 ..... Revision 36
2.10.7-1 ..... Revision 36
2.10.7-2 ..... Revision 36
2.10.7-3 ..... Revision 36
2.10.7-4 ..... Revision 36
2.10.7-5 ..... Revision 36
2.10.7-6 ..... Revision 36
2.10.7-7 ..... Revision 36
2.10.7-8 ..... Revision 36
2.10.7-9 ..... Revision 36

LIST OF EFFECTIVE PAGES (Continued)

2.10.7-10 ..... Revision 36
2.10.7-11 ..... Revision 36
2.10.7-12 ..... Revision 36
2.10.7-13 ..... Revision 36
2.10.7-14 ..... Revision 36
2.10.7-15 ..... Revision 36
2.10.7-16 ..... Revision 36
2.10.7-17 ..... Revision 36
2.10.7-18 ..... Revision 36
2.10.7-19 ..... Revision 36
2.10.7-20 ..... Revision 36
2.10.7-21 ..... Revision 36
2.10.7-22 ..... Revision 36
2.10.7-23 ..... Revision 36
2.10.7-24 ..... Revision 36
2.10.7-25 ..... Revision 36
2.10.7-26 ..... Revision 36
2.10.7-27 ..... Revision 36
2.10.7-28 ..... Revision 36
2.10.7-29 ..... Revision 36
2.10.7-30 ..... Revision 36
2.10.7-31 ..... Revision 36
2.10.7-32 ..... Revision 36
2.10.7-33 ..... Revision 36
2.10.7-34 ..... Revision 36
2.10.7-35 ..... Revision 36
2.10.7-36 ..... Revision 36
2.10.7-37 ..... Revision 36
2.10.7-38 ..... Revision 36
2.10.7-39 ..... Revision 36
2.10.7-40 ..... Revision 36
2.10.7-41 ..... Revision 36
2.10.7-42 ..... Revision 36
2.10.7-43 ..... Revision 36
2.10.7-44 ..... Revision 36
2.10.7-45 ..... Revision 36
2.10.7-46 ..... Revision 36
2.10.7-47 ..... Revision 36
2.10.7-48 ..... Revision 36
2.10.7-49 ..... Revision 36
2.10.7-50 ..... Revision 36
2.10.7-51 ..... Revision 36
2.10.7-52 ..... Revision 36
2.10.7-53 ..... Revision 36
2.10.7-54 ..... Revision 36
2.10.7-55 ..... Revision 36
2.10.7-56 ..... Revision 36
2.10.7-57 ..... Revision 36
2.10.7-58 ..... Revision 36
2.10.7-59 ..... Revision 36
2.10.7-60 ..... Revision 36
2.10.7-61 ..... Revision 36
2.10.7-62 ..... Revision 36
2.10.7-63 ..... Revision 36
2.10.7-64 ..... Revision 36
2.10.7-65 ..... Revision 36
2.10.7-66 ..... Revision 36
2.10.8-1 ..... Revision 36
2.10.8-2 ..... Revision 36
2.10.8-3 ..... Revision 36
2.10.8-4 ..... Revision 36
2.10.8-5 ..... Revision 36
2.10.8-6 ..... Revision 36
2.10.8-7 ..... Revision 36
2.10.8-8 ..... Revision 36
2.10.8-9 ..... Revision 36
2.10.8-10 ..... Revision 36
2.10.8-11 ..... Revision 36
2.10.8-12 ..... Revision 36
2.10.8-13 ..... Revision 36

LIST OF EFFECTIVE PAGES (Continued)

2.10.8-14 ..... Revision 36
2.10.8-15 ..... Revision 36
2.10.8-16 ..... Revision 36
2.10.8-17 ..... Revision 36
2.10.8-18 ..... Revision 36
2.10.8-19 ..... Revision 36
2.10.8-20 ..... Revision 36
2.10.8-21 ..... Revision 36
2.10.8-22 ..... Revision 36
2.10.8-23 ..... Revision 36
2.10.8-24 ..... Revision 36
2.10.8-25 ..... Revision 36
2.10.8-26 ..... Revision 36
2.10.8-27 ..... Revision 36
2.10.8-28 ..... Revision 36
2.10.8-29 ..... Revision 36
2.10.8-30 ..... Revision 36
2.10.8-31 ..... Revision 36
2.10.8-32 ..... Revision 36
2.10.8-33 ..... Revision 36
2.10.8-34 ..... Revision 36
2.10.8-35 ..... Revision 36
2.10.8-36 ..... Revision 36
2.10.8-37 ..... Revision 36
2.10.8-38 ..... Revision 36
2.10.8-39 ..... Revision 36
2.10.8-40 ..... Revision 36
2.10.8-41 ..... Revision 36
2.10.8-42 ..... Revision 36
2.10.8-43 ..... Revision 36
2.10.8-44 ..... Revision 36
2.10.8-45 ..... Revision 36
2.10.8-46 ..... Revision 36
2.10.8-47 ..... Revision 36
2.10.8-48 ..... Revision 36
2.10.8-49 ..... Revision 36
2.10.8-50 ..... Revision 36
2.10.8-51 ..... Revision 36
2.10.8-52 ..... Revision 36
2.10.8-53 ..... Revision 36
2.10.8-54 ..... Revision 36
2.10.8-55 ..... Revision 36
2.10.8-56 ..... Revision 36
2.10.8-57 ..... Revision 36
2.10.8-58 ..... Revision 36
2.10.8-59 ..... Revision 36
2.10.8-60 ..... Revision 36
2.10.8-61 ..... Revision 36
2.10.8-62 ..... Revision 36
2.10.8-63 ..... Revision 36
2.10.8-64 ..... Revision 36
2.10.8-65 ..... Revision 36
2.10.8-66 ..... Revision 36
2.10.8-67 ..... Revision 36
2.10.8-68 ..... Revision 36
2.10.8-69 ..... Revision 36
2.10.8-70 ..... Revision 36
2.10.8-71 ..... Revision 36
2.10.9-1 ..... Revision 36
2.10.9-2 ..... Revision 36
2.10.9-3 ..... Revision 36
2.10.9-4 ..... Revision 36
2.10.9-5 ..... Revision 36
2.10.9-6 ..... Revision 36
2.10.9-7 ..... Revision 36
2.10.9-8 ..... Revision 36
2.10.9-9 ..... Revision 36
2.10.9-10 ..... Revision 36
2.10.10-1 ..... Revision 36
2.10.10-2 ..... Revision 36

LIST OF EFFECTIVE PAGES (Continued)

2.10.10-3 ..... Revision 36
2.10.10-4 ..... Revision 36
2.10.10-5 ..... Revision 36
2.10.10-6 ..... Revision 36
2.10.10-7 ..... Revision 36
2.10.10-8 ..... Revision 36
2.10.10-9 ..... Revision 36
2.10.10-10 ..... Revision 36
2.10.10-11 ..... Revision 36
2.10.10-12 ..... Revision 36
2.10.10-13 ..... Revision 36
2.10.10-14 ..... Revision 36
2.10.10-15 ..... Revision 36
2.10.10-16 ..... Revision 36
2.10.10-17 ..... Revision 36
2.10.10-18 ..... Revision 36
2.10.10-19 ..... Revision 36
2.10.10-20 ..... Revision 36
2.10.10-21 ..... Revision 36
2.10.10-22 ..... Revision 36
2.10.10-23 ..... Revision 36
2.10.10-24 ..... Revision 36
2.10.10-25 ..... Revision 36
2.10.10-26 ..... Revision 36
2.10.10-27 ..... Revision 36
2.10.10-28 ..... Revision 36
2.10.10-29 ..... Revision 36
2.10.10-30 ..... Revision 36
2.10.10-31 ..... Revision 36
2.10.10-32 ..... Revision 36
2.10.10-33 ..... Revision 36
2.10.10-34 ..... Revision 36
2.10.10-35 ..... Revision 36
2.10.10-36 ..... Revision 36
2.10.10-37 ..... Revision 36
2.10.10-38 ..... Revision 36
2.10.10-39 ..... Revision 36
2.10.10-40 ..... Revision 36
2.10.10-41 ..... Revision 36
2.10.10-42 ..... Revision 36
2.10.10-43 ..... Revision 36
2.10.10-44 ..... Revision 36
2.10.10-45 ..... Revision 36
2.10.10-46 ..... Revision 36
2.10.10-47 ..... Revision 36
2.10.10-48 ..... Revision 36
2.10.10-49 ..... Revision 36
2.10.10-50 ..... Revision 36
2.10.10-51 ..... Revision 36
2.10.10-52 ..... Revision 36
2.10.10-53 ..... Revision 36
2.10.10-54 ..... Revision 36
2.10.10-55 ..... Revision 36
2.10.10-56 ..... Revision 36
2.10.10-57 ..... Revision 36
2.10.10-58 ..... Revision 36
2.10.10-59 ..... Revision 36
2.10.10-60 ..... Revision 36
2.10.10-61 ..... Revision 36
2.10.10-62 ..... Revision 36
2.10.10-63 ..... Revision 36
2.10.10-64 ..... Revision 36
2.10.10-65 ..... Revision 36
2.10.10-66 ..... Revision 36
2.10.10-67 ..... Revision 36
2.10.10-68 ..... Revision 36
2.10.10-69 ..... Revision 36
2.10.10-70 ..... Revision 36
2.10.10-71 ..... Revision 36
2.10.10-72 ..... Revision 36

LIST OF EFFECTIVE PAGES (Continued)

2.10.10-73 ..... Revision 36
2.10.10-74 ..... Revision 36
2.10.10-75 ..... Revision 36
2.10.10-76 ..... Revision 36
2.10.10-77 ..... Revision 36
2.10.10-78 ..... Revision 36
2.10.10-79 ..... Revision 36
2.10.10-80 ..... Revision 36
2.10.10-81 ..... Revision 36
2.10.10-82 ..... Revision 36
2.10.10-83 ..... Revision 36
2.10.10-84 ..... Revision 36
2.10.10-85 ..... Revision 36
2.10.10-86 ..... Revision 36
2.10.10-87 ..... Revision 36
2.10.10-88 ..... Revision 36
2.10.10-89 ..... Revision 36
2.10.10-90 ..... Revision 36
2.10.10-91 ..... Revision 36
2.10.10-92 ..... Revision 36
2.10.10-93 ..... Revision 36
2.10.10-94 ..... Revision 36
2.10.10-95 ..... Revision 36
2.10.10-96 ..... Revision 36
2.10.10-97 ..... Revision 36
2.10.10-98 ..... Revision 36
2.10.10-99 ..... Revision 36
2.10.11-1 ..... Revision 36
2.10.11-2 ..... Revision 36
2.10.11-3 ..... Revision 36
2.10.11-4 ..... Revision 36
2.10.11-5 ..... Revision 36
2.10.11-6 ..... Revision 36
2.10.11-7 ..... Revision 36
2.10.11-8 ..... Revision 36
2.10.11-9 ..... Revision 36
2.10.11-10 ..... Revision 36
2.10.12-1 ..... Revision 36
2.10.12-2 ..... Revision 36
2.10.12-3 ..... Revision 36
2.10.12-4 ..... Revision 36
2.10.12-5 ..... Revision 36
2.10.12-6 ..... Revision 36
2.10.12-7 ..... Revision 36
2.10.12-8 ..... Revision 36
2.10.12-9 ..... Revision 36
2.10.12-10 ..... Revision 36
2.10.12-11 ..... Revision 36
2.10.12-12 ..... Revision 36
2.10.12-13 ..... Revision 36
2.10.12-14 ..... Revision 36
2.10.12-15 ..... Revision 36
2.10.12-16 ..... Revision 36
2.10.12-17 ..... Revision 36
2.10.12-18 ..... Revision 36
2.10.12-19 ..... Revision 36
2.10.12-20 ..... Revision 36
2.10.12-21 ..... Revision 36
2.10.12-22 ..... Revision 36
2.10.12-23 ..... Revision 36
2.10.12-24 ..... Revision 36
2.10.12-25 ..... Revision 36
2.10.12-26 ..... Revision 36
2.10.12-27 ..... Revision 36
2.10.12-28 ..... Revision 36
2.10.12-29 ..... Revision 36
2.10.12-30 ..... Revision 36
2.10.12-31 ..... Revision 36
2.10.12-32 ..... Revision 36
2.10.13-1 ..... Revision 36

LIST OF EFFECTIVE PAGES (Continued)

2.10.13-2 ..... Revision 36
2.10.13-3 ..... Revision 36
2.10.13-4 ..... Revision 36
2.10.13-5 ..... Revision 36
2.10.13-6 ..... Revision 36
2.10.13-7 ..... Revision 36
2.10.13-8 ..... Revision 36
2.10.13-9 ..... Revision 36
2.10.13-10 ..... Revision 36
2.10.13-11 ..... Revision 36
2.10.13-12 ..... Revision 36
2.10.13-13 ..... Revision 36
2.10.13-14 ..... Revision 36
2.10.13-15 ..... Revision 36
2.10.13-16 ..... Revision 36
2.10.13-17 ..... Revision 36
2.10.13-18 ..... Revision 36
2.10.13-19 ..... Revision 36
2.10.13-20 ..... Revision 36
2.10.14-1 ..... Revision 36
2.10.14-2 ..... Revision 36
2.10.14-3 ..... Revision 36
2.10.14-4 ..... Revision 36
2.10.14-5 ..... Revision 36
2.10.14-6 ..... Revision 36
2.10.14-7 ..... Revision 36
2.10.14-8 ..... Revision 36
2.10.14-9 ..... Revision 36
2.10.14-10 ..... Revision 36
2.10.14-11 ..... Revision 37
2.10.14-12 ..... Revision 36
2.10.14-13 ..... Revision 36
2.10.14-14 ..... Revision 36
2.10.14-15 ..... Revision 36
2.10.14-16 ..... Revision 36
2.10.14-17 ..... Revision 36
2.10.14-18 ..... Revision 36
2.10.14-19 ..... Revision 36
2.10.14-20 ..... Revision 36
2.10.14-21 ..... Revision 36
2.10.14-22 ..... Revision 36
2.10.14-23 ..... Revision 36
2.10.14-24 ..... Revision 36
2.10.14-25 ..... Revision 36
2.10.14-26 ..... Revision 36
2.10.14-27 ..... Revision 36
2.10.14-28 ..... Revision 36
2.10.14-29 ..... Revision 36
2.10.14-30 ..... Revision 36
2.10.14-31 ..... Revision 36
2.10.14-32 ..... Revision 36
2.10.14-33 ..... Revision 36
2.10.14-34 ..... Revision 36
2.10.14-35 ..... Revision 36
2.10.14-36 ..... Revision 36
2.10.14-37 ..... Revision 36
2.10.14-38 ..... Revision 36
2.10.14-39 ..... Revision 36
2.10.15-1 ..... Revision 36
2.10.15-2 ..... Revision 36
2.10.15-3 ..... Revision 36
2.10.15-4 ..... Revision 36
2.10.15-5 ..... Revision 36
2.10.15-6 ..... Revision 36
2.10.15-7 ..... Revision 36
2.10.15-8 ..... Revision 36
2.10.15-9 ..... Revision 36
2.10.15-10 ..... Revision 36
2.10.15-11 ..... Revision 36
2.10.15-12 ..... Revision 36

LIST OF EFFECTIVE PAGES (Continued)

Chapter 3

3-i ..... Revision LWT-06A
3-ii ..... Revision LWT-06A
3-iii ..... Revision LWT-06A
3-iv ..... Revision LWT-06A
3.1-1 ..... Revision 37
3.1-2 ..... Revision 37
3.2-1 ..... Revision 36
3.2-2 ..... Revision 36
3.2-3 ..... Revision 36
3.2-4 ..... Revision 36
3.2-5 ..... Revision 36
3.2-6 ..... Revision 36
3.2-7 ..... Revision 36
3.2-8 ..... Revision 36
3.2-9 ..... Revision 36
3.2-10 ..... Revision 36
3.2-11 ..... Revision 36
3.3-1 ..... Revision 36
3.3-2 ..... Revision 36
3.4-1 ..... Revision 36
3.4-2 ..... Revision 36
3.4-3 ..... Revision 36
3.4-4 ..... Revision 36
3.4-5 ..... Revision 36
3.4-6 ..... Revision 36
3.4-7 ..... Revision 36
3.4-8 ..... Revision 36
3.4-9 ..... Revision 36
3.4-10 ..... Revision 36
3.4-11 ..... Revision 36
3.4-12 ..... Revision 36
3.4-13 ..... Revision 36
3.4-14 ..... Revision 36
3.4-15 ..... Revision 36
3.4-16 ..... Revision 36
3.4-17 ..... Revision 36
3.4-18 ..... Revision 36
3.4-19 ..... Revision 36
3.4-20 ..... Revision 36
3.4-21 ..... Revision 36
3.4-22 ..... Revision 36
3.4-23 ..... Revision 36
3.4-24 ..... Revision 36
3.4-25 ..... Revision 36
3.4-26 ..... Revision 36
3.4-27 ..... Revision 36
3.4-28 ..... Revision 36
3.4-29 ..... Revision 37
3.4-30 ..... Revision LWT-06A
3.4-31 ..... Revision LWT-06A
3.4-32 ..... Revision LWT-06A
3.4-33 ..... Revision LWT-06A
3.4-34 ..... Revision LWT-06A
3.4-35 ..... Revision LWT-06A
3.4-36 ..... Revision LWT-06A
3.4-37 ..... Revision LWT-06A
3.4-38 ..... Revision LWT-06A
3.4-39 ..... Revision LWT-06A
3.4-40 ..... Revision LWT-06A
3.4-41 ..... Revision LWT-06A
3.4-42 ..... Revision LWT-06A
3.4-43 ..... Revision LWT-06A
3.4-44 ..... Revision LWT-06A
3.4-45 ..... Revision LWT-06A
3.4-46 ..... Revision LWT-06A
3.4-47 ..... Revision LWT-06A
3.4-48 ..... Revision LWT-06A
3.4-49 ..... Revision LWT-06A

LIST OF EFFECTIVE PAGES (Continued)

3.4-50 ..... Revision LWT-06A
3.4-51 ..... Revision LWT-06A
3.4-52 ..... Revision LWT-06A
3.4-53 ..... Revision LWT-06A
3.4-54 ..... Revision LWT-06A
3.4-55 ..... Revision LWT-06A
3.4-56 ..... Revision LWT-06A
3.4-57 ..... Revision LWT-06A
3.4-58 ..... Revision LWT-06A
3.4-59 ..... Revision LWT-06A
3.4-60 ..... Revision LWT-06A
3.4-61 ..... Revision LWT-06A
3.4-62 ..... Revision LWT-06A
3.4-63 ..... Revision LWT-06A
3.4-64 ..... Revision LWT-06A
3.4-65 ..... Revision LWT-06A
3.4-66 ..... Revision LWT-06A
3.4-67 ..... Revision LWT-06A
3.4-68 ..... Revision LWT-06A
3.4-69 ..... Revision LWT-06A
3.4-70 ..... Revision LWT-06A
3.4-71 ..... Revision LWT-06A
3.4-72 ..... Revision LWT-06A
3.4-73 ..... Revision LWT-06A
3.4-74 ..... Revision LWT-06A
3.4-75 ..... Revision LWT-06A
3.4-76 ..... Revision LWT-06A
3.4-77 ..... Revision LWT-06A
3.4-78 ..... Revision LWT-06A
3.4-79 ..... Revision LWT-06A
3.4-80 ..... Revision LWT-06A
3.4-81 ..... Revision LWT-06A
3.4-82 ..... Revision LWT-06A
3.5-1 ..... Revision 36
3.5-2 ..... Revision 36
3.5-3 ..... Revision 36
3.5-4 ..... Revision 36
3.5-5 ..... Revision 36
3.5-6 ..... Revision 36
3.5-7 ..... Revision 36
3.5-8 ..... Revision 36
3.5-9 ..... Revision 36
3.5-10 ..... Revision 36
3.5-11 ..... Revision LWT-06A
3.5-12 ..... Revision LWT-06A
3.5-13 ..... Revision LWT-06A
3.5-14 ..... Revision LWT-06A
3.5-15 ..... Revision LWT-06A
3.5-16 ..... Revision LWT-06A
3.5-17 ..... Revision LWT-06A
3.5-18 ..... Revision LWT-06A
3.5-19 ..... Revision LWT-06A
3.5-20 ..... Revision LWT-06A
3.5-21 ..... Revision LWT-06A
3.5-22 ..... Revision LWT-06A
3.5-23 ..... Revision LWT-06A
3.5-24 ..... Revision LWT-06A
3.5-25 ..... Revision LWT-06A
3.5-26 ..... Revision LWT-06A
3.5-27 ..... Revision LWT-06A
3.5-28 ..... Revision LWT-06A
3.5-29 ..... Revision LWT-06A
3.5-30 ..... Revision LWT-06A
3.5-31 ..... Revision LWT-06A
3.5-32 ..... Revision LWT-06A
3.5-33 ..... Revision LWT-06A
3.5-34 ..... Revision LWT-06A
3.6-1 ..... Revision 36
3.6-2 ..... Revision 36
3.6-3 ..... Revision 36

LIST OF EFFECTIVE PAGES (Continued)

3.6-4 ..... Revision 36
3.6-5 ..... Revision 36
3.6-6 ..... Revision 36
3.6-7 ..... Revision 36
3.6-8 ..... Revision 36
3.6-9 ..... Revision 36
3.6-10 ..... Revision 36
3.6-11 ..... Revision 36
3.6-12 ..... Revision 36

Chapter 4

4-i ..... Revision LWT-06A
4-ii ..... Revision 37
4-iii ..... Revision 37
4.1-1 ..... Revision 36
4.1-2 ..... Revision 36
4.1-3 ..... Revision 36
4.2-1 ..... Revision 37
4.2-2 ..... Revision LWT-06A
4.2-3 ..... Revision LWT-06A
4.2-4 ..... Revision 37
4.2-5 ..... Revision 37
4.2-6 ..... Revision 37
4.2-7 ..... Revision 37
4.2-8 ..... Revision 37
4.2-9 ..... Revision 37
4.2-10 ..... Revision 36
4.2-11 ..... Revision 36
4.2-12 ..... Revision 36
4.3-1 ..... Revision 37
4.3-2 ..... Revision 36
4.3-3 ..... Revision 36
4.3-4 ..... Revision 36
4.3-5 ..... Revision 36
4.3-6 ..... Revision 36
4.4-1 ..... Revision 36
4.4-2 ..... Revision 36
4.5-1 ..... Revision 36
4.5-2 ..... Revision 36
4.5-3 ..... Revision 36
4.5-4 ..... Revision 36
4.5-5 ..... Revision 36
4.5-6 ..... Revision 36
4.5-7 ..... Revision 36
4.5-8 ..... Revision 36
4.5-9 ..... Revision 36
4.5-10 ..... Revision 36
4.5-11 ..... Revision 36
4.5-12 ..... Revision 36
4.5-13 ..... Revision 36
4.5-14 ..... Revision 36
4.5-15 ..... Revision 36
4.5-16 ..... Revision 36
4.5-17 ..... Revision 36
4.5-18 ..... Revision 36
4.5-19 ..... Revision 36
4.5-20 ..... Revision 36
4.5-21 ..... Revision 36
4.5-22 ..... Revision 36
4.5-23 ..... Revision 36
4.5-24 ..... Revision 36
4.5-25 ..... Revision 36
4.5-26 ..... Revision 36
4.5-27 ..... Revision 36
4.5-28 ..... Revision 36
4.5-29 ..... Revision 36
4.5-30 ..... Revision 36
4.5-31 ..... Revision 36
4.5-32 ..... Revision 36

LIST OF EFFECTIVE PAGES (Continued)

4.5-33 ..... Revision 36
4.5-34 ..... Revision 36
4.5-35 ..... Revision 36
4.5-36 ..... Revision 36
4.5-37 ..... Revision 36
4.5-38 ..... Revision 36
4.5-39 ..... Revision 36
4.5-40 ..... Revision 36
4.5-41 ..... Revision 36
4.5-42 ..... Revision 36
4.5-43 ..... Revision 36
4.5-44 ..... Revision 36
4.5-45 ..... Revision 36
4.5-46 ..... Revision 36
4.5-47 ..... Revision 36
4.5-48 ..... Revision 36
4.5-49 ..... Revision 36
4.5-50 ..... Revision 36
4.5-51 ..... Revision 36
4.5-52 ..... Revision 36
4.5-53 ..... Revision 36
4.5-54 ..... Revision 36
4.5-55 ..... Revision 36
4.5-56 ..... Revision 36
4.5-57 ..... Revision 36
4.5-58 ..... Revision 36
4.5-59 ..... Revision 36
4.5-60 ..... Revision 36
4.5-61 ..... Revision 36
4.5-62 ..... Revision 36
4.5-63 ..... Revision 36
4.5-64 ..... Revision 36
4.5-65 ..... Revision 36
4.5-66 ..... Revision 36
4.5-67 ..... Revision 36
4.5-68 ..... Revision 36
4.5-69 ..... Revision 37
4.5-70 ..... Revision 37
4.5-71 ..... Revision 37
4.5-72 ..... Revision 37
4.5-73 ..... Revision 37
4.5-74 ..... Revision 37
4.5-75 ..... Revision 37
4.5-76 ..... Revision 37
4.5-77 ..... Revision 37
4.5-78 ..... Revision 37
4.5-79 ..... Revision 37
4.5-80 ..... Revision 37
4.5-81 ..... Revision 37
4.5-82 ..... Revision 37
4.5-83 ..... Revision 37
4.5-84 ..... Revision 37
4.5-85 ..... Revision 37
4.5-86 ..... Revision 37
4.5-87 ..... Revision LWT-06A

Chapter 5

5-i ..... Revision LWT-06A
5-ii ..... Revision LWT-06A
5-iii ..... Revision LWT-06A
5-iv ..... Revision LWT-06A
5-v ..... Revision LWT-06A
5-vi ..... Revision LWT-06A
5-vii ..... Revision LWT-06A
5-viii ..... Revision LWT-06A
5-ix ..... Revision LWT-06A
5-x ..... Revision LWT-06A
5-1 ..... Revision 36
5-2 ..... Revision 36

LIST OF EFFECTIVE PAGES (Continued)

5-3 ..... Revision LWT-06A
5.1-1 ..... Revision LWT-06A
5.1-2 ..... Revision LWT-06A
5.1-3 ..... Revision LWT-06A
5.1-4 ..... Revision LWT-06A
5.1-5 ..... Revision LWT-06A
5.1-6 ..... Revision LWT-06A
5.1-7 ..... Revision LWT-06A
5.1-8 ..... Revision LWT-06A
5.1-9 ..... Revision LWT-06A
5.1-10 .....Revision LWT-06C
5.1-11 ..... Revision LWT-06A
5.1-12 ..... Revision LWT-06A
5.1-13 ..... Revision LWT-06A
5.1-14 ..... Revision LWT-06A
5.1-15 ..... Revision LWT-06A
5.1-16 ..... Revision LWT-06A
5.1-17 ..... Revision LWT-06A
5.2-1 ..... Revision 36
5.2-2 ..... Revision 36
5.2-3 ..... Revision 36
5.2-4 ..... Revision 36
5.2-5 ..... Revision 36
5.2-6 ..... Revision 36
5.2-7 ..... Revision 36
5.3-1 ..... Revision 36
5.3-2 ..... Revision 36
5.3-3 ..... Revision 36
5.3-4 ..... Revision 36
5.3-5 ..... Revision 36
5.3-6 ..... Revision 36
5.3-7 ..... Revision 36
5.3-8 ..... Revision 36
5.3-9 ..... Revision 36
5.3-10 ..... Revision 36
5.3-11 ..... Revision 36
5.3-12 ..... Revision 36
5.3-13 ..... Revision 36
5.3-14 ..... Revision 36
5.3-15 ..... Revision 36
5.3-16 ..... Revision 36
5.3-17 ..... Revision 36
5.3-18 ..... Revision 36
5.3-19 ..... Revision 36
5.3-20 ..... Revision 36
5.3-21 ..... Revision 36
5.3-22 ..... Revision 36
5.3-23 ..... Revision 36
5.3-24 ..... Revision 36
5.3-25 ..... Revision 36
5.3-26 ..... Revision 36
5.3-27 ..... Revision 36
5.3-28 ..... Revision 36
5.3-29 ..... Revision 36
5.3-30 ..... Revision 36
5.3-31 ..... Revision 36
5.3-32 ..... Revision 36
5.3-33 ..... Revision 36
5.3-34 ..... Revision 36
5.3-35 ..... Revision 36
5.3-36 ..... Revision 36
5.3-37 ..... Revision 36
5.3-38 ..... Revision 36
5.3-39 ..... Revision 36
5.3-40 ..... Revision 36
5.3-41 ..... Revision 36
5.3-42 ..... Revision 36
5.3-43 ..... Revision 36
5.3-44 ..... Revision 36
5.3-45 ..... Revision 36

LIST OF EFFECTIVE PAGES (Continued)

5.3-46 ..... Revision 36
5.3-47 ..... Revision 36
5.3-48 ..... Revision 36
5.3-49 ..... Revision 36
5.3-50 ..... Revision 36
5.3-51 ..... Revision 36
5.3-52 ..... Revision 36
5.3-53 ..... Revision 36
5.3-54 ..... Revision 36
5.3-55 ..... Revision 36
5.3-56 ..... Revision 36
5.3-57 ..... Revision 36
5.3-58 ..... Revision 36
5.3-59 ..... Revision 36
5.3-60 ..... Revision 36
5.3-61 ..... Revision 36
5.3-62 ..... Revision 36
5.3-63 ..... Revision 36
5.3-64 ..... Revision 36
5.3-65 ..... Revision 36
5.3-66 ..... Revision 36
5.3-67 ..... Revision 37
5.3-68 ..... Revision 37
5.3-69 ..... Revision 36
5.3-70 ..... Revision 36
5.3-71 ..... Revision 36
5.3-72 ..... Revision 36
5.3-73 ..... Revision 36
5.3-74 ..... Revision 36
5.3-75 ..... Revision 36
5.3-76 ..... Revision 36
5.3-77 ..... Revision 36
5.3-78 ..... Revision 36
5.3-79 ..... Revision 36
5.3-80 ..... Revision 36
5.3-81 ..... Revision 36
5.3-82 ..... Revision 36
5.3-83 ..... Revision 36
5.3-84 ..... Revision 36
5.3-85 ..... Revision 36
5.3-86 ..... Revision 36
5.3-87 ..... Revision 36
5.3-88 ..... Revision 36
5.3-89 ..... Revision LWT-06A
5.3-90 ..... Revision LWT-06A
5.3-91 ..... Revision LWT-06A
5.3-92 ..... Revision LWT-06A
5.3-93 ..... Revision LWT-06A
5.3-94 ..... Revision LWT-06A
5.3-95 ..... Revision LWT-06A
5.3-96 ..... Revision LWT-06A
5.3-97 ..... Revision LWT-06A
5.3-98 ..... Revision LWT-06A
5.3-99 ..... Revision LWT-06A
5.3-100 ..... Revision LWT-06A
5.3-101 ..... Revision LWT-06A
5.3-102 ..... Revision LWT-06A
5.3-103 ..... Revision LWT-06A
5.3-104 ..... Revision LWT-06A
5.3-105 ..... Revision LWT-06A
5.3-106 ..... Revision LWT-06A
5.3-107 ..... Revision LWT-06A
5.3-108 ..... Revision LWT-06A
5.3-109 ..... Revision LWT-06A
5.3-110 ..... Revision LWT-06A
5.3-111 ..... Revision LWT-06A
5.3-112 ..... Revision LWT-06A
5.3-113 ..... Revision LWT-06A
5.3-114 ..... Revision LWT-06A
5.3-115 ..... Revision LWT-06A

LIST OF EFFECTIVE PAGES (Continued)

5.3-116 ..... Revision LWT-06A
5.3-117 ..... Revision LWT-06A
5.3-118 ..... Revision LWT-06A
5.3-119 ..... Revision LWT-06A
5.3-120 ..... Revision LWT-06A
5.3-121 ..... Revision LWT-06A
5.3-122 ..... Revision LWT-06A
5.3-123 ..... Revision LWT-06A
5.3-124 ..... Revision LWT-06A
5.3-125 ..... Revision LWT-06A
5.3-126 ..... Revision LWT-06A
5.3-127 ..... Revision LWT-06A
5.3-128 ..... Revision LWT-06A
5.3-129 ..... Revision LWT-06A
5.3-130 ..... Revision LWT-06A
5.3-131 ..... Revision LWT-06A
5.3-132 ..... Revision LWT-06A
5.3-133 ..... Revision LWT-06A
5.3-134 ..... Revision LWT-06A
5.3-135 ..... Revision LWT-06A
5.3-136 ..... Revision LWT-06A
5.3-137 ..... Revision LWT-06A
5.3-138 ..... Revision LWT-06A
5.3-139 ..... Revision LWT-06A
5.3-140 ..... Revision LWT-06A
5.3-141 ..... Revision LWT-06A
5.3-142 ..... Revision LWT-06A
5.3-143 ..... Revision LWT-06A
5.3-144 ..... Revision LWT-06A
5.3-145 ..... Revision LWT-06A
5.3-146 ..... Revision LWT-06A
5.3-147 ..... Revision LWT-06A
5.3-148 ..... Revision LWT-06A
5.3-149 ..... Revision LWT-06A
5.3-150 ..... Revision LWT-06A
5.3-151 ..... Revision LWT-06A
5.3-152 ..... Revision LWT-06A
5.3-153 ..... Revision LWT-06A
5.3-154 ..... Revision LWT-06A
5.3-155 ..... Revision LWT-06A
5.3-156 ..... Revision LWT-06A
5.3-157 ..... Revision LWT-06A
5.3-158 ..... Revision LWT-06A
5.3-159 ..... Revision LWT-06A
5.3-160 ..... Revision LWT-06A
5.3-161 ..... Revision LWT-06A
5.3-162 ..... Revision LWT-06A
5.3-163 ..... Revision LWT-06A
5.3-164 ..... Revision LWT-06A
5.3-165 ..... Revision LWT-06A
5.3-166 ..... Revision LWT-06A
5.3-167 ..... Revision LWT-06A
5.3-168 ..... Revision LWT-06A
5.3-169 ..... Revision LWT-06A
5.3-170 ..... Revision LWT-06A
5.3-171 ..... Revision LWT-06A
5.3-172 ..... Revision LWT-06A
5.3-173 ..... Revision LWT-06A
5.3-174 ..... Revision LWT-06A
5.3-175 ..... Revision LWT-06A
5.3-176 ..... Revision LWT-06A
5.3-177 ..... Revision LWT-06A
5.3-178 ..... Revision LWT-06A
5.3-179 ..... Revision LWT-06A
5.3-180 ..... Revision LWT-06A
5.3-181 ..... Revision LWT-06A
5.3-182 ..... Revision LWT-06A
5.3-183 ..... Revision LWT-06A
5.3-184 ..... Revision LWT-06A
5.3-185 ..... Revision LWT-06A

LIST OF EFFECTIVE PAGES (Continued)

5.3-186 ..... Revision LWT-06A
5.3-187 ..... Revision LWT-06A
5.3-188 ..... Revision LWT-06A
5.3-189 ..... Revision LWT-06A
5.3-190 ..... Revision LWT-06A
5.3-191 ..... Revision LWT-06A
5.3-192 ..... Revision LWT-06A
5.3-193 ..... Revision LWT-06A
5.3-194 ..... Revision LWT-06A
5.3-195 ..... Revision LWT-06A
5.3-196 ..... Revision LWT-06A
5.3-197 ..... Revision LWT-06A
5.3-198 ..... Revision LWT-06A
5.3-199 ..... Revision LWT-06A
5.3-200 ..... Revision LWT-06A
5.3-201 ..... Revision LWT-06A
5.3-202 ..... Revision LWT-06A
5.3-203 ..... Revision LWT-06A
5.3-204 ..... Revision LWT-06A
5.3-205 ..... Revision LWT-06A
5.3-206 ..... Revision LWT-06A
5.3-207 ..... Revision LWT-06A
5.3-208 ..... Revision LWT-06A
5.3-209 ..... Revision LWT-06A
5.3-210 ..... Revision LWT-06A
5.3-211 ..... Revision LWT-06A
5.3-212 ..... Revision LWT-06A
5.3-213 ..... Revision LWT-06A
5.3-214 ..... Revision LWT-06A
5.3-215 ..... Revision LWT-06A
5.3-216 ..... Revision LWT-06A
5.3-217 ..... Revision LWT-06A
5.3-218 ..... Revision LWT-06A
5.3-219 ..... Revision LWT-06A
5.3-220 ..... Revision LWT-06A
5.3-221 ..... Revision LWT-06A
5.3-222 ..... Revision LWT-06A
5.3-223 ..... Revision LWT-06A
5.3-224 ..... Revision LWT-06A
5.3-225 ..... Revision LWT-06A
5.3-226 ..... Revision LWT-06A
5.3-227 ..... Revision LWT-06A
5.3-228 ..... Revision LWT-06A
5.3-229 ..... Revision LWT-06A
5.3-230 ..... Revision LWT-06A
5.3-231 ..... Revision LWT-06A
5.3-232 ..... Revision LWT-06A
5.3-233 ..... Revision LWT-06A
5.3-234 ..... Revision LWT-06A
5.3-235 ..... Revision LWT-06A
5.3-236 ..... Revision LWT-06A
5.3-237 ..... Revision LWT-06A
5.3-238 ..... Revision LWT-06A
5.3-239 ..... Revision LWT-06A
5.3-240 ..... Revision LWT-06A
5.3-241 ..... Revision LWT-06A
5.3-242 ..... Revision LWT-06A
5.3-243 ..... Revision LWT-06A
5.3-244 ..... Revision LWT-06A
5.3-245 ..... Revision LWT-06A
5.3-246 ..... Revision LWT-06A
5.3-247 ..... Revision LWT-06A
5.3-248 ..... Revision LWT-06A
5.3-249 ..... Revision LWT-06A
5.3-250 ..... Revision LWT-06A
5.3-251 ..... Revision LWT-06A
5.3-252 ..... Revision LWT-06A
5.3-253 ..... Revision LWT-06A
5.3-254 ..... Revision LWT-06A
5.3-255 ..... Revision LWT-06A

LIST OF EFFECTIVE PAGES (Continued)

5.3-256 ..... Revision LWT-06A
5.4-1 ..... Revision 36
5.4-2 ..... Revision 36
5.4-3 ..... Revision 36
5.4-4 ..... Revision 36
5.4-5 ..... Revision 36
5.4-6 ..... Revision 36

Chapter 6

6-i ..... Revision LWT-06A
6-ii ..... Revision LWT-06A
6-iii ..... Revision LWT-06A
6-iv ..... Revision LWT-06A
6-v ..... Revision LWT-06A
6-vi ..... Revision LWT-06A
6-vii ..... Revision LWT-06A
6-viii ..... Revision LWT-06A
6-ix ..... Revision LWT-06A
6-x ..... Revision LWT-06A
6-xi ..... Revision LWT-06A
6-xii ..... Revision LWT-06A
6-xiii ..... Revision LWT-06A
6-xiv ..... Revision LWT-06A
6-1 ..... Revision LWT-06A
6.1-1 ..... Revision 36
6.1-2 ..... Revision 36
6.1-3 ..... Revision 36
6.1-4 ..... Revision LWT-06A
6.2-1 ..... Revision LWT-06A
6.2-2 ..... Revision 36
6.2-3 ..... Revision 36
6.2-4 ..... Revision 36
6.2-5 ..... Revision 36
6.2-6 ..... Revision 36
6.2-7 ..... Revision 36
6.2-8 ..... Revision 36
6.2-9 ..... Revision 36
6.2-10 ..... Revision 36
6.2-11 ..... Revision 36
6.2-12 ..... Revision 36
6.2-13 ..... Revision 36
6.2-14 ..... Revision 36
6.2-15 ..... Revision 36
6.2-16 ..... Revision 36
6.2-17 ..... Revision 36
6.2-18 ..... Revision 36
6.2-19 ..... Revision 36
6.2-20 ..... Revision 36
6.2-21 ..... Revision 36
6.2-22 ..... Revision 36
6.2-23 ..... Revision 36
6.2-24 ..... Revision 36
6.2-25 ..... Revision 36
6.2-26 ..... Revision 36
6.2-27 ..... Revision 36
6.2-28 ..... Revision 36
6.2-29 ..... Revision 36
6.2-30 ..... Revision 36
6.2-31 ..... Revision 36
6.2-32 ..... Revision 37
6.2-33 ..... Revision 37
6.2-34 ..... Revision 37
6.2-35 ..... Revision LWT-06A
6.2-36 ..... Revision LWT-06A
6.2-37 ..... Revision LWT-06A
6.2-38 ..... Revision LWT-06A
6.2-39 ..... Revision LWT-06A
6.2-40 ..... Revision LWT-06A
6.2-41 ..... Revision LWT-06A

LIST OF EFFECTIVE PAGES (Continued)

6.3-1 ..... Revision LWT-06A
6.3-2 ..... Revision 36
6.3-3 ..... Revision 36
6.3-4 ..... Revision 36
6.3-5 ..... Revision 36
6.3-6 ..... Revision 36
6.3-7 ..... Revision 36
6.3-8 ..... Revision 36
6.3-9 ..... Revision 36
6.3-10 ..... Revision 36
6.3-11 ..... Revision 36
6.3-12 ..... Revision 36
6.3-13 ..... Revision 36
6.3-14 ..... Revision 36
6.3-15 ..... Revision 36
6.3-16 ..... Revision 36
6.3-17 ..... Revision 36
6.3-18 ..... Revision 36
6.3-19 ..... Revision 36
6.3-20 ..... Revision 36
6.3-21 ..... Revision 36
6.3-22 ..... Revision 36
6.3-23 ..... Revision 36
6.3-24 ..... Revision 36
6.3-25 ..... Revision 36
6.3-26 ..... Revision 36
6.3-27 ..... Revision 36
6.3-28 ..... Revision 36
6.3-29 ..... Revision 36
6.3-30 ..... Revision 36
6.3-31 ..... Revision 36
6.3-32 ..... Revision 36
6.3-33 ..... Revision 36
6.3-34 ..... Revision 36
6.3-35 ..... Revision 36
6.3-36 ..... Revision 36
6.3-37 ..... Revision 36
6.3-38 ..... Revision 36
6.3-39 ..... Revision 36
6.3-40 ..... Revision LWT-06A
6.3-41 ..... Revision 36
6.3-42 ..... Revision 36
6.3-43 ..... Revision 36
6.3-44 ..... Revision 36
6.3-45 ..... Revision 36
6.3-46 ..... Revision 36
6.3-47 ..... Revision 36
6.3-48 ..... Revision 36
6.3-49 ..... Revision 36
6.3-50 ..... Revision 36
6.3-51 ..... Revision 36
6.3-52 ..... Revision 37
6.3-53 ..... Revision 37
6.3-54 ..... Revision 37
6.3-55 ..... Revision 37
6.3-56 ..... Revision 37
6.3-57 ..... Revision 37
6.3-58 ..... Revision 37
6.3-59 ..... Revision LWT-06A
6.3-60 ..... Revision LWT-06A
6.3-61 ..... Revision LWT-06A
6.3-62 ..... Revision LWT-06A
6.3-63 ..... Revision LWT-06A
6.3-64 ..... Revision LWT-06A
6.3-65 ..... Revision LWT-06A
6.4-1 ..... Revision 37
6.4-2 ..... Revision 36
6.4-3 ..... Revision 36
6.4-4 ..... Revision 36
6.4-5 ..... Revision 36

LIST OF EFFECTIVE PAGES (Continued)

6.4-6 ..... Revision 36
6.4-7 ..... Revision 36
6.4-8 ..... Revision 36
6.4-9 ..... Revision 36
6.4-10 ..... Revision 36
6.4-11 ..... Revision 36
6.4-12 ..... Revision 36
6.4-13 ..... Revision 36
6.4-14 ..... Revision 36
6.4-15 ..... Revision 36
6.4-16 ..... Revision 36
6.4-17 ..... Revision 36
6.4-18 ..... Revision 36
6.4-19 ..... Revision 36
6.4-20 ..... Revision 36
6.4-21 ..... Revision 36
6.4-22 ..... Revision 36
6.4-23 ..... Revision 36
6.4-24 ..... Revision 36
6.4-25 ..... Revision 36
6.4-26 ..... Revision 36
6.4-27 ..... Revision 36
6.4-28 ..... Revision 36
6.4-29 ..... Revision 36
6.4-30 ..... Revision 36
6.4-31 ..... Revision 36
6.4-32 ..... Revision 36
6.4-33 ..... Revision 36
6.4-34 ..... Revision 36
6.4-35 ..... Revision 36
6.4-36 ..... Revision 36
6.4-37 ..... Revision 36
6.4-38 ..... Revision 36
6.4-39 ..... Revision 36
6.4-40 ..... Revision 36
6.4-41 ..... Revision 36
6.4-42 ..... Revision 36
6.4-43 ..... Revision 36
6.4-44 ..... Revision 36
6.4-45 ..... Revision 36
6.4-46 ..... Revision 36
6.4-47 ..... Revision 36
6.4-48 ..... Revision 36
6.4-49 ..... Revision 36
6.4-50 ..... Revision 36
6.4-51 ..... Revision 36
6.4-52 ..... Revision 36
6.4-53 ..... Revision 36
6.4-54 ..... Revision 36
6.4-55 ..... Revision 36
6.4-56 ..... Revision 36
6.4-57 ..... Revision 36
6.4-58 ..... Revision 36
6.4-59 ..... Revision 36
6.4-60 ..... Revision 36
6.4-61 ..... Revision 36
6.4-62 ..... Revision 36
6.4-63 ..... Revision 36
6.4-64 ..... Revision 36
6.4-65 ..... Revision 36
6.4-66 ..... Revision 36
6.4-67 ..... Revision 36
6.4-68 ..... Revision 36
6.4-69 ..... Revision 36
6.4-70 ..... Revision 36
6.4-71 ..... Revision 36
6.4-72 ..... Revision 36
6.4-73 ..... Revision 36
6.4-74 ..... Revision 36
6.4-75 ..... Revision 36

LIST OF EFFECTIVE PAGES (Continued)

6.4-76 ..... Revision 36
6.4-77 ..... Revision 36
6.4-78 ..... Revision 36
6.4-79 ..... Revision 36
6.4-80 ..... Revision 36
6.4-81 ..... Revision 36
6.4-82 ..... Revision 36
6.4-83 ..... Revision 36
6.4-84 ..... Revision 36
6.4-85 ..... Revision 36
6.4-86 ..... Revision 36
6.4-87 ..... Revision 36
6.4-88 ..... Revision 36
6.4-89 ..... Revision 36
6.4-90 ..... Revision 36
6.4-91 ..... Revision 36
6.4-92 ..... Revision 36
6.4-93 ..... Revision 36
6.4-94 ..... Revision 36
6.4-95 ..... Revision 36
6.4-96 ..... Revision 36
6.4-97 ..... Revision 36
6.4-98 ..... Revision 36
6.4-99 ..... Revision 36
6.4-100 ..... Revision 36
6.4-101 ..... Revision 36
6.4-102 ..... Revision 36
6.4-103 ..... Revision 36
6.4-104 ..... Revision 36
6.4-105 ..... Revision 36
6.4-106 ..... Revision 36
6.4-107 ..... Revision 36
6.4-108 ..... Revision 36
6.4-109 ..... Revision LWT-06A
6.4-110 ..... Revision LWT-06A
6.4-111 ..... Revision LWT-06A
6.4-112 ..... Revision LWT-06A
6.4-113 ..... Revision LWT-06A
6.4-114 ..... Revision LWT-06A
6.4-115 ..... Revision LWT-06A
6.4-116 ..... Revision LWT-06A
6.4-117 ..... Revision LWT-06A
6.4-118 ..... Revision LWT-06A
6.4-119 ..... Revision LWT-06A
6.4-120 ..... Revision LWT-06A
6.4-121 ..... Revision LWT-06A
6.4-122 ..... Revision LWT-06A
6.4-123 ..... Revision LWT-06A
6.4-124 ..... Revision LWT-06A
6.4-125 ..... Revision LWT-06A
6.4-126 ..... Revision LWT-06A
6.4-127 ..... Revision LWT-06A
6.4-128 ..... Revision LWT-06A
6.4-129 ..... Revision LWT-06A
6.4-130 ..... Revision LWT-06A
6.4-131 ..... Revision LWT-06A
6.4-132 ..... Revision LWT-06A
6.4-133 ..... Revision LWT-06A
6.4-134 ..... Revision LWT-06A
6.4-135 ..... Revision LWT-06A
6.4-136 ..... Revision LWT-06A
6.4-137 ..... Revision LWT-06A
6.4-138 ..... Revision LWT-06A
6.4-139 ..... Revision LWT-06A
6.4-140 ..... Revision LWT-06A
6.4-141 ..... Revision LWT-06A
6.4-142 ..... Revision LWT-06A
6.4-143 ..... Revision LWT-06A
6.4-144 ..... Revision LWT-06A
6.4-145 ..... Revision LWT-06A

LIST OF EFFECTIVE PAGES (Continued)

6.4-146 ..... Revision LWT-06A
6.4-147 ..... Revision LWT-06C
6.4-148 ..... Revision LWT-06C
6.4-149 ..... Revision LWT-06A
6.4-150 ..... Revision LWT-06A
6.4-151 ..... Revision LWT-06A
6.4-152 ..... Revision LWT-06A
6.4-153 ..... Revision LWT-06A
6.4-154 ..... Revision LWT-06A
6.4-155 ..... Revision LWT-06A
6.4-156 ..... Revision LWT-06A
6.4-157 ..... Revision LWT-06A
6.4-158 ..... Revision LWT-06A
6.4-159 ..... Revision LWT-06A
6.4-160 ..... Revision LWT-06A
6.4-161 ..... Revision LWT-06A
6.4-162 ..... Revision LWT-06A
6.5-1 ..... Revision 36
6.5-2 ..... Revision 36
6.5-3 ..... Revision 36
6.5-4 ..... Revision 36
6.5-5 ..... Revision 36
6.5-6 ..... Revision 36
6.5-7 ..... Revision 36
6.5-8 ..... Revision 36
6.5-9 ..... Revision 36
6.5-10 ..... Revision 36
6.5-11 ..... Revision 36
6.5-12 ..... Revision 36
6.5-13 ..... Revision 36
6.5-14 ..... Revision LWT-06A
6.5-15 ..... Revision 36
6.5-16 ..... Revision 36
6.5-17 ..... Revision 36
6.5-18 ..... Revision 36
6.5-19 ..... Revision 36
6.6-1 ..... Revision 36
6.6-2 ..... Revision 36
6.6-3 ..... Revision 36
6.6-4 ..... Revision 36
6.6-5 ..... Revision 36
6.6-6 ..... Revision 36
6.6-7 ..... Revision 36
6.6-8 ..... Revision 36
6.6-9 ..... Revision 36
6.6-10 ..... Revision 36
6.6-11 ..... Revision 36
6.6-12 ..... Revision 36
6.6-13 ..... Revision 36
6.6-14 ..... Revision 36
6.6-15 ..... Revision 36
6.6-16 ..... Revision 36
6.6-17 ..... Revision 36
6.6-18 ..... Revision 36
6.6-19 ..... Revision 36
6.6-20 ..... Revision 36
6.6-21 ..... Revision 36
6.6-22 ..... Revision 36
6.6-23 ..... Revision 36
6.6-24 ..... Revision 36
6.6-25 ..... Revision 36
6.6-26 ..... Revision 36
6.6-27 ..... Revision 36
6.6-28 ..... Revision 36
6.6-29 ..... Revision 36
6.6-30 ..... Revision 36
6.6-31 ..... Revision 36
6.6-32 ..... Revision 36
6.6-33 ..... Revision 36
6.6-34 ..... Revision 36

LIST OF EFFECTIVE PAGES (Continued)

6.6-35 ..... Revision 36
6.6-36 ..... Revision 36
6.6-37 ..... Revision 36
6.6-38 ..... Revision 36
6.6-39 ..... Revision 36
6.6-40 ..... Revision 36
6.6-41 ..... Revision 36
6.6-42 ..... Revision 36
6.6-43 ..... Revision 36
6.6-44 ..... Revision 36
6.6-45 ..... Revision 36
6.6-46 ..... Revision 36
6.6-47 ..... Revision 36
6.6-48 ..... Revision 36
6.6-49 ..... Revision 36
6.6-50 ..... Revision 36
6.6-51 ..... Revision 36
6.6-52 ..... Revision 36
6.6-53 ..... Revision 36
6.6-54 ..... Revision 36
6.6-55 ..... Revision 36
6.6-56 ..... Revision 36
6.6-57 ..... Revision 36
6.6-58 ..... Revision 36
6.6-59 ..... Revision 36
6.6-60 ..... Revision 36
6.6-61 ..... Revision 36
6.6-62 ..... Revision 36
6.6-63 ..... Revision 36
6.6-64 ..... Revision 36
6.6-65 ..... Revision 36
6.6-66 ..... Revision 36
6.6-67 ..... Revision 36
6.6-68 ..... Revision 36
6.6-69 ..... Revision 36
6.6-70 ..... Revision 36
6.6-71 ..... Revision 36
6.6-72 ..... Revision 36
6.6-73 ..... Revision 36
6.6-74 ..... Revision 36
6.6-75 ..... Revision 36
6.6-76 ..... Revision 36
6.6-77 ..... Revision 36
6.6-78 ..... Revision 36
6.6-79 ..... Revision 36
6.6-80 ..... Revision 36
6.6-81 ..... Revision 36
6.6-82 ..... Revision 36
6.6-83 ..... Revision 36
6.6-84 ..... Revision 36
6.6-85 ..... Revision 36
6.6-86 ..... Revision 36
6.6-87 ..... Revision 36
6.6-88 ..... Revision 36
6.6-89 ..... Revision 36
6.6-90 ..... Revision 36
6.6-91 ..... Revision 36
6.6-92 ..... Revision 36
6.6-93 ..... Revision 36
6.6-94 ..... Revision 36
6.6-95 ..... Revision 36
6.6-96 ..... Revision 36
6.6-97 ..... Revision 36
6.6-98 ..... Revision 36
6.6-99 ..... Revision 36
6.6-100 ..... Revision 36
6.6-101 ..... Revision 36
6.6-102 ..... Revision 36
6.6-103 ..... Revision 36
6.6-104 ..... Revision 36

LIST OF EFFECTIVE PAGES (Continued)

6.6-105 ..... Revision 36
6.6-106 ..... Revision 36
6.6-107 ..... Revision 36
6.6-108 ..... Revision 36
6.6-109 ..... Revision 36
6.6-110 ..... Revision 36
6.6-111 ..... Revision 36
6.6-112 ..... Revision 36
6.6-113 ..... Revision 36
6.6-114 ..... Revision 36
6.6-115 ..... Revision 36
6.6-116 ..... Revision 36
6.6-117 ..... Revision 36
6.6-118 ..... Revision 36
6.6-119 ..... Revision 36
6.6-120 ..... Revision 36
6.6-121 ..... Revision 36
6.6-122 ..... Revision 36
6.6-123 ..... Revision 36
6.6-124 ..... Revision 36
6.6-125 ..... Revision 36
6.6-126 ..... Revision 36
6.6-127 ..... Revision 36
6.6-128 ..... Revision 36
6.6-129 ..... Revision 36
6.6-130 ..... Revision 36
6.6-131 ..... Revision 36
6.6-132 ..... Revision 36
6.6-133 ..... Revision 36
6.6-134 ..... Revision 36
6.6-135 ..... Revision 36
6.6-136 ..... Revision 36
6.6-137 ..... Revision 36
6.6-138 ..... Revision 36
6.6-139 ..... Revision 36
6.6-140 ..... Revision 36
6.6-141 ..... Revision 36
6.6-142 ..... Revision 36
6.6-143 ..... Revision 36
6.6-144 ..... Revision 36
6.6-145 ..... Revision 36
6.6-146 ..... Revision 36
6.6-147 ..... Revision 36
6.6-148 ..... Revision 36
6.6-149 ..... Revision 36
6.6-150 ..... Revision 36
6.6-151 ..... Revision 36
6.6-152 ..... Revision 36
6.6-153 ..... Revision 36
6.6-154 ..... Revision 36
6.6-155 ..... Revision 36
6.6-156 ..... Revision 36
6.6-157 ..... Revision 36
6.6-158 ..... Revision 36
6.6-159 ..... Revision 36
6.6-160 ..... Revision 36
6.6-161 ..... Revision 36
6.6-162 ..... Revision 36
6.6-163 ..... Revision 36
6.6-164 ..... Revision 36
6.6-165 ..... Revision 36
6.6-166 ..... Revision 36
6.6-167 ..... Revision 36
6.6-168 ..... Revision 36
6.6-169 ..... Revision 36
6.6-170 ..... Revision 36
6.6-171 ..... Revision 36
6.6-172 ..... Revision 36
6.6-173 ..... Revision 36
6.6-174 ..... Revision 36

LIST OF EFFECTIVE PAGES (Continued)

6.6-175 ..... Revision 36
6.6-176 ..... Revision 36
6.6-177 ..... Revision 36
6.6-178 ..... Revision 36
6.6-179 ..... Revision 36
6.6-180 ..... Revision 36
6.6-181 ..... Revision 36
6.6-182 ..... Revision 36
6.6-183 ..... Revision 36
6.6-184 ..... Revision 36
6.6-185 ..... Revision 36
6.6-186 ..... Revision 36
6.6-187 ..... Revision 36
6.6-188 ..... Revision 36
6.6-189 ..... Revision 36
6.6-190 ..... Revision 36
6.6-191 ..... Revision 36
6.6-192 ..... Revision 36
6.6-193 ..... Revision 36
6.6-194 ..... Revision 36
6.6-195 ..... Revision 36
6.6-196 ..... Revision 36
6.6-197 ..... Revision 36
6.6-198 ..... Revision 36
6.6-199 ..... Revision 36
6.6-200 ..... Revision 36
6.6-201 ..... Revision 36
6.6-202 ..... Revision 36
6.6-203 ..... Revision 36
6.6-204 ..... Revision 36
6.6-205 ..... Revision 36
6.6-206 ..... Revision 36
6.6-207 ..... Revision 36
6.6-208 ..... Revision 36
6.6-209 ..... Revision 36
6.6-210 ..... Revision 36
6.6-211 ..... Revision 36
6.6-212 ..... Revision 36
6.6-213 ..... Revision 36
6.6-214 ..... Revision 36
6.6-215 ..... Revision 36
6.6-216 ..... Revision 36
6.6-217 ..... Revision 36
6.6-218 ..... Revision 36
6.6-219 ..... Revision 36
6.6-220 ..... Revision 36
6.6-221 ..... Revision 36
6.6-222 ..... Revision 36
6.6-223 ..... Revision 36
6.6-224 ..... Revision 36
6.6-225 ..... Revision 36
6.6-226 ..... Revision 36
6.6-227 ..... Revision 36
6.6-228 ..... Revision 36
6.6-229 ..... Revision 36
6.6-230 ..... Revision 36
6.6-231 ..... Revision 36
6.6-232 ..... Revision 36
6.6-233 ..... Revision 36
6.6-234 ..... Revision 36
6.6-235 ..... Revision 36
6.6-236 ..... Revision 36
6.6-237 ..... Revision 36
6.6-238 ..... Revision 36
6.6-239 ..... Revision 36
6.6-240 ..... Revision 36
6.6-241 ..... Revision 36
6.6-242 ..... Revision 36
6.6-243 ..... Revision 36
6.6-244 ..... Revision 36

LIST OF EFFECTIVE PAGES (Continued)

6.6-245 ..... Revision 36
6.6-246 ..... Revision 36
6.6-247 ..... Revision 36
6.6-248 ..... Revision 36
6.6-249 ..... Revision 36
6.6-250 ..... Revision 36
6.6-251 ..... Revision 36
6.6-252 ..... Revision 36
6.6-253 ..... Revision 36
6.6-254 ..... Revision 36
6.6-255 ..... Revision 36
6.6-256 ..... Revision 36
6.6-257 ..... Revision 36
6.6-258 ..... Revision 36
6.6-259 ..... Revision 36
6.6-260 ..... Revision 36
6.6-261 ..... Revision 36
6.6-262 ..... Revision 36
6.6-263 ..... Revision 36
6.6-264 ..... Revision 36
6.6-265 ..... Revision 36
6.6-266 ..... Revision 36
6.6-267 ..... Revision 36
6.6-268 ..... Revision 36
6.6-269 ..... Revision 36
6.6-270 ..... Revision 36
6.6-271 ..... Revision 36
6.6-272 ..... Revision 36
6.6-273 ..... Revision 36
6.6-274 ..... Revision 36
6.6-275 ..... Revision 36
6.6-276 ..... Revision 36
6.6-277 ..... Revision 36
6.6-278 ..... Revision 36
6.6-279 ..... Revision 36
6.6-280 ..... Revision 36
6.6-281 ..... Revision 36
6.6-282 ..... Revision 36
6.6-283 ..... Revision 36
6.6-284 ..... Revision 36
6.6-285 ..... Revision 36
6.6-286 ..... Revision 36
6.6-287 ..... Revision 36
6.6-288 ..... Revision 36
6.6-289 ..... Revision 36
6.6-290 ..... Revision 36
6.6-291 ..... Revision 36
6.6-292 ..... Revision 36
6.6-293 ..... Revision 36
6.6-294 ..... Revision 36
6.6-295 ..... Revision 36
6.6-296 ..... Revision 36
6.6-297 ..... Revision 36
6.6-298 ..... Revision 36
6.6-299 ..... Revision 36
6.6-300 ..... Revision 36
6.6-301 ..... Revision 36
6.6-302 ..... Revision 36
6.6-303 ..... Revision 36
6.6-304 ..... Revision 36
6.6-305 ..... Revision 36
6.6-306 ..... Revision 36
6.6-307 ..... Revision 36
6.6-308 ..... Revision 36
6.6-309 ..... Revision 36
6.6-310 ..... Revision 36
6.6-311 ..... Revision 36
6.6-312 ..... Revision 36
6.6-313 ..... Revision 36
6.6-314 ..... Revision 36

LIST OF EFFECTIVE PAGES (Continued)

6.6-315 ..... Revision 36
6.6-316 ..... Revision 36
6.6-317 ..... Revision 36
6.6-318 ..... Revision 36
6.6-319 ..... Revision 36
6.6-320 ..... Revision 36
6.6-321 ..... Revision 36
6.6-322 ..... Revision 36
6.6-323 ..... Revision 36
6.6-324 ..... Revision 36
6.6-325 ..... Revision 36
6.6-326 ..... Revision 36
6.6-327 ..... Revision 36
6.6-328 ..... Revision 36
6.6-329 ..... Revision 36
6.6-330 ..... Revision 36
6.6-331 ..... Revision 36
6.6-332 ..... Revision 36
6.6-333 ..... Revision 36
6.6-334 ..... Revision 36
6.6-335 ..... Revision 36
6.6-336 ..... Revision 36
6.6-337 ..... Revision 36
6.6-338 ..... Revision 36
6.6-339 ..... Revision 36
6.6-340 ..... Revision 36
6.6-341 ..... Revision 36
6.6-342 ..... Revision 36
6.6-343 ..... Revision 36
6.6-344 ..... Revision 36
6.6-345 ..... Revision 36
6.6-346 ..... Revision 36
6.6-347 ..... Revision 36
6.6-348 ..... Revision 36
6.6-349 ..... Revision 36
6.6-350 ..... Revision 36
6.6-351 ..... Revision 36
6.6-352 ..... Revision 36
6.6-353 ..... Revision 36
6.6-354 ..... Revision 36
6.6-355 ..... Revision 36
6.6-356 ..... Revision 36
6.6-357 ..... Revision 36
6.6-358 ..... Revision 36
6.6-359 ..... Revision 36
6.6-360 ..... Revision 36
6.6-361 ..... Revision 36
6.6-362 ..... Revision 36
6.6-363 ..... Revision 36
6.6-364 ..... Revision 36
6.6-365 ..... Revision 36
6.6-366 ..... Revision 36
6.6-367 ..... Revision 36
6.6-368 ..... Revision 36
6.6-369 ..... Revision 36
6.6-370 ..... Revision 36
6.6-371 ..... Revision 36
6.6-372 ..... Revision 36
6.6-373 ..... Revision 36
6.6-374 ..... Revision 36
6.6-375 ..... Revision 36
6.6-376 ..... Revision 36
6.6-377 ..... Revision 36
6.6-378 ..... Revision 36
6.6-379 ..... Revision 36
6.6-380 ..... Revision 36
6.6-381 ..... Revision 36
6.6-382 ..... Revision 36
6.6-383 ..... Revision 36
6.6-384 ..... Revision 36

LIST OF EFFECTIVE PAGES (Continued)

6.6-385 ..... Revision 36
6.6-386 ..... Revision 36
6.6-387 ..... Revision 36
6.6-388 ..... Revision 36
6.6-389 ..... Revision 36
6.6-390 ..... Revision 36
6.6-391 ..... Revision 36
6.6-392 ..... Revision 36
6.6-393 ..... Revision 36
6.6-394 ..... Revision 36
6.6-395 ..... Revision 36
6.6-396 ..... Revision 36
6.6-397 ..... Revision 36
6.6-398 ..... Revision 36
6.6-399 ..... Revision 36
6.6-400 ..... Revision 36
6.6-401 ..... Revision 36
6.6-402 ..... Revision 36
6.6-403 ..... Revision 36
6.6-404 ..... Revision 36
6.6-405 ..... Revision 36
6.6-406 ..... Revision 36
6.6-407 ..... Revision 36
6.6-408 ..... Revision 36
6.6-409 ..... Revision 36
6.6-410 ..... Revision 36
6.6-411 ..... Revision 36
6.6-412 ..... Revision 36
6.6-413 ..... Revision 36
6.6-414 ..... Revision 36
6.6-415 ..... Revision 36
6.6-416 ..... Revision 36
6.6-417 ..... Revision 36
6.6-418 ..... Revision 36
6.6-419 ..... Revision 36
6.6-420 ..... Revision 36
6.6-421 ..... Revision 36
6.6-422 ..... Revision 36
6.6-423 ..... Revision 36
6.6-424 ..... Revision 36
6.6-425 ..... Revision 36
6.6-426 ..... Revision 36
6.6-427 ..... Revision 36
6.6-428 ..... Revision 36
6.6-429 ..... Revision 36
6.6-430 ..... Revision 36
6.6-431 ..... Revision 36
6.6-432 ..... Revision 36
6.6-433 ..... Revision 36
6.6-434 ..... Revision 36
6.6-435 ..... Revision 36
6.6-436 ..... Revision 36
6.6-437 ..... Revision 36
6.6-438 ..... Revision 36
6.6-439 ..... Revision 36
6.6-440 ..... Revision 36
6.6-441 ..... Revision 36
6.6-442 ..... Revision 36
6.6-443 ..... Revision 36
6.6-444 ..... Revision 36
6.6-445 ..... Revision 36
6.6-446 ..... Revision 36
6.6-447 ..... Revision 36
6.6-448 ..... Revision 36
6.6-449 ..... Revision 36
6.6-450 ..... Revision 36
6.6-451 ..... Revision 36
6.6-452 ..... Revision 36
6.6-453 ..... Revision 36
6.6-454 ..... Revision 36

LIST OF EFFECTIVE PAGES (Continued)

6.6-455 ..... Revision 36
6.6-456 ..... Revision 36
6.6-457 ..... Revision 36
6.6-458 ..... Revision 36
6.6-459 ..... Revision 36
6.6-460 ..... Revision 36
6.6-461 ..... Revision 36
6.6-462 ..... Revision 36
6.6-463 ..... Revision 36
6.6-464 ..... Revision 36
6.6-465 ..... Revision 36
6.6-466 ..... Revision 36
6.6-467 ..... Revision 36
6.6-468 ..... Revision 36
6.6-469 ..... Revision 36
6.6-470 ..... Revision 36
6.6-471 ..... Revision 36
6.6-472 ..... Revision 36
6.6-473 ..... Revision 36
6.6-474 ..... Revision 36
6.6-475 ..... Revision 36
6.6-476 ..... Revision 36
6.6-477 ..... Revision 36
6.6-478 ..... Revision 36
6.6-479 ..... Revision 36
6.6-480 ..... Revision 36
6.6-481 ..... Revision 36
6.6-482 ..... Revision 36
6.6-483 ..... Revision 36
6.6-484 ..... Revision 36
6.6-485 ..... Revision 36
6.6-486 ..... Revision 36
6.6-487 ..... Revision 36
6.6-488 ..... Revision 36
6.6-489 ..... Revision 36
6.6-490 ..... Revision 36
6.6-491 ..... Revision 36
6.6-492 ..... Revision 36
6.6-493 ..... Revision 36
6.6-494 ..... Revision 36
6.6-495 ..... Revision 36
6.6-496 ..... Revision 36
6.6-497 ..... Revision 36
6.6-498 ..... Revision 36
6.6-499 ..... Revision 36
6.6-500 ..... Revision 36
6.6-501 ..... Revision 36
6.6-502 ..... Revision 36
6.6-503 ..... Revision 36
6.6-504 ..... Revision 36
6.6-505 ..... Revision 36
6.6-506 ..... Revision 36
6.6-507 ..... Revision 36
6.6-508 ..... Revision 36
6.6-509 ..... Revision 36
6.6-510 ..... Revision 36
6.6-511 ..... Revision 36
6.6-512 ..... Revision 36
6.6-513 ..... Revision 36
6.6-514 ..... Revision 36
6.6-515 ..... Revision 36
6.6-516 ..... Revision 36
6.6-517 ..... Revision 36
6.6-518 ..... Revision 36
6.6-519 ..... Revision 36
6.6-520 ..... Revision 36
6.6-521 ..... Revision 36
6.6-522 ..... Revision 36
6.6-523 ..... Revision 36
6.6-524 ..... Revision 36

LIST OF EFFECTIVE PAGES (Continued)

6.6-525 ..... Revision 36
6.6-526 ..... Revision 36
6.6-527 ..... Revision 36
6.6-528 ..... Revision 36
6.6-529 ..... Revision 36
6.6-530 ..... Revision 36
6.6-531 ..... Revision 36
6.6-532 ..... Revision 36
6.6-533 ..... Revision 36
6.6-534 ..... Revision 36
6.6-535 ..... Revision 36
6.6-536 ..... Revision 36
6.6-537 ..... Revision 36
6.6-538 ..... Revision 36
6.6-539 ..... Revision 36
6.6-540 ..... Revision 36
6.6-541 ..... Revision 36
6.6-542 ..... Revision 36
6.6-543 ..... Revision 36
6.6-544 ..... Revision 36
6.6-545 ..... Revision 36
6.6-546 ..... Revision 36
6.6-547 ..... Revision 36
6.6-548 ..... Revision 36
6.6-549 ..... Revision 36
6.6-550 ..... Revision 36
6.6-551 ..... Revision 36
6.6-552 ..... Revision 36
6.6-553 ..... Revision 36
6.6-554 ..... Revision 36
6.6-555 ..... Revision 36
6.6-556 ..... Revision 36
6.6-557 ..... Revision 36
6.6-558 ..... Revision 36
6.6-559 ..... Revision 36
6.6-560 ..... Revision 36
6.6-561 ..... Revision 36
6.6-562 ..... Revision 36
6.6-563 ..... Revision 36
6.6-564 ..... Revision 36
6.6-565 ..... Revision 36
6.6-566 ..... Revision 36
6.6-567 ..... Revision 36
6.6-568 ..... Revision 36
6.6-569 ..... Revision 36
6.6-570 ..... Revision 36
6.6-571 ..... Revision 36
6.6-572 ..... Revision 36
6.6-573 ..... Revision 36
6.6-574 ..... Revision 36
6.6-575 ..... Revision 36
6.6-576 ..... Revision 36
6.6-577 ..... Revision 36
6.6-578 ..... Revision 36
6.6-579 ..... Revision 36
6.6-580 ..... Revision 36
6.6-581 ..... Revision 36
6.6-582 ..... Revision 36
6.6-583 ..... Revision 36
6.6-584 ..... Revision 36
6.6-585 ..... Revision 36
6.6-586 ..... Revision 36
6.6-587 ..... Revision 36
6.6-588 ..... Revision 36
6.6-589 ..... Revision 36
6.6-590 ..... Revision 36
6.6-591 ..... Revision 36
6.6-592 ..... Revision 36
6.6-593 ..... Revision 36
6.6-594 ..... Revision 36

LIST OF EFFECTIVE PAGES (Continued)

6.6-595 ..... Revision 36
6.6-596 ..... Revision 36
6.6-597 ..... Revision 36
6.6-598 ..... Revision 36
6.6-599 ..... Revision 36
6.6-600 ..... Revision 36
6.6-601 ..... Revision 36
6.6-602 ..... Revision 36
6.6-603 ..... Revision 36
6.6-604 ..... Revision 36
6.6-605 ..... Revision 36
6.6-606 ..... Revision 36
6.6-607 ..... Revision 36
6.6-608 ..... Revision 36
6.6-609 ..... Revision 36
6.6-610 ..... Revision 36
6.6-611 ..... Revision 36
6.6-612 ..... Revision 36
6.6-613 ..... Revision 36
6.6-614 ..... Revision 36
6.6-615 ..... Revision 36
6.6-616 ..... Revision 36
6.6-617 ..... Revision 36
6.6-618 ..... Revision 36
6.6-619 ..... Revision 36
6.6-620 ..... Revision 36
6.6-621 ..... Revision 36
6.6-622 ..... Revision 36
6.6-623 ..... Revision 36
6.6-624 ..... Revision 36
6.6-625 ..... Revision 36
6.6-626 ..... Revision 36
6.6-627 ..... Revision 36
6.6-628 ..... Revision 36
6.6-629 ..... Revision 36
6.6-630 ..... Revision 36
6.6-631 ..... Revision 36
6.6-632 ..... Revision 36
6.6-633 ..... Revision 36
6.6-634 ..... Revision 36
6.6-635 ..... Revision 36
6.6-636 ..... Revision 36
6.6-637 ..... Revision 36
6.6-638 ..... Revision 36
6.6-639 ..... Revision 36
6.6-640 ..... Revision 36
6.6-641 ..... Revision 36
6.6-642 ..... Revision 36
6.6-643 ..... Revision 36
6.6-644 ..... Revision 36
6.6-645 ..... Revision 36
6.6-646 ..... Revision 36
6.6-647 ..... Revision 36
6.6-648 ..... Revision 36
6.6-649 ..... Revision 36
6.6-650 ..... Revision 36
6.6-651 ..... Revision 36
6.6-652 ..... Revision 36
6.6-653 ..... Revision 36
6.6-654 ..... Revision 36
6.6-655 ..... Revision 36
6.6-656 ..... Revision 36
6.6-657 ..... Revision 36
6.6-658 ..... Revision 36
6.6-659 ..... Revision 36
6.6-660 ..... Revision 36
6.6-661 ..... Revision 36
6.6-662 ..... Revision 36
6.6-663 ..... Revision 36
6.6-664 ..... Revision 36

LIST OF EFFECTIVE PAGES (Continued)

6.6-665 ..... Revision 36
6.6-666 ..... Revision 36
6.6-667 ..... Revision 36
6.6-668 ..... Revision 36
6.6-669 ..... Revision 36
6.6-670 ..... Revision 36
6.6-671 ..... Revision 36
6.6-672 ..... Revision 36
6.6-673 ..... Revision 36
6.6-674 ..... Revision 36
6.6-675 ..... Revision 36
6.6-676 ..... Revision 36
6.6-677 ..... Revision 36
6.6-678 ..... Revision 36
6.6-679 ..... Revision 36
6.6-680 ..... Revision 36
6.6-681 ..... Revision 36
6.6-682 ..... Revision 36
6.6-683 ..... Revision 36
6.6-684 ..... Revision 36
6.6-685 ..... Revision 36
6.6-686 ..... Revision 36
6.6-687 ..... Revision 36
6.6-688 ..... Revision 36
6.6-689 ..... Revision 36
6.6-690 ..... Revision 36
6.6-691 ..... Revision 36
6.6-692 ..... Revision 36
6.6-693 ..... Revision 36
6.6-694 ..... Revision 36
6.6-695 ..... Revision 36
6.6-696 ..... Revision 36
6.6-697 ..... Revision 36
6.6-698 ..... Revision 36
6.6-699 ..... Revision 36
6.6-700 ..... Revision 36
6.6-701 ..... Revision 36
6.6-702 ..... Revision 36
6.6-703 ..... Revision 36
6.6-704 ..... Revision 36
6.6-705 ..... Revision 36
6.6-706 ..... Revision 36
6.6-707 ..... Revision 36
6.6-708 ..... Revision 36
6.6-709 ..... Revision 36
6.6-710 ..... Revision 36
6.6-711 ..... Revision 36
6.6-712 ..... Revision 36
6.6-713 ..... Revision 36
6.6-714 ..... Revision 36
6.6-715 ..... Revision 36
6.6-716 ..... Revision 36
6.6-717 ..... Revision 36
6.6-718 ..... Revision 36
6.6-719 ..... Revision 36
6.6-720 ..... Revision 36
6.6-721 ..... Revision 36
6.6-722 ..... Revision 36
6.6-723 ..... Revision 36
6.6-724 ..... Revision 36
6.6-725 ..... Revision 36
6.6-726 ..... Revision 36
6.6-727 ..... Revision 36
6.6-728 ..... Revision 36
6.6-729 ..... Revision 36
6.6-730 ..... Revision 36
6.6-731 ..... Revision 36
6.6-732 ..... Revision 36
6.6-733 ..... Revision 36
6.6-734 ..... Revision 36

LIST OF EFFECTIVE PAGES (Continued)

6.6-735 ..... Revision 36
6.6-736 ..... Revision 36
6.6-737 ..... Revision 36
6.6-738 ..... Revision 36
6.6-739 ..... Revision 36
6.6-740 ..... Revision 36
6.6-741 ..... Revision 36
6.6-742 ..... Revision 36
6.6-743 ..... Revision 36
6.6-744 ..... Revision 36
6.6-745 ..... Revision 36
6.6-746 ..... Revision 36
6.6-747 ..... Revision 36
6.6-748 ..... Revision 36
6.6-749 ..... Revision 36
6.6-750 ..... Revision 36
6.6-751 ..... Revision 36
6.6-752 ..... Revision 36
6.6-753 ..... Revision 36
6.6-754 ..... Revision 36
6.6-755 ..... Revision 36
6.6-756 ..... Revision 36
6.6-757 ..... Revision 36
6.6-758 ..... Revision 36
6.6-759 ..... Revision 36
6.6-760 ..... Revision 36
6.6-761 ..... Revision 36
6.6-762 ..... Revision 36
6.6-763 ..... Revision 36
6.6-764 ..... Revision 36
6.6-765 ..... Revision 36
6.6-766 ..... Revision 36
6.6-767 ..... Revision 36
6.6-768 ..... Revision 36
6.6-769 ..... Revision 36
6.6-770 ..... Revision 36
6.6-771 ..... Revision 36
6.6-772 ..... Revision 36
6.6-773 ..... Revision 36
6.6-774 ..... Revision 36
6.6-775 ..... Revision 36
6.6-776 ..... Revision 36
6.6-777 ..... Revision 36
6.6-778 ..... Revision 36
6.6-779 ..... Revision 36
6.6-780 ..... Revision 36
6.6-781 ..... Revision 36
6.6-782 ..... Revision 36
6.6-783 ..... Revision 36
6.6-784 ..... Revision 36
6.6-785 ..... Revision 36
6.6-786 ..... Revision 36
6.6-787 ..... Revision 36
6.6-788 ..... Revision 36
6.6-789 ..... Revision 36
6.6-790 ..... Revision 36
6.6-791 ..... Revision 36
6.6-792 ..... Revision 36
6.6-793 ..... Revision 36
6.6-794 ..... Revision 36
6.6-795 ..... Revision 36
6.6-796 ..... Revision 36
6.6-797 ..... Revision 36
6.6-798 ..... Revision 36
6.6-799 ..... Revision 36
6.6-800 ..... Revision 36
6.6-801 ..... Revision 36
6.6-802 ..... Revision 36
6.6-803 ..... Revision 36
6.6-804 ..... Revision 36

LIST OF EFFECTIVE PAGES (Continued)

6.6-805 ..... Revision 36
6.6-806 ..... Revision 36
6.6-807 ..... Revision 36
6.6-808 ..... Revision 36
6.6-809 ..... Revision 36
6.6-810 ..... Revision 36
6.6-811 ..... Revision 36
6.6-812 ..... Revision 36
6.6-813 ..... Revision 36
6.6-814 ..... Revision 36
6.6-815 ..... Revision 36
6.6-816 ..... Revision 36
6.6-817 ..... Revision 36
6.6-818 ..... Revision 36
6.6-819 ..... Revision 36
6.6-820 ..... Revision 36
6.6-821 ..... Revision 36
6.6-822 ..... Revision 36
6.6-823 ..... Revision 36
6.6-824 ..... Revision 36
6.6-825 ..... Revision 36
6.6-826 ..... Revision 36
6.6-827 ..... Revision 36
6.6-828 ..... Revision 36
6.6-829 ..... Revision 36
6.6-830 ..... Revision 36
6.6-831 ..... Revision 36
6.6-832 ..... Revision 36
6.6-833 ..... Revision 36
6.6-834 ..... Revision 36
6.6-835 ..... Revision 36
6.6-836 ..... Revision 36
6.6-837 ..... Revision 36
6.6-838 ..... Revision 36
6.6-839 ..... Revision 36
6.6-840 ..... Revision 36
6.6-841 ..... Revision 36
6.6-842 ..... Revision 36
6.6-843 ..... Revision 36
6.6-844 ..... Revision 36
6.6-845 ..... Revision 36
6.6-846 ..... Revision 36
6.6-847 ..... Revision 36
6.6-848 ..... Revision 37
6.6-849 ..... Revision 37
6.6-850 ..... Revision 37
6.6-851 ..... Revision 37
6.6-852 ..... Revision 37
6.6-853 ..... Revision 37
6.6-854 ..... Revision 37
6.6-855 ..... Revision 37
6.6-856 ..... Revision 37
6.6-857 ..... Revision 37
6.6-858 ..... Revision 37
6.6-859 ..... Revision 37
6.6-860 ..... Revision 37
6.6-861 ..... Revision 37
6.6-862 ..... Revision 37
6.6-863 ..... Revision 37
6.6-864 ..... Revision 37
6.6-865 ..... Revision 37
6.6-866 ..... Revision 37
6.6-867 ..... Revision 37
6.6-868 ..... Revision 37
6.6-869 ..... Revision 37
6.6-870 ..... Revision 37
6.6-871 ..... Revision 37
6.6-872 ..... Revision 37
6.6-873 ..... Revision 37
6.6-874 ..... Revision 37

LIST OF EFFECTIVE PAGES (Continued)

6.6-875 ..... Revision 37
6.6-876 ..... Revision 37
6.6-877 ..... Revision 37
6.6-878 ..... Revision 37
6.6-879 ..... Revision 37
6.6-880 ..... Revision 37
6.6-881 ..... Revision 37
6.6-882 ..... Revision 37
6.6-883 ..... Revision 37
6.6-884 ..... Revision 37
6.6-885 ..... Revision 37
6.6-886 ..... Revision 37
6.6-887 ..... Revision 37
6.6-888 ..... Revision 37
6.6-889 ..... Revision 37
6.6-890 ..... Revision 37
6.6-891 ..... Revision 37
6.6-892 ..... Revision 37
6.6-893 ..... Revision 37
6.6-894 ..... Revision 37
6.6-895 ..... Revision LWT-06A
6.6-896 ..... Revision LWT-06A
6.6-897 ..... Revision LWT-06A
6.6-898 ..... Revision LWT-06A
6.6-899 ..... Revision LWT-06A
6.6-900 ..... Revision LWT-06A
6.6-901 ..... Revision LWT-06A
6.6-902 ..... Revision LWT-06A
6.6-903 ..... Revision LWT-06A
6.6-904 ..... Revision LWT-06A
6.6-905 ..... Revision LWT-06A
6.6-906 ..... Revision LWT-06A
6.6-907 ..... Revision LWT-06A
6.6-908 ..... Revision LWT-06A
6.6-909 ..... Revision LWT-06A
6.6-910 ..... Revision LWT-06A
6.6-911 ..... Revision LWT-06A
6.6-912 ..... Revision LWT-06A
6.6-913 ..... Revision LWT-06A
6.6-914 ..... Revision LWT-06A
6.6-915 ..... Revision LWT-06A
6.6-916 ..... Revision LWT-06A
6.6-917 ..... Revision LWT-06A
6.6-918 ..... Revision LWT-06A
6.6-919 ..... Revision LWT-06A
6.6-920 ..... Revision LWT-06A
6.6-921 ..... Revision LWT-06A
6.6-922 ..... Revision LWT-06A
6.6-923 ..... Revision LWT-06A
6.6-924 ..... Revision LWT-06A
6.6-925 ..... Revision LWT-06A
6.6-926 ..... Revision LWT-06A
6.6-927 ..... Revision LWT-06A
6.6-928 ..... Revision LWT-06A
6.6-929 ..... Revision LWT-06A
6.6-930 ..... Revision LWT-06A
6.6-931 ..... Revision LWT-06A
6.6-932 ..... Revision LWT-06A
6.6-933 ..... Revision LWT-06A
6.6-934 ..... Revision LWT-06A
6.6-935 ..... Revision LWT-06A

Chapter 7

7-i ..... Revision LWT-06A
7-ii ..... Revision LWT-06A
7-1 ..... Revision LWT-06A
7-2 ..... Revision 37
7.1-1 ..... Revision 36
7.1-2 ..... Revision 36

LIST OF EFFECTIVE PAGES (Continued)

7.1-3 ..... Revision 36
7.1-4 ..... Revision 36
7.1-5 ..... Revision 36
7.1-6 ..... Revision 36
7.1-7 ..... Revision 36
7.1-8 ..... Revision 36
7.1-9 ..... Revision 36
7.1-10 ..... Revision 36
7.1-11 ..... Revision 36
7.1-12 ..... Revision LWT-06A
7.1-13 .....Revision LWT-06C
7.1-14 .....Revision LWT-06C
7.1-15 .....Revision LWT-06C
7.1-16 ..... Revision LWT-06A
7.1-17 ..... Revision LWT-06A
7.1-18 ..... Revision LWT-06A
7.1-19 ..... Revision LWT-06A
7.1-20 ..... Revision LWT-06A
7.1-21 ..... Revision LWT-06A
7.1-22 ..... Revision LWT-06A
7.1-23 ..... Revision LWT-06A
7.1-24 ..... Revision LWT-06A
7.1-25 ..... Revision LWT-06A
7.1-26 ..... Revision LWT-06A
7.1-27 ..... Revision LWT-06A
7.1-28 ..... Revision LWT-06A
7.1-29 ..... Revision LWT-06A
7.1-30 ..... Revision LWT-06A
7.1-31 ..... Revision LWT-06A
7.1-32 ..... Revision LWT-06A
7.1-33 ..... Revision LWT-06A
7.1-34 ..... Revision LWT-06A
7.1-35 ..... Revision LWT-06A
7.1-36 ..... Revision LWT-06A
7.1-37 ..... Revision LWT-06A
7.1-38 ..... Revision LWT-06A
7.1-39 ..... Revision LWT-06A
7.1-40 ..... Revision LWT-06A
7.1-41 ..... Revision LWT-06A
7.1-42 ..... Revision LWT-06A
7.1-43 ..... Revision LWT-06A
7.1-44 ..... Revision LWT-06A
7.1-45 ..... Revision LWT-06A
7.1-46 ..... Revision LWT-06A
7.1-47 ..... Revision LWT-06A
7.1-48 ..... Revision LWT-06A
7.1-49 ..... Revision LWT-06A
7.1-50 ..... Revision LWT-06A
7.1-51 ..... Revision LWT-06A
7.1-52 ..... Revision LWT-06A
7.1-53 ..... Revision LWT-06A
7.2-1 ..... Revision 36
7.2-2 ..... Revision 36
7.2-3 ..... Revision 36
7.2-4 ..... Revision 36
7.2-5 ..... Revision 37
7.2-6 ..... Revision LWT-06A
7.2-7 ..... Revision LWT-06A
7.2-8 ..... Revision LWT-06A
7.2-9 ..... Revision LWT-06A
7.2.10..... Revision LWT-06A
7.2.11..... Revision LWT-06A
7.3-1 ..... Revision 36
7.3-2 ..... Revision 36

Chapter 8

8-i ..... Revision 37
8-1 ..... Revision 36
8.1-1 ..... Revision 36

LIST OF EFFECTIVE PAGES (Continued)

8.1-2 ..... Revision 36
8.1-3 ..... Revision 36
8.1-4 ..... Revision 36
8.1-5 ..... Revision 36
8.1-6 ..... Revision 36
8.1-7 ..... Revision 36
8.1-8 ..... Revision 36
8.1-9 ..... Revision LWT-06A
8.1-10 ..... Revision LWT-06A
8.1-11 ..... Revision LWT-06A
8.1-12 ..... Revision LWT-06A
8.2-1 ..... Revision 36
8.2-2 ..... Revision 36
8.2-3 ..... Revision 36
8.2-4 ..... Revision 36
8.3-1 ..... Revision 36
8.3-2 ..... Revision 36
8.3-3 ..... Revision 36
8.3-4 ..... Revision 36
8.3-5 ..... Revision 36

Chapter 9

9-i ..... Revision 36
9-1 ..... Revision 36
9-2 ..... Revision 36
9-3 ..... Revision 36
9-4 ..... Revision 36
9-5 ..... Revision 36
9-6 ..... Revision 36
9-7 ..... Revision 36
9-8 ..... Revision 36
9-9 ..... Revision 36
9-10 ..... Revision LWT-06A

Master Table of Contents

MASTER TABLE OF CONTENTS

1.0 GENERAL INFORMATION 1-1
1.1 Introduction 1.1-1
1.2 Package Description 1.2-1
1.2.1 Packaging 1.2-1
1.2.2 Operational Features 1.2-4
1.2.3 Contents of Packaging 1.2-5
1.3 Quality Assurance 1.3-1
1.4 License Drawings 1.4-1
1.5 Unclassified DOE Reference Documents License Drawings 1.5-1
1.5.1 TTQP-1-015 ..... 1.5-2
1.5.2 TTQP-1-091 ..... 1.5-13
1.5.3 TTQP-1-111 ..... 1.5-23
1.5.4 DOE Drawing #H-3-307845 (Page 1 of 2) 1.5-60
1.5.5 DOE Drawing #H-3-308875 (Page 1 of 2) 1.5-61

2.0 STRUCTURAL EVALUATION 2-1
2.1.0 Structural Design 2.1.1-1
2.1.1 Discussion 2.1.1-1
2.1.2 Basic Design Criteria 2.1.2-1
2.1.3 Miscellaneous Structural Failure Modes 2.1.3-1
2.2.0 Weights and Centers of Gravity 2.2-1
2.3.0 Properties of Materials 2.3-1
2.3.1 Mechanical Properties of Materials 2.3.1-1
2.4.0 General Standards for All Packages 2.4-1
2.4.1 Minimum Package Size 2.4.1-1
2.4.2 Tamperproof Feature 2.4.2-1
2.4.3 Positive Closure 2.4.3-1
2.4.4 Chemical and Galvanic Reactions 2.4.4-1
2.4.5 Cask Design 2.4.5-1
2.4.6 Continuous Venting 2.4.6-1
2.5.0 Lifting and Tiedown Standards 2.5.1-1
2.5.1 Lifting Devices 2.5.1-1
2.5.2 Tiedown Devices 2.5.2-1
2.6.0 Normal Conditions of Transport 2.6.1-1
2.6.1 Hot Case 2.6.1-1
2.6.2 Cold Case 2.6.2-1

MASTER TABLE OF CONTENTS (continued)

2.6.3 Reduced External Pressure 2.6.3-1
2.6.4 Increased External Pressure 2.6.4-1
2.6.5 Vibration 2.6.5-1
2.6.6 Water Spray 2.6.6-1
2.6.7 Free Drop (1 Foot) 2.6.7-1
2.6.8 Corner Drop 2.6.8-1
2.6.9 Compression 2.6.9-1
2.6.10 Penetration 2.6.10-1
2.6.11 Fabrication Conditions 2.6.11-1
2.6.12 Fuel Basket Analysis 2.6.12-1
2.7.0 Hypothetical Accident Conditions 2.7-1
2.7.1 Free Drop (30 Feet) 2.7.1-1
2.7.2 Puncture 2.7.2-1
2.7.3 Fire 2.7.3-1
2.7.4 Immersion - Fissile Material 2.7.4-1
2.7.5 Immersion – Irradiated Nuclear Fuel Packages 2.7.5-1
2.7.6 Damage Summary 2.7.6-1
2.7.7 Fuel Basket Accident Analysis 2.7.7-1
2.8.0 Special Form 2.8-1
2.9.0 Spent Fuel Contents 2.9-1
2.9.1 PWR and BWR Fuel Rods 2.9-1
2.9.2 TRIGA Fuel Elements 2.9-1
2.9.3 PULSTAR Intact Fuel Assemblies 2.9-5
2.9.4 ANSTO Fuels 2.9-6
2.10.0 Appendices 2.10.1-1
2.10.1 Computer Program Descriptions 2.10.1-1
2.10.2 Finite Element Model Description 2.10.2-1
2.10.3 Finite Element Evaluations 2.10.3-1
2.10.4 Oblique Drop Slapdown 2.10.4-1
2.10.5 Lead Slump - End Drop 2.10.5-1
2.10.6 Inner Shell Buckling Design Criteria and Evaluation 2.10.6-1
2.10.7 Detailed Finite Element Stress Summary 2.10.7-1
2.10.8 Quarter-Scale Model Drop Test Program for the NAC-LWT Cask. 2.10.8-1
2.10.9 Bolts – Closure Lid (Stress Evaluations) 2.10.9-1
2.10.10 Finite Element Stress Results for the 30-Foot Drop Accident Conditions 2.10.10-1

MASTER TABLE OF CONTENTS (continued)

2.10.11 Hand Calculation for the 30-Foot Drop Accident Conditions 2.10.11-1
2.10.12 Impact Limiter Force-Deflection Curves and Data 2.10.12-1
2.10.13 Structural Evaluation of Failed Fuel Cans and Liners 2.10.13-1
2.10.14 Structural Evaluation of the NAC-LWT Cask Body with TPBAR Contents 2.10.14-1
2.10.15 NAC-LWT Alternate B Port Cover 2.10.15-1

3.0 THERMAL EVALUATION 3.1-1
3.1 Discussion 3.1-1
3.2 Thermal Properties of Materials 3.2-1
3.2.1 Conductive Properties 3.2-1
3.2.2 Radiative Properties 3.2-2
3.2.3 Convective Properties 3.2-3
3.3 Technical Specifications of Components 3.3-1
3.4 Thermal Evaluation for Normal Conditions of Transport 3.4-1
3.4.1 Thermal Model 3.4-1
3.4.2 Maximum Temperatures 3.4-32
3.4.3 Minimum Temperatures 3.4-32
3.4.4 Maximum Internal Pressures 3.4-32
3.4.5 Maximum Thermal Stresses 3.4-44
3.4.6 Evaluation of Package Performance for Normal Conditions of Transport 3.4-44
3.5 Hypothetical Accident Thermal Evaluation 3.5-1
3.5.1 Finite Element Models 3.5-1
3.5.2 Package Conditions and Environment 3.5-3
3.5.3 Package Temperatures 3.5-5
3.5.4 Maximum Internal Pressure 3.5-12
3.5.5 Maximum Thermal Stresses 3.5-16
3.5.6 Evaluation of Package Performance for Hypothetical Accident Thermal Conditions 3.5-16
3.5.7 Assessment of the Effects of the Fission Gas Release in the Fire Accident Condition 3.5-16
3.6 Failed Metallic Fuel Basket – SCOPE Evaluations 3.6-1

MASTER TABLE OF CONTENTS (continued)

4.0 CONTAINMENT 4.1-1
4.1 Containment Boundary 4.1-1
4.1.1 Containment Penetrations 4.1-1
4.1.2 Seals and Welds 4.1-1
4.1.3 Closure 4.1-3
4.2 Containment Requirements for Normal Conditions of Transport 4.2-1
4.2.1 Containment of Radioactive Material 4.2-1
4.2.2 Pressurization of Containment Vessel 4.2-8
4.2.3 Containment Criteria 4.2-9
4.3 Containment Requirements for Hypothetical Accident Conditions 4.3-1
4.3.1 Fission Gas Products 4.3-1
4.3.2 Containment of Radioactive Materials 4.3-1
4.3.3 Containment Criteria 4.3-3
4.3.4 Tritium Permeation Rate of Seals for TPBAR Shipment 4.3-3
4.4 Special Requirements 4.4-1
4.5 Appendices 4.5-1
4.5.1 Tetrafluoroethylene O-Rings 4.5-1
4.5.2 Metallic O-Rings 4.5-10
4.5.3 Viton® O-Rings 4.5-23
4.5.4 SAS2H Output and Group A2 Values for Design Basis PWR, BWR, TRIGA, MTR and DIDO Fuel 4.5-29
4.5.5 Containment Analysis of MTR Fuel Elements 4.5-51
4.5.6 Evaluation of Normal Conditions Allowable Leakage Rate for 25 BWR High Burnup Rods with up to 14 Damaged Rods 4.5-58
4.5.7 Containment Analysis of DIDO Fuel Assemblies 4.5-62
4.5.8 Containment Analysis for PULSTAR Fuel Elements 4.5-69
4.5.9 Metallic Face Seal 4.5-75
4.5.10 Containment Analysis of ANSTO Basket Payloads 4.5-87

5.0 SHIELDING EVALUATION 5-1
5.1 Discussion and Results 5.1-1
5.2 Gamma and Neutron Sources 5.2-1
5.3 Model Specification 5.3-1
5.3.1 Description of Radial and Axial Shielding Configuration 5.3-1
5.3.2 Shield Regional Densities 5.3-2
5.3.3 Metallic Fuel Configuration 5.3-2

MASTER TABLE OF CONTENTS (continued)

5.3.4 MTR Fuel Configuration 5.3-12
5.3.5 25 PWR Fuel Rods Configuration 5.3-28
5.3.6 TRIGA Fuel Element Model Specification and Shielding Evaluation .. 5.3-32
5.3.7 TRIGA Fuel Cluster Rod Model Specification and Shielding Evaluation 5.3-51
5.3.8 High Burnup PWR and BWR Rods Shielding Evaluation 5.3-62
5.3.9 DIDO Fuel Configuration 5.3-88
5.3.10 GA IFM Shielding Evaluation 5.3-115
5.3.11 High Burnup PWR and BWR Rods in a Fuel Assembly Lattice 5.3-129
5.3.12 Damaged High Burnup PWR and BWR Rods in a Rod Holder 5.3-177
5.3.13 TPBAR Shielding Evaluation 5.3-204
5.3.14 PULSTAR Fuel Configuration 5.3-221
5.3.15 Spiral Fuel Assembly Configuration 5.3-243
5.3.16 MOATA Plate Bundle Configuration 5.3-252
5.4 Shielding Evaluation 5.4-1

6.0 CRITICALITY EVALUATION 6-1
6.1 Discussion and Results 6.1-1
6.2 Package Fuel Loading 6.2-1
6.2.1 PWR Fuel Assemblies 6.2-1
6.2.2 BWR Fuel Assemblies 6.2-4
6.2.3 MTR Fuel Elements 6.2-7
6.2.4 PWR and BWR Rods in a Rod Holder or Fuel Assembly Lattice 6.2-14
6.2.5 TRIGA Fuel Elements 6.2-14
6.2.6 TRIGA Fuel Cluster Rods 6.2-20
6.2.7 Metallic Fuel Rods 6.2-23
6.2.8 DIDO Fuel Assemblies 6.2-25
6.2.9 General Atomics Irradiated Fuel Material 6.2-28
6.2.10 PULSTAR Fuel Elements 6.2-32
6.2.11 Spiral Fuel Assemblies 6.2-35
6.2.12 MOATA Fuel Assemblies 6.2-38
6.3 Criticality Model Specifications 6.3-1
6.3.1 PWR Fuel Assemblies 6.3-1
6.3.2 BWR Fuel Assemblies 6.3-7
6.3.3 MTR Fuel Elements 6.3-11
6.3.4 PWR and BWR Rods in a Rod Holder or Fuel Assembly Lattice 6.3-18

MASTER TABLE OF CONTENTS (continued)

6.3.5 TRIGA Fuel Elements and Cluster Rods 6.3-28
6.3.6 DIDO Fuel Assemblies 6.3-39
6.3.7 General Atomics Irradiated Fuel Material 6.3-48
6.3.8 PULSTAR Fuel Contents 6.3-52
6.3.9 ANSTO Basket Payload 6.3-59
6.4 Criticality Calculations 6.4-1
6.4.1 PWR Fuel Assemblies 6.4-1
6.4.2 BWR Fuel Assemblies 6.4-10
6.4.3 MTR Fuel Elements 6.4-19
6.4.4 PWR and BWR Rods in a Rod Holder or Fuel Assembly Lattice 6.4-46
6.4.5 TRIGA Fuel Elements 6.4-71
6.4.6 TRIGA Fuel Cluster Rods 6.4-90
6.4.7 DIDO Fuel Assemblies 6.4-106
6.4.8 General Atomics Irradiated Fuel Material 6.4-119
6.4.9 PULSTAR Fuel Contents 6.4-133
6.4.10 ANSTO Basket Payloads 6.4-143
6.5 Critical Benchmarks 6.5-1
6.5.1 PWR and BWR Fuel Assemblies 6.5-1
6.5.2 MTR and DIDO Fuel Elements 6.5-14
6.5.3 TRIGA Fuel Elements 6.5-18
6.6 Appendix 6.6-1
6.6.1 PWR Fuel Assemblies 6.6-2
6.6.2 BWR Fuel Assemblies 6.6-113
6.6.3 MTR Fuel Elements 6.6-169
6.6.4 Intact PWR and BWR Fuel Rods in a Rod Holder or Fuel Assembly Lattice 6.6-242
6.6.5 TRIGA Fuel Elements 6.6-319
6.6.6 TRIGA Fuel Cluster Rods 6.6-420
6.6.7 MTR Fuel Bounding Configuration 6.6-496
6.6.8 DIDO Fuel Assemblies 6.6-580
6.6.9 General Atomics Irradiated Fuel Material 6.6-763
6.6.10 Damaged Fuel Rods in a Rod Holder 6.6-815
6.6.11 PULSTAR Fuel Elements in the LWT Cask 6.6-848
6.6.12 Spiral Fuel Assemblies in the LWT Cask 6.6-895
6.6.13 MOATA Plate Bundle in the LWT Cask 6.6-914

MASTER TABLE OF CONTENTS (continued)

7.0 OPERATING PROCEDURES 7-1
7.1 Procedures for Loading Packages 7.1-1
7.1.1 Procedures for Wet Loading of LWR Fuel 7.1-1
7.1.2 Procedures for Dry Loading of Metallic Fuel 7.1-5
7.1.3 Procedures for Loading Metallic Fuel and Filters Containing Severely Failed Metallic Fuel into Failed Fuel Canisters 7.1-9
7.1.4 Procedures for Dry Loading of DIDO, Spiral, MOATA and MTR Fuel Elements in Basket Modules into the NAC-LWT Cask 7.1-12
7.1.5 MTR General and Preferential Loading Procedures 7.1-18
7.1.6 Procedure for Dry Loading of TRIGA Fuel Basket Modules and GA IFM Modules into the NAC-LWT Cask 7.1-33
7.1.7 Procedure for Loading TRIGA Failed Fuel or Fuel Debris into TRIGA Sealed Failed Fuel Cans 7.1-40
7.1.8 Procedure for Wet Loading of PWR/BWR Fuel Rods into the PWR/BWR Transport Canister 7.1-41
7.1.9 Procedure for Wet Loading of TPBAR Consolidation Canister into the NAC-LWT Cask 7.1-43
7.1.10 Procedure for Dry Loading of PULSTAR Fuel Into the NAC-LWT Cask 7.1-48
7.2 Procedures for Unloading Package 7.2-1
7.2.1 Procedures for Wet Unloading of LWR Fuel 7.2-1
7.2.2 Procedures for Wet Unloading of Metallic Fuel 7.2-3
7.2.3 Procedure for Wet Unloading of MTR, TRIGA, DIDO, ANSTO or PULSTAR Fuel Basket Contents 7.2-6
7.2.4 Procedure for Dry Unloading of MTR, TRIGA, DIDO, ANSTO or PULSTAR Fuel Basket Contents or the TPBAR Consolidation Canister 7.2-9
7.3 Procedures for Preparation of the Empty Package for Transport 7.3-1

8.0 ACCEPTANCE TESTS AND MAINTENANCE PROGRAM 8-1
8.1 Acceptance Tests 8.1-1
8.1.1 Visual Inspection 8.1-1
8.1.2 Structural and Pressure Tests 8.1-2
8.1.3 Leak Tests 8.1-3
8.1.4 Component Tests 8.1-8
8.1.5 Tests for Shielding Integrity 8.1-9

MASTER TABLE OF CONTENTS (continued)

8.1.6 Thermal Acceptance Tests 8.1-10
8.1.7 Neutron Absorber Tests 8.1-11
8.2 Maintenance Program 8.2-1
8.3 Appendix 8.3-1
8.3.1 General Description 8.3-1
8.3.2 Preparation 8.3-1
8.3.3 Pouring Procedure 8.3-2
8.3.4 Cooling Process 8.3-2

9.0 REFERENCES 9-1

Chapter 1

1.0 GENERAL INFORMATION

This chapter of the NAC International, Legal Weight Truck spent fuel shipping cask (NAC-LWT) Safety Analysis Report (SAR) presents a general introduction to, and description of, the NAC-LWT cask. Terminology used throughout this report is presented in Table 1-1.

Authorization is sought for shipment of the NAC-LWT cask by truck, ISO container, or by railcar, as a Type B(U)F-96 package, as provided for in 10 CFR 71.4 for PWR and BWR fuel assemblies, MTR fuel assemblies and plates, DIDO fuel assemblies, metallic fuel rods, 25 PWR fuel rods, 25 high burnup PWR or 25 high burnup BWR fuel rods (including up to 14 fuel rods classified as damaged), TRIGA fuel elements and TRIGA fuel cluster rods, General Atomics (GA) High-Temperature Gas-Cooled Reactor (HTGR) and Reduced-Enrichment Research and Test Reactor (RERTR) Irradiated Fuel Materials (IFM), up to 300 Tritium Producing Burnable Absorber Rods (TPBARs) of which two can be damaged, and up to 700 PULSTAR fuel elements.

In accordance with 10 CFR 71.59, the NAC-LWT cask is assigned a Criticality Safety Index (CSI) for criticality control of the approved contents as follows: 100 for PWR assemblies; 25 for PWR and BWR rods, MTR fuel, TRIGA fuel elements or fuel cluster rods, GA IFM elements, and intact PULSTAR fuel assemblies and elements; 12.5 for DIDO fuel assemblies; 5 for BWR assemblies; and 0.0 for metallic fuel, TPBARs, spiral fuel assemblies, and MOATA plate bundles. Shipments containing damaged PULSTAR fuel elements are assigned a CSI of 33.4. The estimated Transport Index (TI) for shielding for these contents is shown in Table 5.1-1. The actual TI for individual shipments will be determined in accordance with 10 CFR 71.4 by the licensee.

Table 1-1 Terminology and Notation

Cask Model	NAC-LWT
Package	The Packaging with its radioactive contents (payload), as presented for transportation (10 CFR 71.4). Within this report, the Package is denoted as the NAC-LWT cask or simply as the cask.
Packaging	The assembly of components necessary to ensure compliance with packaging requirements (10 CFR 71.4). Within this report, the Packaging is denoted as the NAC-LWT cask.
NAC-LWT Cask	This packaging consists of a spent-fuel shipping cask body and closure lid with energy absorbing impact limiters.
Contents (Payload)	• 1 PWR assembly • up to 2 BWR assemblies • up to 25 PWR or BWR rods (including high burnup fuel rods and up to 14 fuel rods classified as damaged) • up to 42 MTR fuel elements (including plates) • up to 42 DIDO fuel assemblies • up to 15 sound (cladding intact) metallic fuel rods • up to 9 failed metallic fuel rods or 3 severely failed metallic fuel rods in filters • up to 140 intact or failed TRIGA fuel elements/debris • up to 560 intact or failed TRIGA fuel cluster rods • 2 GA IFM packages • up to 300 TPBARs (including up to 2 damaged TPBARs) • up to 700 intact or damaged PULSTAR fuel elements in either assembly or element form, including fuel debris • up to 42 intact spiral fuel assemblies (also referred to as Mark III spiral fuel). Spiral fuel assemblies may be cropped. • up to 42 intact MOATA plate bundles • any combination of individual ANSTO basket modules containing either spiral fuel assemblies or MOATA plate bundles up to a total of 42 assemblies/bundles
Impact Limiters	Aluminum honeycomb energy absorbers located at the ends of the cask.
Damaged Fuel (LWR)	Fuel having greater than hairline cracks or pin holes in the fuel rod or element cladding.

total volume of material equivalent to 25 PULSTAR fuel elements. The sealed cask contents are restricted to the displaced volume of 25 intact PULSTAR fuel elements. The total cask payload shall not exceed 700 PULSTAR fuel elements. Loading of modules with mixed PULSTAR payload configurations is allowed, but PULSTAR cans, either screened or sealed, are restricted to loading in the base and top modules.

PULSTAR fuel elements are low enriched (< 7 wt%) uranium oxide rods, with zirconium alloy cladding. During reactor operation, 25 PULSTAR fuel elements are arranged in a rectangular 5×5 lattice, surrounded by a zirconium alloy box, and capped by top- and bottom-end fittings to form a PULSTAR fuel assembly. The nonfuel components of a PULSTAR fuel assembly are primarily aluminum and zirconium alloy and do not contain a significant activation source. A sketch of a PULSTAR fuel assembly is provided in Figure 1.2-13. Key physical, radiation protection and thermal characteristics of the PULSTAR fuel assembly/elements are listed in Table 1.2-9.

The sealed and screened PULSTAR cans are stainless steel containers that: a) minimize the dispersal of gross fuel particles that may escape from damaged fuel element cladding and/or fuel debris; b) facilitate retrieval of the contents from the transportation cask; and c) confine damaged fuel and/or debris within a known volume to facilitate criticality control, maintain dose limits, and control thermal loads within the cask. PULSTAR fuel pellets, pieces, and debris may be placed in an encapsulating rod for handling purposes prior to placement into either a sealed or screened can. The encapsulating rod is not required and has no safety significance. In addition to fuel elements, the cans may contain fuel assembly hardware up to the total content weight limit specified in Figure 1.2-9. For operational/retrievability purposes, stainless steel rod inserts may be used to position the PULSTAR fuel elements within the fuel rod insert. Total content weight shall not exceed the total weight limit specified in Table 1.2-9. The fuel rod insert is composed of a 4×4 grid of 0.75-inch OD × 0.065-inch wall stainless steel tubes. The tubes provide structural support for individual intact PULSTAR fuel elements during transport in the NAC-LWT.

Spacers may be used to axially position PULSTAR fuel contents near the top of the module for ease of loading and unloading operations. The spacers are provided for ease of operations and do not provide a safety function.

1.2.3.9 ANSTO Basket and Payload Description

Two basic fuel types are to be transported in the ANSTO baskets within the NAC-LWT cask: spiral fuel assemblies and MOATA plate bundles. Spiral fuel assemblies are composed of cylindrical aluminum inner and outer shells connected by curved metallic fuel plates. Further detail on the spiral fuel assemblies is provided in Section 1.2.3.9.1. MOATA plate bundles are comprised of up to 14 MTR fuel plates. Further detail on the plate bundles is provided in Section 1.2.3.9.2. Spiral fuel assemblies and MOATA plate bundles shall be intact. Note that spiral assemblies may be cropped by removing nonfuel-bearing hardware to fit within the basket tubes. Cropped spiral fuel assemblies are classified as intact fuel.

Up to 42 spiral fuel assemblies or 42 MOATA plate bundles may be loaded. A full cask load contains 6 baskets of up to 7 fuel assemblies or plate bundles per basket. The mixed loading of ANSTO basket modules containing either spiral fuel assemblies or MOATA plate bundles is authorized.

1.2.3.9.1 Spiral Fuel Assemblies

The design basis characteristics of spiral fuel assemblies are presented in Table 1.2-10. The fuel material in spiral fuel assembly plates is a solid, homogeneous mixture of uranium-aluminum alloy, i.e., a metal alloy fuel. The fuel meat of each plate is clad in aluminum. A set of 10 curved fuel plates is located between an inner and outer cylindrical aluminum shell. Fuel elements are cropped to fit axially within the basket envelope. Fuel material is not cut during the cropping operation. The fuel plates are located in a spiral pattern, maintaining a constant pitch between fuel plate centers. A sketch of the assembly cross-section is provided in Figure 1.2-14.

1.2.3.9.2 MOATA Plate Bundles

The design basis characteristics of MOATA plate bundles are presented in Table 1.2-11. The fuel material in the plate bundle is a solid, homogeneous mixture of uranium-aluminum alloy, i.e., a metal alloy fuel. Each plate is clad in aluminum. A plate bundle is comprised of up to 14 fuel plates. Two thick (0.635 cm) aluminum nonfuel side plates support the fuel plate stack from two sides, making a possible total of 16 plates per bundle. At each axial end, the plates in the stack are connected by a pin. Spacing between plates is maintained by disk spacers placed onto the top and bottom pins between each fuel plate and the aluminum side plates. A sketch of a typical MOATA plate bundle is provided in Figure 1.2-15.

Table 1.2-4 Fuel Characteristics (Continued)

Parameter	Metallic Fuel	Metallic Fuel	Metallic Fuel	MTR HEU	MTR MEU	MTR LEU	TRIGA LEU Element	TRIGA HEU Element	TRIGA Cluster Rod
Maximum Number of Assemblies, Elements or Rods	15 rods (sound)	9 rods (failed)	3 rods (severely failed in filters)	42 [1]	42	42	140	140	560
Maximum Overall Weight, lbs	1805	1805	1805	30 (max)	30 (max)	30 (max)	13.2 (max)	8.82 (nom.) 13.2 (max)	1.5
Maximum Overall Length, in	120.5	120.5	120.5	25.4[2]	26.1[2]	26.1[2]	45	45	31.0
Maximum Active Fuel Length, in	120.0	120.0	120.0	24.8	25.6	25.6	15	15	22.5
Fuel Rod Cladding	Al	Al	Al	Al	Al	Al	Al or SS	Al or SS	Incoloy 800
Maximum Uranium, kg U	54.5	54.5	54.5	0.422 0.511	0.950	2.474	0.824	0.196	0.0486
Maximum Initial ^{235}U, wt %	Natural	Natural	Natural	94	94[3]	25	20	70	93.3
Maximum Burnup, MWD/MTU	1,600	1,600	1,600	Variable up to 660,000[4]	Variable up to 293,300	Variable up to 139,300	151,100 (80% ^{235}U)	460,000 (80% ^{235}U)	600,000 (80% ^{235}U)
Maximum Unit Decay Heat, kW	0.036	0.036	0.036	Variable[5]	0.030[5]	0.030[5]	0.0075	0.0075	0.001875
Maximum Cask Decay Heat, kW	0.54	0.54	0.54	1.26	1.26	1.26	1.05	1.05	1.05
Minimum Cool Time, yr	1	1	1	Variable[5]	Variable[5]	Variable[5]	Variable[6]	Variable[6]	Variable[6]

[1] For NISTR fuel, 42 assemblies may be cut in half, producing 84 fuel-bearing pieces. Each fuel-bearing piece may contain up to 0.211 kgU.
[2] For MTR fuel assemblies, which are cut to remove nonfuel-bearing hardware prior to transport, a nominal 0.28 inch of nonfuel hardware will remain above and below the active fuel region to allow for fuel handling operations. The HFBR element, with an element length of 57.24 inches, must be cut prior to shipment.
[3] Typical MEU enrichment is 45 wt% ^{235}U. Criticality analysis supports up to 94 wt% under the MEU fuel definition.
[4] Maximum burnup is 660,000 MWD/MTU for 380g ^{235}U and 577,500 MWD/MTU for 460g ^{235}U.
[5] Minimum cool times for MTR fuel, down to 90 days, shall be determined using the procedure presented in Section 7.1.5.
[6] Minimum cool times for TRIGA fuel elements and fuel cluster rods, down to 90 days, are determined so that the maximum decay heat of any element to be shipped is 7.5 watts and any fuel cluster rod is 1.875 watts.

Table 1.2-4 Fuel Characteristics (Continued)

Parameter	DIDO HEU	DIDO MEU	DIDO LEU
Number of Fuel Cylinders per Assembly	4	4	4
Maximum Overall Weight (lb)	15	15	15
Minimum Plate Thickness, in	0.051	0.051	0.051
Minimum Clad Thickness (Al), in	0.00984	0.00984	0.00984
Maximum ^{235}U per Element, g	190	190	190
Maximum Initial ^{235}U, wt %	94	94	94
Minimum Initial ^{235}U, wt %	90	40	19
Maximum Uranium, kg U	0.2111	0.4750	1.0000
Minimum Active Fuel Height, in	23.13	23.13	23.13
Minimum Element Height[1], in	24.21	24.21	24.21
Maximum Burnup, MWD/MTU	577,460	256,650	121,910
Maximum Unit Decay Heat[2], kW	0.025	0.025	0.025
Maximum Cask Decay Heat, kW	1.05	1.05	1.05
Minimum Cool Time[3], yr	Variable	Variable	Variable

1 Element height provides for spacing of fissile material. An optional spacer may be used to maintain spacing if the element is cut shorter than 24.21 inches.
2 Maximum unit decay heat of 0.025 kW allowed only in conjunction with spacers for top basket (see Section 7.1.4), otherwise the limit is 0.018 kW.
3 Minimum cool times for DIDO fuel assemblies, down to 180 days, shall be determined using the procedure presented in Section 7.1.4.

Table 1.2-9 PULSTAR Fuel Characteristics

Description	Value
Maximum Pellet Diameter (inch)	0.423
Minimum Element (Rod) Cladding Thickness (inch)	0.0185
Minimum Element (Rod) Diameter (inch)	0.470
Maximum Active Fuel Height (inch)	24.1
Element (Rod) Length (inch)	26.2
Rod Pitch (inch)	0.525 × 0.607
Assembly Length (inch)	38
Box Outside Width (inch)	2.745 × 3.155
Box Thickness (inch)	0.06
Maximum Assembly or Loaded Can Weight (lb) [1]	80
Maximum PULSTAR Can Content Weight (lb)[2]	39.6
Maximum Enrichment (wt % ^{235}U)	6.5
Maximum ^{235}U Content per Element (g)	33
No. of Elements (Rods) per Assembly	25
No. of Elements (Rods) per Can[2]	25
Maximum Depletion (%^{235}U)	45
Minimum Cool Time (yrs)	1.5
Maximum Heat Load per Assembly (W)	30
Maximum Heat Load per Element (W)	1.2

[1] Listed weight is the maximum weight evaluated for the structural calculation to bound all payload configurations, including loaded cans, and spacers. Nominal PULSTAR assembly weight is 45 pounds.

[2] The contents of a PULSTAR can are restricted to the equivalent of the fuel material in 25 PULSTAR fuel elements and of the displaced volume of 25 intact PULSTAR fuel elements. Fuel material may be in damaged form including fuel debris. The listed weight represents the can content limit established by the structural analyses.

Table 1.2-10 Spiral Fuel Assembly Characteristics

Parameter	Value
Number of elements per assembly	10
Fuel element type	Curved plate
Nominal dimensions of element (cm)	0.147 × 7.33 × 63.5 (individual plate)
Chemical form of fuel meat	U-Al_x-alloy
Cladding material	Aluminum
Nominal over-all dimensions (cm)	63.818 (height) × 10.16 diameter[5]
Max total weight of ^{235}U (g)	160 (total per assembly)
Maximum enrichment (wt % ^{235}U)	85
Side plate material	Aluminum (inner and outer tubes)
Nominal side plate – dimensions (cm)	Inner 6.045 OD, 5.82 ID × 63.818 Outer 10.16 OD, 9.85 ID × 63.818[1]
Max. assembly weight (lb)	18[2]
Assembly maximum heat load (W)	15.7[3]
Burnup/cool time limit	Variable[4]

1 Criticality evaluations reduced inner and outer shell thickness to 0.01 cm to provide additional moderator within the assembly.
2 Typical assembly weight is 7.9 pounds. Bounding structural analysis weight is listed.
3 Thermal and shielding evaluation employed 18 W per element. Based on cool time constraint, 15.7 W represents maximum heat load.
4 Spiral fuel is constrained to DIDO MEU cool time limits as a function of burnup. Minimum cool times for the spiral assembly, down to 270 days, shall be determined using the procedure presented in Section 7.1.4 for 18 W DIDO MEU fuel.
5 Cropped to fit within ANSTO fuel basket module nominal height of 28.3 inches.

Chapter 2

where:

W_{total} = 1770 lb, total weight of loaded basket, which bounds the calculated weight of 1,667 pounds

The minimum cross-sectional area is at the base of the fuel tubes where the cutouts for water drainage are located. The cross-sectional area is:

$$A = \frac{\left[\frac{\pi}{4}\left(D_o^2 - D_i^2\right)\times 6\right]}{2} + \left[\frac{\pi}{4}\left(D_o^2 - D_i^2\right) - 6\times l_c \times t_t\right] = 5.93 \text{ in}^2$$

where:

D_o = 4.375 in, tube outer diameter

D_i = 4.125 in, tube inner diameter

l_c = 1.00 in, cutout length in center tube

t_t = 0.125 in, tube wall thickness

The membrane stress in the basket is:

$$\sigma = \frac{P}{A} = \frac{35{,}400}{5.93} = 5.97 \text{ ksi}$$

The margin of safety is:

$$MS = \frac{S_m}{\sigma} - 1 = +2.2$$

where:

S_m = 19.4 ksi, design stress intensity, Type 304 stainless steel, 350°F

The support plates are welded to the fuel tube with 1/16-inch bevel welds on both sides of the plate. The area of the weld is:

$$A_W = \frac{6(\pi D_o)}{2} \times 2t_w = 5.15 \text{ in}^2$$

where:

D_o = 4.375 in, outer diameter of tube

t_w = 1/16 in, weld thickness

The bounding weight of the support plates is 20.1 lb; and the bounding g-load factor is 60. A weld quality factor of 0.25 for a surface visual examination is divided into the calculated stress. This factor corresponds to the largest stress reduction factor in Table NG-3352-1 of the ASME Code. Therefore, the stress in the weld is:

$$\sigma_w = \frac{20.1 \times 60}{A_w\,(0.25)} = 936 \text{ psi}$$

The margin of safety using normal conditions allowable is:

$$MS = \frac{0.6S_m}{\sigma_w} - 1 = +\text{Large}$$

where:

S_m = 19.4 ksi, design stress intensity, Type 304 stainless steel, 350°F

2.6.12.11.3 <u>ANSTO Thermal Stress Evaluation</u>

Thermal stress caused by a temperature gradient in the basket is calculated in this section. The thermal stress is minimal since the basket is free to expand. The thermal stress occurs as the hotter tubes expand radially against the basket support plates, which are at a lower temperature. The maximum thermal stress of the fuel tube is back-calculated from the displacement computed using equations for circular rings from Table 17, Case 1, Roark.

The diametrical displacements caused by the thermal expansions for the center tube (Δ_1) and the tube adjacent to it (Δ_2) are calculated as:

$$\Delta_1 = \alpha \times \Delta T \times R_t = 4.58 \times 10^{-3} \text{ in}$$

where:

$\alpha = 9.1\times10^{-6}$ /°F, coefficient of thermal expansion, Type 304 stainless steel, 350°F

ΔT= 230°F (300-70), T_{max} of the basket is conservatively considered to be 300°F

70°F is room temperature

R_t = 2.19 in. (4.375/2), radius of the fuel tube outer surface

$$\Delta_2 = \alpha \times \Delta T \times D_t = 9.17 \times 10^{-3} \text{ in}$$

where,

$\alpha = 9.1\times10^{-6}$ /°F, coefficient of thermal expansion, Type 304 stainless steel, 350°F

ΔT= 230°F (300-70), T_{max} of the basket is conservatively considered to be 300°F

70°F is room temperature

D_t = 4.375, diameter of the fuel tube

The displacement caused by the thermal expansions for the outer surface of the support plate (Δ_s) is calculated as:

$$\Delta_S = \alpha \times \Delta T \times R_S = 8.58 \times 10^{-3} \text{ in}$$

where,

$\alpha = 9.1\times10^{-6}$ /°F, coefficient of thermal expansion, Type 304 stainless steel, 350°F

ΔT= 144°F (214-70), T_{max} of the inner shell

70°F is room temperature

R_S = 6.55 in. (13.1/2), radius of the support plate

Note: 214°F is conservatively used to result in a minimum Δ_S in order to maximize the thermal stress.

The deformation that results in thermal stress is -5.17×10^{-3} inch (Δ_S - Δ_1 - Δ_2). Therefore, the fuel tube will experience a reduction in diameter due to the differential thermal expansion of the fuel tubes and support plates. It is conservative to assume that all deformation occurs at the center tube. Using Case 1 in Table 17 of Roark, the change in the diameter of the circular ring, D_V, and the moment, M_A, are given by:

$$D_V = 0.1488 \times \frac{WR^3}{EI} \quad \text{and} \quad M_A = \frac{WR \times k_2}{\pi}$$

therefore:

$$M_A = \frac{D_V \times EI}{0.1488 \times R^2} \times \frac{k_2}{\pi}$$

where:

W is the load due to differential thermal expansion

$D_V = 5.17 \times 10^{-3}$ inch, change in the diameter due to thermal stress

R = 2.13 in, mean radius of fuel tube

$E = 25.7 \times 10^6$ psi, modulus of elasticity, Type 304 stainless steel, 350°F

$I = bt^3/12$, inertial of the cross-section

b = 1.0 in, unit length

t = 0.125 in, tube wall thickness

$k_2 = 1 - \alpha = 1.00$

$$\alpha = \frac{I}{A \times R^2} = \frac{bt^3/12}{b \times t \times R^2} = 2.87 \times 10^{-4}$$

The thermal stress is:

$$\sigma = \frac{6M_A}{bt^2} = \frac{D_V E t k_2}{0.2976 \pi R^2} = \frac{5.17 \times 10^{-3} \times 25.7 \times 10^6 \times 0.125 \times 1.0}{0.2976 \times \pi \times 2.13^2} = 3{,}916 \text{ psi}$$

The maximum P+Q stress in the basket is conservatively calculated by combining the bending stress and thermal stress in the basket. The P+Q stress is:

$$\sigma_{pq} = \sigma_b + \sigma_{th} = 23.0 + 3.9 = 26.9 \text{ ksi}$$

Chapter 5

Table 5.1-1 Type, Form, Quantity and Potential Sources of Design Basis Fuel (Continued)

Fuel Type	-	DIDO Fuel Assemblies
	-	HEU: 90 wt % ^{235}U, Maximum burnup variable up to 577,460 MWd/MTU or 70% ^{235}U depletion
	-	MEU: 40 wt % ^{235}U, Maximum burnup variable up to 256,650 MWd/MTU or 70% ^{235}U depletion
	-	LEU: 19 wt % ^{235}U, Maximum burnup variable up to 121,910 MWd/MTU or 70% ^{235}U depletion
	-	175 or 126 W per basket decay heat
	-	Variable cool time down to 180 days using the procedure in Section 7.1.4
Fuel Form	-	Intact aluminum clad concentric fuel tubes
Quantity	-	Up to 42 fuel assemblies
Source of Fuel	-	Research Reactors
Transport Index	-	40.1
Fuel Type	-	General Atomics (GA) Irradiated Fuel Material (IFM)
	-	RERTR (see activity inventory in Table 5.3-74)
	-	HTGR (see activity inventory in Table 5.3-74)
	-	<13.05 W
	-	Transport after 1/1/96
Fuel Form	-	RERTR: 13 intact TRIGA elements, 7 sectioned elements
	-	HTGR: Spherical loose fuel particles, cylindrical fuel rods, 2 fuel pebbles
Quantity	-	1 Fuel Handling Unit holding RERTR IFM and 1 Fuel Handling Unit holding HTGR IFM
Source of Fuel	-	Research reactors, commercial LWR reactors
Transport Index	-	<1
Maximum Activity	-	3403 Ci
Material Type	-	Tritium Producing Burnable Absorber Rods (TPBARs)
	-	3.35 W/TPBARS; 1.005 kW total[1]
	-	30 days minimum cool time
Material Form	-	Type 316 stainless steel clad TPBARs
Quantity	-	Up to 300 TPBARs (of which two can be damaged)
Source of Material	-	Commercial LWR reactors
Transport Index	-	22
Maximum Activity	-	12,800 Ci/TPBAR; 3,840,000 Ci total[1]

[1] Conservatively calculated for 30-day minimum cooling time. Actual minimum cooling period for thermal requirements is 90 days.

Table 5.1-1 Type, Form, Quantity and Potential Sources of Design Basis Fuel (Continued)

Fuel Type	-	PULSTAR Fuel Elements
	-	6 wt % ^{235}U
	-	32 grams ^{235}U per element
	-	45% ^{235}U depletion (burnup)
	-	210 W per basket decay heat (30 watts per basket cell) × 4 = 840W
	-	Minimum cool time from discharge of 1.5 years[2]
Fuel Form	-	Intact assemblies; intact elements in fuel rod insert; canned intact or failed elements
Quantity	-	Up to 700 elements (25 elements per cell)
Sources of Fuel	-	Research reactors
Transport Index	-	25
Fuel Type	-	Spiral Fuel Assemblies
	-	75 wt % ^{235}U, maximum burnup variable up to 70% ^{235}U depletion
	-	18 W per assembly , 126 W per basket (at given cool time and burnup limits, maximum heat load is 15.7 W per assembly or 110 W per basket)
	-	Variable cool time down to 270 days using the procedure in Section 7.1.4 for 18 W DIDO MEU fuel
Fuel Form	-	Intact aluminum clad fuel plates within concentric aluminum inner and outer shells
Quantity	-	Up to 42 fuel assemblies
Sources of Fuel	-	Research reactors
Transport Index	-	40.1 (applied bounding MEU DIDO limit)
Fuel Type	-	MOATA Plate Bundles
	-	80 wt % ^{235}U, maximum burnup variable up to a 30,000 MWd/MTU or 4.1% ^{235}U depletion
Fuel Form	-	Intact aluminum-clad fuel plates
Quantity	-	Up to 42 bundles
Sources of Fuel	-	Research reactors
Transport Index	-	40.1 (applied bounding MEU DIDO limit)

Chapter 6

6.4.10.2 MOATA Plate Bundles

Initial evaluations document the reactivity of the plate bundle in a nominal configuration basket. The cask model is set to accident conditions with neutron shield and cask exterior material voided. This base model is then modified to evaluate basket configuration and fuel material changes individually or in combination. Results of these evaluations are documented in Table 6.4.10-6 and Table 6.4.10-7. Basket tolerance studies, as well as fuel studies shown later, rely on a base model containing maximum tolerance fissile material mass and uranium weight percent in the fuel meat. For all evaluations, the ^{235}U enrichment percentage is set to its maximum value as increased ^{235}U weight percent minimizes parasitic absorption in ^{238}U.

Maximum reactivity material, basket tolerances, and mechanical perturbation configurations are listed in the following bullets.

- Radial shift in – close approach active fuel
  No statistically significant difference between shifted middle fuel element and a centered middle fuel element. The centered middle fuel element is chosen to continue the remaining evaluations.
- Axial alternating shift – close approach active fuel
- Maximum ^{235}U mass and maximum uranium weight percentage
- Minimum fuel tube thickness
  For the tube specified, minimum tube thickness equals nominal thickness (tolerance is defined as -0%, +22%).
- No significant effect associated with other basket tolerances
  As reduced basket bottom plate and tube height removes absorber material from the system, the remaining reactivity evaluations set these variables to minimum.
  Fuel tube OD is retained at nominal as there is no significant effect on system reactivity for this variable, and offsetting neutronic effects occur for a change in tube size (e.g., increasing OD increases parasitic absorber and separates fissile material but provides additional moderator in the fuel region).

Next, fuel assembly dimensional and material effects are evaluated. The results of the fuel tolerance studies are documented in Table 6.4.10-8. Maximum system reactivity fuel configuration is itemized in the following bullets.

- Maximum active fuel width
  The tolerance applied to the active fuel width is one-half the distance between active fuel width and plate width. Applying this tolerance (0.3175 cm for the nominal plate width and 0.3366 cm for the maximum tolerance plate width) significantly increases system reactivity. Maximum allowed active fuel width by this analysis is 7.32 cm (conservatively rounded down from the 7.3266 cm evaluated).
- Maximum plate width
  Plate width variation taken independently has no effect on system reactivity. Analysis tied plate width to active fuel width, as no tolerance on the actual fuel width was available. Increasing plate width thereby increased the maximum active fuel width, which was shown to be bounding.
- Nominal plate thickness
  Plate bundle moderator to fuel ration (H/U) is controlled by the plate spacer thickness not plate thickness. Therefore, there is no significant effect of plate thickness on the bundle reactivity.
- Minimum clad thickness
  Maximum reactivity obtained from a case where clad thickness is conservatively set to a minimum of 0.01 cm.
- Nominal active fuel height
  Contrary to the spiral fuel and DIDO evaluation set, no significant effect of active fuel height was observed in the calculations.
- Minimum element height – reduces the space between fissile materials in the alternating shifted model
  Set to active fuel height to remove variable as a potential licensing limit. Note that the end-fitting structure of the plate bundle will assure significant separation between active fuel regions.
- Maximum plate spacer
  A conservative maximum spacer of 0.18 cm thickness was evaluated and shown to be bounding.
- Replacing aluminum side plates by water
  Provides additional moderation in the system.

Cask interior and exterior moderator density variation studies are included in Table 6.4.10-9 These studies demonstrate that for a fully moderated cask interior, any increase in cask exterior density reduces reactivity by decoupling the casks in the array. This data is consistent for reduced reactivity obtained from the normal condition case where the cask water neutron shield

Chapter 7

consist of a top module, four intermediate modules and a base module. In the case of MTR fuel elements, the basket assembly can include 2, 3 or 4 intermediate modules, depending on the length and conditions of the fuel contents.

The fuel content condition (i.e., heat load, fissile mass, minimum cool time, etc.) limits for the various fuel types are discussed or referenced in the following paragraphs.

MTR fuel elements shall be selected and loaded in accordance with the MTR General and Preferential Loading Procedures in Section 7.1.5. The MTR plate canister, if required, shall be loaded in accordance with Section 7.1.4.1.

DIDO fuel elements shall meet the following loading conditions:

- The maximum decay heat per DIDO fuel element shall not exceed 25 W.
- The maximum decay heat load for a loaded DIDO fuel basket assembly shall not exceed 1.05 kW.
- The heat load for each DIDO fuel element shall be verified by use of cool time versus burnup (MWd/MTU) curves in Figure 7.1-8 (LEU fuel), Figure 7.1-9 (MEU fuel), and Figure 7.1-10 (HEU fuel) <u>or</u> by use of minimum cool time versus ^{235}U depletion curves in Figure 7.1-11 (generic for LEU, MEU and HEU fuels). Note that significantly lower uranium content for a loaded assembly compared to the design basis assembly may result in a loaded assembly calculated burnup higher than that included in Figures 7.1-8 through 7.1-10. Use of Figure 7.1-11 ^{235}U depletion curves is required for fuel assemblies in this category.
- An additional requirement for fuel element loading of the top module limits the heat load to 18 W per element, unless there is a spacer bolted to the underside of the closure lid, or there is sufficient fuel element hardware to ensure that axial movement of the fuel element is limited, to ensure that the active fuel region is radially shielded by the gamma shield lead layer. A lid spacer, if required, shall be as shown on NAC Drawing No. 315-40-113.

Spiral and MOATA fuel elements shall meet the content conditions specified in the Certificate of Compliance for loading into the ANSTO fuel basket assembly. Full spiral fuel loads or mixed spiral and MOATA fuel loads are authorized with separate basket modules containing the two fuel types.

The procedures for loading the NAC-LWT cask with MTR, DIDO or ANSTO fuel baskets in a dry configuration or using a dry transfer system are as follows:

1. Perform a receiving survey of the empty cask or closed ISO container and inspect for damage.
2. Position the trailer in the designated area. Set the trailer brakes and block the wheels against movement in ether direction, unless site-specific conditions require the trailer to move in conjunction with, or instead of, the overhead crane to upend the cask in Step 7 or downend the cask in Step 50.
3. Remove the roof from the ISO container, and open front and rear doors. Remove roof cross members, if installed.

   Note: Verify that the package identification number on the nameplate complies with the Certificate of Compliance.
4. Perform a Health Physics survey of the cask and adjacent surfaces of the container.

   Note: A receiving survey of the cask and transport must be performed as soon as practicable after arrival at the site to ensure compliance with 10 CFR 20, 10 CFR 71.87(i), 10 CFR 71.47, and to ensure timely reporting of any transportation noncompliance.
5. Remove the top and bottom impact limiters.
6. Remove the cask tie-down strap.
7. Using the cask lifting yoke with the lift yoke arm guides removed, engage the lifting trunnions of the front end of the cask. Raise the cask to a vertical position on the rear cask support, moving the crane and/or trailer, as required, to keep the cask engaged in the trailer rear rotation supports and the crane cable vertical. When the cask is fully vertical, block the trailer wheels, and lift the cask from the container.
8. Place the cask onto the dry loading station. Connect the cask to loading station tie-downs and tighten evenly.
9. Disengage the lifting yoke and move clear.
10. Remove the weather seal from the cask.
11. Remove the vent and drain valve port covers. Carefully inspect the O-ring seals in the side of the valve port cover. If the O-rings show any damage, replace them. Be certain that the replacement O-rings are properly installed and seated. Visually inspect the valve quick disconnect nipples and replace them, if necessary.
12. Remove closure lid bolts. Attach the lid lift slings to the closure lid. Remove the closure lid and set it on a support that is suitable for radiological control and for maintaining the cleanliness of the closure lid. Carefully inspect the Teflon O-ring seal in the underside of the closure lid. If the O-ring shows any damage, replace it. Remove the metallic O-ring and replace it with an approved spare. Be certain that the replacement O-rings are properly installed and seated. Inspect the lid bolts and replace any that are damaged.

13. Visually inspect the inner cavity for foreign material or damage. Install or verify presence of a proper drain tube including drain tube alignment ring.
14. Replace the closure lid, but not the lid bolts.
15. Attach lift slings to the transfer cask adapter. Lift for inspection.
16. Visually verify that the mating surface of the cask adapter is free from debris.
17. Carefully lower the adapter onto the cask positioning the adapter match mark lines with the cask lifting trunnions and cavity drain.
18. Attach four retention clamps over the cask trunnions.
19. Open cask adapter gate and attach lift slings to the closure lid.
20. Remove the cask closure lid and close adapter gate. Place the closure lid on an adequate support.
21. Attach lift sling to transfer cask adapter ring and carefully place over opening in transfer cask adapter.
22. Identify the fuel to be loaded. Modular baskets consist of one base unit, multiple intermediate units, and one top unit, each holding up to seven authorized fuel elements. The base module must be the first unit loaded and the top unit must be the last unit loaded. The intermediate units will be loaded in accordance with the verified loading diagrams. Fuel basket(s) and/or modules shall comply with the fuel content, heat load and ^{235}U loading conditions of Sections 7.1.4 and/or 7.1.5.
23. Place the transfer cask containing the base unit onto the adapter noting the position of the match mark lines between the adapter and transfer cask.
24. Open the cask adapter gate.
25. Open the transfer cask gate.
26. Lower the fuel basket from the transfer cask into the shipping cask.
27. Disengage grapple and retract back into the transfer cask.

    Note: Grapple release can be verified by checking cable for tension.
28. Verify grapple is fully retracted.

    Note: Indication will be physical indicator attached to cable.
29. Close cask adapter gate.
30. Close transfer cask gate.
31. Repeat steps 23-30 for each intermediate basket module and for the top basket module.
32. Attach lift swing to transfer cask adapter ring and carefully remove from transfer cask adapter.

33. Attach lift swing to closure lid and position just above cask adapter gate and match lines for radial position.

34. Open the cask adapter gate.

35. Carefully lower the closure lid into position and visually verify that it is properly seated.

36. Attach lift sling to transfer cask adapter. Remove four retention clamps from the cask trunnions.

37. Carefully remove transfer cask adapter and position for subsequent decontamination.

38. Install and tighten all 12 closure bolts to 260 ± 20 ft-lb in three passes, using the sequence stamped on the lid.

39. Attach the vacuum pump to the cask vent valve.

40. Evacuate the cask cavity to ≤ 9 mm of mercury and maintain for a minimum of 15 minutes.

41. Stop the vacuum pump and monitor pressure for at least ten minutes. If pressure rise is less than 4.5 mm of mercury, the cask is adequately dried for shipment. If not, repeat Steps 39 and 40.

42. Remove the vacuum pump and backfill the cask cavity with helium to 1 atmosphere (absolute), +1, -0 psi.

43. Remove the helium gas supply line.

44. Perform the helium mass spectrometer leak test on the cask lid O-ring seal in accordance with the requirements of Section 8.1.3.1, Steps 3 through 10.

45. For standard and alternate port cover configurations, place the port covers over the vent and drain valves. Install and tighten the port cover bolts to 100 ± 10 inch-pound. Using the pressure test fixture, including a calibrated vacuum/pressure gauge with a minimum sensitivity of 0.25 psi, pressurize the annulus between the two port cover seals to 15 +1/-0 psig through the pressure test port located on the valve port cover. Observe the pressure gauge for at least 10 minutes after closing the isolation valve.

    If no drop in gas pressure is observed greater than the gauge readability, the port cover test is acceptable and meets the minimum preshipment leakage rate of 1×10^{-3} ref cm^3/sec. If the gas pressure drops, remove the valve port cover and replace the seals. Reinstall the cover and test in accordance with the requirements of Section 8.1.3.2. Repeat the test on each valve port cover.