VIRGINIA ELECTRIC AND POWER COMPANY
RICHMOND, VIRGINIA 23261

June 13, 2006

U.S. Nuclear Regulatory Commission
Attention: Document Control Desk
Washington, D.C. 20555

| | |
|---|---|
| Serial No. | 06-434 |
| NL&OS/GDM | R0 |
| Docket Nos. | 50-280 |
| | 50-281 |
| License Nos. | DRP-32 |
| | DRP-37 |

**VIRGINIA ELECTRIC AND POWER COMPANY**
**SURRY POWER STATION UNITS 1 AND 2**
**UPDATE TO NRC REACTOR VESSEL INTEGRITY DATABASE AND EXEMPTION REQUEST FOR ALTERNATE MATERIAL PROPERTIES BASIS PER 10 CFR 50.60(b)**

Virginia Electric and Power Company (Dominion) has prepared an update to the NRC's Reactor Vessel Integrity Database to document the results of the most recent 10 CFR 50.61 Pressurized Thermal Shock (PTS) screening calculations, Nil Ductility Transition Reference Temperature ($RT_{NDT}$) values, and Upper Shelf Energy values. The calculations utilize revised initial (unirradiated) $RT_{NDT}$ values for Linde 80 weld materials based on Topical Report BAW-2308, Revision 1-A. The calculations assume fluence values applicable to the current 60-year license period that accommodate the use of Westinghouse Integral Fuel Burnable Absorber (IFBA) in Surry Units 1 and 2 and removal of Flux Suppression Inserts (FSIs) for Surry Unit 1. 10 CFR 50.61 PTS screening criteria and 10 CFR 50 Appendix G Upper Shelf Energy criteria continue to be met for Surry Units 1 and 2 reactor vessel materials. The existing Reactor Coolant System (RCS) Pressure/Temperature (P/T) operating limits, Low Temperature Overpressure Protection System (LTOPS) setpoints, and LTOPS enabling temperature presently in the Surry Units 1 and 2 Technical Specifications continue to be valid and conservative through their period of applicability (i.e., 28.8 EFPY and 29.4 EFPY for Surry Units 1 and 2, respectively).

Also, pursuant to 10 CFR 50.12 and 10 CFR 50.60(b), Dominion requests an exemption from the requirements of 10 CFR 50.61 and 10 CFR 50 Appendix G to revise certain Surry reactor pressure vessel material initial (unirradiated) properties using Framatome ANP Topical Report BAW-2308, Revision 1-A. The Topical Report provides revised initial (unirradiated) reference temperatures for the Linde 80 weld materials present in the reactor pressure vessels of Surry Units 1 and 2 and was approved by the NRC in August 2005.

In May 2005, Dominion participated in a teleconference with the NRC Materials Branch staff to discuss Dominion's pending exemption request and aspects of the NRC's review

of Topical Report BAW-2308, Revision 1. Regarding the timing of the exemption request review, the NRC staff cited 10 CFR 50.61(b)(3) and provided an interpretation that could be used to allow making significant core design changes while the exemption request was being reviewed by the NRC. The attached exemption request is submitted based on the interpretation that the schedule for implementing flux suppression measures can take into account the timing of the submittal, NRC review, and approval of calculations that apply new analysis techniques. The Surry core design changes related to FSI removal and IFBA implementation are being made with the realistic expectation of obtaining NRC staff approval. This interpretation is reasonable, since the relevant effects of these changes on reactor vessel integrity are very long-term in nature, thus providing sufficient time for the necessary regulatory interactions. Furthermore, the NRC has already approved the new analysis techniques described in Topical Report BAW-2308, Revision 1-A.

A discussion of the proposed changes to the reactor vessel materials evaluations for Surry Power Station is provided in Attachment 1, and the request for exemption is included in Attachment 2. An update to the NRC Reactor Vessel Integrity Database (RVID) for Surry is included as Attachment 3. Framatome ANP Report BAW-2494, Revision 1, "Low Upper-Shelf Toughness Fracture Mechanics Analysis of Reactor Vessel of Surry Units 1 and 2 for Extended Life through 48 Effective Full Power Years," dated September 2005, is provided as Attachment 4.

If you have any questions or require additional information regarding this submittal, please contact Mr. Gary Miller at (804) 273-2771.

Sincerely,

E. S. Grecheck
Vice President – Nuclear Support Services

Attachments:
1. Proposed Changes to Reactor Vessel Materials Evaluations
2. Regulatory Basis and Request for Exemption
3. Reactor Vessel Materials Data Tables
4. Framatome ANP Report BAW-2494, Revision 1

Commitment made in this letter:

1. Sections of the Surry Units 1 and 2 Updated Final Safety Analysis Report (UFSAR) will be revised to reflect implementation of the revised design basis analyses described herein. Following NRC approval of the exemption request associated with this submittal, a UFSAR revision will be made in accordance with the requirements of 10 CFR 50.71(e).

cc: U.S. Nuclear Regulatory Commission
Region II
Sam Nunn Atlanta Federal Center
61 Forsyth Street, SW
Suite 23T85
Atlanta, Georgia 30303

Mr. N. P. Garrett
NRC Senior Resident Inspector
Surry Power Station

Mr. S. R. Monarque
NRC Project Manager
U. S. Nuclear Regulatory Commission
One White Flint North
11555 Rockville Pike
Mail Stop 8-H12
Rockville, MD 20852

**Attachment 1**

**Proposed Changes to Reactor Vessel Materials Evaluations**

**Surry Power Station Units 1 and 2**
**Virginia Electric and Power Company**
**(Dominion)**

**Proposed Changes to Reactor Vessel Materials Evaluations**
**Surry Power Station Units 1 and 2**

## 1.0 Introduction

An update to the NRC's Reactor Vessel Integrity Database (RVID) has been prepared to document the results of Virginia Electric and Power Company's (Dominion's) most recent 10 CFR 50.61 Pressurized Thermal Shock (PTS) screening calculations, Nil Ductility Transition Reference Temperature ($RT_{NDT}$) values, and Upper Shelf Energy values for Surry Units 1 and 2. The calculations utilize revised initial (unirradiated) $RT_{NDT}$ values for Linde 80 weld materials based on Framatome ANP Topical Report BAW-2308, Revision 1-A, "Initial $RT_{NDT}$ of Linde 80 Weld Materials" (Reference 1). The NRC approved topical Report BAW-2308, Revision 1-A in August 2005 (Reference 2). The calculations assume fluence values applicable to the current 60-year license period that accommodate the use of Westinghouse Integral Fuel Burnable Absorber (IFBA) in Surry Units 1 and 2, and removal of Flux Suppression Inserts (FSIs) for Surry Unit 1. 10 CFR 50.61 PTS screening criteria and 10 CFR 50 Appendix G Upper Shelf Energy criteria continue to be met for all Surry Units 1 and 2 reactor vessel materials. The existing RCS Pressure/Temperature (P/T) limits, Low Temperature Overpressure Protection System (LTOPS) setpoints, and LTOPS enabling temperature presently in the Surry Units 1 and 2 Technical Specifications continue to be valid and conservative through their period of applicability [i.e., 28.8 effective full power years (EFPY) and 29.4 EFPY for Surry Units 1 and 2, respectively].

The use of Topical Report BAW-2308, Revision 1-A requires the submittal of an exemption request pursuant to 10 CFR 50.12 and 10 CFR 50.60(b) from the requirements of 10 CFR 50.61, and 10 CFR 50 Appendix G. An exemption request for Surry Units 1 and 2 is provided in Attachment 2.

## 2.0 Background

Beginning with Surry Unit 1 Cycle 13, FSIs were placed into certain Surry Unit 1 peripheral fuel assembly locations to reduce the neutron fluence at the limiting reactor pressure vessel (RPV) weld locations. FSIs were implemented to ensure that the limiting Surry Unit 1 RPV beltline weld materials would continue to meet the applicable PTS screening criteria provided in 10 CFR 50.61. The NRC was notified of Dominion's plan to use FSIs in a Surry Unit 1 letter dated December 10, 1991 (Reference 4).

The most recent update to the Reactor Vessel Integrity Database (RVID) for Surry Units 1 and 2 was provided to the NRC in Dominion letter dated March 27, 2003 (Reference 3). This RVID update reported $RT_{PTS}$ values based on RPV neutron fluence estimates corresponding to the end of the original 40-year license period. The RPV neutron fluence analyses that supported the PTS assessment of Reference 3 were based on the assumption that future operating reactor cores would contain FSIs for Surry Unit 1, and that discrete burnable poison rods would be used for excess reactivity control in both Surry units.

The FSIs are qualified to remain in the Surry Unit 1 core through the end of Cycle 21, after which they would require replacement. The FSIs have a design lifetime of 12 EFPY. Dominion has elected to remove the FSIs at the end of Surry Unit 1 Cycle 20. Surry Unit 1 Cycle 21, which began operation in the Spring of 2006, does not contain FSIs. The removal of FSIs precludes the need to procure at least two more sets of FSIs during the remaining life of the plant, which will reduce lifetime radioactive waste. Also, FSI removal reduces fuel handling requirements during refueling outages and disposal operations. Surry Unit 2 is unaffected by this change, since it has never used FSIs.

Dominion implemented the use of Westinghouse IFBA in Surry Unit 1 Cycle 21 (Spring 2006), and plans to implement the use of IFBA for Surry Unit 2 Cycle 21 (Fall 2006). The IFBA transition will reduce, and eventually replace, the current practice of using discrete burnable poison rods in the Surry core reload designs. IFBA core designs involve loading fresh fuel nearer the peripheral core locations than previous core designs using discrete burnable poison rods. The removal of FSIs from Surry Unit 1, and the use of IFBA in reload core designs for Surry Units 1 and 2, will result in increased fast neutron fluence on reactor pressure vessel beltline materials.

## 3.0 Discussion of Changes to Previously Reported Information

### 3.1 RPV Neutron Fluence Projections

RPV fast neutron fluence (E > 1.0 MeV) projections for the current 60-year renewed license period have been performed by Framatome ANP to account for FSI removal at Surry Unit 1, and IFBA reload patterns at Surry Units 1 and 2. These neutron fluence projections are valid for cumulative core exposures of 48 EFPY for both Surry Units 1 and 2. Future operating cycles are assumed to be equilibrium fuel cycles with IFBA and without FSIs at a capacity factor of 95%. The 60-year fast neutron fluence projections were calculated in accordance with the requirements of Regulatory Guide (RG) 1.190 (Reference 5), as described in Framatome ANP Topical Report BAW-2241P (Reference 6). An NRC staff review of Topical Report BAW-2241P concluded that the methodology is acceptable for referencing in licensing applications for determining the RPV fluence of Westinghouse designed reactors (Reference 7).

The revised fluence analyses also provide peak reactor vessel fluence results at a cumulative core exposure of 32 EFPY for each Surry unit. The fluence values at 32 EFPY can be considered bounding with respect to the original 40-year operating period for Surry Units 1 and 2. The existing Technical Specification RCS P/T limits, LTOPS setpoint, and LTOPS enabling temperature are valid and conservative through their period of applicability (i.e., 28.8 EFPY and 29.4 EFPY for Surry Units 1 and 2, respectively.) Therefore, the 32 EFPY fluence projections provided in the revised analysis represent a conservative point of comparison to previously docketed fluence analyses based on the original 40-year license period. Results from the revised fluence analyses, considering FSI removal and IFBA operating cycles, are shown below.

**Table 3.1 – Revised RPV Fluence Projections for Surry Unit 1**

| **Surry Unit 1** | | **Neutron Fluence (E > 1.0 MeV)** | |
|---|---|---|---|
| **Location** | **Material** | **Fluence at 32 EFPY (n/cm$^2$)** | **Fluence at 48 EFPY (n/cm$^2$)** |
| Vessel Wall Inner Surface (0°) | Intermediate and Lower Plates | 3.80E+19 | 5.66E+19 |
| Lower Shell Longitudinal Weld, L1 & L2 | SA-1494/8T1554<br>SA-1526/299L44 | 6.40E+18 | 1.04E+19 |
| Intermediate Shell Longitudinal Weld, L3 & L4 | SA-1494/8T1554 | 6.78E+18 | 1.08E+19 |
| Intermediate to Lower Shell Circumferential Weld, W05 | SA-1585/72445<br>SA-1650/72445 | 3.74E+19 | 5.61E+19 |
| Nozzle to Intermediate Shell Circumferential Weld, W06 | J726/25017 | 5.27E+18 | 7.75E+18 |

**Table 3.2 – Revised RPV Fluence Projections for Surry Unit 2**

| **Surry Unit 2** | | **Neutron Fluence (E > 1.0 MeV)** | |
|---|---|---|---|
| **Location** | **Material** | **Fluence at 32 EFPY (n/cm$^2$)** | **Fluence at 48 EFPY (n/cm$^2$)** |
| Vessel Wall Inner Surface (0°) | Intermediate and Lower Plates | 3.64E+19 | 5.38E+19 |
| Lower Shell Longitudinal Weld, L1 & L2 | WF-4/8T1762<br>WF-8/8T1762 | 7.62E+18 | 1.14E+19 |
| Intermediate Shell Longitudinal Weld, L3 & L4 | SA-1585/72445<br>WF-4/8T1762 | 7.63E+18 | 1.14E+19 |
| Intermediate to Lower Shell Circumferential Weld, W05 | R3008/0227 | 3.62E+19 | 5.37E+19 |
| Nozzle to Intermediate Shell Circumferential Weld, W06 | J737/4275 | 4.00E+18 | 6.32E+18 |

## 3.2 Linde 80 Weld Material Properties

Framatome ANP Topical Report BAW-2308, Revision 1-A (Reference 1), provides an alternate method for determining the unirradiated and adjusted $RT_{NDT}$ for the Linde 80 weld materials present in the beltline region of the RPVs at Surry Unit 1 and 2. Topical Report BAW-2308, Revision 1-A, also provides revised initial (unirradiated) $RT_{NDT}$ values and associated uncertainties for these materials.

The NRC approved Topical Report BAW-2308, Revision 1-A in August 2005 (Reference 2). Table 3 of the NRC Safety Evaluation Report (SER) (Reference 2) contains the revised initial reference temperature ($IRT_{T0}$) and initial margin ($\sigma_I$) values for Linde 80 weld materials that are approved by the NRC for the purpose of RPV material property determination. The approved values from Reference 2 are shown below.

**Table 3.3**
**NRC Staff-Accepted Initial $RT_{T0}$ and $\sigma_I$ Values for Linde 80 Weld Materials**

| Linde 80 Weld Material | Initial $RT_{T0}$ (°F) | Initial Margin $\sigma_I$ (°F) |
|---|---|---|
| 406L44 | -94.9 | 11.0 |
| 71249 | -47.4 | 12.9 |
| 72105 | -32.7 | 11.8 |
| 821T44 | -80.2 | 9.3 |
| 299L44 | -81.8 | 11.6 |
| 72442 | -30.0 | 11.9 |
| 72445 | -72.5 | 12.3 |
| All Heats (Generic Value) | -47.6 | 17.2 |

The following Linde 80 weld materials are contained in the Surry Unit 1 reactor vessel: 8T1554, 299L44, and 72445.

The following Linde 80 weld materials are contained in the Surry Unit 2 reactor vessel: 8T1762 and 72445.

Note that for any Linde 80 material not specifically included in the table above, the inputs for "All Heats (Generic Value)" are to be used.

---

The following is stated as Condition and Limitation (4) in the NRC's Safety Evaluation for Topical Report BAW-2308, Revision 1-A:

> *"Any licensee who wants to utilize the methodology of TR BAW-2308, Revision 1 as outlined in items (1) through (3) above, must request an exemption, per 10 CFR 50.12, from the requirements of Appendix G to 10 CFR Part 50 and 10 CFR 50.61 to do so."*

In the above quotation, Condition and Limitation (1) pertains to NRC-accepted values of initial (unirradiated) reference temperature, $IRT_{T0}$, and the corresponding uncertainty term, $\sigma_I$, for Linde 80 weld materials based on the Master Curve methodology using direct testing of fracture toughness in accordance with ASTM Standard Test Method E-1921 and ASME Code Case N-629. These values are provided in Table 3 of the NRC SER (Reference 2), as shown above in Table 3.3.

Condition and Limitation (2) requires that a minimum chemistry factor of 167.0°F be applied when the methodology of RG 1.99, Revision 2, is used to assess the shift in initial properties due to irradiation.

Condition and Limitation (3) requires that a value of $\sigma_\Delta$ = 28.0°F be used in the determination of the margin term, as defined in Topical Report BAW-2308, Revision 1-A, and RG 1.99, Revision 2 (Reference 12). As noted in Reference 2, the NRC staff has concluded that the use of $\sigma_\Delta$ = 28.0°F in conjunction with the $IRT_{T0}$ and $\sigma_I$ values based on Master Curve testing, and material property shifts based on the models in RG 1.99, Revision 2, with a minimum chemistry factor of 167°F, provides an acceptable basis for RPV Linde 80 weld assessment. The Conditions and Limitations specified in Reference 2 have been met for the 10 CFR 50.61 PTS assessment and Adjusted Reference Temperatures (ART) at 1/4-T and 3/4-T, for the Surry Linde 80 weld materials addressed in this submittal.

There are no changes being proposed in this submittal for the material properties of non-Linde 80 weld materials. Chemical composition, chemistry factors, uncertainty terms, and overall margin terms are unchanged for the non-Linde 80 materials, and remain consistent with the information previously reported in Reference 3.

A summary of the material property data relevant to this submittal is included as Attachment 3. This data is provided as an update to the NRC's Reactor Vessel Integrity Database (RVID).

### 3.3 Pressurized Thermal Shock Assessment

Dominion has performed a PTS assessment for all Surry RPV beltline materials. The revised neutron fluence projections corresponding to the end of the current 60-year operating licenses (48 EFPY) were utilized, as provided in Section 3.1 above. The unirradiated $RT_{NDT}$ values and associated uncertainties presented in Topical Report BAW-2308, Revision 1-A were used for the Linde 80 weld materials. Unirradiated $RT_{NDT}$ values and associated uncertainties for non-Linde 80 materials are unchanged from those previously provided in Reference 3. The results of the PTS screening calculations are provided in Attachment 3.

For Surry Unit 1, the limiting materials in terms of absolute value of $RT_{PTS}$ are the Intermediate to Lower Shell Circumferential Welds SA-1585/72445 and SA-1650/72445. For these materials, the value of $RT_{PTS}$ is 226.5°F versus the PTS screening criterion of 300°F for circumferential welds. This value represents a 73.5°F margin to the applicable PTS screening criterion for these materials.

For Surry Unit 1, the limiting material in terms of margin to the applicable PTS screening criterion, is the Lower Shell Longitudinal Weld SA-1526/299L44. For this material, the value of $RT_{PTS}$ is 201.8°F versus the PTS screening criterion of 270°F for plates, forgings, and axial welds. This represents a 68.2°F margin to the applicable PTS screening criterion for this material.

For Surry Unit 2, the limiting material in terms of the absolute value of $RT_{PTS}$ and margin to the applicable PTS screening criterion is the Intermediate to Lower Shell Circumferential Weld R3008/0227. For this material, the value of $RT_{PTS}$ is 236.4°F versus the PTS screening criterion of 300°F for circumferential welds. This represents a 63.6°F margin to the applicable PTS screening criterion for this material.

In summary, when the revised 60-year fluence projections are considered in conjunction with the alternate initial $RT_{NDT}$ methodology as described in Topical Report BAW-2308, Revision 1-A, Surry Units 1 and 2 reactor vessel beltline materials meet the 10 CFR 50.61 PTS screening criteria through the end of the current 60-year operating license period.

10 CFR 50.61 Screening Calculations without Use of BAW-2308, Revision 1-A

Dominion has performed sensitivity calculations to determine when the 10 CFR 50.61 screening criteria would be reached by the Linde 80 weld materials without employing the alternate methodology as described in BAW-2308, Revision 1-A. The results of these sensitivity calculations show that the 10 CFR 50.61 PTS screening criterion of 270°F would be reached by Surry Unit 1 weld material SA-1526/299L44 at a fast neutron fluence of 0.809E19 n/cm$^2$.

To convert this neutron fluence value to an equivalent cumulative core burnup (effective full power year; EFPY) value, a simple linear interpolation is employed using the fluence data presented in Section 3.1, Table 3.1. At a neutron fluence of 0.809E19 n/cm$^2$, the corresponding cumulative core exposure for Surry Unit 1 is approximately 38.8 EFPY. This cumulative core exposure is estimated to occur in approximately the year 2022 based on current projections of future operating cycles, including a 95% capacity factor.

## 3.4 Upper Shelf Energy

The results of Upper Shelf Energy (USE) calculations performed by Dominion are provided in Attachment 3. The percentage drops in USE values at the 1/4-T location within the reactor vessel wall were calculated using the RG 1.99, Revision 2, Position 1.2 methodology.

Equivalent Margin Analyses (EMAs) are required for the Surry Units 1 and 2 reactor vessel beltline materials for which either (1) initial (unirradiated) USE values were not known, or (2) initial unirradiated USE values were available and the beltline materials USE at the end of the licensed period of operation were projected to fall below the 50 ft-lb criterion specified in Section IV.A.1 of 10 CFR Part 50, Appendix G.

For those weld materials which meet either of these criteria, the summary table provided in Attachment 3 displays a value of 'EMA' in place of the calculated values for USE at 1/4-T, Unirradiated USE, % Drop in USE at 1/4-T, and % Drop in USE Method. Framatome ANP has performed the EMAs for those Surry RPV materials that meet

either of the criteria (Reference 8). The EMAs are provided in Attachment 4.

The EMA documented in Reference 8 states that Surry Unit 1 beltline weld material SA-1526/299L44 is the limiting weld for the reactor vessels at Surry. The previous EMA, which is documented in Framatome Report BAW-2323 (Reference 9), determined that the minimum ratio of material J-resistance to applied J-integral, $J_{0.1}/J_1$, occurred for Surry Unit 1 beltline longitudinal weld material SA-1526. Table 6-1 of the most recently performed EMA (Reference 8), which is based on the revised 60-year fluence projections that include consideration of IFBA implementation and FSI removal, reaffirms that this limiting ratio occurs for Surry Unit 1 beltline longitudinal weld material SA-1526.

The upper shelf energy EMA documented in Reference 8 includes conservative margin relative to the reactor vessel fluence projections described in Section 3.1. At Dominion's request, the EMA documented in Reference 8 includes reactor vessel fluence margins of 10% for circumferential welds, 20% for longitudinal welds, and 100% for circumferential welds above the active core height to provide a degree of retained margin in the analyses.

The EMA documented in Reference 8 concludes that the limiting reactor vessel beltline weld for Surry Units 1 and 2 satisfies the acceptance criteria of Appendix K to Section XI of the ASME Code for ductile flaw extensions and tensile stability using projected low upper-shelf Charpy impact energy levels at 48 EFPY of plant operation.

It is noted that USE values are provided in the summary table of Attachment 3 for Surry Unit 2 weld materials R3008 and SA-1585, even though the EMA documented in Reference 8 is applicable to these materials. The EMA is not cited in the summary table because 10 CFR Part 50 Appendix G calls for using the EMA if the USE value does not meet the 50 ft-lb criterion. Since Surry Unit 2 weld materials R3008 and SA-1585 continue to be above 50 ft-lbs, the USE value is reported in Attachment 3 instead of the EMA.

In summary, when the revised 60-year neutron fluence values are considered, Surry Units 1 and 2 reactor vessel beltline materials meet the 10 CFR Part 50 Appendix G requirements by satisfying the 50 ft-lb USE limit, or by an EMA that demonstrates acceptable margins of safety against fracture for projected low upper-shelf Charpy impact energy levels at 48 EFPY.

### 3.5 Technical Specification RCS Pressure/Temperature Limits

The current Surry Units 1 and 2 Technical Specifications RCS P/T limits and LTOPS setpoint are based on a limiting 1/4-thickness (1/4-T) $RT_{NDT}$ of 228.4 °F and a limiting 3/4-thickness (3/4-T) $RT_{NDT}$ of 189.5°F (References 10 and 11). When the current Technical Specifications RCS P/T limits and LTOPS setpoint were developed, these values of $RT_{NDT}$ were determined to bound Surry Units 1 and 2 reactor vessel beltline materials at end-of-original 40-year license fluences corresponding to 28.8 EFPY and

29.4 EFPY for Surry Units 1 and 2, respectively.

The summary table provided in Attachment 3 shows the results for the 1/4-T $RT_{NDT}$ and the 3/4-T $RT_{NDT}$ values considering the 60-year fluence projections corresponding to 48 EFPY, and the Linde 80 weld material properties per Topical Report BAW-2308, Revision 1-A. At fluence projections corresponding to 48 EFPY, the limiting 1/4-T $RT_{NDT}$ value is 222.5°F for Surry Unit 2 Intermediate to Lower Shell Circumferential Weld material R3008/0227, and the limiting 3/4-T $RT_{NDT}$ value is 188.6°F for Surry Unit 2 Intermediate to Lower Shell Circumferential Weld material R3008/0227.

Sensitivity calculations were also performed to determine the 1/4-T $RT_{NDT}$ and the 3/4-T $RT_{NDT}$ values at 32 EFPY, without crediting the alternate initial $RT_{NDT}$ methodology described in Topical Report BAW-2308, Revision 1-A. A cumulative core exposure of 32 EFPY exceeds the core exposure cited on the current Technical Specifications RCS P/T limits curves, which indicate cumulative exposure applicability limits of 28.8 EFPY for Surry Unit 1 and 29.4 EFPY for Surry Unit 2. Therefore, the 32 EFPY fluences represent a conservative point of comparison relative to the current Technical Specifications RCS P/T limits.

At fluence projections corresponding to 32 EFPY, and without crediting the Linde 80 weld material properties per Topical Report BAW-2308, Revision 1-A, the limiting 1/4-T $RT_{NDT}$ value is 225.7°F for Surry Unit 1 Lower Shell Longitudinal Weld SA-1526/299L44. At fluence projections corresponding to 32 EFPY and without crediting the Linde 80 weld material properties per Topical Report BAW-2308, Revision 1-A, the limiting 3/4-T $RT_{NDT}$ value is 188.9°F for Surry Unit 1 Intermediate to Lower Shell Circumferential Welds SA-1585/72445 and SA-1650/72445.

In summary, when the revised 60-year fluence projections at 48 EFPY are used with the revised Linde 80 weld initial $RT_{NDT}$ values, the limiting 1/4-T and 3/4-T $RT_{NDT}$ values remain less than those used in the development of the current P/T limits and LTOPS setpoints. Additionally, when revised fluence projections at 32 EFPY are used <u>without</u> the revised Linde 80 weld material properties, the limiting 1/4-T and 3/4-T $RT_{NDT}$ values remain less than those used in the development of the current P/T limits and LTOPS setpoint. Therefore, the existing Surry Technical Specifications RCS P/T limits, LTOPS setpoint, and LTOPS enabling temperature remain valid and conservative for their period of applicability, corresponding to 28.8 EFPY and 29.4 EFPY for Surry Units 1 and 2, respectively.

### 3.6 <u>RPV Material Surveillance Program per 10 CFR 50 Appendix H</u>

Current reactor vessel material surveillance monitoring requirements for Surry are based on the predicted shift in Charpy V-notch 30 ft-lb energy ($\Delta T_{30}$). The alternate methodology described in Topical Report BAW-2308, Revision 1-A does not rely on obtaining direct fracture toughness measurements (i.e. in accordance with ASTM-1921) in the irradiated condition for the purposes of monitoring changes due to irradiation in the Linde 80 weld materials. Topical Report BAW-2308, Revision 1-A also confirmed

that the irradiation-induced shift in Charpy V-notch 30 ft-lb energy ($\Delta T_{30}$) conservatively overpredicted the Master Curve $\Delta T_0$ test data for Linde 80 weld materials. Therefore, the current reactor vessel material surveillance program at Surry Power Station is not affected (i.e. current monitoring requirements are based on predicted shift in Charpy V-notch 30 ft-lb energy ($\Delta T_{30}$).

Dominion expects to submit for NRC review and approval a revised surveillance capsule withdrawal schedule for Surry, which will be valid for the current 60-year operating license period. The revised surveillance capsule withdrawal schedule will incorporate the guidance of NUREG-1801 (GALL Report).

## 4.0 Surry Units 1 and 2 Technical Specifications

As noted in Section 3.5, the current Surry Technical Specifications RCS P/T limits (TS 3.1.B), LTOPS setpoint, and LTOPS enabling temperature (TS 3.1.G.1.c) are not affected by this submittal and remain valid and conservative for their period of applicability. Therefore, there are no changes to Surry Technical Specifications proposed in this submittal. However, Dominion expects to submit, at a later date, a Technical Specifications change request to provide revised RCS P/T Limits, LTOPS setpoint, and LTOPS Enable Temperature basis that will be effective through the end of the Surry Units 1 and 2 60-year operating licenses.

## 5.0 Affected UFSAR Sections

Sections of the Surry Units 1 and 2 UFSAR will be revised to reflect implementation of the revised design basis analyses described herein. Following NRC approval of the exemption request associated with this submittal, a UFSAR revision will be made in accordance with the requirements of 10 CFR 50.71(e).

## 6.0 Reactor Vessel Integrity Database (RVID)

Attachment 3 of this submittal contains a RVID update based on the alternate material properties basis for Linde 80 weld materials as provided in Topical Report BAW-2308, Revision 1-A. The RVID update also includes the revised RPV neutron fluence values, which include the effects of FSI removal and IFBA core designs. The revised fluence values support plant operation for 48 EFPY for Surry Units 1 and 2, corresponding to the end of the current 60-year operating licenses.

## 7.0 Conclusions

The proposed changes to the Surry Power Station Units 1 and 2 PTS assessment per 10 CFR 50.61 are valid to the end of the current 60-year license period. As described in this assessment, the PTS screening criteria per 10 CFR 50.61 are met for Surry Units 1 and 2 RPV beltline materials. The assessment employs alternate initial $RT_{NDT}$ methodology for the Linde 80 weld materials as described in approved Topical Report BAW-2308, Revision 1-A. The assessment also employs revised RPV neutron fluence

values that appropriately consider IFBA core designs and FSI removal.

The Upper Shelf Energy values for Surry Units 1 and 2 beltline materials meet the 50 ft-lb acceptance criterion of 10 CFR 50 Appendix G at the end of the current 60-year operating license period, or an EMA demonstrates acceptable margins of safety against fracture for projected low upper-shelf Charpy impact energy levels at 48 EFPY.

The 1/4-T and 3/4-T $RT_{NDT}$ values used in the development of the current Surry Units 1 and 2 Technical Specifications P/T limits, LTOPS setpoint, and LTOPS enabling temperature remain valid and conservative for the period of applicability.

## 8.0 References

1. Framatome ANP Topical Report BAW-2308, Revision 1-A, "Initial $RT_{NDT}$ of Linde 80 Weld Materials," approved August 2005.

2. NRC Letter from H. N. Berkow to J. S. Holm (Framatome ANP), "Final Safety Evaluation for Topical Report BAW-2308, Revision 1, 'Initial $RT_{NDT}$ of Linde 80 Weld Materials' (TAC No. MB6636)," dated August 4, 2005.

3. Letter from L. N. Hartz (Virginia Electric and Power Company) to USNRC, "Virginia Electric and Power Company, Surry Power Station Unit 2, Evaluation of Surry 2 Capsule Y Data," dated March 27, 2003.

4. Letter from W. L. Stewart (Virginia Electric and Power Company) to USNRC, "Virginia Electric and Power Company, Surry Power Station Units 1 and 2, North Anna Power Station Units 1 and 2, Revision to 10 CFR 50.61 Fracture Toughness Requirements for Protection Against Pressurized Thermal Shock Events," dated December 10, 1991.

5. NRC Regulatory Guide 1.190, Revision 0, "Calculational and Dosimetry Methods for Determining Pressure Vessel Neutron Fluence," dated March 2001.

6. Framatome ANP Report BAW-2241P-A, Rev. 1, "Fluence and Uncertainty Methodologies," December 1999.

7. NRC Letter from S. A. Richards to J. J. Kelly (B&WOG), "Acceptance for Referencing of Licensing Topical Report BAW-2241P, Revision 1, Fluence and Uncertainty Methodologies (TAC No. M98962)," dated April 5, 2000.

8. Framatome ANP Report BAW-2494, Revision 1, "Low Upper-Shelf Toughness Fracture Mechanics Analysis of Reactor Vessel of Surry Units 1 and 2 for Extended Life through 48 Effective Full Power Years," September 2005.

9. Framatome Report BAW-2323, "Low Upper-Shelf Toughness Fracture Mechanics Analysis of Reactor Vessels of Surry Units 1 and 2 for Extended Life through 48 Effective Full Power Years," June 1998.

10. Letter from R. F. Saunders (Virginia Electric and Power Company) to USNRC, "Virginia Electric and Power Company, Surry Power Station Units 1 and 2, Request for Exemption - ASME Code Case N-514, Proposed Technical Specifications Change, Revised Pressure/Temperature Limits and LTOPS Setpoint," Serial No. 95-197, June 8, 1995.

11. Letter from USNRC to J. P. O'Hanlon (Virginia Electric and Power Company), "Surry Units 1 and 2 - Issuance of Amendments Re: Surry, Units 1 and 2 Reactor Vessel Heatup and Cooldown Curves (TAC NOS. M92537 and M92538)," dated December 28,1995.

12. NRC Regulatory Guide 1.99, Revision 2, "Radiation Embrittlement of Reactor Vessel Materials," dated May 1988.

**Attachment 2**

**Regulatory Basis and Request for Exemption**

**Surry Power Station Units 1 and 2**
**Virginia Electric and Power Company**
**(Dominion)**

# Regulatory Basis and Request for Exemption

## 1.0 Introduction

In accordance with the provisions of 10 CFR 50.60(b) and 10 CFR 50.12, Virginia Electric and Power Company (Dominion) is submitting a request for exemption from certain requirements of 10 CFR 50.61, "Fracture Toughness Requirements for Protection Against Thermal Shock Events," and 10 CFR 50, Appendix G, "Fracture Toughness Requirements." The requested exemption would allow use of an alternate method, as described in Framatome ANP Topical Report BAW-2308, Revision 1-A, for determining the adjusted $RT_{NDT}$ (reference nil-ductility temperature) of the Linde 80 weld materials present in the beltline region of the Surry Units 1 and 2 reactor pressure vessels.

## 2.0 Background

10 CFR 50.61(a)(5) and 10 CFR 50, Appendix G (II)(D)(i), require that the pre-service or unirradiated condition $RT_{NDT}$ be evaluated according to the procedures in the ASME Code, Section III, Paragraph NB-2331, from Charpy V-notch impact tests and drop weight tests.

Framatome ANP Topical Report BAW-2308, Rev. 1-A provides an NRC-approved alternate method for determining the adjusted $RT_{NDT}$ (reference nil-ductility temperature) of the Linde 80 weld materials present in the beltline region of the reactor pressure vessels at Surry Power Stations Unit 1 and 2. BAW-2308, Revision 1-A, also provides revised initial (unirradiated) $RT_{NDT}$ values for the Linde 80 weld materials present in the reactor pressure vessels of Surry Units 1 and 2.

The following Condition and Limitation is stated in the NRC's Safety Evaluation for Topical Report BAW-2308, Rev. 1:

> *"Any licensee who wants to utilize the methodology of TR BAW-2308, Revision 1 as outlined in items (1) through (3) above, must request an exemption, per 10 CFR 50.12, from the requirements of Appendix G to 10 CFR Part 50 and 10 CFR 50.61 to do so."*

In the above quotation, Condition and Limitation (1) pertains to NRC-accepted values of initial (unirradiated) reference temperature, $IRT_{To}$, and the corresponding uncertainty term, $\sigma_I$, for Linde 80 weld materials based on the Master Curve methodology using direct testing of fracture toughness in accordance with ASTM Standard Test Method E-1921.

Condition and Limitation (2) requires that a minimum chemistry factor of 167.0°F be applied when the methodology of Regulatory Guide 1.99, Revision 2, is used to assess the shift in nil-ductility transition temperature due to irradiation.

Condition and Limitation (3) requires that a value of $\sigma_\Delta$ = 28.0°F be used to determine the margin term, as defined in Topical Report BAW-2308, Revision 1-A, and Regulatory Guide 1.99, Revision 2.

3.0 Proposed Exemption

The exemption requested by Dominion addresses portions of the following regulations:

(1) Appendix G to 10 CFR Part 50, which sets forth fracture toughness requirements for ferritic materials of pressure-retaining components of the reactor coolant pressure boundary of light water nuclear power reactors to provide adequate margins of safety during any condition of normal operation, including anticipated operational occurrences and system hydrostatic tests, to which the system may be subjected over its service lifetime;

(2) 10 CFR 50.61, which sets forth fracture toughness requirements for protection against pressurized thermal shock (PTS).

The exemption from Appendix G to 10 CFR 50 is to replace the required use of the existing Charpy V-notch and drop-weight-based methodology with the use of an alternate methodology that incorporates the use of fracture toughness test data for evaluating the integrity of the Linde 80 weld materials present in the Surry Units 1 and 2 reactor pressure vessel beltline regions. The alternate methodology employs direct fracture toughness testing per the Master Curve methodology based on use of ASTM Standard Method E 1921 (1997 and 2002 editions), and ASME Code Case N-629. The exemption is required since Appendix G to 10 CFR 50 requires that for the pre-service or unirradiated condition, $RT_{NDT}$ be evaluated by Charpy V-notch impact tests and drop weight tests according to the procedures in the ASME Code, Paragraph NB-2331.

The exemption from 10 CFR 50.61 is to use an alternate methodology to allow the use of direct fracture toughness test data for evaluating the integrity of the Linde 80 weld materials present in the Surry Units 1 and 2 RPV beltline regions, based on the use of ASTM E 1921 (1997 and 2002 editions) and ASME Code Case N-629. The exemption is required because the methodology for evaluating RPV material fracture toughness in 10 CFR 50.61 requires that the pre-service or unirradiated condition be evaluated using Charpy V-notch impact tests and drop weight tests according to the procedures in the ASME Code, Paragraph NB-2331.

Additionally, the NRC's Safety Evaluation for Topical Report BAW-2308, Revision 1, concludes that an exemption is required to address issues related to 10 CFR 50.61 inasmuch as the methodology presented in Topical Report BAW-2308, Revision 1, as modified and approved by the NRC staff, represents a significant change to the methodology specified in 10 CFR 50.61 for determining the PTS reference temperature ($RT_{PTS}$) value for Linde 80 weld material. The changes in the methodology described in BAW-2308, Revision 1-A, with respect to the methodology per 10 CFR 50.61, include

the requirements for use of a minimum chemistry factor of 167°F and a value of $\sigma_\Delta$ = 28.0°F for Linde 80 weld materials.

10 CFR 50.12 states that the Commission may grant an exemption from requirements contained in 10 CFR 50 provided that: 1) the exemption is authorized by law, 2) the exemption will not result in an undue risk to public health and safety, 3) the exemption is consistent with the common defense and security, and 4) special circumstances, as defined in 10 CFR 50.12(a)(2) are present. The requested exemption to allow the use of Topical Report BAW-2308, Revision 1-A, as the basis for the Linde 80 weld material initial properties at Surry Units 1 and 2 satisfy these requirements as described below.

1. <u>The requested exemption is authorized by law.</u>

   No law exists which precludes the activities covered by this exemption request. 10 CFR 50.60(b) allows the use of alternatives to 10 CFR 50, Appendix G when an exemption is granted by the Commission under 10 CFR 50.12.

   In addition, 10 CFR 50.61 permits other methods for use in determining the initial material properties provided such methods are approved by the Director, Office of Nuclear Reactor Regulation.

2. <u>The requested exemption does not present an undue risk to the public health and safety.</u>

   The proposed material initial properties basis described in Topical Report BAW-2308 Revision 1-A represents an NRC-approved methodology for establishing weld wire specific and generic $IRT_{T0}$ values for Linde 80 welds. Topical Report BA-2308, Revision 1-A, includes appropriate conservatisms to ensure that use of the proposed initial material properties basis does not increase the probability of occurrence or the consequences of an accident at Surry Unit 1 or 2, and will not create the possibility for a new or different type of accident that could pose a risk to public health and safety.

   The use of this proposed approach ensures that the intent of the requirements specified in 10 CFR 50 Appendix G and 10 CFR 50.61 are satisfied.

   The requested exemption is consistent with the NRC staff requirements specified in the Safety Evaluation for the approved Topical Report BAW-2308, Revision 1-A; consequently, the exemption does not present an undue risk to the public health and safety.

3. <u>The requested exemption will not endanger the common defense and security.</u>

   The requested exemption is specifically concerned with RPV material properties and is consistent with NRC staff requirements specified in the Safety Evaluation for

approved Topical Report BAW-2308, Revision 1-A. Consequently, the requested exemption will not endanger the common defense and security.

4. Special circumstances are present which necessitate the request for an exemption to the regulations of 10 CFR 50.61 and 10 CFR 50 Appendix G.

   Pursuant to 10 CFR 50.12(a)(2), the NRC will not consider granting an exemption to the regulations unless special circumstances are present. The requested exemption meets the special circumstances of paragraph 10 CFR 50.12(a)(2)(ii) since application of these regulations in this particular circumstance is not necessary to achieve the underlying purpose of the regulations.

   The underlying purpose of 10 CFR 50.61 and 10 CFR 50 Appendix G is to protect the integrity of the reactor coolant pressure boundary by ensuring that each reactor vessel material has adequate fracture toughness. Application of paragraph NB-2331 of ASME Section III in the determination of initial material properties was conservatively developed based on the level of knowledge existing in the early 1970s concerning reactor pressure vessel materials and the estimated effects of operation. Since the early 1970s, the level of knowledge concerning these topics has greatly expanded. This increased knowledge level permits relaxation of the ASME III NB-2331 requirements via application of Topical Report BAW-2308, Revision 1-A, while maintaining the underlying purpose of the ASME Code and NRC regulations to ensure an acceptable margin of safety is maintained.

   This submittal presents the reactor vessel integrity assessments for Surry Power Station Units 1 and 2 utilizing the methodology of Topical Report BAW-2308, Revision 1-A for Linde 80 weld materials. The assessment documents the integrity of the reactor pressure vessel for Surry Units 1 and 2 relative to the requirements and underlying purpose of 10 CFR 50.61 and 10 CFR 50 Appendix G.

   Therefore, the intent of 10 CFR 50.61 and 10 CFR 50 Appendix G will continue to be satisfied for the proposed change in reactor vessel material initial properties basis, thus justifying the exemption request. Issuance of an exemption from the criteria of these regulations to permit the use of Topical Report BAW-2308, Revision 1-A for Surry Units 1 and 2 will not compromise the safe operation of the reactors, and will ensure that RPV integrity is maintained.

**Attachment 3**

# Reactor Vessel Materials Data Tables

**Surry Power Station Units 1 and 2**
**Virginia Electric and Power Company**
**(Dominion)**

# PTS Summary Based on 60-Year Fluences and Linde 80 Weld Material Properties per BAW-2308, Rev. 1

**Facility:** Surry Unit 1
**Vessel Manufacturer:** B&W and Rotterdam Dockyard

| RPV Weld Wire Heat or Material ID | Location | Best-Estimate Copper (wt%) | Best-Estimate Nickel (wt%) | ID Fluence (x1E19) | Assigned Material Chemistry Factor | Method of Determining CF | Initial RT(NDT) | Shift ΔRT(NDT) | Sigma(I) | Sigma(delta) | Margin | Inner Surf. ART or RT(PTS) | 1/4-T ART* | 3/4-T ART** |
|---|---|---|---|---|---|---|---|---|---|---|---|---|---|---|
| 122V109VA1 | Nozzle Shell Forging | 0.110 | 0.740 | 0.775 | 76.1 | Tables | 40 | 70.7 | 0.0 | 17.0 | 34.0 | 144.7 | 134.2 | 115.0 |
| C4326-1 | Intermediate Shell | 0.110 | 0.550 | 5.660 | 73.5 | Tables | 10 | 104.8 | 0.0 | 17.0 | 34.0 | 148.8 | 141.3 | 122.6 |
| C4326-2 | Intermediate Shell | 0.110 | 0.550 | 5.660 | 73.5 | Tables | 0 | 104.8 | 0.0 | 17.0 | 34.0 | 138.8 | 131.3 | 112.6 |
| 4415-1 | Lower Shell | 0.102 | 0.493 | 5.660 | 85.0 | Surv. Data | 20 | 121.2 | 0.0 | 8.5 | 17.0 | 158.2 | 149.5 | 127.9 |
| 4415-2 | Lower Shell | 0.110 | 0.500 | 5.660 | 73.0 | Tables | 0 | 104.1 | 0.0 | 17.0 | 34.0 | 138.1 | 130.6 | 112.1 |
| J726/25017 | Nozzle to Int Shell Circ Weld | 0.330 | 0.100 | 0.775 | 152.0 | Tables | 0 | 141.1 | 20.0 | 28.0 | 68.8 | 209.9 | 189.1 | 150.8 |
| SA-1585/72445 | Int. to Low Sh. Circ (ID 40%) | 0.220 | 0.540 | 5.610 | 167.0 | BAW-2308-1-A | -72.5 | 237.9 | 12.3 | 28.0 | 61.2 | 226.5 | 209.4 | 166.9 |
| SA-1650/72445 | Int. to Low Sh. Circ (OD 60%) | 0.220 | 0.540 | 5.610 | 167.0 | BAW-2308-1-A | -72.5 | 237.9 | 12.3 | 28.0 | 61.2 | 226.5 | 209.4 | 166.9 |
| SA-1494/8T1554 | Int Shell Long. Welds L3 & L4 | 0.160 | 0.570 | 1.080 | 167.0 | BAW-2308-1-A | -47.6 | 170.6 | 17.2 | 28.0 | 65.7 | 188.7 | 165.6 | 121.5 |
| SA-1494/8T1554 | Lower Shell Long. Weld L1 | 0.160 | 0.570 | 1.040 | 167.0 | BAW-2308-1-A | -47.6 | 168.8 | 17.2 | 28.0 | 65.7 | 187.0 | 163.8 | 120.0 |
| SA-1526/299L44 | Lower Shell Long. Weld L2 | 0.340 | 0.680 | 1.040 | 220.6 | Tables | -81.8 | 223.0 | 11.6 | 28.0 | 60.6 | 201.8 | 171.3 | 113.3 |

* 1/4-T ART value of 228.4 F was used in the determination of P/T limits (Approved by NRC on 12/28/95)
** 3/4-T ART value of 189.5 F was used in the determination of P/T limits (Approved by NRC on 12/28/95)

Note: Shaded cells indicate a changed value relative to Dominion's most recent update to the NRC's Reactor Vessel Integrity Database (RVID) (Last Update on 3/27/03).

**Facility:** Surry Unit 2
**Vessel Manufacturer:** B&W and Rotterdam Dockyard

| RPV Weld Wire Heat or Material ID | Location | Best-Estimate Copper (wt%) | Best-Estimate Nickel (wt%) | ID Fluence (x1E19) | Assigned Material Chemistry Factor | Method of Determining CF | Initial RT(NDT) | Shift ΔRT(NDT) | Sigma(I) | Sigma(delta) | Margin | Inner Surf. ART or RT(PTS) | 1/4-T ART* | 3/4-T ART** |
|---|---|---|---|---|---|---|---|---|---|---|---|---|---|---|
| 123V303VA1 | Nozzle Shell Forging | 0.110 | 0.720 | 0.632 | 75.8 | Tables | 30 | 66.1 | 0.0 | 17.0 | 34.0 | 130.1 | 119.8 | 101.4 |
| C4331-2 | Intermediate Shell | 0.120 | 0.600 | 5.380 | 83.0 | Tables | -10 | 117.6 | 0.0 | 17.0 | 34.0 | 141.6 | 132.9 | 111.6 |
| C4339-2 | Intermediate Shell | 0.110 | 0.540 | 5.380 | 73.4 | Tables | -20 | 104.0 | 0.0 | 17.0 | 34.0 | 118.0 | 110.3 | 91.5 |
| C4208-2 | Lower Shell | 0.150 | 0.550 | 5.380 | 107.3 | Tables | -30 | 151.9 | 0.0 | 17.0 | 34.0 | 155.9 | 144.7 | 117.2 |
| C4339-1 | Lower Shell | 0.107 | 0.530 | 5.380 | 70.8 | Tables | -10 | 100.3 | 0.0 | 17.0 | 34.0 | 124.3 | 116.9 | 98.8 |
| L737/4275 | Nozzle to Int Shell Circ Weld | 0.350 | 0.100 | 0.632 | 160.5 | Tables | 0 | 139.9 | 20.0 | 28.0 | 68.8 | 208.7 | 187.0 | 147.9 |
| R3008/0227 | Int. to Lower Shell Circ Weld | 0.187 | 0.545 | 5.370 | 132.4 | Surv. Data | 0 | 187.6 | 20.0 | 14.0 | 48.8 | 236.4 | 222.5 | 188.6 |
| WF-4/8T1762 | Int. Shell Long. L4 (ID 50%) | 0.190 | 0.570 | 1.140 | 167.0 | BAW-2308-1-A | -47.6 | 173.1 | 17.2 | 28.0 | 65.7 | 191.2 | 168.1 | 123.8 |
| SA-1585/72445 | Int. Sh. L3 (100%), L4 (OD 50) | 0.220 | 0.540 | 1.140 | 167.0 | BAW-2308-1-A | -72.5 | 173.1 | 12.3 | 28.0 | 61.2 | 161.8 | 138.7 | 94.3 |
| WF-4/8T1762 | LS L2 (ID 63%), L1 (100) | 0.190 | 0.570 | 1.140 | 167.0 | BAW-2308-1-A | -47.6 | 173.1 | 17.2 | 28.0 | 65.7 | 191.2 | 168.1 | 123.8 |
| WF-8/8T1762 | LS Long. Weld L2 (OD 37%) | 0.190 | 0.570 | 1.140 | 167.0 | BAW-2308-1-A | -47.6 | 173.1 | 17.2 | 28.0 | 65.7 | 191.2 | 168.1 | 123.8 |

* 1/4-T ART value of 228.4 F was used in the determination of P/T limits (Approved by NRC on 12/28/95)
** 3/4-T ART value of 189.5 F was used in the determination of P/T limits (Approved by NRC on 12/28/95)

Note: Shaded cells indicate a changed value relative to Dominion's most recent update to the NRC's Reactor Vessel Integrity Database (RVID) (Last Update on 3/27/03).

# Upper Shelf Energy Summary Based on 60-Year Fluences

**CvUSE Values**
**Facility:** Surry Unit 1
**Vessel Manufacturer:** B&W and Rotterdam Dockyard

| RPV Weld Wire Heat or Material ID | Location | Forging or Flux Type | USE @ 1/4 T | 1/4-T Fluence (x1E19) | Unirradiated USE | Unirradiated USE Method | %Drop in USE @ EOL @ 1/4 T | %Drop in USE Method | Cu % |
|---|---|---|---|---|---|---|---|---|---|
| 122V109VA1 | Nozzle Shell Forging | SA508, Cl. 2 | 69.2 | 0.473 | 83.0 | Measured/MTEB 5-2 | 16.6% | Pos 1.2 | 0.11 |
| C4326-1 | Intermediate Shell | SA533, Gr. B1 | 84.4 | 3.453 | 115.0 | Measured | 26.7% | Pos 1.2 | 0.11 |
| C4326-2 | Intermediate Shell | SA533, Gr. B1 | 68.9 | 3.453 | 94.0 | Measured/MTEB 5-2 | 26.7% | Pos 1.2 | 0.11 |
| 4415-1 | Lower Shell | SA533, Gr. B1 | 76.6 | 3.453 | 103.0 | Measured | 25.6% | Pos 1.2 | 0.10 |
| 4415-2 | Lower Shell | SA533, Gr. B1 | 60.9 | 3.453 | 83.0 | Measured/MTEB 5-2 | 26.7% | Pos 1.2 | 0.11 |
| J726/25017 | Nozzle to Int Shell Circ Weld | SAF 89 | EMA | 0.473 | EMA | Estimate | EMA | EMA | 0.33 |
| SA-1585/72445 | Int. to Low Sh. Circ (ID 40%) | Linde 80 | EMA | 3.423 | EMA | Measured | EMA | EMA | 0.22 |
| SA-1650/72445 | Int. to Low Sh. Circ (OD 60%) | Linde 80 | EMA | 3.423 | EMA | Measured | EMA | EMA | 0.22 |
| SA-1494/8T1554 | Int Shell Long. Welds L3 & L4 | Linde 80 | EMA | 0.659 | EMA | Estimate | EMA | EMA | 0.16 |
| SA-1494/8T1554 | Lower Shell Long. Weld L1 | Linde 80 | EMA | 0.634 | EMA | Estimate | EMA | EMA | 0.16 |
| SA-1526/299L44 | Lower Shell Long. Weld L2 | Linde 80 | EMA | 0.634 | EMA | Measured | EMA | EMA | 0.34 |

Note: Shaded cells indicate a changed value relative to Dominion's most recent update to the NRC's Reactor Vessel Integrity Database (RVID) (Last Update on 3/27/03).

**CvUSE Values**
**Facility:** Surry Unit 2
**Vessel Manufacturer:** B&W and Rotterdam Dockyard

| RPV Weld Wire Heat or Material ID | Location | Forging or Flux Type | USE @ 1/4 T | 1/4-T Fluence (x1E19) | Unirradiated USE | Unirradiated USE Method | %Drop in USE @ 1/4 T | %Drop in USE Method | Cu % |
|---|---|---|---|---|---|---|---|---|---|
| 123V303VA1 | Nozzle Shell Forging | SA508, Cl. 2 | 87.6 | 0.386 | 104.0 | Measured/MTEB 5-2 | 15.8% | Pos 1.2 | 0.11 |
| C4331-2 | Intermediate Shell | SA533, Gr. B1 | 60.9 | 3.282 | 84.0 | Measured/MTEB 5-2 | 27.5% | Pos 1.2 | 0.12 |
| C4339-2 | Intermediate Shell | SA533, Gr. B1 | 61.2 | 3.282 | 83.0 | Measured/MTEB 5-2 | 26.3% | Pos 1.2 | 0.11 |
| C4208-2 | Lower Shell | SA533, Gr. B1 | 64.7 | 3.282 | 94.0 | Measured/MTEB 5-2 | 31.2% | Pos 1.2 | 0.15 |
| C4339-1 | Lower Shell | SA533, Gr. B1 | 77.8 | 3.282 | 105.0 | Measured | 25.9% | Pos 1.2 | 0.11 |
| L737/4275 | Nozzle to Int Shell Circ Weld | SAF 89 | EMA | 0.386 | EMA | Estimate | EMA | EMA | 0.35 |
| R3008/0227 | Int. to Lower Shell Circ Weld | Grau Lo | 51.5 | 3.276 | 90.0 | Measured | 42.7% | Pos 1.2 | 0.19 |
| WF-4/8T1762 | Int. Shell Long. L4 (ID 50%) | Linde 80 | EMA | 0.695 | EMA | Estimate | EMA | EMA | 0.19 |
| SA-1585/72445 | Int. Sh. L3 (100%), L4 (OD 50) | Linde 80 | 51.6 | 0.695 | 77.0 | Measured | 33.0% | Pos 1.2 | 0.22 |
| WF-4/8T1762 | LS L2 (ID 63%), L1 (100) | Linde 80 | EMA | 0.695 | EMA | Estimate | EMA | EMA | 0.19 |
| WF-8/8T1762 | LS Long. Weld L2 (OD 37%) | Linde 80 | EMA | 0.695 | EMA | Estimate | EMA | EMA | 0.19 |

Note: Shaded cells indicate a changed value relative to Dominion's most recent update to the NRC's Reactor Vessel Integrity Database (RVID) (Last Update on 3/27/03).

**Attachment 4**

**Framatome ANP Report BAW-2494, Revision 1**
***Low Upper-Shelf Toughness Fracture Mechanics Analysis of Reactor Vessel of Surry Units 1 and 2 for Extended Life through 48 Effective Full Power Years***
**September 2005**

**Surry Power Station Units 1 and 2**
**Virginia Electric and Power Company**
**(Dominion)**

**BAW-2494, Revision 1**
**September 2005**

# Low Upper-Shelf Toughness Fracture Mechanics Analysis of Reactor Vessel of Surry Units 1 and 2 for Extended Life through 48 Effective Full Power Years

AREVA Document No. 77-2494-01
(See Section 11 for document signatures.)

Prepared for

Dominion Generation

Prepared by

Framatome ANP, Inc.
An AREVA and Siemens company
3315 Old Forest Road
P. O. Box 10935
Lynchburg, Virginia 24506-0935

# EXECUTIVE SUMMARY

Dominion Generation is considering withdrawal of the flux suppression inserts (FSIs) from the core of Surry Unit 1 in Cycle 21 and implementation of Integral Fuel Burnable Absorbers (IFBA) in the feed fuel for both Surry Units 1 and 2 in their respective Cycle 21. As a result of these changes, projected fluence values at 48 effective full power years (EFPY) of plant operation have changed. It must be ensured that these changes do not affect the plant adversely from a regulatory compliance point of view. One of the compliance issues is Appendix G to 10 CFR Part 50 where low upper-shelf toughness is addressed. An equivalent margins assessment has to be made for material toughness when the upper-shelf Charpy energy level falls below 50 ft-lb. This report addresses this particular compliance issue regarding low upper-shelf toughness only.

The Charpy upper-shelf value of reactor vessel beltline weld materials at Surry Units 1 and 2 may be less than 50 ft lb at 48 EFPY. In order to demonstrate that sufficient margins of safety against fracture remain to satisfy the requirements of Appendix G to 10 CFR Part 50, a low upper-shelf toughness fracture mechanics analysis has been performed. The limiting welds in the beltline region have been evaluated for ASME Levels A, B, C, and D Service Loadings based on the evaluation acceptance criteria of the ASME Code, Section XI, Appendix K.

The analysis presented in this report demonstrates that the limiting reactor vessel beltline weld at Surry Units 1 and 2 satisfies the ASME Code requirements of Appendix K for ductile flaw extensions and tensile stability using projected low upper-shelf Charpy impact energy levels for the weld material at 48 EFPY.

RECORD OF REVISIONS

| Revision | Affected Pages | Description | Date |
|---|---|---|---|
| 0 | All | Original release | May 2005 |
| 1 | All | Include analysis of Surry Unit 2. Re-evaluate Surry Unit 1 using updated fluence values. | September 2005 |

TABLE OF CONTENTS

1.0 Introduction ..... 1-1

2.0 Acceptance criteria ..... 2-1
2.1 Levels A and B Service Loadings (K-2200) ..... 2-1
2.2 Level C Service Loadings (K-2300) ..... 2-1
2.3 Level D Service Loadings (K-2400) ..... 2-2

3.0 Material Properties and Reactor Vessel Design Data ..... 3-1
3.1 J-Integral Resistance Model for Mn-Mo-Ni/Linde 80 Welds ..... 3-1
3.2 Reactor Vessel Design Data ..... 3-2
3.3 Mechanical Properties for Weld Material ..... 3-2
3.4 J-Integral Resistance for Linde 80 Weld Material ..... 3-3

4.0 Analytical Methodology ..... 4-1
4.1 Procedure for Evaluating Levels A and B Service Loadings ..... 4-1
4.2 Procedure for Evaluating Levels C and D Service Loadings ..... 4-3
4.3 Temperature Range for Upper-Shelf Fracture Toughness Evaluations ..... 4-5
4.4 Effect of Cladding Material ..... 4-5

5.0 Applied Loads ..... 5-1
5.1 Levels A and B Service Loadings ..... 5-1
5.2 Levels C and D Service Loadings ..... 5-1

6.0 Evaluation for Levels A and B Service Loadings ..... 6-1

7.0 Evaluation for Levels C and D Service Loadings ..... 7-1

8.0 Summary of Results ..... 8-1

9.0 Conclusion ..... 9-1

10.0 References ..... 10-1

11.0 Certification ..... 11-1

LIST OF TABLES

3-1 Mechanical Properties for Base and SA-1526 Weld Material of Surry Unit 1 .....3-3

3-2 Selected Welds and Properties.....3-4

3-3 *J*-Integral Resistances for Levels A and B Service Loadings.....3-4

3-4 *J*-Integral Resistances for Levels C and D Service Loadings .....3-5

6-1 Flaw Evaluation for Levels A and B Service Loadings.....6-2

6-2 *J*-Integral vs. Flaw Extension for Levels A and B Service Loadings – SA-1526 .....6-3

6-3 *J-R* Curves for Evaluation of Levels A and B Service Loadings.....6-4

7-1 $K_I$ vs. Crack Tip Temperature for SLB.....7-3

7-2 $K_{Ic}$ at $^1/_{10}$ Wall Thickness.....7-4

7-3 $K_{Jc}$ at $^1/_{10}$ Wall Thickness with $\Delta a$ = 0.10 in.....7-5

7-4 *J*-Integral vs. Flaw Extension for Levels C and D Service Loadings.....7-6

7-5 *J-R* Curves for Evaluation of Levels C and D Service Loadings .....7-7

7-6 Level D Service Loadings - Internal Pressure at Tensile Instability .....7-8

LIST OF FIGURES

1-1 Reactor Vessel of Surry Unit 1 ..... 1-2

1-2 Reactor Vessel of Surry Unit 2 ..... 1-3

2-1 Reactor Vessel Beltline Region with Postulated Longitudinal Flaw ..... 2-3

2-2 Reactor Vessel Beltline Region with Postulated Circumferential Flaw ..... 2-4

5-1 SLB transient – Reactor Coolant Temperature and Pressure vs. Time ..... 5-2

6-1 *J*-Integral vs. Flaw Extension for Levels A and B Service Loadings ..... 6-5

7-1 $K_I$ vs. Crack Tip Temperature for Levels C & D Service Loadings ..... 7-9

7-2 *J*-Integral vs. Flaw Extension for Levels C & D Service Loadings ..... 7-10

## 1.0 Introduction

One consideration for extending the operational life of reactor vessels beyond their original licensing period is the degradation of upper shelf Charpy impact energy levels in reactor vessel materials due to neutron radiation. Appendix G to 10 CFR Part 50, "Domestic Licensing of Production and Utilization Facilities," states in Paragraph IV.A.1.a that, "Reactor vessel beltline materials must have Charpy upper shelf energy ... of no less than 75 ft lb initially and must maintain Charpy upper shelf energy throughout the life of the vessel of no less than 50 ft lb, unless it is demonstrated in a manner approved by the Director, Office of Nuclear Reactor Regulation, that lower values of Charpy upper shelf energy will provide margins of safety against fracture equivalent to those required by Appendix G of Section XI of the ASME Code." Materials with Charpy upper shelf energy below 50 ft lb are said to have low upper shelf fracture toughness. Fracture mechanics analysis is necessary to satisfy the requirements of Appendix G to 10 CFR Part 50 for reactor vessel materials with upper shelf Charpy impact energy levels that have dropped, or that are predicted to drop, below the 50 ft lb requirement.

Dominion Generation is considering withdrawal of the flux suppression inserts (FSIs) from the core of Surry Unit 1 in Cycle 21 and implementation of Integral Fuel Burnable Absorbers (IFBA) in the feed fuel for both Surry Units 1 and 2 in their respective Cycle 21. This document assesses the effect of these proposed changes on the upper-shelf fracture toughness of the reactor vessels at Surry Units 1 and 2. The base metal and weld materials used in the beltline regions of the Surry reactor vessels are identified in Figures 1-1 and 1-2. The B&W Owners Group (B&WOG) fracture toughness model was used in the low upper-shelf toughness fracture mechanics analyses of the reactor vessels of the B&WOG Reactor Vessel Working Group (RVWG) which includes the Surry Units 1 and 2 reactor vessels. The low upper-shelf toughness analysis for all reactor vessels of the B&WOG RVWG for Levels A & B Service Loadings was documented in BAW-2192PA [1]. An additional fracture mechanics analysis for Levels C & D Service Loadings was carried out for all these reactor vessels and documented in BAW-2178PA [2]. Both these reports have been accepted by the NRC. An additional low upper-shelf toughness analysis covering end-of-license and end-of-license renewal fluence values was performed in 1998 for Surry Units 1 and 2 [3]. For the current planned changes, the effect on the Surry Units 1 and 2 reactor vessel materials' upper-shelf toughness is assessed in this report.

The present analysis addresses ASME Levels A, B, C, and D Service Loadings. For Levels A and B Service Loadings, the low upper-shelf toughness analysis is performed according to the acceptance criteria and evaluation procedures contained in Appendix K to Section XI of the ASME Code [4]. The evaluation also utilizes the acceptance criteria and evaluation procedures prescribed in Appendix K for Levels C and D Service Loadings. Levels C and D Service Loadings are evaluated using the one-dimensional, finite element, thermal and stress models and linear elastic fracture mechanics methodology of Framatome ANP's PCRIT computer code to determine stress intensity factors for a worst case pressurized thermal shock transient.

Figure 1-1 Reactor Vessel of Surry Unit 1

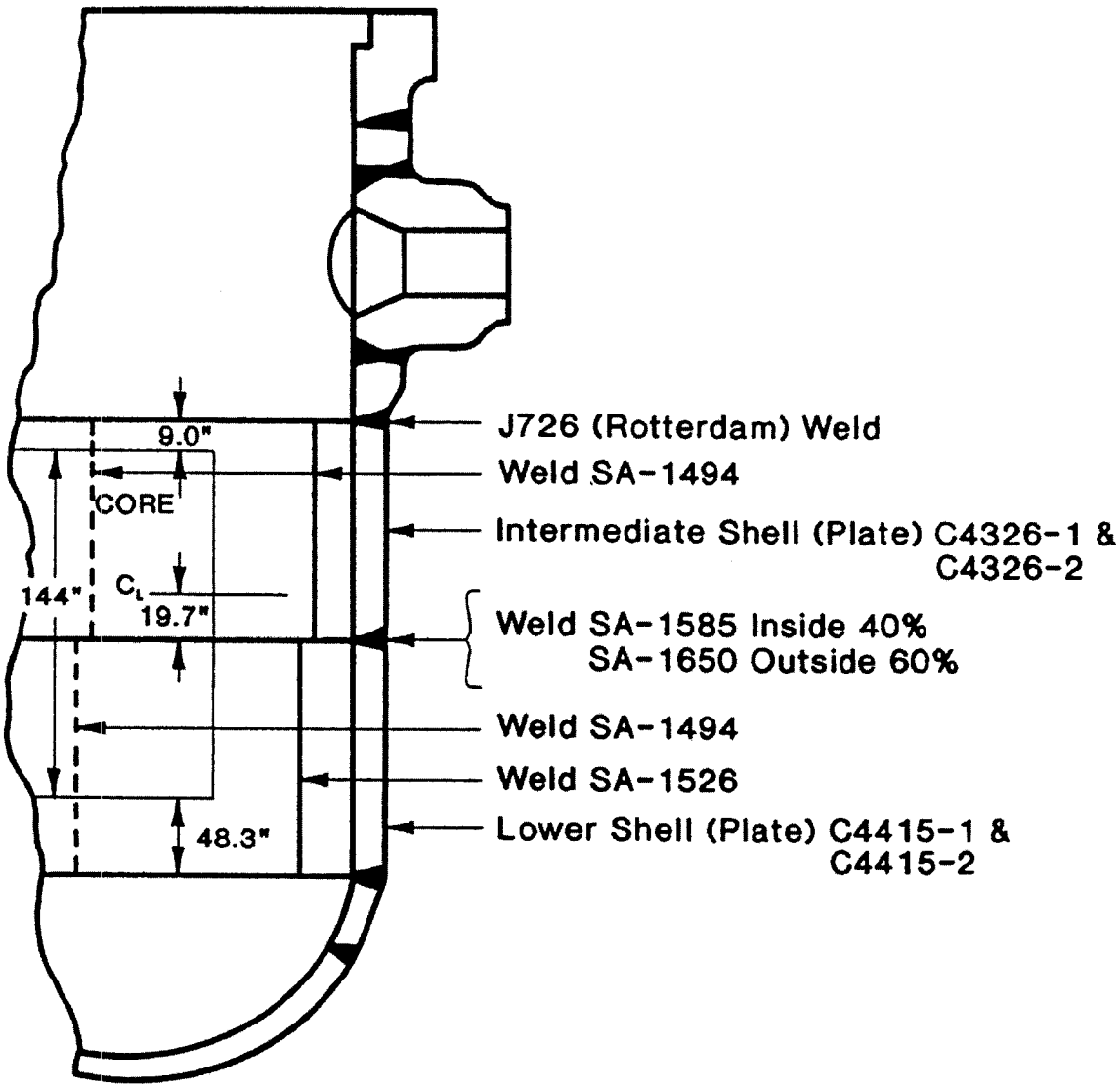

Figure 1-2 Reactor Vessel of Surry Unit 2

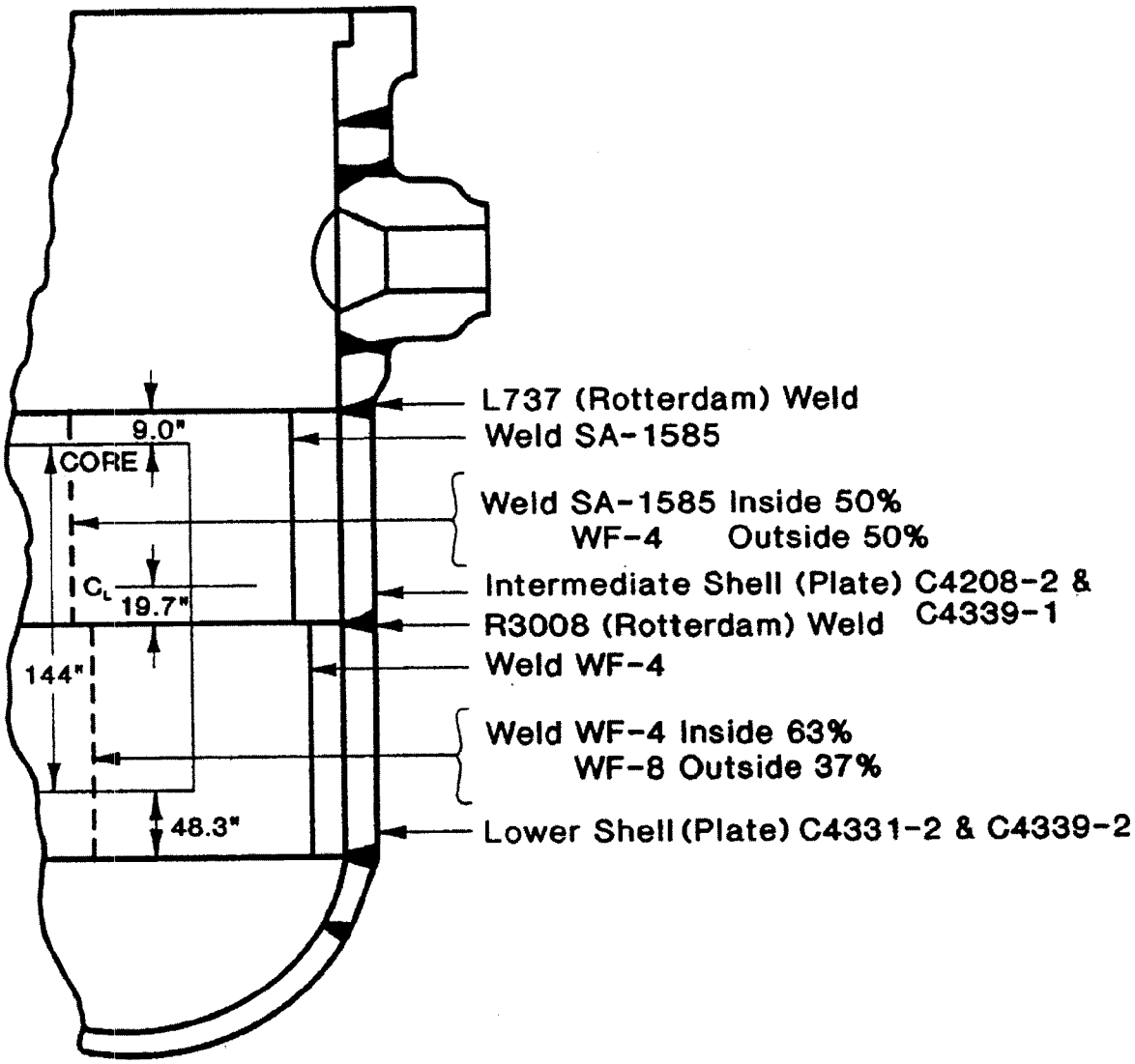

## 2.0 Acceptance Criteria

Acceptance criteria for the assessment of reactor vessels with low upper shelf Charpy impact energy levels are prescribed in Article K-2000 of Appendix K to the ASME Code, Section XI [4]. These criteria are summarized below as they pertain to the evaluation of reactor vessel weld metals.

### 2.1 Levels A and B Service Loadings (K-2200)

(a) When evaluating adequacy of the upper shelf toughness for the weld material for Levels A and B Service Loadings, an interior semi-elliptical surface flaw with a depth ¼ of the wall thickness and a length six times the depth shall be postulated, with the flaw's major axis oriented along the weld of concern and the flaw plane oriented in the radial direction. Two criteria shall be satisfied:

(1) The applied *J*-integral evaluated at a pressure 1.15 times the accumulation pressure ($P_a$) as defined in the plant specific Overpressure Protection Report, with a factor of safety of 1.0 on thermal loading for the plant specific heatup and cooldown conditions, shall be less than the *J*-integral of the material at a ductile flaw extension of 0.10 in.

(2) Flaw extensions at pressures up to 1.25 times the accumulation pressure ($P_a$) shall be ductile and stable, using a factor of safety of 1.0 on thermal loading for the plant specific heatup and cooldown conditions.

(b) The *J*-integral resistance versus flaw extension curve shall be a conservative representation for the vessel material under evaluation.

### 2.2 Level C Service Loadings (K-2300)

(a) When evaluating the adequacy of the upper shelf toughness for the weld material for Level C Service Loadings, interior semi-elliptical surface flaws with depths up to $^1/_{10}$ of the base metal wall thickness, plus the cladding thickness, with total depths not exceeding 1.0 in., and a surface length six times the depth, shall be postulated, with the flaw's major axis oriented along the weld of concern, and the flaw plane oriented in the radial direction. Flaws of various depths, ranging up to the maximum postulated depth, shall be analyzed to determine the most limiting flaw depth. Two criteria shall be satisfied:

(1) The applied *J*-integral shall be less than the *J*-integral of the material at a ductile flaw extension of 0.10 in., using a factor of safety of 1.0 on loading.

(2) Flaw extensions shall be ductile and stable, using a factor of safety of 1.0 on loading.

(b) The *J*-integral resistance versus flaw extension curve shall be a conservative representation for the vessel material under evaluation.

## 2.3 Level D Service Loadings (K-2400)

(a) When evaluating adequacy of the upper shelf toughness for Level D Service Loadings, flaws as specified for Level C Service Loadings shall be postulated, and toughness properties for the corresponding orientation shall be used. Flaws of various depths, ranging up to the maximum postulated depth, shall be analyzed to determine the most limiting flaw depth. Smaller maximum flaw sizes may be used when justified. Flaw extensions shall be ductile and stable, using a factor of safety of 1.0 on loading.

(b) The *J*-integral resistance versus flaw extension curve shall be a best estimate representation for the vessel material under evaluation.

(c) The extent of stable flaw extension shall be less than or equal to 75% of the vessel wall thickness, and the remaining ligament shall not be subject to tensile instability.

Figure 2-1 Reactor Vessel Beltline Region with Postulated Longitudinal Flaw

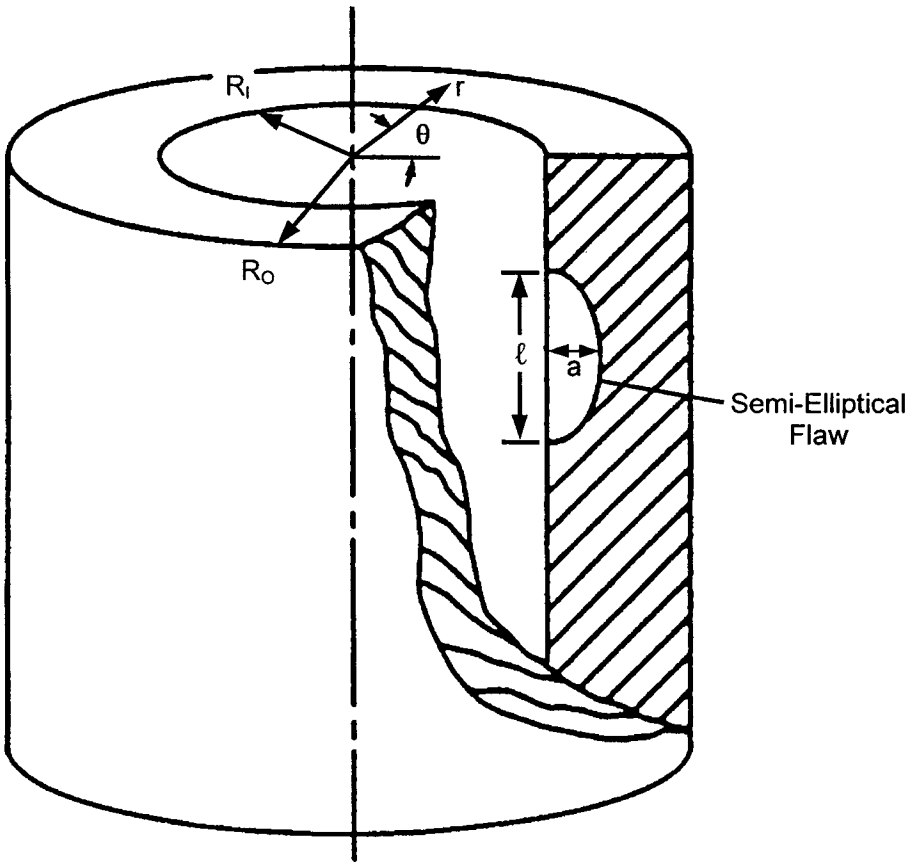


(Not to Scale)

Figure 2-2 Reactor Vessel Beltline Region with Postulated Circumferential Flaw

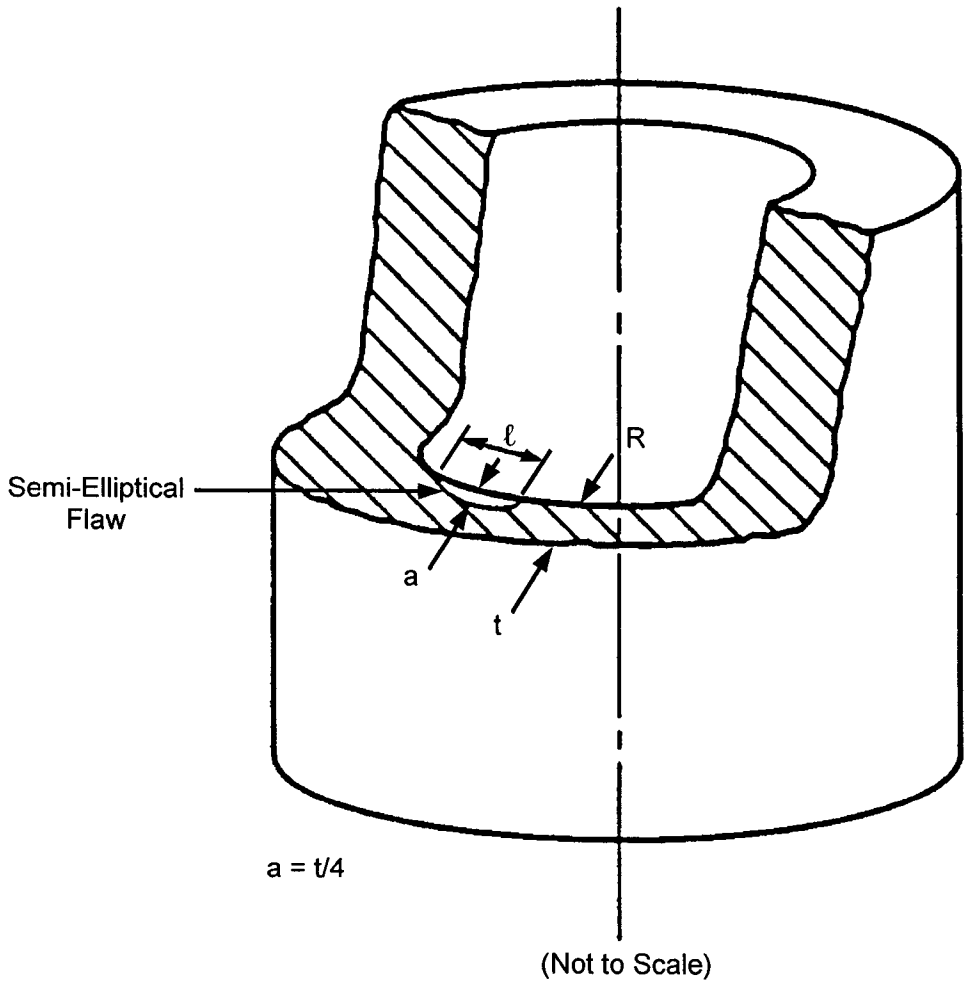

## 3.0 Material Properties and Reactor Vessel Design Data

An upper-shelf fracture toughness material model is discussed below, as well as mechanical properties for the weld material and reactor vessel design data.

### 3.1 J-Integral Resistance Model for Mn-Mo-Ni/Linde 80 Welds

A model for the *J*-integral resistance versus crack extension curve (*J-R* curve) required to analyze low upper-shelf energy materials has been derived specifically for Mn-Mo-Ni/Linde 80 weld materials. A previous analysis of the reactor vessels of B&W Owners Group RVWG [1] described the development of this toughness model from a large database of fracture specimens. Using a modified power law to represent the *J-R* curve, the mean value of the *J*-integral is given by:

$$J = 1000\, C_1 (\Delta a)^{C_2} \exp\left(C_3\, \Delta a^{C_4}\right)$$

with

$$\ln(C_1) = a_1 + a_2\, Cu(\varphi_t)^{a_7} + a_3\, T + a_4 \ln(B_N)$$
$$C_2 = d_1 + d_2 \ln(C_1) + d_3 \ln(B_N)$$
$$C_3 = d_4 + d_5 \ln(C_1) + d_6 \ln(B_N)$$
$$C_4 = -0.4489$$

where

| | | |
|---|---|---|
| $\Delta a$ | = | crack extension, in. |
| $Cu$ | = | copper content, wt% |
| $\phi_t$ | = | fluence at crack tip, $10^{18}$ n/cm$^2$ |
| $T$ | = | temperature, °F |
| $B_N$ | = | specimen net thickness = 0.8 in. |

and

| | | |
|---|---|---|
| $a_1$ | = | 1.81 |
| $a_2$ | = | -1.512 |
| $a_3$ | = | -0.00151 |
| $a_4$ | = | 0.3935 |
| $a_7$ | = | 0.1236 |
| $d_1$ | = | 0.077 |
| $d_2$ | = | 0.1164 |
| $d_3$ | = | 0.07222 |
| $d_4$ | = | -0.08124 |
| $d_5$ | = | -0.00920 |
| $d_6$ | = | 0.05183 |

A lower bound (-2$S_e$) *J-R* curve is obtained by multiplying *J*-integrals from the mean *J-R* curve by 0.699 [1]. It was shown in a previous low upper-shelf fracture toughness analysis performed for B&W Owners Group plants [5] that a typical lower bound *J-R* curve is a conservative representation of toughness values for reactor vessel beltline materials, as required by Appendix K [4] for Levels A, B, and C Service Loadings. The best estimate representation of toughness required for Level D Service Loadings is provided by the mean *J-R* curve.

## 3.2 Reactor Vessel Design Data

Pertinent design data for upper-shelf flaw evaluations in the beltline region of the reactor vessel are provided below for Surry Units 1 and 2.

| | | |
|---|---|---|
| Design Pressure, $P_d$ | = | 2485 psig (use 2500 psig) |
| Inside radius, $R_i$ | = | 78.95 in. |
| Vessel thickness, $t$ | = | 8.08 in. |
| Nominal cladding thickness, $t_c$ | = | 0.16 in. |
| Reactor coolant inlet temperature, $T_C$ | = | 543°F |

## 3.3 Mechanical Properties for Weld Material

The beltline region weld SA-1526 has been previously determined [3] to be the limiting weld for the reactor vessels at Surry. Mechanical properties for the base and SA-1526 weld materials are presented in Tables 3-1. Base metal properties are found in the ASME Code [6]. Weld metal tensile properties are taken from surveillance capsule data for the SA-1526 weld material tested at 70°F and 550°F at a fluence level of $1.60 \times 10^{19}$ n/cm$^2$ [7]. Properties for the intermediate temperatures are calculated by determining the relationship between the variation in yield strength of the base metal with temperature and applying a scaling factor based on the given yield strength values of the weld at the tested temperatures. Also, Poisson's ratio, $\nu$, is taken to be 0.3.

| | |
|---|---|
| Reactor vessel base metal: | SA-533, Grade B, Class 1 low alloy steel plate [8] |
| Description: | Mn-1/2Mo-1/2Ni |
| Carbon content: | < 0.30% |
| Description of weld material | |
| Weld wire: | Mn-Mo-Ni |
| Weld flux: | Linde 80, SAF 89 |

Note: Although the J-R upper-shelf fracture toughness model was developed specifically for Linde 80 weld material, it is assumed that this material model may be used for all beltline welds, including the Rotterdam J726, L737 and R3008 weld materials

Table 3-1 Mechanical Properties for Base and SA-1526 Weld Material of Surry Unit 1

| Temp. | $E$ | Yield Strength ($\sigma_y$) | | Ultimate Strength ($\sigma_u$)* | | $\alpha$ |
|---|---|---|---|---|---|---|
| Material: | Base Metal | Base Metal | Weld SA-1526 | Base Metal | Weld SA-1526 | Base Metal |
| Source: [Ref.] | Code [6] | Code [6] | Actual [7] | Code [6] | Actual [7] | Code [6] |
| (°F) | (ksi) | (ksi) | (ksi) | (ksi) | (ksi) | (in/in/°F) |
| 70 | 29500 | 50.00 | 97.90 | 80 | 111.30 | 7.06E-06 |
| 100 | 29500 | 50.00 | 97.90 | 80 | 111.30 | 7.06E-06 |
| 200 | 28800 | 47.50 | 95.06 | 80 | 109.08 | 7.25E-06 |
| 300 | 28300 | 46.10 | 92.21 | 80 | 106.86 | 7.43E-06 |
| 400 | 27700 | 45.10 | 89.37 | 80 | 104.63 | 7.58E-06 |
| 500 | 27300 | 44.50 | 86.52 | 80 | 102.41 | 7.70E-06 |
| 543 | 27042 | 44.15 | 85.30 | 80 | 101.46 | 7.76E-06 |
| 550 | 27000 | 44.11 | 85.10 | 80 | 101.30 | 7.77E-06 |
| 600 | 26700 | 43.80 | 83.68 | 80 | 100.19 | 7.83E-06 |

* Note: The ultimate strength values of the base and weld metals given here are not used in calculations

The ASME transition region fracture toughness curve for $K_{Ic}$, used to define the beginning of the upper-shelf toughness region, is indexed by the initial $RT_{NDT}$ of the weld material.

Initial $RT_{NDT}$ = -7.0°F [9]
Margin = 69.5°F [9]

## 3.4 J-Integral Resistance for Linde 80 Weld Material

Values of $J$-integral resistance from the upper-shelf toughness model of Section 3.1 are dependent on the temperature and fluence at the crack tip location, the copper content of the weld material, and the size (thickness) of the fracture specimen. These parameters are listed below for the reactor vessels at Surry.

Crack tip temperature varies with plant operation. At 100% power normal operating conditions, the temperature at the crack tip, $T$, is taken to be the inlet temperature, or

Crack tip temperature, $T = T_C$ = 543°F

Fluence at the crack tip is determined using the attenuation equation from Regulatory Guide 1.99, Rev. 2 [10]:

$$\varphi_t = \varphi_{t\,IS}\, e^{-0.24x}$$

where

$\phi_t$ = attenuated fluence at crack tip, n/cm$^2$

$\phi_{t\,IS}$ = fluence at inside surface, n/cm$^2$

$x$ = depth into the vessel wall, in.

Table 3-2 lists the copper content of the weld materials and the fluence at the inside surface of the reactor vessel for all welds located within the innermost 40% of the beltline wall.

Table 3-2 Selected Welds and Properties

| Plant | Weld ID | Weld Orientation | Copper Content (wt%) | Inside Surface Fluence (n/cm$^2$)* |
|---|---|---|---|---|
| Surry 1 | J726 | Circumferential | 0.33 | $15.50 \times 10^{18}$ |
| | SA-1494 | Longitudinal | 0.16 | $12.96 \times 10^{18}$ |
| | SA-1585 | Circumferential | 0.22 | $61.71 \times 10^{18}$ |
| | SA-1526 | Longitudinal | 0.34 | $12.48 \times 10^{18}$ |
| Surry 2 | L737 | Circumferential | 0.35 | $12.64 \times 10^{18}$ |
| | SA-1585 | Longitudinal | 0.22 | $13.68 \times 10^{18}$ |
| | R3008 | Circumferential | 0.19 | $59.07 \times 10^{18}$ |
| | WF-4 | Longitudinal | 0.19 | $13.68 \times 10^{18}$ |

* Note: Fluence values are calculated in Ref. 11 (Surry Unit 1) and Ref. 12 (Surry Unit 2). These values are increased by a percentage value specified in Ref. 13 to account for future changes as requested by Dominion Generation.

Tables 3-3 and 3-4 provide mean and lower bound *J*-Integral Resistance, $J_{0.1}$, of the weld material at a ductile flaw extension of 0.10 in. This data is provided for the beltline region weld locations at Surry Units 1 and 2, based on the following postulated flaw depths.

| Service Loading Condition | Flaw Depth $a$ (in.) | Extension $\Delta a$ (in.) | Total Depth $x = a + \Delta a$ (in.) |
|---|---|---|---|
| Level A&B | t/4 = 2.02 | 0.1 | 2.12 |
| Level C&D | t/10 = 0.808 | 0.1 | 0.908 |

Table 3-3 *J*-Integral Resistances for Levels A and B Service Loadings

| Plant | Weld ID | Weld Orientation | Fluence at Extended Crack Depth ($\times 10^{18}$ n/cm$^2$) | Mean $J_{0.1}$ (lb/in) | Lower Bound $J_{0.1}$ (lb/in) |
|---|---|---|---|---|---|
| Surry 1 | J726 | C | 9.32 | 796 | 556 |
| | SA-1494 | L | 7.79 | 1016 | 710 |
| | SA-1585 | C | 37.10 | 877 | 613 |
| | SA-1526 | L | 7.50 | 795 | 556 |
| Surry 2 | L737 | C | 7.60 | 783 | 548 |
| | SA-1585 | L | 8.22 | 934 | 653 |
| | R3008 | C | 35.51 | 924 | 646 |
| | WF-4 | L | 8.22 | 973 | 680 |

Table 3-4 *J*-Integral Resistances for Levels C and D Service Loadings

| Plant | Weld ID | Weld Orientation | Fluence at Extended Crack Depth ($\times 10^{18}$ n/cm$^2$) | Mean $J_{0.1}$ (lb/in) | Lower Bound $J_{0.1}$ (lb/in) |
|---|---|---|---|---|---|
| Surry 1 | J726 | C | 12.46 | 783 | 547 |
| | SA-1494 | L | 10.42 | 1008 | 705 |
| | SA-1585 | C | 49.63 | 865 | 605 |
| | SA-1526 | L | 10.04 | 781 | 546 |
| Surry 2 | L737 | C | 10.16 | 770 | 538 |
| | SA-1585 | L | 11.00 | 923 | 645 |
| | R3008 | C | 47.50 | 913 | 638 |
| | WF-4 | L | 11.00 | 964 | 674 |

## 4.0 Analytical Methodology

Upper-shelf toughness is evaluated through use of fracture mechanics analytical methods that utilize the acceptance criteria and evaluation procedures of Section XI, Appendix K [4], where applicable.

### 4.1 Procedure for Evaluating Levels A and B Service Loadings

The applied *J*-integral is calculated per Appendix K, paragraph K-4210 [4], using an effective flaw depth to account for small scale yielding at the crack tip, and evaluated per K-4220 for upper-shelf toughness and per K-4310 for flaw stability, as outlined below.

(1) For an axial flaw of depth *a*, the stress intensity factor due to internal pressure is calculated with a safety factor (*SF*) on pressure using the following:

$$K_{Ip} = (SF)p\left(1+\frac{R_i}{t}\right)(\pi a)^{0.5}F_1$$

where

$$F_1 = 0.982 + 1.006\left(\frac{a}{t}\right)^2, \qquad 0.20 \le \left(\frac{a}{t}\right) \le 0.50$$

(2) For a circumferential flaw of depth *a*, the stress intensity factor due to internal pressure is calculated with a safety factor (*SF*) on pressure using the following:

$$K_{Ip} = (SF)p\left(1+\frac{R_i}{2t}\right)(\pi a)^{0.5}F_2$$

where

$$F_2 = 0.885 + 0.233\left(\frac{a}{t}\right) + 0.345\left(\frac{a}{t}\right)^2, \qquad 0.20 \le \left(\frac{a}{t}\right) \le 0.50$$

(3) For an axial or circumferential flaw of depth *a*, the stress intensity factor due to radial thermal gradients is calculated using the following:

$$K_{It} = \left(\frac{CR}{1000}\right)t^{2.5}F_3, \qquad 0 \le (CR) \le 100°\text{F/hour}$$

where

*CR* = cooldown rate (°F/hr), and

$$F_3 = 0.690 + 3.127\left(\frac{a}{t}\right) - 7.435\left(\frac{a}{t}\right)^2 + 3.532\left(\frac{a}{t}\right)^3, \quad 0.20 \le \left(\frac{a}{t}\right) \le 0.50$$

(4) The effective flaw depth for small scale yielding, $a_e$, is calculated using the following:

$$a_e = a + \left(\frac{1}{6\pi}\right)\left[\frac{K_{Ip} + K_{It}}{\sigma_y}\right]^2$$

(5) For an axial flaw of depth $a_e$, the stress intensity factor due to internal pressure for small scale yielding is calculated with a safety factor (*SF*) on pressure using the following:

$$K'_{Ip} = (SF)p\left(1 + \frac{R_i}{t}\right)(\pi a_e)^{0.5} F'_1$$

where

$$F'_1 = 0.982 + 1.006\left(\frac{a_e}{t}\right)^2, \qquad 0.20 \le \left(\frac{a_e}{t}\right) \le 0.50$$

(6) For a circumferential flaw of depth $a_e$, the stress intensity factor due to internal pressure is calculated with a safety factor (*SF*) on pressure using the following

$$K'_{Ip} = (SF)p\left(1 + \frac{R_i}{2t}\right)(\pi a_e)^{0.5} F'_2$$

where

$$F'_2 = 0.885 + 0.233\left(\frac{a_e}{t}\right) + 0.345\left(\frac{a_e}{t}\right)^2, \qquad 0.20 \le \left(\frac{a_e}{t}\right) \le 0.50$$

(7) For an axial or circumferential flaw of depth $a_e$, the stress intensity factor due to radial thermal gradients is

$$K'_{It} = \left(\frac{CR}{1000}\right) t^{2.5} F'_3, \qquad 0 \le (CR) \le 100°\text{F/hour}$$

where

*CR* = cooldown rate (°F/hr), and

$$F'_3 = 0.690 + 3.127\left(\frac{a_e}{t}\right) - 7.435\left(\frac{a_e}{t}\right)^2 + 3.532\left(\frac{a_e}{t}\right)^3, \quad 0.20 \le \left(\frac{a_e}{t}\right) \le 0.50$$

(8) The *J*-integral due to applied loads for small scale yielding is calculated using the following:

$$J_1 = 1000\frac{\left(K'_{Ip} + K'_{It}\right)^2}{E'}$$

where

$$E' = \frac{E}{1-\nu^2}$$

(9) Evaluation of upper-shelf toughness at a flaw extension of 0.10 in. is performed for a flaw depth,

$$a = 0.25t + 0.10 \quad \text{in.},$$

using

$$SF = 1.15$$

$$p = P_a$$

where $P_a$ is the accumulation pressure for Levels A and B Service Loadings, such that

$$J_1 < J_{0.1}$$

where

$J_1$ = the applied $J$-integral for a safety factor of 1.15 on pressure, and a safety factor of 1.0 on thermal loading
$J_{0.1}$ = the $J$-integral resistance at a ductile flaw extension of 0.10 in.

(10) Evaluation of flaw stability is performed through use of a crack driving force diagram procedure by comparing the slopes of the applied $J$-integral curve and the $J$-$R$ curve. The applied $J$-integral is calculated for a series of flaw depths corresponding to increasing amounts of ductile flaw extension. The applied pressure is the accumulation pressure for Levels A and B Service Loadings, $P_a$, and the safety factor ($SF$) on pressure is 1.25. Flaw stability at a given applied load is verified when the slope of the applied $J$-integral curve is less than the slope of the $J$-$R$ curve at the point on the $J$-$R$ curve where the two curves intersect.

## 4.2 Procedure for Evaluating Levels C and D Service Loadings

Levels C and D Service Loadings are evaluated using the one-dimensional, finite element, thermal and stress models and linear elastic fracture mechanics methodology of the PCRIT computer code to determine stress intensity factors. The beltline region weld identified in Section 3.3 is analyzed for the limiting Level D transient for Surry Units 1 and 2 which is a main steam line break (SLB) without offsite power transient. The pressurizer pressure is increased by 70 psi to account for the pressure difference between the pressurizer and the downcomer

(i.e., the reactor vessel beltline region) during the time period of interest. This Level D transient is also used to evaluate Level C Service Loadings since it bounds all Level C transients [2].

The transient considered appears in Figure 5.1. Transients are assumed to hold steady at the end of their definitions, and are held constant until the thermal gradient through the shell has developed fully and begins to dissipate.

The evaluation is performed as follows:

(1) For each transient described above, utilize PCRIT to calculate stress intensity factors for a semi-elliptical flaw of depth $^1/_{10}$ of the base metal wall thickness, as a function of time, due to internal pressure and radial thermal gradients with a factor of safety of 1.0 on loading. The applied stress intensity factor, $K_I$, calculated by PCRIT for each of these transients is compared to the $K_{Jc}$ limit of the weld. The transient that most closely approaches the $K_{Jc}$ limit is chosen as the limiting transient, and the critical time in the limiting transient occurs at the point where $K_I$ most closely approaches the upper-shelf toughness curve.

(2) At the critical transient time, develop a crack driving force diagram with the applied *J*-integral and *J-R* curves plotted as a function of flaw extension. The adequacy of the upper-shelf toughness is evaluated by comparing the applied *J*-integral with the *J-R* curve at a flaw extension of 0.10 in. Flaw stability is assessed by examining the slopes of the applied *J*-integral and *J-R* curves at the points of intersection.

(3) Verify that the extent of stable flaw extension is no greater than 75% of the vessel wall thickness by determining when the applied *J*-integral curve intersects the mean *J-R* curve.

(4) Verify that the remaining ligament is not subject to tensile instability. The internal pressure $p$ shall be less than $P_I$, where $P_I$ is the internal pressure at tensile instability of the remaining ligament. Equations for $P_I$ are given below for the axial and circumferential flaws [14]. These equations first appear in the 2001 Edition of the ASME Section XI code that is cited.

(a) For an axial flaw,

$$P_I = 1.07\sigma_O\left[\frac{1-(A_c/A)}{(R_i/t)+(A_c/A)}\right]$$

where

$$\sigma_O = \frac{\sigma_y + \sigma_u}{2}$$

$$A = t(\ell + t)$$

$$A_c = \frac{\pi a \ell}{4}$$

and

$\ell$ = surface length of crack, six times the depth, $a$
$R_m$ = mean radius of vessel

This equation for $P_l$ includes the effect of pressure on the flaw face.

(b) For a circumferential flaw,

$$P_l = 1.07\sigma_O\left[\frac{1-(A_c/A)}{\left(R_i^{\,2}/(2R_m t)\right)+(A_c/A)}\right]$$

This equation for $P_l$ includes the effect of pressure on the flaw face. This equation is valid for internal pressures not exceeding the pressure at tensile instability caused by the applied hoop stress acting over the nominal wall thickness of the vessel. This validity limit on pressure for the circumferential flaw equation for $P_l$ is

$$P_l \le 1.07\sigma_O\left[\frac{t}{R_i}\right]$$

## 4.3 Temperature Range for Upper-Shelf Fracture Toughness Evaluations

Upper-shelf fracture toughness is determined through use of Charpy V-notch impact energy versus temperature plots by noting the temperature above which the Charpy energy remains on a plateau, maintaining a relatively high constant energy level. Similarly, fracture toughness can be addressed in three different regions on the temperature scale, i.e. a lower-shelf toughness region, a transition region, and an upper-shelf toughness region. Fracture toughness of reactor vessel steel and associated weld metals are conservatively predicted by the ASME initiation toughness curve, $K_{Ic}$, in the lower-shelf and transition regions. In the upper-shelf region, the upper-shelf toughness curve, $K_{Jc}$, is derived from the upper-shelf $J$-integral resistance model described in Section 3.1. The upper-shelf toughness then becomes a function of fluence, copper content, temperature, and fracture specimen size. When upper-shelf toughness is plotted versus temperature, a plateau-like curve develops that decreases slightly with increasing temperature. Since the present analysis addresses the low upper-shelf toughness issue, only the upper-shelf temperature range, which begins at the intersection of $K_{Ic}$ and the upper-shelf toughness curves, $K_{Jc}$, is considered.

## 4.4 Effect of Cladding Material

The PCRIT code utilized in the flaw evaluations for Levels C and D Service Loadings does not consider stresses in the cladding when calculating stress intensity factors for thermal loads. To account for this cladding effect, an additional stress intensity factor, $K_{Iclad}$, is calculated separately and added to the total stress intensity factor computed by PCRIT.

The contribution of cladding stresses to stress intensity factor was examined previously [2]. In this low upper-shelf toughness analysis performed for B&W Owners Group Reactor Vessel

Working Group plants, the Zion-1 WF-70 weld using thermal loads from the Turkey Point SLB was determined to be the bounding case. The Zion-1 vessel was as thick as or thicker than any other vessel. The thickness of the Surry reactor vessels is 8.08" whereas the Zion vessel is 8.44". From a thermal stress perspective, it is conservative to consider the thicker vessel. For the Zion vessel, the maximum value of $K_{Iclad}$, at any time during the transient and for any flaw depth, was determined to be 9.0 ksi$\sqrt{\text{in}}$. This bounding value is therefore used as the stress intensity factor for $K_{Iclad}$ in this low upper-shelf toughness analysis.

## 5.0 Applied Loads

The Levels A and B Service Loadings required by Appendix K are an accumulation pressure (internal pressure load) and a cooldown rate (thermal load). Since Levels C and D Service Loadings are not specified by the Code, Levels C and D pressurized thermal shock events are reviewed and a worst case transient is selected for use in flaw evaluations.

### 5.1 Levels A and B Service Loadings

Per paragraph K-1300 of Appendix K [4], the accumulation pressure used for flaw evaluations should not exceed 1.1 times the design pressure. Using 2.5 ksi as the design pressure, the accumulation pressure is 2.75 ksi. The cooldown rate is also taken to be the maximum required by Appendix K, 100°F/hour.

### 5.2 Levels C and D Service Loadings

As discussed in Section 4.2, the SLB transient is evaluated using the computer code PCRIT. Pressure and temperature time histories for the SLB transient are shown in Figure 5-1. The pressurizer pressure is increased by 70 psi to account for the pressure difference between the pressurizer and the downcomer (i.e., the reactor vessel beltline region) during the time period of interest.

Figure 5-1 SLB transient – Reactor Coolant Temperature and Pressure vs. Time

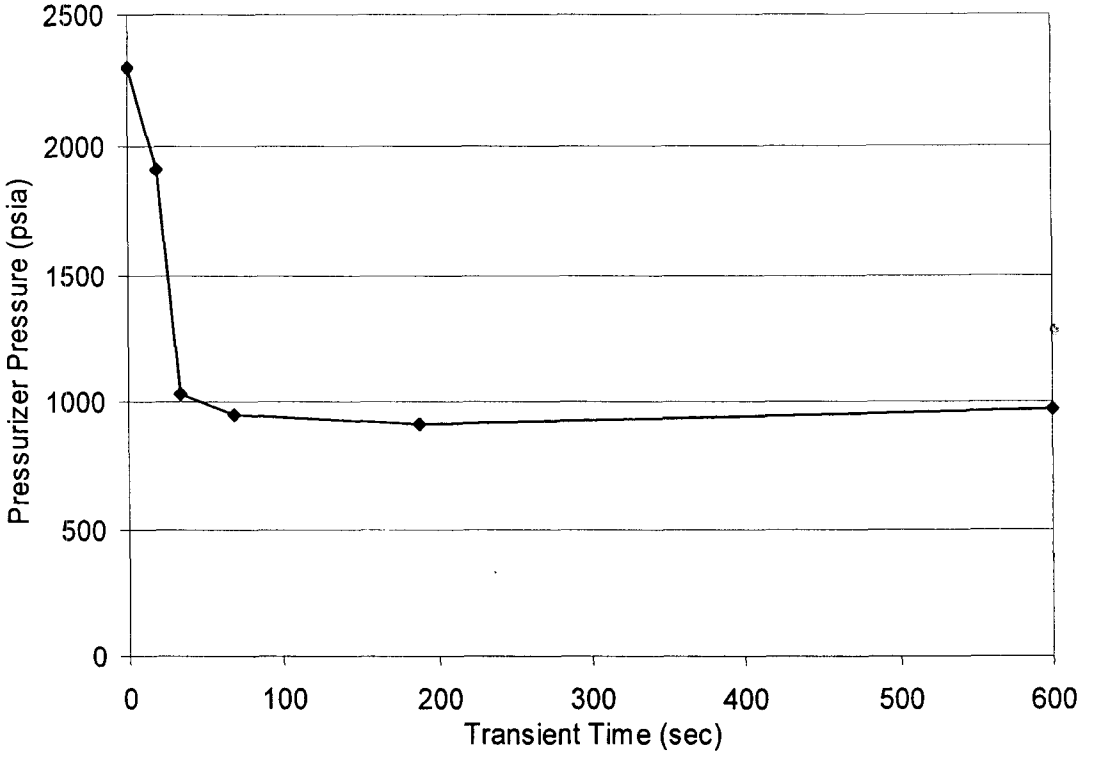


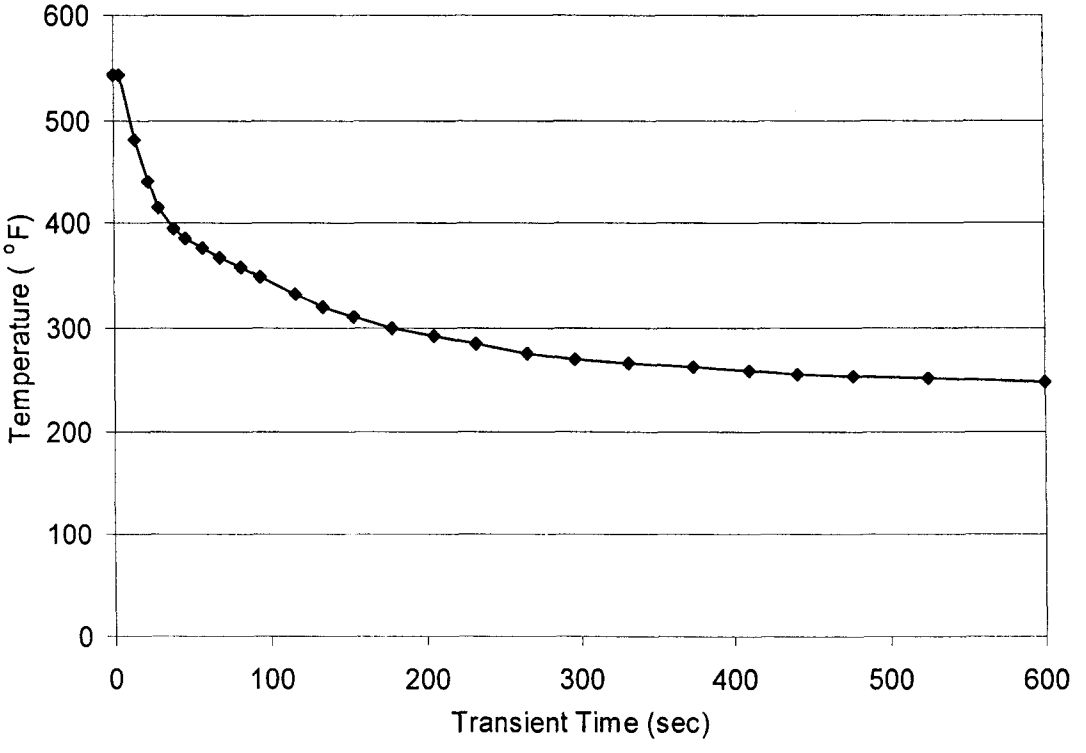

## 6.0 Evaluation for Levels A and B Service Loadings

Initial flaw depths equal to ¼ of the vessel wall thickness are analyzed for Levels A and B Service Loadings following the procedure outlined in Section 4.1 and evaluated for acceptance based on values for the *J*-integral resistance of the material from Section 3.4. The results of the evaluation are presented in Table 6-1, where it is seen that the minimum ratio of material *J*-integral resistance ($J_{0.1}$) to applied *J*-integral ($J_1$) is 1.26 which is higher than the minimum acceptable value of 1.0.

The flaw evaluation for the controlling weld (SA-1526) is repeated by calculating applied *J*-integrals for various amounts of flaw extension with safety factors (on pressure) of 1.15 and 1.25 in Table 6-2. The results, along with mean and lower bound *J-R* curves developed in Table 6-3, are plotted in Figure 6-1. An evaluation line at a flaw extension 0.10 in. is also included to confirm the results of Table 6-1 by showing that the applied *J*-integral for a safety factor of 1.15 is less than the lower bound *J*-integral resistance of the material. The requirement for ductile and stable crack growth is also demonstrated by Figure 6-1 since the slope of the applied *J*-integral curve for a safety factor of 1.25 is considerably less than the slope of the lower bound *J-R* curve at the point where the two curves intersect.

Table 6-1 Flaw Evaluation for Levels A & B Service Loadings

Dimensional data:

$R_i$ = 78.95 in.
t = 8.08 in.
$a_o$ = 2.0200 in.
$\Delta a$ = 0.1000 in.
a = 2.1200 in.
a/t = 0.2624 ( $0.2 \le a/t \le 0.5$ )

Material data:

T = 543 °F
E = 27042 ksi
$\nu$ = 0.3
E' = 29716 ksi

Loading data:

$P_d$ = 2.50 ksi
$P_a$ = 2.75 ksi
SF = 1.15
CR = 100 °F/hr

Geometry factors for initial flaw depth (w/o plasticity correction):

$F_1$ = 1.0513 for pressure loading and axial flaws
$F_2$ = 0.9699 for pressure loading and circumferential flaws
$F_3$ = 1.0624 for thermal loading and both flaw types

| Plant | Weld | Orient. | $K_{Ip}$ (ksi√in) | $K_{It}$ (ksi√in) | $\sigma_y$ (ksi) | $a_e$ (in.) | $a_e/t$ | $F_1'$ or $F_2'$ | $F_3'$ | $K_{Ip}'$ (ksi√in) | $K_{It}'$ (ksi√in) | $J_1$ (lb/in) | $J_{0.1}$ at t/4 (lb/in) | $J_{0.1}/J_1$ |
|---|---|---|---|---|---|---|---|---|---|---|---|---|---|---|
| Surry 1 | J726 | C | 46.59 | 19.72 | 85.30 | 2.1521 | 0.2663 | 0.9715 | 1.0622 | 47.02 | 19.71 | 150 | 556 | **3.71** |
| | SA-1494 | L | 92.41 | 19.72 | 85.30 | 2.2117 | 0.2737 | 1.0574 | 1.0613 | 94.94 | 19.70 | 442 | 710 | **1.61** |
| | SA-1585 | C | 46.59 | 19.72 | 85.30 | 2.1521 | 0.2663 | 0.9715 | 1.0622 | 47.02 | 19.71 | 150 | 613 | **4.09** |
| | SA-1526 | L | 92.41 | 19.72 | 85.30 | 2.2117 | 0.2737 | 1.0574 | 1.0613 | 94.94 | 19.70 | 442 | 556 | **1.26** |
| Surry 2 | L737 | C | 46.59 | 19.72 | 85.30 | 2.1521 | 0.2663 | 0.9715 | 1.0622 | 47.02 | 19.71 | 150 | 548 | **3.65** |
| | SA-1585 | L | 92.41 | 19.72 | 85.30 | 2.2117 | 0.2737 | 1.0574 | 1.0613 | 94.94 | 19.70 | 442 | 653 | **1.48** |
| | R3008 | C | 46.59 | 19.72 | 85.30 | 2.1521 | 0.2663 | 0.9715 | 1.0622 | 47.02 | 19.71 | 150 | 646 | **4.31** |
| | WF-4 | L | 92.41 | 19.72 | 85.30 | 2.2117 | 0.2737 | 1.0574 | 1.0613 | 94.94 | 19.70 | 442 | 680 | **1.54** |

Table 6-2 J-Integral versus Flaw Extension for Levels A & B Service Loadings - SA-1526

$R_i$ = 78.95 in. $P_a$ = 2.75 ksi
t = 8.08 in. CR = 100 °F/hr
$a_o$ = 2.0200 in. $\sigma_y$ = 85.30 ksi

| | | SF = 1.15 | | | | | | SF = 1.25 | | | | | |
|---|---|---|---|---|---|---|---|---|---|---|---|---|---|
| Δa (in.) | a (in.) | $K_{Ip}$ (ksi√in) | $K_{It}$ (ksi√in) | $a_e$ (in.) | $K_{Ip}'$ (ksi√in) | $K_{It}'$ (ksi√in) | $J_1$ (lb/in) | $K_{Ip}$ (ksi√in) | $K_{It}$ (ksi√in) | $a_e$ (in.) | $K_{Ip}'$ (ksi√in) | $K_{It}'$ (ksi√in) | $J_1$ (lb/in) |
| 0.000 | 2.02 | 89.66 | 19.71 | 2.1072 | 92.06 | 19.72 | 420 | 97.46 | 19.71 | 2.1201 | 100.45 | 19.72 | 486 |
| 0.025 | 2.045 | 90.35 | 19.72 | 2.1333 | 92.78 | 19.71 | 426 | 98.21 | 19.72 | 2.1464 | 101.24 | 19.71 | 492 |
| 0.050 | 2.07 | 91.04 | 19.72 | 2.1594 | 93.50 | 19.71 | 431 | 98.95 | 19.72 | 2.1727 | 102.03 | 19.71 | 499 |
| 0.075 | 2.095 | 91.73 | 19.72 | 2.1856 | 94.22 | 19.70 | 437 | 99.70 | 19.72 | 2.1990 | 102.82 | 19.70 | 505 |
| 0.100 | 2.12 | 92.41 | 19.72 | 2.2117 | 94.94 | 19.70 | 442 | 100.45 | 19.72 | 2.2253 | 103.60 | 19.69 | 512 |
| 0.125 | 2.145 | 93.10 | 19.71 | 2.2378 | 95.66 | 19.69 | 448 | 101.20 | 19.71 | 2.2516 | 104.39 | 19.68 | 518 |
| 0.150 | 2.17 | 93.79 | 19.71 | 2.2639 | 96.38 | 19.67 | 453 | 101.95 | 19.71 | 2.2779 | 105.18 | 19.67 | 525 |
| 0.175 | 2.195 | 94.48 | 19.70 | 2.2901 | 97.11 | 19.66 | 459 | 102.70 | 19.70 | 2.3042 | 105.98 | 19.65 | 531 |
| 0.200 | 2.22 | 95.17 | 19.69 | 2.3162 | 97.83 | 19.65 | 464 | 103.45 | 19.69 | 2.3306 | 106.77 | 19.64 | 538 |
| 0.225 | 2.245 | 95.86 | 19.68 | 2.3423 | 98.55 | 19.63 | 470 | 104.20 | 19.68 | 2.3569 | 107.56 | 19.62 | 544 |
| 0.250 | 2.27 | 96.55 | 19.67 | 2.3685 | 99.28 | 19.61 | 476 | 104.95 | 19.67 | 2.3832 | 108.35 | 19.60 | 551 |
| 0.275 | 2.295 | 97.24 | 19.66 | 2.3946 | 100.00 | 19.59 | 481 | 105.70 | 19.66 | 2.4096 | 109.15 | 19.58 | 558 |
| 0.300 | 2.32 | 97.93 | 19.64 | 2.4208 | 100.73 | 19.57 | 487 | 106.45 | 19.64 | 2.4359 | 109.95 | 19.56 | 564 |
| 0.325 | 2.345 | 98.63 | 19.63 | 2.4470 | 101.46 | 19.55 | 493 | 107.20 | 19.63 | 2.4623 | 110.74 | 19.53 | 571 |
| 0.350 | 2.37 | 99.32 | 19.61 | 2.4731 | 102.19 | 19.52 | 498 | 107.96 | 19.61 | 2.4887 | 111.54 | 19.50 | 578 |
| 0.375 | 2.395 | 100.01 | 19.59 | 2.4993 | 102.92 | 19.49 | 504 | 108.71 | 19.59 | 2.5150 | 112.35 | 19.48 | 585 |
| 0.400 | 2.42 | 100.71 | 19.57 | 2.5255 | 103.65 | 19.46 | 510 | 109.47 | 19.57 | 2.5414 | 113.15 | 19.45 | 592 |
| 0.425 | 2.445 | 101.40 | 19.55 | 2.5517 | 104.38 | 19.43 | 516 | 110.22 | 19.55 | 2.5678 | 113.95 | 19.42 | 599 |
| 0.450 | 2.47 | 102.10 | 19.52 | 2.5779 | 105.12 | 19.40 | 522 | 110.98 | 19.52 | 2.5942 | 114.76 | 19.38 | 606 |
| 0.475 | 2.495 | 102.80 | 19.50 | 2.6041 | 105.86 | 19.37 | 528 | 111.74 | 19.50 | 2.6206 | 115.57 | 19.35 | 613 |
| 0.500 | 2.52 | 103.50 | 19.47 | 2.6303 | 106.59 | 19.34 | 534 | 112.50 | 19.47 | 2.6470 | 116.38 | 19.31 | 620 |

Table 6-3 J-R Curves for Evaluation of Levels A and B Service Loadings

Weld: SA-1526

| | | |
|---|---|---|
| T = | 543 | °F |
| t = | 8.08 | in. |
| $a_o$ = | 2.02 | in. |
| $\phi_{t\,IS}$ = | 12.48 | $\times 10^{18}$ n/cm$^2$ @ inside surface |
| Cu = | 0.34 | wt% |
| $B_n$ = | 0.80 | in |

| Δa (in.) | a (in.) | $\phi_t$ ($10^{18}$ n/cm$^2$) | $\ln C_1$ | $C_1$ | $C_2$ | $C_3$ | J-R (lb/in) Mean | J-R (lb/in) Low |
|---|---|---|---|---|---|---|---|---|
| 0.001 | 2.0210 | 7.6836 | 0.24083 | 1.27230 | 0.08892 | -0.09502 | 83 | 58 |
| 0.002 | 2.0220 | 7.6817 | 0.24085 | 1.27233 | 0.08892 | -0.09502 | 156 | 109 |
| 0.004 | 2.0240 | 7.6781 | 0.24089 | 1.27238 | 0.08892 | -0.09502 | 251 | 175 |
| 0.007 | 2.0270 | 7.6725 | 0.24095 | 1.27245 | 0.08893 | -0.09502 | 339 | 237 |
| 0.010 | 2.0300 | 7.6670 | 0.24101 | 1.27253 | 0.08894 | -0.09502 | 399 | 279 |
| 0.015 | 2.0350 | 7.6578 | 0.24110 | 1.27265 | 0.08895 | -0.09502 | 468 | 327 |
| 0.020 | 2.0400 | 7.6486 | 0.24120 | 1.27278 | 0.08896 | -0.09502 | 518 | 362 |
| 0.030 | 2.0500 | 7.6303 | 0.24140 | 1.27303 | 0.08898 | -0.09502 | 589 | 412 |
| 0.040 | 2.0600 | 7.6120 | 0.24159 | 1.27328 | 0.08901 | -0.09503 | 639 | 447 |
| 0.050 | 2.0700 | 7.5938 | 0.24179 | 1.27353 | 0.08903 | -0.09503 | 677 | 474 |
| 0.070 | 2.0900 | 7.5574 | 0.24218 | 1.27403 | 0.08907 | -0.09503 | 735 | 514 |
| 0.100 | 2.1200 | 7.5032 | 0.24277 | 1.27477 | 0.08914 | -0.09504 | 795 | 556 |
| 0.120 | 2.1400 | 7.4673 | 0.24316 | 1.27527 | 0.08919 | -0.09504 | 825 | 577 |
| 0.140 | 2.1600 | 7.4315 | 0.24355 | 1.27577 | 0.08923 | -0.09504 | 851 | 595 |
| 0.160 | 2.1800 | 7.3959 | 0.24394 | 1.27627 | 0.08928 | -0.09505 | 873 | 610 |
| 0.200 | 2.2200 | 7.3253 | 0.24472 | 1.27727 | 0.08937 | -0.09505 | 909 | 636 |
| 0.250 | 2.2700 | 7.2379 | 0.24570 | 1.27851 | 0.08948 | -0.09506 | 946 | 661 |
| 0.300 | 2.3200 | 7.1515 | 0.24667 | 1.27976 | 0.08960 | -0.09507 | 976 | 682 |
| 0.350 | 2.3700 | 7.0662 | 0.24764 | 1.28100 | 0.08971 | -0.09508 | 1001 | 700 |
| 0.400 | 2.4200 | 6.9819 | 0.24861 | 1.28224 | 0.08982 | -0.09509 | 1023 | 715 |
| 0.450 | 2.4700 | 6.8987 | 0.24958 | 1.28349 | 0.08994 | -0.09510 | 1043 | 729 |
| 0.500 | 2.5200 | 6.8164 | 0.25055 | 1.28473 | 0.09005 | -0.09511 | 1060 | 741 |

Figure 6-1 *J*-Integral vs. Flaw Extension for Levels A and B Service Loadings

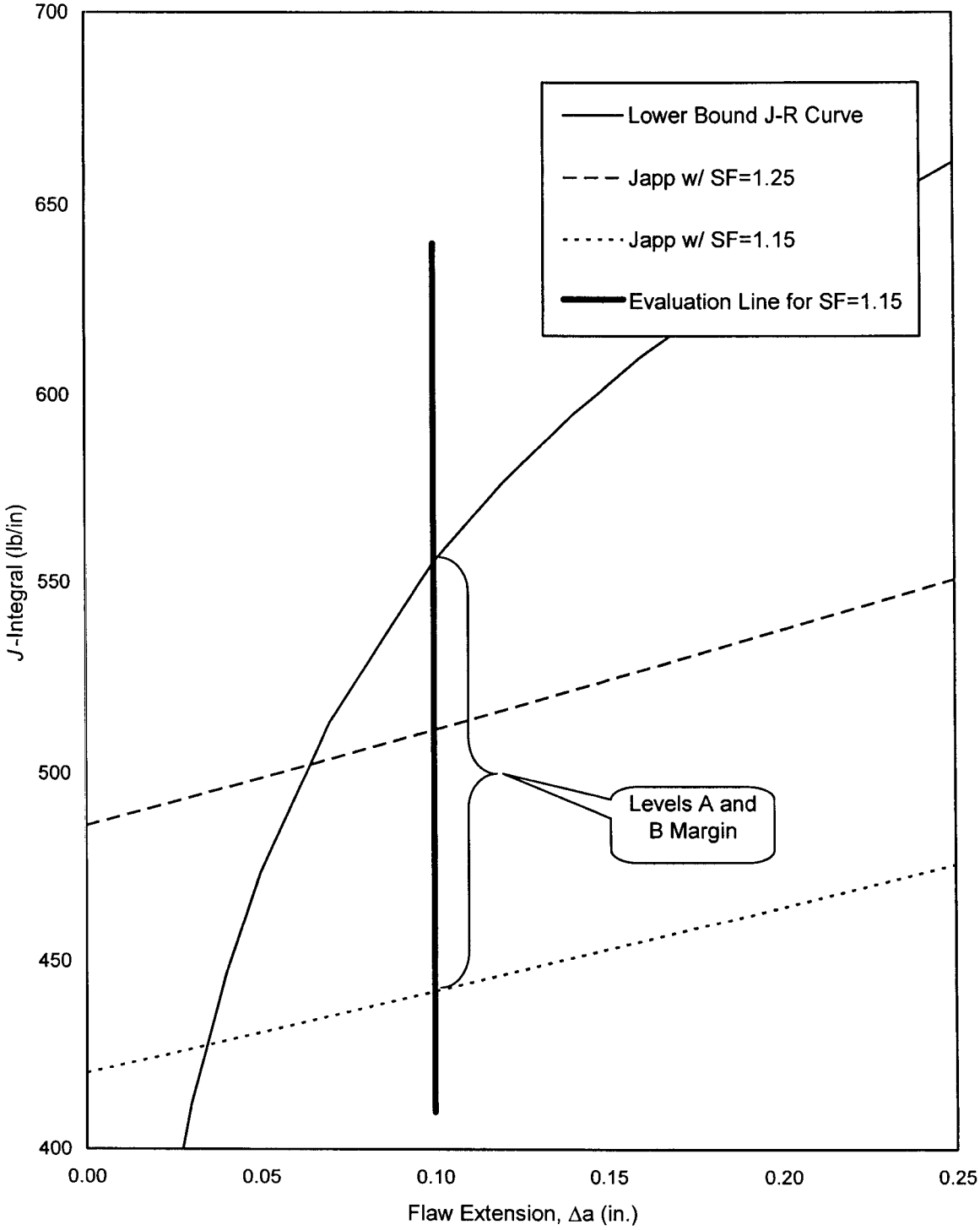

## 7.0 Evaluation for Levels C and D Service Loadings

A flaw depth of $^1/_{10}$ of the base metal wall thickness is used to evaluate the Levels C and D Service Loadings. Based on the results of Table 6-1 for Levels A and B Service Loadings and flaw depths equal to ¼ of the wall thickness, the controlling weld for Levels C and D Service Loadings is the SA-1526 longitudinal weld.

Table 7-1 presents applied stress intensity factors, $K_I$, from the PCRIT pressurized thermal shock analysis of the steam line break transient described in Section 5.2, along with total stress intensity factors after including a contribution of 9.0 ksi√in from cladding, as discussed in Section 4.4. The stress intensity factor calculated by the PCRIT code is the sum of thermal, residual stress, deadweight, and pressure terms. Table 7-1 also shows the variation of crack tip temperature with time for the SLB event. To determine the critical time in the transient for the Levels C and D flaw evaluation, allowable stress intensity factors are calculated for both the transition and upper-shelf toughness regions. Transition region toughness is obtained from the ASME Section XI equation for crack initiation [15],

$$K_{Ic} = 33.2 + 2.806 \exp[0.02(T - RT_{NDT} + 100°F)]$$

using an $RT_{NDT}$ value of 284.8°F from PCRIT for a flaw depth of $^1/_{10}$ of the wall thickness, where:

$K_{Ic}$ = transition region toughness, ksi√in
$T$ = crack tip temperature, °F

The $RT_{NDT}$ value of 284.8°F calculated in PCRIT is based on the Initial $RT_{NDT}$ value of -7.0°F and Margin term of 69.5°F. Use of the newly-approved Topical Report BAW-2308, Rev. 1, [16, 17] would allow usage of an Initial $RT_{NDT}$ value of -81.8°F and Margin term of 60.6°F for weld material SA-1526. This would result in a much lower $RT_{NDT}$ value of approximately 201°F for use in the $K_{Ic}$ equation shown above. It is therefore conservative to use the $RT_{NDT}$ value of 284.8°F.

Upper-shelf toughness is derived from the $J$-integral resistance model of Section 3.1 for a flaw depth of $^1/_{10}$ of the wall thickness, a crack extension of 0.10 in., and a fluence value of $10.04 \times 10^{18}$ n/cm$^2$, as follows:

$$K_{Jc} = \sqrt{\frac{J_{0.1}E}{1000(1-v^2)}}$$

where

$K_{Jc}$ = upper-shelf region toughness, ksi√in
$J_{0.1}$ = $J$-integral resistance at $\Delta a$ = 0.1 in.

Toughness values are given in Tables 7-2 and 7-3 for the transition and upper-shelf regions, respectively, as a function of temperature.

Figure 7-1 shows the variation of applied stress intensity factor, $K_I$, transition range toughness, $K_{Ic}$, and upper-shelf toughness, $K_{Jc}$ with temperature. The small triangles on the $K_I$ curve indicate points in time at which PCRIT solutions are available. In the upper-shelf toughness range, the $K_I$ curve is closest to the lower bound $K_{Jc}$ curve at 6.5 minutes into the transient. This

time is selected as the critical time in the transient at which to perform the flaw evaluation for Levels C and D Service Loadings.

Applied *J*-integrals are calculated for the controlling weld (SA-1526) for various flaw depths in Table 7-4 using stress intensity factors from PCRIT for the steam line break transient (at 7.0 min.) and adding 9.0 ksi√in to account for cladding effects. Stress intensity factors are converted to *J*-integrals by the plain strain relationship,

$$J_{applied}(a) = 1000\frac{K_{Itotal}^2(a)}{E}(1-\nu^2)$$

Table 7-4 lists flaw extensions vs. applied *J*-integrals. As the Surry vessels are 8.08 in. thick, the initial flaw depth of $^1/_{10}$ of the wall thickness is 0.808 in. Flaw extension from this flaw depth is calculated by subtracting the initial flaw depth of 0.808 in. from the built-in PCRIT flaw depths. The results, along with mean and lower bound *J-R* curves developed in Table 7-5, are plotted in Figure 7-2. An evaluation line is used at a flaw extension 0.10 in. to show that the applied *J*-integral is less than the lower bound *J*-integral of the material, as required by Appendix K for Level C Service Loadings [4]. The requirements for ductile and stable crack growth are also demonstrated by Figure 7-2 since the slope of the applied *J*-integral curve is considerably less than the slopes of both the lower bound and mean *J-R* curves at the points of intersection.

Referring to Figure 7-2, the Level D Service Loading requirement that the extent of stable flaw extension be no greater than 75% of the vessel wall thickness is easily satisfied since the applied *J*-integral curve intersects the mean *J-R* curve at a flaw extension that is only a small fraction of the wall thickness (less than 1%).

The last requirement is that the internal pressure $p$ shall be less than $P_I$, the internal pressure at tensile instability of the remaining ligament. Table 7-6 gives the results of the calculations for $P_I$ for flaw depths up to 1.29 in. As the internal pressure $p$ is less than $P_I$, the remaining ligament is not subject to tensile instability.

Table 7-1 $K_I$ vs. Crack Tip Temperature for SLB

| a/t =1/10<br>a = 0.808 in. | | | | |
|---|---|---|---|---|
| Time | Temp | PCRIT $K_{Isum}$ | Clad $K_I$ | Total $K_I$ |
| 0.00 | 544.00 | 53.68 | 9.0 | 62.68 |
| 0.25 | 543.40 | 51.07 | 9.0 | 60.07 |
| 0.50 | 536.20 | 46.49 | 9.0 | 55.49 |
| 0.75 | 523.20 | 49.10 | 9.0 | 58.10 |
| 1.00 | 509.70 | 53.87 | 9.0 | 62.87 |
| 1.50 | 486.70 | 61.55 | 9.0 | 70.55 |
| 2.00 | 467.50 | 68.02 | 9.0 | 77.02 |
| 2.50 | 450.00 | 73.75 | 9.0 | 82.75 |
| 3.00 | 434.50 | 78.20 | 9.0 | 87.20 |
| 3.50 | 421.20 | 81.82 | 9.0 | 90.82 |
| 4.00 | 409.70 | 84.87 | 9.0 | 93.87 |
| 4.50 | 399.30 | 87.51 | 9.0 | 96.51 |
| 5.00 | 390.00 | 89.58 | 9.0 | 98.58 |
| 5.50 | 381.90 | 91.12 | 9.0 | 100.12 |
| 6.00 | 374.90 | 92.30 | 9.0 | 101.30 |
| 6.50 | 368.70 | 93.24 | 9.0 | 102.24 |
| 7.00 | 363.00 | 94.04 | 9.0 | 103.04 |
| 7.50 | 357.70 | 94.66 | 9.0 | 103.66 |
| 8.00 | 353.10 | 94.97 | 9.0 | 103.97 |
| 9.00 | 345.30 | 95.21 | 9.0 | 104.21 |
| 10.00 | 338.30 | 95.35 | 9.0 | 104.35 |

Table 7-2 $K_{Ic}$ at 1/10 Wall Thickness

| $K_{Ic}$ Curve at a = 1/10T | | |
|---|---|---|
| $RT_{NDT}$ = 284.8 °F | | |
| T (°F) | $T-RT_{NDT}$ | $K_{Ic}$ (ksi√in) |
| 200 | -84.8 | 37.0 |
| 210 | -74.8 | 37.8 |
| 220 | -64.8 | 38.9 |
| 230 | -54.8 | 40.1 |
| 240 | -44.8 | 41.7 |
| 250 | -34.8 | 43.5 |
| 260 | -24.8 | 45.8 |
| 270 | -14.8 | 48.6 |
| 280 | -4.8 | 52.0 |
| 290 | 5.2 | 56.2 |
| 300 | 15.2 | 61.3 |
| 310 | 25.2 | 67.5 |
| 320 | 35.2 | 75.1 |
| 330 | 45.2 | 84.4 |
| 340 | 55.2 | 95.7 |
| 350 | 65.2 | 109.6 |
| 360 | 75.2 | 126.5 |
| 370 | 85.2 | 147.2 |
| 380 | 95.2 | 172.4 |
| 390 | 105.2 | 203.2 |
| 400 | 115.2 | 240.8 |
| 410 | 125.2 | 286.8 |
| 420 | 135.2 | 343.0 |
| 430 | 145.2 | 411.5 |
| 440 | 155.2 | 495.3 |
| 450 | 165.2 | 597.6 |

Table 7-3 $K_{Jc}$ at 1/10 Wall Thickness with $\Delta a$ = 0.10 in.

| $K_{Jc}$ Curve with $\Delta a$ = 0.10 in. | | | | | | | | |
|---|---|---|---|---|---|---|---|---|
| Fluence = | 12.48 | x $10^{18}$ n/cm$^2$ at inside surface | | | | | | |
| = | 10.04 | x $10^{18}$ n/cm$^2$ at t/10 + 0.1" | | | | | | |
| $\Delta a$ = | 0.10 | in. | | | | | | |
| Cu = | 0.34 | wt% | | | | | | |
| E = | 27042 | ksi | | | | | | |
| $\nu$ = | 0.30 | | | | | | | |
| $C_4$ = | -0.4489 | | | | | | | |
| T (°F) | $\ln C_1$ | $C_1$ | $C_2$ | $C_3$ | Mean $J_{0.1}$ (lb/in) | Lower Bound $J_{0.1}$ (lb/in) | Mean $K_{Jc}$ (ksi·√in) | Lower Bound $K_{Jc}$ (ksi·√in) |
| 200 | 0.73656 | 2.08873 | 0.14662 | -0.09957 | 1126 | 787 | 183.0 | 153.0 |
| 250 | 0.66106 | 1.93684 | 0.13783 | -0.09888 | 1068 | 747 | 178.1 | 148.9 |
| 300 | 0.58556 | 1.79599 | 0.12904 | -0.09819 | 1012 | 708 | 173.5 | 145.0 |
| 350 | 0.51006 | 1.66539 | 0.12026 | -0.09749 | 960 | 671 | 168.9 | 141.2 |
| 400 | 0.43456 | 1.54428 | 0.11147 | -0.09680 | 910 | 636 | 164.5 | 137.5 |
| 450 | 0.35906 | 1.43198 | 0.10268 | -0.09611 | 863 | 603 | 160.1 | 133.9 |
| 500 | 0.28356 | 1.32784 | 0.09389 | -0.09541 | 818 | 572 | 155.9 | 130.4 |
| 550 | 0.20806 | 1.23128 | 0.08510 | -0.09472 | 776 | 542 | 151.8 | 126.9 |
| 600 | 0.13256 | 1.14174 | 0.07631 | -0.09402 | 735 | 514 | 147.8 | 123.6 |

Table 7-4 J-Integral vs. Flaw Extension for Level C and D Service Loadings

| Time = 6.50 min | | | | | E = 27042 ksi | | |
|---|---|---|---|---|---|---|---|
| Crack tip at t/10 | | t = 8.08 in. | | | ν = 0.3 | | |
| (a/t)*40 | a (in.) | Δa (in.) | Temp. (F) | $K_{Isum}$ | $K_{Iclad}$ | $K_{Itotal}$ | $J_{app}$ (lb/in) |
| 1 | 0.2020 | | 323.60 | 52.55 | 9.0 | 61.6 | 127 |
| 2 | 0.4040 | | 339.20 | 73.31 | 9.0 | 82.3 | 228 |
| 3 | 0.6060 | | 354.30 | 85.16 | 9.0 | 94.2 | 298 |
| 4 | 0.8080 | 0.0000 | 368.70 | 93.24 | 9.0 | 102.2 | 352 |
| 5 | 1.0100 | 0.2020 | 382.50 | 98.68 | 9.0 | 107.7 | 390 |
| 6 | 1.2120 | 0.4040 | 395.70 | 102.66 | 9.0 | 111.7 | 420 |
| 7 | 1.4140 | 0.6060 | 408.20 | 105.49 | 9.0 | 114.5 | 441 |
| 8 | 1.6160 | 0.8080 | 420.00 | 107.64 | 9.0 | 116.6 | 458 |
| 9 | 1.8180 | 1.0100 | 431.20 | 109.29 | 9.0 | 118.3 | 471 |
| 10 | 2.0200 | 1.2120 | 441.60 | 110.21 | 9.0 | 119.2 | 478 |
| 12 | 2.4240 | 1.6160 | 460.50 | 110.93 | 9.0 | 119.9 | 484 |
| 14 | 2.8280 | 2.0200 | 476.70 | 110.57 | 9.0 | 119.6 | 481 |
| 16 | 3.2320 | 2.4240 | 490.50 | 111.29 | 9.0 | 120.3 | 487 |
| 18 | 3.6360 | 2.8280 | 501.90 | 111.35 | 9.0 | 120.4 | 487 |
| 20 | 4.0400 | 3.2320 | 511.40 | 111.07 | 9.0 | 120.1 | 485 |
| 22 | 4.4440 | 3.6360 | 519.00 | 110.56 | 9.0 | 119.6 | 481 |
| 24 | 4.8480 | 4.0400 | 525.10 | 110.07 | 9.0 | 119.1 | 477 |
| 26 | 5.2520 | 4.4440 | 529.80 | 109.66 | 9.0 | 118.7 | 474 |
| 28 | 5.6560 | 4.8480 | 533.50 | 108.97 | 9.0 | 118.0 | 468 |
| 30 | 6.0600 | 5.2520 | 536.30 | 107.92 | 9.0 | 116.9 | 460 |
| 32 | 6.4640 | 5.6560 | 538.30 | 106.78 | 9.0 | 115.8 | 451 |

At Δa = 0.10 in., $J_{app}$ = 371 lb/in.

LEVEL D $J_{0.1}/J_{app}$= 2.54

LEVEL C $J_{0.1}/J_{app}$= 1.77

Table 7-5 J-R Curves for Evaluation of Levels C and D Service Loadings

Weld: SA-1526

Time = 6.50 min.
T = 368.70 °F
t = 8.08 in.
$a_o$ = 0.808 in.
$\phi_{t\,IS}$ = 12.48 × $10^{18}$ n/cm$^2$ @ inside surface
Cu = 0.34 wt%
$B_n$ = 0.80 in

| Δa (in.) | a (in.) | $\phi_t$ ($10^{18}$ n/cm$^2$) | $\ln C_1$ | $C_1$ | $C_2$ | $C_3$ | J-R (lb/in) Mean | J-R (lb/in) Low |
|---|---|---|---|---|---|---|---|---|
| 0.001 | 0.8090 | 10.2776 | 0.47981 | 1.61577 | 0.11673 | -0.09721 | 83 | 58 |
| 0.002 | 0.8100 | 10.2751 | 0.47983 | 1.61580 | 0.11674 | -0.09722 | 161 | 112 |
| 0.004 | 0.8120 | 10.2702 | 0.47987 | 1.61586 | 0.11674 | -0.09722 | 266 | 186 |
| 0.007 | 0.8150 | 10.2628 | 0.47993 | 1.61596 | 0.11675 | -0.09722 | 367 | 257 |
| 0.010 | 0.8180 | 10.2554 | 0.47999 | 1.61606 | 0.11676 | -0.09722 | 438 | 306 |
| 0.015 | 0.8230 | 10.2431 | 0.48009 | 1.61623 | 0.11677 | -0.09722 | 522 | 365 |
| 0.020 | 0.8280 | 10.2308 | 0.48020 | 1.61639 | 0.11678 | -0.09722 | 583 | 408 |
| 0.030 | 0.8380 | 10.2063 | 0.48040 | 1.61672 | 0.11680 | -0.09722 | 671 | 469 |
| 0.040 | 0.8480 | 10.1819 | 0.48060 | 1.61705 | 0.11683 | -0.09722 | 735 | 514 |
| 0.050 | 0.8580 | 10.1574 | 0.48080 | 1.61738 | 0.11685 | -0.09722 | 785 | 549 |
| 0.070 | 0.8780 | 10.1088 | 0.48121 | 1.61803 | 0.11690 | -0.09723 | 860 | 601 |
| 0.100 | 0.9080 | 10.0363 | 0.48182 | 1.61902 | 0.11697 | -0.09723 | 941 | 658 |
| 0.120 | 0.9280 | 9.9882 | 0.48223 | 1.61967 | 0.11702 | -0.09724 | 982 | 687 |
| 0.140 | 0.9480 | 9.9404 | 0.48263 | 1.62033 | 0.11706 | -0.09724 | 1018 | 711 |
| 0.160 | 0.9680 | 9.8928 | 0.48304 | 1.62099 | 0.11711 | -0.09724 | 1048 | 733 |
| 0.200 | 1.0080 | 9.7983 | 0.48384 | 1.62230 | 0.11720 | -0.09725 | 1100 | 769 |
| 0.250 | 1.0580 | 9.6814 | 0.48485 | 1.62394 | 0.11732 | -0.09726 | 1151 | 805 |
| 0.300 | 1.1080 | 9.5659 | 0.48586 | 1.62558 | 0.11744 | -0.09727 | 1194 | 835 |
| 0.350 | 1.1580 | 9.4518 | 0.48687 | 1.62722 | 0.11756 | -0.09728 | 1231 | 860 |
| 0.400 | 1.2080 | 9.3391 | 0.48788 | 1.62885 | 0.11767 | -0.09729 | 1263 | 883 |
| 0.450 | 1.2580 | 9.2277 | 0.48888 | 1.63049 | 0.11779 | -0.09730 | 1291 | 903 |
| 0.500 | 1.3080 | 9.1176 | 0.48988 | 1.63213 | 0.11791 | -0.09731 | 1317 | 921 |

Table 7-6 Level D Service Loadings - Internal Pressure at Tensile Instability

| flaw depth *a* (in.) | $P_I$ (ksi) |
|---|---|
| 0.0808 | 10.22 |
| 0.1616 | 10.21 |
| 0.2424 | 10.18 |
| 0.3232 | 10.16 |
| 0.4040 | 10.12 |
| 0.4848 | 10.09 |
| 0.5656 | 10.04 |
| 0.6464 | 10.00 |
| 0.7272 | 9.95 |
| 0.8080 | 9.89 |
| 0.8888 | 9.84 |
| 0.9696 | 9.78 |
| 1.0504 | 9.72 |
| 1.1312 | 9.66 |
| 1.2120 | 9.60 |
| 1.2928 | 9.54 |

Figure 7-1. $K_I$ vs. Crack Tip Temperature for Levels C & D Service Loadings

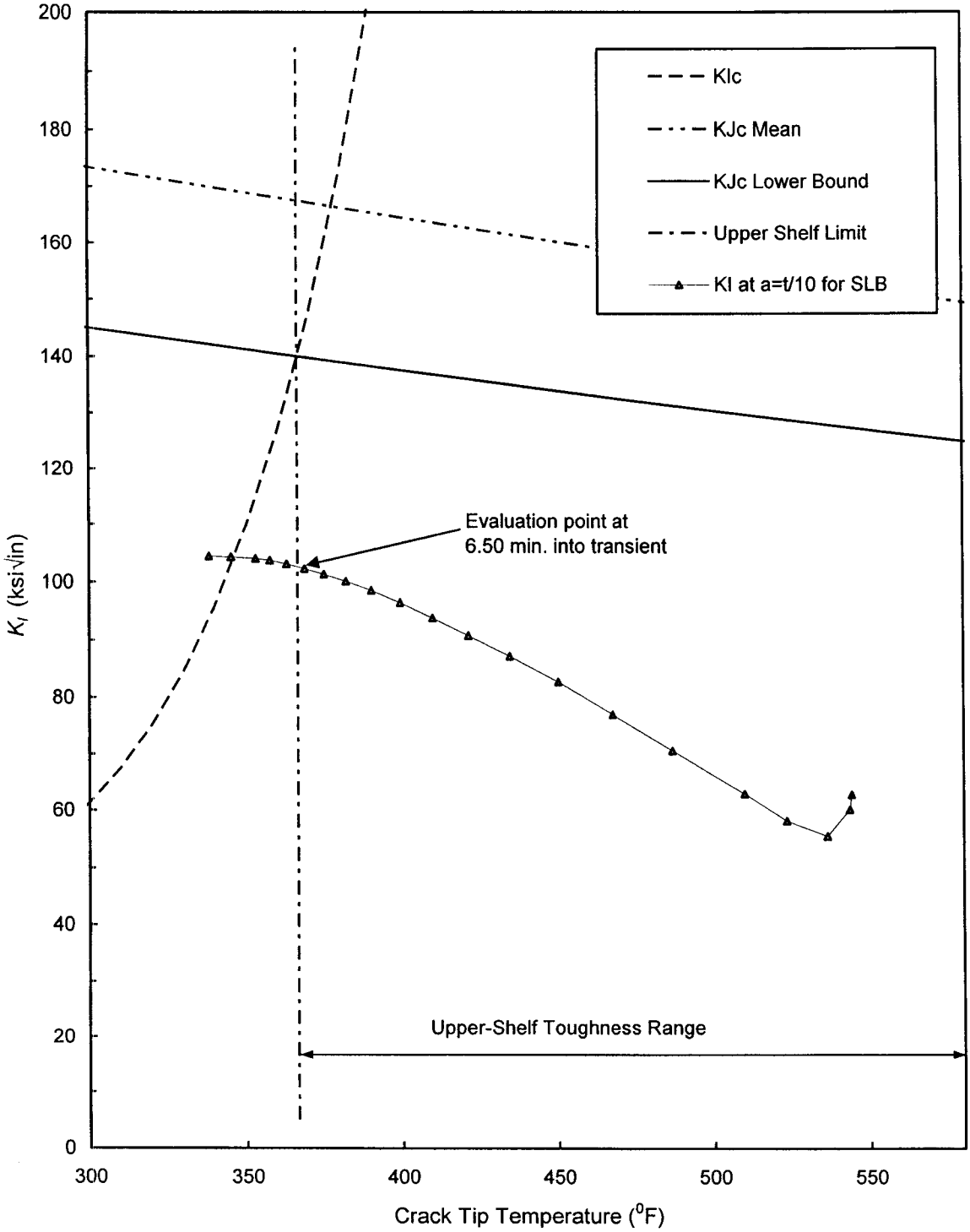

Figure 7-2. *J*-Integral vs. Flaw Extension for Levels C & D Service Loadings

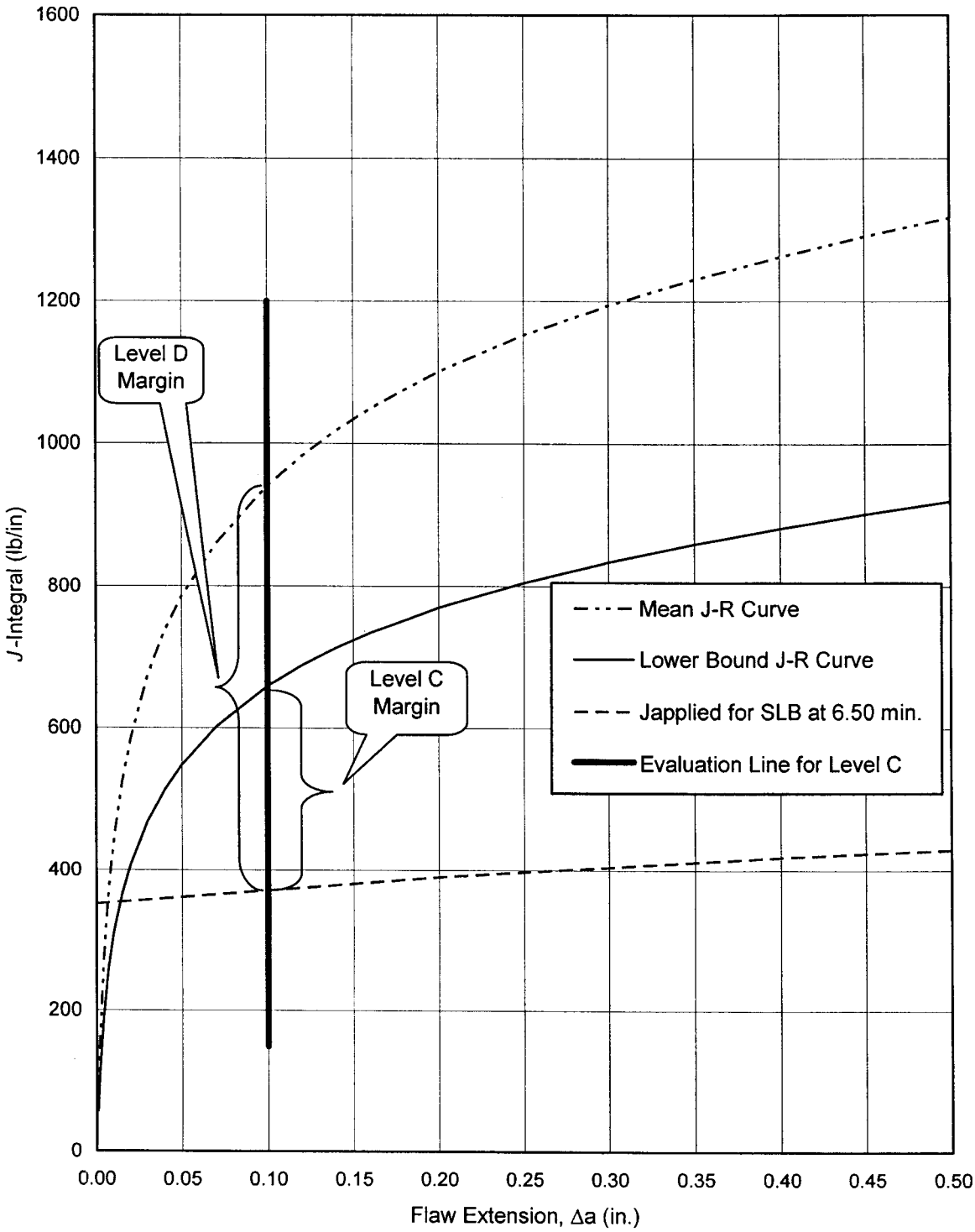

## 8.0 Summary of Results

A low upper-shelf toughness fracture mechanics analysis has been performed to evaluate the reactor vessel weld at Surry Units 1 and 2 for projected low upper-shelf energy levels at 48 EFPY, considering Levels A, B, C, and D Service Loadings of the ASME Code.

Evidence that the ASME Code, Section XI, Appendix K [4] acceptance criteria have been satisfied for Levels A and B Service Loadings is provided by the following:

(1) The limiting weld is the axial weld SA-1526 of Surry Unit 1. Figure 6-1 shows that with factors of safety of 1.15 on pressure and 1.0 on thermal loading, the applied *J*-integral ($J_1$) is less than the *J*-integral of the material at a ductile flaw extension of 0.10 in. ($J_{0.1}$). The ratio $J_{0.1}/J_1$ = 1.26 is greater than the required value of 1.0.

(2) Figure 6-1 shows that with a factor of safety of 1.25 on pressure and 1.0 on thermal loading, flaw extensions are ductile and stable since the slope of the applied *J*-integral curve is less than the slope of the lower bound *J-R* curve at the point where the two curves intersect.

Evidence that the ASME Code, Section XI, Appendix K [4] acceptance criteria have been satisfied for Levels C and D Service Loadings is provided by the following:

(1) Figure 7-2 shows that with a factor of safety of 1.0 on loading, the applied *J*-integral ($J_1$) is less than the *J*-integral of the material at a ductile flaw extension of 0.10 in. ($J_{0.1}$). From Tables 7-4 and 7-5, for Level C Service Loadings, the ratio $J_{0.1}/J_1$ = 658/371 = 1.77, and for Level D Service Loadings, the ratio $J_{0.1}/J_1$ = 941/371 = 2.54. Both these margins are greater than the required value of 1.0.

(2) Figure 7-2 shows that with a factor of safety of 1.0 on loading, flaw extensions are ductile and stable since the slope of the applied *J*-integral curve is less than the slopes of both the lower bound and mean *J-R* curves at the points of intersection.

(3) Figure 7-2 shows that flaw growth is stable at much less than 75% of the vessel wall thickness. It has also been shown that the remaining ligament is sufficient to preclude tensile instability by a large margin.

## 9.0 Conclusion

The limiting Surry Units 1 and 2 reactor vessel beltline weld satisfies the acceptance criteria of Appendix K to Section XI of the ASME Code [4] for projected low upper-shelf Charpy impact energy levels at 48 effective full power years of plant operation.

## 10.0 References


1. BAW-2192PA, Low Upper-Shelf Toughness Fracture Mechanics Analysis of Reactor Vessels of B&W Owners Reactor Vessel Working Group For Level A & B Service Loads, April 1994.

2. BAW-2178PA, Low Upper-Shelf Toughness Fracture Mechanics Analysis of Reactor Vessels of B&W Owners Reactor Vessel Working Group For Level C & D Service Loads, April 1994.

3. BAW-2323, Low Upper-Shelf Toughness Fracture Mechanics Analysis of Reactor Vessels of Surry Units 1 and 2 for Extended Life Through 48 Effective Full Power Years, June 1998.

4. ASME Boiler and Pressure Vessel Code, Section XI, 1992 Edition with Addenda through December 1993.

5. BAW-2275, Low Upper-Shelf Toughness Fracture Mechanics Analysis of B&W Designed Reactor Vessels for 48 EFPY, August 1996.

6. ASME Boiler and Pressure Vessel Code, Section III, Appendices, 1986 Edition with no Addenda.

7. BAW-2324, Analysis of Capsule X Virginia Electric Surry Unit No. 1 Reactor Vessel Material Surveillance Program, April 1998.

8. BAW-2150, Materials Information for Westinghouse-Designed Reactor Vessels Fabricated by B&W, December 1990.

9. USNRC Reactor Vessel Integrity Database Version 2.0.1 (RVID), U. S. Nuclear Regulatory Commission, July 2000.

10. Regulatory Guide 1.99, Revision 2, U.S. Nuclear Regulatory Commission, May 1988.

11. AREVA/FANP Document No. 32-5068629-00, "Surry 1 Updated Fluence Calculation - Cycles 1 to 19," August 2005.

12. AREVA/FANP Document No. 32-5070607-00, "Surry 2 Fluence Calculation for Cycles 1 to 18," August 2005.

13. AREVA/FANP Document No. 38-5063040-00, released April 2005 and containing Dominion Generation Letter NFP-05-011-A "Surry Equilibrium Cycle Data to Support Fluence and Equivalent Margin Analyses," dated March 21, 2005.

14. ASME Boiler and Pressure Vessel Code, Appendix K, Section XI, 2001 Edition.

15. EPRI NP-719-SR, T.U. Marston, Flaw Evaluation Procedures: ASME Section XI, Electric Power Research Institute, Palo Alto, California, August 1978.

16. BAW-2308, Revision 1, Initial $RT_{NDT}$ of Linde 80 Weld Materials, August 2003.

17. Final Safety Evaluation for Topical Report BAW-2308, Revision 1, "Initial $RT_{NDT}$ of Linde 80 Weld Materials," (TAC No. MB6646), August 4, 2005.

## 11.0 Certification

This report is an accurate description of the low upper-shelf toughness fracture mechanics analysis performed for the reactor vessels at Surry Units 1 and 2.

9/12/05

H. P. Gunawardane, Engineer III — Date
Structural and Fracture Mechanics Unit

This report has been reviewed and found to be an accurate description of the low upper-shelf toughness fracture mechanics analysis performed for the reactor vessels at Surry Unit 1 and 2.

9/12/05

A. D. Nana, Principal Engineer — Date
Structural and Fracture Mechanics Unit

Verification of independent review.

9/12/05

B. Djazmati, Manager — Date
Structural and Fracture Mechanics Unit

This report is approved for release.

9/12/05

E. Giavedoni, Manager — Date
Analysis Services Unit