MEMORANDUM TO: William D. Travers, Director
Spent Fuel Project Office, NMSS

FROM: Dennis G. Reid, Project Manager
Spent Fuel Licensing Section
Spent Fuel Project Office, NMSS

SUBJECT: MEETING BETWEEN U.S. DEPARTMENT OF ENERGY AND THE NUCLEAR REGULATORY COMMISSION REGARDING CENTRAL INTERIM STORAGE

On August 20, 1996, a meeting was held between representatives of the U.S. Department of Energy (DOE), its associated contractors, and the Nuclear Regulatory Commission staff to discuss a proposed submittal of a non-site-specific topical safety analysis report (TSAR) for a central interim storage (CIS) facility. Attachment 1 is a list of attendees. Attachment 2 is a copy of the slides presented by DOE. The meeting was noticed on August 1, 1996.

DOE representatives provided information on the policy, administration, and technical aspects of the proposed CIS. The proposed TSAR is expected to bound all conditions required by 10 CFR Part 72, but many items relating to site characterization would not be addressed until a site is selected. The DOE plans to use existing storage cask technologies for its facility, several of which are currently under NRC review. The DOE has tentatively selected the NAC STC, Holtec HISTAR-100, Sierra Nuclear Transtor, VECTRA MP-187, and the Westinghouse MPC System (large and small) storage systems for use in the proposed CIS. In developing the TSAR, DOE will utilize Regulatory Guide 3.48 and NUREG-0800.

The DOE schedule anticipates that a TSAR application would be submitted in May 1997, with the acceptance of spent nuclear fuel in September 2002. Members of the public attended the meeting.

No proprietary information was disseminated or discussed at this meeting. No regulatory decisions were requested or made.

Docket No. 72-21

Attachments: 1. Attendee List
2. DOE Slides

Distribution w/atts:

Docket	NRC File Center	PUBLIC	NMSS R/F	SFPO R/F	LKokajko
CHaughney	PEng	EEaston	OJankovich	FSturz	WReamer

OFC	SFPO	C	SFPO	E	SFPO	E				
NAME	DReid:dd		VLTharpe		EJLeeds					
DATE	08/28/96		08/28/96		08/28/96					

C = COVER E = COVER & ENCLOSURE N = NO COPY
OFFICIAL RECORD COPY
G:\DOECIS.SUM

NF07

9608300070 960828
PDR ADOCK 07200021
C PDR

NRC FILE CENTER COPY

ATTENDANCE LIST

Meeting between the U. S. Department of Energy and
the U. S. Nuclear Regulatory Commission Staff

August 20, 1996

Name	Affiliation
Lawrence Kokajko	NRC/NMSS/SFPO
Robert G. Morgan	Duke Eng/M&O
Stephen G. Benesole	Duke Eng/M&O
Nick L. Seagle	Duke Eng/M&O
Dan Kane	DOE
N. Prasana Kumar	DOE
C. Folkers	Nuclear Info & Resource Srvcs
Jim York	Weston
Jeff Williams	DOE
Jack Bagnulo	GAO
Woody Chu	NWTRB
Sandi Wastler	NRC/NMSS/DWM
Jim Osborne	DOE
Steve Nesbit	M&O
John McConaghy	Duke Eng/M&O
Mark Delligatti	NRC/NMSS/SFPO
Priscilla Bunton	DOE
Cheryl Faubert	Nye County, Nevada
King Stablien	NRC/OEDO
Elise Heumann	NRC/NMSS/SFPO
Edward Shum	NRC/NMSS/SFPO
Paul P. Narbut	NRC/NMSS/SFPO
Allen Howe	NRC/NMSS/SFPO
Henry Lee	NRC/NMSS/SFPO
Sue Gagner	NRC/OPA
Don Carlson	NRC/NMSS/SFPO
Charles Haughney	NRC/NMSS/SFPO
Dennis Reid	NRC/NMSS/SFPO
Kien C. Chang	NRC/NMSS/DWM
David Tang	NRC/NMSS/SFPO
Eric Leeds	NRC/NMSS/SFPO
Susan Shankman	NRC/NMSS/SFPO
John Richardson	Raytheon/Weston
Steve Hogsett	NRC/NMSS/SFPO
Neil Jensen	NRC/OGC
Robert Sweeney	IBEC
Fritz Sturz	NRC/NMSS/SFPO
Mike Waters	NRC/NMSS/SFPO
Carl Withee	NRC/NMSS/SFPO
Patricia Eng	NRC/NMSS/SFPO

ATTACHMENT 1

Overview of Interim Storage Facility Design and Topical Safety Analysis Report Development

Office of Civilian Radioactive Waste Management
U.S. Department of Energy

NRC/DOE Kick-off Meeting
August 20, 1996

ATTACHMENT 2

Purpose of Meeting

- Begin dialogue and obtain feedback on TSAR approach and selected issues
- Introduce key individuals

Agenda

- Introduction (Jeff Williams)
- Overview of ISF Phased Approach (Dan Kane)
- Phase I TSAR Design Scope (John McConaghy)
- Generic Site Design Criteria (Steve Nesbit)
- TSAR Development and Future Meetings (Robert Morgan)

Office of Civilian Radioactive Waste Management

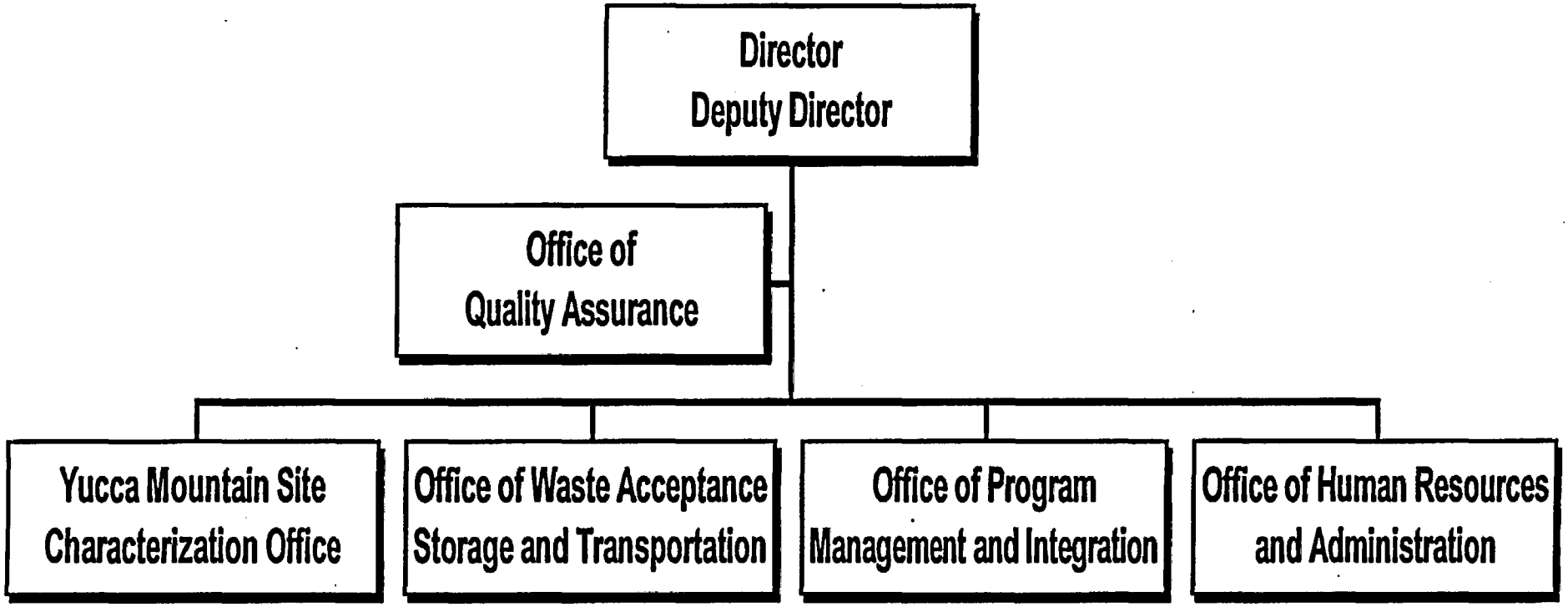

Proposed Realignment

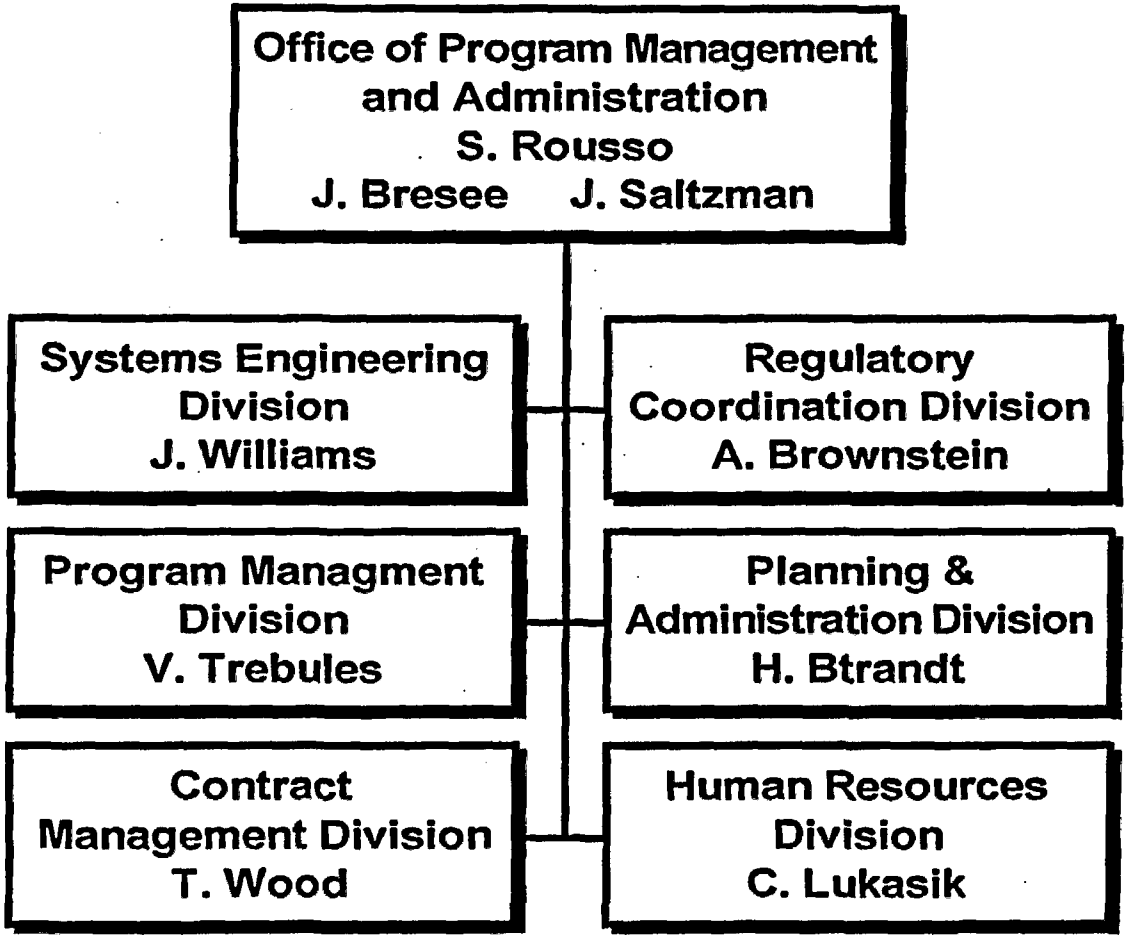

Proposed Realignment

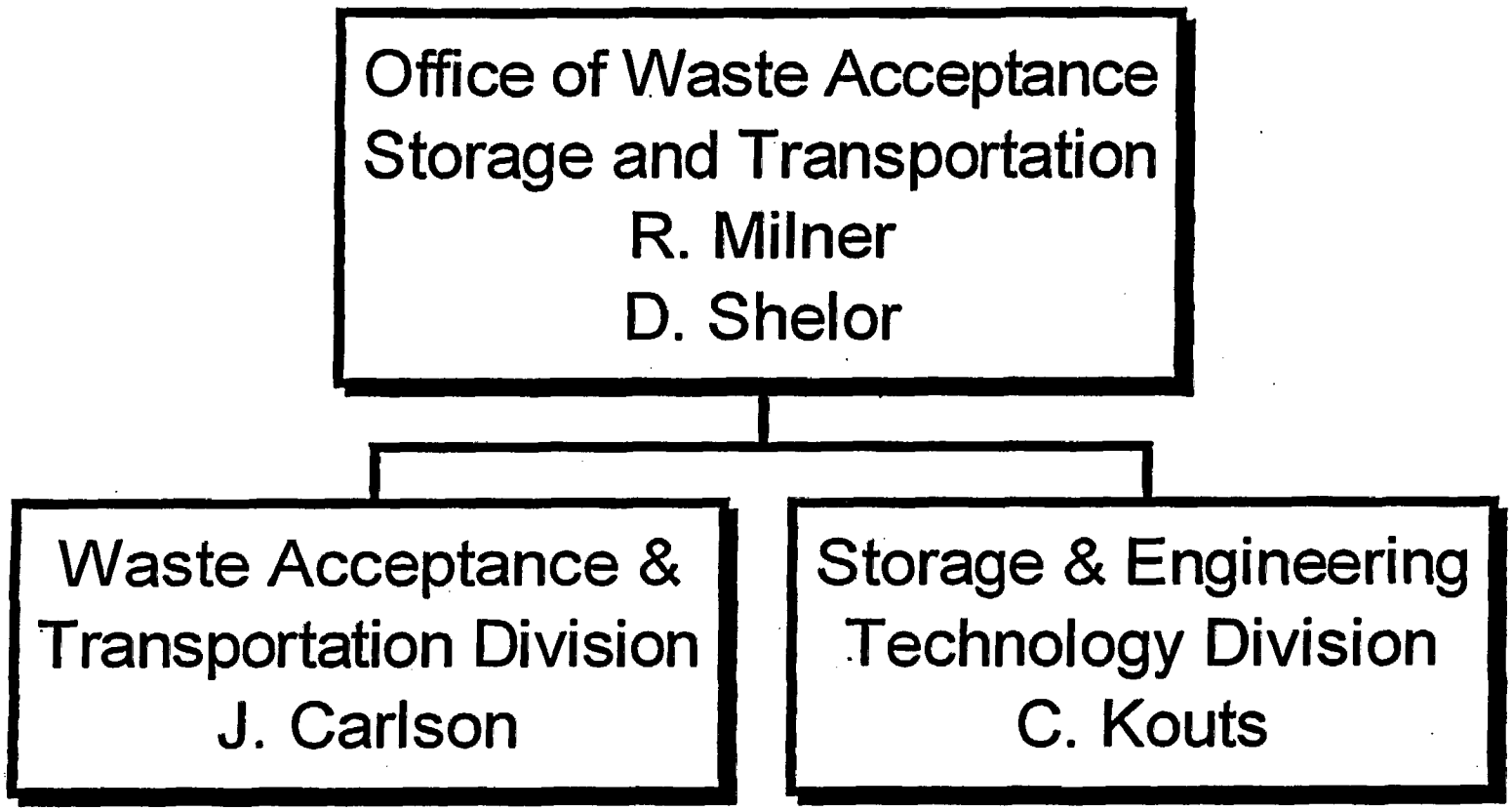

Interim Storage Schedule

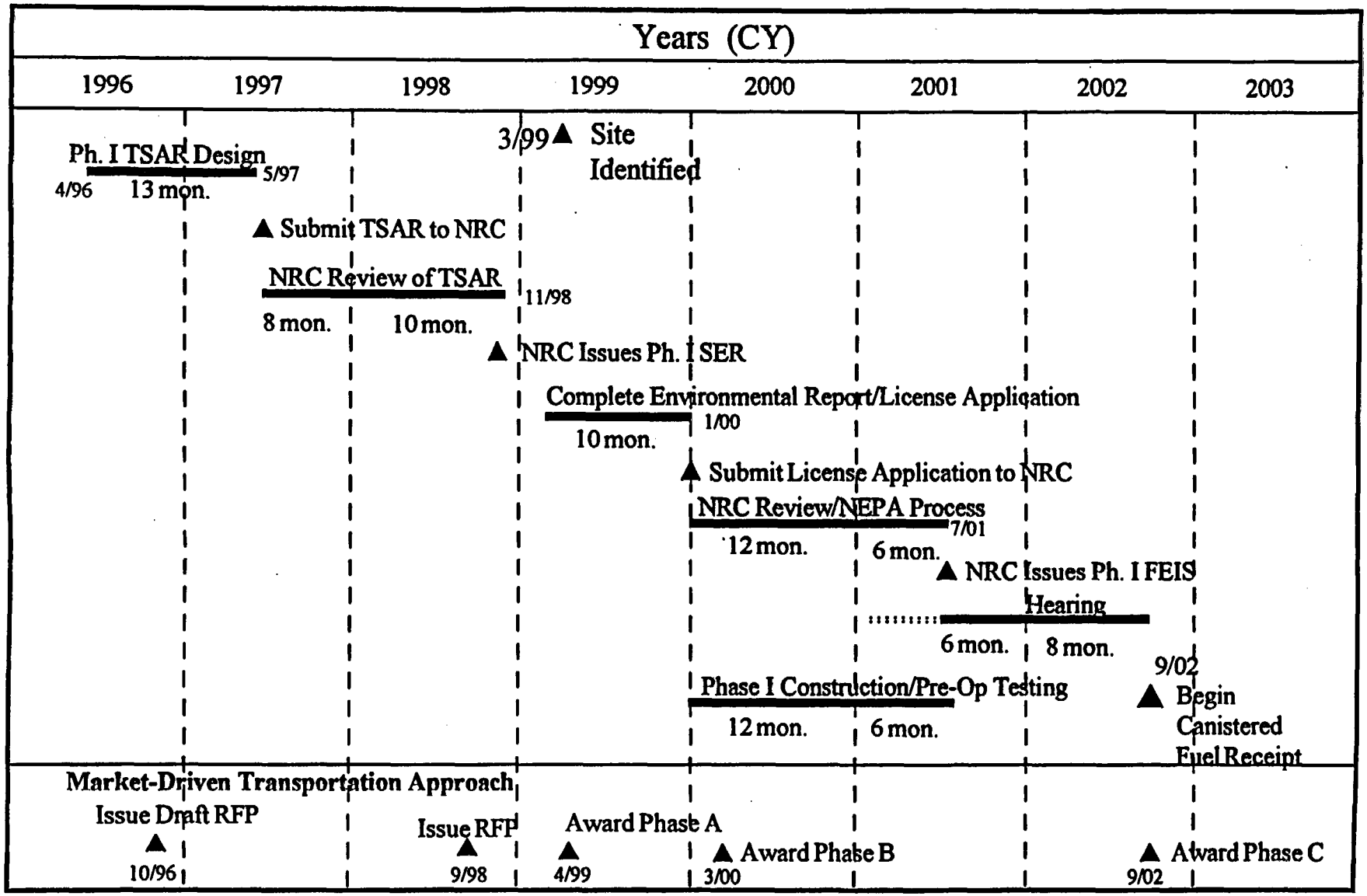

Phase I TSAR Design Scope

J. M. McConaghy, Jr.
August 1996

ISF Design Approach

- Design developed under approved QA program
- Design for phased ISF implementation
- Phase I uses dual-purpose technologies expected to be licensed by NRC
- Canistered commercial SNF only
- Non- site specific design

Products of TSAR Design Phase

- Identification of SSCs important to safety
- Design criteria
- Design analyses
- Facility system descriptions
- TSAR text and figures

TSAR Design Inputs

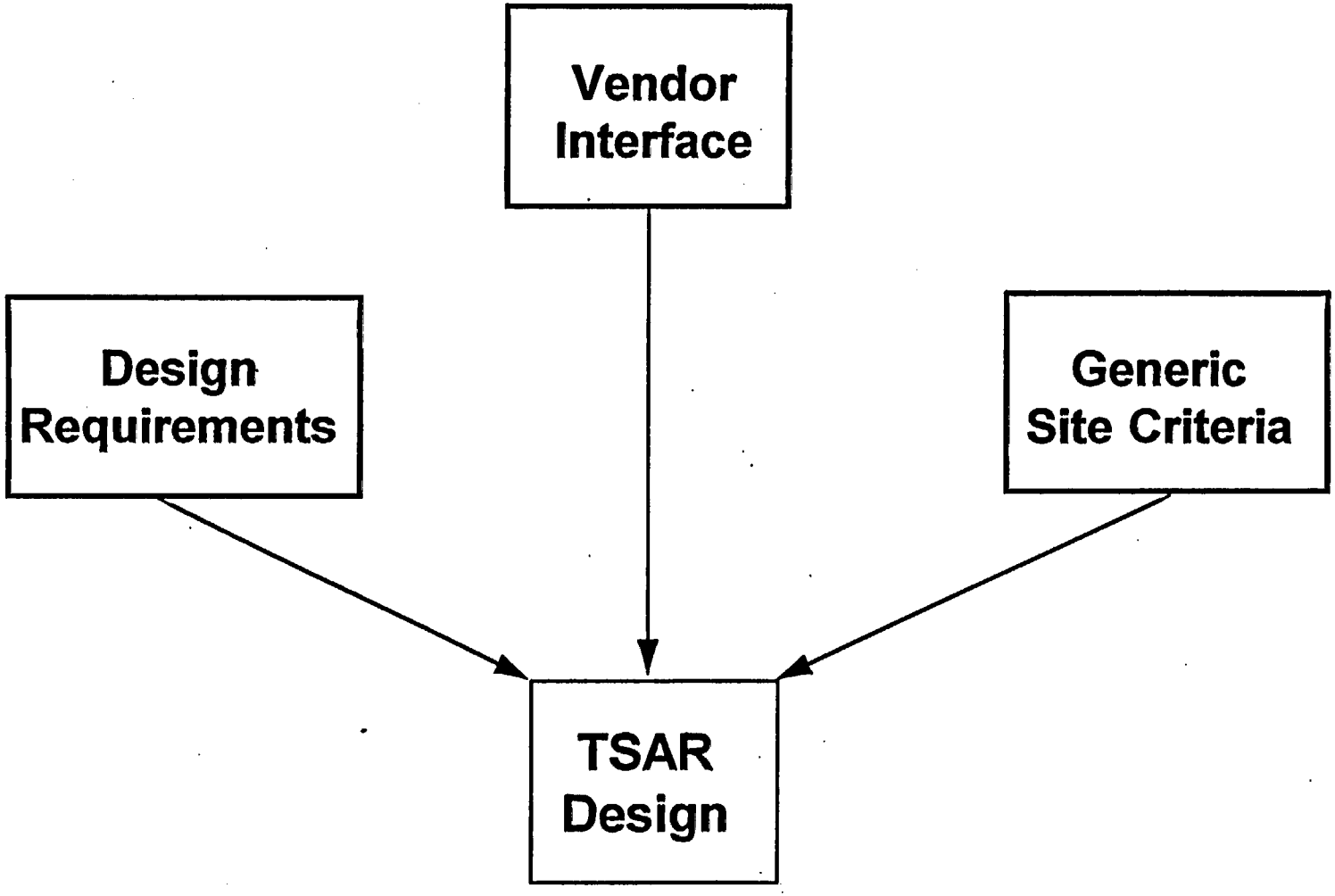

Design Performance Requirements

- Annual Handling Requirements
  - Year 1 and 2 — 1200 MTU / 160 to 230 canisters
  - Year 3 and 4 — 2000 MTU
  - Year 5 — 2700 MTU
  - Year 6 and beyond — 3000 MTU
- Total storage capacity — 40,000 MTU (approximately 6500 canisters)
- Maintainable storage life of 100 years

Vendor Interface Approach

- Identify vendor transportation and storage technologies
- Review vendor submittals for design interface information
  - Canister/Basket Assemblies
  - Vertical Storage Casks
  - Horizontal Storage Casks
  - Transportation Casks
  - Transfer Casks
  - Auxiliary Equipment
- List vendor's applicable parameters
- Identify enveloping equipment design parameters
- Use bounding parameters as the ISF design envelope

Design Criteria Content

- Performance-based System Requirements
- Applicable Design Codes (ACI, AISC, ASME, NFPA, etc.)
- Industry Standards (ANSI/ANS, ANSI/ASCE, etc.)
- Regulatory guidance documents (RG, SRP, NUREG-, NUREG/CR-)
- Design Events/Accidents/Combinations

System Description Content

- Scope
- Design inputs
- Functional analysis
- Overall description
- Interfaces
- Tables
- Figures
- Subsystem or item descriptions
- References and appendices

Site/Storage Layout

- ISF Phase I design will accommodate transfer and storage of licensed transportation and storage systems

- Basis for TSAR design:
  - NAC STC
  - Holtec HISTAR-100
  - Sierra Nuclear TranStor
  - VECTRA MP-187
  - Westinghouse MPC System (Large and Small)

NAC-STC Transfer and Storage Operations

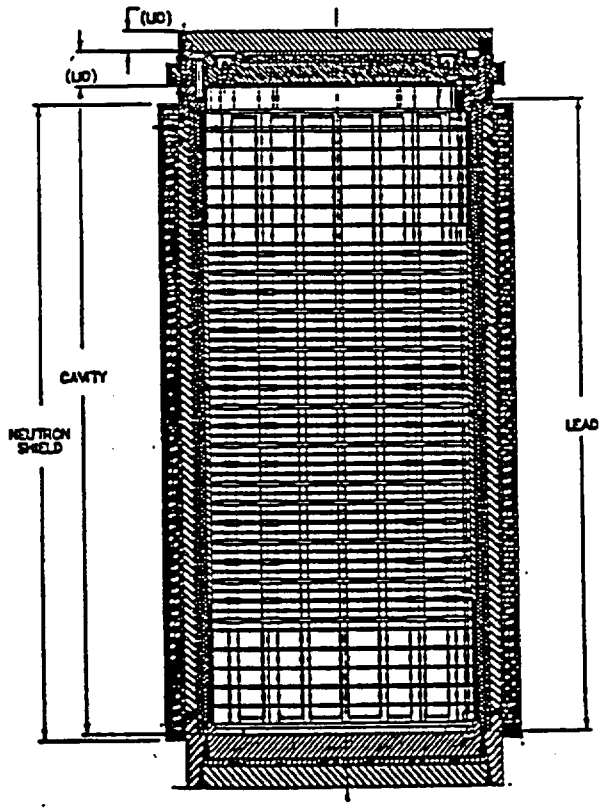

NAC-STC Transportable Storage Cask

- Bare fuel assemblies are shipped from a utility inside a NAC-STC transportable storage cask (TSC) via a heavy-haul transporter, and the TSC is received at the ISF transfer facility.

- The TSC is upended and lifted from the heavy-haul transporter by the transfer facility overhead crane and lowered onto a site trailer and prepared for storage (no canister transfer operations).

- The site trailer, containing the TSC (which is also licensed for storage), is towed by the site tractor to the its storage yard location.

- A storage yard crane is used to upend and lift the TSC from the trailer, and vertically place it onto its storage location on the pad.

HI-STAR 100 System Transfer and Storage Operations

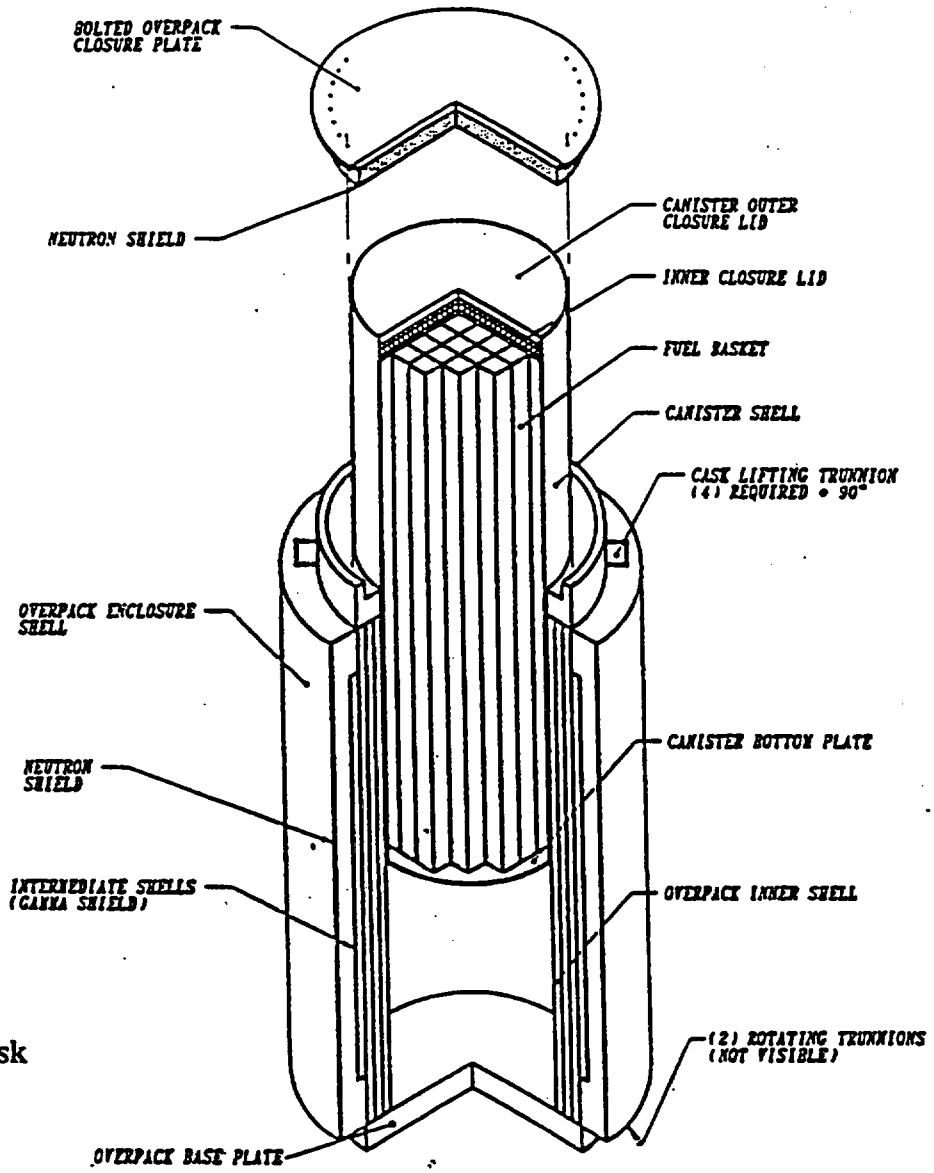

HI-STAR 100 Cask

- An MPC is shipped from the utility inside a HI-STAR 100 transportation cask, via a heavy-haul transporter, and the cask is received at the ISF transfer facility.
- The HI-STAR 100 transportation cask is upended and lifted from the heavy-haul transporter by the transfer facility overhead crane and lowered vertically onto a transfer trailer (no canister transfer operations).
- The transfer trailer, containing the loaded HI-STAR 100 (which is also licensed for storage), is towed by the site tractor to the its storage yard location.
- A storage yard crane is used to lift the HI-STAR 100 from the transfer trailer, and vertically place it onto its storage location on the pad.

TRANSTOR™ Cask System Transfer and Storage Operations

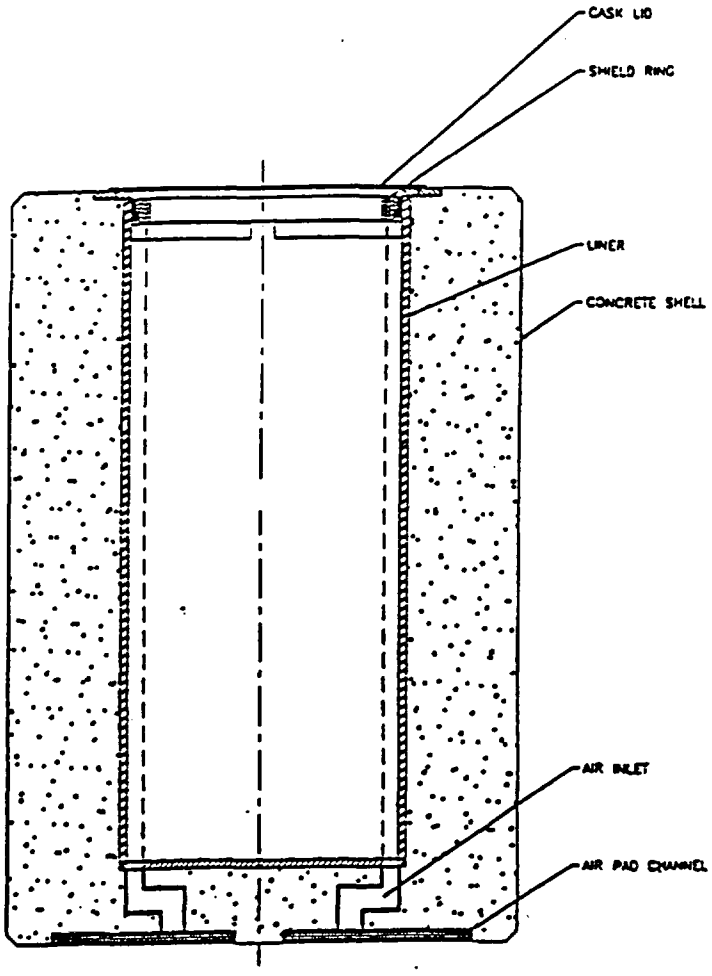

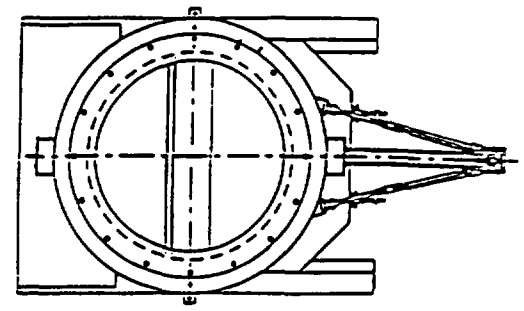

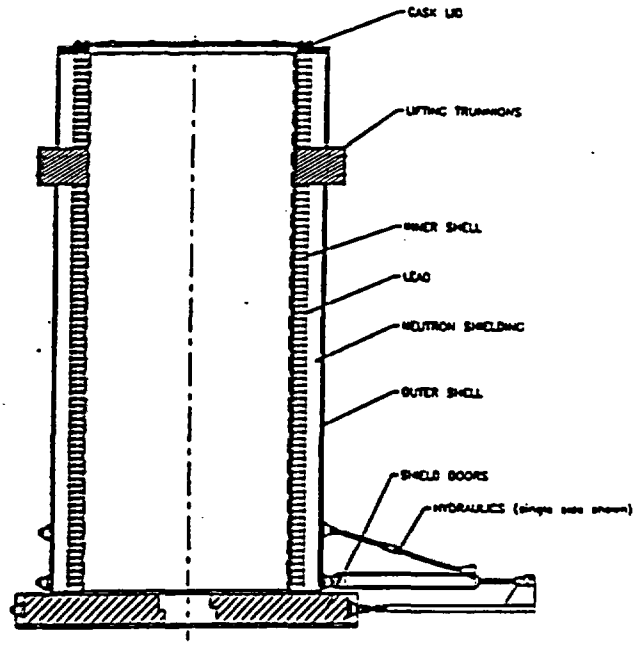

TRANSTOR™ Cask System

- A canister is shipped from the utility inside a TRANSTOR™ transportation cask, via a heavy-haul transporter, and the cask is received at the ISF transfer facility.

- The TRANSTOR™ transportation cask is upended and lifted from the heavy-haul transporter by the transfer facility overhead crane and lowered onto the transfer facility floor in a vertical position (preparation for canister transfer operations).

- The TRANSTOR™ transfer cask is placed on top of the transportation cask and the canister is pulled inside the transfer cask. With bottom doors closed, the transfer cask is moved by the overhead crane and placed on top of the TRANSTOR™ concrete storage cask. The doors of the transfer cask are opened and the canister is lowered into the concrete cask (cask closure and preparation for storage).

- A transporter lifts and moves the loaded concrete cask from the transfer facility to its storage yard location and places it into storage.

NUHOMS® HSM & MP187 Transfer and Storage Operations

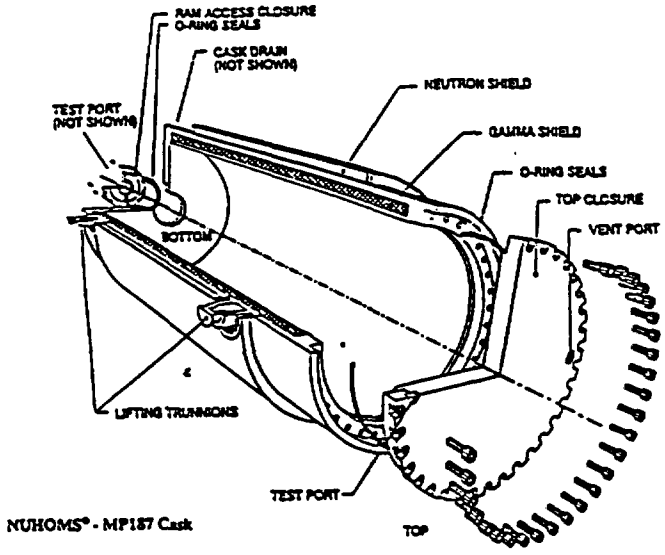

NUHOMS® - MP187 Cask

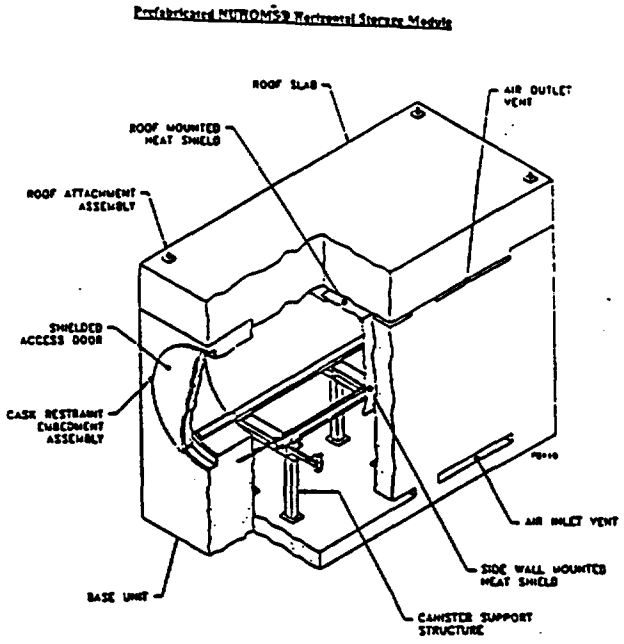

NUHOMS® - HSM & MP187 Cask

- Canister shipped from utility inside a NUHOMS® - MP187 transportation cask via a heavy-haul transporter, and the cask is received at the ISF transfer facility.
- The MP187 transportation cask is upended and lifted from the heavy-haul transporter by the transfer facility overhead crane and lowered and downended horizontally onto a transfer trailer (preparation for canister transfer operations).
- The transfer trailer, containing the loaded MP187 is towed by the site tractor to the the storage yard location.
- The canister is transferred horizontally into a NUHOMS® Horizontal Storage Module (HSM) from the MP187 (HSM closure and preparation for storage).

Westinghouse Large and Small MPC Storage System
Transfer and Storage Operations

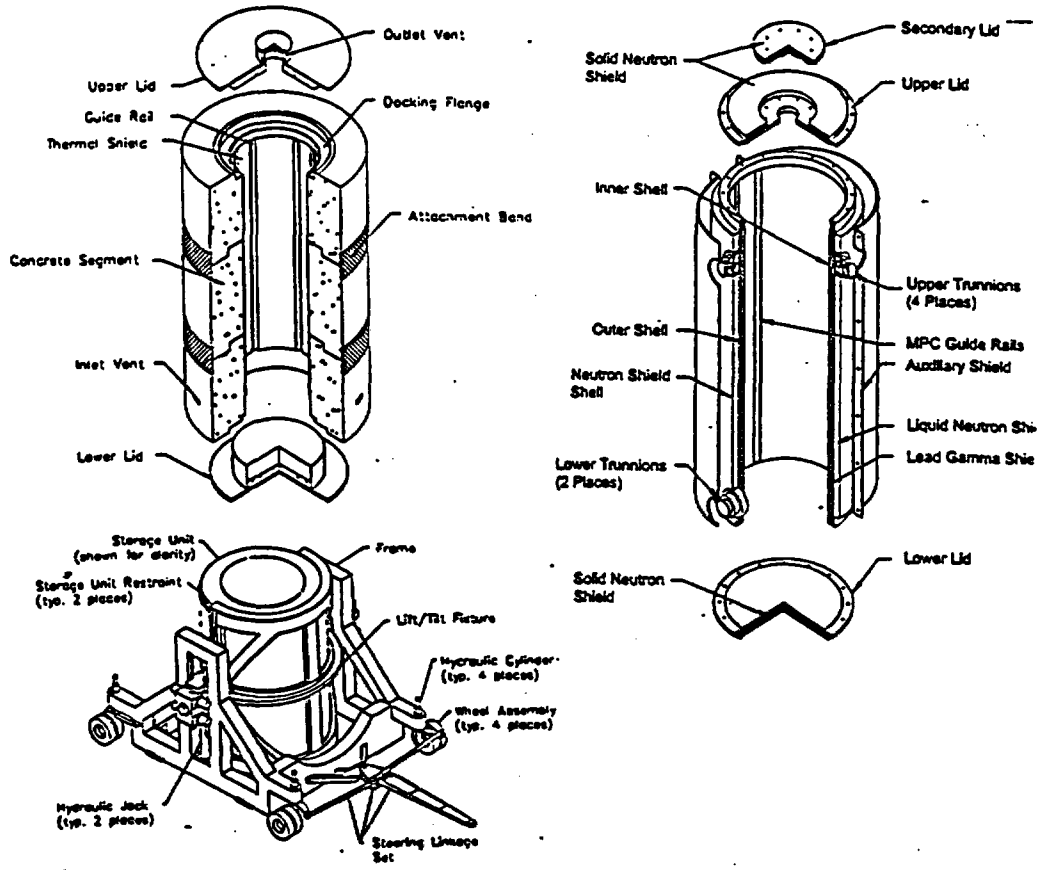

Westinghouse MPC Cask System

- A large or small MPC is shipped from the utility inside a large or small Westinghouse transportation cask, via a heavy-haul transporter, and the cask is received at the ISF transfer facility.

- The Westinghouse transportation cask is upended and lifted from the heavy-haul transporter by the transfer facility overhead crane and lowered and downended onto the transfer trailer in a horizontal position (preparation for MPC transfer operations) and towed to its storage location for MPC transfer.

- The Westinghouse small or large concrete cask is placed inside the upender/downender at its storage location. The concrete cask is downended and aligned with the horizontal transportation cask, and the MPC is transferred horizontally into the concrete cask using a hydraulic ram device (cask closure and preparation for storage). Note: The Westinghouse small or large transfer cask can be utilized for this operation if required.

- The upender/downender is used to upend the loaded concrete cask and place it into storage.

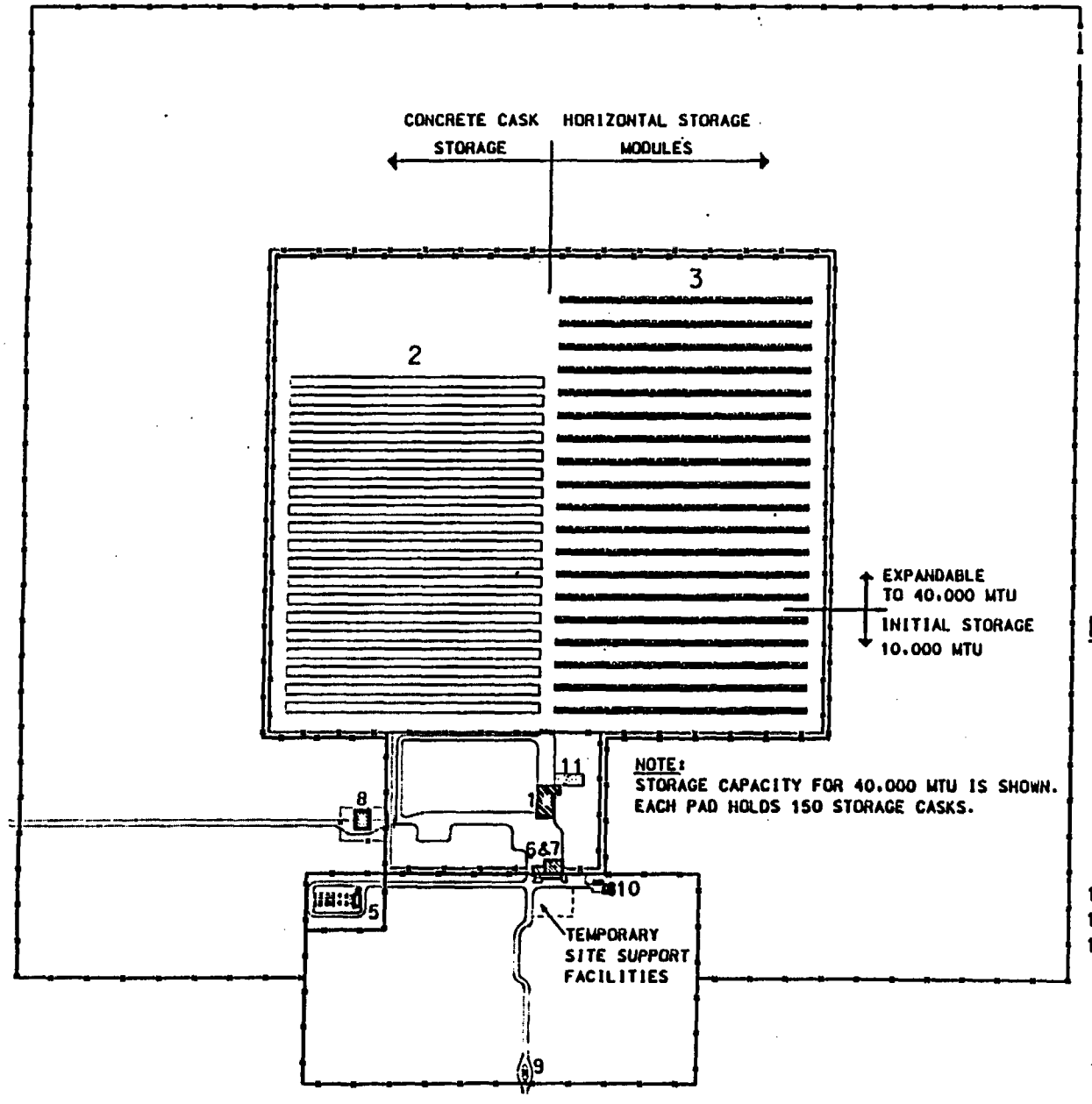

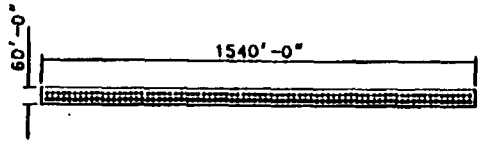

TYPICAL PAD FOR CONCRETE STORAGE CASKS
150 CASKS PER PAD - 50' BETWEEN PADS
APPROX. 1000 MTU

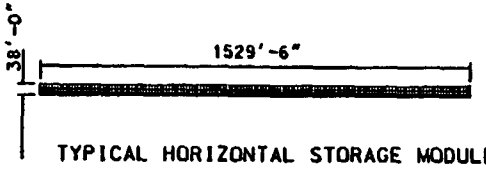

TYPICAL HORIZONTAL STORAGE MODULE LAYOUT
150 MODULES PER SECTION - 100' BETWEEN SECTIONS
APPROX. 1000 MTU

ALTERNATE STORAGE METHODS

KEY TO PLAN

1 TRANSFER FACILITY
2 CONCRETE CASK STORAGE PADS
3 HORIZONTAL STORAGE MODULES

5 SWITCHYARD
6 BADGING AREA
7 SECURITY COMPLEX & CARGO ACCESS PORTAL
8 INSPECTION GATEHOUSE
9 MAIN GATEHOUSE
10 WATER UTILITIES & FIRE PROTECTION
11 CONCRETE CASK STAGING AREA
12 RECEIVING GATEHOUSE

ISF TSAR PHASE I - SITE PLAN

Generic Site Design Criteria

S. P. Nesbit
August 1996

Outline of Presentation

- Purpose
- Approach
- Criteria / Bases
- Siting Implications
- Storage System Implications
- Summary

Purpose

- Specify those site-related criteria that are required for generic Interim Storage Facility (ISF) Topical Safety Analysis Report (TSAR) design
- Examples:
  - Temperature
  - Rainfall
  - Wind
  - Seismic ground motion
- NOT developing siting criteria
- NOT basing design criteria on any particular cask/canister design
- Criteria should be applicable to both Phase I and Phase II of the ISF

Approach

- Establish list of criteria
  - ISF Design Requirements Document
    - 10 CFR Part 72
    - Site to be determined
  - Nuclear Regulatory Commission (NRC) Regulatory Guide 3.48 [Format & Content for Independent Spent Fuel Storage Installation (ISFSI) SAR]
  - NUREG-0800 [Standard Review Plan (SRP) for nuclear power plants]

Approach

- Establish list of criteria
  - Advanced Light Water Reactor certification documents
  - ISFSI site, cask/canister vendor, and dry transfer system SARs
  - ANSI/ANS-57.9-1992 (Design criteria for ISFSIs)
  - Experience designing nuclear facilities

List of Generic Site Criteria

- Ambient temperature
- Wind loads (non-tornado)
- Tornado (wind loads)
- Tornado (missile spectrum)
- Precipitation
- Lightning
- Snow and ice loads
- Meteorology
- Seismic - ground motion
- Explosions
- Air quality (corrosion)
- Aircraft impact
- Proximity to other uranium fuel cycle operations
- Floods
- Seismic - surface faulting
- Foundation design
- Site grade
- Volcanic eruption

Approach

- Establish values for each criterion
  - Desired characteristics
    - Bounding for all 48 contiguous United States
    - Reviewed and approved by the NRC
    - Based on most current codes, standards, etc.

Approach

- Establish values for each criterion
  - Feasibility Check
    - Range of geographical variation
    - Site-specific nature
    - Impact on design
    - Consistency with cask/canister designs

Ambient Temperature

- Criteria
  - Normal temperature: 76.0 °F
  - Minimum temperature: -40 °F
  - Maximum temperature: 125 °F
- Basis
  - ASHRAE Handbook "Fundamentals" (1993)
  - 10 CFR 71.71

Wind Loads (Non-Tornado)

- Criteria
  - Basic Wind Speed: 110 mph
  - Exposure Category: C
  - Importance Factor: 1.15
- Basis
  - ANSI/ASCE 7-95 (Minimum Design Loads for Buildings and Other Structures)
  - Slightly more conservative than NRC-accepted ALWR criteria

Tornado Wind Load

- Criteria
  - Maximum translational speed: 60 mph
  - Maximum rotational speed: 240 mph
  - Maximum wind speed: 300 mph
  - Radius of maximum rotational speed: 150 ft
  - Pressure drop: 2.0 psi at 1.2 psi/sec
  - Gust factor: 1.0

Tornado Wind Load

- Basis
  - Advanced Light Water Reactor Reviews by NRC
    - SECY-93-087 (4/02/93)
    - Staff Requirements Memorandum on SECY-93-087 (7/21/93)
  - Less stringent than "traditional" Regulatory Guide 1.76 criteria for nuclear power plants

Tornado (Missile Spectrum)

- Criteria
  - NUREG-0800 Missile Spectrum I - Three missiles
    - Massive Missile (automobile)
    - Penetrating Missile (8" diameter artillery shell)
    - Small Missile (1" diameter steel sphere)
- Basis
  - SRP for nuclear plants (NUREG-0800)

Precipitation

- Criteria
  - Cumulative precipitation in 5 minutes: 6.2 in.
  - Cumulative precipitation in 1 hour: 19.4 in.
- Basis
  - National Weather Service Report #52 (8/82)
  - Consistent with NRC-accepted ALWR criteria

Snow and Ice Loads

- Criteria
  - Snow / Ice Loading: 50 lb/ft^2
  - Exposure factor: 1.0
  - Importance factor: 1.2
- Basis
  - ANSI/ASCE 7-95
  - Consistent with NRC-accepted ALWR criteria

Meteorology

- Criteria
  - Pasquill Stability Class: F (moderately stable)
  - Average windspeed: 2.2 mph
- Basis
  - NRC Reg. Guide 1.145 (Atmospheric Dispersion Models for Potential Accident Consequence Assessments at Nuclear Power Plants)
  - NRC Reg. Guide 1.4 (Assumptions Used for Evaluating the Potential Radiological Consequences of a Loss of Coolant Accident for Pressurized Water Reactors)

Seismic - Ground Motion

- Criteria
  - Design Earthquake described by NRC Regulatory Guide 1.60 design response spectra anchored at a horizontal acceleration of 0.75 g
- Basis
  - NRC Regulatory Guide 1.60 (Design Response Spectra for Seismic Design of Nuclear Power Plants)
  - Various seismic hazard assessments for nuclear power plants and DOE sites
  - Seismic Design Inputs for Exploratory Studies Facility at Yucca Mountain

Criteria With No Specified Values

- Explosions
- Air quality (corrosion)
- Aircraft impact
- Proximity to other uranium fuel cycle operations
- Floods
- Seismic - surface faulting
- Site grade
- Volcanic eruption

Siting Implications

- Flooding - Site-specific characteristic that can pose constraints even on arid sites

- Snow/Ice Loads - Does not bound locations in Northeast, upper Great Plains, and mountains. These areas likely undesirable due to extremes in temperature or grade

- Wind Loads - Criteria would be exceeded by sites on the Atlantic and Gulf coasts

Siting Implications

- Seismic (Ground Motion) - Bounds most potential locations for an ISF — Sites in the West near tectonic plate boundaries may exceed the criteria

- Seismic (Faulting) - Can be a contentious licensing issue — Fault avoidance is the preferred approach, but western sites may have a number of faults

Siting Implications

- Aircraft Impact - Sites near airports, military airfields or aviation corridors may require the consideration of aircraft impact in the facility design (if the probability of impact is high enough)

- Explosions - Sites near major transportation routes or large industrial facilities may exceed related criteria (tornado pressure drop)

Storage System Implications

- The site-related design criteria for the following storage systems are generally consistent with the ISF generic site design criteria:
  - Holtec HI-STAR
  - NAC-STC
  - Sierra Nuclear TranStor
  - VECTRA MP-187
  - Westinghouse MPC (large and small)

Storage System Implications

- Potentially significant inconsistencies between storage system site-related design criteria and the generic site design criteria are:
  - Holtec HI-STAR: Is designed for a -20°F minimum temp., rather than -40°F.
  - NAC-STC: Cask will tipover at the specified 0.75g PGA but vendor claims that cask can withstand tipover with no damage.

Storage System Implications

- Sierra Nuclear TranStor: Design ground motion of 0.38g is much less than the value specified for the ISF
- VECTRA MP-187: Design ground motion of 0.25g is much less than the value specified for the ISF
- Westinghouse MPC: Design ground motion of 0.25g is much less than the value specified for the ISF

Summary Of Results

- Bounding criteria
  - Tornado wind load
  - Tornado missile spectrum
  - Lightning

Summary Of Results

- Other criteria (may not bound all sites)
  - Meteorology
  - Wind loads
  - Precipitation
  - Snow and ice loads
  - Seismic (ground motion)
  - Ambient temperature
  - Foundation design

Summary Of Results

- Quantitative criteria not specified
  - Explosions
  - Air quality (corrosion)
  - Aircraft impact
  - Proximity to other uranium fuel cycle operations
  - Floods
  - Seismic (surface faulting)
  - Site grade
  - Volcanic eruption

TSAR Development and Future NRC Interactions

R. G. Morgan,
August 1996

Overview

- TSAR and cask vendor interface
- TSAR development schedule
- Future NRC interactions

TSAR/Cask Vendor Interface

- Five dual purpose technologies to be referenced in TSAR
  - NAC STC
  - Holtec HISTAR-100
  - VECTRA MP-187
  - Sierra Nuclear TranStor
  - Westinghouse MPC System (large and small)

TSAR/Cask Vendor Interface

- Discussed in the TSAR in various places
  - Design bases for storage systems
  - Interface with ISF design criteria
  - Cask parameters that do not meet generic site design criteria
  - ISF operations
  - Radiation protection
  - Accident analyses

TSAR/Cask Vendor Interface

- Cask vendors may need to modify their designs or perform re-analysis based on ISF site selected
- TSAR not expected to be updated to reflect revisions to existing cask designs or new technology
- Changes to ISF design (if necessary) addressed in site-specific license application

TSAR/Cask Vendor Interface

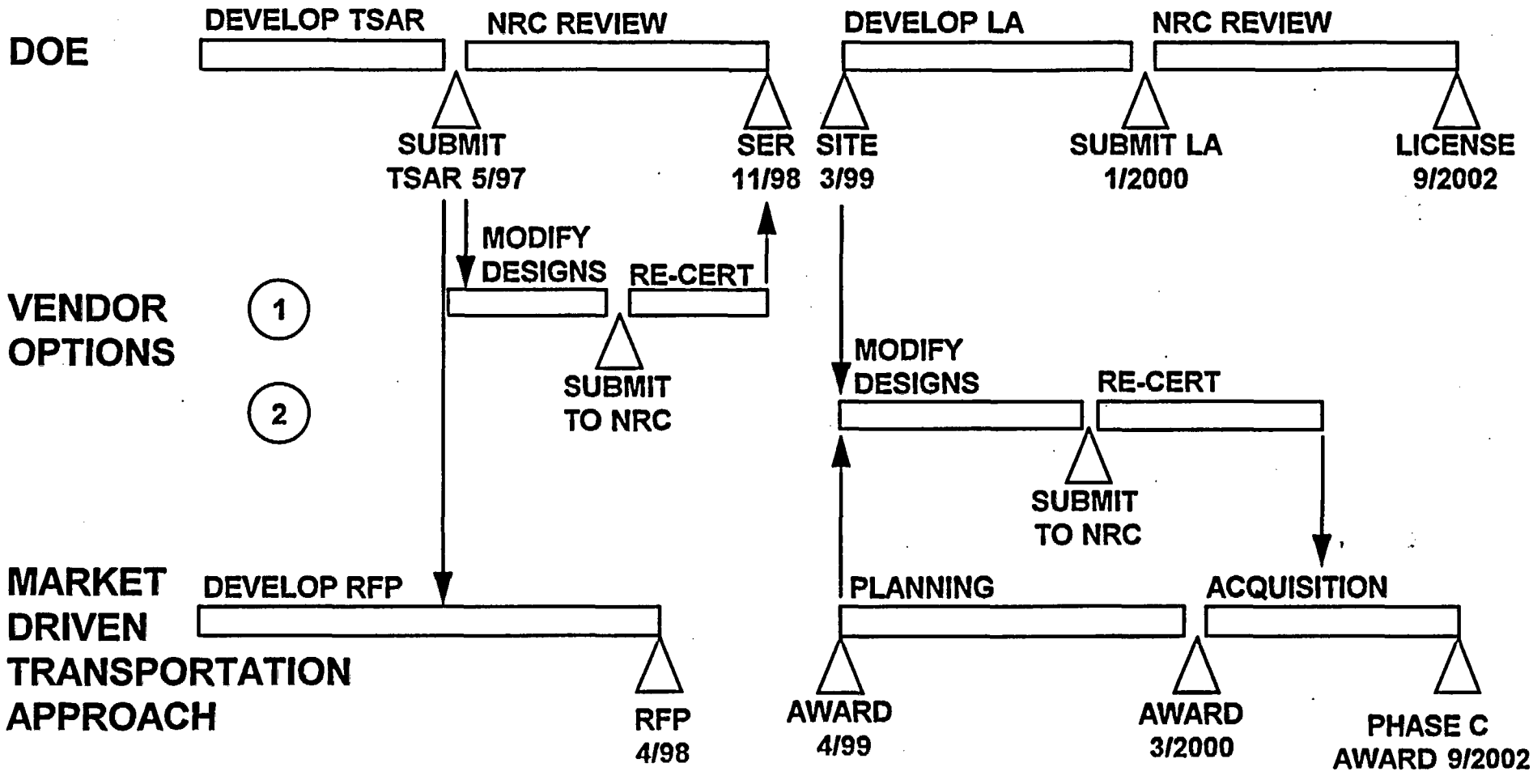

NRC Interactions

- Approximately 4 meetings prior to TSAR submittal
- Additional meetings if necessary
- Meeting #1 - August 1996
  - TSAR scope and design approach
  - TSAR/Cask vendor interface
  - Generic Site Design Criteria

NRC Interactions

- Meeting #2 - Fall 1996
  - Principle design criteria
  - Site layout and general arrangements
  - Operations
  - Storage modes and layout
  - Design basis accidents

NRC Interactions

- Meeting #3 - Early 1997
  - Overview of final TSAR design
- Meeting #4 - April 1997
  - Final meeting prior to TSAR submittal
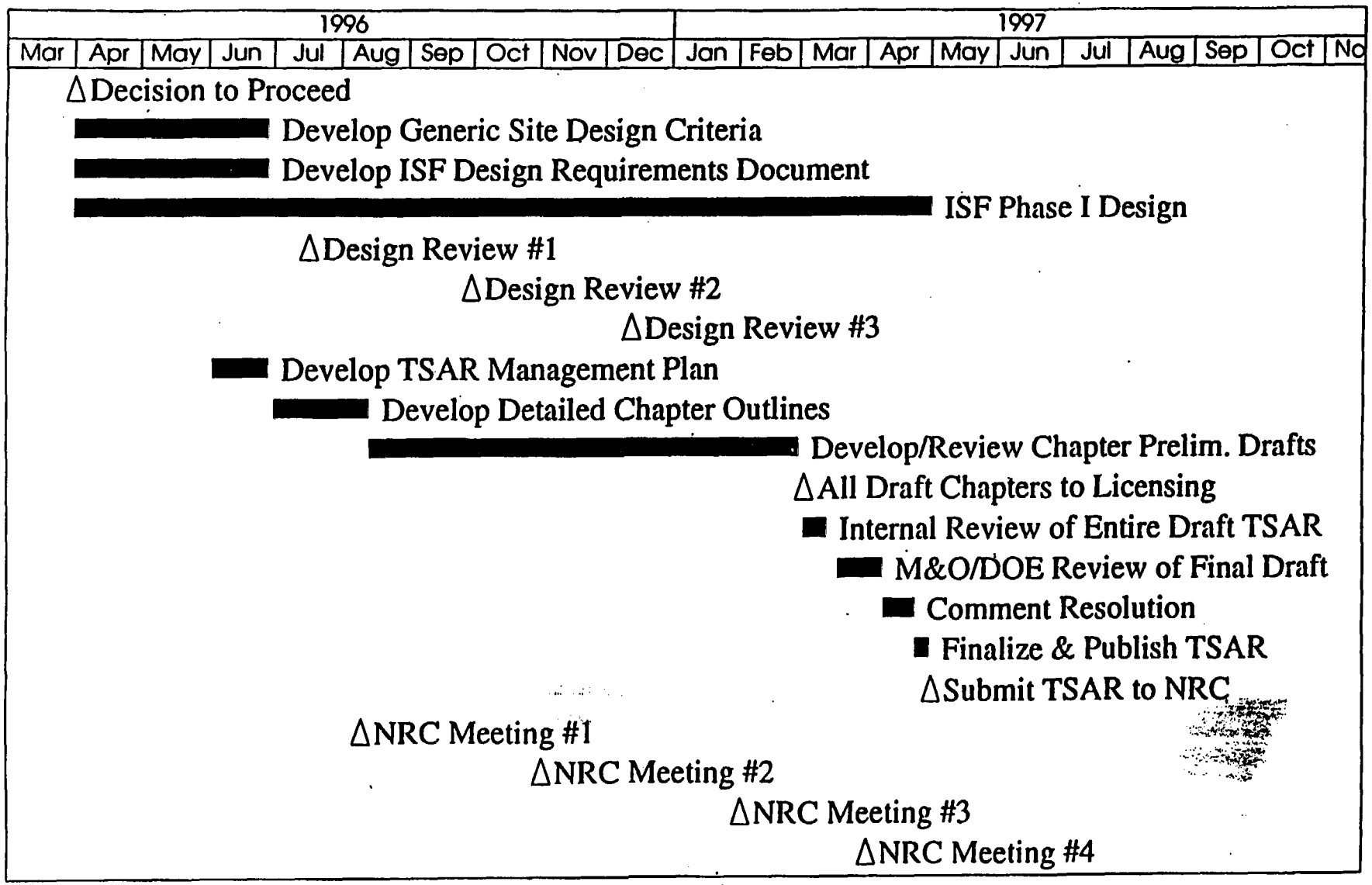
TSAR Development Schedule