ODCM TABLE OF CONTENTS

PART I – RADIOLOGICAL EFFLUENT CONTROLS

1.0 DEFINITIONS I.1-1
2.0 CONTROLS AND SURVEILLANCE REQUIREMENTS I.2-1
3.11 RADIOLOGICAL EFFLUENT CONTROLS AND RADIOLOGICAL ENVIRONMENTAL MONITORING PROGRAM I.3-1
3.13 METEOROLOGICAL MONITORING PROGRAM I.3-3
4.0 BASES I.4-1
5.0 ADMINISTRATIVE REQUIREMENTS I.5-1

PART II - ODCM

1.0 INTRODUCTION – ODCM GENERAL INFORMATION II.1-1
1.1 Structure of the ODCM II.1-1
1.2 Regulations II.1-2
1.2.1 Code of Federal Regulations II.1-2
1.2.2 Radiological Effluent Technical Standards II.1-4
1.2.3 Offsite Dose Calculation Manual II.1-5
1.2.4 Overlapping Requirements II.1-5
1.2.5 Dose Receiver Methodology II.1-5
1.3 Offsite Dose Calculation Parameters II.1-10
1.4 References II.1-10

2.0 INSTRUMENTATION AND SYSTEMS II.2-1
2.1 Liquid Effluent System Description II.2-1
2.1.1 Release Tanks II.2-1
2.1.2 Turbine Building Fire and Oil Sump II.2-1
2.1.3 Condensate Polisher Sump II.2-1
2.2 Liquid Effluent Radiation Monitors II.2-2
2.2.1 Liquid Radwaste Effluent Monitor II.2-2
2.2.2 Station Blowdown Monitor II.2-2
2.2.3 Reactor Containment Fan Cooler (RCFC) and Essential Service Water (SX) Outlet Line Monitor II.2-2
2.2.4 Turbine Building Fire and Oil Sump Monitor II.2-2
2.2.5 Condensate Polisher Sump Monitor II.2-2
2.2.6 Component Cooling Water Monitors II.2-2
2.3 Liquid Radiation Effluent Monitors Alarm and Trip Setpoints II.2-3
2.3.1 Station Blowdown Monitor II.2-3
2.3.2 Liquid Radwaste Effluent Monitor II.2-3
2.3.3 Other Liquid Effluent Monitors II.2-5
2.3.4 Conversion Factors II.2-6

PART II - ODCM

2.3.5 Allocation of Effluent from Common Release Points II.2-6
2.3.6 Solidification of Wastes/Process Control Program II.2-6
2.4 Gaseous Effluent System Description II.2-6
2.4.1 Waste Gas Holdup System II.2-6
2.4.2 Ventilation Exhaust Treatment System II.2-6
2.5 Gaseous Effluent Radiation Monitors II.2-7
2.5.1 Auxiliary Building Vent Effluent Monitors II.2-7
2.5.2 Containment Purge Effluent Monitors II.2-7
2.5.3 Waste Gas Decay Tank Monitors II.2-7
2.5.4 Gland Steam and Condenser Air Ejector Monitors II.2-8
2.5.5 Radwaste Building Ventilation Monitor II.2-8
2.6 Gaseous Effluent Monitor Alarm and Trip Setpoints II.2-8
2.6.1 Auxiliary Building Vent Effluent Monitors II.2-8
2.6.2 Containment Purge Effluent Monitors II.2-8
2.6.3 Waste Gas Decay Tank Effluent Monitors II.2-8
2.6.4 Gaseous Effluent Release Limits II.2-9
2.6.5 Release Mixture II.2-10
2.6.6 Conversion Factors II.2-10
2.6.7 HVAC Dilution Flow Rates II.2-10
2.6.8 Allocation of Effluents from Common Release Points II.2-10
2.6.9 Dose Projections for Batch Releases II.2-10

3.0 LIQUID EFFLUENTS II.3-1
3.1 Liquid Effluent Releases – General Information II.3-1
3.2 Liquid Effluent Concentrations II.3-2
3.3 Liquid Effluent Dose Calculation Requirements II.3-4
3.4 Dose Methodology II.3-4
3.5 Site Specific Dose Factors and Bioaccumulation Factors II.3-7

4.0 GASEOUS EFFLUENTS II.4-1
4.1 Gaseous Effluents – General Information II.4-1
4.2 Gaseous Effluents – Dose and Dose Rate Calculation Requirements II.4-2
4.2.1 Instantaneous Dose Rates II.4-2
4.2.2 Time Averaged Dose from Noble Gas II.4-5
4.2.3 Time Averaged Dose from Non-Noble Gas Radionuclides II.4-8

PART II – ODCM

5.0 TOTAL DOSE II.5-1
5.1 Total Dose Calculation Requirements II.5-1
5.1.1 Total Effective Dose Equivalent Limits, 10CFR20 and 40CFR190 ..... II.5-1
5.1.2 Total Dose Calculation Methodology II.5-1
5.2 Onsite Radwaste and Rad Material Storage Facilities II.5-2
5.2.1 Process Waste Storage Facilities II.5-2
5.2.2 DAW Storage Facilities II.5-2
5.2.3 Replaced Steam Generator Storage Facilities II.5-2
5.2.4 ISFSI Facilities II.5-2
5.3 Methodology II.5-2
5.4 Total Dose II.5-3
5.5 Compliance to Total Dose Limits II.5-4
5.5.1 Total Effective Dose Equivalent Limit – 10CFR20 Compliance II.5-4
5.5.2 Dose to a Member of the Public in the Unrestricted Area II.5-4
5.5.3 Dose to a Member of the Public in the Restricted Area II.5-4
5.5.4 Total Dose Due to the Uranium Fuel Cycle (40CFR190) II.5-5
5.6 When Compliance Assessment is Required II.5-6

6.0 RADIOLOGICAL ENVIRONMENTAL MONITORING PROGRAM II.6-1

ODCM TABLE OF CONTENTS
LIST OF TABLES

PART I – RADIOLOGICAL EFFLUENT CONTROLS

Table 1-1 Frequency Notations I.1-4
Table 1-2 Compliance Matrix I.1-5

PART II - ODCM

Table 1-1 Regulatory Dose Limit Matrix II.1-7
Table 1-2 Dose Assessment Receivers II.1-8
Table 1-3 Miscellaneous Dose Assessment Factors: Environmental Parameters II.1-17
Table 1-4 Stable Element Transfer Data II.1-18
Table 2-1 Liquid Radioactive Effluent Monitors II.2-11
Table 2-2 Gaseous Radioactive Effluent Monitors II.2-12
Table 2-3 Assumed Composition of the Byron Station Noble Gas Effluent II.2-13
Table 2-4 Assumed Composition of the Byron Station Liquid Effluent II.2-14
Table 3-1 Site Specific Potable Water Dose Factors for Adult Age Group II.3-9
Table 3-2 Site Specific Potable Water Dose Factors for Teen Age Group II.3-11
Table 3-3 Site Specific Potable Water Dose Factors for Child Age Group II.3-13
Table 3-4 Site Specific Potable Water Dose Factors for Infant Age Group II.3-15
Table 3-5 Site Specific Fish Ingestion Dose Factors for Adult Age Group II.3-17
Table 3-6 Site Specific Fish Ingestion Dose Factors for Teen Age Group II.3-19
Table 3-7 Site Specific Fish Ingestion Dose Factors for Child Age Group II.3-21
Table 3-8 Bioaccumulation Factors (BF_i) to be used in the Absence of Site-Specific Data II.3-23
Table 4-1 X/Q and D/Q Maxima at or Beyond the Unrestricted Area Boundary II.4-18
Table 4-2 X/Q and D/Q Maxima at or Beyond the Restricted Area Boundary II.4-19
Table 4-3 Maximum Offsite Gamma-X/Q II.4-20
Table 4-4 X/Q and D/Q at the Nearest Resident Locations within 5 miles II.4-21

ODCM TABLE OF CONTENTS
LIST OF TABLES

PART II - ODCM

Table 4-5 X/Q and D/Q at the Nearest Cow Milk Locations within 5 miles II.4-22
Table 4-6 X/Q and D/Q at the Nearest Cow Milk Meat Locations within 5 miles II.4-23
Table 4-7 Ground Plane Dose Factors II.4-24
Table 4-8 External Dose Factors for Standing on Contaminated Ground II.4-26
Table 4-9 Adult Inhalation Dose Factors II.4-29
Table 4-10 Teen Inhalation Dose Factors II.4-31
Table 4-11 Child Inhalation Dose Factors II.4-33
Table 4-12 Infant Inhalation Dose Factors II.4-35
Table 4-13 Adult Vegetation Dose Factors II.4-37
Table 4-14 Teen Vegetation Dose Factors II.4-39
Table 4-15 Child Vegetation Dose Factors II.4-41
Table 4-16 Adult Grass-Cow-Milk Dose Factors II.4-43
Table 4-17 Teen Grass-Cow-Milk Dose Factors II.4-45
Table 4-18 Child Grass-Cow-Milk Dose Factors II.4-47
Table 4-19 Infant Grass-Cow-Milk Dose Factors II.4-49
Table 4-20 Adult Grass-Goat-Milk Dose Factors II.4-51
Table 4-21 Teen Grass-Goat-Milk Dose Factors II.4-53
Table 4-22 Child Grass-Goat-Milk Dose Factors II.4-55
Table 4-23 Infant Grass-Goat-Milk Dose Factors II.4-57
Table 4-24 Adult Grass-Cow-Meat Dose Factors II.4-59
Table 4-25 Teen Grass-Cow-Meat Dose Factors II.4-61
Table 4-26 Child Grass-Cow-Meat Dose Factors II.4-63
Table 4-27 Byron Station Characteristics II.4-65
Table 4-28 Dose Factors for Noble Gases II.4-66
Table 6-1 Radiological Environmental Monitoring Program II.6-2
Table 6–2 Latitude/Longitude Positions of REMP samples II.6-14

ODCM TABLE OF CONTENTS
LIST OF FIGURES

PART I – RADIOLOGICAL EFFLUENT CONTROLS

NONE

PART II - ODCM

Figure 1-1 Radiation Exposure Pathways to Humans II.1-9
Figure 1-2 Site Boundary II.1-20
Figure 1-3 Restricted Area Boundary II.1-21
Figure 2-1 Simplified HVAC & Gaseous Effluent Flow Diagram II.2-15
Figure 2-2 Simplified Liquid Radwaste Processing Diagram II.2-17
Figure 2-3 Liquid Release Flow Path II.2-18
Figure 6-1 Onsite Air Sampling Locations II.6-10
Figure 6-2 Offsite Air Sampling Locations II.6-11
Figure 6-3 Inner Ring & Outer Ring TLD Locations II.6-12
Figure 6-4 Ingestion & Waterborne Exposure Pathway Sample Locations II.6-13
Figure 6-5 Site Layout and Exclusion Area II.6-16

RADIOLOGICAL EFFLUENTS CONTROLS

FOR

BYRON STATION

UNITS 1 AND 2

REVISION 4

1.0 DEFINITIONS

1.1 **ACTIONS** shall be that part of a Specification that prescribes Required Actions to be taken under designated Conditions within specified Completion Times.

1.2 **CHANNEL CALIBRATION** shall be the adjustment, as necessary, of the channel so that it responds within the required range and accuracy to known inputs. The CHANNEL CALIBRATION shall encompass the entire channel, including the required sensor, alarm, interlock, display, and trip functions. Calibration of instrument channels with Resistance Temperature Detector (RTD) or thermocouple sensors may consist of an in place qualitative assessment of sensor behavior and normal calibration of the remaining adjustable devices in the channel. The CHANNEL CALIBRATION may be performed by means of any series of sequential, overlapping calibrations or total channel steps so that the entire channel is calibrated.

1.3 **CHANNEL CHECK** shall be the quantitative assessment, by observation, of channel behavior during operation. This determination shall include, where possible, comparison of the channel indication and status to other indications or status derived from independent instrument channels measuring the same parameter.

1.4 **CHANNEL OPERATIONAL TEST** (COT) shall be the injection of a simulated or actual signal into the channel as close to the sensor as practicable to verify the OPERABILITY of required alarm, interlock, display and trip functions. The COT shall include adjustments, as necessary, of the required alarm, interlock, and trip setpoints so that the setpoints are within the required range and accuracy.

1.5 **DOSE EQUIVALENT I-131** shall be that concentration of I-131 (microcuries/gram) that alone would produce the same thyroid dose as the quantity and isotopic mixture of I-131, I-132, I-133, I-134, and I-135 actually present. The thyroid dose conversion factors used for this calculation shall be those listed in Table III of TID-14844, AEC, 1962. "Calculation of Distance Factors for Power and Test Reactor Sites," or those listed in Table E-7 of Regulatory Guide 1.109, Rev.1, NRC, 1977, or ICRP 30, Supplement to Part 1, pages 192-212, Table Titled, "Committed Dose Equivalent in Target Organs or Tissues per Intake of Unit Activity."

1.6 **FREQUENCY** - Table 1-1 provides the definitions of various frequencies for which surveillances, sampling, etc., are performed unless defined otherwise. The 25% variance shall not be applied to Operability Action statements. The bases to Improved Technical Specification 3.0.2 provide clarifications to this requirement.

1.7 **IMMEDIATELY** – When "immediately" is used as a completion time the Required Action should be pursued without delay and in a controlled manner.

1.8 **MEMBER(S) OF THE PUBLIC** shall include all persons who are not occupationally associated with the plant. This category does not include employees of the licensee, its contractors or vendors and persons who enter the site to service equipment or to make deliveries. This category does include persons who use portions of the site for recreational, occupational, or other purposes not associated with the plant.

1.9 **MODE** shall correspond to any one inclusive combination of core reactivity condition, power level, average reactor coolant temperature, and reactor vessel head closure bolt tensioning specified in Technical Specifications with fuel in the reactor vessel.

1.10 **OCCUPATIONAL DOSE** means the dose received by an individual in the course of employment in which the individual's assigned duties involve exposure to radiation and/or to radioactive material from licensed and unlicensed sources of radiation, whether in the possession of the licensee or other person. Occupational dose does not include dose from background radiation, as a patient from medical practices, from voluntary participation in medical research programs, or as a member of the public.

1.11 A system, subsystem, train, component, or device shall be **OPERABLE** or have **OPERABLITY** when it is capable of performing its specified safety functions(s) and when all necessary attendant instrumentation, controls, normal or emergency electrical power, cooling and seal water, lubrication, and other auxiliary equipment that are required for the system, subsystem, train, component, or device to perform its specified safety function(s) are also capable of performing their related support function(s).

1.12 **PROCESS CONTROL PROGRAM (PCP)** shall contain the current formulas, sampling, analyses, tests, and determinations to be made to ensure that processing and packaging of solid radioactive wastes based on demonstrated processing of actual or simulated wet solid wastes will be accomplished in such a way as to assure compliance with 10 CFR Parts 20, 61, and 71, State regulations, burial ground requirements and other requirements governing the disposal of solid radioactive waste.

1.13 **PURGE/PURGING** shall be any controlled process of discharging air or gas from a confinement to maintain temperature, pressure, humidity, concentration or other operating condition, in such a manner that replacement air or gas is required to purify the confinement.

1.14 **RATED THERMAL POWER** shall be a total core heat transfer rate to the reactor coolant as defined in the Technical Specifications.

1.15 **RADIOLOGICAL EFFLUENT CONTROLS AND SURVEILLANCES (RECS)** are in accordance with Byron Technical Specifications and the Code of Federal Regulations.

1.16 **RADIOLOGICAL ENVIRONMENTAL MONITORING PROGRAM (REMP)** are in accordance with Byron Technical Specifications and the Code of Federal Regulations.

1.17 **SITE BOUNDARY** shall be that line beyond which, the land or property is not owned, nor leased, nor otherwise controlled by the licensee.

1.18 **SOLIDIFICATION** shall be the conversion of wet wastes into a form that meets shipping and burial ground requirements.

1.19 **SOURCE CHECK** shall be the qualitative assessment of channel response when the channel sensor is exposed to a source of increased radioactivity.

1.20 **THERMAL POWER** shall be the total reactor core heat transfer rate to the reactor coolant.

1.21 **TLCO-TECHNICAL LIMITING CONDITION FOR OPERATION** Limiting Condition for Operation as listed in the TRM.

1.22 **TECHNICAL REQUIREMENTS MANUAL (TRM)** Chapter 3.11 contains the Radiological Effluent Controls and Surveillances (RECS). Chapter 3.12 contains the Radiological Environmental Monitoring Program (REMP).

1.23 **UNRESTRICTED AREA** means an area, access to which is neither limited nor controlled by the licensee.

1.24 **VENTILATION EXHAUST TREATMENT SYSTEM** shall be any system designed and installed to reduce gaseous radioiodine or radioactive material in particulate form in effluents by passing ventilation or vent exhaust gases through charcoal absorbers and/or HEPA filters for the purpose of removing iodines or particulates from the gaseous exhaust stream prior to the release to the environment. Such a system is not considered to have any effect on noble gas effluents. Engineered Safety Features Atmospheric Cleanup Systems are not considered VENTILATION EXHAUST TREATMENT SYSTEM components.

1.25 **VENTING** shall be any controlled process of discharging air or gas from a confinement to maintain temperature, pressure, humidity, concentration or other operating condition, in such a manner that replacement air or gas is not provided or required during VENTING. Vent, used in system names, does not imply a VENTING process.

1.26 **WASTE GAS HOLDUP SYSTEM** shall be any system designed and installed to reduce radioactive gaseous effluents by collecting Reactor Coolant System off-gases from the Reactor Coolant System and providing for delay or holdup for the purpose of reducing the total radioactivity prior to release to the environment.

1.27 Definitions Peculiar to Estimating Dose to Members of the Public using the OFFSITE DOSE CALCULATION MANUAL ODCM Computer Program.

a. **ACTUAL** - ACTUAL refers to using known release data to project the dose to members of the public for the previous time period. This data is stored in the database and used to demonstrate compliance with the reporting requirements of the ODCM.

b. **PROJECTED** - PROJECTED refers to using known release data from the previous time period or estimated release data to forecast a future dose to members of the public. This data is not incorporated into the database.

Table 1-1

FREQUENCY NOTATIONS*

Notation	Frequency
S - Shiftly	At least once per 12 hours
D - Daily	At least once per 24 hours
W - Weekly	At least once per 7 days
B- Biweekly	At least once every 14 days
M - Monthly	At least once per 31 days
Q - Quarterly	At least once per 92 days
SA - Semiannually	At least once per 184 days
A - Annually	At least once per 366 days
R - Refuel Cycle	At least once per 18 months
S/U - Startup	Prior to each reactor startup
N.A.	Not applicable
P - Prior	Prior to each radioactive release

*Each frequency requirement shall be performed within the specified time interval with the maximum allowable extension not to exceed 25% of the frequency interval. The 25% variance shall not be applied to Operability Action statements. The bases to ITS 3.0.2 provide clarifications to this requirement. These frequency notations do not apply to the Radiological Environmental Monitoring Program as described in TRM 3.12.

Table 1-2

COMPLIANCE MATRIX

Regulation	Dose Component Limit	ODCM Equation	REC	Technical Specification
10 CFR 50 Appendix I	1. Gamma air dose and beta air dose due to airborne radioactivity in effluent plume.	4-4 4-5	3.11.g	5.5.4.h
	a. Total body and skin dose due to airborne radioactivity in effluent plume are reported only if certain gamma and beta air dose criteria are exceeded.	4-6 4-7	N/A	N/A
	2. Dose for all organs and all four age groups due to iodines and particulates in effluent plume. All pathways are considered.	4-8	3.11.h	5.5.4.i
	3. Dose for all organs and all four age groups due to radioactivity in liquid effluents.	3-3	3.11.d	5.5.4.d
10 CFR 20	1. Total Dose, totaling all external dose components (direct, ground and plume shine) and internal dose (all pathways, both airborne and liquid-borne).	5-2		5.5.4.c
40 CFR 190 (now by reference, also part of 10 CFR 20)	1. Total body dose due to direct dose, ground and plume shine from all sources at a station.	5-1	3.11.k	5.5.4.j
	2. Organ doses to an adult due to all pathways.	3-3 4-8		
Technical Specifications	1. "Instantaneous" total body, skin and organ dose rates to a child due to radioactivity in airborne effluents. For the organ dose, only inhalation is considered.	4-1 4-2 4-3	3.11.f	5.5.4.g
	2. "Instantaneous" concentration limits for liquid effluents.	3-1	3.11.c	5.5.4.b
Technical Specifications	1. Radioactive Effluent Release Report	NA	5.2	5.6.2

Table 1-2
Page 2 of 2
COMPLIANCE MATRIX

Regulation	Component Limit	ODCM Equation	TRM	Technical Specification
10CFR50 Appendix I Section IV.B.2	1. Implement Environmental Monitoring Program.	N/A	3.12.a	N/A
10CFR50 Appendix I Section IV.B.3	1. Land Use Census	N/A	3.12.b	N/A
10CFR50 Appendix I Section IV.B.2	1. Interlaboratory Comparison Program	N/A	3.12.c	N/A
Regulation	Component Limit	ODCM Equation	ODCM	Technical Specification
10CFR50 Appendix I Section IV.B.2 and Technical Specifications	1. Annual Radiological Environmental Operating Report	N/A	5.1	5.6.2

2.0 CONTROLS AND SURVEILLANCE REQUIREMENTS

2.0.1 APPLICABILITY

2.1 CONTROLS

2.1.1 Compliance with the Controls contained in the succeeding controls is required during the OPERATIONAL MODES or other conditions specified herein; except that upon failure to meet the Control, the associated ACTION requirements shall be met.

2.1.2 Noncompliance with a control shall exist when the requirements of the Control and associated ACTION requirements are not met within the specified time intervals. If the Control is restored prior to expiration of the specified time intervals, completion of the ACTION requirements is not required.

2.1.3 When a Control is not met, except as provided in the associated ACTION requirements, within 1 hour action shall be initiated to place the unit in a MODE in which the control does not apply by placing it, as applicable, in:

a. At least HOT STANDBY within the next 6 hours,

b. At least HOT SHUTDOWN within the following 6 hours, and

c. At least COLD SHUTDOWN within the subsequent 24 hours.

Where corrective measures are completed that permit operation under the ACTION requirements, the action may be taken in accordance with the specified time limits as measured from the time of failure to meet the Control. Exceptions to these requirements are stated in the individual controls.

2.1.4 Entry into an OPERATIONAL MODE or other specified condition shall not be made when the conditions for the Control are not met and the associated ACTION requires a shutdown if they are not met within a specified time interval. Entry into an OPERATIONAL MODE or specified condition may be made in accordance with ACTION requirements when conformance to them permits continued operation of the facility for an unlimited period of time. This provision shall not prevent passage through or to OPERATIONAL MODES as required to comply with ACTION requirements. Exceptions to these requirements are stated in the individual specifications.

3.0 SURVEILLANCE REQUIREMENTS

3.0.1 Surveillance Requirements shall be met during the OPERATIONAL MODES or other conditions specified for individual Controls unless otherwise stated in an individual Surveillance Requirement.

3.0.2 Each Surveillance Requirement shall be performed within the specified time interval with:

a. A maximum allowable extension not to exceed 25% of the surveillance interval, but

b. The combined time interval for any three consecutive surveillance intervals shall not exceed 3.25 times the specified surveillance interval.

3.0.3 Failure to perform a Surveillance Requirement within the allowed surveillance interval shall constitute noncompliance with the OPERABILITY requirements for a Control. The time limits of the ACTION requirements are applicable at the time it is identified that a Surveillance Requirement has not been performed. The ACTION requirements may be delayed for up to 24 hours to permit the completion of the surveillance when the allowable outage time limits of the ACTION requirements are less than 24 hours. Surveillance Requirements do not have to be performed on inoperable equipment.

3.0.4 Entry into an OPERATIONAL MODE or other specified condition shall not be made unless the Surveillance Requirement(s) associated with the Control has been performed within the stated surveillance interval or as otherwise specified. This provision shall not prevent passage through or to OPERATIONAL MODES as required to comply with ACTION requirements. Exceptions to these requirements are stated in the individual controls.

NOTE: 3.0.5 through 3.10 Not Used

3.11 Radiological Effluent Controls and Radiological Environmental Monitoring Program

NOTE: SEE TRM Chapter 3.11 for Radiological Effluents Controls and Surveillances (RECS) and TRM Chapter 3.12 for Radiological Environmental Monitoring Program (REMP).

3.13 METEOROLOGICAL MONITORING PROGRAM

3.13.1 METEOROLOGICAL MONITORING

Meteorological parameters are measured in the vicinity of each nuclear power station in order to provide data for calculating radiation doses due to airborne effluent radioactivity. Some nuclear power stations' Technical Specifications state applicable requirements (typically under the subheading, "Meteorological Instrumentation," in the instrumentation section). Regulatory guidance is given in Regulatory Guide 1.23 (Reference 5). Wind speed, wind direction and the temperature gradient are measured using instruments at two or more elevations on a meteorological tower at each Exelon Nuclear station. The elevations are chosen to provide meteorological data representative of the elevations of the airborne releases from the station. The Annual Radiological Environmental Operating Report includes a summary of meteorological data collected over the reporting year. These data are used to calculate optional isopleths of radiation dose and radioactivity concentration.

3.13.2 METEOROLOGICAL CONTRACTOR

The meteorological contractor operates and maintains the meteorological tower instrumentation at each nuclear power station. The contractor collects and analyzes the data and issues periodic reports. The contractor prepares the meteorological data summary required for the Annual Radiological Environmental Operating Report (AREOR) and also computes and plots isopleths included in the AREOR.

4.0 BASES

4.1 RADIOACTIVE LIQUID EFFLUENT MONITORING INSTRUMENTATION (TRM 3.11.a)

The radioactive liquid effluent instrumentation is provided to monitor and control, as applicable, the releases of radioactive materials in liquid effluents during actual or potential releases of liquid effluents. The alarm/trip setpoints for these instruments shall be calculated and adjusted in accordance with the methodology and parameters in the ODCM to ensure that the alarm/trip will occur prior to exceeding 10 times the EFFLUENT CONCENTRATION values specified in Appendix B, Table 2, Column 2 to 10 CFR 20. The OPERABILITY and use of this instrumentation is consistent with the requirements of General Design Criteria 60, 63 and 64 of Appendix A to 10 CFR Part 50. The purpose of tank level indicating devices is to assure the detection and control of leaks that if not controlled could potentially result in the transport of radioactive materials to UNRESTRICTED AREAS.

4.2 RADIOACTIVE GASEOUS EFFLUENT MONITORING INSTRUMENTATION (TRM 3.11.b)

The radioactive gaseous effluent instrumentation is provided to monitor and control, as applicable, the releases of radioactive materials in gaseous effluents during actual or potential releases of gaseous effluents. The alarm/trip setpoints for these instruments shall be calculated and adjusted in accordance with the methodology and parameters in the ODCM to ensure that the alarm/trip will occur prior to exceeding the limits of 10 CFR Part 20. The OPERABILITY and use of this instrumentation is consistent with the requirements of General Design Criteria 60, 63 and 64 of Appendix A to 10 CFR Part 50.

4.3 LIQUID EFFLUENT CONCENTRATION (TRM 3.11.c)

This Control is provided to ensure that the concentration of radioactive materials released in liquid waste effluents to UNRESTRICTED AREAS will be less than 10 times the EFFLUENT CONCENTRATION values specified in Appendix B, Table 2, Column 2 to 10 CFR 20. The Control provides operational flexibility for releasing liquid effluents in concentrations to follow the Section II.A and II.C design objectives of Appendix I to 10 CFR Part 50. This limitation provides reasonable assurance that the levels of radioactive materials in bodies of water in UNRESTRICTED AREAS will result in exposures within (1) the Section II.A design objectives of Appendix I, 10 CFR Part 50, to a MEMBER OF THE PUBLIC and (2) the restrictions authorized by 10 CFR Part 20.1301(e). The concentration limit for the dissolved or entrained noble gases is based upon the assumption that Xe-133 is the controlling radionuclide and its EFFLUENT CONCENTRATION in air (submersion) was converted to an equivalent concentration in water. This control does not affect the requirement to comply with the annual limitations of 10 CFR Part 20.1301(a).

This Control applies to the release of radioactive materials in liquid effluents from all units at the site.

The required detection capabilities for radioactive materials in liquid waste samples are tabulated in terms of the lower limits of detection (LLDs). Detailed discussion of the LLD and other detection limits can be found in Currie, L.A., "Lower Limit of Detection: Definition and Elaboration of a Proposed Position for Radiological Effluent and Environmental Measurements," NUREG/CR-4007 (September 1984), and in the HASL Procedures Manual, HASL-300 (revised annually).

4.4 DOSE FROM LIQUID EFFLUENTS (TRM 3.11.d)

This Control is provided to implement the requirements of Sections II.A, III.A and IV.A of Appendix I, 10 CFR Part 50. The Control statement implements the guides set forth in Section II.A of Appendix I. The Action statements provide the required operating flexibility and at the same time implement the guides set forth in Section IV.A of Appendix I to assure that the releases of radioactive material in liquid effluents will be kept "as low as is reasonably achievable." Also, for fresh water sites with drinking water supplies that can be potentially affected by plant operations, there is reasonable assurance that the operation of the facility will not result in radionuclide concentrations in the finished drinking water that are in excess of the requirements of 40 CFR Part 141. The dose calculation methodology and parameters in the ODCM implement the requirements in Section III.A of Appendix I that conformance with the guides of Appendix I be shown by calculational procedures based on models and data, such that the actual exposure of a MEMBER OF THE PUBLIC through appropriate pathways is unlikely to be substantially underestimated. The equations specified in the ODCM for calculating the doses due to the actual release rates of radioactive materials in liquid effluents are consistent with the methodology provided in Regulatory Guide 1.109, "Calculation of Annual Doses to Man from Routine Releases of Reactor Effluents for the purpose of Evaluating Compliance with 10 CFR Part 50, Appendix I," Revision 1, October 1977 and Regulatory Guide 1.113, "Estimating Aquatic Dispersion of Effluents from Accidental and Routine Reactor Releases for the Purpose of Implementing Appendix I," April 1977.

This Control applies to the release of liquid effluents from each reactor at the site. For units with shared radwaste treatment systems, the liquid effluents from the shared system are proportioned among the units sharing that system.

4.5 LIQUID RADWASTE TREATMENT SYSTEM (TRM 3.11.e)

The OPERABILITY of the Liquid Radwaste Treatment System ensures that this system will be available for use whenever liquid effluents require treatment prior to release to the environment. The requirement that the appropriate portions of this system be used, when specified, provides assurance that the releases of radioactive materials in liquid effluents will be kept "as low as is reasonably achievable". This Control implements the requirements of 10 CFR Part 50.36a, General Design Criterion 60 of Appendix A to 10 CFR Part 50 and the design objective given in Section II.D of Appendix I to 10 CFR part 50. The specified limits governing the use of appropriate portions of the liquid radwaste treatment system were specified as a suitable fraction of the dose design objectives set forth in Section II.A of Appendix I, 10 CFR Part 50, for liquid effluents.

This Control applies to the release of liquid effluents from each reactor at the site. For units with shared radwaste treatment systems, the liquid effluents from the shared system are proportioned among the units sharing that system.

4.6 GASEOUS EFFLUENTS DOSE RATES (TRM 3.11.f)

This Control provides reasonable assurance that radioactive material discharged in gaseous effluents will not result in the exposure of a MEMBER OF THE PUBLIC in an UNRESTRICTED AREA, either at or beyond the SITE BOUNDARY in excess of the design objectives of Appendix I to 10 CFR Part 50. This Control is provided to ensure that gaseous effluents from all units on the site will be appropriately controlled. It provides operational flexibility for releasing gaseous effluents to satisfy the Section II.A and II.C design objectives of Appendix I to 10 CFR Part 50. For MEMBERS OF THE PUBLIC who may at times be within the SITE BOUNDARY, the occupancy of that MEMBER OF THE PUBLIC will usually be sufficiently low to compensate for the reduced atmospheric dispersion of gaseous effluents relative to that for the SITE BOUNDARY. Examples of calculations for such MEMBERS OF THE PUBLIC, with the appropriate occupancy factors, shall be given in the ODCM. The specified release rate limits restrict, at all times, the corresponding dose rates above background to a MEMBER OF THE PUBLIC at or beyond the SITE BOUNDARY to less than or equal to 500 mrem/year to the total body or to less than or equal to 3000 mrem/year to the skin. These release rate limits also restrict, at all times, the corresponding thyroid dose rate above background to a child via the inhalation pathway to less than or equal to 1500 mrem/year. This Control does not affect the requirement to comply with the annual limitations of 10 CFR 20.1301(a).

This Control applies to the release of gaseous effluents from all units at the site.

The required detection capabilities for radioactive materials in gaseous waste samples are tabulated in terms of the lower limits of detection (LLDs). Detailed discussion of the LLD and other detection limits can be found in Currie, L.A., "Lower Limit of Detection: Definition and Elaboration of a Proposed Position for Radiological Effluent and Environmental Measurements," NUREG/CR-4007 (September 1984), and in the HASL Procedures Manual, HASL-300 (revised annually).

4.7 DOSE FROM NOBLE GASES (TRM 3.11.g)

This Control is provided to implement the requirements of Sections II.B, III.A and IV.A of Appendix I, 10 CFR Part 50. The Control statements implement the guides set forth in Section II.B of Appendix I. The Action statements provide the required operating flexibility and at the same time implement the guides set forth in Section IV.A of Appendix I to assure that the releases of radioactive material in gaseous effluents will be kept "as low as is reasonably achievable." The Surveillance Requirements implement the requirements in Section III.A of Appendix I that conformance with the guides of Appendix I be shown by calculational procedures based on models and data such that the actual exposure of a MEMBER OF THE PUBLIC through appropriate pathways is unlikely to be substantially underestimated.

The dose calculation methodology and parameters established in the ODCM for calculating the doses due to the actual release rates of radioactive noble gases in gaseous effluents are consistent with the methodology provided in Regulatory Guide 1.109, "Calculation of Annual Doses to Man from Routine Releases of Reactor Effluents for the Purpose of Evaluating Compliance with 10 CFR Part 50, Appendix I," Revision 1, October 1977 and Regulatory Guide 1.111, "Methods for Estimating Atmospheric Transport and Dispersion of Gaseous Effluents in Routine Releases from Light-Water Cooled Reactors," Revision 1, July 1977. The ODCM equations provided for determining the air doses at and beyond the SITE BOUNDARY are based upon the historical average atmospheric conditions.

This Control applies to the release of gaseous effluents from each reactor at the site. For units with shared radwaste treatment systems, the gaseous effluents from the shared system are proportioned among the units sharing that system.

4.8 DOSE FROM IODINE-131, TRITIUM, AND RADIOACTIVE MATERIAL IN PARTICULATE FORM (TRM 3.11.h)

This Control is provided to implement the requirements of Sections II.C, III.A and IV.A of Appendix I, 10 CFR Part 50. The Controls are the guides set forth in Section II.C of Appendix I. The Action statements provide the required operating flexibility and at the same time implement the guides set forth in Section IV.A of Appendix I to assure that the releases of radioactive materials in gaseous effluents will be kept "as low as is reasonably achievable." The ODCM calculational methods specified in the Surveillance Requirements implement the requirements in Section III.A of Appendix I that conformance with the guides of Appendix I be shown by calculational procedures based on models and data, such that the actual exposure of a MEMBER OF THE PUBLIC through appropriate pathways is unlikely to be substantially underestimated.

The ODCM calculational methodology and parameters for calculating the doses due to the actual release rates of the subject materials are consistent with the methodology provided in Regulatory Guide 1.109, "Calculation of Annual Doses to Man from Routine Releases of Reactor Effluents for the Purpose of Evaluating Compliance with 10 CFR Part 50, Appendix I," Revision 1, October 1977 and Regulatory Guide 1.111, "Methods for Estimating Atmospheric Transport and Dispersion of Gaseous Effluents in Routine Releases from Light-Water-Cooled Reactors," Revision 1, July 1977. These equations also provide for determining the actual doses based upon the historical average atmospheric conditions. The release rate controls for Iodine-131, Tritium, and radionuclides in particulate form with half-lives greater than 8 days are dependent upon the existing radionuclide pathways to man, in the areas at and beyond the SITE BOUNDARY. The pathways that were examined in the development of these calculations were: 1) individual inhalation of airborne radionuclides, 2) deposition of radionuclides onto green leafy vegetation with subsequent consumption by man, 3) deposition onto grassy areas where milk animals and meat producing animals graze with consumption of the milk and meat by man, and 4) deposition on the ground with subsequent exposure of man.

This Control applies to the release of gaseous effluents from each reactor at the site. For units with shared radwaste treatment systems, the gaseous effluents from the shared systems are proportioned among the units sharing that system.

4.9 GASEOUS RADWASTE TREATMENT SYSTEM (TRM 3.11.i)

The OPERABILITY of the Gaseous Radwaste Treatment System ensures that the system will be available for use whenever gaseous effluents require treatment prior to release of the environment. The requirement that the appropriate portions of these systems be used, when specified, provides reasonable assurance that the release of radioactive materials in gaseous effluents will be kept "as low as is reasonably achievable." This Control implements the requirements of 10 CFR Part 50.36a, General Design Criterion 60 of Appendix A to 10 CFR Part 50, and the design objectives given in Section II.D of Appendix I to 10 CFR Part 50.

The specified limits governing the use of appropriate portions of the systems were specified as a suitable fraction of the dose design objectives set forth in Sections II.B and II.C of Appendix I, 10 CFR Part 50, for gaseous effluents.

This Control applies to the release of gaseous effluents from each reactor at the site. For units with shared radwaste treatment systems, the gaseous effluents from the shared systems are proportioned among the units sharing that system.

4.10 TOTAL DOSE (TRM 3.11.k)

This Control is provided to meet the dose limitations of 40 CFR Part 190 that have been incorporated into 10 CFR Part 20.1301(d). The Control requires the preparation and submittal of a Special Report whenever the calculated doses due to releases of radioactivity and to radiation from uranium fuel cycle sources exceed 25 mrems to the total body or any organ, except the thyroid, which shall be limited to less than or equal to 75 mrems.

For sites containing up to 4 reactors, it is highly unlikely that the resultant dose to a MEMBER OF THE PUBLIC will exceed the dose limits of 40 CFR Part 190 if the individual reactors remain within twice the dose design objectives of Appendix I, and if direct radiation doses from the reactor units and outside storage tanks, etc., are kept small. The Special Report will describe a course of action that should result in the limitation of the annual dose to a MEMBER OF THE PUBLIC to within the 40 CFR Part 190 limits. For the purposes of the Special Report, it may be assumed that the dose commitment to the MEMBER OF THE PUBLIC from other uranium fuel cycle sources is negligible, with the exception that dose contributions from other nuclear fuel cycle facilities at the same site or within a radius of 8 km must be considered. If the dose to any MEMBER OF THE PUBLIC is estimated to exceed the requirements of 40 CFR Part 190, submittal of the Special Report within 30 days with a request for a variance (provided the release conditions resulting in violation of 40 CFR Part 190 have not already been corrected), in accordance with the provisions of 40 CFR Part 190.11 and 10 CFR Part 20.2203(a)(4), is considered to be a timely request and fulfills the requirements of 40 CFR Part 190 until NRC staff action is completed.

Demonstration of compliance with the limits of 40 CFR Part 190 or with the design objectives of Appendix I to 10 CFR Part 50 will be considered to demonstrate compliance with the 0.1 rem limit of 10 CFR Part 20.1301.

4.11 RADIOLOGICAL ENVIRONMENTAL MONITORING PROGRAM (TRM 3.12)

The Radiological Environmental Monitoring Program required by this Control provides representative measurements of radiation and of radioactive materials in those exposure pathways and for those radionuclides that lead to the highest potential radiation exposures of MEMBERS OF THE PUBLIC resulting from the station operation.

This monitoring program implements Section IV.B.2 of Appendix I to 10 CFR Part 50 and thereby supplements the Radiological Effluent Monitoring Program by verifying that the measurable concentrations of radioactive materials and levels of radiation are not higher than expected on the basis of the effluent measurements and the modeling of the environmental exposure pathways. Isotopes identified in REMP are compared to those identified in the applicable Annual Effluent Report. Program changes may be initiated based on these operational experiences.

The required detection capabilities for environmental sample analyses are tabulated in terms of the lower limits of detection (LLDs). The LLDs required by Table T3.12.a-3 are considered optimum for routine environmental measurements in industrial laboratories. It should be recognized that the LLD is defined as an a priori (before the fact) limit representing the capability of a measurement system and not as an a posteriori (after the fact) limit for a particular measurement.

Detailed discussion of the LLD and other detection limits can be found in Currie, L.A., "Lower Limit of Detection: Definition and Elaboration of a Proposed Position for Radiological Effluent and Environmental Measurements," NUREG/CR-4007 (September 1984), and in the HASL Procedures Manual, HASL-300 (revised annually).

4.12 LAND USE CENSUS (TRM 3.12.b)

This Control is provided to ensure that changes in the use of areas at and beyond the SITE BOUNDARY are identified and that modifications to the Radiological Environmental Monitoring Program are made if required by the results of this census. The best information from the door-to-door survey, from aerial survey or from consulting with local agricultural authorities shall be used. This census satisfies the requirements of Section IV.B.3 of Appendix I to 10 CFR Part 50. Restricting the census to gardens of greater than 50 m^2 provides assurance that significant exposure pathways via leafy vegetables will be identified and monitored since a garden of this size is the minimum required to produce the quantity (26 kg/year) of leafy vegetables assumed in Regulatory Guide 1.109 for consumption by a child. To determine this minimum garden size, the following assumptions were made: 1) 20% of the garden was used for growing broad leaf vegetation (i.e., similar to lettuce and cabbage), and 2) a vegetation yield of 2 kg/m^2.

4.13 INTERLABORATORY COMPARISON PROGRAM (TRM 3.12.c)

The requirement for participation in an approved Interlaboratory Comparison Program is provided to ensure that independent checks on the precision and accuracy of the measurements of radioactive material in environmental sample matrices are performed as part of the quality assurance program for environmental monitoring in order to demonstrate that the results are reasonably valid for the purposes of Section IV.B.2 of Appendix I to 10 CFR Part 50.

5.0 ADMINISTRATIVE REQUIREMENTS

5.1 Annual Radiological Environmental Operating Report*

Routine Annual Radiological Environmental Operating Report covering the operation of the Unit(s) during the previous calendar year shall be submitted prior to May 15 of each year.

The Annual Radiological Environmental Operating Report shall include summaries, interpretations, and an analysis of trends of the results of the radiological environmental surveillance activities for the report period, including a comparison with operational controls as appropriate, and with previous environmental surveillance reports, and an assessment of the observed impacts of the plant operation on the environment.

The Annual Radiological Environmental Operating Report shall include the results of all radiological environmental samples and of all environmental radiation measurements taken during the period pursuant to the locations specified in the tables and figures in Part II Section 6 of the ODCM, as well as summarized and tabulated results of these analyses and measurements in the format of the table in the Radiological Assessment Branch Technical Position, Revision 1, November 1979. In the event that some individual results are not available for inclusion with the report, the report shall be submitted noting and explaining the reasons for the missing results. The missing data shall be submitted as soon as possible in a supplementary report.

The reports shall also include the following: a summary description of the Radiological Environmental Monitoring Program; legible maps covering all sampling locations keyed to a table giving distances and directions from the midpoint between the two units; reasons for not conducting the Radiological Environmental Monitoring Program as required by TLCO 3.12.a, a Table of Missed Samples and a Table of Sample Anomalies for all deviations from the sampling schedule of TRM Table T3.12.a-1; discussion of environmental sample measurements that exceed the reporting levels of TRM Table T3.12.a-2 but are not the result of plant effluents, discussion of all analyses in which the LLD required by TRM Table T3.12.a-3 was not achievable; result of the Land Use Census required by TRM TLCO 3.12.b; and the results of the licensee participation in an Interlaboratory Comparison Program and the corrective actions being taken if the specified program is not being performed as required by TRM TLCO 3.12.c.

The Annual Radiological Environmental Operating Report shall also include an annual summary of hourly meteorological data collected over the applicable year. This annual summary may be either in the form of an hour-by-hour listing on magnetic tape of wind speed, wind direction, atmospheric stability, and precipitation (if measured), or in the form of joint frequency distributions of wind speed, wind direction, and atmospheric stability. In lieu of submission with the Annual Radiological Environmental Operating Report, the licensee has the option of retaining this summary of required meteorological data on site in a file that shall be provided to the NRC upon request.

The Annual Radiological Environmental Operating Report shall also include an assessment of the radiation doses due to the radioactive liquid and gaseous effluents released from the Unit or Station during the previous calendar year. This report shall also include an assessment of the radiation doses to the most likely exposed MEMBER OF THE PUBLIC from reactor releases and other near-by uranium fuel cycle sources including doses from primary effluent pathways and direct radiation, for the previous calendar year. The assessment of radiation doses shall be performed in accordance with the methodology and parameters in the ODCM, and in compliance with 10CFR20 and 40 CFR Part 190, "Environmental Radiation Protection Standards for Nuclear Power Operation."

*A single submittal may be made for a multiple unit station.

5.2 Annual Radioactive Effluent Release Report**

Routine Annual Radioactive Effluent Release Reports covering the operation of the unit during the previous calendar year of operation shall be submitted prior to May 1 of the following year.

The Annual Radioactive Effluent Release Reports shall include a summary of the quantities of radioactive liquid and gaseous effluents and solid waste released from the unit as outlined in Regulatory Guide 1.21, "Measuring Evaluating, and Reporting Radioactivity in Solid Wastes and Releases of Radioactive Materials in Liquid and Gaseous Effluents from Light-Water-Cooled Nuclear Power Plants," Revision 1, June 1974, with data summarized on a quarterly basis following the format of Appendix B thereof.

For solid wastes, the format for Table 3 in Appendix B of the report shall be supplemented with three additional categories: class of solid wastes (as defined by 10 CFR Part 61), type of container (e.g., LSA, Type A, Type B, Large Quantity), and SOLIDIFICATION agent or absorbent (e.g., cement, urea formaldehyde).

The Annual Radioactive Effluent Release Reports shall include a list and description of unplanned releases from the site to UNRESTRICTED AREAS of radioactive materials in gaseous and liquid effluents made during the reporting period.

The Annual Radioactive Effluent Release Reports shall include any changes made during the reporting period to the PCP as well as any major changes to Liquid, Gaseous or Solid Radwaste Treatment Systems, pursuant to Part I Section 5.3.

The Annual Radioactive Effluent Release Reports shall also include the following: an explanation as to why the inoperability of liquid or gaseous effluent monitoring instrumentation was not corrected within the time specified in TRM TLCO 3.11.a or TLCO 3.11.b, respectively; and description of the events leading to liquid holdup tanks or gas storage tanks exceeding the limits of TS 5.5.12.

** A single submittal may be made for a multiple unit station. The submittal should combine those sections that are common to all units at the station; however, for units with separate radwaste systems, the submittal shall specify the releases of radioactive material from each unit.

5.3 ODCM

5.3.1 The ODCM shall be submitted to the Commission following proper approval through station processes.

5.3.2 Licensee-initiated changes to the ODCM:

a. Shall be documented and records of reviews performed shall be retained as required by UFSAR Chapter 17. This documentation shall contain:

1. Sufficient information to support the change together with the appropriate analyses or evaluations justifying the changes(s); and

2. A determination that the change will maintain the level of radioactive effluent control required by 10 CFR Part 20, 40 CFR Part 190, 10 CFR 50.36a, and Appendix I to 10 CFR Part 50 and not adversely impact the accuracy or reliability of effluent, dose, or setpoint calculations.

b. Shall become effective after review and acceptance by the Independent Technical Review and PORC and the approval of the Plant Manager on the date specified by the Independent Technical Review and PORC.

c. Shall be submitted to the Commission in the form of the complete, legible copy of the entire ODCM, or updated pages if the Commission retains a controlled copy. If an entire copy of the ODCM is submitted, it shall be submitted as a part of or concurrent with the Annual Radioactive Effluent Release Report for the period of the report in which any change to the ODCM was made effective. Each change shall be identified by markings in the margin of the affected pages, clearly indicating the area of the page that was changed, and shall indicate the date (e.g., month/year) the change was implemented.

5.4 Major Changes to Liquid and Gaseous Radwaste Treatment Systems***

Licensee-initiated major changes to the Radwaste Treatment Systems (liquid and gaseous):

a. Shall be reported to the Commission in the Annual Radioactive Effluent Release Report for the period in which the evaluation was reviewed by the Independent Technical Review and PORC. The discussion of each change shall contain:

1) A summary of the evaluation that led to the determination that the change could be made in accordance with 10 CFR 50.59;

2) Sufficient detailed information to totally support the reason for the change without benefit of additional and supplemental information;

3) A detailed description of the equipment, components, and processes involved and the interfaces with other plant systems.

4) An evaluation of the change which shows the predicted releases of radioactive materials in liquid and gaseous effluents that differ from those previously predicted in the License application and amendments thereto;

5) An evaluation of the change, which shows the expected maximum exposures to a MEMBER OF THE PUBLIC in the UNRESTRICTED AREA and to the general population that differ from those previously estimated in the License application and amendments thereto;

6) A comparison of the predicted releases of radioactive materials, in liquid and gaseous effluents, to the actual releases for the period prior to when the changes are to be made;

7) An estimate of the exposure to plant operating personnel as a result of the change; and

8) Documentation of the fact that the change was reviewed and found acceptable by the Independent Technical Review and PORC.

b. Shall become effective upon review and acceptance by the Independent Technical Review and PORC.

***Licensees may choose to submit the information called for in this standard as part of the annual FSAR update.

OFFSITE DOSE CALCULATION MANUAL

Byron Station
Units 1 and 2

Revision 4

1.0 INTRODUCTION - ODCM GENERAL INFORMATION

The Offsite Dose Calculation Manual (ODCM) presents a discussion of the following:

- The basic concepts applied in calculating offsite doses from plant effluents.
- The regulations and requirements for the ODCM and related programs.
- The methodology and parameters for the offsite dose calculations to assess impact on the environment and compliance with regulations.

The methodology detailed in this manual is intended for the calculation of radiation doses during routine (i.e., non-accident) conditions. The calculations are normally performed using a computer program. Manual calculations may be performed in lieu of the computer program.

The dose effects of airborne radioactivity releases predominately depend on meteorological conditions (wind speed, wind direction, and atmospheric stability). For airborne effluents, the dose calculations prescribed in this manual are based on historical average atmospheric conditions. This methodology is appropriate for estimating annual average dose effects and is stipulated in the Bases Section of the Radiological Effluents Controls (RECS).

1.1 Structure of the ODCM

Part I of the ODCM is considered to be the Radiological Effluents Controls (RECS), and contains the former Radiological Effluent Technical Specifications that have been removed from the Technical Specifications. Part I is organized as follows:

- Definitions
- Radiological Effluent Controls and Surveillances
- Radiological Environmental Monitoring Program
- Bases
- Administrative Requirements

Part II of the ODCM is considered to be the Offsite Dose Calculation Manual (ODCM), and contains methods, equations, assumptions, and parameters for calculation of radiation doses from plant effluents. Part II is organized as follows:

- Introduction
- Instrumentation and Systems
- Liquid Effluents
- Gaseous Effluents
- Total Dose
- Radiological and Environmental Monitoring Program

1.2 Regulations

This section serves to illustrate the regulations and requirements that define and are applicable to the ODCM. Any information provided in the ODCM concerning specific regulations are not a substitute for the regulations as found in the Code of Federal Regulations (CFR) or Technical Specifications.

1.2.1 Code of Federal Regulations

Various sections of the Code of Federal Regulations (CFR) require nuclear power stations to be designed and operated in a manner that limits the radiation exposure to members of the public. These sections specify limits on offsite radiation doses and on effluent radioactivity concentrations and they also require releases of radioactivity to be "As Low As Reasonably Achievable". These requirements are contained in 10CFR20, 10CFR50 and 40CFR190. In addition, 40CFR141 imposes limits on the concentration of radioactivity in drinking water provided by the operators of public water systems.

- <u>10CFR20, Standards for Protection Against Radiation</u>

  This revision of the ODCM addresses the requirements of 10CFR20. The 10CFR20 dose limits are summarized in Table 1 - 1.

- <u>Design Criteria (Appendix A of 10CFR50)</u>

  Section 50.36 of 10CFR50 requires that an application for an operating license include proposed Technical Specifications. Final Technical Specifications for each station are developed through negotiation between the applicant and the NRC. The Technical Specifications are then issued as a part of the operating license, and the licensee is required to operate the facility in accordance with them.

Section 50.34 of 10CFR50 states that an application for a license must state the principal design criteria of the facility. Minimum requirements are contained in Appendix A of 10CFR50.

- ALARA Provisions (Appendix I of 10CFR50)

  Sections 50.34a and 50.36a of 10CFR50 require that the nuclear plant design and the station RECS have provisions to keep levels of radioactive materials in effluents to unrestricted areas "As Low As Reasonably Achievable" (ALARA). Although 10CFR50 does not impose specific limits on releases, Appendix I of 10CFR50 does provide numerical design objectives and suggested limiting conditions for operation. According to Section I of Appendix I of 10CFR50, design objectives and limiting conditions for operation, conforming to the guidelines of Appendix I "shall be deemed a conclusive showing of compliance with the "As Low As Reasonably Achievable" requirements of 10CFR50.34a and 50.36a."

  An applicant must use calculations to demonstrate conformance with the design objective dose limits of Appendix I. The calculations are to be based on models and data such that the actual radiation exposure of an individual is "unlikely to be substantially underestimated" (see 10CFR50 Appendix I, Section III.A.1).

  The guidelines in Appendix I call for an investigation, corrective action and a report to the NRC whenever the calculated dose due to the radioactivity released in a calendar quarter exceeds one-half of an annual design objective. The guidelines also require a surveillance program to monitor releases, monitor the environment and identify changes in land use.

- 40CFR190, Environmental Radiation Protection Standards for Nuclear Power Operations

  Under an agreement between the NRC and the EPA, the NRC stipulated to its licensees in Generic Letter 79-041 that "Compliance with Radiological Effluent Technical Specifications (RETS), NUREG-0472 (Rev.2) for PWR's, implements the LWR provisions to meet 40CFR190". (See References 49 and 103.)

  The regulations of 40CFR190 limit radiation doses received by members of the public as a result of operations that are part of the uranium fuel cycle. Operations must be conducted in such a manner as to provide reasonable assurance that the annual dose equivalent to any member of the public due to radiation and to planned discharges of radioactive materials does not exceed the following limits:

  - 25 mrem to the total body
  - 75 mrem to the thyroid

- 25 mrem to any other organ

An important difference between the design objectives of 10CFR50 and the limits of 40CFR190 is that 10CFR50 addresses only doses due to radioactive effluents. 40CFR190 limits doses due to effluents and to radiation sources maintained on site. See Section 1.2.4 for further discussion of the differences between the requirements of 10CFR50 Appendix I and 40CFR190.

- 40CFR141, National Primary Drinking Water Regulations

The following radioactivity limits for community water systems were established in the July, 1976 Edition of 40CFR141:

- Combined Ra-226 and Ra-228: $\leq$ 5 pCi/L.
- Gross alpha (particle activity including Ra-226 but excluding radon and uranium): $\leq$ 15 pCi/L.
- The average annual concentration of beta particle and photon radioactivity from man-made radionuclides in drinking water shall not produce an annual dose equivalent to the total body or any internal organ greater than 4 mrem/yr.

The regulations specify procedures for determining the values of annual average radionuclide concentration that produce an annual dose equivalent of 4 mrem. Radiochemical analysis methods are also specified. The responsibility for monitoring radioactivity in a community water system falls on the supplier of the water. The Byron Station has requirements related to 40CFR141 in the RECS.

1.2.2 Radiological Effluent Technical Standards

The Radiological Effluent Technical Standards (RETS) were formerly a subset of the Technical Specifications. They implement provisions of the Code of Federal Regulations aimed at limiting offsite radiation dose. The NRC published Standard RETS for PWRs (Reference 2) as guidance to assist in the development of technical specifications. These documents have undergone frequent minor revisions to reflect changes in plant design and evolving regulatory concerns. The RETS have been removed from the Technical Specifications and placed in the TRM as the RECS (see Reference 90). The RECS are similar but not identical to the guidance of the Standard Radiological Effluent Technical Specifications.

1.2.3 Offsite Dose Calculation Manual

The NRC in Generic Letter 89-01 defines the ODCM as follows (not verbatim) (see Reference 90):

> The Offsite Dose Calculation Manual (ODCM) shall contain the methodology and parameters used in the calculation of offsite doses resulting from radioactive gaseous and liquid effluents, in the calculation of gaseous and liquid effluent monitoring Alarm/Trip Setpoints, and in the conduct of the Radiological Environmental Monitoring Program. The ODCM shall also contain (1) the Radioactive Effluent Controls and Radiological Environmental Monitoring Programs and (2) descriptions of the Information that should be included in the Annual Radiological Environmental Operating and Annual Radioactive Effluent Release Reports.

Additional requirements for the content of the ODCM are contained throughout the text of the RECS.

1.2.4 Overlapping Requirements

In 10CFR20, 10CFR50 and 40CFR190, there are overlapping requirements regarding offsite radiation dose and dose commitment to the total body. In 10CFR20.1301, the total effective dose equivalent (TEDE) to a member of the public is limited to 100 mrem per calendar year. In addition, Appendix I to 10CFR50 establishes design objectives on annual total body dose or dose commitment of 3 mrem per reactor for liquid effluents and 5 mrem per reactor for gaseous effluents (see 10CFR50 Appendix I, Sections II.A and II.B.2(a)). Finally, 40CFR190 limits annual total body dose or dose commitment to a member of the public to 25 mrem due to all uranium fuel cycle operations.

While these dose limits/design objectives appear to overlap, they are different and each is addressed separately by the RETS. Calculations are made and reports are generated to demonstrate compliance to all regulations. Refer to Table 1 - 1 and Table 1 - 2 for additional information regarding instantaneous effluent limits, design objectives and regulatory compliance.

1.2.5 Dose Receiver Methodology

Table 1 - 2 lists the location of the dose recipient and occupancy factors, if applicable. Dose is assessed at the location in the unrestricted area where the combination of existing pathways and receptor age groups indicates the maximum potential exposures. The dose calculation

methodology is consistent with the methodology of Regulatory Guide 1.109 (Reference 6) and NUREG 0133 (Reference 14). Dose is therefore calculated to a maximum individual. The maximum individual is characterized as "maximum" with regard to food consumption, occupancy and other usage of the area in the vicinity of the plant site. Such a "maximum individual" represents reasonable deviation from the average for the population in general. In all physiological and metabolic respects, the maximum individual is assumed to have those characteristics that represent averages for their corresponding age group. Thus, the dose calculated is very conservative compared to the "average" (or typical) dose recipient who does not go out of the way to maximize radioactivity uptakes and exposure.

Table 1 - 1
Regulatory Dose Limit Matrix

REGULATION	DOSE TYPE		DOSE LIMIT(s)		TRM Section
Airborne Releases:			(quarterly)	(annual)	
10CFR50 App. I[3]	Gamma Dose to Air due to Noble Gas Radionuclides (per reactor unit)		5 mrad	10 mrad	3.11.g
	Beta Dose to Air Due to Noble Gas Radionuclides (per reactor unit)		10 mrad	20 mrad	3.11.g
	Organ Dose Due to Specified Non-Noble Gas Radionuclides (per reactor unit)		7.5 mrem	15 mrem	3.11.h
	Total Body and Skin Dose (if air dose is exceeded)	Total Body	2.5 mrem	5 mrem	N/A
		Skin	7.5 mrem	15 mrem	N/A
Technical Specifications	Total Body Dose Rate Due to Noble Gas Radionuclides (instantaneous limit, per site)		500 mrem/yr		3.11.f
	Skin Dose Rate Due to Noble Gas Radionuclides (instantaneous limit, per site)		3,000 mrem/yr		3.11.f
	Organ Dose Rate Due to Specified Non-Noble Gas Radionuclides (instantaneous limit, per site)		1,500 mrem/yr		3.11.f
Liquid Releases:			(quarterly)	(annual)	
10CFR50 App. I[3]	Whole (Total) Body Dose (per reactor unit)		1.5 mrem	3 mrem	3.11.d
	Organ Dose (per reactor unit)		5 mrem	10 mrem	
Technical Specifications	The concentration of radioactivity in liquid effluents released to unrestricted areas		Ten times the values listed in 10CFR20 Appendix B; Table 2, Column 2, and note 5 below for Noble Gases		3.11.c
Total Doses [1]:					ODCM Section II
10 CFR 20.1301 (a)(1)	Total Effective Dose Equivalent [4]		100 mrem/yr		5.5
10CFR20.1301 (d) And 40CFR190	Total Body Dose		25 mrem/yr		5.5
	Thyroid Dose		75 mrem/yr		5.5
	Other Organ Dose		25 mrem/yr		5.5
Other Limits [2]:					
40CFR141	Total Body Dose Due to Drinking Water From Public Water Systems		4 mrem/yr		3.4
	Organ Dose Due to Drinking Water From Public Water Systems		4 mrem/yr		3.4

1 These doses are calculated considering all sources of radiation and radioactivity in effluents.
2 These limits are not directly applicable to nuclear power stations. They are applicable to the owners or operators of public water systems. However, the Byron RECS requires assessment of compliance with these limits.
3 Note that 10CFR50 provides design objectives, not limits.
4 Compliance with 10CFR20.1301(a)(1) is demonstrated by compliance with 40CFR190. Note that it may be necessary to address dose from on-site activity by members of the public as well.
5 Kr-85m, Kr-85, Kr-87, Kr-88, Ar-41, Xe-131m, Xe-133m, Xe-133, Xe-135m and Xe-135 allowable concentration is 2E-4 µCi/ml computed from Equation 17 of ICRP Publication 2 adjusted for infinite cloud submersion in water, and R = 0.01 rem/wk, ρ_w = 1.0 g/cm3, and P_w/P_t = 1.0.

Table 1 - 2
Dose Assessment Receivers

Dose Component or Pathway	Location; Occupancy if Different than 100%
"Instantaneous" dose rates from airborne radioactivity	Unrestricted area boundary location that results in the maximum dose rate
"Instantaneous" concentration limits in liquid effluents	Point where liquid effluents enter the unrestricted area
Annual average concentration limits for liquid effluents	Point where liquid effluents enter the unrestricted area
Direct dose from contained sources	Receiver spends part of this time in the controlled area and the remainder at his residence or fishing nearby; occupancy factor is considered and is site-specific.
Direct dose from airborne plume	Receiver is at the unrestricted area boundary location that results in the maximum dose.
Dose due to radioiodines, tritium and particulates with half-lives greater than 8 days for inhalation, ingestion of vegetation, milk and meat, and ground plane exposure pathways.	Receiver is at the location in the unrestricted area where the combination of existing pathways and receptor age groups indicates the highest potential exposures.
Ingestion dose from drinking water	The drinking water pathway is considered as an additive dose component in this assessment only if the public water supply serves the community immediately adjacent to the plant.
Ingestion dose from eating fish	The receiver eats fish from the receiving body of water
Total Organ Doses	Summation of ingestion/inhalation doses
Total Dose	Summation of above data (Note it may also be necessary to address dose from on-site activity by members of the public.)

Figure 1 - 1 illustrates some of the potential radiation exposure pathways to humans due to routine operation of a nuclear power station.

Figure 1 - 1
Radiation Exposure Pathways to Humans

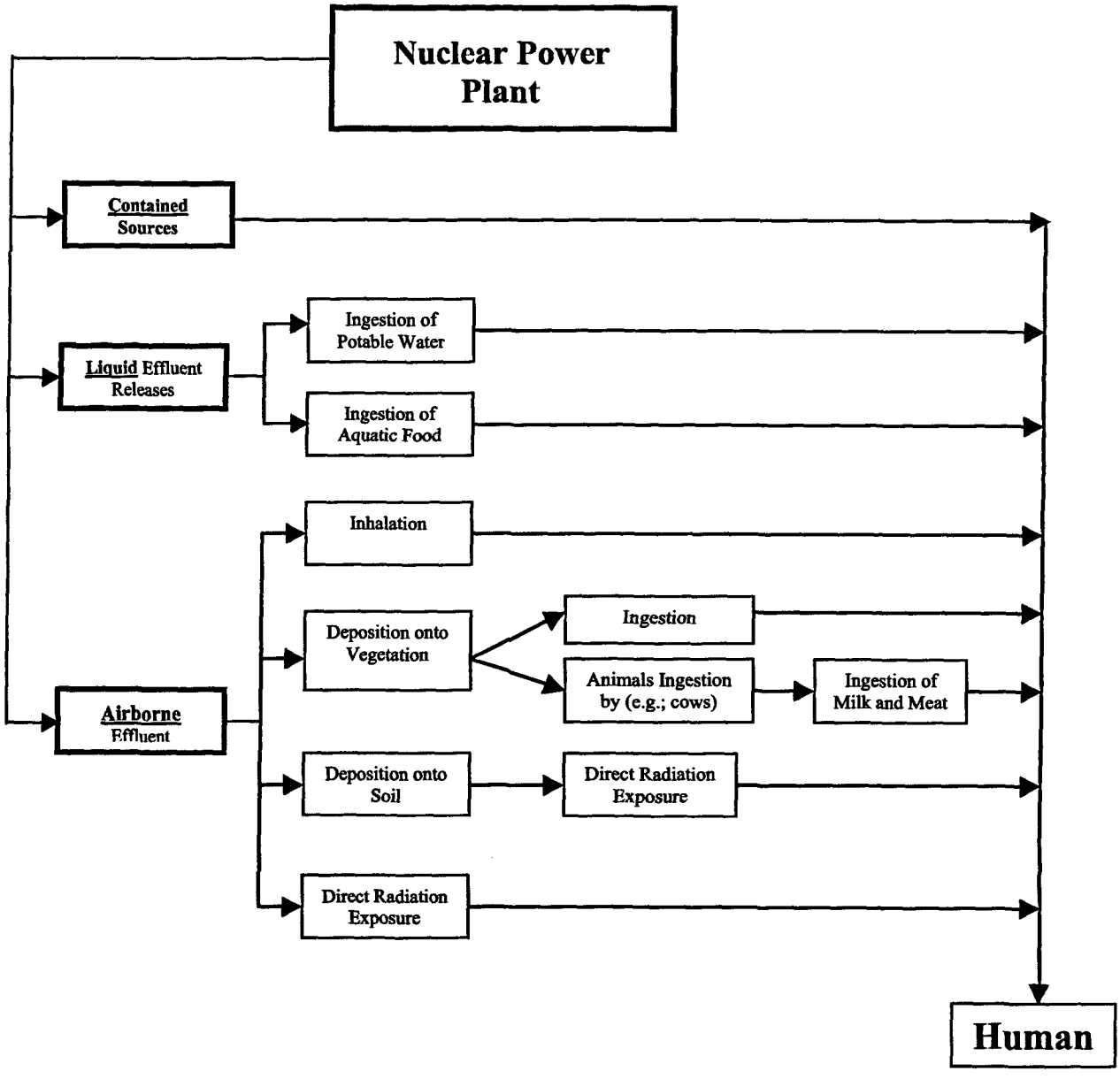

1.3 Offsite Dose Calculation Parameters

This section contains offsite dose calculation parameter factors, or values not specific only to one of the gas, liquid, or total dose chapters. Additional parameters are provided in the Sections 2, 4 and 5 of the ODCM.

10CFR50 Dose Commitment Factors

With the exception of H-3, the dose commitment factors for 10CFR50 related calculations are exactly those provided in Regulatory Guide 1.109 (Reference 6). The following table lists the parameters and the corresponding data tables in the RG 1.109:

PATHWAY	ADULT	TEENAGER	CHILD	INFANT
Inhalation	RG 1.109: Table E-7	RG 1.109: Table E-8	RG 1.109: Table E-9	RG 1.109: Table E-10
Ingestion	RG 1.109: Table E-11	RG 1.109: Table E-12	RG 1.109: Table E-13	RG 1.109: Table E-14

These tables are contained in Regulatory Guide 1.109 (Reference 6). Each table (E-7 through E-14) provides dose factors for seven organs for each of 73 radionuclides, and Table E-5 lists Miscellaneous Dose Assessment Factors - Consumption Parameters. For radionuclides not found in these tables, dose factors will be derived from ICRP 2 (Reference 50) or NUREG-0172 (Reference 51). The values for H-3 are taken from NUREG-4013 (Reference 107).

1.4 REFERENCES

The references listed below were transferred from the previous ODCM revision that was common to all former Commonwealth Edison nuclear stations. The references not applicable to Byron have been deleted, however the numbering has been preserved for ease of reference management throughout the ODCM document; therefore, reference numbering is not sequential.

2. U.S. Nuclear Regulatory Commission, Standard Radiological Effluent Technical Specifications for Pressurized Water Reactors, NUREG-0472, Rev. 3, Draft, January 1983 (frequently revised).

4. U.S. Nuclear Regulatory Commission, Measuring, Evaluating, and Reporting Radioactivity in Solid Wastes and Releases of Radioactive Materials in Liquid

and Gaseous Effluents from Light-Water-Cooled Nuclear Power Plants, Regulatory Guide 1.21. Revision 1, June 1974.

5. U.S. Nuclear Regulatory Commission, Onsite Meteorological Programs, Regulatory Guide 1.23, Safety Guide 23, February 17, 1972.

6. U.S. Nuclear Regulatory Commission, Calculation of Annual Doses to Man from Routine Releases of Reactor Effluents for the Purpose of Evaluating Compliance with 10 CFR Part 50 Appendix I, Regulatory Guide 1.109, Rev. 1, October 1977.

7. U.S. Nuclear Regulatory Commission, Methods for Estimating Atmospheric Transport and Dispersion of Gaseous Effluents in Routine Releases from Light-Water-Cooled Reactors, Regulatory Guide 1.111, Rev. 1, July 1977.

8. U.S. Nuclear Regulatory Commission, Calculation of Releases of Radioactive Materials in Gaseous and Liquid Effluents from Light-Water-Cooled Power Reactors, Regulatory Guide 1.112, Rev. 0-R, April 1976; reissued May 1977.

9. U.S. Nuclear Regulatory Commission, Estimating Aquatic Dispersion of Effluents from Accidental and Routine Reactor Releases for the Purpose of Implementing Appendix I, Regulatory Guide 1.113, Rev. 1, April 1977.

10. U.S. Nuclear Regulatory Commission, Programs for Monitoring Radioactivity in the Environs of Nuclear Power Plants, Regulatory Guide 4.1, Rev. 1, April 1975.

11. U.S. Nuclear Regulatory Commission, Preparation of Environmental Reports for Nuclear Power Stations, Regulatory Guide 4.2, Rev. 2, July 1976.

12. U.S. Nuclear Regulatory Commission, Environmental Technical Specifications for Nuclear Power Plants, Regulatory Guide 4.8, Rev. 1, December 1975. (See also the related Radiological Assessment Branch Technical Position, Rev. 1, November 1979.)

13. U.S. Nuclear Regulatory Commission, Quality Assurance for Radiological Monitoring Programs (Normal Operations)--Effluent Streams and the Environment, Regulatory Guide 4.15, Rev. 1, February 1979.

14. U.S. Nuclear Regulatory Commission, Preparation of Radiological Effluent Technical Specifications for Nuclear Power Plants, edited by J. S. Boegli et al. NUREG-0133, October 1978.

15. U.S. Nuclear Regulatory Commission, XOQDOQ: Computer Program for the Meteorological Evaluation of Routine Effluent Releases at Nuclear Power Stations, J. F. Sagendorf et al. NUREG/CR-2919, PNL-4380, September 1982.

16. U.S. Nuclear Regulatory Commission, Radiological Assessment, edited by J. E. Till and H. R. Meyer, NUREG/CR-3332, ORNL-5968, September 1983.

17. U.S. Nuclear Regulatory Commission, Standard Review Plan, NUREG-0800, July 1981.

18. U.S. Atomic Energy Commission, Meteorology and Atomic Energy 1968, edited by D. H. Slade, TID-21940, July 1968.

19. U.S. Atomic Energy Commission, Plume Rise, G. A. Briggs, TID-25075, 1969.

20. U.S. Atomic Energy Commission, The Potential Radiological Implications of Nuclear Facilities in the Upper Mississippi River Basin in the Year 2000, WASH 1209, January 1973.

21. U.S. Atomic Energy Commission, HASL Procedures Manual, Health and Safety Laboratory, HASL-300 (revised annually).

22. U.S. Department of Energy, Models and Parameters for Environmental Radiological Assessments, edited by C. W. Miller, DOE/TIC-11468, 1984.

23. U.S. Department of Energy, Atmospheric Science and Power Production, edited by D. Randerson, DOE/TIC-27601, 1984.

24. U.S. Environmental Protection Agency, Workbook of Atmospheric Dispersion Estimates, D. B. Turner, Office of Air Programs Publication No. AP-26, 1970.

25. U.S. Environmental Protection Agency, 40CFR190 Environmental Radiation Protection Requirements for Normal Operations of Activities in the Uranium Fuel Cycle, Final Environmental Statement, EPA 520/4-76-016, November 1, 1976.

26. U.S. Environmental Protection Agency, Environmental Analysis of the Uranium Fuel Cycle, EPA-520/9-73-003-C, November 1973.

27. American Society of Mechanical Engineers, Recommended Guide for the Prediction of the Dispersion of Airborne Effluents, 1973.

28. Eisenbud, M., Environmental Radioactivity, 3rd Edition, (Academic Press, Orlando, FL, 1987).

29. Glasstone, S., and Jordan, W. H., Nuclear Power and Its Environmental Effects (American Nuclear Society, LaGrange Park, IL, 1980).

30. International Atomic Energy Agency, Generic Models and Parameters for Assessing the Environmental Transfer of Radionuclides from Routine Releases, Safety Series, No. 57, 1982.

31. National Council on Radiation Protection and Measurements, Radiological Assessment: Predicting the Transport, Bioaccumulation, and Uptake by Man of Radionuclides Released to the Environment, NCRP Report No. 76, March 15, 1984.

32. American National Standards Institute, Guide to Sampling Airborne Radioactive Materials in Nuclear Facilities, ANSI N13.1-1969, February 19, 1969.

33. Institute of Electrical and Electronics Engineers, Specification and Performance of On-Site Instrumentation for Continuously Monitoring Radioactivity in Effluents, ANSI N13.10-1974, September 19, 1974.

34. American National Standards Institute, Testing and Procedural Specifications for Thermoluminescence Dosimetry (Environmental Applications), ANSI N545-1975, August 20, 1975.

35. American Nuclear Insurers, Effluent Monitoring, ANI/MAELU Engineering Inspection Criteria for Nuclear Liability Insurance, Section 5.1, Rev. 2, October 24, 1986.

36. American Nuclear Insurers, Environmental Monitoring, ANI/MAELU Engineering Inspection Criteria for Nuclear Liability Insurance, Section 5.2, Rev. 1, March 23, 1987.

37. American Nuclear Insurers, Environmental Monitoring Programs, ANI/MAELU Information Bulletin 86-1, June 9, 1986.

38. Cember, H., Introduction to Health Physics, 2nd Edition (Pergamon Press, Elmsford, NY 1983).

41. U.S. Nuclear Regulatory Commission, Branch Technical Position, Radiological Assessment Branch, Revision 1, November 1979. (This is a branch position on Regulatory Guide 4.8.)

43. U.S. Nuclear Regulatory Commission, Calculation of Releases of Radioactive Materials in Gaseous and Liquid Effluents from Pressurized Water Reactors (PWR-GALE Code), NUREG-0017, April 1976.

49. U.S. Nuclear Regulatory Commission, Methods for Demonstrating LWR Compliance with the EPA Uranium Fuel Cycle Standard (40 CFR Part 190), NUREG-0543, February 1980.

50. International Commission on Radiological Protection, Report of Committee Two on Permissible Dose for Internal Radiation, Recommendations of the International Commission on Radiological Protection, ICRP Publication 2, 1959.

51. U.S. Nuclear Regulatory Commission, Age-Specific Radiation Dose Commitment Factors for a One-Year Chronic Intake, Battelle Pacific Northwest Laboratories, NUREG-0172, 1977.

52. W. C. Ng, Transfer Coefficients for Prediction of the Dose to Man via the Forage-Cow-Milk Pathway from Radionuclides Released to the Biosphere, UCRL-51939.

53. E. C. Eimutis and M. G. Konicek, Derivations of Continuous Functions for the Lateral and Vertical Atmospheric Dispersion Coefficients, Atmospheric Environment 6, 859 (1972).

54. D. C. Kocher, Editor, Nuclear Decay Data for Radionuclides Occurring in Routine Releases from Nuclear Fuel Cycle Facilities, ORNL/NUREG/TM-102, August 1977.

55. R. L. Heath, Gamma-Ray Spectrum Catalog, Aerojet Nuclear Co., ANCR-1000-2, third or subsequent edition.

56. S. E. Thompson, Concentration Factors of Chemical Elements in Edible Aquatic Organisms, UCRL-50564, Rev. 1, 1972.

57. U.S. Nuclear Regulatory Commission, Instruction Concerning Risks from Occupational Radiation Exposure, Regulatory Guide 8.29, July 1981.

58. Dresden Nuclear Power Station, Radioactive Waste and Environmental Monitoring, Annual Report 1987, March 1988.

59. Reserved reference number

70. D. C. Kocher, Radioactivity Decay Data Tables, DOE/TIC-11026, 1981.

71. J. C. Courtney, A Handbook of Radiation Shielding Data, ANS/SD-76/14, July 1976.

75. Sargent & Lundy, METWRSUM, S&L Program Number 09.5.187-1.0.

76. Sargent & Lundy, Comments on CECo ODCM and List of S&L Calculations, Internal Office Memorandum, P. N. Derezotes to G. R. Davidson, November 23, 1988.

77. Sargent & Lundy, AZAP, A Computer Program to Calculate Annual Average Offsite Doses from Routine Releases of Radionuclides in Gaseous Effluents and Postaccident X/Q Values, S&L Program Number 09.8.054-1.7.

78. National Oceanic and Atmospheric Administration, A Program for Evaluating Atmospheric Dispersion from a Nuclear Power Station, J. F. Sagendorf, NOAA Technical Memorandum ERL ARL-42, Air Resources Laboratory, Idaho Falls, Idaho, May 1974.

79. G. P. Lahti, R. S. Hubner, and J. C. Golden, Assessment of Gamma-Ray Exposures Due to Finite Plumes, Health Physics 41, 319 (1981).

80. National Council of Radiation Protection and Measurements, Ionizing Radiation Exposure of the Population of the United States, NCRP Report No. 93, September 1, 1987.

82. W. R. Van Pelt (Environmental Analysts, Inc.), Letter to J. Golden (Exelon Nuclear) dated January 3, 1972.

84. U.S. Nuclear Regulatory Commission, Draft Generic Environmental Impact Statement on Uranium Milling, NUREG-0511, April 1979.

85. U.S. Environmental Protection Agency, Environmental Analysis of the Uranium Fuel Cycle, Part I - Fuel Supply, EPA-520/9-73-003-B, October 1973.

86. U.S. Nuclear Regulatory Commission, Final Generic Environmental Statement on the Use of Recycle Plutonium in Mixed Oxide Fuel in Light Water Cooled Reactors, NUREG-0002, August 1976.

87. U.S. Nuclear Regulatory Commission, Demographic Statistics Pertaining to Nuclear Power Reactor Sites, NUREG-0348, Draft, December 1977.

88. Nuclear News 31, Number 10, Page 69 (August 1988).

89. General Electric Company, Irradiated Fuel Storage at Morris Operation, Operating Experience Report, January 1972 through December 1982, K. J. Eger, NEDO-20969B.

90. U.S. Nuclear Regulatory Commission, Generic Letter 89-01, "Guidance For The Implementation of Programmatic Controls For RETS In The Administrative Controls Section of Technical Specifications and the Relocation of Procedural Details of Current RETS to the Offsite Dose Calculation Manual or Process Control Program", January 1989.

92. NRC Safety Evaluation Report (SER)/Idaho Notional Engineering Laboratory Technical Evaluation Report (TER) of the Commonwealth Edison Offsite Dose Calculation Manual (ODCM), Revision O.A, December 2, 1991.

95. U.S. Nuclear Regulatory Commission, Standards for Protection Against Radiation (10CFR20).

96. U.S. Nuclear Regulatory Commission, Licensing of Production and Utilization Facilities (10CFR50).

97. Federal Register, Vol. 57, No. 169, Monday, August 31, 1992, page 39358.

98. Miller, Charles W., Models and Parameters for Environmental Radiological Assessments, U.S. Dept. of Energy, DE8102754, 1984, pages 32, 33, 48, and 49.

99. Kocher, D. C., "Dose-Rate Conversion Factors For External Exposure To Photons and Electrons", Health Physics Vol. 45, No. 3 (September), pp. 665-686, 1983.

100. U.S. Department of Health, Education and Welfare Public Health Service, Radiological Health Handbook, January 1970.

101. ODCM Bases and Reference Document, rev.0, November, 1998.

103. U.S. Nuclear Regulatory Commission, Generic Letter 79-041, September 17, 1979.

104. Federal Register, Vol. 56, No. 98, Tuesday, May 21, 1991, page 23374, column 3.

105. U.S. Nuclear Regulatory Commission, Offsite Dose Calculation Manual Guidance: Standard Radiological Effluent Controls for Pressurized Water Reactors, NUREG-1301, April 1991.

107. U.S. Nuclear Regulatory Commission, LADTAP II - Technical Reference and Users Guide, NUREG-4013, April 1986.

Table 1 - 3
Miscellaneous Dose Assessment Factors: Environmental Parameters

Parameter	Value	Comment	Equation	Basis[a]
f_g	0.76		4-11, 4-12	A
f_L	1.0		4-11, 4-12	A
f_p	1.0		4-13, 4-15	A
f_s	1.0		4-13, 4-15	A
t_b	262,800 hrs	30 years	4-9	C
t_f	48 hrs	Cow Milk Pathway	4-13	A
t_f	480 hrs	Cow Meat Pathway	4-15	A
t_h	1440 hrs	60 days for produce	4-11	A
t_h	2160 hrs	90 days for produce	4-13, 4-15	A
t_L	24 hrs	1 day for leafy vegetables	4-11	A
Q_F	50 Kg/day		4-13, 4-14, 4-15, 4-16	B
r	1.0	For Iodines	4-11, 4-13, 4-15	A
r	0.2	For Particulates	4-11, 4-13, 4-15	A
Y_p	0.7 Kg/m^2		4-13, 4-15	A
Y_s	2.0 Kg/m^2		4-13, 4-15	A
Y_v	2.0 Kg/m^2		4-11	A
λ_w	0.0021 hr-1		4-11, 4-13, 4-15	A
H	8 gm/m^3	Absolute Atmospheric Humidity	4-12, 4-14, 4-16	D

[a]Basis key:

A: Reference 6, Table E-15.
B: Reference 6, Table E-3.
C: The parameter t_b is taken as the midpoint of plant operating life (based upon an assumed 60 year plant operating lifetime).
D: Reference 14, Section 5.3.1.3.

Table 1 - 4
Stable Element Transfer Data

Element	F_f Meat (d/kg)	F_M(Cow) Milk (d/L)	Reference
H	1.2E-02	1.0E-02	6
Be	1.5E-03	3.2E-03	Footnote 1
C	3.1E-02	1.2E-02	6
F	2.9E-03	1.4E-02	Footnote 2
Na	3.0E-02	4.0E-02	6
Mg	1.5E-03	3.2E-03	Footnote 1
Al	1.5E-02	1.3E-03	Footnote 3
P	4.6E-02	2.5E-02	6
Cl	2.9E-03	1.4E-02	Footnote 2
Ar	NA	NA	NA
K	1.8E-02	7.2E-03	16
Ca	1.6E-03	1.1E-02	16
Sc	2.4E-03	7.5E-06	Footnote 4
Ti	3.4E-02	5.0E-06	Footnote 5
V	2.8E-01	1.3E-03	Footnote 6
Cr	2.4E-03	2.2E-03	6
Mn	8.0E-04	2.5E-04	6
Fe	4.0E-02	1.2E-03	6
Co	1.3E-02	1.0E-03	6
Ni	5.3E-02	6.7E-03	6
Cu	8.0E-03	1.4E-02	6
Zn	3.0E-02	3.9E-02	6
Ga	1.5E-02	1.3E-03	Footnote 3
Ge	9.1E-04	9.9E-05	Footnote 7
As	1.7E-02	5.0E-04	Footnote 8
Se	7.7E-02	1.0E-03	Footnote 9
Br	2.9E-03	2.2E-02	F_f Footnote 2;F_M from Ref. 16
Kr	NA	NA	NA
Rb	3.1E-02	3.0E-02	6
Sr	6.0E-04	8.0E-04	6
Y	4.6E-03	1.0E-05	6
Zr	3.4E-02	5.0E-06	6
Nb	2.8E-01	2.5E-03	6
Mo	8.0E-03	7.5E-03	6
Tc	4.0E-01	2.5E-02	6
Ru	4.0E-01	1.0E-06	6
Rh	1.5E-03	1.0E-02	6
Pd	5.3E-02	6.7E-03	Footnote 10
Cd	3.0E-02	2.0E-02	Footnote 11
In	1.5E-02	1.3E-03	Footnote 3
Sn	9.1E-04	9.9E-05	Footnote 7
Sb	5.0E-03	2.0E-05	98
Ag	1.7E-02	5.0E-02	6
Te	7.7E-02	1.0E-03	6
I	2.9E-03	6.0E-03	6
Xe	NA	NA	NA
Cs	4.0E-03	1.2E-02	6
Ba	3.2E-03	4.0E-04	6
La	2.0E-04	5.0E-06	6
Ce	1.2E-03	1.0E-04	6
Pr	4.7E-03	5.0E-06	6
Nd	3.3E-03	5.0E-06	6

Table 1 - 4 (Cont'd)
Stable Element Transfer Data

Element	F_f Meat (d/kg)	F_M (Cow) Milk (d/L)	Reference
Pm	2.9E-04	2.0E-05	16
Sm	2.9E-04	2.0E-05	16
Eu	2.9E-04	2.0E-05	16
Gd	2.9E-04	2.0E-05	16
Dy	2.9E-04	2.0E-05	16
Er	2.9E-04	2.0E-05	16
Tm	2.9E-04	2.0E-05	16
Yb	2.9E-04	2.0E-05	16
Lu	2.9E-04	2.0E-05	16
Hf	3.4E-02	5.0E-06	Footnote 5
Ta	2.8E-01	1.3E-03	F_M - Ref.16; F_f -Footnote 6
W	1.3E-03	5.0E-04	6
Re	1.0E-01	1.3E-03	F_M - Ref.16; F_f -Footnote 12
Os	2.2E-01	6.0E-04	Footnote 13
Ir	7.3E-03	5.5E-03	Footnote 14
Pt	5.3E-02	6.7E-03	Footnote 10
Au	1.3E-02	3.2E-02	Footnote 15
Hg	3.0E-02	9.7E-06	F_M - Ref.16; F_f -Footnote 11
Tl	1.5E-02	1.3E-03	F_M - Ref.16; F_f -Footnote 3
Pb	9.1E-04	9.9E-05	98
Bi	1.7E-02	5.0E-04	98
Ra	5.5E-04	5.9E-04	98
Th	1.6E-06	5.0E-06	98
U	1.6E-06	1.2E-04	98
Np	2.0E-04	5.0E-06	6
Am	1.6E-06	2.0E-05	98

Notes:

1. NA = It is assumed that noble gases are not deposited on the ground.
2. Elements listed are those considered for 10CFR20 assessment and compliance.

Footnotes:

There are numerous F_f and F_M values that were not found in published literature. In these cases, the periodic table was used in conjunction with published values. The periodic table was used based on a general assumption that elements have similar characteristics when in the same column of the periodic table. The values of elements in the same column of the periodic table, excluding atomic numbers 58-71 and 90-103, were averaged then assigned to elements missing values located in the same column of the periodic table. This method was used for all columns where there were missing values except column 3A, where there was no data, hence, the average of column 2B and 4A were used.

1. Values obtained by averaging Reference 6 values of Ca, Sr, Ba and Ra.
2. F_f value obtained by assigning the Reference 6 value for I. F_M value obtained by averaging I (Ref. 6) and Br (Ref.16).
3. F_f values obtained by averaging Zn (Ref.6) and Pb (Ref. 98); there were no values for elements in the same column; an average is taken between values of columns 2B and 4A on the periodic table. F_M values obtained by using the value for Tl from Reference 16.
4. Values obtained by averaging Reference 6 values of Y and La.
5. Values obtained by assigning the Reference 6 value for Zr.
6. F_f values obtained from Ref. 6 value for Nb. F_M values obtained by averaging values for Nb (Ref.6) and Ta (Ref. 16).
7. Values obtained from the Reference 6 values for Pb.
8. Values obtained from the Reference 6 values for Bi.
9. Values obtained from the Reference 6 values for Te.
10. Values obtained from the Reference 6 values for Ni.
11. F_f values obtained from Ref. 6 values for Zn. F_M values obtained by averaging the Reference 6 values for Zn and Hg.
12. Values obtained by averaging Reference 6 values for Mn, Tc, Nd and Reference 98 value for U.
13. Values obtained by averaging Reference 6 values from Fe and Ru.
14. Values obtained by averaging Reference 6 values from Co and Rh.
15. Values obtained by averaging Reference 6 values from Cu and Ag.

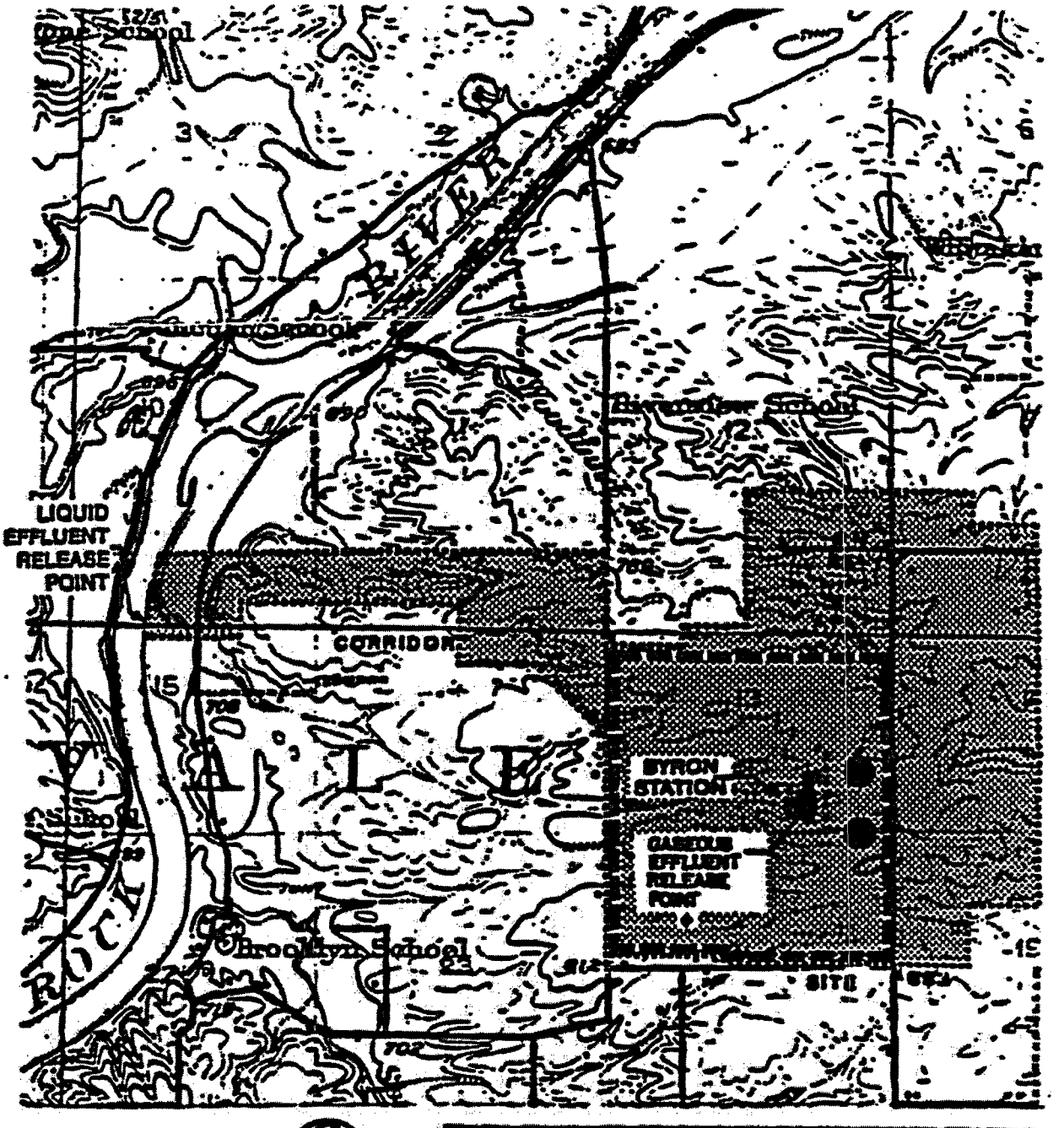

0 1/2 1 KM

0 1/2 1 MILE

■ ■ ■ Exclusion Area Boundary

-------- Site Boundary

◆ Meteorological Tower

OFFSITE DOSE CALCULATION MANUAL
BYRON STATION

FIGURE 1-2

Site Boundary

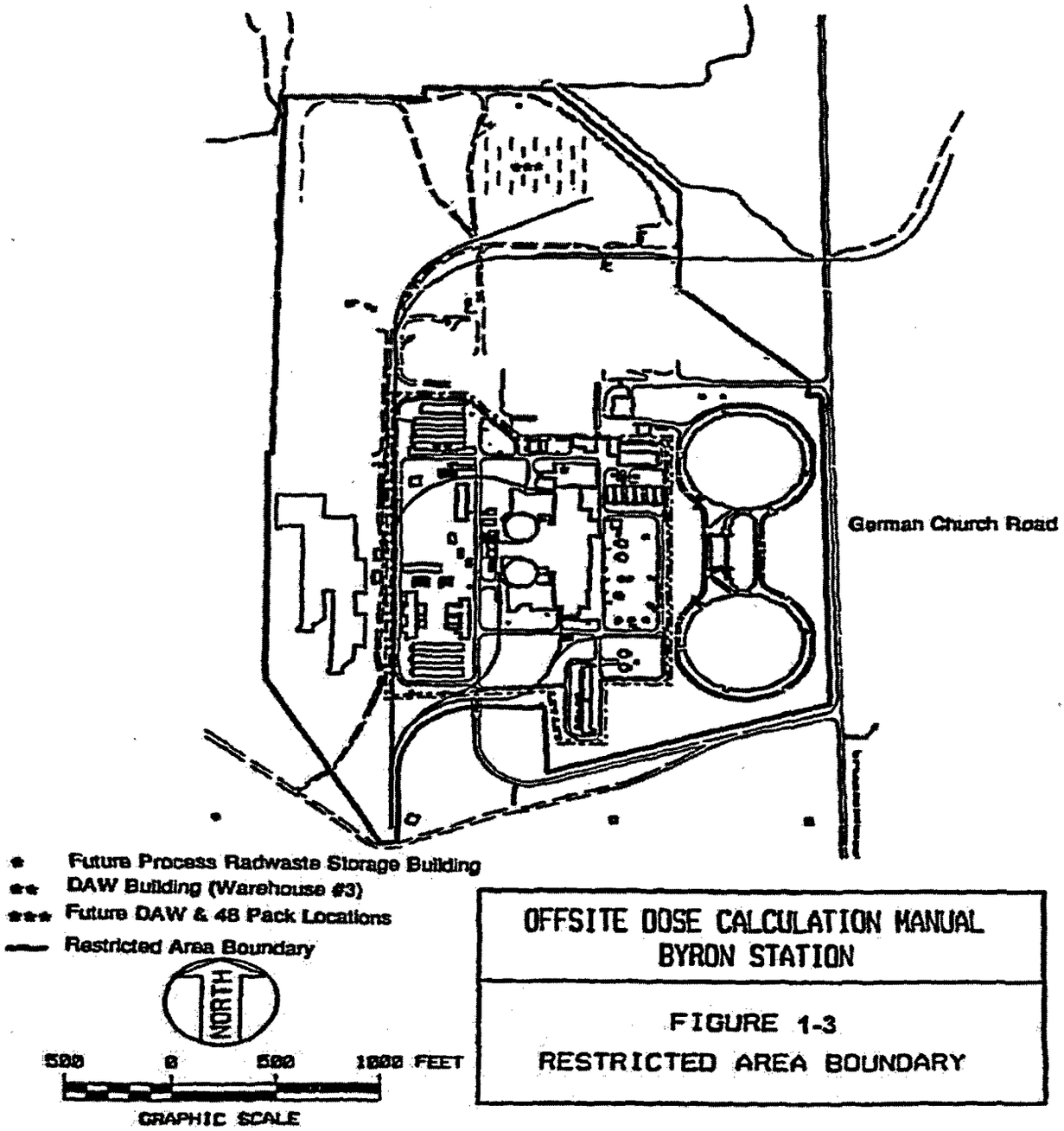

OFFSITE DOSE CALCULATION MANUAL
BYRON STATION

FIGURE 1-3
RESTRICTED AREA BOUNDARY

2.0 INSTRUMENTATION AND SYSTEMS

2.1 Liquid Effluents System Description

A simplified liquid release flowpath diagram is provided in Figure 2-3. A simplified liquid radwaste processing diagram is provided in Figure 2-2.

The liquid radwaste treatment system is designed and installed to reduce radioactive liquid effluents by collecting the liquids, providing for retention or holdup, and providing for treatment by demineralizer for the purpose of reducing the total radioactivity prior to release to the environment. The system is described in Chapter 11 of the Byron Updated Final Safety Analysis Report.

2.1.1 Release Tanks

There are two radwaste release tanks (0WX0IT and 0WX26T 30,000-gallon capacity each) that receive liquid waste before discharge to the Rock River.

2.1.2 Turbine Building Fire and Oil Sump

The turbine building fire and oil sump receives water from selected turbine building sumps, the tendon tunnel sumps, and the diesel fuel oil storage sumps, all of which are normally non-radioactive but potentially contaminated. The effluent from this sump is monitored, and if radioactive contamination exceeds a predetermined level pump operation is automatically terminated. The water may then be sent to the liquid radwaste treatment system.

2.1.3 Condensate Polisher Sump

The condensate polisher sump receives wastewater from the condensate polisher system, which is normally non-radioactive but potentially contaminated. The effluent from this sump is monitored and if radioactive contamination exceeds a predetermined level sump discharge is terminated and major condensate polisher inputs to the sump are automatically isolated. The water may then be sent to the liquid radwaste treatment system.

2.2 Liquid Effluent Radiation Monitors

Pertinent information on the Liquid Radioactive Effluent Monitors and associated control devices are shown in Table 2-1; additional information is provided in the Byron UFSAR Chapter 11.

2.2.1 Liquid Radwaste Effluent Monitor

Monitor 0RE-PR001 is used to monitor all releases from the release tanks. On high alarm, the monitor automatically initiates closure of valves 0WX-353 and 0WX-869 to terminate the release.

2.2.2 Station Blowdown Monitor

Monitor 0RE-PR010 continuously monitors the recirculating water blowdown. No control device is initiated by this channel.

2.2.3 Reactor Containment Fan Cooler (RCFC) and Essential Service Water (SX) Outlet Line Monitors.

Monitors 1RE-PR002, 2RE-PR002, 1RE-PR003, and 2RE-PR003 continuously monitor the RCFC and SX outlet lines. No control device is initiated by these channels.

2.2.4 Turbine Building Fire and Oil Sump Monitor

Monitor 0RE-PR005 continuously monitors the fire and oil sump discharge. On high alarm the monitor automatically initiates an interlock to trip the discharge pumps, close valve 0OD030, and terminate the release.

2.2.5 Condensate Polisher Sump Monitor

Monitor 0RE-PR041 continuously monitors the condensate polisher sump discharge. On high alarm, the monitor automatically initiates an interlock to trip the discharge pumps and terminate the release.

2.2.6 Component Cooling Water Monitors

Monitors 0RE-PR009 (common), 1RE-PR009 (Unit 1), and 2RE-PR009 (Unit 2) continuously monitor the component cooling water heat exchanger outlets. On high alarm 0RE-PR009 initiates closure of both component cooling water surge tank (CCWST) vents, 1RE-PR009 initiates closure of the Unit 1

CCWST vent, and 2RE-PR009 initiates closure of the Unit 2 CCWST vent.

2.3 Liquid Radiation Effluent Monitors Alarm and Trip Setpoints

Alarm and trip setpoints of liquid effluent monitors at the principal release points are established to ensure that the limits of TRM Section 3.11.a are not exceeded in the unrestricted area.

Setpoint calculations normally consist of identified release mixtures, dilution factors, conversion factors (detector sensitivity), maximum release flow rates, and conservatism factors.

2.3.1 Station Blowdown Monitor

During release, the monitor setpoint is found by solving equation 2-1

$$P \leq C^{CW} + (1.50 \times C^{T}) \times (F^{r}_{max}/(F^{CW} + F^{r}_{max})) \qquad (2\text{-}1)$$

P	Release Setpoint	[μCi/ml]
1.50	Factor to account for minor fluctuations in count rate	
C^{CW}	Concentration of activity in the circulating water blowdown at the time of discharge ("Background reading")	[μCi/ml]
C^{T}	Analyzed activity in the release tank (excluding tritium)	[μCi/ml]
F^{CW}	Circulating Water Blowdown Rate	[gpm]
F^{r}_{max}	Maximum Release Tank Discharge Flow Rate The flow rate from the radwaste discharge tank	[gpm]

The release mixture used for the setpoint determination is the radionuclide mix identified in the release tank grab sample isotopic analysis.

2.3.2 Liquid Radwaste Effluent Monitor

During release, the setpoint is established at 1.5 times the analyzed tank activity plus the background reading. However, per procedure, the maximum discharge flow rate is limited to a value that will result in less than 50% of 10*ECL at the discharge point. (See Section 2.3.2.1)

2.3.2.1 Radwaste Tank Discharge Flow Rate

Prior to each batch release, a grab sample is obtained.

The results of the analysis of the waste sample determine the discharge rate of each batch as follows:

$$F^{r}_{max} = 0.5(F^{d}_{act} / \Sigma(C_i \ / 10 * ECL_i)) \quad (2\text{-}2)$$

The summation is over radionuclides i.

F^{r}_{max} Maximum Permitted Discharge Flow Rate [gpm]
The maximum permitted flow rate from the radwaste discharge tank based on radiological limits (not chemistry limits which may be more restrictive)

F^{d}_{act} Circulating Water Blowdown Rate [gpm]

C_i Concentration of Radionuclide i in the Release Tank [µCi/ml]
The concentration of radioactivity in the radwaste discharge tank based on measurements of a sample drawn from the tank.

ECL_i Effluent Concentration Limit [µCi/ml]
The concentration of radionuclide i given in Appendix B, Table 2, Column 2 to 10CFR20.1001 - 20.2402.

10 Multiplier

2.3.2.2 Release Mixture

The release mixture used for the setpoint determination is the radionuclide mix identified in the release tank grab sample isotopic analysis.

2.3.2.3 Liquid Dilution Flow Rates

Dilution flow rates are obtained from the main control board in the control room. If this information is unavailable, releases may continue for up to 30 days provided the dilution flow rates are estimated every 4 hours during the release, in accordance with TRM Table T 3.11.a-1.

2.3.2.4 Projected Concentrations for Releases

After determining F^r_{max} 0 from Equation 2-2, RECS compliance is verified using Equations 2-3 and 2-4.

$$C_i^a = C_i^T [F^r_{max} / (F^r_{max} + F^d_{act})] \quad (2\text{-}3)$$

$$\Sigma\{ C_i^a / 10 * \mathrm{ECL}_i \} \leq 1 \quad (2\text{-}4)$$

The summation is over radionuclides i.

C_i^a Concentration of Radionuclide i in the Unrestricted Area [μCi/mL]

The calculated concentration of radionuclide i in the unrestricted area as determined by Equation 2-3.

C_i^T Concentration of Radionuclide i in the Release Tank [μCi/mL]

The concentration of radioactivity in the radwaste discharge tank based on measurements of a sample drawn from the tank.

ECL_i Effluent Concentration Limit [μCi/ml]

The concentration of radionuclide i given in Appendix B, Table 2, Column 2 to 10CFR20.1001 - 20.2402.

10 Multiplier

F^r_{max} Maximum Release Tank Discharge Flow Rate [gpm]

F^d_{act} Circulating Water Blowdown Rate [gpm]

2.3.3 Other Liquid Effluent Monitors

For all other liquid effluent monitors, including 0RE-PR001 and 0RE-PR010 when not batch releasing, setpoints are determined such that the concentration limits do not exceed 10 times the ECL value given in Appendix B, Table 2, Column 2 to 10CFR20.1001 - 20.2402 in the unrestricted area. Release mixtures are based on a representative isotopic mixture of the waste stream or inputs to the waste stream, or defaulted to the mix listed in Table 2-4.

2.3.4 Conversion Factors

The readouts for the liquid effluent monitors are in μCi/ml. The cpm to μCi/ml conversion is determined for each monitor.

2.3.5 Allocation of Effluents from Common Release Points

Radioactive liquid effluents released from either release tank (0WX01T or 0WX26T) are comprised of contributions from both units. Under normal operating conditions, it is difficult to apportion the radioactivity between the units. Consequently, allocation is made evenly between units.

2.3.6 SOLIDIFICATION OF WASTE/PROCESS CONTROL PROGRAM

The process control program (PCP) contains the sampling, analysis, and formulation determination by which solidification of radioactive wastes from liquid systems is ensured.

2.4 Gaseous Effluents System Description

A simplified HVAC and gaseous effluent flow diagram is provided in . The principal release points for potentially radioactive airborne effluents are the two auxiliary building vent stacks (designated Vent Stack 1 and Vent Stack 2 in). In the classification scheme of Section 4.1.4, each is classified as a vent release point. Engineered safety features atmospheric cleanup systems are not considered to be ventilation exhaust treatment system components.

2.4.1 Waste Gas Holdup System

The waste gas holdup system is designed and installed to reduce radioactive gaseous effluents by collecting reactor coolant system off-gases from the reactor coolant system and providing for delay or holdup to reduce the total radioactivity by radioactive decay prior to release to the environment.

2.4.2 Ventilation Exhaust Treatment System

Ventilation exhaust treatment systems are designed and installed to reduce gaseous radioiodine or radioactive material in particulate form in gaseous effluents by passing ventilation or vent exhaust gases through charcoal absorbers and/or HEPA filters prior to release to the environment. Such a system is not considered to have any effect on noble gas effluents. The ventilation exhaust treatment systems are shown in .

Engineered safety features atmospheric cleanup systems are not considered to be ventilation exhaust treatment system components.

2.5 Gaseous Effluent Radiation Monitors

Pertinent information on the Gaseous Effluent Radiation Monitors and associated control devices are shown in Table 2-2, additional information is provided in Byron UFSAR Chapter 11.

2.5.1 Auxiliary Building Vent Effluent Monitors

Monitors 1RE-PR028 (Unit 1) and 2RE-PR028 (Unit 2) continuously monitor the final effluent from the auxiliary building vent stacks.

Both vent stack monitors feature automatic noble gas monitoring, isokinetic sampling, grab sampling, and sampling for iodine, particulate, and tritium.

These monitors perform no automatic isolation or control functions.

2.5.2 Containment Purge Effluent Monitors

Monitors 1RE-PR001 (Unit 1) and 2RE-PR001 (Unit 2) continuously monitor the effluent from the Unit 1 and Unit 2 containments, respectively. When airborne radioactivity in the containment purge effluent stream exceeds a specified level station personnel will follow established procedures to terminate the release by manually activating the containment purge valves. Additionally, the auxiliary building vent effluent monitors provide an independent, redundant means of monitoring the containment purge effluent.

These monitors perform no automatic isolation or control functions.

Monitors 1RE-AR011, 2RE-AR011, 1RE-AR012 and 2RE-AR012 continuously monitor the containment atmosphere for radioactive gas and particulates. On high alarm during a containment purge, these monitors will automatically terminate the purge.

2.5.3 Waste Gas Decay Tank Monitors

Monitors 0RE-PR002A and 0RE-PR002B continuously monitor the noble gas activity released from the gas decay tanks.

On high alarm, the monitors automatically initiate closure of the valve 0GW104 thus terminating the release.

2.5.4 Gland Steam and Condenser Air Ejector Monitors

Monitors 1RE-PR027 and 2RE-PR027 continuously monitor the condenser air ejector gas from Units 1 and 2, respectively. This monitor performs no automatic isolation or control functions.

2.5.5 Radwaste Building Ventilation Monitor

Monitor 0RE-PR026 continuously monitors radioactivity in the radwaste building ventilation system. On high alarm, 0RE-PR026 initiates isolation of the radwaste building ventilation system.

2.5.5.1 Miscellaneous Ventilation Monitors

Monitor 0RE-PR003 continuously monitors radioactivity in the ventilation exhaust from the laboratory fume hoods. This monitor performs no automatic isolation or control functions.

2.6 Gaseous Effluent Monitor Alarm and Trip Setpoints

2.6.1 Auxiliary Building Vent Effluent Monitors

The setpoints for the low range noble gas channel are conservatively established at 2.5% of the maximum permissible release rate for the high alarm and 0.25% of the maximum release rate for the alert alarm.

The setpoints for the high range noble gas channel are conservatively established at 50% of the maximum permissible release rate for the high alarm and 5% of the maximum release rate for the alert alarm.

2.6.2 Containment Purge Effluent Monitors

The setpoints are established at 1.25 times the containment noble gas activity during purge.

2.6.3 Waste Gas Decay Tank Effluent Monitors

The setpoints are established at 1.25 times the analyzed waste gas tank activity during release.

2.6.4 Gaseous Effluent Release Limits

Alarm and trip setpoints of gaseous effluent monitors are established to ensure that the release rate limits of TRM Section 3.11.b are not exceeded. The release limits are found by solving Equations 2-5 and 2-6 for the total allowed release rate of vent releases, Q_{tv}.

$$(\chi/Q)_v^{\gamma} Q_{tv} \sum_i K_i f_i < 500 \text{ mrem/yr} \qquad (2\text{-}5)$$

$$Q_{tv} \sum_i f_i \{L_i (\chi/Q)_v + (1.11) M_i (\chi/Q)_v^{\gamma}\} < 3000 \text{ mrem/yr} \qquad (2\text{-}6)$$

The summations are over noble gas radionuclides i.

f_i Fractional Radionuclide Composition

The release rate of noble gas radionuclide i divided by the total release rate of all noble gas radionuclides.

Q_{tv} Total Allowed Release Rate, Vent Release [μCi/sec]

The total allowed release rate of all noble gas radionuclides released as vent releases.

The remaining parameters in Equation 2-5 have the same definitions as in Equation 4-1 of Part II Section 4. The remaining parameters in Equation 2-6 have the same definition as in Equation 4-2 of Part II Section 4.

Equation 2-5 is based on Equation 4-1 of Section 4 and the RECS restriction on whole body dose rate (500 mrem/yr) due to noble gases released in gaseous effluents (see Part II Section 4.2.1.1). Equation 2-6 is based on Equation 4-2 of Section 4 and the RECS restriction on skin dose rate (3000 mrem/yr) due to noble gases released in gaseous effluents (see Part II Section 4.2.1.2).

Since the solution to Equation 2-6 is more conservative than the solution to Equation 2-5, the value of Equation 2-6 (1.02×10^7 μCi/sec) is used as the limiting noble gas release rate. During evolutions involving releases from the containment or waste gas decay tanks, the total station release rate is procedurally limited such that the maximum permissible release rate is not exceeded.

2.6.5 Release Mixture

In the determination of alarm and trip setpoints, the radioactivity mixture in exhaust air is assumed to have the radionuclide composition of Table 2-3.

2.6.6 Conversion Factors.

The response curves used to determine the monitor count rates are based on the sensitivity to Xe-133 for conservatism.

2.6.7 HVAC Dilution Flow Rates

The plant vent stack flow rates are obtained from the RM-11 (or equivalent) console in the control room. If the values cannot be obtained from RM-11 (or equivalent), flow rates can be estimated from the operating fan combinations.

2.6.8 Allocation of Effluents from Common Release Points

Radioactive gaseous effluents released from the auxiliary building, miscellaneous ventilation systems and the gas decay tanks are comprised of contributions from both units. Consequently, allocation is made evenly between units.

2.6.9 Dose Projections for Batch Releases

The 10CFR20 dose limits have been converted into a station administrative release rate limit using the methodology in the ODCM. Compliance is verified prior to each release. Doses are calculated after purging the containment or venting the waste gas decay tanks. Per procedure, representative samples are obtained and analyzed, and the doses calculated on a monthly basis to verify compliance with 10CFR50.

Table 2-1 Liquid Radioactive Effluent Monitors

Channel	Monitor Description	Sampling Locations	Effluent Control Functions	Alarm Setpoint Used
0RE-PR001	Radwaste Release Tank Monitor	Common release point from Radwaste Release Tanks 0WX01T, 0WX26T	Radwaste release termination	Yes
0RE-PR010	Station Blowdown Monitor	Recirculating Water Blowdown	None	No
1RE-PR002 2RE-PR002 1RE-PR003 2RE-PR003	Reactor Containment Fan Cooler and Essential Service Water Outlet Line Monitors	RCFC and SX outlet lines	None	No
0RE-PR005	Turbine Building Fire and Oil Sump Monitor	Fire and Oil Sump discharge	Terminates release from Fire and Oil Sump	Yes
0RE-PR041	Condensate Polisher Sump Monitor	Condensate Polisher Sump discharge	Terminates release from Condensate Polisher Sump	Yes
0RE-PR009 1RE-PR009 2RE-PR009	Component Cooling Water (CCW) Monitors	0RE-PR009: CCW Heat Exchangers, common discharge 1RE-PR009: Unit 1 CCW Heat Exchanger discharge 2RE-PR009: Unit 2 CCW Heat Exchanger discharge	0RE-PR009: Closes both CCW surge tank vents 1RE-PR009: Closes Unit 1 CCW surge tank vent 2RE-PR009: Closes Unit 2 CCW surge tank vent	Yes

Table 2-2 Gaseous Radioactive Effluent Monitors

Channel	Monitor Description	Sampling Locations	Effluent Control Functions	Alarm Setpoint Used
1RE-PR028 2RE-PR028	Auxiliary Building Vent Effluent Monitors	Final effluent from auxiliary building vent stack from Unit 1 (1RE-PR028) and from Unit 2 (2RE-PR028)	None	Yes
1RE-PR001 2RE-PR001	Containment Purge Effluent Monitors	Effluent from Unit 1 Containment (1RE-PR001) Effluent from Unit 2 Containment (2RE-PR001)	None	Yes
1RE-AR011 2RE-AR011 1RE-AR012 2RE-AR012	Reactor Containment Particulate and Gas Monitors	Unit 1 Containment (1RE-AR011, 1RE-AR012) Unit 2 Containment (2RE-AR011, 2RE-AR012) *Note: not effluent monitors, but have effluent control functions*	Terminate containment purge	Yes
0RE-PR002A 0RE-PR002B	Waste Gas Decay Tank Monitors	Release line from Waste Gas Decay Tanks	Closes valve 0GW104, terminates release	Yes
1RE-PR027 2RE-PR027	Gland Steam and Condenser Air Ejector Monitors	Condenser Air Ejector (CAE) gas from Unit 1 (1RE-PR-027) and CAE gas from Unit 2 (2RE-PR027)	None	No
0RE-PR026	Radwaste Building Ventilation	Radwaste Building Ventilation System	Isolates Radwaste Building ventilation system	Yes
0RE-PR003	Laboratory Fume Hood Exhaust Monitor	Common line from laboratory fume hoods	None	No

Table 2-3 Assumed Composition of the Byron Station Noble Gas Effluent

Isotope	Percent of Effluent
Ar-41	0.89
Kr-85m	0.18
Kr-85	24.9
Kr-87	0.04
Kr-88	0.28
Xe-131m	1.42
Xe-133m	0.57
Xe-133	71.1
Xe-135	0.53
Xe-138	0.04

Table 2-4 Assumed Composition of the Byron Station Liquid Effluent

Isotope	Concentration (uCi/ml)	Isotope	Concentration (uCi/ml)
H-3	1.16E-05	Ag-110m	1.70E-11
Cr-51	2.39E-12	Te-127	5.40E-13
Mn-54	3.86E-11	Te-129m	1.78E-12
Fe-55	2.08E -12	Te-129	1.16E-12
Fe-59	1.35E-12	Te-131m	1.27E-12
Co-58	1.74E-10	Te-132	2.39E-11
Co-60	3.40E -10	I-130	4.24E-12
Br-83	6.59E-13	I-131	3.09E-09
Rb-86	1.81E-12	I-132	6.95E-11
Sr-89	5.02E-13	I-133	1.43E-09
Zr-95	5.40E-11	I-135	1.66E-10
Nb-95	7.72E-11	Cs-134	1.08E-09
Mo-99	7.72E-11	Cs-136	2.66E-10
Tc-99m	8.88E-11	Cs-137	1.35E-09
Ru-103	5.40E-12	Ce-144	2.01E-10
Ru-106	9.26E-11	Np-239	8.88E-13

Figure 2-1 Simplified HVAC & Gaseous Effluent Flow Diagram

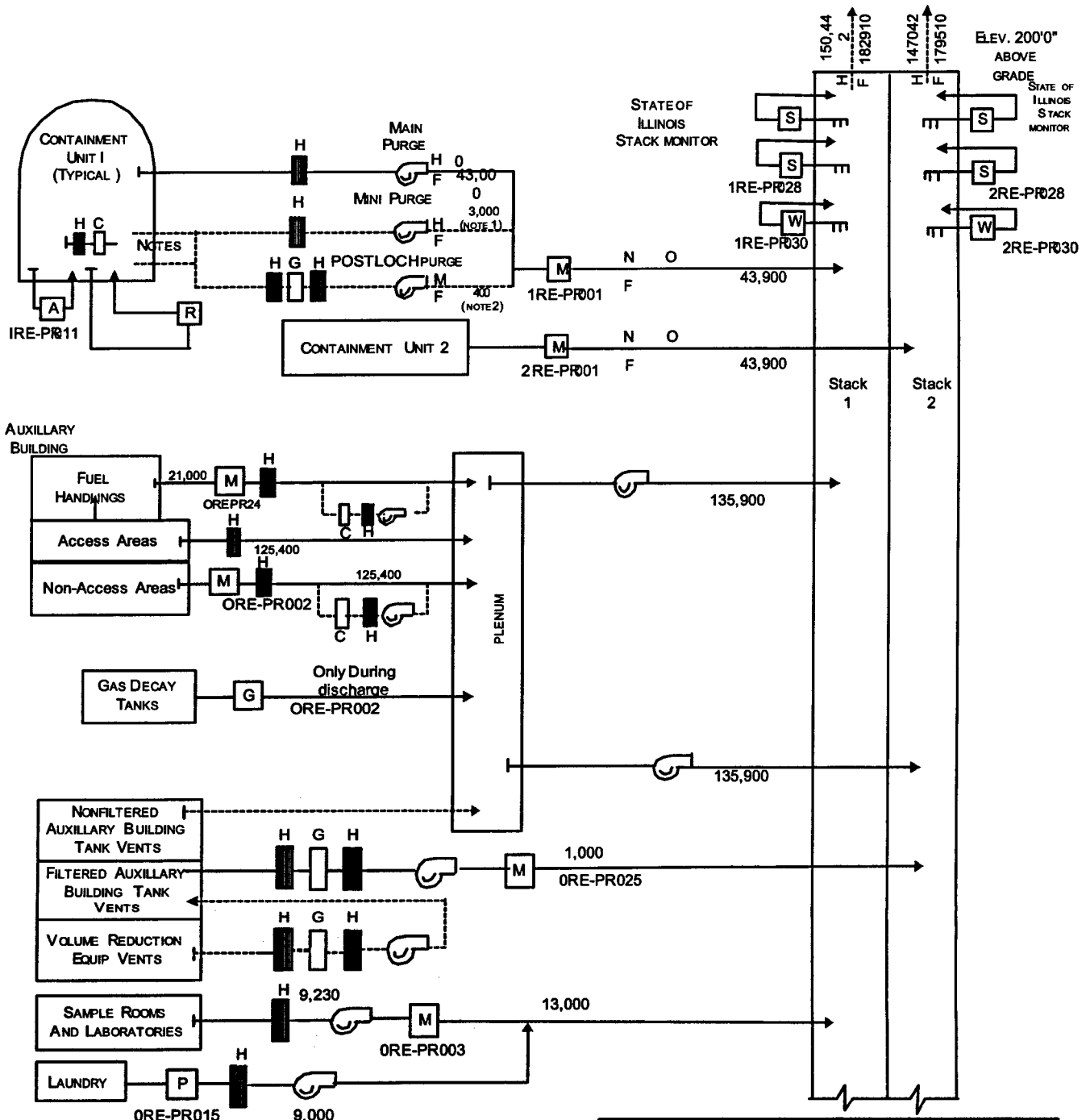

OFFSITE DOSE CALCULATION MANUAL
BYRON STATION

Figure 2-1
SIMPLIFIED HVAC AND GASEOUS EFFLUENT FLOW DIAGRAM
(SHEET 1 OF 2)

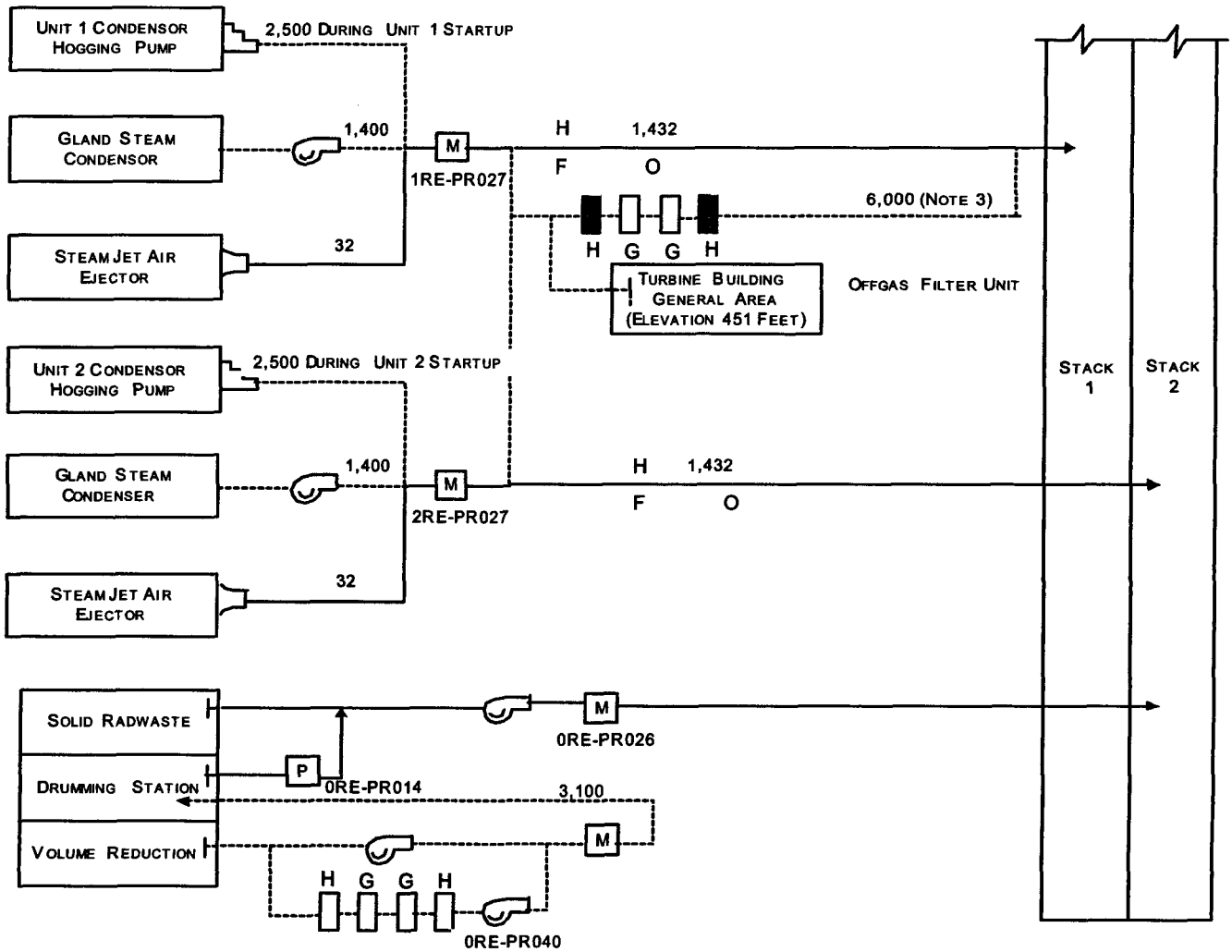

LEGEND

———	NORMAL OR FREQUENT FLOW PATH
--------	OCCASIONAL FLOW PATH
A	CONTAIMENT ATMOSPHERE RADIATION MONITOR
C	CHARCOAL FILTER
F	REFUELING
G	NOBLE GAS RADIATION MONITOR
H	HEPAFILTER
M	THREE-CHANNEL RADIATION MONITOR FOR PARTICULATE, IODINE, AND NOBLE GAS (OFFLINE)
N	NORMAL OPERATION
P	PARTICULATE MONITOR (OFFLINE)
R	HYDROGEN RECOMBINER
S	NORMAL RANGE STACK RADIATION MONITOR (PARTICULATE, IODINE, AND NOBLE GAS)
W	WIDE-RANGE STACK NOBLE GAS RADIATION MONITOR

NOTES

1. USED INTERMITTENTLY TO VENT CONTAINMENT DURING NORMAL OPERATION
2. USED ONLY DURING POST ACCIDENT OPERATION
3. FILLER UNIT OPERATES ONLY WHEN HIGH RADIATION IS DETECTED IN OFFGAS SYSTEM EFFLUENT DISCHARGE
4. ALL FLOW RATES ARE DISCHARGE FLOW RATES IN CUBIC FEET PER MINUTE
5. Integrate Leak Rate Test (ILRT) Pressure Relief Point

OFFSITE DOSE CALCULATION MANUAL
BYRON STATION

Figure 2-1
SIMPLIFIED HVAC AND GASEOUS EFFLUENT FLOW DIAGRAM
(SHEET 2 OF 2)

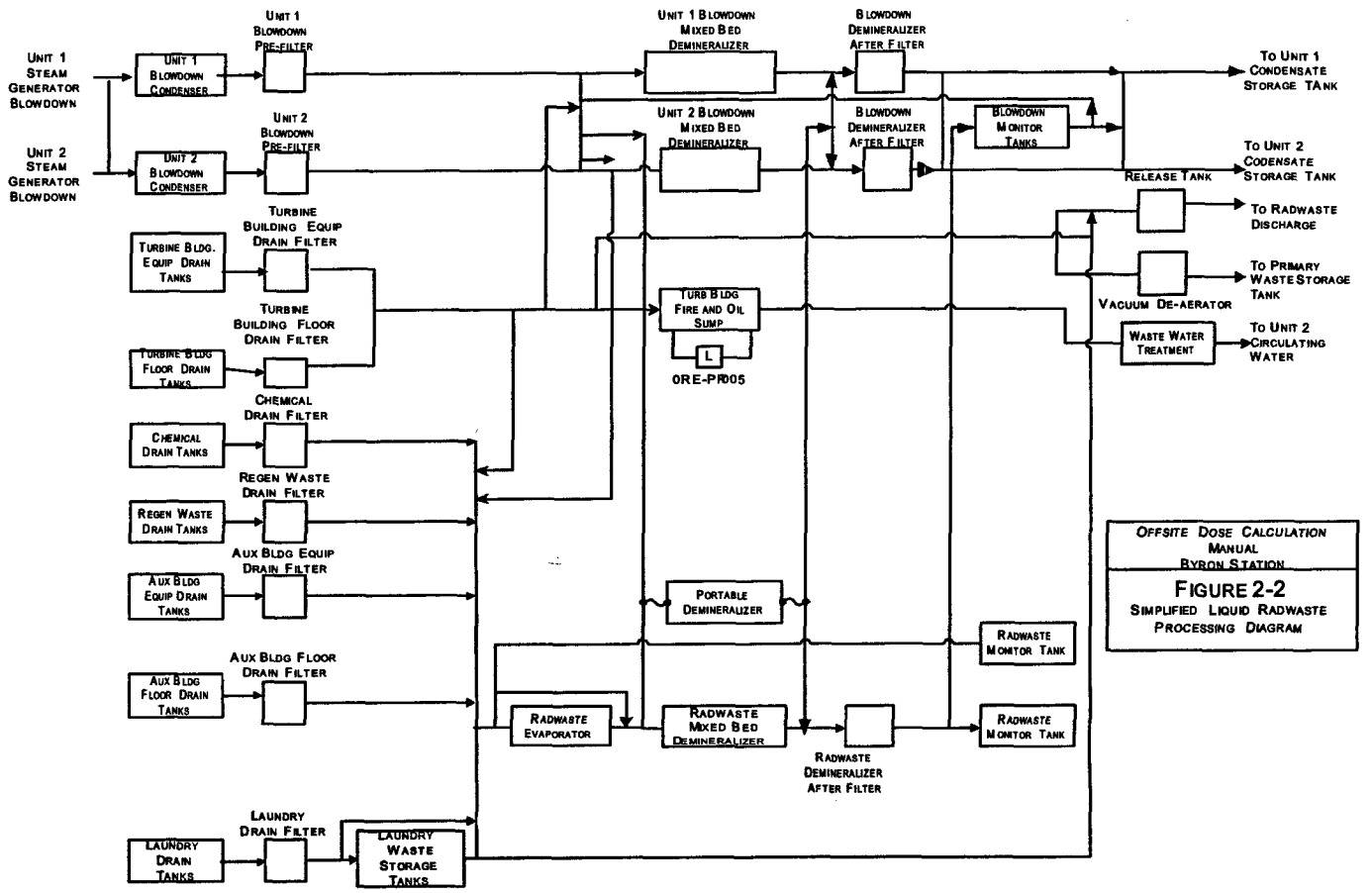

Figure 2-2 Simplified Liquid Radwaste Processing Diagram

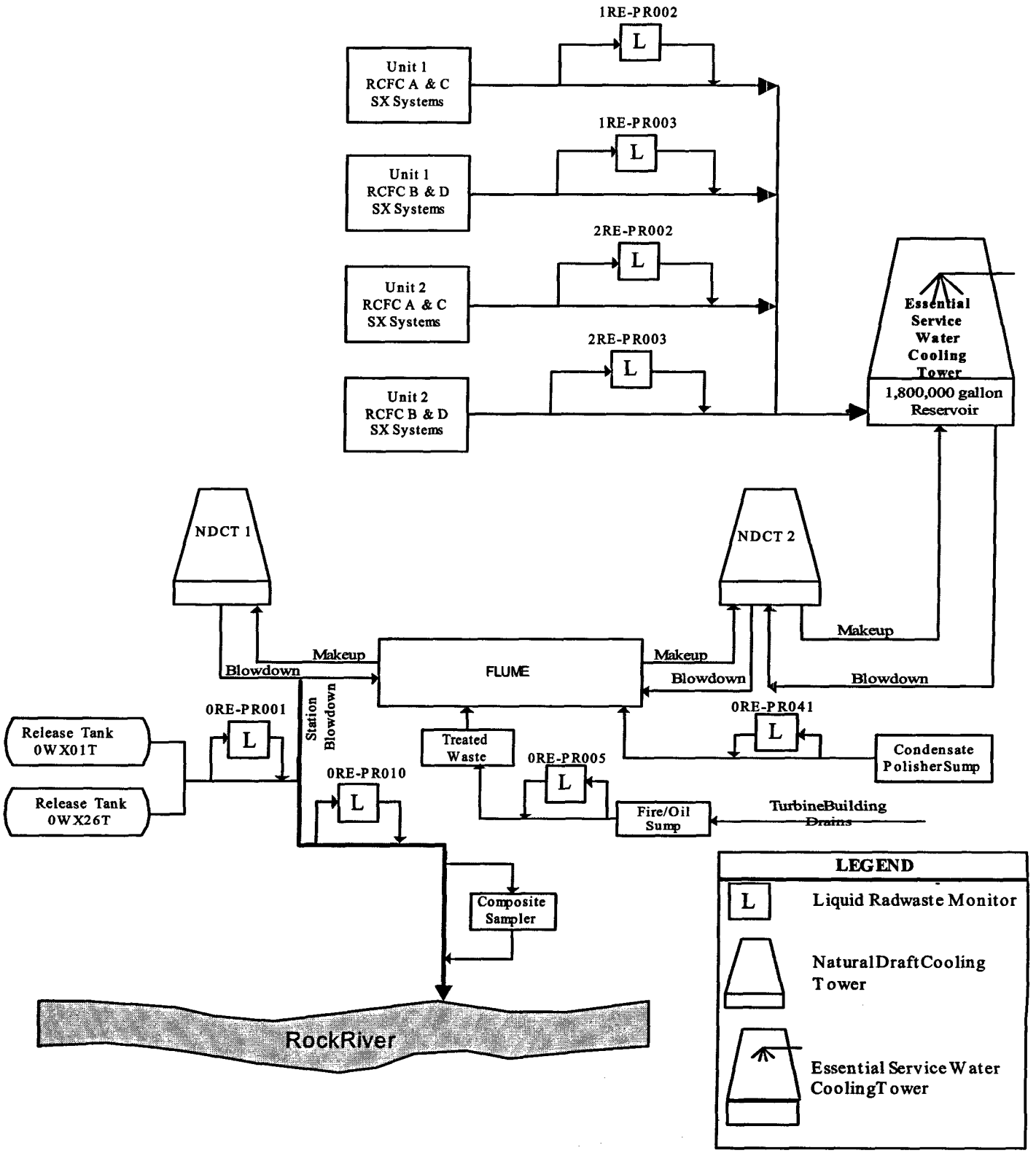

Figure 2-3 Liquid Release Flow Path

3.0 LIQUID EFFLUENTS

3.1 Liquid Effluent Releases – General Information

3.1.1 The design objectives of 10CFR50, Appendix I and RECS provide the following limits on the dose to a member of the public from radioactive materials in liquid effluents released from each reactor unit to restricted area boundaries:

- During any calendar quarter, less than or equal to 1.5 mrem to the total body and less than or equal to 5 mrem to any organ.
- During any calendar year, less than or equal to 3 mrem to the total body and less than or equal to 10 mrem to any organ.

3.1.2 The organ doses due to radioactivity in liquid effluents are also used as part of the 40CFR190 compliance and are included in the combination of doses to determine the total dose used to demonstrate 10CFR20 compliance. (See Section 5.0, Total Dose)

3.1.3 Dose assessments for 10CFR50 Appendix I compliance are made for four age groups (adult, teenager, child, infant) using NUREG 0133 (Reference 14) methodology and Regulatory Guide 1.109 (Reference 6) dose conversion factors.

3.1.4 To limit the consequences of tank overflow, Technical Specification 5.5.12 limits the quantity of radioactivity that may be stored in unprotected outdoor tanks to 10 Curies.

Unprotected tanks are tanks that are not surrounded by liners, dikes, or walls capable of holding the tank contents and that do not have tank overflows and surrounding area drains connected to the liquid radwaste treatment system.

The specific objective is to provide assurance that in the event of an uncontrolled release of a tank's contents, the resulting radioactivity concentrations beyond the unrestricted area boundary, at the nearest potable water supply and at the nearest surface water supply, will be less than the limits of 10CFR20 Appendix B, Table 2; Column 2.

3.1.5 Cases in which normally non-radioactive liquid streams (such as the Service Water) are found to contain radioactive material are non-routine will be treated on a case specific basis if and when this occurs. Since the station has sufficient capacity to delay a liquid release for reasonable periods of time, it is expected that planned

releases will not take place under these circumstances. Therefore, the liquid release setpoint calculations need not and do not contain provisions for treating multiple simultaneous release pathways.

3.1.6 Radioactive liquid effluents released from either release tank (0WX01T or 0WX26T) are comprised of contributions from both units. Under normal operating conditions, it is difficult to apportion the radioactivity between the units. Consequently, allocation is made evenly between units.

3.2 Liquid Effluent Concentrations

3.2.1 One method of demonstrating compliance to the requirements of 10CFR20.1301 is to demonstrate that the annual average concentrations of radioactive material released in gaseous and liquid effluents do not exceed the values specified in 10CFR20 Appendix B, Table 2, Column 2. (See 10CFR 20.1302(b)(2).) However, as noted in Section 5.5, this mode of 10CFR20.1301 compliance has not been elected.

As a means of assuring that annual concentration limits will not be exceeded, and as a matter of policy assuring that doses by the liquid pathway will be ALARA; RECS provides the following restriction:

> "The concentration of radioactive material released in liquid effluents to unrestricted areas shall be limited to ten times the concentration values in Appendix B, Table 2, Column 2 to 10CFR20.1001-20.2402."

This also meets the requirement of Station Technical Specifications and RECS.

3.2.2 According to the footnotes to 10CFR20 Appendix B, Table 2, Column 2, if a radionuclide mix of known composition is released, the concentrations must be such that

$$\sum_i \left(\frac{C_i}{10\ ECL_i} \right) \leq 1 \qquad \textbf{(3-1)}$$

where the summation is over radionuclide **i**.

C_i Radioactivity Concentration in Liquid Effluents to the Unrestricted Area [μCi/ml]

Concentration of radionuclide **i** in liquid released to the unrestricted area.

ECL_i Effluent Concentration Limit in Liquid Effluents Released to the Unrestricted Area [μCi/ml]

The allowable annual average concentration of radionuclide **i** in liquid effluents released to the unrestricted area. This concentration is specified in 10CFR20 Appendix B, Table 2, Column 2. Concentrations for noble gases are different and are specified in the stations' Technical Specifications and RECS.

10 Multiplier to meet the requirements of Technical Specifications.

If either the identity or concentration of any radionuclide in the mixture is not known, special rules apply. These are given in the footnotes in 10CFR20 Appendix B, Table 2, Column 2.

3.2.3 When radioactivity is released to the unrestricted area with liquid discharge from a tank (e.g., a radwaste discharge tank), the concentration of a radionuclide in the effluent is calculated as follows:

$$C_i = C_i^t \frac{\text{Waste Flow}}{\text{Dilution Flow}} \qquad (3\text{-}2)$$

C_i Concentration in Liquid effluent to the unrestricted area. [μCi/ml]

Concentration of radionuclide **i** in liquid released to the unrestricted area.

C_i^t Concentration in the Discharge Tank [μCi/ml]

Measured concentration of radionuclide **i** in the discharge tank.

The RECS and Technical Specifications require a specified sampling and analysis program to assure that liquid radioactivity concentrations at the point of release are maintained within the required limits. To comply with this provision, samples are analyzed in accordance with the radioactive liquid waste (or effluent) sampling and analysis program in the TRM 3.11.c. Radioactivity concentrations in tank effluents are determined in accordance with

Equation 3-2. Comparison with the Effluent Concentration Limit is made using Equation 3-1.

3.3 Liquid Effluent Dose Calculation Requirements

3.3.1 RECS require determination of cumulative and projected dose contributions from liquid effluents for the current calendar quarter and the current calendar year at least once per 31 days. (See TRM Chapter 3.II.)

For a release attributable to a processing or effluent system shared by more than one reactor unit, the dose due to an individual unit is obtained by proportioning the effluents among the units sharing the system. The allocation procedure is specified in section 3.1.6.

3.3.2 Operability and Use of the Liquid Radwaste Treatment System

The design objectives of 10CFR50, Appendix I, RECS and Technical Specifications require that the liquid radwaste treatment system be operable and that appropriate portions be used to reduce releases of radioactivity when projected doses due to the liquid effluent from each reactor unit to restricted area boundaries exceed either of the following (see TRM Chapter 3.II, RECS);

- 0.06 mrem to the total body in a 31-day period.
- 0.2 mrem to any organ in a 31-day period.

3.4 Dose Methodology

3.4.1 Liquid Effluent Dose Method: General

The dose from radioactive materials in liquid effluents considers the contributions for consumption of fish and potable water. All of these pathways are considered in the dose assessment unless demonstrated not to be present. While the adult is normally considered the maximum individual, the methodology provides for dose to be calculated for all four age groups. The dose to each organ (and to the total body) is calculated by the following expression:

$$D_{aj}^{Liq} = F\,\Delta t \sum_{p}\sum_{i} A_{aipj} C_i \qquad \textbf{(3-3)}$$

The summation is over exposure pathways **p** and radionuclides **i**.

D_{aj}^{Liq} Organ and Total Body Dose Due to Liquid Effluents [mrem]

Dose to organ **j** (including total body) of age group **a** due to radioactivity in liquid effluents.

F Near Field Average Dilution Factor [dimensionless]
Dilution in the near field averaged over the period of interest.

Defined as:

$$F = \frac{\textbf{Waste Flow}}{\textbf{Dilution Flow} \times Z} \qquad \textbf{(3-4)}$$

Waste Flow Liquid Radioactive Waste Flow [gpm]

The average flow during disposal from the discharge structure release point into the receiving water body.

Dilution Flow Dilution Water Flow During Period of Interest [gpm]

Z Discharge Structure Mixing Factor [dimensionless]

Site-specific factor to account for the mixing effect of the discharge structure. The factor addresses the dilution that occurs in the near field between the discharge structure and the body of water containing the fish in the liquid ingestion pathway (See section 3.5.5.2).

Δt Duration of Release [hrs]

C_i Average Radionuclide Concentration [μCi/ml]

Average concentration of radionuclide **i**, in the undiluted liquid effluent during time period Δt.

A_{aipj} Site-Specific Liquid Dose Factor [(mrem/hr)/(μCi/ml)]

Site-specific dose factor for age group **a**, nuclide **i**, liquid pathway **p** and organ **j**. The pathways included are potable water and fish ingestion. A_{aipj} is defined for these pathways in the following sections. Values for A_{aipj} are provided in Part II Section 3.5 of this ODCM.

3.4.2 Potable Water Pathway

The site-specific potable water pathway dose factor is calculated by the following expression:

$$A_{ai(PW)j} = k_o \left\{ \frac{U_a^w}{D^w} \right\} DFL_{aij} \qquad \textbf{(3-5)}$$

Where:

$A_{ai(PW)j}$ Site-Specific Dose Factor for Potable Water Pathway [(mrem/hr)/(μCi/ml)]

Site-specific potable water ingestion dose factor for age group **a**, nuclide **i** and organ **j**.

k_o Conversion Constant (1.14E05) [(yr-pCi-ml)/(hr-μCi-l)]

Units constant to convert years to hours, pCi to μCi and liters to ml.

U_a^w Potable Water Consumption Rate [l/yr]

Potable water consumption rate for age group **a**. Taken from Table E-5 of Regulatory Guide 1.109.

D^w Potable Water Dilution Factor [dimensionless]

Dilution factor from the near field area within one-quarter mile of the release point to the potable water intake (See section 3.5.5.1).

DFL_{aij} Ingestion Dose Conversion Factor [mrem/pCi]

Ingestion dose conversion factor for age group **a**, nuclide **i** and organ **j**. Converts pCi ingested to mrem. Taken from Tables E-11 though E-14 of Regulatory Guide 1.109. The value for H-3 is taken from NUREG 4013 (Reference 107).

3.4.3 Fish Ingestion Pathway

The site-specific fish ingestion pathway dose factor is calculated by the following expression:

$$A_{ai(Fish)j} = k_o U_a^F BF_i DFL_{aij} \qquad \textbf{(3-6)}$$

Where:

$A_{ai(Fish)j}$ Site-Specific Dose Factor for Potable Water Pathway [(mrem/hr)/(μCi/ml)]

Site-specific fish ingestion dose factor for age group **a**, nuclide **i** and organ **j**.

U_a^F Fish Consumption Rate [kg/yr]

Fish consumption rate for age group **a**. Taken from Table E-5 of Regulatory Guide 1.109.

BF_i Bioaccumulation Factor [(pCi/kg)/(pCi/l)]

Bioaccumulation factor for nuclide **i** in fresh water fish. Taken from Table 3-8.

All other terms have been previously defined.

3.4.4 Offsite doses due to projected releases of radioactive materials in liquid effluents are calculated using Equation 3-3. Projected radionuclide release concentrations are used in place of measured concentrations, C_i.

3.5 Site Specific Dose Factors and Bioaccumulation Factors

3.5.1 There are no public potable water intakes on the Rock River downstream of the station.

3.5.2 There is no irrigation occurring on the Rock Rover downstream of the station.

3.5.3 Recreation includes one or more of the following: boating, water-skiing, swimming, and sport fishing.

3.5.4 According to Section 2.4.1.2 and Figure 2.4-5 of the Byron Environmental Report, there are four downstream dams on the Rock River within approximately 50 miles of the station one at Oregon, one at Dixon and two at Sterling.

3.5.5 Water and Fish Ingestion Parameters

3.5.5.1 $D^W = 10$ (potable water dilution factor, dimensionless)

3.5.5.2 Z = 32 (discharge structure mixing factor, dimensionless)

3.5.6 Site-specific dose factors for potable water consumption are shown in Table 3-1 for adult, Table 3-2 for teen, Table 3-3 for child, and Table 3-4 for infant age groups. These tables include dose factors for the bone, liver, total body, thyroid, kidney, lung, and GI (lower large intestines).

3.5.7 Site-specific dose factors for fish ingestion are shown in Table 3-5 for adult, Table 3-6 for teen, and Table 3-7 for child age groups. These tables include dose factors for the bone, liver, total body, thyroid, kidney, lung, and GI (lower large intestines).

Table 3-1

Site Specific Potable Water Dose Factors for Adult Age Group

Nuclide	Bone	Liver	T Body	Thyroid	Kidney	Lung	GI-LLI
H-3	0.00E+00	4.98E-01	4.98E-01	4.98E-01	4.98E-01	4.98E-01	4.98E-01
Na-24	1.41E+01	1.41E+01	1.41E+01	1.41E+01	1.41E+01	1.41E+01	1.41E+01
Cr-51	0.00E+00	0.00E+00	2.21E-02	1.32E-02	4.88E-03	2.94E-02	5.57E+00
Mn-54	0.00E+00	3.80E+01	7.26E+00	0.00E+00	1.13E+01	0.00E+00	1.17E+02
Mn-56	0.00E+00	9.57E-01	1.70E-01	0.00E+00	1.22E+00	0.00E+00	3.05E+01
Fe-55	2.29E+01	1.58E+01	3.69E+00	0.00E+00	0.00E+00	8.82E+00	9.07E+00
Fe-59	3.61E+01	8.49E+01	3.25E+01	0.00E+00	0.00E+00	2.37E+01	2.83E+02
Co-58	0.00E+00	6.20E+00	1.39E+01	0.00E+00	0.00E+00	0.00E+00	1.26E+02
Co-60	0.00E+00	1.78E+01	3.93E+01	0.00E+00	0.00E+00	0.00E+00	3.35E+02
Ni-63	1.08E+03	7.50E+01	3.63E+01	0.00E+00	0.00E+00	0.00E+00	1.56E+01
Ni-65	4.39E+00	5.71E-01	2.60E-01	0.00E+00	0.00E+00	0.00E+00	1.45E+01
Cu-64	0.00E+00	6.93E-01	3.25E-01	0.00E+00	1.75E+00	0.00E+00	5.91E+01
Zn-65	4.03E+01	1.28E+02	5.79E+01	0.00E+00	8.57E+01	0.00E+00	8.07E+01
Zn-69	8.57E-02	1.64E-01	1.14E-02	0.00E+00	1.07E-01	0.00E+00	2.46E-02
Br-83	0.00E+00	0.00E+00	3.35E-01	0.00E+00	0.00E+00	0.00E+00	4.82E-01
Br-84	0.00E+00	0.00E+00	4.34E-01	0.00E+00	0.00E+00	0.00E+00	3.40E-06
Br-85	0.00E+00	0.00E+00	1.78E-02	0.00E+00	0.00E+00	0.00E+00	0.00E+00
Rb-86	0.00E+00	1.76E+02	8.18E+01	0.00E+00	0.00E+00	0.00E+00	3.46E+01
Rb-88	0.00E+00	5.03E-01	2.67E-01	0.00E+00	0.00E+00	0.00E+00	6.96E-12
Rb-89	0.00E+00	3.34E-01	2.35E-01	0.00E+00	0.00E+00	0.00E+00	1.94E-14
Sr-89	2.56E+03	0.00E+00	7.36E+01	0.00E+00	0.00E+00	0.00E+00	4.11E+02
Sr-90	7.25E+04	0.00E+00	1.46E+03	0.00E+00	0.00E+00	0.00E+00	1.82E+03
Sr-91	4.72E+01	0.00E+00	1.91E+00	0.00E+00	0.00E+00	0.00E+00	2.25E+02
Sr-92	1.79E+01	0.00E+00	7.74E-01	0.00E+00	0.00E+00	0.00E+00	3.55E+02
Y-90	8.01E-02	0.00E+00	2.15E-03	0.00E+00	0.00E+00	0.00E+00	8.49E+02
Y-91M	7.56E-04	0.00E+00	2.93E-05	0.00E+00	0.00E+00	0.00E+00	2.22E-03
Y-91	1.17E+00	0.00E+00	3.14E-02	0.00E+00	0.00E+00	0.00E+00	6.46E+02
Y-92	7.03E-03	0.00E+00	2.06E-04	0.00E+00	0.00E+00	0.00E+00	1.23E+02
Y-93	2.23E-02	0.00E+00	6.16E-04	0.00E+00	0.00E+00	0.00E+00	7.07E+02
Zr-95	2.53E-01	8.11E-02	5.49E-02	0.00E+00	1.27E-01	0.00E+00	2.57E+02
Zr-97	1.40E-02	2.82E-03	1.29E-03	0.00E+00	4.26E-03	0.00E+00	8.74E+02
Nb-95	5.18E-02	2.88E-02	1.55E-02	0.00E+00	2.85E-02	0.00E+00	1.75E+02
Mo-99	0.00E+00	3.59E+01	6.82E+00	0.00E+00	8.12E+01	0.00E+00	8.31E+01
Tc- 99M	2.06E-03	5.81E-03	7.40E-02	0.00E+00	8.82E-02	2.85E-03	3.44E+00
Tc-101	2.11E-03	3.05E-03	2.99E-02	0.00E+00	5.48E-02	1.56E-03	9.15E-15
Ru-103	1.54E+00	0.00E+00	6.63E-01	0.00E+00	5.88E+00	0.00E+00	1.80E+02
Ru-105	1.28E-01	0.00E+00	5.06E-02	0.00E+00	1.66E+00	0.00E+00	7.84E+01
Ru-106	2.29E+01	0.00E+00	2.90E+00	0.00E+00	4.42E+01	0.00E+00	1.48E+03
Ag-110M	1.33E+00	1.23E+00	7.32E-01	0.00E+00	2.42E+00	0.00E+00	5.03E+02
Te-125M	2.23E+01	8.08E+00	2.99E+00	6.71E+00	9.07E+01	0.00E+00	8.90E+01

Table 3-1 (continued)
Site Specific Potable Water Dose Factors for Adult Age Group

Nuclide	Bone	Liver	T Body	Thyroid	Kidney	Lung	GI-LLI
Te-127M	5.63E+01	2.01E+01	6.87E+00	1.44E+01	2.29E+02	0.00E+00	1.89E+02
Te-127	9.15E-01	3.29E-01	1.98E-01	6.78E-01	3.73E+00	0.00E+00	7.22E+01
Te-129M	9.57E+01	3.57E+01	1.51E+01	3.29E+01	3.99E+02	0.00E+00	4.82E+02
Te-129	2.61E-01	9.82E-02	6.37E-02	2.01E-01	1.10E+00	0.00E+00	1.97E-01
Te-131M	1.44E+01	7.04E+00	5.87E+00	1.12E+01	7.13E+01	0.00E+00	6.99E+02
Te-131	1.64E-01	6.85E-02	5.18E-02	1.35E-01	7.18E-01	0.00E+00	2.32E-02
Te-132	2.10E+01	1.36E+01	1.27E+01	1.50E+01	1.31E+02	0.00E+00	6.42E+02
I-130	6.29E+00	1.86E+01	7.32E+00	1.57E+03	2.90E+01	0.00E+00	1.60E+01
I-131	3.46E+01	4.95E+01	2.84E+01	1.62E+04	8.49E+01	0.00E+00	1.31E+01
I-132	1.69E+00	4.52E+00	1.58E+00	1.58E+02	7.20E+00	0.00E+00	8.49E-01
I-133	1.18E+01	2.06E+01	6.27E+00	3.02E+03	3.59E+01	0.00E+00	1.85E+01
I-134	8.82E-01	2.40E+00	8.57E-01	4.15E+01	3.81E+00	0.00E+00	2.09E-03
I-135	3.69E+00	9.65E+00	3.56E+00	6.37E+02	1.55E+01	0.00E+00	1.09E+01
Cs-134	5.18E+02	1.23E+03	1.01E+03	0.00E+00	3.99E+02	1.32E+02	2.16E+01
Cs-136	5.42E+01	2.14E+02	1.54E+02	0.00E+00	1.19E+02	1.63E+01	2.43E+01
Cs-137	6.63E+02	9.07E+02	5.94E+02	0.00E+00	3.08E+02	1.02E+02	1.76E+01
Cs-138	4.59E-01	9.07E-01	4.49E-01	0.00E+00	6.67E-01	6.58E-02	3.87E-06
Ba-139	8.07E-01	5.75E-04	2.36E-02	0.00E+00	5.38E-04	3.26E-04	1.43E+00
Ba-140	1.69E+02	2.12E-01	1.11E+01	0.00E+00	7.22E-02	1.22E-01	3.48E+02
Ba-141	3.92E-01	2.96E-04	1.32E-02	0.00E+00	2.75E-04	1.68E-04	1.85E-10
Ba-142	1.77E-01	1.82E-04	1.12E-02	0.00E+00	1.54E-04	1.03E-04	2.50E-19
La-140	2.08E-02	1.05E-02	2.77E-03	0.00E+00	0.00E+00	0.00E+00	7.70E+02
La-142	1.07E-03	4.84E-04	1.21E-04	0.00E+00	0.00E+00	0.00E+00	3.54E+00
Ce-141	7.79E-02	5.27E-02	5.98E-03	0.00E+00	2.45E-02	0.00E+00	2.01E+02
Ce-143	1.37E-02	1.02E+01	1.12E-03	0.00E+00	4.47E-03	0.00E+00	3.79E+02
Ce-144	4.06E+00	1.70E+00	2.18E-01	0.00E+00	1.01E+00	0.00E+00	1.37E+03
Pr-143	7.66E-02	3.07E-02	3.79E-03	0.00E+00	1.77E-02	0.00E+00	3.35E+02
Pr-144	2.50E-04	1.04E-04	1.27E-05	0.00E+00	5.87E-05	0.00E+00	3.60E-11
Nd-147	5.23E-02	6.05E-02	3.62E-03	0.00E+00	3.54E-02	0.00E+00	2.90E+02
W-187	8.57E-01	7.17E-01	2.50E-01	0.00E+00	0.00E+00	0.00E+00	2.35E+02
Np-239	9.90E-03	9.74E-04	5.37E-04	0.00E+00	3.04E-03	0.00E+00	2.00E+02

Notes:

1) Units are mrem/hr per μCi/ml.

Table 3-2

Site Specific Potable Water Dose Factors for Teen Age Group

Nuclide	Bone	Liver	T Body	Thyroid	Kidney	Lung	GI-LLI
H-3	0.00E+00	3.51E-01	3.51E-01	3.51E-01	3.51E-01	3.51E-01	3.51E-01
Na-24	1.34E+01	1.34E+01	1.34E+01	1.34E+01	1.34E+01	1.34E+01	1.34E+01
Cr-51	0.00E+00	0.00E+00	2.09E-02	1.16E-02	4.59E-03	2.99E-02	3.52E+00
Mn-54	0.00E+00	3.43E+01	6.80E+00	0.00E+00	1.02E+01	0.00E+00	7.03E+01
Mn-56	0.00E+00	9.19E-01	1.63E-01	0.00E+00	1.16E+00	0.00E+00	6.05E+01
Fe-55	2.20E+01	1.56E+01	3.63E+00	0.00E+00	0.00E+00	9.88E+00	6.74E+00
Fe-59	3.41E+01	7.97E+01	3.08E+01	0.00E+00	0.00E+00	2.51E+01	1.88E+02
Co-58	0.00E+00	5.65E+00	1.30E+01	0.00E+00	0.00E+00	0.00E+00	7.79E+01
Co-60	0.00E+00	1.63E+01	3.68E+01	0.00E+00	0.00E+00	0.00E+00	2.13E+02
Ni-63	1.03E+03	7.27E+01	3.49E+01	0.00E+00	0.00E+00	0.00E+00	1.16E+01
Ni-65	4.35E+00	5.56E-01	2.53E-01	0.00E+00	0.00E+00	0.00E+00	3.02E+01
Cu-64	0.00E+00	6.69E-01	3.15E-01	0.00E+00	1.69E+00	0.00E+00	5.19E+01
Zn-65	3.35E+01	1.16E+02	5.42E+01	0.00E+00	7.44E+01	0.00E+00	4.92E+01
Zn-69	8.55E-02	1.63E-01	1.14E-02	0.00E+00	1.06E-01	0.00E+00	3.00E-01
Br-83	0.00E+00	0.00E+00	3.34E-01	0.00E+00	0.00E+00	0.00E+00	0.00E+00
Br-84	0.00E+00	0.00E+00	4.20E-01	0.00E+00	0.00E+00	0.00E+00	0.00E+00
Br-85	0.00E+00	0.00E+00	1.77E-02	0.00E+00	0.00E+00	0.00E+00	0.00E+00
Rb-86	0.00E+00	1.73E+02	8.14E+01	0.00E+00	0.00E+00	0.00E+00	2.56E+01
Rb-88	0.00E+00	4.95E-01	2.64E-01	0.00E+00	0.00E+00	0.00E+00	4.24E-08
Rb-89	0.00E+00	3.20E-01	2.26E-01	0.00E+00	0.00E+00	0.00E+00	4.90E-10
Sr-89	2.56E+03	0.00E+00	7.33E+01	0.00E+00	0.00E+00	0.00E+00	3.05E+02
Sr-90	5.93E+04	0.00E+00	1.19E+03	0.00E+00	0.00E+00	0.00E+00	1.35E+03
Sr-91	4.69E+01	0.00E+00	1.87E+00	0.00E+00	0.00E+00	0.00E+00	2.13E+02
Sr-92	1.77E+01	0.00E+00	7.56E-01	0.00E+00	0.00E+00	0.00E+00	4.52E+02
Y-90	7.97E-02	0.00E+00	2.15E-03	0.00E+00	0.00E+00	0.00E+00	6.57E+02
Y-91M	7.50E-04	0.00E+00	2.87E-05	0.00E+00	0.00E+00	0.00E+00	3.54E-02
Y-91	1.17E+00	0.00E+00	3.13E-02	0.00E+00	0.00E+00	0.00E+00	4.79E+02
Y-92	7.03E-03	0.00E+00	2.03E-04	0.00E+00	0.00E+00	0.00E+00	1.93E+02
Y-93	2.23E-02	0.00E+00	6.10E-04	0.00E+00	0.00E+00	0.00E+00	6.80E+02
Zr-95	2.40E-01	7.56E-02	5.20E-02	0.00E+00	1.11E-01	0.00E+00	1.74E+02
Zr-97	1.38E-02	2.73E-03	1.26E-03	0.00E+00	4.13E-03	0.00E+00	7.38E+02
Nb-95	4.78E-02	2.65E-02	1.46E-02	0.00E+00	2.57E-02	0.00E+00	1.13E+02
Mo-99	0.00E+00	3.51E+01	6.69E+00	0.00E+00	8.02E+01	0.00E+00	6.28E+01
Tc- 99M	1.93E-03	5.38E-03	6.98E-02	0.00E+00	8.02E-02	2.99E-03	3.53E+00
Tc-101	2.09E-03	2.98E-03	2.92E-02	0.00E+00	5.38E-02	1.81E-03	5.09E-10
Ru-103	1.48E+00	0.00E+00	6.34E-01	0.00E+00	5.23E+00	0.00E+00	1.24E+02
Ru-105	1.27E-01	0.00E+00	4.92E-02	0.00E+00	1.60E+00	0.00E+00	1.02E+02
Ru-106	2.28E+01	0.00E+00	2.87E+00	0.00E+00	4.40E+01	0.00E+00	1.09E+03
Ag-110M	1.19E+00	1.13E+00	6.86E-01	0.00E+00	2.15E+00	0.00E+00	3.17E+02
Te-125M	2.23E+01	8.02E+00	2.98E+00	6.22E+00	0.00E+00	0.00E+00	6.57E+01

Table 3-2 (continued)
Site Specific Potable Water Dose Factors for Teen Age Group

Nuclide	Bone	Liver	T Body	Thyroid	Kidney	Lung	GI-LLI
Te-127M	5.62E+01	1.99E+01	6.69E+00	1.34E+01	2.28E+02	0.00E+00	1.40E+02
Te-127	9.19E-01	3.26E-01	1.98E-01	6.34E-01	3.72E+00	0.00E+00	7.09E+01
Te-129M	9.48E+01	3.52E+01	1.50E+01	3.06E+01	3.97E+02	0.00E+00	3.56E+02
Te-129	2.60E-01	9.71E-02	6.34E-02	1.86E-01	1.09E+00	0.00E+00	1.42E+00
Te-131M	1.42E+01	6.80E+00	5.67E+00	1.02E+01	7.09E+01	0.00E+00	5.46E+02
Te-131	1.62E-01	6.69E-02	5.07E-02	1.25E-01	7.09E-01	0.00E+00	1.33E-02
Te-132	2.03E+01	1.28E+01	1.21E+01	1.35E+01	1.23E+02	0.00E+00	4.07E+02
I-130	5.99E+00	1.73E+01	6.92E+00	1.41E+03	2.67E+01	0.00E+00	1.33E+01
I-131	3.40E+01	4.76E+01	2.56E+01	1.39E+04	8.20E+01	0.00E+00	9.42E+00
I-132	1.62E+00	4.24E+00	1.52E+00	1.43E+02	6.69E+00	0.00E+00	1.85E+00
I-133	1.17E+01	1.98E+01	6.05E+00	2.77E+03	3.48E+01	0.00E+00	1.50E+01
I-134	8.49E-01	2.25E+00	8.08E-01	3.75E+01	3.55E+00	0.00E+00	2.97E-02
I-135	3.55E+00	9.13E+00	3.38E+00	5.87E+02	1.44E+01	0.00E+00	1.01E+01
Cs-134	4.87E+02	1.15E+03	5.31E+02	0.00E+00	3.64E+02	1.39E+02	1.42E+01
Cs-136	4.99E+01	1.97E+02	1.32E+02	0.00E+00	1.07E+02	1.69E+01	1.58E+01
Cs-137	6.51E+02	8.66E+02	3.02E+02	0.00E+00	2.95E+02	1.15E+02	1.23E+01
Cs-138	4.51E-01	8.66E-01	4.33E-01	0.00E+00	6.40E-01	7.44E-02	3.93E-04
Ba-139	8.08E-01	5.69E-04	2.35E-02	0.00E+00	5.36E-04	3.92E-04	7.21E+00
Ba-140	1.65E+02	2.02E-01	1.06E+01	0.00E+00	6.86E-02	1.36E-01	2.55E+02
Ba-141	3.90E-01	2.91E-04	1.30E-02	0.00E+00	2.70E-04	1.99E-04	8.31E-07
Ba-142	1.74E-01	1.74E-04	1.07E-02	0.00E+00	1.47E-04	1.16E-04	5.34E-13
La-140	2.02E-02	9.94E-03	2.65E-03	0.00E+00	0.00E+00	0.00E+00	5.71E+02
La-142	1.04E-03	4.62E-04	1.15E-04	0.00E+00	0.00E+00	0.00E+00	1.41E+01
Ce-141	7.73E-02	5.16E-02	5.93E-03	0.00E+00	2.43E-02	0.00E+00	1.48E+02
Ce-143	1.37E-02	9.94E+00	1.11E-03	0.00E+00	4.46E-03	0.00E+00	2.99E+02
Ce-144	4.05E+00	1.67E+00	2.17E-01	0.00E+00	1.00E+00	0.00E+00	1.02E+03
Pr-143	7.62E-02	3.04E-02	3.79E-03	0.00E+00	1.77E-02	0.00E+00	2.51E+02
Pr-144	2.50E-04	1.02E-04	1.27E-05	0.00E+00	5.87E-05	0.00E+00	2.76E-07
Nd-147	5.45E-02	5.93E-02	3.55E-03	0.00E+00	3.48E-02	0.00E+00	2.14E+02
W-187	8.49E-01	6.92E-01	2.42E-01	0.00E+00	0.00E+00	0.00E+00	1.87E+02
Np-239	1.02E-02	9.65E-04	5.36E-04	0.00E+00	3.03E-03	0.00E+00	1.55E+02

Notes:

1) Units are mrem/hr per μCi/ml.

Table 3-3

Site Specific Potable Water Dose Factors for Child Age Group

Nuclide	Bone	Liver	T Body	Thyroid	Kidney	Lung	GI-LLI
H-3	0.00E+00	6.74E-01	6.74E-01	6.74E-01	6.74E-01	6.74E-01	6.74E-01
Na-24	3.37E+01	3.37E+01	3.37E+01	3.37E+01	3.37E+01	3.37E+01	3.37E+01
Cr-51	0.00E+00	0.00E+00	5.17E-02	2.87E-02	7.85E-03	5.24E-02	2.74E+00
Mn-54	0.00E+00	6.22E+01	1.66E+01	0.00E+00	1.74E+01	0.00E+00	5.22E+01
Mn-56	0.00E+00	1.94E+00	4.38E-01	0.00E+00	2.35E+00	0.00E+00	2.81E+02
Fe-55	6.69E+01	3.55E+01	1.10E+01	0.00E+00	0.00E+00	2.01E+01	6.57E+00
Fe-59	9.59E+01	1.55E+02	7.73E+01	0.00E+00	0.00E+00	4.50E+01	1.62E+02
Co-58	0.00E+00	1.05E+01	3.20E+01	0.00E+00	0.00E+00	0.00E+00	6.10E+01
Co-60	0.00E+00	3.08E+01	9.07E+01	0.00E+00	0.00E+00	0.00E+00	1.70E+02
Ni-63	3.13E+03	1.67E+02	1.06E+02	0.00E+00	0.00E+00	0.00E+00	1.13E+01
Ni-65	1.29E+01	1.22E+00	7.09E-01	0.00E+00	0.00E+00	0.00E+00	1.49E+02
Cu-64	0.00E+00	1.42E+00	8.60E-01	0.00E+00	3.44E+00	0.00E+00	6.69E+01
Zn-65	7.97E+01	2.12E+02	1.32E+02	0.00E+00	1.34E+02	0.00E+00	3.73E+01
Zn-69	2.55E-01	3.68E-01	3.40E-02	0.00E+00	2.23E-01	0.00E+00	2.32E+01
Br-83	0.00E+00	0.00E+00	9.94E-01	0.00E+00	0.00E+00	0.00E+00	0.00E+00
Br-84	0.00E+00	0.00E+00	1.15E+00	0.00E+00	0.00E+00	0.00E+00	0.00E+00
Br-85	0.00E+00	0.00E+00	5.30E-02	0.00E+00	0.00E+00	0.00E+00	0.00E+00
Rb-86	0.00E+00	3.90E+02	2.40E+02	0.00E+00	0.00E+00	0.00E+00	2.51E+01
Rb-88	0.00E+00	1.10E+00	7.67E-01	0.00E+00	0.00E+00	0.00E+00	5.42E-02
Rb-89	0.00E+00	6.80E-01	6.05E-01	0.00E+00	0.00E+00	0.00E+00	5.93E-03
Sr-89	7.67E+03	0.00E+00	2.19E+02	0.00E+00	0.00E+00	0.00E+00	2.97E+02
Sr-90	1.49E+05	0.00E+00	2.99E+03	0.00E+00	0.00E+00	0.00E+00	1.33E+03
Sr-91	1.40E+02	0.00E+00	5.27E+00	0.00E+00	0.00E+00	0.00E+00	3.08E+02
Sr-92	5.25E+01	0.00E+00	2.10E+00	0.00E+00	0.00E+00	0.00E+00	9.94E+02
Y-90	2.39E-01	0.00E+00	6.40E-03	0.00E+00	0.00E+00	0.00E+00	6.80E+02
Y-91M	2.22E-03	0.00E+00	8.08E-05	0.00E+00	0.00E+00	0.00E+00	4.35E+00
Y-91	3.50E+00	0.00E+00	9.36E-02	0.00E+00	0.00E+00	0.00E+00	4.66E+02
Y-92	2.09E-02	0.00E+00	5.99E-04	0.00E+00	0.00E+00	0.00E+00	6.05E+02
Y-93	6.63E-02	0.00E+00	1.82E-03	0.00E+00	0.00E+00	0.00E+00	9.88E+02
Zr-95	6.74E-01	1.48E-01	1.32E-01	0.00E+00	2.12E-01	0.00E+00	1.55E+02
Zr-97	4.06E-02	5.87E-03	3.47E-03	0.00E+00	8.43E-03	0.00E+00	8.90E+02
Nb-95	1.31E-01	5.09E-02	3.64E-02	0.00E+00	4.78E-02	0.00E+00	9.42E+01
Mo-99	0.00E+00	7.73E+01	1.91E+01	0.00E+00	1.65E+02	0.00E+00	6.40E+01
Tc- 99M	5.37E-03	1.05E-02	1.74E-01	0.00E+00	1.53E-01	5.34E-03	5.99E+00
Tc-101	6.22E-03	6.51E-03	8.26E-02	0.00E+00	1.11E-01	3.44E-03	2.07E-02
Ru-103	4.25E+00	0.00E+00	1.63E+00	0.00E+00	1.07E+01	0.00E+00	1.10E+02
Ru-105	3.75E-01	0.00E+00	1.36E-01	0.00E+00	3.30E+00	0.00E+00	2.45E+02
Ru-106	6.80E+01	0.00E+00	8.49E+00	0.00E+00	9.19E+01	0.00E+00	1.06E+03
Ag-110M	3.13E+00	2.12E+00	1.69E+00	0.00E+00	3.94E+00	0.00E+00	2.52E+02
Te-125M	6.63E+01	1.80E+01	8.84E+00	1.86E+01	0.00E+00	0.00E+00	6.40E+01

Table 3-3 (continued)
Site Specific Potable Water Dose Factors for Child Age Group

Nuclide	Bone	Liver	T Body	Thyroid	Kidney	Lung	GI-LLI
Te-127M	1.68E+02	4.52E+01	1.99E+01	4.02E+01	4.79E+02	0.00E+00	1.36E+02
Te-127	2.74E+00	7.38E-01	5.87E-01	1.90E+00	7.79E+00	0.00E+00	1.07E+02
Te-129M	2.83E+02	7.91E+01	4.40E+01	9.13E+01	8.31E+02	0.00E+00	3.45E+02
Te-129	7.79E-01	2.17E-01	1.85E-01	5.56E-01	2.28E+00	0.00E+00	4.85E+01
Te-131M	4.19E+01	1.45E+01	1.54E+01	2.98E+01	1.40E+02	0.00E+00	5.87E+02
Te-131	4.83E-01	1.47E-01	1.44E-01	3.69E-01	1.46E+00	0.00E+00	2.53E+00
Te-132	5.87E+01	2.60E+01	3.14E+01	3.78E+01	2.41E+02	0.00E+00	2.62E+02
I-130	1.70E+01	3.43E+01	1.77E+01	3.78E+03	5.13E+01	0.00E+00	1.60E+01
I-131	1.00E+02	1.01E+02	5.72E+01	3.33E+04	1.65E+02	0.00E+00	8.95E+00
I-132	4.65E+00	8.55E+00	3.93E+00	3.97E+02	1.31E+01	0.00E+00	1.01E+01
I-133	3.44E+01	4.26E+01	1.61E+01	7.91E+03	7.09E+01	0.00E+00	1.72E+01
I-134	2.44E+00	4.52E+00	2.08E+00	1.04E+02	6.92E+00	0.00E+00	3.00E+00
I-135	1.02E+01	1.83E+01	8.66E+00	1.62E+03	2.81E+01	0.00E+00	1.40E+01
Cs-134	1.36E+03	2.23E+03	4.71E+02	0.00E+00	6.92E+02	2.48E+02	1.20E+01
Cs-136	1.37E+02	3.76E+02	2.43E+02	0.00E+00	2.00E+02	2.98E+01	1.32E+01
Cs-137	1.90E+03	1.82E+03	2.69E+02	0.00E+00	5.93E+02	2.13E+02	1.14E+01
Cs-138	1.33E+00	1.84E+00	1.17E+00	0.00E+00	1.30E+00	1.40E-01	8.49E-01
Ba-139	2.41E+00	1.28E-03	6.98E-02	0.00E+00	1.12E-03	7.56E-04	1.39E+02
Ba-140	4.83E+02	4.23E-01	2.82E+01	0.00E+00	1.38E-01	2.52E-01	2.45E+02
Ba-141	1.16E+00	6.51E-04	3.78E-02	0.00E+00	5.63E-04	3.83E-03	6.63E-01
Ba-142	5.08E-01	3.66E-04	2.84E-02	0.00E+00	2.96E-04	2.15E-04	6.63E-03
La-140	5.87E-02	2.05E-02	6.92E-03	0.00E+00	0.00E+00	0.00E+00	5.72E+02
La-142	3.05E-03	9.71E-04	3.04E-04	0.00E+00	0.00E+00	0.00E+00	1.92E+02
Ce-141	2.31E-01	1.15E-01	1.71E-02	0.00E+00	5.05E-02	0.00E+00	1.44E+02
Ce-143	4.06E-02	2.20E+01	3.19E-03	0.00E+00	9.24E-03	0.00E+00	3.23E+02
Ce-144	1.21E+01	3.79E+00	6.45E-01	0.00E+00	2.10E+00	0.00E+00	9.88E+02
Pr-143	2.28E-01	6.86E-02	1.13E-02	0.00E+00	3.72E-02	0.00E+00	2.47E+02
Pr-144	7.50E-04	2.32E-04	3.77E-05	0.00E+00	1.23E-04	0.00E+00	4.99E-01
Nd-147	1.62E-01	1.31E-01	1.02E-02	0.00E+00	7.21E-02	0.00E+00	2.08E+02
W-187	2.49E+00	1.48E+00	6.63E-01	0.00E+00	0.00E+00	0.00E+00	2.08E+02
Np-239	3.05E-02	2.19E-03	1.54E-03	0.00E+00	6.34E-03	0.00E+00	1.62E+02

Notes:

1) Units are mrem/hr per μCi/ml.

Table 3-4

Site Specific Potable Water Dose Factors for Infant Age Group

Nuclide	Bone	Liver	T Body	Thyroid	Kidney	Lung	GI-LLI
H-3	0.00E+00	6.62E-01	6.62E-01	6.62E-01	6.62E-01	6.62E-01	6.62E-01
Na-24	3.80E+01	3.80E+01	3.80E+01	3.80E+01	3.80E+01	3.80E+01	3.80E+01
Cr-51	0.00E+00	0.00E+00	5.30E-02	3.46E-02	7.56E-03	6.73E-02	1.55E+00
Mn-54	0.00E+00	7.49E+01	1.70E+01	0.00E+00	1.66E+01	0.00E+00	2.75E+01
Mn-56	0.00E+00	3.08E+00	5.30E-01	0.00E+00	2.64E+00	0.00E+00	2.80E+02
Fe-55	5.23E+01	3.38E+01	9.03E+00	0.00E+00	0.00E+00	1.65E+01	4.29E+00
Fe-59	1.16E+02	2.02E+02	7.98E+01	0.00E+00	0.00E+00	5.98E+01	9.67E+01
Co-58	0.00E+00	1.35E+01	3.38E+01	0.00E+00	0.00E+00	0.00E+00	3.37E+01
Co-60	0.00E+00	4.06E+01	9.59E+01	0.00E+00	0.00E+00	0.00E+00	9.67E+01
Ni-63	2.39E+03	1.47E+02	8.28E+01	0.00E+00	0.00E+00	0.00E+00	7.34E+00
Ni-65	1.77E+01	2.00E+00	9.10E-01	0.00E+00	0.00E+00	0.00E+00	1.52E+02
Cu-64	0.00E+00	2.29E+00	1.06E+00	0.00E+00	3.87E+00	0.00E+00	4.70E+01
Zn-65	6.92E+01	2.37E+02	1.09E+02	0.00E+00	1.15E+02	0.00E+00	2.01E+02
Zn-69	3.51E-01	6.32E-01	4.70E-02	0.00E+00	2.63E-01	0.00E+00	5.15E+01
Br-83	0.00E+00	0.00E+00	1.37E+00	0.00E+00	0.00E+00	0.00E+00	0.00E+00
Br-84	0.00E+00	0.00E+00	1.44E+00	0.00E+00	0.00E+00	0.00E+00	0.00E+00
Br-85	0.00E+00	0.00E+00	7.30E-02	0.00E+00	0.00E+00	0.00E+00	0.00E+00
Rb-86	0.00E+00	6.40E+02	3.16E+02	0.00E+00	0.00E+00	0.00E+00	1.64E+01
Rb-88	0.00E+00	1.87E+00	1.03E+00	0.00E+00	0.00E+00	0.00E+00	1.82E+00
Rb-89	0.00E+00	1.08E+00	7.41E-01	0.00E+00	0.00E+00	0.00E+00	3.66E-01
Sr-89	9.44E+03	0.00E+00	2.71E+02	0.00E+00	0.00E+00	0.00E+00	1.94E+02
Sr-90	1.06E+05	0.00E+00	2.16E+03	0.00E+00	0.00E+00	0.00E+00	8.69E+02
Sr-91	1.88E+02	0.00E+00	6.81E+00	0.00E+00	0.00E+00	0.00E+00	2.23E+02
Sr-92	7.22E+01	0.00E+00	2.68E+00	0.00E+00	0.00E+00	0.00E+00	7.79E+02
Y-90	3.27E-01	0.00E+00	8.77E-03	0.00E+00	0.00E+00	0.00E+00	4.51E+02
Y-91M	3.05E-03	0.00E+00	1.04E-04	0.00E+00	0.00E+00	0.00E+00	1.02E+01
Y-91	4.25E+00	0.00E+00	1.13E-01	0.00E+00	0.00E+00	0.00E+00	3.05E+02
Y-92	2.88E-02	0.00E+00	8.09E-04	0.00E+00	0.00E+00	0.00E+00	5.49E+02
Y-93	9.14E-02	0.00E+00	2.49E-03	0.00E+00	0.00E+00	0.00E+00	7.22E+02
Zr-95	7.75E-01	1.89E-01	1.34E-01	0.00E+00	2.04E-01	0.00E+00	9.41E+01
Zr-97	5.57E-02	9.56E-03	4.36E-03	0.00E+00	9.63E-03	0.00E+00	6.09E+02
Nb-95	1.58E-01	6.51E-02	3.76E-02	0.00E+00	4.66E-02	0.00E+00	5.49E+01
Mo-99	0.00E+00	1.28E+02	2.49E+01	0.00E+00	1.91E+02	0.00E+00	4.21E+01
Tc- 99M	7.22E-03	1.49E-02	1.92E-01	0.00E+00	1.60E-01	7.79E-03	4.33E+00
Tc-101	8.54E-03	1.08E-02	1.06E-01	0.00E+00	1.28E-01	5.87E-03	1.83E+00
Ru-103	5.57E+00	0.00E+00	1.86E+00	0.00E+00	1.16E+01	0.00E+00	6.77E+01
Ru-105	5.12E-01	0.00E+00	1.72E-01	0.00E+00	3.76E+00	0.00E+00	2.04E+02
Ru-106	9.07E+01	0.00E+00	1.13E+01	0.00E+00	1.07E+02	0.00E+00	6.88E+02
Ag-110M	3.75E+00	2.73E+00	1.81E+00	0.00E+00	3.91E+00	0.00E+00	1.42E+02
Te-125M	8.77E+01	2.93E+01	1.19E+01	2.95E+01	0.00E+00	0.00E+00	4.18E+01

Table 3-4 (continued)
Site Specific Potable Water Dose Factors for Infant Age Group

Nuclide	Bone	Liver	T Body	Thyroid	Kidney	Lung	GI-LLI
Te-127M	2.20E+02	7.30E+01	2.66E+01	6.36E+01	5.42E+02	0.00E+00	8.88E+01
Te-127	3.76E+00	1.26E+00	8.09E-01	3.06E+00	9.18E+00	0.00E+00	7.90E+01
Te-129M	3.76E+02	1.29E+02	5.79E+01	1.44E+02	9.41E+02	0.00E+00	2.25E+02
Te-129	1.07E+00	3.68E-01	2.49E-01	8.95E-01	2.66E+00	0.00E+00	8.54E+01
Te-131M	5.72E+01	2.30E+01	1.90E+01	4.66E+01	1.58E+02	0.00E+00	3.87E+02
Te-131	6.62E-01	2.45E-01	1.86E-01	5.91E-01	1.69E+00	0.00E+00	2.67E+01
Te-132	7.82E+01	3.87E+01	3.62E+01	5.72E+01	2.42E+02	0.00E+00	1.43E+02
I-130	2.26E+01	4.97E+01	1.99E+01	5.57E+03	5.45E+01	0.00E+00	1.06E+01
I-131	1.35E+02	1.59E+02	7.00E+01	5.23E+04	1.86E+02	0.00E+00	5.68E+00
I-132	6.24E+00	1.27E+01	4.51E+00	5.94E+02	1.41E+01	0.00E+00	1.03E+01
I-133	4.70E+01	6.85E+01	2.01E+01	1.25E+04	8.05E+01	0.00E+00	1.16E+01
I-134	3.27E+00	6.70E+00	2.38E+00	1.56E+02	7.49E+00	0.00E+00	6.92E+00
I-135	1.37E+01	2.72E+01	9.93E+00	2.44E+03	3.04E+01	0.00E+00	9.86E+00
Cs-134	1.42E+03	2.64E+03	2.67E+02	0.00E+00	6.81E+02	2.79E+02	7.19E+00
Cs-136	1.73E+02	5.08E+02	1.90E+02	0.00E+00	2.02E+02	4.14E+01	7.71E+00
Cs-137	1.96E+03	2.30E+03	1.63E+02	0.00E+00	6.17E+02	2.50E+02	7.19E+00
Cs-138	1.81E+00	2.94E+00	1.43E+00	0.00E+00	1.47E+00	2.29E-01	4.70E+00
Ba-139	3.31E+00	2.20E-03	9.59E-02	0.00E+00	1.32E-03	1.33E-03	2.10E+02
Ba-140	6.43E+02	6.43E-01	3.31E+01	0.00E+00	1.53E-01	3.95E-01	1.58E+02
Ba-141	1.60E+00	1.09E-03	5.04E-02	0.00E+00	6.58E-04	6.66E-04	1.95E+01
Ba-142	6.92E-01	5.76E-04	3.41E-02	0.00E+00	3.31E-04	3.48E-04	2.86E+00
La-140	7.94E-02	3.13E-02	8.05E-03	0.00E+00	0.00E+00	0.00E+00	3.68E+02
La-142	4.14E-03	1.52E-03	3.64E-04	0.00E+00	0.00E+00	0.00E+00	2.58E+02
Ce-141	2.96E-01	1.81E-01	2.13E-02	0.00E+00	5.57E-02	0.00E+00	9.33E+01
Ce-143	5.57E-02	3.69E+01	4.21E-03	0.00E+00	1.08E-02	0.00E+00	2.16E+02
Ce-144	1.12E+01	4.59E+00	6.28E-01	0.00E+00	1.85E+00	0.00E+00	6.43E+02
Pr-143	3.06E-01	1.14E-01	1.52E-02	0.00E+00	4.25E-02	0.00E+00	1.61E+02
Pr-144	1.03E-03	3.99E-04	5.19E-05	0.00E+00	1.44E-04	0.00E+00	1.85E+01
Nd-147	2.08E-01	2.14E-01	1.31E-02	0.00E+00	8.24E-02	0.00E+00	1.35E+02
W-187	3.40E+00	2.36E+00	8.16E-01	0.00E+00	0.00E+00	0.00E+00	1.39E+02
Np-239	4.18E-02	3.74E-03	2.11E-03	0.00E+00	7.45E-03	0.00E+00	1.08E+02

Notes:

1) Units are mrem/hr per µCi/ml.

Table 3-5
Site Specific Fish Ingestion Dose Factors for Adult Age Group

Nuclide	Bone	Liver	T Body	Thyroid	Kidney	Lung	GI-LLI
H-3	0.00E+00	1.29E-01	1.29E-01	1.29E-01	1.29E-01	1.29E-01	1.29E-01
Na-24	4.07E+02	4.07E+02	4.07E+02	4.07E+02	4.07E+02	4.07E+02	4.07E+02
Cr-51	0.00E+00	0.00E+00	1.27E+00	7.61E-01	2.81E-01	1.69E+00	3.20E+02
Mn-54	0.00E+00	4.38E+03	8.35E+02	0.00E+00	1.30E+03	0.00E+00	1.34E+04
Mn-56	0.00E+00	1.10E+02	1.95E+01	0.00E+00	1.40E+02	0.00E+00	3.51E+03
Fe-55	6.58E+02	4.55E+02	1.06E+02	0.00E+00	0.00E+00	2.54E+02	2.61E+02
Fe-59	1.04E+03	2.44E+03	9.36E+02	0.00E+00	0.00E+00	6.82E+02	8.14E+03
Co-58	0.00E+00	8.92E+01	2.00E+02	0.00E+00	0.00E+00	0.00E+00	1.81E+03
Co-60	0.00E+00	2.56E+02	5.65E+02	0.00E+00	0.00E+00	0.00E+00	4.81E+03
Ni-63	3.11E+04	2.16E+03	1.04E+03	0.00E+00	0.00E+00	0.00E+00	4.50E+02
Ni-65	1.26E+02	1.64E+01	7.49E+00	0.00E+00	0.00E+00	0.00E+00	4.17E+02
Cu-64	0.00E+00	9.97E+00	4.68E+00	0.00E+00	2.51E+01	0.00E+00	8.50E+02
Zn-65	2.32E+04	7.37E+04	3.33E+04	0.00E+00	4.93E+04	0.00E+00	4.64E+04
Zn-69	4.93E+01	9.43E+01	6.56E+00	0.00E+00	6.13E+01	0.00E+00	1.42E+01
Br-83	0.00E+00	0.00E+00	4.04E+01	0.00E+00	0.00E+00	0.00E+00	5.82E+01
Br-84	0.00E+00	0.00E+00	5.24E+01	0.00E+00	0.00E+00	0.00E+00	4.11E-04
Br-85	0.00E+00	0.00E+00	2.15E+00	0.00E+00	0.00E+00	0.00E+00	0.00E+00
Rb-86	0.00E+00	1.01E+05	4.71E+04	0.00E+00	0.00E+00	0.00E+00	1.99E+04
Rb-88	0.00E+00	2.90E+02	1.54E+02	0.00E+00	0.00E+00	0.00E+00	4.00E-09
Rb-89	0.00E+00	1.92E+02	1.35E+02	0.00E+00	0.00E+00	0.00E+00	1.12E-11
Sr-89	2.21E+04	0.00E+00	6.35E+02	0.00E+00	0.00E+00	0.00E+00	3.55E+03
Sr-90	6.26E+05	0.00E+00	1.26E+04	0.00E+00	0.00E+00	0.00E+00	1.57E+04
Sr-91	4.07E+02	0.00E+00	1.64E+01	0.00E+00	0.00E+00	0.00E+00	1.94E+03
Sr-92	1.54E+02	0.00E+00	6.68E+00	0.00E+00	0.00E+00	0.00E+00	3.06E+03
Y-90	5.76E-01	0.00E+00	1.54E-02	0.00E+00	0.00E+00	0.00E+00	6.10E+03
Y-91M	5.44E-03	0.00E+00	2.11E-04	0.00E+00	0.00E+00	0.00E+00	1.60E-02
Y-91	8.44E+00	0.00E+00	2.26E-01	0.00E+00	0.00E+00	0.00E+00	4.64E+03
Y-92	5.06E-02	0.00E+00	1.48E-03	0.00E+00	0.00E+00	0.00E+00	8.86E+02
Y-93	1.60E-01	0.00E+00	4.43E-03	0.00E+00	0.00E+00	0.00E+00	5.09E+03
Zr-95	2.40E-01	7.70E-02	5.21E-02	0.00E+00	1.21E-01	0.00E+00	2.44E+02
Zr-97	1.33E-02	2.68E-03	1.22E-03	0.00E+00	4.04E-03	0.00E+00	8.30E+02
Nb-95	4.47E+02	2.48E+02	1.34E+02	0.00E+00	2.46E+02	0.00E+00	1.51E+06
Mo-99	0.00E+00	1.03E+02	1.96E+01	0.00E+00	2.34E+02	0.00E+00	2.39E+02
Tc- 99M	8.87E-03	2.51E-02	3.19E-01	0.00E+00	3.81E-01	1.23E-02	1.48E+01
Tc-101	9.12E-03	1.31E-02	1.29E-01	0.00E+00	2.37E-01	6.72E-03	3.95E-14
Ru-103	4.43E+00	0.00E+00	1.91E+00	0.00E+00	1.69E+01	0.00E+00	5.17E+02
Ru-105	3.69E-01	0.00E+00	1.46E-01	0.00E+00	4.76E+00	0.00E+00	2.26E+02
Ru-106	6.58E+01	0.00E+00	8.33E+00	0.00E+00	1.27E+02	0.00E+00	4.26E+03
Ag-110M	8.81E-01	8.15E-01	4.84E-01	0.00E+00	1.60E+00	0.00E+00	3.33E+02
Te-125M	2.57E+03	9.30E+02	3.44E+02	7.72E+02	1.04E+04	0.00E+00	1.02E+04

Table 3-5 (continued)
Site Specific Fish Ingestion Dose Factors for Adult Age Group

Nuclide	Bone	Liver	T Body	Thyroid	Kidney	Lung	GI-LLI
Te-127M	6.48E+03	2.32E+03	7.90E+02	1.66E+03	2.63E+04	0.00E+00	2.17E+04
Te-127	1.05E+02	3.78E+01	2.28E+01	7.80E+01	4.29E+02	0.00E+00	8.31E+03
Te-129M	1.10E+04	4.11E+03	1.74E+03	3.78E+03	4.60E+04	0.00E+00	5.54E+04
Te-129	3.01E+01	1.13E+01	7.33E+00	2.31E+01	1.26E+02	0.00E+00	2.27E+01
Te-131M	1.66E+03	8.10E+02	6.75E+02	1.28E+03	8.21E+03	0.00E+00	8.04E+04
Te-131	1.89E+01	7.88E+00	5.96E+00	1.55E+01	8.26E+01	0.00E+00	2.67E+00
Te-132	2.41E+03	1.56E+03	1.47E+03	1.72E+03	1.50E+04	0.00E+00	7.38E+04
I-130	2.71E+01	8.01E+01	3.16E+01	6.79E+03	1.25E+02	0.00E+00	6.89E+01
I-131	1.49E+02	2.14E+02	1.22E+02	7.00E+04	3.66E+02	0.00E+00	5.64E+01
I-132	7.29E+00	1.95E+01	6.82E+00	6.82E+02	3.11E+01	0.00E+00	3.66E+00
I-133	5.10E+01	8.87E+01	2.70E+01	1.30E+04	1.55E+02	0.00E+00	7.97E+01
I-134	3.81E+00	1.03E+01	3.70E+00	1.79E+02	1.64E+01	0.00E+00	9.01E-03
I-135	1.59E+01	4.17E+01	1.54E+01	2.75E+03	6.68E+01	0.00E+00	4.70E+01
Cs-134	2.98E+05	7.09E+05	5.79E+05	0.00E+00	2.29E+05	7.61E+04	1.24E+04
Cs-136	3.12E+04	1.23E+05	8.86E+04	0.00E+00	6.85E+04	9.38E+03	1.40E+04
Cs-137	3.82E+05	5.22E+05	3.42E+05	0.00E+00	1.77E+05	5.89E+04	1.01E+04
Cs-138	2.64E+02	5.22E+02	2.59E+02	0.00E+00	3.84E+02	3.79E+01	2.23E-03
Ba-139	9.29E-01	6.62E-04	2.72E-02	0.00E+00	6.19E-04	3.75E-04	1.65E+00
Ba-140	1.94E+02	2.44E-01	1.27E+01	0.00E+00	8.30E-02	1.40E-01	4.00E+02
Ba-141	4.51E-01	3.41E-04	1.52E-02	0.00E+00	3.17E-04	1.93E-04	2.13E-10
Ba-142	2.04E-01	2.10E-04	1.28E-02	0.00E+00	1.77E-04	1.19E-04	2.87E-19
La-140	1.50E-01	7.54E-02	1.99E-02	0.00E+00	0.00E+00	0.00E+00	5.54E+03
La-142	7.66E-03	3.48E-03	8.68E-04	0.00E+00	0.00E+00	0.00E+00	2.54E+01
Ce-141	2.24E-02	1.52E-02	1.72E-03	0.00E+00	7.04E-03	0.00E+00	5.79E+01
Ce-143	3.95E-03	2.92E+00	3.23E-04	0.00E+00	1.29E-03	0.00E+00	1.09E+02
Ce-144	1.17E+00	4.88E-01	6.27E-02	0.00E+00	2.90E-01	0.00E+00	3.95E+02
Pr-143	5.51E-01	2.21E-01	2.73E-02	0.00E+00	1.27E-01	0.00E+00	2.41E+03
Pr-144	1.80E-03	7.48E-04	9.16E-05	0.00E+00	4.22E-04	0.00E+00	2.59E-10
Nd-147	3.76E-01	4.35E-01	2.60E-02	0.00E+00	2.54E-01	0.00E+00	2.09E+03
W-187	2.96E+02	2.47E+02	8.65E+01	0.00E+00	0.00E+00	0.00E+00	8.10E+04
Np-239	2.85E-02	2.80E-03	1.54E-03	0.00E+00	8.74E-03	0.00E+00	5.75E+02

Notes:

1) Units are mrem/hr per µCi/ml.

Table 3-6

Site Specific Fish Ingestion Dose Factors for Teen Age Group

Nuclide	Bone	Liver	T Body	Thyroid	Kidney	Lung	GI-LLI
H-3	0.00E+00	9.92E-02	9.92E-02	9.92E-02	9.92E-02	9.92E-02	9.92E-02
Na-24	4.20E+02	4.20E+02	4.20E+02	4.20E+02	4.20E+02	4.20E+02	4.20E+02
Cr-51	0.00E+00	0.00E+00	1.31E+00	7.30E-01	2.88E-01	1.88E+00	2.21E+02
Mn-54	0.00E+00	4.30E+03	8.54E+02	0.00E+00	1.28E+03	0.00E+00	8.83E+03
Mn-56	0.00E+00	1.15E+02	2.05E+01	0.00E+00	1.46E+02	0.00E+00	7.59E+03
Fe-55	6.89E+02	4.89E+02	1.14E+02	0.00E+00	0.00E+00	3.10E+02	2.12E+02
Fe-59	1.07E+03	2.50E+03	9.65E+02	0.00E+00	0.00E+00	7.88E+02	5.91E+03
Co-58	0.00E+00	8.86E+01	2.04E+02	0.00E+00	0.00E+00	0.00E+00	1.22E+03
Co-60	0.00E+00	2.56E+02	5.77E+02	0.00E+00	0.00E+00	0.00E+00	3.34E+03
Ni-63	3.23E+04	2.28E+03	1.09E+03	0.00E+00	0.00E+00	0.00E+00	3.63E+02
Ni-65	1.37E+02	1.75E+01	7.95E+00	0.00E+00	0.00E+00	0.00E+00	9.47E+02
Cu-64	0.00E+00	1.05E+01	4.93E+00	0.00E+00	2.65E+01	0.00E+00	8.14E+02
Zn-65	2.10E+04	7.30E+04	3.40E+04	0.00E+00	4.67E+04	0.00E+00	3.09E+04
Zn-69	5.36E+01	1.02E+02	7.15E+00	0.00E+00	6.68E+01	0.00E+00	1.88E+02
Br-83	0.00E+00	0.00E+00	4.40E+01	0.00E+00	0.00E+00	0.00E+00	0.00E+00
Br-84	0.00E+00	0.00E+00	5.53E+01	0.00E+00	0.00E+00	0.00E+00	0.00E+00
Br-85	0.00E+00	0.00E+00	2.34E+00	0.00E+00	0.00E+00	0.00E+00	0.00E+00
Rb-86	0.00E+00	1.09E+05	5.11E+04	0.00E+00	0.00E+00	0.00E+00	1.61E+04
Rb-88	0.00E+00	3.11E+02	1.66E+02	0.00E+00	0.00E+00	0.00E+00	2.66E-05
Rb-89	0.00E+00	2.01E+02	1.42E+02	0.00E+00	0.00E+00	0.00E+00	3.08E-07
Sr-89	2.41E+04	0.00E+00	6.89E+02	0.00E+00	0.00E+00	0.00E+00	2.87E+03
Sr-90	5.58E+05	0.00E+00	1.12E+04	0.00E+00	0.00E+00	0.00E+00	1.27E+04
Sr-91	4.42E+02	0.00E+00	1.76E+01	0.00E+00	0.00E+00	0.00E+00	2.00E+03
Sr-92	1.67E+02	0.00E+00	7.11E+00	0.00E+00	0.00E+00	0.00E+00	4.25E+03
Y-90	6.25E-01	0.00E+00	1.68E-02	0.00E+00	0.00E+00	0.00E+00	5.15E+03
Y-91M	5.88E-03	0.00E+00	2.25E-04	0.00E+00	0.00E+00	0.00E+00	2.78E-01
Y-91	9.17E+00	0.00E+00	2.46E-01	0.00E+00	0.00E+00	0.00E+00	3.76E+03
Y-92	5.52E-02	0.00E+00	1.60E-03	0.00E+00	0.00E+00	0.00E+00	1.51E+03
Y-93	1.75E-01	0.00E+00	4.79E-03	0.00E+00	0.00E+00	0.00E+00	5.34E+03
Zr-95	2.48E-01	7.82E-02	5.38E-02	0.00E+00	1.15E-01	0.00E+00	1.81E+02
Zr-97	1.43E-02	2.82E-03	1.30E-03	0.00E+00	4.28E-03	0.00E+00	7.64E+02
Nb-95	4.50E+02	2.50E+02	1.37E+02	0.00E+00	2.42E+02	0.00E+00	1.07E+06
Mo-99	0.00E+00	1.10E+02	2.10E+01	0.00E+00	2.52E+02	0.00E+00	1.97E+02
Tc- 99M	9.08E-03	2.53E-02	3.28E-01	0.00E+00	3.78E-01	1.41E-02	1.66E+01
Tc-101	9.85E-03	1.40E-02	1.38E-01	0.00E+00	2.53E-01	8.54E-03	2.39E-09
Ru-103	4.65E+00	0.00E+00	1.99E+00	0.00E+00	1.64E+01	0.00E+00	3.89E+02
Ru-105	3.98E-01	0.00E+00	1.54E-01	0.00E+00	5.02E+00	0.00E+00	3.21E+02
Ru-106	7.15E+01	0.00E+00	9.01E+00	0.00E+00	1.38E+02	0.00E+00	3.43E+03
Ag-110M	8.60E-01	8.14E-01	4.95E-01	0.00E+00	1.55E+00	0.00E+00	2.29E+02
Te-125M	2.79E+03	1.01E+03	3.74E+02	7.81E+02	0.00E+00	0.00E+00	8.24E+03

Table 3-6 (continued)
Site Specific Fish Ingestion Dose Factors for Teen Age Group

Nuclide	Bone	Liver	T Body	Thyroid	Kidney	Lung	GI-LLI
Te-127M	7.06E+03	2.50E+03	8.39E+02	1.68E+03	2.86E+04	0.00E+00	1.76E+04
Te-127	1.15E+02	4.09E+01	2.48E+01	7.95E+01	4.67E+02	0.00E+00	8.90E+03
Te-129M	1.19E+04	4.41E+03	1.88E+03	3.84E+03	4.98E+04	0.00E+00	4.47E+04
Te-129	3.27E+01	1.22E+01	7.95E+00	2.33E+01	1.37E+02	0.00E+00	1.79E+02
Te-131M	1.78E+03	8.54E+02	7.12E+02	1.28E+03	8.90E+03	0.00E+00	6.85E+04
Te-131	2.04E+01	8.39E+00	6.36E+00	1.57E+01	8.90E+01	0.00E+00	1.67E+00
Te-132	2.55E+03	1.61E+03	1.52E+03	1.70E+03	1.55E+04	0.00E+00	5.11E+04
I-130	2.82E+01	8.15E+01	3.26E+01	6.65E+03	1.26E+02	0.00E+00	6.27E+01
I-131	1.60E+02	2.24E+02	1.20E+02	6.54E+04	3.86E+02	0.00E+00	4.43E+01
I-132	7.63E+00	2.00E+01	7.17E+00	6.73E+02	3.15E+01	0.00E+00	8.70E+00
I-133	5.50E+01	9.33E+01	2.85E+01	1.30E+04	1.64E+02	0.00E+00	7.06E+01
I-134	3.99E+00	1.06E+01	3.80E+00	1.76E+02	1.67E+01	0.00E+00	1.40E-01
I-135	1.67E+01	4.30E+01	1.59E+01	2.76E+03	6.79E+01	0.00E+00	4.76E+01
Cs-134	3.05E+05	7.19E+05	3.33E+05	0.00E+00	2.28E+05	8.72E+04	8.94E+03
Cs-136	3.13E+04	1.23E+05	8.28E+04	0.00E+00	6.71E+04	1.06E+04	9.92E+03
Cs-137	4.09E+05	5.44E+05	1.89E+05	0.00E+00	1.85E+05	7.19E+04	7.73E+03
Cs-138	2.83E+02	5.44E+02	2.72E+02	0.00E+00	4.01E+02	4.67E+01	2.47E-01
Ba-139	1.01E+00	7.14E-04	2.95E-02	0.00E+00	6.73E-04	4.92E-04	9.05E+00
Ba-140	2.07E+02	2.54E-01	1.34E+01	0.00E+00	8.61E-02	1.71E-01	3.20E+02
Ba-141	4.90E-01	3.66E-04	1.63E-02	0.00E+00	3.39E-04	2.50E-04	1.04E-06
Ba-142	2.18E-01	2.18E-04	1.34E-02	0.00E+00	1.85E-04	1.45E-04	6.70E-13
La-140	1.59E-01	7.80E-02	2.07E-02	0.00E+00	0.00E+00	0.00E+00	4.48E+03
La-142	8.16E-03	3.63E-03	9.03E-04	0.00E+00	0.00E+00	0.00E+00	1.10E+02
Ce-141	2.43E-02	1.62E-02	1.86E-03	0.00E+00	7.62E-03	0.00E+00	4.63E+01
Ce-143	4.29E-03	3.12E+00	3.48E-04	0.00E+00	1.40E-03	0.00E+00	9.38E+01
Ce-144	1.27E+00	5.25E-01	6.82E-02	0.00E+00	3.14E-01	0.00E+00	3.19E+02
Pr-143	5.97E-01	2.38E-01	2.97E-02	0.00E+00	1.39E-01	0.00E+00	1.97E+03
Pr-144	1.96E-03	8.03E-04	9.94E-05	0.00E+00	4.61E-04	0.00E+00	2.16E-06
Nd-147	4.28E-01	4.65E-01	2.79E-02	0.00E+00	2.73E-01	0.00E+00	1.68E+03
W-187	3.20E+02	2.60E+02	9.13E+01	0.00E+00	0.00E+00	0.00E+00	7.05E+04
Np-239	3.21E-02	3.03E-03	1.68E-03	0.00E+00	9.50E-03	0.00E+00	4.87E+02

Notes:

1) Units are mrem/hr per µCi/ml.

Table 3-7

Site Specific Fish Ingestion Dose Factors for Child Age Group

Nuclide	Bone	Liver	T Body	Thyroid	Kidney	Lung	GI-LLI
H-3	0.00E+00	8.21E-02	8.21E-02	8.21E-02	8.21E-02	8.21E-02	8.21E-02
Na-24	4.56E+02	4.56E+02	4.56E+02	4.56E+02	4.56E+02	4.56E+02	4.56E+02
Cr-51	0.00E+00	0.00E+00	1.40E+00	7.77E-01	2.12E-01	1.42E+00	7.43E+01
Mn-54	0.00E+00	3.37E+03	8.97E+02	0.00E+00	9.44E+02	0.00E+00	2.83E+03
Mn-56	0.00E+00	1.05E+02	2.37E+01	0.00E+00	1.27E+02	0.00E+00	1.52E+04
Fe-55	9.05E+02	4.80E+02	1.49E+02	0.00E+00	0.00E+00	2.71E+02	8.89E+01
Fe-59	1.30E+03	2.10E+03	1.05E+03	0.00E+00	0.00E+00	6.09E+02	2.19E+03
Co-58	0.00E+00	7.08E+01	2.17E+02	0.00E+00	0.00E+00	0.00E+00	4.13E+02
Co-60	0.00E+00	2.08E+02	6.14E+02	0.00E+00	0.00E+00	0.00E+00	1.15E+03
Ni-63	4.23E+04	2.27E+03	1.44E+03	0.00E+00	0.00E+00	0.00E+00	1.53E+02
Ni-65	1.75E+02	1.64E+01	9.60E+00	0.00E+00	0.00E+00	0.00E+00	2.01E+03
Cu-64	0.00E+00	9.64E+00	5.82E+00	0.00E+00	2.33E+01	0.00E+00	4.52E+02
Zn-65	2.16E+04	5.74E+04	3.57E+04	0.00E+00	3.62E+04	0.00E+00	1.01E+04
Zn-69	6.89E+01	9.96E+01	9.20E+00	0.00E+00	6.04E+01	0.00E+00	6.28E+03
Br-83	0.00E+00	0.00E+00	5.65E+01	0.00E+00	0.00E+00	0.00E+00	0.00E+00
Br-84	0.00E+00	0.00E+00	6.54E+01	0.00E+00	0.00E+00	0.00E+00	0.00E+00
Br-85	0.00E+00	0.00E+00	3.01E+00	0.00E+00	0.00E+00	0.00E+00	0.00E+00
Rb-86	0.00E+00	1.05E+05	6.48E+04	0.00E+00	0.00E+00	0.00E+00	6.78E+03
Rb-88	0.00E+00	2.99E+02	2.08E+02	0.00E+00	0.00E+00	0.00E+00	1.47E+01
Rb-89	0.00E+00	1.84E+02	1.64E+02	0.00E+00	0.00E+00	0.00E+00	1.60E+00
Sr-89	3.11E+04	0.00E+00	8.90E+02	0.00E+00	0.00E+00	0.00E+00	1.21E+03
Sr-90	6.04E+05	0.00E+00	1.22E+04	0.00E+00	0.00E+00	0.00E+00	5.40E+03
Sr-91	5.66E+02	0.00E+00	2.14E+01	0.00E+00	0.00E+00	0.00E+00	1.25E+03
Sr-92	2.13E+02	0.00E+00	8.54E+00	0.00E+00	0.00E+00	0.00E+00	4.04E+03
Y-90	8.08E-01	0.00E+00	2.16E-02	0.00E+00	0.00E+00	0.00E+00	2.30E+03
Y-91M	7.51E-03	0.00E+00	2.73E-04	0.00E+00	0.00E+00	0.00E+00	1.47E+01
Y-91	1.18E+01	0.00E+00	3.17E-01	0.00E+00	0.00E+00	0.00E+00	1.58E+03
Y-92	7.08E-02	0.00E+00	2.03E-03	0.00E+00	0.00E+00	0.00E+00	2.05E+03
Y-93	2.24E-01	0.00E+00	6.16E-03	0.00E+00	0.00E+00	0.00E+00	3.34E+03
Zr-95	3.01E-01	6.62E-02	5.89E-02	0.00E+00	9.47E-02	0.00E+00	6.90E+01
Zr-97	1.81E-02	2.62E-03	1.55E-03	0.00E+00	3.76E-03	0.00E+00	3.97E+02
Nb-95	5.31E+02	2.07E+02	1.48E+02	0.00E+00	1.94E+02	0.00E+00	3.82E+05
Mo-99	0.00E+00	1.05E+02	2.59E+01	0.00E+00	2.23E+02	0.00E+00	8.65E+01
Tc- 99M	1.09E-02	2.14E-02	3.54E-01	0.00E+00	3.10E-01	1.08E-02	1.22E+01
Tc-101	1.26E-02	1.32E-02	1.68E-01	0.00E+00	2.25E-01	6.99E-03	4.20E-02
Ru-103	5.75E+00	0.00E+00	2.21E+00	0.00E+00	1.45E+01	0.00E+00	1.49E+02
Ru-105	5.07E-01	0.00E+00	1.84E-01	0.00E+00	4.46E+00	0.00E+00	3.31E+02
Ru-106	9.20E+01	0.00E+00	1.15E+01	0.00E+00	1.24E+02	0.00E+00	1.43E+03
Ag-110M	9.75E-01	6.59E-01	5.26E-01	0.00E+00	1.23E+00	0.00E+00	7.83E+01
Te-125M	3.59E+03	9.72E+02	4.78E+02	1.01E+03	0.00E+00	0.00E+00	3.46E+03

Table 3-7 (continued)
Site Specific Fish Ingestion Dose Factors for Child Age Group

Nuclide	Bone	Liver	T Body	Thyroid	Kidney	Lung	GI-LLI
Te-127M	9.09E+03	2.45E+03	1.08E+03	2.17E+03	2.59E+04	0.00E+00	7.36E+03
Te-127	1.48E+02	4.00E+01	3.18E+01	1.03E+02	4.22E+02	0.00E+00	5.79E+03
Te-129M	1.53E+04	4.28E+03	2.38E+03	4.94E+03	4.50E+04	0.00E+00	1.87E+04
Te-129	4.22E+01	1.18E+01	1.00E+01	3.01E+01	1.23E+02	0.00E+00	2.62E+03
Te-131M	2.27E+03	7.83E+02	8.34E+02	1.61E+03	7.58E+03	0.00E+00	3.18E+04
Te-131	2.61E+01	7.96E+00	7.77E+00	2.00E+01	7.90E+01	0.00E+00	1.37E+02
Te-132	3.18E+03	1.41E+03	1.70E+03	2.05E+03	1.31E+04	0.00E+00	1.42E+04
I-130	3.45E+01	6.96E+01	3.59E+01	7.67E+03	1.04E+02	0.00E+00	3.26E+01
I-131	2.03E+02	2.04E+02	1.16E+02	6.75E+04	3.35E+02	0.00E+00	1.82E+01
I-132	9.44E+00	1.73E+01	7.98E+00	8.05E+02	2.65E+01	0.00E+00	2.04E+01
I-133	6.99E+01	8.64E+01	3.27E+01	1.60E+04	1.44E+02	0.00E+00	3.48E+01
I-134	4.94E+00	9.18E+00	4.22E+00	2.11E+02	1.40E+01	0.00E+00	6.09E+00
I-135	2.06E+01	3.72E+01	1.76E+01	3.29E+03	5.70E+01	0.00E+00	2.83E+01
Cs-134	3.68E+05	6.04E+05	1.27E+05	0.00E+00	1.87E+05	6.72E+04	3.26E+03
Cs-136	3.70E+04	1.02E+05	6.58E+04	0.00E+00	5.41E+04	8.07E+03	3.57E+03
Cs-137	5.14E+05	4.92E+05	7.27E+04	0.00E+00	1.60E+05	5.77E+04	3.08E+03
Cs-138	3.59E+02	4.99E+02	3.16E+02	0.00E+00	3.51E+02	3.78E+01	2.30E+02
Ba-139	1.30E+00	6.95E-04	3.78E-02	0.00E+00	6.07E-04	4.09E-04	7.52E+01
Ba-140	2.61E+02	2.29E-01	1.53E+01	0.00E+00	7.46E-02	1.37E-01	1.32E+02
Ba-141	6.29E-01	3.52E-04	2.05E-02	0.00E+00	3.05E-04	2.07E-03	3.59E-01
Ba-142	2.75E-01	1.98E-04	1.54E-02	0.00E+00	1.60E-04	1.16E-04	3.59E-03
La-140	1.99E-01	6.94E-02	2.34E-02	0.00E+00	0.00E+00	0.00E+00	1.94E+03
La-142	1.03E-02	3.28E-03	1.03E-03	0.00E+00	0.00E+00	0.00E+00	6.51E+02
Ce-141	3.12E-02	1.56E-02	2.31E-03	0.00E+00	6.83E-03	0.00E+00	1.94E+01
Ce-143	5.50E-03	2.98E+00	4.32E-04	0.00E+00	1.25E-03	0.00E+00	4.37E+01
Ce-144	1.64E+00	5.13E-01	8.73E-02	0.00E+00	2.84E-01	0.00E+00	1.34E+02
Pr-143	7.73E-01	2.32E-01	3.83E-02	0.00E+00	1.26E-01	0.00E+00	8.34E+02
Pr-144	2.54E-03	7.85E-04	1.28E-04	0.00E+00	4.15E-04	0.00E+00	1.69E+00
Nd-147	5.49E-01	4.44E-01	3.44E-02	0.00E+00	2.44E-01	0.00E+00	7.04E+02
W-187	4.05E+02	2.40E+02	1.08E+02	0.00E+00	0.00E+00	0.00E+00	3.37E+04
Np-239	4.13E-02	2.97E-03	2.08E-03	0.00E+00	8.57E-03	0.00E+00	2.19E+02

Notes:

1) Units are mrem/hr per μCi/ml.
2) The infant age group is assumed to receive no dose through the fish ingestion pathway; therefore, no dose factors are supplied.

Table 3-8

Bioaccumulation Factors (BF_i) to be Used in the Absence of Site-Specific Data

Element	BF_i for Freshwater Fish (pCi/kg per pCi/L)	Reference
H	9.0E-01	6
Be	2.8E+01	Footnote 2
C	4.6E+03	6
F	2.2E+02	Footnote 16
Na	1.0E+02	6
Mg	2.8E+01	Footnote 2
Al	2.2E+03	Footnote 13
P	1.0E+05	6
Cl	2.2E+02	Footnote 16
Ar	NA	NA
K	1.0E+03	Footnote 1
Ca	2.8E+01	Footnote 2
Sc	2.5E+01	Footnote 3
Ti	3.3E+00	Footnote 4
V	3.0E+04	Footnote 5
Cr	2.0E+02	6
Mn	4.0E+02	6
Fe	1.0E+02	6
Co	5.0E+01	6
Ni	1.0E+02	6
Cu	5.0E+01	6
Zn	2.0E+03	6
Ga	2.2E+03	Footnote 13
Ge	2.4E+03	Footnote 12
As	3.3E+04	Footnote 14
Se	4.0E+02	Footnote 15
Br	4.2E+02	6
Kr	NA	NA
Rb	2.0E+03	6
Sr	3.0E+01	6
Y	2.5E+01	6
Zr	3.3E+00	6
Nb	3.0E+04	6
Mo	1.0E+01	6
Tc	1.5E+01	6
Ru	1.0E+01	6
Rh	1.0E+01	6
Pd	1.0E+02	Footnote 9

Table 3-8 (cont.) Bioaccumulation Factors (BF_i) to be Used in the Absence of Site-Specific Data		
Cd	2.0E+03	Footnote 11
In	2.2E+03	Footnote 13
Sn	2.4E+03	Footnote 12
Sb	1.0E+00	98
Ag	2.3E+00	56
Te	4.0E+02	6
I	1.5E+01	6
Xe	NA	NA
Cs	2.0E+03	6
Ba	4.0E+00	6
La	2.5E+01	6
Ce	1.0E+00	6
Pr	2.5E+01	6
Nd	2.5E+01	6
Pm	3.0E+01	98
Sm	3.0E+01	Footnote 3
Eu	1.0E+02	Footnote 3
Gd	2.6E+01	Footnote 3
Dy	2.2E+03	Footnote 3
Er	3.3E+04	Footnote 3
Tm	4.0E+02	Footnote 3
Yb	2.2E+02	Footnote 3
Lu	2.5E+01	Footnote 3
Hf	3.3E+00	Footnote 4
Ta	3.0E+04	Footnote 5
W	1.2E+03	6
Re	2.1E+02	Footnote 6
Os	5.5E+01	Footnote 7
Ir	3.0E+01	Footnote 8
Pt	1.0E+02	Footnote 9
Au	2.6E+01	Footnote 10
Hg	2.0E+03	Footnote 11
Tl	2.2E+03	Footnote 13
Pb	3.0E+02	98
Bi	2.0E+01	98
Ra	5.0E+01	98
Th	3.0E+01	98
U	1.0E+01	98
Np	1.0E+01	6
Am	3.0E+01	98

Footnotes:
NA = It is assumed that noble gases are not accumulated.

In Reference 6, see Table A-1 in the ODCM Training and Reference Material.

A number of bioaccumulation factors could not be found in literature. In this case, the periodic table was used in conjunction with published element values. This method was used for periodic table columns except where there were no values for column 3A so the average of columns 2B and 4A was assigned.

1. Value is the average of Reference 6 values in literature for H, Na, Rb and Cs.
2. Value is the average of Ref. 6 values in literature for Sr, Ba and Ref. 98 values for Ra.
3. Value is the same as the Reference 6 value used for Y.
4. Value is the same as the Reference 6 value used for Zr.
5. Value is the same as the Reference 6 value used for Nb.
6. Value is the average of Reference 6 values in literature for Mn and Tc.
7. Value is the average of Reference 6 values in literature for Fe and Ru.
8. Value is the average of Reference 6 values in literature for Co and Rh.
9. Value is the same as the Reference 6 value used for Ni.
10. Value is the average of Reference 6 values in literature for Cu and Reference 56 value for Ag.
11. Value used is the same as the Reference 6 value used for Zn.
12. Value is the average of Reference 6 value in literature for C and Reference 98 value for Pb.
13. Value is the average of columns 2B and 4A, where column 2B is the "Reference 6 value for Zn" and column 4A is the average of "Reference 6 value for C and Reference 98 value for Pb".
14. Value is the average of Ref. 6 value found in literature for P and the Ref. 98 values for Bi and Sb.
15. Value is the same as the Reference 6 value used for Te.
16. Value is the average of Reference 6 values found in literature for Br and I.

4.0 GASEOUS EFFLUENTS

4.1 Gaseous Effluents – General Information

This section reviews the offsite radiological limits applicable to the nuclear power stations and presents in detail the equations and procedures used to assess compliance with these limits. This calculational approach uses the methodology of NUREG-0133 (Reference 14), and incorporates certain simplifications such as the use of average meteorology.

4.1.1 Pre-calculated atmospheric transport parameters are based on historical average atmospheric conditions. These historical meteorological conditions have resulted in the dispersion parameters shown in Table 4-1, Table 4-2 and Table 4-8.

4.1.2 The equations and parameters of this section are for use in calculating offsite radiation doses during routine operating conditions. They are not for use in calculating doses due to non-routine releases (e.g., accident releases).

4.1.3 An overview of the required compliance is given in Table 1-1. The dose components are itemized and referenced, and an indication of their regulatory application is noted. Additionally, the locations of dose receivers for each dose component are given in Table 1-2.

4.1.4 Airborne Release Point Classifications

The pattern of dispersion of airborne releases is dependent on the height of the release point relative to adjacent structures. Each release point is classified as one of the following three height-dependent types:

- Stack (or Elevated) Release Point (denoted by the letter S or subscript s)
- Ground Level Release Point (denoted by the letter G or subscript g)
- Vent (or Mixed Mode) Release Point (denoted by the letter V or subscript v)

4.1.5 Operability and Use of Gaseous Effluent Treatment Systems

10CFR50 Appendix I and ODCM Part I require that the ventilation exhaust treatment system and the waste gas holdup system be used when projected offsite doses in 31 days, due to gaseous effluent releases, from each reactor unit, exceed any of the following limits:

- 0.2 mrad to air from gamma radiation.
- 0.4 mrad to air from beta radiation.
- 0.3 mrem to any organ of a member of the public.

The station must project doses due to gaseous releases from the site at least once per 31 days. The calculational methods shown in sections 4.2.2 and 4.2.3 are used for this dose projection.

4.1.6 For a release attributable to a processing or effluent system shared by more than one reactor unit, the dose due to an individual unit is obtained by proportioning the effluents among the units sharing the system.

4.2 Gaseous Effluents – Dose and Dose Rate Calculation Requirements

4.2.1 Instantaneous Dose Rates

4.2.1.1 Noble Gas: Total Body Dose Rate

ODCM Part I limits the total body dose rate due to noble gases in gaseous effluents released from a site to areas at and beyond the site boundary to less than or equal to 500 mrem/yr at all times.

The total body dose rate due to noble gases released in gaseous effluents is calculated by the following expression:

$$\dot{D}_{TB} = \sum_i K_i \left\{ (\chi/Q)^{\gamma}_{s} Q_{is} + (\chi/Q)^{\gamma}_{v} Q_{iv} + (\chi/Q)^{\gamma}_{g} Q_{ig} \right\} \qquad \textbf{(4-1)}$$

The summation is over noble gas radionuclides **i**.

Since Byron does not have an elevated release point, the Q_{is} term is not used.

$\dot{D}_{TB}$ Total Body Dose Rate [mrem/yr]

Dose rate to the total body due to gamma radiation from noble gas radionuclides released in gaseous effluents.

Q_{is}, Q_{iv}, Q_{ig} Release Rate [µCi/sec]

Measured release rate of radionuclide **i** from a stack, vent or ground level release point, respectively.

K_i Gamma Total Body Dose Conversion Factor [(mrem/yr)/(uCi/m^3)]

Gamma total body dose factor due to gamma emissions for noble gas radionuclide i. K values are taken from Table 4-28

Relative Concentration Factor [sec/m^3]

$(\chi/Q)_s$
$(\chi/Q)_v$
$(\chi/Q)_g$ Radioactivity concentration based on semi-infinite cloud methodology at a specified location per unit of radioactivity release rate for a stack, vent, or ground level release, respectively. See Table 4-1.

To comply with this specification, the effluent radiation monitor has a setpoint corresponding to an offsite total body dose rate at or below the limit (see Part II Section 2.6). In addition, compliance is assessed by calculating offsite total body dose rate based on periodic samples obtained per station procedures.

4.2.1.2 Noble Gas: Skin Dose Rate

ODCM Part I limits the skin dose rate due to noble gases in gaseous effluents released from a site to areas at and beyond the site boundary to less than or equal to a dose rate of 3000 mrem/yr at all times. (See TRM 3.11.f)

The skin dose rate due to noble gases released in gaseous effluents is calculated by the following expression:

$$\dot{D}_{SK} = \sum_i \left\{ L_i \left[(\chi/Q)_s Q_{is} + (\chi/Q)_v Q_{iv} + (\chi/Q)_g Q_{ig} \right] + (1.11)\, M_i \left[(\chi/Q)_s^{\gamma} Q_{is} + (\chi/Q)_v^{\gamma} Q_{iv} + (\chi/Q)_g^{\gamma} Q_{ig} \right] \right\} \qquad (4\text{-}2)$$

The summation is over noble gas radionuclides **i**.

$\dot{D}_{SK}$ Skin Dose Rate [mrem/yr]

Dose rate to skin due to beta and gamma radiation from noble gas radionuclides released in gaseous effluents.

L_i Skin Dose Conversion Factor [(mrem/yr)/(uCi/m^3)]

Skin dose factor due to gamma emissions for noble gas radionuclide **i**. L values are taken from Table 4-28

M_i Gamma Air Dose Conversion Factor [(mrad/yr)/(μCi/m^3)]

Gamma air dose rate factor per unit of radioactivity release rate for radionuclide **i**. See Table 4-28 for Gamma Air Dose conversion factors (From Table 3-1 of Regulatory Guide 1.109).

Since Byron does not have an elevated release point, the Q_{is} term is not used.

To comply with this specification, gaseous effluent radiation monitors have setpoints corresponding to an offsite skin dose rate at or below the limit (see Part II Section 2.6). In addition, compliance is assessed by calculating offsite skin dose rate based on periodic samples obtained per station procedures.

4.2.1.3 Non-Noble Gas Radionuclides: Organ Dose Rate

ODCM Part I limits the dose rate to any organ, due to radioactive materials in gaseous effluents released from a site to areas at and beyond the site boundary, to less than or equal to a dose rate of 1500 mrem/yr (See TRM 3.11.f)

Typically the child is considered to be the limiting receptor in calculating dose rate to organs due to inhalation of non-noble gas radionuclides in gaseous effluents.

The dose rate to any child organ due to inhalation is calculated by the following expression:

$$\dot{D}^{NNG}_{(Child)i(Inhal)j} = \sum_{i} R_{(Child)i(Inhal)j}\left\{(\chi/Q)_s Q_{is} + (\chi/Q)_v Q_{iv} + (\chi/Q)_g Q_{ig}\right\} \qquad \textbf{(4-3)}$$

The summation is over non-noble gas radionuclides **i**.

$\dot{D}^{NNG}_{(Child)i(Inhal)j}$ Inhalation Dose Rate [mrem/yr]

Dose rate to the child age group from radionuclide **i**, via the inhalation pathway to organ **j** due to non-noble gas radionuclides.

$R_{(Child)i(Inhal)j}$ Inhalation Dose Factor [(mrem/yr)/(μCi/m^3)]

Inhalation dose factor for child age group for radionuclide **i**, and organ **j**. Inhalation dose factors for non-noble gas radionuclides (child) are shown in Table 4-11

Since Byron does not have an elevated release point, the Q_{is} term is not used.

ODCM Part I requires the dose rate due to non-noble gas radioactive materials in airborne effluents be determined to be within the above limit in accordance with a sampling and analysis program specified in TRM Table T3.11.f-1.

The child organ dose rate due to inhalation is calculated in each sector at the location of the highest offsite χ/Q (see Table 4-1). The result for the sector with the highest organ inhalation dose rate is compared to the limit.

4.2.2 Time Averaged Dose from Noble Gas

4.2.2.1 Gamma Air Dose

ODCM and TRM limits the gamma air dose due to noble gas effluents released from each reactor unit to areas at and beyond the unrestricted area boundary to the following:

- Less than or equal to 5 mrad per calendar quarter.
- Less than or equal to 10 mrad per calendar year.

The gamma air dose due to noble gases released in gaseous effluents is calculated by the following expression:

$$D_\gamma = (3.17E-8)\sum_i M_i \left\{ (\chi/Q)^\gamma_s A_{is} + (\chi/Q)^\gamma_v A_{iv} + (\chi/Q)^\gamma_g A_{ig} \right\} \qquad (4\text{-}4)$$

The summation is over noble gas radionuclides **i**.

D_γ Gamma Air Dose [mrad]

Dose to air due to gamma radiation from noble gas radionuclides released in gaseous effluents.

3.17E-8 Conversion Constant (seconds to years) [yr/sec]

M_i Gamma Air Dose Conversion Factor [(mrad/yr)/(μCi/m^3)]

Gamma air dose rate factor per unit of radioactivity release rate for radionuclide **i**. See Table 4-28 for Gamma Air Dose conversion factors (From Table 3-1 of Regulatory Guide 1.109).

$(\chi/Q)^\gamma_s, (\chi/Q)^\gamma_v, (\chi/Q)^\gamma_g$ Gamma-χ/Q Factor [sec/m^3]

Radioactivity concentration based on finite cloud methodology at a specific location per unit of radioactivity release rate from a stack, vent or ground level release, respectively. See Table 4-3 for Gamma-χ/Q Factors.

A_{is}, A_{iv}, A_{ig} Cumulative Radionuclide Release [μCi]

Measured cumulative release of radionuclide **i** over the time period of interest from a stack, vent, or ground level release point, respectively.

Since Byron does not have an elevated release point, the A_{is} term is not used.

TRM TSR 3.11.g.1 requires determination of cumulative and projected gamma air dose contributions due to noble gases for the current calendar quarter and the current calendar year at least once per 31 days.

Gamma air dose is calculated for the sector with the highest offsite $(\chi/Q)^{\gamma}$ and is compared with the Part I limits on gamma air dose.

For a release attributable to a processing or effluent system shared by more than one reactor unit, the dose due to an individual unit is obtained by proportioning the effluents among the units sharing the system.

4.2.2.2 Beta Air Dose

TRM Chapter 3.11 limits beta air dose due to noble gases in gaseous effluents released from each reactor unit to areas at and beyond the unrestricted area boundary to the following:

- Less than or equal to 10 mrad per calendar quarter.
- Less than or equal to 20 mrad per calendar year.

The beta air dose due to noble gases released in gaseous effluents is calculated by the following expression:

$$D_{\beta} = (3.17E-8)\sum_{i}\left\{N_i\left[(\chi/Q)_s A_{is} + (\chi/Q)_v A_{iv} + (\chi/Q)_g A_{ig}\right]\right\} \qquad \textbf{(4-5)}$$

The summation is over noble gas radionuclides **i**.

D_{β} Beta Dose [mrad]

Dose to air due to beta radiation from noble gas radionuclides released in gaseous effluents.

3.17E-8 Conversion Constant (seconds to years) [yr/sec]

N_i Beta Air Dose Conversion Factor [(mrad/yr)/(μCi/m^3)]

Beta air dose rate per unit of radioactivity concentration for radionuclide **i**. See Table 4-28 for Beta Air Dose conversion factors (From Table 3-1 of Regulatory Guide 1.109).

$(\chi/Q)_s$ Relative Concentration Factor [sec/m^3]
$(\chi/Q)_v$
$(\chi/Q)_g$ Radioactivity concentration based on semi-infinite cloud methodology at a specified location per unit of radioactivity release rate for a stack, vent, or ground level release, respectively. See Table 4-1.

A_{is}, A_{iv}, A_{ig} Cumulative Radionuclide Release [μCi]

Measured cumulative release of radionuclide **i** over the time period of interest from a stack, vent, or ground level release point, respectively.

Since Byron does not have an elevated release point, the A_{is} term is not used.

TRM 3.11.g requires determination of cumulative and projected beta air dose contributions due to noble gases for the current calendar quarter and the current calendar year at least once per 31 days.

Beta air dose is calculated for the sector with the highest offsite **(χ/Q)** and is compared with the ODCM Part I limit on beta air dose.

For a release attributable to a processing or effluent system shared by more than one reactor unit, the dose due to an individual unit is obtained by proportioning the effluents among the units sharing the system.

4.2.2.3 Whole Body Dose

The total body dose, to any receiver is due, in part, to gamma radiation emitted from radioactivity in airborne effluents. This component is added to others to demonstrate compliance to the requirements of 40CFR190 and 10CFR20.

The total body dose component due to gamma radiation from noble gases released in gaseous effluents is calculated by the following expression:

$$D_{TB} = (3.17E-8)\sum_i K_i \left\{ (\chi/Q)^{\gamma}_{s} A_{is} + (\chi/Q)^{\gamma}_{v} A_{iv} + (\chi/Q)^{\gamma}_{g} A_{ig} \right\} \qquad (4\text{-}6)$$

The summation is over noble gas radionuclides **i**.

D_{TB} Total Body Dose [mrem]

Dose to the total body due to gamma radiation from noble gas radionuclides released in gaseous effluents.

3.17E-8 Conversion Constant (seconds to years) [yr/sec]

K_i Gamma Total Body Dose Conversion Factor [(mrem/yr)/(uCi/m^3)]

Gamma total body dose factor due to gamma emissions for noble gas radionuclide **i** released from a stack, vent or ground level release point, respectively. See Table 4-28 for Gamma total body dose conversion factors. (From Table 3-1 of Regulatory Guide 1.109)

A_{is}, A_{iv}, A_{ig} Cumulative Radionuclide Release [μCi]

Measured cumulative release of radionuclide **i** over the time period of interest from a stack, vent, or ground level release point, respectively.

The total body dose is also calculated for the 40CFR190 and 10CFR20 compliance assessments. In some cases, the total body dose may be required in 10CFR50 Appendix I assessments (See Part II Table 1-1).

4.2.2.4 Skin Dose

There is no regulatory requirement to evaluate skin dose. However, this component is evaluated for reference as there is skin dose design objective contained in 10CFR50 Appendix I. Note that in the unlikely event that if beta air dose guideline is exceeded, then the skin dose will require evaluation.

The part of skin dose due to noble gases released in gaseous effluents is calculated by the following expression:

$$D_{SK} = (3.17E-8)\sum_i \left\{ L_i\left[(\chi/Q)_s A_{is} + (\chi/Q)_v A_{iv} + (\chi/Q)_g A_{ig}\right] + (1.11)M_i\left[(\chi/Q)_s^{\gamma} A_{is} + (\chi/Q)_v^{\gamma} A_{iv} + (\chi/Q)_g^{\gamma} A_{ig}\right]\right\} \quad (4\text{-}7)$$

The summation is over noble gas radionuclides **i**.

D_{SK} Skin Dose [mrem]

Dose to the skin due to beta and gamma radiation from noble gas radionuclides released in gaseous effluents.

L_i Beta Skin Dose Conversion Factor [(mrem/yr)/(μCi/m^3)]

Beta skin dose rate per unit of radioactivity concentration for radionuclide **i**. Taken from Table 4-28.

1.11 Conversion Constant (rads in air to rem in tissue) [mrem/mrad]

All other terms have been previously defined.

The skin dose is calculated for reference only.

4.2.3 Time Averaged Dose from Non-Noble Gas Radionuclides

TRM 3.11 provides the following limits, based on 10CFR50 Appendix I, on the dose to a member of the public from specified non-noble gas radionuclides in gaseous effluents released from each reactor unit to areas at and beyond the unrestricted area boundary:

- Less than or equal to 7.5 mrem to any organ during any calendar quarter
- Less than or equal to 15 mrem to any organ during any calendar year

The individual dose components are also required as part of the 40CFR190 assessments and combined as part of the 10CFR20 assessment (Part II Table 1-1). The dose due to radionuclides deposited on the ground is considered to be a component of the deep dose equivalent for 10CFR20 compliance and an organ (and total body) dose component for 10CFR50 Appendix I and 40CFR190 compliance.

The dose is calculated for releases in the time period under consideration.

Specifically, the dose is calculated as follows:

$$D_{aj}^{NNG} = (3.17E-8)\sum_{p}\sum_{i}\left[W_s R_{aipj} A_{is} + W_v R_{aipj} A_{iv} + W_g R_{aipj} A_{ig}\right] \qquad (4\text{-}8)$$

The summation is over pathways **p** and non-noble gas radionuclides **i**.

D_{aj}^{NNG} Dose Due to Non-Noble Gas Radionuclides [mrem]

Dose due to non-noble gases (radioiodines, tritium and particulates) to age group **a**, and to organ **j**.

3.17E-8 Conversion Constant (seconds to years) [yr/sec]

W_s, W_v, W_g Relative Concentration Factor

Radioactive concentration at a specific location per unit of radioactivity release rate or concentration for stack, vent or ground level release, respectively.

W_s, W_v, or W_g = $(\chi/Q)_s$, $(\chi/Q)_v$ or $(\chi/Q)_g$ for immersion, inhalation and all tritium pathways.

W_s, W_v, or W_g = $(D/Q)_s$, $(D/Q)_v$ or $(D/Q)_g$ for ground plain and all ingestion pathways.

$(\chi/Q)_s$, $(\chi/Q)_v$, $(\chi/Q)_g$ Relative Concentration Factor [sec/m^3]

Radioactivity concentration based on semi-infinite cloud model at a specified location per unit of radioactivity release rate for a stack, vent, or ground level release, respectively. See Table 4-1 through Table 4-6.

$(D/Q)_s$, $(D/Q)_v$, $(D/Q)_g$ Relative Deposition Factor [1/m^2]

Radioactivity concentration at a specified location per unit of radioactivity release concentration for a stack, vent, or ground level release, respectively. See Table 4-1 through Table 4-6.

R_{aipj} Site-Specific Dose Factor [(m^2 mrem/yr)/(μCi/sec)] or [(mrem/yr)/(μCi/m^3)]

Site-specific dose factor for age group **a**, nuclide **i**, pathway **p** and organ **j**. Pathways included are ground plane exposure, inhalation, vegetation ingestion, milk ingestion and meat ingestion. Values of R_{aipj} are provided in Table 4-7 through Table 4-26.

A_{is}, A_{iv}, A_{ig} Cumulative Radionuclide Release [μCi]

Measured cumulative release of radionuclide **i** over the time period of interest from a stack, vent, or ground level release point, respectively.

Since Byron does not have an elevated release point, the stack terms for A_{is}, W_s, $(\chi/Q)_s$, and $(D/Q)_s$ are not used.

TRM 3.11.h require cumulative and projected dose contributions for the current calendar quarter and the current calendar year for the specified non-noble gas radionuclides in airborne effluents to be determined at least once per 31 days.

To comply with this specification, Byron Station obtains and analyzes samples in accordance with the radioactive gaseous waste or gaseous effluent sampling and analysis program (TRM 3.11.f-1). In accordance with NUREG 0133 (Reference 14), dose due to non-noble gases is assessed at the location in the unrestricted area where the combination of existing pathways and receptor age groups indicates the maximum potential exposure. The inhalation and ground plane exposure pathways are considered to exist at all locations. The food ingestion pathways at a specific location are considered based on their existence as determined by land use census. The values used for (χ/Q) and (D/Q) are shown in Table 4-1 through Table 4-6 and correspond to the applicable pathway location.

For a release attributable to a processing or effluent system shared by more than one reactor, the dose due to an individual unit is obtained by proportioning the effluents among the units sharing the system.

The dose evaluated is also included as part of the 10CFR20 and 40CFR190 assessment (See Part II Section 5).

4.2.3.1 Ground Plane

The site-specific dose factor for ground deposition of radioactivity is considered to be a total body dose component and is calculated by the following expression:

$$R_{ai(GP)j}[D/Q] = K'K''(0.7)DFG_i\left[\frac{1-e^{-\lambda_i t_b}}{\lambda_i}\right] \qquad (4\text{-}9)$$

$R_{ai(GP)j}[D/Q]$ Ground Plane Deposition Dose Factor [(m^2 mrem/yr)/(μCi/sec)]

Site-specific ground plane dose factor for age group **a**, nuclide **i** and organ **j**. The ground plane dose is calculated using (D/Q).

K' Conversion Constant (1E6 pCi per μCi) [pCi/μCi]

K" Conversion Constant (8760 hr/yr) [hr/yr]

0.7 Shielding Factor; a factor that accounts for dimensionless shielding due to occupancy of structures.

DFG_i Ground Plane Dose Conversion Factor [(mrem/hr)/(pCi/m^2)]

Dose rate to the total body per unit of surface radioactivity concentration due to standing on ground uniformly contaminated with radionuclide **i**. Ground Plane Dose Factors are shown in Table 4-8.

Note that ground plane dose factors are only given for the total body and no age group. Doses to other organs are assumed to be equal to the total body dose. All age groups are assumed to receive the same dose.

λ_i Radiological Decay Constant [hr^{-1}]

Radiological decay constant for radionuclide **i**.

t_b Time Period of Ground Deposition [hr]

Time period during which the radioactivity on the ground is assumed to have been deposited (see Part II Table 1-3).

The ground plane exposure pathway is considered to exist at all locations.

4.2.3.2 Inhalation

The site-specific dose factor for inhalation is calculated by the following expression:

$$R_{ai(Inhal)j}[\chi/Q] = K'BR_a DFA_{aij} \qquad \textbf{(4-10)}$$

$R_{ai(Inhal)j}[\chi/Q]$ Inhalation Pathway Dose Factor [(mrem/yr)/(μCi/m^3)]

Site-specific inhalation dose factor for age group **a**, nuclide **i** and organ **j**. The inhalation dose is calculated using (χ/Q).

K' Conversion Constant (1E6 pCi per μCi) [pCi/μCi]

BR_a Individual Air Inhalation Rate [m^3/yr]

The air intake rate for individuals in age group **a**. See Table E-5 of Regulatory Guide 1.109.

DFA_{aij} Inhalation Dose Conversion Factor [mrem/pCi]

Dose commitment to an individual in age group **a** to organ **j** per unit of activity of radionuclide **i** inhaled. Taken from Tables E-7 through E-10 of Regulatory Guide 1.109. The value for H-3 is taken from NUREG 4013 (Reference 107).

The inhalation exposure pathway is considered to exist at all locations.

4.2.3.3 Ingestion: Vegetation

Food ingestion pathway doses are calculated at locations indicated by the land use census survey. If no real pathway exists within 5 miles of the station, the cow-milk pathway is assumed to be located at 5 miles. Food pathway calculations are not made for sectors in which the offsite regions near the station are over bodies of water.

The dose factor for consumption of vegetables is calculated by the following expression:

$$R_{ai(Veg)j}[D/Q] = K'\left[\frac{(r)}{Y_v(\lambda_i + \lambda_w)}\right](DFL_{aij})\left[U_a^L f_L e^{-\lambda_i t_L} + U_a^S f_g e^{-\lambda_i t_h}\right] \quad \textbf{(4-11)}$$

$R_{ai(Veg)j}[D/Q]$ Vegetation Ingestion Pathway Dose Factor [(m^2 mrem/yr)/(μCi/sec)]

Site-specific vegetation ingestion dose factor for age group **a**, nuclide **i** and organ **j**. With the exception of H-3, the vegetation dose is calculated using (D/Q).

K' Conversion Constant (1E6 pCi per μCi) [pCi/μCi]

r Vegetation Retention Factor [dimensionless]

Y_v Agricultural Productivity Yield [kg/ m^2]

λ_i Radiological Decay Constant [1/sec]

Radiological decay constant for radionuclide **I**

λ_w Weathering Decay Constant [1/sec]

Removal constant for physical loss of activity by weathering. See ODCM Part II Table 1-3.

DFL_{aij} Ingestion Dose Conversion Factor [mrem/pCi]

Ingestion dose conversion factor for age group **a**, nuclide **i** and organ **j**. Converts pCi ingested to mrem. Taken from Tables E-11 though E-14 of Regulatory Guide 1.109. The value for H-3 is taken from NUREG 4013 (Reference 107).

U_a^L Consumption Rate for Fresh Leafy Vegetation [kg/yr]

Consumption rate for fresh leafy vegetation for age group **a**.

U_a^S Consumption Rate for Stored Vegetation [kg/yr]

Consumption rate for stored vegetation for age group **a**.

f_L Local Leafy Vegetation Fraction [dimensionless]

Fraction of the annual intake of fresh leafy vegetation that is grown locally.

f_g Local Stored Vegetation Fraction [dimensionless]

Fraction of the annual intake of stored vegetation that is grown locally.

t_L Environmental Transport Time - Fresh Vegetation [sec]

Average time between harvest of leafy vegetation and its consumption.

t_h Environmental Transport Time - Stored Vegetation [sec]

Average time between harvest of stored vegetation and its consumption.

The tritium dose from the vegetation pathway must be considered separately as the transport mechanism is based on airborne concentration rather than ground deposition. The dose factor for the tritium vegetation pathway is:

$$R_{a(H-3)(Veg)j}[\chi/Q] = K'K'''\left(U_a^L f_L + U_a^S f_g\right)DFL_{a(H-3)j}[0.75(0.5/H)] \qquad (4\text{-}12)$$

$R_{a(H-3)(Veg)j}[\chi/Q]$ Tritium Vegetation Ingestion Pathway Dose Factor [(mrem/yr)/(μCi/m^3)]

Site-specific tritium vegetation ingestion dose factor for age group **a** and organ **j**. The tritium vegetation dose is calculated using χ/Q.

K''' Conversion Constant (1E3 gm per Kg) [gm/Kg]

H Absolute Atmospheric Humidity [gm/m^3]

0.75 Water Fraction [dimensionless]
The fraction of total vegetation that is water.

0.5 Specific Activity Ratio [dimensionless]

4.2.3.4 Ingestion: Milk

The dose factor for consumption of milk is calculated by the following expressions:

$$R_{ai(Milk)j}[D/Q] = K'\frac{Q_F(U_{am})}{\lambda_i + \lambda_w}F_m(r)(DFL_{aij})\left[\frac{f_p f_s}{Y_p} + \frac{(1-f_p f_s)e^{-\lambda_i t_h}}{Y_s}\right]e^{-\lambda_i t_f} \qquad (4\text{-}13)$$

$R_{ai(Milk)j}[D/Q]$ Milk Ingestion Pathway Dose Factor [(m^2 mrem/yr)/(μCi/sec)]

Site-specific milk ingestion dose factor for age group **a**, nuclide **i** and organ **j**. With the exception of H-3, the milk dose factor is calculated using (D/Q).

K' Conversion Constant (1E6 pCi per μCi) [pCi/μCi]

Q_F Feed Consumption [Kg/da]

Amount of feed consumed by milk animal each day. See ODCM Part II Table 1-3.

U_{am} Milk Consumption Rate [l/yr]

Milk consumption rate for age group **a**.

F_m Stable Element Transfer Coefficient for Milk [da/l]

Fraction of animal's daily intake of a particular chemical element that appears in each liter of milk (pCi/l in milk per pCi/da ingested by animal). See ODCM Part II Table 1-4.

f_p Pasture Time Fraction [dimensionless]

Fraction of year that animal is on pasture.

f_s Pasture Grass Fraction [dimensionless]

Fraction of animal feed that is pasture grass while animal is on pasture.

Y_P Agricultural Productivity Yield - Pasture Grass [kg/m^2]

The agricultural productivity by unit area of pasture feed grass.

Y_S Agricultural Productivity Yield - Stored Feed [kg/m^2]

The agricultural productivity by unit area of stored feed.

t_h Environmental Transport Time - Stored Feed [sec]

Average time between harvest to consumption of stored feed by milk animal.

t_f Environmental Transport Time - Pasture to Consumption [sec]

Average time from pasture, to milk animal, to milk, to consumption.

All other terms have been previously defined.

The tritium dose from the milk pathway must be considered separately as the transport mechanism is based on airborne concentration rather than ground deposition. The dose factor for the tritium milk pathway is:

$$R_{a(H-3)(Milk)j}[\chi/Q] = K'K'''F_m\ Q_F U_{am} DFL_{a(H-3)j}[0.75(0.5/H)] \qquad (4\text{-}14)$$

$R_{a(H-3)(Milk)j}[\chi/Q]$ Tritium Milk Ingestion Pathway Dose Factor [(mrem/yr)/(μCi/m^3)]

Site-specific tritium milk ingestion dose factor for age group **a** and organ **j**. The tritium milk dose is calculated using χ/Q.

K''' Conversion Constant (1E3 gm per Kg) [gm/Kg]

H Absolute Atmospheric Humidity [gm/m^3]

0.75 Water Fraction [dimensionless]

The fraction of total vegetation that is water.

0.5 Specific Activity Ratio [dimensionless]

4.2.3.5 Ingestion: Meat

The dose factor for consumption of meat is calculated by the following expression:

$$R_{ai(Meat)j}[D/Q] = K'\frac{Q_F(U_{af})}{\lambda_l + \lambda_w} F_f(r)(DFL_{aij})\left[\frac{f_p f_s}{Y_p} + \frac{(1 - f_p f_s)e^{-\lambda_i t_h}}{Y_s}\right] e^{-\lambda_i t_f} \qquad (4\text{-}15)$$

$R_{ai(Meat)j}[D/Q]$ Meat Ingestion Pathway Dose Factor [(m^2 mrem/yr)/(μCi/sec)]

Site-specific meat ingestion dose factor for age group **a**, nuclide **i** and organ **j**. With the exception of H-3, the meat dose factor is calculated using (D/Q).

U_{af} Meat Consumption Rate [l/yr]

Meat consumption rate for age group **a**.

F_f Stable Element Transfer Coefficient for Meat [da/Kg]

Fraction of animal's daily intake of a particular chemical element that appears in each liter of meat (pCi/Kg in meat per pCi/da ingested by animal). See ODCM Part II Table 1-4.

t_h Environmental Transport Time - Stored Feed [sec]

Average time between harvest to consumption of stored feed by meat animal.

t_f Environmental Transport Time - Pasture to Consumption [sec]

Average time from pasture, to meat animal, to meat, to consumption.

All other terms have been previously defined.

The tritium dose from the meat pathway must be considered separately as the transport mechanism is based on airborne concentration rather than ground deposition. The dose factor for the tritium meat pathway is:

$$R_{a(H-3)(Meat)j}[\chi/Q] = K'K''F_f\,Q_F U_{ar} DFL_{a(H-3)j}[0.75(0.5/H)] \qquad \textbf{(4-16)}$$

$R_{a(H-3)(Meat)j}[\chi/Q]$ Tritium Meat Ingestion Pathway Dose Factor [(mrem/yr)/(μCi/m^3)]

Site-specific tritium meat ingestion dose factor for age group **a** and organ **j**. The tritium meat dose is calculated using χ/Q.

K''' Conversion Constant (1E3 gm per Kg) [gm/Kg]

H Absolute Atmospheric Humidity [gm/m^3]

0.75 Water Fraction [dimensionless]
The fraction of total vegetation that is water.

0.5 Specific Activity Ratio [dimensionless]

All other terms have been previously defined.

Table 4-1
X/Q and D/Q Maxima at or Beyond the Unrestricted Area Boundary

Downwind Direction	Mixed Mode(Vent) Release Radius (meters)	X/Q (sec/m**3)	Radius (meters)	D/Q (1/m**2)	Ground Level Release Radius (meters)	X/Q (sec/m**3)	D/Q (1/m**2)
N	1875.	1.988E-07	1875.	1.983E-09	1875.	8.676E-07	4.671E-09
NNE	1829.	1.677E-07	1829.	1.927E-09	1829.	7.531E-07	4.271E-09
NE	1585.	1.530E-07	1585.	1.821E-09	1585.	7.876E-07	4.388E-09
ENE	1234.	1.353E-07	1234.	1.764E-09	1234.	8.808E-07	5.036E-09
E	1227.	1.688E-07	1227.	2.335E-09	1227.	1.143E-06	6.226E-09
ESE	991.	2.519E-07	991.	3.340E-09	991.	1.692E-06	9.896E-09
SE	1006.	3.020E-07	1006.	3.578E-09	1006.	2.480E-06	1.118E-08
SSE	800.	4.497E-07	800.	3.761E-09	800.	4.152E-06	1.420E-08
S	945.	2.249E-07	945.	2.792E-09	945.	1.846E-06	9.364E-09
SSW	975.	1.476E-07	975.	1.970E-09	975.	1.305E-06	6.672E-09
SW	1067.	1.148E-07	1067.	1.786E-09	1067.	9.279E-07	5.316E-09
WSW	1212.	1.199E-07	1212.	1.903E-09	1212.	7.646E-07	5.002E-09
W	1189.	1.758E-07	1189.	1.870E-09	1189.	9.348E-07	5.330E-09
WNW	1227.	1.205E-07	1227.	1.292E-09	1227.	6.543E-07	3.745E-09
NW	1128.	1.686E-07	1128.	1.719E-09	1128.	8.807E-07	4.984E-09
NNW	1044.	3.047E-07	1044.	3.223E-09	1044.	1.432E-06	8.871E-09

Byron Site Meteorological Data 1/78 - 12/87

Note: Based on "Irrigation from the Rock River" letter from G.P. Lahti (Sargent and Lundy) to J.C. Golden (NSEP), June 4, 1990 and the formulas in Reg. Guide 1.109.

χ/Q is used for beta skin, and inhalation dose pathways. See Sections 4.2.1, 4.2.2 and 4.2.3.2.

D/Q is used for produce and leafy vegetable pathways. See Section 4.2.3.

The ground level release data are provided for reference purposes only. Routine dose calculations are performed using mixed mode data.

Radius is the approximate distance from the midpoint between gaseous effluent release points to the location of the highest χ/Q or D/Q at or beyond the unrestricted area boundary (UAB).

Table 4-2
X/Q and D/Q Maxima at or Beyond the Restricted Area Boundary

Downwind Direction	Mixed Mode(Vent) Release Radius (meters)	X/Q (sec/m**3)	Radius (meters)	D/Q (1/m**2)	Ground Level Release Radius (meters)	X/Q (sec/m**3)	D/Q (1/m**2)
N	777.	6.357E-07	777.	7.004E-09	777.	3.290E-06	1.036E-08
NNE	538.	8.778E-07	538.	1.046E-08	538.	5.086E-06	1.193E-08
NE	528.	6.803E-07	528.	7.792E-09	528.	4.371E-06	1.646E-08
ENE	474.	5.341E-07	474.	5.947E-09	474.	4.014E-06	2.346E-08
E	468.	6.698E-07	468.	7.930E-09	468.	5.359E-06	3.930E-08
ESE	480.	7.377E-07	480.	8.963E-09	480.	5.434E-06	5.144E-08
SE	427.	1.126E-06	427.	1.063E-08	427.	1.024E-05	4.352E-08
SSE	410.	1.349E-06	410.	8.744E-09	410.	1.305E-05	6.044E-08
S	295.	1.441E-06	295.	1.171E-08	295.	1.391E-05	5.707E-08
SSW	299.	9.382E-07	299.	8.293E-09	299.	9.376E-06	4.197E-08
SW	451.	3.949E-07	451.	5.063E-09	451.	3.666E-06	2.095E-08
WSW	386.	6.098E-07	386.	7.425E-09	386.	4.699E-06	3.088E-08
W	379.	1.041E-06	379.	8.116E-09	379.	6.009E-06	3.275E-08
WNW	385.	7.454E-07	385.	6.081E-09	385.	4.382E-06	2.370E-08
NW	445.	7.394E-07	445.	6.117E-09	445.	4.068E-06	2.198E-08
NNW	658.	6.123E-07	658.	6.177E-09	658.	2.980E-06	1.874E-08

Byron Site Meteorological Data 1/78 - 12/87

Note: Based on "Irrigation from the Rock River" letter from G.P. Lahti (Sargent and Lundy) to J.C. Golden (NSEP), June 4, 1990 and the formulas in Reg. Guide 1.109.

The ground level release data are provided for reference purposes only. Routine dose calculations are performed using mixed mode data.

Radius is the approximate distance from the midpoint between gaseous effluent release points to the location of the highest χ/Q or D/Q at or beyond the restricted area boundary (RAB).

Table 4-3
Maximum Offsite Gamma-χ/Q

Downwind Direction	Radius (meters)	Ground Gamma-χ/Q (sec/m**3)	Vent Gamma-χ/Q (sec/m**3)
N	1875	4.80E-07	1.46E-07
NNE	1829	4.16E-07	1.36E-07
NE	1585	4.34E-07	1.31E-07
ENE	1234	4.83E-07	1.27E-07
E	1227	6.10E-07	1.50E-07
ESE	991	8.73E-07	2.13E-07
SE	1006	1.24E-06	2.45E-07
SSE	800	1.83E-06	3.02E-07
S	945	9.68E-07	1.85E-07
SSW	975	6.69E-07	1.34E-07
SW	1067	4.84E-07	1.08E-07
WSW	1212	4.19E-07	1.11E-07
W	1189	5.07E-07	1.39E-07
WNW	1227	3.54E-07	9.70E-08
NW	1128	4.61E-07	1.29E-07
NNW	1044	7.43E-07	2.15E-07

Table 4-4
χ/Q and D/Q at the Nearest Resident Locations within 5 miles

Location Description	Direction	Distance		Ground Level Release		Mixed Mode (Vent) Release	
		Miles	meters	χ/Q sec/m^3	D/Q m^{-2}	χ/Q sec/m^3	D/Q m^{-2}
NEAREST RESIDENCE	N	2.67	4300	3.70E-07	9.80E-10	6.30E-08	3.80E-10
NEAREST RESIDENCE	NNE	0.99	1600	1.50E-06	5.30E-09	8.30E-08	1.70E-09
NEAREST RESIDENCE	NE	1.18	1900	1.00E-06	3.40E-09	6.60E-08	1.10E-09
NEAREST RESIDENCE	ENE	1.30	2100	8.20E-07	2.20E-09	4.60E-08	7.30E-10
NEAREST RESIDENCE	E	1.30	2100	1.20E-06	2.80E-09	5.90E-08	9.40E-10
NEAREST RESIDENCE	ESE	1.43	2300	9.10E-07	2.10E-09	5.10E-08	7.10E-10
NEAREST RESIDENCE	SE	0.75	1200	3.60E-06	7.40E-09	6.90E-08	2.00E-09
NEAREST RESIDENCE	SSE	0.62	1000	3.80E-06	8.10E-09	5.40E-08	1.60E-09
NEAREST RESIDENCE	S	0.50	800	3.40E-06	1.20E-08	8.40E-08	2.40E-09
NEAREST RESIDENCE	SSW	0.62	1000	1.70E-06	6.80E-09	6.40E-08	1.90E-09
NEAREST RESIDENCE	SW	0.75	1200	7.80E-07	3.10E-09	3.50E-08	8.80E-10
NEAREST RESIDENCE	WSW	1.68	2700	3.30E-07	1.40E-09	5.40E-08	6.50E-10
NEAREST RESIDENCE	W	1.68	2700	5.50E-07	1.40E-09	5.20E-08	4.10E-10
NEAREST RESIDENCE	WNW	0.75	1200	1.70E-06	5.20E-09	4.60E-08	1.00E-09
NEAREST RESIDENCE	NW	0.99	1600	1.10E-06	3.30E-09	4.30E-08	7.30E-10
NEAREST RESIDENCE	NNW	1.30	2100	8.50E-07	2.90E-09	6.20E-08	7.90E-10

Table 4-5
χ/Q and D/Q at the Nearest Cow Milk Locations within 5 miles

Location Description	Direction	Distance		Ground Level Release		Mixed Mode (Vent) Release	
		miles	meters	χ/Q sec/m^3	D/Q m^{-2}	χ/Q sec/m^3	D/Q m^{-2}
COW MILK	N	4.97	8000	1.50E-07	3.20E-10	4.20E-08	1.40E-10
COW MILK	NNE	4.97	8000	1.30E-07	3.10E-10	3.90E-08	1.60E-10
COW MILK	NE	1.86	3000	5.00E-07	1.50E-09	6.70E-08	6.20E-10
COW MILK	ENE	4.97	8000	1.10E-07	2.00E-10	2.90E-08	1.10E-10
COW MILK	E	4.97	8000	1.60E-07	2.70E-10	3.90E-08	1.40E-10
COW MILK	ESE	4.97	8000	1.40E-07	2.30E-10	3.50E-08	1.20E-10
COW MILK	SE	4.97	8000	2.00E-07	2.70E-10	3.80E-08	1.40E-10
COW MILK	SSE	4.97	8000	1.50E-07	2.20E-10	3.10E-08	1.20E-10
COW MILK	S	4.78	7700	9.10E-08	2.40E-10	2.90E-08	1.50E-10
COW MILK	SSW	4.97	8000	6.10E-08	1.80E-10	2.20E-08	1.20E-10
COW MILK	SW	4.97	8000	3.90E-08	1.10E-10	1.50E-08	7.10E-11
COW MILK	WSW	4.97	8000	6.30E-08	2.10E-10	2.50E-08	1.30E-10
COW MILK	W	2.49	4000	3.00E-07	7.20E-10	4.90E-08	2.60E-10
COW MILK	WNW	3.29	5300	1.70E-07	4.00E-10	3.40E-08	1.50E-10
COW MILK	NW	2.98	4800	2.10E-07	4.90E-10	3.70E-08	1.80E-10
COW MILK	NNW	4.97	8000	1.10E-07	2.70E-10	3.50E-08	1.20E-10

Table 4-6
χ/Q and D/Q at the Nearest Cow Meat Locations within 5 miles

Location Description	Direction	Distance		Ground Level Release		Mixed Mode (Vent) Release	
		miles	meters	χ/Q sec/m^3	D/Q m^{-2}	χ/Q sec/m^3	D/Q m^{-2}
COW MEAT	N	2.98	4800	3.10E-07	8.10E-10	6.00E-08	3.20E-10
COW MEAT	NNE	1.49	2400	7.70E-07	2.60E-09	7.60E-08	9.90E-10
COW MEAT	NE	3.42	5500	2.00E-07	5.30E-10	5.20E-08	2.70E-10
COW MEAT	ENE	2.30	3700	3.40E-07	8.10E-10	4.30E-08	3.50E-10
COW MEAT	E	2.24	3600	5.00E-07	1.10E-09	5.80E-08	4.70E-10
COW MEAT	ESE	1.49	2400	8.50E-07	2.00E-09	5.10E-08	6.80E-10
COW MEAT	SE	1.68	2700	9.80E-07	1.80E-09	5.90E-08	6.90E-10
COW MEAT	SSE	3.17	5100	2.90E-07	4.90E-10	4.10E-08	2.40E-10
COW MEAT	S	0.56	900	2.80E-06	9.90E-09	7.70E-08	2.10E-09
COW MEAT	SSW	2.17	3500	2.10E-07	8.00E-10	4.00E-08	4.30E-10
COW MEAT	SW	3.17	5100	7.60E-08	2.50E-10	2.10E-08	1.50E-10
COW MEAT	WSW	1.68	2700	3.30E-07	1.40E-09	5.40E-08	6.50E-10
COW MEAT	W	1.68	2700	5.50E-07	1.40E-09	5.20E-08	4.10E-10
COW MEAT	WNW	3.29	5300	1.70E-07	4.00E-10	3.40E-08	1.50E-10
COW MEAT	NW	3.79	6100	1.50E-07	3.20E-10	3.30E-08	1.30E-10
COW MEAT	NNW	1.37	2200	7.90E-07	2.70E-09	6.20E-08	7.50E-10

Table 4-7
Ground Plane Dose Factors

Nuclide	Bone	Liver	T Body	Thyroid	Kidney	Lung	GI-LLI
H-3	0.00E+00	0.00E+00	0.00E+00	0.00E+00	0.00E+00	0.00E+00	0.00E+00
Na-24	1.20E+07	1.20E+07	1.20E+07	1.20E+07	1.20E+07	1.20E+07	1.20E+07
Cr-51	4.65E+06	4.65E+06	4.65E+06	4.65E+06	4.65E+06	4.65E+06	4.65E+06
Mn-54	1.38E+09	1.38E+09	1.38E+09	1.38E+09	1.38E+09	1.38E+09	1.38E+09
Mn-56	9.03E+05	9.03E+05	9.03E+05	9.03E+05	9.03E+05	9.03E+05	9.03E+05
Fe-55	0.00E+00	0.00E+00	0.00E+00	0.00E+00	0.00E+00	0.00E+00	0.00E+00
Fe-59	2.73E+08	2.73E+08	2.73E+08	2.73E+08	2.73E+08	2.73E+08	2.73E+08
Co-58	3.80E+08	3.80E+08	3.80E+08	3.80E+08	3.80E+08	3.80E+08	3.80E+08
Co-60	2.45E+10	2.45E+10	2.45E+10	2.45E+10	2.45E+10	2.45E+10	2.45E+10
Ni-63	0.00E+00	0.00E+00	0.00E+00	0.00E+00	0.00E+00	0.00E+00	0.00E+00
Ni-65	2.97E+05	2.97E+05	2.97E+05	2.97E+05	2.97E+05	2.97E+05	2.97E+05
Cu-64	6.05E+05	6.05E+05	6.05E+05	6.05E+05	6.05E+05	6.05E+05	6.05E+05
Zn-65	7.46E+08	7.46E+08	7.46E+08	7.46E+08	7.46E+08	7.46E+08	7.46E+08
Zn-69	0.00E+00	0.00E+00	0.00E+00	0.00E+00	0.00E+00	0.00E+00	0.00E+00
Br-83	4.87E+03	4.87E+03	4.87E+03	4.87E+03	4.87E+03	4.87E+03	4.87E+03
Br-84	2.03E+05	2.03E+05	2.03E+05	2.03E+05	2.03E+05	2.03E+05	2.03E+05
Br-85	0.00E+00	0.00E+00	0.00E+00	0.00E+00	0.00E+00	0.00E+00	0.00E+00
Rb-86	9.01E+06	9.01E+06	9.01E+06	9.01E+06	9.01E+06	9.01E+06	9.01E+06
Rb-88	3.31E+04	3.31E+04	3.31E+04	3.31E+04	3.31E+04	3.31E+04	3.31E+04
Rb-89	1.23E+05	1.23E+05	1.23E+05	1.23E+05	1.23E+05	1.23E+05	1.23E+05
Sr-89	2.16E+04	2.16E+04	2.16E+04	2.16E+04	2.16E+04	2.16E+04	2.16E+04
Sr-90	0.00E+00	0.00E+00	0.00E+00	0.00E+00	0.00E+00	0.00E+00	0.00E+00
Sr-91	2.14E+06	2.14E+06	2.14E+06	2.14E+06	2.14E+06	2.14E+06	2.14E+06
Sr-92	7.76E+05	7.76E+05	7.76E+05	7.76E+05	7.76E+05	7.76E+05	7.76E+05
Y-90	4.50E+03	4.50E+03	4.50E+03	4.50E+03	4.50E+03	4.50E+03	4.50E+03
Y-91M	1.00E+05	1.00E+05	1.00E+05	1.00E+05	1.00E+05	1.00E+05	1.00E+05
Y-91	1.07E+06	1.07E+06	1.07E+06	1.07E+06	1.07E+06	1.07E+06	1.07E+06
Y-92	1.80E+05	1.80E+05	1.80E+05	1.80E+05	1.80E+05	1.80E+05	1.80E+05
Y-93	1.83E+05	1.83E+05	1.83E+05	1.83E+05	1.83E+05	1.83E+05	1.83E+05
Zr-95	2.45E+08	2.45E+08	2.45E+08	2.45E+08	2.45E+08	2.45E+08	2.45E+08
Zr-97	2.96E+06	2.96E+06	2.96E+06	2.96E+06	2.96E+06	2.96E+06	2.96E+06
Nb-95	1.37E+08	1.37E+08	1.37E+08	1.37E+08	1.37E+08	1.37E+08	1.37E+08
Mo-99	3.99E+06	3.99E+06	3.99E+06	3.99E+06	3.99E+06	3.99E+06	3.99E+06
Tc- 99M	1.84E+05	1.84E+05	1.84E+05	1.84E+05	1.84E+05	1.84E+05	1.84E+05
Tc-101	2.03E+04	2.03E+04	2.03E+04	2.03E+04	2.03E+04	2.03E+04	2.03E+04
Ru-103	1.08E+08	1.08E+08	1.08E+08	1.08E+08	1.08E+08	1.08E+08	1.08E+08
Ru-105	6.36E+05	6.36E+05	6.36E+05	6.36E+05	6.36E+05	6.36E+05	6.36E+05
Ru-106	4.22E+08	4.22E+08	4.22E+08	4.22E+08	4.22E+08	4.22E+08	4.22E+08
Ag-110M	3.45E+09	3.45E+09	3.45E+09	3.45E+09	3.45E+09	3.45E+09	3.45E+09

Table 4-7 (Continued)
Ground Plane Dose Factors (same for all age groups)

Nuclide	Bone	Liver	T Body	Thyroid	Kidney	Lung	GI-LLI
Te-125M	1.56E+06	1.56E+06	1.56E+06	1.56E+06	1.56E+06	1.56E+06	1.56E+06
Te-127M	9.16E+04	9.16E+04	9.16E+04	9.16E+04	9.16E+04	9.16E+04	9.16E+04
Te-127	2.99E+03	2.99E+03	2.99E+03	2.99E+03	2.99E+03	2.99E+03	2.99E+03
Te-129M	1.98E+07	1.98E+07	1.98E+07	1.98E+07	1.98E+07	1.98E+07	1.98E+07
Te-129	2.62E+04	2.62E+04	2.62E+04	2.62E+04	2.62E+04	2.62E+04	2.62E+04
Te-131M	8.02E+06	8.02E+06	8.02E+06	8.02E+06	8.02E+06	8.02E+06	8.02E+06
Te-131	2.92E+04	2.92E+04	2.92E+04	2.92E+04	2.92E+04	2.92E+04	2.92E+04
Te-132	4.22E+06	4.22E+06	4.22E+06	4.22E+06	4.22E+06	4.22E+06	4.22E+06
I-130	5.50E+06	5.50E+06	5.50E+06	5.50E+06	5.50E+06	5.50E+06	5.50E+06
I-131	1.72E+07	1.72E+07	1.72E+07	1.72E+07	1.72E+07	1.72E+07	1.72E+07
I-132	1.25E+06	1.25E+06	1.25E+06	1.25E+06	1.25E+06	1.25E+06	1.25E+06
I-133	2.45E+06	2.45E+06	2.45E+06	2.45E+06	2.45E+06	2.45E+06	2.45E+06
I-134	4.46E+05	4.46E+05	4.46E+05	4.46E+05	4.46E+05	4.46E+05	4.46E+05
I-135	2.53E+06	2.53E+06	2.53E+06	2.53E+06	2.53E+06	2.53E+06	2.53E+06
Cs-134	6.94E+09	6.94E+09	6.94E+09	6.94E+09	6.94E+09	6.94E+09	6.94E+09
Cs-136	1.50E+08	1.50E+08	1.50E+08	1.50E+08	1.50E+08	1.50E+08	1.50E+08
Cs-137	1.76E+10	1.76E+10	1.76E+10	1.76E+10	1.76E+10	1.76E+10	1.76E+10
Cs-138	3.59E+05	3.59E+05	3.59E+05	3.59E+05	3.59E+05	3.59E+05	3.59E+05
Ba-139	1.06E+05	1.06E+05	1.06E+05	1.06E+05	1.06E+05	1.06E+05	1.06E+05
Ba-140	2.05E+07	2.05E+07	2.05E+07	2.05E+07	2.05E+07	2.05E+07	2.05E+07
Ba-141	4.17E+04	4.17E+04	4.17E+04	4.17E+04	4.17E+04	4.17E+04	4.17E+04
Ba-142	4.44E+04	4.44E+04	4.44E+04	4.44E+04	4.44E+04	4.44E+04	4.44E+04
La-140	1.92E+07	1.92E+07	1.92E+07	1.92E+07	1.92E+07	1.92E+07	1.92E+07
La-142	7.60E+05	7.60E+05	7.60E+05	7.60E+05	7.60E+05	7.60E+05	7.60E+05
Ce-141	1.37E+07	1.37E+07	1.37E+07	1.37E+07	1.37E+07	1.37E+07	1.37E+07
Ce-143	2.31E+06	2.31E+06	2.31E+06	2.31E+06	2.31E+06	2.31E+06	2.31E+06
Ce-144	6.96E+07	6.96E+07	6.96E+07	6.96E+07	6.96E+07	6.96E+07	6.96E+07
Pr-143	0.00E+00	0.00E+00	0.00E+00	0.00E+00	0.00E+00	0.00E+00	0.00E+00
Pr-144	1.84E+03	1.84E+03	1.84E+03	1.84E+03	1.84E+03	1.84E+03	1.84E+03
Nd-147	8.48E+06	8.48E+06	8.48E+06	8.48E+06	8.48E+06	8.48E+06	8.48E+06
W-187	2.35E+06	2.35E+06	2.35E+06	2.35E+06	2.35E+06	2.35E+06	2.35E+06
Np-239	1.71E+06	1.71E+06	1.71E+06	1.71E+06	1.71E+06	1.71E+06	1.71E+06

Notes:

1) Units are m^2 mrem/yr per μCi/sec.
2) All age groups are assumed to receive the same dose.

Table 4-8
External Dose Factors for Standing on Contaminated Ground
DFG_{ij} (mrem/hr per pCi/ m^2)

Element	Whole Body Dose Factor	Reference	Element	Dose Factor	Reference
H-3	0.00E+00	6	Be-7	5.95E-10	99
C-14	0.00E+00	6	F-18	1.19E-08	99
Na-22	2.42E-08	99	Na-24	2.50E-08	6
Mg-27	1.14E-08	99	Mg-28	1.48E-08	99
Al-26	2.95E-08	99	Al-28	2.00E-08	99
P-32	0.00E+00	6	Cl-38	1.70E-08	99
Ar-41	1.39E-08	99	K-40	2.22E-09	99
K-42	4.64E-09	99	K-43	1.19E-08	99
Ca-47	1.14E-08	99	Sc-44	2.50E-08	99
Sc-46m	1.21E-09	99	Sc-46	2.24E-08	99
Sc-47	1.46E-09	99	Ti-44	1.95E-09	99
V-48	3.21E-08	99	Cr-51	2.20E-10	6
Mn-52m	2.79E-08	99	Mn-52	3.80E-08	99
Mn-54	5.80E-09	6	Mn-56	1.10E-08	6
Fe-52	9.12E-09	99	Fe-55	0.00E+00	6
Fe-59	8.00E-09	6	Co-57	1.65E-09	99
Co-58	7.00E-09	6	Co-60	1.70E-08	6
Ni-63	0.00E+00	6	Ni-65	3.70E-09	6
Cu-64	1.50E-09	6	Cu-67	1.52E-09	99
Cu-68	8.60E-09[1]	–	Zn-65	4.00E-09	6
Zn-69m	5.06E-09	99	Zn-69	0.00E+00	6
Ga-66	2.70E-08	99	Ga-67	1.89E-09	99
Ga-68	1.24E-08	99	Ga-72	3.00E-08	99
Ge-77	1.34E-08	99	As-72	2.23E-08	99
As-73	1.16E-10	99	As-74	9.41E-09	99
As-76	6.46E-09	99	As-77	1.79E-10	99
Se-73	1.38E-08	99	Se-75	4.98E-09	99
Br-77	3.84E-09	99	Br-80	2.01E-09	99
Br-82	3.00E-08	99	Br-83	6.40E-11	6
Br-84	1.20E-08	6	Br-85	0.00E+00	6
Kr-79	3.07E-09	99	Kr-81	1.59E-10	99
Kr-83m	1.42E-11	99	Kr-85m	2.24E-09	99
Kr-85	1.35E-10	99	Kr-87	1.03E-08	99
Kr-88	2.07E-08	99	Kr-90	1.56E-08	99
Rb-84	1.07E-08	99	Rb-86	6.30E-10	6
Rb-87	0.00E+00	99	Rb-88	3.50E-09	6
Rb-89	1.50E-08	6	Sr-85	6.16E-09	99
Sr-87m	3.92E-09	99	Sr-89	5.60E-13	6
Sr-90	1.84E-11	99	Sr-91	7.10E-09	6
Sr-92	9.00E-09	6	Y-86	4.00E-08	99
Y-87	5.53E-09	99	Y-88	2.88E-08	99
Y-90	2.20E-12	6	Y-91m	3.80E-09	6
Y-91	2.40E-11	6	Y-92	1.60E-09	6
Y-93	5.70E-10	6	Zr-95	5.00E-09	6
Zr-97	5.50E-09	6	Nb-94	1.84E-08	99
Nb-95	5.10E-09	6	Nb-97m	8.57E-09	99
Nb-97	8.48E-09	99	Mo-99	1.90E-09	6
Tc-99m	9.60E-10	6	Tc-101	2.70E-09	6
Tc-104	1.83E-08[1]	–	Ru-97	2.99E-09	99
Ru-103	3.60E-09	6	Ru-105	4.50E-09	6
Ru/Rh-106	5.76E-09[3]	6, 99	Pc-109	3.80E-10	99
Cc-109	1.12E-10	99	In-111	5.11E-09	99
In-115m	2.01E-09	99	In-116	0.00E+00[2]	–
Sn-113	1.15E-09	99	Sn-117m	1.96E-08	99
Sn-119m	7.05E-11	99	Sb-117	0.00E+00[2]	–
Sb-122	2.71E-09[1]	–	Sb-124	1.16E-08[1]	–
Sb-125	4.56E-09	99	Sb-126	7.13E-10	99
Ag-108m	1.92E-08	99	Ag-108	1.14E-09	99
Ag-110m	1.80E-08	6	Ag-111	6.75E-10	99
Te-121m	2.65E-09	99	Te-121	6.75E-09	99
Te-123m	1.88E-09	99	Te-125m	3.50E-11	6

Table 4-8 (cont.)
External Dose Factors for Standing on Contaminated Ground
DFG_{ij} (mrem/hr per pCi/ m^2)

Element	Whole Body Dose Factor	Reference	Element	Dose Factor	Reference
Te-125	0.00E+00[2]	–	Te-127m	1.10E-12	6
Te-127	1.00E-11	6	Te-129m	7.70E-10	6
Te-129	7.10E-10	6	Te-131m	8.40E-09	6
Te-131	2.20E-09	6	Te-I-132	3.40E-09[5]	6
Te-134	1.05E-08	99	I-123	2.12E-09	99
I-124	1.23E-08	99	I-125	2.89E-10	99
I-130	1.40E-08	6	I-131	2.80E-09	6
I-133	3.70E-09	6	I-134	1.60E-08	6
I-135	1.20E-08	6	Xe-127	3.44E-09	99
Xe-129m	5.57E-10	99	Xe-131m	2.13E-10	99
Xe-133m	4.81E-10	99	Xe-133	5.91E-10	99
Xe-135m	5.23E-09	99	Xe-135	3.36E-09	99
Xe-137	4.26E-09	99	Xe-138	1.30E-08	99
Cs-129	3.39E-09	99	Cs-132	8.40E-09	99
Cs-134	1.20E-08	6	Cs-136	1.50E-08	6
Cs-137/Ba-137m	1.14E-08[4]	6, 99	Cs-138	2.10E-08	6
Cs-139	5.15E-09	99	Ba-131	5.74E-09	99
Ba-133m	8.10E-10	99	Ba-133	4.85E-09	99
Ba-135m	7.26E-10	99	Ba-137m	7.17E-09	99
Ba-137	0.00E+00[2]	–	Ba-139	2.40E-09	6
Ba-La-140	1.71E-08[6]	6	Ba-141	4.30E-09	6
Ba-142	7.90E-09	6	La-142	1.50E-08	6
Ce-139	2.04E-09	99	Ce-141	5.50E-10	6
Ce-143	2.20E-09	6	Ce-Pr-144	5.20E-10[7]	6
Pr-142	1.84E-09	99	Pr-143	0.00E+00	6
Nc-147	1.00E-09	6	Nc-149	5.32E-09	99
Pm-145	3.38E-10	99	Pm-148m	2.35E-08	99
Pm-148	7.22E-09	99	Pm-149	5.32E-10	99
Sm-153	8.95E-10	99	Eu-152	1.30E-08	99
Eu-154	1.41E-08	99	Eu-155	8.27E-10	99
Gc-153	1.46E-09	99	Dy-157	4.39E-09	99
Er-169	6.12E-14	99	Er-171	5.11E-09	99
Tm-170	3.41E-10	99	Yb-169	4.12E-09	99
Yb-175	4.94E-10	99	Lu-177	4.60E-10	99
Hf-181	6.67E-09	99	Ta-182	1.42E-08	99
Ta-183	2.93E-09[1]	–	W-187	3.10E-09	6
Re-188	1.89E-09	99	Os-191	9.83E-10	99
Ir-194	2.31E-09	99	Pt-195m	9.79E-10	99
Pt-197	3.57E-10	99	Au-195m	2.54E-09	99
Au-195	1.14E-09	99	Au-198	5.19E-09	99
Au-199	1.18E-09	99	Hg-197	9.33E-10	99
Hg-203	2.89E-09	99	Tl-201	1.24E-09	99
Tl-206	0.00E+00[2]	–	Tl-208	3.58E-08	99
Pb-203	3.88E-09	99	Pb-210	3.57E-11	99
Pb-212	1.91E-09	99	Pb-214	3.18E-09	99
Bi-206	3.74E-08	99	Bi-207	1.77E-08	99
Bi-214	1.71E-08	99	Ra-226	8.78E-11	99
Th-232	8.14E-12	99	U-238	7.98E-12	99
Np-239	9.50E-10	6	Am-241	3.48E-10	99

1 Valued derived by comparing the percentage and MeV of the nuclide's gammas and then comparing to Cesium-137, as a value was not available in the literature.

2 0.0 due to low yield and short half-life. A value was not available in the literature.

3 Value is the sum of Ru-106 (1.50E-9) and Rh-106 (4.26E-9). The Rh-106 value is from Reference 99 and the Ru-106 value is from Reference 6.

4 Value is the sum of Cs-137 (4.20E-9) and Ba-137m (7.17E-9). The values are from references 6 and 99, respectively.

Table 4-8 (cont.)
External Dose Factors for Standing on Contaminated Ground
DFG_{ij} (mrem/hr per pCi/ m^2)

5 Value is the sum of Te-132 (1.70E-9) and I-132 (1.70E-9).

6 Value is the sum of Ba-140 (2.10E-9) and La-140 (1.50E-8) from reference 6. In Reference 6, see Table E-6.

7 Value is the sum of Ce-144 (3.20E-10) and Pr-144 (2.00E-10) from reference 6.

Note: Dose assessments for 10CFR20 and 40CFR190 compliance are made for an adult only.

Dose assessments for 10CFR50 Appendix are made using dose factors of Regulatory Guide 1.109 (Reference 6) for all age groups.

Table 4-9
Adult Inhalation Dose Factors

Nuclide	Bone	Liver	T Body	Thyroid	Kidney	Lung	GI-LLI
H-3	0.00E+00	7.18E+02	7.18E+02	7.18E+02	7.18E+02	7.18E+02	7.18E+02
Na-24	1.02E+04	1.02E+04	1.02E+04	1.02E+04	1.02E+04	1.02E+04	1.02E+04
Cr-51	0.00E+00	0.00E+00	1.00E+02	5.95E+01	2.28E+01	1.44E+04	3.32E+03
Mn-54	0.00E+00	3.96E+04	6.30E+03	0.00E+00	9.84E+03	1.40E+06	7.74E+04
Mn-56	0.00E+00	1.24E+00	1.83E-01	0.00E+00	1.30E+00	9.44E+03	2.02E+04
Fe-55	2.46E+04	1.70E+04	3.94E+03	0.00E+00	0.00E+00	7.21E+04	6.03E+03
Fe-59	1.18E+04	2.78E+04	1.06E+04	0.00E+00	0.00E+00	1.02E+06	1.88E+05
Co-58	0.00E+00	1.58E+03	2.07E+03	0.00E+00	0.00E+00	9.28E+05	1.06E+05
Co-60	0.00E+00	1.15E+04	1.48E+04	0.00E+00	0.00E+00	5.97E+06	2.85E+05
Ni-63	4.32E+05	3.14E+04	1.45E+04	0.00E+00	0.00E+00	1.78E+05	1.34E+04
Ni-65	1.54E+00	2.10E-01	9.12E-02	0.00E+00	0.00E+00	5.60E+03	1.23E+04
Cu-64	0.00E+00	1.46E+00	6.15E-01	0.00E+00	4.62E+00	6.78E+03	4.90E+04
Zn-65	3.24E+04	1.03E+05	4.66E+04	0.00E+00	6.90E+04	8.64E+05	5.34E+04
Zn-69	3.38E-02	6.51E-02	4.52E-03	0.00E+00	4.22E-02	9.20E+02	1.63E+01
Br-83	0.00E+00	0.00E+00	2.41E+02	0.00E+00	0.00E+00	0.00E+00	2.32E+02
Br-84	0.00E+00	0.00E+00	3.13E+02	0.00E+00	0.00E+00	0.00E+00	1.64E-03
Br-85	0.00E+00	0.00E+00	1.28E+01	0.00E+00	0.00E+00	0.00E+00	0.00E+00
Rb-86	0.00E+00	1.35E+05	5.90E+04	0.00E+00	0.00E+00	0.00E+00	1.66E+04
Rb-88	0.00E+00	3.87E+02	1.93E+02	0.00E+00	0.00E+00	0.00E+00	3.34E-09
Rb-89	0.00E+00	2.56E+02	1.70E+02	0.00E+00	0.00E+00	0.00E+00	9.28E-12
Sr-89	3.04E+05	0.00E+00	8.72E+03	0.00E+00	0.00E+00	1.40E+06	3.50E+05
Sr-90	2.87E+07	0.00E+00	5.77E+05	0.00E+00	0.00E+00	9.60E+06	7.22E+05
Sr-91	6.19E+01	0.00E+00	2.50E+00	0.00E+00	0.00E+00	3.65E+04	1.91E+05
Sr-92	6.74E+00	0.00E+00	2.91E-01	0.00E+00	0.00E+00	1.65E+04	4.30E+04
Y-90	2.09E+03	0.00E+00	5.61E+01	0.00E+00	0.00E+00	1.70E+05	5.06E+05
Y-91M	2.61E-01	0.00E+00	1.02E-02	0.00E+00	0.00E+00	1.92E+03	1.33E+00
Y-91	4.62E+05	0.00E+00	1.24E+04	0.00E+00	0.00E+00	1.70E+06	3.85E+05
Y-92	1.03E+01	0.00E+00	3.02E-01	0.00E+00	0.00E+00	1.57E+04	7.35E+04
Y-93	9.44E+01	0.00E+00	2.61E+00	0.00E+00	0.00E+00	4.85E+04	4.22E+05
Zr-95	1.07E+05	3.44E+04	2.33E+04	0.00E+00	5.42E+04	1.77E+06	1.50E+05
Zr-97	9.68E+01	1.96E+01	9.04E+00	0.00E+00	2.97E+01	7.87E+04	5.23E+05
Nb-95	1.41E+04	7.82E+03	4.21E+03	0.00E+00	7.74E+03	5.05E+05	1.04E+05
Mo-99	0.00E+00	1.21E+02	2.30E+01	0.00E+00	2.91E+02	9.12E+04	2.48E+05
Tc- 99M	1.03E-03	2.91E-03	3.70E-02	0.00E+00	4.42E-02	7.64E+02	4.16E+03
Tc-101	4.18E-05	6.02E-05	5.90E-04	0.00E+00	1.08E-03	3.99E+02	1.09E-11
Ru-103	1.53E+03	0.00E+00	6.58E+02	0.00E+00	5.83E+03	5.05E+05	1.10E+05
Ru-105	7.90E-01	0.00E+00	3.11E-01	0.00E+00	1.02E+00	1.10E+04	4.82E+04
Ru-106	6.91E+04	0.00E+00	8.72E+03	0.00E+00	1.34E+05	9.36E+06	9.12E+05
Ag-110M	1.08E+04	1.00E+04	5.94E+03	0.00E+00	1.97E+04	4.63E+06	3.02E+05

Table 4-9 (Continued)
Adult Inhalation Dose Factors

Nuclide	Bone	Liver	T Body	Thyroid	Kidney	Lung	GI-LLI
Te-125M	3.42E+03	1.58E+03	4.67E+02	1.05E+03	1.24E+04	3.14E+05	7.06E+04
Te-127M	1.26E+04	5.77E+03	1.57E+03	3.29E+03	4.58E+04	9.60E+05	1.50E+05
Te-127	1.40E+00	6.42E-01	3.10E-01	1.06E+00	5.10E+00	6.51E+03	5.74E+04
Te-129M	9.76E+03	4.67E+03	1.58E+03	3.44E+03	3.66E+04	1.16E+06	3.83E+05
Te-129	4.98E-02	2.39E-02	1.24E-02	3.90E-02	1.87E-01	1.94E+03	1.57E+02
Te-131M	6.99E+01	4.36E+01	2.90E+01	5.50E+01	3.09E+02	1.46E+05	5.56E+05
Te-131	1.11E-02	5.95E-03	3.59E-03	9.36E-03	4.37E-02	1.39E+03	1.84E+01
Te-132	2.60E+02	2.15E+02	1.62E+02	1.90E+02	1.46E+03	2.88E+05	5.10E+05
I-130	4.58E+03	1.34E+04	5.28E+03	1.14E+06	2.09E+04	0.00E+00	7.69E+03
I-131	2.52E+04	3.58E+04	2.05E+04	1.19E+07	6.13E+04	0.00E+00	6.28E+03
I-132	1.16E+03	3.26E+03	1.16E+03	1.14E+05	5.18E+03	0.00E+00	4.06E+02
I-133	8.64E+03	1.48E+04	4.52E+03	2.15E+06	2.58E+04	0.00E+00	8.88E+03
I-134	6.44E+02	1.73E+03	6.15E+02	2.98E+04	2.75E+03	0.00E+00	1.01E+00
I-135	2.68E+03	6.98E+03	2.57E+03	4.48E+05	1.11E+04	0.00E+00	5.25E+03
Cs-134	3.73E+05	8.48E+05	7.28E+05	0.00E+00	2.87E+05	9.76E+04	1.04E+04
Cs-136	3.90E+04	1.46E+05	1.10E+05	0.00E+00	8.56E+04	1.20E+04	1.17E+04
Cs-137	4.78E+05	6.21E+05	4.28E+05	0.00E+00	2.22E+05	7.52E+04	8.40E+03
Cs-138	3.31E+02	6.21E+02	3.24E+02	0.00E+00	4.80E+02	4.86E+01	1.86E-03
Ba-139	9.36E-01	6.66E-04	2.74E-02	0.00E+00	6.22E-04	3.76E+03	8.96E+02
Ba-140	3.90E+04	4.90E+01	2.57E+03	0.00E+00	1.67E+01	1.27E+06	2.18E+05
Ba-141	1.00E-01	7.53E-05	3.36E-03	0.00E+00	7.00E-05	1.94E+03	1.16E-07
Ba-142	2.63E-02	2.70E-05	1.66E-03	0.00E+00	2.29E-05	1.19E+03	1.57E-16
La-140	3.44E+02	1.74E+02	4.58E+01	0.00E+00	0.00E+00	1.36E+05	4.58E+05
La-142	6.83E-01	3.10E-01	7.72E-02	0.00E+00	0.00E+00	6.33E+03	2.11E+03
Ce-141	1.99E+04	1.35E+04	1.53E+03	0.00E+00	6.26E+03	3.62E+05	1.20E+05
Ce-143	1.86E+02	1.38E+02	1.53E+01	0.00E+00	6.08E+01	7.98E+04	2.26E+05
Ce-144	3.43E+06	1.43E+06	1.84E+05	0.00E+00	8.48E+05	7.78E+06	8.16E+05
Pr-143	9.36E+03	3.75E+03	4.64E+02	0.00E+00	2.16E+03	2.81E+05	2.00E+05
Pr-144	3.01E-02	1.25E-02	1.53E-03	0.00E+00	7.05E-03	1.02E+03	2.15E-08
Nd-147	5.27E+03	6.10E+03	3.65E+02	0.00E+00	3.56E+03	2.21E+05	1.73E+05
W-187	8.48E+00	7.08E+00	2.48E+00	0.00E+00	0.00E+00	2.90E+04	1.55E+05
Np-239	2.30E+02	2.03E+02	1.24E+01	0.00E+00	7.00E+01	3.76E+04	1.19E+05

Notes:
1) Units are mrem/yr per $\mu Ci/m^3$.

Table 4-10
Teen Inhalation Dose Factors

Nuclide	Bone	Liver	T Body	Thyroid	Kidney	Lung	GI-LLI
H-3	0.00E+00	7.25E+02	7.25E+02	7.25E+02	7.25E+02	7.25E+02	7.25E+02
Na-24	1.38E+04	1.38E+04	1.38E+04	1.38E+04	1.38E+04	1.38E+04	1.38E+04
Cr-51	0.00E+00	0.00E+00	1.35E+02	7.50E+01	3.07E+01	2.10E+04	3.00E+03
Mn-54	0.00E+00	5.11E+04	8.40E+03	0.00E+00	1.27E+04	1.98E+06	6.68E+04
Mn-56	0.00E+00	1.70E+00	2.52E-01	0.00E+00	1.79E+00	1.52E+04	5.74E+04
Fe-55	3.34E+04	2.38E+04	5.54E+03	0.00E+00	0.00E+00	1.24E+05	6.39E+03
Fe-59	1.59E+04	3.70E+04	1.43E+04	0.00E+00	0.00E+00	1.53E+06	1.78E+05
Co-58	0.00E+00	2.07E+03	2.78E+03	0.00E+00	0.00E+00	1.34E+06	9.52E+04
Co-60	0.00E+00	1.51E+04	1.98E+04	0.00E+00	0.00E+00	8.72E+06	2.59E+05
Ni-63	5.80E+05	4.34E+04	1.98E+04	0.00E+00	0.00E+00	3.07E+05	1.42E+04
Ni-65	2.18E+00	2.93E-01	1.27E-01	0.00E+00	0.00E+00	9.36E+03	3.67E+04
Cu-64	0.00E+00	2.03E+00	8.48E-01	0.00E+00	6.41E+00	1.11E+04	6.14E+04
Zn-65	3.86E+04	1.34E+05	6.24E+04	0.00E+00	8.64E+04	1.24E+06	4.66E+04
Zn-69	4.83E-02	9.20E-02	6.46E-03	0.00E+00	6.02E-02	1.58E+03	2.85E+02
Br-83	0.00E+00	0.00E+00	3.44E+02	0.00E+00	0.00E+00	0.00E+00	0.00E+00
Br-84	0.00E+00	0.00E+00	4.33E+02	0.00E+00	0.00E+00	0.00E+00	0.00E+00
Br-85	0.00E+00	0.00E+00	1.83E+01	0.00E+00	0.00E+00	0.00E+00	0.00E+00
Rb-86	0.00E+00	1.90E+05	8.40E+04	0.00E+00	0.00E+00	0.00E+00	1.77E+04
Rb-88	0.00E+00	5.46E+02	2.72E+02	0.00E+00	0.00E+00	0.00E+00	2.92E-05
Rb-89	0.00E+00	3.52E+02	2.33E+02	0.00E+00	0.00E+00	0.00E+00	3.38E-07
Sr-89	4.34E+05	0.00E+00	1.25E+04	0.00E+00	0.00E+00	2.42E+06	3.71E+05
Sr-90	3.31E+07	0.00E+00	6.66E+05	0.00E+00	0.00E+00	1.65E+07	7.65E+05
Sr-91	8.80E+01	0.00E+00	3.51E+00	0.00E+00	0.00E+00	6.07E+04	2.59E+05
Sr-92	9.52E+00	0.00E+00	4.06E-01	0.00E+00	0.00E+00	2.74E+04	1.19E+05
Y-90	2.98E+03	0.00E+00	8.00E+01	0.00E+00	0.00E+00	2.93E+05	5.59E+05
Y-91M	3.70E-01	0.00E+00	1.42E-02	0.00E+00	0.00E+00	3.20E+03	3.02E+01
Y-91	6.61E+05	0.00E+00	1.77E+04	0.00E+00	0.00E+00	2.94E+06	4.09E+05
Y-92	1.47E+01	0.00E+00	4.29E-01	0.00E+00	0.00E+00	2.68E+04	1.65E+05
Y-93	1.35E+02	0.00E+00	3.72E+00	0.00E+00	0.00E+00	8.32E+04	5.79E+05
Zr-95	1.46E+05	4.58E+04	3.15E+04	0.00E+00	6.74E+04	2.69E+06	1.49E+05
Zr-97	1.38E+02	2.72E+01	1.26E+01	0.00E+00	4.12E+01	1.30E+05	6.30E+05
Nb-95	1.86E+04	1.03E+04	5.66E+03	0.00E+00	1.00E+04	7.51E+05	9.68E+04
Mo-99	0.00E+00	1.69E+02	3.22E+01	0.00E+00	4.11E+02	1.54E+05	2.69E+05
Tc- 99M	1.38E-03	3.86E-03	4.99E-02	0.00E+00	5.76E-02	1.15E+03	6.13E+03
Tc-101	5.92E-05	8.40E-05	8.24E-04	0.00E+00	1.52E-03	6.67E+02	8.72E-07
Ru-103	2.10E+03	0.00E+00	8.96E+02	0.00E+00	7.43E+03	7.83E+05	1.09E+05
Ru-105	1.12E+00	0.00E+00	4.34E-01	0.00E+00	1.41E+00	1.82E+04	9.04E+04
Ru-106	9.84E+04	0.00E+00	1.24E+04	0.00E+00	1.90E+05	1.61E+07	9.60E+05
Ag-110M	1.38E+04	1.31E+04	7.99E+03	0.00E+00	2.50E+04	6.75E+06	2.73E+05

Table 4-10 (Continued)
Teen Inhalation Dose Factors

Nuclide	Bone	Liver	T Body	Thyroid	Kidney	Lung	GI-LLI
Te-125M	4.88E+03	2.24E+03	6.67E+02	1.40E+03	0.00E+00	5.36E+05	7.50E+04
Te-127M	1.80E+04	8.16E+03	2.18E+03	4.38E+03	6.54E+04	1.66E+06	1.59E+05
Te-127	2.01E+00	9.12E-01	4.42E-01	1.42E+00	7.28E+00	1.12E+04	8.08E+04
Te-129M	1.39E+04	6.58E+03	2.25E+03	4.58E+03	5.19E+04	1.98E+06	4.05E+05
Te-129	7.10E-02	3.38E-02	1.76E-02	5.18E-02	2.66E-01	3.30E+03	1.62E+03
Te-131M	9.84E+01	6.01E+01	4.02E+01	7.25E+01	4.39E+02	2.38E+05	6.21E+05
Te-131	1.58E-02	8.32E-03	5.04E-03	1.24E-02	6.18E-02	2.34E+03	1.51E+01
Te-132	3.60E+02	2.90E+02	2.19E+02	2.46E+02	1.95E+03	4.49E+05	4.63E+05
I-130	6.24E+03	1.79E+04	7.17E+03	1.49E+06	2.75E+04	0.00E+00	9.12E+03
I-131	3.54E+04	4.91E+04	2.64E+04	1.46E+07	8.40E+04	0.00E+00	6.49E+03
I-132	1.59E+03	4.38E+03	1.58E+03	1.51E+05	6.92E+03	0.00E+00	1.27E+03
I-133	1.22E+04	2.05E+04	6.22E+03	2.92E+06	3.59E+04	0.00E+00	1.03E+04
I-134	8.88E+02	2.32E+03	8.40E+02	3.95E+04	3.66E+03	0.00E+00	2.04E+01
I-135	3.70E+03	9.44E+03	3.49E+03	6.21E+05	1.49E+04	0.00E+00	6.95E+03
Cs-134	5.02E+05	1.13E+06	5.49E+05	0.00E+00	3.75E+05	1.46E+05	9.76E+03
Cs-136	5.15E+04	1.94E+05	1.37E+05	0.00E+00	1.10E+05	1.78E+04	1.09E+04
Cs-137	6.70E+05	8.48E+05	3.11E+05	0.00E+00	3.04E+05	1.21E+05	8.48E+03
Cs-138	4.66E+02	8.56E+02	4.46E+02	0.00E+00	6.62E+02	7.87E+01	2.70E-01
Ba-139	1.34E+00	9.44E-04	3.90E-02	0.00E+00	8.88E-04	6.46E+03	6.45E+03
Ba-140	5.47E+04	6.70E+01	3.52E+03	0.00E+00	2.28E+01	2.03E+06	2.29E+05
Ba-141	1.42E-01	1.06E-04	4.74E-03	0.00E+00	9.84E-05	3.29E+03	7.46E-04
Ba-142	3.70E-02	3.70E-05	2.27E-03	0.00E+00	3.14E-05	1.91E+03	4.79E-10
La-140	4.79E+02	2.36E+02	6.26E+01	0.00E+00	0.00E+00	2.14E+05	4.87E+05
La-142	9.60E-01	4.25E-01	1.06E-01	0.00E+00	0.00E+00	1.02E+04	1.20E+04
Ce-141	2.84E+04	1.90E+04	2.17E+03	0.00E+00	8.88E+03	6.14E+05	1.26E+05
Ce-143	2.66E+02	1.94E+02	2.16E+01	0.00E+00	8.64E+01	1.30E+05	2.55E+05
Ce-144	4.89E+06	2.02E+06	2.62E+05	0.00E+00	1.21E+06	1.34E+07	8.64E+05
Pr-143	1.34E+04	5.31E+03	6.62E+02	0.00E+00	3.09E+03	4.83E+05	2.14E+05
Pr-144	4.30E-02	1.76E-02	2.18E-03	0.00E+00	1.01E-02	1.75E+03	2.35E-04
Nd-147	7.86E+03	8.56E+03	5.13E+02	0.00E+00	5.02E+03	3.72E+05	1.82E+05
W-187	1.20E+01	9.76E+00	3.43E+00	0.00E+00	0.00E+00	4.74E+04	1.77E+05
Np-239	3.38E+02	2.88E+02	1.77E+01	0.00E+00	1.00E+02	6.49E+04	1.32E+05

Notes:
1) Units are mrem/yr per $\mu Ci/m^3$.

Table 4-11
Child Inhalation Dose Factors

Nuclide	Bone	Liver	T Body	Thyroid	Kidney	Lung	GI-LLI
H-3	0.00E+00	6.40E+02	6.40E+02	6.40E+02	6.40E+02	6.40E+02	6.40E+02
Na-24	1.61E+04	1.61E+04	1.61E+04	1.61E+04	1.61E+04	1.61E+04	1.61E+04
Cr-51	0.00E+00	0.00E+00	1.54E+02	8.55E+01	2.43E+01	1.70E+04	1.08E+03
Mn-54	0.00E+00	4.29E+04	9.51E+03	0.00E+00	1.00E+04	1.58E+06	2.29E+04
Mn-56	0.00E+00	1.66E+00	3.12E-01	0.00E+00	1.67E+00	1.31E+04	1.23E+05
Fe-55	4.74E+04	2.52E+04	7.77E+03	0.00E+00	0.00E+00	1.11E+05	2.87E+03
Fe-59	2.07E+04	3.34E+04	1.67E+04	0.00E+00	0.00E+00	1.27E+06	7.07E+04
Co-58	0.00E+00	1.77E+03	3.16E+03	0.00E+00	0.00E+00	1.11E+06	3.44E+04
Co-60	0.00E+00	1.31E+04	2.26E+04	0.00E+00	0.00E+00	7.07E+06	9.62E+04
Ni-63	8.21E+05	4.63E+04	2.80E+04	0.00E+00	0.00E+00	2.75E+05	6.33E+03
Ni-65	2.99E+00	2.96E-01	1.64E-01	0.00E+00	0.00E+00	8.18E+03	8.40E+04
Cu-64	0.00E+00	1.99E+00	1.07E+00	0.00E+00	6.03E+00	9.58E+03	3.67E+04
Zn-65	4.26E+04	1.13E+05	7.03E+04	0.00E+00	7.14E+04	9.95E+05	1.63E+04
Zn-69	6.70E-02	9.66E-02	8.92E-03	0.00E+00	5.85E-02	1.42E+03	1.02E+04
Br-83	0.00E+00	0.00E+00	4.74E+02	0.00E+00	0.00E+00	0.00E+00	0.00E+00
Br-84	0.00E+00	0.00E+00	5.48E+02	0.00E+00	0.00E+00	0.00E+00	0.00E+00
Br-85	0.00E+00	0.00E+00	2.53E+01	0.00E+00	0.00E+00	0.00E+00	0.00E+00
Rb-86	0.00E+00	1.98E+05	1.14E+05	0.00E+00	0.00E+00	0.00E+00	7.99E+03
Rb-88	0.00E+00	5.62E+02	3.66E+02	0.00E+00	0.00E+00	0.00E+00	1.72E+01
Rb-89	0.00E+00	3.45E+02	2.90E+02	0.00E+00	0.00E+00	0.00E+00	1.89E+00
Sr-89	5.99E+05	0.00E+00	1.72E+04	0.00E+00	0.00E+00	2.16E+06	1.67E+05
Sr-90	3.85E+07	0.00E+00	7.66E+05	0.00E+00	0.00E+00	1.48E+07	3.43E+05
Sr-91	1.21E+02	0.00E+00	4.59E+00	0.00E+00	0.00E+00	5.33E+04	1.74E+05
Sr-92	1.31E+01	0.00E+00	5.25E-01	0.00E+00	0.00E+00	2.40E+04	2.42E+05
Y-90	4.11E+03	0.00E+00	1.11E+02	0.00E+00	0.00E+00	2.62E+05	2.68E+05
Y-91M	5.07E-01	0.00E+00	1.84E-02	0.00E+00	0.00E+00	2.81E+03	1.72E+03
Y-91	9.14E+05	0.00E+00	2.44E+04	0.00E+00	0.00E+00	2.63E+06	1.84E+05
Y-92	2.04E+01	0.00E+00	5.81E-01	0.00E+00	0.00E+00	2.39E+04	2.39E+05
Y-93	1.86E+02	0.00E+00	5.11E+00	0.00E+00	0.00E+00	7.44E+04	3.89E+05
Zr-95	1.90E+05	4.18E+04	3.70E+04	0.00E+00	5.96E+04	2.23E+06	6.11E+04
Zr-97	1.88E+02	2.72E+01	1.60E+01	0.00E+00	3.89E+01	1.13E+05	3.51E+05
Nb-95	2.35E+04	9.18E+03	6.55E+03	0.00E+00	8.62E+03	6.14E+05	3.70E+04
Mo-99	0.00E+00	1.72E+02	4.26E+01	0.00E+00	3.92E+02	1.35E+05	1.27E+05
Tc- 99M	1.78E-03	3.48E-03	5.77E-02	0.00E+00	5.07E-02	9.51E+02	4.81E+03
Tc-101	8.10E-05	8.51E-05	1.08E-03	0.00E+00	1.45E-03	5.85E+02	1.63E+01
Ru-103	2.79E+03	0.00E+00	1.07E+03	0.00E+00	7.03E+03	6.62E+05	4.48E+04
Ru-105	1.53E+00	0.00E+00	5.55E-01	0.00E+00	1.34E+00	1.59E+04	9.95E+04
Ru-106	1.36E+05	0.00E+00	1.69E+04	0.00E+00	1.84E+05	1.43E+07	4.29E+05
Ag-110M	1.69E+04	1.14E+04	9.14E+03	0.00E+00	2.12E+04	5.48E+06	1.00E+05

Table 4-11 (Continued)
Child Inhalation Dose Factors

Nuclide	Bone	Liver	T Body	Thyroid	Kidney	Lung	GI-LLI
Te-125M	6.73E+03	2.33E+03	9.14E+02	1.92E+03	0.00E+00	4.77E+05	3.38E+04
Te-127M	2.49E+04	8.55E+03	3.02E+03	6.07E+03	6.36E+04	1.48E+06	7.14E+04
Te-127	2.77E+00	9.51E-01	6.11E-01	1.96E+00	7.07E+00	1.00E+04	5.62E+04
Te-129M	1.92E+04	6.85E+03	3.04E+03	6.33E+03	5.03E+04	1.76E+06	1.82E+05
Te-129	9.77E-02	3.50E-02	2.38E-02	7.14E-02	2.57E-01	2.93E+03	2.55E+04
Te-131M	1.34E+02	5.92E+01	5.07E+01	9.77E+01	4.00E+02	2.06E+05	3.08E+05
Te-131	2.17E-02	8.44E-03	6.59E-03	1.70E-02	5.88E-02	2.05E+03	1.33E+03
Te-132	4.81E+02	2.72E+02	2.63E+02	3.17E+02	1.77E+03	3.77E+05	1.38E+05
I-130	8.18E+03	1.64E+04	8.44E+03	1.85E+06	2.45E+04	0.00E+00	5.11E+03
I-131	4.81E+04	4.81E+04	2.73E+04	1.62E+07	7.88E+04	0.00E+00	2.84E+03
I-132	2.12E+03	4.07E+03	1.88E+03	1.94E+05	6.25E+03	0.00E+00	3.20E+03
I-133	1.66E+04	2.03E+04	7.70E+03	3.85E+06	3.38E+04	0.00E+00	5.48E+03
I-134	1.17E+03	2.16E+03	9.95E+02	5.07E+04	3.30E+03	0.00E+00	9.55E+02
I-135	4.92E+03	8.73E+03	4.14E+03	7.92E+05	1.34E+04	0.00E+00	4.44E+03
Cs-134	6.51E+05	1.01E+06	2.25E+05	0.00E+00	3.30E+05	1.21E+05	3.85E+03
Cs-136	6.51E+04	1.71E+05	1.16E+05	0.00E+00	9.55E+04	1.45E+04	4.18E+03
Cs-137	9.07E+05	8.25E+05	1.28E+05	0.00E+00	2.82E+05	1.04E+05	3.62E+03
Cs-138	6.33E+02	8.40E+02	5.55E+02	0.00E+00	6.22E+02	6.81E+01	2.70E+02
Ba-139	1.84E+00	9.84E-04	5.37E-02	0.00E+00	8.62E-04	5.77E+03	5.77E+04
Ba-140	7.40E+04	6.48E+01	4.33E+03	0.00E+00	2.11E+01	1.74E+06	1.02E+05
Ba-141	1.96E-01	1.09E-04	6.36E-03	0.00E+00	9.47E-05	2.92E+03	2.75E+02
Ba-142	5.00E-02	3.60E-05	2.79E-03	0.00E+00	2.91E-05	1.64E+03	2.74E+00
La-140	6.44E+02	2.25E+02	7.55E+01	0.00E+00	0.00E+00	1.83E+05	2.26E+05
La-142	1.30E+00	4.11E-01	1.29E-01	0.00E+00	0.00E+00	8.70E+03	7.59E+04
Ce-141	3.92E+04	1.95E+04	2.90E+03	0.00E+00	8.55E+03	5.44E+05	5.66E+04
Ce-143	3.66E+02	1.99E+02	2.87E+01	0.00E+00	8.36E+01	1.15E+05	1.27E+05
Ce-144	6.77E+06	2.12E+06	3.61E+05	0.00E+00	1.17E+06	1.20E+07	3.89E+05
Pr-143	1.85E+04	5.55E+03	9.14E+02	0.00E+00	3.00E+03	4.33E+05	9.73E+04
Pr-144	5.96E-02	1.85E-02	3.00E-03	0.00E+00	9.77E-03	1.57E+03	1.97E+02
Nd-147	1.08E+04	8.73E+03	6.81E+02	0.00E+00	4.81E+03	3.28E+05	8.21E+04
W-187	1.63E+01	9.66E+00	4.33E+00	0.00E+00	0.00E+00	4.11E+04	9.10E+04
Np-239	4.66E+02	3.01E+02	2.35E+01	0.00E+00	9.73E+01	5.81E+04	6.40E+04

Notes:

1) Units are mrem/yr per $\mu Ci/m^3$.

Table 4-12
Infant Inhalation Dose Factors

Nuclide	Bone	Liver	T Body	Thyroid	Kidney	Lung	GI-LLI
H-3	0.00E+00	3.68E+02	3.68E+02	3.68E+02	3.68E+02	3.68E+02	3.68E+02
Na-24	1.06E+04	1.06E+04	1.06E+04	1.06E+04	1.06E+04	1.06E+04	1.06E+04
Cr-51	0.00E+00	0.00E+00	8.95E+01	5.75E+01	1.32E+01	1.28E+04	3.57E+02
Mn-54	0.00E+00	2.53E+04	4.98E+03	0.00E+00	4.98E+03	1.00E+06	7.06E+03
Mn-56	0.00E+00	1.54E+00	2.21E-01	0.00E+00	1.10E+00	1.25E+04	7.17E+04
Fe-55	1.97E+04	1.17E+04	3.33E+03	0.00E+00	0.00E+00	8.69E+04	1.09E+03
Fe-59	1.36E+04	2.35E+04	9.48E+03	0.00E+00	0.00E+00	1.02E+06	2.48E+04
Co-58	0.00E+00	1.22E+03	1.82E+03	0.00E+00	0.00E+00	7.77E+05	1.11E+04
Co-60	0.00E+00	8.02E+03	1.18E+04	0.00E+00	0.00E+00	4.51E+06	3.19E+04
Ni-63	3.39E+05	2.04E+04	1.16E+04	0.00E+00	0.00E+00	2.09E+05	2.42E+03
Ni-65	2.39E+00	2.84E-01	1.23E-01	0.00E+00	0.00E+00	8.12E+03	5.01E+04
Cu-64	0.00E+00	1.88E+00	7.74E-01	0.00E+00	3.98E+00	9.30E+03	1.50E+04
Zn-65	1.93E+04	6.26E+04	3.11E+04	0.00E+00	3.25E+04	6.47E+05	5.14E+04
Zn-69	5.39E-02	9.67E-02	7.18E-03	0.00E+00	4.02E-02	1.47E+03	1.32E+04
Br-83	0.00E+00	0.00E+00	3.81E+02	0.00E+00	0.00E+00	0.00E+00	0.00E+00
Br-84	0.00E+00	0.00E+00	4.00E+02	0.00E+00	0.00E+00	0.00E+00	0.00E+00
Br-85	0.00E+00	0.00E+00	2.04E+01	0.00E+00	0.00E+00	0.00E+00	0.00E+00
Rb-86	0.00E+00	1.90E+05	8.82E+04	0.00E+00	0.00E+00	0.00E+00	3.04E+03
Rb-88	0.00E+00	5.57E+02	2.87E+02	0.00E+00	0.00E+00	0.00E+00	3.39E+02
Rb-89	0.00E+00	3.21E+02	2.06E+02	0.00E+00	0.00E+00	0.00E+00	6.82E+01
Sr-89	3.98E+05	0.00E+00	1.14E+04	0.00E+00	0.00E+00	2.03E+06	6.40E+04
Sr-90	1.55E+07	0.00E+00	3.12E+05	0.00E+00	0.00E+00	1.12E+07	1.31E+05
Sr-91	9.56E+01	0.00E+00	3.46E+00	0.00E+00	0.00E+00	5.26E+04	7.34E+04
Sr-92	1.05E+01	0.00E+00	3.91E-01	0.00E+00	0.00E+00	2.38E+04	1.40E+05
Y-90	3.29E+03	0.00E+00	8.82E+01	0.00E+00	0.00E+00	2.69E+05	1.04E+05
Y-91M	4.07E-01	0.00E+00	1.39E-02	0.00E+00	0.00E+00	2.79E+03	2.35E+03
Y-91	5.88E+05	0.00E+00	1.57E+04	0.00E+00	0.00E+00	2.45E+06	7.03E+04
Y-92	1.64E+01	0.00E+00	4.61E-01	0.00E+00	0.00E+00	2.45E+04	1.27E+05
Y-93	1.50E+02	0.00E+00	4.07E+00	0.00E+00	0.00E+00	7.64E+04	1.67E+05
Zr-95	1.15E+05	2.79E+04	2.03E+04	0.00E+00	3.11E+04	1.75E+06	2.17E+04
Zr-97	1.50E+02	2.56E+01	1.17E+01	0.00E+00	2.59E+01	1.10E+05	1.40E+05
Nb-95	1.57E+04	6.43E+03	3.78E+03	0.00E+00	4.72E+03	4.79E+05	1.27E+04
Mo-99	0.00E+00	1.65E+02	3.23E+01	0.00E+00	2.65E+02	1.35E+05	4.87E+04
Tc- 99M	1.40E-03	2.88E-03	3.72E-02	0.00E+00	3.11E-02	8.11E+02	2.03E+03
Tc-101	6.51E-05	8.23E-05	8.12E-04	0.00E+00	9.79E-04	5.84E+02	8.44E+02
Ru-103	2.02E+03	0.00E+00	6.79E+02	0.00E+00	4.24E+03	5.52E+05	1.61E+04
Ru-105	1.22E+00	0.00E+00	4.10E-01	0.00E+00	8.99E-01	1.57E+04	4.84E+04
Ru-106	8.68E+04	0.00E+00	1.09E+04	0.00E+00	1.07E+05	1.16E+07	1.64E+05
Ag-110M	9.98E+03	7.22E+03	5.00E+03	0.00E+00	1.09E+04	3.67E+06	3.30E+04

Table 4-12 (Continued)
Infant Inhalation Dose Factors

Nuclide	Bone	Liver	T Body	Thyroid	Kidney	Lung	GI-LLI
Te-125M	4.76E+03	1.99E+03	6.58E+02	1.62E+03	0.00E+00	4.47E+05	1.29E+04
Te-127M	1.67E+04	6.90E+03	2.07E+03	4.87E+03	3.75E+04	1.31E+06	2.73E+04
Te-127	2.23E+00	9.53E-01	4.89E-01	1.85E+00	4.86E+00	1.03E+04	2.44E+04
Te-129M	1.41E+04	6.09E+03	2.23E+03	5.47E+03	3.18E+04	1.68E+06	6.90E+04
Te-129	7.88E-02	3.47E-02	1.88E-02	6.75E-02	1.75E-01	3.00E+03	2.63E+04
Te-131M	1.07E+02	5.50E+01	3.63E+01	8.93E+01	2.65E+02	1.99E+05	1.19E+05
Te-131	1.74E-02	8.22E-03	5.00E-03	1.58E-02	3.99E-02	2.06E+03	8.22E+03
Te-132	3.72E+02	2.37E+02	1.76E+02	2.79E+02	1.03E+03	3.40E+05	4.41E+04
I-130	6.36E+03	1.39E+04	5.57E+03	1.60E+06	1.53E+04	0.00E+00	1.99E+03
I-131	3.79E+04	4.44E+04	1.96E+04	1.48E+07	5.18E+04	0.00E+00	1.06E+03
I-132	1.69E+03	3.54E+03	1.26E+03	1.69E+05	3.95E+03	0.00E+00	1.90E+03
I-133	1.32E+04	1.92E+04	5.60E+03	3.56E+06	2.24E+04	0.00E+00	2.16E+03
I-134	9.21E+02	1.88E+03	6.65E+02	4.45E+04	2.09E+03	0.00E+00	1.29E+03
I-135	3.86E+03	7.60E+03	2.77E+03	6.96E+05	8.47E+03	0.00E+00	1.83E+03
Cs-134	3.96E+05	7.03E+05	7.45E+04	0.00E+00	1.90E+05	7.97E+04	1.33E+03
Cs-136	4.83E+04	1.35E+05	5.29E+04	0.00E+00	5.64E+04	1.18E+04	1.43E+03
Cs-137	5.49E+05	6.12E+05	4.55E+04	0.00E+00	1.72E+05	7.13E+04	1.33E+03
Cs-138	5.05E+02	7.81E+02	3.98E+02	0.00E+00	4.10E+02	6.54E+01	8.76E+02
Ba-139	1.48E+00	9.84E-04	4.30E-02	0.00E+00	5.92E-04	5.95E+03	5.10E+04
Ba-140	5.60E+04	5.60E+01	2.90E+03	0.00E+00	1.34E+01	1.60E+06	3.84E+04
Ba-141	1.57E-01	1.08E-04	4.97E-03	0.00E+00	6.50E-05	2.97E+03	4.75E+03
Ba-142	3.98E-02	3.30E-05	1.96E-03	0.00E+00	1.90E-05	1.55E+03	6.93E+02
La-140	5.05E+02	2.00E+02	5.15E+01	0.00E+00	0.00E+00	1.68E+05	8.48E+04
La-142	1.03E+00	3.77E-01	9.04E-02	0.00E+00	0.00E+00	8.22E+03	5.95E+04
Ce-141	2.77E+04	1.67E+04	1.99E+03	0.00E+00	5.25E+03	5.17E+05	2.16E+04
Ce-143	2.93E+02	1.93E+02	2.21E+01	0.00E+00	5.64E+01	1.16E+05	4.97E+04
Ce-144	3.19E+06	1.21E+06	1.76E+05	0.00E+00	5.38E+05	9.84E+06	1.48E+05
Pr-143	1.40E+04	5.24E+03	6.99E+02	0.00E+00	1.97E+03	4.33E+05	3.72E+04
Pr-144	4.79E-02	1.85E-02	2.41E-03	0.00E+00	6.72E-03	1.61E+03	4.28E+03
Nd-147	7.94E+03	8.13E+03	5.00E+02	0.00E+00	3.15E+03	3.22E+05	3.12E+04
W-187	1.30E+01	9.02E+00	3.12E+00	0.00E+00	0.00E+00	3.96E+04	3.56E+04
Np-239	3.71E+02	2.98E+02	1.88E+01	0.00E+00	6.62E+01	5.95E+04	2.49E+04

Notes:
1) Units are mrem/yr per $\mu Ci/m^3$.

Table 4-13
Adult Vegetation Dose Factors

Nuclide	Bone	Liver	T Body	Thyroid	Kidney	Lung	GI-LLI
H-3	0.00E+00	1.29E+03	1.29E+03	1.29E+03	1.29E+03	1.29E+03	1.29E+03
Na-24	2.69E+05	2.69E+05	2.69E+05	2.69E+05	2.69E+05	2.69E+05	2.69E+05
Cr-51	0.00E+00	0.00E+00	4.64E+04	2.77E+04	1.02E+04	6.15E+04	1.17E+07
Mn-54	0.00E+00	3.13E+08	5.97E+07	0.00E+00	9.31E+07	0.00E+00	9.58E+08
Mn-56	0.00E+00	1.54E+01	2.73E+00	0.00E+00	1.95E+01	0.00E+00	4.91E+02
Fe-55	2.10E+08	1.45E+08	3.38E+07	0.00E+00	0.00E+00	8.08E+07	8.31E+07
Fe-59	1.26E+08	2.96E+08	1.13E+08	0.00E+00	0.00E+00	8.27E+07	9.87E+08
Co-58	0.00E+00	3.08E+07	6.90E+07	0.00E+00	0.00E+00	0.00E+00	6.24E+08
Co-60	0.00E+00	1.67E+08	3.69E+08	0.00E+00	0.00E+00	0.00E+00	3.14E+09
Ni-63	1.04E+10	7.21E+08	3.49E+08	0.00E+00	0.00E+00	0.00E+00	1.50E+08
Ni-65	5.97E+01	7.75E+00	3.54E+00	0.00E+00	0.00E+00	0.00E+00	1.97E+02
Cu-64	0.00E+00	9.09E+03	4.27E+03	0.00E+00	2.29E+04	0.00E+00	7.75E+05
Zn-65	3.17E+08	1.01E+09	4.56E+08	0.00E+00	6.75E+08	0.00E+00	6.36E+08
Zn-69	4.95E-06	9.48E-06	6.59E-07	0.00E+00	6.16E-06	0.00E+00	1.42E-06
Br-83	0.00E+00	0.00E+00	3.00E+00	0.00E+00	0.00E+00	0.00E+00	4.32E+00
Br-84	0.00E+00	0.00E+00	2.20E-11	0.00E+00	0.00E+00	0.00E+00	1.72E-16
Br-85	0.00E+00	0.00E+00	0.00E+00	0.00E+00	0.00E+00	0.00E+00	0.00E+00
Rb-86	0.00E+00	2.20E+08	1.03E+08	0.00E+00	0.00E+00	0.00E+00	4.34E+07
Rb-88	0.00E+00	0.00E+00	0.00E+00	0.00E+00	0.00E+00	0.00E+00	0.00E+00
Rb-89	0.00E+00	0.00E+00	0.00E+00	0.00E+00	0.00E+00	0.00E+00	0.00E+00
Sr-89	9.95E+09	0.00E+00	2.86E+08	0.00E+00	0.00E+00	0.00E+00	1.60E+09
Sr-90	6.95E+11	0.00E+00	1.40E+10	0.00E+00	0.00E+00	0.00E+00	1.75E+10
Sr-91	3.01E+05	0.00E+00	1.22E+04	0.00E+00	0.00E+00	0.00E+00	1.43E+06
Sr-92	4.12E+02	0.00E+00	1.78E+01	0.00E+00	0.00E+00	0.00E+00	8.17E+03
Y-90	1.33E+04	0.00E+00	3.57E+02	0.00E+00	0.00E+00	0.00E+00	1.41E+08
Y-91M	4.93E-09	0.00E+00	1.91E-10	0.00E+00	0.00E+00	0.00E+00	1.45E-08
Y-91	5.12E+06	0.00E+00	1.37E+05	0.00E+00	0.00E+00	0.00E+00	2.82E+09
Y-92	8.95E-01	0.00E+00	2.62E-02	0.00E+00	0.00E+00	0.00E+00	1.57E+04
Y-93	1.67E+02	0.00E+00	4.62E+00	0.00E+00	0.00E+00	0.00E+00	5.31E+06
Zr-95	1.18E+06	3.77E+05	2.55E+05	0.00E+00	5.92E+05	0.00E+00	1.20E+09
Zr-97	3.35E+02	6.77E+01	3.09E+01	0.00E+00	1.02E+02	0.00E+00	2.10E+07
Nb-95	1.43E+05	7.95E+04	4.27E+04	0.00E+00	7.86E+04	0.00E+00	4.83E+08
Mo-99	0.00E+00	6.14E+06	1.17E+06	0.00E+00	1.39E+07	0.00E+00	1.42E+07
Tc- 99M	3.06E+00	8.64E+00	1.10E+02	0.00E+00	1.31E+02	4.23E+00	5.11E+03
Tc-101	0.00E+00	0.00E+00	0.00E+00	0.00E+00	0.00E+00	0.00E+00	0.00E+00
Ru-103	4.77E+06	0.00E+00	2.05E+06	0.00E+00	1.82E+07	0.00E+00	5.57E+08
Ru-105	5.27E+01	0.00E+00	2.08E+01	0.00E+00	6.81E+02	0.00E+00	3.23E+04
Ru-106	1.93E+08	0.00E+00	2.44E+07	0.00E+00	3.72E+08	0.00E+00	1.25E+10
Ag-110M	1.05E+07	9.75E+06	5.79E+06	0.00E+00	1.92E+07	0.00E+00	3.98E+09

Table 4-13 (Continued)
Adult Vegetation Dose Factors

Nuclide	Bone	Liver	T Body	Thyroid	Kidney	Lung	GI-LLI
Te-125M	9.67E+07	3.50E+07	1.30E+07	2.91E+07	3.93E+08	0.00E+00	3.86E+08
Te-127M	3.49E+08	1.25E+08	4.26E+07	8.92E+07	1.42E+09	0.00E+00	1.17E+09
Te-127	5.68E+03	2.04E+03	1.23E+03	4.21E+03	2.31E+04	0.00E+00	4.48E+05
Te-129M	2.51E+08	9.37E+07	3.97E+07	8.62E+07	1.05E+09	0.00E+00	1.26E+09
Te-129	7.14E-04	2.68E-04	1.74E-04	5.48E-04	3.00E-03	0.00E+00	5.39E-04
Te-131M	9.09E+05	4.45E+05	3.71E+05	7.04E+05	4.50E+06	0.00E+00	4.41E+07
Te-131	1.26E-15	5.26E-16	3.97E-16	1.03E-15	5.51E-15	0.00E+00	1.78E-16
Te-132	4.28E+06	2.77E+06	2.60E+06	3.06E+06	2.67E+07	0.00E+00	1.31E+08
I-130	3.89E+05	1.15E+06	4.52E+05	9.72E+07	1.79E+06	0.00E+00	9.87E+05
I-131	8.07E+07	1.15E+08	6.62E+07	3.78E+10	1.98E+08	0.00E+00	3.05E+07
I-132	5.58E+01	1.49E+02	5.22E+01	5.22E+03	2.38E+02	0.00E+00	2.80E+01
I-133	2.08E+06	3.62E+06	1.10E+06	5.32E+08	6.31E+06	0.00E+00	3.25E+06
I-134	8.55E-05	2.32E-04	8.31E-05	4.02E-03	3.69E-04	0.00E+00	2.02E-07
I-135	3.87E+04	1.01E+05	3.74E+04	6.68E+06	1.62E+05	0.00E+00	1.14E+05
Cs-134	4.67E+09	1.11E+10	9.08E+09	0.00E+00	3.59E+09	1.19E+09	1.94E+08
Cs-136	4.25E+07	1.68E+08	1.21E+08	0.00E+00	9.33E+07	1.28E+07	1.90E+07
Cs-137	6.36E+09	8.70E+09	5.70E+09	0.00E+00	2.95E+09	9.81E+08	1.68E+08
Cs-138	3.32E-11	6.56E-11	3.25E-11	0.00E+00	4.82E-11	4.76E-12	2.80E-16
Ba-139	2.71E-02	1.93E-05	7.92E-04	0.00E+00	1.80E-05	1.09E-05	4.80E-02
Ba-140	1.29E+08	1.61E+05	8.42E+06	0.00E+00	5.49E+04	9.24E+04	2.65E+08
Ba-141	0.00E+00	0.00E+00	0.00E+00	0.00E+00	0.00E+00	0.00E+00	0.00E+00
Ba-142	0.00E+00	0.00E+00	0.00E+00	0.00E+00	0.00E+00	0.00E+00	0.00E+00
La-140	1.98E+03	9.97E+02	2.63E+02	0.00E+00	0.00E+00	0.00E+00	7.32E+07
La-142	1.94E-04	8.83E-05	2.20E-05	0.00E+00	0.00E+00	0.00E+00	6.45E-01
Ce-141	1.97E+05	1.33E+05	1.51E+04	0.00E+00	6.19E+04	0.00E+00	5.09E+08
Ce-143	9.94E+02	7.35E+05	8.13E+01	0.00E+00	3.24E+02	0.00E+00	2.75E+07
Ce-144	3.29E+07	1.38E+07	1.77E+06	0.00E+00	8.16E+06	0.00E+00	1.11E+10
Pr-143	6.27E+04	2.51E+04	3.11E+03	0.00E+00	1.45E+04	0.00E+00	2.75E+08
Pr-144	0.00E+00	0.00E+00	0.00E+00	0.00E+00	0.00E+00	0.00E+00	0.00E+00
Nd-147	3.37E+04	3.90E+04	2.33E+03	0.00E+00	2.28E+04	0.00E+00	1.87E+08
W-187	3.79E+04	3.17E+04	1.11E+04	0.00E+00	0.00E+00	0.00E+00	1.04E+07
Np-239	1.42E+03	1.40E+02	7.72E+01	0.00E+00	4.37E+02	0.00E+00	2.87E+07

Notes:
1) Units are m^2 mrem/yr per μCi/sec with the exception of H-3.
2) For H-3, the units are mrem/yr per μCi/m^3.

Table 4-14
Teen Vegetation Dose Factors

Nuclide	Bone	Liver	T Body	Thyroid	Kidney	Lung	GI-LLI
H-3	0.00E+00	1.47E+03	1.47E+03	1.47E+03	1.47E+03	1.47E+03	1.47E+03
Na-24	2.39E+05	2.39E+05	2.39E+05	2.39E+05	2.39E+05	2.39E+05	2.39E+05
Cr-51	0.00E+00	0.00E+00	6.16E+04	3.42E+04	1.35E+04	8.79E+04	1.03E+07
Mn-54	0.00E+00	4.54E+08	9.01E+07	0.00E+00	1.36E+08	0.00E+00	9.32E+08
Mn-56	0.00E+00	1.39E+01	2.47E+00	0.00E+00	1.76E+01	0.00E+00	9.13E+02
Fe-55	3.26E+08	2.31E+08	5.39E+07	0.00E+00	0.00E+00	1.47E+08	1.00E+08
Fe-59	1.79E+08	4.18E+08	1.61E+08	0.00E+00	0.00E+00	1.32E+08	9.89E+08
Co-58	0.00E+00	4.37E+07	1.01E+08	0.00E+00	0.00E+00	0.00E+00	6.02E+08
Co-60	0.00E+00	2.49E+08	5.60E+08	0.00E+00	0.00E+00	0.00E+00	3.24E+09
Ni-63	1.61E+10	1.13E+09	5.45E+08	0.00E+00	0.00E+00	0.00E+00	1.81E+08
Ni-65	5.55E+01	7.10E+00	3.23E+00	0.00E+00	0.00E+00	0.00E+00	3.85E+02
Cu-64	0.00E+00	8.24E+03	3.87E+03	0.00E+00	2.08E+04	0.00E+00	6.39E+05
Zn-65	4.24E+08	1.47E+09	6.86E+08	0.00E+00	9.41E+08	0.00E+00	6.23E+08
Zn-69	4.64E-06	8.84E-06	6.19E-07	0.00E+00	5.78E-06	0.00E+00	1.63E-05
Br-83	0.00E+00	0.00E+00	2.81E+00	0.00E+00	0.00E+00	0.00E+00	0.00E+00
Br-84	0.00E+00	0.00E+00	2.00E-11	0.00E+00	0.00E+00	0.00E+00	0.00E+00
Br-85	0.00E+00	0.00E+00	0.00E+00	0.00E+00	0.00E+00	0.00E+00	0.00E+00
Rb-86	0.00E+00	2.75E+08	1.29E+08	0.00E+00	0.00E+00	0.00E+00	4.06E+07
Rb-88	0.00E+00	0.00E+00	0.00E+00	0.00E+00	0.00E+00	0.00E+00	0.00E+00
Rb-89	0.00E+00	0.00E+00	0.00E+00	0.00E+00	0.00E+00	0.00E+00	0.00E+00
Sr-89	1.51E+10	0.00E+00	4.33E+08	0.00E+00	0.00E+00	0.00E+00	1.80E+09
Sr-90	9.22E+11	0.00E+00	1.84E+10	0.00E+00	0.00E+00	0.00E+00	2.11E+10
Sr-91	2.81E+05	0.00E+00	1.12E+04	0.00E+00	0.00E+00	0.00E+00	1.27E+06
Sr-92	3.84E+02	0.00E+00	1.64E+01	0.00E+00	0.00E+00	0.00E+00	9.78E+03
Y-90	1.24E+04	0.00E+00	3.35E+02	0.00E+00	0.00E+00	0.00E+00	1.02E+08
Y-91M	4.59E-09	0.00E+00	1.75E-10	0.00E+00	0.00E+00	0.00E+00	2.17E-07
Y-91	7.84E+06	0.00E+00	2.10E+05	0.00E+00	0.00E+00	0.00E+00	3.21E+09
Y-92	8.41E-01	0.00E+00	2.43E-02	0.00E+00	0.00E+00	0.00E+00	2.31E+04
Y-93	1.57E+02	0.00E+00	4.30E+00	0.00E+00	0.00E+00	0.00E+00	4.80E+06
Zr-95	1.72E+06	5.44E+05	3.74E+05	0.00E+00	7.99E+05	0.00E+00	1.26E+09
Zr-97	3.10E+02	6.14E+01	2.83E+01	0.00E+00	9.31E+01	0.00E+00	1.66E+07
Nb-95	1.93E+05	1.07E+05	5.90E+04	0.00E+00	1.04E+05	0.00E+00	4.58E+08
Mo-99	0.00E+00	5.63E+06	1.07E+06	0.00E+00	1.29E+07	0.00E+00	1.01E+07
Tc- 99M	2.70E+00	7.52E+00	9.75E+01	0.00E+00	1.12E+02	4.17E+00	4.94E+03
Tc-101	0.00E+00	0.00E+00	0.00E+00	0.00E+00	0.00E+00	0.00E+00	0.00E+00
Ru-103	6.82E+06	0.00E+00	2.91E+06	0.00E+00	2.40E+07	0.00E+00	5.69E+08
Ru-105	4.90E+01	0.00E+00	1.90E+01	0.00E+00	6.18E+02	0.00E+00	3.95E+04
Ru-106	3.09E+08	0.00E+00	3.90E+07	0.00E+00	5.97E+08	0.00E+00	1.48E+10
Ag-110M	1.52E+07	1.44E+07	8.73E+06	0.00E+00	2.74E+07	0.00E+00	4.03E+09

Table 4-14 (Continued)
Teen Vegetation Dose Factors

Nuclide	Bone	Liver	T Body	Thyroid	Kidney	Lung	GI-LLI
Te-125M	1.49E+08	5.35E+07	1.99E+07	4.15E+07	0.00E+00	0.00E+00	4.38E+08
Te-127M	5.51E+08	1.96E+08	6.56E+07	1.31E+08	2.24E+09	0.00E+00	1.37E+09
Te-127	5.36E+03	1.90E+03	1.15E+03	3.70E+03	2.17E+04	0.00E+00	4.14E+05
Te-129M	3.61E+08	1.34E+08	5.72E+07	1.17E+08	1.51E+09	0.00E+00	1.36E+09
Te-129	6.68E-04	2.49E-04	1.63E-04	4.77E-04	2.80E-03	0.00E+00	3.65E-03
Te-131M	8.42E+05	4.04E+05	3.37E+05	6.07E+05	4.21E+06	0.00E+00	3.24E+07
Te-131	1.17E-15	4.82E-16	3.66E-16	9.01E-16	5.11E-15	0.00E+00	9.60E-17
Te-132	3.89E+06	2.46E+06	2.32E+06	2.60E+06	2.36E+07	0.00E+00	7.81E+07
I-130	3.47E+05	1.01E+06	4.01E+05	8.20E+07	1.55E+06	0.00E+00	7.73E+05
I-131	7.68E+07	1.08E+08	5.78E+07	3.14E+10	1.85E+08	0.00E+00	2.13E+07
I-132	5.03E+01	1.32E+02	4.72E+01	4.43E+03	2.07E+02	0.00E+00	5.73E+01
I-133	1.93E+06	3.28E+06	1.00E+06	4.58E+08	5.75E+06	0.00E+00	2.48E+06
I-134	7.73E-05	2.05E-04	7.36E-05	3.41E-03	3.23E-04	0.00E+00	2.70E-06
I-135	3.49E+04	8.99E+04	3.33E+04	5.78E+06	1.42E+05	0.00E+00	9.97E+04
Cs-134	7.10E+09	1.67E+10	7.75E+09	0.00E+00	5.31E+09	2.03E+09	2.08E+08
Cs-136	4.35E+07	1.71E+08	1.15E+08	0.00E+00	9.31E+07	1.47E+07	1.38E+07
Cs-137	1.01E+10	1.35E+10	4.69E+09	0.00E+00	4.59E+09	1.78E+09	1.92E+08
Cs-138	3.07E-11	5.89E-11	2.94E-11	0.00E+00	4.35E-11	5.06E-12	2.67E-14
Ba-139	2.55E-02	1.79E-05	7.42E-04	0.00E+00	1.69E-05	1.23E-05	2.27E-01
Ba-140	1.38E+08	1.69E+05	8.90E+06	0.00E+00	5.74E+04	1.14E+05	2.13E+08
Ba-141	0.00E+00	0.00E+00	0.00E+00	0.00E+00	0.00E+00	0.00E+00	0.00E+00
Ba-142	0.00E+00	0.00E+00	0.00E+00	0.00E+00	0.00E+00	0.00E+00	0.00E+00
La-140	1.81E+03	8.88E+02	2.36E+02	0.00E+00	0.00E+00	0.00E+00	5.10E+07
La-142	1.78E-04	7.92E-05	1.97E-05	0.00E+00	0.00E+00	0.00E+00	2.41E+00
Ce-141	2.83E+05	1.89E+05	2.17E+04	0.00E+00	8.89E+04	0.00E+00	5.40E+08
Ce-143	9.29E+02	6.76E+05	7.55E+01	0.00E+00	3.03E+02	0.00E+00	2.03E+07
Ce-144	5.27E+07	2.18E+07	2.83E+06	0.00E+00	1.30E+07	0.00E+00	1.33E+10
Pr-143	7.01E+04	2.80E+04	3.49E+03	0.00E+00	1.63E+04	0.00E+00	2.31E+08
Pr-144	0.00E+00	0.00E+00	0.00E+00	0.00E+00	0.00E+00	0.00E+00	0.00E+00
Nd-147	3.67E+04	4.00E+04	2.39E+03	0.00E+00	2.35E+04	0.00E+00	1.44E+08
W-187	3.53E+04	2.87E+04	1.01E+04	0.00E+00	0.00E+00	0.00E+00	7.78E+06
Np-239	1.38E+03	1.30E+02	7.24E+01	0.00E+00	4.09E+02	0.00E+00	2.10E+07

Notes:
1) Units are m^2 mrem/yr per μCi/sec with the exception of H-3.
2) For H-3, the units are mrem/yr per μCi/m^3.

Table 4-15
Child Vegetation Dose Factors

Nuclide	Bone	Liver	T Body	Thyroid	Kidney	Lung	GI-LLI
H-3	0.00E+00	2.29E+03	2.29E+03	2.29E+03	2.29E+03	2.29E+03	2.29E+03
Na-24	3.73E+05	3.73E+05	3.73E+05	3.73E+05	3.73E+05	3.73E+05	3.73E+05
Cr-51	0.00E+00	0.00E+00	1.17E+05	6.49E+04	1.77E+04	1.18E+05	6.20E+06
Mn-54	0.00E+00	6.65E+08	1.77E+08	0.00E+00	1.86E+08	0.00E+00	5.58E+08
Mn-56	0.00E+00	1.82E+01	4.10E+00	0.00E+00	2.20E+01	0.00E+00	2.63E+03
Fe-55	8.01E+08	4.25E+08	1.32E+08	0.00E+00	0.00E+00	2.40E+08	7.87E+07
Fe-59	3.97E+08	6.42E+08	3.20E+08	0.00E+00	0.00E+00	1.86E+08	6.69E+08
Co-58	0.00E+00	6.45E+07	1.97E+08	0.00E+00	0.00E+00	0.00E+00	3.76E+08
Co-60	0.00E+00	3.78E+08	1.12E+09	0.00E+00	0.00E+00	0.00E+00	2.10E+09
Ni-63	3.95E+10	2.11E+09	1.34E+09	0.00E+00	0.00E+00	0.00E+00	1.42E+08
Ni-65	1.02E+02	9.59E+00	5.60E+00	0.00E+00	0.00E+00	0.00E+00	1.18E+03
Cu-64	0.00E+00	1.09E+04	6.56E+03	0.00E+00	2.62E+04	0.00E+00	5.10E+05
Zn-65	8.12E+08	2.16E+09	1.35E+09	0.00E+00	1.36E+09	0.00E+00	3.80E+08
Zn-69	8.56E-06	1.24E-05	1.14E-06	0.00E+00	7.50E-06	0.00E+00	7.80E-04
Br-83	0.00E+00	0.00E+00	5.18E+00	0.00E+00	0.00E+00	0.00E+00	0.00E+00
Br-84	0.00E+00	0.00E+00	3.39E-11	0.00E+00	0.00E+00	0.00E+00	0.00E+00
Br-85	0.00E+00	0.00E+00	0.00E+00	0.00E+00	0.00E+00	0.00E+00	0.00E+00
Rb-86	0.00E+00	4.54E+08	2.79E+08	0.00E+00	0.00E+00	0.00E+00	2.92E+07
Rb-88	0.00E+00	0.00E+00	0.00E+00	0.00E+00	0.00E+00	0.00E+00	0.00E+00
Rb-89	0.00E+00	0.00E+00	0.00E+00	0.00E+00	0.00E+00	0.00E+00	0.00E+00
Sr-89	3.59E+10	0.00E+00	1.03E+09	0.00E+00	0.00E+00	0.00E+00	1.39E+09
Sr-90	1.87E+12	0.00E+00	3.77E+10	0.00E+00	0.00E+00	0.00E+00	1.67E+10
Sr-91	5.17E+05	0.00E+00	1.95E+04	0.00E+00	0.00E+00	0.00E+00	1.14E+06
Sr-92	7.04E+02	0.00E+00	2.82E+01	0.00E+00	0.00E+00	0.00E+00	1.33E+04
Y-90	2.31E+04	0.00E+00	6.18E+02	0.00E+00	0.00E+00	0.00E+00	6.57E+07
Y-91M	8.42E-09	0.00E+00	3.06E-10	0.00E+00	0.00E+00	0.00E+00	1.65E-05
Y-91	1.87E+07	0.00E+00	4.99E+05	0.00E+00	0.00E+00	0.00E+00	2.49E+09
Y-92	1.55E+00	0.00E+00	4.43E-02	0.00E+00	0.00E+00	0.00E+00	4.47E+04
Y-93	2.89E+02	0.00E+00	7.94E+00	0.00E+00	0.00E+00	0.00E+00	4.31E+06
Zr-95	3.86E+06	8.50E+05	7.56E+05	0.00E+00	1.22E+06	0.00E+00	8.86E+08
Zr-97	5.67E+02	8.19E+01	4.83E+01	0.00E+00	1.18E+02	0.00E+00	1.24E+07
Nb-95	4.12E+05	1.61E+05	1.15E+05	0.00E+00	1.51E+05	0.00E+00	2.97E+08
Mo-99	0.00E+00	7.69E+06	1.90E+06	0.00E+00	1.64E+07	0.00E+00	6.36E+06
Tc- 99M	4.64E+00	9.10E+00	1.51E+02	0.00E+00	1.32E+02	4.62E+00	5.18E+03
Tc-101	0.00E+00	0.00E+00	0.00E+00	0.00E+00	0.00E+00	0.00E+00	0.00E+00
Ru-103	1.53E+07	0.00E+00	5.89E+06	0.00E+00	3.86E+07	0.00E+00	3.96E+08
Ru-105	8.97E+01	0.00E+00	3.25E+01	0.00E+00	7.89E+02	0.00E+00	5.86E+04
Ru-106	7.45E+08	0.00E+00	9.30E+07	0.00E+00	1.01E+09	0.00E+00	1.16E+10
Ag-110M	3.21E+07	2.17E+07	1.74E+07	0.00E+00	4.04E+07	0.00E+00	2.58E+09

Table 4-15 (Continued)
Child Vegetation Dose Factors

Nuclide	Bone	Liver	T Body	Thyroid	Kidney	Lung	GI-LLI
Te-125M	3.51E+08	9.52E+07	4.68E+07	9.86E+07	0.00E+00	0.00E+00	3.39E+08
Te-127M	1.32E+09	3.56E+08	1.57E+08	3.16E+08	3.77E+09	0.00E+00	1.07E+09
Te-127	9.89E+03	2.67E+03	2.12E+03	6.84E+03	2.81E+04	0.00E+00	3.86E+05
Te-129M	8.40E+08	2.35E+08	1.30E+08	2.71E+08	2.47E+09	0.00E+00	1.02E+09
Te-129	1.24E-03	3.45E-04	2.94E-04	8.83E-04	3.62E-03	0.00E+00	7.70E-02
Te-131M	1.54E+06	5.32E+05	5.66E+05	1.09E+06	5.15E+06	0.00E+00	2.16E+07
Te-131	2.15E-15	6.57E-16	6.41E-16	1.65E-15	6.51E-15	0.00E+00	1.13E-14
Te-132	6.97E+06	3.09E+06	3.73E+06	4.49E+06	2.86E+07	0.00E+00	3.11E+07
I-130	6.10E+05	1.23E+06	6.35E+05	1.36E+08	1.84E+06	0.00E+00	5.76E+05
I-131	1.43E+08	1.44E+08	8.17E+07	4.75E+10	2.36E+08	0.00E+00	1.28E+07
I-132	8.93E+01	1.64E+02	7.54E+01	7.61E+03	2.51E+02	0.00E+00	1.93E+02
I-133	3.52E+06	4.36E+06	1.65E+06	8.09E+08	7.26E+06	0.00E+00	1.76E+06
I-134	1.37E-04	2.55E-04	1.17E-04	5.86E-03	3.90E-04	0.00E+00	1.69E-04
I-135	6.20E+04	1.12E+05	5.28E+04	9.89E+06	1.71E+05	0.00E+00	8.51E+04
Cs-134	1.60E+10	2.63E+10	5.55E+09	0.00E+00	8.16E+09	2.93E+09	1.42E+08
Cs-136	8.18E+07	2.25E+08	1.46E+08	0.00E+00	1.20E+08	1.79E+07	7.90E+06
Cs-137	2.39E+10	2.29E+10	3.38E+09	0.00E+00	7.46E+09	2.68E+09	1.43E+08
Cs-138	5.58E-11	7.75E-11	4.92E-11	0.00E+00	5.45E-11	5.87E-12	3.57E-11
Ba-139	4.69E-02	2.51E-05	1.36E-03	0.00E+00	2.19E-05	1.47E-05	2.71E+00
Ba-140	2.77E+08	2.43E+05	1.62E+07	0.00E+00	7.90E+04	1.45E+05	1.40E+08
Ba-141	0.00E+00	0.00E+00	0.00E+00	0.00E+00	0.00E+00	0.00E+00	0.00E+00
Ba-142	0.00E+00	0.00E+00	0.00E+00	0.00E+00	0.00E+00	0.00E+00	0.00E+00
La-140	3.25E+03	1.13E+03	3.82E+02	0.00E+00	0.00E+00	0.00E+00	3.16E+07
La-142	3.23E-04	1.03E-04	3.22E-05	0.00E+00	0.00E+00	0.00E+00	2.04E+01
Ce-141	6.55E+05	3.27E+05	4.85E+04	0.00E+00	1.43E+05	0.00E+00	4.08E+08
Ce-143	1.71E+03	9.28E+05	1.34E+02	0.00E+00	3.89E+02	0.00E+00	1.36E+07
Ce-144	1.27E+08	3.98E+07	6.78E+06	0.00E+00	2.21E+07	0.00E+00	1.04E+10
Pr-143	1.46E+05	4.38E+04	7.24E+03	0.00E+00	2.37E+04	0.00E+00	1.57E+08
Pr-144	0.00E+00	0.00E+00	0.00E+00	0.00E+00	0.00E+00	0.00E+00	0.00E+00
Nd-147	7.27E+04	5.89E+04	4.56E+03	0.00E+00	3.23E+04	0.00E+00	9.33E+07
W-187	6.41E+04	3.80E+04	1.70E+04	0.00E+00	0.00E+00	0.00E+00	5.34E+06
Np-239	2.55E+03	1.83E+02	1.29E+02	0.00E+00	5.30E+02	0.00E+00	1.36E+07

Notes:

1) Units are m^2 mrem/yr per μCi/sec with the exception of H-3.
2) For H-3, the units are mrem/yr per μCi/m^3.
3) The infant age group is assumed to receive no dose through the vegetation ingestion pathway therefore no dose factors are supplied.

Table 4-16
Adult Grass-Cow-Milk Dose Factors

Nuclide	Bone	Liver	T Body	Thyroid	Kidney	Lung	GI-LLI
H-3	0.00E+00	4.35E+02	4.35E+02	4.35E+02	4.35E+02	4.35E+02	4.35E+02
Na-24	2.46E+06	2.46E+06	2.46E+06	2.46E+06	2.46E+06	2.46E+06	2.46E+06
Cr-51	0.00E+00	0.00E+00	2.86E+04	1.71E+04	6.29E+03	3.79E+04	7.18E+06
Mn-54	0.00E+00	8.41E+06	1.61E+06	0.00E+00	2.50E+06	0.00E+00	2.58E+07
Mn-56	0.00E+00	4.13E-03	7.32E-04	0.00E+00	5.24E-03	0.00E+00	1.32E-01
Fe-55	2.51E+07	1.74E+07	4.05E+06	0.00E+00	0.00E+00	9.68E+06	9.95E+06
Fe-59	2.97E+07	6.98E+07	2.67E+07	0.00E+00	0.00E+00	1.95E+07	2.33E+08
Co-58	0.00E+00	4.72E+06	1.06E+07	0.00E+00	0.00E+00	0.00E+00	9.56E+07
Co-60	0.00E+00	1.64E+07	3.62E+07	0.00E+00	0.00E+00	0.00E+00	3.08E+08
Ni-63	6.73E+09	4.66E+08	2.26E+08	0.00E+00	0.00E+00	0.00E+00	9.73E+07
Ni-65	3.70E-01	4.81E-02	2.19E-02	0.00E+00	0.00E+00	0.00E+00	1.22E+00
Cu-64	0.00E+00	2.36E+04	1.11E+04	0.00E+00	5.95E+04	0.00E+00	2.01E+06
Zn-65	1.37E+09	4.36E+09	1.97E+09	0.00E+00	2.92E+09	0.00E+00	2.75E+09
Zn-69	2.01E-12	3.84E-12	2.67E-13	0.00E+00	2.50E-12	0.00E+00	5.78E-13
Br-83	0.00E+00	0.00E+00	9.65E-02	0.00E+00	0.00E+00	0.00E+00	1.39E-01
Br-84	0.00E+00	0.00E+00	0.00E+00	0.00E+00	0.00E+00	0.00E+00	0.00E+00
Br-85	0.00E+00	0.00E+00	0.00E+00	0.00E+00	0.00E+00	0.00E+00	0.00E+00
Rb-86	0.00E+00	2.60E+09	1.21E+09	0.00E+00	0.00E+00	0.00E+00	5.12E+08
Rb-88	0.00E+00	0.00E+00	0.00E+00	0.00E+00	0.00E+00	0.00E+00	0.00E+00
Rb-89	0.00E+00	0.00E+00	0.00E+00	0.00E+00	0.00E+00	0.00E+00	0.00E+00
Sr-89	1.45E+09	0.00E+00	4.16E+07	0.00E+00	0.00E+00	0.00E+00	2.33E+08
Sr-90	5.38E+10	0.00E+00	1.08E+09	0.00E+00	0.00E+00	0.00E+00	1.35E+09
Sr-91	2.87E+04	0.00E+00	1.16E+03	0.00E+00	0.00E+00	0.00E+00	1.37E+05
Sr-92	4.84E-01	0.00E+00	2.09E-02	0.00E+00	0.00E+00	0.00E+00	9.58E+00
Y-90	7.10E+01	0.00E+00	1.90E+00	0.00E+00	0.00E+00	0.00E+00	7.52E+05
Y-91M	6.42E-20	0.00E+00	0.00E+00	0.00E+00	0.00E+00	0.00E+00	1.89E-19
Y-91	8.59E+03	0.00E+00	2.30E+02	0.00E+00	0.00E+00	0.00E+00	4.73E+06
Y-92	5.57E-05	0.00E+00	1.63E-06	0.00E+00	0.00E+00	0.00E+00	9.75E-01
Y-93	2.22E-01	0.00E+00	6.12E-03	0.00E+00	0.00E+00	0.00E+00	7.03E+03
Zr-95	9.44E+02	3.03E+02	2.05E+02	0.00E+00	4.75E+02	0.00E+00	9.59E+05
Zr-97	4.32E-01	8.72E-02	3.99E-02	0.00E+00	1.32E-01	0.00E+00	2.70E+04
Nb-95	8.26E+04	4.60E+04	2.47E+04	0.00E+00	4.54E+04	0.00E+00	2.79E+08
Mo-99	0.00E+00	2.47E+07	4.70E+06	0.00E+00	5.60E+07	0.00E+00	5.73E+07
Tc- 99M	3.31E+00	9.35E+00	1.19E+02	0.00E+00	1.42E+02	4.58E+00	5.53E+03
Tc-101	0.00E+00	0.00E+00	0.00E+00	0.00E+00	0.00E+00	0.00E+00	0.00E+00
Ru-103	1.02E+03	0.00E+00	4.39E+02	0.00E+00	3.88E+03	0.00E+00	1.19E+05
Ru-105	8.51E-04	0.00E+00	3.36E-04	0.00E+00	1.10E-02	0.00E+00	5.20E-01
Ru-106	2.04E+04	0.00E+00	2.58E+03	0.00E+00	3.94E+04	0.00E+00	1.32E+06
Ag-110M	5.82E+07	5.39E+07	3.20E+07	0.00E+00	1.06E+08	0.00E+00	2.20E+10

Table 4-16 (Continued)
Adult Grass-Cow-Milk Dose Factors

Nuclide	Bone	Liver	T Body	Thyroid	Kidney	Lung	GI-LLI
Te-125M	1.63E+07	5.91E+06	2.18E+06	4.90E+06	6.63E+07	0.00E+00	6.51E+07
Te-127M	4.58E+07	1.64E+07	5.58E+06	1.17E+07	1.86E+08	0.00E+00	1.54E+08
Te-127	6.66E+02	2.39E+02	1.44E+02	4.94E+02	2.71E+03	0.00E+00	5.26E+04
Te-129M	6.02E+07	2.24E+07	9.52E+06	2.07E+07	2.51E+08	0.00E+00	3.03E+08
Te-129	2.83E-10	1.06E-10	6.88E-11	2.17E-10	1.19E-09	0.00E+00	2.13E-10
Te-131M	3.61E+05	1.76E+05	1.47E+05	2.79E+05	1.79E+06	0.00E+00	1.75E+07
Te-131	0.00E+00	0.00E+00	0.00E+00	0.00E+00	0.00E+00	0.00E+00	0.00E+00
Te-132	2.39E+06	1.55E+06	1.45E+06	1.71E+06	1.49E+07	0.00E+00	7.32E+07
I-130	4.18E+05	1.23E+06	4.86E+05	1.04E+08	1.92E+06	0.00E+00	1.06E+06
I-131	2.96E+08	4.23E+08	2.43E+08	1.39E+11	7.26E+08	0.00E+00	1.12E+08
I-132	1.65E-01	4.40E-01	1.54E-01	1.54E+01	7.02E-01	0.00E+00	8.27E-02
I-133	3.88E+06	6.74E+06	2.06E+06	9.91E+08	1.18E+07	0.00E+00	6.06E+06
I-134	1.89E-12	5.13E-12	1.83E-12	8.89E-11	8.16E-12	0.00E+00	4.47E-15
I-135	1.29E+04	3.38E+04	1.25E+04	2.23E+06	5.42E+04	0.00E+00	3.82E+04
Cs-134	5.65E+09	1.35E+10	1.10E+10	0.00E+00	4.35E+09	1.45E+09	2.35E+08
Cs-136	2.63E+08	1.04E+09	7.46E+08	0.00E+00	5.77E+08	7.91E+07	1.18E+08
Cs-137	7.38E+09	1.01E+10	6.61E+09	0.00E+00	3.43E+09	1.14E+09	1.95E+08
Cs-138	0.00E+00	0.00E+00	0.00E+00	0.00E+00	0.00E+00	0.00E+00	0.00E+00
Ba-139	4.43E-08	3.16E-11	1.30E-09	0.00E+00	2.95E-11	1.79E-11	7.86E-08
Ba-140	2.69E+07	3.38E+04	1.76E+06	0.00E+00	1.15E+04	1.93E+04	5.54E+07
Ba-141	0.00E+00	0.00E+00	0.00E+00	0.00E+00	0.00E+00	0.00E+00	0.00E+00
Ba-142	0.00E+00	0.00E+00	0.00E+00	0.00E+00	0.00E+00	0.00E+00	0.00E+00
La-140	4.52E+00	2.28E+00	6.02E-01	0.00E+00	0.00E+00	0.00E+00	1.67E+05
La-142	1.89E-11	8.59E-12	2.14E-12	0.00E+00	0.00E+00	0.00E+00	6.28E-08
Ce-141	4.84E+03	3.28E+03	3.72E+02	0.00E+00	1.52E+03	0.00E+00	1.25E+07
Ce-143	4.15E+01	3.07E+04	3.39E+00	0.00E+00	1.35E+01	0.00E+00	1.15E+06
Ce-144	3.58E+05	1.50E+05	1.92E+04	0.00E+00	8.87E+04	0.00E+00	1.21E+08
Pr-143	1.58E+02	6.34E+01	7.83E+00	0.00E+00	3.66E+01	0.00E+00	6.92E+05
Pr-144	0.00E+00	0.00E+00	0.00E+00	0.00E+00	0.00E+00	0.00E+00	0.00E+00
Nd-147	9.48E+01	1.10E+02	6.56E+00	0.00E+00	6.41E+01	0.00E+00	5.26E+05
W-187	6.51E+03	5.44E+03	1.90E+03	0.00E+00	0.00E+00	0.00E+00	1.78E+06
Np-239	3.67E+00	3.61E-01	1.99E-01	0.00E+00	1.12E+00	0.00E+00	7.40E+04

Notes:
1) Units are m^2 mrem/yr per μCi/sec with the exception of H-3.
2) For H-3, the units are mrem/yr per μCi/m^3.

Table 4-17
Teen Grass-Cow-Milk Dose Factors

Nuclide	Bone	Liver	T Body	Thyroid	Kidney	Lung	GI-LLI
H-3	0.00E+00	5.66E+02	5.66E+02	5.66E+02	5.66E+02	5.66E+02	5.66E+02
Na-24	4.29E+06	4.29E+06	4.29E+06	4.29E+06	4.29E+06	4.29E+06	4.29E+06
Cr-51	0.00E+00	0.00E+00	4.99E+04	2.77E+04	1.09E+04	7.12E+04	8.38E+06
Mn-54	0.00E+00	1.40E+07	2.78E+06	0.00E+00	4.18E+06	0.00E+00	2.87E+07
Mn-56	0.00E+00	7.32E-03	1.30E-03	0.00E+00	9.27E-03	0.00E+00	4.82E-01
Fe-55	4.45E+07	3.16E+07	7.36E+06	0.00E+00	0.00E+00	2.00E+07	1.37E+07
Fe-59	5.18E+07	1.21E+08	4.67E+07	0.00E+00	0.00E+00	3.81E+07	2.86E+08
Co-58	0.00E+00	7.94E+06	1.83E+07	0.00E+00	0.00E+00	0.00E+00	1.09E+08
Co-60	0.00E+00	2.78E+07	6.26E+07	0.00E+00	0.00E+00	0.00E+00	3.62E+08
Ni-63	1.18E+10	8.35E+08	4.01E+08	0.00E+00	0.00E+00	0.00E+00	1.33E+08
Ni-65	6.78E-01	8.66E-02	3.94E-02	0.00E+00	0.00E+00	0.00E+00	4.70E+00
Cu-64	0.00E+00	4.21E+04	1.98E+04	0.00E+00	1.06E+05	0.00E+00	3.26E+06
Zn-65	2.11E+09	7.31E+09	3.41E+09	0.00E+00	4.68E+09	0.00E+00	3.10E+09
Zn-69	3.70E-12	7.05E-12	4.94E-13	0.00E+00	4.61E-12	0.00E+00	1.30E-11
Br-83	0.00E+00	0.00E+00	1.78E-01	0.00E+00	0.00E+00	0.00E+00	0.00E+00
Br-84	0.00E+00	0.00E+00	0.00E+00	0.00E+00	0.00E+00	0.00E+00	0.00E+00
Br-85	0.00E+00	0.00E+00	0.00E+00	0.00E+00	0.00E+00	0.00E+00	0.00E+00
Rb-86	0.00E+00	4.73E+09	2.22E+09	0.00E+00	0.00E+00	0.00E+00	7.01E+08
Rb-88	0.00E+00	0.00E+00	0.00E+00	0.00E+00	0.00E+00	0.00E+00	0.00E+00
Rb-89	0.00E+00	0.00E+00	0.00E+00	0.00E+00	0.00E+00	0.00E+00	0.00E+00
Sr-89	2.67E+09	0.00E+00	7.66E+07	0.00E+00	0.00E+00	0.00E+00	3.18E+08
Sr-90	8.13E+10	0.00E+00	1.63E+09	0.00E+00	0.00E+00	0.00E+00	1.86E+09
Sr-91	5.27E+04	0.00E+00	2.10E+03	0.00E+00	0.00E+00	0.00E+00	2.39E+05
Sr-92	8.85E-01	0.00E+00	3.77E-02	0.00E+00	0.00E+00	0.00E+00	2.26E+01
Y-90	1.30E+02	0.00E+00	3.51E+00	0.00E+00	0.00E+00	0.00E+00	1.08E+06
Y-91M	1.18E-19	0.00E+00	0.00E+00	0.00E+00	0.00E+00	0.00E+00	5.55E-18
Y-91	1.58E+04	0.00E+00	4.24E+02	0.00E+00	0.00E+00	0.00E+00	6.48E+06
Y-92	1.03E-04	0.00E+00	2.98E-06	0.00E+00	0.00E+00	0.00E+00	2.82E+00
Y-93	4.09E-01	0.00E+00	1.12E-02	0.00E+00	0.00E+00	0.00E+00	1.25E+04
Zr-95	1.65E+03	5.21E+02	3.58E+02	0.00E+00	7.65E+02	0.00E+00	1.20E+06
Zr-97	7.87E-01	1.56E-01	7.17E-02	0.00E+00	2.36E-01	0.00E+00	4.22E+04
Nb-95	1.41E+05	7.82E+04	4.30E+04	0.00E+00	7.58E+04	0.00E+00	3.34E+08
Mo-99	0.00E+00	4.46E+07	8.51E+06	0.00E+00	1.02E+08	0.00E+00	8.00E+07
Tc- 99M	5.74E+00	1.60E+01	2.07E+02	0.00E+00	2.39E+02	8.89E+00	1.05E+04
Tc-101	0.00E+00	0.00E+00	0.00E+00	0.00E+00	0.00E+00	0.00E+00	0.00E+00
Ru-103	1.81E+03	0.00E+00	7.74E+02	0.00E+00	6.38E+03	0.00E+00	1.51E+05
Ru-105	1.55E-03	0.00E+00	6.03E-04	0.00E+00	1.96E-02	0.00E+00	1.25E+00
Ru-106	3.75E+04	0.00E+00	4.73E+03	0.00E+00	7.24E+04	0.00E+00	1.80E+06
Ag-110M	9.63E+07	9.11E+07	5.54E+07	0.00E+00	1.74E+08	0.00E+00	2.56E+10

Table 4-17 (Continued)
Teen Grass-Cow-Milk Dose Factors

Nuclide	Bone	Liver	T Body	Thyroid	Kidney	Lung	GI-LLI
Te-125M	3.01E+07	1.08E+07	4.02E+06	8.40E+06	0.00E+00	0.00E+00	8.87E+07
Te-127M	8.44E+07	2.99E+07	1.00E+07	2.01E+07	3.42E+08	0.00E+00	2.10E+08
Te-127	1.24E+03	4.38E+02	2.66E+02	8.52E+02	5.00E+03	0.00E+00	9.54E+04
Te-129M	1.10E+08	4.09E+07	1.74E+07	3.55E+07	4.61E+08	0.00E+00	4.13E+08
Te-129	5.20E-10	1.94E-10	1.27E-10	3.72E-10	2.18E-09	0.00E+00	2.84E-09
Te-131M	6.57E+05	3.15E+05	2.63E+05	4.74E+05	3.28E+06	0.00E+00	2.53E+07
Te-131	0.00E+00	0.00E+00	0.00E+00	0.00E+00	0.00E+00	0.00E+00	0.00E+00
Te-132	4.27E+06	2.71E+06	2.55E+06	2.85E+06	2.60E+07	0.00E+00	8.57E+07
I-130	7.35E+05	2.13E+06	8.49E+05	1.73E+08	3.27E+06	0.00E+00	1.63E+06
I-131	5.37E+08	7.52E+08	4.04E+08	2.19E+11	1.29E+09	0.00E+00	1.49E+08
I-132	2.92E-01	7.64E-01	2.74E-01	2.57E+01	1.20E+00	0.00E+00	3.33E-01
I-133	7.08E+06	1.20E+07	3.66E+06	1.68E+09	2.11E+07	0.00E+00	9.09E+06
I-134	3.35E-12	8.89E-12	3.19E-12	1.48E-10	1.40E-11	0.00E+00	1.17E-13
I-135	2.29E+04	5.91E+04	2.19E+04	3.80E+06	9.33E+04	0.00E+00	6.54E+04
Cs-134	9.82E+09	2.31E+10	1.07E+10	0.00E+00	7.34E+09	2.80E+09	2.87E+08
Cs-136	4.47E+08	1.76E+09	1.18E+09	0.00E+00	9.58E+08	1.51E+08	1.42E+08
Cs-137	1.34E+10	1.78E+10	6.20E+09	0.00E+00	6.06E+09	2.35E+09	2.53E+08
Cs-138	0.00E+00	0.00E+00	0.00E+00	0.00E+00	0.00E+00	0.00E+00	0.00E+00
Ba-139	8.20E-08	5.77E-11	2.39E-09	0.00E+00	5.44E-11	3.98E-11	7.31E-07
Ba-140	4.85E+07	5.95E+04	3.13E+06	0.00E+00	2.02E+04	4.00E+04	7.49E+07
Ba-141	0.00E+00	0.00E+00	0.00E+00	0.00E+00	0.00E+00	0.00E+00	0.00E+00
Ba-142	0.00E+00	0.00E+00	0.00E+00	0.00E+00	0.00E+00	0.00E+00	0.00E+00
La-140	8.12E+00	3.99E+00	1.06E+00	0.00E+00	0.00E+00	0.00E+00	2.29E+05
La-142	3.41E-11	1.51E-11	3.77E-12	0.00E+00	0.00E+00	0.00E+00	4.61E-07
Ce-141	8.88E+03	5.93E+03	6.81E+02	0.00E+00	2.79E+03	0.00E+00	1.70E+07
Ce-143	7.62E+01	5.55E+04	6.20E+00	0.00E+00	2.49E+01	0.00E+00	1.67E+06
Ce-144	6.58E+05	2.72E+05	3.54E+04	0.00E+00	1.63E+05	0.00E+00	1.66E+08
Pr-143	2.90E+02	1.16E+02	1.44E+01	0.00E+00	6.74E+01	0.00E+00	9.55E+05
Pr-144	0.00E+00	0.00E+00	0.00E+00	0.00E+00	0.00E+00	0.00E+00	0.00E+00
Nd-147	1.82E+02	1.98E+02	1.19E+01	0.00E+00	1.17E+02	0.00E+00	7.16E+05
W-187	1.19E+04	9.71E+03	3.40E+03	0.00E+00	0.00E+00	0.00E+00	2.63E+06
Np-239	7.00E+00	6.60E-01	3.67E-01	0.00E+00	2.07E+00	0.00E+00	1.06E+05

Notes:
1) Units are m^2 mrem/yr per μCi/sec with the exception of H-3.
2) For H-3, the units are mrem/yr per μCi/m^3.

Table 4-18
Child Grass-Cow-Milk Dose Factors

Nuclide	Bone	Liver	T Body	Thyroid	Kidney	Lung	GI-LLI
H-3	0.00E+00	8.97E+02	8.97E+02	8.97E+02	8.97E+02	8.97E+02	8.97E+02
Na-24	8.93E+06	8.93E+06	8.93E+06	8.93E+06	8.93E+06	8.93E+06	8.93E+06
Cr-51	0.00E+00	0.00E+00	1.02E+05	5.65E+04	1.54E+04	1.03E+05	5.39E+06
Mn-54	0.00E+00	2.10E+07	5.59E+06	0.00E+00	5.88E+06	0.00E+00	1.76E+07
Mn-56	0.00E+00	1.28E-02	2.88E-03	0.00E+00	1.54E-02	0.00E+00	1.85E+00
Fe-55	1.12E+08	5.93E+07	1.84E+07	0.00E+00	0.00E+00	3.35E+07	1.10E+07
Fe-59	1.20E+08	1.94E+08	9.69E+07	0.00E+00	0.00E+00	5.64E+07	2.02E+08
Co-58	0.00E+00	1.21E+07	3.71E+07	0.00E+00	0.00E+00	0.00E+00	7.08E+07
Co-60	0.00E+00	4.32E+07	1.27E+08	0.00E+00	0.00E+00	0.00E+00	2.39E+08
Ni-63	2.96E+10	1.59E+09	1.01E+09	0.00E+00	0.00E+00	0.00E+00	1.07E+08
Ni-65	1.66E+00	1.56E-01	9.11E-02	0.00E+00	0.00E+00	0.00E+00	1.91E+01
Cu-64	0.00E+00	7.39E+04	4.47E+04	0.00E+00	1.79E+05	0.00E+00	3.47E+06
Zn-65	4.13E+09	1.10E+10	6.85E+09	0.00E+00	6.94E+09	0.00E+00	1.93E+09
Zn-69	9.10E-12	1.32E-11	1.22E-12	0.00E+00	7.98E-12	0.00E+00	8.29E-10
Br-83	0.00E+00	0.00E+00	4.37E-01	0.00E+00	0.00E+00	0.00E+00	0.00E+00
Br-84	0.00E+00	0.00E+00	0.00E+00	0.00E+00	0.00E+00	0.00E+00	0.00E+00
Br-85	0.00E+00	0.00E+00	0.00E+00	0.00E+00	0.00E+00	0.00E+00	0.00E+00
Rb-86	0.00E+00	8.78E+09	5.40E+09	0.00E+00	0.00E+00	0.00E+00	5.65E+08
Rb-88	0.00E+00	0.00E+00	0.00E+00	0.00E+00	0.00E+00	0.00E+00	0.00E+00
Rb-89	0.00E+00	0.00E+00	0.00E+00	0.00E+00	0.00E+00	0.00E+00	0.00E+00
Sr-89	6.62E+09	0.00E+00	1.89E+08	0.00E+00	0.00E+00	0.00E+00	2.56E+08
Sr-90	1.68E+11	0.00E+00	3.38E+09	0.00E+00	0.00E+00	0.00E+00	1.51E+09
Sr-91	1.29E+05	0.00E+00	4.88E+03	0.00E+00	0.00E+00	0.00E+00	2.86E+05
Sr-92	2.16E+00	0.00E+00	8.67E-02	0.00E+00	0.00E+00	0.00E+00	4.09E+01
Y-90	3.23E+02	0.00E+00	8.64E+00	0.00E+00	0.00E+00	0.00E+00	9.19E+05
Y-91M	2.87E-19	0.00E+00	1.04E-20	0.00E+00	0.00E+00	0.00E+00	5.62E-16
Y-91	3.90E+04	0.00E+00	1.04E+03	0.00E+00	0.00E+00	0.00E+00	5.20E+06
Y-92	2.53E-04	0.00E+00	7.23E-06	0.00E+00	0.00E+00	0.00E+00	7.30E+00
Y-93	1.00E+00	0.00E+00	2.75E-02	0.00E+00	0.00E+00	0.00E+00	1.50E+04
Zr-95	3.83E+03	8.43E+02	7.50E+02	0.00E+00	1.21E+03	0.00E+00	8.79E+05
Zr-97	1.91E+00	2.77E-01	1.63E-01	0.00E+00	3.97E-01	0.00E+00	4.19E+04
Nb-95	3.18E+05	1.24E+05	8.85E+04	0.00E+00	1.16E+05	0.00E+00	2.29E+08
Mo-99	0.00E+00	8.12E+07	2.01E+07	0.00E+00	1.73E+08	0.00E+00	6.72E+07
Tc- 99M	1.32E+01	2.58E+01	4.28E+02	0.00E+00	3.75E+02	1.31E+01	1.47E+04
Tc-101	0.00E+00	0.00E+00	0.00E+00	0.00E+00	0.00E+00	0.00E+00	0.00E+00
Ru-103	4.28E+03	0.00E+00	1.65E+03	0.00E+00	1.08E+04	0.00E+00	1.11E+05
Ru-105	3.79E-03	0.00E+00	1.38E-03	0.00E+00	3.33E-02	0.00E+00	2.48E+00
Ru-106	9.24E+04	0.00E+00	1.15E+04	0.00E+00	1.25E+05	0.00E+00	1.44E+06
Ag-110M	2.09E+08	1.41E+08	1.13E+08	0.00E+00	2.63E+08	0.00E+00	1.68E+10

Table 4-18 (Continued)
Child Grass-Cow-Milk Dose Factors

Nuclide	Bone	Liver	T Body	Thyroid	Kidney	Lung	GI-LLI
Te-125M	7.38E+07	2.00E+07	9.84E+06	2.07E+07	0.00E+00	0.00E+00	7.12E+07
Te-127M	2.08E+08	5.60E+07	2.47E+07	4.97E+07	5.93E+08	0.00E+00	1.68E+08
Te-127	3.04E+03	8.19E+02	6.51E+02	2.10E+03	8.64E+03	0.00E+00	1.19E+05
Te-129M	2.71E+08	7.58E+07	4.21E+07	8.75E+07	7.97E+08	0.00E+00	3.31E+08
Te-129	1.28E-09	3.58E-10	3.05E-10	9.16E-10	3.75E-09	0.00E+00	7.99E-08
Te-131M	1.60E+06	5.53E+05	5.88E+05	1.14E+06	5.35E+06	0.00E+00	2.24E+07
Te-131	0.00E+00	0.00E+00	0.00E+00	0.00E+00	0.00E+00	0.00E+00	0.00E+00
Te-132	1.02E+07	4.52E+06	5.46E+06	6.58E+06	4.19E+07	0.00E+00	4.55E+07
I-130	1.72E+06	3.47E+06	1.79E+06	3.82E+08	5.19E+06	0.00E+00	1.62E+06
I-131	1.30E+09	1.31E+09	7.45E+08	4.33E+11	2.15E+09	0.00E+00	1.17E+08
I-132	6.91E-01	1.27E+00	5.84E-01	5.89E+01	1.94E+00	0.00E+00	1.49E+00
I-133	1.72E+07	2.13E+07	8.05E+06	3.95E+09	3.55E+07	0.00E+00	8.57E+06
I-134	7.94E-12	1.47E-11	6.79E-12	3.39E-10	2.26E-11	0.00E+00	9.78E-12
I-135	5.43E+04	9.78E+04	4.62E+04	8.66E+06	1.50E+05	0.00E+00	7.45E+04
Cs-134	2.26E+10	3.72E+10	7.84E+09	0.00E+00	1.15E+10	4.13E+09	2.00E+08
Cs-136	1.01E+09	2.77E+09	1.80E+09	0.00E+00	1.48E+09	2.20E+08	9.75E+07
Cs-137	3.22E+10	3.09E+10	4.55E+09	0.00E+00	1.01E+10	3.62E+09	1.93E+08
Cs-138	0.00E+00	0.00E+00	0.00E+00	0.00E+00	0.00E+00	0.00E+00	0.00E+00
Ba-139	2.01E-07	1.08E-10	5.84E-09	0.00E+00	9.39E-11	6.33E-11	1.16E-05
Ba-140	1.17E+08	1.03E+05	6.84E+06	0.00E+00	3.34E+04	6.12E+04	5.94E+07
Ba-141	0.00E+00	0.00E+00	0.00E+00	0.00E+00	0.00E+00	0.00E+00	0.00E+00
Ba-142	0.00E+00	0.00E+00	0.00E+00	0.00E+00	0.00E+00	0.00E+00	0.00E+00
La-140	1.95E+01	6.80E+00	2.29E+00	0.00E+00	0.00E+00	0.00E+00	1.90E+05
La-142	8.24E-11	2.63E-11	8.22E-12	0.00E+00	0.00E+00	0.00E+00	5.20E-06
Ce-141	2.19E+04	1.09E+04	1.62E+03	0.00E+00	4.78E+03	0.00E+00	1.36E+07
Ce-143	1.87E+02	1.01E+05	1.47E+01	0.00E+00	4.26E+01	0.00E+00	1.49E+06
Ce-144	1.62E+06	5.09E+05	8.66E+04	0.00E+00	2.82E+05	0.00E+00	1.33E+08
Pr-143	7.18E+02	2.16E+02	3.57E+01	0.00E+00	1.17E+02	0.00E+00	7.75E+05
Pr-144	0.00E+00	0.00E+00	0.00E+00	0.00E+00	0.00E+00	0.00E+00	0.00E+00
Nd-147	4.48E+02	3.63E+02	2.81E+01	0.00E+00	1.99E+02	0.00E+00	5.75E+05
W-187	2.89E+04	1.71E+04	7.67E+03	0.00E+00	0.00E+00	0.00E+00	2.40E+06
Np-239	1.72E+01	1.24E+00	8.69E-01	0.00E+00	3.58E+00	0.00E+00	9.15E+04

Notes:

1) Units are m^2 mrem/yr per μCi/sec with the exception of H-3.
2) For H-3, the units are mrem/yr per μCi/m^3.

Table 4-19
Infant Grass-Cow-Milk Dose Factors

Nuclide	Bone	Liver	T Body	Thyroid	Kidney	Lung	GI-LLI
H-3	0.00E+00	1.36E+03	1.36E+03	1.36E+03	1.36E+03	1.36E+03	1.36E+03
Na-24	1.56E+07	1.56E+07	1.56E+07	1.56E+07	1.56E+07	1.56E+07	1.56E+07
Cr-51	0.00E+00	0.00E+00	1.61E+05	1.05E+05	2.30E+04	2.05E+05	4.70E+06
Mn-54	0.00E+00	3.90E+07	8.84E+06	0.00E+00	8.64E+06	0.00E+00	1.43E+07
Mn-56	0.00E+00	3.13E-02	5.39E-03	0.00E+00	2.69E-02	0.00E+00	2.84E+00
Fe-55	1.35E+08	8.73E+07	2.33E+07	0.00E+00	0.00E+00	4.27E+07	1.11E+07
Fe-59	2.24E+08	3.92E+08	1.54E+08	0.00E+00	0.00E+00	1.16E+08	1.87E+08
Co-58	0.00E+00	2.43E+07	6.05E+07	0.00E+00	0.00E+00	0.00E+00	6.04E+07
Co-60	0.00E+00	8.82E+07	2.08E+08	0.00E+00	0.00E+00	0.00E+00	2.10E+08
Ni-63	3.49E+10	2.16E+09	1.21E+09	0.00E+00	0.00E+00	0.00E+00	1.07E+08
Ni-65	3.51E+00	3.97E-01	1.81E-01	0.00E+00	0.00E+00	0.00E+00	3.02E+01
Cu-64	0.00E+00	1.84E+05	8.51E+04	0.00E+00	3.11E+05	0.00E+00	3.77E+06
Zn-65	5.55E+09	1.90E+10	8.78E+09	0.00E+00	9.23E+09	0.00E+00	1.61E+10
Zn-69	1.94E-11	3.49E-11	2.60E-12	0.00E+00	1.45E-11	0.00E+00	2.85E-09
Br-83	0.00E+00	0.00E+00	9.27E-01	0.00E+00	0.00E+00	0.00E+00	0.00E+00
Br-84	0.00E+00	0.00E+00	0.00E+00	0.00E+00	0.00E+00	0.00E+00	0.00E+00
Br-85	0.00E+00	0.00E+00	0.00E+00	0.00E+00	0.00E+00	0.00E+00	0.00E+00
Rb-86	0.00E+00	2.23E+10	1.10E+10	0.00E+00	0.00E+00	0.00E+00	5.70E+08
Rb-88	0.00E+00	0.00E+00	0.00E+00	0.00E+00	0.00E+00	0.00E+00	0.00E+00
Rb-89	0.00E+00	0.00E+00	0.00E+00	0.00E+00	0.00E+00	0.00E+00	0.00E+00
Sr-89	1.26E+10	0.00E+00	3.61E+08	0.00E+00	0.00E+00	0.00E+00	2.59E+08
Sr-90	1.86E+11	0.00E+00	3.77E+09	0.00E+00	0.00E+00	0.00E+00	1.52E+09
Sr-91	2.70E+05	0.00E+00	9.76E+03	0.00E+00	0.00E+00	0.00E+00	3.19E+05
Sr-92	4.60E+00	0.00E+00	1.71E-01	0.00E+00	0.00E+00	0.00E+00	4.96E+01
Y-90	6.82E+02	0.00E+00	1.83E+01	0.00E+00	0.00E+00	0.00E+00	9.42E+05
Y-91M	6.09E-19	0.00E+00	2.07E-20	0.00E+00	0.00E+00	0.00E+00	2.03E-15
Y-91	7.33E+04	0.00E+00	1.95E+03	0.00E+00	0.00E+00	0.00E+00	5.25E+06
Y-92	5.37E-04	0.00E+00	1.51E-05	0.00E+00	0.00E+00	0.00E+00	1.02E+01
Y-93	2.14E+00	0.00E+00	5.83E-02	0.00E+00	0.00E+00	0.00E+00	1.69E+04
Zr-95	6.81E+03	1.66E+03	1.18E+03	0.00E+00	1.79E+03	0.00E+00	8.26E+05
Zr-97	4.05E+00	6.96E-01	3.18E-01	0.00E+00	7.01E-01	0.00E+00	4.44E+04
Nb-95	5.94E+05	2.45E+05	1.41E+05	0.00E+00	1.75E+05	0.00E+00	2.07E+08
Mo-99	0.00E+00	2.08E+08	4.05E+07	0.00E+00	3.10E+08	0.00E+00	6.84E+07
Tc- 99M	2.74E+01	5.65E+01	7.27E+02	0.00E+00	6.08E+02	2.95E+01	1.64E+04
Tc-101	0.00E+00	0.00E+00	0.00E+00	0.00E+00	0.00E+00	0.00E+00	0.00E+00
Ru-103	8.67E+03	0.00E+00	2.90E+03	0.00E+00	1.80E+04	0.00E+00	1.05E+05
Ru-105	8.00E-03	0.00E+00	2.69E-03	0.00E+00	5.88E-02	0.00E+00	3.18E+00
Ru-106	1.90E+05	0.00E+00	2.38E+04	0.00E+00	2.25E+05	0.00E+00	1.44E+06
Ag-110M	3.86E+08	2.82E+08	1.86E+08	0.00E+00	4.03E+08	0.00E+00	1.46E+10

Table 4-19 (Continued)
Infant Grass-Cow-Milk Dose Factors

Nuclide	Bone	Liver	T Body	Thyroid	Kidney	Lung	GI-LLI
Te-125M	1.51E+08	5.04E+07	2.04E+07	5.08E+07	0.00E+00	0.00E+00	7.19E+07
Te-127M	4.21E+08	1.40E+08	5.10E+07	1.22E+08	1.04E+09	0.00E+00	1.70E+08
Te-127	6.45E+03	2.16E+03	1.39E+03	5.25E+03	1.57E+04	0.00E+00	1.35E+05
Te-129M	5.57E+08	1.91E+08	8.58E+07	2.14E+08	1.39E+09	0.00E+00	3.33E+08
Te-129	2.72E-09	9.38E-10	6.35E-10	2.28E-09	6.77E-09	0.00E+00	2.17E-07
Te-131M	3.37E+06	1.36E+06	1.12E+06	2.75E+06	9.35E+06	0.00E+00	2.29E+07
Te-131	0.00E+00	0.00E+00	0.00E+00	0.00E+00	0.00E+00	0.00E+00	0.00E+00
Te-132	2.10E+07	1.04E+07	9.71E+06	1.54E+07	6.51E+07	0.00E+00	3.85E+07
I-130	3.53E+06	7.77E+06	3.12E+06	8.71E+08	8.53E+06	0.00E+00	1.67E+06
I-131	2.72E+09	3.20E+09	1.41E+09	1.05E+12	3.74E+09	0.00E+00	1.14E+08
I-132	1.43E+00	2.91E+00	1.04E+00	1.36E+02	3.25E+00	0.00E+00	2.36E+00
I-133	3.63E+07	5.29E+07	1.55E+07	9.62E+09	6.22E+07	0.00E+00	8.95E+06
I-134	1.65E-11	3.37E-11	1.20E-11	7.87E-10	3.77E-11	0.00E+00	3.49E-11
I-135	1.13E+05	2.25E+05	8.19E+04	2.01E+07	2.50E+05	0.00E+00	8.13E+04
Cs-134	3.65E+10	6.80E+10	6.87E+09	0.00E+00	1.75E+10	7.18E+09	1.85E+08
Cs-136	1.97E+09	5.80E+09	2.16E+09	0.00E+00	2.31E+09	4.72E+08	8.80E+07
Cs-137	5.15E+10	6.02E+10	4.27E+09	0.00E+00	1.62E+10	6.55E+09	1.88E+08
Cs-138	0.00E+00	0.00E+00	0.00E+00	0.00E+00	0.00E+00	0.00E+00	0.00E+00
Ba-139	4.29E-07	2.84E-10	1.24E-08	0.00E+00	1.71E-10	1.72E-10	2.72E-05
Ba-140	2.41E+08	2.41E+05	1.24E+07	0.00E+00	5.72E+04	1.48E+05	5.92E+07
Ba-141	0.00E+00	0.00E+00	0.00E+00	0.00E+00	0.00E+00	0.00E+00	0.00E+00
Ba-142	0.00E+00	0.00E+00	0.00E+00	0.00E+00	0.00E+00	0.00E+00	0.00E+00
La-140	4.06E+01	1.60E+01	4.12E+00	0.00E+00	0.00E+00	0.00E+00	1.88E+05
La-142	1.73E-10	6.35E-11	1.52E-11	0.00E+00	0.00E+00	0.00E+00	1.08E-05
Ce-141	4.34E+04	2.64E+04	3.11E+03	0.00E+00	8.15E+03	0.00E+00	1.37E+07
Ce-143	3.96E+02	2.63E+05	3.00E+01	0.00E+00	7.65E+01	0.00E+00	1.53E+06
Ce-144	2.33E+06	9.52E+05	1.30E+05	0.00E+00	3.85E+05	0.00E+00	1.33E+08
Pr-143	1.49E+03	5.56E+02	7.37E+01	0.00E+00	2.07E+02	0.00E+00	7.84E+05
Pr-144	0.00E+00	0.00E+00	0.00E+00	0.00E+00	0.00E+00	0.00E+00	0.00E+00
Nd-147	8.88E+02	9.12E+02	5.59E+01	0.00E+00	3.51E+02	0.00E+00	5.78E+05
W-187	6.08E+04	4.23E+04	1.46E+04	0.00E+00	0.00E+00	0.00E+00	2.48E+06
Np-239	3.64E+01	3.26E+00	1.84E+00	0.00E+00	6.50E+00	0.00E+00	9.42E+04

Notes:

1) Units are m^2 mrem/yr per μCi/sec with the exception of H-3.
2) For H-3, the units are mrem/yr per μCi/m^3.

Table 4-20
Adult Grass-Goat-Milk Dose Factors

Nuclide	Bone	Liver	T Body	Thyroid	Kidney	Lung	GI-LLI
H-3	0.00E+00	8.88E+02	8.88E+02	8.88E+02	8.88E+02	8.88E+02	8.88E+02
Na-24	2.95E+05	2.95E+05	2.95E+05	2.95E+05	2.95E+05	2.95E+05	2.95E+05
Cr-51	0.00E+00	0.00E+00	3.43E+03	2.05E+03	7.55E+02	4.55E+03	8.62E+05
Mn-54	0.00E+00	1.01E+06	1.93E+05	0.00E+00	3.00E+05	0.00E+00	3.09E+06
Mn-56	0.00E+00	4.95E-04	8.79E-05	0.00E+00	6.29E-04	0.00E+00	1.58E-02
Fe-55	3.26E+05	2.26E+05	5.26E+04	0.00E+00	0.00E+00	1.26E+05	1.29E+05
Fe-59	3.86E+05	9.07E+05	3.48E+05	0.00E+00	0.00E+00	2.53E+05	3.02E+06
Co-58	0.00E+00	5.66E+05	1.27E+06	0.00E+00	0.00E+00	0.00E+00	1.15E+07
Co-60	0.00E+00	1.97E+06	4.34E+06	0.00E+00	0.00E+00	0.00E+00	3.70E+07
Ni-63	8.07E+08	5.60E+07	2.71E+07	0.00E+00	0.00E+00	0.00E+00	1.17E+07
Ni-65	4.44E-02	5.77E-03	2.63E-03	0.00E+00	0.00E+00	0.00E+00	1.46E-01
Cu-64	0.00E+00	2.63E+03	1.23E+03	0.00E+00	6.63E+03	0.00E+00	2.24E+05
Zn-65	1.65E+08	5.24E+08	2.37E+08	0.00E+00	3.50E+08	0.00E+00	3.30E+08
Zn-69	2.41E-13	4.61E-13	3.21E-14	0.00E+00	3.00E-13	0.00E+00	6.93E-14
Br-83	0.00E+00	0.00E+00	1.16E-02	0.00E+00	0.00E+00	0.00E+00	1.67E-02
Br-84	0.00E+00	0.00E+00	0.00E+00	0.00E+00	0.00E+00	0.00E+00	0.00E+00
Br-85	0.00E+00	0.00E+00	0.00E+00	0.00E+00	0.00E+00	0.00E+00	0.00E+00
Rb-86	0.00E+00	3.12E+08	1.45E+08	0.00E+00	0.00E+00	0.00E+00	6.15E+07
Rb-88	0.00E+00	0.00E+00	0.00E+00	0.00E+00	0.00E+00	0.00E+00	0.00E+00
Rb-89	0.00E+00	0.00E+00	0.00E+00	0.00E+00	0.00E+00	0.00E+00	0.00E+00
Sr-89	3.05E+09	0.00E+00	8.74E+07	0.00E+00	0.00E+00	0.00E+00	4.88E+08
Sr-90	1.13E+11	0.00E+00	2.27E+09	0.00E+00	0.00E+00	0.00E+00	2.84E+09
Sr-91	6.03E+04	0.00E+00	2.44E+03	0.00E+00	0.00E+00	0.00E+00	2.87E+05
Sr-92	1.02E+00	0.00E+00	4.39E-02	0.00E+00	0.00E+00	0.00E+00	2.01E+01
Y-90	8.52E+00	0.00E+00	2.28E-01	0.00E+00	0.00E+00	0.00E+00	9.03E+04
Y-91M	0.00E+00	0.00E+00	0.00E+00	0.00E+00	0.00E+00	0.00E+00	2.26E-20
Y-91	1.03E+03	0.00E+00	2.76E+01	0.00E+00	0.00E+00	0.00E+00	5.67E+05
Y-92	6.68E-06	0.00E+00	1.95E-07	0.00E+00	0.00E+00	0.00E+00	1.17E-01
Y-93	2.66E-02	0.00E+00	7.34E-04	0.00E+00	0.00E+00	0.00E+00	8.43E+02
Zr-95	1.13E+02	3.63E+01	2.46E+01	0.00E+00	5.70E+01	0.00E+00	1.15E+05
Zr-97	5.19E-02	1.05E-02	4.79E-03	0.00E+00	1.58E-02	0.00E+00	3.24E+03
Nb-95	9.92E+03	5.52E+03	2.97E+03	0.00E+00	5.45E+03	0.00E+00	3.35E+07
Mo-99	0.00E+00	2.97E+06	5.65E+05	0.00E+00	6.72E+06	0.00E+00	6.88E+06
Tc- 99M	3.97E-01	1.12E+00	1.43E+01	0.00E+00	1.70E+01	5.50E-01	6.64E+02
Tc-101	0.00E+00	0.00E+00	0.00E+00	0.00E+00	0.00E+00	0.00E+00	0.00E+00
Ru-103	1.22E+02	0.00E+00	5.26E+01	0.00E+00	4.66E+02	0.00E+00	1.43E+04
Ru-105	1.02E-04	0.00E+00	4.03E-05	0.00E+00	1.32E-03	0.00E+00	6.25E-02
Ru-106	2.45E+03	0.00E+00	3.10E+02	0.00E+00	4.73E+03	0.00E+00	1.58E+05
Ag-110M	6.99E+06	6.46E+06	3.84E+06	0.00E+00	1.27E+07	0.00E+00	2.64E+09

Table 4-20 (Continued)
Adult Grass-Goat-Milk Dose Factors

Nuclide	Bone	Liver	T Body	Thyroid	Kidney	Lung	GI-LLI
Te-125M	1.96E+06	7.09E+05	2.62E+05	5.88E+05	7.95E+06	0.00E+00	7.81E+06
Te-127M	5.49E+06	1.96E+06	6.69E+05	1.40E+06	2.23E+07	0.00E+00	1.84E+07
Te-127	8.00E+01	2.87E+01	1.73E+01	5.92E+01	3.26E+02	0.00E+00	6.31E+03
Te-129M	7.22E+06	2.69E+06	1.14E+06	2.48E+06	3.01E+07	0.00E+00	3.64E+07
Te-129	3.39E-11	1.27E-11	8.26E-12	2.60E-11	1.43E-10	0.00E+00	2.56E-11
Te-131M	4.33E+04	2.12E+04	1.76E+04	3.35E+04	2.14E+05	0.00E+00	2.10E+06
Te-131	0.00E+00	0.00E+00	0.00E+00	0.00E+00	0.00E+00	0.00E+00	0.00E+00
Te-132	2.87E+05	1.86E+05	1.74E+05	2.05E+05	1.79E+06	0.00E+00	8.78E+06
I-130	5.01E+05	1.48E+06	5.84E+05	1.25E+08	2.31E+06	0.00E+00	1.27E+06
I-131	3.55E+08	5.08E+08	2.91E+08	1.67E+11	8.71E+08	0.00E+00	1.34E+08
I-132	1.98E-01	5.29E-01	1.85E-01	1.85E+01	8.42E-01	0.00E+00	9.93E-02
I-133	4.65E+06	8.09E+06	2.47E+06	1.19E+09	1.41E+07	0.00E+00	7.27E+06
I-134	2.27E-12	6.15E-12	2.20E-12	1.07E-10	9.79E-12	0.00E+00	5.36E-15
I-135	1.55E+04	4.06E+04	1.50E+04	2.68E+06	6.51E+04	0.00E+00	4.58E+04
Cs-134	1.70E+10	4.04E+10	3.30E+10	0.00E+00	1.31E+10	4.34E+09	7.06E+08
Cs-136	7.88E+08	3.11E+09	2.24E+09	0.00E+00	1.73E+09	2.37E+08	3.53E+08
Cs-137	2.21E+10	3.03E+10	1.98E+10	0.00E+00	1.03E+10	3.42E+09	5.86E+08
Cs-138	0.00E+00	0.00E+00	0.00E+00	0.00E+00	0.00E+00	0.00E+00	0.00E+00
Ba-139	5.32E-09	3.79E-12	1.56E-10	0.00E+00	3.54E-12	2.15E-12	9.44E-09
Ba-140	3.23E+06	4.05E+03	2.11E+05	0.00E+00	1.38E+03	2.32E+03	6.64E+06
Ba-141	0.00E+00	0.00E+00	0.00E+00	0.00E+00	0.00E+00	0.00E+00	0.00E+00
Ba-142	0.00E+00	0.00E+00	0.00E+00	0.00E+00	0.00E+00	0.00E+00	0.00E+00
La-140	5.43E-01	2.74E-01	7.23E-02	0.00E+00	0.00E+00	0.00E+00	2.01E+04
La-142	2.27E-12	1.03E-12	2.57E-13	0.00E+00	0.00E+00	0.00E+00	7.53E-09
Ce-141	5.81E+02	3.93E+02	4.46E+01	0.00E+00	1.83E+02	0.00E+00	1.50E+06
Ce-143	4.98E+00	3.68E+03	4.07E-01	0.00E+00	1.62E+00	0.00E+00	1.38E+05
Ce-144	4.29E+04	1.79E+04	2.30E+03	0.00E+00	1.06E+04	0.00E+00	1.45E+07
Pr-143	1.90E+01	7.60E+00	9.40E-01	0.00E+00	4.39E+00	0.00E+00	8.31E+04
Pr-144	0.00E+00	0.00E+00	0.00E+00	0.00E+00	0.00E+00	0.00E+00	0.00E+00
Nd-147	1.14E+01	1.32E+01	7.87E-01	0.00E+00	7.69E+00	0.00E+00	6.31E+04
W-187	7.82E+02	6.53E+02	2.28E+02	0.00E+00	0.00E+00	0.00E+00	2.14E+05
Np-239	4.40E-01	4.33E-02	2.39E-02	0.00E+00	1.35E-01	0.00E+00	8.88E+03

Notes:
1) Units are m^2 mrem/yr per μCi/sec with the exception of H-3.
2) For H-3, the units are mrem/yr per μCi/m^3.

Table 4-21
Teen Grass-Goat-Milk Dose Factors

Nuclide	Bone	Liver	T Body	Thyroid	Kidney	Lung	GI-LLI
H-3	0.00E+00	1.16E+03	1.16E+03	1.16E+03	1.16E+03	1.16E+03	1.16E+03
Na-24	5.15E+05	5.15E+05	5.15E+05	5.15E+05	5.15E+05	5.15E+05	5.15E+05
Cr-51	0.00E+00	0.00E+00	5.99E+03	3.33E+03	1.31E+03	8.55E+03	1.01E+06
Mn-54	0.00E+00	1.68E+06	3.34E+05	0.00E+00	5.02E+05	0.00E+00	3.45E+06
Mn-56	0.00E+00	8.78E-04	1.56E-04	0.00E+00	1.11E-03	0.00E+00	5.78E-02
Fe-55	5.79E+05	4.11E+05	9.57E+04	0.00E+00	0.00E+00	2.60E+05	1.78E+05
Fe-59	6.74E+05	1.57E+06	6.07E+05	0.00E+00	0.00E+00	4.96E+05	3.72E+06
Co-58	0.00E+00	9.53E+05	2.20E+06	0.00E+00	0.00E+00	0.00E+00	1.31E+07
Co-60	0.00E+00	3.34E+06	7.52E+06	0.00E+00	0.00E+00	0.00E+00	4.35E+07
Ni-63	1.42E+09	1.00E+08	4.81E+07	0.00E+00	0.00E+00	0.00E+00	1.59E+07
Ni-65	8.13E-02	1.04E-02	4.73E-03	0.00E+00	0.00E+00	0.00E+00	5.63E-01
Cu-64	0.00E+00	4.69E+03	2.20E+03	0.00E+00	1.19E+04	0.00E+00	3.64E+05
Zn-65	2.53E+08	8.78E+08	4.09E+08	0.00E+00	5.62E+08	0.00E+00	3.72E+08
Zn-69	4.44E-13	8.46E-13	5.92E-14	0.00E+00	5.53E-13	0.00E+00	1.56E-12
Br-83	0.00E+00	0.00E+00	2.13E-02	0.00E+00	0.00E+00	0.00E+00	0.00E+00
Br-84	0.00E+00	0.00E+00	0.00E+00	0.00E+00	0.00E+00	0.00E+00	0.00E+00
Br-85	0.00E+00	0.00E+00	0.00E+00	0.00E+00	0.00E+00	0.00E+00	0.00E+00
Rb-86	0.00E+00	5.68E+08	2.67E+08	0.00E+00	0.00E+00	0.00E+00	8.41E+07
Rb-88	0.00E+00	0.00E+00	0.00E+00	0.00E+00	0.00E+00	0.00E+00	0.00E+00
Rb-89	0.00E+00	0.00E+00	0.00E+00	0.00E+00	0.00E+00	0.00E+00	0.00E+00
Sr-89	5.61E+09	0.00E+00	1.61E+08	0.00E+00	0.00E+00	0.00E+00	6.69E+08
Sr-90	1.71E+11	0.00E+00	3.41E+09	0.00E+00	0.00E+00	0.00E+00	3.90E+09
Sr-91	1.11E+05	0.00E+00	4.41E+03	0.00E+00	0.00E+00	0.00E+00	5.02E+05
Sr-92	1.86E+00	0.00E+00	7.92E-02	0.00E+00	0.00E+00	0.00E+00	4.74E+01
Y-90	1.56E+01	0.00E+00	4.21E-01	0.00E+00	0.00E+00	0.00E+00	1.29E+05
Y-91M	1.41E-20	0.00E+00	0.00E+00	0.00E+00	0.00E+00	0.00E+00	6.66E-19
Y-91	1.90E+03	0.00E+00	5.08E+01	0.00E+00	0.00E+00	0.00E+00	7.77E+05
Y-92	1.23E-05	0.00E+00	3.57E-07	0.00E+00	0.00E+00	0.00E+00	3.39E-01
Y-93	4.90E-02	0.00E+00	1.34E-03	0.00E+00	0.00E+00	0.00E+00	1.50E+03
Zr-95	1.98E+02	6.25E+01	4.30E+01	0.00E+00	9.18E+01	0.00E+00	1.44E+05
Zr-97	9.44E-02	1.87E-02	8.61E-03	0.00E+00	2.83E-02	0.00E+00	5.06E+03
Nb-95	1.69E+04	9.38E+03	5.16E+03	0.00E+00	9.09E+03	0.00E+00	4.01E+07
Mo-99	0.00E+00	5.36E+06	1.02E+06	0.00E+00	1.23E+07	0.00E+00	9.59E+06
Tc- 99M	6.89E-01	1.92E+00	2.49E+01	0.00E+00	2.86E+01	1.07E+00	1.26E+03
Tc-101	0.00E+00	0.00E+00	0.00E+00	0.00E+00	0.00E+00	0.00E+00	0.00E+00
Ru-103	2.17E+02	0.00E+00	9.29E+01	0.00E+00	7.66E+02	0.00E+00	1.81E+04
Ru-105	1.86E-04	0.00E+00	7.24E-05	0.00E+00	2.35E-03	0.00E+00	1.51E-01
Ru-106	4.50E+03	0.00E+00	5.67E+02	0.00E+00	8.68E+03	0.00E+00	2.16E+05
Ag-110M	1.16E+07	1.09E+07	6.65E+06	0.00E+00	2.09E+07	0.00E+00	3.07E+09

Table 4-21 (Continued)
Teen Grass-Goat-Milk Dose Factors

Nuclide	Bone	Liver	T Body	Thyroid	Kidney	Lung	GI-LLI
Te-125M	3.61E+06	1.30E+06	4.82E+05	1.01E+06	0.00E+00	0.00E+00	1.06E+07
Te-127M	1.01E+07	3.59E+06	1.20E+06	2.41E+06	4.10E+07	0.00E+00	2.52E+07
Te-127	1.48E+02	5.25E+01	3.19E+01	1.02E+02	6.00E+02	0.00E+00	1.14E+04
Te-129M	1.32E+07	4.90E+06	2.09E+06	4.26E+06	5.53E+07	0.00E+00	4.96E+07
Te-129	6.24E-11	2.33E-11	1.52E-11	4.46E-11	2.62E-10	0.00E+00	3.41E-10
Te-131M	7.88E+04	3.78E+04	3.15E+04	5.68E+04	3.94E+05	0.00E+00	3.03E+06
Te-131	0.00E+00	0.00E+00	0.00E+00	0.00E+00	0.00E+00	0.00E+00	0.00E+00
Te-132	5.13E+05	3.25E+05	3.06E+05	3.42E+05	3.12E+06	0.00E+00	1.03E+07
I-130	8.82E+05	2.55E+06	1.02E+06	2.08E+08	3.93E+06	0.00E+00	1.96E+06
I-131	6.45E+08	9.02E+08	4.85E+08	2.63E+11	1.55E+09	0.00E+00	1.78E+08
I-132	3.50E-01	9.17E-01	3.29E-01	3.09E+01	1.44E+00	0.00E+00	3.99E-01
I-133	8.50E+06	1.44E+07	4.40E+06	2.01E+09	2.53E+07	0.00E+00	1.09E+07
I-134	4.03E-12	1.07E-11	3.83E-12	1.78E-10	1.68E-11	0.00E+00	1.41E-13
I-135	2.75E+04	7.09E+04	2.63E+04	4.56E+06	1.12E+05	0.00E+00	7.85E+04
Cs-134	2.94E+10	6.93E+10	3.22E+10	0.00E+00	2.20E+10	8.41E+09	8.62E+08
Cs-136	1.34E+09	5.28E+09	3.54E+09	0.00E+00	2.87E+09	4.53E+08	4.25E+08
Cs-137	4.02E+10	5.34E+10	1.86E+10	0.00E+00	1.82E+10	7.06E+09	7.60E+08
Cs-138	0.00E+00	0.00E+00	0.00E+00	0.00E+00	0.00E+00	0.00E+00	0.00E+00
Ba-139	9.84E-09	6.92E-12	2.87E-10	0.00E+00	6.53E-12	4.77E-12	8.78E-08
Ba-140	5.82E+06	7.14E+03	3.75E+05	0.00E+00	2.42E+03	4.80E+03	8.98E+06
Ba-141	0.00E+00	0.00E+00	0.00E+00	0.00E+00	0.00E+00	0.00E+00	0.00E+00
Ba-142	0.00E+00	0.00E+00	0.00E+00	0.00E+00	0.00E+00	0.00E+00	0.00E+00
La-140	9.75E-01	4.79E-01	1.27E-01	0.00E+00	0.00E+00	0.00E+00	2.75E+04
La-142	4.09E-12	1.82E-12	4.53E-13	0.00E+00	0.00E+00	0.00E+00	5.53E-08
Ce-141	1.07E+03	7.12E+02	8.17E+01	0.00E+00	3.35E+02	0.00E+00	2.04E+06
Ce-143	9.15E+00	6.66E+03	7.44E-01	0.00E+00	2.99E+00	0.00E+00	2.00E+05
Ce-144	7.90E+04	3.27E+04	4.24E+03	0.00E+00	1.95E+04	0.00E+00	1.99E+07
Pr-143	3.48E+01	1.39E+01	1.73E+00	0.00E+00	8.08E+00	0.00E+00	1.15E+05
Pr-144	0.00E+00	0.00E+00	0.00E+00	0.00E+00	0.00E+00	0.00E+00	0.00E+00
Nd-147	2.19E+01	2.38E+01	1.43E+00	0.00E+00	1.40E+01	0.00E+00	8.59E+04
W-187	1.43E+03	1.17E+03	4.08E+02	0.00E+00	0.00E+00	0.00E+00	3.15E+05
Np-239	8.40E-01	7.92E-02	4.40E-02	0.00E+00	2.49E-01	0.00E+00	1.27E+04

Notes:
1) Units are m^2 mrem/yr per μCi/sec with the exception of H-3.
2) For H-3, the units are mrem/yr per μCi/m^3.

Table 4-22
Child Grass-Goat-Milk Dose Factors

Nuclide	Bone	Liver	T Body	Thyroid	Kidney	Lung	GI-LLI
H-3	0.00E+00	1.83E+03	1.83E+03	1.83E+03	1.83E+03	1.83E+03	1.83E+03
Na-24	1.07E+06	1.07E+06	1.07E+06	1.07E+06	1.07E+06	1.07E+06	1.07E+06
Cr-51	0.00E+00	0.00E+00	1.22E+04	6.78E+03	1.85E+03	1.24E+04	6.47E+05
Mn-54	0.00E+00	2.52E+06	6.70E+05	0.00E+00	7.06E+05	0.00E+00	2.11E+06
Mn-56	0.00E+00	1.53E-03	3.46E-04	0.00E+00	1.85E-03	0.00E+00	2.22E-01
Fe-55	1.45E+06	7.71E+05	2.39E+05	0.00E+00	0.00E+00	4.36E+05	1.43E+05
Fe-59	1.56E+06	2.53E+06	1.26E+06	0.00E+00	0.00E+00	7.33E+05	2.63E+06
Co-58	0.00E+00	1.46E+06	4.46E+06	0.00E+00	0.00E+00	0.00E+00	8.49E+06
Co-60	0.00E+00	5.18E+06	1.53E+07	0.00E+00	0.00E+00	0.00E+00	2.87E+07
Ni-63	3.56E+09	1.90E+08	1.21E+08	0.00E+00	0.00E+00	0.00E+00	1.28E+07
Ni-65	1.99E-01	1.87E-02	1.09E-02	0.00E+00	0.00E+00	0.00E+00	2.29E+00
Cu-64	0.00E+00	8.24E+03	4.98E+03	0.00E+00	1.99E+04	0.00E+00	3.87E+05
Zn-65	4.96E+08	1.32E+09	8.22E+08	0.00E+00	8.33E+08	0.00E+00	2.32E+08
Zn-69	1.09E-12	1.58E-12	1.46E-13	0.00E+00	9.57E-13	0.00E+00	9.95E-11
Br-83	0.00E+00	0.00E+00	5.24E-02	0.00E+00	0.00E+00	0.00E+00	0.00E+00
Br-84	0.00E+00	0.00E+00	0.00E+00	0.00E+00	0.00E+00	0.00E+00	0.00E+00
Br-85	0.00E+00	0.00E+00	0.00E+00	0.00E+00	0.00E+00	0.00E+00	0.00E+00
Rb-86	0.00E+00	1.05E+09	6.48E+08	0.00E+00	0.00E+00	0.00E+00	6.78E+07
Rb-88	0.00E+00	0.00E+00	0.00E+00	0.00E+00	0.00E+00	0.00E+00	0.00E+00
Rb-89	0.00E+00	0.00E+00	0.00E+00	0.00E+00	0.00E+00	0.00E+00	0.00E+00
Sr-89	1.39E+10	0.00E+00	3.97E+08	0.00E+00	0.00E+00	0.00E+00	5.38E+08
Sr-90	3.53E+11	0.00E+00	7.11E+09	0.00E+00	0.00E+00	0.00E+00	3.16E+09
Sr-91	2.72E+05	0.00E+00	1.03E+04	0.00E+00	0.00E+00	0.00E+00	6.00E+05
Sr-92	4.54E+00	0.00E+00	1.82E-01	0.00E+00	0.00E+00	0.00E+00	8.60E+01
Y-90	3.87E+01	0.00E+00	1.04E+00	0.00E+00	0.00E+00	0.00E+00	1.10E+05
Y-91M	3.45E-20	0.00E+00	0.00E+00	0.00E+00	0.00E+00	0.00E+00	6.75E-17
Y-91	4.68E+03	0.00E+00	1.25E+02	0.00E+00	0.00E+00	0.00E+00	6.24E+05
Y-92	3.03E-05	0.00E+00	8.67E-07	0.00E+00	0.00E+00	0.00E+00	8.75E-01
Y-93	1.20E-01	0.00E+00	3.31E-03	0.00E+00	0.00E+00	0.00E+00	1.80E+03
Zr-95	4.60E+02	1.01E+02	9.00E+01	0.00E+00	1.45E+02	0.00E+00	1.05E+05
Zr-97	2.30E-01	3.32E-02	1.96E-02	0.00E+00	4.77E-02	0.00E+00	5.03E+03
Nb-95	3.82E+04	1.49E+04	1.06E+04	0.00E+00	1.40E+04	0.00E+00	2.75E+07
Mo-99	0.00E+00	9.75E+06	2.41E+06	0.00E+00	2.08E+07	0.00E+00	8.06E+06
Tc- 99M	1.58E+00	3.10E+00	5.14E+01	0.00E+00	4.50E+01	1.57E+00	1.76E+03
Tc-101	0.00E+00	0.00E+00	0.00E+00	0.00E+00	0.00E+00	0.00E+00	0.00E+00
Ru-103	5.14E+02	0.00E+00	1.97E+02	0.00E+00	1.29E+03	0.00E+00	1.33E+04
Ru-105	4.55E-04	0.00E+00	1.65E-04	0.00E+00	4.00E-03	0.00E+00	2.97E-01
Ru-106	1.11E+04	0.00E+00	1.38E+03	0.00E+00	1.50E+04	0.00E+00	1.72E+05
Ag-110M	2.51E+07	1.69E+07	1.35E+07	0.00E+00	3.15E+07	0.00E+00	2.01E+09

Table 4-22 (Continued)
Child Grass-Goat-Milk Dose Factors

Nuclide	Bone	Liver	T Body	Thyroid	Kidney	Lung	GI-LLI
Te-125M	8.86E+06	2.40E+06	1.18E+06	2.49E+06	0.00E+00	0.00E+00	8.55E+06
Te-127M	2.50E+07	6.72E+06	2.96E+06	5.97E+06	7.12E+07	0.00E+00	2.02E+07
Te-127	3.64E+02	9.83E+01	7.82E+01	2.52E+02	1.04E+03	0.00E+00	1.42E+04
Te-129M	3.26E+07	9.09E+06	5.05E+06	1.05E+07	9.56E+07	0.00E+00	3.97E+07
Te-129	1.54E-10	4.30E-11	3.66E-11	1.10E-10	4.51E-10	0.00E+00	9.59E-09
Te-131M	1.92E+05	6.63E+04	7.06E+04	1.36E+05	6.42E+05	0.00E+00	2.69E+06
Te-131	0.00E+00	0.00E+00	0.00E+00	0.00E+00	0.00E+00	0.00E+00	0.00E+00
Te-132	1.22E+06	5.42E+05	6.55E+05	7.89E+05	5.03E+06	0.00E+00	5.46E+06
I-130	2.06E+06	4.17E+06	2.15E+06	4.59E+08	6.23E+06	0.00E+00	1.95E+06
I-131	1.56E+09	1.57E+09	8.94E+08	5.20E+11	2.58E+09	0.00E+00	1.40E+08
I-132	8.29E-01	1.52E+00	7.00E-01	7.07E+01	2.33E+00	0.00E+00	1.79E+00
I-133	2.06E+07	2.55E+07	9.66E+06	4.74E+09	4.25E+07	0.00E+00	1.03E+07
I-134	9.53E-12	1.77E-11	8.14E-12	4.07E-10	2.71E-11	0.00E+00	1.17E-11
I-135	6.52E+04	1.17E+05	5.55E+04	1.04E+07	1.80E+05	0.00E+00	8.94E+04
Cs-134	6.79E+10	1.11E+11	2.35E+10	0.00E+00	3.45E+10	1.24E+10	6.01E+08
Cs-136	3.03E+09	8.32E+09	5.39E+09	0.00E+00	4.43E+09	6.61E+08	2.92E+08
Cs-137	9.67E+10	9.26E+10	1.37E+10	0.00E+00	3.02E+10	1.09E+10	5.80E+08
Cs-138	0.00E+00	0.00E+00	0.00E+00	0.00E+00	0.00E+00	0.00E+00	0.00E+00
Ba-139	2.42E-08	1.29E-11	7.01E-10	0.00E+00	1.13E-11	7.59E-12	1.40E-06
Ba-140	1.41E+07	1.23E+04	8.21E+05	0.00E+00	4.01E+03	7.34E+03	7.12E+06
Ba-141	0.00E+00	0.00E+00	0.00E+00	0.00E+00	0.00E+00	0.00E+00	0.00E+00
Ba-142	0.00E+00	0.00E+00	0.00E+00	0.00E+00	0.00E+00	0.00E+00	0.00E+00
La-140	2.33E+00	8.16E-01	2.75E-01	0.00E+00	0.00E+00	0.00E+00	2.27E+04
La-142	9.88E-12	3.15E-12	9.87E-13	0.00E+00	0.00E+00	0.00E+00	6.24E-07
Ce-141	2.62E+03	1.31E+03	1.94E+02	0.00E+00	5.74E+02	0.00E+00	1.63E+06
Ce-143	2.25E+01	1.22E+04	1.76E+00	0.00E+00	5.11E+00	0.00E+00	1.78E+05
Ce-144	1.95E+05	6.11E+04	1.04E+04	0.00E+00	3.38E+04	0.00E+00	1.59E+07
Pr-143	8.62E+01	2.59E+01	4.28E+00	0.00E+00	1.40E+01	0.00E+00	9.30E+04
Pr-144	0.00E+00	0.00E+00	0.00E+00	0.00E+00	0.00E+00	0.00E+00	0.00E+00
Nd-147	5.37E+01	4.35E+01	3.37E+00	0.00E+00	2.39E+01	0.00E+00	6.89E+04
W-187	3.47E+03	2.05E+03	9.21E+02	0.00E+00	0.00E+00	0.00E+00	2.88E+05
Np-239	2.07E+00	1.48E-01	1.04E-01	0.00E+00	4.29E-01	0.00E+00	1.10E+04

Notes:
1) Units are m^2 mrem/yr per μCi/sec with the exception of H-3.
2) For H-3, the units are mrem/yr per μCi/m^3.

Table 4-23

Infant Grass-Goat-Milk Dose Factors

Nuclide	Bone	Liver	T Body	Thyroid	Kidney	Lung	GI-LLI
H-3	0.00E+00	2.78E+03	2.78E+03	2.78E+03	2.78E+03	2.78E+03	2.78E+03
Na-24	1.87E+06	1.87E+06	1.87E+06	1.87E+06	1.87E+06	1.87E+06	1.87E+06
Cr-51	0.00E+00	0.00E+00	1.93E+04	1.26E+04	2.76E+03	2.46E+04	5.64E+05
Mn-54	0.00E+00	4.68E+06	1.06E+06	0.00E+00	1.04E+06	0.00E+00	1.72E+06
Mn-56	0.00E+00	3.75E-03	6.47E-04	0.00E+00	3.22E-03	0.00E+00	3.41E-01
Fe-55	1.76E+06	1.13E+06	3.03E+05	0.00E+00	0.00E+00	5.55E+05	1.44E+05
Fe-59	2.92E+06	5.09E+06	2.01E+06	0.00E+00	0.00E+00	1.51E+06	2.43E+06
Co-58	0.00E+00	2.91E+06	7.26E+06	0.00E+00	0.00E+00	0.00E+00	7.25E+06
Co-60	0.00E+00	1.06E+07	2.50E+07	0.00E+00	0.00E+00	0.00E+00	2.52E+07
Ni-63	4.19E+09	2.59E+08	1.45E+08	0.00E+00	0.00E+00	0.00E+00	1.29E+07
Ni-65	4.21E-01	4.77E-02	2.17E-02	0.00E+00	0.00E+00	0.00E+00	3.63E+00
Cu-64	0.00E+00	2.05E+04	9.48E+03	0.00E+00	3.46E+04	0.00E+00	4.20E+05
Zn-65	6.66E+08	2.28E+09	1.05E+09	0.00E+00	1.11E+09	0.00E+00	1.93E+09
Zn-69	2.33E-12	4.19E-12	3.12E-13	0.00E+00	1.74E-12	0.00E+00	3.42E-10
Br-83	0.00E+00	0.00E+00	1.11E-01	0.00E+00	0.00E+00	0.00E+00	0.00E+00
Br-84	0.00E+00	0.00E+00	0.00E+00	0.00E+00	0.00E+00	0.00E+00	0.00E+00
Br-85	0.00E+00	0.00E+00	0.00E+00	0.00E+00	0.00E+00	0.00E+00	0.00E+00
Rb-86	0.00E+00	2.67E+09	1.32E+09	0.00E+00	0.00E+00	0.00E+00	6.84E+07
Rb-88	0.00E+00	0.00E+00	0.00E+00	0.00E+00	0.00E+00	0.00E+00	0.00E+00
Rb-89	0.00E+00	0.00E+00	0.00E+00	0.00E+00	0.00E+00	0.00E+00	0.00E+00
Sr-89	2.64E+10	0.00E+00	7.58E+08	0.00E+00	0.00E+00	0.00E+00	5.43E+08
Sr-90	3.91E+11	0.00E+00	7.92E+09	0.00E+00	0.00E+00	0.00E+00	3.19E+09
Sr-91	5.66E+05	0.00E+00	2.05E+04	0.00E+00	0.00E+00	0.00E+00	6.70E+05
Sr-92	9.65E+00	0.00E+00	3.59E-01	0.00E+00	0.00E+00	0.00E+00	1.04E+02
Y-90	8.19E+01	0.00E+00	2.20E+00	0.00E+00	0.00E+00	0.00E+00	1.13E+05
Y-91M	7.31E-20	0.00E+00	0.00E+00	0.00E+00	0.00E+00	0.00E+00	2.44E-16
Y-91	8.79E+03	0.00E+00	2.34E+02	0.00E+00	0.00E+00	0.00E+00	6.30E+05
Y-92	6.44E-05	0.00E+00	1.81E-06	0.00E+00	0.00E+00	0.00E+00	1.23E+00
Y-93	2.57E-01	0.00E+00	6.99E-03	0.00E+00	0.00E+00	0.00E+00	2.03E+03
Zr-95	8.17E+02	1.99E+02	1.41E+02	0.00E+00	2.15E+02	0.00E+00	9.91E+04
Zr-97	4.87E-01	8.35E-02	3.81E-02	0.00E+00	8.42E-02	0.00E+00	5.33E+03
Nb-95	7.13E+04	2.94E+04	1.70E+04	0.00E+00	2.10E+04	0.00E+00	2.48E+07
Mo-99	0.00E+00	2.49E+07	4.86E+06	0.00E+00	3.72E+07	0.00E+00	8.21E+06
Tc- 99M	3.29E+00	6.78E+00	8.73E+01	0.00E+00	7.29E+01	3.54E+00	1.97E+03
Tc-101	0.00E+00	0.00E+00	0.00E+00	0.00E+00	0.00E+00	0.00E+00	0.00E+00
Ru-103	1.04E+03	0.00E+00	3.48E+02	0.00E+00	2.16E+03	0.00E+00	1.27E+04
Ru-105	9.60E-04	0.00E+00	3.23E-04	0.00E+00	7.06E-03	0.00E+00	3.82E-01
Ru-106	2.28E+04	0.00E+00	2.85E+03	0.00E+00	2.70E+04	0.00E+00	1.73E+05
Ag-110M	4.63E+07	3.38E+07	2.24E+07	0.00E+00	4.84E+07	0.00E+00	1.75E+09

Table 4-23 (Continued)
Infant Grass-Goat-Milk Dose Factors

Nuclide	Bone	Liver	T Body	Thyroid	Kidney	Lung	GI-LLI
Te-125M	1.81E+07	6.05E+06	2.45E+06	6.09E+06	0.00E+00	0.00E+00	8.62E+06
Te-127M	5.05E+07	1.68E+07	6.12E+06	1.46E+07	1.24E+08	0.00E+00	2.04E+07
Te-127	7.74E+02	2.59E+02	1.66E+02	6.30E+02	1.89E+03	0.00E+00	1.63E+04
Te-129M	6.68E+07	2.29E+07	1.03E+07	2.57E+07	1.67E+08	0.00E+00	3.99E+07
Te-129	3.26E-10	1.13E-10	7.62E-11	2.74E-10	8.13E-10	0.00E+00	2.61E-08
Te-131M	4.05E+05	1.63E+05	1.35E+05	3.30E+05	1.12E+06	0.00E+00	2.74E+06
Te-131	0.00E+00	0.00E+00	0.00E+00	0.00E+00	0.00E+00	0.00E+00	0.00E+00
Te-132	2.52E+06	1.25E+06	1.17E+06	1.84E+06	7.81E+06	0.00E+00	4.62E+06
I-130	4.24E+06	9.32E+06	3.74E+06	1.04E+09	1.02E+07	0.00E+00	2.00E+06
I-131	3.26E+09	3.85E+09	1.69E+09	1.26E+12	4.49E+09	0.00E+00	1.37E+08
I-132	1.72E+00	3.49E+00	1.24E+00	1.64E+02	3.90E+00	0.00E+00	2.83E+00
I-133	4.36E+07	6.35E+07	1.86E+07	1.15E+10	7.46E+07	0.00E+00	1.07E+07
I-134	1.98E-11	4.05E-11	1.44E-11	9.44E-10	4.53E-11	0.00E+00	4.19E-11
I-135	1.36E+05	2.70E+05	9.83E+04	2.42E+07	3.01E+05	0.00E+00	9.76E+04
Cs-134	1.09E+11	2.04E+11	2.06E+10	0.00E+00	5.25E+10	2.15E+10	5.54E+08
Cs-136	5.91E+09	1.74E+10	6.49E+09	0.00E+00	6.93E+09	1.42E+09	2.64E+08
Cs-137	1.54E+11	1.81E+11	1.28E+10	0.00E+00	4.85E+10	1.96E+10	5.65E+08
Cs-138	0.00E+00	0.00E+00	0.00E+00	0.00E+00	0.00E+00	0.00E+00	0.00E+00
Ba-139	5.14E-08	3.41E-11	1.49E-09	0.00E+00	2.05E-11	2.07E-11	3.26E-06
Ba-140	2.89E+07	2.89E+04	1.49E+06	0.00E+00	6.87E+03	1.78E+04	7.11E+06
Ba-141	0.00E+00	0.00E+00	0.00E+00	0.00E+00	0.00E+00	0.00E+00	0.00E+00
Ba-142	0.00E+00	0.00E+00	0.00E+00	0.00E+00	0.00E+00	0.00E+00	0.00E+00
La-140	4.88E+00	1.92E+00	4.95E-01	0.00E+00	0.00E+00	0.00E+00	2.26E+04
La-142	2.08E-11	7.62E-12	1.82E-12	0.00E+00	0.00E+00	0.00E+00	1.29E-06
Ce-141	5.20E+03	3.17E+03	3.73E+02	0.00E+00	9.78E+02	0.00E+00	1.64E+06
Ce-143	4.75E+01	3.15E+04	3.60E+00	0.00E+00	9.19E+00	0.00E+00	1.84E+05
Ce-144	2.79E+05	1.14E+05	1.56E+04	0.00E+00	4.62E+04	0.00E+00	1.60E+07
Pr-143	1.78E+02	6.67E+01	8.84E+00	0.00E+00	2.48E+01	0.00E+00	9.41E+04
Pr-144	0.00E+00	0.00E+00	0.00E+00	0.00E+00	0.00E+00	0.00E+00	0.00E+00
Nd-147	1.07E+02	1.09E+02	6.70E+00	0.00E+00	4.22E+01	0.00E+00	6.93E+04
W-187	7.29E+03	5.07E+03	1.75E+03	0.00E+00	0.00E+00	0.00E+00	2.98E+05
Np-239	4.37E+00	3.91E-01	2.21E-01	0.00E+00	7.80E-01	0.00E+00	1.13E+04

Notes:

1) Units are m^2 mrem/yr per μCi/sec with the exception of H-3.
2) For H-3, the units are mrem/yr per μCi/m^3.

Table 4-24
Adult Grass-Cow-Meat Dose Factors

Nuclide	Bone	Liver	T Body	Thyroid	Kidney	Lung	GI-LLI
H-3	0.00E+00	1.85E+02	1.85E+02	1.85E+02	1.85E+02	1.85E+02	1.85E+02
Na-24	1.45E-03	1.45E-03	1.45E-03	1.45E-03	1.45E-03	1.45E-03	1.45E-03
Cr-51	0.00E+00	0.00E+00	7.04E+03	4.21E+03	1.55E+03	9.34E+03	1.77E+06
Mn-54	0.00E+00	9.18E+06	1.75E+06	0.00E+00	2.73E+06	0.00E+00	2.81E+07
Mn-56	0.00E+00	0.00E+00	0.00E+00	0.00E+00	0.00E+00	0.00E+00	0.00E+00
Fe-55	2.93E+08	2.03E+08	4.72E+07	0.00E+00	0.00E+00	1.13E+08	1.16E+08
Fe-59	2.65E+08	6.24E+08	2.39E+08	0.00E+00	0.00E+00	1.74E+08	2.08E+09
Co-58	0.00E+00	1.82E+07	4.09E+07	0.00E+00	0.00E+00	0.00E+00	3.70E+08
Co-60	0.00E+00	7.52E+07	1.66E+08	0.00E+00	0.00E+00	0.00E+00	1.41E+09
Ni-63	1.89E+10	1.31E+09	6.33E+08	0.00E+00	0.00E+00	0.00E+00	2.73E+08
Ni-65	0.00E+00	0.00E+00	0.00E+00	0.00E+00	0.00E+00	0.00E+00	0.00E+00
Cu-64	0.00E+00	2.52E-07	1.18E-07	0.00E+00	6.36E-07	0.00E+00	2.15E-05
Zn-65	3.56E+08	1.13E+09	5.12E+08	0.00E+00	7.57E+08	0.00E+00	7.13E+08
Zn-69	0.00E+00	0.00E+00	0.00E+00	0.00E+00	0.00E+00	0.00E+00	0.00E+00
Br-83	0.00E+00	0.00E+00	0.00E+00	0.00E+00	0.00E+00	0.00E+00	0.00E+00
Br-84	0.00E+00	0.00E+00	0.00E+00	0.00E+00	0.00E+00	0.00E+00	0.00E+00
Br-85	0.00E+00	0.00E+00	0.00E+00	0.00E+00	0.00E+00	0.00E+00	0.00E+00
Rb-86	0.00E+00	4.88E+08	2.28E+08	0.00E+00	0.00E+00	0.00E+00	9.63E+07
Rb-88	0.00E+00	0.00E+00	0.00E+00	0.00E+00	0.00E+00	0.00E+00	0.00E+00
Rb-89	0.00E+00	0.00E+00	0.00E+00	0.00E+00	0.00E+00	0.00E+00	0.00E+00
Sr-89	3.01E+08	0.00E+00	8.65E+06	0.00E+00	0.00E+00	0.00E+00	4.83E+07
Sr-90	1.43E+10	0.00E+00	2.87E+08	0.00E+00	0.00E+00	0.00E+00	3.59E+08
Sr-91	1.43E-10	0.00E+00	5.79E-12	0.00E+00	0.00E+00	0.00E+00	6.83E-10
Sr-92	0.00E+00	0.00E+00	0.00E+00	0.00E+00	0.00E+00	0.00E+00	0.00E+00
Y-90	1.08E+02	0.00E+00	2.91E+00	0.00E+00	0.00E+00	0.00E+00	1.15E+06
Y-91M	0.00E+00	0.00E+00	0.00E+00	0.00E+00	0.00E+00	0.00E+00	0.00E+00
Y-91	1.13E+06	0.00E+00	3.03E+04	0.00E+00	0.00E+00	0.00E+00	6.23E+08
Y-92	0.00E+00	0.00E+00	0.00E+00	0.00E+00	0.00E+00	0.00E+00	0.00E+00
Y-93	4.39E-12	0.00E+00	1.21E-13	0.00E+00	0.00E+00	0.00E+00	1.39E-07
Zr-95	1.87E+06	6.01E+05	4.07E+05	0.00E+00	9.43E+05	0.00E+00	1.91E+09
Zr-97	2.04E-05	4.12E-06	1.88E-06	0.00E+00	6.22E-06	0.00E+00	1.28E+00
Nb-95	2.30E+06	1.28E+06	6.89E+05	0.00E+00	1.27E+06	0.00E+00	7.78E+09
Mo-99	0.00E+00	9.93E+04	1.89E+04	0.00E+00	2.25E+05	0.00E+00	2.30E+05
Tc- 99M	0.00E+00	1.22E-20	1.56E-19	0.00E+00	1.85E-19	0.00E+00	7.23E-18
Tc-101	0.00E+00	0.00E+00	0.00E+00	0.00E+00	0.00E+00	0.00E+00	0.00E+00
Ru-103	1.05E+08	0.00E+00	4.53E+07	0.00E+00	4.01E+08	0.00E+00	1.23E+10
Ru-105	0.00E+00	0.00E+00	0.00E+00	0.00E+00	0.00E+00	0.00E+00	0.00E+00
Ru-106	2.80E+09	0.00E+00	3.54E+08	0.00E+00	5.40E+09	0.00E+00	1.81E+11
Ag-110M	6.68E+06	6.18E+06	3.67E+06	0.00E+00	1.22E+07	0.00E+00	2.52E+09

Table 4-24 (Continued)
Adult Grass-Cow-Meat Dose Factors

Nuclide	Bone	Liver	T Body	Thyroid	Kidney	Lung	GI-LLI
Te-125M	3.59E+08	1.30E+08	4.81E+07	1.08E+08	1.46E+09	0.00E+00	1.43E+09
Te-127M	1.12E+09	3.99E+08	1.36E+08	2.85E+08	4.53E+09	0.00E+00	3.74E+09
Te-127	2.50E-10	8.98E-11	5.41E-11	1.85E-10	1.02E-09	0.00E+00	1.97E-08
Te-129M	1.13E+09	4.23E+08	1.79E+08	3.89E+08	4.73E+09	0.00E+00	5.71E+09
Te-129	0.00E+00	0.00E+00	0.00E+00	0.00E+00	0.00E+00	0.00E+00	0.00E+00
Te-131M	4.49E+02	2.20E+02	1.83E+02	3.48E+02	2.23E+03	0.00E+00	2.18E+04
Te-131	0.00E+00	0.00E+00	0.00E+00	0.00E+00	0.00E+00	0.00E+00	0.00E+00
Te-132	1.40E+06	9.03E+05	8.48E+05	9.98E+05	8.70E+06	0.00E+00	4.27E+07
I-130	2.03E-06	5.98E-06	2.36E-06	5.07E-04	9.33E-06	0.00E+00	5.15E-06
I-131	1.07E+07	1.54E+07	8.80E+06	5.03E+09	2.63E+07	0.00E+00	4.05E+06
I-132	0.00E+00	0.00E+00	0.00E+00	0.00E+00	0.00E+00	0.00E+00	0.00E+00
I-133	3.70E-01	6.43E-01	1.96E-01	9.45E+01	1.12E+00	0.00E+00	5.78E-01
I-134	0.00E+00	0.00E+00	0.00E+00	0.00E+00	0.00E+00	0.00E+00	0.00E+00
I-135	4.66E-17	1.22E-16	4.50E-17	8.04E-15	1.95E-16	0.00E+00	1.38E-16
Cs-134	6.58E+08	1.57E+09	1.28E+09	0.00E+00	5.07E+08	1.68E+08	2.74E+07
Cs-136	1.20E+07	4.73E+07	3.40E+07	0.00E+00	2.63E+07	3.61E+06	5.37E+06
Cs-137	8.72E+08	1.19E+09	7.81E+08	0.00E+00	4.05E+08	1.35E+08	2.31E+07
Cs-138	0.00E+00	0.00E+00	0.00E+00	0.00E+00	0.00E+00	0.00E+00	0.00E+00
Ba-139	0.00E+00	0.00E+00	0.00E+00	0.00E+00	0.00E+00	0.00E+00	0.00E+00
Ba-140	2.88E+07	3.61E+04	1.88E+06	0.00E+00	1.23E+04	2.07E+04	5.92E+07
Ba-141	0.00E+00	0.00E+00	0.00E+00	0.00E+00	0.00E+00	0.00E+00	0.00E+00
Ba-142	0.00E+00	0.00E+00	0.00E+00	0.00E+00	0.00E+00	0.00E+00	0.00E+00
La-140	3.76E-02	1.90E-02	5.01E-03	0.00E+00	0.00E+00	0.00E+00	1.39E+03
La-142	0.00E+00	0.00E+00	0.00E+00	0.00E+00	0.00E+00	0.00E+00	0.00E+00
Ce-141	1.40E+04	9.49E+03	1.08E+03	0.00E+00	4.41E+03	0.00E+00	3.63E+07
Ce-143	1.99E-02	1.47E+01	1.63E-03	0.00E+00	6.47E-03	0.00E+00	5.49E+02
Ce-144	1.46E+06	6.09E+05	7.83E+04	0.00E+00	3.61E+05	0.00E+00	4.93E+08
Pr-143	2.10E+04	8.42E+03	1.04E+03	0.00E+00	4.86E+03	0.00E+00	9.20E+07
Pr-144	0.00E+00	0.00E+00	0.00E+00	0.00E+00	0.00E+00	0.00E+00	0.00E+00
Nd-147	7.21E+03	8.33E+03	4.98E+02	0.00E+00	4.87E+03	0.00E+00	4.00E+07
W-187	2.07E-02	1.73E-02	6.04E-03	0.00E+00	0.00E+00	0.00E+00	5.66E+00
Np-239	2.57E-01	2.53E-02	1.40E-02	0.00E+00	7.90E-02	0.00E+00	5.19E+03

Notes:
1) Units are m^2 mrem/yr per μCi/sec with the exception of H-3.
2) For H-3, the units are mrem/yr per $\mu Ci/m^3$.

Table 4-25
Teen Grass-Cow-Meat Dose Factors

Nuclide	Bone	Liver	T Body	Thyroid	Kidney	Lung	GI-LLI
H-3	0.00E+00	1.10E+02	1.10E+02	1.10E+02	1.10E+02	1.10E+02	1.10E+02
Na-24	1.16E-03	1.16E-03	1.16E-03	1.16E-03	1.16E-03	1.16E-03	1.16E-03
Cr-51	0.00E+00	0.00E+00	5.63E+03	3.13E+03	1.23E+03	8.04E+03	9.46E+05
Mn-54	0.00E+00	7.00E+06	1.39E+06	0.00E+00	2.09E+06	0.00E+00	1.44E+07
Mn-56	0.00E+00	0.00E+00	0.00E+00	0.00E+00	0.00E+00	0.00E+00	0.00E+00
Fe-55	2.38E+08	1.69E+08	3.94E+07	0.00E+00	0.00E+00	1.07E+08	7.31E+07
Fe-59	2.12E+08	4.95E+08	1.91E+08	0.00E+00	0.00E+00	1.56E+08	1.17E+09
Co-58	0.00E+00	1.41E+07	3.24E+07	0.00E+00	0.00E+00	0.00E+00	1.94E+08
Co-60	0.00E+00	5.83E+07	1.31E+08	0.00E+00	0.00E+00	0.00E+00	7.60E+08
Ni-63	1.52E+10	1.07E+09	5.15E+08	0.00E+00	0.00E+00	0.00E+00	1.71E+08
Ni-65	0.00E+00	0.00E+00	0.00E+00	0.00E+00	0.00E+00	0.00E+00	0.00E+00
Cu-64	0.00E+00	2.06E-07	9.68E-08	0.00E+00	5.21E-07	0.00E+00	1.60E-05
Zn-65	2.50E+08	8.69E+08	4.05E+08	0.00E+00	5.56E+08	0.00E+00	3.68E+08
Zn-69	0.00E+00	0.00E+00	0.00E+00	0.00E+00	0.00E+00	0.00E+00	0.00E+00
Br-83	0.00E+00	0.00E+00	0.00E+00	0.00E+00	0.00E+00	0.00E+00	0.00E+00
Br-84	0.00E+00	0.00E+00	0.00E+00	0.00E+00	0.00E+00	0.00E+00	0.00E+00
Br-85	0.00E+00	0.00E+00	0.00E+00	0.00E+00	0.00E+00	0.00E+00	0.00E+00
Rb-86	0.00E+00	4.08E+08	1.91E+08	0.00E+00	0.00E+00	0.00E+00	6.03E+07
Rb-88	0.00E+00	0.00E+00	0.00E+00	0.00E+00	0.00E+00	0.00E+00	0.00E+00
Rb-89	0.00E+00	0.00E+00	0.00E+00	0.00E+00	0.00E+00	0.00E+00	0.00E+00
Sr-89	2.54E+08	0.00E+00	7.28E+06	0.00E+00	0.00E+00	0.00E+00	3.03E+07
Sr-90	9.89E+09	0.00E+00	1.98E+08	0.00E+00	0.00E+00	0.00E+00	2.26E+08
Sr-91	1.21E-10	0.00E+00	4.80E-12	0.00E+00	0.00E+00	0.00E+00	5.47E-10
Sr-92	0.00E+00	0.00E+00	0.00E+00	0.00E+00	0.00E+00	0.00E+00	0.00E+00
Y-90	9.13E+01	0.00E+00	2.46E+00	0.00E+00	0.00E+00	0.00E+00	7.53E+05
Y-91M	0.00E+00	0.00E+00	0.00E+00	0.00E+00	0.00E+00	0.00E+00	0.00E+00
Y-91	9.54E+05	0.00E+00	2.56E+04	0.00E+00	0.00E+00	0.00E+00	3.91E+08
Y-92	0.00E+00	0.00E+00	0.00E+00	0.00E+00	0.00E+00	0.00E+00	0.00E+00
Y-93	3.71E-12	0.00E+00	1.02E-13	0.00E+00	0.00E+00	0.00E+00	1.13E-07
Zr-95	1.50E+06	4.74E+05	3.26E+05	0.00E+00	6.96E+05	0.00E+00	1.09E+09
Zr-97	1.70E-05	3.37E-06	1.55E-06	0.00E+00	5.10E-06	0.00E+00	9.11E-01
Nb-95	1.80E+06	9.98E+05	5.49E+05	0.00E+00	9.67E+05	0.00E+00	4.27E+09
Mo-99	0.00E+00	8.21E+04	1.57E+04	0.00E+00	1.88E+05	0.00E+00	1.47E+05
Tc- 99M	0.00E+00	0.00E+00	1.24E-19	0.00E+00	1.43E-19	0.00E+00	6.29E-18
Tc-101	0.00E+00	0.00E+00	0.00E+00	0.00E+00	0.00E+00	0.00E+00	0.00E+00
Ru-103	8.56E+07	0.00E+00	3.66E+07	0.00E+00	3.02E+08	0.00E+00	7.15E+09
Ru-105	0.00E+00	0.00E+00	0.00E+00	0.00E+00	0.00E+00	0.00E+00	0.00E+00
Ru-106	2.36E+09	0.00E+00	2.97E+08	0.00E+00	4.55E+09	0.00E+00	1.13E+11
Ag-110M	5.06E+06	4.79E+06	2.91E+06	0.00E+00	9.13E+06	0.00E+00	1.35E+09

Table 4-25 (Continued)
Teen Grass-Cow-Meat Dose Factors

Nuclide	Bone	Liver	T Body	Thyroid	Kidney	Lung	GI-LLI
Te-125M	3.03E+08	1.09E+08	4.06E+07	8.47E+07	0.00E+00	0.00E+00	8.95E+08
Te-127M	9.41E+08	3.34E+08	1.12E+08	2.24E+08	3.82E+09	0.00E+00	2.35E+09
Te-127	2.12E-10	7.53E-11	4.57E-11	1.46E-10	8.60E-10	0.00E+00	1.64E-08
Te-129M	9.49E+08	3.52E+08	1.50E+08	3.06E+08	3.97E+09	0.00E+00	3.56E+09
Te-129	0.00E+00	0.00E+00	0.00E+00	0.00E+00	0.00E+00	0.00E+00	0.00E+00
Te-131M	3.75E+02	1.80E+02	1.50E+02	2.70E+02	1.87E+03	0.00E+00	1.44E+04
Te-131	0.00E+00	0.00E+00	0.00E+00	0.00E+00	0.00E+00	0.00E+00	0.00E+00
Te-132	1.14E+06	7.24E+05	6.81E+05	7.63E+05	6.94E+06	0.00E+00	2.29E+07
I-130	1.63E-06	4.72E-06	1.88E-06	3.85E-04	7.27E-06	0.00E+00	3.63E-06
I-131	8.92E+06	1.25E+07	6.71E+06	3.64E+09	2.15E+07	0.00E+00	2.47E+06
I-132	0.00E+00	0.00E+00	0.00E+00	0.00E+00	0.00E+00	0.00E+00	0.00E+00
I-133	3.09E-01	5.25E-01	1.60E-01	7.32E+01	9.20E-01	0.00E+00	3.97E-01
I-134	0.00E+00	0.00E+00	0.00E+00	0.00E+00	0.00E+00	0.00E+00	0.00E+00
I-135	3.79E-17	9.75E-17	3.61E-17	6.27E-15	1.54E-16	0.00E+00	1.08E-16
Cs-134	5.23E+08	1.23E+09	5.71E+08	0.00E+00	3.91E+08	1.49E+08	1.53E+07
Cs-136	9.34E+06	3.68E+07	2.47E+07	0.00E+00	2.00E+07	3.15E+06	2.96E+06
Cs-137	7.24E+08	9.63E+08	3.36E+08	0.00E+00	3.28E+08	1.27E+08	1.37E+07
Cs-138	0.00E+00	0.00E+00	0.00E+00	0.00E+00	0.00E+00	0.00E+00	0.00E+00
Ba-139	0.00E+00	0.00E+00	0.00E+00	0.00E+00	0.00E+00	0.00E+00	0.00E+00
Ba-140	2.38E+07	2.91E+04	1.53E+06	0.00E+00	9.88E+03	1.96E+04	3.67E+07
Ba-141	0.00E+00	0.00E+00	0.00E+00	0.00E+00	0.00E+00	0.00E+00	0.00E+00
Ba-142	0.00E+00	0.00E+00	0.00E+00	0.00E+00	0.00E+00	0.00E+00	0.00E+00
La-140	3.09E-02	1.52E-02	4.04E-03	0.00E+00	0.00E+00	0.00E+00	8.73E+02
La-142	0.00E+00	0.00E+00	0.00E+00	0.00E+00	0.00E+00	0.00E+00	0.00E+00
Ce-141	1.18E+04	7.87E+03	9.04E+02	0.00E+00	3.70E+03	0.00E+00	2.25E+07
Ce-143	1.67E-02	1.22E+01	1.36E-03	0.00E+00	5.46E-03	0.00E+00	3.66E+02
Ce-144	1.23E+06	5.08E+05	6.60E+04	0.00E+00	3.04E+05	0.00E+00	3.09E+08
Pr-143	1.77E+04	7.05E+03	8.79E+02	0.00E+00	4.10E+03	0.00E+00	5.81E+07
Pr-144	0.00E+00	0.00E+00	0.00E+00	0.00E+00	0.00E+00	0.00E+00	0.00E+00
Nd-147	6.35E+03	6.90E+03	4.14E+02	0.00E+00	4.05E+03	0.00E+00	2.49E+07
W-187	1.73E-02	1.41E-02	4.94E-03	0.00E+00	0.00E+00	0.00E+00	3.82E+00
Np-239	2.25E-01	2.12E-02	1.18E-02	0.00E+00	6.66E-02	0.00E+00	3.41E+03

Notes:
1) Units are m^2 mrem/yr per μCi/sec with the exception of H-3.
2) For H-3, the units are mrem/yr per μCi/m^3.

Table 4-26
Child Grass-Cow-Meat Dose Factors

Nuclide	Bone	Liver	T Body	Thyroid	Kidney	Lung	GI-LLI
H-3	0.00E+00	1.34E+02	1.34E+02	1.34E+02	1.34E+02	1.34E+02	1.34E+02
Na-24	1.84E-03	1.84E-03	1.84E-03	1.84E-03	1.84E-03	1.84E-03	1.84E-03
Cr-51	0.00E+00	0.00E+00	8.78E+03	4.87E+03	1.33E+03	8.90E+03	4.66E+05
Mn-54	0.00E+00	8.01E+06	2.13E+06	0.00E+00	2.25E+06	0.00E+00	6.72E+06
Mn-56	0.00E+00	0.00E+00	0.00E+00	0.00E+00	0.00E+00	0.00E+00	0.00E+00
Fe-55	4.57E+08	2.42E+08	7.51E+07	0.00E+00	0.00E+00	1.37E+08	4.49E+07
Fe-59	3.76E+08	6.08E+08	3.03E+08	0.00E+00	0.00E+00	1.76E+08	6.34E+08
Co-58	0.00E+00	1.64E+07	5.03E+07	0.00E+00	0.00E+00	0.00E+00	9.59E+07
Co-60	0.00E+00	6.93E+07	2.04E+08	0.00E+00	0.00E+00	0.00E+00	3.84E+08
Ni-63	2.91E+10	1.56E+09	9.91E+08	0.00E+00	0.00E+00	0.00E+00	1.05E+08
Ni-65	0.00E+00	0.00E+00	0.00E+00	0.00E+00	0.00E+00	0.00E+00	0.00E+00
Cu-64	0.00E+00	2.77E-07	1.67E-07	0.00E+00	6.68E-07	0.00E+00	1.30E-05
Zn-65	3.75E+08	1.00E+09	6.22E+08	0.00E+00	6.30E+08	0.00E+00	1.76E+08
Zn-69	0.00E+00	0.00E+00	0.00E+00	0.00E+00	0.00E+00	0.00E+00	0.00E+00
Br-83	0.00E+00	0.00E+00	0.00E+00	0.00E+00	0.00E+00	0.00E+00	0.00E+00
Br-84	0.00E+00	0.00E+00	0.00E+00	0.00E+00	0.00E+00	0.00E+00	0.00E+00
Br-85	0.00E+00	0.00E+00	0.00E+00	0.00E+00	0.00E+00	0.00E+00	0.00E+00
Rb-86	0.00E+00	5.78E+08	3.55E+08	0.00E+00	0.00E+00	0.00E+00	3.72E+07
Rb-88	0.00E+00	0.00E+00	0.00E+00	0.00E+00	0.00E+00	0.00E+00	0.00E+00
Rb-89	0.00E+00	0.00E+00	0.00E+00	0.00E+00	0.00E+00	0.00E+00	0.00E+00
Sr-89	4.81E+08	0.00E+00	1.37E+07	0.00E+00	0.00E+00	0.00E+00	1.86E+07
Sr-90	1.57E+10	0.00E+00	3.15E+08	0.00E+00	0.00E+00	0.00E+00	1.40E+08
Sr-91	2.26E-10	0.00E+00	8.54E-12	0.00E+00	0.00E+00	0.00E+00	5.00E-10
Sr-92	0.00E+00	0.00E+00	0.00E+00	0.00E+00	0.00E+00	0.00E+00	0.00E+00
Y-90	1.73E+02	0.00E+00	4.62E+00	0.00E+00	0.00E+00	0.00E+00	4.92E+05
Y-91M	0.00E+00	0.00E+00	0.00E+00	0.00E+00	0.00E+00	0.00E+00	0.00E+00
Y-91	1.80E+06	0.00E+00	4.82E+04	0.00E+00	0.00E+00	0.00E+00	2.40E+08
Y-92	0.00E+00	0.00E+00	0.00E+00	0.00E+00	0.00E+00	0.00E+00	0.00E+00
Y-93	6.97E-12	0.00E+00	1.91E-13	0.00E+00	0.00E+00	0.00E+00	1.04E-07
Zr-95	2.67E+06	5.86E+05	5.22E+05	0.00E+00	8.39E+05	0.00E+00	6.11E+08
Zr-97	3.16E-05	4.57E-06	2.70E-06	0.00E+00	6.56E-06	0.00E+00	6.93E-01
Nb-95	3.11E+06	1.21E+06	8.64E+05	0.00E+00	1.14E+06	0.00E+00	2.24E+09
Mo-99	0.00E+00	1.14E+05	2.82E+04	0.00E+00	2.44E+05	0.00E+00	9.44E+04
Tc- 99M	0.00E+00	1.18E-20	1.96E-19	0.00E+00	1.72E-19	0.00E+00	6.72E-18
Tc-101	0.00E+00	0.00E+00	0.00E+00	0.00E+00	0.00E+00	0.00E+00	0.00E+00
Ru-103	1.55E+08	0.00E+00	5.95E+07	0.00E+00	3.90E+08	0.00E+00	4.00E+09
Ru-105	0.00E+00	0.00E+00	0.00E+00	0.00E+00	0.00E+00	0.00E+00	0.00E+00
Ru-106	4.44E+09	0.00E+00	5.54E+08	0.00E+00	5.99E+09	0.00E+00	6.90E+10
Ag-110M	8.39E+06	5.67E+06	4.53E+06	0.00E+00	1.06E+07	0.00E+00	6.74E+08

Table 4-26 (Continued)
Child Grass-Cow-Meat Dose Factors

Nuclide	Bone	Liver	T Body	Thyroid	Kidney	Lung	GI-LLI
Te-125M	5.70E+08	1.54E+08	7.59E+07	1.60E+08	0.00E+00	0.00E+00	5.50E+08
Te-127M	1.77E+09	4.78E+08	2.11E+08	4.24E+08	5.06E+09	0.00E+00	1.44E+09
Te-127	3.99E-10	1.08E-10	8.56E-11	2.76E-10	1.14E-09	0.00E+00	1.56E-08
Te-129M	1.79E+09	5.00E+08	2.78E+08	5.77E+08	5.25E+09	0.00E+00	2.18E+09
Te-129	0.00E+00	0.00E+00	0.00E+00	0.00E+00	0.00E+00	0.00E+00	0.00E+00
Te-131M	6.97E+02	2.41E+02	2.57E+02	4.96E+02	2.33E+03	0.00E+00	9.78E+03
Te-131	0.00E+00	0.00E+00	0.00E+00	0.00E+00	0.00E+00	0.00E+00	0.00E+00
Te-132	2.09E+06	9.23E+05	1.12E+06	1.34E+06	8.57E+06	0.00E+00	9.30E+06
I-130	2.92E-06	5.89E-06	3.04E-06	6.49E-04	8.81E-06	0.00E+00	2.76E-06
I-131	1.65E+07	1.66E+07	9.45E+06	5.50E+09	2.73E+07	0.00E+00	1.48E+06
I-132	0.00E+00	0.00E+00	0.00E+00	0.00E+00	0.00E+00	0.00E+00	0.00E+00
I-133	5.75E-01	7.10E-01	2.69E-01	1.32E+02	1.18E+00	0.00E+00	2.86E-01
I-134	0.00E+00	0.00E+00	0.00E+00	0.00E+00	0.00E+00	0.00E+00	0.00E+00
I-135	6.86E-17	1.23E-16	5.84E-17	1.09E-14	1.89E-16	0.00E+00	9.40E-17
Cs-134	9.22E+08	1.51E+09	3.19E+08	0.00E+00	4.69E+08	1.68E+08	8.16E+06
Cs-136	1.61E+07	4.43E+07	2.87E+07	0.00E+00	2.36E+07	3.52E+06	1.56E+06
Cs-137	1.33E+09	1.28E+09	1.88E+08	0.00E+00	4.16E+08	1.50E+08	7.99E+06
Cs-138	0.00E+00	0.00E+00	0.00E+00	0.00E+00	0.00E+00	0.00E+00	0.00E+00
Ba-139	0.00E+00	0.00E+00	0.00E+00	0.00E+00	0.00E+00	0.00E+00	0.00E+00
Ba-140	4.39E+07	3.84E+04	2.56E+06	0.00E+00	1.25E+04	2.29E+04	2.22E+07
Ba-141	0.00E+00	0.00E+00	0.00E+00	0.00E+00	0.00E+00	0.00E+00	0.00E+00
Ba-142	0.00E+00	0.00E+00	0.00E+00	0.00E+00	0.00E+00	0.00E+00	0.00E+00
La-140	5.66E-02	1.98E-02	6.67E-03	0.00E+00	0.00E+00	0.00E+00	5.52E+02
La-142	0.00E+00	0.00E+00	0.00E+00	0.00E+00	0.00E+00	0.00E+00	0.00E+00
Ce-141	2.22E+04	1.11E+04	1.64E+03	0.00E+00	4.85E+03	0.00E+00	1.38E+07
Ce-143	3.14E-02	1.70E+01	2.46E-03	0.00E+00	7.14E-03	0.00E+00	2.49E+02
Ce-144	2.32E+06	7.26E+05	1.24E+05	0.00E+00	4.02E+05	0.00E+00	1.89E+08
Pr-143	3.34E+04	1.00E+04	1.66E+03	0.00E+00	5.44E+03	0.00E+00	3.61E+07
Pr-144	0.00E+00	0.00E+00	0.00E+00	0.00E+00	0.00E+00	0.00E+00	0.00E+00
Nd-147	1.19E+04	9.65E+03	7.47E+02	0.00E+00	5.29E+03	0.00E+00	1.53E+07
W-187	3.21E-02	1.90E-02	8.52E-03	0.00E+00	0.00E+00	0.00E+00	2.67E+00
Np-239	4.23E-01	3.04E-02	2.14E-02	0.00E+00	8.79E-02	0.00E+00	2.25E+03

Notes:

1) Units are m^2 mrem/yr per μCi/sec with the exception of H-3.
2) For H-3, the units are mrem/yr per μCi/m^3.
3) The infant age group is assumed to receive no dose through the meat ingestion pathway therefore no dose factors are supplied.

Table 4-27
Byron Station Characteristics

LOCATION: 3.7 miles SSW of Byron, Illinois

Characteristics of Elevated Release Point: Not applicable (NA)

1) Release Height = ____m 2) Diameter = ____m

3) Exit Speed = ___ms^{-1} 4) Heat Content___Kcal s^{-1}

Characteristics of Vent Stack Release Point

1) Release Height = 60.66 m[a] 2) Diameter = 2.80 m

3) Exit Speed = 13.00 ms^{-1}[a]

Characteristics of Ground Level Point

1) Release Height = 0 m

2) Building Factor (D) = 60.6 m[a]

Meteorological Data

A 250 ft Tower is Located 1036 m SW of vent stack release point

---

Tower Data Used in Calculations

Release Point	Wind Speed and Direction	Differential Temperature
Elevated	(NA)	(NA)
Vent	250 ft	250-30 ft
Ground	30 ft	250-30 ft

[a] Used in calculating the meteorological and dose factors in Table 4-1 and Table 4-4.

Table 4-28
Dose Factors for Noble Gases

Nuclide	Beta Air Dose Factor N_i (mrad/yr per uCi/m^3)	Beta Skin Dose Factor L_i (mrem/yr per uCi/m^3)	Gamma Air Dose Factor M_i (mrad/yr per uCi/m^3)	Gamma Total Body Dose Factor K_i (mrem/yr per uCi/m^3)
Kr-83m	2.88E+02	---	1.93E+01	7.56E-02
Kr-85m	1.97E+03	1.46E+03	1.23E+03	1.17E+03
Kr-85	1.95E+03	1.34E+03	1.72E+01	1.61E+01
Kr-87	1.03E+04	9.73E+03	6.17E+03	5.92E+03
Kr-88	2.93E+03	2.37E+03	1.52E+04	1.47E+04
Kr-89	1.06E+04	1.01E+04	1.73E+04	1.66E+04
Kr-90	7.83E+03	7.29E+03	1.63E+04	1.56E+04
Xe-131m	1.11E+03	4.76E+02	1.56E+02	9.15E+01
Xe-133m	1.48E+03	9.94E+02	3.27E+02	2.51E+02
Xe-133	1.05E+03	3.06E+02	3.53E+02	2.94E+02
Xe-135m	7.39E+02	7.11E+02	3.36E+03	3.12E+03
Xe-135	2.46E+03	1.86E+03	1.92E+03	1.81E+03
Xe-137	1.27E+04	1.22E+04	1.51E+03	1.42E+03
Xe-138	4.75E+03	4.13E+03	9.21E+03	8.83E+03
Ar-41	3.28E+03	2.69E+03	9.30E+03	8.84E+03

Source: Table B-1 of US NRC Regulatory Guide 1.109

5.0. TOTAL DOSE

5.1 Total Dose Calculation Requirements

5.1.1 Total Effective Dose Equivalent Limits; 10CFR20 and 40CFR190

The Byron Station is required to determine the total dose to a member of the public due to all uranium fuel cycle sources in order to assess compliance with 40CFR190 as part of demonstrating compliance with 10CFR20.

The total dose for the uranium fuel cycle is the sum of doses due to radioactivity in airborne and liquid effluents and the doses due to direct radiation from contained sources at the nuclear power station. When evaluation of total dose is required for a station, the following contributions are summed:

- Doses due to airborne and liquid effluents from the station.
- Doses due to liquid effluents from nuclear power stations upstream.
- Doses due to any onsite radioactive waste storage facilities, if applicable.

10CFR20 requires compliance to dose limits expressed as "Total Effective Dose Equivalent" (TEDE). Although annual dose limits in 10CFR20 are now expressed in terms of TEDEs, 40CFR190 limits remain stated as organ dose. The NRC continues to require 10CFR50 Appendix I and 40CFR190 doses to be reported in terms of organ dose and not TEDE. Due to the fact that organ dose limits set forth in 40CFR190 are substantially lower than those of 10CFR20 (25 mrem/yr vs. 100 mrem/yr), the NRC has stated that demonstration of compliance with the dose limits in 40CFR190 will be deemed as demonstration of compliance with the dose limits of 10CFR20 for most facilities (Reference 104). In addition to compliance with 40CFR190, it may be necessary for a nuclear power plant to address dose from on-site activity by members of the public.

5.1.2 Total Dose Calculation Methodology

In addition to the total body, skin and single organ dose assessments previously described, an additional assessment is required. The additional assessment addresses radiation dose due

to radioactivity contained within the nuclear power station and its structures.

Pressurized water reactors have the potential to affect off-site doses from contained sources of radioactivity, primarily due to gamma rays associated with radioactive material contained in onsite radwaste and radioactive material storage facilities.

5.2 Onsite Radwaste and Rad Material Storage Facilities

A 10CFR50.59 analysis is required for radwaste storage facilities.

5.2.1 Process Waste Storage Facilities

- Interim Radwaste Storage Facility (IRSF) structure
- Concrete vaults containing radwaste liners

5.2.2 DAW Storage Facilities

- Dry Active Waste (DAW) facilities (may include Butler buildings/warehouses)
- Seavans or other temporary warehouses

5.2.3 Replaced Steam Generator Storage Facilities

5.2.4 ISFSI Facilities

- Independent spent fuel storage installation facilities.

5.3 Methodology

The external total body dose is comprised of the following parts:

1) Total body dose due to noble gas radionuclides in gaseous effluents (Section 4.2.2.3),
2) Dose due to other contained sources and
3) Total body dose due to radioactivity deposited on the ground (Section 4.2.3.1).

The external total body dose due to radioactivity deposited on the ground is accounted for in the determination of the non-noble gas dose and is considered in section 5.4.

The total external total body dose, D^{Ex}, is given by:

$$D^{Ex} = D^{TB} + D^{OSF} \quad (5\text{-}1)$$

D^{Ex}	Total External Total Body Dose	[mrem]
	Total external total body dose due to irradiation by external sources at the location of interest.	
D^{TB}	Noble Gas Total Body Dose	[mrem]
	External total body dose due to gamma radiation from noble gas radionuclides released in gaseous effluents at the location of interest. See Section 4.2.2.3.	
D^{OSF}	Dose From On-Site Storage Facilities	[mrem]
	External total body dose due to gamma radiation from on-site storage facilities at the location of interest. See Section 5.2.	

5.4 Total Dose

The total dose, D^{Tot}, in the unrestricted area to a member of the public due to plant operations is given by:

$$D^{Tot} = D^{Ex} + D^{Liq}_{aj} + D^{NNG}_{aj} \quad (5\text{-}2)$$

where:

D^{Tot}	Total Dose To Member of Public	[mrem]
	Total off-site dose to a member of public due to plant operations.	
D^{Ex}	Total External Total Body Dose	[mrem]
	Total body dose due to external exposure to noble gases, N-16 skyshine and on-site storage facilities.	
D^{Liq}_{aj}	Liquid Effluent Dose	[mrem]
	Dose due to liquid effluents to age group **a** and organ **j**. The age group and organ with the highest dose from liquid effluents is used.	
D^{NNG}_{aj}	Non-Noble Gaseous Effluent Dose	[mrem]
	Dose due to non-noble gaseous effluents to age group **a** and organ **j**. The age group and organ with the highest dose from non-noble gas effluents is used.	

5.5 COMPLIANCE TO TOTAL DOSE LIMITS

5.5.1 Total Effective Dose Equivalent Limit - 10CFR20 Compliance

Each station's RECS limits the Total Effective Dose Equivalent (TEDE) to an annual limit of 100 mrem, as required by 10CFR20.1301 (a)(1). Demonstration of compliance with the limits of 40CFR190 (per Section 4.2.2) will be considered to demonstrate compliance with the 100 mrem/year limit.

5.5.2 Dose to a Member of the Public in the Unrestricted Area

The NRC has stated that demonstration of compliance with the limits of 40CFR190 or with the design objectives of Appendix I to 10CFR50 will be deemed to demonstrate compliance with the limits of 10CFR20.1301(a)(1). Power reactors that comply with Appendix I may also have to demonstrate that they are within the 25 mrem limit of 40CFR190 (See Reference 104).

5.5.3 Dose to a Member of the Public in the Restricted Area

In August of 1995, a revision to 10CFR20 was implemented that changed the definition of a member of the public. As a result, for each nuclear station, estimated doses were calculated for a member of the public who enters the site boundary, but is not authorized for unescorted access to the protected area of the site and does not enter any radiologically posted areas on the site. Realistic assumptions were made for occupancy times and locations visited while within the site boundary.

These evaluations indicate that the doses estimated for these members of the public are well within the 10CFR20 limits. These dose evaluations will be performed annually and if necessary, a model will be developed and included in the ODCM.

Evaluation of the 40CFR190 dose is used to demonstrate compliance to 10CFR20 and satisfy station TRM and Technical Specifications (see ODCM Part I).

5.5.4 Total Dose due to the Uranium Fuel Cycle (40CFR190)

RECS and 40CFR190 limit the annual (calendar year) dose or dose commitment to any member of the public due to releases of radioactivity and to radiation from uranium fuel cycle sources to the following:

- Less than or equal to 25 mrem to the total body.
- Less than or equal to 25 mrem to any organ except the thyroid.
- Less than or equal to 75 mrem to the thyroid.

Total Dose Components

This requirement includes the total dose from operations at the nuclear power station. This includes doses due to radioactive effluents (airborne and liquid) and dose due to direct radiation from non-effluent sources (e.g., sources contained in systems on site). It also includes dose due to plants under consideration, neighboring plants and dose due to other facilities in the uranium fuel cycle.

The operations comprising the uranium fuel cycle are specified in 40CFR190.02(b). The following are included to the extent that they directly support the production of electrical power for public use utilizing nuclear energy:

- Milling of uranium ore.
- Chemical conversion of uranium.
- Isotopic enrichment of uranium.
- Fabrication of uranium fuel.
- Generation of electricity by a light-watered-cooled nuclear power plant using uranium fuel.
- Reprocessing of spent uranium fuel.

Excluded are:

- Mining operations.
- Operations at waste disposal sites.
- Transportation of any radioactive material in support of these operations.
- The re-use of recovered non-uranium special nuclear and by-product materials from the cycle.

5.6 When Compliance Assessment is Required

Compliance with the 40CFR190 regulations is now required as part of demonstration of compliance to 10CFR20 regulations per 10CFR20.1301(d).

The dose due to the uranium fuel cycle is determined by equation 5-2

6.0 RADIOLOGICAL ENVIRONMENTAL MONITORING PROGRAM

The radiological environmental monitoring program for the environs around Byron Station is given in Table 6-1.

Figures 6-1 through 6-4 show sampling and monitoring locations.

Table 6-1

Radiological Environmental Monitoring Program

Exposure Pathway and/or Sample	Sampling or Monitoring Locations	Sampling or Collection Frequency	Type of Frequency of Analysis
1. Airborne			
Radioiodine and Particulates	a. Indicators-Near Field BY-21, Byron Nearsite N, 0.3 mi N (0.5 km A) BY-22, Byron Nearsite ESE, 0.4 mi ESE (0.6 km F) BY-23, Byron Nearsite S, 0.6 mi S (1.0 km J) BY-24, Byron Nearsite SW, 0.6 mi SW (1.0 km L)	Continuous sampler operation with particulate sample collection weekly, or more frequently if required by dust loading, and radioiodine canister collection biweekly.	Radioiodine Canister: I-131 analysis biweekly on near field and control samples.[1] Particulate Sampler: Gross beta analysis following weekly filter change[2] and gamma isotopic analysis[3] quarterly on composite filters by location on near field and control samples.
	b. Indicators-Far Field BY-1, Byron, 3.0 mi N (4.8 km A) BY-4, Paynes Pt., 5.0 mi SE (8.0 km G) BY-6, Oregon, 4.7 mi SSW (7.5 km K)		

Table 6-1 (Cont.)

Radiological Environmental Monitoring Program

Exposure Pathway and/or Sample	Sampling or Monitoring Locations	Sampling or Collection Frequency	Type of Frequency of Analysis
1. Airborne (Cont'd)	c. Controls		
	BY-8, Leaf River, 6.8 mi WNW (10.9 km P)		
2. Direct Radiation	a. Indicators-Inner Ring	Quarterly	Gamma Dose Quarterly
	BY-101-1, 0.3 mi N (0.5 km A) BY-101-2, 0.3 mi N (0.5 km A) BY-102-1, 0.9 mi NNE (1.5 km B) BY-102-2, 1.0 mi NNE (1.5 km B) BY-103-1, 1.7 mi NE (2.8 km C) BY-103-2, 1.7 mi NE (2.7 km C) BY-104-1, 1.5 mi ENE (2.4 km D) BY-104-2, 1.5 mi ENE (2.4 km D) BY-105-1, 1.3 mi E (2.1 km E) BY-105-2, 1.3 mi E (2.1 km E) BY-106-1, 1.4 mi ESE (2.3 km F) BY-106-2, 1.4 mi ESE (2.3 km F) BY-107-1, 1.4 mi SE (2.2 km G) BY-107-2, 1.4 mi SE (2.2 km G) BY-108-1, 0.7 mi SSE (1.1 km H) BY-108-2, 0.6 mi SSE (1.0 km H) BY-109-1, 0.6 mi S (1.0 km J) BY-109-2, 0.6 mi S (1.0 km J) BY-110-1, 0.6 mi SSW (1.0 km K) BY-110-2, 0.6 mi SSW (1.0 km K) BY-111-3, 0.7 mi SW (1.1 km L) BY-111-4, 0.8 mi SW (1.3 km L) BY-112-3, 0.8 mi WSW (1.2 km M) BY-112-4, 0.8 mi WSW (1.2 km M)		

Table 6-1 (Cont.)

Radiological Environmental Monitoring Program

Exposure Pathway and/or Sample	Sampling or Monitoring Locations	Sampling or Collection Frequency	Type of Frequency of Analysis
2. Direct Radiation (Cont'd)	Indicators-Inner Ring (cont'd) BY-113-1, 0.7 mi W (1.1 km N) BY-113-2, 0.7 mi W (1.1 km N) BY-114-1, 0.8 mi WNW (1.2 km P) BY-114-2, 0.8 mi WNW (1.3 km P) BY-115-1, 1.0 mi NW (1.6 km Q) BY-115-2, 1.0 mi NW (1.7 km Q) BY-116-1, 1.4 mi NNW (2.3 km R) BY-116-2, 1.4 mi NNW (2.3 km R)		
	b. Indicators-Outer Ring BY-201-3, 4.5 mi N (7.1 km A) BY-201-4, 4.4 mi N (7.1 km A) BY-202-1, 4.3 mi NNE (6.9 km B) BY-202-2, 4.8 mi NNE (7.6 km B) BY-203-1, 4.8 mi NE (7.7 km C) BY-203-2, 4.7 mi NE (7.5 km C) BY-204-1, 4.2 mi ENE (6.6 km D) BY-204-2, 4.1 mi ENE (6.5 km D) BY-205-1, 3.8 mi E (6.2 km E) BY-205-2, 3.8 mi E (6.2 km E) BY-206-1, 4.1 mi ESE (6.5 km F) BY-206-2, 4.4 mi ESE (7.0 km F) BY-207-1, 4.2 mi SE (6.7 km G) BY-207-2, 3.6 mi SE (5.8 km G)		

Table 6-1 (Cont.)

Radiological Environmental Monitoring Program

Exposure Pathway and/or Sample	Sampling or Monitoring Locations	Sampling or Collection Frequency	Type of Frequency of Analysis
2. Direct Radiation (Cont'd)	Indicators-Outer Ring (cont'd) BY-208-1, 4.0 mi SSE (6.4 km H) BY-208-2, 3.7 mi SSE (5.9 km H) BY-209-1, 3.7 mi S (5.9 km J) BY-209-4, 3.7 mi S (5.9 km J) BY-210-3, 3.9 mi SSW (6.2 km K) BY-210-4, 3.9 mi SSW (6.2 km K) BY-211-1, 4.9 mi SW (7.9 km L) BY-211-4, 4.9 mi SW (7.8 km L) BY-212-1, 4.7 mi WSW (7.4 km M) BY-212-4, 4.7 mi WSW (7.4 km M) BY-213-1, 4.7 mi W (7.5 km N) BY-213-4, 4.6 mi W (7.4 km N) BY-214-1, 4.6 mi WNW (7.4 km P) BY-214-4, 4.9 mi WNW (7.8 km P) BY-215-1, 5.3 mi NW (8.4 km Q) BY-215-4, 5.2 mi NW (8.3 km Q) BY-216-1, 4.6 mi NNW (7.3 km R) BY-216-2, 4.8 mi NNW (7.6 km R)		
	c. Indicators-Other One at each airborne location given in part 1.a and 1.b.		
	d. Control One at each airborne control location given in part 1.c.		

Table 6-1 (Cont.)
Radiological Environmental Monitoring Program

Exposure Pathway and/or Sample	Sampling or Monitoring Locations	Sampling or Collection Frequency	Type of Frequency of Analysis
3. Waterborne a. Ground/Well	a. Indicators BY-14-1, 3200 German Church Rd 1.0 mi SSE (1.6 km H) BY-18, McCoy Farmstead 0.7 mi SW (1.2 km L) BY-32, Wolford Well 1.8 mi W (2.9 km N)	Quarterly	Gamma isotopic[3] and tritium analysis quarterly.
b. Drinking	There is no drinking water pathway within 6.2 mi downstream of the station.		
c. Surface	BY-12, Oregon Pool of Rock River, Downstream of Discharge, 4.5 mi SSW (7.3 km K)	Weekly grab samples.	Gross beta and gamma isotopic analysis[3] on monthly composite; tritium analysis on quarterly composite.
d. Control	BY-29, Byron, Upstream of Intake 3.0 mi N (4.8 km A)	Weekly grab samples.	Gross beta and gamma isotopic analysis[3] on monthly composite; tritium analysis on quarterly composite.
e. Sediment	BY-12, Oregon Pool of Rock River, Downstream of Discharge, 4.5 mi SSW (7.3 km K) BY-34, Rock River Downstream of discharge 0.6 mi (0.96 km N)	Semiannually	Gamma isotopic[3] analysis semiannually.

Table 6-1 (Cont.)

Radiological Environmental Monitoring Program

Exposure Pathway and/or Sample	Sampling or Monitoring Locations	Sampling or Collection Frequency	Type of Frequency of Analysis
4. Ingestion			
a. Milk	a. Indicators BY-20-1 R. Snodgrass,Dairy Farm 4.7 mi WSW (7.52kmm) BY-30, Don Roos Dairy, 5.3 mi SE (8.4 km G)	Biweekly: May through October; monthly: November through April.	Gamma isotopic[3] and I-131 analysis[4] on each sample.
	b. Controls BY-26-1, Dennis Herbert's Dairy 12.8 mi N (20.6 KM A)		
b. Fish	a. Indicator BY-31, Rock River in vicinity of Discharge, 2.2 mi WNW (3.5 km P)	Two times annually	Gamma isotopic[3] analysis on edible portions.
	b. Control BY-29, Byron, Upstream of Intake 3.0 mi N (4.8 km A)		
c. Food Products	a. Indicators Two samples from each of the four major quadrants within 6.2 miles of the station.	Annually	Gamma isotopic[3] analysis on each sample.

Table 6-1 (Cont.)

Radiological Environmental Monitoring Program

Exposure Pathway and/or Sample	Sampling or Monitoring Locations	Sampling or Collection Frequency	Type of Frequency of Analysis
c. Food Products (cont'd)	Sample locations for food products may vary based on availability and therefore are not required to be identified here but shall be taken. b. Control Two samples within 9.3 to 18.6 miles of the station.		

Table 6-1 (Cont'd)

Radiological Environmental Monitoring Program

[1]Far field samples are analyzed when the respective near field sample results are inconsistent with previous measurements and radioactivity is confirmed as having its origin in airborne effluents from the station, or at the discretion of the Chemistry Manager.

[2]Airborne particulate sample filters shall be analyzed for gross beta radioactivity 24 hours or more after sampling to allow for radon and thoron daughter decay. If gross beta activity in air particulate samples is greater than ten times the yearly mean of control samples, gamma isotopic analysis shall be performed on the individual samples.

[3]Gamma isotopic analysis means the identification and quantification of gamma-emitting radionuclides that may be attributable to the effluents from the station.

[4]I-131 analysis means the analytical separation and counting procedure are specific for this radionuclide.

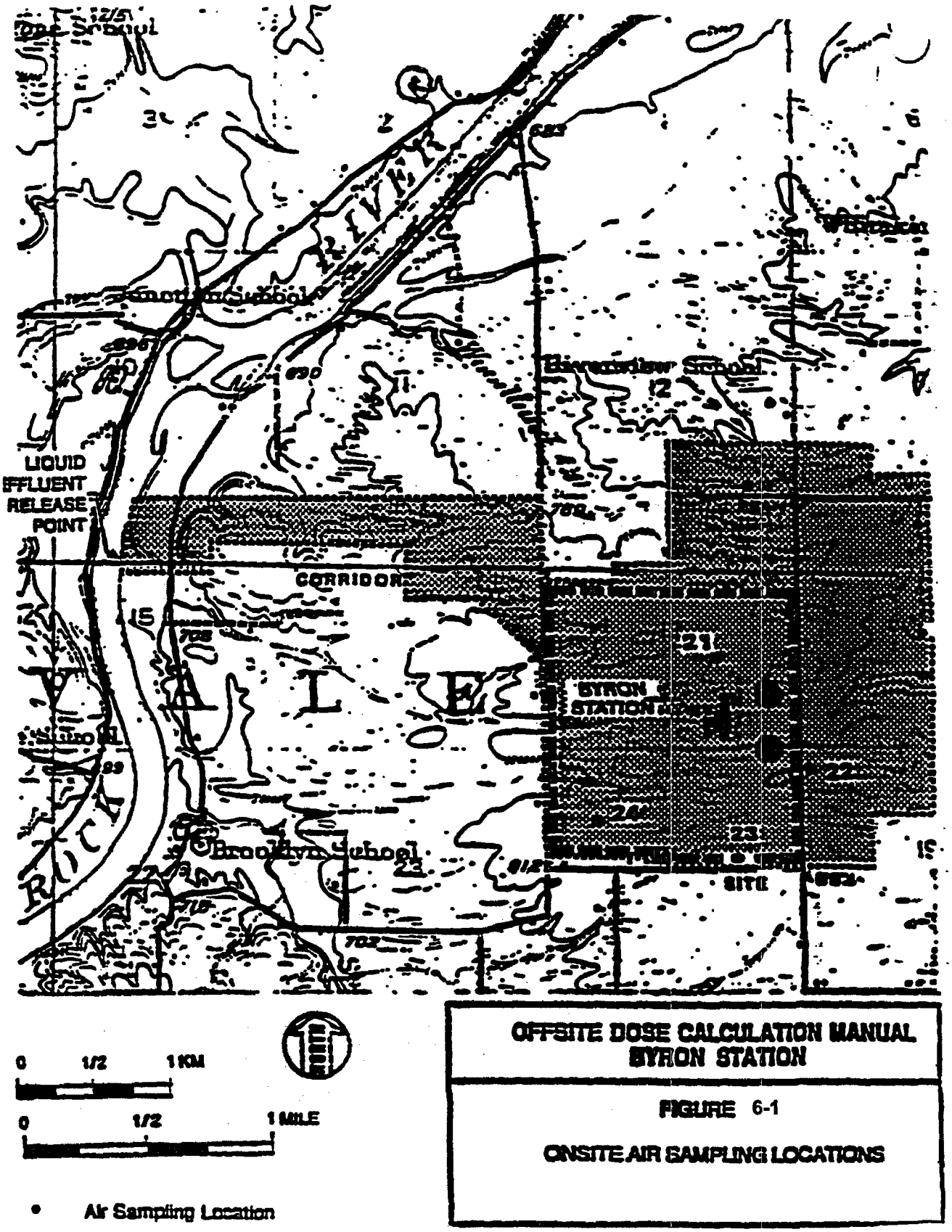

OFFSITE DOSE CALCULATION MANUAL
BYRON STATION

FIGURE 6-1

ONSITE AIR SAMPLING LOCATIONS

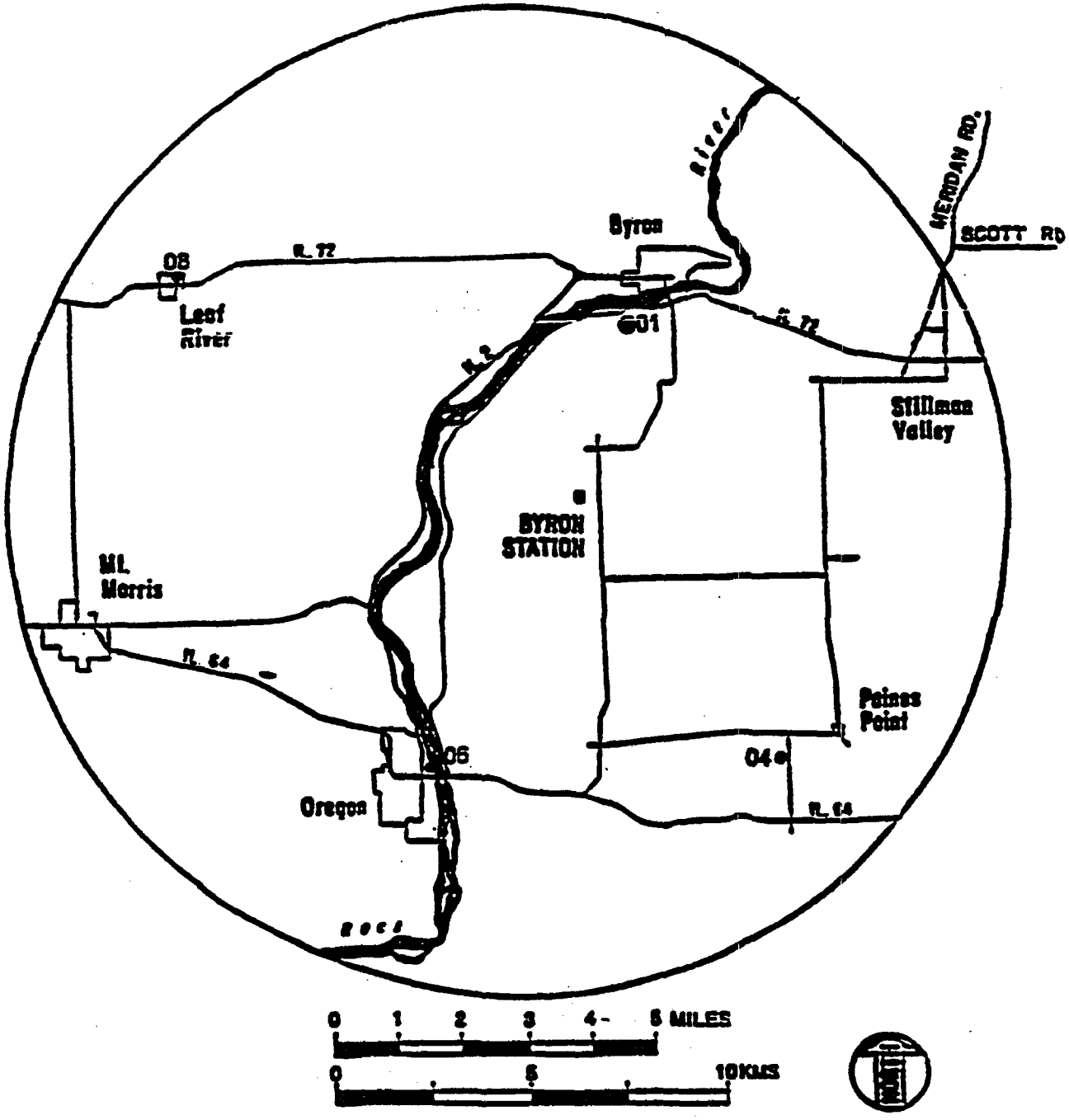

● Air Sampling Location

▼ Byron Station

OFFSITE DOSE CALCULATION MANUAL
BYRON STATION

FIGURE 6-2

OFFSITE AIR SAMPLING LOCATIONS

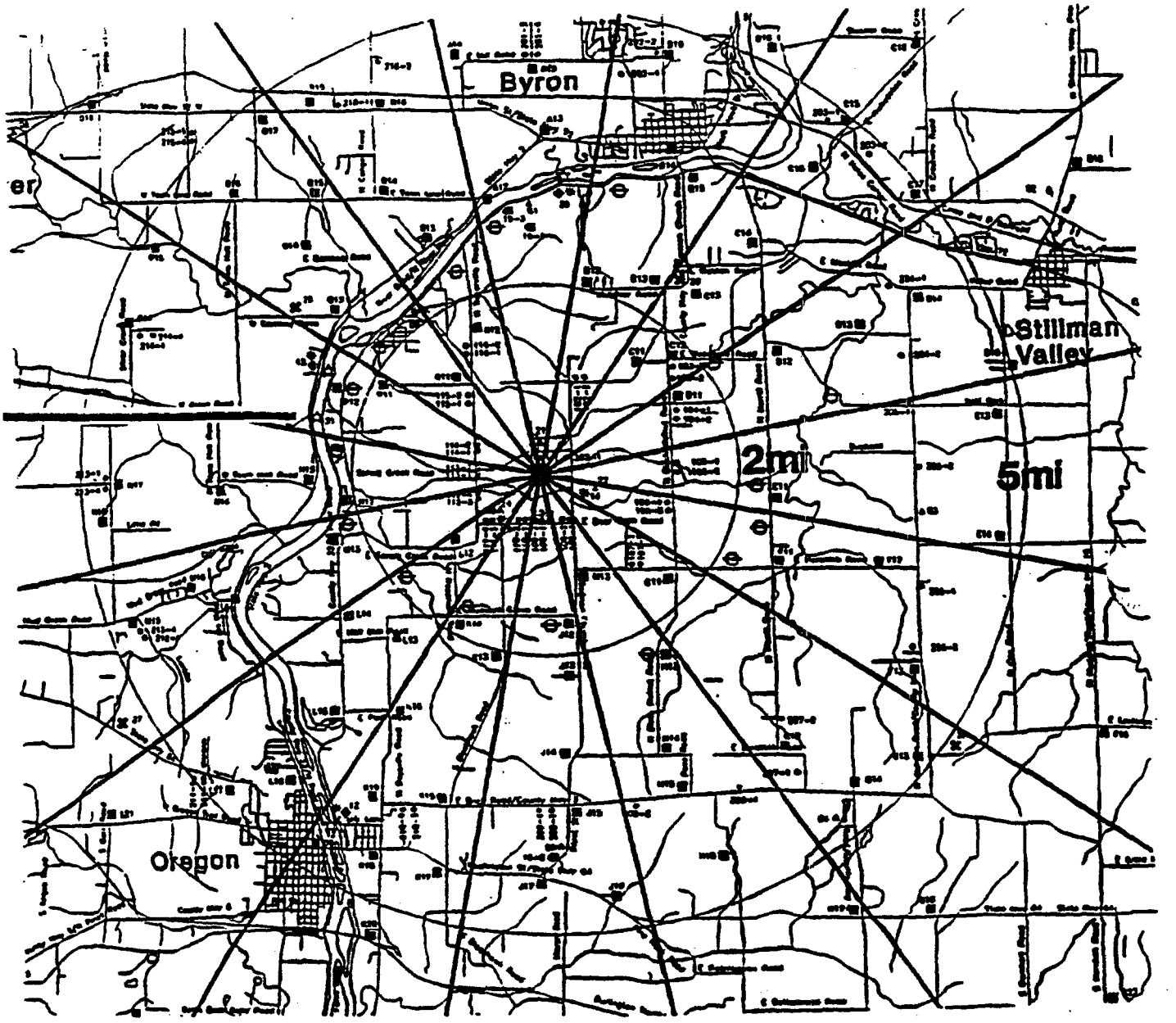

• TLD Location

N

OFFSITE DOSE CALCULATION MANUAL
BYRON STATION

FIGURE 6-3

INNER RING AND OUTER RING TLD LOCATIONS

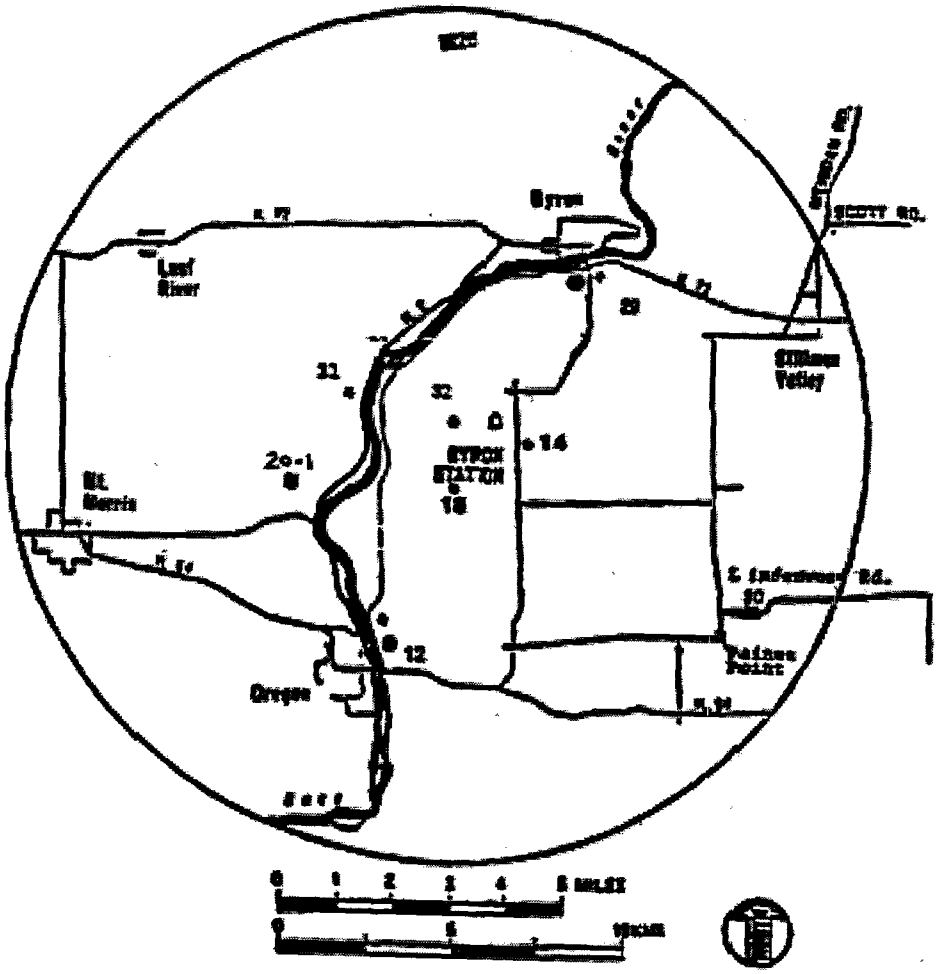

Fish
Milk
Sediment
Water
Byron Station

OFFSITE DOSE CALCULATION MANUAL
BYRON STATION

FIGURE 6-4

INGESTION AND WATERBORNE EXPOSURE PATHWAY SAMPLE LOCATIONS

Latitude/Longitude Positions of REMP Samples

Table 6-2

Sampling Location	Latitude	Longitude	Distance (km)	Direction (°) From Stack	Sector
Vent Stack					
Vent Stack	42 04 28	089 17 01	-	-	-
Air Sampling Stations					
BY-01	42 07 02	089 16 46	4.76	5	A
BY-04	42 01 09	089 13 19	7.98	142	G
BY-06	42 00 57	089 19 46	7.54	211	K
BY-08	42 07 29	089 23 50	10.90	302	P
BY-21	42 04 44	089 16 57	0.48	2	A
BY-22	42 04 19	089 16 38	0.60	120	F
BY-23	42 03 57	089 16 56	0.95	174	J
BY-24	42 04 05	089 17 34	1.03	228	L
Surface Water/Fish/Sediment Sampling Locations					
BY-12	42 01 01	089 19 30	7.26	209	K
BY-29	42 07 02	089 16 46	4.76	5	A
BY-31	42 05 00	089 19 28	3.50	288	P
Milk Sampling Locations					
BY-20	42 05 48	089 15 31	3.24	41	C
BY-26	42 14 49	089 17 58	19.22	357	A
BY-30	42 01 51	089 12 00	8.43	126	G
Well Water Sampling Locations					
BY-14	42 04 16	089 16 34	0.72	123	F
BY-18	42 03 58	089 17 23	1.18	217	L
BY-32	42 04 29	089 19 06	2.91	272	N
Vegetation Sampling Locations					
BY-Control					
BY-Quad 1					
BY-Quad 2					
BY-Quad 3					
BY-Quad 4					
TLD Locations					
BY-101-1	42 04 44	089 16 57	0.52	2	A
BY-101-2	42 04 43	089 16 55	0.50	6	A
BY-102-1	42 05 12	089 16 34	1.49	26	B
BY-102-2	42 05 12	089 16 31	1.53	28	B
BY-103-1	42 05 28	089 15 30	2.79	50	C
BY-103-2	42 05 25	089 15 31	2.73	50	C
BY-104-1	42 05 01	089 15 28	2.37	66	D
BY-104-2	42 05 00	089 15 28	2.35	67	D
BY-105-1	42 04 35	089 15 29	2.13	86	E
BY-105-2	42 04 33	089 15 29	2.12	87	E
BY-106-1	42 04 05	089 15 27	2.27	109	F
BY-106-2	42 04 03	089 15 28	2.28	111	F
BY-107-1	42 03 33	089 16 01	2.20	143	G
BY-107-2	42 03 33	089 15 57	2.24	141	G
BY-108-1	42 04 00	089 16 38	1.08	152	H
BY-108-2	42 03 57	089 16 45	1.01	160	H
BY-109-1	42 03 57	089 16 59	0.95	178	J
BY-109-2	42 03 56	089 17 03	0.95	183	J
BY-110-1	42 03 57	089 17 14	0.99	199	K

Latitude/Longitude Positions of REMP Samples

Table 6-2 (cont.)

Sampling Location	Latitude	Longitude	Distance (km)	Direction (°) From Stack	Sector
BY-110-2	42 03 58	089 17 17	1.01	203	K
BY-111-3	42 03 57	089 17 27	1.10	214	L
BY-111-4	42 03 57	089 17 36	1.25	221	L
BY-112-3	42 04 10	089 17 47	1.20	243	M
BY-112-4	42 04 11	089 17 50	1.22	246	M
BY-113-1	42 04 25	089 17 50	1.10	267	N
BY-113-2	42 04 28	089 17 48	1.08	271	N
BY-114-1	42 04 46	089 17 50	1.24	297	P
BY-114-2	42 04 47	089 17 50	1.27	300	P
BY-115-1	42 05 03	089 17 51	1.58	316	Q
BY-115-2	42 05 06	089 17 52	1.65	316	Q
BY-116-1	42 05 31	089 17 53	2.26	329	R
BY-116-2	42 05 32	089 17 54	2.31	330	R
BY-201-3	42 08 20	089 17 04	7.14	1	A
BY-201-4	42 08 19	089 17 00	7.11	1	A
BY-202-1	42 08 03	089 15 53	6.85	14	B
BY-202-2	42 08 25	089 15 29	7.62	14	B
BY-203-1	42 07 41	089 13 30	7.66	40	C
BY-203-2	42 07 20	089 13 08	7.53	47	C
BY-204-1	42 06 15	089 12 51	6.64	61	D
BY-204-2	42 05 42	089 12 33	6.53	71	D
BY-205-1	42 04 42	089 12 34	6.15	86	E
BY-205-2	42 04 34	089 12 33	6.15	90	E
BY-206-1	42 03 23	089 12 31	6.51	109	F
BY-206-2	42 02 47	089 12 29	6.96	118	F
BY-207-1	42 01 40	089 13 54	6.74	142	G
BY-207-2	42 02 09	089 14 14	5.75	140	G
BY-208-1	42 01 26	089 14 49	6.41	152	H
BY-208-2	42 01 21	089 16 03	5.94	168	H
BY-209-1	42 01 18	089 17 01	5.86	181	J
BY-209-4	42 01 18	089 17 08	5.85	183	J
BY-210-3	42 01 21	089 18 34	6.16	202	K
BY-210-4	42 01 21	089 18 38	6.20	202	K
BY-211-1	42 01 34	089 21 11	7.85	228	L
BY-211-4	42 01 33	089 21 09	7.84	228	L
BY-212-1	42 02 55	089 22 00	7.44	248	M
BY-212-4	42 02 55	089 22 01	7.44	248	M
BY-213-1	42 04 20	089 22 28	7.49	269	N
BY-213-4	42 04 18	089 22 25	7.43	269	N
BY-214-1	42 05 39	089 22 11	7.43	288	P
BY-214-4	42 05 39	089 22 09	7.83	288	P
BY-215-1	42 07 41	089 21 21	8.41	316	Q
BY-215-4	42 07 36	089 21 22	8.34	315	Q
BY-216-1	42 07 51	089 19 47	7.33	330	R
BY-216-2	42 08 19	089 19 02	7.64	346	R
BY-302-1					B
BY-314-1					P

3.11 RADIOLOGICAL EFFLUENTS (RE)

3.11.a Radioactive Liquid Effluent Monitoring Instrumentation

TLCO 3.11.a All radioactive liquid effluent monitoring instrumentation channels shown in Table T3.11.a-1 shall be OPERABLE.

APPLICABILITY: At all times.

ACTIONS

----------NOTES----------

1. Separate Condition entry is allowed for each channel.
2. All samples are to be analyzed for radioactivity at a lower limit of detection as specified in Table T3.11.c-1.
3. TLCO 3.0.c is not applicable.
4. TLCO 3.0.d is not applicable.

CONDITION	REQUIRED ACTION	COMPLETION TIME
A. One or more radioactive liquid effluent monitoring instrumentation channel Alarm/Trip Setpoint less conservative than required.	A.1 Suspend the release of radioactive liquid effluent monitored by the affected channel. OR A.2 Declare the channel inoperable.	Immediately Immediately
B. Less than the required radioactive liquid effluent monitoring instrumentation channels OPERABLE.	B.1 Enter the Condition referenced in Table T3.11.a-1 for the affected channel(s).	Immediately

(continued)

ACTIONS (continued)

CONDITION	REQUIRED ACTION		COMPLETION TIME
C. As required by Required Action B.1 and referenced by Table T3.11.a-1.	C.1	Verify at least two independent samples are analyzed.	Prior to initiating a release
	AND		
	C.2	Verify at least two technically qualified members of the facility staff independently verify the release rate calculations.	Prior to initiating a release
	AND		
	C.3	Verify at least two technically qualified members of the facility staff independently verify the discharge line valving.	Prior to initiating a release
	AND		
	C.4.1	Restore the required number of channels to OPERABLE.	14 days
	OR		
	C.4.2	Supplement the Radioactive Effluent Release Report pursuant to Technical Specification 5.6.3 with the cause for failure to correct inoperability.	12 months

(continued)

ACTIONS (continued)

CONDITION	REQUIRED ACTION		COMPLETION TIME
D. As required by Required Action B.1 and referenced by Table T3.11.a-1.	D.1	Verify grab samples are collected and analyzed.	Every 12 hours
	AND		
	D.2.1	Restore the required number of channels to OPERABLE.	30 days
	OR		
	D.2.2	Supplement the Radioactive Effluent Release Report pursuant to Technical Specification 5.6.3 with the cause for failure to correct inoperability.	12 months

(continued)

ACTIONS (continued)

CONDITION	REQUIRED ACTION	COMPLETION TIME
E. As required by Required Action B.1 and referenced by Table T3.11.a-1.	E.1 ---------NOTES--------- 1. Pump performance curves generated in place may be used to estimate flow. 2. Only required to be performed during actual releases. ---------- Estimate flow rate.	Every 4 hours
	AND	
	E.2.1 Restore the required number of channels to OPERABLE.	30 days
	OR	
	E.2.2 Supplement the Radioactive Effluent Release Report pursuant to Technical Specification 5.6.3 with the cause for failure to correct inoperability.	12 months

(continued)

ACTIONS (continued)

CONDITION	REQUIRED ACTION	COMPLETION TIME
F. As required by Required Action B.1 and referenced by Table T3.11.a-1.	F.1.1 ---------NOTE--------- Only required to be performed when the specific activity of the secondary coolant is > 0.01 μCi/gm DOSE EQUIVALENT I-131. ----------	
	Verify grab samples are collected and analyzed.	Every 12 hours
	OR	
	F.1.2 ---------NOTE--------- Only required to be performed when the specific activity of the secondary coolant is ≤ 0.01 μCi/gm DOSE EQUIVALENT I-131. ----------	
	Verify grab samples are collected and analyzed.	Every 24 hours
	AND	
		(continued)

ACTIONS

CONDITION	REQUIRED ACTION		COMPLETION TIME
F. (continued)	F.2.1	Restore the required number of channels to OPERABLE.	30 days
	OR		
	F.2.2	Supplement the Radioactive Effluent Release Report pursuant to Technical Specification 5.6.3 with the cause for failure to correct inoperability.	12 months
G. As required by Required Action B.1 and referenced by Table T3.11.a-1.	G.1	Verify liquid grab samples are collected and analyzed.	Every 12 hours
	AND		
	G.2.1	Restore the required number of channels to OPERABLE.	30 days
	OR		
	G.2.2	Supplement the Radioactive Effluent Release Report pursuant to Technical Specification 5.6.3 with the cause for failure to correct inoperability.	12 months

(continued)

ACTIONS (continued)

CONDITION	REQUIRED ACTION	COMPLETION TIME
H. Required Action and associated Completion Time for Conditions C, D, E, F, or G not met.	H.1 Suspend the release of radioactive liquid effluent monitored by the affected channel.	Immediately

SURVEILLANCE REQUIREMENTS

NOTES

1. Refer to Table T3.11.a-1 to determine which TSRs apply to each instrument.
2. Alarm/Trip Setpoints shall be set to ensure that the limits of Technical Requirement 3.11.c are not exceeded. The Alarm/Trip Setpoints of these channels shall be determined and adjusted in accordance with the methodology and parameters in the OFFSITE DOSE CALCULATION MANUAL (ODCM).

SURVEILLANCE	FREQUENCY
TSR 3.11.a.1 Perform a CHANNEL CHECK.	24 hours
TSR 3.11.a.2 Perform a SOURCE CHECK.	31 days
TSR 3.11.a.3 Perform a CHANNEL OPERATIONAL TEST.	92 days
TSR 3.11.a.4 Perform a CHANNEL CALIBRATION.	18 months

(continued)

SURVEILLANCE REQUIREMENTS (continued)

SURVEILLANCE	FREQUENCY
TSR 3.11.a.5 Perform a SOURCE CHECK.	Prior to each release

Table T3.11.a-1 (page 1 of 3)
Radioactive Liquid Effluent Monitoring Instrumentation

INSTRUMENT	REQUIRED CHANNELS	CONDITION	SURVEILLANCE REQUIREMENTS
1. Radioactivity Monitors Providing Alarm and Automatic Termination of Release			
a. Liquid Radwaste Effluent Line (ORE-PR001)	1	C	TSR 3.11.a.1 TSR 3.11.a.3[a] TSR 3.11.a.4[c] TSR 3.11.a.5
b. Fire and Oil Sump (ORE-PR005)	1	F	TSR 3.11.a.1 TSR 3.11.a.2 TSR 3.11.a.3[a] TSR 3.11.a.4[c]
c. Condensate Polisher Sump Discharge (ORE-PR041)	1	F	TSR 3.11.a.1 TSR 3.11.a.2 TSR 3.11.a.3[a] TSR 3.11.a.4[c]

(continued)

(a) The CHANNEL OPERATIONAL TEST shall also demonstrate that automatic isolation of this pathway and control room alarm annunciation occur if any of the following conditions exists:

1. Instrument indicates measured levels above the Alarm/Trip Setpoint, or
2. Circuit failure (monitor loss of communications - alarm only, detector loss of counts, or monitor loss of power), or
3. Detector check source test failure, or
4. Detector channel out-of-service, or
5. Monitor loss of sample flow.

(c) The initial CHANNEL CALIBRATION shall be performed using one or more of the reference standards certified by the National Bureau of Standards (NBS) or using standards that have been obtained from suppliers that participate in measurement assurance activities with NBS. These standards shall permit calibrating the system over its intended range of energy and measurement range. For subsequent CHANNEL CALIBRATION, sources that have been related to the initial calibration shall be used.

Table T3.11.a-1 (page 2 of 3)
Radioactive Liquid Effluent Monitoring Instrumentation

INSTRUMENT	REQUIRED CHANNELS	CONDITION	SURVEILLANCE REQUIREMENTS
2. Radioactivity Monitors Providing Alarm But Not Providing Automatic Termination of Release			
a. Essential Service Water.			
1) Unit 1			
a) RCFC 1A and 1C Outlet (1RE-PR002)	1	D	TSR 3.11.a.1 TSR 3.11.a.2 TSR 3.11.a.3(b) TSR 3.11.a.4(c)
b) RCFC 1B and 1D Outlet (1RE-PR003)	1	D	TSR 3.11.a.1 TSR 3.11.a.2 TSR 3.11.a.3(b) TSR 3.11.a.4(c)
2) Unit 2			
a) RCFC 2A and 2C Outlet (2RE-PR002)	1	D	TSR 3.11.a.1 TSR 3.11.a.2 TSR 3.11.a.3(b) TSR 3.11.a.4(c)
b) RCFC 2B and 2D Outlet (2RE-PR003)	1	D	TSR 3.11.a.1 TSR 3.11.a.2 TSR 3.11.a.3(b) TSR 3.11.a.4(c)
b. Station Blowdown Line (0RE-PR010)	1	D	TSR 3.11.a.1 TSR 3.11.a.2 TSR 3.11.a.3(b) TSR 3.11.a.4(c)

(continued)

(b) The CHANNEL OPERATIONAL TEST shall also demonstrate that control room alarm annunciation occurs if any of the following conditions exists:

1. Instrument indicates measured levels above the Alarm Setpoint, or
2. Circuit failure (monitor loss of communications - alarm only, detector loss of counts, or monitor loss of power), or
3. Detector check source test failure, or
4. Detector channel out-of-service, or
5. Monitor loss of sample flow.

(c) The initial CHANNEL CALIBRATION shall be performed using one or more of the reference standards certified by the National Bureau of Standards (NBS) or using standards that have been obtained from suppliers that participate in measurement assurance activities with NBS. These standards shall permit calibrating the system over its intended range of energy and measurement range. For subsequent CHANNEL CALIBRATION, sources that have been related to the initial calibration shall be used.

Table T3.11.a-1 (page 3 of 3)
Radioactive Liquid Effluent Monitoring Instrumentation

INSTRUMENT	REQUIRED CHANNELS	CONDITION	SURVEILLANCE REQUIREMENTS
3. Flow Rate Measurement Devices			
a. Liquid Radwaste Effluent Line (Loop-WX001)	1	E	TSR 3.11.a.1[d] TSR 3.11.a.3 TSR 3.11.a.4
b. Liquid Radwaste Effluent Line (Loop-WX630)	1	E	TSR 3.11.a.1[d] TSR 3.11.a.3 TSR 3.11.a.4
c. Station Blowdown Line (Loop-CW032)	1	E	TSR 3.11.a.1[d] TSR 3.11.a.3 TSR 3.11.a.4
4. Radioactivity Monitors Providing Alarm and Automatic Closure of Surge Tank Vent Component Cooling Water Line			
a. (0RE-PR009 and 1/2RE-PR009)	2	G	TSR 3.11.a.1 TSR 3.11.a.2 TSR 3.11.a.3[a] TSR 3.11.a.4[c]

(a) The CHANNEL OPERATIONAL TEST shall also demonstrate that automatic isolation of this pathway and control room alarm annunciation occur if any of the following conditions exist:

1. Instrument indicates measured levels above the Alarm/Trip Setpoint, or
2. Circuit failure (monitor loss of communications - alarm only, detector loss of counts, or monitor loss of power), or
3. Detector check source test failure, or
4. Detector channel out-of-service, or
5. Monitor loss of sample flow.

(c) The initial CHANNEL CALIBRATION shall be performed using one or more of the reference standards certified by the National Bureau of Standards (NBS) or using standards that have been obtained from suppliers that participate in measurement assurance activities with NBS. These standards shall permit calibrating the system over its intended range of energy and measurement range. For subsequent CHANNEL CALIBRATION, sources that have been related to the initial calibration shall be used.

(d) CHANNEL CHECK shall consist of verifying indication of flow during periods of release. CHANNEL CHECK shall be made at least once per 24 hours on days on which continuous, periodic, or batch releases are made.

3.11 RADIOLOGICAL EFFLUENTS (RE)

3.11.b Radioactive Gaseous Effluent Monitoring Instrumentation

TLCO 3.11.b All radioactive gaseous effluent monitoring instrumentation channels shown in Table T3.11.b-1 shall be OPERABLE.

APPLICABILITY: At all times.

ACTIONS

NOTES

1. Separate Condition entry is allowed for each channel.
2. TLCO 3.0.c is not applicable.
3. TLCO 3.o.d is not applicable.

CONDITION	REQUIRED ACTION		COMPLETION TIME
A. One or more gaseous effluent monitoring instrumentation channel Alarm/Trip Setpoint(s) less conservative than required.	A.1	Suspend the release of radioactive gaseous effluent monitored by the affected channel.	Immediately
	OR		
	A.2	Declare the channel inoperable.	Immediately
B. Less than the required radioactive gaseous effluent monitoring instrumentation channels OPERABLE.	B.1	Enter the Condition referenced in Table T3.11.b-1 for the affected channel(s).	Immediately

(continued)

ACTIONS (continued)

CONDITION	REQUIRED ACTION		COMPLETION TIME
C. As required by Required Action B.1 and referenced by Table T3.11.b-1.	C.1	Verify at least two independent samples of the tank's contents are analyzed.	Prior to initiating a release
	AND		
	C.2	Verify at least two technically qualified members of the facility staff independently verify the release rate calculations.	Prior to initiating a release
	AND		
	C.3	Verify at least two technically qualified members of the facility staff independently verify the discharge valve lineup.	Prior to initiating a release
	AND		
	C.4.1	Restore the required number of channels to OPERABLE.	14 days
	OR		
	C.4.2	Supplement the Radioactive Effluent Release Report pursuant to Technical Specification 5.6.3 with the cause for failure to correct the inoperability.	12 months

(continued)

ACTIONS (continued)

CONDITION	REQUIRED ACTION		COMPLETION TIME
D. As required by Required Action B.1 and referenced by Table T3.11.b-1.	D.1.1	Suspend PURGING via this pathway.	Immediately
	OR		
	D.1.2	Verify real time monitoring of radioactive effluents released via this pathway.	During release
	AND		
	D.2.1	Restore the required number of channels to OPERABLE.	7 days
	OR		
	D.2.2	Supplement the Radioactive Effluent Release Report pursuant to Technical Specification 5.6.3 with the cause for failure to correct the inoperability.	12 months

(continued)

ACTIONS (continued)

CONDITION	REQUIRED ACTION	COMPLETION TIME
E. As required by Required Action B.1 and referenced by Table T3.11.b-1.	E.1 Estimate flow rate.	Every 4 hours
	AND	
	E.2.1 Restore the required number of channels to OPERABLE.	30 days
	OR	
	E.2.2 Supplement the Radioactive Effluent Release Report pursuant to Technical Specification 5.6.3 with the cause for failure to correct the inoperability.	12 months

(continued)

ACTIONS (continued)

CONDITION	REQUIRED ACTION		COMPLETION TIME
F. As required by Required Action B.1 and referenced by Table T3.11.b-1.	F.1	Verify samples are continuously collected with auxiliary sampling equipment as required by Table T3.11.f-1.	During release
	AND		
	F.2.1	Restore the required number of channels to OPERABLE.	30 days
	OR		
	F.2.2	Supplement the Radioactive Effluent Release Report pursuant to Technical Specification 5.6.3 with the cause for failure to correct the inoperability.	12 months

(continued)

ACTIONS (continued)

CONDITION	REQUIRED ACTION		COMPLETION TIME
G. As required by Required Action B.1 and referenced by Table T3.11.b-1.	G.1	Verify gaseous grab samples are collected and analyzed for principle gamma emitters at a Lower Limit of Detection (LLD) as specified in OFFSITE DOSE CALCULATION MANUAL (ODCM) Table 12.4.-1.	Every 12 hours
	AND		
	G.2.1	Restore the required number of channels to OPERABLE.	30 days
	OR		
	G.2.2	Supplement the Radioactive Effluent Release Report pursuant to Technical Specification 5.6.3 with the cause for failure to correct the inoperability.	12 months
H. Required Action and associated Completion Time for Conditions C, D, E, F, or G not met.	H.1	Suspend the release of radioactive gaseous effluent monitored by the affected channel.	Immediately

SURVEILLANCE REQUIREMENTS

----------NOTES----------

1. Refer to Table T3.11.b-1 to determine which TSRs apply to each instrument.

2. Alarm/Trip Setpoints shall be set to ensure that the limits of TLCO 3.11.f and Technical Specification 5.5.12 are not exceeded. The Alarm/Trip Setpoints of these channels meeting TLCO 3.11.f shall be determined and adjusted in accordance with the methodology and parameters in the OFFSITE DOSE CALCULATION MANUAL (ODCM).

SURVEILLANCE		FREQUENCY
TSR 3.11.b.1	Perform a CHANNEL CHECK.	24 hours
TSR 3.11.b.2	Perform a SOURCE CHECK.	31 days
TSR 3.11.b.3	Perform a CHANNEL OPERATIONAL TEST.	92 days
TSR 3.11.b.4	Perform a CHANNEL CALIBRATION.	18 months
TSR 3.11.b.5	Perform a CHANNEL CHECK.	Prior to each release
TSR 3.11.b.6	Perform a SOURCE CHECK.	Prior to each release

Table T3.11.b-1 (page 1 of 3)
Radioactive Gaseous Effluent Monitoring Instrumentation

INSTRUMENT	REQUIRED CHANNELS	CONDITION	SURVEILLANCE REQUIREMENTS
U-1 Plant Vent Monitoring System			
1. Noble Gas Activity Monitor - Providing Alarm			
a. High Range (1RE-PR028D)	1	G	TSR 3.11.b.1 TSR 3.11.b.2 TSR 3.11.b.3(b) TSR 3.11.b.4(c)
b. Low Range (1RE-PR028B)	1	G	TSR 3.11.b.1 TSR 3.11.b.2 TSR 3.11.b.3(b) TSR 3.11.b.4(c)
c. Iodine Sampler (1RE-PR028C)	1	F	TSR 3.11.b.1 TSR 3.11.b.2 TSR 3.11.b.3(b) TSR 3.11.b.4(c)
d. Particulate Sampler (1RE-PR028A)	1	F	TSR 3.11.b.1 TSR 3.11.b.2 TSR 3.11.b.3(b) TSR 3.11.b.4(c)
e. Effluent System Flow Rate Measuring Device (LOOP-VA019)	1	E	TSR 3.11.b.1 TSR 3.11.b.3 TSR 3.11.b.4
f. Sampler Flow Rate Measuring Device (1FT-PR165)	1	E	TSR 3.11.b.1 TSR 3.11.b.3 TSR 3.11.b.4

(continued)

(b) The CHANNEL OPERATIONAL TEST shall also demonstrate that control room alarm annunciation occurs if any of the following conditions exists:

1. Instrument indicates measured levels above the Alarm Setpoint, or
2. Circuit failure (monitor loss of communications - alarm only, detector loss of counts, or monitor loss of power), or
3. Detector check source test failure, or
4. Detector channel out-of-service, or
5. Monitor loss of sample flow.

(c) The initial CHANNEL CALIBRATION shall be performed using one or more of the reference standards certified by the National Bureau of Standards (NBS) or using standards that have been obtained from suppliers that participate in measurement assurance activities with NBS. These standards shall permit calibrating the system over its intended range of energy and measurement range. For subsequent CHANNEL CALIBRATION, sources that have been related to the initial calibration shall be used.

Table T3.11.b-1 (page 2 of 3)
Radioactive Gaseous Effluent Monitoring Instrumentation

INSTRUMENT	REQUIRED CHANNELS	CONDITION	SURVEILLANCE REQUIREMENTS
U-2 Plant Vent Monitoring System			
2. Noble Gas Activity Monitor - Providing Alarm			
a. High Range (2RE-PR028D)	1	G	TSR 3.11.b.1 TSR 3.11.b.2 TSR 3.11.b.3(b) TSR 3.11.b.4(c)
b. Low Range (2RE-PR028B)	1	G	TSR 3.11.b.1 TSR 3.11.b.2 TSR 3.11.b.3(b) TSR 3.11.b.4(c)
c. Iodine Sampler (2RE-PR028C)	1	F	TSR 3.11.b.1 TSR 3.11.b.2 TSR 3.11.b.3(b) TSR 3.11.b.4(c)
d. Particulate Sampler (2RE-PR028A)	1	F	TSR 3.11.b.1 TSR 3.11.b.2 TSR 3.11.b.3(b) TSR 3.11.b.4(c)
e. Effluent System Flow Rate Measuring Device (LOOP-VA020)	1	E	TSR 3.11.b.1 TSR 3.11.b.3 TSR 3.11.b.4
f. Sampler Flow Rate Measuring Device (2FT-PR165)	1	E	TSR 3.11.b.1 TSR 3.11.b.3 TSR 3.11.b.4
3. Refer to Technical Requirements Manual 3.3.e for Gaseous Waste Management Explosive Gas Monitoring Instrumentation			

(continued)

(b) The CHANNEL OPERATIONAL TEST shall also demonstrate that control room alarm annunciation occurs if any of the following conditions exists:

1. Instrument indicates measured levels above the Alarm Setpoint, or
2. Circuit failure (monitor loss of communications - alarm only, detector loss of counts, or monitor loss of power), or
3. Detector check source test failure, or
4. Detector channel out-of-service, or
5. Monitor loss of sample flow.

(c) The initial CHANNEL CALIBRATION shall be performed using one or more of the reference standards certified by the National Bureau of Standards (NBS) or using standards that have been obtained from suppliers that participate in measurement assurance activities with NBS. These standards shall permit calibrating the system over its intended range of energy and measurement range. For subsequent CHANNEL CALIBRATION, sources that have been related to the initial calibration shall be used.

Table T3.11.b-1 (page 3 of 3)
Radioactive Gaseous Effluent Monitoring Instrumentation

INSTRUMENT	REQUIRED CHANNELS	CONDITION	SURVEILLANCE REQUIREMENTS
4. Gas Decay Tank System			
Noble Gas Activity Monitor - Providing Alarm and Automatic Termination of Release (0RE-PR002A and 2B)	2	C	TSR 3.11.b.3[a] TSR 3.11.b.4[c] TSR 3.11.b.5 TSR 3.11.b.6
5. Containment Purge System			
a. Noble Gas Activity Monitor - Providing Alarm (1/2RE-PR001B)	1	D	TSR 3.11.b.1 TSR 3.11.b.3[b] TSR 3.11.b.4[c] TSR 3.11.b.6
b. Iodine Sampler (1/2RE-PR001C)	1	F	TSR 3.11.b.4[c] TSR 3.11.b.5 TSR 3.11.b.6
c. Particulate Sampler (1/2RE-PR001A)	1	F	TSR 3.11.b.4[c] TSR 3.11.b.5 TSR 3.11.b.6

(a) The CHANNEL OPERATIONAL TEST shall also demonstrate that automatic isolation of this pathway and control room alarm annunciation occur if any of the following conditions exists:

1. Instrument indicates measured levels above the Alarm/Trip Setpoint, or
2. Circuit failure (monitor loss of communications - alarm only, detector loss of counts, or monitor loss of power), or
3. Detector check source test failure, or
4. Detector channel out-of-service, or
5. Monitor loss of sample flow.

(b) The CHANNEL OPERATIONAL TEST shall also demonstrate that control room alarm annunciation occurs if any of the following conditions exists:

1. Instrument indicates measured levels above the Alarm Setpoint, or
2. Circuit failure (monitor loss of communications - alarm only, detector loss of counts, or monitor loss of power), or
3. Detector check source test failure, or
4. Detector channel out-of-service, or
5. Monitor loss of sample flow.

(c) The initial CHANNEL CALIBRATION shall be performed using one or more of the reference standards certified by the National Bureau of Standards (NBS) or using standards that have been obtained from suppliers that participate in measurement assurance activities with NBS. These standards shall permit calibrating the system over its intended range of energy and measurement range. For subsequent CHANNEL CALIBRATION, sources that have been related to the initial calibration shall be used.

3.11 RADIOLOGICAL EFFLUENTS (RE)

3.11.c Concentration Limits for Effluents

TLCO 3.11.c The concentration of radioactive material released in liquid effluents to UNRESTRICTED AREAS (see Byron Station OFFSITE DOSE CALCULATION MANUAL (ODCM) Annex, Appendix F, Figure F-1) shall be limited to 10 times the concentrations specified in 10 CFR Part 20, Appendix B, Table 2, Column 2, for radionuclides other than dissolved or entrained noble gases. For dissolved or entrained noble gases, the concentration shall be limited to 2×10^{-4} μCi/ml total activity.

APPLICABILITY: At all times.

ACTIONS

NOTES

1. Separate Condition entry is allowed for each release.
2. TLCO 3.0.c is not applicable.
3. TLCO 3.0.d is not applicable.

CONDITION	REQUIRED ACTION		COMPLETION TIME
A. Concentration of radioactive material released exceeding limit.	A.1	Restore the concentration within the limit.	Immediately
	OR		
	A.2	Terminate the release.	Immediately

SURVEILLANCE REQUIREMENTS

NOTES

1. All TSRs to be performed at frequency defined by Table T3.11.c-1.

2. The results of the radioactivity analysis shall be used in accordance with the methodology and parameters in the ODCM to assure that the concentrations at the point of release are maintained within the limits of TLCO 3.11.c.

SURVEILLANCE		FREQUENCY
TSR 3.11.c.1	Sample and analyze liquid wastes.	Per Table T3.11.c-1

Table T3.11.c-1 (Page 1 of 4)
Radioactive Liquid Waste Sampling and Analysis Program

LIQUID RELEASE TYPE	SAMPLING FREQUENCY	MINIMUM ANALYSIS FREQUENCY	TYPE OF ACTIVITY ANALYSIS	LOWER LIMIT OF DETECTION (LLD) (μCi/ml) (Refer to Note 1, Page 3.11.c-6)
1. Batch Release Tanks[a]	P Each Batch	P Each Batch	Principal Gamma Emitters[b]	5×10^{-7}
			I-131	1×10^{-6}
	P One Batch/M	M	Dissolved and Entrained Gases (Gamma Emitters)	1×10^{-5}
	P Each Batch	M Composite[c]	H-3	1×10^{-5}
	P Each Batch	Q Composite[c]	Gross Alpha	1×10^{-7}
			Sr-89, Sr-90	5×10^{-8}
			Fe-55	1×10^{-6}

(continued)

(a) A batch release is the discharge of liquid wastes of a discrete volume. Prior to sampling for analyses, each batch shall be isolated, and then thoroughly mixed.

(b) The principal gamma emitters for which the LLD specification applies include the following radionuclides: Mn-54, Fe-59, Co-58, Co-60, Zn-65, Mo-99, Cs-134, Cs-137, and Ce-141. Ce-144 shall also be measured, but at the LLD of 5E-06. This list does not mean that only these nuclides are to be considered. Other gamma peaks that are identifiable, together with those of the above nuclides, shall also be analyzed and reported in the Radioactive Effluent Release Report pursuant to Specification 5.6.3 in the format outlined in Regulatory Guide 1.21, Appendix B, Revision 1, June 1974.

(c) A composite sample is one in which the quantity of liquid sampled is proportional to the quantity of liquid waste discharged and in which the method of sampling employed results in a specimen that is representative of the liquids released.

Table T3.11.c-1 (Page 2 of 4)
Radioactive Liquid Waste Sampling and Analysis Program

LIQUID RELEASE TYPE	SAMPLING FREQUENCY	MINIMUM ANALYSIS FREQUENCY	TYPE OF ACTIVITY ANALYSIS	LOWER LIMIT OF DETECTION (LLD) (μCi/ml) (Refer to Note 1. Page 3.11.c-6)
2. Continuous Releases[d]	Continuous[e]	W Composite[e]	Principal Gamma Emitters[b]	5×10^{-7}
			I-131	1×10^{-6}
a. Circulating Water Blowdown	M Grab Sample	M	Dissolved and Entrained Gases (Gamma Emitters)	1×10^{-5}
b. Waste Water Treatment System Discharge to Flume	Continuous[e]	M Composite[e]	H-3	1×10^{-5}
			Gross Alpha	1×10^{-7}
c. Condensate Polisher Sump Discharge	Continuous[e]	Q Composite[e]	Sr-89, Sr-90	5×10^{-8}
			Fe-55	1×10^{-6}

(continued)

(b) The principal gamma emitters for which the LLD specification applies include the following radionuclides: Mn-54, Fe-59, Co-58, Co-60, Zn-65, Mo-99, Cs-134, Cs-137, and Ce-141. Ce-144 shall also be measured, but at the LLD of 5E-06. This list does not mean that only these nuclides are to be considered. Other gamma peaks that are identifiable, together with those of the above nuclides, shall also be analyzed and reported in the Radioactive Effluent Release Report pursuant to Specification 5.6.3 in the format outlined in Regulatory Guide 1.21, Appendix B, Revision 1, June 1974.

(d) A continuous release is the discharge of liquid wastes of a nondiscrete volume, e.g., from a volume of a system that has an input flow during the continuous release.

(e) To be representative of the quantities and concentrations of radioactive materials in liquid effluents, samples shall be collected continuously in proportion to the rate of flow of the effluent stream. Prior to analyses, all samples taken for the composite shall be thoroughly mixed in order for the composite sample to be representative of the effluent release.

Table T3.11.c-1 (Page 3 of 4)
Radioactive Liquid Waste Sampling and Analysis Program

LIQUID RELEASE TYPE	SAMPLING FREQUENCY	MINIMUM ANALYSIS FREQUENCY	TYPE OF ACTIVITY ANALYSIS	LOWER LIMIT OF DETECTION (LLD) (μCi/ml) (Refer to Note 1, Page 3.11.c-6)
3. Continuous Release[d] Essential Service Water Reactor Containment Fan Cooler (RCFC) Outlet Line	W[f] Grab Sample	W[f]	Principal Gamma Emitters[b]	5×10^{-7}
			I-131	1×10^{-6}
			Dissolved and Entrained Gases (Gamma Emitters)	1×10^{-5}
			H-3	1×10^{-5}

(b) The principal gamma emitters for which the LLD specification applies include the following radionuclides: Mn-54, Fe-59, Co-58, Co-60, Zn-65, Mo-99, Cs-134, Cs-137, and Ce-141. Ce-144 shall also be measured, but at the LLD of 5E-06. This list does not mean that only these nuclides are to be considered. Other gamma peaks that are identifiable, together with those of the above nuclides, shall also be analyzed and reported in the Radioactive Effluent Release Report pursuant to Specification 5.6.3 in the format outlined in Regulatory Guide 1.21, Appendix B, Revision 1, June 1974.

(d) A continuous release is the discharge of liquid wastes of a nondiscrete volume, e.g., from a volume of a system that has an input flow during the continuous release.

(f) Not required unless the Essential Service Water RCFC Outlet Radiation Monitors 1/2RE-PR002 and 1/2RE-PR003 indicates measured levels greater than 1×10^{-6} μCi/ml above background at any time during the week.

Table T3.11.c-1 (Page 4 of 4)
Radioactive Liquid Waste Sampling and Analysis Program

Note 1: Lower Limit of Detection (LLD)

The LLD is defined, for purposes of these Technical Requirements, as the smallest concentration of radioactive material in a sample that will yield a net count, above system background, that will be detected with 95% probability with only 5% probability of falsely concluding that a blank observation represents a "real" signal.

For a particular measurement system, which may include radiochemical separation:

$$LLD = \frac{4.66\ s_b}{E * V * 2.22 \times 10^6 * Y * \exp(-\lambda \Delta\tau)}$$

Where:

LLD = the lower limit of detection (microCuries per unit mass or volume),

s_b = the standard deviation of the background counting rate or of the counting rate of a blank sample as appropriate (counts per minute),

E = the counting efficiency (counts per disintegration),

V = the sample size (units of mass or volume),

2.22×10^6 = the number of disintegrations per minute per microCurie,

Y = the fractional radiochemical yield, when applicable,

λ = the radioactive decay constant for the particular radionuclide (sec^{-1}), and

$\Delta\tau$ = the elapsed time between the midpoint of sample collection and the time of counting (sec).

Typical values of E, V, Y, and $\Delta\tau$ should be used in the calculation.

It should be recognized that the LLD is defined as a before the fact limit representing the capability of a measurement system and not as an after the fact limit for a particular measurement.

3.11 RADIOLOGICAL EFFLUENTS (RE)

3.11.d Dose From Liquid Effluents

TLCO 3.11.d The dose or dose commitment to a MEMBER OF THE PUBLIC from radioactive materials in liquid effluents, from each unit, to UNRESTRICTED AREAS (see Byron Station OFFSITE DOSE CALCULATION MANUAL (ODCM) Annex, Appendix F, Figure F-1) shall be limited:

1. During any calendar quarter to ≤ 1.5 mrem to the whole body and to ≤ 5 mrem to any organ, and

2. During any calendar year to ≤ 3 mrem to the whole body and to ≤ 10 mrem to any organ.

APPLICABILITY: At all times.

ACTIONS

NOTES

1. Separate Condition entry is allowed for each dose.
2. TLCO 3.0.c is not applicable.
3. TLCO 3.0.d is not applicable.

CONDITION	REQUIRED ACTION	COMPLETION TIME
A. Calculated dose exceeding above limits.	A.1 Submit Special Report to the Commission that identifies the cause(s) for exceeding the limit(s) and defines the corrective actions that have been taken to reduce the releases and the proposed corrective actions to be taken to assure that subsequent releases will be in compliance with the above limits.	30 days

SURVEILLANCE REQUIREMENTS

SURVEILLANCE		FREQUENCY
TSR 3.11.d.1	Determine cumulative dose contributions from liquid effluents for the current calendar quarter and the current calendar year.	31 days

3.11 RADIOLOGICAL EFFLUENTS (RE)

3.11.e Liquid Radwaste Treatment System

TLCO 3.11.e The Liquid Radwaste Treatment System shall be OPERABLE and shall be used to reduce releases from each unit to UNRESTRICTED AREAS (see Byron Station OFFSITE DOSE CALCULATION MANUAL (ODCM) Annex, Appendix F, Figure F-1) when the projected dose would exceed 0.06 mrem to the whole body or 0.2 mrem to any organ in a 31 day period.

APPLICABILITY: At all times.

ACTIONS

NOTES

1. Separate Condition entry is allowed for each release.

2. TLCO 3.0.c is not applicable.

3. TLCO 3.0.d is not applicable.

CONDITION	REQUIRED ACTION	COMPLETION TIME
A. Radioactive liquid waste being discharged without treatment. AND In excess of above limits. AND Any portion of the Liquid Radwaste Treatment System not in operation.	A.1 Submit Special Report to the Commission that includes an explanation of why liquid radwaste was being discharged without treatment, identification of any inoperable equipment or subsystems, and the reason for the inoperability; action(s) taken to restore the inoperable equipment to OPERABLE status; and a summary description of actions(s) taken to prevent recurrence.	30 days

SURVEILLANCE REQUIREMENTS

SURVEILLANCE		FREQUENCY
TSR 3.11.e.1	----------NOTE---------- Only required to be performed when the Liquid Radwaste Treatment System is not fully utilized. ---------- Project doses due to liquid releases from each unit to UNRESTRICTED AREAS.	31 days
TSR 3.11.e.2	Verify the installed Liquid Radwaste Treatment System is OPERABLE by meeting the requirements of TLCO 3.11.c and TLCO 3.11.d.	Per the applicable TSRs

3.11 RADIOLOGICAL EFFLUENTS (RE)

3.11.f Dose Rate for Gaseous Effluent

TLCO 3.11.f The dose rate in gaseous effluents from the site to areas at and beyond the SITE BOUNDARY (see Byron Station OFFSITE DOSE CALCULATION MANUAL (ODCM) Annex, Appendix F, Figure F-1) shall be limited to:

1. For noble gases: ≤ 500 mrem/yr to the whole body and ≤ 3000 mrem/yr to the skin, and

2. For Iodine-131 and 133, for tritium, and for all radionuclides in particulate form with half-lives > 8 days: ≤ 1500 mrem/yr to any organ.

APPLICABILITY: At all times.

ACTIONS

----------NOTES----------

1. Separate Condition entry is allowed for each dose rate.

2. TLCO 3.0.c is not applicable.

3. TLCO 3.0.d is not applicable.

CONDITION	REQUIRED ACTION	COMPLETION TIME
A. Dose rate exceeding above limits.	A.1 Restore the release rate to within limits.	Immediately

SURVEILLANCE REQUIREMENTS

SURVEILLANCE		FREQUENCY
TSR 3.11.f.1	Determine dose rate due to noble gases within limits.	Per Table T3.11.f-1
TSR 3.11.f.2	Determine dose rate due to I-131, I-133, tritium and all other radionuclides in particulate form with half-lives > 8 days within limits.	Per Table T3.11.f-1

Table T3.11.f-1 (Page 1 of 3)
Radioactive Gaseous Waste Sampling and Analysis Program

GASEOUS RELEASE TYPE	SAMPLING FREQUENCY	MINIMUM ANALYSIS FREQUENCY	TYPE OF ACTIVITY ANALYSIS	LOWER LIMIT OF DETECTION (LLD) (μCi/ml) (Refer to Note 1, Page 3.11.f-5)
1. Waste Gas Decay Tank	P Each Tank Grab Sample	P Each Tank	Principal Gamma Emitters[a]	1×10^{-4}
2. Containment Purge	P Each PURGE[b] Grab Sample	Each PURGE[b] Grab Sample	Principal Gamma Emitters[a]	1×10^{-4}
			H-3	1×10^{-7}

(continued)

(a) The principal gamma emitters for which the LLD specification applies include the following radionuclides: Kr-87, Kr-88, Xe-133, Xe-133m, Xe-135, and Xe-138 in noble gas releases and Mn-54, Fe-59, Co-58, Co-60, Zn-65, Mo-99, I-131, Cs-134, Cs-137, Ce-141, and Ce-144 in iodine and particulate releases. This list does not mean that only these nuclides are to be considered. Other gamma peaks that are identifiable, together with those of the above nuclides, shall also be analyzed and reported in the Radioactive Effluent Release Report pursuant to Specification 5.6.3, in the format outlined in Regulatory Guide 1.21, Appendix B, Revision 1, June 1974.

(b) Sampling and analysis shall also be performed following shutdown, startup, or a THERMAL POWER change exceeding 15% of RATED THERMAL POWER within a 1-hour period.

Table T3.11.f-1 (Page 2 of 3)
Radioactive Gaseous Waste Sampling and Analysis Program

GASEOUS RELEASE TYPE	SAMPLING FREQUENCY	MINIMUM ANALYSIS FREQUENCY	TYPE OF ACTIVITY ANALYSIS	LOWER LIMIT OF DETECTION (LLD) (μCi/ml) (Refer to Note 1, Page 3.11.f-5)
3. Auxiliary Building Vent Stack (Units 1 and 2)	M[c][d] Grab Sample	M	Principal Gamma Emitters[a]	1×10^{-4}
			H-3	1×10^{-7}
	Continuous[e]	W[f] Charcoal Sample	I-131	1×10^{-12}
			I-133	1×10^{-10}
	Continuous[e]	W[f] Charcoal Sample	Principal Gamma Emitters[a]	1×10^{-11}
	Continuous[e]	Q Composite Particulate Sample	Gross Alpha	1×10^{-11}
	Continuous[e]	Q Composite Particulate Sample	Sr-89, Sr-90	1×10^{-11}
	Continuous	N.A. Noble Gas Monitor	Noble Gases: Gross Beta or Gamma	1×10^{-6}

(a) The principal gamma emitters for which the LLD specification applies include the following radionuclides: Kr-87, Kr-88, Xe-133, Xe-133m, Xe-135, and Xe-138 in noble gas releases and Mn-54, Fe-59, Co-58, Co-60, Zn-65, Mo-99, I-131, Cs-134, Cs-137, Ce-141, and Ce-144 in iodine and particulate releases. This list does not mean that only these nuclides are to be considered. Other gamma peaks that are identifiable, together with those of the above nuclides, shall also be analyzed and reported in the Radioactive Effluent Release Report pursuant to Specification 5.6.3, in the format outlined in Regulatory Guide 1.21, Appendix B, Revision 1, June 1974.

(c) Tritium grab samples shall be taken at least once per 24 hours when the refueling canal is flooded.

(d) Tritium grab samples shall be taken at least once per 7 days from the spent fuel pool area, whenever spent fuel is in the spent fuel pool.

(e) The ratio of the sample flow rate to the sampled stream flow rate shall be known for the time period covered by each dose or dose rate calculation made in accordance with Technical Requirements 3.11.f, 3.11.g, and 3.11.h.

(f) Samples shall be changed at least once per 7 days and analyses shall be completed within 48 hours after changing, or after removal from sampler. Sampling shall also be performed at least once per 24 hours for at least 7 days following each shutdown, startup or THERMAL POWER change exceeding 15% of RATED THERMAL POWER within a 1-hour period and analyses shall be completed within 48 hours of changing. When samples collected for 24 hours are analyzed, the corresponding LLDs may be increased by a factor of 10. This requirement does not apply if: (1) analysis shows that the DOSE EQUIVALENT I-131 concentration in the reactor coolant has not increased more than a factor of 3, and (2) the noble gas monitor shows that effluent activity has not increased more than a factor of 3.

Table T3.11.f-1 (Page 3 of 3)
Radioactive Gaseous Waste Sampling and Analysis Program

Note 1: Lower Limit of Detection (LLD)

The LLD is defined, for purposes of these Technical Requirements, as the smallest concentration of radioactive material in a sample that will yield a net count, above system background, that will be detected with 95% probability with only 5% probability of falsely concluding that a blank observation represents a "real" signal.

For a particular measurement system, which may include radiochemical separation:

$$LLD = \frac{4.66\ s_b}{E * V * 2.22 \times 10^6 * Y * \exp(-\lambda \Delta\tau)}$$

Where:

LLD = the lower limit of detection (microCuries per unit mass or volume),

s_b = the standard deviation of the background counting rate or of the counting rate of a blank sample as appropriate (counts per minute),

E = the counting efficiency (counts per disintegration),

V = the sample size (units of mass or volume),

2.22×10^6 = the number of disintegrations per minute per microCurie,

Y = the fractional radiochemical yield, when applicable,

λ = the radioactive decay constant for the particular radionuclide (sec-1), and

$\Delta\tau$ = the elapsed time between the midpoint of sample collection and the time of counting (sec).

Typical values of E, V, Y, and $\Delta\tau$ should be used in the calculation.

It should be recognized that the LLD is defined as a before the fact limit representing the capability of a measurement system and not as an after the fact limit for a particular measurement.

3.11 RADIOLOGICAL EFFLUENTS (RE)

3.11.g Dose - Noble Gases

TLCO 3.11.g The air dose due to noble gases released in gaseous effluents, from each unit, to areas at and beyond the SITE BOUNDARY/UNRESTRICTED AREA boundary (see Byron Station OFFSITE DOSE CALCULATION MANUAL (ODCM) Annex, Appendix F, Figure F-1) shall be limited to:

1) During any calendar quarter: ≤ 5 mrad for gamma radiation and ≤ 10 mrad for beta radiation, and

2) During any calendar year: ≤ 10 mrad for gamma radiation and ≤ 20 mrad for beta radiation.

APPLICABILITY: At all times.

ACTIONS

NOTES

1. Separate Condition entry is allowed for each air dose.
2. TLCO 3.0.c is not applicable.
3. TLCO 3.0.d is not applicable.

CONDITION	REQUIRED ACTION	COMPLETION TIME
A. Calculated air dose exceeding limit.	A.1 Submit a Special Report to the Commission that identifies the cause(s) for exceeding the limits(s) and defines the corrective actions that have been taken to reduce the releases and the proposed corrective actions to be taken to assure that subsequent releases will be in compliance with the above limits.	30 days

SURVEILLANCE REQUIREMENTS

SURVEILLANCE		FREQUENCY
TSR 3.11.g.1	Determine cumulative dose contributions for noble gases for the current calendar quarter and current calendar year.	31 days

3.11 RADIOLOGICAL EFFLUENTS (RE)

3.11.h Dose - I-131, I-133, Tritium, and Radioactive Material in Particulate Form

TLCO 3.11.h The dose to a MEMBER OF THE PUBLIC from I-131, I-133, tritium, and all radionuclides in particulate form with half-lives > 8 days in gaseous effluents released, from each unit, to areas at and beyond the SITE BOUNDARY/UNRESTRICTED AREA boundary(see BYRON Station OFFSITE DOSE CALCULATION MANUAL (ODCM) Annex, Appendix F, Figure F-1) shall be limited to:

1) During any calendar quarter: ≤ 7.5 mrem to any organ, and

2) During any calendar year: ≤ 15 mrem to any organ.

APPLICABILITY: At all times.

ACTIONS

NOTE

1. Separate Condition entry is allowed for each calculated dose.
2. TLCO 3.0.c is not applicable.
3. TLCO 3.0.d is not applicable.

CONDITION	REQUIRED ACTION	COMPLETION TIME
A. Calculated dose exceeding limit.	A.1 Submit a Special Report to the Commission that identifies the cause(s) for exceeding the limit and defines the corrective actions that have been taken to reduce the releases and the proposed corrective actions to be taken to assure that subsequent releases will be in compliance with the above limits.	30 days

SURVEILLANCE REQUIREMENTS

SURVEILLANCE		FREQUENCY
TSR 3.11.h.1	Determine cumulative dose contributions for Iodine-131 and 133, tritium, and radionuclides in particulate form with half-lives > 8 days for the current calendar quarter and current calendar year.	31 days

3.11 RADIOLOGICAL EFFLUENTS (RE)

3.11.i Gaseous Radwaste Treatment System

TLCO 3.11.i The VENTILATION EXHAUST TREATMENT SYSTEM and the WASTE GAS HOLDUP SYSTEM shall be OPERABLE and shall be used to reduce activity in releases, from each unit, of gaseous effluents when the projected doses at and beyond the SITE BOUNDARY/UNRESTRICTED AREA boundary (see Byron Station OFFSITE DOSE CALCULATION MANUAL (ODCM) Annex, Appendix F, Figure F-1) in 31 days would exceed:

1) 0.2 mrad to air from gamma radiation,

2) 0.4 mrad to air from beta radiation, or

3) 0.3 mrem to any organ of a MEMBER OF THE PUBLIC.

APPLICABILITY: At all times.

ACTIONS

----------NOTES----------

1. Separate Condition entry is allowed for each gaseous release.

2. TLCO 3.0.c is not applicable.

3. TLCO 3.0.d is not applicable.

CONDITION	REQUIRED ACTION	COMPLETION TIME
A. ----------NOTE---------- Only applicable if radioactive gaseous waste being discharged without treatment. ---------- Gaseous releases in excess of limit.	A.1 Submit a Special Report to the Commission that includes the following information: a. Identification of any inoperable equipment or subsystems, and the reason for the inoperability. b. Action(s) taken to restore the inoperable equipment to OPERABLE status, and c. Summary description of action(s) taken to prevent recurrence.	30 days

SURVEILLANCE REQUIREMENTS

SURVEILLANCE		FREQUENCY
TSR 3.11.i.1	----------NOTE---------- Only required to be performed when the Gaseous Radwaste Treatment Systems are not being fully utilized. ---------- Project doses due to gaseous releases from each unit to areas at or beyond the SITE BOUNDARY/UNRESTRICTED AREA boundary.	31 days
TSR 3.11.i.2	Verify the installed VENTILATION EXHAUST TREATMENT SYSTEM and WASTE GAS HOLDUP SYSTEM are OPERABLE by meeting TSR 3.11.f, and TSR 3.11.g or TSR 3.11.h.	Per the applicable TSRs

3.11 RADIOLOGICAL EFFLUENTS (RE)

3.11.j Solid Radioactive Wastes

TLCO 3.11.j Radioactive wastes shall be solidified or dewatered in accordance with the PROCESS CONTROL PROGRAM.

APPLICABILITY: At all times.

ACTIONS

NOTES

1. TLCO 3.0.c is not applicable.
2. TLCO 3.0.d is not applicable.

CONDITION		REQUIRED ACTION		COMPLETION TIME
A.1	Solidification or dewatering not meeting either the disposal site, shipping or transportation requirements.	A.1	Suspend shipment of inadequately processed wastes.	Immediately
		AND		
		A.2	Determine root cause and correct to preclude recurrence.	Prior to resuming shipments

ACTIONS (continued)

CONDITION		REQUIRED ACTION		COMPLETION TIME
B.1	Solidification or dewatering not performed in accordance with the PROCESS CONTROL PROGRAM.	B.1	Test the improperly processed waste in each container to ensure it meets burial ground and shipping requirements.	Prior to resuming shipments
		AND		
		B.2	Take appropriate administrative action to prevent recurrence.	Prior to resuming shipments

SURVEILLANCE REQUIREMENTS

SURVEILLANCE		FREQUENCY
TSR 3.11.j.1	The PROCESS CONTROL PROGRAM shall be used to collect and test representative test specimens to verify the solidification of each type of wet radioactive waste. (Refer to Note 1, Page 3.11.j-3)	At least one representative test specimen from at least every tenth batch of each type of wet radioactive waste

NOTE 1

Solidification of at least one representative test specimen from at least every tenth batch of each type of wet radioactive wastes (e.g., filter sludges, spent resins, evaporator bottoms, boric acid solutions and sodium sulfate solutions) shall be verified in accordance with the PROCESS CONTROL PROGRAM:

a. If any test specimen fails to verify solidification, the solidification of the batch under test shall be suspended until such time as additional test specimens can be obtained, alternative solidification parameters can be determined in accordance with the PROCESS CONTROL PROGRAM, and a subsequent test verifies solidification. Solidification of the batch may then be resumed using the alternative solidification parameters determined by the PROCESS CONTROL PROGRAM;

b. If the initial test specimen from a batch of waste fails to verify solidification, the PROCESS CONTROL PROGRAM shall provide for the collection and testing of representative test specimens from each consecutive batch of the same type of wet waste until at least 3 consecutive initial test specimens demonstrate solidification. The PROCESS CONTROL PROGRAM shall be modified as required, as provided in TLCO 5.2.5, to assure solidification of subsequent batches of waste; and

c. With the installed equipment incapable of meeting TLCO 3.11.j or declared out-of-service, restore the equipment to operable status or provide for contract capability to process wastes as necessary to satisfy all applicable transportation and disposal requirements.

3.11 RADIOLOGICAL EFFLUENTS (RE)

3.11.k Total Dose

TLCO 3.11.k The annual(calendar year) dose or dose commitment to any MEMBER OF THE PUBLIC due to releases of radioactivity and to radiation from the uranium fuel cycle sources shall be limited to ≤ 25 mrem to the whole body or any organ (except the thyroid) and ≤ 75 mrem to the thyroid.

APPLICABILITY: At all times.

ACTIONS

----------NOTES----------

1. Separate Condition entry is allowed for each calculated dose.
2. TLCO 3.0.c is not applicable.
3. TLCO 3.0.d is not applicable.

CONDITION	REQUIRED ACTION	COMPLETION TIME
A. Calculated doses exceeding twice the TLCO limits for: 3.11.d.1, 3.11.d.2, 3.11.g.1, 3.11.g.2, 3.11.h.1, or 3.11.h.2.	A.1 ----------NOTE---------- Calculations to include direct radiation contributions from the units and from outside storage tanks. ---------- Determine if the TLCO 3.11.k limits have been exceeded.	15 days

(continued)

ACTIONS (continued)

CONDITION	REQUIRED ACTION	COMPLETION TIME
B. Required Action of Condition A determines the TLCO 3.11.k limits have been exceeded.	B.1 Submit a Special Report to the Commission (Refer to Note 1, Page 3.11.k-3).	15 days

SURVEILLANCE REQUIREMENTS

SURVEILLANCE		FREQUENCY
TSR 3.11.k.1	----------NOTE---------- Only applicable if Condition A is entered. ---------- Determine cumulative dose contributions from direct radiation from the units and from radwaste storage tanks.	In accordance with the OFFSITE DOSE CALCULATION MANUAL (ODCM)
TSR 3.11.k.2	Determine cumulative dose contributions from liquid and gaseous effluents in accordance with TSR 3.11.d.1, TSR 3.11.g.1, and TSR 3.11.h.1 and in accordance with the methodology and parameters in the OFFSITE DOSE CALCULATION MANUAL (ODCM).	Per the applicable TSRs
TSR 3.11.k.3	Inspect the Old Steam Generator Storage Facility (OSGSF) sump for the presence of liquid and the appearance that seepage has occurred.	92 days

(continued)

SURVEILLANCE REQUIREMENTS (continued)

SURVEILLANCE		FREQUENCY
TSR 3.11.k.4	----------NOTE---------- Only required to be performed if TSR 3.11.k.3 identifies both the presence of liquid and indications of seepage. ----------	
	Sample and analyze the liquid from the OSGSF sump.	92 days

NOTE 1

The Special Report shall define the corrective actions to be taken to reduce subsequent releases to prevent recurrence of exceeding the TLCO 3.11.k limits and includes the schedule for achieving conformance with the TLCO 3.11.k limits. The Special Report, as defined by 10 CFR 20.405c, shall include an analysis that estimates the radiation exposure to a MEMBER OF THE PUBLIC from the uranium cycle sources, including all effluent pathways and direct radiation, for the calendar year that includes the release(s) covered by this report. It shall also describe levels of radiation and concentration of radioactive material involved, and the cause of the exposure levels or concentrations. If the estimated dose(s) exceeds the TLCO 3.11.k limits, and if the release condition resulting in violation of 40 CFR Part 190 has not already been corrected, the Special Report shall include a request for a variance in accordance with the provisions of 40 CFR Part 190. Submittal of the report is considered a timely response and a variance is granted until staff action on the request is complete.

3.12 RADIOLOGICAL ENVIRONMENTAL MONITORING PROGRAM

3.12.a Radiological Environmental Monitoring Program

TLCO 3.12.a The Radiological Environmental Monitoring Program (REMP) shall be conducted as specified in Table T3.12.a-1.

APPLICABILITY: At all times.

ACTIONS

NOTES

1. TLCO 3.0.c is not applicable.
2. TLCO 3.0.d is not applicable.

CONDITION	REQUIRED ACTION	COMPLETION TIME
A. REMP not being conducted as specified in Table T3.12.a-1.	A.1 Submit in the Annual Radiological Environmental Operating Report, as required by Specification 5.6.2, a description of the reasons for not conducting the program as required and the plans for preventing recurrence.	12 months

(continued)

ACTIONS (continued)

CONDITION	REQUIRED ACTION	COMPLETION TIME
B. Level of radioactivity as a result of plant effluents in an environmental sampling medium at a specified location exceeding the reporting limits of Table T3.12.a-2 when averaged over any calendar quarter.	B.1 ----------NOTE---------- The methodology and parameters used to estimate the potential annual dose to a MEMBER OF THE PUBLIC shall be indicated in this report. ----------	
	Submit a Special Report to the Commission that identifies the cause(s) for exceeding the limit(s) and defines the corrective actions to be taken to reduce radioactive effluents so that the potential annual dose to a MEMBER OF THE PUBLIC is less than the calendar year limits of Technical Requirements 3.11.d, 3.11.g and 3.11.h.	30 days

(continued)

ACTIONS (continued)

CONDITION	REQUIRED ACTION	COMPLETION TIME
C. More than one of the radionuclides in Table T3.12.a-2 are detected in the sampling medium. AND $\frac{C_1}{RL_1} + \frac{C_2}{RL_2} + \ldots \geq 1.0$ where: C = concentration RL = reporting level.	C.1 ----------NOTE---------- The methodology and parameters used to estimate the potential annual dose to a MEMBER OF THE PUBLIC shall be indicated in this report. ---------- Submit a Special Report to the Commission that identifies the cause(s) for exceeding the limit(s) and defines the corrective actions to be taken to reduce radioactive effluents so that the potential annual dose to a MEMBER OF THE PUBLIC is less than the calendar year limits of Technical Requirements 3.11.d, 3.11.g and 3.11.h.	30 days

(continued)

ACTIONS (continued)

CONDITION	REQUIRED ACTION	COMPLETION TIME
D. Radionuclides other than those in Table T3.12.a-2 are detected. AND Are the result of plant effluents. AND The potential annual dose to a MEMBER OF THE PUBLIC from all radionuclides is equal to or greater than the calendar limits of Technical Requirements 3.11.d, 3.11.g and 3.11.h.	D.1 ---------NOTE-------- The methodology and parameters used to estimate the potential annual dose to a MEMBER OF THE PUBLIC shall be indicated in this report. ---------- Submit a Special Report to the Commission that identifies the cause(s) for exceeding the limit(s) and defines the corrective actions to be taken to reduce radioactive effluents so that the potential annual dose to a MEMBER OF THE PUBLIC is less than the calendar year limits of Technical Requirements 3.11.d, 3.11.g and 3.11.h.	30 days
E. Measured levels of radioactivity not the result of plant effluents.	E.1 Report and describe the condition in the Annual Radiological Environmental Operating Report required by Specification 5.6.2.	12 months

(continued)

ACTIONS (continued)

CONDITION	REQUIRED ACTION		COMPLETION TIME
F. Milk or fresh leafy vegetable samples unavailable from one or more of the sample locations required by Table T3.12.a-1.	F.1	Identify specific locations for obtaining replacement samples and add them to the REMP given in the OFFSITE DOSE CALCULATION MANUAL (ODCM).	30 days
	AND		
	F.2	Submit controlled version of the ODCM to the NRC including a revised figure(s) and table reflecting the new location(s) with supporting information identifying the cause of the unavailability of samples, deleting the specific locations from which samples were unavailable and justifying the selection of the new location(s) for obtaining samples.	180 days

SURVEILLANCE REQUIREMENTS

SURVEILLANCE		FREQUENCY
TSR 3.12.a.1	The radiological environmental monitoring samples shall be collected pursuant to Table T3.12.a-1 from the specific locations given in the table and figure(s) in the ODCM and shall be analyzed pursuant to the requirements of Table T3.12.a-1 and the detection capabilities required by Table T3.12.a-3.	Per the applicable Table(s)

Table T3.12.a-1 (Page 1 of 5)
Radiological Environmental Monitoring Program

EXPOSURE PATHWAY AND/OR SAMPLE	NUMBER OF REPRESENTATIVE SAMPLES AND SAMPLE LOCATIONS[a]	SAMPLING AND COLLECTION FREQUENCY	TYPE/FREQUENCY OF ANALYSIS
1. Airborne Radioiodine and Particulates	Samples from a total of eight locations: a. Indicator - Near Field Four samples from locations within 4 km (2.5 mi) in different sectors. b. Indicator - Far Field Three additional locations within 4 to 10 km (2.5 to 6.2 mi) in different sectors. c. Control One sample from a control location within 10 to 30 km (6.2 to 18.6 mi).	Continuous sampler operation with sample collection weekly (or more frequently if required due to dust loading).	Radioiodine Canister: I-131 analysis bi-weekly on near field samples and control.[b] Particulate Sampler: Gross beta analysis following weekly filter change[c] and gamma isotopic analysis[d] quarterly on composite filters by location on near field samples and control.[b]

(continued)

(a) Specific parameters of distance and direction from the centerline of the midpoint of the two units and additional description where pertinent, shall be provided for each and every sample location in Table 11-1 of the ODCM Station Annexes. Refer to NUREG-0133, "Preparation of Radiological Effluent Technical Specifications for Nuclear Power Plants," October 1978, and to Radiological Assessment Branch Technical Position, Revision 1, November 1979.

Deviations are permitted from the required sampling schedule if specimens are unobtainable due to hazardous conditions, seasonal availability, malfunction of sampling equipment, if a person/business who participates in the program goes out of business or no longer can provide sample, or due to a contractor omission which is corrected as soon as discovered. If the equipment malfunctions, corrective actions shall be completed as soon as practical. If a person/business supplying samples goes out of business, a replacement supplier should be found as soon as possible. Refer to Technical Requirements Manual Section 3.12.a, Required Action A.1, for guidance as to required actions to be taken whenever a sample is not obtained.

(b) Far field samples are analyzed when the respective near field sample results are inconsistent with previous measurements and radioactivity is confirmed as having its origin in airborne effluents from the station, or at the discretion of the Health Physics Support Director.

(c) Airborne particulate sample filters shall be analyzed for gross beta radioactivity 24 hours or more after sampling to allow for radon and daughter decay. If gross beta activity in air particulate samples is greater than 10 times the yearly mean of control samples, gamma isotopic analysis shall be performed on the individual samples.

(d) Gamma isotopic analysis means the identification and quantification of gamma emitting radionuclides that may be attributable to the effluents from the station.

Table T3.12.a-1 (Page 2 of 5)
Radiological Environmental Monitoring Program

EXPOSURE PATHWAY AND/OR SAMPLE	NUMBER OF REPRESENTATIVE SAMPLES AND SAMPLE LOCATIONS[a]	SAMPLING AND COLLECTION FREQUENCY	TYPE/FREQUENCY OF ANALYSIS
2. Direct Radiation[e]	Forty routine monitoring stations either with a thermoluminescent dosimeter (TLD) or with one instrument for measuring dose rate continuously, placed as follows: a. Indicator - Inner Ring (100 Series TLD) One in each meteorological sector, in the general area of the SITE BOUNDARY; b. Indicator - Outer Ring (200 Series TLD) One in each meteorological sector, within 6 to 8 km (3.7 to 5.0 mi); and c. Other One at each Airborne location given in part 1.a. and 1.b. The balance of the TLDs to be placed at special interest locations beyond the restricted locations beyond the Restricted Area where either a MEMBER OF THE PUBLIC or Exelon Nuclear employees have routine access (300 Series TLD). d. Control One at each Airborne control location given in part 1.c.	Quarterly.	Gamma dose on each TLD quarterly.

(continued)

(a) Specific parameters of distance and direction from the centerline of the midpoint of the two units and additional description where pertinent, shall be provided for each and every sample location in Table 11-1 of the ODCM Station Annexes. Refer to NUREG-0133, "Preparation of Radiological Effluent Technical Specifications for Nuclear Power Plants," October 1978, and to Radiological Assessment Branch Technical Position, Revision 1, November 1979.

Deviations are permitted from the required sampling schedule if specimens are unobtainable due to hazardous conditions, seasonal availability, malfunction of sampling equipment, if a person/business who participates in the program goes out of business or no longer can provide sample, or due to a contractor omission which is corrected as soon as discovered. If the equipment malfunctions, corrective actions shall be completed as soon as practical. If a person/business supplying samples goes out of business, a replacement supplier should be found as soon as possible. Refer to Technical Requirements Manual Section 3.12.a, Required Action A.1, for guidance as to required actions to be taken whenever a sample is not obtained.

(e) One or more instruments, such as a pressurized ion chamber, for measuring and recording dose rate continuously may be used in place of, or in addition to, integrating dosimeters. Film badges shall not be used as dosimeters for measuring direct radiation. The 40 locations is not an absolute number. The number of direct radiation monitoring stations may be reduced according to geographical limitations; e.g., if a station is adjacent to a lake, some sectors may be over water thereby reducing the number of dosimeters which could be placed at the indicated distances. The frequency of analysis or readout for TLD systems will depend upon the characteristics of the specific system used and should be selected to obtain optimum dose information with minimal fading.

Table T3.12.a-1 (Page 3 of 5)
Radiological Environmental Monitoring Program

EXPOSURE PATHWAY AND/OR SAMPLE	NUMBER OF REPRESENTATIVE SAMPLES AND SAMPLE LOCATIONS[a]	SAMPLING AND COLLECTION FREQUENCY	TYPE/FREQUENCY OF ANALYSIS
3. Waterborne			
a. Ground/ Well	a. Indicator Samples from three sources only if likely to be affected.[f]	Quarterly.	Gamma isotopic[d] and tritium analysis quarterly.
b. Drinking[g]	a. Indicator Some sample from each community drinking water supply that could be affected by the station discharge within 10 km (6.2 mi) downstream of discharge.	Weekly grab samples.	Gross beta and gamma isotopic analyses[d] on monthly composite; tritium analysis on quarterly composite.
c. Surface Water[g]	If no community water supply (Drinking Water) exists within 10 km downstream of discharge then surface water sampling shall be performed. a. Indicator One sample downstream.	Weekly grab samples.	Gross beta and gamma isotopic analyses[d] on monthly composite; tritium analysis on quarterly composite.
d. Control Sample[g]	a. Control One surface sample upstream of discharge.	Weekly grab samples.	Gross beta and gamma isotopic analyses[d] on monthly composite; tritium analysis on quarterly composite.
e. Sediment	a. Indicator At least one sample from downstream[g] area within 10 km (6.2 mi) distance.	Semiannually.	Gamma isotopic analysis[d] semiannually.

(continued)

(a) Specific parameters of distance and direction from the centerline of the midpoint of the two units and additional description where pertinent, shall be provided for each and every sample location in Table 11-1 of the ODCM Station Annexes. Refer to NUREG-0133, "Preparation of Radiological Effluent Technical Specifications for Nuclear Power Plants," October 1978, and to Radiological Assessment Branch Technical Position, Revision 1, November 1979.

Deviations are permitted from the required sampling schedule if specimens are unobtainable due to hazardous conditions, seasonal availability, malfunction of sampling equipment, if a person/business who participates in the program goes out of business or no longer can provide sample, or due to a contractor omission which is corrected as soon as discovered. If the equipment malfunctions, corrective actions shall be completed as soon as practical. If a person/business supplying samples goes out of business, a replacement supplier should be found as soon as possible. Refer to Technical Requirements Manual Section 3.12.a, Required Action A.1, for guidance as to required actions to be taken whenever a sample is not obtained.

(d) Gamma isotopic analysis means the identification and quantification of gamma emitting radionuclides that may be attributable to the effluents from the station.

(f) Groundwater samples shall be taken when this source is tapped for drinking or irrigation purposes in areas where the hydraulic gradient or recharge properties are suitable for contamination.

(g) The "downstream" sample shall be taken in an area beyond but near the mixing zone. The "upstream sample" shall be taken at a distance beyond significant influence of the discharge. Upstream samples in an estuary must be taken far enough up upstream to be beyond the station influence.

Table T3.12.a-1 (Page 4 of 5)
Radiological Environmental Monitoring Program

EXPOSURE PATHWAY AND/OR SAMPLE	NUMBER OF REPRESENTATIVE SAMPLES AND SAMPLE LOCATIONS[a]	SAMPLING AND COLLECTION FREQUENCY	TYPE/FREQUENCY OF ANALYSIS
4. Ingestion			
a. Milk[h]	a. Indicator Samples from milking animals from a maximum of three locations within 10 km (6.2 mi) distance. b. Control One sample from milking animals at a control location within 15 to 30 km (9.3 to 18.6 mi).	Biweekly[i] when animals are on pasture (May through October), monthly at other times (November through April).	Gamma isotopic[d] and I-131[j] analysis on each sample.
b. Fish	a. Indicator Representative samples of commercially and recreationally important species in discharge area. b. Control Representative samples of commercially and recreationally important species in control locations upstream of discharge.	Two times annually.	Gamma isotopic analysis[d] on edible portions.

(continued)

(a) Specific parameters of distance and direction from the centerline of the midpoint of the two units and additional description where pertinent, shall be provided for each and every sample location in Table 11-1 of the ODCM Station Annexes. Refer to NUREG-0133, "Preparation of Radiological Effluent Technical Specifications for Nuclear Power Plants," October 1978, and to Radiological Assessment Branch Technical Position, Revision 1, November 1979.

Deviations are permitted from the required sampling schedule if specimens are unobtainable due to hazardous conditions, seasonal availability, malfunction of sampling equipment, if a person/business who participates in the program goes out of business or no longer can provide sample, or due to a contractor omission which is corrected as soon as discovered. If the equipment malfunctions, corrective actions shall be completed as soon as practical. If a person/business supplying samples goes out of business, a replacement supplier should be found as soon as possible. Refer to Technical Requirements Manual Section 3.12.a, Required Action A.1, for guidance as to required actions to be taken whenever a sample is not obtained.

(d) Gamma isotopic analysis means the identification and quantification of gamma emitting radionuclides that may be attributable to the effluents from the station.

(h) If milking animals are not found in the designated indicator locations, or if the owners decline to participate in the REMP, all milk sampling shall be discontinued.

(i) Biweekly refers to every two weeks.

(j) I-131 analysis means the analytical separation and counting procedure are specific for this radionuclide.

Table T3.12.a-1 (Page 5 of 5)
Radiological Environmental Monitoring Program

EXPOSURE PATHWAY AND/OR SAMPLE	NUMBER OF REPRESENTATIVE SAMPLES AND SAMPLE LOCATIONS[a]	SAMPLING AND COLLECTION FREQUENCY	TYPE/FREQUENCY OF ANALYSIS
4. Ingestion (continued)			
c. Food Products	a. Indicator Two representative samples from the principal food pathways grown in each of four major quadrants within 10 km (6.2 mi): At least one root vegetable sample.[k] At least one broad leaf vegetable (or vegetation).[k] b. Control Two representative samples similar to indicator samples grown within 15 to 30 km (9.3 to 18.6 mi).	Annually.	Gamma isotopic[d] analysis on each sample.

(a) Specific parameters of distance and direction from the centerline of the midpoint of the two units and additional description where pertinent, shall be provided for each and every sample location in Table 11-1 of the ODCM Station Annexes. Refer to NUREG-0133, "Preparation of Radiological Effluent Technical Specifications for Nuclear Power Plants," October 1978, and to Radiological Assessment Branch Technical Position, Revision 1, November 1979.

Deviations are permitted from the required sampling schedule if specimens are unobtainable due to hazardous conditions, seasonal availability, malfunction of sampling equipment, if a person/business who participates in the program goes out of business or no longer can provide sample, or due to a contractor omission which is corrected as soon as discovered. If the equipment malfunctions, corrective actions shall be completed as soon as practical. If a person/business supplying samples goes out of business, a replacement supplier should be found as soon as possible. Refer to Technical Requirements Manual Section 3.12.a, Required Action A.1, for guidance as to required actions to be taken whenever a sample is not obtained.

(d) Gamma isotopic analysis means the identification and quantification of gamma emitting radionuclides that may be attributable to the effluents from the station.

(k) One sample shall consist of a volume/weight of sample large enough to fill contractor specified container.

Table T3.12.a-2 (Page 1 of 1)
Reporting Levels for Radioactivity Concentrations in Environmental Samples Reporting Levels

ANALYSIS	WATER (pCi/l)	AIRBORNE PARTICULATE OR GASES (pCi/m^3)	FISH (pCi/kg, wet)	MILK (pCi/l)	FOOD PRODUCTS (pCi/kg, wet)
H-3	20,000[a]				
Mn-54	1,000		30,000		
Fe-59	400		10,000		
Co-58	1,000		30,000		
Co-60	300		10,000		
Zn-65	300		20,000		
Zr-95	400				
Nb-95	400				
I-131	2[b]	0.9		3	100
Cs-134	30	10	1,000	60	1,000
Cs-137	50	20	2,000	70	2,000
Ba-140	200			300	
La-140	200			300	

(a) For drinking water samples. This is 40 CFR Part 141 value. If no drinking water pathway exists, a value of 30,000 pCi/l may be used.

(b) If no drinking water pathway exists, a value of 20 pCi/l may be used.

Table T3.12.a-3 (Page 1 of 2)
Detection Capabilities for Environmental Sample Analysis[a]
Lower Limit of Detection (LLD)[b] (Refer to Note 1, Page 3.12.a-14)

ANALYSIS	WATER (pCi/l)	AIRBORNE PARTICULATE OR GAS (pCi/m^3)	FISH (pCi/kg, wet)	MILK (pCi/l)	FOOD PRODUCTS (pCi/kg, wet)	SEDIMENT (pCi/kg, dry)
Gross Beta	4	0.01				
H-3	2000[c]					
Mn-54	15		130			
Fe-59	30		260			
Co-58,60	15		130			
Zn-65	30		260			
Zr-95	30					
Nb-95	15					
I-131	1	0.07		1	60	
Cs-134	15	0.05	130	15	60	150
Cs-137	18	0.06	150	18	80	180
Ba-140	60			60		
La-140	15			15		

(a) This list does not mean that only these nuclides are to be considered. Other peaks at are identifiable, together with those of the above nuclides, shall also be analyzed and reported in the Annual Radiological Environmental Operating Report pursuant to Technical Specification 5.6.2.

(b) Required detection capabilities for thermoluminescent dosimeters used for environmental measurements shall be in accordance with the recommendations of Regulatory Guide 4.13.

(c) This LLD is the minimum allowable, however, vendors performing environmental sample analyses offsite will be required to meet an LLD of 200 pCi/l.

Table T3.12.a-3 (Page 2 of 2)
Detection Capabilities for Environmental Sample Analysis
Lower Limit of Detection (LLD)

Note 1: Lower Limit of Detection (LLD)

The LLD is defined, for purposes of these Technical Requirements, as the smallest concentration of radioactive material in a sample that will yield a net count, above system background, that will be detected with 95% probability with only 5% probability of falsely concluding that a blank observation represents a "real" signal.

For a particular measurement system, which may include radiochemical separation:

$$LLD = \frac{4.66\ s_b}{E * V * 2.22 * Y * \exp(-\lambda \Delta t)}$$

Where:

LLD = the "a priori" lower limit of detection (picoCuries per unit mass or volume).

s_b = the standard deviation of the background counting rate or of the counting rate of a blank sample as appropriate (counts per minute).

E = the counting efficiency (counts per disintegration).

V = the sample size (units of mass or volume).

2.22 = the number of disintegrations per minute per picoCurie.

Y = the fractional radiochemical yield, when applicable.

λ = the radioactive decay constant for the particular radionuclide (sec^{-1}), and

Δt = the elapsed time between the midpoint of sample collection and the time of counting (sec).

Typical values of E, V, Y, and Δt should be used in the calculation.

It should be recognized that the LLD is defined as a before the fact limit representing the capability of a measurement system and not as an after the fact limit for a particular measurement. Analyses shall be performed in such a manner that the stated LLDs will be achieved under routine conditions. Occasionally, background fluctuations, unavoidable small sample sizes, the presence of interfering nuclides, or other uncontrollable circumstances may render these LLDs unachievable. In such cases, the contributing factors shall be identified and described in the Annual Radiological Environmental Operating Report pursuant to Technical Specification 5.6.2.

3.12 RADIOLOGICAL ENVIRONMENTAL MONITORING PROGRAM

3.12.b Land Use Census

TLCO 3.12.b The Land Use Census shall be conducted and shall identify within a distance of 10 km (6.2 miles) the location in each of the 16 meteorological sectors (Refer to Note 1, Page 3.12.b-3) of the nearest milk animal, the nearest residence (Refer to Note 2, Page 3.12.b-3), and a enumeration of livestock. For dose calculation, a garden will be assumed at the nearest residence.

APPLICABILITY: At all times.

ACTIONS

NOTES

1. TLCO 3.0.c is not applicable.
2. TLCO 3.0.d is not applicable.

CONDITION	REQUIRED ACTION	COMPLETION TIME
A. Calculated dose or dose commitment greater than the value currently calculated in Technical Requirement 3.11.h.1.	A.1 Identify the new location(s) in the next Annual Radiological Environmental Operating Report pursuant to Technical Specification 5.6.2.	12 months

(continued)

ACTIONS (continued)

CONDITION	REQUIRED ACTION	COMPLETION TIME
B. Identification of a location that yields a calculated dose or dose commitment (via the same exposure pathway) 20% greater than at a location from which samples are currently being obtained, in accordance with Technical Requirement 3.12.a.	B.1 Add the new location(s) to the Radiological Environmental Monitoring Program (REMP) given in the OFFSITE DOSE CALCULATION MANUAL (ODCM) (Refer to Note 3, Page 3.12.b-3) .	30 days

SURVEILLANCE REQUIREMENTS

SURVEILLANCE		FREQUENCY
TSR 3.12.b.1	The Land Use Census (Refer to Note 4, Page 3.12.b-3) shall be conducted during the growing season (01 JUN - 01 OCT).	12 months

Note 1: This requirement may be reduced according to geographical limitations; e.g. at a lake site where some sectors will be over water.

Note 2: The nearest industrial facility shall also be documented if closer than the nearest residence.

Note 3: The sampling location(s), excluding the control station location, having the lowest calculated dose or dose commitment(s), via the same exposure pathway, may be deleted from this monitoring program after October 31 of the year in which this Land Use Census was conducted. Pursuant to Technical Specification 5.5.1.c, submit in the next Annual Radiological Environmental Operating Report documentation for a change in the ODCM including a revised figure(s) and table(s) for the ODCM reflecting the new location(s) with information supporting the change in sampling locations.

Note 4: The Land Use Census shall use information that will provide the best results, such as by a door-to-door survey, aerial survey, or by consulting local agriculture authorities. The results of the Land Use Census shall be included in the Annual Radiological Environmental Operating Report.

3.12 RADIOLOGICAL ENVIRONMENTAL MONITORING PROGRAM

3.12.c Interlaboratory Comparison Program

TLCO 3.12.c Analyses shall be performed on radioactive materials, supplied as part of an Interlaboratory Comparison Program that corresponds to samples required by Table 3.12.a-1.

APPLICABILITY: At all times.

ACTIONS

NOTES

1. TLCO 3.0.c is not applicable.
2. TLCO 3.0.d is not applicable.

CONDITION	REQUIRED ACTION	COMPLETION TIME
A. Analyses NOT being performed per Table T3.12.a-1.	A.1 Report the corrective actions to preclude recurrence in the Annual Radiological Operating Report to the Commission pursuant to Technical Specification 5.6.2.	12 months

SURVEILLANCE REQUIREMENTS

SURVEILLANCE		FREQUENCY
TSR 3.12.c.1	Summarize the results obtained as part of the Interlaboratory Comparison Program in the Annual Radiological Environmental Operating Report to the Commission pursuant to Technical Specification 5.6.2.	12 months