STANDBY GAS TREATMENT SYSTEM

REFERENCE TEXT

Revisions

Date	Rev #	Description
12/02/04	**8**	**Moisture elements ME-8123 and ME-8124 abandoned in place.**
11/01/03	7	Correct Stby Gas Fan starter drawings. Replace Figure 2 with Heater control circuit. Explain indication of RED and GREEN indicating lights illuminated when a heater fault causes STBY GAS fan to trip. Added description of recharge compressor K-203.
01/28/02	6	Incorporated PDC 00-25 "Air Compressor and SBGT Capacity Expansion", PDC 00-26 "Increase heater capacity to 20 kW under degraded conditions, changed range of temperature meters on C-7 due to FRN 00-04-18A
02/06/01	5	
12/10/99	4	Change setpoint for heater hi temperature trip from 150°F to 200°F per I&C procedure 8.E.47.
11/30/99	3	Minor instrumentation changes.
06/10/97	2	Corrected ARP annunciator locations.
11/25/96	1	PR 95.9513 included in Industry Events section of reference text.

Revision: December 2, 2004

Submitted by: K. Kennedy

System Engineer Review by/Date: _____
(Enter N/A if not applicable)

Approved by/Date _____

TABLE OF CONTENTS

REFERENCES

A. FSAR
1. Sections 5.3.3.4,

B. Piping and Instrument Diagrams
1. Heating ventilation and air conditioning standby gas treatment system control diagram, M-294
2. Heating, ventilation and air conditioning secondary containment isolation control diagram, M-283
3. Functional description standby gas treatment system, SM-437
4. Compressed Air System, M-220, Sheet 2

C. Vendor Manuals
1. Standby Gas Treatment System, V-0311

D. Bechtel Drawings
1. Schematic diagram, H and V system standby gas treatment, E-241
2. Schematic diagram, H and V system standby gas treatment, E-244
3. Wiring block diagram, H and V system miscellaneous, E-433
4. Schematic diagram, SGT Heater Controls (Pnls C68 & C69), M50-3-3

E. PNPS Procedures
1. Standby gas treatment, 2.2.50
2. Deluge sprinkler and spray systems, 2.2.26
3. Instrument air system, 2.2.36
4. Primary and secondary containment isolation reset, 2.2.125.1
5. Conduct of operations, 1.3.34
6. HEPA filter and charcoal filter performance test program, 7.1.30
7. Measurement of pressure drop across standby gas treatment filters, 8.7.2.1
8. Demonstration of standby gas treatment inlet heater capability, 8.7.2.2
9. SBGT system operability, 8.7.2.6
10. Secondary containment leak rate test, 8.7.3
11. Primary containment venting and purging under emergency conditions, 5.4.6
12. Special fire procedure, 5.5.2

F. EOPs
1. Primary containment control, EOP-03

G. Technical Specifications
1. Section 3.7

STANDBY GAS TREATMENT SYSTEM

A. OVERVIEW

The Standby Gas Treatment System is a secondary containment subsystem consisting of two, 100% capacity trains. The SBGT system can be used for atmosphere control on either the secondary or primary containment.

B. SYSTEM DESCRIPTION

1. System Purpose

The standby gas treatment system (SGTS) provides a method to remove particulates and gaseous contaminants (especially iodine and methyl iodide) from the reactor building's contaminated exhaust ventilation system air stream to minimize the release of radioactive material from the stack. It also prevents contaminated air from leaking from the reactor building (while isolated) by maintaining it at a slight vacuum (.25" H_2O).

The Standby Gas Treatment System (SGTS) is a secondary containment subsystem. Upon receipt of signals indicating a loss of coolant accident (high drywell pressure or low reactor water level) or fuel handling accident (high refuel floor vent exhaust radiation) the following occur:

a. The building is isolated (normal HVAC is secured and dampers shut)
b. SGTS starts to maintain the slight negative pressure and treats the effluents prior to release.

SGTS is also required during drywell/torus venting when the mode switch is in run.

2. Design Basis

The standby gas treatment system is a subsystem to the secondary containment system (SCS). The secondary containment system design basis which apply to the standby gas treatment system are:

a. The SCS provides primary containment whenever primary containment is open.
b. The design of the system prevents single active component failures from reducing the effectiveness of radionuclide removal.
c. The secondary containment limits the ground level airborne radioactive material release. Off-site doses from a design basis fuel handling or loss of coolant accident will be below values stated in 10 CFR 100.
d. The SCS is sufficiently leaktight to allow the SGTS to reduce reactor building pressure to a minimum subatmospheric pressure of 0.25" H_2O under neutral wind conditions, when the SGTS fans are exhausting reactor building atmosphere at 4,000 ft^3/min.
e. The reactor building isolation and control system isolates the reactor building fast enough to prevent fission products from the postulated fuel handling accident from being released to the environs through the normal discharge path.

3. System Components

a. Filter units (2) containing:
   1) Demister
   2) Electric air heaters
   3) HEPA filter (2)
   4) Charcoal adsorbers (2)
   5) Deluge spray spargers (one for each adsorber)
   6) Fans
b. Air supply system and dampers
c. Exhaust radiation monitor
d. Cross-ties at filter inlet and outlet

4. Basic System Operation (Figure 1)

The standby gas treatment system (SGTS) has two identical, parallel air filtration assemblies separated by an 18-inch thick concrete block wall. Each train is 100 percent capacity, and has a filter unit containing a demister, electric heating coil, a pre-treatment HEPA filter, two charcoal beds, a post-treatment HEPA filter, an exhaust fan and both air and motor operated dampers. The two trains are cross-tied at the suction and exhaust. The system is designed to prevent off-site doses from exceeding the limits of 10 CFR 100. The accidents used for design studies are a loss of coolant accident with significant primary

leakage and a fuel handling accident with large fission product releases. The SGT trains are in the turbine building's northwest corner at the 51-foot level.

The SGTS is automatically initiated by the same signals which initiate a reactor building isolation (low reactor water level (+12"), high drywell pressure (2.2 psig), refueling floor exhaust duct high radiation, downscale of all 4 refueling floor exhaust duct monitors or downscale of 2 monitors in one channel with a high in the other channel). When an initiation signal is received, the supply dampers to the SGT's plenum open, SGT train 'A' fan (VEX-210A) starts and the inlet and outlet dampers for train 'A' open. The inlet damper to train 'B' opens and SGT train 'B' fan (VEX 210B) starts and the outlet damper opens. When the fans start a permissive signal is sent to the associated filter train, which energizes the heaters. Air is drawn from the following points:

a. reactor building contaminated exhaust vent (condensate demineralizer vent, HPCI gland seal condenser exhauster and the O_2 analyzer vent)
b. refueling floor exhaust vent
c. drywell exhaust vent
d. suppression pool exhaust vent

The air flows first through a demister to remove any entrained water droplets, then it passes through electric heating coils, which reduce the humidity. After the heating coils, the air flows through a HEPA filter, and into two activated charcoal beds. A post HEPA filter prevents any loose charcoal particles from entering the fans. Crossover lines between the charcoal filters inlet and fan suctions provide some flow through the idle train. This keeps the charcoal beds cool when the train is not operating. A restricting orifice in the fan suction crossover line limits the idle train flow. Air leaves the filters and passes through the fans into a common discharge header.

A gamma sensitive geiger-mueller (GM) detector adjacent to the common discharge header continuously monitors exhaust air radiation levels. The SGT air is then discharged to the main stack through a 20" under ground pipe.

When an isolation signal secures the reactor building ventilation system, both SGT fans initially start to maintain reactor building pressure at a slight vacuum (approximately .25" H_2O) preventing any unfiltered air from leaking out of the reactor building during isolation conditions. Only one fan is required to maintain reactor building pressure at a slight vacuum. A preset time delay stops the standby fan and shuts its outlet damper. The operating SGT fan continues running to maintain the reactor building at a slight vacuum. The standby fan restarts if the running fan's flow is too low.

When the reactor building isolation signal is reset, the exhaust fans and heaters will secure and the air operated dampers will close. Procedurally, the damper controls are placed in OPEN and one fan control is placed in RUN prior to resetting the isolation.

The system can be manually started for reactor building leak testing or to vent the drywell or torus. Connections are provided in the system for testing the HEPA filters and charcoal bed efficiency.

C. COMPONENT DESCRIPTION

1. Filter Units

The two filter units (VGTF-201A(B)) are each rated for 4000 cfm with a pressure drop of 5-9" H_2O. Cross-connects between the filter trains are provided to maintain the required decay heat removal cooling airflow on the charcoal filters in the inactive treatment train. The filter units each contain the following components:

a. Demister (optional)

The demister removes entrained water droplets from the air stream. It can withstand a 2" H_2O differential pressure . The designed pressure drop is less than 1" H_2O at rated flow (1100 cfm/cell) of saturated air at 70°F. Any water removed drains to the reactor building equipment drain sump.

b. Electric Air heater (Figure 2)

A 30.2 kW total capacity heater bank maintains incoming air relative humidity less than 70 percent. The heaters are automatically energized when the associated fan starts from the fan motor holding coil. Current transformers measure the current to the heaters. If the current is low (open in a coil) the fan motor will trip after a 3 second time delay. The RED run indication light on the fan is driven from the Control Switch on panel C-7. The GREEN off light is driven from the holding coil when it is deenergized (OFF). If the fan trips because of a heater fault both RED and GREEN lights will be illuminated. The fan will not be running. A temperature switch in the air stream, deenergizes the heaters at 200°F. See Figure 2. (NOTE: Associated fan will trip if running and heaters deenergize. Temp. should not normally reach 200°F.) The heaters receive power from 480 V, safeguard MCC B-15(14). The rating of the heaters was raised from 21.9 kW by PDC 00-26 to ensure that heater capacity will be maintained greater than 20kW during a degraded voltage condition.

The safety-related power and control circuits allow detection of a loss of current through any one of the twelve heater elements in each of the trains. Safety-related current transformers monitor heater current. In series interlock shuts down the train's exhaust fan when low current is sensed on the associated heaters (to reset the trip signal, the fan control switch must be placed in "OFF").

c. HEPA filters (2)

Each train contains two HEPA filters, one upstream of the charcoal beds (prefilter) and one downstream of the charcoal beds (post filter). Each filter, when tested with DOP smoke, removed 99.97 percent of 0.3 micron particles. Each has a 900-gram dust holding capacity and is designed for 1" H_2O pressure drop at rated flow (1100 cfm/cell). There are four cells per filter. The filters fire resistant construction is satisfactory for operation up to 300°F. HEPA filters are installed before and after the charcoal beds to minimize the potential particulate release to the environment, and prevent charcoal bed clogging.

d. Charcoal adsorber filters (charcoal beds) (2)

The filters consist of iodide - impregnated activated carbon beds which can remove $\geq$99.9 percent of the iodide in the air stream. Each is rated for 3996 cfm with a 1.15" H_2O ($\pm$ .15") pressure drop. Any organic materials or moisture not removed from the air will

reduce bed efficiency. This drop in bed efficiency is due to fouling the bed's adsorption capabilities. Flow rates > 4000 cfm also reduce efficiency.

e. Deluge Spray System

A sprinkler system inside each filter train prevents fires from occurring in the charcoal filter beds. Heat generated by the decay of fission products in the charcoal filter could cause a fire in the filter train. If charcoal bed temperature reaches 280°F, an alarm is received in the control room on the Simplex CPU. An operator is then sent to the SGTS filter room and if necessary manual isolation valves can be opened to spray down the charcoal filters. To prevent the spread of any fire in the SGTS filter room(s) the access door is a three-hour fire door.

Any actuation of the Deluge System during or after a DBA will result in the washing off of all deposited radio-iodines into the Turbine Building floor drain system, actuation could also create holes in the charcoal filters which could allow the release of radioactivity to the atmosphere. Therefore, the manual actuation of the Deluge System must be administratively prevented in the post-accident time frame.

f. Fans (2) (Figures 3 and 4)

Each SGTS train contains a fan (VEX-210A(B)). The fans are powered from 480 V safeguards MCC B-15 (14). Only one fan is needed to maintain reactor building pressure at a slight vacuum. The centrifugal type fans are 480 V, 3Ø, 60 Hz, 15 hp, rated for 4000 cfm. The C-7 control switch for the "A" fan has three positions; OFF, AUTO, and RUN. The "B" fan switch has four positions; MAINTENANCE, OFF, STANDBY, and RUN. The "A" fan is normally in the "AUTO" mode and the "B" fan in the "STANDBY" mode. Upon receipt of a reactor building isolation signal, the "A" fan will immediately start, its associated inlet and outlet isolation dampers will open, and its associated train heaters will be energized from fan breaker contacts. Upon receipt of a reactor building isolation signal the "B" train inlet damper will open. A safety related limit switch will then start its associated fan resulting in the outlet damper opening and its associated heater being energized.

After a time delay of 65 seconds, the STANDBY train B inlet damper will receive a close signal, its associated fan will shut down, outlet dampers will close, and the heater will be de-energized.

If flow in the combined outlet falls below 2000 cfm, a low flow signal will re-open the STANDBY train (B) inlet damper which will start its associated fan resulting in the outlet damper opening and its associated heaters being energized.

When the "A" train is taken out of service, the "B" train control switch is placed in the MAINTENANCE position which will prevent the "B" train from shutting down after the 65 second time delay.

2. SGTS Air Supply System and Dampers (Figure 5)

The Standby Gas Treatment System air supply for each train's suction and discharge dampers is safety related and is constructed of stainless steel tubing. The air supply is self-contained and consists of a bank of five air accumulators that are charged from two high pressure air bottles. The high pressure air bottles are replaceable from stock. The accumulators should be maintained above 120 psig, $\leq$ 130 psig and agree within 6 psi.

The Standby Gas Treatment System air supply can also be recharged from compressor K-203. The compressor is out of the way under the stairs that go up to Fan Room 1. The compressor and associated valves are manually operated to recharge the air system. It is powered from bus B-19. The compressor was added to the system to relieve operations from transporting HP air bottles. The compressor is the preferred method of recharging the air system.

The SBGT air operated dampers are required to operate post accident for a period of 30 days without recharging. PDC 00-25 installed an additional tank accumulator (raising the number of air accumulators from four to the current number of five) to raise the capacity from 52 ft^3 to 130 ft^3 to ensure operability of the air operated dampers for the 30 day period. The tank is located next to the existing tanks outside the SBGT room on the Turbine Building 51' level.

If the accumulator system pressure falls below 115 psig pressure switch PS-8120 will cause annunciators "STANDBY GAS TREATMENT SYSTEM TROUBLE" Panel C-904 left window E-7, and "C-7 TROUBLE" Panel C-2 right window A7, to alarm. The annunciated condition will also cause an amber light "SGTS ISOL DAMPERS AIR PRESSURE LOW". In

this condition the accumulator bank must be immediately recharged from the high pressure air cylinders. The air cylinders may need replacement.

A structural steel frame, which is covered with steel grating, encloses the accumulator bank. This enclosure is safety related and functions as a missile shield.

Pressure of the accumulator bank can be locally monitored by pressure gauges PI-8120A and B. These gauges are mounted behind the missile shield at the southwest face of the enclosure. The pressure gauge root valves are normally closed. Readings must be obtained by peering through the grating. The gauge will be checked by the tour and must indicate greater than 120 psig, $\leq$130 psig and agree within 6 psi.

The "A" SGTS train inlet and outlet dampers are air to close, spring open, butterfly valves. Their control solenoids are normally energized with air holding the dampers shut. On an initiation, or on a loss of DC control power, or on a loss of air the dampers fail open.

The "B" SGTS train inlet and outlet dampers are air to open, spring close, butterfly valves. Their control solenoids are normally deenergized with the dampers shut. On a loss of DC control power or loss of air the dampers fail closed (fan will trip on interlock with the inlet damper). The solenoids are energized to open the dampers on an initiation signal.

3. **Exhaust Radiation Monitor**

An exhaust radiation detector (1736) is in the SGT system common discharge header to provide radiation level indication. This also provides operators with information on sources of radiation in the main stack. The monitor (1705-9) uses a gamma sensitive geiger-mueller detector and a combined log radiation indicator and trip unit. The trip unit has two trip circuits. One is an upscale trip that activates an alarm on panel 904 at 16 mR/hr (incr.). The other is a downscale trip (0.1mR/hr) that activates an instrument trouble alarm on panel 904.

The monitor's output is displayed on panel 910 and a recorder (1705-20) on panel 902. The monitor is powered from 120 V panel Y-2. For more information on the SGT exhaust radiation monitor, refer to the process radiation monitoring reference text.

4. Cross-Tie Ducts

The inlet and outlet cross tie ducts allow for removal of decay heat from the standby filter train. When an initiation signal is received, both fans and filter units are initially started. When the standby fan is secured, a small flow of air is maintained through the idle filter. This flow, restricted by an orifice in the outlet crosstie duct, provides enough cooling to prevent the decay heat in the idle filter from starting a fire. The dampers in the cross tie ducts are failed open since their air supply has been removed. The damper control switches and control solenoids have not been removed but are deenergized.

D. INSTRUMENTATION AND CONTROLS

1. Control Room Instrumentation

Instrumentation/Location	Description
A(B) SGTS filter relative humidity MI-8123 (8124) Panel C-7 (ABONDONED IN PLACE)	0-100 percent ME-8123 (8124) Via MT-8123 (8124) (ABONDONED IN PLACE)
A(B) SGTS differential pressures DPI-8118 (8119) Panel C-7	0-15" WC (Water Column) DPT-8118 (8119)
A(B) SGTS filter temperature TI-8121 (8122) Panel C-7	0-250°F TE-8121 (8122)
SGT total air flow FI-8126 (8127) Panel C-7	0-40 x 10^2 SCFM FT-8126 (8127)
Standby gas treat exhaust radiation level record. RR-1705-020 Panel 902	0.1-1000 mR/hr Chart recorder, blue pen records SGT exhaust radiation levels from RE-1736
Standby gas treat exhaust radiation level monitor RM-1705-09 Panel 910	1 to 10^4 mR/hr RE-1736

2. Local Instrumentation

Instrument/Location	Description
Train "A" filter components Differential pressure DPAA-21 through DPAA-26 Local at filter train "A" elevation 51 ft.	Provides local differential pressure indication across each filter component.
Train "B" filter components Differential pressure DPAA-31 through DPAA-36 Local at filter train "B" elevation 51 ft.	Provides local differential pressure indication across each filter component.
Train A(B) temperature indicators 2 per train	Measure inlet and outlet stream temperature. Used to verify heater operability.

3. Alarms

Title/Location	Setpoint/Initiating Device
STANDBY GAS TREATMENT SYSTEM TROUBLE OR TEST Panel C904L E7	• Loss of 125 VDC control power 74XA or 74XB de-energized • Low discharge flow, 2000 CFM decreasing (FS-8135) and 10 second T.D. • Low control air pressure, 115 psig P.S. 8120
SBGTS DELUGE ON Panel 904L F7	2.0" Increasing LS-4637, 4635, 4636 or 4638
STANDBY GAS TREATMENT DISCHARGE HI RADIATION Panel 904 Left Center F4	20 mR/hr (increasing) RIS-1705-9
STANDBY GAS TREATMENT DISCHARGE DOWNSCALE/INOP Panel 904 Left Center G4	1 mR/hr (decreasing) RIS-1705-9

4. Interlocks and Trips

Interlock or Trip	Functions
SGTS initiation signals	Automatically starts SGTS if any of the following signals are received: - reactor low water level +12" (one out of two, twice) - high drywell pressure >2.2 psig (one out of two, twice) - high radiation level in refueling floor exhaust ducts (16 mR/hr - 100 mR/hr) - simultaneous downscale from all four refueling floor duct radiation monitors - both downscales in one channel and one high in the other channel
"B" train STANDBY fan time delay	Secures "B" train when in STANDBY after a 65 sec. time delay, after initiation
Low discharge flow Auto restart	If, with an initiation signal present, low discharge flow (<2000 SCFM) is sensed the "B" train automatically starts. Illuminates amber low flow light above fan control switch. Signal comes from relays 62-8135. Flow is sensed from switches FS-8135.
Heater high temperature trip	If temperature in filter train is >200°, heaters de-energize; signal comes from TS81000A or B
Fan-heater interlock	Filter train A(B) heaters will not energize unless the associated fan, VEX-210A(B), is running **AND** When A(B) fans are running if heaters burn out or trip on high temperature fans de-energize after 3 seconds. The electric heating coils de-energize upon securing the associated train exhaust fan STANDBY GAS FAN A (VEX-210A) or STANDBY GAS FAN B (VEX-210B) shuts down upon low heater current (to reset the trip signal, the fan switch must be taken to "OFF")
Fan-outlet damper interlock	TRAIN A OUTL DAMPER (AO-N-108) and TRAIN B OUTL DMPR (AO-N-112) will not open automatically unless their associated fan starts. They may be opened manually.

5. Control Room Controls

Item/Location	Functions of Positions	
SGTS exh. fan "A" CS-42-1526 VEX-210A Panel C-7	AUTO	If initiation signal is received, the "A" train fan will start. The fan start circuit will also energize the "A" SGTS heaters and open the "A" inlet and outlet dampers. When the initiation signal is reset, the fan stops, the heaters are de-energized and the dampers close if they are in AUTO.
	RUN	Starts the "A" fan and energizes the "A" heaters and opens the "A" inlet and outlet dampers
	OFF	Secures the "A" fan and de-energizes the heaters and closes the dampers if they are in AUTO. "A" system will not respond to an initiation signal.

5. **Control Room Controls (cont.)**

Item/Location	Functions of Positions	
SGTS exh. fan 'B' CS-42-1426 VEX-210B Panel C-7	STBY	If initiation signal is received, "B" train inlet damper opens. When OPEN limit switch picks up, "B" fan starts. Fan start circuit energizes heaters and opens "B" outlet damper. After 65 seconds, the "B" train shuts down by closing the inlet damper, which secures the fan, which de-energizes the heaters and closes the outlet damper. If SBGT flowrate is sensed to be <2000 scfm, the "B" train will re-start. When the initiation signal is reset, the inlet damper closes, which secures the fan, which de-energizes the heaters and closes the outlet damper.
	MAINT	Same as STBY except that the "B" train will not shutdown after 65 seconds. It will continue to run until initiation signal is reset or the fan control switch is taken to OFF.
	RUN	"B" fan starts which energizes the heaters and opens the outlet damper. NOTE: The inlet damper must be opened first. It does not open if its switch is in AUTO.
	OFF	Shuts the "B" inlet damper and secures the "B" fan which de-energizes the heaters and shuts the outlet damper.
"A" SGTS inlet/outlet dampers AO-99 (108) HS-SLV-58(67) Panel C-7	AUTO	When "A" SGTS fan gets start signal, inlet (outlet) damper opens. Inlet (outlet) damper closes when "A" SGTS fan is secured.
	OPEN	"A" SGTS inlet (outlet) damper opens, or will not close when "A" SGTS fan is secured.

5. **Control Room Controls (cont.)**

Item/Location	Functions of Positions	
"B" SGTS Inlet Damper AO-106 HS-SLV-62 Panel C-7	AUTO	"B" SGTS inlet damper opens in response to system start signals as described above for "B" fan control switch.
	OPEN	"B" SGTS inlet damper opens. When it opens, a start signal is sent to the "B" fan circuit, which will start the remainder of "B" SGTS as described in fan control switch description above.
"B" SGTS outlet damper AO-112 HS-SLV-70 Panel C-7	AUTO	When "B" SGTS fan gets start signal, outlet damper opens. Outlet damper closes when "B" fan is secured.
	OPEN	"B" SGTS outlet damper opens, or will not close when "B" SGTS fan is secured.
SGTS x-tie dampers AO-135 (136) HS-SLV-77(78) Panel C-7	OPEN	Opens the cross-tie damper(s)
	CLOSE	Closes the cross-tie damper(s) **NOTE:** Air lines have been disconnected from these dampers and the dampers are failed open. Switches are used for testing when the air lines are re-connected.
RPW A & RPW B Keylock switches Panel C-7	TEST LOGIC	Defeats relays which initiate SGTS to allow logic test without initiating SGTS.
	STBY	System in standby for auto initiation
	ISOLATE	Manual initiation of SGTS and secondary containment isolation (RBIS)

6. **Local Controls**

None

E. SYSTEM INTERRELATIONSHIPS

1. Reactor Building HVAC

The SGTS takes a suction from the following points during reactor building isolation conditions via the reactor building contaminated exhaust vent:

a. condensate demineralizer vents
b. O_2 analyzer vent line
c. HPCI gland seal condenser exhauster
d. refueling floor exhaust vent

2. HPCI System

During HPCI system operation the standby gas treatment system receives and processes non-condensable gases from the gland seal condenser exhauster, prior to releasing them to the atmosphere, any time the reactor building ventilation system is isolated.

3. Primary Containment Atmosphere Control System

The primary atmosphere control system discharges drywell and torus atmosphere to the SGT system when airborne activity levels are high, or the mode switch is in RUN.

4. Fire Protection System

The fire protection system supplies the water for the deluge spray system; if the fire protection system were lost, it would not prevent SGT system operation. However, care must be taken to ensure that excessive heat production in the charcoal filter beds does not cause a fire.

5. Power Supplies - DC/AC

Breaker Number	Component
480 V power center B-14	
1416A	SGT train B heaters
1426	SGT train B exhaust fan

Breaker Number	Component
480 V power center B-15	
1516A	SGT train A heaters
1526	SGT train A exhaust fan
480 V power center B-19	
B19121	Recharge Compressor K-203
120 V safeguard power supply panel Y-3	
Breaker no. 6	- Temperature indication train A - Differential pressure indication train A - Valve indication train A
120 V safeguard power supply panel Y-4	
Breaker no. 6	- Temperature indication train B - Differential pressure indication train B - Valve indication train B
125 V DC distribution panel D-4	
Breaker no. 15	Solenoid valves SV-L67(58,61,57)
125 V DC distribution panel D-5	
Breaker no. 15	Solenoid valves SV-L59(60,62,70)
120 V instrument power supply panel Y-1	
Breaker no. 1	Recorder, panel 902
120 V vital services instrument power supply panel Y-2	
Breaker no. 1	Detector power supply, panel 910

F. SYSTEM OPERATIONAL SUMMARY

1. Normal System Operation

Normally the Standby Gas Treatment System is lined up for automatic operation. The inlet and outlet dampers AO-99, 108, 106, 112 are closed. The Crosstie Dampers AO-135, 136 are open (and will remain open). SGTS Exhaust Fan A is in the AUTO position. SGTS Fan B is in the STBY position.

When an initiation signal is received, SGTS Fan A starts, the "A" train inlet and outlet dampers open and the heaters energize. The "B" SGTS train starts as follows: the inlet damper (AO-106) opens, the "B" fan starts, the outlet damper opens and the heaters energize. If there is normal flow through the system, after 65 seconds the "B" train shuts down. The "B" train will remain in standby and the "A" train will continue to run.

If the "A" train failed to start or shuts down, while the initiation signal is still present, the "B" train will re-start if low combined discharge flow, (< 2000 scfm), is sensed.

The HEPA filters and charcoal filter beds remove gaseous and particulate contaminants, especially iodine from the airstream prior to discharge to the environment through the main stack.

Drywell and torus atmospheres can be vented through the purge ventilation system by either of two flow paths, depending on its activity level.

The SGTS automatically secures when the initiation signal has cleared and reset, or it can be manually secured by placing the fan control switches in OFF.

If the "A" SGTS train must be secured for maintenance, its fan control switch is taken to OFF and the "B" fan control switch is taken to MAINTENANCE. Under these conditions, the "B" train will start on an initiation signal and not shut down after 65 seconds but continue to run while the initiation signal is present.

2. Infrequent Operations

Every cycle the HEPA filter and charcoal bed efficiency must be tested. To test the charcoal beds, a halogenated hydrocarbon is injected into the system upstream of the beds. Measurements upstream and downstream of the beds are taken to determine the efficiency. DOP (dioctylpthalate) smoke is used for HEPA filter testing. SGTS operability and automatic start testing is required every 3 months. This is done by simulating the initiation signals.

3. Abnormal Operations

Under accident conditions, where the integrity of the primary containment is threatened by either high pressures or a combustible atmosphere within the containment, venting of the containment may be required irrespective of the offsite radioactive release rate. The SGTS will be used for this evolution and in extreme cases, the direct torus vent path will be used. EOP-03 and PNPS 5.4.6 provide guidance under these conditions.

G. INDUSTRY LESSONS LEARNED

1. Problem Report 95.9513.05

While preparing for maintenance on 'A' Standby Gas Treatment System, breaker B1526 was removed from its cubicle. This caused the inlet and outlet dampers (AO-N-99) and AO-N-108) to the 'A' SBGT fan to go to the full open position. This action is, by design, to insure a flowpath is available when SBGT is required to operate. Upon discovery of this condition (after approximately 1.5 hours), breaker B1536 was re-energized and the dampers restored to the closed position.

PNPS procedure 2.2.50 requires that when 'A' SBGT fan is taken out of service that AO-N-99 be placed in the closed position. This is to prevent the possibility of humid air affecting the performance of the charcoal filters.

The root cause was identified as human performance errors:

a) Planning personnel did not identify the inlet and outlet dampers failing open
b) Operations personnel did not identify the consequences of breaker removal

TABLE 1
STANDBY GAS TREATMENT SYSTEM INITIATION

AUTOMATIC RESPONSE OF SYSTEM

1. The Standby Gas Treatment System (SGTS) will automatically start under any of the following conditions:

   a. High radiation signals in each of the refueling floor exhaust duct radiation trip channels (16 mR/hr - 67 mR/hr).

   b. One refuel floor high radiation signal in one trip channel and two simultaneous downscale signals in the other channel.

   c. Simultaneous downscale signals from all four refueling floor duct radiation monitors.

   d. Low reactor water level (+12").

   e. High drywell pressure (2.2 psig).

2. Upon initiation, the following sequence occurs:

   a. VEX-210A (STANDBY GAS FAN A) starts. AO-N-99 and AO-N-106 (TRAIN A INLET DMPR and TRAIN B INLET DMPR) open.

   b. When VEX-210A is running, AO-N-108 (TRAIN A OUTL DMPR) will open and the Train A air heaters will energize.

   c. When AO-N-106 (TRAIN B INLET DMPR) is open, a limit switch starts VEX-210B (STANDBY GAS FAN B).

   d. When VEX-210B is running, AO-N-112 (TRAIN B OUTL DMPR) opens and the Train B heaters energize.

   e. After a time delay of 65 seconds (provided there is normal air flow in Train A), AO-N-106 (TRAIN B INLET DMPR) will close, STANDBY GAS FAN B will shut down, AO-N-112 (TRAIN B OUTL DMPR) will close, and heater coil will be de-energized.

   f. Flow element FE-8135 senses fan discharge flow rate (setpoint approximately 2000 cfm). If an initiation is present and FE-8135 does not sense the setpoint flow, the B fan will not be permitted to shut down after the 65 second timer has elapsed. This condition will be indicated by an amber light illumination above the STANDBY GAS FAN B control switch on Panel C7.

   g. When STANDBY GAS FAN A control switch is not in AUTO and an initiation occurs, the B train will start. However, the amber light triggered by FE-8135 will be illuminated. The illuminated amber light may or may not indicate a true low flow condition in this situation. Additional positive means of flow verification must be performed to ensure SGTS is operating. Such verification may be from flow indicators of DP indication on C7, checking that air flow is entering the Rx Building at access control, or other methods.

TABLE 2
STANDBY STATUS FOR SBGT

The controls and indication on Control Panel C7 shall be as indicated below for STANDBY STATUS:

Equipment (Train)	Before Initiation	Switch or Indication	Control Switch Description
AO-N-100(A,B)	OPEN	Red	CLN EXH PLENUM DMPR
AO-N-137(B)	CLOSED	AUTO/Green	CONTAMINATED EXH DIVERT DMPR
AO-N-138(A)	CLOSED	AUTO/Green	REFUEL FLR EXH DIVERT DMPR
AO-N-98(A)	CLOSED	AUTO/Green	CONTAMINATED EXH PLENUM DMPR
AO-N-101(B)	CLOSED	AUTO/Green	REFUEL FLR EXH PLENUM DMPR
AO-N-99(A)	CLOSED	AUTO/Green	TRAIN A INLET DMPR
AO-N-106(B)	CLOSED	AUTO/Green	TRAIN B INLET DMPR
AO-N-136(A,B)	OPEN	Red	INLET CROSS CONNECT DAMPER
AO-N-135(A,B)	OPEN	Red	OUTLET CROSS CONNECT DAMPER
AO-N-108(A)*	CLOSED	AUTO/Green	TRAIN A OUTL DMPR
AO-N-112(B)*	CLOSED	AUTO/Green	TRAIN B OUTL DMPR
MO-N-109(A)	OPEN	Pot. Cntrl. Open	STANDBY GAS FAN A OUTLET DAMPER
MO-N-113(B)	OPEN	Pot. Cntrl. Open	STANDBY GAS FAN B OUTLET DAMPER
VEX-210A(A)	OFF	AUTO/Green	STANDBY GAS FAN A
VEX-210B(B)	OFF	STANDBY/Green	STANDBY GAS FAN B

* A Train and B Train automatic dampers are interlocked with SGT fans VEX-210A and VEX-210B so that dampers will not be open if the respective fans are not running.

TABLE 3
SBGT STATUS AFTER AUTO INITIATION

Equipment (Train)	Before Initiation	Switch or Indication	Control Switch Description
AO-N-100(A,B)	OPEN	Red	CLN EXH PLENUM DMPR
AO-N-137(B)	OPEN	AUTO/Red	CONTAMINATED EXH DIVERT DMPR
AO-N-138(A)	OPEN	AUTO/Red	REFUEL FLR EXH DIVERT DMPR
AO-N-98(A)	OPEN	AUTO/Red	CONTAMINATED EXH PLENUM DMPR
AO-N-101(B)	OPEN	AUTO/Red	REFUEL FLR EXH PLENUM DMPR
AO-N-99(A)	OPEN	AUTO/Red	TRAIN A INLET DMPR
AO-N-106(B)	OPEN	AUTO/Red	TRAIN B INLET DMPR
AO-N-136(A,B)	OPEN	Red	INLET CROSS CONNECT DAMPER
AO-N-135(A,B)	OPEN	Red	OUTLET CROSS CONNECT DAMPER
AO-N-108(A)*	OPEN	AUTO/Red	TRAIN A OUTL DMPR
AO-N-112(B)*	OPEN	AUTO/Red	TRAIN B OUTL DMPR
MO-N-109(A)	OPEN	Pot. Cntrl. Open	STANDBY GAS FAN A OUTLET DAMPER
MO-N-113(B)	OPEN	Pot. Cntrl. Open	STANDBY GAS FAN B OUTLET DAMPER
VEX-210A(A)	ON	AUTO/Red	STANDBY GAS FAN A
VEX-210B(B)	ON	STANDBY/Red	STANDBY GAS FAN B (only 65 seconds)

* A Train and B Train automatic dampers are interlocked with SGT fans VEX-210A and VEX-210B so that dampers will be closed if the respective fans are not running. After systems initiation, if one fan fails, its associated discharge damper should be verified closed.

H. LIST OF FIGURES

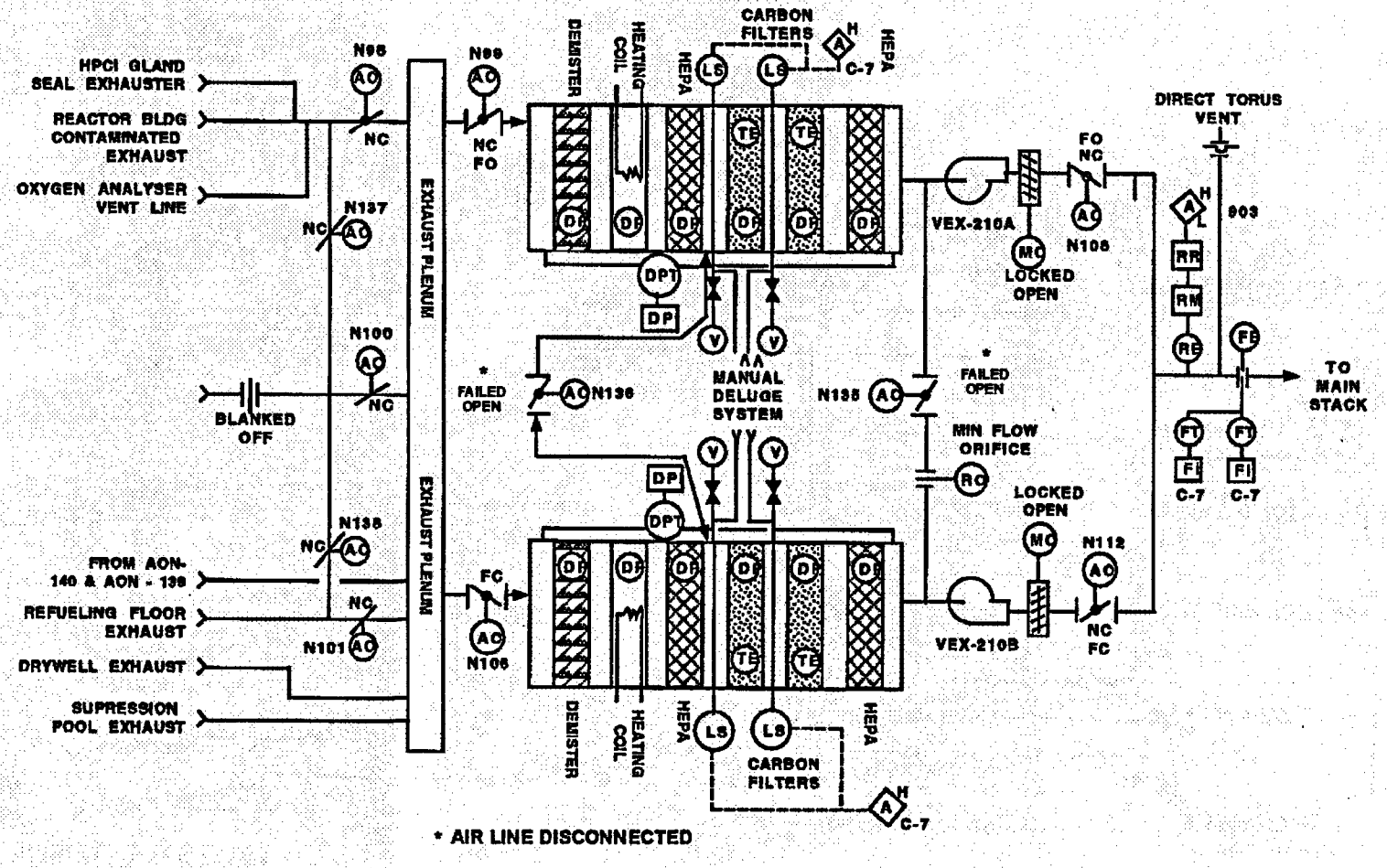

STANDBY GAS TREATMENT SYSTEM

FIGURE 1

19OP7219

Rev. 8

PRINT M50-3-3 STANBY GAS TREATMENT SYSTEM HEATER CONTROLS

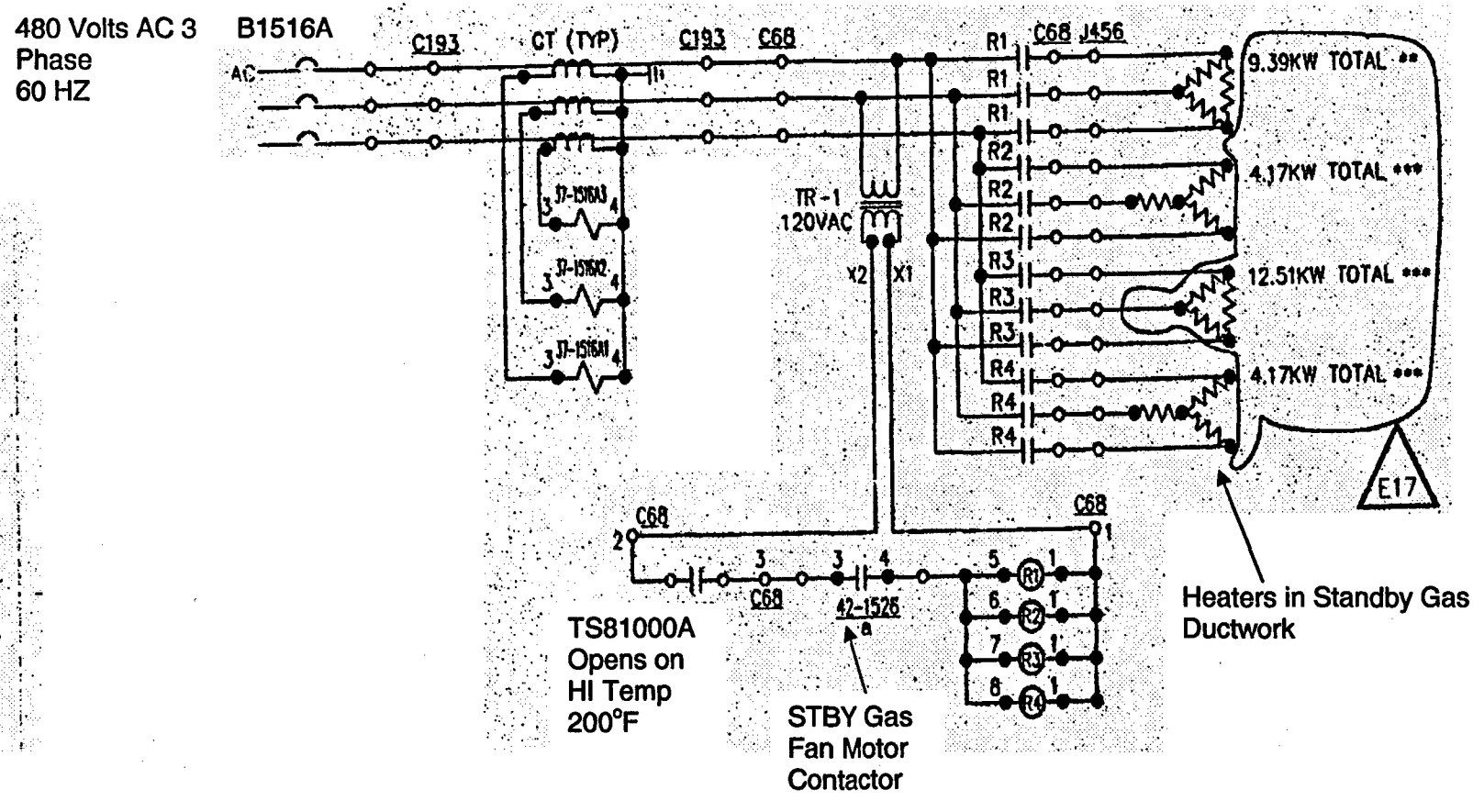

FIGURE 2

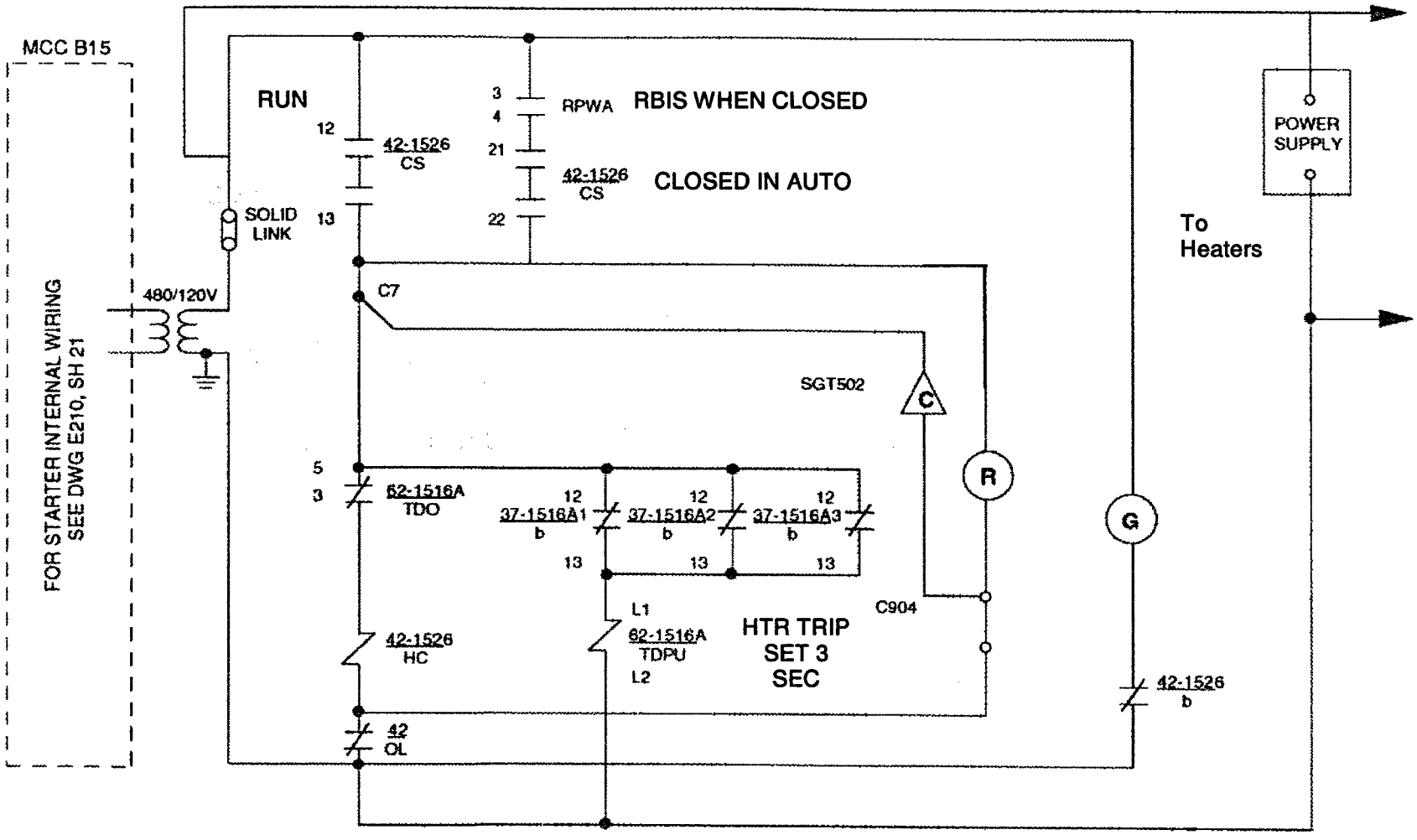

PRINT E-241

SBGT SCHEMATIC - TRAIN A
Figure 3

101op11095a

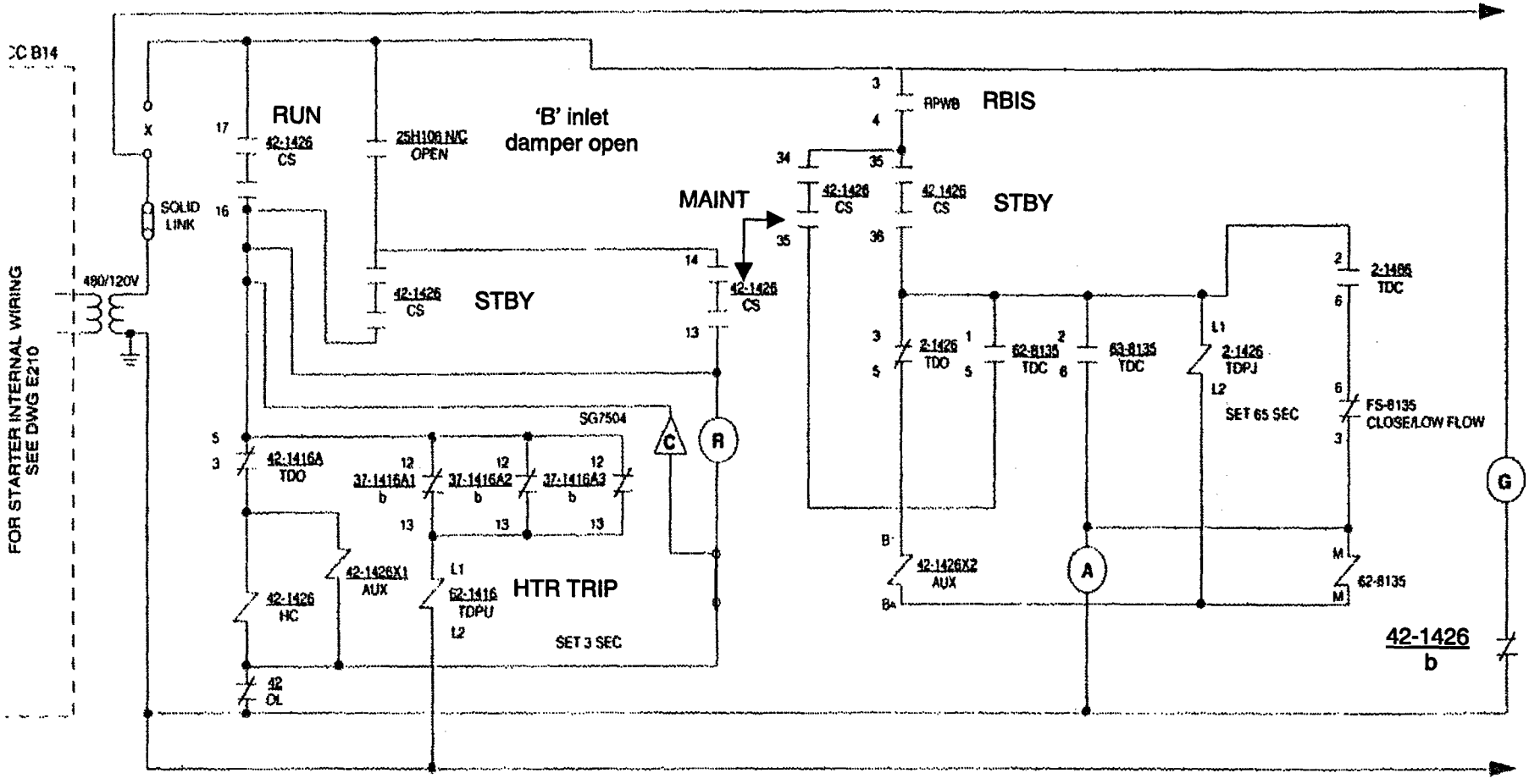

PRINT E-241

SBGT SCHEMATIC - TRAIN B
Figure 4

101op11095a

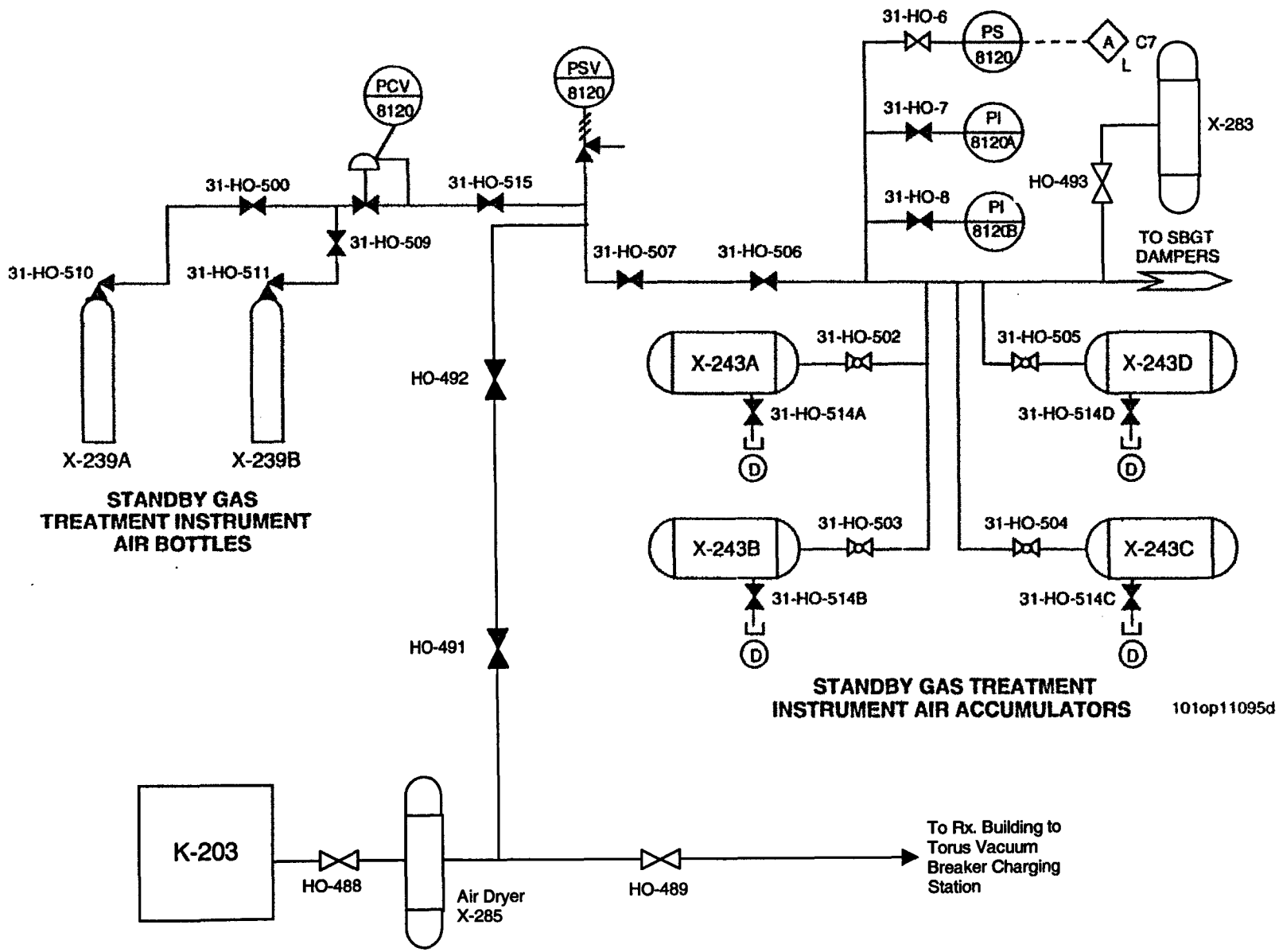

SBGT Instrument Air System
Figure 5