SOUTHERN CALIFORNIA
EDISON®
An EDISON INTERNATIONAL® Company

A. Edward Scherer
Manager of
Nuclear Regulatory Affairs

May 10, 2006

U.S. Nuclear Regulatory Commission
Attn: Document Control Desk
Washington, DC 20555-0001

Subject: **Docket Nos. 50-361**
Weld Overlay Design and Analysis for Pressurizer Safety Relief and Spray Nozzle-to-Safe End Welds in support of ISI-3-18
San Onofre Nuclear Generating Station, Unit 2

Dear Sir or Madam:

This letter transmits Report No. SIR-06-143, "Weld Overlay Design and Analysis for Pressurizer Safety Relief and Spray Nozzle-to-Safe End Welds at San Onofre Nuclear Generating Station, Unit 2."

Southern California Edison (SCE) submitted ISI-3-18 on February 22, 2006, and provided supplemental information by letter dated March 17, 2006. ISI-3-18 requested approval for repair/replacement activities related to the performance of structural weld overlay repairs at San Onofre Nuclear Generating Station Unit 2. In the February 22, 2006 letter SCE committed to submit to the NRC a summary report of the weld overlay design and analysis. This letter with the enclosure fulfills this commitment.

Please note that in the enclosed report, Figures 2-1 and 2-2 have been removed because they were marked Proprietary by Structural Integrity. These figures can be found in Attachment 3 to the February 22, 2006, submittal.

Should you have any questions, please contact Mr. Jack Rainsberry at (949) 368-7420

Sincerely,

Enclosure: As stated

cc: B. S. Mallett, Regional Administrator, NRC Region IV
N. Kalyanam, NRC Project Manager, San Onofre Units 2 and 3
C. C. Osterholtz, NRC Senior Resident Inspector, San Onofre Units 2 and 3

P.O. Box 128
San Clemente, CA 92672
949-368-7501
Fax 949-368-7575

A047

Southern California Edison (SCE)

San Onofre Nuclear Generating Station (SONGS), Unit 2

Docket No. 50-361

Enclosure

Report No. SIR-06-143,
"Weld Overlay Design and Analysis for Pressurizer Safety Relief and Spray Nozzle-to-Safe End Welds at San Onofre Nuclear Generating Station, Unit 2,"

Report No.: SIR-06-143
Revision No.: 1
Project No.: SONG-08Q
File No.: SONG-08Q-401
April, 2006

Weld Overlay Design and Analysis for Pressurizer Safety Relief and Spray Nozzle-to-Safe End Welds at San Onofre Nuclear Generation Station, Unit 2

Prepared for:

Southern California Edison
WSI PO #36594, Rev. O. (SCE Contract 6D226001)

Prepared by:

Structural Integrity Associates, Inc.
San Jose, CA

Prepared by: _____ Date: 04/28/06
P. C. Riccardella

Reviewed by: _____ Date: 04/28/06
H. L. Gustin

Approved by: _____ Date: 04/28/06
M. S. Lashley

REVISION CONTROL SHEET

Document Number: SIR-06-143

Title: Weld Overlay Design and Analysis for Pressurizer Safety Relief Nozzle-to-Safe End Welds at San Onofre Nuclear Generation Station, Unit 2

Client: Southern California Edison

SI Project Number: SONG-08Q

Sections	Pages	Revision	Date	Comments
1 – 9	All	0	4/19/06	Initial Issue
1 - 9	All	1	04/28/06	Incorporated Client Comments

Professional Engineer Certification Statement

"Weld Overlay Design and Analysis for Pressurizer Safety Relief Nozzle-to-Safe End Welds at San Onofre Nuclear Generation Station, Unit 2, SIR-06-143, Revision 1

I, Harry L Gustin, being a duly licensed professional engineer under the laws of the State of Colorado, certify that this document and calculations contained herein were reviewed by me, and that this document meets the requirements of ASME Section XI and Section III (Editions and Addenda as referenced in the individual calculations), and requirements of Code Case N-504-2, all as applicable to the specific scope of this report. This report is supplementary to the governing Code Design Reports for the systems and components described herein, and does not invalidate those reports. I further certify that this document is correct and complete to the best of my knowledge and belief, and that I am competent to review this document.

Harry L Gustin

Harry L. Gustin, P.E.
State of Colorado
Registration Number 34862

Revision 1: April 28, 2006

COLORADO REGISTERED
HARRY LATHAM GUSTIN
34862
PROFESSIONAL ENGINEER

HLG
4/28/06

Table of Contents

Section Page

1.0 INTRODUCTION 1-1

1.1 Background 1-1

1.2 Weld Overlay Repair 1-1

1.3 Objectives and Report Organization 1-2

2.0 WELD OVERLAY DESIGN 2-1

2.1 Repair Description 2-1

2.2 Criteria for Design of Structural Weld Overlay Repairs 2-2

2.3 Weld Overlay Structural Sizing 2-3

2.3.1 Overlay Thickness 2-3

2.3.2 Weld Overlay Length 2-3

2.4 Comparison with Field Measurements 2-4

3.0 RESIDUAL STRESS ANALYSIS 3-1

3.1 Background 3-1

3.2 Technical Approach 3-1

3.3 Residual Stress Analysis Results 3-3

4.0 EVALUATION OF WELD OVERLAY SHRINKAGE STRESSES 4-1

4.1 Background 4-1

4.2 Evaluation of Weld Overlay Shrinkage Stresses in SONGS-2 Pressurizer Nozzles ... 4-2

5.0 CRACK GROWTH CONSIDERATIONS 5-1

5.1 Background 5-1

5.2 Technical Approach 5-1

5.3 Crack Growth Results 5-2

5.3.1 Safety Relief Nozzles 5-2

5.3.2 Spray Nozzle 5-3

6.0 ASME SECTION III STRESS ANALYSIS 6-1

6.1 Background 6-1

6.2 Technical Approach 6-1

6.3 Results of Analysis 6-2
6.3.1 Safety Relief Nozzles 6-2
6.3.2 Spray Nozzle 6-3
6.4 Concluding Remarks 6-4

7.0 SUMMARY AND CONCLUSIONS 7-1

8.0 REFERENCES 8-1

9.0 APPENDICES (STRUCTURAL INTEGRITY ASSOCIATES CALCULATION PACKAGES) 9-1

List of Tables

Table Page

Table 2-1: Weld Overlay Structural Thickness and Length Requirements (Appendices A & B)2-5

Table 2-2: As-Built Dimensions of SONGS-2 Pressurizer Weld Overlays [8-11] 2-5

Table 4-1: SONGS-2 Pressurizer Weld Overlay Shrinkage Measurements [8-11]..... 4-3

Table 5-1: Predicted Fatigue Crack Growth for the Spray Nozzles based on 5-4

Table 6-1: Stress Results Along Critical Paths for the Safety Relief Nozzle 6-5

Table 6-2: Stress Results Along Critical Paths for the Spray Nozzle..... 6-6

Table 6-3: Allowable Cycles for the Spray Nozzle for Spray Thermal Transients at Various Temperature Ranges..... 6-7

List of Figures

Figure Page

Figure 1-1: Safety Relief Nozzle-to-Safe End Configuration and Materials at Songs 2 1-3

Figure 1-2: Spray Nozzle Nozzle-to-Safe End Dimensions and Materials at SONGS-2 1-4

Figure 2-1: SONGS Unit 2 Pressurizer Safety Relief Nozzle Weld Overlay Dimensions..... 2-1

Figure 2-2: SONGS Unit 2 Pressurizer Spray Head Weld Overlay Dimensions 2-2

Figure 3-1: Finite Element Model Used for Pressurizer Safety Relief Nozzle Residual Stress Analysis (Bottom Figure Illustrates Lumped Weld Nuggets Used in the Analysis) 3-5

Figure 3-2: Finite Element Model Used for Pressurizer Spray Nozzle Residual Stress Analysis3-6

Figure 3-3: Pre-WOL Residual Stresses in Safety Relief Nozzles Including Simulated Weld Repair 3-7

Figure 3-4: Pre-WOL Residual Stresses in Spray Nozzle Including Simulated Weld Repair ... 3-8

Figure 3-5: Post-WOL Residual Stresses in Safety Relief Nozzles 3-9

Figure 3-6: Post-WOL Residual Stresses in Spray Nozzle..... 3-10

Figure 3-7: ID Surface Hoop Stresses in Safety Relief Nozzle; Pre- and Post-overlay 3-11

Figure 3-8: ID Surface Axial Stresses in Safety Relief Nozzle; Pre- and Post-overlay 3-12

Figure 3-9: ID Surface Hoop Stresses in Spray Nozzle; Pre- and Post-overlay..... 3-13

Figure 3-10: ID Surface Axial Stresses in Spray Nozzle; Pre- and Post-overlay..... 3-14

Figure 6-1: Safety Relief Nozzle Linearized Stress Paths. (Paths 1 through 5 are for the uncracked model and Paths 6 and 7 for the cracked model.)..... 6-8

Figure 6-2: Spray Nozzle Linearized Stress Paths..... 6-9

1.0 INTRODUCTION

1.1 Background

During inservice inspections at the San Onofre Nuclear Generating Station Unit 2 (SONGS-2) in its Cycle 14 refueling outage, examinations were performed of four Class 1 reactor coolant system (RCS) pressurizer, dissimilar metal, nozzle to safe end welds. These welds are ISI Designation Numbers 02-005-027, 02-005-028, 02-005-029, and 02-005-030, which are three safety relief valve line nozzles and the pressurizer spray line nozzle, respectively.

Axial flaw indications were identified in ISI Designation Numbers 02-005-027 and 02-005-028. These indications were dispositioned as not being attributed to primary water stress corrosion cracking (PWSCC) as discussed below. However, SCE decided to perform a structural weld overlay on all four welds to eliminate dependence on the Alloy 82/182 welds as a pressure boundary weld and to mitigate any potential PWSCC in the future.

The axial flaws identified in welds 02-005-027 and 02-005-028 were found in the Alloy 82/182 weld material that is known to be subject to primary water stress corrosion cracking (PWSCC). However, SCE performed additional review of these axial flaw indications, including eddy current examinations on the inside surfaces of these welds. Through these supplemental examinations SCE concluded that the identified flaws are not surface connected and therefore are not PWSCC. There is evidence that the indications are related to fabrication flaws that were created during the fabrication of the welds. Nonetheless, instead of evaluating the flaws in accordance with ASME Section XI Code requirements SCE decided to perform the weld overlay repairs discussed herein.

1.2 Weld Overlay Repair

Weld overlays have been used routinely in U.S. BWRs and PWRs to repair flaws associated with stress corrosion cracking. The process is an ASME Code approved repair method under ASME

Code Case N-504-2 [3]. However, the unique nature of the geometry and materials of the SONGS pressurizer safe-end welds required design and implementation considerations beyond those specified by ASME Code Case N-504-2. These have been documented and approved in Reference [12]. The geometry and materials of the subject welds at SONGS-2 are shown in Figures 1-1 and 1-2. The nozzle material is low alloy steel, SA-508 Class 2, a P3 material that requires post weld heat treatment (PWHT) after welding. The safe end material for the three safety relief line welds is cast austenitic stainless steel, and for the spray nozzle is wrought austenitic stainless steel. The weld metal joining the safe ends to the nozzles is a combination of Alloy 182 nozzle butter and Alloy 82/182 butt weld. The low alloy steel nozzle material composition requires a post weld heat treatment after welding operations. As an option to thermal treatment after welding, the Gas Tungsten Arc Welding (GTAW) process using the ambient temperature temperbead welding technique with selective and carefully controlled weld bead placement and heat input has been successfully developed under Code Case N-638-1 [4] to achieve the same tempering effect. The nozzle material and other considerations dictate that the ambient temperature temperbead welding technique be used in this weld overlay application. Additionally, nickel alloy welding filler metal is required for this weld overlay for material compatibility with the Alloy 82/182 weld materials.

1.3 Objectives and Report Organization

The objective of this report is to provide the technical basis and a summary of the weld overlay design and analysis of the SONGS-2 pressurizer nozzle overlays. Detailed calculations supporting this report are contained in Appendices A thru N. Section 2.0 of this report discusses the repair and evaluation criteria for weld overlay design and basic structural sizing of the overlays. Section 3.0 summarizes the residual stress analyses performed. Shrinkage stresses that result from the overlay application are evaluated in Section 4.0. Consideration of flaw growth into the overlay repair is discussed in Section 5.0. Analyses demonstrating that the overlays meet ASME Code, Section III requirements that supplement the existing Stress Reports for the piping, safe ends, and nozzles are described in Section 6.0. A summary and conclusions are provided in Section 7.0, while Section 8.0 provides references used in this report.

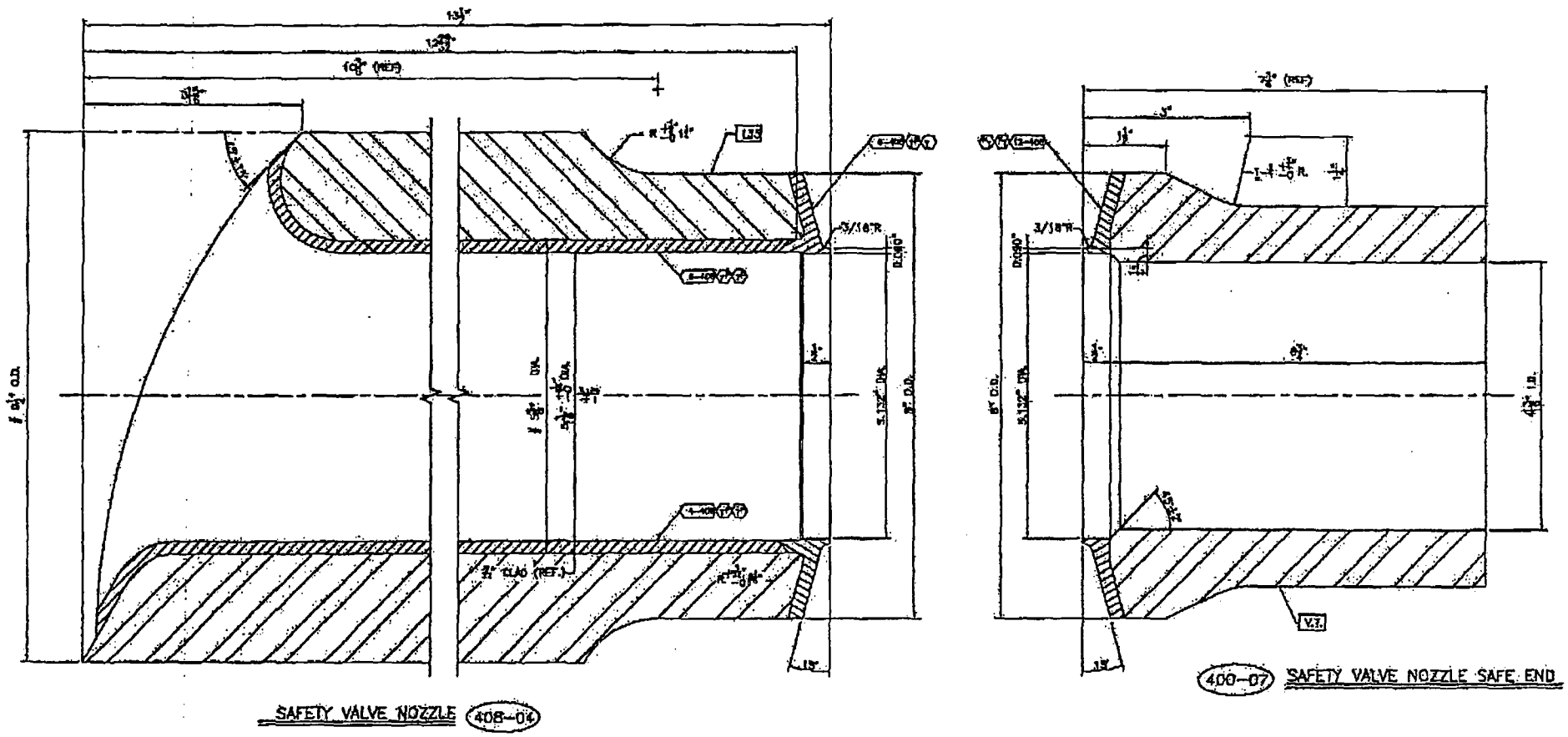

Figure 1-1: Safety Relief Nozzle-to-Safe End Configuration and Materials at Songs 2

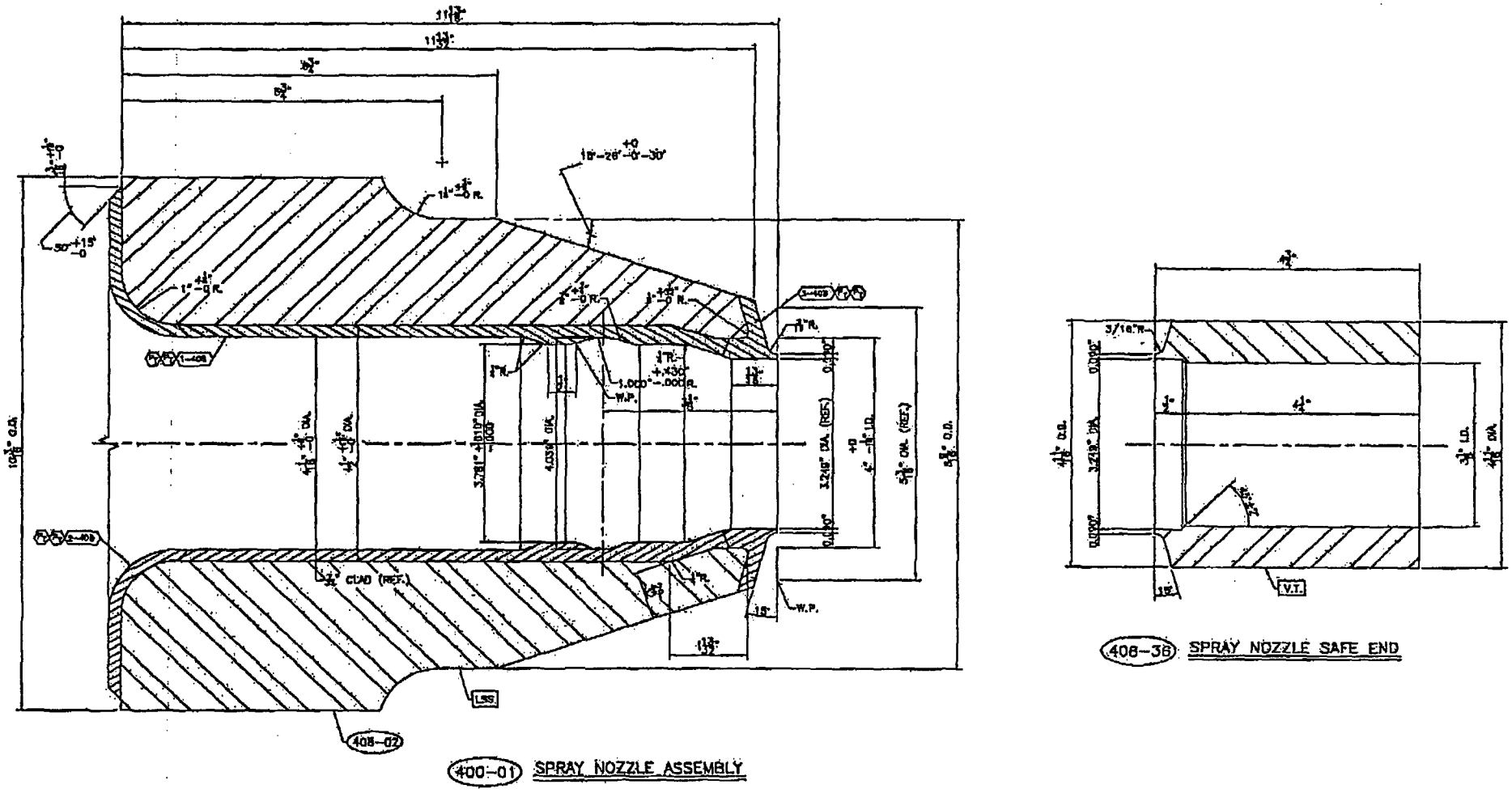

Figure 1-2: Spray Nozzle Nozzle-to-Safe End Dimensions and Materials at SONGS-2

2.0 WELD OVERLAY DESIGN

2.1 Repair Description

The overlay repairs were carefully controlled using the following steps in order to assure the integrity of the overlay and underlying weldment:

1. Surface preparation by grinding of the existing weld crown and any local protrusions to blend smoothly into the base metal, plus the removal of oxides and other foreign materials from the area to be overlayed.
2. Layout of the weld overlay per the design drawing by appropriately punch marking the safe end and nozzle.
3. Liquid penetrant examination of the surface to be overlayed to assure the surface is free of indications. Special requirements apply to subsequent overlay layers if this requirement is not met.
4. Measurement of the wall thickness on each side of the weld to be overlayed using UT techniques.
5. Application of the temperbead weld overlay layers.
6. Application of the remainder of the weld overlay layers to achieve a full structural weld overlay.
7. Surface preparation of the completed weld overlay to assure adequate surface contour and smoothness for UT examination.
8. Measurement of the final overlay thickness by UT techniques.
9. Liquid penetrant examination of the final overlay surface.
10. Volumetric examination of the completed weld overlay repair and part of the original pipe wall.

2.2 Criteria for Design of Structural Weld Overlay Repairs

The requirements for design of weld overlay repairs are defined in ASME Code Case N-504-2 [3], supplemented for this application by the approved Relief Request [12]. The analytical bases for the design of the repairs are in accordance with the requirements of ASME Code, Section XI, IWB-3641 [5]. Weld overlay repairs are considered to be acceptable long-term repairs for PWSCC-flawed weldments if they meet a conservative set of design assumptions which qualify them as "full structural" weld overlays. The three principal design requirements to qualify a weld overlay as "full structural" are:

1. The design basis for the repair is a circumferentially oriented flaw which extends 360° around the component, and is through the original component wall. This conservative assumption eliminates concerns about the reliability of the ultrasonic inspection that initially identified the flaw. In addition, potential concerns about the toughness of the original butt weld material are not applicable, since no credit is taken in the design process for the load carrying capability of the remaining component wall ligament.

2. As required by ASME Code, Section XI, IWB-3641 [5], a combination of internal pressure, deadweight and seismic stresses is used in the design of weld overlay repairs. Thermal and other secondary stresses are not required to be included for structural sizing calculations (since the repairs are applied using a GTAW process that produces high toughness weld deposit), but they are addressed later in fatigue and stress corrosion cracking evaluations.

3. Following the repair, the surface finish of the overlay must be sufficiently smooth to allow ultrasonic examination through the overlay material and into a portion of the original base metal. The purpose of this examination is, in part, to demonstrate that the repair thickness does not degrade with time due to continued flaw propagation.

2.3 Weld Overlay Structural Sizing

2.3.1 Overlay Thickness

Detailed sizing calculations for weld overlay thickness are documented in Appendices A and B (Structural Integrity Associates Calculations SONG-08Q-301 and -302) for the Safety Relief and Spray nozzles, respectively. The "Codes and Standards" module of the **pc-CRACK** computer program [16], which incorporates ASME Code, Section XI, IWB-3640 evaluation methodology, was used to determine the thickness of the overlay using loads and stress combinations provided by SCE. Both normal operating/upset (Level A/B) and emergency/faulted (Level C/D) load combinations were considered in this evaluation, and the design was based on the more limiting results. The resulting overlay thicknesses are summarized in Table 2-1. Because of weld metal dilution concerns over the carbon steel nozzle, a dilution weld layer has been added in addition to the thickness required for structural reinforcement to allow for the possibility that minimum required chromium content of 24% may not be achieved in the first layer (Figures 2-1 and 2-2).

2.3.2 Weld Overlay Length

Appendices A and B also present detailed calculations for weld overlay length sizing. The weld overlay length must consider three requirements: (1) length required for structural reinforcement, (2) length required for access for preservice and inservice examinations of the overlaid weld, and (3) limitation on the area of the nozzle surface that can be overlaid using ambient temperature temperbead welding.

In accordance with ASME Code Case N-504-2, the weld overlay length required for structural reinforcement was established as $0.75\sqrt{(Rt)}$ on either side of the susceptible weld being overlaid. Based on the dimensions shown in Figures 1-1 and 1-2, this formula yields a minimum length requirement of 1.63" for the Safety Relief nozzles and 1.19" on the nozzle side and 0.97" on the safe end side of the Spray nozzle. Note that these dimensions must be

measured from the intersection of the original Alloy 182 construction weld with the safe-end or nozzle material on the outside surface of the nozzle.

Weld overlay access for preservice examination requires that the overlay length and profile be such that the required post-WOL exam volume can be inspected using PDI qualified NDE techniques. This requirement could cause the overlay lengths to be longer than required for structural reinforcement. Design sketches of the overlay are presented Figures 2-1 and 2-2. These have been reviewed by qualified personnel to ensure that they meet this requirement.

Finally, review of the WOL designs in Figures 2-1 and 2-2 indicate that the maximum surface area of low alloy steel material covered by weld overlay are <70 in^2 for the safety relief nozzles and < 50 in^2 for the spray nozzle. These are well within the 100 in^2 limit specified in Code Case N-638-1.

2.4 Comparison with Field Measurements

The measured as-built thicknesses and lengths of the overlays, after final machining are summarized in Table 2-2 [8-11]. These measurements exceed the overly minimum structural design dimensions demonstrating the adequacy of the as-installed repairs.

Table 2-1: Weld Overlay Structural Thickness and Length Requirements (Appendices A & B)

		Safety Relief Nozzles 02-005-027, -28, & -29	Spray Nozzle 02-005-030
Minimum* Thickness (in.)	Nozzle Side	0.4	0.29
	Safe End Side	0.4	0.24
Minimum** Length (in.)	Nozzle Side	1.63	1.19
	Safe End Side	1.63	0.97

* - Weld dilution layer (0.08") must be added

** - Additional length requirements apply for inspectability (see Figs. 2-1 and 2-2)

Table 2-2: As-Built Dimensions of SONGS-2 Pressurizer Weld Overlays [8-11]

		Safety Relief Nozzle 02-005-027	Safety Relief Nozzle 02-005-028	Safety Relief Nozzle 02-005-029	Spray Nozzle 02-005-030
Minimum Thickness (in.)	Nozzle Side	0.52	0.56	0.54	0.438
	Safe End Side	0.52	0.54	0.52	0.375
Minimum Length (in.)	Nozzle Side	2.188	2.063	2.375	2.125
	Safe End Side	2.75	2.188	1.625	1.688

Figure 2-1 removed,
as it is marked
SI Proprietary

Please refer to the Safety Nozzle Assembly drawings in
Attachment 3 of ISI-3-18,
submitted by letter from
A.E. Scherer to the U.S. Nuclear Regulatory Commission
dated February 22, 2006

Figure 2-2 removed,
as it is marked
SI Proprietary

Please refer to the Spray Nozzle Assembly drawing in
Attachment 3 of ISI-3-18,
submitted by letter from
A.E. Scherer to the U.S. Nuclear Regulatory Commission
dated February 22, 2006

3.0 RESIDUAL STRESS ANALYSIS

3.1 Background

In addition to providing structural reinforcement to the flawed location to meet ASME Code safety margins, the weld overlay produces beneficial residual stresses that support the mitigation of PWSCC. The weld overlay approach has been used in the U.S. nuclear industry on hundreds of welds. There have been no reports of crack extension after application of the weld overlay. Thus, the compressive stresses caused by the weld overlay have been effective in mitigating crack growth. In addition, the weld residual stresses from this calculation are used as mean stresses in the fatigue crack growth assessments.

The weld residual stresses for the SONGS-2 pressurizer weld overlays were determined by detailed elastic-plastic finite element analyses as documented in Appendices F and G (SI Calculations SONG-08Q-306 and -307). The residual stress calculations were based on the design weld overlay dimensions in Section 2.0. The analysis approach has been previously documented to provide predictions of weld residual stress that are in reasonable agreement with experimental measurements [1, 2, 13].

3.2 Technical Approach

The residual stresses due to welding are controlled by the welding parameters, thermal transients due to application of the welding process, thermal boundary conditions, temperature dependent material properties, and elastic-plastic stress reversals. The analytical technique uses finite element analysis to simulate the multi-pass weld repair and weld overlay process. In order to reduce computational time, individual weld bead passes are lumped into larger nuggets, as illustrated in the bottom portion of Figure 3-1.

To obtain a bounding assessment of the impact of the weld overlay on the flawed location, the residual stress assessment must consider residual stresses that existed prior to application of the overlay. Thus, the weld overlay analysis utilized a conservative bounding assumption regarding residual stresses that may be present due to assumed weld repairs that may have occurred during plant construction.

Two-dimensional, axisymmetric finite element models were developed for the Safety Relief and Spray Nozzles using the ANSYS software package [14]. The models are illustrated in Figures 3-1 and 3-2, and include a portion of the pressurizer and nozzle, the safe-end weld and butter, the safe end and a portion of the piping. Note that both models include a simulated ID repair at the DMW location with a depth = 50% through the original wall thickness. This assumption is considered to conservatively bound any weld repairs that may have been performed during plant construction, from the standpoint of producing tensile residual stresses on the inside surface of the weld. The axisymmetric assumption is geometrically exact for the spray nozzle, and a reasonable assumption for the safety relief nozzles.

A thermal analysis is performed to simulate the welding process of the repair, the overlay welding process, and finally, a heatup to operating temperature. A non-linear, elastic-plastic stress analysis then is performed to calculate the resulting residual stress state at various times. The analysis consists of a thermal pass to determine the temperature response of the model to each individual lumped weld nugget as it is added in sequence, followed by an elastic-plastic stress pass to calculate the residual stress due to the temperature cycling from the application of each lumped weld pass. Since residual stress is a function of the welding history, the stress pass for each nugget is applied to the residual stress field induced from all previously applied weld nuggets.

After completion of the weld overlay simulation, the model was allowed to cool to a uniform 70°F, and then heated up to a uniform 650°F in order to obtain the residual stresses at operating temperature.

3.3 Residual Stress Analysis Results

The pre-weld overlay residual stress distributions, including the effect of the assumed construction weld repair, are shown in Figures 3-3 and 3-4 for the safety relief and spray nozzles, respectively. Note the highly tensile state on the inside surfaces of the DMW. This result represents a conservative starting point for the weld overlay residual stress analysis, and is consistent with field experience with PWSCC in PWR dissimilar metal welds (i.e. essentially all welds in which PWSCC has occurred were found to have had significant weld repairs during plant construction).

The post weld overlay residual stresses at normal operating conditions, representing the final stage of the analysis, are presented in Figure 3-5 and 3-6. It is seen from these figures that, upon application of the WOL, the stresses on the inside surface of the original DMW are reversed to compressive. The ID compression is balanced by tensile stresses in the WOL itself. Tensile residual stresses in the WOL are not a PWSCC concern, because the overlays were installed with Alloy 52M weld metal, a material that has been shown to offer significant improvement in PWSCC resistance.

The favorable residual stress reversal on the susceptible ID surface is further illustrated by Figures 3-7 through 3-10, which are plots of ID surface stresses, before and after application of the WOL. The region of PWSCC susceptible Alloy 82/182 weld material and butter is indicated on these plots. The compressive nature of the ID surface stresses, as opposed to the high tensile pre-overlay values, is demonstration that the overlays will serve their intended purpose of preventing any new PWSCC initiation in regions of the weld that aren't cracked, and inhibiting crack growth of any existing cracks that may have initiated. Through-wall residual stress distributions from these analyses will be used later in this report as input to fatigue and PWSCC crack growth calculations.

More detailed descriptions of the residual stress analyses including complete presentation of the input, assumptions and results are contained in Appendices F and G of this report.

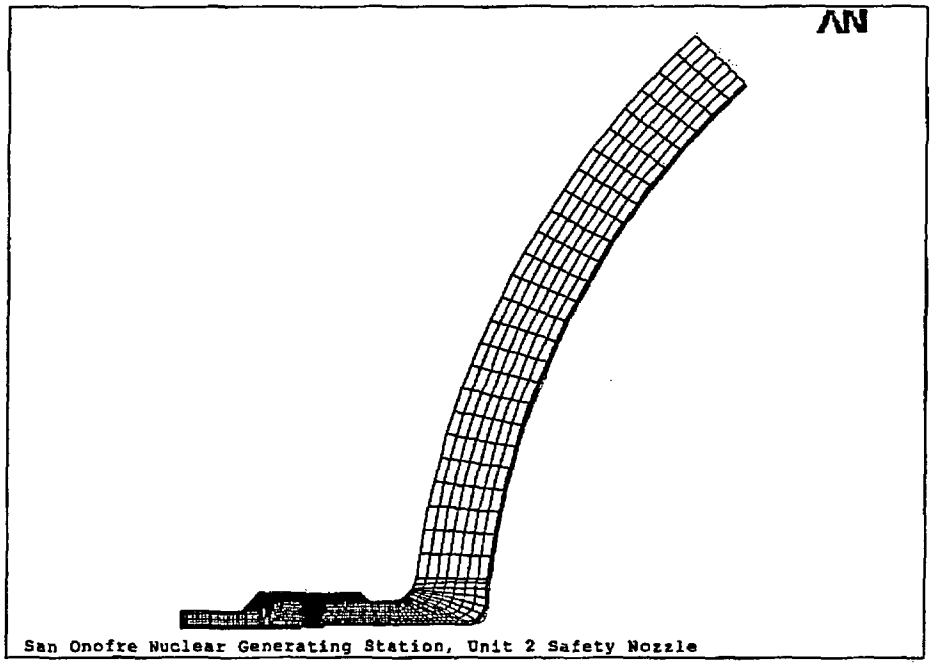

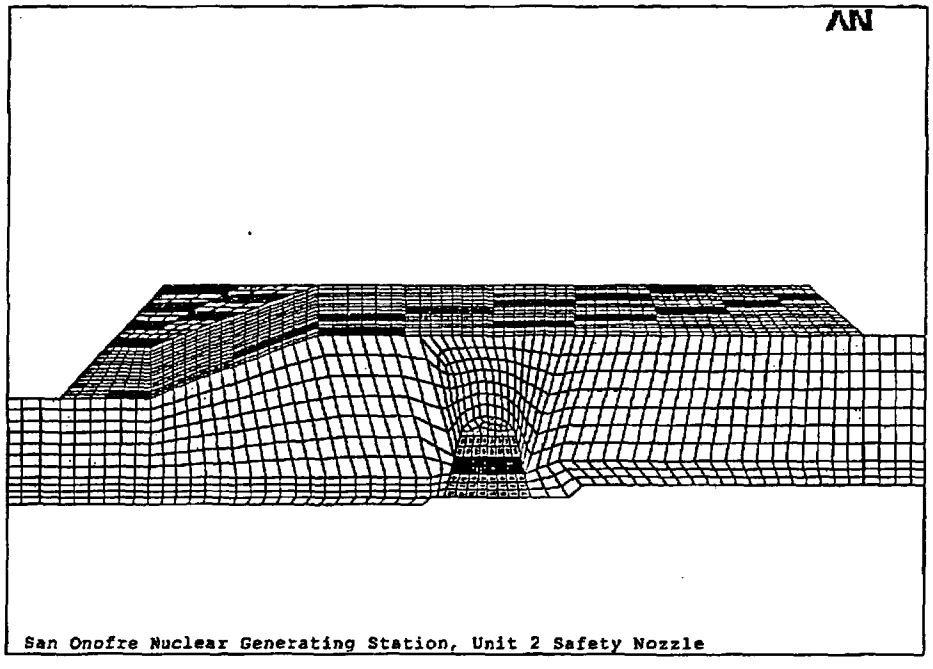

Figure 3-1: Finite Element Model Used for Pressurizer Safety Relief Nozzle Residual Stress Analysis (Bottom Figure Illustrates Lumped Weld Nuggets Used in the Analysis)

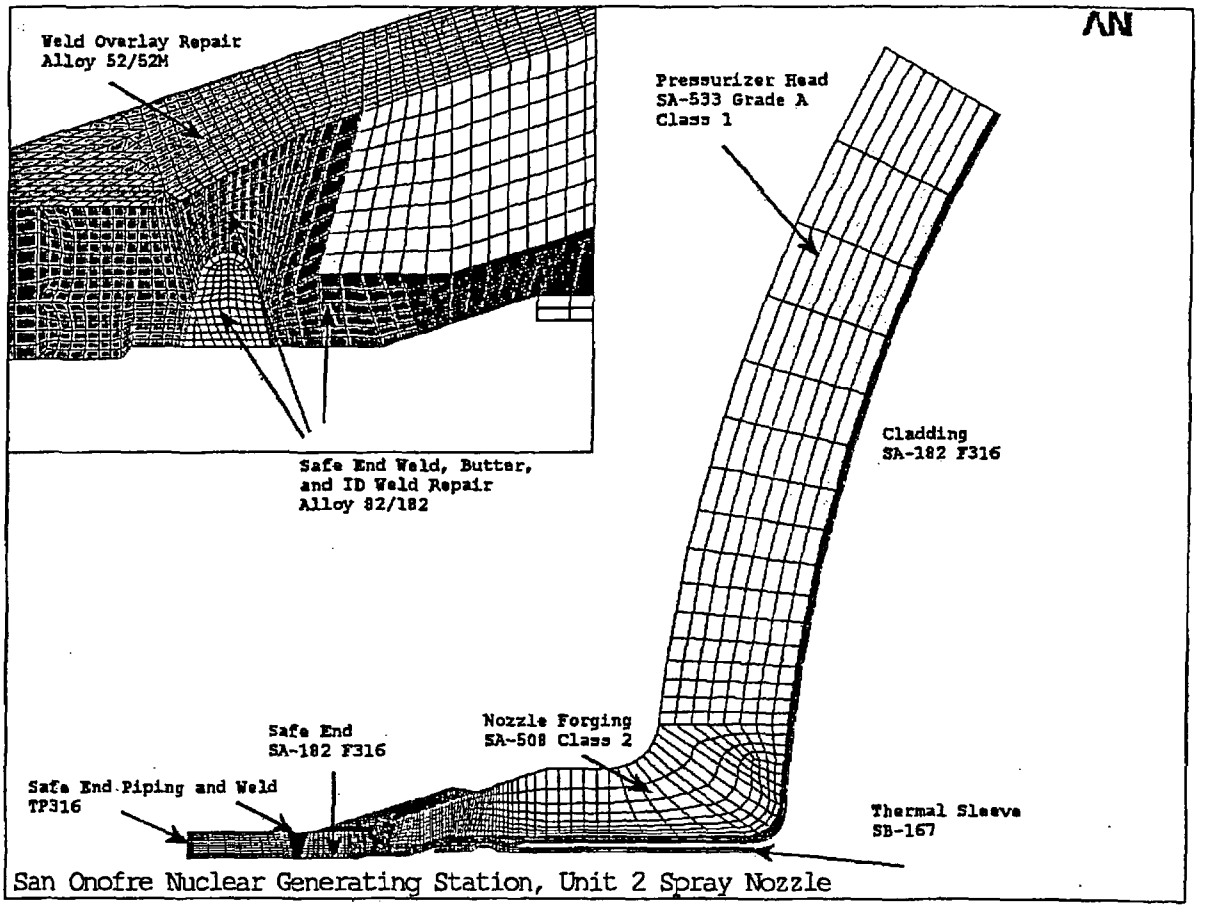

Figure 3-2: Finite Element Model Used for Pressurizer Spray Nozzle Residual Stress Analysis

Hoop Stresses

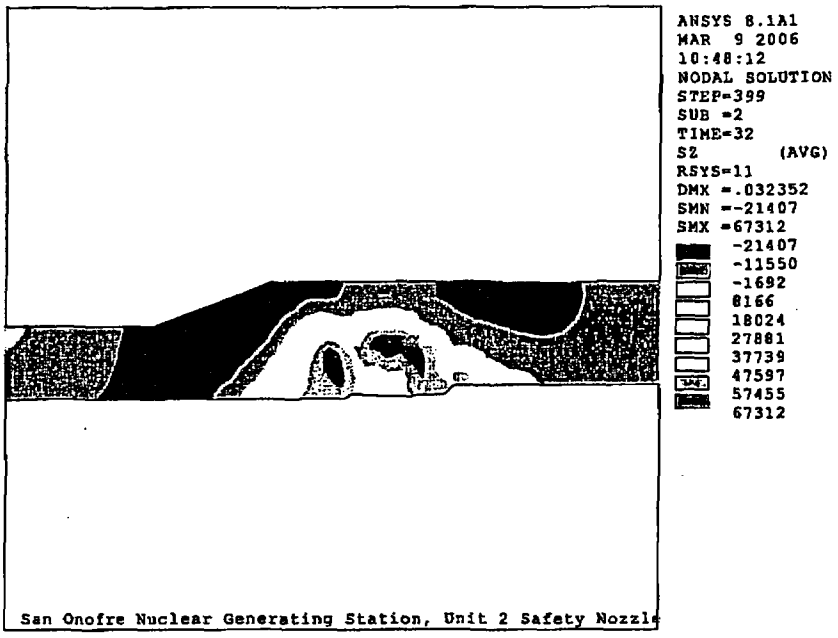

Axial Stresses

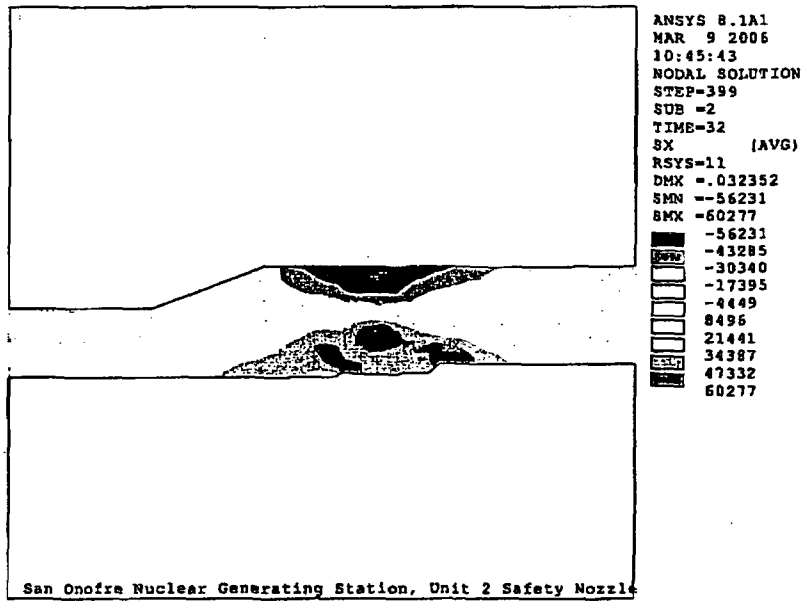

Figure 3-3: Pre-WOL Residual Stresses in Safety Relief Nozzles Including Simulated Weld Repair

Hoop Stresses

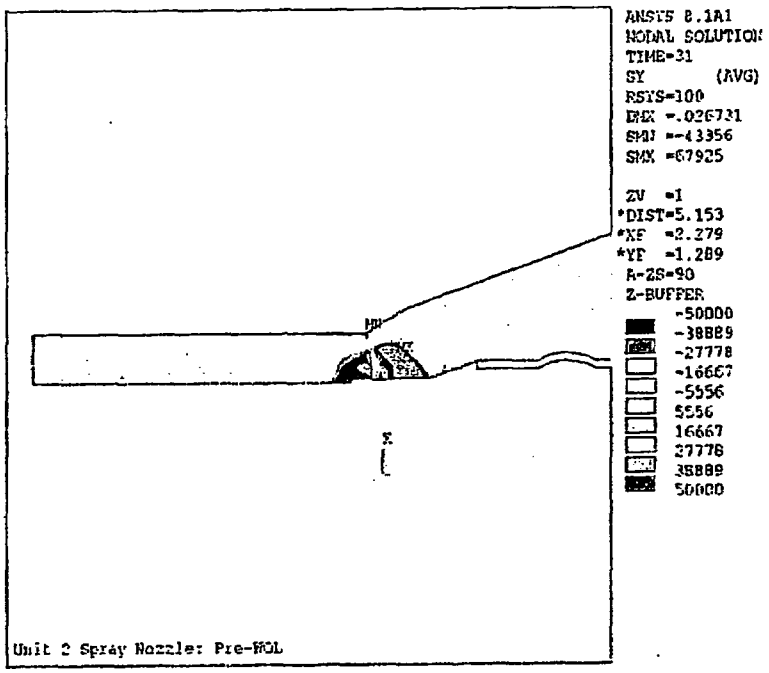

Axial Stresses

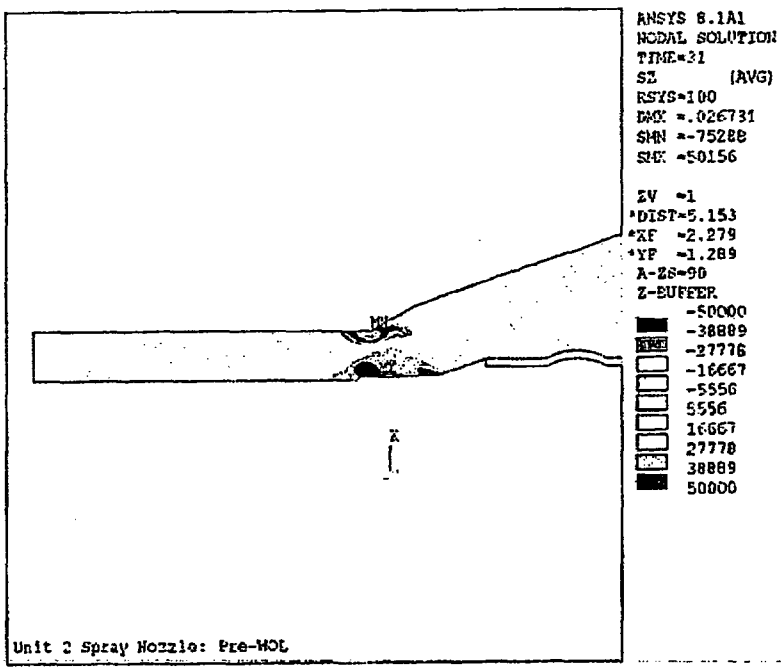

Figure 3-4: Pre-WOL Residual Stresses in Spray Nozzle Including Simulated Weld Repair

Hoop Stresses

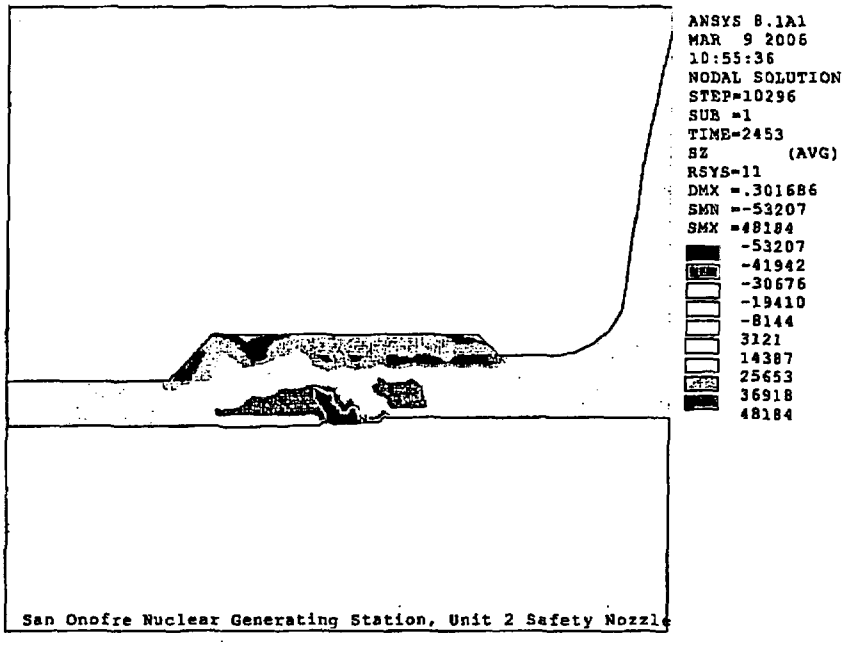

Axial Stresses

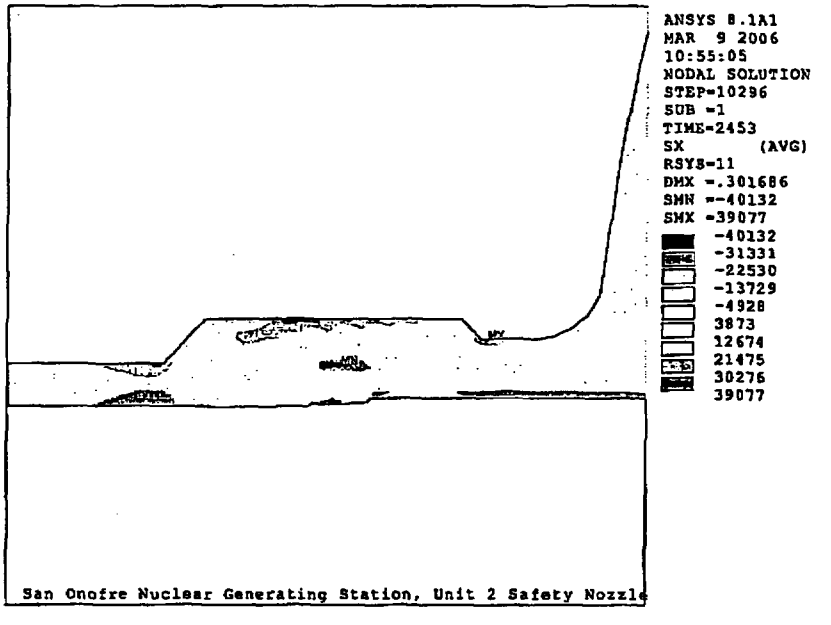

Figure 3-5: Post-WOL Residual Stresses in Safety Relief Nozzles

Hoop Stresses

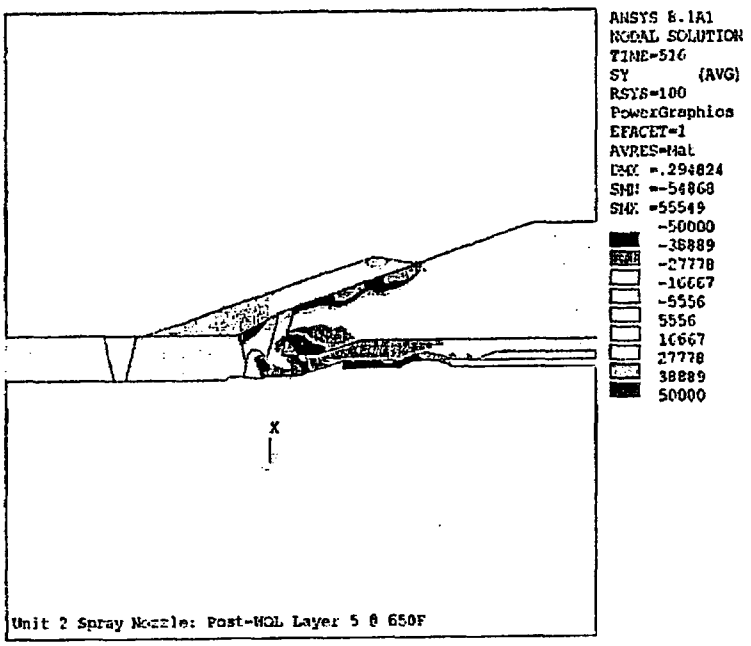

Axial Stresses

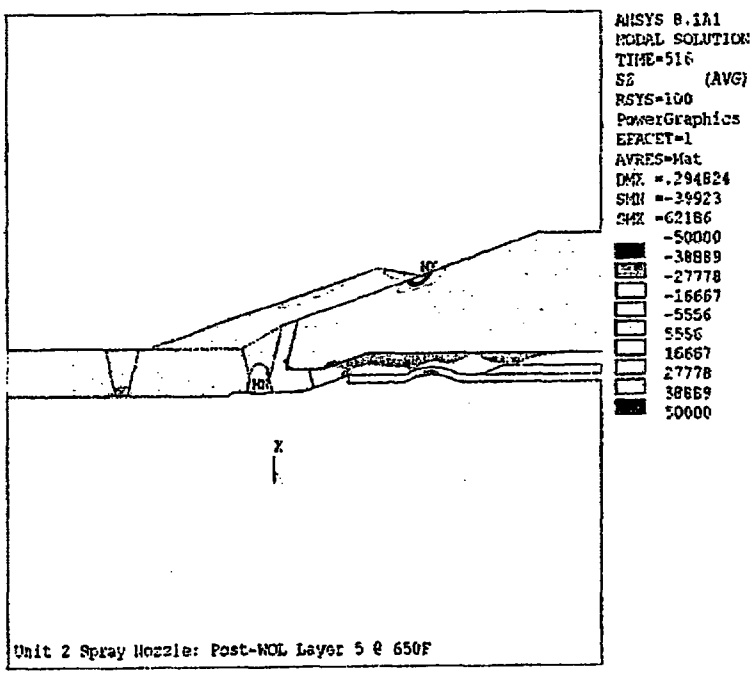

Figure 3-6: Post-WOL Residual Stresses in Spray Nozzle

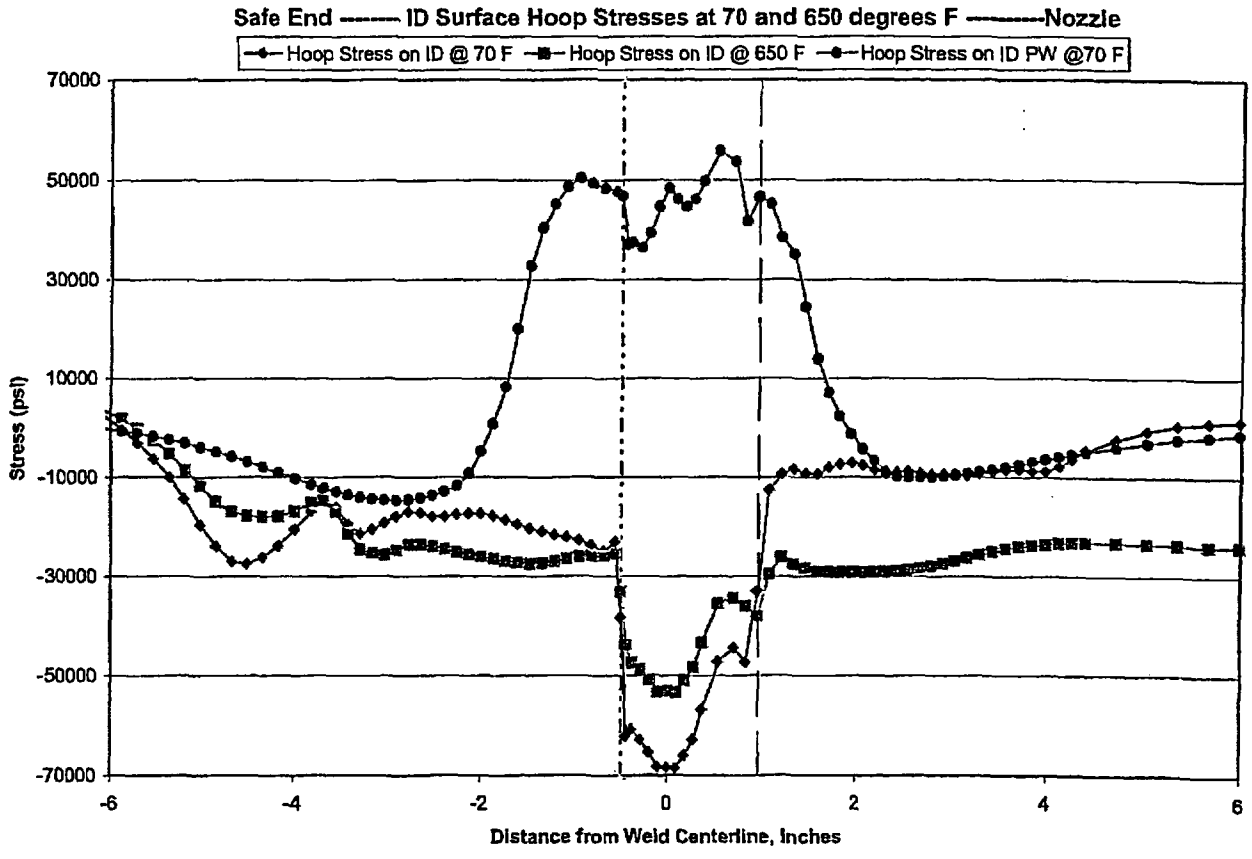

Figure 3-7: ID Surface Hoop Stresses in Safety Relief Nozzle; Pre- and Post-overlay

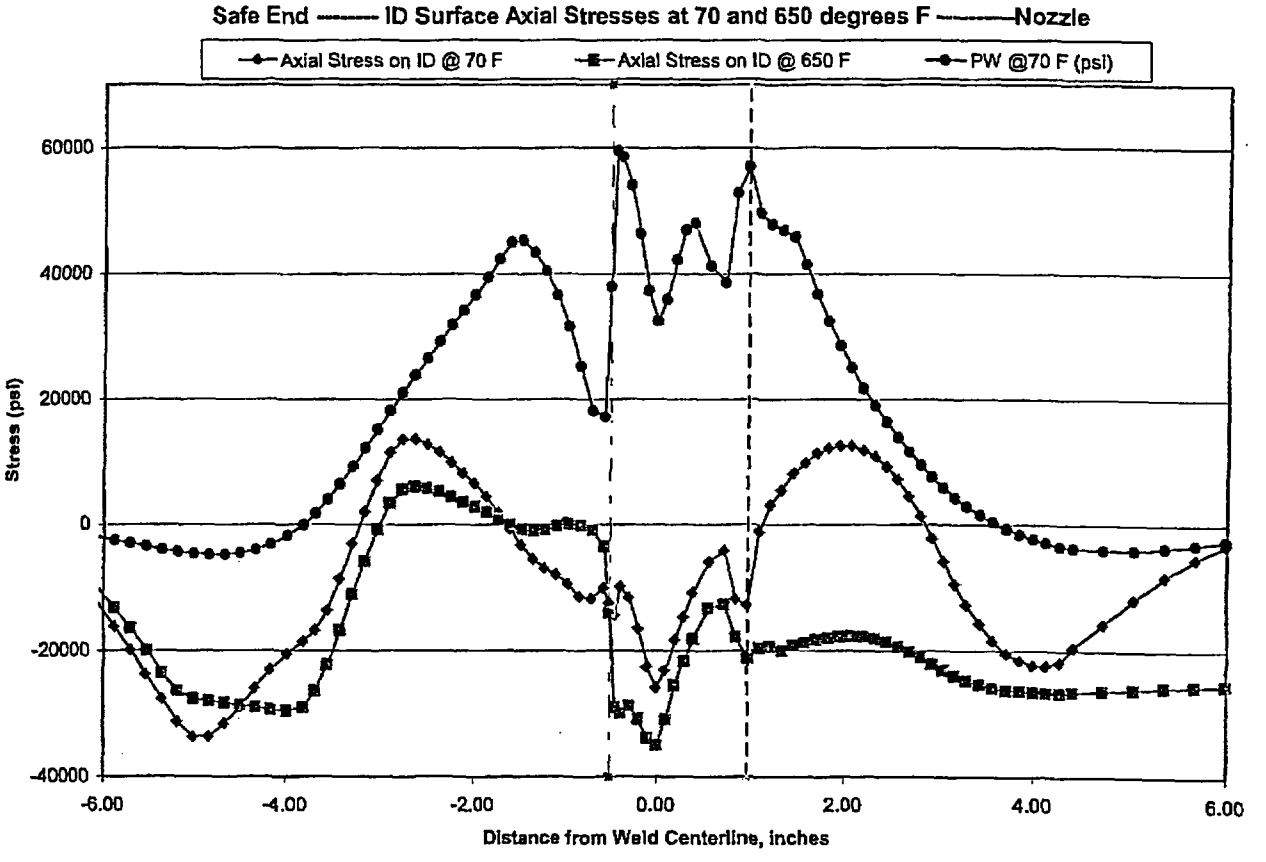

Figure 3-8: ID Surface Axial Stresses in Safety Relief Nozzle; Pre- and Post-overlay

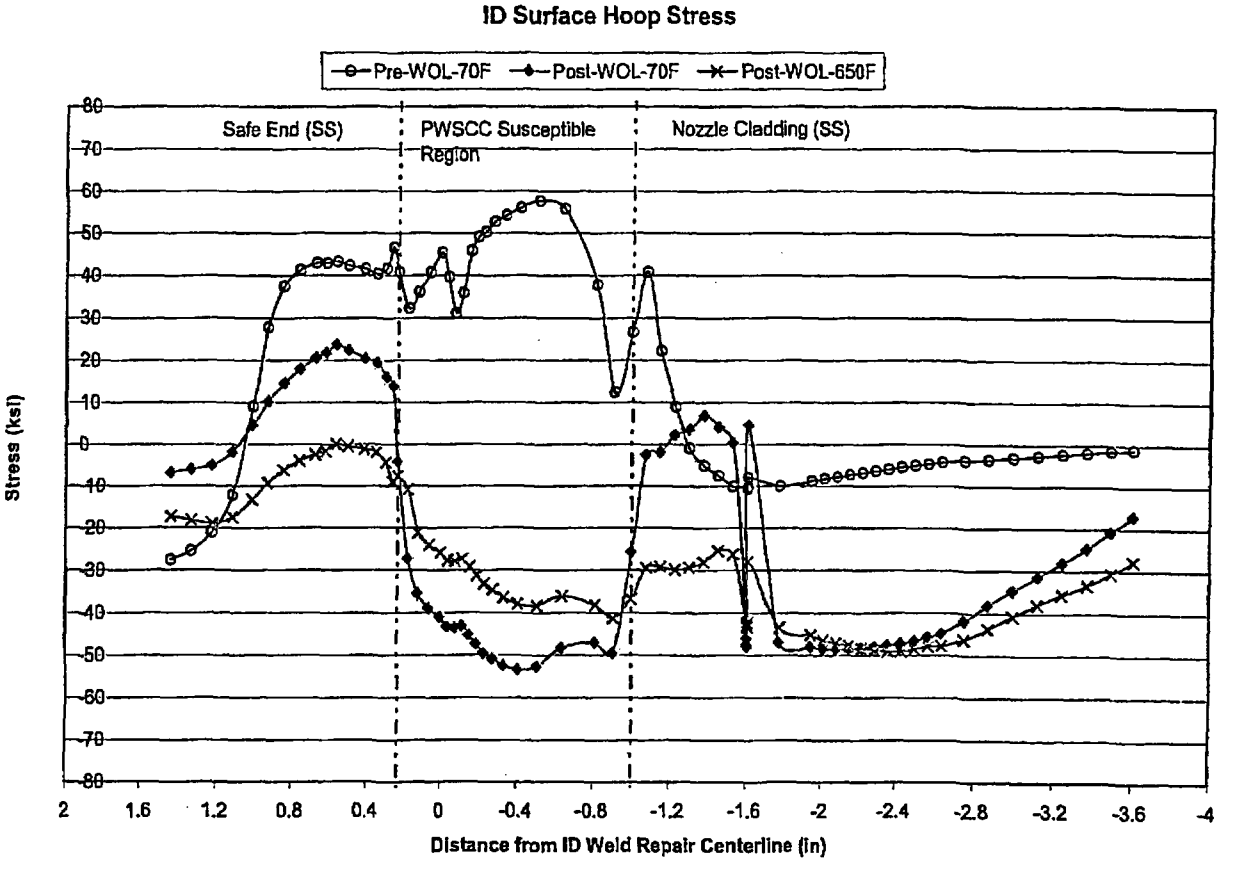

Figure 3-9: ID Surface Hoop Stresses in Spray Nozzle; Pre- and Post-overlay

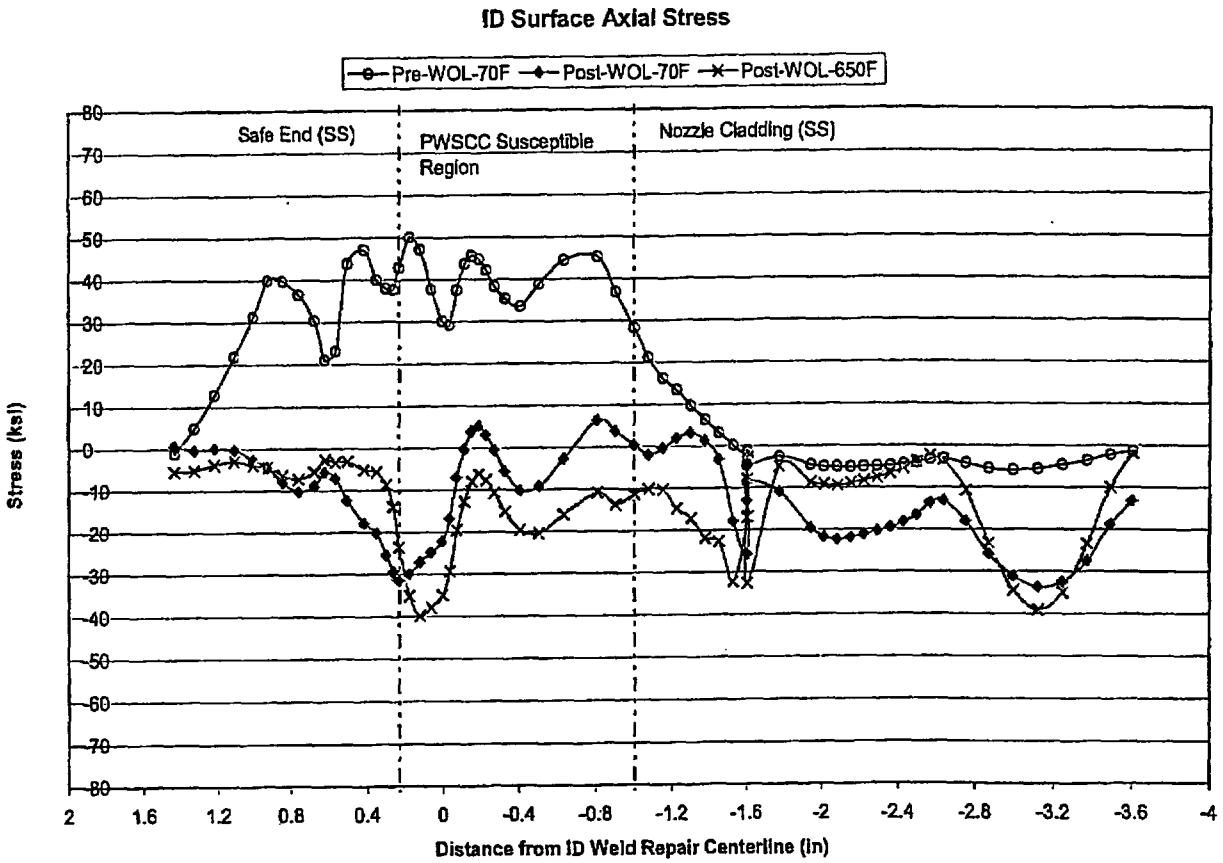

Figure 3-10: ID Surface Axial Stresses in Spray Nozzle; Pre- and Post-overlay

4.0 EVALUATION OF WELD OVERLAY SHRINKAGE STRESSES

4.1 Background

Stresses may develop in remote locations of a piping system after application of one or more weld overlays in the system, due to the weld shrinkage at the overlays. These stresses are system-wide, and are similar in nature to restrained free-end thermal expansion or contraction stresses. The level of stresses resulting from weld overlay shrinkage depends upon the amount of shrinkage that occurs and the piping system geometry (i.e. its stiffness).

In ASME Code terminology, weld overlay shrinkage stresses are secondary or peak stresses, and have no primary component. They are essentially constant with time, so there are no official ASME Code limits that apply to them, since Code limits on secondary and peak stresses apply to their range under cyclic loading conditions. They could, however, potentially increase the susceptibility of other susceptible welds in the system to future PWSCC. Therefore, it has become common practice with weld overlays to measure the shrinkage between punch marks that are placed on the piping and/or nozzles beyond the ends of the overlays as part of the implementation process. The stresses due to the measured shrinkage are then evaluated via a piping model. However, this was primarily a requirement for BWR weld overlays, in which the stainless steel systems contained multiple welds that are susceptible to IGSCC, and often contained more than one overlay. It is less of a concern in PWR overlay applications, because the PWSCC susceptibility in the systems is typically limited to the DMW that is being overlaid.

<u>Hanger Set Points</u>

Due to displacements introduced by weld overlay shrinkage in the piping system, it is also required that, after application of the overlay, a walkdown be performed to check all hanger set points. In addition, clearances at all pipe whip restraints should also be checked to insure that they are within tolerance.

4.2 Evaluation of Weld Overlay Shrinkage Stresses in SONGS-2 Pressurizer Nozzles

The weld overlay shrinkages, measured at four azimuthal locations around the nozzles during the repairs [8-11] are summarized in Table 4-1. At all safety relief nozzles, the average measured shrinkage at the four locations was extremely small (less than 1/16"). Measurements weren't taken on the spray nozzle because of the slope of the overlay and the associated diametric differences between the punch marks. However, it is reasonable to assume that the shrinkage was very small on that nozzle as well. The piping systems in question (safety relief valve lines and spray line) are long flexible systems with relatively few supports, and have no other PWSCC susceptible welds. For these reasons, it was decided to waive a piping stress analysis of the shrinkage stresses. The stresses are expected to be very small, because of small shrinkage values and the very flexible systems. Also, as previously discussed, there are no ASME Section III Code stress limits that directly apply to these stresses, and there are no other PWSCC susceptible welds in the piping systems, so ASME Section XI flaw evaluations and/or PWSCC mitigation of other welds, which could be affected by shrinkage stresses, do not exist.

All hanger set points were checked by SCE after the application of the overlay repair and they were all found to be within the design ranges [21]. Also, clearances at all pipe whip restraints were found by SCE to be within the tolerance after the overlay repair [22].

Table 4-1: SONGS-2 Pressurizer Weld Overlay Shrinkage Measurements [8-11]

	Measurement Location	Safety Relief Nozzle 02-005-027	Safety Relief Nozzle 02-005-028	Safety Relief Nozzle 02-005-029	Spray Nozzle 02-005-030
Shrinkage Measurement (in.)	0°	0	-1/16	-1/16	N/A
	90°	0	-1/16	0	N/A
	180°	0	0	-1/16	N/A
	270°	0	+1/8 (growth)	-1/16	N/A
Averages (in.)		0.0	0.0	-0.047	N/A

N/A = Shrinkages not measured on spray nozzle due to slope of WOL. Assumed to be comparable to safety relief nozzle measurements.

5.0 CRACK GROWTH CONSIDERATIONS

5.1 Background

In this section, growth of cracks that may potentially exist in the overlaid welds is considered for both PWSCC and fatigue mechanisms. As previously mentioned, qualified ultrasonic examinations and other NDE was performed on the subject nozzles, prior to application of the weld overlays. Two of the nozzles were found to be clean, and two of the nozzles were found to have indications, although upon further examination, they were concluded not to be service related. Crack growth evaluations were performed to demonstrate that flaws equal to or greater than the maximum flaw sizes that could have escaped detection in these examinations would not grow unacceptably in the nozzles, so as to undermine the basis for the overlay design. Crack growth analysis details and results are contained in Appendices M and N (SI Calculations SONG-08Q-313 and -314).

5.2 Technical Approach

The technical approach used in this evaluation is to determine the through-wall stress intensity factor (K) distribution associated with assumed axial and circumferential flaws in the nozzles using the post weld overlay residual stresses at operating conditions plus sustained and transient operating stresses. If the K distribution with sustained operating stresses is such that it is negative at the crack tip, then no PWSCC growth is predicted, even in the original susceptible DMW material [15]. The maximum depth crack for which this condition is true represents the flaw tolerance depth, below which no PWSCC crack growth is predicted. From a fatigue standpoint, the K distributions for both the maximum and minimum cyclic stresses during various plant transients are determined. The K_{min} and K_{max} calculations include both applied and residual stresses. Fatigue crack growth is then computed using a very conservative environmental fatigue crack growth law for Alloy 182 [17]. In implementing the crack growth

law, it is assumed that no crack growth will occur if both K_{min} and K_{max} are less than zero. If K is positive during any part of a transient, then the crack growth due to fatigue is calculated for the defined number of cycles for each transient.

It is important to note that, even if these conditions were for some reason exceeded, and a crack were to propagate to the weld overlay itself, the safety of the overlaid weld would not be compromised, since the overlay material (Alloy 52M) is PWSCC resistant, and the design basis of the overlay took no credit for the underlying DMW material.

5.3 Crack Growth Results

5.3.1 Safety Relief Nozzles

Two of the three safety relief nozzles contained UT indications. Based on supplemental examinations, these indications were not believed to be PWSCC, and no qualified depth sizing was performed. However, supplemental examinations reported in [18] confirmed that they were not present in the outer two-thirds of the wall thickness. Therefore, a flaw depth of 1/3 of the wall thickness was conservatively assumed for the crack growth evaluations of the safety relief nozzles. Stress intensity factors versus flaw depth were computed for three paths through the original DMW and butter, for both axial and circumferential cracks (six cases).

For five out of the six crack growth cases, no fatigue or PWSCC crack growth was predicted, as both K_{max} and K_{min} are negative in all cases. For the path 2 axial crack case, K_{max} was positive at the initial assumed flaw size of 1/3 the wall thickness. However, if this assumed flaw size was increased to 53% of the wall thickness, both K_{max} and K_{min} became negative. Therefore, for the path 2 axial crack case, if the crack were to grow from the initial assumed flaw size, it would arrest at 53% of the wall thickness. For the other five cases the crack would not grow from the initial assumed flaw size. Crack growth for the safety relief nozzles is thus not predicted to be a significant factor affecting the weld overlay designs.

5.3.2 Spray Nozzle

As previously mentioned, the SONGS-2 spray nozzle was inspected and found clean during this outage, so the weld overlay was applied as PWSCC mitigation rather than a repair. The initial flaw size for the crack growth evaluations was chosen as 10% of original wall thickness for both axial and circumferentially oriented flaws. (10% of the wall thickness is conservatively considered to be the detectability limit of the examinations performed.) As before, stress intensity factors versus flaw depth were computed for three paths through the original DMW and butter, for both axial and circumferential cracks (six cases).

For PWSCC, it was shown that the stress intensity factors due to normal operating conditions plus post-WOL residual stresses remained negative for crack depths equal to and greater than the assumed 10% initial flaw size. In fact, for circumferential cracks, the stress intensity factor is predicted to remain negative up to and included flaw depths completely through the original wall thickness and impinging on the weld overlay. For axial cracks, the stress intensity factor remains negative for cracks up to ~70% of the original wall thickness. Therefore, the weld overlay has clearly provided an effective mitigation for PWSCC crack growth in this weld.

For fatigue crack growth, the spray nozzle is subjected to numerous severe thermal cycles due to spray transients. No specific number of spray transients is specified for this nozzle in [19]. Instead, the nozzle is analyzed for allowable numbers of spray cycles at various temperature ranges. Similar analyses are performed and presented for fatigue crack growth in Appendix N, for assumed axial and circumferential cracks, in terms of the incremental crack growth that would be predicted for cracks of various depths subjected to spray transients of various severity (i.e. ΔTs ranging from 200°F to 600°F).

Section 6 and Appendix L of this report present allowable numbers of spray transients of various severities that are permissible in accordance with ASME Section III fatigue usage limitations (See Table 6-3). Table 5-1 provides an interpretation of the Appendix N fatigue crack growth results, in terms of the amount of fatigue crack growth that would occur if the allowable number

of cycles at each temperature range from Table 6-3 were to occur. It is seen that in no case do the final predicted crack depths exceed the design basis for the weld overlay (i.e. through the original DMW wall thickness, or 0.885" at the location at which the crack growth analysis was performed). Crack growth for the spray nozzle is thus not predicted to be a significant factor affecting the weld overlay design.

Table 5-1: Predicted Fatigue Crack Growth for the Spray Nozzles based on Allowable Spray Thermal Cycles at Various Temperature Ranges (from Table 6-3)

Temperature Range °F	Factored Allowable Cycles = NAU × 0.45	Predicted Final Depth of Initial 10% Axial Crack (in.)	Predicted Final Depth of Initial 10% Circ. Crack (in.)
201-250	3685	0.260	0.378
251-300	1558	0.232	0.349
301-350	851	0.243	0.355
351-400	612	0.302	0.405
401-450	403	0.346	0.438
451-500	255	0.382	0.461
501-550	147	0.391	0.466
551-600	113	0.385	0.465

6.0 ASME SECTION III STRESS ANALYSIS

6.1 Background

This section presents a summary of ASME Section III stress evaluations performed for the SONGS-2 pressurizer safety relief and spray nozzle weld overlay applications and their impact on the existing ASME Section III Stress Reports for these nozzles. Details of the analyses for the safety relief nozzles are contained in Appendices I and K (SI Calculations SONG-08Q-309 and -311) and for the spray nozzle in Appendices H, J, and L (SI Calculations SONG-08Q-308, -310, and -312).

The original construction Code for the pressurizer was ASME Section III, 1971 Edition through Summer 1971 Addenda. However, as allowed by ASME Section XI, Code Editions and Addenda later than the original construction Code up to 1998 through 2000 Addenda [6] may be used. Reference [6] was used for these analyses.

The following summary of the impact of the weld overlays is presented to illustrate that the presence of the overlays does not invalidate the current design basis for the nozzle Stress Reports.

6.2 Technical Approach

The two-dimensional, axisymmetric finite element models of the SONGS-2 safety relief and spray nozzles developed for residual stress analysis (as discussed in Section 3 of this report) were used for this evaluation. As illustrated in Figures 3-1 and 3-2, the models include the nozzles plus a portion of the pressurizer, the safe-end, the weld overlay, and a portion of the piping. The spray nozzle model also includes the thermal sleeve.

Item (f)(1) of Code Case N-504-2 requires that the overlay be sized so that it will be able to provide for load redistribution from the pipe into the deposited weld metal and back into the pipe without violating applicable stress limits of ASME Code, Section III for primary, secondary, and peak stresses. This was demonstrated in Section 2 of this report using a rule of thumb for weld overlay length sizing contained in Code Case N-504-2 ($0.75\sqrt{Rt}$), but is confirmed by the detailed analyses in this section. Two models have thus been developed. To confirm adequate overlay length for load transfer, a cracked model was developed in which the original DMW was assumed to be cracked through wall and 360°. The cracked model is used for evaluation of primary stresses only in order to demonstrate appropriate load transfer at critical sections of the weld overlay.

An uncracked model is used for the balance of the evaluation of primary and primary-plus-secondary stresses. Thermal transient and static structural analyses are performed with this model for operating transients, internal pressure and piping loads, using loads and transients provided by SONGS. A detailed description of the thermal transients used in the analyses is contained in Appendix C (SI Calculation SONG-08Q-303). The resulting stresses are compared to Section III allowable stresses and fatigue usage.

6.3 Results of Analysis

6.3.1 Safety Relief Nozzles

Stress intensities for the weld overlaid safety relief nozzles are determined from finite element analyses in Appendix I for the various specified load combinations. Linearized stresses were evaluated through a total of seven paths for the modeled safety relief nozzle throughout the transient time histories and the pressure and axial load analyses. Five of the paths (Paths 1 to 5) are located through the nozzle/safe-end wall and weld overlay for the uncracked model cases, and the remaining two paths (Paths 6 and 7) are located through the overlay alone, for the cracked model cases. The seven paths are shown in Figure 6-1.

The stress intensities along all these paths are evaluated in accordance with ASME Code, Section III, Subarticle NB-3200 [6], and compared to the applicable Code limits in Appendix K. A summary of the stress comparisons for the limiting paths for each load combination is provided in Table 6-1. It is seen from this table that, in all cases, the stresses in the weld overlaid safety relief nozzles meet the applicable Code limits. Fatigue usage is not limiting, since the nozzles satisfy ASME Section III, NB-3200 criteria for exemption from fatigue analysis.

6.3.2 Spray Nozzle

Stress intensities for the weld overlaid spray nozzle are calculated in Appendices H and J for the various specified load combinations. Linearized stresses were evaluated through a total of seven paths for the modeled spray nozzle, as illustrated in Figure 6-2. Five of the paths (Paths 1 to 5, uncracked) are located through the nozzle/safe-end wall and weld overlay for the uncracked model cases, and the remaining two paths (Paths 1 and 2, cracked) are located through the overlay alone, for the cracked model cases.

The stress intensities along all these paths are evaluated in accordance with ASME Code, Section III, Subarticle NB-3200 [6], and compared to the applicable Code limits in Appendix L. A summary of the stress comparisons for the limiting paths for each load combination is provided in Table 6-2. It is seen from this table that, the stresses in the weld overlaid spray nozzle meets the applicable Code limits for all conditions except Level A/B Primary plus Secondary stresses (spray transient). For that condition, simplified elastic-plastic analysis was performed, and it was shown that Primary plus Secondary stresses excluding thermal bending meet the required Code limit. A simplified elastic-plastic analysis correction factor (K_e) was initially used in the determination of alternating stresses. However, in order to remove excessive conservatism inherent in the simplified elastic-plastic analysis, lower values of K_e were justified, as described in Appendix L, based on comparisons to full elastic-plastic analyses contained in [19]. The modified K_e values were used to modify elastic alternating stresses for final fatigue cycle determination.

In accordance with Reference [20], an actual fatigue usage factor was not computed for the spray nozzle. Instead, for specified ranges of ΔT, the number of allowable cycles were tabulated and reported. Based on stress evaluations performed in Appendix L, the highest stresses occur at Path 2. Hence, Path 2 was selected for detailed evaluations for all ranges of ΔT. The allowable cycles for Path 2 for various ranges of ΔT are summarized in Table 6-3. The factored allowable cycles in Table 6-3 represent the number of spray transients at various ΔTs that can be sustained by the nozzle without exceeding the plant-specified fatigue usage allowable of 0.45 specified in the UFSAR for these transients [20]. This value has been adjusted from the Code allowable fatigue usage of 1.0 to account for other transients not addressed.

6.4 Concluding Remarks

An evaluation has been performed to determine the impact of the weld overlay repairs on the pressurizer and spray nozzles and SONGS Unit 2, in terms of their effect on ASME Code, Section III evaluation. The evaluation included primary and primary-plus-secondary Code limits, thermal ratchet, fatigue, and Code Case N-504-2 stress limits. It was determined that the impact of the revised stresses remain within the applicable Code allowables. Fatigue is not significant for the safety relief nozzles. For the spray nozzle, the analysis results are presented in terms of allowable numbers of spray transients at various temperature differentials. These numbers of cycles compare favorably with prior results for the un-overlaid nozzle, indicating that applying the weld overlay did not have a detrimental effect on the fatigue life of this nozzle.

This report is supplemental to the original stress reports for these components.

Table 6-1: Stress Results Along Critical Paths for the Safety Relief Nozzle

Primary Stress Evaluations					
Load Combination	Critical Path	P_m (ksi)	Allowable (ksi)	$P_l + P_b$ (ksi)	Allowable (ksi)
Design	1 (uncracked)	10.1	16.3	9.2	24.5
	6 (cracked)	15.9	23.3	9.5	34.95
Level D	1 (uncracked)	19.0	39.1	18.1	58.7
	6 (cracked)	29.5	55.9	23.0	83.8
Test	1 (uncracked)	9.1	16.3	7.9	24.4
	6 & 7(cracked)	13.0	24.8	7.0	37.1
Primary + Secondary Evaluations					
Load Combination	Critical Path	$P_l + Q$ (ksi)	Allowable (ksi)		
Level A/B	2 (uncracked)	48.5	48.9		
Fatigue	ASME III, NB-3200 exemptions to fatigue usage analysis satisfied				

Table 6-2: Stress Results Along Critical Paths for the Spray Nozzle

Primary Stress Evaluations					
Load Combination	Critical Path	P_m (ksi)	Allowable (ksi)	$P_l + P_b$ (ksi)	Allowable (ksi)
Design	1 (uncracked)	10.6	16.3	10.3	24.5
	2 & 1(cracked)	16.9	23.3	11.1	24.5
Level D	1 (uncracked)	27.1	39.1	26.8	58.7
	1 2 (cracked)	32.0	39.1	33.8	58.7
Test	1 (uncracked)	7.8	16.4	7.5	24.6
	2 & 1 (cracked)	15.2	24.8	6.5	24.6
Primary + Secondary Stress Evaluations					
Load Combination	Critical Path	$P_l + Q$ (ksi)	Allowable (ksi)		
Level A/B	2 (uncracked)	108.6*	69.9*		
	2 (uncracked)	27.7*	69.9*		
Thermal Ratchet	2 (uncracked)	116.2 (Thermal Hoop Stress)	247.8		

* - Elastic analysis exceeds 3Sm, however, criteria for simplified elastic-plastic analysis and thermal ratchet are met.

Table 6-3: Allowable Cycles for the Spray Nozzle for Spray Thermal Transients at Various Temperature Ranges

Temperature Range °F	Unfactored Allowable Cycles NAU	Factored Allowable Cycles = NAU × 0.45
201-250	8189	3685
251-300	3463	1558
301-350	1892	851
351-400	1360	612
401-450	895	403
451-500	566	255
501-550	327	147
551-600	250	113

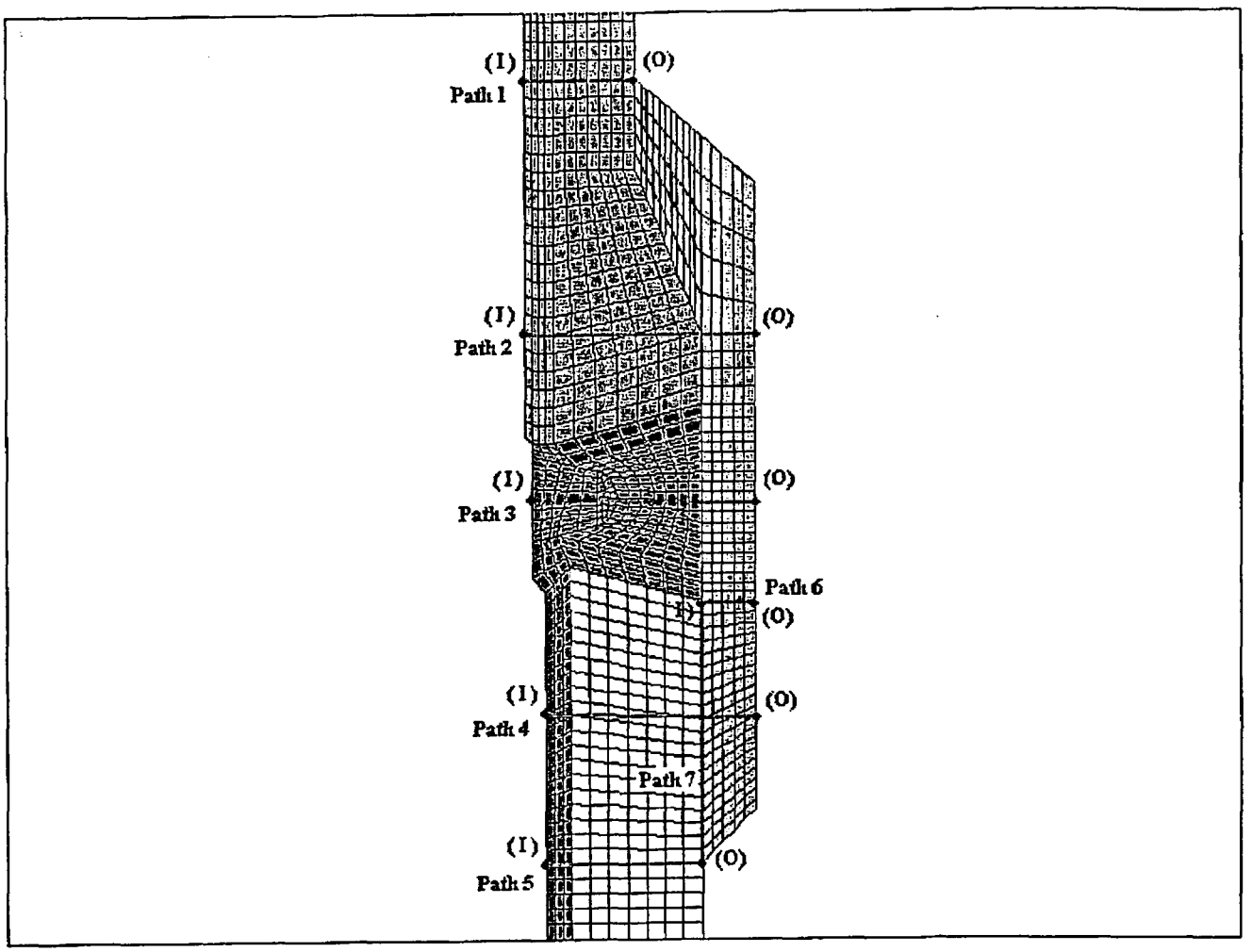

Figure 6-1: Safety Relief Nozzle Linearized Stress Paths. (Paths 1 through 5 are for the uncracked model and Paths 6 and 7 for the cracked model.)

Path Locations for Uncracked Model:

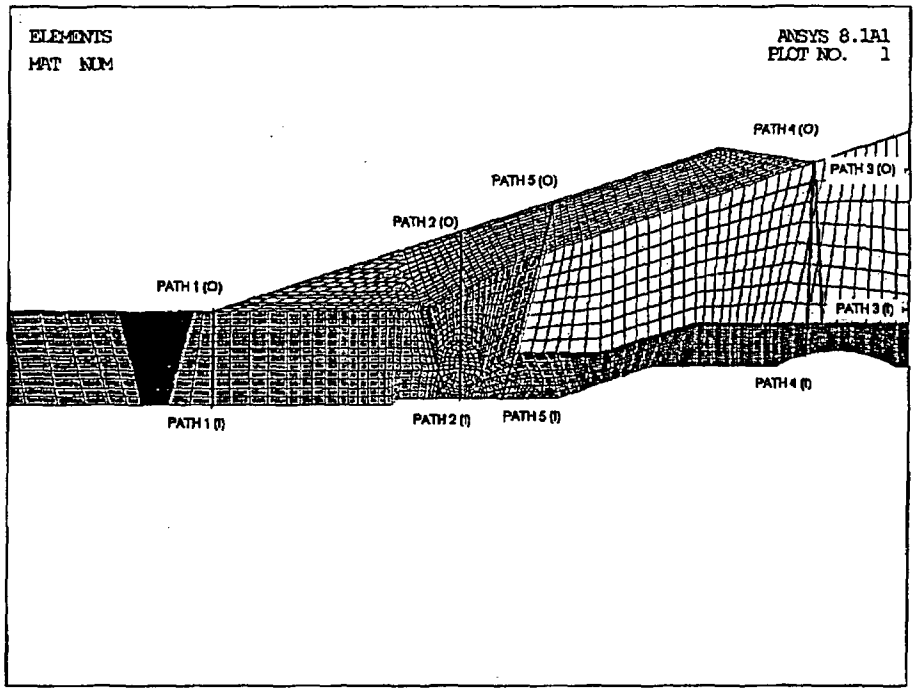

Path Locations for Cracked Model:

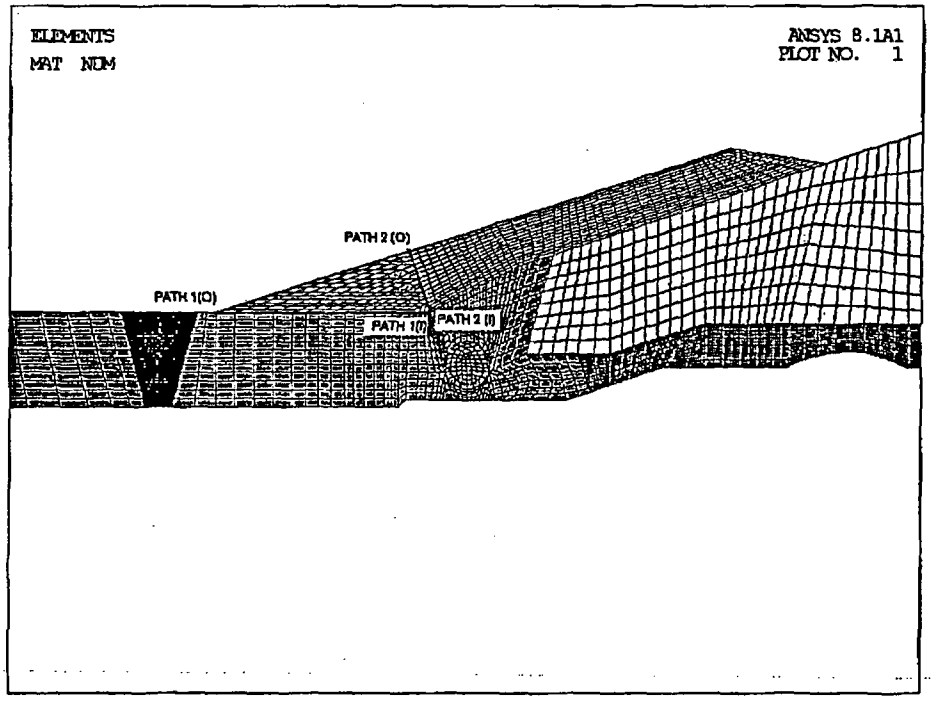

Figure 6-2: Spray Nozzle Linearized Stress Paths

7.0 SUMMARY AND CONCLUSIONS

This report has provided a summary of the weld overlay design and analyses for the dissimilar metal, nozzle to safe end welds in the pressurizer safety relief valve and spray nozzle welds at San Onofre Nuclear Generation Station, Unit 2 (ISI Designation Numbers 02-005-027, 02-005-028, 02-005-029, and 02-005-030). The design of these overlays was performed taking guidance from the requirements of ASME Code Case N-504-2, and Code Case N-638-1 ambient temperature temperbead procedure developed to eliminate the need for post weld heat treatment of the nozzle after welding. The weld overlays are demonstrated to be long-term repairs and/or mitigation of PWSCC in these welds based on the following:

- The weld overlay restores the original safety margins of the weld since it is designed to meet the requirements of ASME Code, Section XI, IWB-3640. In addition, it meets all the structural requirements of ASME Code Case N-504-2.

- The as-built dimensions exceeded the minimum design dimensions, thus demonstrating additional margin in the overlay repair.

- No credit is taken for the first layer in the overlay design, which could have been diluted by the base metal during the welding process.

- The weld metal used for the overlay is Alloy 52M, which has been shown to be resistant to PWSCC, thus providing a PWSCC resistant barrier. Therefore, no crack growth is expected into the overlay.

- Residual stress analysis was performed, after first simulating severe ID weld repairs in the nozzle to safe-end welds, and then applying the weld overlay repair. The post weld overlay residual stresses at normal operating conditions have been shown to result in beneficial compressive stresses on the inside surface of the components, further assuring that crack growth into the overlay is highly unlikely.

- Fracture mechanics analyses were performed to determine the amount of future crack growth which would be predicted in the nozzles, assuming that cracks exist that are equal to or greater than the thresholds of the NDE techniques used on the nozzles. For the safety relief nozzles, the total stress intensity factors, when all operating stresses are combined with the residual stresses resulting from the overlay are compressive, at both the maximum and minimum points in the stress cycles. Therefore, no fatigue crack growth is predicted. Some fatigue crack growth is predicted for the spray nozzle, based on the number and severity of thermal cycles associated with the spray transient. However, those are not found to be limiting compared to the numbers of cycles specified in the plant FSAR [20]. PWSCC crack growth is predicted to be insignificant for both nozzles since the sustained stress intensity factors during normal operation are negative.

- Shrinkage measured during the overlay application was very small, and the associated piping systems are relatively flexible and they contain no other PWSCC susceptible welds. Therefore shrinkage stresses at other locations in the piping systems arising from the weld overlays are not expected to have an adverse effect on the systems. All hanger set points and pipe whip restraint clearances were checked after the overlay repair, and were found to be within the design ranges.

- The application of the weld overlay does not impact the conclusions of the existing nozzle Stress Reports. With the application of the overlay, all the ASME Code, Section III stress and fatigue criteria are met. The stress requirements in ASME Code Case N-504-2 are also met.

- The total added weight on the piping systems due to the overlays is less than 200 lbs. This weight is insignificant compared to the weight of the piping systems and therefore does not impact the stresses nor their dynamic characteristics.

From the above observations and the fact that similar nozzle-to-safe end weld overlays have been applied to other plants since 1986 with no problems identified, it is concluded that the observed indications have been permanently repaired and that the pressurizer safety relief valve and spray nozzle dissimilar metal welds have received long term mitigation against PWSCC..

8.0 REFERENCES

1. EPRI Report NP-7103-D "Justification for Extended Weld-Overlay Design Life," January 1991.

2. EPRI Report NP-7085-D, "Inconel Weld-Overlay Repair for Low-Alloy Steel Nozzle to safe End Joint," January 1991.

3. ASME Code, Code Case N-504-2, "Alternative Rules for Repair of Classes 1, 2, and 3 Austenitic Stainless Steel Piping, Section XI, Division 1."

4. ASME Code, Code Case N-638-1, "Similar and Dissimilar Metal Welding Using Ambient Temperature Machine GTAW Temper Bead Technique, Section XI, Division 1."

5. ASME Boiler and Pressure Vessel Code, Section XI, 1995 Edition, with 1996 Addenda.

6. ASME Boiler and Pressure Vessel Code, Section III, 1998 Edition with Addenda through 2000.

7. ASME Boiler and Pressure Vessel Code, Section II, Part D, 1998 Edition, with 1999 and 2000 Addenda.

8. WSI Work Traveler No. 101144-302, Rev. 0, Work Traveler for Pressurizer Safety Relief Nozzle Overlay for SCE SONGS Unit 2, Nozzle ID 02-005-027.

9. WSI Work Traveler No. 101144-302, Rev. 0, Work Traveler for Pressurizer Safety Relief Nozzle Overlay for SCE SONGS Unit 2, Nozzle ID 02-005-028.

10. WSI Work Traveler No. 101144-302, Rev. 0, Work Traveler for Pressurizer Safety Relief Nozzle Overlay for SCE SONGS Unit 2, Nozzle ID 02-005-029.

11. WSI Work Traveler No. 101144-302, Rev. 0, Work Traveler for Pressurizer Spray Nozzle Overlay for SCE SONGS Unit 2, Nozzle ID 02-005-030.

12. Docket Nos. 50-361, "Third Ten-Year Inservice Inspection (ISI) Interval Relief Request ISI-3-18 Use of Structural Weld Overlay and Associated Alternative Repair Techniques. San Onofre Nuclear Generating Station, Unit 2", February 22, 2006, and "Additional Information Supporting the Third Ten-Year Inservice Inspection (ISI) Interval Relief Request ISI-3-18", March 17, 2006.

13. Materials Reliability Program Report MRP-169, "Technical Basis for Preemptive Weld Overlays for Alloy 82/182 Butt Welds in PWRs," August 2005.

14. ANSYS Release 8.1 (with Service Pack 1), ANSYS, Inc., June 2004.

15. Materials Reliability Program Report MRP-115, "Materials Reliability Program: Crack Growth Rates for Evaluating Primary Water Stress Corrosion Cracking (PWSCC) of Alloy 82, 182, and 132 Welds," September 2004.

16. **pc-CRACK** for Windows, Version 3.1-98348, Structural Integrity Associates, 1998

17. NUREG/CR-6721, "Effects of Alloy Chemistry, Cold Work, and Water Chemistry on Corrosion Fatigue and Stress Corrosion Cracking of Nickel Alloys and Welds," U.S. Nuclear Regulatory Commission (Argonne National Laboratory), April 2001.

18. EPRI Report IR-2006-104, "Review of Ultrasonic Examinations Performed at SONGS Unit 2 on the Pressurizer Safety Relief Nozzle During Unit 2 C14".

19. Combustion Engineering Calculation No. PRS-215-1, Revision 1, "Structural Analysis of the Spray Nozzle for Additional Transients," SI File SI File SONG-08Q-216P.

20. Excerpts from SONGS UFSAR, amended June 2005, Table 3.9-1a, SI File SONG-08Q-216.

21. SCE Action Request #060200222-32, "Perform Pre and Post Installation Pipe Support/Spring/Snubber Inspection" 3/10/06, Completion Date 3/24/06.

22. Southern California Edison San Onofre Units 2 & 3 Visual Examination Report, VT 1 and 3, "Pressurizer Relief Valve Discharge Line Snubbers, 3/21/06.

9.0 APPENDICES (STRUCTURAL INTEGRITY ASSOCIATES CALCULATION PACKAGES)

A SONG-08Q-301R2 - Weld Overlay Sizing for RCS Pressurizer Safety Relief Nozzles

B SONG-08Q-302R0 - Weld Overlay Sizing for Pressurizer Spray Nozzle

C SONG-08Q-303R0 - Thermal Transients for Pressurizer Safety Relief Nozzle and Spray Nozzle Weld Overlays

D SONG-08Q-304R0 - Finite Element Models of the SONGS Unit 2 Pressurizer Spray Nozzle With Weld Overlay Repair Using Design Dimensions

E SONG-08Q-305R0 - Finite Element Models of the SONGS Unit 2 Pressurizer Safety Relief Nozzle With Weld Overlay Repair Using Design Dimensions

F SONG-08Q-306R0 - Residual Stress Evaluation of the SONGS Unit 2 Pressurizer Spray Nozzle With Preemptive Weld Overlay Using Design Dimensions

G SONG-08Q-307R0 - Residual Stress Evaluation of the SONGS Unit 2 Pressurizer Safety Relief Nozzle With Weld Overlay Repair Using Design Dimensions

H SONG-08Q-308R0 - Thermal Analysis for Pressurizer Spray Nozzle Weld Overlay

I SONG-08Q-309 R0 - Thermal and Mechanical Stress Analyses of the Pressurizer Safety Relief Nozzle With Weld Overlay Repair

J SONG-08Q-310R0 - Mechanical Load and Thermal Stress Analysis for Pressurizer Spray Nozzle Weld Overlay

K SONG-08Q-311R0 - Section III Stress and Fatigue Evaluation of the Pressurizer Safety Relief Nozzle with Weld Overlay Repair

L SONG-08Q-312R0 - Stress Evaluation and Determination of Allowable Cycles for Pressurizer Spray Nozzle Weld Overlay

M SONG-08Q-313R0 - Predicting Fatigue Crack Growth for the SONGS Unit 2 Pressurizer Safety Relief Nozzle With Design Weld Overlay

N SONG-08Q-314R1 - Predicting Fatigue Crack Growth for the SONGS, Unit 2 Pressurizer Spray Nozzle With Design Weld Overlay