KEWAUNEE POWER STATION

OFFSITE DOSE CALCULATION MANUAL (ODCM)

Revision 9
DATE

Reviewed By: Tom Webb Date: 29 Nov 2005
Plant Operations Review Committee

Approved By: Thomas T. Bruce Date: 11/28/05
Regulatory Affairs Manager

Approved By: Dan J. Schrum Date: 11/28/05
Radiation Protection Manager

Approved By: Wally Pickard Date: 11/23/05
Chemistry Manager

50.59 APPLICABILITY REVIEW

(Is the activity excluded from 50.59 review?)

1. Document/Activity number: ODCM revision 9

2. Brief description of proposed activity (what is being changed and why):

Implement changes to incorporate new Effluent Concentration Values of 10 CFR 20, Appendix B, Table 2, Column 2. Change default setpoints for R-16, R-18, R-19 & R-20 when CW= 0 based on minimum SW flow of 5,000 gpm rather than 10,000 gpm.

3. Does the proposed activity involve or change any of the following documents or processes? Check YES or NO for EACH applicability review item. Explain in comments if necessary. [Ref. NMC 50.59 Resource Manual, Section 4]

NOTE: If you are unsure if a document or process may be affected, contact the process owner.

	Yes 3	No 3	Document or Process	Applicable Regulation	Contact/Action
a	☐	☒	Technical Specifications or Operating License	10CFR50.92	Process change per NAD-05.14. Contact Licensing.
b	☒	☐	Activity/change previously approved by NRC in license amendment or NRC SER	10CFR50.90	Identify NRC letter in comments below. Process change. Contact Licensing for assistance.
c	☐	☒	Activity/change covered by an existing approved 10CFR50.59 review, screening, or evaluation.	10CFR50 Appendix B	Identify screening or evaluation in comments below. Process change.
d	☐	☒	Quality Assurance Program (QQAPD)	10CFR50.54(a)	Contact QA. Refer to NAD-01.07.
e	☐	☒	Emergency Plan	10CFR50.54(q)	Contact EP. Refer to FP-R-EP-02.
f	☐	☒	Security Plan	10CFR50.54(p)	Contact Security. Refer to FP-S-SPE-01.
g	☐	☒	IST Plan	10CFR50.55a(f)	Contact IST process owner. Refer to NAD-01.24.
h	☐	☒	ISI Plan	10CFR50.55a(g)	Contact ISI process owner. Refer to NADs 01.03, 01.05, and 05.11.
i	☐	☒	ECCS Acceptance Criteria	10CFR50.46	Contact Licensing.
j	☐	☒	USAR or any document incorporated by reference - Check YES only if change is editorial (see Attachment A).	10CFR50.71	Process USAR change per NEP-05.02. Contact USAR process owner for assistance.
k	☐	☒	Commitment - Commitment changes associated with a response to Generic Letters and Bulletins, or if described in the USAR require a pre-screening.	10CFR50 Appendix B	Contact Licensing. Refer to NAD-05.25.
l	☐	☒	Maintenance activity or new/revised maintenance procedure - Check YES only if clearly maintenance and equipment will be restored to its as-designed condition within 90 days (see Attachment C).	10CFR50.65	Evaluate under Maintenance Rule. Refer to NAD-08.20 and NAD-08.21.
m	☒	☐	New/revised administrative or managerial directive/procedure (e.g., NAD, GNP, Fleet Procedure) or a change to any procedure or other controlled document (e.g., plant drawing) which is clearly editorial/administrative. See Attachments A and B.	10CFR50 Appendix B	Process procedure/document revision.

4. Conclusion. Check one of the following:

☐ All documents/processes listed above are checked NO. 10CFR50.59 applies to the proposed activity. A 50.59 pre-screening shall be performed.

☐ One or more of the documents/processes listed above are checked YES, AND controls all aspects of the proposed activity. 10CFR50.59 does NOT apply. Process the change under the applicable program/process/procedure.

☒ One or more of the documents/processes listed above are checked YES, however, some portion of the proposed activity is not controlled by any of the above processes. 10CFR50.59 applies to that portion. A 50.59 pre-screening shall be performed.

5. Comments:
Implementing the new EC values from 10 CFR 20, Appendix B, Table 2, Column 2 has been previously approved by the NRC as part license TS Amendment No. 186. A 50.59 screening for ODCM rev 9 applies to default setpoint changes with CW = 0

6. Print name followed by signature. Attach completed form to document/activity/change package.

Prepared by: Darryl Holschbach (print/sign) Darryl Holschbach Date: 11/10/2005

Reviewed by: ED HINSHAW (print/sign) E A Hinshaw Date: 11/15/05

50.59 PRE-SCREENING

(Is a 50.59 screening required?)

1. Document/Activity number: ODCM revision 9
2. Brief description of proposed activity (what is being changed and why):
   Implement changes to incorporate new Effluent Concentration Values of 10 CFR 20, Appendix B, Table 2, Column 2. Change default setpoints for R-16, R-18, R-19 & R-20 when CW= 0 based on minimum SW flow of 5,000 gpm rather than 10,000 gpm.
3. Does the proposed activity involve or change any of the following documents or processes? Explain in Comments if necessary.
   Check YES or NO for EACH pre-screening item. [Ref. NMC 50.59 Resource Manual, Section 5.1]
   NOTE: If you are unsure if a document or process may be affected, contact the process owner.

   NOTE: An asterisk (*) indicates that the document is incorporated by reference in the USAR or is implicitly considered part of the USAR.

   NOTE: Check NO if activity/change is considered editorial, administrative, or maintenance as defined in Attachments A, B, and C. Explain in Comments if necessary.

	Yes 3	No 3		Document/Process	Directive/ Procedure
a	☐	☒		Updated Safety Analysis Report (USAR)	NEP-05.02
b	☒	☐	*	Technical Specifications Bases or Technical Requirements Manual (TRM)	NAD-05.14, NAD-03.25
c	☐	☒	*	Commitments made in response to NRC Generic Letters and Bulletins, and those described in the USAR	NAD-05.25
d	☐	☒	*	Environmental Qualification (EQ) Plan	NAD-01.08
e	☐	☒	*	Regulatory Guide 1.97 (RG 1.97) Accident Monitoring Instrumentation Plan	NAD-05.22
f	☐	☒	*	Fire Plan	NAD-01.02
g	☐	☒	*	Appendix R Design Description	NAD-01.02
h	☐	☒	*	Fire Protection Program Analysis (FPPA)	NAD-01.02
i	☒	☐	*	Offsite Dose Calculation Manual (ODCM)	NAD-05.13
j	☐	☒	*	Radiological Environmental Monitoring Manual (REMM)	NAD-05.13
k	☐	☒	*	Station Blackout Design Description	
l	☐	☒	*	Control Room Habitability Study	
m	☐	☒		Plant Drawing Changes/Discrepancies	NAD-05.01
n	☐	☒		Calculations/Evaluations/Analyses/Computer Software - Check YES only if: 1) It affects a method of evaluation described in the USAR, or 2) It independently (i.e., not part of a modification) affects the licensing or design basis.	Various
o	☐	☒		Permanent Plant Physical Changes - All require a screening.	NAD-04.03
p	☐	☒		Temporary Plant Physical Changes (TCRs) - Check No only if installed for maintenance AND in effect for less than 90 days at power conditions.	NAD-04.03
q	☐	☒		QA Typing Determinations - Check YES only if reduction in classification, or affects design function as described in USAR.	NAD-01.01
r	☒	☐		Setpoint or Acceptance Criteria - Check YES only if change affects plant monitoring, performance, or operation.	Various
s	☐	☒		Plant Procedures/Revisions - Check YES only if the change directly or indirectly involves operating, controlling or configuring an SSC differently than described or credited in USAR.	NAD-03.01
t	☐	☒		Engineering Specifications - Check YES only if a design function or design requirement may be affected.	NAD-05.03
u	☐	☒		Operations Night Orders or Operator Work Arounds - Check YES only if SSCs are operated or configured differently than described in USAR.	NAD-12.08
v	☐	☒		Temporary plant alterations (e.g., jumpers, scaffolding, shielding, barriers) - Check YES only if installed (or in effect) for maintenance for longer than 90 days at power conditions.	NAD-08.14, GMP-127, HP-04.002, FPP-08-09
w	☐	☒		Temporary plant alterations - Check YES only if not associated with maintenance.	
x	☐	☒		Corrective/Compensatory Actions - Check YES only if degraded/non-conforming plant condition accepted "as-is" or compensatory action taken.	GNP-11.08.03

4. Conclusion. Check one of the following:
   ☐ All of the documents or processes listed above are checked NO. A 50.59 screening is NOT required. Process change in accordance with the applicable program/process/procedure.
   ☒ One or more of the documents or processes listed above are checked YES. A 50.59 screening shall be performed.
5. Comments:
   Implementing the new EC values from 10 CFR 20, Appendix B, Table 2, Column 2 has been previously approved by the NRC as part license TS Amendment No. 186. A 50.59 screening for ODCM rev 9 applies to default setpoint changes with CW = 0
6. Print name followed by signature. Either the preparer or reviewer shall be 50.59 screening qualified. Attach completed form to document/activity/change package.

Prepared by: Daryl Holschbach / Daryl Holschbach Date: 11/10/05
(print/sign)
Reviewed by: Ed Hushaw / E. C. Hushaw Date: 11/15/05

10CFR50.59 SCREENING

Document/Activity Number: Offsite Dose Calculation Manual Rev. 9 **SCRN#** 05-146

PART I: **Describe the Proposed Activity and Search the KNPP USAR**
(Refer to NMC 50.59 Resource Manual Section 5.3.1)

I.1. Describe the proposed activity, and scope of the activity covered by this screening. Appropriate descriptive materials may be attached.

Revision 9 of the ODCM changes the default set points for radiation monitors, R-18, R-19, R-20 & R-16 with no CW flow as given in Table 1.1 to more conservative values based on the lowest possible Service Water dilution flow of 5,000 gpm rather than the previous default of 10,000 gpm. Calculation # 10690 rev 0 addendum B. [CAP 25888]

I.2. Search the Updated Safety Analysis Report (USAR) including those documents incorporated by reference. Describe relevant function(s), performance requirements, and methods of evaluation of the affected SSCs, and where this information is described in the USAR. In general, any USAR information potentially affected by the activity should be identified (consider both support functions and indirect affects). It is acceptable to attach and highlight applicable portions of the USAR.

USAR 11.0 Waste Disposal System and Radiation Protection System
11.1 Waste Disposal System
11.1.1 Design Basis
Control of Releases of Radioactivity to the Environment page 11.1-1
Criterion: The facility design shall include those means necessary to maintain control over the plant radioactive effluents, whether gaseous, liquid, or solid. Appropriate holdup capacity shall be provided for retention of gaseous, liquid, or solid effluents, particularly where unfavorable environmental conditions can be expected to require operational limitations upon the release of radioactive effluents to the environment. In all cases the design for radioactivity control must be justified:
In all cases the design for radioactivity control must be justified:
(a) on the basis of 10 CFR 20 requirements, for both normal operations and for any transient situation that might reasonably be anticipated to occur, and
(b) on the basis of 10 CFR 100 dosage level guidelines for potential reactor accidents of exceedingly low probability of occurrence (GDC 70).

Continued on SCRN # 05-146 Attachment 1

I.3. Does the activity involve a change to the Technical Specifications?
(Changes to the Technical Specifications require a License Amendment request.)

☐ Yes ☒ No

SCRN# 05-146

PART II: **Determine if the Activity Involves a Design Function**
(Refer to NMC 50.59 Resource Manual Section 5.3.2)

Compare the proposed activity to the relevant portions of the USAR and answer the following questions:

	YES	NO	QUESTION
1.	☐	☒	Does the proposed activity involve Safety Analyses or an SSC(s) credited in the Safety Analyses?
2.	☐	☒	Does the proposed activity involve SSCs that support SSC(s) credited in the Safety Analyses?
3.	☐	☒	Does the proposed activity involve SSCs whose failure could initiate a transient (e.g., reactor trip, loss of feedwater, etc) or accident?
4.	☐	☒	Does the proposed activity involve SSCs whose failure could impact SSC(s) credited in the Safety Analyses?
5.	☒	☐	Does the proposed activity involve USAR-described SSCs or procedural controls that perform functions that are required by, or otherwise necessary to comply with, regulations, license conditions, orders, or Technical Specifications?
6.	☐	☒	Does the activity involve a method of evaluation described in the USAR?
7.	☐	☒	Is the activity a test or experiment? (i.e., a non-passive activity which gathers data)
8.	☐	☒	Does the activity exceed or potentially affect a design basis limit for a fission product barrier (DBLFPB)? If this question is answered YES, this activity requires a 10CFR50.59 Evaluation.

If the answer to all of these questions is NO, answer PART III as Not Applicable, and proceed to PART IV. A 10CFR50.59 evaluation is not required.

If any of the above questions are checked YES, identify the specific design function, method of evaluation, or DBLFPB involved:

The radiation monitors, R-16, R-18, R-19 & R 20 are used to control radioactive effluents as required by 10 CFR 20.1302, 40 CFR Part 190, 10 CFR 50.36a and Appendix I to 10 CFR Part 50 and described in Technical Specification 6.16.b.1.

SCRN# 05-146

PART III: Determine Whether the Activity Involves Adverse Effects
(Refer to NMC 50.59 Resource Manual Section 5.3.3)

If all the questions in Part II were answered NO, then Part III is:
☐ **Not Applicable**

Answer the following questions to determine if the activity has an adverse effect on a design function. Any YES answer means that a 10CFR50.59 Evaluation is required, except where noted in Question III.3.

III.1. Changes to the Facility or Procedures

	YES	NO	QUESTION
a.	☐	☒	Does the activity adversely affect the design function(s) identified in Part II?
b.	☐	☒	Does the activity introduce an accident of a different type than previously described in the USAR? (see RM Section 6.2.5)
c.	☐	☒	Does the activity introduce new type of malfunction directly or indirectly affecting an SSC having a design function identified in Part II? (See definition in GNP-04.04.02, Section 3.0)
d.	☐	☒	Does the activity adversely affect the method of performing or controlling the design function(s) identified in Part II?

If any answer is YES, a 10CFR50.59 Evaluation is required. For each answer given, describe the basis for the conclusion (attach additional discussion, as necessary):

See SCRN # 05-146 Attachment 2

III.2. Changes to a Method of Evaluation

If the activity does not involve a method of evaluation, these questions are:
☒ **Not Applicable**

YES	NO	QUESTION
☐	☐	Does the activity use a revised or different method of evaluation for performing safety analyses than that described in the USAR?
☐	☐	Does the activity use a revised or different method of evaluation for evaluating SSCs credited in safety analyses than that described in the USAR?

If either answer is YES, a 10CFR50.59 Evaluation is required. For each answer given, describe the basis for the conclusion (attach additional discussion, as necessary):

SCRN# 05-146

III.3. Tests or Experiments

If the activity is not a test or experiment, the questions in III.3.a and III.3.b are:
☒ **Not Applicable**

a. Answer these two questions first:

YES	NO	QUESTION
☐	☐	Is the proposed test or experiment bounded by other tests or experiments that are described in the USAR?
☐	☐	Are the SSCs affected by the proposed test or experiment isolated from the facility?

If the answer to both questions is NO, continue to III.3.b. For each answer given, describe the basis for the conclusion (attach additional discussion, as necessary):

b. Answer these additional questions only for tests or experiments which do not meet the criteria given above. If the answer to either question in III.3.a is YES, then these three questions are:
☒ **Not Applicable**

YES	NO	QUESTION
☐	☐	Does the activity use or control an SSC in a manner that is outside the reference bounds ofthe design bases as described in the USAR?
☐	☐	Does the activity use or control an SSC in a manner that is inconsistent with the analyses or descriptions in the USAR?
☐	☐	Does the activity place the facility in a condition not previously evaluated or that could affect the capability of an SSC to perform its intended functions?

If any answer in III.3.b is YES, a 10CFR50.59 Evaluation is required. For each answer given, describe the basis for the conclusion (attach additional discussion, as necessary):

10CFR50.59 SCREENING

SCRN# 05-146

PART IV: **Conclusion**
(Refer to NMC 50.59 Resource Manual Section 5.3.4)

Check all that apply:

1. A 10CFR50.59 Evaluation is

   ☐ required,

   OR

   ☒ **NOT** required

2. A change to the USAR and/or any document incorporated by reference is

   ☐ required (Process change in accordance with applicable plant program/process/procedure.),

   OR

   ☒ **NOT** required

Additional comments:

Print name followed by signature. The preparer and reviewer shall be 50.59 screening or evaluation qualified. The completed screening is part of the document/activity/change package. Provide a copy of 50.59 screening to the 50.59 Process Owner/Program Coordinator.

Prepared By: (print/sign) ED HINSHAW / E.A. Hinshaw Date: 11/15/05

Reviewed By: (print/sign) Mike Bernsdorf / Mike Bernsdorf Date: 11/15/05

Initiated By: Darryl Holschbach / Darryl Holschbach 11/15/05

SCRN # 05-146
Attachment 1

USAR Search

Part I.2

USAR 9.3 Auxiliary Coolant System
9.3.2 System Design and Operation **page 9.3-4**
9.6 Facility Services
9.6.2 Service Water System
Design and Operation **page 9.6-3**

USAR 11.0 Waste Disposal System and Radiation Protection System
11.1 Waste Disposal System
11.1.1 Design Basis
Control of Releases of Radioactivity to the Environment **page 11.1-1**
Criterion: The facility design shall include those means necessary to maintain control over the plant radioactive effluents, whether gaseous, liquid, or solid. Appropriate holdup capacity shall be provided for retention of gaseous, liquid, or solid effluents, particularly where unfavorable environmental conditions can be expected to require operational limitations upon the release of radioactive effluents to the environment. In all cases the design for radioactivity control must be justified:

(a) on the basis of 10 CFR 20 requirements, for both normal operations and for any transient situation that might reasonably be anticipated to occur, and
(b) on the basis of 10 CFR 100 dosage level guidelines for potential reactor accidents of exceedingly low probability of occurrence (GDC 70).

11.1.2 System Design and Operation **pages 11.1-2 & 11.1-4 thru 11.1-5**
11.1.4 Minimum Operating Conditions **page 11.1-13**
All liquid waste releases are continuously monitored for gross activity during discharges to ensure that the activity limits specified in 10 CFR 20 for unrestricted areas are not exceeded. The Off-Site Dose Calculation Manual provides guidance when continuous monitoring is unavailable.

11.2 Radiation Protection
11.2.1 Design Basis
Monitoring Radioactive Releases **pages 11.1-1**
11.2.3 Radiation Monitoring System **pages 11.2-7 thru 11.2-10 and 11.2-15 thru 11.2-17**
11.2.5 Minimum Operating Conditions **page 11.2-27**
All liquid waste releases are continuously monitored for gross activity during discharge to ensure that the activity concentration limits are below those specified in 10 CFR 20 for unrestricted areas.

Table 11.2-7 (Radiation Monitor Setpoints "Calculated In Accordance With KNPP Off-site Dose Calculation Manual")

USAR 14.2 Standby Safety Features Analysis
14.2.2 Accidental Release-Recycle of Waste Liquid **pages 14.2-5 thru 14.2-7**
14.2.4 Steam Generator Tube Rupture **pages 14.2-10 thru 14.2-12**

TS 6.16.b

ODCM Sections 1.2.1 and 1.2.2
ODCM Table 1.1

Calculation # 10690
[CAP 25888]

SCRN # 05-146
Attachment 2

Safety Review Screening

PART III Determine Whether the Activity Involves Adverse Effects

Answer to questions:
III.1. Changes to the Facility or Procedures

a. **No, the proposed setpoint changes to radiation monitors, R-16, R-18, R-19 & R 20 are not adverse to the level of radioactive effluent control as required by 10 CFR 20.1302, 40 CFR Part 190, 10 CFR 50.36a and Appendix I to 10 CFR Part 50 and described in Technical Specification 6.16.b.1.**
Previous revisions of the ODCM listed calculated default setpoints as given in table 1.1 without CW flow using the default Service Water flow of 10,000 gpm. CAP 25888 identified from operator aid 94-1 and comparison with the normal operating limits of N-SW-02 that SW flow could be as low as 5000 gpm. CAP2588 determined that 5000 gpm rather than 10,000gpm should be used to calculate the default set points for radiation monitors, R-18, R-19, R-20 & R-16 with no CW flow Using the minimum SW flow of 5,000 gpm as input to calculation # 10690, new default setpoints were determined (Calculation # 10690 rev 0 addendum B). The setpoints will become more conservative being reduced by a factor of two (2). Thus they are not adverse to the level of radioactive effluent control.

b. **No, the proposed setpoint changes to radiation monitors, R-16, R-18, R-19 & R 20 do not create the possibility of an accident of a different type than any previously evaluated in the USAR.**
The radiation monitors are not an accident initiator. They are used for monitoring and controlling effluent releases from the plant and do not affect nuclear safety.

c. **No, the proposed setpoint changes to radiation monitors, R-16, R-18, R-19 & R 20 do not introduce a new type of malfunction directly or indirectly affecting an SSC used to control radioactive effluents.**
Changing the radiation monitor setpoints does not change the analyzed design of any plant equipment and cannot create the possibility for a different type of malfunction of equipment than previously evaluated in the USAR.

d. **No, the proposed setpoint changes to radiation monitors, R-16, R-18, R-19 & R 20 do not adversely affect the method of performing or controlling radioactive effluents required by 10 CFR 20.1302, 40 CFR Part 190, 10 CFR 50.36a and Appendix I to 10 CFR Part 50.**
The methodology to calculate the setpoints has not changed but rather the dilution water input to the calculation. The proposed changes to the setpoints are more conservative. The procedural controls for radioactive liquid discharges remain intact. The bases for protection of the public from radiation per 10 CFR 20; 10 CFR 50, Appendix I; and 40 CFR 190 are maintained. These default setpoint changes in no way reduce the margin of safety as defined in TS 6.16.b.1.

UNITED STATES
NUCLEAR REGULATORY COMMISSION
WASHINGTON, D.C. 20555-0001

SAFETY EVALUATION BY THE OFFICE OF NUCLEAR REACTOR REGULATION

RELATING TO AMENDMENT NO. 186 TO FACILITY OPERATING LICENSE NO. DPR-43

DOMINION ENERGY KEWAUNEE, INC.

KEWAUNEE POWER STATION

DOCKET NO. 50-305

1.0 INTRODUCTION

By application to the U.S. Nuclear Regulatory Commission (NRC, the Commission) dated February 3, 2005 (Agencywide Document Access and Management System (ADAMS) Accession Number ML050450372), Nuclear Management Company, LLC (the former licensee), proposed an amendment to the Technical Specifications (TSs) for the Kewaunee Nuclear Power Plant (Kewaunee). On July 5, 2005, the NRC issued Amendment No. 185 that reflected the transfer of the license to Dominion Energy Kewaunee, Inc., and the change in the facility name to Kewaunee Power Station.

The proposed changes would revise TS 6.16.b.1, "Radioactive Effluent Controls Program," and TS 6.18, "Off-site Dose Calculation Manual," to be consistent with Title 10 of the *Code of Federal Regulations* (10 CFR) Part 20, "Standards for Protection Against Radiation," and NUREG-1431, Revision 3, "Standard Technical Specifications [STS] Westinghouse Plants." Several of the proposed changes are consistent with TS Task Force (TSTF) Change Travelers TSTF-258A, Revision 4, "Changes to Section 5.0, Administrative Controls," dated July 31, 2003, and TSTF-308, Revision 1, "Determination of Cumulative and Projected Dose Contribution in RECP [Radioactive Effluents Control Program]," dated June 13, 2000. While TSTF-308 recommended changes for several TS administrative controls, the licensee proposed only those changes referring to the RECP for inclusion into the Kewaunee TSs.

2.0 REGULATORY EVALUATION

The TSTF process is an industry and NRC-controlled process for proposing and incorporating improvements to the STS. Several of the revisions proposed in this amendment are consistent with TSTF-258A, Revision 4, and TSTF-308, Revision 1. However, since Kewaunee has not adopted the STS, the NRC staff has made a plant-specific evaluation of the licensee's application using TSTF-258A and TSTF-308 as guidance.

The applicable regulatory requirements and guidelines are:

1. NUREG-1431, Revision 3
2. TSTF-258A, Revision 4

3. TSTF-308, Revision 1

4. 10 CFR Part 20

5. 40 CFR Part 190, "Environmental Standards for the Uranium Fuel Cycle"

6. 10 CFR 50, Appendix I, "Numerical Guides for Design Objectives and Limiting Conditions for Operation to Meet the Criterion 'As Low As Is Reasonably Achievable' for Radioactive Material in Light-Water-Cooled Nuclear Power Reactor Effluents"

7. Generic Letter (GL) 89-01, "Implementation of Programmatic Controls for Radiological Effluent Technical Specifications [RETS] in the Administrative Controls Section of the Technical Specifications and the Relocation of Procedural Details of RETS to the Offsite Dose Calculation Manual or to the Process Control Program," dated January 31, 1989.

3.0 TECHNICAL EVALUATION

The licensee's proposed changes, and NRC staff's evaluation of the changes, are discussed below.

3.1 TS 6.16.b.1

3.1.1 Proposed TS Changes

Revise TS 6.16.b.1 to insert parentheses around the "S" in "MEMBERS OF THE PUBLIC" in the second line of the introductory paragraph and delete "OPERATING" before procedures in the fourth line of the introductory paragraph.

3.7.2 NRC Staff Evaluation

Inserting parentheses around the "S" in MEMBERS OF THE PUBLIC makes the wording consistent with the Kewaunee TS title for definition TS 1.0.o.1. NUREG-1431, Section 1.1, "Definitions," does not include a definition of "member(s) of the public." Notwithstanding, NUREG-1431 and Kewaunee TS are written such that the defined terms in TS Section 1 appear identically in capitalized type throughout the TS and Bases as a means of reflecting the use of the term as TS Section 1. The NRC staff finds that this change is administrative with no impact on the safety of the unit and is therefore, acceptable.

The NRC staff finds that the deletion of the word "operating" in the specification introduction is administrative with no impact on the safety of the unit and is consistent with the wording in NUREG-1431. On this basis, the NRC staff finds the proposed change acceptable.

3.2 TS 6.16.b.1.B

3.2.1 Proposed TS Change

Revise TS 6.16.b.1.B to change "10 CFR Part 20, Appendix B, Table II, Column 2" to "ten times the concentration values in Appendix B, Table 2, Column 2 to 10 CFR 20.1001-20.2402."

3.2.2 NRC Staff Evaluation

The 1994 revision to 10 CFR Part 20, Appendix B, Table 2, Column 2, incorporated a change in the dose base for the liquid effluent concentration release rate limit from 500 millirem (mrem) per year to 50 mrem per year. Therefore, in order to retain the same dose base upon which the TS 6.16.b.1.b is based (500 mrem per year), the new Appendix B, Table 2, Column 2 values are multiplied by ten. This change is intended to eliminate possible confusion or improper implementation of the revised 10 CFR 20 requirements and is consistent with TSTF-258, Revision 4 and NUREG-1431. On this basis, the NRC staff finds the proposed change acceptable.

3.3 TS 6.16.b.1.C

3.3.1 Proposed TS Change

Revise TS 6.16.b.1.C to change reference from 10 CFR 20.106 to 10 CFR 20.1302.

3.3.2 NRC Staff Evaluation

The 1994 revision of 10 CFR Part 20 replaced 10 CFR 20.106 with 10 CFR 20.1302. Subpart D, Sections 20.1301 and 20.1302 now state the requirements for dose limits for individual members of the public, and compliance with the dose limits, respectively. This change is consistent with NUREG-1431. On this basis, the NRC staff finds the proposed change acceptable.

3.4 TS 6.16.b.1.E

3.4.1 Proposed TS Change

Revise TS 6.16.b.1.E to separate out the determination of cumulative and projected dose as follows: "Determination of cumulative dose contributions from radioactive effluents for the current calendar quarter and current calendar year in accordance with the methodology and parameters in the ODCM at least every 31 days. Determination of projected dose contributions from radioactive effluents in accordance with the methodology in the ODCM at least every 31 days."

3.4.2 NRC Staff Evaluation

This revision clarifies that determination of projected dose contributions from radioactive effluents in accordance with the methodology in the ODCM is required at least once every 31 days. The existing TS could be interpreted as requiring determining projected dose

contribution of the current calendar quarter and current calendar year every 31 days. The NRC staff finds that this change is administrative in nature and is consistent with TSTF-308, Revision 1, and NUREG-1431. On this basis, the NRC staff finds the proposed change acceptable.

3.5 TS 6.16.b.1.G

3.5.1 Proposed TS Change

Revise TS 6.16.b.1.G to delete current specification and insert:

> Limitations on the dose rate resulting from radioactive material released in gaseous effluents from the site to areas at or beyond the SITE BOUNDARY shall be limited to the following:
>
> 1. For noble gases: a dose rate ≤500 mrem/yr to the total body and a dose rate of ≤3000 mrem/yr to the skin, and
>
> 2. For iodine-131, iodine-133, tritium, and for all radionuclides in particulate form with half-lives greater than 8 days: a dose rate of ≤1500 mrem/yr to any organ.

3.5.2 NRC Staff Evaluation

This revision maintains the same dose rate limits as referenced in the current wording for TS 6.16.b.1.G, while also maintaining consistency with the methods of the ODCM for calculating these dose rates. Recognizing that this limit is an as low as reasonably achievable (ALARA) constraint on the release rate for gaseous effluents and not an annual dose limit, reference to the 10 CFR 20, Appendix B, Table 2, Column I values is not necessary. Change traveler TSTF-258 states that the change was made to eliminate possible confusion or improper implementation of the revised 10 CFR Part 20 requirements.

The NRC staff finds that the change is administrative in nature and is consistent with TSTF-258 and NUREG-1431. On this basis, the NRC staff finds the proposed change acceptable.

3.6 TS 6.16.1.b.J

3.6.1 Proposed TS Change

Revise TS 6.16.1.b.J to insert the phrase ", beyond the site boundary," immediately following "MEMBER(S) OF THE PUBLIC".

3.6.2 NRC Staff Evaluation

This change is made to provide clarification. The NRC staff finds that the change is administrative in nature and is in accordance with TSTF-258, NUREG-1431, and 40 CFR Part 190. On this basis, the NRC staff finds the proposed change acceptable.

3.7 Surveillance Provisions

3.7.1 Proposed TS Change

Insert the following sentence immediately after TS 6.16.1.b.J: "The provisions of TS 4.0.b and 4.0.c are applicable to the Radioactive Effluent Controls Program surveillance frequency."

3.7.2 NRC Staff Evaluation

This change specifies that the provisions of Kewaunee TS 4.0.b and 4.0.c, which contain provisions for maximum allowable surveillance frequency extension and missed surveillances, are applicable to the RECP surveillances. TS 4.0.b permits a 25 percent extension of the interval specified in the frequency (31 days). Allowing a 25 percent extension in the frequency of performing the monthly cumulative dose and projected dose calculation for the current quarter/year will have no effect on the outcome of the calculations.

As applied to the 31-day frequency, TS 4.0.b and 4.0.c would allow up to 31 days to complete the surveillance (dose calculation) if it is discovered that the surveillance was not performed within 38 days and 18 hours (the specified interval plus the 25 percent extension). Allowing 31 days to complete the cumulative dose and projected dose calculation for the current quarter/year is acceptable because it will have no effect on the outcome of the calculations and has no impact on the risk associated with plant operation. In addition, operating experience has shown that the calculated dose is usually well within limits. Thus, it is considered unlikely that a potential greater time interval between dose calculations will result in inadvertent effluent releases exceeding the specified limits. Additionally, TS 6.16.b.1 requires the RECP, which is contained in the ODCM, to include remedial actions to be taken whenever program limits are exceeded.

The NRC staff finds this change is consistent with the guidance contained in GL 89-01 and NUREG-1431. On this basis, the NRC staff finds the proposed change acceptable.

3.8 TS 6.18.b.1.B

3.8.1 Proposed TS Change

Revise TS 6.18.b.1.B to change the reference from 10 CFR 20.106 to 10 CFR 20.1302.

3.8.2 NRC Staff Evaluation

The 1994 revision of 10 CFR Part 20 replaced 10 CFR 20.106 with 10 CFR 20.1302. Subpart D, Sections 20.1301 and 20.1302 now state the requirements for dose limits for individual members of the public, and compliance with the dose limits, respectively. This change is consistent with NUREG-1431. On this basis, the NRC staff finds the proposed change acceptable.

3.9 Technical Evaluation Summary

The NRC staff has reviewed the licensee's submittal, and based on our review discussed above, the NRC staff finds the proposed changes to be acceptable.

4.0 VERIFICATIONS AND COMMITMENTS

The licensee's application dated February 5, 2005, made the following plant-specific regulatory commitment:

> The Kewaunee ODCM and affected plant procedures will be updated during implementation of the approved TS amendment.

The NRC staff finds that reasonable controls for the implementation and for subsequent evaluation of proposed changes pertaining to the above regulatory commitment can be provided by the licensee's administrative processes, including its commitment management program. The NRC staff has agreed that Nuclear Energy Institute 99-04, Revision 0, "Guidelines for Managing NRC Commitment Changes," provides reasonable guidance for the control of regulatory commitments made to the NRC staff (see Regulatory Issue Summary 2000-17, "Managing Regulatory Commitments Made by Power Reactor Licensees to the NRC Staff," dated September 21, 2000). Should the licensee choose to incorporate a regulatory commitment into the final safety analysis report or other document with established regulatory controls, the associated regulations would define the appropriate change-control and reporting requirements.

5.0 STATE CONSULTATION

In accordance with the Commission's regulations, the Wisconsin State official was notified of the proposed issuance of the amendment. The State official had no comments.

6.0 ENVIRONMENTAL CONSIDERATION

This amendment changes a requirement with respect to installation or use of a facility component located within the restricted area as defined in 10 CFR Part 20. The NRC staff has determined that the amendment involves no significant increase in the amounts, and no significant change in the types, of any effluent that may be released offsite and that there is no significant increase in individual or cumulative occupational radiation exposure. The Commission has previously issued a proposed finding that this amendment involves no significant hazards consideration and there has been no public comment on such finding (70 FR 15944). Accordingly, this amendment meets the eligibility criteria for categorical exclusion set forth in 10 CFR 51.22(c)(9). Pursuant to 10 CFR 51.22(b), no environmental impact statement or environmental assessment need be prepared in connection with the issuance of this amendment.

7.0 CONCLUSION

The NRC staff has concluded, based on the considerations discussed above, that: (1) there is reasonable assurance that the health and safety of the public will not be endangered by

operation in the proposed manner, (2) such activities will be conducted in compliance with the Commission's regulations, and (3) the issuance of this amendment will not be inimical to the common defense and security or to the health and safety of the public.

Principal Contributor: D. Beaulieu

Date: October 4, 2005

KEWAUNEE POWER STATION

OFFSITE DOSE CALCULATION MANUAL (ODCM)

Revision 9
December 2, 2005

Reviewed By:	Tom Webb Plant Operations Review Committee	Date:	11/29/2005
Approved By:	Thomas Breene Regulatory Affairs Manager	Date:	11/28/2005
Approved By:	Dan Shannon Radiation Protection Manager	Date:	11/28/2005
Approved By:	Wally Flint Chemistry Manager	Date:	11/23/2005

Abstract

This document has been developed in accordance with the Wisconsin Public Service Corporation (WPSC) commitment made by letter dated August 21, 1984 (from D.C. Hintz to S.A. Varga). It provides the current methodologies and parameters to be used in the calculation of offsite doses due to radioactive gaseous and liquid effluents and gaseous and liquid effluent monitoring alarm/trip setpoints for the Kewaunee Power Station. To develop this document, WPSC contracted the J. Stewart Bland Consultants, Inc. of Maryland; however, rigorous review and final acceptance of this document has been provided by WPSC. Implementation of this document is the responsibility of the current owner/operator of the Kewaunee Power Station (KPS).

KEWAUNEE POWER STATION
OFFSITE DOSE CALCULATION MANUAL

Table of Contents

Introduction 0-1

Definitions 0-2

1.0 Liquid Effluent 1-1

1.1 Radiation Monitoring Instrumentation and Controls 1-1
1.2 Liquid Effluent Monitor Setpoint Determination 1-1
1.2.1 Liquid Effluent Monitors (Radwaste, Steam Generator Blowdown and Service Water) 1-2
1.2.2 Conservative Default Values 1-3
1.3 Liquid Effluent Concentration Limits - 10CFR20 1-4
1.4 Liquid Effluent Dose Calculations - 10CFR50 1-5
1.5 Liquid Effluent Dose Projections 1-7
1.6 Onsite Disposal of Low-Level Radioactively Contaminated Waste Streams 1-8
1.7 Heating Boiler Blowdown Operation with Primary-to-Secondary Leak 1-9
Figure 1 Liquid Radioactive Effluent Flow Diagram 1-10
Table 1.1 Parameters for Liquid Alarm Setpoint Determinations 1-11
Table 1.2 Site Related Ingestion Dose Commitment Factors 1-12
Table 1.3 Bioaccumulation Factors (BFi) 1-14

2.0 Gaseous Effluents 2-1

2.1 Radiation Monitoring Instrumentation and Controls 2-1
2.1.1 Waste Gas Holdup System 2-1
2.1.2 Condenser Evacuation System 2-1
2.1.3 Containment Purge 2-1
2.1.4 Auxiliary Building Vent 2-1
2.1.5 Containment Mini-Purge/Vent System 2-2

2.2 Gaseous Effluent Monitor Setpoint Determination 2-2
2.2.1 Containment and Auxiliary Building Vent Monitor 2-2
2.2.2 Conservative Default Values 2-3

2.3 Gaseous Effluent Instantaneous Dose Rate Calculations - 10CFR20 2-4
2.3.1 Site Boundary Dose Rate - Noble Gas 2-4
2.3.2 Site Boundary Dose Rate - Radioiodine and Particulates 2-5

Table of Contents (con't)

2.4 Gaseous Effluent Dose Calculations - 10CFR50 2-6
2.4.1 Unrestricted Area Dose - Noble Gases 2-6
2.4.2 Unrestricted Area Dose - Radioiodine and Particulates 2-7

2.5 Gaseous Effluent Dose Projection 2-9

2.6 Environmental Radiation Protection Standards - 40CFR190 2-10

2.7 Incineration of Radioactively Contaminated Oil 2-10

2.8 Total Dose 2-10
Figure 2 Gaseous Radioactive Effluent Flow Diagram 2-12
Figure 3 Simplified Heating Boiler Fuel Oil Piping System 2-13
Table 2.1 Dose Factors for Noble Gases 2-14
Table 2.2 Parameters for Gaseous Alarm Setpoint Determinations 2-15
Table 2.3 Controlling Locations, Pathways and Atmospheric Dispersion for Dose Calculations 2-16
Table 2.4 Inhalation Pathway Dose Factors - ADULT 2-17
Table 2.5 Inhalation Pathway Dose Factors - TEEN 2-19
Table 2.6 Inhalation Pathway Dose Factors - CHILD 2-21
Table 2.7 Inhalation Pathway Dose Factors - INFANT 2-23
Table 2.8 Vegetation Pathway Dose Factors - ADULT 2-25
Table 2.9 Vegetation Pathway Dose Factors - TEEN 2-27
Table 2.10 Vegetation Pathway Dose Factors - CHILD 2-29
Table 2.11 Grass-Cow-Milk Pathway Dose Factors - ADULT 2-31
Table 2.12 Grass-Cow-Milk Pathway Dose Factors - TEEN 2-33
Table 2.13 Grass-Cow-Milk Pathway Dose Factors - CHILD 2-35
Table 2.14 Grass-Cow-Milk Pathway Dose Factors - INFANT 2-37
Table 2.15 Ground Plane Pathway Dose Factors 2-39

3/4 Radiological Effluent Specifications and Surveillance Requirements 3-1

3/4.0 Applicability and Surveillance Requirements 3-1

3/4.1 Radioactive Liquid Effluent Monitoring Instrumentation 3-2

3/4.2 Radioactive Gaseous Effluent Monitoring Instrumentation 3-3

Table of Contents (con't)

3/4.3 Liquid Effluents 3-4
Concentration 3-4
Dose 3-5
Liquid Radwaste Treatment System 3-6

3/4.4 Gaseous Effluents 3-7
Dose Rate 3-7
Dose-Noble Gases 3-9
Dose-Iodine-131, Iodine-133, Tritium and Radionuclides in Particulate Form 3-10
Gaseous Radwaste Treatment System 3-12

3/4.5 Total Dose 3-14

3/4.6 Reporting Requirements 3-16
Table 3.1 Radioactive Liquid Effluent Monitoring Instrumentation 3-17
Table 3.2 Radioactive Gaseous Effluent Monitoring Instrumentation 3-18
Table 4.0 Frequency Notation 3-20
Table 4.1 Radioactive Liquid Effluent Monitoring Instrumentation Surveillance Requirements 3-21
Table 4.2 Radioactive Gaseous Effluent Monitoring Instrumentation Surveillance Requirements 3-22
Table 4.3 Radioactive Liquid Waste Sampling and Analysis Program 3-23
Table 4.4 Radioactive Gaseous Waste Sampling and Analysis Program 3-25

Appendices

Appendix A Technical Basis for Effective Dose Factors - Liquid Radioactive Effluents A-1
Table A-1 Adult Dose Contributions Fish and Drinking Water Pathways A-5
Table A-2 Adult Liver and Total Body Dose Assessment A-6

Appendix B Technical Basis for Effective Dose Factors - Gaseous Radioactive Effluents .. B-1
Table B-1 Effective Dose Factors - Noble Gases B-5

Appendix C Evaluation of Conservative, Default Effective EC Value for Liquid Effluents . C-1
Table C-1 Calculation of Effective EC (EC_e) C-4

Appendix D Site Maps D-1
Figure D-1 Gaseous and Liquid Effluent Release Points D-3

Appendix E Onsite Disposal of Low-Level Radioactively Contaminated Waste Streams E-1

KEWAUNEE POWER STATION
OFFSITE DOSE CALCULATION MANUAL

Introduction

The Kewaunee Offsite Dose Calculation Manual (ODCM) describes the methodology and parameters used in:

1) The calculation of radioactive liquid and gaseous effluent monitoring instrumentation alarm/trip setpoints; and

2) The calculation of radioactive liquid and gaseous concentrations, dose rates and cumulative quarterly and yearly doses.

The methodology stated in this manual is acceptable for use in demonstrating compliance with 10CFR20.1302, 10CFR50, Appendix I, and 40CFR190.

More conservative calculational methods and/or conditions (e.g., location and/or exposure pathways) expected to yield higher computed doses than appropriate for the maximally exposed person may be assumed in the dose evaluations.

The ODCM will be maintained at the station for use as a reference guide and training document of accepted methodologies and calculations. Changes will be made to the ODCM calculational methodologies and parameters as is deemed necessary to assure reasonable conservatism in keeping with the principles of 10CFR50.36a and Appendix I for demonstrating radioactive effluents are ALARA.

Definitions

1. ACTION

   ACTION shall be that part of a specification which prescribes remedial measures required under designated conditions.

2. GASEOUS RADWASTE TREATMENT SYSTEM

   A GASEOUS RADWASTE TREATMENT SYSTEM is any system designed and installed to reduce radioactive gaseous effluents by collecting off-gases from the primary coolant system and providing for delay or holdup for the purpose of reducing the total radioactivity released to the environment.

3. INSTRUMENTATION SURVEILLANCE

   a. CHANNEL CHECK

   b. CHANNEL FUNCTIONAL TEST

   c. CHANNEL CALIBRATION

   d. SOURCE CHECK

   As defined in the Technical Specifications.

4. MEMBER(S) OF THE PUBLIC

   MEMBER(S) OF THE PUBLIC shall include all persons who are not occupationally associated with the plant. This category does not include employees of the utility, its contractors or vendors. Also excluded from this category are persons who enter the site to service equipment or to make deliveries. This category does include persons who use portions of the site for recreational, occupational, or other purposes not associated with the plant.

5. OPERABLE-OPERABILITY

   As defined in the Technical Specifications.

6. PURGE - PURGING

   PURGE or PURGING is the controlled process of discharging air or gas from a confinement to maintain temperature, pressure, humidity, concentration, or other OPERATING condition, in such a manner that replacement air or gas is required to purify the confinement.

7. RADIOLOGICAL ENVIRONMENTAL MONITORING MANUAL (REMM)

The REMM shall contain the current methodology and parameters used in the conduct of the radiological environmental monitoring program.

8. SITE BOUNDARY

The SITE BOUNDARY shall be that line beyond which the land is neither owned, nor leased, nor otherwise controlled by the licensee.

9. UNRESTRICTED AREA

An UNRESTRICTED AREA shall be any area at or beyond the SITE BOUNDARY access to which is not controlled by the licensee for purposes of protection of individuals from exposure to radiation and radioactive materials, or any area within the SITE BOUNDARY used for residential quarters or for industrial, commercial, institutional, and/or recreational purposes.

10. VENTILATION EXHAUST TREATMENT SYSTEM

A VENTILATION EXHAUST TREATMENT SYSTEM is any system designed and installed to reduce gaseous radioiodine or radioactive material in particulate form in effluents by passing ventilation or vent exhaust gases through charcoal and/or HEPA filters for the purpose of removing iodines or particulates from the gaseous exhaust stream prior to the release to the environment. Such a system is not considered to have any effect on noble gas effluents. Engineered Safety Feature atmospheric cleanup systems (i.e., Auxiliary Building special ventilation, Shield Building ventilation, spent fuel pool ventilation) are not considered to be VENTILATION EXHAUST TREATMENT SYSTEM components.

1.0 Liquid Effluents

1.1 Radiation Monitoring Instrumentation and Controls

The liquid effluent monitoring instrumentation and controls installed at Kewaunee for controlling and monitoring normal radioactive material releases in accordance with 10 CFR 50, Appendix A, Criteria 60 and 64, are summarized as follows:

1) Alarm (and Automatic Termination) - R-18 provides this function on the liquid radwaste effluent line, R-19 on the Steam Generator blowdown.

2) Alarm (only) - R-20 and R-16 provide alarm functions for the Service Water discharges.

3) Composite Samples - Samples are collected weekly from the steam generator blowdown and analyzed by gamma spectroscopy. Samples are collected weekly from the Turbine Building Sump and analyzed by gamma spectroscopy. The weekly samples are composited for monthly tritium and gross alpha analyses and for quarterly Sr-89, Sr-90 , and Fe-55 analyses. During periods of identified primary-to-secondary leakage (with the secondary activity > 1.0E-05 μCi/ml), grab samples from the Turbine Building sump are collected daily and analyzed by gamma spectroscopy. These samples are composited for monthly tritium and gross alpha analyses and for quarterly Sr-89, Sr-90, and Fe-55 analyses.

4) Liquid Tank Controls - All radioactive liquid tanks are located inside the Auxiliary Building and contain the suitable confinement systems and drains to prevent direct, unmonitored release to the environment. A liquid radioactive waste flow diagram with the applicable, associated radiation monitoring instrumentation and controls is presented as Figure 1.

1.2 Liquid Effluent Monitor Setpoint Determination

Per the requirements of Technical Specification 6.16.b.1.B and ODCM Specification 3.1, alarm setpoints shall be established for the liquid effluent monitoring instrumentation to ensure that the release concentration limits of ODCM Specification 3.3.1 are met (i.e., the concentration of radioactive material released in liquid effluents to unrestricted areas shall be limited to ten times the concentrations specified in 10 CFR 20, Appendix B, Table 2, Column 2, for radionuclides and 2.0E-04 μCi/ml for dissolved or entrained noble gases). The following equation[1] must be satisfied to meet the liquid effluent restrictions:

$$c \leq \frac{10 \times C(F+f)}{f} \qquad (1.1)$$

[1] Adapted from NUREG-0133 to include the application of 10 times the Effluent Concentration (EC) of 10 CFR 20, Appendix B, Table 2, Column 2.

where:

10×C = ten times the effluent concentration limit of 10 CFR 20, Appendix B, Table 2, Column 2, in μCi/ml. For dissolved and entrained noble gases equals 2×10^{-4} μCi/ml.

c = the setpoint, in μCi/ml, of the radioactivity monitor measuring the radioactivity concentration in the effluent line prior to dilution and subsequent release; the setpoint, which is inversely proportional to the volumetric flow of the effluent line and proportional to the volumetric flow of the dilution stream plus the effluent stream, represents a value which, if exceeded, would result in concentrations exceeding the limits of ODCM Specification 3.3.1.

f = the flow rate at the radiation monitor location in volume per unit time, but in the same units as F, below.

F = the dilution water flow rate as measured prior to the release point, in volume per unit time.

[Note that if no dilution is provided, c ≤ C. Also, note that when (F) is large compared to (f), then (F + f) ≈ F.]

1.2.1 <u>Liquid Effluent Monitors (Radwaste, Steam Generator Blowdown and Service Water)</u>

The setpoints for the liquid effluent monitors at the Kewaunee Power Station are determined by the following equations:

$$SP \leq \frac{CW \times \sum (C_i \times SEN_i)}{\sum \frac{C_i}{10 \times EC_i} \times RR} + \text{bkg} \qquad (1.2)$$

where:

SP = alarm setpoint corresponding to the maximum allowable release rate (cpm)

Ci = the concentration of radionuclide "i" in the liquid effluent (μCi), to include gamma emitters only

10 x ECi = ten times the EC value corresponding to radionuclide "i" from 10 CFR 20, Appendix B, Table 2, Column 2 (μCi/ml)

SENi = the sensitivity value to which the monitor is calibrated for radionuclide "i" (cpm per μCi/ml). The default calibration value from Table 1.1 may be used for gamma emitting radionuclides in lieu of nuclide specific values.

CW = the circulating water flow rate (dilution water flow) at the time of release (gal/min)

RR = the liquid effluent release rate (gal/min)

bkg = the background of the monitor (cpm)

The radioactivity monitor setpoint equation (1.2) remains valid during outages when the circulating water dilution is at its lowest. Reduction of the waste stream flow (RR) may be necessary during these periods to meet the discharge criteria. At its lowest value, CW will equal RR and equation (1.2) reverts to the following equation:

$$SP \leq \frac{\sum (C_i \times SEN_i)}{\sum \frac{C_i}{(10 \times EC_i)}} + bkg \qquad (1.3)$$

1.2.2 Conservative Default Values

Non-gamma emitting radionuclides (H-3, Fe-55, Sr-89/90) are not detected by the effluent monitor and, therefore, are not directly included in the above setpoint equation. These non-gamma radionuclides can, however, contribute a sizable fraction of the total EC limit (refer to Appendix C). The method specified below for establishing default setpoints provides conservatism to account for these non-gamma emitters and ensures that the setpoint meets the requirements of ODCM Specification 3.1 including all radionuclides. Refer to Appendix C for further discussion.

Conservative alarm setpoints have been determined through the use of generic, default parameters. Table 1.1 summarizes all current default values in use for Kewaunee. They are based upon the following:

a) substitution of the default effective EC (EC_e) value of 1.0E-06 μCi/ml (refer to Appendix C for justification),

where,

$$EC_e = \frac{\sum C_i}{\sum \frac{C_i}{(EC_i)}} \qquad (1.4)$$

b) substitution of the lowest operational circulating water flow, in gal/min; and,

c) substitution of the highest effluent release rate, in gal/min,

d) substitution of the default monitor sensitivity.

The default setpoint equation is provided below:

$$SP \leq \frac{EC_e \times 10 \times SEN \times CW}{RR} + bkg \qquad (1.5)$$

1.3 Liquid Effluent Concentration Limits - 10 CFR 20

ODCM Specification 3.3.1 limits the concentration of radioactive material in liquid effluents (after dilution in the Circulating Water System) to less than ten times the concentrations as specified in 10 CFR 20, Appendix B, Table 2, Column 2 for radionuclides other than noble gases. Noble gases are limited to a diluted concentration of 2E-04 µCi/ml. Release rates are controlled and radiation monitor alarm setpoints are established to ensure that these concentration limits are not exceeded. In the event any liquid release results in an alarm setpoint being exceeded, an evaluation of compliance with the concentration limits of ODCM Specification 3.3.1 may be performed using the following equation:

where:

$$\sum[(C_i \div (10 \times EC_i)) \times (RR + CW)] \leq 1 \qquad (1.6)$$

Ci	=	concentration of radionuclide "i" in the undiluted liquid effluent (µCi/ml)
10 x ECi	=	ten times the EC value corresponding to radionuclide "i" from 10 CFR 20, Appendix B, Table 2, Column 2 (µCi/ml)
	=	2E-04 µCi/ml for dissolved or entrained noble gases
RR	=	the liquid effluent release rate (gal/min)
CW	=	the circulating water flow rate (dilution water flow) at the time of the release (gal/min)

1.4 Liquid Effluent Dose Calculation - 10 CFR 50

ODCM Specification 3.3.2 limits the dose or dose commitment to members of the public from radioactive materials in liquid effluents from the Kewaunee Power Station to:

- during any calendar quarter;

  ≤ 1.5 mrem to total body

  ≤ 5.0 mrem to any organ

- during any calendar year;

  ≤ 3.0 mrem to total body

  ≤ 10.0 mrem to any organ.

Per Surveillance Requirement 4.3.2, the following calculational methods may be used for determining the dose or dose commitment due to the liquid radioactive effluents from Kewaunee.

$$D_o = \frac{1.67E-02 \times VOL}{CW} \times \sum (C_i \times A_{io}) \qquad (1.7)$$

where:

D_o = dose or dose commitment to organ "o", including total body (mrem)

A_{io} = site-related ingestion dose commitment factor to the total body or any organ "o" for radionuclide "i" (mrem/hr per µCi/ml) (Table 1.2)

C_i = average concentration of radionuclide "i", in undiluted liquid effluent representative of the volume VOL (µCi/ml)

VOL = volume of liquid effluent released (gal)

CW = average circulating water discharge rate during release period (gal/min)

1.67E-02 = conversion factor (hr/min)

The site-related ingestion dose/dose commitment factors (A_{io}) are presented in Table 1.2 and have been derived in accordance with guidance of NUREG-0133 by the equation:

$$A_{io} = 1.14E+05[(U_W \div D_W) + (U_F \times BF_i)]DF_i \qquad (1.8)$$

where:

A_{io} = composite dose parameter for the total body or critical organ "o" of an adult for radionuclide "i", for the fish ingestion and water consumption pathways (mrem/hr per µCi/ml)

1.14E+05 = conversion factor (pCi/µCi x ml/kg ÷ hr/yr)

U_w = adult water consumption (730 kg/yr)

D_w = dilution factor from the near field area within ¼ mile of the release point to the nearest potable water intake for the adult water consumption (84[2], unitless)

U_F = adult fish consumption (21 kg/yr)

BF_i = bioaccumulation factor for radionuclide "i" in fish from Table 1.3 (pCi/kg per pCi/l)

DF_i = dose conversion factor for nuclide "i" for adults in pre-selected organ "o", from Table E-11 of Regulatory Guide 1.109, 1977 and NUREG 0172, 1977 (mrem/pCi)

The radionuclides included in the periodic dose assessment per the requirements of ODCM Specification 3.3.2 and Surveillance Requirement 4.3.2 are those as identified by gamma spectral analysis of the liquid waste samples collected and analyzed per Surveillance Requirement 4.3.1.1, Table 4.3.

Radionuclides requiring radiochemical analysis (e.g., Sr-89 and Sr-90) will be added to the dose analysis at a frequency consistent with the required minimum analysis frequency of Table 4.3.

In lieu of the individual radionuclide dose assessment as presented above, the following simplified dose calculational equation may be used for demonstrating compliance with the dose limits of ODCM Specification 3.3.2. (Refer to Appendix A for the derivation and justification for this simplified method.)

[2] Adapted from the Kewaunee Final Environmental Statement, Section V.

Total Body

$$D_{tb} = \frac{9.67E+03 \times VOL}{CW} \times \sum C_i \qquad (1.9)$$

Maximum Organ

$$D_{max} = \frac{1.18E+04 \times VOL}{CW} \times \sum C_i \qquad (1.10)$$

where:

C_i = average concentration of radionuclide "i", in undiluted liquid effluent representative of the volume VOL (μCi/ml)

VOL = volume of liquid effluent released (gal)

CW = average circulating water discharge rate during release period (gal/min)

D_{tb} = conservatively evaluated total body dose (mrem)

D_{max} = conservatively evaluated maximum organ dose (mrem)

9.67E+03 = product of the hour-to-minute conversion factor (hr/min) and the conservative total body dose conversion factor (Cs-134, total body -- 5.79E+05 mrem/hr per μCi/ml)

1.18E+04 = product of the hour-to-minute conversion factor (hr/min) and the conservative maximum organ dose conversion factor (Cs-134, liver -- 7.09E+05 mrem/hr per μCi/ml)

1.5 Liquid Effluent Dose Projections

ODCM Specification 3.3.3 requires that the liquid radioactive waste processing system be used to reduce the radioactive material levels in the liquid waste prior to release when the quarterly projected doses exceed:

- 0.18 mrem to the total body, or
- 0.62 mrem to any organ.

The applicable liquid waste streams and processing systems are as delineated in Figure 1.

Dose projections are made at least once per 31 days by the following equations:

$$D_{tbp} = D_{tb}(91 \div d) \quad (1.11)$$

$$D_{maxp} = D_{max}(91 \div d) \quad (1.12)$$

where:

D_{tbp}	=	the total body dose projection for current calendar quarter (mrem)
D_{tb}	=	the total body dose to date for current calendar quarter as determined by equation (1.7) or (1.9) (mrem)
D_{maxp}	=	the maximum organ dose projection for current calendar quarter (mrem)
D_{max}	=	the maximum organ dose to date for current calendar quarter as determined by equation (1.7) or (1.10) (mrem)
d	=	the number of days to date for current calendar quarter
91	=	the number of days in a calendar quarter

1.6 Onsite Disposal of Low-Level Radioactively Contaminated Waste Streams

During the normal operation of Kewaunee, the potential exists for in-plant process streams, which are not normally radioactive to become contaminated with very low levels of radioactive materials. These waste streams are normally separated from the radioactive streams. However, due mainly to infrequent, minor system leaks, and anticipated operational occurrences, the potential exists for these systems to become slightly contaminated. At Kewaunee, the secondary system demineralizer resins, the service water pretreatment system sludges, the make-up water system resins, and the sewage treatment plant sludges are waste streams that have the potential to become contaminated at very low levels. During the yearly testing of a batch of pre-treatment sludge, it was found that approximately 15,000 cubic feet of sludge had been contaminated with Cs-137 and Co-60.

The potential radiation doses to members of the public from these onsite disposal methods are well below 1 mrem per year. This dose is in keeping with the guidelines of the National Council on Radiation Protection (NCRP) in their Report No. 91, in which the NCRP established a "negligible individual risk level" at a dose rate of 1 mrem per year.

It is for these type wastes that the NRC acknowledged in Information Notice No. 83-05 and 88-22 that the levels of radioactive material are so low that control and disposal as a radwaste are not warranted. The potential risks to man are negligible and the disposal costs as a radwaste are unwarranted and costly.

This waste material will be monitored and evaluated prior to disposal to ensure its radioactive material content is negligible. It shall then be disposed of in a normal conventional manner with records being maintained of all materials disposed of using these methods.

Approvals for specific alternate disposal methods are listed in Appendix E. Currently, only service water pretreatment (SWPT) facility lagoon sludge and sewage treatment plant sludge have been approved for disposal by land spreading.

1.7 Heating Boiler Blowdown Operation with Primary-to-Secondary Leak

During operation with a primary-to-secondary leak, the potential exists for non-radioactive systems to become contaminated. One such system is the heating system. Activity is transferred from the reactor coolant system into the secondary main steam system through the leak and then into the heating system. Heating boiler operation following operation with a primary-to-secondary leak will result in the heating boiler becoming contaminated.

When the heating boiler is operated, it must be periodically blown down to remove impurities, which collect in the system. This blowdown is normally directed to the steam generator blowdown tank but can be diverted to the circulating water discharge. Either way, the blowdown becomes a release path for radioactivity to the environment. The heating boiler blowdown is sampled, using current plant procedures, whenever the primary-to-secondary leakage exceeds 10 gallons per day and the gross gamma activity or tritium activity exceeds 1.0E-05 μCi/ml. The results of these samples allow for the activity being released to the environment to be quantified. This is similar to the method used for the turbine building sump release path. The radioactive effluent limits of 10 CFR Part 20, 40 CFR 190, and Technical Specifications can therefore be maintained.

Figure 1
Liquid Radioactive Effluent Flow Diagram

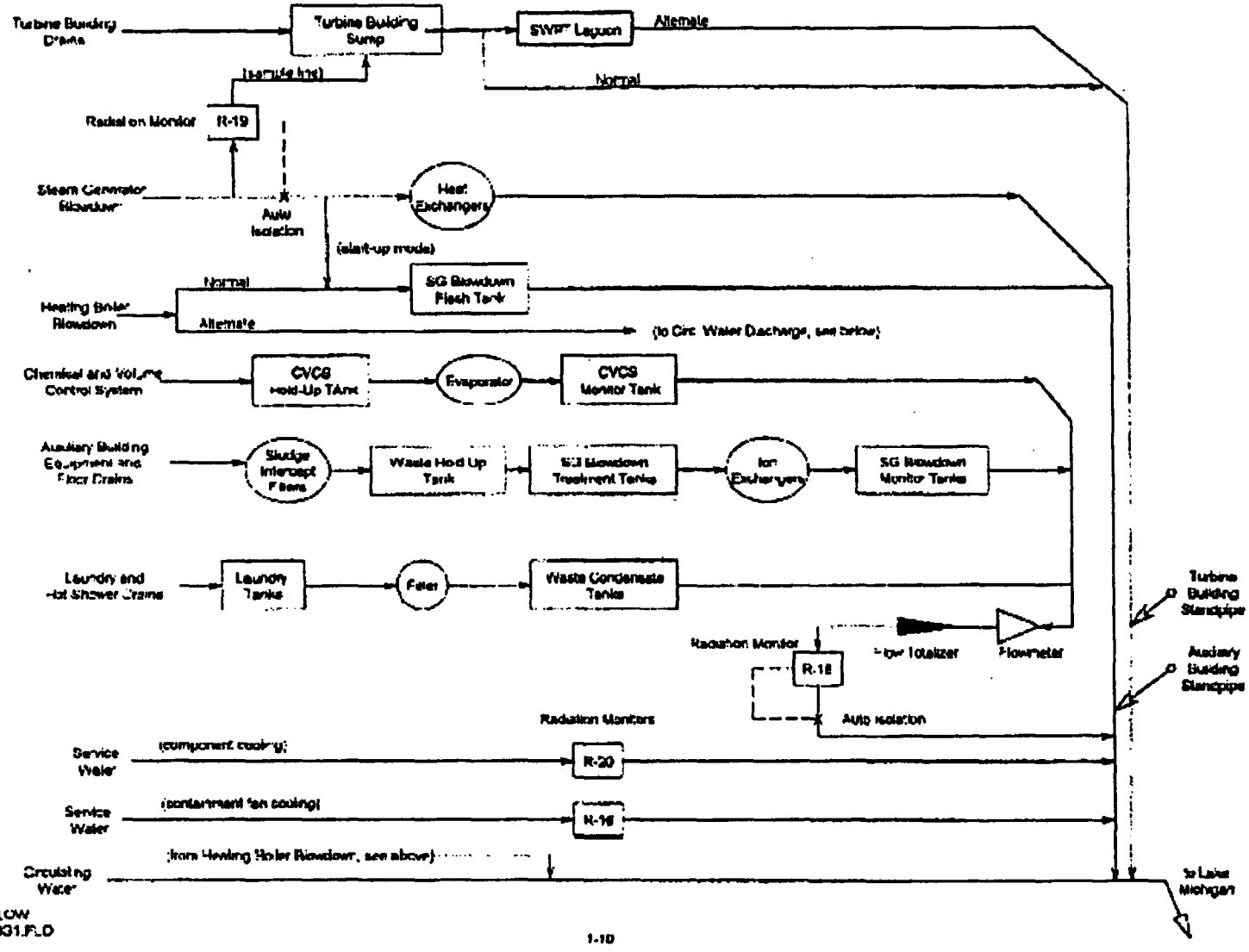

Table 1.1

Parameters for Liquid Alarm Setpoint Determinations

Parameter	Actual Value	Default Value*	Units	Comments
EC_e	calculated	1.0E-06**	µCi/ml	Calculate for each batch to be released
C_i	measured	N/A	µCi/ml	Taken from gamma spectral analysis of liquid effluent
EC_i	as determined	N/A	µCi/ml	Taken from 10 CFR 20, Appendix B, Table 2, Col. 2
Sensitivity (SEN)				
R-18	as determined	1.0E+08	cpm per µCi/ml	Radwaste effluent
R-19	as determined	1.0E+08		Steam Generator blowdown
R-20	as determined	1.0E+08		Service Water - component cooling
R-16	as determined	9.8E+07		Service Water - Containment fan cooling
CW	as determined	2.58E+05	gpm	Circulating Water System default = winter, single CW pump
Release Rate (RR)				
R-18	as determined	8.0E+01	gpm	Determined prior to release; release rate can be adjusted for Technical Specification compliance
R-19	as determined	2.0E+02		Steam Generator A and B combined
R-20	as determined	5.0E+03		Service Water - component cooling
R-16	as determined	1.5E+03		Service Water - Containment fan cooling
Background (bkg)				
R-18	as determined	2.0E+03	cpm	Nominal values only; actual values may be used in lieu of these reference values
R-19	as determined	8.0E+01		
R-20	as determined	6.0E+01		
R-16	as determined	8.0E+01		
Setpoint* (SP)				
R-18	calculated	3.22E+06 + bkg	cpm	Default alarm setpoints; more conservative values may be used as deem appropriate and desirable for assuring regulatory compliance and for maintaining releases ALARA.
R-19	calculated	1.29E+06 + bkg		
R-20	calculated	5.16E+04 + bkg		
R-16	calculated	1.69E+05 + bkg		
Setpoint* (SP) with no Circulating Water System flow, CW=0				
R-18	calculated	6.25E+04+ bkg	cpm	For outages with no Circulating Water System flow (CW=0) and a dilution flow as provided by the Service Water system of 5,000 gpm total.***
R-19	calculated	2.50E+04 + bkg		
R-20	calculated	1,00E+03 + bkg		
R-16	calculated	3.26E+03 + bkg		

* Refer to Calculation # C10690 for the default setpoint calculation.
** Refer to Appendix C for derivation
*** SW flow is based on N-SW-02 Operating Parameters and Service Water Pump Flow Curves.

Table 1.2
Site Related Ingestion Dose Commitment Factors
(mrem/hr per µCi/ml)

Nuclide	Bone	Liver	T.Body	Thyroid	Kidney	Lung	GI-LLI
H-3	-	3.30E-1	3.30E-1	3.30E-1	3.30E-1	3.30E-1	3.30E-1
C-14	3.13E+4	6.26E+3	6.26E+3	6.26E+3	6.26E+3	6.26E+3	6.26E+3
Na-24	4.09E+2	4.09E+2	4.09E+2	4.09E+2	4.09E+2	4.09E+2	4.09E+2
P-32	1.39E+6	8.62E+4	5.36E+4	-	-	-	1.56E+5
Cr-51	-	-	1.28E+0	7.63E-1	2.81E-1	1.69E+0	3.21E+2
Mn-54	-	4.38E+3	8.36E+2	-	1.30E+3	-	1.34E+4
Mn-56	-	1.10E+2	1.96E+1	-	1.40E+2	-	3.52E+3
Fe-55	6.61E+2	4.57E+2	1.06E+2	-	-	2.55E+2	2.62E+2
Fe-59	1.04E+3	2.45E+3	9.40E+2	-	-	6.85E+2	8.17E+3
Co-57	-	2.11E+1	3.51E+1	-	-	-	5.36E+2
Co-58	-	8.99E+1	2.02E+2	-	-	-	1.82E+3
Co-60	-	2.58E+2	5.70E+2	-	-	-	4.85E+3
Ni-63	3.13E+4	2.17E+3	1.05E+3	-	-	-	4.52E+2
Ni-65	1.27E+2	1.65E+1	7.52E+0	-	-	-	4.18E+2
Cu-64	-	1.01E+1	4.72E+0	-	2.53E+1	-	8.57E+2
Zn-65	2.32E+4	7.38E+4	3.33E+4	-	4.93E+4	-	4.65E+4
Zn-69	4.93E+1	9.43E+1	6.56E+0	-	6.13E+1	-	1.42E+1
Br-82	-	-	2.27E+3	-	-	-	2.61E+3
Br-83	-	-	4.05E+1	-	-	-	5.83E+1
Br-84	-	-	5.24E+1	-	-	-	4.12E-4
Br-85	-	-	2.15E+0	-	-	-	-
Rb-86	-	1.01E+5	4.71E+4	-	-	-	1.99E+4
Rb-88	-	2.90E+2	1.54E+2	-	-	-	4.00E-9
Rb-89	-	1.92E+2	1.35E+2	-	-	-	-
Sr-89	2.24E+4	-	6.44E+2	-	-	-	3.60E+3
Sr-90	5.52E+5	-	1.35E+5	-	-	-	1.59E+4
Sr-91	4.13E+2	-	1.67E+1	-	-	-	1.97E+3
Sr-92	1.57E+2	-	6.77E+0	-	-	-	3.10E+3
Y-90	5.85E-1	-	1.57E-2	-	-	-	6.21E+3
Y-91m	5.53E-3	-	2.14E-4	-	-	-	1.62E-2
Y-91	8.58E+0	-	2.29E-1	-	-	-	4.72E+3
Y-92	5.14E-2	-	1.50E-3	-	-	-	9.00E+2
Y-93	1.63E-1	-	4.50E-3	-	-	-	5.17E+3
Zr-95	2.70E-1	8.67E-2	5.87E-2	-	1.36E-1	-	2.75E+2
Zr-97	1.49E-2	3.01E-3	1.38E-3	-	4.55E-3	-	9.34E+2
Nb-95	4.47E+2	2.49E+2	1.34E+2	-	2.46E+2	-	1.51E+6
Nb-97	3.75E+0	9.48E-1	3.46E-1	-	1.11E+0	-	3.50E+3
Mo-99	-	1.07E+2	2.04E+1	-	2.43E+2	-	2.49E+2
Tc-99m	9.11E-3	2.58E-2	3.28E-1	-	3.91E-1	1.26E-2	1.52E+1
Tc-101	9.37E-3	1.35E-2	1.32E-1	-	2.43E-1	6.90E-3	-
Ru-103	4.61E+0	-	1.99E+0	-	1.76E+1	-	5.39E+2
Ru-105	3.84E-1	-	1.52E-1	-	4.96E+0	-	2.35E+2
Ru-106	6.86E+1	-	8.68E+0	-	1.32E+2	-	4.44E+3
Rh-103m	-	-	-	-	-	-	-

Table 1.2
Site Related Ingestion Dose Commitment Factors
(mrem/hr per µCi/ml)

Nuclide	Bone	Liver	T.Body	Thyroid	Kidney	Lung	GI-LLI
Rh-106	-	-	-	-	-	-	-
Ag-110m	1.04E+0	9.62E-1	5.71E-1	-	1.89E+0	-	3.92E+2
Sb-124	9.48E+0	1.79E-1	3.76E+0	2.30E-2	-	7.38E+0	2.69E+2
Sb-125	6.06E+0	6.77E-2	1.44E+0	6.16E-3	-	4.67E+0	6.67E+1
Te-125m	2.57E+3	9.31E+2	3.44E+2	7.73E+2	1.04E+4	-	1.03E+4
Te-127m	6.49E+3	2.32E+3	7.91E+2	1.66E+3	2.64E+4	-	2.18E+4
Te-127	1.05E+2	3.79E+1	2.28E+1	7.81E+1	4.29E+2	-	8.32E+3
Te-129m	1.10E+4	4.11E+3	1.74E+3	3.79E+3	4.60E+4	-	5.55E+4
Te-129	3.01E+1	1.13E+1	7.33E+0	2.31E+1	1.27E+2	-	2.27E+1
Te-131m	1.66E+3	8.11E+2	6.76E+2	1.28E+3	8.22E+3	-	8.05E+4
Te-131	1.89E+1	7.89E+0	5.96E+0	1.55E+1	8.27E+1	-	2.67E+0
Te-132	2.42E+3	1.56E+3	1.47E+3	1.73E+3	1.50E+4	-	7.39E+4
I-130	2.79E+1	8.23E+1	3.25E+1	6.97E+3	1.28E+2	-	7.08E+1
I-131	1.54E+2	2.20E+2	1.26E+2	7.20E+4	3.76E+2	-	5.79E+1
I-132	7.49E+0	2.00E+1	7.01E+0	7.01E+2	3.19E+1	-	3.76E+0
I-133	5.24E+1	9.11E+1	2.78E+1	1.34E+4	1.59E+2	-	8.19E+1
I-134	3.91E+0	1.06E+1	3.80E+0	1.84E+2	1.69E+1	-	9.26E-3
I-135	1.63E+1	4.28E+1	1.58E+1	2.82E+3	6.86E+1	-	4.83E+1
Cs-134	2.98E+5	7.09E+5	5.79E+5	-	2.29E+5	7.61E+4	1.24E+4
Cs-136	3.12E+4	1.23E+5	8.86E+4	-	6.85E+4	9.39E+3	1.40E+4
Cs-137	3.82E+5	5.22E+5	3.42E+5	-	1.77E+5	5.89E+4	1.01E+4
Cs-138	2.64E+2	5.22E+2	2.59E+2	-	3.84E+2	3.79E+1	2.23E-3
Ba-139	1.02E+0	7.30E-4	3.00E-2	-	6.83E-4	4.14E-4	1.82E+0
Ba-140	2.15E+2	2.69E-1	1.41E+1	-	9.16E-2	1.54E-1	4.42E+2
Ba-141	4.98E-1	3.76E-4	1.68E-2	-	3.50E-4	2.13E-4	-
Ba-142	2.25E-1	2.31E-4	1.42E-2	-	1.95E-4	1.31E-4	-
La-140	1.52E-1	7.67E-2	2.03E-2	-	-	-	5.63E+3
La-142	7.79E-3	3.54E-3	8.82E-4	-	-	-	2.59E+1
Ce-141	3.17E-2	2.14E-2	2.43E-3	-	9.95E-3	-	8.19E+1
Ce-143	5.58E-3	4.13E+0	4.57E-4	-	1.82E-3	-	1.54E+2
Ce-144	1.65E+0	6.90E-1	8.87E-2	-	4.10E-1	-	5.58E+2
Pr-143	5.60E-1	2.25E-1	2.77E-2	-	1.30E-1	-	2.45E+3
Pr-144	1.83E-3	7.61E-4	9.31E-5	-	4.29E-4	-	-
Nd-147	3.83E-1	4.42E-1	2.65E-2	-	2.59E-1	-	2.12E+3
W-187	2.96E+2	2.47E+2	8.65E+1	-	-	-	8.10E+4
Np-239	2.97E-2	2.92E-3	1.61E-3	-	9.10E-3	-	5.98E+2

Table 1.3 Bioaccumulation Factors(BFi) (pCi/kg per pCi/liter)*	
Element	Freshwater Fish
H	9.0E-01
C	4.6E+03
Na	1.0E+02
P	3.0E+03
Cr	2.0E+02
Mn	4.0E+02
Fe	1.0E+02
Co	5.0E+01
Ni	1.0E+02
Cu	5.0E+01
Zn	2.0E+03
Br	4.2E+02
Rb	2.0E+03
Sr	3.0E+01
Y	2.5E+01
Zr	3.3E+00
Nb	3.0E+04
Mo	1.0E+01
Tc	1.5E+01
Ru	1.0E+01
Rh	1.0E+01
Ag	2.3E+00
Sb	1.0E+00
Te	4.0E+02
I	1.5E+01
Cs	2.0E+03
Ba	4.0E+00
La	2.5E+01
Ce	1.0E+00
Pr	2.5E+01
Nd	2.5E+01
W	1.2E+03
Np	1.0E+01

* Values in this Table are taken from Regulatory Guide 1.109 except for phosphorus which is adapted from NUREG/CR-1336 and silver and antimony which are taken from UCRL 50564, Rev. 1, October 1972.

Gaseous Effluents

2.1 Radiation Monitoring Instrumentation and Controls

The gaseous effluent monitoring instrumentation and controls at Kewaunee for controlling and monitoring normal radioactive material releases in accordance with 10 CFR 50, Appendix A, Criteria 60 and 64, are summarized as follows:

2.1.1 Waste Gas Holdup System

The vent header gases are collected by the waste gas holdup system. Gases may be recycled to provide cover gas for the CVCS hold-up tanks or held in the waste gas tanks for decay prior to release. Waste gas decay tanks are batch released after sampling and analysis. The tanks are discharged via the Auxiliary Building vent. R-13 and/or R-14 provide noble gas monitoring and automatic isolation.

2.1.2 Condenser Evacuation System

The air ejector discharge is monitored by R-15. Releases from this system are normally via the Auxiliary Building vent and are monitored by R-13 and/or R-14.

2.1.3 Containment Purge

Containment purge and ventilation is via the containment stack for the 36-inch RBV system but via the auxiliary building stack for the 2-inch vent and mini-purge blower system. The stack radiation monitoring system consists of:

- a noble gas activity monitor providing alarm and automatic termination of release (R-12 and R-21),
- an iodine sampler, and
- a particulate sampler.

Effluent flow rates are determined empirically as a function of fan operation (fan curves). Sampler flow rates are determined by flow rate instrumentation.

2.1.4 Auxiliary Building Vent

The Auxiliary Building vent receives discharges from the waste gas holdup system, condenser evacuation system, fuel storage area ventilation, Auxiliary Building radwaste processing area ventilation, 2-inch containment pressure relief purge/vent system, and Auxiliary Building general area. All effluents pass through the R-13 and/or R-14 channels which contain:

- a noble gas monitor,
- an iodine sampler, and
- a particulate sampler.

The noble gas monitor provides auto isolation of any waste gas decay tank release and diverts other releases through the special ventilation system. Effluent flow rates are determined by installed flow measurement equipment or as a function of fan operation (fan curves). Sampler flow rates are determined by flow rate instrumentation.

2.1.5 Containment Mini-Purge/Vent System

Slight pressure buildup in containment is a recurring event resulting from normal operation of the plant. Prior to exceeding 2 psig in containment, this excess pressure is vented off. Air from containment is routed to the Auxiliary Building ventilation system, via the post-LOCA hydrogen recombiner piping and then out through the Auxiliary Building vent stack. The system is also designed to allow a continuous supply of fresh air to be introduced into containment via a mini-blower to purge gases. An alarm of the Auxiliary Building vent stack monitor (R-13 or R-14) or the containment building airborne radioactivity monitors (R-11, R-12) provides automatic isolation.

A gaseous radioactive waste flow diagram with the applicable, associated radiation monitoring instrumentation and controls is presented as Figure 2.

2.2 Gaseous Effluent Monitor Setpoint Determination

2.2.1 Containment and Auxiliary Building Vent Monitor

Per the requirements of ODCM Specification 3.2, alarm setpoints shall be established for the gaseous effluent monitoring instrumentation to ensure that the release rate of noble gases does not exceed corresponding dose rate at the site boundary of 500 mrem/year to the total body or 3000 mrem/year to the skin. Based on a grab sample analysis of the applicable release (i.e., grab sample of the Containment vent or Auxiliary Building vent), the radiation monitoring alarm setpoints may be established by the following calculational method:

$$FRAC_{tb} = \left[4.72E+02 \times \chi/Q \times VF \times \sum (C_i \times K_i)\right] \div 500 \qquad (2.1)$$

$$FRAC_{skin} = \left[4.72E+02 \times \chi/Q \times VF \times \sum (C_i \times (L_i + 1.1M_i))\right] \div 3000 \qquad (2.2)$$

where:

$FRAC_{tb}$ = fraction of the allowable release rate for the total body based on the identified radionuclide concentrations and the release flow rate

$FRAC_{skin}$ = fraction of the allowable release rate for skin based on the identified radionuclide concentrations and the release flow rate

χ/Q = annual average meteorological dispersion for direct exposure to noble gas at the controlling site boundary location (sec/m^3, from Table 2.3)

VF = ventilation system flow rate for the applicable release point and monitor (ft^3/min, from Table 2.3)

C_i = concentration of noble gas radionuclide "i" as determined by radioanalysis of grab sample ($\mu Ci/cm^3$)

K_i = total body dose conversion factor for noble gas radionuclide "i" (mrem/yr per $\mu Ci/m^3$, from Table 2.1)

L_i = beta skin dose conversion factor for noble gas radionuclide "i" (mrem/yr per $\mu Ci/m^3$, from Table 2.1)

M_i = gamma air dose conversion factor for noble gas radionuclide "i" (mrad/yr per $\mu Ci/m^3$, from Table 2.1)

1.1 = mrem skin dose per mrad gamma air dose (mrem/mrad)

4.72E+02 = conversion factor (cm^3/ft^3 x min/sec)

500 = total body dose rate limit (mrem/yr)

3000 = skin dose rate limit (mrem/yr)

Based on the more limiting FRAC (i.e., higher value) as determined above, the alarm setpoint for the Containment and Auxiliary Building vent monitors at Kewaunee may be calculated:

$$SP = \left[\sum (C_i \times SEN_i) \div FRAC\right] + bkg \qquad (2.3)$$

where:

SP = alarm setpoint corresponding to the maximum allowable release rate (cpm)

SEN_i = the sensitivity value to which the monitor is calibrated for radionuclide "i" (cpm per $\mu Ci/cm^3$), use the default value from Table 2.2 if radionuclide specific sensitivities are not available

bkg = background of the monitor (cpm)

2.2.2 Conservative Default Values

A conservative alarm setpoint can be established, in lieu of the individual radionuclide evaluation based on the grab sample analysis, to eliminate the potential of periodically having to adjust the setpoint to reflect minor changes in radionuclide distribution and variations in release flow rate. The alarm setpoint may be conservatively determined by the default values presented in Table 2.2. These values are based upon:

a) substitution of the maximum ventilation flow rate,

b) substitution of a radionuclide distribution[3] comprised of 95% Xe-133, 2% Xe-135, 1% Xe-133m, 1% Kr-88 and 1% Kr-85; and,

c) application of an administrative multiplier of 0.5 to conservatively assure that any simultaneous releases do not exceed the maximum allowable release rate.

For this radionuclide distribution, the alarm setpoint based on the total body dose rate is more restrictive than the corresponding setpoint based on the skin dose rate. The resulting conservative, default setpoints are presented in Table 2.2.

2.3 Gaseous Effluent Instantaneous Dose Rate Calculations - 10 CFR 20

2.3.1 Site Boundary Dose Rate - Noble Gases.

ODCM Specification 3.4.1.a limits the dose rate at the site boundary due to noble gas releases to ≤ 500 mrem/yr to the total body, and ≤ 3000 mrem/yr to the skin. Radiation monitor alarm setpoints are established to ensure that these release limits are not exceeded. In the event any gaseous releases from the station results in the alarm setpoints being exceeded, an evaluation of the unrestricted area dose rate resulting from the release may be performed using the following equations:

$$\dot{D}_{tb} = \chi/Q \times \sum\left(K_i \times \dot{Q}_i\right) \qquad (2.4)$$

and

$$\dot{D}_s = \chi/Q \times \sum\left((L_i + 1.1M_i) \times \dot{Q}_i\right) \qquad (2.5)$$

where:

$\dot{D}_{tb}$ = total body dose rate (mrem/yr)

$\dot{D}_s$ = skin dose rate (mrem/yr)

χ/Q = atmospheric dispersion for direct exposure to noble gas at the controlling site boundary (sec/m³, from Table 2.3)

$\dot{Q}_i$ = average release rate of radionuclide "i" over the release period under evaluation (μCi/sec)

[3] Adopted from ANSI N237-1976/ANS-18.1, Source Term Specifications, Table 6.

K_i = total body dose conversion factor for noble gas radionuclide "i" (mrem/yr per μCi/m³, from Table 2.1)

L_i = beta skin dose conversion factor for noble gas radionuclide "i" (mrem/yr per μCi/m³, from Table 2.1)

M_i = gamma air dose conversion factor for noble gas radionuclide "i" (mrad/yr per μCi/m³, from Table 2.1)

1.1 = mrem skin dose per mrad gamma air dose (mrem/mrad)

Actual meteorological conditions concurrent with the release period or the default, annual average dispersion parameters as presented in Table 2.3 may be used for evaluating the gaseous effluent dose rate.

2.3.2 Site Boundary Dose Rate - Radioiodine and Particulates

ODCM Specification 3.4.1.b limits the dose rate to ≤ 1500 mrem/yr to any organ for I-131, I-133, tritium and particulates with half-lives greater than 8 days. To demonstrate compliance with this limit, an evaluation is performed at a frequency no greater than that corresponding to the sampling and analysis time period for continuous releases (e.g., nominally once per 7 days) and for batch releases on the time period over which any batch release is to occur. The following equation may be used for the dose rate evaluation:

$$\dot{D}_o = \chi/Q \times \sum \left(R_i \times \dot{Q}_i \right) \qquad (2.6)$$

where:

$\dot{D}_o$ = average organ dose rate over the sampling time period (mrem/yr)

χ/Q = atmospheric dispersion to the controlling site boundary for the inhalation pathway (sec/m³, from Table 2.3)

R_i = dose parameter for radionuclide "i", (mrem/yr per μCi/m³) for the child inhalation pathway from Table 2.6

$\dot{Q}_i$ = average release rate over the appropriate sampling period and analysis frequency for radionuclide i, I-131, I-133, tritium or other radionuclide in particulate form with half-life greater than 8 days (μCi/sec)

By substituting 1500 mrem/yr for $\dot{D}_o$ solving for $\dot{Q}_i$, an allowable release rate for I-131 can be determined. Based on the annual average meteorological dispersion (see Table 2.3) and the most limiting potential pathway, age group and organ (inhalation pathway, child thyroid – R_i = 1.62E+07 mrem/yr per μCi/m³) the allowable release rate for I-131 is 6.43 μCi/sec. An added conservatism factor of 0.25 has been included in this calculation to account for any potential dose contribution from other radioactive particulate material.

For a 7-day period, which is the nominal sampling and analysis frequency for I-131, the cumulative allowable release is 3.9 Ci. Therefore, as long as the I-131 releases in any 7-day period do not exceed 3.9 Ci, no additional analyses are needed to verify compliance with the ODCM Specification 3.4.1.b limits on allowable release rate.

2.4 Gaseous Effluent Dose Calculations - 10 CFR 50

2.4.1 Unrestricted Area Dose - Noble Gases

ODCM Specification 3.4.2 requires a periodic assessment of releases of noble gases to evaluate compliance with the quarterly dose limits of (≤ 5 mrad, gamma-air and ≤ 10 mrad, beta-air) and the calendar year limits (≤ 10 mrad, gamma-air and ≤ 20 mrad, beta-air). The following equations may be used to calculate the gamma-air and beta-air doses:

$$D_\gamma = 3.17E-08 \times \chi/Q \times \sum (M_i \times Q_i) \qquad (2.7)$$

and

$$D_\beta = 3.17E-08 \times \chi/Q \times \sum (N_i \times Q_i) \qquad (2.8)$$

where:

D_γ = air dose due to gamma emissions for noble gas radionuclides (mrad)

D_β = air dose due to beta emissions for noble gas radionuclides (mrad)

χ/Q = atmospheric dispersion to the controlling site boundary (sec/m³, from Table 2.3)

Q_i = cumulative release of noble gas radionuclide "i" over the period of interest (μCi)

M_i = air dose factor due to gamma emissions from noble gas radionuclide "i" (mrad/yr per μCi/m³ from Table 2.1)

N_i = air dose factor due to beta emissions from noble gas radionuclide "i" (mrad/yr per μCi/m³, Table 2.1)

3.17E-08 = conversion factor (yr/sec)

In lieu of the individual noble gas radionuclide dose assessment as presented above, the following simplified dose calculational equation may be used for verifying compliance with the dose limits of ODCM Specification 3.4.2. (Refer to Appendix B for the derivation and justification for this simplified method.)

$$D_\gamma = \frac{3.17E-08}{0.50} \times \chi/Q \times M_{eff} \times \sum Q_i \qquad (2.9)$$

and

$$D_\beta = \frac{3.17E-08}{0.50} \times \chi/Q \times N_{eff} \times \sum Q_i \qquad (2.10)$$

where:

M_{eff} = 5.3E+02 effective gamma-air dose factor (mrad/yr per $\mu Ci/m^3$)

N_{eff} = 1.1E+03 effective beta-air dose factor (mrad/yr per $\mu Ci/m^3$)

0.50 = conservatism factor

Actual meteorological conditions concurrent with the release period or the default, annual average dispersion parameters as presented in Table 2.3, may be used for the evaluation of the gamma-air and beta-air doses.

2.4.2 Unrestricted Area Dose - Radioiodine and Particulates

Per the requirements of ODCM Specification 3.4.3, a periodic assessment shall be performed to evaluate compliance with the quarterly dose limit (≤ 7.5 mrem) and calendar year limit (≤ 15 mrem) to any organ. The following equation may be used to evaluate the maximum organ dose due to releases of I-131, I-133, tritium and particulates with half-lives greater than 8 days:

$$D_{aop} = 3.17E-08 \times W \times SF_p \times \sum (R_i \times Q_i) \qquad (2.11)$$

where:

D_{aop} = dose or dose commitment for age group "a" to organ "o", including the total body, via pathway "p" from I-131, I-133, tritium and radionuclides in particulate form with half-life greater than eight days (mrem)

W = atmospheric dispersion parameter to the controlling location(s) as identified in Table 2.3

χ/Q = atmospheric dispersion for inhalation pathway and H-3 dose contribution via other pathways (sec/m^3)

D/Q = atmospheric deposition for vegetation, milk and ground plane exposure pathways (l/m^2)

R_i = dose factor for radionuclide "i", (mrem/yr per $\mu Ci/m^3$) or (m^2 - mrem/yr per μCi/sec) from Table 2.4 through 2.15 for each age group "a" and the applicable pathway "p" as identified in Table 2.3. Values for R_i were derived in accordance with the methods described in NUREG-0133.

Q_i = cumulative release over the period of interest for radionuclide "i" -- I-131 or radioactive material in particulate form with half-life greater than 8 days (μCi).

SF_p = seasonal correction factor to account for the fraction of the period that the applicable exposure pathway does exist.

1) For milk and vegetation exposure pathways:

$$= \frac{\textit{\# of months in the period that grazing occurs}}{\textit{total \# of months in period}}$$

= 0.5 for annual calculations

2) For inhalation and ground plane exposure pathways: = 1.0

In lieu of the individual radionuclide (I-131 and particulates) dose assessment as presented above, the following simplified dose calculational equation may be used for verifying compliance with the dose limits of ODCM Specification 3.4.3.

$$D_{max} = 3.17E-08 \times W \times SF_p \times R_{I-131} \times \sum Q_i \qquad (2.12)$$

where:

D_{max} = maximum organ dose (mrem)

R_{I-131} = I-131 dose parameter for the thyroid for the identified controlling pathway

= 1.05E+12, infant thyroid dose parameter with the grass-cow-milk pathway controlling (m^2 - mrem/yr per μCi/sec)

The ground plane exposure and inhalation pathways need not be considered when the above-simplified calculational method is used because of the overall negligible contribution of these pathways to the total thyroid dose. It is recognized that for some particulate radionuclides (e.g. Co-60 and Cs-137), the ground plane exposure pathway may represent a higher dose contribution than either the vegetation or grass-cow-milk pathway. However, use of the I-131 thyroid dose parameter for all radionuclides will maximize the organ dose calculation, especially considering that no other radionuclide has a higher dose parameter for any organ via any pathway than I-131 for the thyroid via the grass-cow-milk pathway.

The location of exposure pathways and the maximum organ dose calculation may be based on the available pathways in the surrounding environment of Kewaunee as identified by the annual land-use census, see ODCM Specification 3.6.2. Otherwise, the dose will be evaluated based on the predetermined controlling pathways as identified in Table 2.3.

2.5 Gaseous Effluent Dose Projection

ODCM Specification 3.4.4 requires that the Ventilation Exhaust Treatment System be used to reduce radioactive material levels prior to discharge when projected doses exceed one-half the annual design objective rate in any calendar quarter, i.e., exceeding:

- 0.62 mrad/quarter, gamma air,
- 1.25 mrad/quarter, beta air, or
- 0.94 mrem/quarter, maximum organ.

The applicable gaseous release sources and processing systems are as delineated in Figure 2.

Dose projections are performed at least once per 31 days by the following equations:

$$D_{\gamma p} = D_{\gamma} \times (91 \div d) \qquad (2.13)$$

$$D_{\beta p} = D_{\beta} \times (91 \div d) \qquad (2.14)$$

$$D_{maxp} = D_{max} \times (91 \div d) \qquad (2.15)$$

where:

$D_{\gamma p}$ = gamma air dose projection for current calendar quarter (mrad)

D_{γ} = gamma air dose to date for current calendar quarter as determined by equation (2.7) or (2.9) (mrad)

$D_{\beta p}$ = beta air dose projection for current calendar quarter (mrad)

D_{β} = beta air dose to date for current calendar quarter as determined by equation (2.8) or (2.10) (mrad)

D_{maxp} = maximum organ dose projection for current calendar quarter (mrem)

D_{max} = maximum organ dose to date for current calendar quarter as determined by equation (2.11) or (2.12) (mrem)

d = number of days to date in current calendar quarter

91 = number of days in a calendar quarter

2.6 Environmental Radiation Protection Standards 40 CFR 190

For the purpose of implementing ODCM Specification 3.5 on the EPA environmental radiation protection standard and Technical Specification 6.9.b.2 on reporting requirements, dose calculations may be performed using the above equations with the substitution of average or actual meteorological parameters for the period of interest and actual applicable pathways. Any exposure attributable to on-site sources will be evaluated based on the results of the environmental monitoring program (TLD measurements) or by calculational methods. NUREG-0543 describes acceptable methods for demonstrating compliance with 40 CFR Part 190 when radioactive effluents exceed the Appendix I portion of the specifications.

2.7 Incineration of Radioactively Contaminated Oil

During plant operation, radioactively contaminated oils are generated from various pieces of equipment operating in the plant. The largest source of contaminated oil is the reactor coolant pump lubricating oil, which is periodically changed for preventive maintenance reasons. 10 CFR Part 20 allows licensees to incinerate radioactively contaminated oils on site provided that the total radioactive effluents from the facility conform to the requirements of 10 CFR Part 50, Appendix I.

Radioactively contaminated oil, which is designated for incineration, will be collected in containers, which are uniquely serialized such that the contents can be identified and tracked. Each container will be sampled and analyzed for radioactivity. The isotopic concentrations will be recorded for each container.

The heating boiler will be utilized to incinerate the radioactively contaminated oil collected on site. A gaseous radwaste effluent dose calculation, as prescribed in Section 2.3 of the ODCM, will be performed to insure that the limits established by ODCM Specifications 3.4.1, 3.4.2 and 3.4.3 are not exceeded. Release of the activity is assumed to occur at the time the contaminated oil is transferred into the heating boiler fuel oil storage tank and will be accounted for using established plant procedures. This will be valid for an assumed release from the fuel oil storage tank vent, fill piping, or from the boiler exhaust stack. See Figure 3 for a description of the heating boiler fuel oil system.

2.8 Total Dose

The purpose of this section is to describe the method used to calculate the cumulative dose contributions from liquid and gaseous effluents in accordance with KPS Technical Specifications for total dose. This method can also be used to demonstrate compliance with the Environmental Protection Agency (EPA) 40CFR190, "Environmental Standards for the Uranium Fuel Cycle".

Compliance with the KPS Technical Specification dose objectives for the maximum individual demonstrates compliance with the EPA limits to any member of the public, since the design dose objectives from 10CFR50, Appendix I are much lower than the 40CFR190 dose limits to the general public. With the calculated doses from the releases of radioactive materials in liquid or gaseous effluents exceeding twice the limits outlined in ODCM Specifications 3.3.2, 3.4.2, and 3.4.3, a special analysis shall be performed. The purpose of this analysis is to demonstrate if the total dose to any member of the public (real individual) from all uranium fuel cycle sources (including direct radiation contributions from the reactor unit, from outside storage areas and from all real pathways) is limited to less than or equal to 25 mrem per year to the total body or any organ, except the thyroid, which is limited to 75 mrem per year.

If required, the total dose to a member of the public will be calculated for all significant effluent release points for all real pathways including direct radiation. Effluent releases from Point Beach Nuclear Plant must also be considered due to its proximity. Calculations will be based on the equations in Sections 1.4, 2.4.1, and 2.4.2, with the exception that usage factors and other site specific parameters may be modified using more realistic assumptions, where appropriate.

The direct radiation component from the facility can be determined using environmental TLD results. These results will be corrected for natural background and for actual occupancy time of any areas accessible to the general public at the location of maximum direct radiation. It is recognized that by including the results from the environmental TLDs into the sum of total dose component, the direct radiation dose may be overestimated. The TLD measurements may include the exposure from noble gases, ground plane deposition, and shoreline deposition, which have already been included in the summation of the significant dose pathways to the general public. However, this conservative method can be used, if required, as well as any other method for estimating the direct radiation dose from contained radioactive sources within the facility. The methodology used to incorporate the direct radiation component into total dose estimates will be outlined whenever total doses are reported.

Therefore, the total dose will be determined based on the most realistic site specific data and parameters to assess the real dose to any member of the public.

Figure 2
Gaseous Radioactive Effluent Flow Diagram

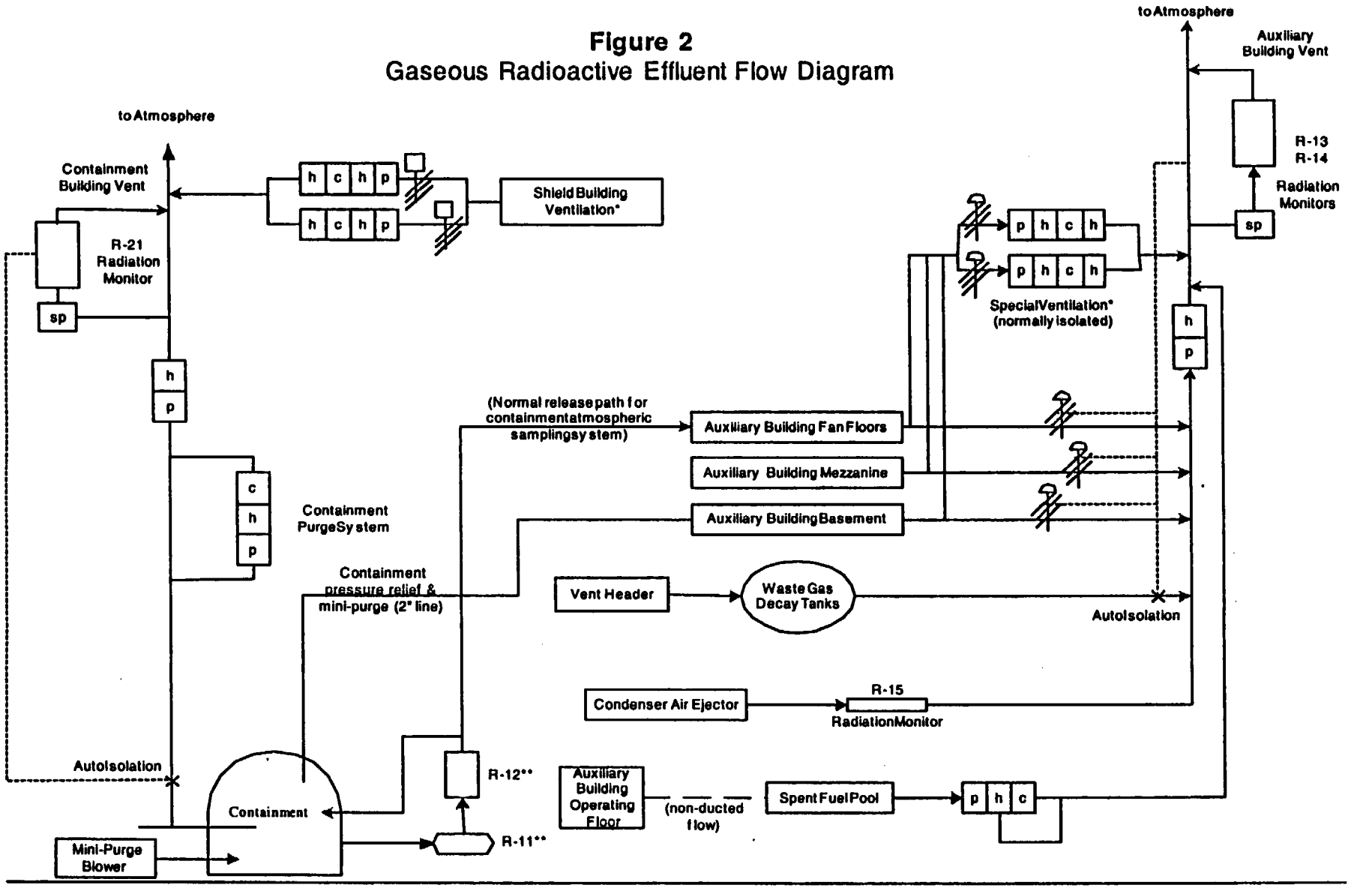

* The shield building ventilation and special ventilation are ESF systems and are not part of the normal effluent processing system. They are included for completeness only.

** The containment air sampler (R-11) and radiation monitor (R-12) can also be aligned as needed for sampling containment vent.

Figure 3
Simplified Heating Boiler Fuel Oil Piping System

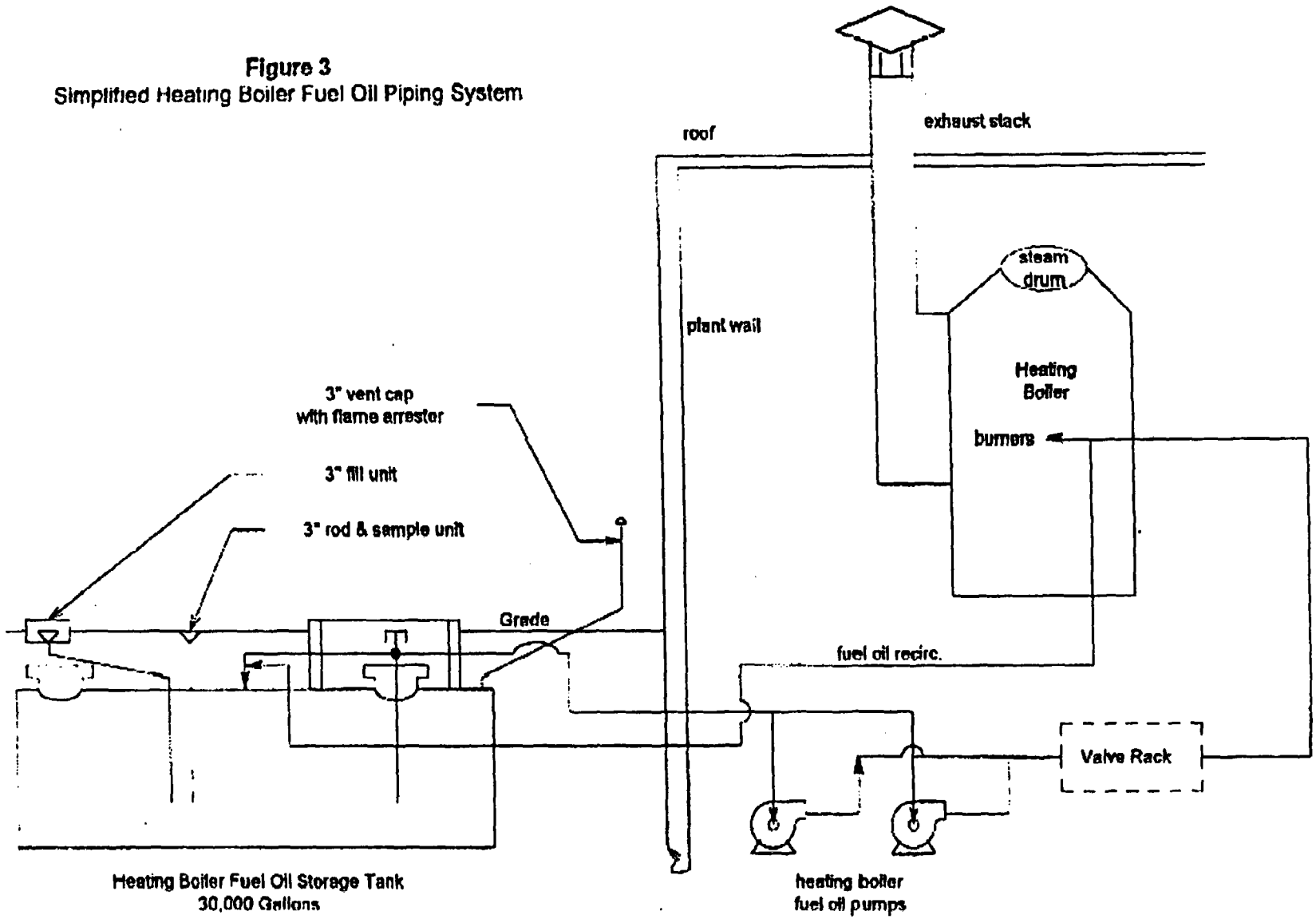

Table 2.1 Dose Factors for Noble Gases				
Radionuclide	Total Body Dose Factor K_i (mrem/yr per $\mu Ci/m^3$)	Skin Dose Factor L_i (mrem/yr per $\mu Ci/m^3$)	Gamma Air Dose Factor M_i (mrad/yr per $\mu Ci/m^3$)	Beta Air Dose Factor N_i (mrad/yr per $\mu Ci/m^3$)
Kr-83m	7.56E-02	------	1.93E+01	2.88E+02
Kr-85m	1.17E+03	1.46E+03	1.23E+03	1.97E+03
Kr-85	1.61E+01	1.34E+03	1.72E+01	1.95E+03
Kr-87	5.92E+03	9.73E+03	6.17E+03	1.03E+04
Kr-88	1.47E+04	2.37E+03	1.52E+04	2.93E+03
Kr-89	1.66E+04	1.01E+04	1.73E+04	1.06E+04
Kr-90	1.56E+04	7.29E+03	1.63E+04	7.83E+03
Xe-131m	9.15E+01	4.76E+02	1.56E+02	1.11E+03
Xe-133m	2.51E+02	9.94E+02	3.27E+02	1.48E+03
Xe-133	2.94E+02	3.06E+02	3.53E+02	1.05E+03
Xe-135m	3.12E+03	7.11E+02	3.36E+03	7.39E+02
Xe-135	1.81E+03	1.86E+03	1.92E+03	2.46E+03
Xe-137	1.42E+03	1.22E+04	1.51E+03	1.27E+04
Xe-138	8.83E+03	4.13E+03	9.21E+03	4.75E+03
Ar-41	8.84E+03	2.69E+03	9.30E+03	3.28E+03

Table 2.2 Parameters for Gaseous Alarm Setpoint Determinations				
Parameter	**Actual Value**	**Default Value***	**Units**	**Comments**
χ/Q	calculated	3.6E-06	sec/m^3	Licensing technical specification value
VF	fan curves	33,000 54,000	cfm	Containment -normal plus purge modes Auxiliary Building - normal operation
C_i	measured	N/A	µCi/m^3	
K_i	nuclide specific	N/A	mrem/yr per µCi/m^3	Values from Table 2.1
L_i	nuclide specific	N/A	mrem/yr per µCi/m^3	Values from Table 2.1
M_i	nuclide specific	N/A	mrem/yr per µCi/m^3	Values from Table 2.1
Sensitivity** (SEN) R-12 R-21 R-13 R-14	as determined	2.32E+07 2.32E+07 2.32E+07 2.32E+07	cpm per µCi/cm^3	Containment Containment Auxiliary Building Auxiliary Building
background (bkg) R-12 R-21 R-13 R-14	as determined	4.0E+02 4.0E+01 6.0E+02 9.0E+02	cpm	Nominal values only; actual values may be used in lieu of these reference values.
Setpoint* (SP) R-12 R-21 R-13 R-14	calculated calculated calculated calculated	2.2E+05 + bkg 2.2E+05 + bkg 1.3E+05 + bkg 1.3E+05 + bkg	cpm	Default alarm setpoints; more conservative values may be used as deemed appropriate and desirable for ensuring regulatory compliance and for maintaining releases ALARA.

* Refer to Calculation # C10690 for the default setpoint calculation.
** Conservatively based on Xe-133 sensitivity

Table 2.3 Controlling Locations, Pathways and Atmospheric Dispersion for Dose Calculations				
			Atmospheric Dispersion	
ODCM Specification	Location	Pathway(s)	χ/Q (sec/m^3)	D/Q (1/m^2)
3.4.1.a	site boundary (1300 m, N)	noble gases direct exposure	3.6E-06	N/A
3.4.1.b	site boundary (1300 m, N)	inhalation	3.6E-06	N/A
3.4.2	site boundary (1300 m, N)	gamma-air beta-air	3.6E-06	N/A
3.4.3	residence/dairy (1 mile W)	inhalation, vegetation, milk and ground plane	5.6E-07	5.6E-09

Table 2.4
R_i Inhalation Pathway Dose Factors - ADULT
(mrem/yr per µCi/m^3)

Nuclide	Bone	Liver	Thyroid	Kidney	Lung	GI-LLI	T.Body
H-3	-	1.26E+3	1.26E+3	1.26E+3	1.26E+3	1.26E+3	1.26E+3
C-14	1.82E+4	3.41E+3	3.41E+3	3.41E+3	3.41E+3	3.41E+3	3.41E+3
Na-24	1.02E+4	1.02E+4	1.02E+4	1.02E+4	1.02E+4	1.02E+4	1.02E+4
P-32	1.32E+6	7.71E+4	-	-	-	8.64E+4	5.01E+4
Cr-51	-	-	5.95E+1	2.28E+1	1.44E+4	3.32E+3	1.00E+2
Mn-54	-	3.96E+4	-	9.84E+3	1.40E+6	7.74E+4	6.30E+3
Mn-56	-	1.24E+0	-	1.30E+0	9.44E+3	2.02E+4	1.83E-1
Fe-55	2.46E+4	1.70E+4	-	-	7.21E+4	6.03E+3	3.94E+3
Fe-59	1.18E+4	2.78E+4	-	-	1.02E+6	1.88E+5	1.06E+4
Co-57	-	6.92E+2	-	-	3.70E+5	3.14E+4	6.71E+2
Co-58	-	1.58E+3	-	-	9.28E+5	1.06E+5	2.07E+3
Co-60	-	1.15E+4	-	-	5.97E+6	2.85E+5	1.48E+4
Ni-63	4.32E+5	3.14E+4	-	-	1.78E+5	1.34E+4	1.45E+4
Ni-65	1.54E+0	2.10E-1	-	-	5.60E+3	1.23E+4	9.12E-2
Cu-64	-	1.46E+0	-	4.62E+0	6.78E+3	4.90E+4	6.15E-1
Zn-65	3.24E+4	1.03E+5	-	6.90E+4	8.64E+5	5.34E+4	4.66E+4
Zn-69	3.38E-2	6.51E-2	-	4.22E-2	9.20E+2	1.63E+1	4.52E-3
Br-82	-	-	-	-	-	1.04E+4	1.35E+4
Br-83	-	-	-	-	-	2.32E+2	2.41E+2
Br-84	-	-	-	-	-	1.64E-3	3.13E+2
Br-85	-	-	-	-	-	-	1.28E+1
Rb-86	-	1.35E+5	-	-	-	1.66E+4	5.90E+4
Rb-88	-	3.87E+2	-	-	-	3.34E-9	1.93E+2
Rb-89	-	2.56E+2	-	-	-	-	1.70E+2
Sr-89	3.04E+5	-	-	-	1.40E+6	3.50E+5	8.72E+3
Sr-90	9.92E+7	-	-	-	9.60E+6	7.22E+5	6.10E+6
Sr-91	6.19E+1	-	-	-	3.65E+4	1.91E+5	2.50E+0
Sr-92	6.74E+0	-	-	-	1.65E+4	4.30E+4	2.91E-1
Y-90	2.09E+3	-	-	-	1.70E+5	5.06E+5	5.61E+1
Y-91m	2.61E-1	-	-	-	1.92E+3	1.33E+0	1.02E-2
Y-91	4.62E+5	-	-	-	1.70E+6	3.85E+5	1.24E+4
Y-92	1.03E+1	-	-	-	1.57E+4	7.35E+4	3.02E-1
Y-93	9.44E+1	-	-	-	4.85E+4	4.22E+5	2.61E+0
Zr-95	1.07E+5	3.44E+4	-	5.42E+4	1.77E+6	1.50E+5	2.33E+4
Zr-97	9.68E+1	1.96E+1	-	2.97E+1	7.87E+4	5.23E+5	9.04E+0
Nb-95	1.41E+4	7.82E+3	-	7.74E+3	5.05E+5	1.04E+5	4.21E+3
Nb-97	2.22E-1	5.62E-2	-	6.54E-2	2.40E+3	2.42E+2	2.05E-2
Mo-99	-	1.21E+2	-	2.91E+2	9.12E+4	2.48E+5	2.30E+1
Tc-99m	1.03E-3	2.91E-3	-	4.42E-2	7.64E+2	4.16E+3	3.70E-2
Tc-101	4.18E-5	6.02E-5	-	1.08E-3	3.99E+2	-	5.90E-4

Table 2.4
R_i Inhalation Pathway Dose Factors - ADULT
(mrem/yr per µCi/m^3)

Nuclide	Bone	Liver	Thyroid	Kidney	Lung	GI-LLI	T.Body
Ru-103	1.53E+3	-	-	5.83E+3	5.05E+5	1.10E+5	6.58E+2
Ru-105	7.90E-1	-	-	1.02E+0	1.10E+4	4.82E+4	3.11E-1
Ru-106	6.91E+4	-	-	1.34E+5	9.36E+6	9.12E+5	8.72E+3
Rh-103m	-	-	-	-	-	-	-
Rh-106	-	-	-	-	-	-	-
Ag-110m	1.08E+4	1.00E+4	-	1.97E+4	4.63E+6	3.02E+5	5.94E+3
Sb-124	3.12E+4	5.89E+2	7.55E+1	-	2.48E+6	4.06E+5	1.24E+4
Sb-125	5.34E+4	5.95E+2	5.40E+1	-	1.74E+6	1.01E+5	1.26E+4
Te-125m	3.42E+3	1.58E+3	1.05E+3	1.24E+4	3.14E+5	7.06E+4	4.67E+2
Te-127m	1.26E+4	5.77E+3	3.29E+3	4.58E+4	9.60E+5	1.50E+5	1.57E+3
Te-127	1.40E+0	6.42E-1	1.06E+0	5.10E+0	6.51E+3	5.74E+4	3.10E-1
Te-129m	9.76E+3	4.67E+3	3.44E+3	3.66E+4	1.16E+6	3.83E+5	1.58E+3
Te-129	4.98E-2	2.39E-2	3.90E-2	1.87E-1	1.94E+3	1.57E+2	1.24E-2
Te-131m	6.99E+1	4.36E+1	5.50E+1	3.09E+2	1.46E+5	5.56E+5	2.90E+1
Te-131	1.11E-2	5.95E-3	9.36E-3	4.37E-2	1.39E+3	1.84E+1	3.59E-3
Te-132	2.60E+2	2.15E+2	1.90E+2	1.46E+3	2.88E+5	5.10E+5	1.62E+2
I-130	4.58E+3	1.34E+4	1.14E+6	2.09E+4	-	7.69E+3	5.28E+3
I-131	2.52E+4	3.58E+4	1.19E+7	6.13E+4	-	6.28E+3	2.05E+4
I-132	1.16E+3	3.26E+3	1.14E+5	5.18E+3	-	4.06E+2	1.16E+3
I-133	8.64E+3	1.48E+4	2.15E+6	2.58E+4	-	8.88E+3	4.52E+3
I-134	6.44E+2	1.73E+3	2.98E+4	2.75E+3	-	1.01E+0	6.15E+2
I-135	2.68E+3	6.98E+3	4.48E+5	1.11E+4	-	5.25E+3	2.57E+3
Cs-134	3.73E+5	8.48E+5	-	2.87E+5	9.76E+4	1.04E+4	7.28E+5
Cs-136	3.90E+4	1.46E+5	-	8.56E+4	1.20E+4	1.17E+4	1.10E+5
Cs-137	4.78E+5	6.21E+5	-	2.22E+5	7.52E+4	8.40E+3	4.28E+5
Cs-138	3.31E+2	6.21E+2	-	4.80E+2	4.86E+1	1.86E-3	3.24E+2
Ba-139	9.36E-1	6.66E-4	-	6.22E-4	3.76E+3	8.96E+2	2.74E-2
Ba-140	3.90E+4	4.90E+1	-	1.67E+1	1.27E+6	2.18E+5	2.57E+3
Ba-141	1.00E-1	7.53E-5	-	7.00E-5	1.94E+3	1.16E-7	3.36E-3
Ba-142	2.63E-2	2.70E-5	-	2.29E-5	1.19E+3	-	1.66E-3
La-140	3.44E+2	1.74E+2	-	-	1.36E+5	4.58E+5	4.58E+1
La-142	6.83E-1	3.10E-1	-	-	6.33E+3	2.11E+3	7.72E-2
Ce-141	1.99E+4	1.35E+4	-	6.26E+3	3.62E+5	1.20E+5	1.53E+3
Ce-143	1.86E+2	1.38E+2	-	6.08E+1	7.98E+4	2.26E+5	1.53E+1
Ce-144	3.43E+6	1.43E+6	-	8.48E+5	7.78E+6	8.16E+5	1.84E+5
Pr-143	9.36E+3	3.75E+3	-	2.16E+3	2.81E+5	2.00E+5	4.64E+2
Pr-144	3.01E-2	1.25E-2	-	7.05E-3	1.02E+3	2.15E-8	1.53E-3
Nd-147	5.27E+3	6.10E+3	-	3.56E+3	2.21E+5	1.73E+5	3.65E+2
W-187	8.48E+0	7.08E+0	-	-	2.90E+4	1.55E+5	2.48E+0
Np-239	2.30E+2	2.26E+1	-	7.00E+1	3.76E+4	1.19E+5	1.24E+1

Table 2.5
R_i Inhalation Pathway Dose Factors - TEEN
(mrem/yr per µCi/m^3)

Nuclide	Bone	Liver	Thyroid	Kidney	Lung	GI-LLI	T.Body
H-3	-	1.27E+3	1.27E+3	1.27E+3	1.27E+3	1.27E+3	1.27E+3
C-14	2.60E+4	4.87E+3	4.87E+3	4.87E+3	4.87E+3	4.87E+3	4.87E+3
Na-24	1.38E+4	1.38E+4	1.38E+4	1.38E+4	1.38E+4	1.38E+4	1.38E+4
P-32	1.89E+6	1.10E+5	-	-	-	9.28E+4	7.16E+4
Cr-51	-	-	7.50E+1	3.07E+1	2.10E+4	3.00E+3	1.35E+2
Mn-54	-	5.11E+4	-	1.27E+4	1.98E+6	6.68E+4	8.40E+3
Mn-56	-	1.70E+0	-	1.79E+0	1.52E+4	5.74E+4	2.52E-1
Fe-55	3.34E+4	2.38E+4	-	-	1.24E+5	6.39E+3	5.54E+3
Fe-59	1.59E+4	3.70E+4	-	-	1.53E+6	1.78E+5	1.43E+4
Co-57	-	6.92E+2	-	-	5.86E+5	3.14E+4	9.20E+2
Co-58	-	2.07E+3	-	-	1.34E+6	9.52E+4	2.78E+3
Co-60	-	1.51E+4	-	-	8.72E+6	2.59E+5	1.98E+4
Ni-63	5.80E+5	4.34E+4	-	-	3.07E+5	1.42E+4	1.98E+4
Ni-65	2.18E+0	2.93E-1	-	-	9.36E+3	3.67E+4	1.27E-1
Cu-64	-	2.03E+0	-	6.41E+0	1.11E+4	6.14E+4	8.48E-1
Zn-65	3.86E+4	1.34E+5	-	8.64E+4	1.24E+6	4.66E+4	6.24E+4
Zn-69	4.83E-2	9.20E-2	-	6.02E-2	1.58E+3	2.85E+2	6.46E-3
Br-82	-	-	-	-	-	-	1.82E+4
Br-83	-	-	-	-	-	-	3.44E+2
Br-84	-	-	-	-	-	-	4.33E+2
Br-85	-	-	-	-	-	-	1.83E+1
Rb-86	-	1.90E+5	-	-	-	1.77E+4	8.40E+4
Rb-88	-	5.46E+2	-	-	-	2.92E-5	2.72E+2
Rb-89	-	3.52E+2	-	-	-	3.38E-7	2.33E+2
Sr-89	4.34E+5	-	-	-	2.42E+6	3.71E+5	1.25E+4
Sr-90	1.08E+8	-	-	-	1.65E+7	7.65E+5	6.68E+6
Sr-91	8.80E+1	-	-	-	6.07E+4	2.59E+5	3.51E+0
Sr-92	9.52E+0	-	-	-	2.74E+4	1.19E+5	4.06E-1
Y-90	2.98E+3	-	-	-	2.93E+5	5.59E+5	8.00E+1
Y-91m	3.70E-1	-	-	-	3.20E+3	3.02E+1	1.42E-2
Y-91	6.61E+5	-	-	-	2.94E+6	4.09E+5	1.77E+4
Y-92	1.47E+1	-	-	-	2.68E+4	1.65E+5	4.29E-1
Y-93	1.35E+2	-	-	-	8.32E+4	5.79E+5	3.72E+0
Zr-95	1.46E+5	4.58E+4	-	6.74E+4	2.69E+6	1.49E+5	3.15E+4
Zr-97	1.38E+2	2.72E+1	-	4.12E+1	1.30E+5	6.30E+5	1.26E+1
Nb-95	1.86E+4	1.03E+4	-	1.00E+4	7.51E+5	9.68E+4	5.66E+3
Nb-97	3.14E-1	7.78E-2	-	9.12E-2	3.93E+3	2.17E+3	2.84E-2
Mo-99	-	1.69E+2	-	4.11E+2	1.54E+5	2.69E+5	3.22E+1
Tc-99m	1.38E-3	3.86E-3	-	5.76E-2	1.15E+3	6.13E+3	4.99E-2
Tc-101	5.92E-5	8.40E-5	-	1.52E-3	6.67E+2	8.72E-7	8.24E-4

Table 2.5
R_i Inhalation Pathway Dose Factors - TEEN
(mrem/yr per $\mu Ci/m^3$)

Nuclide	Bone	Liver	Thyroid	Kidney	Lung	GI-LLI	T.Body
Ru-103	2.10E+3	-	-	7.43E+3	7.83E+5	1.09E+5	8.96E+2
Ru-105	1.12E+0	-	-	1.41E+0	1.82E+4	9.04E+4	4.34E-1
Ru-106	9.84E+4	-	-	1.90E+5	1.61E+7	9.60E+5	1.24E+4
Rh-103m	-	-	-	-	-	-	-
Rh-106	-	-	-	-	-	-	-
Ag-110m	1.38E+4	1.31E+4	-	2.50E+4	6.75E+6	2.73E+5	7.99E+3
Sb-124	4.30E+4	7.94E+2	9.76E+1	-	3.85E+6	3.98E+5	1.68E+4
Sb-125	7.38E+4	8.08E+2	7.04E+1	-	2.74E+6	9.92E+4	1.72E+4
Te-125m	4.88E+3	2.24E+3	1.40E+3	-	5.36E+5	7.50E+4	6.67E+2
Te-127m	1.80E+4	8.16E+3	4.38E+3	6.54E+4	1.66E+6	1.59E+5	2.18E+3
Te-127	2.01E+0	9.12E-1	1.42E+0	7.28E+0	1.12E+4	8.08E+4	4.42E-1
Te-129m	1.39E+4	6.58E+3	4.58E+3	5.19E+4	1.98E+6	4.05E+5	2.25E+3
Te-129	7.10E-2	3.38E-2	5.18E-2	2.66E-1	3.30E+3	1.62E+3	1.76E-2
Te-131m	9.84E+1	6.01E+1	7.25E+1	4.39E+2	2.38E+5	6.21E+5	4.02E+1
Te-131	1.58E-2	8.32E-3	1.24E-2	6.18E-2	2.34E+3	1.51E+1	5.04E-3
Te-132	3.60E+2	2.90E+2	2.46E+2	1.95E+3	4.49E+5	4.63E+5	2.19E+2
I-130	6.24E+3	1.79E+4	1.49E+6	2.75E+4	-	9.12E+3	7.17E+3
I-131	3.54E+4	4.91E+4	1.46E+7	8.40E+4	-	6.49E+3	2.64E+4
I-132	1.59E+3	4.38E+3	1.51E+5	6.92E+3	-	1.27E+3	1.58E+3
I-133	1.22E+4	2.05E+4	2.92E+6	3.59E+4	-	1.03E+4	6.22E+3
I-134	8.88E+2	2.32E+3	3.95E+4	3.66E+3	-	2.04E+1	8.40E+2
I-135	3.70E+3	9.44E+3	6.21E+5	1.49E+4	-	6.95E+3	3.49E+3
Cs-134	5.02E+5	1.13E+6	-	3.75E+5	1.46E+5	9.76E+3	5.49E+5
Cs-136	5.15E+4	1.94E+5	-	1.10E+5	1.78E+4	1.09E+4	1.37E+5
Cs-137	6.70E+5	8.48E+5	-	3.04E+5	1.21E+5	8.48E+3	3.11E+5
Cs-138	4.66E+2	8.56E+2	-	6.62E+2	7.87E+1	2.70E-1	4.46E+2
Ba-139	1.34E+0	9.44E-4	-	8.88E-4	6.46E+3	6.45E+3	3.90E-2
Ba-140	5.47E+4	6.70E+1	-	2.28E+1	2.03E+6	2.29E+5	3.52E+3
Ba-141	1.42E-1	1.06E-4	-	9.84E-5	3.29E+3	7.46E-4	4.74E-3
Ba-142	3.70E-2	3.70E-5	-	3.14E-5	1.91E+3	-	2.27E-3
La-140	4.79E+2	2.36E+2	-	-	2.14E+5	4.87E+5	6.26E+1
La-142	9.60E-1	4.25E-1	-	-	1.02E+4	1.20E+4	1.06E-1
Ce-141	2.84E+4	1.90E+4	-	8.88E+3	6.14E+5	1.26E+5	2.17E+3
Ce-143	2.66E+2	1.94E+2	-	8.64E+1	1.30E+5	2.55E+5	2.16E+1
Ce-144	4.89E+6	2.02E+6	-	1.21E+6	1.34E+7	8.64E+5	2.62E+5
Pr-143	1.34E+4	5.31E+3	-	3.09E+3	4.83E+5	2.14E+5	6.62E+2
Pr-144	4.30E-2	1.76E-2	-	1.01E-2	1.75E+3	2.35E-4	2.18E-3
Nd-147	7.86E+3	8.56E+3	-	5.02E+3	3.72E+5	1.82E+5	5.13E+2
W-187	1.20E+1	9.76E+0	-	-	4.74E+4	1.77E+5	3.43E+0
Np-239	3.38E+2	3.19E+1	-	1.00E+2	6.49E+4	1.32E+5	1.77E+1

Table 2.6
R_i Inhalation Pathway Dose Factors - CHILD
(mrem/yr per µCi/m^3)

Nuclide	Bone	Liver	Thyroid	Kidney	Lung	GI-LLI	T.Body
H-3	-	1.12E+3	1.12E+3	1.12E+3	1.12E+3	1.12E+3	1.12E+3
C-14	3.59E+4	6.73E+3	6.73E+3	6.73E+3	6.73E+3	6.73E+3	6.73E+3
Na-24	1.61E+4	1.61E+4	1.61E+4	1.61E+4	1.61E+4	1.61E+4	1.61E+4
P-32	2.60E+6	1.14E+5	-	-	-	4.22E+4	9.88E+4
Cr-51	-	-	8.55E+1	2.43E+1	1.70E+4	1.08E+3	1.54E+2
Mn-54	-	4.29E+4	-	1.00E+4	1.58E+6	2.29E+4	9.51E+3
Mn-56	-	1.66E+0	-	1.67E+0	1.31E+4	1.23E+5	3.12E-1
Fe-55	4.74E+4	2.52E+4	-	-	1.11E+5	2.87E+3	7.77E+3
Fe-59	2.07E+4	3.34E+4	-	-	1.27E+6	7.07E+4	1.67E+4
Co-57	-	9.03E+2	-	-	5.07E+5	1.32E+4	1.07E+3
Co-58	-	1.77E+3	-	-	1.11E+6	3.44E+4	3.16E+3
Co-60	-	1.31E+4	-	-	7.07E+6	9.62E+4	2.26E+4
Ni-63	8.21E+5	4.63E+4	-	-	2.75E+5	6.33E+3	2.80E+4
Ni-65	2.99E+0	2.96E-1	-	-	8.18E+3	8.40E+4	1.64E-1
Cu-64	-	1.99E+0	-	6.03E+0	9.58E+3	3.67E+4	1.07E+0
Zn-65	4.26E+4	1.13E+5	-	7.14E+4	9.95E+5	1.63E+4	7.03E+4
Zn-69	6.70E-2	9.66E-2	-	5.85E-2	1.42E+3	1.02E+4	8.92E-3
Br-82	-	-	-	-	-	-	2.09E+4
Br-83	-	-	-	-	-	-	4.74E+2
Br-84	-	-	-	-	-	-	5.48E+2
Br-85	-	-	-	-	-	-	2.53E+1
Rb-86	-	1.98E+5	-	-	-	7.99E+3	1.14E+5
Rb-88	-	5.62E+2	-	-	-	1.72E+1	3.66E+2
Rb-89	-	3.45E+2	-	-	-	1.89E+0	2.90E+2
Sr-89	5.99E+5	-	-	-	2.16E+6	1.67E+5	1.72E+4
Sr-90	1.01E+8	-	-	-	1.48E+7	3.43E+5	6.44E+6
Sr-91	1.21E+2	-	-	-	5.33E+4	1.74E+5	4.59E+0
Sr-92	1.31E+1	-	-	-	2.40E+4	2.42E+5	5.25E-1
Y-90	4.11E+3	-	-	-	2.62E+5	2.68E+5	1.11E+2
Y-91m	5.07E-1	-	-	-	2.81E+3	1.72E+3	1.84E-2
Y-91	9.14E+5	-	-	-	2.63E+6	1.84E+5	2.44E+4
Y-92	2.04E+1	-	-	-	2.39E+4	2.39E+5	5.81E-1
Y-93	1.86E+2	-	-	-	7.44E+4	3.89E+5	5.11E+0
Zr-95	1.90E+5	4.18E+4	-	5.96E+4	2.23E+6	6.11E+4	3.70E+4
Zr-97	1.88E+2	2.72E+1	-	3.89E+1	1.13E+5	3.51E+5	1.60E+1
Nb-95	2.35E+4	9.18E+3	-	8.62E+3	6.14E+5	3.70E+4	6.55E+3
Nb-97	4.29E-1	7.70E-2	-	8.55E-2	3.42E+3	2.78E+4	3.60E-2
Mo-99	-	1.72E+2	-	3.92E+2	1.35E+5	1.27E+5	4.26E+1
Tc-99m	1.78E-3	3.48E-3	-	5.07E-2	9.51E+2	4.81E+3	5.77E-2
Tc-101	8.10E-5	8.51E-5	-	1.45E-3	5.85E+2	1.63E+1	1.08E-3

Table 2.6
R_i Inhalation Pathway Dose Factors - CHILD
(mrem/yr per µCi/m^3)

Nuclide	Bone	Liver	Thyroid	Kidney	Lung	GI-LLI	T.Body
Ru-103	2.79E+3	-	-	7.03E+3	6.62E+5	4.48E+4	1.07E+3
Ru-105	1.53E+0	-	-	1.34E+0	1.59E+4	9.95E+4	5.55E-1
Ru-106	1.36E+5	-	-	1.84E+5	1.43E+7	4.29E+5	1.69E+4
Rh-103m	-	-	-	-	-	-	-
Rh-106	-	-	-	-	-	-	-
Ag-110m	1.69E+4	1.14E+4	-	2.12E+4	5.48E+6	1.00E+5	9.14E+3
Sb-124	5.74E+4	7.40E+2	1.26E+2	-	3.24E+6	1.64E+5	2.00E+4
Sb-125	9.84E+4	7.59E+2	9.10E+1	-	2.32E+6	4.03E+4	2.07E+4
Te-125m	6.73E+3	2.33E+3	1.92E+3	-	4.77E+5	3.38E+4	9.14E+2
Te-127m	2.49E+4	8.55E+3	6.07E+3	6.36E+4	1.48E+6	7.14E+4	3.02E+3
Te-127	2.77E+0	9.51E-1	1.96E+0	7.07E+0	1.00E+4	5.62E+4	6.11E-1
Te-129m	1.92E+4	6.85E+3	6.33E+3	5.03E+4	1.76E+6	1.82E+5	3.04E+3
Te-129	9.77E-2	3.50E-2	7.14E-2	2.57E-1	2.93E+3	2.55E+4	2.38E-2
Te-131m	1.34E+2	5.92E+1	9.77E+1	4.00E+2	2.06E+5	3.08E+5	5.07E+1
Te-131	2.17E-2	8.44E-3	1.70E-2	5.88E-2	2.05E+3	1.33E+3	6.59E-3
Te-132	4.81E+2	2.72E+2	3.17E+2	1.77E+3	3.77E+5	1.38E+5	2.63E+2
I-130	8.18E+3	1.64E+4	1.85E+6	2.45E+4	-	5.11E+3	8.44E+3
I-131	4.81E+4	4.81E+4	1.62E+7	7.88E+4	-	2.84E+3	2.73E+4
I-132	2.12E+3	4.07E+3	1.94E+5	6.25E+3	-	3.20E+3	1.88E+3
I-133	1.66E+4	2.03E+4	3.85E+6	3.38E+4	-	5.48E+3	7.70E+3
I-134	1.17E+3	2.16E+3	5.07E+4	3.30E+3	-	9.55E+2	9.95E+2
I-135	4.92E+3	8.73E+3	7.92E+5	1.34E+4	-	4.44E+3	4.14E+3
Cs-134	6.51E+5	1.01E+6	-	3.30E+5	1.21E+5	3.85E+3	2.25E+5
Cs-136	6.51E+4	1.71E+5	-	9.55E+4	1.45E+4	4.18E+3	1.16E+5
Cs-137	9.07E+5	8.25E+5	-	2.82E+5	1.04E+5	3.62E+3	1.28E+5
Cs-138	6.33E+2	8.40E+2	-	6.22E+2	6.81E+1	2.70E+2	5.55E+2
Ba-139	1.84E+0	9.84E-4	-	8.62E-4	5.77E+3	5.77E+4	5.37E-2
Ba-140	7.40E+4	6.48E+1	-	2.11E+1	1.74E+6	1.02E+5	4.33E+3
Ba-141	1.96E-1	1.09E-4	-	9.47E-5	2.92E+3	2.75E+2	6.36E-3
Ba-142	5.00E-2	3.60E-5	-	2.91E-5	1.64E+3	2.74E+0	2.79E-3
La-140	6.44E+2	2.25E+2	-	-	1.83E+5	2.26E+5	7.55E+1
La-142	1.30E+0	4.11E-1	-	-	8.70E+3	7.59E+4	1.29E-1
Ce-141	3.92E+4	1.95E+4	-	8.55E+3	5.44E+5	5.66E+4	2.90E+3
Ce-143	3.66E+2	1.99E+2	-	8.36E+1	1.15E+5	1.27E+5	2.87E+1
Ce-144	6.77E+6	2.12E+6	-	1.17E+6	1.20E+7	3.89E+5	3.61E+5
Pr-143	1.85E+4	5.55E+3	-	3.00E+3	4.33E+5	9.73E+4	9.14E+2
Pr-144	5.96E-2	1.85E-2	-	9.77E-3	1.57E+3	1.97E+2	3.00E-3
Nd-147	1.08E+4	8.73E+3	-	4.81E+3	3.28E+5	8.21E+4	6.81E+2
W-187	1.63E+1	9.66E+0	-	-	4.11E+4	9.10E+4	4.33E+0
Np-239	4.66E+2	3.34E+1	-	9.73E+1	5.81E+4	6.40E+4	2.35E+1

Table 2.7
R_i Inhalation Pathway Dose Factors - INFANT
(mrem/yr per µCi/m^3)

Nuclide	Bone	Liver	Thyroid	Kidney	Lung	GI-LLI	T.Body
H-3	-	6.47E+2	6.47E+2	6.47E+2	6.47E+2	6.47E+2	6.47E+2
C-14	2.65E+4	5.31E+3	5.31E+3	5.31E+3	5.31E+3	5.31E+3	5.31E+3
Na-24	1.06E+4	1.06E+4	1.06E+4	1.06E+4	1.06E+4	1.06E+4	1.06E+4
P-32	2.03E+6	1.12E+5	-	-	-	1.61E+4	7.74E+4
Cr-51	-	-	5.75E+1	1.32E+1	1.28E+4	3.57E+2	8.95E+1
Mn-54	-	2.53E+4	-	4.98E+3	1.00E+6	7.06E+3	4.98E+3
Mn-56	-	1.54E+0	-	1.10E+0	1.25E+4	7.17E+4	2.21E-1
Fe-55	1.97E+4	1.17E+4	-	-	8.69E+4	1.09E+3	3.33E+3
Fe-59	1.36E+4	2.35E+4	-	-	1.02E+6	2.48E+4	9.48E+3
Co-57	-	6.51E+2	-	-	3.79E+5	4.86E+3	6.41E+2
Co-58	-	1.22E+3	-	-	7.77E+5	1.11E+4	1.82E+3
Co-60	-	8.02E+3	-	-	4.51E+6	3.19E+4	1.18E+4
Ni-63	3.39E+5	2.04E+4	-	-	2.09E+5	2.42E+3	1.16E+4
Ni-65	2.39E+0	2.84E-1	-	-	8.12E+3	5.01E+4	1.23E-1
Cu-64	-	1.88E+0	-	3.98E+0	9.30E+3	1.50E+4	7.74E-1
Zn-65	1.93E+4	6.26E+4	-	3.25E+4	6.47E+5	5.14E+4	3.11E+4
Zn-69	5.39E-2	9.67E-2	-	4.02E-2	1.47E+3	1.32E+4	7.18E-3
Br-82	-	-	-	-	-	-	1.33E+4
Br-83	-	-	-	-	-	-	3.81E+2
Br-84	-	-	-	-	-	-	4.00E+2
Br-85	-	-	-	-	-	-	2.04E+1
Rb-86	-	1.90E+5	-	-	-	3.04E+3	8.82E+4
Rb-88	-	5.57E+2	-	-	-	3.39E+2	2.87E+2
Rb-89	-	3.21E+2	-	-	-	6.82E+1	2.06E+2
Sr-89	3.98E+5	-	-	-	2.03E+6	6.40E+4	1.14E+4
Sr-90	4.09E+7	-	-	-	1.12E+7	1.31E+5	2.59E+6
Sr-91	9.56E+1	-	-	-	5.26E+4	7.34E+4	3.46E+0
Sr-92	1.05E+1	-	-	-	2.38E+4	1.40E+5	3.91E-1
Y-90	3.29E+3	-	-	-	2.69E+5	1.04E+5	8.82E+1
Y-91m	4.07E-1	-	-	-	2.79E+3	2.35E+3	1.39E-2
Y-91	5.88E+5	-	-	-	2.45E+6	7.03E+4	1.57E+4
Y-92	1.64E+1	-	-	-	2.45E+4	1.27E+5	4.61E-1
Y-93	1.50E+2	-	-	-	7.64E+4	1.67E+5	4.07E+0
Zr-95	1.15E+5	2.79E+4	-	3.11E+4	1.75E+6	2.17E+4	2.03E+4
Zr-97	1.50E+2	2.56E+1	-	2.59E+1	1.10E+5	1.40E+5	1.17E+1
Nb-95	1.57E+4	6.43E+3	-	4.72E+3	4.79E+5	1.27E+4	3.78E+3
Nb-97	3.42E-1	7.29E-2	-	5.70E-2	3.32E+3	2.69E+4	2.63E-2
Mo-99	-	1.65E+2	-	2.65E+2	1.35E+5	4.87E+4	3.23E+1
Tc-99m	1.40E-3	2.88E-3	-	3.11E-2	8.11E+2	2.03E+3	3.72E-2
Tc-101	6.51E-5	8.23E-5	-	9.79E-4	5.84E+2	8.44E+2	8.12E-4

Table 2.7
R_i Inhalation Pathway Dose Factors - INFANT
(mrem/yr per µCi/m^3)

Nuclide	Bone	Liver	Thyroid	Kidney	Lung	GI-LLI	T.Body
Ru-103	2.02E+3	-	-	4.24E+3	5.52E+5	1.61E+4	6.79E+2
Ru-105	1.22E+0	-	-	8.99E-1	1.57E+4	4.84E+4	4.10E-1
Ru-106	8.68E+4	-	-	1.07E+5	1.16E+7	1.64E+5	1.09E+4
Rh-103m	-	-	-	-	-	-	-
Rh-106	-	-	-	-	-	-	-
Ag-110m	9.98E+3	7.22E+3	-	1.09E+4	3.67E+6	3.30E+4	5.00E+3
Sb-124	3.79E+4	5.56E+2	1.01E+2	-	2.65E+6	5.91E+4	1.20E+4
Sb-125	5.17E+4	4.77E+2	6.23E+1	-	1.64E+6	1.47E+4	1.09E+4
Te-125m	4.76E+3	1.99E+3	1.62E+3	-	4.47E+5	1.29E+4	6.58E+2
Te-127m	1.67E+4	6.90E+3	4.87E+3	3.75E+4	1.31E+6	2.73E+4	2.07E+3
Te-127	2.23E+0	9.53E-1	1.85E+0	4.86E+0	1.03E+4	2.44E+4	4.89E-1
Te-129m	1.41E+4	6.09E+3	5.47E+3	3.18E+4	1.68E+6	6.90E+4	2.23E+3
Te-129	7.88E-2	3.47E-2	6.75E-2	1.75E-1	3.00E+3	2.63E+4	1.88E-2
Te-131m	1.07E+2	5.50E+1	8.93E+1	2.65E+2	1.99E+5	1.19E+5	3.63E+1
Te-131	1.74E-2	8.22E-3	1.58E-2	3.99E-2	2.06E+3	8.22E+3	5.00E-3
Te-132	3.72E+2	2.37E+2	2.79E+2	1.03E+3	3.40E+5	4.41E+4	1.76E+2
I-130	6.36E+3	1.39E+4	1.60E+6	1.53E+4	-	1.99E+3	5.57E+3
I-131	3.79E+4	4.44E+4	1.48E+7	5.18E+4	-	1.06E+3	1.96E+4
I-132	1.69E+3	3.54E+3	1.69E+5	3.95E+3	-	1.90E+3	1.26E+3
I-133	1.32E+4	1.92E+4	3.56E+6	2.24E+4	-	2.16E+3	5.60E+3
I-134	9.21E+2	1.88E+3	4.45E+4	2.09E+3	-	1.29E+3	6.65E+2
I-135	3.86E+3	7.60E+3	6.96E+5	8.47E+3	-	1.83E+3	2.77E+3
Cs-134	3.96E+5	7.03E+5	-	1.90E+5	7.97E+4	1.33E+3	7.45E+4
Cs-136	4.83E+4	1.35E+5	-	5.64E+4	1.18E+4	1.43E+3	5.29E+4
Cs-137	5.49E+5	6.12E+5	-	1.72E+5	7.13E+4	1.33E+3	4.55E+4
Cs-138	5.05E+2	7.81E+2	-	4.10E+2	6.54E+1	8.76E+2	3.98E+2
Ba-139	1.48E+0	9.84E-4	-	5.92E-4	5.95E+3	5.10E+4	4.30E-2
Ba-140	5.60E+4	5.60E+1	-	1.34E+1	1.60E+6	3.84E+4	2.90E+3
Ba-141	1.57E-1	1.08E-4	-	6.50E-5	2.97E+3	4.75E+3	4.97E-3
Ba-142	3.98E-2	3.30E-5	-	1.90E-5	1.55E+3	6.93E+2	1.96E-3
La-140	5.05E+2	2.00E+2	-	-	1.68E+5	8.48E+4	5.15E+1
La-142	1.03E+0	3.77E-1	-	-	8.22E+3	5.95E+4	9.04E-2
Ce-141	2.77E+4	1.67E+4	-	5.25E+3	5.17E+5	2.16E+4	1.99E+3
Ce-143	2.93E+2	1.93E+2	-	5.64E+1	1.16E+5	4.97E+4	2.21E+1
Ce-144	3.19E+6	1.21E+6	-	5.38E+5	9.84E+6	1.48E+5	1.76E+5
Pr-143	1.40E+4	5.24E+3	-	1.97E+3	4.33E+5	3.72E+4	6.99E+2
Pr-144	4.79E-2	1.85E-2	-	6.72E-3	1.61E+3	4.28E+3	2.41E-3
Nd-147	7.94E+3	8.13E+3	-	3.15E+3	3.22E+5	3.12E+4	5.00E+2
W-187	1.30E+1	9.02E+0	-	-	3.96E+4	3.56E+4	3.12E+0
Np-239	3.71E+2	3.32E+1	-	6.62E+1	5.95E+4	2.49E+4	1.88E+1

Table 2.8

R_i Vegetation Pathway Dose Factors - ADULT

(mrem/yr per µCi/m^3) for H-3 and C-14 (m^2 x mrem/yr µCi/sec) for others

Nuclide	Bone	Liver	Thyroid	Kidney	Lung	GI-LLI	T.Body
H-3	-	2.26E+3	2.26E+3	2.26E+3	2.26E+3	2.26E+3	2.26E+3
C-14	8.97E+5	1.79E+5	1.79E+5	1.79E+5	1.79E+5	1.79E+5	1.79E+5
Na-24	2.76E+5	2.76E+5	2.76E+5	2.76E+5	2.76E+5	2.76E+5	2.76E+5
P-32	1.40E+9	8.73E+7	-	-	-	1.58E+8	5.42E+7
Cr-51	-	-	2.79E+4	1.03E+4	6.19E+4	1.17E+7	4.66E+4
Mn-54	-	3.11E+8	-	9.27E+7	-	9.54E+8	5.94E+7
Mn-56	-	1.61E+1	-	2.04E+1	-	5.13E+2	2.85E+0
Fe-55	2.09E+8	1.45E+8	-	-	8.06E+7	8.29E+7	3.37E+7
Fe-59	1.27E+8	2.99E+8	-	-	8.35E+7	9.96E+8	1.14E+8
Co-57	-	1.17E+7	-	-	-	2.97E+8	1.95E+7
Co-58	-	3.09E+7	-	-	-	6.26E+8	6.92E+7
Co-60	-	1.67E+8	-	-	-	3.14E+9	3.69E+8
Ni-63	1.04E+10	7.21E+8	-	-	-	1.50E+8	3.49E+8
Ni-65	6.15E+1	7.99E+0	-	-	-	2.03E+2	3.65E+0
Cu-64	-	9.27E+3	-	2.34E+4	-	7.90E+5	4.35E+3
Zn-65	3.17E+8	1.01E+9	-	6.75E+8	-	6.36E+8	4.56E+8
Zn-69	8.75E-6	1.67E-5	-	1.09E-5	-	2.51E-6	1.16E-6
Br-82	-	-	-	-	-	1.73E+6	1.51E+6
Br-83	-	-	-	-	-	4.63E+0	3.21E+0
Br-84	-	-	-	-	-	-	-
Br-85	-	-	-	-	-	-	-
Rb-86	-	2.19E+8	-	-	-	4.32E+7	1.02E+8
Rb-88	-	-	-	-	-	-	-
Rb-89	-	-	-	-	-	-	-
Sr-89	9.96E+9	-	-	-	-	1.60E+9	2.86E+8
Sr-90	6.05E+11	-	-	-	-	1.75E+10	1.48E+11
Sr-91	3.20E+5	-	-	-	-	1.52E+6	1.29E+4
Sr-92	4.27E+2	-	-	-	-	8.46E+3	1.85E+1
Y-90	1.33E+4	-	-	-	-	1.41E+8	3.56E+2
Y-91m	5.83E-9	-	-	-	-	1.71E-8	-
Y-91	5.13E+6	-	-	-	-	2.82E+9	1.37E+5
Y-92	9.01E-1	-	-	-	-	1.58E+4	2.63E-2
Y-93	1.74E+2	-	-	-	-	5.52E+6	4.80E+0
Zr-95	1.19E+6	3.81E+5	-	5.97E+5	-	1.21E+9	2.58E+5
Zr-97	3.33E+2	6.73E+1	-	1.02E+2	-	2.08E+7	3.08E+1
Nb-95	1.42E+5	7.91E+4	-	7.81E+4	-	4.80E+8	4.25E+4
Nb-97	2.90E-6	7.34E-7	-	8.56E-7	-	2.71E-3	2.68E-7
Mo-99	-	6.25E+6	-	1.41E+7	-	1.45E+7	1.19E+6
Tc-99m	3.06E+0	8.66E+0	-	1.32E+2	4.24E+0	5.12E+3	1.10E+2
Tc-101	-	-	-	-	-	-	-

Table 2.8
R_i Vegetation Pathway Dose Factors - ADULT
(mrem/yr per µCi/m³) for H-3 and C-14 (m² x mrem/yr µCi/sec) for others

Nuclide	Bone	Liver	Thyroid	Kidney	Lung	GI-LLI	T.Body
Ru-103	4.80E+6	-	-	1.83E+7	-	5.61E+8	2.07E+6
Ru-105	5.39E+1	-	-	6.96E+2	-	3.30E+4	2.13E+1
Ru-106	1.93E+8	-	-	3.72E+8	-	1.25E+10	2.44E+7
Rh-103m	-	-	-	-	-	-	-
Rh-106	-	-	-	-	-	-	-
Ag-110m	1.06E+7	9.76E+6	-	1.92E+7	-	3.98E+9	5.80E+6
Sb-124	1.04E+8	1.96E+6	2.52E+5	-	8.08E+7	2.95E+9	4.11E+7
Sb-125	1.36E+8	1.52E+6	1.39E+5	-	1.05E+8	1.50E+9	3.25E+7
Te-125m	9.66E+7	3.50E+7	2.90E+7	3.93E+8	-	3.86E+8	1.29E+7
Te-127m	3.49E+8	1.25E+8	8.92E+7	1.42E+9	-	1.17E+9	4.26E+7
Te-127	5.76E+3	2.07E+3	4.27E+3	2.35E+4	-	4.54E+5	1.25E+3
Te-129m	2.55E+8	9.50E+7	8.75E+7	1.06E+9	-	1.28E+9	4.03E+7
Te-129	6.65E-4	2.50E-4	5.10E-4	2.79E-3	-	5.02E-4	1.62E-4
Te-131m	9.12E+5	4.46E+5	7.06E+5	4.52E+6	-	4.43E+7	3.72E+5
Te-131	-	-	-	-	-	-	-
Te-132	4.29E+6	2.77E+6	3.06E+6	2.67E+7	-	1.31E+8	2.60E+6
I-130	3.96E+5	1.17E+6	9.90E+7	1.82E+6	-	1.01E+6	4.61E+5
I-131	8.09E+7	1.16E+8	3.79E+10	1.98E+8	-	3.05E+7	6.63E+7
I-132	5.74E+1	1.54E+2	5.38E+3	2.45E+2	-	2.89E+1	5.38E+1
I-133	2.12E+6	3.69E+6	5.42E+8	6.44E+6	-	3.31E+6	1.12E+6
I-134	1.06E-4	2.88E-4	5.00E-3	4.59E-4	-	2.51E-7	1.03E-4
I-135	4.08E+4	1.07E+5	7.04E+6	1.71E+5	-	1.21E+5	3.94E+4
Cs-134	4.66E+9	1.11E+10	-	3.59E+9	1.19E+9	1.94E+8	9.07E+9
Cs-136	4.20E+7	1.66E+8	-	9.24E+7	1.27E+7	1.89E+7	1.19E+8
Cs-137	6.36E+9	8.70E+9	-	2.95E+9	9.81E+8	1.68E+8	5.70E+9
Cs-138	-	-	-	-	-	-	-
Ba-139	2.95E-2	2.10E-5	-	1.96E-5	1.19E-5	5.23E-2	8.64E-4
Ba-140	1.29E+8	1.62E+5	-	5.49E+4	9.25E+4	2.65E+8	8.43E+6
Ba-141	-	-	-	-	-	-	-
Ba-142	-	-	-	-	-	-	-
La-140	1.97E+3	9.92E+2	-	-	-	7.28E+7	2.62E+2
La-142	1.40E-4	6.35E-5	-	-	-	4.64E-1	1.58E-5
Ce-141	1.96E+5	1.33E+5	-	6.17E+4	-	5.08E+8	1.51E+4
Ce-143	1.00E+3	7.42E+5	-	3.26E+2	-	2.77E+7	8.21E+1
Ce-144	3.29E+7	1.38E+7	-	8.16E+6	-	1.11E+10	1.77E+6
Pr-143	6.34E+4	2.54E+4	-	1.47E+4	-	2.78E+8	3.14E+3
Pr-144	-	-	-	-	-	-	-
Nd-147	3.34E+4	3.86E+4	-	2.25E+4	-	1.85E+8	2.31E+3
W-187	3.82E+4	3.19E+4	-	-	-	1.05E+7	1.12E+4
Np-239	1.42E+3	1.40E+2	-	4.37E+2	-	2.87E+7	7.72E+1

Table 2.9
R_i Vegetation Pathway Dose Factors - TEEN
(mrem/yr per µCi/m^3) for H-3 and C-14 (m^2 x mrem/yr µCi/sec) for others

Nuclide	Bone	Liver	Thyroid	Kidney	Lung	GI-LLI	T.Body
H-3	-	2.59E+3	2.59E+3	2.59E+3	2.59E+3	2.59E+3	2.59E+3
C-14	1.45E+6	2.91E+5	2.91E+5	2.91E+5	2.91E+5	2.91E+5	2.91E+5
Na-24	2.45E+5	2.45E+5	2.45E+5	2.45E+5	2.45E+5	2.45E+5	2.45E+5
P-32	1.61E+9	9.96E+7	-	-	-	1.35E+8	6.23E+7
Cr-51	-	-	3.44E+4	1.36E+4	8.85E+4	1.04E+7	6.20E+4
Mn-54	-	4.52E+8	-	1.35E+8	-	9.27E+8	8.97E+7
Mn-56	-	1.45E+1	-	1.83E+1	-	9.54E+2	2.58E+0
Fe-55	3.25E+8	2.31E+8	-	-	1.46E+8	9.98E+7	5.38E+7
Fe-59	1.81E+8	4.22E+8	-	-	1.33E+8	9.98E+8	1.63E+8
Co-57	-	1.79E+7	-	-	-	3.34E+8	3.00E+7
Co-58	-	4.38E+7	-	-	-	6.04E+8	1.01E+8
Co-60	-	2.49E+8	-	-	-	3.24E+9	5.60E+8
Ni-63	1.61E+10	1.13E+9	-	-	-	1.81E+8	5.45E+8
Ni-65	5.73E+1	7.32E+0	-	-	-	3.97E+2	3.33E+0
Cu-64	-	8.40E+3	-	2.12E+4	-	6.51E+5	3.95E+3
Zn-65	4.24E+8	1.47E+9	-	9.41E+8	-	6.23E+8	6.86E+8
Zn-69	8.19E-6	1.56E-5	-	1.02E-5	-	2.88E-5	1.09E-6
Br-82	-	-	-	-	-	-	1.33E+6
Br-83	-	-	-	-	-	-	3.01E+0
Br-84	-	-	-	-	-	-	-
Br-85	-	-	-	-	-	-	-
Rb-86	-	2.73E+8	-	-	-	4.05E+7	1.28E+8
Rb-88	-	-	-	-	-	-	-
Rb-89	-	-	-	-	-	-	-
Sr-89	1.51E+10	-	-	-	-	1.80E+9	4.33E+8
Sr-90	7.51E+11	-	-	-	-	2.11E+10	1.85E+11
Sr-91	2.99E+5	-	-	-	-	1.36E+6	1.19E+4
Sr-92	3.97E+2	-	-	-	-	1.01E+4	1.69E+1
Y-90	1.24E+4	-	-	-	-	1.02E+8	3.34E+2
Y-91m	5.43E-9	-	-	-	-	2.56E-7	-
Y-91	7.87E+6	-	-	-	-	3.23E+9	2.11E+5
Y-92	8.47E-1	-	-	-	-	2.32E+4	2.45E-2
Y-93	1.63E+2	-	-	-	-	4.98E+6	4.47E+0
Zr-95	1.74E+6	5.49E+5	-	8.07E+5	-	1.27E+9	3.78E+5
Zr-97	3.09E+2	6.11E+1	-	9.26E+1	-	1.65E+7	2.81E+1
Nb-95	1.92E+5	1.06E+5	-	1.03E+5	-	4.55E+8	5.86E+4
Nb-97	2.69E-6	6.67E-7	-	7.80E-7	-	1.59E-2	2.44E-7
Mo-99	-	5.74E+6	-	1.31E+7	-	1.03E+7	1.09E+6
Tc-99m	2.70E+0	7.54E+0	-	1.12E+2	4.19E+0	4.95E+3	9.77E+1
Tc-101	-	-	-	-	-	-	-

Table 2.9

R_i Vegetation Pathway Dose Factors - TEEN

(mrem/yr per $\mu Ci/m^3$) for H-3 and C-14 (m^2 x mrem/yr μCi/sec) for others

Nuclide	Bone	Liver	Thyroid	Kidney	Lung	GI-LLI	T.Body
Ru-103	6.87E+6	-	-	2.42E+7	-	5.74E+8	2.94E+6
Ru-105	5.00E+1	-	-	6.31E+2	-	4.04E+4	1.94E+1
Ru-106	3.09E+8	-	-	5.97E+8	-	1.48E+10	3.90E+7
Rh-103m	-	-	-	-	-	-	-
Rh-106	-	-	-	-	-	-	-
Ag-110m	1.52E+7	1.44E+7	-	2.74E+7	-	4.04E+9	8.74E+6
Sb-124	1.55E+8	2.85E+6	3.51E+5	-	1.35E+8	3.11E+9	6.03E+7
Sb-125	2.14E+8	2.34E+6	2.04E+5	-	1.88E+8	1.66E+9	5.00E+7
Te-125m	1.48E+8	5.34E+7	4.14E+7	-	-	4.37E+8	1.98E+7
Te-127m	5.51E+8	1.96E+8	1.31E+8	2.24E+9	-	1.37E+9	6.56E+7
Te-127	5.43E+3	1.92E+3	3.74E+3	2.20E+4	-	4.19E+5	1.17E+3
Te-129m	3.67E+8	1.36E+8	1.18E+8	1.54E+9	-	1.38E+9	5.81E+7
Te-129	6.22E-4	2.32E-4	4.45E-4	2.61E-3	-	3.40E-3	1.51E-4
Te-131m	8.44E+5	4.05E+5	6.09E+5	4.22E+6	-	3.25E+7	3.38E+5
Te-131	-	-	-	-	-	-	-
Te-132	3.90E+6	2.47E+6	2.60E+6	2.37E+7	-	7.82E+7	2.32E+6
I-130	3.54E+5	1.02E+6	8.35E+7	1.58E+6	-	7.87E+5	4.09E+5
I-131	7.70E+7	1.08E+8	3.14E+10	1.85E+8	-	2.13E+7	5.79E+7
I-132	5.18E+1	1.36E+2	4.57E+3	2.14E+2	-	5.91E+1	4.87E+1
I-133	1.97E+6	3.34E+6	4.66E+8	5.86E+6	-	2.53E+6	1.02E+6
I-134	9.59E-5	2.54E-4	4.24E-3	4.01E-4	-	3.35E-6	9.13E-5
I-135	3.68E+4	9.48E+4	6.10E+6	1.50E+5	-	1.05E+5	3.52E+4
Cs-134	7.09E+9	1.67E+10	-	5.30E+9	2.02E+9	2.08E+8	7.74E+9
Cs-136	4.29E+7	1.69E+8	-	9.19E+7	1.45E+7	1.36E+7	1.13E+8
Cs-137	1.01E+10	1.35E+10	-	4.59E+9	1.78E+9	1.92E+8	4.69E+9
Cs-138	-	-	-	-	-	-	-
Ba-139	2.77E-2	1.95E-5	-	1.84E-5	1.34E-5	2.47E-1	8.08E-4
Ba-140	1.38E+8	1.69E+5	-	5.75E+4	1.14E+5	2.13E+8	8.91E+6
Ba-141	-	-	-	-	-	-	-
Ba-142	-	-	-	-	-	-	-
La-140	1.80E+3	8.84E+2	-	-	-	5.08E+7	2.35E+2
La-142	1.28E-4	5.69E-5	-	-	-	1.73E+0	1.42E-5
Ce-141	2.82E+5	1.88E+5	-	8.86E+4	-	5.38E+8	2.16E+4
Ce-143	9.37E+2	6.82E+5	-	3.06E+2	-	2.05E+7	7.62E+1
Ce-144	5.27E+7	2.18E+7	-	1.30E+7	-	1.33E+10	2.83E+6
Pr-143	7.12E+4	2.84E+4	-	1.65E+4	-	2.34E+8	3.55E+3
Pr-144	-	-	-	-	-	-	-
Nd-147	3.63E+4	3.94E+4	-	2.32E+4	-	1.42E+8	2.36E+3
W-187	3.55E+4	2.90E+4	-	-	-	7.84E+6	1.02E+4
Np-239	1.38E+3	1.30E+2	-	4.09E+2	-	2.10E+7	7.24E+1

Table 2.10
R_i Vegetation Pathway Dose Factors - CHILD
(mrem/yr per µCi/m^3) for H-3 and C-14 (m^2 x mrem/yr µCi/sec) for others

Nuclide	Bone	Liver	Thyroid	Kidney	Lung	GI-LLI	T.Body
H-3	-	4.01E+3	4.01E+3	4.01E+3	4.01E+3	4.01E+3	4.01E+3
C-14	3.50E+6	7.01E+5	7.01E+5	7.01E+5	7.01E+5	7.01E+5	7.01E+5
Na-24	3.83E+5	3.83E+5	3.83E+5	3.83E+5	3.83E+5	3.83E+5	3.83E+5
P-32	3.37E+9	1.58E+8	-	-	-	9.30E+7	1.30E+8
Cr-51	-	-	6.54E+4	1.79E+4	1.19E+5	6.25E+6	1.18E+5
Mn-54	-	6.61E+8	-	1.85E+8	-	5.55E+8	1.76E+8
Mn-56	-	1.90E+1	-	2.29E+1	-	2.75E+3	4.28E+0
Fe-55	8.00E+8	4.24E+8	-	-	2.40E+8	7.86E+7	1.31E+8
Fe-59	4.01E+8	6.49E+8	-	-	1.88E+8	6.76E+8	3.23E+8
Co-57	-	2.99E+7	-	-	-	2.45E+8	6.04E+7
Co-58	-	6.47E+7	-	-	-	3.77E+8	1.98E+8
Co-60	-	3.78E+8	-	-	-	2.10E+9	1.12E+9
Ni-63	3.95E+10	2.11E+9	-	-	-	1.42E+8	1.34E+9
Ni-65	1.05E+2	9.89E+0	-	-	-	1.21E+3	5.77E+0
Cu-64	-	1.11E+4	-	2.68E+4	-	5.20E+5	6.69E+3
Zn-65	8.12E+8	2.16E+9	-	1.36E+9	-	3.80E+8	1.35E+9
Zn-69	1.51E-5	2.18E-5	-	1.32E-5	-	1.38E-3	2.02E-6
Br-82	-	-	-	-	-	-	2.04E+6
Br-83	-	-	-	-	-	-	5.55E+0
Br-84	-	-	-	-	-	-	-
Br-85	-	-	-	-	-	-	-
Rb-86	-	4.52E+8	-	-	-	2.91E+7	2.78E+8
Rb-88	-	-	-	-	-	-	-
Rb-89	-	-	-	-	-	-	-
Sr-89	3.59E+10	-	-	-	-	1.39E+9	1.03E+9
Sr-90	1.24E+12	-	-	-	-	1.67E+10	3.15E+11
Sr-91	5.50E+5	-	-	-	-	1.21E+6	2.08E+4
Sr-92	7.28E+2	-	-	-	-	1.38E+4	2.92E+1
Y-90	2.30E+4	-	-	-	-	6.56E+7	6.17E+2
Y-91m	9.94E-9	-	-	-	-	1.95E-5	-
Y-91	1.87E+7	-	-	-	-	2.49E+9	5.01E+5
Y-92	1.56E+0	-	-	-	-	4.51E+4	4.46E-2
Y-93	3.01E+2	-	-	-	-	4.48E+6	8.25E+0
Zr-95	3.90E+6	8.58E+5	-	1.23E+6	-	8.95E+8	7.64E+5
Zr-97	5.64E+2	8.15E+1	-	1.17E+2	-	1.23E+7	4.81E+1
Nb-95	4.10E+5	1.59E+5	-	1.50E+5	-	2.95E+8	1.14E+5
Nb-97	4.90E-6	8.85E-7	-	9.82E-7	-	2.73E-1	4.13E-7
Mo-99	-	7.83E+6	-	1.67E+7	-	6.48E+6	1.94E+6
Tc-99m	4.65E+0	9.12E+0	-	1.33E+2	4.63E+0	5.19E+3	1.51E+2
Tc-101	-	-	-	-	-	-	-

Table 2.10
R_i Vegetation Pathway Dose Factors - CHILD
(mrem/yr per µCi/m³) for H-3 and C-14 (m² x mrem/yr µCi/sec) for others

Nuclide	Bone	Liver	Thyroid	Kidney	Lung	GI-LLI	T.Body
Ru-103	1.55E+7	-	-	3.89E+7	-	3.99E+8	5.94E+6
Ru-105	9.17E+1	-	-	8.06E+2	-	5.98E+4	3.33E+1
Ru-106	7.45E+8	-	-	1.01E+9	-	1.16E+10	9.30E+7
Rh-103m	-	-	-	-	-	-	-
Rh-106	-	-	-	-	-	-	-
Ag-110m	3.22E+7	2.17E+7	-	4.05E+7	-	2.58E+9	1.74E+7
Sb-124	3.52E+8	4.57E+6	7.78E+5	-	1.96E+8	2.20E+9	1.23E+8
Sb-125	4.99E+8	3.85E+6	4.62E+5	-	2.78E+8	1.19E+9	1.05E+8
Te-125m	3.51E+8	9.50E+7	9.84E+7	-	-	3.38E+8	4.67E+7
Te-127m	1.32E+9	3.56E+8	3.16E+8	3.77E+9	-	1.07E+9	1.57E+8
Te-127	1.00E+4	2.70E+3	6.93E+3	2.85E+4	-	3.91E+5	2.15E+3
Te-129m	8.54E+8	2.39E+8	2.75E+8	2.51E+9	-	1.04E+9	1.33E+8
Te-129	1.15E-3	3.22E-4	8.22E-4	3.37E-3	-	7.17E-2	2.74E-4
Te-131m	1.54E+6	5.33E+5	1.10E+6	5.16E+6	-	2.16E+7	5.68E+5
Te-131	-	-	-	-	-	-	-
Te-132	6.98E+6	3.09E+6	4.50E+6	2.87E+7	-	3.11E+7	3.73E+6
I-130	6.21E+5	1.26E+6	1.38E+8	1.88E+6	-	5.87E+5	6.47E+5
I-131	1.43E+8	1.44E+8	4.76E+10	2.36E+8	-	1.28E+7	8.18E+7
I-132	9.20E+1	1.69E+2	7.84E+3	2.59E+2	-	1.99E+2	7.77E+1
I-133	3.59E+6	4.44E+6	8.25E+8	7.40E+6	-	1.79E+6	1.68E+6
I-134	1.70E-4	3.16E-4	7.28E-3	4.84E-4	-	2.10E-4	1.46E-4
I-135	6.54E+4	1.18E+5	1.04E+7	1.81E+5	-	8.98E+4	5.57E+4
Cs-134	1.60E+10	2.63E+10	-	8.14E+9	2.92E+9	1.42E+8	5.54E+9
Cs-136	8.06E+7	2.22E+8	-	1.18E+8	1.76E+7	7.79E+6	1.43E+8
Cs-137	2.39E+10	2.29E+10	-	7.46E+9	2.68E+9	1.43E+8	3.38E+9
Cs-138	-	-	-	-	-	-	-
Ba-139	5.11E-2	2.73E-5	-	2.38E-5	1.61E-5	2.95E+0	1.48E-3
Ba-140	2.77E+8	2.43E+5	-	7.90E+4	1.45E+5	1.40E+8	1.62E+7
Ba-141	-	-	-	-	-	-	-
Ba-142	-	-	-	-	-	-	-
La-140	3.23E+3	1.13E+3	-	-	-	3.15E+7	3.81E+2
La-142	2.32E-4	7.40E-5	-	-	-	1.47E+1	2.32E-5
Ce-141	6.35E+5	3.26E+5	-	1.43E+5	-	4.07E+8	4.84E+4
Ce-143	1.73E+3	9.36E+5	-	3.93E+2	-	1.37E+7	1.36E+2
Ce-144	1.27E+8	3.98E+7	-	2.21E+7	-	1.04E+10	6.78E+6
Pr-143	1.48E+5	4.46E+4	-	2.41E+4	-	1.60E+8	7.37E+3
Pr-144	-	-	-	-	-	-	-
Nd-147	7.16E+4	5.80E+4	-	3.18E+4	-	9.18E+7	4.49E+3
W-187	6.47E+4	3.83E+4	-	-	-	5.38E+6	1.72E+4
Np-239	2.55E+3	1.83E+2	-	5.30E+2	-	1.36E+7	1.29E+2

Table 2.11

R_i Grass-Cow-Milk Pathway Dose Factors - ADULT

(mrem/yr per µCi/m³) for H-3 and C-14 (m² x mrem/yr µCi/sec) for others

Nuclide	Bone	Liver	Thyroid	Kidney	Lung	GI-LLI	T.Body
H-3	-	7.63E+2	7.63E+2	7.63E+2	7.63E+2	7.63E+2	7.63E+2
C-14	3.63E+5	7.26E+4	7.26E+4	7.26E+4	7.26E+4	7.26E+4	7.26E+4
Na-24	2.54E+6	2.54E+6	2.54E+6	2.54E+6	2.54E+6	2.54E+6	2.54E+6
P-32	1.71E+10	1.06E+9	-	-	-	1.92E+9	6.60E+8
Cr-51	-	-	1.71E+4	6.30E+3	3.80E+4	7.20E+6	2.86E+4
Mn-54	-	8.40E+6	-	2.50E+6	-	2.57E+7	1.60E+6
Mn-56	-	4.23E-3	-	5.38E-3	-	1.35E-1	7.51E-4
Fe-55	2.51E+7	1.73E+7	-	-	9.67E+6	9.95E+6	4.04E+6
Fe-59	2.98E+7	7.00E+7	-	-	1.95E+7	2.33E+8	2.68E+7
Co-57	-	1.28E+6	-	-	-	3.25E+7	2.13E+6
Co-58	-	4.72E+6	-	-	-	9.57E+7	1.06E+7
Co-60	-	1.64E+7	-	-	-	3.08E+8	3.62E+7
Ni-63	6.73E+9	4.66E+8	-	-	-	9.73E+7	2.26E+8
Ni-65	3.70E-1	4.81E-2	-	-	-	1.22E+0	2.19E-2
Cu-64	-	2.41E+4	-	6.08E+4	-	2.05E+6	1.13E+4
Zn-65	1.37E+9	4.36E+9	-	2.92E+9	-	2.75E+9	1.97E+9
Zn-69	-	-	-	-	-	-	-
Br-82	-	-	-	-	-	3.72E+7	3.25E+7
Br-83	-	-	-	-	-	1.49E-1	1.03E-1
Br-84	-	-	-	-	-	-	-
Br-85	-	-	-	-	-	-	-
Rb-86	-	2.59E+9	-	-	-	5.11E+8	1.21E+9
Rb-88	-	-	-	-	-	-	-
Rb-89	-	-	-	-	-	-	-
Sr-89	1.45E+9	-	-	-	-	2.33E+8	4.16E+7
Sr-90	4.68E+10	-	-	-	-	1.35E+9	1.15E+10
Sr-91	3.13E+4	-	-	-	-	1.49E+5	1.27E+3
Sr-92	4.89E-1	-	-	-	-	9.68E+0	2.11E-2
Y-90	7.07E+1	-	-	-	-	7.50E+5	1.90E+0
Y-91m	-	-	-	-	-	-	-
Y-91	8.60E+3	-	-	-	-	4.73E+6	2.30E+2
Y-92	5.42E-5	-	-	-	-	9.49E-1	1.58E-6
Y-93	2.33E-1	-	-	-	-	7.39E+3	6.43E-3
Zr-95	9.46E+2	3.03E+2	-	4.76E+2	-	9.62E+5	2.05E+2
Zr-97	4.26E-1	8.59E-2	-	1.30E-1	-	2.66E+4	3.93E-2
Nb-95	8.25E+4	4.59E+4	-	4.54E+4	-	2.79E+8	2.47E+4
Nb-97	-	-	-	-	-	5.47E-9	-
Mo-99	-	2.52E+7	-	5.72E+7	-	5.85E+7	4.80E+6
Tc-99m	3.25E+0	9.19E+0	-	1.40E+2	4.50E+0	5.44E+3	1.17E+2
Tc-101	-	-	-	-	-	-	-

Table 2.11
R_i Grass-Cow-Milk Pathway Dose Factors - ADULT
(mrem/yr per µCi/m^3) for H-3 and C-14 (m^2 x mrem/yr µCi/sec) for others

Nuclide	Bone	Liver	Thyroid	Kidney	Lung	GI-LLI	T.Body
Ru-103	1.02E+3	-	-	3.89E+3	-	1.19E+5	4.39E+2
Ru-105	8.57E-4	-	-	1.11E-2	-	5.24E-1	3.38E-4
Ru-106	2.04E+4	-	-	3.94E+4	-	1.32E+6	2.58E+3
Rh-103m	-	-	-	-	-	-	-
Rh-106	-	-	-	-	-	-	-
Ag-110m	5.83E+7	5.39E+7	-	1.06E+8	-	2.20E+10	3.20E+7
Sb-124	2.57E+7	4.86E+5	6.24E+4	-	2.00E+7	7.31E+8	1.02E+7
Sb-125	2.04E+7	2.28E+5	2.08E+4	-	1.58E+7	2.25E+8	4.86E+6
Te-125m	1.63E+7	5.90E+6	4.90E+6	6.63E+7	-	6.50E+7	2.18E+6
Te-127m	4.58E+7	1.64E+7	1.17E+7	1.86E+8	-	1.54E+8	5.58E+6
Te-127	6.72E+2	2.41E+2	4.98E+2	2.74E+3	-	5.30E+4	1.45E+2
Te-129m	6.04E+7	2.25E+7	2.08E+7	2.52E+8	-	3.04E+8	9.57E+6
Te-129	-	-	-	-	-	-	-
Te-131m	3.61E+5	1.77E+5	2.80E+5	1.79E+6	-	1.75E+7	1.47E+5
Te-131	-	-	-	-	-	-	-
Te-132	2.39E+6	1.55E+6	1.71E+6	1.49E+7	-	7.32E+7	1.45E+6
I-130	4.26E+5	1.26E+6	1.07E+8	1.96E+6	-	1.08E+6	4.96E+5
I-131	2.96E+8	4.24E+8	1.39E+11	7.27E+8	-	1.12E+8	2.43E+8
I-132	1.64E-1	4.37E-1	1.53E+1	6.97E-1	-	8.22E-2	1.53E-1
I-133	3.97E+6	6.90E+6	1.01E+9	1.20E+7	-	6.20E+6	2.10E+6
I-134	-	-	-	-	-	-	-
I-135	1.39E+4	3.63E+4	2.40E+6	5.83E+4	-	4.10E+4	1.34E+4
Cs-134	5.65E+9	1.34E+10	-	4.35E+9	1.44E+9	2.35E+8	1.10E+10
Cs-136	2.61E+8	1.03E+9	-	5.74E+8	7.87E+7	1.17E+8	7.42E+8
Cs-137	7.38E+9	1.01E+10	-	3.43E+9	1.14E+9	1.95E+8	6.61E+9
Cs-138	-	-	-	-	-	-	-
Ba-139	4.70E-8	-	-	-	-	8.34E-8	1.38E-9
Ba-140	2.69E+7	3.38E+4		1.15E+4	1.93E+4	5.54E+7	1.76E+6
Ba-141	-	-	-	-	-	-	-
Ba-142	-	-	-	-	-	-	-
La-140	4.49E+0	2.26E+0	-	-	-	1.66E+5	5.97E-1
La-142	-	-	-	-	-	3.03E-8	-
Ce-141	4.84E+3	3.27E+3	-	1.52E+3	-	1.25E+7	3.71E+2
Ce-143	4.19E+1	3.09E+4	-	1.36E+1	-	1.16E+6	3.42E+0
Ce-144	3.58E+5	1.50E+5	-	8.87E+4	-	1.21E+8	1.92E+4
Pr-143	1.59E+2	6.37E+1	-	3.68E+1	-	6.96E+5	7.88E+0
Pr-144	-	-	-	-	-	-	-
Nd-147	9.42E+1	1.09E+2	-	6.37E+1	-	5.23E+5	6.52E+0
W-187	6.56E+3	5.48E+3	-	-	-	1.80E+6	1.92E+3
Np-239	3.66E+0	3.60E-1	-	1.12E+0	-	7.39E+4	1.98E-1

Table 2.12
R_i Grass-Cow-Milk Pathway Dose Factors - TEEN
(mrem/yr per µCi/m^3) for H-3 and C-14 (m^2 x mrem/yr µCi/sec) for others

Nuclide	Bone	Liver	Thyroid	Kidney	Lung	GI-LLI	T.Body
H-3	-	9.94E+2	9.94E+2	9.94E+2	9.94E+2	9.94E+2	9.94E+2
C-14	6.70E+5	1.34E+5	1.34E+5	1.34E+5	1.34E+5	1.34E+5	1.34E+5
Na-24	4.44E+6	4.44E+6	4.44E+6	4.44E+6	4.44E+6	4.44E+6	4.44E+6
P-32	3.15E+10	1.95E+9	-	-	-	2.65E+9	1.22E+9
Cr-51	-	-	2.78E+4	1.10E+4	7.13E+4	8.40E+6	5.00E+4
Mn-54	-	1.40E+7	-	4.17E+6	-	2.87E+7	2.78E+6
Mn-56	-	7.51E-3	-	9.50E-3	-	4.94E-1	1.33E-3
Fe-55	4.45E+7	3.16E+7	-	-	2.00E+7	1.37E+7	7.36E+6
Fe-59	5.20E+7	1.21E+8	-	-	3.82E+7	2.87E+8	4.68E+7
Co-57	-	2.25E+6	-	-	-	4.19E+7	3.76E+6
Co-58	-	7.95E+6	-	-	-	1.10E+8	1.83E+7
Co-60	-	2.78E+7	-	-	-	3.62E+8	6.26E+7
Ni-63	1.18E+10	8.35E+8	-	-	-	1.33E+8	4.01E+8
Ni-65	6.78E-1	8.66E-2	-	-	-	4.70E+0	3.94E-2
Cu-64	-	4.29E+4	-	1.09E+5	-	3.33E+6	2.02E+4
Zn-65	2.11E+9	7.31E+9	-	4.68E+9	-	3.10E+9	3.41E+9
Zn-69	-	-	-	-	-	-	-
Br-82	-	-	-	-	-	-	5.64E+7
Br-83	-	-	-	-	-	-	1.91E-1
Br-84	-	-	-	-	-	-	-
Br-85	-	-	-	-	-	-	-
Rb-86	-	4.73E+9	-	-	-	7.00E+8	2.22E+9
Rb-88	-	-	-	-	-	-	-
Rb-89	-	-	-	-	-	-	-
Sr-89	2.67E+9	-	-	-	-	3.18E+8	7.66E+7
Sr-90	6.61E+10	-	-	-	-	1.86E+9	1.63E+10
Sr-91	5.75E+4	-	-	-	-	2.61E+5	2.29E+3
Sr-92	8.95E-1	-	-	-	-	2.28E+1	3.81E-2
Y-90	1.30E+2	-	-	-	-	1.07E+6	3.50E+0
Y-91m	-	-	-	-	-	-	-
Y-91	1.58E+4	-	-	-	-	6.48E+6	4.24E+2
Y-92	1.00E-4	-	-	-	-	2.75E+0	2.90E-6
Y-93	4.30E-1	-	-	-	-	1.31E+4	1.18E-2
Zr-95	1.65E+3	5.22E+2	-	7.67E+2	-	1.20E+6	3.59E+2
Zr-97	7.75E-1	1.53E-1	-	2.32E-1	-	4.15E+4	7.06E-2
Nb-95	1.41E+5	7.80E+4	-	7.57E+4	-	3.34E+8	4.30E+4
Nb-97	-	-	-	-	-	6.34E-8	-
Mo-99	-	4.56E+7	-	1.04E+8	-	8.16E+7	8.69E+6
Tc-99m	5.64E+0	1.57E+1	-	2.34E+2	8.73E+0	1.03E+4	2.04E+2
Tc-101	-	-	-	-	-	-	-

Table 2.12
R_i Grass-Cow-Milk Pathway Dose Factors - TEEN
(mrem/yr per µCi/m^3) for H-3 and C-14 (m^2 x mrem/yr µCi/sec) for others

Nuclide	Bone	Liver	Thyroid	Kidney	Lung	GI-LLI	T.Body
Ru-103	1.81E+3	-	-	6.40E+3	-	1.52E+5	7.75E+2
Ru-105	1.57E-3	-	-	1.97E-2	-	1.26E+0	6.08E-4
Ru-106	3.75E+4	-	-	7.23E+4	-	1.80E+6	4.73E+3
Rh-103m	-	-	-	-	-	-	-
Rh-106	-	-	-	-	-	-	-
Ag-110m	9.63E+7	9.11E+7	-	1.74E+8	-	2.56E+10	5.54E+7
Sb-124	4.59E+7	8.46E+5	1.04E+5	-	4.01E+7	9.25E+8	1.79E+7
Sb-125	3.65E+7	3.99E+5	3.49E+4	-	3.21E+7	2.84E+8	8.54E+6
Te-125m	3.00E+7	1.08E+7	8.39E+6	-	-	8.86E+7	4.02E+6
Te-127m	8.44E+7	2.99E+7	2.01E+7	3.42E+8	-	2.10E+8	1.00E+7
Te-127	1.24E+3	4.41E+2	8.59E+2	5.04E+3	-	9.61E+4	2.68E+2
Te-129m	1.11E+8	4.10E+7	3.57E+7	4.62E+8	-	4.15E+8	1.75E+7
Te-129	-	-	-	1.67E-9	-	2.18E-9	-
Te-131m	6.57E+5	3.15E+5	4.74E+5	3.29E+6	-	2.53E+7	2.63E+5
Te-131	-	-	-	-	-	-	-
Te-132	4.28E+6	2.71E+6	2.86E+6	2.60E+7	-	8.58E+7	2.55E+6
I-130	7.49E+5	2.17E+6	1.77E+8	3.34E+6	-	1.67E+6	8.66E+5
I-131	5.38E+8	7.53E+8	2.20E+11	1.30E+9	-	1.49E+8	4.04E+8
I-132	2.90E-1	7.59E-1	2.56E+1	1.20E+0	-	3.31E-1	2.72E-1
I-133	7.24E+6	1.23E+7	1.72E+9	2.15E+7	-	9.30E+6	3.75E+6
I-134	-	-	-	-	-	-	-
I-135	2.47E+4	6.35E+4	4.08E+6	1.00E+5		7.03E+4	2.35E+4
Cs-134	9.81E+9	2.31E+10	-	7.34E+9	2.80E+9	2.87E+8	1.07E+10
Cs-136	4.45E+8	1.75E+9	-	9.53E+8	1.50E+8	1.41E+8	1.18E+9
Cs-137	1.34E+10	1.78E+10	-	6.06E+9	2.35E+9	2.53E+8	6.20E+9
Cs-138	-	-	-	-	-	-	-
Ba-139	8.69E-8	-	-	-	-	7.75E-7	2.53E-9
Ba-140	4.85E+7	5.95E+4	-	2.02E+4	4.00E+4	7.49E+7	3.13E+6
Ba-141	-	-	-	-	-	-	-
Ba-142	-	-	-	-	-	-	-
La-140	8.06E+0	3.96E+0	-	-	-	2.27E+5	1.05E+0
La-142	-	-	-	-	-	2.23E-7	-
Ce-141	8.87E+3	5.92E+3	-	2.79E+3	-	1.69E+7	6.81E+2
Ce-143	7.69E+1	5.60E+4	-	2.51E+1	-	1.68E+6	6.25E+0
Ce-144	6.58E+5	2.72E+5	-	1.63E+5	-	1.66E+8	3.54E+4
Pr-143	2.92E+2	1.17E+2	-	6.77E+1	-	9.61E+5	1.45E+1
Pr-144	-	-	-	-	-	-	-
Nd-147	1.81E+2	1.97E+2	-	1.16E+2	-	7.11E+5	1.18E+1
W-187	1.20E+4	9.78E+3	-	-	-	2.65E+6	3.43E+3
Np-239	6.99E+0	6.59E-1	-	2.07E+0	-	1.06E+5	3.66E-1

Table 2.13

R_i Grass-Cow-Milk Pathway Dose Factors - CHILD

(mrem/yr per µCi/m^3) for H-3 and C-14 (m^2 x mrem/yr µCi/sec) for others

Nuclide	Bone	Liver	Thyroid	Kidney	Lung	GI-LLI	T.Body
H-3	-	1.57E+3	1.57E+3	1.57E+3	1.57E+3	1.57E+3	1.57E+3
C-14	1.65E+6	3.29E+5	3.29E+5	3.29E+5	3.29E+5	3.29E+5	3.29E+5
Na-24	9.23E+6	9.23E+6	9.23E+6	9.23E+6	9.23E+6	9.23E+6	9.23E+6
P-32	7.77E+10	3.64E+9	-	-	-	2.15E+9	3.00E+9
Cr-51	-	-	5.66E+4	1.55E+4	1.03E+5	5.41E+6	1.02E+5
Mn-54	-	2.09E+7	-	5.87E+6	-	1.76E+7	5.58E+6
Mn-56	-	1.31E-2	-	1.58E-2	-	1.90E+0	2.95E-3
Fe-55	1.12E+8	5.93E+7	-	-	3.35E+7	1.10E+7	1.84E+7
Fe-59	1.20E+8	1.95E+8	-	-	5.65E+7	2.03E+8	9.71E+7
Co-57	-	3.84E+6	-	-	-	3.14E+7	7.77E+6
Co-58	-	1.21E+7	-	-	-	7.08E+7	3.72E+7
Co-60	-	4.32E+7	-	-	-	2.39E+8	1.27E+8
Ni-63	2.96E+10	1.59E+9	-	-	-	1.07E+8	1.01E+9
Ni-65	1.66E+0	1.56E-1	-	-	-	1.91E+1	9.11E-2
Cu-64	-	7.55E+4	-	1.82E+5	-	3.54E+6	4.56E+4
Zn-65	4.13E+9	1.10E+10	-	6.94E+9	-	1.93E+9	6.85E+9
Zn-69	-	-	-	-	-	2.14E-9	-
Br-82	-	-	-	-	-	-	1.15E+8
Br-83	-	-	-	-	-	-	4.69E-1
Br-84	-	-	-	-	-	-	-
Br-85	-	-	-	-	-	-	-
Rb-86	-	8.77E+9	-	-	-	5.64E+8	5.39E+9
Rb-88	-	-	-	-	-	-	-
Rb-89	-	-	-	-	-	-	-
Sr-89	6.62E+9	-	-	-	-	2.56E+8	1.89E+8
Sr-90	1.12E+11	-	-	-	-	1.51E+9	2.83E+10
Sr-91	1.41E+5	-	-	-	-	3.12E+5	5.33E+3
Sr-92	2.19E+0	-	-	-	-	4.14E+1	8.76E-2
Y-90	3.22E+2	-	-	-	-	9.15E+5	8.61E+0
Y-91m	-	-	-	-	-	-	-
Y-91	3.91E+4	-	-	-	-	5.21E+6	1.04E+3
Y-92	2.46E-4	-	-	-	-	7.10E+0	7.03E-6
Y-93	1.06E+0	-	-	-	-	1.57E+4	2.90E-2
Zr-95	3.84E+3	8.45E+2	-	1.21E+3	-	8.81E+5	7.52E+2
Zr-97	1.89E+0	2.72E-1	-	3.91E-1	-	4.13E+4	1.61E-1
Nb-95	3.18E+5	1.24E+5	-	1.16E+5	-	2.29E+8	8.84E+4
Nb-97	-	-	-	-	-	1.45E-6	-
Mo-99	-	8.29E+7	-	1.77E+8	-	6.86E+7	2.05E+7
Tc-99m	1.29E+1	2.54E+1	-	3.68E+2	1.29E+1	1.44E+4	4.20E+2
Tc-101	-	-	-	-	-	-	-

Table 2.13
R_i Grass-Cow-Milk Pathway Dose Factors - CHILD
(mrem/yr per µCi/m^3) for H-3 and C-14 (m^2 x mrem/yr µCi/sec) for others

Nuclide	Bone	Liver	Thyroid	Kidney	Lung	GI-LLI	T.Body
Ru-103	4.29E+3	-	-	1.08E+4	-	1.11E+5	1.65E+3
Ru-105	3.82E-3	-	-	3.36E-2	-	2.49E+0	1.39E-3
Ru-106	9.24E+4	-	-	1.25E+5	-	1.44E+6	1.15E+4
Rh-103m	-	-	-	-	-	-	-
Rh-106	-	-	-	-	-	-	-
Ag-110m	2.09E+8	1.41E+8	-	2.63E+8	-	1.68E+10	1.13E+8
Sb-124	1.09E+8	1.41E+8	2.40E+5	-	6.03E+7	6.79E+8	3.81E+7
Sb-125	8.70E+7	1.41E+6	8.06E+4	-	4.85E+7	2.08E+8	1.82E+7
Te-125m	7.38E+7	2.00E+7	2.07E+7	-	-	7.12E+7	9.84E+6
Te-127m	2.08E+8	5.60E+7	4.97E+7	5.93E+8	-	1.68E+8	2.47E+7
Te-127	3.06E+3	8.25E+2	2.12E+3	8.71E+3	-	1.20E+5	6.56E+2
Te-129m	2.72E+8	7.61E+7	8.78E+7	8.00E+8	-	3.32E+8	4.23E+7
Te-129	-	-	-	2.87E-9	-	6.12E-8	-
Te-131m	1.60E+6	5.53E+5	1.14E+6	5.35E+6	-	2.24E+7	5.89E+5
Te-131	-	-	-	-	-	-	-
Te-132	1.02E+7	4.52E+6	6.58E+6	4.20E+7	-	4.55E+7	5.46E+6
I-130	1.75E+6	3.54E+6	3.90E+8	5.29E+6	-	1.66E+6	1.82E+6
I-131	1.30E+9	1.31E+9	4.34E+11	2.15E+9	-	1.17E+8	7.46E+8
I-132	6.86E-1	1.26E+0	5.85E+1	1.93E+0	-	1.48E+0	5.80E-1
I-133	1.76E+7	2.18E+7	4.04E+9	3.63E+7	-	8.77E+6	8.23E+6
I-134	-	-	-	-	-	-	-
I-135	5.84E+4	1.05E+5	9.30E+6	1.61E+5	-	8.00E+4	4.97E+4
Cs-134	2.26E+10	3.71E+10	-	1.15E+10	4.13E+9	2.00E+8	7.83E+9
Cs-136	1.00E+9	2.76E+9	-	1.47E+9	2.19E+8	9.70E+7	1.79E+9
Cs-137	3.22E+10	3.09E+10	-	1.01E+10	3.62E+9	1.93E+8	4.55E+9
Cs-138	-	-	-	-	-	-	-
Ba-139	2.14E-7	-	-	-	-	1.23E-5	6.19E-9
Ba-140	1.17E+8	1.03E+5	-	3.34E+4	6.12E+4	5.94E+7	6.84E+6
Ba-141	-	-	-	-	-	-	-
Ba-142	-	-	-	-	-	-	-
La-140	1.93E+1	6.74E+0	-	-	-	1.88E+5	2.27E+0
La-142	-	-	-	-	-	2.51E-6	-
Ce-141	2.19E+4	1.09E+4	-	4.78E+3	-	1.36E+7	1.62E+3
Ce-143	1.89E+2	1.02E+5	-	4.29E+1	-	1.50E+6	1.48E+1
Ce-144	1.62E+6	5.09E+5	-	2.82E+5	-	1.33E+8	8.66E+4
Pr-143	7.23E+2	2.17E+2	-	1.17E+2	-	7.80E+5	3.59E+1
Pr-144	-	-	-	-	-	-	-
Nd-147	4.45E+2	3.60E+2	-	1.98E+2	-	5.71E+5	2.79E+1
W-187	2.91E+4	1.72E+4	-	-	-	2.42E+6	7.73E+3
Np-239	1.72E+1	1.23E+0	-	3.57E+0	-	9.14E+4	8.68E-1

Table 2.14
R_i Grass-Cow-Milk Pathway Dose Factors - INFANT
(mrem/yr per µCi/m³) for H-3 and C-14 (m² x mrem/yr µCi/sec) for others

Nuclide	Bone	Liver	Thyroid	Kidney	Lung	GI-LLI	T.Body
H-3	-	2.38E+3	2.38E+3	2.38E+3	2.38E+3	2.38E+3	2.38E+3
C-14	3.23E+6	6.89E+5	6.89E+5	6.89E+5	6.89E+5	6.89E+5	6.89E+5
Na-24	1.61E+7	1.61E+7	1.61E+7	1.61E+7	1.61E+7	1.61E+7	1.61E+7
P-32	1.60E+11	9.42E+9	-	-	-	2.17E+9	6.21E+9
Cr-51	-	-	1.05E+5	2.30E+4	2.05E+5	4.71E+6	1.61E+5
Mn-54	-	3.89E+7	-	8.63E+6	-	1.43E+7	8.83E+6
Mn-56	-	3.21E-2	-	2.76E-2	-	2.91E+0	5.53E-3
Fe-55	1.35E+8	8.72E+7	-	-	4.27E+7	1.11E+7	2.33E+7
Fe-59	2.25E+8	3.93E+8	-	-	1.16E+8	1.88E+8	1.55E+8
Co-57	-	8.95E+6	-	-	-	3.05E+7	1.46E+7
Co-58	-	2.43E+7	-	-	-	6.05E+7	6.06E+7
Co-60	-	8.81E+7	-	-	-	2.10E+8	2.08E+8
Ni-63	3.49E+10	2.16E+9	-	-	-	1.07E+8	1.21E+9
Ni-65	3.51E+0	3.97E-1	-	-	-	3.02E+1	1.81E-1
Cu-64	-	1.88E+5	-	3.17E+5	-	3.85E+6	8.69E+4
Zn-65	5.55E+9	1.90E+10	-	9.23E+9	-	1.61E+10	8.78E+9
Zn-69	-	-	-	-	-	7.36E-9	-
Br-82	-	-	-	-	-	-	1.94E+8
Br-83	-	-	-	-	-	-	9.95E-1
Br-84	-	-	-	-	-	-	-
Br-85	-	-	-	-	-	-	-
Rb-86	-	2.22E+10	-	-	-	5.69E+8	1.10E+10
Rb-88	-	-	-	-	-	-	-
Rb-89	-	-	-	-	-	-	-
Sr-89	1.26E+10	-	-	-	-	2.59E+8	3.61E+8
Sr-90	1.22E+11	-	-	-	-	1.52E+9	3.10E+10
Sr-91	2.94E+5	-	-	-	-	3.48E+5	1.06E+4
Sr-92	4.65E+0	-	-	-	-	5.01E+1	1.73E-1
Y-90	6.80E+2	-	-	-	-	9.39E+5	1.82E+1
Y-91m	-	-	-	-	-	-	-
Y-91	7.33E+4	-	-	-	-	5.26E+6	1.95E+3
Y-92	5.22E-4	-	-	-	-	9.97E+0	1.47E-5
Y-93	2.25E+0	-	-	-	-	1.78E+4	6.13E-2
Zr-95	6.83E+3	1.66E+3	-	1.79E+3	-	8.28E+5	1.18E+3
Zr-97	3.99E+0	6.85E-1	-	6.91E-1	-	4.37E+4	3.13E-1
Nb-95	5.93E+5	2.44E+5	-	1.75E+5	-	2.06E+8	1.41E+5
Nb-97	-	-	-	-	-	3.70E-6	-
Mo-99	-	2.12E+8	-	3.17E+8	-	6.98E+7	4.13E+7
Tc-99m	2.69E+1	5.55E+1	-	5.97E+2	2.90E+1	1.61E+4	7.15E+2
Tc-101	-	-	-	-	-	-	-

Table 2.14
R_i Grass-Cow-Milk Pathway Dose Factors - INFANT
(mrem/yr per µCi/m³) for H-3 and C-14 (m² x mrem/yr µCi/sec) for others

Nuclide	Bone	Liver	Thyroid	Kidney	Lung	GI-LLI	T.Body
Ru-103	8.69E+3	-	-	1.81E+4	-	1.06E+5	2.91E+3
Ru-105	8.06E-3	-	-	5.92E-2	-	3.21E+0	2.71E-3
Ru-106	1.90E+5	-	-	2.25E+5	-	1.44E+6	2.38E+4
Rh-103m	-	-	-	-	-	-	-
Rh-106	-	-	-	-	-	-	-
Ag-110m	3.86E+8	2.82E+8	-	4.03E+8	-	1.46E+10	1.86E+8
Sb-124	2.09E+8	3.08E+6	5.56E+5	-	1.31E+8	6.46E+8	6.49E+7
Sb-125	1.49E+8	1.45E+6	1.87E+5	-	9.38E+7	1.99E+8	3.07E+7
Te-125m	1.51E+8	5.04E+7	5.07E+7	-	-	7.18E+7	2.04E+7
Te-127m	4.21E+8	1.40E+8	1.22E+8	1.04E+9	-	1.70E+8	5.10E+7
Te-127	6.50E+3	2.18E+3	5.29E+3	1.59E+4	-	1.36E+5	1.40E+3
Te-129m	5.59E+8	1.92E+8	2.15E+8	1.40E+9	-	3.34E+8	8.62E+7
Te-129	2.08E-9	-	1.75E-9	5.18E-9	-	1.66E-7	-
Te-131m	3.38E+6	1.36E+6	2.76E+6	9.35E+6	-	2.29E+7	1.12E+6
Te-131	-	-	-	-	-	-	-
Te-132	2.10E+7	1.04E+7	1.54E+7	6.51E+7	-	3.85E+7	9.72E+6
I-130	3.60E+6	7.92E+6	8.88E+8	8.70E+6	-	1.70E+6	3.18E+6
I-131	2.72E+9	3.21E+9	1.05E+12	3.75E+9	-	1.15E+8	1.41E+9
I-132	1.42E+0	2.89E+0	1.35E+2	3.22E+0	-	2.34E+0	1.03E+0
I-133	3.72E+7	5.41E+7	9.84E+9	6.36E+7	-	9.16E+6	1.58E+7
I-134	-	-	1.01E-9	-	-	-	-
I-135	1.21E+5	2.41E+5	2.16E+7	2.69E+5	-	8.74E+4	8.80E+4
Cs-134	3.65E+10	6.80E+10	-	1.75E+10	7.18E+9	1.85E+8	6.87E+9
Cs-136	1.96E+9	5.77E+9	-	2.30E+9	4.70E+8	8.76E+7	2.15E+9
Cs-137	5.15E+10	6.02E+10	-	1.62E+10	6.55E+9	1.88E+8	4.27E+9
Cs-138	-	-	-	-	-	-	-
Ba-139	4.55E-7	-	-	-	-	2.88E-5	1.32E-8
Ba-140	2.41E+8	2.41E+5	-	5.73E+4	1.48E+5	5.92E+7	1.24E+7
Ba-141	-	-	-	-	-	-	-
Ba-142	-	-	-	-	-	-	-
La-140	4.03E+1	1.59E+1	-	-	-	1.87E+5	4.09E+0
La-142	-	-	-	-	-	5.21E-6	-
Ce-141	4.33E+4	2.64E+4	-	8.15E+3	-	1.37E+7	3.11E+3
Ce-143	4.00E+2	2.65E+5	-	7.72E+1	-	1.55E+6	3.02E+1
Ce-144	2.33E+6	9.52E+5	-	3.85E+5	-	1.33E+8	1.30E+5
Pr-143	1.49E+3	5.59E+2	-	2.08E+2	-	7.89E+5	7.41E+1
Pr-144	-	-	-	-	-	-	-
Nd-147	8.82E+2	9.06E+2	-	3.49E+2	-	5.74E+5	5.55E+1
W-187	6.12E+4	4.26E+4	-	-	-	2.50E+6	1.47E+4
Np-239	3.64E+1	3.25E+0	-	6.49E+0	-	9.40E+4	1.84E+0

Table 2.15 R_i Ground Plane Pathway Dose Factors (m^2 x mrem/yr per µCi/sec)	
Nuclide	Any Organ
H-3	-
C-14	-
Na-24	1.21E+7
P-32	-
Cr-51	4.68E+6
Mn-54	1.34E+9
Mn-56	9.05E+5
Fe-55	-
Fe-59	2.75E+8
Co-57	4.37E+8
Co-58	3.82E+8
Co-60	2.16E+10
Ni-63	-
Ni-65	2.97E+5
Cu-64	6.09E+5
Zn-65	7.45E+8
Zn-69	-
Br-82	4.57E+7
Br-83	4.89E+3
Br-84	2.03E+5
Br-85	-
Rb-86	8.98E+6
Rb-88	3.29E+4
Rb-89	1.21E+5
Sr-89	2.16E+4
Sr-90	-
Sr-91	2.19E+6
Sr-92	7.77E+5
Y-90	4.48E+3
Y-91m	1.01E+5
Y-91	1.08E+6
Y-92	1.80E+5
Y-93	1.85E+5
Zr-95	2.48E+8
Zr-97	2.94E+6
Nb-95	1.36E+8
Nb-97	2.28E+6
Mo-99	4.05E+6
Tc-99m	1.83E+5
Tc-101	2.04E+4
Ru-103	1.09E+8

Table 2.15 R_i Ground Plane Pathway Dose Factors (m^2 x mrem/yr per µCi/sec)	
Nuclide	Any Organ
Ru-105	6.36E+5
Ru-106	4.21E+8
Rh-103m	-
Rh-106	-
Ag-110m	3.47E+9
Sb-124	2.87E+9
Sb-125	6.49E+9
Te-125m	1.55E+6
Te-127m	9.17E+4
Te-127	3.00E+3
Te-129m	2.00E+7
Te-129	2.60E+4
Te-131m	8.03E+6
Te-131	2.93E+4
Te-132	4.22E+6
I-130	5.53E+6
I-131	1.72E+7
I-132	1.24E+6
I-133	2.47E+6
I-134	4.49E+5
I-135	2.56E+6
Cs-134	6.75E+9
Cs-136	1.49E+8
Cs-137	1.04E+10
Cs-138	3.59E+5
Ba-139	1.06E+5
Ba-140	2.05E+7
Ba-141	4.18E+4
Ba-142	4.49E+4
La-140	1.91E+7
La-142	7.36E+5
Ce-141	1.36E+7
Ce-143	2.32E+6
Ce-144	6.95E+7
Pr-143	-
Pr-144	1.83E+3
Nd-147	8.40E+6
W-187	2.36E+6
Np-239	1.71E+6

'4 RADIOLOGICAL EFFLUENT SPECIFICATIONS AND SURVEILLANCE REQUIREMENTS

3/4.0 APPLICABILITY AND SURVEILLANCE REQUIREMENTS

SPECIFICATIONS

3.0.1 Compliance with the specifications contained in the succeeding text is required during the conditions specified therein; except that upon failure to meet the specifications, the associated ACTION requirements shall be met.

3.0.2 Noncompliance with a Specification shall exist when its requirements and associated ACTION requirements are not met within the specified time intervals. If the Specification is restored prior to expiration of the specified time intervals, completion of the Action requirements is not required.

3.0.3 When a Specification is not met, except as provided in the associated ACTION requirements, reporting pursuant to TS 6.9.b.3 will be initiated.

SURVEILLANCE REQUIREMENTS

4.0.1 Surveillance Requirements shall be met during the conditions specified for individual Specifications unless otherwise stated in an individual Surveillance Requirement.

4.0.2 Each Surveillance Requirement shall be performed within the specified time interval with a maximum allowable extension not to exceed 25% of the surveillance interval.

4.0.3 Failure to perform a Surveillance Requirement within the specified time interval shall constitute a failure to meet the OPERABILITY requirements for a Specification. Exceptions to these requirements are stated in the individual Specification. Surveillance Requirements do not have to be performed on inoperable equipment.

3/4.1 RADIOACTIVE LIQUID EFFLUENT MONITORING INSTRUMENTATION

SPECIFICATIONS

3.1 The radioactive liquid effluent monitoring instrumentation channels shown in Table 3.1 shall be OPERABLE with their alarm/trip setpoints set to ensure that the limits of ODCM Specification 3.3.1 are not exceeded. The alarm/trip setpoints of these channels shall be determined in accordance with the methodology in Section 1.0 of the OFF-SITE DOSE CALCULATION MANUAL (ODCM).

APPLICABILITY

During release via the monitored pathway.

ACTION

a. With a radioactive liquid effluent monitoring instrumentation channel alarm/trip setpoint less conservative than required by the above specification, without delay suspend the release of radioactive liquid effluents monitored by the affected channel, or declare the channel inoperable, or change the setpoint so it is acceptably conservative.

b. With less than the minimum number of radioactive liquid effluent monitoring instrumentation channels OPERABLE, take the ACTION shown in Table 3.1. Exert best efforts to return the instruments to OPERABLE status within 30 days and, if unsuccessful, explain in the next Radioactive Effluent Release Report why the inoperability was not corrected in a timely manner.

SURVEILLANCE REQUIREMENTS

4.1 Each radioactive liquid effluent monitoring instrumentation channel shall be demonstrated OPERABLE by performance of the CHANNEL CHECK, SOURCE CHECK, CHANNEL CALIBRATION and CHANNEL FUNCTIONAL TEST operations at the frequencies shown in Table 4.1.

BASIS

Radioactive Liquid Effluent Monitoring Instrumentation - The radioactive liquid effluent instrumentation is provided to monitor and control, as applicable, the releases of radioactive materials in liquid effluents during actual or potential releases of liquid effluents. The alarm/trip setpoints for these instruments shall be calculated and adjusted in accordance with the methodology and parameters in the ODCM to ensure that the alarm/trip will occur prior to exceeding ten (10) times the values of 10 CFR Part 20, Appendix B, Table 2, Column 2. The operability and use of this instrumentation is consistent with the appropriate requirements of General Design Criteria 60, 63 and 64 of Appendix A to 10 CFR Part 50.

3/4.2 RADIOACTIVE GASEOUS EFFLUENT MONITORING INSTRUMENTATION

SPECIFICATIONS

3.2 The radioactive gaseous effluent monitoring instrumentation channels shown in Table 3.2 shall be OPERABLE with their alarm/trip setpoints set to ensure that the limits of ODCM Specification 3.4.1 are not exceeded. The alarm/trip setpoints of these channels shall be determined in accordance with the methodology in section 2.0 of the ODCM.

APPLICABILITY

As shown in Table 3.2.

ACTION

a. With a radioactive gaseous effluent monitoring instrumentation channel alarm/trip setpoint less conservative than required by the above Specification, without delay suspend the release of radioactive gaseous effluents monitored by the affected channel, or declare the channel inoperable, or change the setpoint so it is acceptably conservative.

b. With less than the minimum number of radioactive gaseous effluent monitoring instrumentation channels OPERABLE, take the ACTION shown in Table 3.2. Exert best efforts to return the instruments to OPERABLE status within 30 days and, if unsuccessful, explain in the next Radioactive Effluent Release Report why the inoperability was not corrected in a timely manner.

SURVEILLANCE REQUIREMENTS

4.2 Each radioactive gaseous effluent monitoring instrumentation channel shall be demonstrated OPERABLE by performance of the CHANNEL CHECK, SOURCE CHECK, CHANNEL CALIBRATION and CHANNEL FUNCTIONAL TEST operations at the frequencies shown in Table 4.2.

BASIS

Radioactive Gaseous Effluent Monitoring Instrumentation - The radioactive gaseous effluent instrumentation is provided to monitor and control, as applicable, the releases of radioactive materials in gaseous effluents during actual or potential releases of gaseous effluents. The alarm/trip will occur prior to exceeding the dose rate limits of ODCM Specification 3.4.1. The operability and use of this instrumentation is consistent with the appropriate requirements of General Design Criteria 60, 63 and 64 of Appendix A to 10 CFR Part 50.

3/4.3 LIQUID EFFLUENTS

CONCENTRATION

SPECIFICATIONS

3.3.1 The concentration of radioactive material released in liquid effluents to UNRESTRICTED AREAS shall be limited to ten times the concentrations specified in 10 CFR Part 20, Appendix B, Table 2, Column 2 for radionuclides other than dissolved or entrained noble gases. For dissolved or entrained noble gases, the concentration shall be limited to 2×10^{-4} μCi/ml total activity.

APPLICABILITY

During release via the monitored pathway.

ACTION

With the concentration of radioactive material released in liquid effluents to UNRESTRICTED AREAS exceeding the above limits, without delay restore the concentration to within the above limits.

SURVEILLANCE REQUIREMENTS

4.3.1.1 Radioactive liquid wastes shall be sampled and analyzed according to the sampling and analysis program of Table 4.3.

4.3.1.2 The results of the radioactivity analyses shall be used in accordance with the methodology and parameters in the ODCM to assure that the concentrations at the point of release are maintained within the limits of ODCM Specification 3.3.1.

BASIS

Concentration - This specification is provided to ensure that the concentration of radioactive materials released in liquid waste effluents to UNRESTRICTED AREAS will be less than ten times the concentration levels specified in 10 CFR Part 20, Appendix B, Table 2, Column 2. This limitation provides additional assurance that the levels of radioactive materials in bodies of water in UNRESTRICTED AREAS will result in exposures within (1) the Section II.A design objectives of Appendix I, 10 CFR Part 50, to a MEMBER OF THE PUBLIC and (2) the limits of 10 CFR Part 20.1301 to the population. The concentration limit for dissolved or entrained noble gases is based upon the assumption that Xe-135 is the controlling radioisotope and its concentration limit in air (submersion) was converted to an equivalent concentration in water using the methods described in International Commission on Radiological Protection (ICRP) Publication 2.

The required detection capabilities for radioactive materials in liquid waste samples are tabulated in terms of the lower limits of detection (LLDs). Detailed discussion of the LLD, and other detection limits can be found in HASL Procedures Manual, HASL-300 (revised annually), Currie, L.A., "Limits for Qualitative Detection and Quantitative Determination - Application to Radiochemistry," Anal. Chem. 40, 586-93 (1968), and Hartwell, J.K., "Detection Limits for Radioanalytical Counting Techniques," Atlantic Richfield Hanford Company Report ARH-SA-215 (June 1975).

DOSE

SPECIFICATIONS

3.3.2 The dose or dose commitment to a MEMBER OF THE PUBLIC from radioactive materials in liquid effluents released to UNRESTRICTED AREAS shall be limited:

a. During any calendar quarter to less than or equal to 1.5 mrem to the total body and to less than or equal to 5 mrem to any organ, and

b. During any calendar year to less than or equal to 3 mrem to the total body and to less than or equal to 10 mrem to any organ.

APPLICABILITY

At all times.

ACTION

With the calculated dose from the release of radioactive materials in liquid effluents exceeding any of the above limits, in lieu of a Licensee Event Report, prepare and submit to the Commission within 30 days, pursuant to Technical Specification (TS) 6.9.b.3, a Special Report that identifies the cause(s) for exceeding the limit(s) and defines the corrective actions that have been taken to reduce the release and the proposed corrective actions to be taken to assure that subsequent releases will be in compliance with the above limits.

SURVEILLANCE REQUIREMENTS

4.3.2 Cumulative dose contributions from liquid effluents for the current calendar quarter and the current calendar year shall be determined in accordance with the methodology and parameters in the ODCM once per 31 days.

BASIS

Dose - This specification is provided to implement the requirements of Sections II.A, III.A and IV.A of Appendix I, 10 CFR 50. The Limiting Condition for Operation implements the guides set forth in Section II.A of Appendix I. The ACTION statements provide the required operating flexibility and at the same time implement the guides set forth in Section IV.A of Appendix I to assure that the releases of radioactive material in liquid effluents to UNRESTRICTED AREAS will be kept "as low as is reasonably achievable." The dose calculation methodology and parameters in the ODCM implement the requirements in Section III.A of Appendix I that conformance with the guides of Appendix I be shown by calculational procedures based on models and data, such that the actual exposure of a MEMBER OF THE PUBLIC through appropriate pathways is unlikely to be substantially underestimated. The equations specified in the ODCM for calculating the doses due to the actual release rates of radioactive materials in liquid effluents are consistent with the methodology provided in Regulatory Guide 1.109, "Calculation of Annual Doses to Man from Routine Releases of Reactor Effluents for the Purpose of Evaluating Compliance with 10 CFR Part 50, Appendix I," Revision 1, October 1977 and Regulatory Guide 1.113, "Estimating Aquatic Dispersion of Effluents from Accidental and Routine Reactor Releases for the Purpose of Implementing Appendix I," April 1977.

LIQUID RADWASTE TREATMENT SYSTEM

SPECIFICATIONS

3.3.3 The liquid radwaste treatment system as described in the ODCM shall be used to reduce the radioactive materials in liquid wastes prior to their discharge when the projected doses, due to the liquid effluent, to UNRESTRICTED AREAS would exceed 0.18 mrem to the total body or 0.62 mrem to any organ in a calendar quarter.

APPLICABILITY

At all times.

ACTION

a. With radioactive liquid waste being discharged without treatment and in excess of the above limits, in lieu of a Licensee Event Report, prepare and submit to the Commission within 30 days pursuant to TS 6.9.b.3, a Special Report that includes the following information:

1. Explanation of why liquid radwaste was being discharged without treatment, identification of any inoperable equipment or subsystems, and the reason for the inoperability,

2. Action(s) taken to restore the inoperable equipment to OPERABLE status, and

3. Summary description of action(s) taken to prevent a recurrence.

SURVEILLANCE REQUIREMENTS

4.3.3 Doses due to liquid releases from the unit to UNRESTRICTED AREAS shall be projected once per 31 days in accordance with the methodology and parameters in the ODCM.

BASIS

Liquid Radwaste Treatment System - The requirement that the appropriate portions of this system be used, when specified, provides assurance that the releases of radioactive materials in liquid effluents will be kept "as low as is reasonably achievable." This specification implements the requirements of 10 CFR Part 50.36a, General Design Criterion 60 of Appendix A to 10 CFR Part 50 and the design objective given in Section II.D of Appendix I to 10 CFR Part 50. The specified limits governing the use of appropriate portions of the liquid radwaste treatment system were specified as a suitable fraction of the dose design objectives set forth in Section II.A of Appendix I, 10 CFR Part 50, for liquid effluents.

3/4.4 GASEOUS EFFLUENTS

DOSE RATE

SPECIFICATIONS

3.4.1 The dose rate due to radioactive materials released in gaseous effluents from the site to areas at and beyond the SITE BOUNDARY shall be limited to the following:

a. For noble gases: Less than or equal to 500 mrem/yr to the total body and less than or equal to 3000 mrem/yr to the skin, and

b. For iodine-131, iodine-133, tritium, and for all radionuclides in particulate form with half lives greater than 8 days: Less than or equal to 1500 mrem/yr to any organ.

APPLICABILITY

At all times.

ACTION

a. With the dose rate(s) exceeding the above limits, without delay restore the release rate to within the above limit(s).

SURVEILLANCE REQUIREMENTS

4.4.1.1 The dose rate due to noble gases in gaseous effluents shall be determined to be within the above limits in accordance with the methodology and parameters in the ODCM.

4.4.1.2 The dose rate due to iodine-131, iodine-133, tritium, and all radionuclides in particulate form with half lives greater than 8 days in gaseous effluents shall be determined to be within the above limits in accordance with the methodology and parameters in the ODCM by obtaining representative samples and performing analyses in accordance with the sampling and analysis program specified in Table 4.4.

BASIS

Dose Rate - This specification is provided to ensure that the dose rates at any time to a MEMBER OF THE PUBLIC at or beyond the SITE BOUNDARY are less than or equal to 500 mrem/yr to the total body and less than or equal to 3000 mrem/yr to the skin. This also restricts releases, at all times, for the corresponding thyroid dose rate above background to a child via the inhalation pathway to less than or equal to 1500 mrem/yr. These dose rate limits provide additional assurance that radioactive material discharged in gaseous effluents will be maintained ALARA, and coupled with the requirements of ODCM Specification 3.4.2, ensure that the exposures of MEMBERS OF THE PUBLIC in an UNRESTRICTED AREA, either within or outside the SITE BOUNDARY, will not exceed the annual average concentrations specified in Appendix B, Table 2, Column 1 of 10 CFR 20. For MEMBERS OF THE PUBLIC who may at times be within the SITE BOUNDARY, the occupancy of that MEMBER OF THE PUBLIC will usually be sufficiently low to compensate for any increase in the atmospheric diffusion factor above that for the SITE BOUNDARY.

The required detection capabilities for radioactive materials in gaseous waste samples are tabulated in terms of the lower limits of detection (LLDs). Detailed discussion of the LLD, and other detection limits can be found in HASL Procedures Manual, HASL-300 (revised annually), Currie, L.A., "Limits for Qualitative Detection and Quantitative Determination - Application to Radiochemistry," Anal. Chem. 40, 586-93 (1968), and Hartwell, J.K., "Detection Limits for Radioanalytical Counting Techniques," Atlantic Richfield Hanford Company Report ARH-SA-215 (June 1975).

DOSE - NOBLE GASES

SPECIFICATIONS

3.4.2 The air dose due to noble gases released in gaseous effluents, to areas at and beyond the SITE BOUNDARY shall be limited to the following:

a. During any calendar quarter: Less than or equal to 5 mrad for gamma radiation and less than or equal to 10 mrad for beta radiation and,

b. During any calendar year: Less than or equal to 10 mrad for gamma radiation and less than or equal to 20 mrad for beta radiation.

APPLICABILITY

At all times.

ACTION

a. With the calculated air dose from radioactive noble gases in gaseous effluents exceeding any of the above limits, in lieu of a Licensee Event Report, prepare and submit to the Commission within 30 days, pursuant to TS 6.9.b.3, a Special Report that identifies the cause(s) for exceeding the limit(s) and defines the corrective actions that have been taken to reduce the releases and the proposed corrective actions to be taken to assure that subsequent releases will be in compliance with the above limits.

SURVEILLANCE REQUIREMENTS

4.4.2 Cumulative dose contributions for the current calendar quarter and current calendar year for noble gases shall be determined in accordance with the methodology and parameters in the ODCM once per 31 days.

BASIS

Dose - Noble Gases - This specification is provided to implement the requirements of Sections II.B, III.A and IV.A of Appendix I, 10 CFR Part 50. The Limiting Condition for Operation implements the guides set forth in Section II.B of Appendix I. The ACTION statements provide the required operating flexibility and at the same time implement the guides set forth in Section IV.A of Appendix I to assure that the releases of radioactive material in gaseous effluents to UNRESTRICTED AREAS will be kept "as low as is reasonably achievable." The Surveillance Requirements implement the requirements in Section III.A of Appendix I that conformance with the guides of Appendix I be shown by calculational procedures based on models and data such that the actual exposure of a MEMBER OF THE PUBLIC through appropriate pathways is unlikely to be substantially underestimated. The dose calculation methodology and parameters established in the ODCM for calculating the doses due to the actual release rates of radioactive noble gases in gaseous effluents are consistent with the methodology provided in Regulatory Guide 1.109, "Calculation of Annual Doses to Man from Routine Releases of Reactor Effluents for the Purpose of Evaluating Compliance with 10 CFR Part 50, Appendix I," Revision 1, October 1977 and Regulatory Guide 1.111, "Methods for Estimating Atmospheric Transport and Dispersion of Gaseous Effluents in Routine Releases from Light-Water Cooled Reactors," Revision 1, July 1977. The ODCM equations provided for determining the air doses at and beyond the SITE BOUNDARY are based upon the historical average atmospheric conditions.

DOSE - IODINE-131, IODINE-133, TRITIUM AND RADIONUCLIDES IN PARTICULATE FORM

SPECIFICATIONS

3.4.3 The dose to a MEMBER OF THE PUBLIC from iodine-131, iodine-133, tritium, and all radionuclides in particulate form with half-lives greater than 8 days in gaseous effluents released to areas at and beyond the SITE BOUNDARY shall be limited to the following:

a. During any calendar quarter: Less than or equal to 7.5 mrem to any organ and,

b. During any calendar year: Less than or equal to 15 mrem to any organ.

APPLICABILITY

At all times.

ACTION

a. With the calculated dose from the release of iodine-131, iodine-133, tritium, and radionuclides in particulate form with half lives greater than 8 days, in gaseous effluents exceeding any of the above limits, in lieu of a Licensee Event Report, prepare and submit to the Commission within 30 days, pursuant to TS 6.9.b.3, a Special Report that identifies the cause(s) for exceeding the limit and defines the corrective actions that have been taken to reduce the releases and the proposed corrective actions to be taken to assure that subsequent releases will be in compliance with the above limits.

SURVEILLANCE REQUIREMENTS

4.4.3 Cumulative dose contributions for the current calendar quarter and current calendar year for iodine-131, iodine-133, tritium, and radionuclides in particulate form with half lives greater than 8 days shall be determined in accordance with the methodology and parameters in the ODCM once per 31 days.

BASIS

Dose - Iodine-131, Iodine-133, Tritium, and Radionuclides in Particulate Form - This specification is provided to implement the requirements of Sections II.C, III.A and IV.A of Appendix I, 10 CFR Part 50. The Limiting Conditions for Operation are the guides set forth in Section II.C of Appendix I. The ACTION statements provide the required operating flexibility and at the same time implement the guides set forth in Section IV.A of Appendix I to assure that the releases of radioactive materials in gaseous effluents to UNRESTRICTED AREAS will be kept "as low as is reasonably achievable."

The ODCM calculational methods specified in the Surveillance Requirements implement the requirements in Section III.A of Appendix I that conformance with the guides of Appendix I be shown by calculational procedures based on models and data, such that the actual exposure of a MEMBER OF THE PUBLIC through appropriate pathways is unlikely to be substantially underestimated. The ODCM calculational methodology and parameters for calculating the doses due to the actual release rates of the subject materials are consistent with the methodology provided in Regulatory Guide 1.109, "Calculation of Annual Doses to man from Routine Releases of Reactor Effluents for the Purpose of Evaluating Compliance with 10 CFR Part 50, Appendix I," Revision 1, October 1977 and Regulatory Guide 1.111, "Methods for Estimating Atmospheric Transport and Dispersion of Gaseous Effluents in Routine Releases from Light-Water-Cooled Reactors," Revision 1, July 1977. These equations also provide for determining the actual doses based upon the historical average atmospheric conditions. The release rate specifications for iodine-131, iodine-133, tritium, and radionuclides in particulate form with half-lives greater than 8 days are dependent upon the existing radionuclide pathways to man, in areas at and beyond the SITE BOUNDARY. The pathways that were examined in the development of these calculations were: 1) individual inhalation of airborne radionuclides, 2) deposition of radionuclides onto green leafy vegetation with subsequent consumption by man, 3) deposition onto grassy areas where milk animals and meat producing animals graze with consumption of the milk and meat by man, and 4) deposition on the ground with subsequent exposure of man.

GASEOUS RADWASTE TREATMENT SYSTEM

SPECIFICATIONS

3.4.4 The GASEOUS RADWASTE TREATMENT SYSTEM and the VENTILATION EXHAUST TREATMENT SYSTEM shall be used to reduce radioactive materials in gaseous waste prior to their discharge when the projected gaseous effluent air doses due to gaseous effluent releases to areas at and beyond the SITE BOUNDARY would exceed 0.62 mrad for gamma radiation and 1.25 mrad for beta radiation in a calendar quarter. The VENTILATION EXHAUST TREATMENT SYSTEM shall be used to reduce radioactive materials in gaseous waste prior to their discharge when the projected doses due to gaseous effluent releases, to areas at and beyond the SITE BOUNDARY would exceed 0.94 mrem to any organ in a calendar quarter.

APPLICABILITY

At all times.

ACTION

a. With gaseous waste being discharged without treatment and in excess of the above limits, in lieu of a Licensee Event Report, prepare and submit to the Commission within 30 days, pursuant to TS 6.9.b.3, a Special Report that includes the following information:

1. Explanation of why gaseous radwaste was being discharged without treatment, identification of any inoperable equipment or subsystems, and the reason for the inoperability,

2. Action(s) taken to restore the inoperable equipment to OPERABLE status, and

3. Summary description of action(s) taken to prevent a recurrence.

SURVEILLANCE REQUIREMENTS

4.4.4 Doses due to gaseous releases from areas at and beyond the SITE BOUNDARY shall be projected once per 31 days in accordance with the methodology and parameters in the ODCM.

BASIS

Gaseous Radwaste Treatment System - The requirement that the appropriate portions of these systems be used, when specified, provides reasonable assurance that the releases of radioactive materials in gaseous effluents will be kept "as low as is reasonably achievable."

This specification implements the requirements of 10 CFR 50.36a, General Design Criterion 60 of Appendix A to 10 CFR Part 50, and the design objectives given in Section II.D of Appendix I to 10 CFR Part 50. The specified limits governing the use of appropriate portions of the systems were specified as a suitable fraction of the dose design objectives set forth in Sections II.B and II.C of Appendix I, 10 CFR Part 50, for gaseous effluents.

3/4.5 TOTAL DOSE

SPECIFICATIONS

3.5 The annual (calendar year) dose or dose commitment to any MEMBER OF THE PUBLIC due to releases of radioactivity and to radiation from uranium fuel cycle sources shall be limited to less than or equal to 25 mrem to the total body or any organ, except the thyroid, which shall be limited to less than or equal to 75 mrem.

APPLICABILITY

At all times.

ACTION

a. With the calculated doses from the release of radioactive materials in liquid or gaseous effluents exceeding twice the limits of ODCM Specification 3.3.2.a, 3.3.2.b, 3.4.2.a, 3.4.2.b, 3.4.3.a, or 3.4.3.b, calculations should be made including direct radiation contributions from the reactor unit to determine whether the above limits have been exceeded. If such is the case in lieu of a Licensee Event Report, prepare and submit to the Commission within 30 days, pursuant to TS 6.9.b.3, a special report that defines the corrective action to be taken to reduce subsequent releases to prevent recurrence of exceeding the above limits and includes the schedule for achieving conformance with the above limits. This special report as defined in 10 CFR 20.2203, shall include an analysis that estimates the radiation exposure (dose) to a MEMBER OF THE PUBLIC from uranium fuel cycle sources, including all effluent pathways and direct radiation, for the calendar year that includes the release(s) covered by this report. It shall also describe levels of radiation and concentrations of radioactive material involved, and the cause of the exposure levels or concentrations. If the estimated dose(s) exceeds the above limits, and if the release condition resulting in violation of 40 CFR Part 190 has not already been corrected, the special report shall include a request for a variance in accordance with the provisions of 40 CFR Part 190. Submittal of the report is considered a timely request, and a variance is granted until staff action on the request is complete.

SURVEILLANCE REQUIREMENTS

4.5.1 Cumulative dose contributions from liquid and gaseous effluents shall be determined in accordance with Surveillance Requirements 4.3.2, 4.4.2, and 4.4.3 in accordance with the methodology and parameters in the ODCM.

4.5.2 Cumulative dose contributions from direct radiation from the reactor unit shall be determined in accordance with the methodology and parameters in the ODCM. This requirement is applicable only under conditions set forth in ODCM Specification 3.5.a.

BASIS

Total Dose - This specification is provided to meet the dose limitations of 40 CFR Part 190 that have been incorporated into 10 CFR Part 20 by 46 FR 18525. The specification requires the preparation and submittal of a Special Report whenever the calculated doses from plant generated radioactive effluents and direct radiation exceed 25 mrem to the total body or any organ, except the thyroid, which shall be limited to less than or equal to 75 mrem. It is highly unlikely that the resultant dose to a MEMBER OF THE PUBLIC will exceed the dose limits of 40 CFR Part 190 if the reactor remains within twice the dose design objectives of Appendix I, and if direct radiation doses from the reactor are kept small. The Special Report will describe a course of action that should result in the limitation of the annual dose to a MEMBER OF THE PUBLIC to within the 40 CFR Part 190 limits. For the purposes of the Special Report, it may be assumed that the dose commitment to the MEMBER OF THE PUBLIC from other uranium fuel cycle sources is negligible. If the dose to any MEMBER OF THE PUBLIC is estimated to exceed the requirements of 40 CFR Part 190, the Special Report with a request for a variance (provided the release conditions resulting in violation of 40 CFR Part 190 have not already been corrected), in accordance with the provisions of 40 CFR 190.11 and 10 CFR 20.2203, is considered to be a timely request and fulfills the requirements of 40 CFR Part 190 until NRC staff action is completed. The variance only relates to the limits of 40 CFR Part 190, and does not apply in any way to the other requirements for dose limitation of 10 CFR Part 20, as addressed in ODCM Specifications 3.3.1 and 3.4.1. An individual is not considered a MEMBER OF THE PUBLIC during any period in which he/she is engaged in carrying out any operation that is part of the nuclear fuel cycle.

3/4.6 REPORTING REQUIREMENTS

3/4.6.1 Radioactive Effluent Release Report

The Radioactive Effluent Release Report shall include the following:

a. A summary of the quantities of radioactive liquid and gaseous effluents and solid waste released from the unit following the format of Regulatory Guide 1.21, "Measuring, Evaluating, and Reporting Radioactivity in Solid Wastes and Releases of Radioactive Materials in Liquid and Gaseous Effluents from Light-Water-Cooled Nuclear Power Plants," Revision 1, June 1974.

b. An annual summary of hourly meteorological data collected over the previous year. This annual summary may be either in the form of an hour-by-hour listing on magnetic tape of wind speed, wind direction, atmospheric stability, and precipitation (if measured), or in the form of joint frequency distributions of wind speed, wind direction, and atmospheric stability[4]. This same report shall include an assessment of the radiation doses due to the radioactive liquid and gaseous effluents released from the unit during the previous calendar year. The assumptions used in making these assessment, i.e., specific activity, exposure time and location shall be included in these reports. The assessment of radiation doses shall be performed based on the calculational guidance, as presented in the ODCM.

c. An assessment of radiation doses to the likely most exposed MEMBER OF THE PUBLIC from reactor releases and other nearby uranium fuel cycle sources, including doses from primary effluent pathways and direct radiation, the previous calendar year to show conformance with 40 CFR Part 190, Environmental Radiation Protection Standards for Nuclear Power Operation.

d. A list and description of unplanned releases from the site to UNRESTRICTED AREAS of radioactive materials in gaseous and liquid effluents made during the reporting period.

e. Any changes made during the reporting period to the ODCM.

[4] In lieu of submission with the annual Radioactive Effluent Release Report, the licensee has the option of retaining this summary of required meteorological data on site in a file that shall be provided to the NRC upon request.

TABLE 3.1
RADIOACTIVE LIQUID EFFLUENT MONITORING INSTRUMENTATION

Instrument	Minimum Channels Operable	Action
1. Gross Radioactivity Monitors Providing Alarm and Automatic Termination of Release		
a. Liquid Radwaste Effluent Line (R-18)	1	1
b. Steam Generator Blowdown Effluent Line (R-19)	1	2
2. Gross Beta or Gamma Radioactivity Monitors Providing Alarm But Not Providing Automatic Termination of Release		
a. Service Water System Effluent Line (Component cooling, R-20)	1	3
b. Service Water System Effluent Line (Containment fan cooling, R-16)	1	3

Action 1 - With the number of channels OPERABLE less than required by the Minimum Channels OPERABLE requirement, effluent releases may continue provided that prior to initiating a release:

a. At least two independent samples are analyzed in accordance with Surveillance Requirement 4.3.1.1 and

b. At least two technically qualified members of the Facility Staff independently verify the release rate calculations and discharge line valving;

Otherwise, suspend release of radioactive effluents via this pathway.

Action 2 - With the number of channels OPERABLE less than required by the Minimum Channels OPERABLE requirement, effluent releases via this pathway may continue provided grab samples are analyzed for gross radioactivity (beta or gamma) at a lower limit of detection of 1.0E-6 uCi/ml:

a. At least once per week with no indication of primary-to-secondary leakage; or

b. At least once per 24 hours with identified primary-to-secondary leakage (with secondary side activity > 1.0E-05 uCi/ml)

Action 3 - With the number of channels OPERABLE less than required by the Minimum Channels OPERABLE requirement, effluent releases via this pathway may continue provided that, at least once per 12 hours, grab samples are collected and analyzed for gross radioactivity (beta or gamma) at a lower limit of detection of 1.0E-6 uCi/ml. (Note: Failure to complete sampling and analysis prior to 12 hours after the monitor is declared O.O.S. is a violation of this specification).

TABLE 3.2 RADIOACTIVE GASEOUS EFFLUENT MONITORING INSTRUMENTATION (Page 1 of 2)			
Instrument	**Minimum Channels Operable**	**Applicability**	**Action**
1. Noble Gas Activity Monitor			
a. R-13 or R-14			
- Waste Gas Holdup System (auto-isolation)			
- Auxiliary Building Ventilation System	1	*	
- Containment Purge 2″ line (auto-isolation)			4 5
b. R-12 or R-21			6
- Containment purge 36″ duct (auto-isolation)	1	*	6
c. R-15	1	*	
- Condenser Evacuation System			5
2. Radioiodine & Particulate Samplers			
a. Containment Building Vent (R-21)	1	*	7
b. Auxiliary Building Vent (R-13 or R-14)	1	*	7
3. Sampler Flow Rate Measuring Devices			
a. Containment Building Vent Sampler (R-21)	1	*	8
b. Auxiliary Building Vent Sampler (R-13 or R-14)	1	*	8

*** At all times**

TABLE 3.2 RADIOACTIVE GASEOUS EFFLUENT MONITORING INSTRUMENTATION (Page 2 of 2)	
TABLE NOTATIONS	
Action 4 -	With the number of channels OPERABLE less than required by the Minimum Channels OPERABLE requirement, the contents of the tank(s) may be released to the environment provided that prior to initiating the release: a. At least two independent samples of the tank's contents are analyzed, and b. At least two technically qualified members of the Facility Staff independently verify the release rate calculations and discharge valve lineup; Otherwise, suspend release of radioactive effluents via this pathway.
Action 5 -	With the number of channels OPERABLE less than required by the Minimum Channels OPERABLE requirement, effluent releases via this pathway may continue provided grab samples are taken at least once per 12 hours and these samples are analyzed for gross activity within 24 hours.
Action 6 -	With the number of channels OPERABLE less than required by the Minimum Channels OPERABLE requirement, immediately suspend PURGING of radioactive effluents via this pathway.
Action 7 -	With the number of channels OPERABLE less than required by the Minimum Channels OPERABLE requirement, effluent releases via the affected pathway may continue provided samples are continuously collected with auxiliary sampling equipment as required in Table 4.4.
Action 8 -	With the number of channels OPERABLE less than required by the Minimum Channels OPERABLE requirement, effluent releases via this pathway may continue provided the flow rate is estimated at least once per 4 hours.

TABLE 4.0 FREQUENCY NOTATION	
Notation	**Frequency[5]**
S	Once per shift
St	Once per 12 hours
D	Once per 24 hours
W	Once per 7 days
M	Once per 31 days
Q	Once per 92 days
SA	Once per 184 days
R	Once per refueling cycle, not to exceed 18 months
P	Prior to each reactor startup if not done previous week
PR	Completed prior to each release
NA	Not applicable

[5] A maximum extension not to exceed 25% of the surveillance interval.

TABLE 4.1 RADIOACTIVE LIQUID EFFLUENT MONITORING INSTRUMENTATION SURVEILLANCE REQUIREMENTS				
Instrument	**Channel Check**	**Source Check**	**Channel Calibration**	**Channel Functional Test**
1. Gross Radioactivity Monitors Providing Alarm and Automatic Termination of Release				
a. Liquid Radwaste Effluent Line (R-18)	D	PR	R	Q
b. Steam Generator Blowdown Effluent Line (R-19)	D	M	R	Q
2. Gross Beta or Gamma Radioactivity Monitors Providing Alarm But Not Providing Automatic Termination of Release				
a. Service Water System Effluent Line (Component cooling, R-20)	D	M	R	Q
b. Service Water System Effluent Line (Containment fan cooling, R-16)	D	M	R	Q

TABLE 4.2
RADIOACTIVE GASEOUS EFFLUENT MONITORING INSTRUMENTATION SURVEILLANCE REQUIREMENTS

Instrument	Channel Check	Source Check	Channel Calibration	Channel Functional Test	Modes In Which Surveillance Required
1. Noble Gas Activity Monitor					
a. R-13 or R-14					
Waste Gas Holdup System (auto-isolation)	PR	PR	R	Q	*
Auxiliary Building Ventilation System	D	M	R	Q	*
Containment Purge 2" line (auto-isolation)	D	M	R	Q	*
b. R-12 or R-21					
Containment purge 36" duct (auto-isolation)	D	PR	R	Q	*
c. R-15					
Condenser Evacuation System	D	M	R	Q	*
2. Radioiodine Particulate Samplers					
a. Containment Building vent (R-21)	W	NA	NA	NA	*
b. Auxiliary Building vent (R-13 or R-14)	W	NA	NA	NA	*
3. Sampler Flow Rate Measuring Devices					
a. Containment Building vent sampler (R-21)	D	NA	R	Q	*
b. Auxiliary Building vent sampler (R-13 or R-14)	D	NA	R	Q	*

* At all times other than when the line is valved out and tagged.

TABLE 4.3
RADIOACTIVE LIQUID WASTE SAMPLING AND ANALYSIS PROGRAM
Page 1 of 2

Liquid Release Type	Sampling Frequency	Minimum Analysis Frequency	Type of Activity Analysis	Lower Limit of Detection (LLD)[a] (μCi/ml)
A. Batch Waste Release Tanks[b]	PR Each Batch	PR Each Batch	Principal Gamma Emitters[c]	$1x10^{-6}$
			I-131	$1x10^{-6}$
	PR Each Batch	M Composite[d]	H-3	$1x10^{-5}$
			Gross Alpha	$5x10^{-7}$
	PR Each Batch	Q Composite[d]	Sr-89, Sr-90	$5x10^{-8}$
			Fe-55	$1x10^{-6}$
B. Continuous Releases[e] (SG Blowdown) (TB Sump[g])	W Grab Sample	W Grab Sample	Principal Gamma Emitters[c]	$5x10^{-7}$
			I-131	$1x10^{-6}$
	W Grab Sample	M Composite[f]	H-3	$1x10^{-5}$
			Gross Alpha	$5x10^{-7}$
	W Grab Sample	Q Composite[f]	Sr-89, Sr-90	$5x10^{-8}$
			Fe-55	$1x10^{-6}$

TABLE 4.3
RADIOACTIVE LIQUID WASTE SAMPLING AND ANALYSIS PROGRAM

Table Notations

a The LLD is defined, for purposes of these specifications, as the smallest concentration of radioactive material in a sample that will yield a net count, above system background, that will be detected with 95% probability with only 5% probability of falsely concluding that a blank observation represents a "real" signal.

For a particular measurement system, which may include radiochemical separation:

$$LLD = \frac{4.66 * s_b}{E * V * 2.22 \times 10^6 * Y * \exp^{(-\lambda \Delta t)}}$$

Where:

- LLD is the a priori lower limit of detection as defined above, as µCi per unit mass or volume,
- s_b is the standard deviation of the background counting rate or of the counting rate of a blank sample as appropriate, as counts per minute,
- E is the counting efficiency, as counts per disintegration,
- V is the sample size in units of mass or volume,
- 2.22×10^6 is the number of disintegrations per minute per microcurie,
- Y is the fractional radiochemical yield, when applicable,
- λ is the radioactive decay constant for the particular radionuclide, and
- Δt for plant effluents is the elapsed time between the midpoint of sample collection and time of counting.
- Typical values of E, V, Y and Δt should be used in the calculation.

It should be recognized that the LLD is defined as an a priori (before the fact) limit representing the capability of a measurement system and not as an a posteriori (after the fact) limit for a particular measurement.

b A batch release is the discharge of liquid wastes of a discrete volume. Prior to sampling for analysis, each batch shall be located, and then thoroughly mixed to ensure representative sampling.

c The principal gamma emitters for which the LLD specification applies exclusively are the following radionuclides: Mn-54, Fe-59, Co-58, Co-60, Zn-65, Mo-99, Cs-134, Cs-137, Ce-141, and Ce-144. This list does not mean that only these nuclides are to be considered. Other gamma peaks that are identifiable, together with those of the above nuclides, shall also be analyzed and reported in the Radioactive Effluent Release Report pursuant to TS 6.9.b.2.

d A composite sample is one in which the quantity of liquid sampled is proportional to the quantity of liquid waste discharged and in which the method of sampling employed results in a specimen that is representative of the liquids released.

e A continuous release is the discharge of liquid wastes of a nondiscrete volume, e.g., from a volume of a system that has an input flow during the continuous release.

f As a minimum, the monthly and quarterly composite samples shall be comprised of weekly grab samples.

g During periods of identified primary-to-secondary leakage (with the secondary activity > 1.0E-05 µCi/ml), grab samples are collected daily and analyzed by gamma spectroscopy.

TABLE 4.4
RADIOACTIVE GASEOUS WASTE SAMPLING AND ANALYSIS PROGRAM
Page 1 of 2

Gaseous Release Type	Sampling Frequency	Minimum Analysis Frequency	Type of Activity Analysis	Lower Limit of Detection (LLD)[a] (μCi/ml)
A. Waste Gas Storage Tank	PR Each Tank Grab Sample	PR Each Tank	Principal Gamma Emitters[b]	$1x10^{-4}$
B. Containment PURGE	PR Each PURGE Grab Sample	PR Each Purge	Principal Gamma Emitters[b]	$1x10^{-4}$
C. Auxiliary Building and Containment Building Vent	M Grab Sample	M	Principal Gamma Emitters[b]	$1x10^{-4}$
	Continuous[c]	W Charcoal Sample	I-131	$3x10^{-12}$
	Continuous[c]	W Particulate Sample	Principal Gamma Emitter[b] (I-131, others)	$1x10^{-11}$
	Continuous[c]	M Composite Particulate Sample	Gross Alpha	$1x10^{-11}$
	Continuous[c]	Q Composite Patriculate Sample	SR-89, SR-90	$1x10^{-11}$
	Continuous[c]	Noble Gas Monitor	Noble Gases Gross Beta or Gamma	$1x10^{-6}$

TABLE 4.4
RADIOACTIVE GASEOUS WASTE SAMPLING AND ANALYSIS PROGRAM
Page 2 of 2

I. Table Notations

a The LLD is defined, for purposes of these specifications, as the smallest concentration of radioactive material in a sample that will yield a net count, above system background, that will be detected with 95% probability with only 5% probability of falsely concluding that a blank observation represents a "real" signal.

For a particular measurement system, which may include radiochemical separation:

$$LLD = \frac{4.66 * s_b}{E * V * 2.22 \times 10^6 * Y * \exp^{(-\lambda \Delta t)}}$$

Where:

- LLD is the a priori lower limit of detection as defined above, as μCi per unit mass or volume,
- s_b is the standard deviation of the background counting rate or of the counting rate of a blank sample as appropriate, as counts per minute,
- E is the counting efficiency, as counts per disintegration,
- V is the sample size in units of mass or volume,
- 2.22×10^6 is the number of disintegrations per minute per microcurie,
- Y is the fractional radiochemical yield, when applicable,
- λ is the radioactive decay constant for the particular radionuclide, and
- Δt for plant effluents is the elapsed time between the midpoint of sample collection and time of counting.
- Typical values of E, V, Y, and Δt should be used in the calculation.

It should be recognized that the LLD is defined as an a priori (before the fact) limit representing the capability of a measurement system and not as an a posteriori (after the fact) limit for a particular measurement.

b The principal gamma emitters for which the LLD specification applies exclusively are the following radionuclides: Kr-87, Kr-88, Xe-133, Xe-133m, Xe-135, and Xe-138 for gaseous emissions and Mn-54, Fe-59, Co-58, Co-60, Zn-65, Mo-99, Cs-134, Cs-137, Ce-141, and Ce-144 for particulate emissions. This list does not mean that only these nuclides are to be considered. Other gamma peaks that are identifiable, together with those of the above nuclides, shall also be analyzed and reported in the Radioactive Effluent Release Report pursuant to TS 6.9.b.2.

c The ratio of the sample flow rate to the sampled flow stream flow rate shall be known (based on sampler and ventilation system flow measuring devices or periodic flow estimates) for the time period covered by each dose or dose rate calculation made in accordance with ODCM Specifications 3.4.1, 3.4.2, and 3.4.3.

APPENDIX A

TECHNICAL BASIS FOR EFFECTIVE DOSE FACTORS - LIQUID RADIOACTIVE EFFLUENTS

Technical Basis for Effective Dose Factors - Liquid Effluent Releases

To verify that the current approach to determining environmental doses using a simplified method has remained consistent since the previous analysis (performed using effluent data from 1981-1983), a similar evaluation was performed using the liquid effluent release data from 2000-2002. From the effluent data, the dose contribution of the radionuclide mixture can be obtained to provide a simplified method of determining compliance with the dose limits of ODCM Specification 3.3.2. For the radionuclide distribution of effluents from the Kewaunee Power Station, the controlling organ is either the GI-LLI or the liver. The calculated GI-LLI dose is almost exclusively dictated by the Nb-95 releases; the liver dose is mostly a function of the Cs-134 and Fe-55 releases. The radionuclides, Fe-55, Co-58, Co-60, Sr-90, and Cs-137 contribute essentially all of the calculated total body dose. The results of this evaluation are presented in Table A-1. The individual nuclide doses used in the dose comparisons of Table A-1 were calculated using the total curies released via batch and continuous releases as reported in the Annual Radioactive Effluent Release Report, weighted by the appropriate dose factors.

Tritium is not included in the limited analysis dose assessment for liquid releases, because the potential dose resulting from normal reactor releases is negligible. From 2000-2002, the maximum tritium release from the Kewaunee Nuclear Plant to Lake Michigan was 270 curies. The calculated total body dose from such a release is 1.36E-02 mrem/yr via the fish ingestion and drinking water pathways. This amounts to 0.07% of the design objective dose of 3 mrem/yr. Furthermore, the release of tritium is a function of operating time and power level and is essentially unrelated to radwaste system operation.

For purposes of simplifying the details of the dose calculational process, it is conservative to identify a controlling, dose significant radionuclide and limit the calculational process to the use of the dose conversion factor for this nuclide. Multiplication of the total release (i.e., cumulative activity for all radionuclides) by this dose conversion factor provides for a dose calculational method that is simplified while also being conservative.

While not present in the 2000-2002 liquid effluent releases, it still remains conservative to use the Cs-134 dose conversion factor (7.09E+05 mrem/hr per µCi/ml, liver) to evaluate the maximum organ dose. Only the reactor-generated radionuclide Nb-95 has a higher dose conversion factor (1.51E+06 mrem/hr per µCi/ml, GI-LLI). However, since Nb-95 releases are typically less than 5% of the total releases, it is conservative to use the Cs-134 factor. By this approach, the maximum organ dose will be routinely overestimated. For 2000, using this simplified conservative method (CW value of 2.00E+05 gpm) would overestimate the maximum organ dose as reported in the Annual Radioactive Effluent Release Report by a factor of 234; for 2001, the conservatism is a factor of 109; and for 2002, a factor of 730. This comparison is shown in Table A-2.

For the total body calculation, the Cs-134 dose factor (5.79E+05 mrem/hr per μCi/ml, total body) is again used since it is higher than the identified dominant nuclides. For 2000, using this simplified conservative dose calculational method would overestimate the total body dose by a factor of 253; for 2001, the conservatism is a factor of 105; and for 2002, a factor of 601.

For evaluating compliance with the dose limits of ODCM Specification 3.3.2 the following simplified equations may be used:

Total Body

$$D_{tb} = \frac{1.67E-02 \times VOL}{CW} \times A_{Cs-134,TB} \times \sum C_i \qquad (A.1)$$

where:

D_{tb} = dose to the total body (mrem)

$A_{Cs-134,TB}$ = 5.79E+05, total body ingestion dose conversion factor for Cs-134 (mrem/hr per μCi/ml)

VOL = volume of liquid effluent released (gal)

ΣC_i = total concentration of all radionuclides (μCi/ml)

CW = average circulating water discharge rate during release period (gal/min)

1.67E-02 = conversion factor (hr/min)

Substituting the value for the Cs-134 total body dose conversion factor, the equation simplifies to:

$$D_{tb} = \frac{9.67E+03 \times VOL}{CW} \times \sum C_i \qquad (A.2)$$

Maximum Organ

$$D_{max} = \frac{1.67E-02 \times VOL \times A_{Cs-134,L}}{CW} \times \sum C_i \qquad (A.3)$$

where:

D_{max} = maximum organ dose (mrem)

$A_{Cs-134,L}$ = 7.09E+05, liver ingestion dose conversion factor for Cs-134 (mrem/hr per μCi/ml)

Substituting the value for $A_{Cs\text{-}134,Liver}$ the equation simplifies to:

$$D_{max} = \frac{1.18E+04 \times VOL}{CW} \times \sum C_i \qquad (A.4)$$

Only the total body dose need be evaluated by this simplified method since it represents the more limiting (compared with the maximum organ dose) for demonstrating compliance with ODCM Specification 3.3.2.

Table A-1
Adult Dose Contributions
Fish and Drinking Water Pathways

	2000				2001				2002			
Radio-nuclide	**Release (Ci)**	**TB Dose Frac.**	**GI-LLI Dose Frac.**	**Liver Dose Frac.**	**Release (Ci)**	**TB Dose Frac.**	**GI-LLI Dose Frac.**	**Liver Dose Frac.**	**Release (Ci)**	**TB Dose Frac.**	**GI-LLI Dose Frac.**	**Liver Dose Frac.**
Fe-55	4.81E-02	0.03	0.02	0.10	4.85E-02	0.04	0.03	0.13	3.69E-02	0.19	0.02	0.84
Co-58	8.07E-03	0.01	0.03	*	4.09E-03	0.01	0.02	*	4.94E-03	0.05	0.02	0.02
Fe-59	2.77E-04	*	*	*	2.44E-04	*	*	*	1.65E-04	0.01	*	0.02
Co-60	4.71E-03	0.02	0.04	0.01	4.31E-03	0.02	0.05	0.01	2.07E-03	0.06	0.02	0.03
Br-82	4.94E-04	0.01	*	*	1.44E-04	*	*	*	N/D	*	*	*
Sr-90	2.25E-04	0.18	0.01	*	2.50E-04	0.25	0.01	*	9.76E-05	0.63	*	*
Nb-95	3.41E-04	*	0.89	*	2.39E-04	*	0.86	*	2.45E-04	*	0.91	*
Cs-137	3.70E-04	0.75	0.01	0.88	2.74E-04	0.68	0.01	0.85	3.04E-06	0.05	*	0.08

* Less than 0.01
N/D = not detected

Table A-2 Adult Liver and Total Body Dose Assessment Dose Via the Simplified Method Versus the Actual Calculated Dose			
	2000	**2001**	**2002**
Simplified Liver Dose (mRem)*	1.16E+00	9.87E-01	7.88E-01
Actual Liver Dose (mRem)**	4.97E-03	9.02E-03	1.08E-03
Simplified divided by Actual	**234**	**109**	**730**
Simplified Total Body Dose (mRem) *	9.53E-01	8.09E-01	6.46E-01
Actual Total Body Dose (mRem) **	3.77E-03	7.73E-03	1.07E-03
Simplified divided by Actual	**253**	**105**	**601**

* Assuming 2.00E+05 gpm circulating water flow
** From the Annual Radioactive Effluent Release Report

APPENDIX B

TECHNICAL BASIS FOR EFFECTIVE DOSE FACTORS - GASEOUS RADIOACTIVE EFFLUENTS

APPENDIX B

Technical Basis for Effective Dose Factors - Gaseous Radioactive Effluents

Overview

The evaluation of doses due to releases of radioactive material to the atmosphere can be simplified by the use of effective dose transfer factors instead of using dose factors, which are radionuclide specific. These effective factors, which can be based on typical radionuclide distributions of releases, can be applied to the total radioactivity released to approximate the dose in the environment (i.e., instead of having to perform individual radionuclide dose analyses only a single multiplication (K_{eff}, M_{eff} or N_{eff}) times the total quantity of radioactive material released would be needed). This approach provides a reasonable estimate of the actual dose while eliminating the need for a detailed calculational technique.

Determination of Effective Dose Factors

Effective dose transfer factors are calculated by the following equations:

$$K_{eff} = \sum (K_i \times f_i) \qquad \text{(B.1)}$$

where:

K_{eff} = the effective total body dose factor due to gamma emissions from all noble gases released

K_i = the total body dose factor due to gamma emissions from each noble gas radionuclide "i" released

f_i = the fractional abundance of noble gas radionuclide "i" relative to the total noble gas activity

$$(L+1.1M)_{eff} = \sum [(L_i + 1.1M_i) \times f_i] \qquad \text{(B.2)}$$

where:

$(L + 1.1\ M)_{eff}$ = the effective skin dose factor due to beta and gamma emissions from all noble gases released

$(L_i + 1.1\ M_i)$ = the skin dose factor due to beta and gamma emissions from each noble gas radionuclide "i" released

$$M_{eff} = \sum (M_i \times f_i) \qquad \text{(B.3)}$$

where:

M_{eff} = the effective air dose factor due to gamma emissions from all noble gases released

M_i = the air dose factor due to gamma emissions from each noble gas radionuclide "i" released

$$N_{eff} = \sum (N_i \times f_i) \quad (B.4)$$

where:

N_{eff} = the effective air dose factor due to beta emissions from all noble gases released

N_i = the air dose factor due to beta emissions from each noble gas radionuclide "i" released

Normally, it would be expected that past radioactive effluent data would be used for the determination of the effective dose factors. However, the noble gas releases from Kewaunee have been maintained to such negligible quantities that the inherent variability in the data makes any meaningful evaluations difficult. For the years of 2000, 2001 and 2002, the total noble gas releases have been limited to 2.54E-04 Ci for 2000, 1.37E-01 Ci for 2001, and 1.91E-02 Ci for 2002. Therefore, in order to provide a reasonable basis for the derivation of the effective noble gas dose factors, the primary coolant source term from ANSI N237-1976/ANS-18.1, "Source Term Specifications," has been used as representing a typical distribution. The effective dose factors as derived are presented in Table B-1.

Application

To provide an additional degree of conservatism, a factor of 0.50 is introduced into the dose calculational process when the effective dose transfer factor is used. This conservatism provides additional assurance that the evaluation of doses by the use of a single effective factor will not significantly underestimate any actual doses in the environment.

For evaluating compliance with the dose limits of ODCM Specification 3.4.2, the following simplified equations may be used:

$$D_\gamma = \frac{3.17E-08}{0.50} \times \chi/Q \times M_{eff} \times \sum Q_i \quad (B.5)$$

$$D_\beta = \frac{3.17E-08}{0.50} \times \chi/Q \times N_{eff} \times \sum Q_i \quad (B.6)$$

where:

$D\gamma$ = air dose due to gamma emissions for the cumulative release of all noble gases (mrad)

D_β = air dose due to beta emissions for the cumulative release of all noble gases (mrad)

χ/Q = atmospheric dispersion to the controlling site boundary (sec/m^3)

M_{eff} = 5.3E+02, effective gamma-air dose factor (mrad/yr per μCi/m³)

N_{eff} = 1.1E+03, effective beta-air dose factor (mrad/yr per μCi/m³)

ΣQ_i = cumulative release for all noble gas radionuclides (μCi)

3.17E-08 = conversion factor (yr/sec)

0.50 = conservatism factor to account for the variability in the effluent data

Combining the constants, the dose calculational equations simplify to:

$$D_\gamma = 3.5E-05 \times \chi/Q \times \sum Q_i \quad \text{(B.7)}$$

and

$$D_\beta = 7.0E-05 \times \chi/Q \times \sum Q_i \quad \text{(B.8)}$$

The effective dose factors are used on a very limited basis for the purpose of facilitating the timely assessment of radioactive effluent releases, particularly during periods of computer malfunction where a detailed dose assessment may be unavailable. Dose assessments using the detailed, radionuclide dependent calculation are performed at least annually for preparation of the Radioactive Effluent Reports. Comparisons can be performed at this time to assure that the use of the effective dose factors does not substantially underestimate actual doses.

Table B-1 Effective Dose Factors - Noble Gases			
Radionuclide	f_i	Total Body Effective Dose Factor K_{eff} (mrem/yr per $\mu Ci/m^3$)	Skin Effective Dose Factor $(L+1.1\ M)_{eff}$ (mrem/yr per $\mu Ci/m^3$)
Noble Gases - Total Body and Skin			
Kr-85	0.01	--	1.4E+01
Kr-88	0.01	1.5E+02	1.9E+02
Xe-133m	0.01	2.5E+00	1.4E+01
Xe-133	0.9	3.0E+02	6.6E+02
Xe-135	0.02	3.6E+01	7.9E+01
TOTAL		4.8E+02	9.6E+02
Noble Gases - Air			
Radionuclide	f_i	Gamma Air Effective Dose Factor M_{eff} (mrad/yr per $\mu Ci/m^3$)	Beta Air Effective Dose Factor N_{eff} (mrad/yr per $\mu Ci/m^3$)
Kr-85	0.01	--	2.0E+01
Kr-88	0.01	1.5E+02	2.9E+01
Xe-133m	0.01	3.3E+00	1.5E+01
Xe-133	0.95	3.4E+02	1.0E+03
Xe-135	0.02	3.8E+01	4.9E+01
TOTAL		5.3E+02	1.1E+03

APPENDIX C

EVALUATION OF CONSERVATIVE, DEFAULT EFFECTIVE EC VALUE FOR LIQUID EFFLUENTS

Appendix C

Evaluation of Conservative, Default Effective EC Value for Liquid Effluents

In accordance with the requirements of ODCM Specification 3.1 the radioactive liquid effluent monitors shall be operable with alarm setpoints established to ensure that the concentration of radioactive material at the discharge point does not exceed 10 times the value of 10 CFR 20, Appendix B, Table 2, Column 2 for all radionuclides other than noble gases and a value of $2X10^{-4}$ μCi/ml for noble gases. The determination of allowable radionuclide concentration and corresponding alarm setpoint is a function of the individual radionuclide distribution and corresponding EC values.

In order to limit the need for routinely having to reestablish the alarm setpoints as a function of changing radionuclide distributions, a default alarm setpoint can be established. This default setpoint can be conservatively based on an evaluation of the radionuclide distribution of the liquid effluents from Kewaunee and the EC_e value for this distribution.

The effective EC value for a radionuclide distribution can be calculated by the equation:

$$EC_e = \frac{\sum C_i}{\sum \frac{C_i}{EC_i}} \qquad (C.1)$$

where:

EC_e = an effective EC value for a mixture of radionuclide (μCi/ml)

C_i = concentration of radionuclide "i" in the mixture

EC_i = the 10 CFR 20, Appendix B, Table 2, Column 2 EC value for radionuclide "i" (μCi/ml)

Based on the above equation and the radionuclide distribution in the effluents for past years from Kewaunee, an EC_e value can be determined. Effluent release data from 2000-2002 was used to generate the results presented in Table C-1. The most limiting effective EC (for gamma emitting radionuclides) was for the calendar year 2001, with a calculated value of 5.98E-06 μCi/ml. For conservatism in establishing the alarm setpoints, a default effective EC value of 1.0E-06 μCi/ml was selected. The overall conservatism of this value is reaffirmed for future releases considering that 1.0E-06 μCi/ml is as or more restrictive than the individual EC values for the principal fission and activation products of Co-58, Co-60 and Cs-137. Overall, use of this effective EC value provides a factor of six (6) conservatism based on the 2000-2002 radionuclide distribution for gamma emitters.

Being a non-gamma emitter, tritium is not detected by the effluent monitor. While tritium accounts for nearly all of the activity, it is not a significant contributor when determining the alarm setpoint for release rate evaluations. Examining releases over the years 2000-2002, the average, diluted H-3 contribution to its limiting concentration (i.e., fraction of concentration limit - 10 x EC) in liquid effluents was 0.004%. This contribution is not expected to change significantly over time, since the concentration of H-3 in effluents can be expected to remain fairly consistent in effluent releases regardless of fuel conditions, activation product releases, and waste processing.

Based on relative abundances, other non-gamma emitting radionuclides (Fe-55 and Sr-89/90) contributed up to 30% of the concentration limit (30% for CY 2001). It is reasonable to assume that the abundances of these non-gammas will remain the same relative to other fission and/or activation products under varying conditions. Therefore, under conditions of elevated effluent radionuclide levels, the gamma-emitting radionuclides can be expected to be the main contributors to limiting conditions on liquid effluent concentrations, as established in Technical Specification 6.16.b.1.B and ODCM Specifications 3.3.1. Note that including the non-gammas (excluding tritium) in the evaluation results in a higher effective EC value.

Therefore, under conditions of elevated effluent levels, the main contributor to the limiting conditions of the liquid effluent concentration would be the gamma-emitting radionuclides. The factor of six (6) conservatism in the effective EC determination (discussed above) provides adequate consideration for the contribution from non-gamma emitting radionuclides, and provides a conservative basis for establishing an alarm setpoint consistent with the requirements of Technical Specification 6.16.b.1.B and ODCM Specifications 3.3.1.

Table C-1
Calculation of Effective EC (EC_e)

Nuclide	EC (μCi/ml)	2000			2001			2002		
		Release (C_i)	C_i/EC_i	Frac.	Release (C_i)	C_i/EC_i	Frac.	Release (C_i)	C_i/EC_i	Frac.
Na-24	5.00E-05	1.03E-03	2.06E+01	4.89E-03	2.18E-04	4.35E+00	1.27E-03	0.00E+00	0.00E+00	0.00E+00
Cr-51	5.00E-04	1.44E-03	2.89E+00	6.85E-04	8.26E-04	1.65E+00	4.83E-04	0.00E+00	0.00E+00	0.00E+00
Mn-54	3.00E-05	1.49E-04	4.97E+00	1.18E-03	3.30E-04	1.10E+01	3.22E-03	6.41E-05	2.14E+00	9.83E-04
Fe-55	1.00E-04	4.81E-02	4.81E+02	1.14E-01	4.85E-02	4.85E+02	1.42E-01	3.69E-02	3.69E+02	1.70E-01
Co-57	6.00E-05	0.00E+00	0.00E+00	0.00E+00	2.42E-05	4.03E-01	1.18E-04	0.00E+00	0.00E+00	0.00E+00
Co-58	2.00E-05	8.07E-03	4.04E+02	9.59E-02	4.09E-03	2.05E+02	5.99E-02	4.94E-03	2.47E+02	1.14E-01
Fe-59	1.00E-05	2.77E-04	2.77E+01	6.57E-03	2.44E-04	2.44E+01	7.14E-03	1.65E-04	1.65E+01	7.61E-03
Co-60	3.00E-06	4.71E-03	1.57E+03	3.73E-01	4.31E-03	1.44E+03	4.21E-01	2.07E-03	6.89E+02	3.17E-01
Br-82	4.00E-05	4.94E-04	1.23E+01	2.93E-03	1.44E-04	3.59E+00	1.05E-03	0.00E+00	0.00E+00	0.00E+00
Sr-89	8.00E-06	3.42E-04	4.27E+01	1.01E-02	2.59E-04	3.24E+01	9.48E-03	5.98E-04	7.48E+01	3.44E-02
Sr-90	5.00E-07	2.25E-04	4.50E+02	1.07E-01	2.50E-04	5.00E+02	1.46E-01	9.76E-05	1.95E+02	8.98E-02
Zr-95	2.00E-05	1.16E-04	5.79E+00	1.38E-03	7.18E-05	3.59E+00	1.05E-03	5.24E-05	2.62E+00	1.20E-03
Nb-95	3.00E-05	3.41E-04	1.14E+01	2.70E-03	2.39E-04	7.95E+00	2.33E-03	2.45E-04	8.17E+00	3.76E-03
Ag-110m	6.00E-06	2.85E-03	4.74E+02	1.13E-01	1.63E-03	2.72E+02	7.97E-02	2.86E-03	4.76E+02	2.19E-01
Sn-113	3.00E-05	9.65E-05	3.22E+00	7.64E-04	5.08E-05	1.69E+00	4.95E-04	7.06E-05	2.35E+00	1.08E-03
Sb-124	7.00E-06	5.61E-04	8.01E+01	1.90E-02	1.81E-04	2.59E+01	7.59E-03	4.34E-05	6.20E+00	2.85E-03
Sb-125	3.00E-05	4.86E-03	1.62E+02	3.85E-02	1.02E-03	3.41E+01	9.99E-03	2.46E-03	8.18E+01	3.76E-02
I-132	1.00E-04	0.00E+00	0.00E+00	0.00E+00	7.75E-08	7.75E-04	2.27E-07	0.00E+00	0.00E+00	0.00E+00
I-133	7.00E-06	6.16E-04	8.80E+01	2.09E-02	6.32E-04	9.03E+01	2.65E-02	0.00E+00	0.00E+00	0.00E+00
I-135	3.00E-05	0.00E+00	0.00E+00	0.00E+00	4.61E-05	1.54E+00	4.50E-04	0.00E+00	0.00E+00	0.00E+00
Cs-137	1.00E-06	3.70E-04	3.70E+02	8.78E-02	2.74E-04	2.74E+02	8.02E-02	3.04E-06	3.04E+00	1.40E-03
	Total	7.46E-02	4.21E+03	1.00E+00	6.34E-02	3.42E+03	1.00E+00	5.06E-02	2.17E+03	1.00E+00
Non-Gamma Fraction				0.23			0.30			0.29
Gamma Fraction				0.77			0.70			0.71
EC_e (μCi/ml, total)		1.77E-05			1.86E-05			2.33E-05		
EC_e (μCi/ml, gammas)		8.03E-06			5.98E-06			8.44E-06		

APPENDIX D

Site Maps

Appendix D

Site Maps

Plant drawing A-408, "Radiological Survey Site Map" depicts the site area by illustrating the site boundary and the restricted areas. Plant drawing A-449, "Plan of Plant Area, Fence, Lighting, and CCTV Support Structure" shows the layout of the site buildings. Members of the public are restricted from access to all areas of the Owner Controlled Area (OCA).

Figure D-1 presents the locations and elevations of radioactive effluent release points at the plant. The plant drawings referenced above are not included as part of the ODCM but can be found in the plant drawing system.

Figure D-1

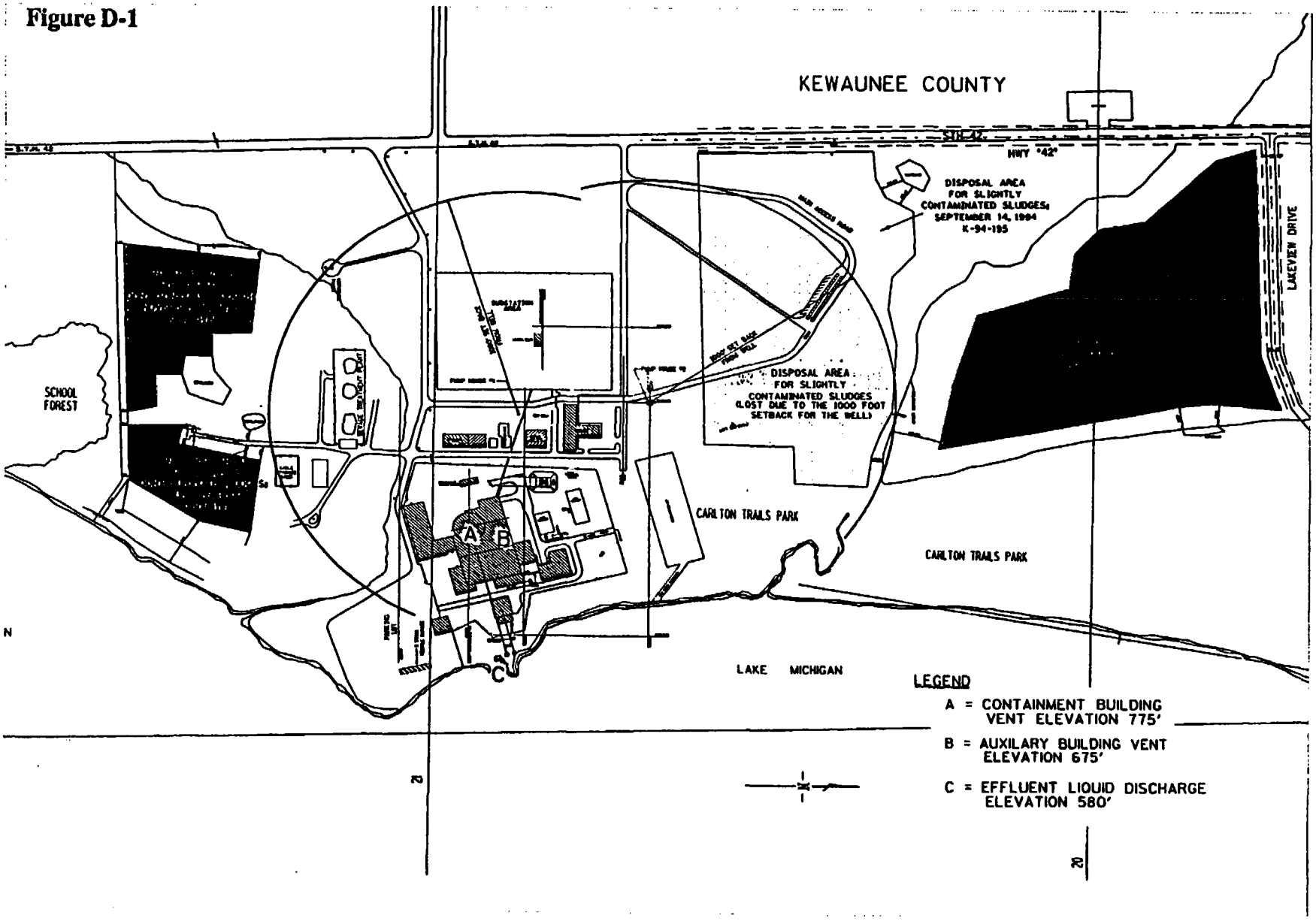
KEWAUNEE COUNTY
STH 42
HWY '42'
DISPOSAL AREA FOR SLIGHTLY CONTAMINATED SLUDGES, SEPTEMBER 14, 1994 K-94-195
LAKEVIEW DRIVE
SCHOOL FOREST
DISPOSAL AREA FOR SLIGHTLY CONTAMINATED SLUDGES (LOST DUE TO THE 1000 FOOT SETBACK FOR THE WELL)
CARLTON TRAILS PARK
CARLTON TRAILS PARK
A
B
C
N
LAKE MICHIGAN
LEGEND
A = CONTAINMENT BUILDING VENT ELEVATION 775'
B = AUXILARY BUILDING VENT ELEVATION 675'
C = EFFLUENT LIQUID DISCHARGE ELEVATION 580'

APPENDIX E

On-site Disposal of Low-Level Radioactively Contaminated Waste Streams

Appendix E consists of hard copies of the following reference documents:

DESCRIPTION	DATE	DOCKET NUMBER
Operating License DPR-43 Kewaunee Nuclear Power Plant Disposal of Low Level Radioactive Material	October 17, 1991	NRC-91-148 50-305
Proposed Disposal of Low Level Radioactive Waste Sludge Onsite at the Kewaunee Nuclear Power Plant (TAC No. M75047)	June 17, 1992	K92-119 50-305
Safety Evaluation For An Amendment To An Approved 10 CFR 20.302 Application For The Kewaunee Nuclear Plant (TAC No. M89719)	September 14, 1994	K-94-195 50-305
Alternate Disposal Of Contaminated Sewage Treatment Plant Sludge In Accordance With 10 CFR 20.2002 (TAC No. M93844)	November 13, 1995	K-95-172 50-305
Onsite Disposal Of Contaminated Sludge Pursuant To 10 CFR 20.2002 (TAC No. M97411)	April 9, 1997	K-97-64 50-305

[1] Adapted from N

WPSC (414) 433-1598
TELECOPIER (414) 433-5544

NRC 91-148

EASYLINK 62891993

WISCONSIN PUBLIC SERVICE CORPORATION
600 North Adams • P.O. Box 19002 • Green Bay, WI 54307-9002

bcc - K M Barlow, MGE
N E Boys, WPL
Larry Nielsen, ANFC
D R Berg KNP
D A Bollom G6
R E Draheim KNP
K H Evers D2
M L Marchi KNP
D L Masarik KNP
J N Morrison D2
J R Mueller D2
D S Nalepka KNP
L A Nuthals D2 (NSRAC)
R P Pulec D2
J S Richmond D2
D J Ristau D2
D J Ropson KNP
DT Brown KNP
A J Ruege D2
C A Schrock KNP
C S Smoker KNP
C R Steinhardt D2
J J Wallace KNP
K H Weinhauer KNP
S F Wozniak D2
QA Vault KNP
TJ Webb KNP

October 17, 1991

File

U. S. Nuclear Regulatory Commission
ATTN: Document Control Desk
Washington, D.C. 20555

Gentlemen:

Docket 50-305
Operating License DPR-43
Kewaunee Nuclear Power Plant
Disposal of Low Level Radioactive Material

References: 1) Letter from K.H.Evers to Document Control Desk dated September 12, 1989

2) Letter from M.J.Davis to K.H.Evers dated February 13, 1990

3) Letter from L.Sridharon (WDNR) to M.Vandenbusch dated June 13, 1991

In reference 1, pursuant to the regulation of 10 CFR 20.302, Wisconsin Public Service Corporation (WPSC) requested authorization for the alternative disposal of very-low-level radioactive materials from the Kewaunee Nuclear Power Plant. In reference 2, the US NRC identified additional questions that needed to be addressed in order to complete their review. Attachment 1 provides our response to the questions.

WPSC requested the State of Wisconsin Department of Natural Resources (WDNR) to review the disposal options for the service water pretreatment lagoon sludges. In reference 3, the WDNR completed a review of the most appropriate on site disposal methods for the slightly contaminated service water pretreatment lagoon sludges. The two proposed methods that the WDNR evaluated included in-situ capping of the sludge in the wastewater treatment lagoon and on site landspreading. In Attachment 1, Appendix A, WPSC evaluated the on site landspreading

application which is our preferred disposal method. WPSC does not intend to utilize the in-situ capping of the sludge in the lagoon at this time. However, in the letter the WDNR agreed that either disposal method was acceptable provided:

- if the material is to be left in the lagoon, it would be capped in accordance with Wisconsin State statutes.

- if the on site landspreading option is utilized, the material would be spread by either disking into the soil or by spiking into the ground.

WPSC will abide by the WDNR landspreading requirements which include locational and performance standards. Should there be any additional questions please feel free to contact a member of my staff.

Sincerely,

C. A. Schrock

C. A. Schrock
Manager - Nuclear Engineering

DJM/jms

Attach.

cc - US NRC - Region III
Mr. Patrick Castleman, US NRC

LIC\DJM\N492

ATTACHMENT 1

To

Letter from K. H. Evers (WPSC) to Document Control Desk (NRC)

Dated

October 17, 1991

References 1) Letter from K. H. Evers to Document Control Desk dated September 1, 1989.

NRC Question #1

On page 4 of your submittal, the average input to the Sewage Treatment System is approximately 11,000 gallons per day. In the Final Environmental Statement, this system is to be operated below its design capacity of 9,000 gallons per day. Discuss this deviation from the design capacity, and provide information to justify the higher output for this system.

WPSC Response

The original Sewage Treatment System installed at the Kewaunee Nuclear Power Plant (KNPP) was replaced in 1986 with a higher capacity system. The original system was designed for an onsite work force of around 150 people. It was a limited capacity aerobic treatment system which included the onsite lagoon for additional retention. Because of this limited capacity and more stringent conditions on system effluent to Lake Michigan, an aerobic digester system was installed, which has a higher capacity, and uses current technology.

The estimated input volume to the Sewage Treatment System used in the September 12, 1989 application was 11,000 gallons per day. This value was based on past operating data. The increase in influent from the original design basis included in the Final Environmental Statement is due mainly to an increase in the number of individuals and facilities (e.g., training and simulator building) located onsite. Design changes to the system were required to accommodate these new facilities.

The current volumes of sewage sludge were used as the basis for the potential dose analysis and corresponding radionuclide concentration limits. This increase has no significant effect on the dose modeling. (Refer to the response to NRC Question #2, below.)

NRC Question #2

Provide information regarding how the disposal plan assures that the annual dose to any exposed individual will be kept below 1 mrem per year.

WPSC Response

The dose pathway modeling used for determining the radioactive material concentration limits was based on NRC modeling. The computer code IMPACTS-BRC was used as the basis for calculating the potential doses from the alternative disposal methods. This modeling includes reasonable conservative exposure pathway scenarios for the various disposal methods.

Administrative controls will be established to ensure that the actual disposal of any slightly contaminated materials from KNPP are within the bounds of the evaluation. Samples from each of the waste streams will be collected and analyzed by gamma spectroscopy prior to release for disposal. A system lower limit of detection (LLD) of 5E-07 μCi/ml for the principal gamma emitting radionuclides will be required. This LLD ensures the identification of any contaminated materials at a fraction of the allowable concentration limits for the alternative disposal.

The results of these analyses will be used to ensure that any detectable levels of radioactive material are within the limits for alternative disposal. Any materials with levels of radioactive material above the concentration limits

(and of plant origin) will be treated as a radioactive waste and appropriately controlled.

Records will be maintained to ensure that the cumulative disposal of any contaminated materials are maintained within the bounds of the evaluation. In addition to a comparison of the individual radionuclide concentration limits, a record of the total amount of radioactive material disposed of will be maintained. Cumulative totals will be maintained to ensure that the total activity does not exceed the quantity assumed in the derivation of the limits.

In developing the concentration limits presented in Table 1 of reference 1, it was assumed the total annual design basis volume of 27,000 ft^3 would be contaminated at the derived limit. The dose commitment from each radionuclide was individually evaluated as if it were the only radioactive material present. To determine if a mixture of radionuclides meets the limit, the sum-of-the-fractions rule should be applied (i.e., the sum of each radionuclide's concentration divided by its limiting concentration must be less than one).

The concentration limits of Table 1 of reference 1 also have an implied total activity limit. This limit is determined by multiplying the individual radionuclide concentration limit by the total estimated waste volume of 27,000 ft^3. These total activity limits are presented in Table A of this response, for each radionuclide individually. For a mixture of radionuclides, a total annual activity limit may be determined by normalizing the concentrations so that the sum-of-the-fractions for the mixture equals one (1). These resultant adjusted concentrations may be multiplied by the 27,000 ft^3 waste volume to determine the corresponding total activity limit of the mixture.

A Disposal Log will be maintained on a calendar year basis for all disposals of any very-low-level radioactive materials. The log will contain as a minimum the following information:

- Disposal location
- Description of waste
- Shipment/disposal date
- Waste volume
- Radionuclide concentrations (gamma emitters)
- Year-to-date radionuclide activity
- Year-to-date waste volume

In addition to the above Disposal Log, a record file will be kept for each individual disposal. This file will contain, as a minimum, the following information:

- Waste identification
- Sample gamma spectroscopy results
- Identified radionuclide concentrations and total activity

NRC Question #3

Revise Appendix B, Section A of your submittal, "Radiation Exposure During Transport," by adding the cumulative dose to the exposed population per reactor year for both the transportation worker and the general public (onlookers along route).

WPSC Response

The potential exposure to the general public (onlookers along route) is modeled by the IMPACTS-BRC code. As addressed in NUREG/CR-3585, this modeling is based on an integration of the source strength, an assumed

population density along route and vehicular speed. For a conservative evaluation of the potential exposure to the general public from the transport of the KNPP waste, a population density of 610 persons/mi^2 was assumed. This value is conservative for the KNPP site area where the average population density is less than 53 persons/mi^2. A transport distance of 45 miles was assumed. The IMPACTS-BRC modeling assumes five (5) tons of material are transported per shipment. For the assumed KNPP waste volume, this shipment weight translates into a total of 167 shipments per year. With a vehicular speed of 20 miles per hour, the resultant total population exposure time is 375 person-hours per year. At the concentration limits established for the alternative disposal, the potential onlooker doses during transport will be less than 0.01 person-rem per year. For the modeling of the exposure to the transport worker, the IMPACTS-BRC model assumes two drivers per vehicle. As presented in the September 12, 1989 submittal, the maximum dose to the driver is less than 1 mrem per year (<0.001 rem/yr). Therefore, the total collective dose to the transport workers will be twice the individual dose, i.e., less than 0.002 person-rem. Including the population dose of <0.01 person-rem per year, the total collective dose to both the transport workers and the population is less than 0.02 person-rem (0.002 person-rem + 0.01 person-rem < 0.02 person-rem).

For the disposal of the existing 15,000 ft^3 of contaminated sludges, the population dose due to the transportation of the waste is calculated to be 0.0002 person-rem. The estimated collective exposure to the transport worker is 0.00007 person-rem. The total collective dose due to transport of the waste is 0.00027 person-rem.

Additional Potential Disposal Method

The Wisconsin Department of Natural Resources has requested Wisconsin Public Service to examine the feasibility of land application of the lagoon sludges in lieu of disposal in the Kewaunee County Landfill. Land application is also an option for the disposal of the sewage sludges. Therefore, WPS requests that the option for onsite disposal at the KNPP site by land application be included in the alternative disposal methods which was determined to be acceptable in our September 12, 1989 submittal.

The potential pathways of exposure as evaluated in the September 12, 1989 submittal conservatively bound any additional pathways of exposure that would result from onsite land spreading of the waste. Attachment A to this response provides an overview of the land spreading disposal method. Also, the pathways of exposure applicable to the onsite land application are evaluated; and a comparison to the controlling pathways and radionuclide concentrations as presented in the September 12, 1989 submittal are discussed. From a modeling standpoint, the two exposure scenarios , "Radiation Exposure During Transport" and "Radiation Exposure to Landfill Operator," appropriately characterize any potential exposure to workers involved with the land spreading of the waste. The other post-disposal exposure scenarios, "Intruder Scenario", "Intruder Well", and "Exposed Waste Scenario," as described in NUREG/CR-3585 (and as discussed in Appendix C of the submittal) reasonably bound any potential exposures from either ground waste migration or post-release from the Kewaunee site. In no case is there a higher potential for exposure from land application than the pathways and potential exposures that were used for the derivation of the limits for alternative disposal. Therefore, no revisions are needed to the radionuclide concentration limits proposed in the September 12, 1989 submittal to include the option for disposal by onsite land spreading of the waste.

Table A

Radionuclide Quantity Limits for Alternative Disposal

Nuclide	Limiting Concentration (μCi/ml)	Limiting Annual Quantity (Ci)
H-3	9.65E-04	0.7382
C-14	4.55E-05	0.0348
Cr-51	3.13E-04	0.2394
Mn-54	1.14E-05	0.0087
Fe-55	1.00E-02	7.6500
Fe-59	7.90E-06	0.0060
Co-58	1.16E-05	0.0089
Co-60	3.74E-06	0.0029
Ni-63	1.00E-02	7.6500
Sr-90	3.45E-03	2.6393
Zr-95	6.28E-06	0.0048
Nb-95	1.23E-05	0.0094
Mo-99	6.73E-05	0.0515
Tc-99	2.70E-04	0.2066
I-129	2.50E-06	0.0019
I-131	2.68E-05	0.0205
Cs-134	6.16E 06	0.0047
Cs-137	1.71E-05	0.0131
Ba-140	5.52E-05	0.0422
La-140	4.17E-06	0.0032
Transuranics		
.TRU (T½ > 5 yrs)	8.91E-05	0.0682
Pu-241	2.85E-03	2.1803
Cm-242	1.00E-02	7.6500

Assumes annual quantity of KNPP wastes is 27,000 ft^3 or 7.65E8 mls.

Appendix A

Evaluation of Onsite Land Application for Alternative Disposal of Very-Low-Level Contaminated Materials

Overview

Land spreading of lagoon sludges onsite at the Kewaunee Nuclear Power Plant has been recommended by personnel from the Wisconsin Department of Natural Resources (DNR) as a desirable alternative to the use of the Kewaunee County Landfill for disposal. This method of disposal is also a recommended practice for disposing of sewage treatment facility sludges. Therefore, WPS requests that this disposal method be included in the options available for the alternative disposal of very-low-level radioactively contaminated materials from KNPP.

Description of Disposal Method

The disposal of KNPP sludges will be performed by beneficial land application to a dedicated disposal area located onsite at the Kewaunee Nuclear Power Plant. Typical methods of land spreading will be employed. KNPP sludges will be loaded onto appropriate vehicles (e.g., tanker truck, sludge spreader, etc.) and applied to the dedicated disposal area. The dedicated disposal area will be periodically plowed to a depth of 6 inches.

Onsite disposal of water treatment and sewage sludges are allowed by EPA and State of Wisconsin Department of Natural Resources with the criteria and limits for land spreading being specified by the potential use of the land. The two land use criteria are 1) Agricultural land that covers any lands upon which food crops are grown or animals are grazed for human consumption, and 2) Non-Agricultural land that covers lands which do not represent ingestion pathways to man. To be conservative, the Agricultural Land Application limits of sludge contaminants will be applied to the KNPP wastes even though the less restrictive Non-Agricultural Land Application sludge contamination limits are allowed. Therefore, no more than 50 metric tons of sludge per hectare will be applied to the dedicated disposal site. This limit will ensure that any land application will not exceed the bounds of the dose analysis as

performed previously. In addition, other limitations as applied to land application by the State of Wisconsin Department of Natural Resources will be followed (e.g., control of runoff/erosion, proximity to wells/residences/surface water, etc.).

Applicable Pathways of Exposure

The pathways of exposure applicable for land spreading are not appreciably different from the pathways evaluated for the disposal methods at the Kewaunee County Landfill or the Green Bay Metropolitan Sewerage District facilities. The major exposure pathways are discussed below:

Direct Exposure to Workers

Any potential exposures to workers involved in the removal, transport and land spreading of the sludges are reasonably bound by the evaluation of the exposure to the transport worker in the September 12, 1989 submittal. The transport worker has been assumed to be exposed for 460 hours per year at one (1) meter from unshielded waste. For the land spreading of these wastes, it is estimated that the total exposure time for the removal and disposal of the lagoon sludges will require no longer than a three week period per year (i.e., 120 hours).

The potential exposure to a worker onsite after land spreading, has been estimated at no more that 100 hours per year. Such an individual would be involved in land maintenance activities, such as plowing and mowing. As modeled in the September 12, 1989 submittal, an exposure of 2000 hours per year to the landfill operator has been assumed. For this exposure, the KNPP materials are mixed with other landfill waste: a 1:13 mixing of KNPP materials to other waste is assumed. This mixing is not significantly different from the type of mixing that will occur in the field with the sludges being

plowed into the soil to a depth of six (6) inches. With a land spreading of 50 metric tons per hectare per year, a mixing ratio of 1:30 will be achieved. Therefore, the resultant dose to the exposed worker would be less than the 1 mrem per year dose to the transport worker as evaluated in the September 12, 1989 submittal.

Post Disposal Exposure - Intruder Scenario

The IMPACTS-BRC model, as applied to the disposal of the KNPP waste, assumes a loss of institutional controls 10 years after closure of the site (See Appendix B of the September 12, 1989 submittal). An individual is assumed to reside in a house built on the disposal area. This individual receives a direct exposure (from the uncovered waste), an inhalation exposure (from resuspension), and an ingestion exposure (from growing ½ of his food crops). For modeling purposes, it is assumed that the waste is mixed at a ratio of 1:13 with other soils during the resident's construction process.

The onsite land application of KNPP waste will be limited by the Agricultural Land Application sludge concentrations even though the less restrictive Non-Agricultural Land Application sludge concentrations are applicable since a "dedicated land disposal" site will be used (i.e., no crops will be grown on the disposal site). Therefore, provided the KNPP waste does not exceed the Non-Agricultural maximum sludge concentrations for heavy metal or organic chemicals, unlimited application of waste to the dedicated land disposal site is allowed. However, to be conservative, the land application of KNPP wastes will be limited to 5 metric tons per hectare per year. The intruder scenario as evaluated in the September 12, 1989 submittal conservatively bounds this exposure pathway for the on-site land spreading.

Post Disposal - Intruder Well

The intruder well pathway for onsite land disposal is essentially the same as the intruder well pathway as evaluated by the IMPACTS-BRC model. It is conservatively assumed that the well is located at the edge of the disposal site. As modeled, locating the well at the disposal site edge in "downstream flow" direction maximizes the calculated hypothetical dose. (Additional discussion of this modeling is presented in NUREG/CR-3585, Volume 2).

The potential dose for the intruder well scenario for the land spreading disposal would be less than 0.001 mrem per year. The modeling as presented in the September 12, 1989 submittal reasonably bounds any hypothetical well water exposure pathway.

In summary, the modeling of the exposure scenarios, as presented in the September 12, 1989 submittal, conservatively bounds the hypothetically exposures for the on-site land spreading. In no case is it likely that any individual, either on-site or off-site, will receive a dose in excess of 1 mrem per year from the disposal of the slightly contaminated materials.

K 92-114
Rec'd
6-22-92

UNITED STATES
NUCLEAR REGULATORY COMMISSION
WASHINGTON, D C 20555

June 17, 1992

Docket No. 50-305

Mr. C. A. Schrock
Manager - Nuclear Engineering
Wisconsin Public Service
Corporation
P. O. Box 19002
Green Bay, Wisconsin 54037-9002

Dear Mr. Schrock:

SUBJECT: PROPOSED DISPOSAL OF LOW LEVEL RADIOACTIVE WASTE SLUDGE ONSITE AT THE KEWAUNEE NUCLEAR POWER PLANT (TAC NO. M75047)

By letters dated September 12, 1989, and October 17, 1991, you submitted a request pursuant to 10 CFR 20.302 for the disposal of waste sludge onsite at the Kewaunee Nuclear Power Plant. We have completed our review of the request and find your procedures, including documented commitments, to be acceptable.

This approval is granted provided that the enclosed safety evaluation is permanently incorporated into your Offsite Dose Calculation Manual (ODCM) as an Appendix, and that future modifications of these commitments are reported to the NRC.

Issuance of this safety evaluation completes all effort on TAC No. M75047.

Sincerely,

Allen G. Hansen, Project Manager
Project Directorate III-3
Division of Reactor Projects III/IV/V
Office of Nuclear Reactor Regulation

Enclosure:
As stated

cc w/enclosure:
See next page

NRC LETTER DISTRIBUTION

T A Hanson (MG&E)
J D Loock (WPL)
Larry Nielsen (ANFC)
J L Belant (NSRAC)
D A Bollom G6
K H Evers KNP
J P Giesler D2
M L Marchi KNP
D L Masarik KNP
R P Pulec D2 (2)
D J Ristau D2
A J Ruege D2
C A Schrock D2
C R Steinhardt D2
T J Webb KNP
S F Wozniak D2
QA Vault KNP

cc:

David Baker, Esquire
Foley and Lardner
P.O. Box 2193
Orlando, Florida 32802

Glen Kunesh, Chairman
Town of Carlton
Route 1
Kewaunee, Wisconsin 54216

Mr. Harold Reckelberg, Chairman
Kewaunee County Board
Kewaunee County Courthouse
Kewaunee, Wisconsin 54216

Chairman
Public Service Commission of Wisconsin
Hill Farms State Office Building
Madison, Wisconsin 53702

Attorney General
114 East, State Capitol
Madison, Wisconsin 53702

U.S. Nuclear Regulatory Commission
Resident Inspectors Office
Route #1, Box 999
Kewaunee, Wisconsin 54216

Regional Administrator - Region III
U.S. Nuclear Regulatory Commission
799 Roosevelt Road
Glen Ellyn, Illinois 60137

Mr. Robert S. Cullen
Chief Engineer
Wisconsin Public Service Commission
P.O. Box 7854
Madison, Wisconsin 53707

UNITED STATES
NUCLEAR REGULATORY COMMISSION
WASHINGTON, D.C. 20555

SAFETY EVALUATION BY THE OFFICE OF NUCLEAR REACTOR REGULATION

RELATING TO ONSITE DISPOSAL OF LOW-LEVEL RADIOACTIVELY

CONTAMINATED WASTE SLUDGE

AT THE KEWAUNEE NUCLEAR POWER PLANT

WISCONSIN PUBLIC SERVICE CORPORATION
WISCONSIN POWER AND LIGHT COMPANY
MADISON GAS AND ELECTRIC COMPANY

DOCKET NO. 50-305

1.0 INTRODUCTION

In reference 1, Wisconsin Public Service Corporation (WPSC) requested approval pursuant to Section 20.302 of Title 10 of the Code of Federal Regulations (CFR) for the disposal of licensed material not previously considered in the Kewaunee Final Environmental Statement (FES) dated December 1972. Additional related material from the licensee, from the State of Wisconsin, and from the staff are contained in references 2 through 5.

The WPSC request contains a detailed description of the licensed material (i.e., contaminated sludge) subject to this 10 CFR 20.302 request, based on radioactivity absorbed from liquid discharges of licensed material. The 15,000 cubic feet of contaminated sludge identified in the request contains a total radionuclide inventory of 0.17 mCi of Cesium-137 and Cobalt-60.

In its submittal, the licensee addressed specific information requested in accordance with 10 CFR 20.302(a), provided a detailed description of the licensed material, thoroughly analyzed and evaluated the information pertinent to the effects on the environment of the proposed disposal of licensed material, and committed to follow specific procedures to minimize the risk of unexpected exposures.

2.0 DESCRIPTION OF WASTE

During the normal operation of Kewaunee, the potential exists for in-plant process streams which are not normally radioactive to become contaminated with very low levels of radioactive materials. These waste streams are normally separated from the radioactive streams. However, due mainly to infrequent, minor system leaks, and anticipated operational occurrences, the potential exists for these systems to become slightly contaminated. At Kewaunee, the secondary system demineralizer resins, the service water pre-treatment system sludges, the make-up water system resins, and the sewage treatment plant sludges are waste streams that have the potential to become contaminated at very low levels.

During the yearly testing of a batch of pre-treatment sludge, it was found that approximately 15,000 cubic feet of sludge had been contaminated with Cs-137 and Co-60.

3.0 PROPOSED DISPOSAL METHOD

WPSC plans to dispose of the 15,000 cubic feet of contaminated sludge onsite pursuant to 10 CFR 20.302. The sludge is currently contained in an onsite lagoon at the KNPP sewage treatment facility. The disposal of the sludge will be by land application to an area located onsite at KNPP, as shown in Figure 1. The area will be periodically plowed to a depth of 6 inches.

Table 1 lists the principal nuclides identified in the sludge. The activity is based on measurements made in 1989. The radionuclide half-lives, which are dominated by 30-year Cs-137, meet the staff's 10 CFR 20.302 guidelines (reference 6), which apply to radionuclides with half-lives less than 35 years.

Table 1

Nuclide	Total Activity (mCi)
Co-60	0.076
Cs-137	0.094

	0.170

4.0 RADIOLOGICAL IMPACTS

The licensee has evaluated the following potential exposure pathways to members of the general public from the radionuclides in the sludge: (1) external exposure caused by groundshine from the disposal site; (2) internal exposure from inhalation of re-suspended radionuclides; and (3) internal exposure from ingesting ground water. The staff has reviewed the licensee's calculational methods and assumptions and finds that they are consistent with NRC Regulatory Guide 1.109, "Calculation of Annual Doses to Man from Routine Releases of Reactor Effluents for the Purpose of Evaluating Compliance with 10 CFR Part 50, Appendix I," Revision 1, October 1977. The staff finds the assessment methodology acceptable.

Table 2 lists the doses calculated by the licensee for the maximally exposed member of the public based on a total activity of 0.170 mCi disposed of in the current year, as well as the cumulative impact of similar disposals during subsequent years. For any repetitive disposals, the licensee must reapply to the NRC when a particular disposal would exceed the following boundary conditions: (1) the annual disposal must be less than a total activity of 0.2 mCi; (2) the whole body dose to the hypothetical maximally exposed individual must be less than 0.1 mrem/year; and (3) the disposal must be at the same site as described in Figure 1.

TABLE 2

Pathway	Whole Body Dose Received by Maximally Exposed Individual (mrem/year)
Groundshine	0.034
Inhalation	0.008
Groundwater Ingestion	0.007
TOTAL	0.049

As shown in Table 2, the annual dose is expected to be on the order of 0.1 mrem or less. Such a dose is a small fraction of the 300 mrem received annually by members of the general public from sources of natural background radiation.

The guidelines used by the NRC staff for onsite disposal of licensed material are presented in Table 3, along with the staff's evaluation of how each guideline has been satisfied.

The licensee's procedures and commitments as documented in the submittal are acceptable, provided that they are permanently incorporated into the licensee's Offsite Dose Calculation Manual (ODCM) as an Appendix, and that future modifications be reported to NRC in accordance with the applicable ODCM change protocol.

Based on the above findings, the staff finds the licensee's proposal to dispose of the low level radioactive waste sludge onsite in the manner described in the WPSC letter dated September 12, 1989, to be acceptable. The State of Wisconsin has also approved these procedures (reference 5).

TABLE 3

20.302 Guideline for Onsite Disposal	Staff's Evaluation
1. The radioactive material should be disposed of in a manner that it is unlikely that the material would be recycled.	1. Due to the nature of the disposed material, recycling to the general public is not considered likely.
2. Doses to the total body and any body organ of a maximally exposed individual (a member of the general public or a non-occupationally exposed worker) from the probable pathways of exposure to the disposed material should be less than 1 mrem/year.	2. This guideline is addressed in Table 2.
3. Doses to the total body and any body organ of an inadvertent intruder from the probable pathways of exposure should be less than 5 mrem/year.	3. Because the material will be land-spread, the staff considers the maximally exposed individual scenario to also address the intruder scenario.
4. Doses to the total body and any body organ of an individual from assumed recycling of the disposed material at the time the disposal site is released from regulatory control from all likely pathways of exposure should be less than 1 mrem.	4. Even if recycling were to occur after release from regulatory control, the dose to the maximally exposed member of the public is not expected to exceed 1 mrem/year, based on the exposure scenarios considered in this analysis.

REFERENCES

(1) WPSC letter from K. H. Evers to NRC Document Control Desk, September 12, 1989.

(2) Memorandum from L. J. Cunningham, DREP, to J. K. Harmon, "Request For Additional Information," December 11, 1989.

(3) NRC letter from M. J. Davis to K. H. Evers of WPSC dated February 13, 1990.

(4) WPSC letter from K. H. Evers to NRC Document Control Desk, October 17, 1991.

(5) Letter from L. Sridharon of the State of Wisconsin Department of Natural Resources to M. Vandenbusch of WPSC, dated June 13, 1991.

(6) E. F. Branagan Jr. and F. J. Congel, "Disposal of Contaminated Radioactive Wastes from Nuclear Power Plants," presented at the Health Physics Society's midyear Symposium on Health Physics Considerations in Decontamination/Decommissioning, Knoxville, TN, February 1986 (CONF-860203).

Principal Contributor: J. Minns

Date: June 17, 1992

Figure 1

Kewaunee Nuclear Power Plant Site Area Map

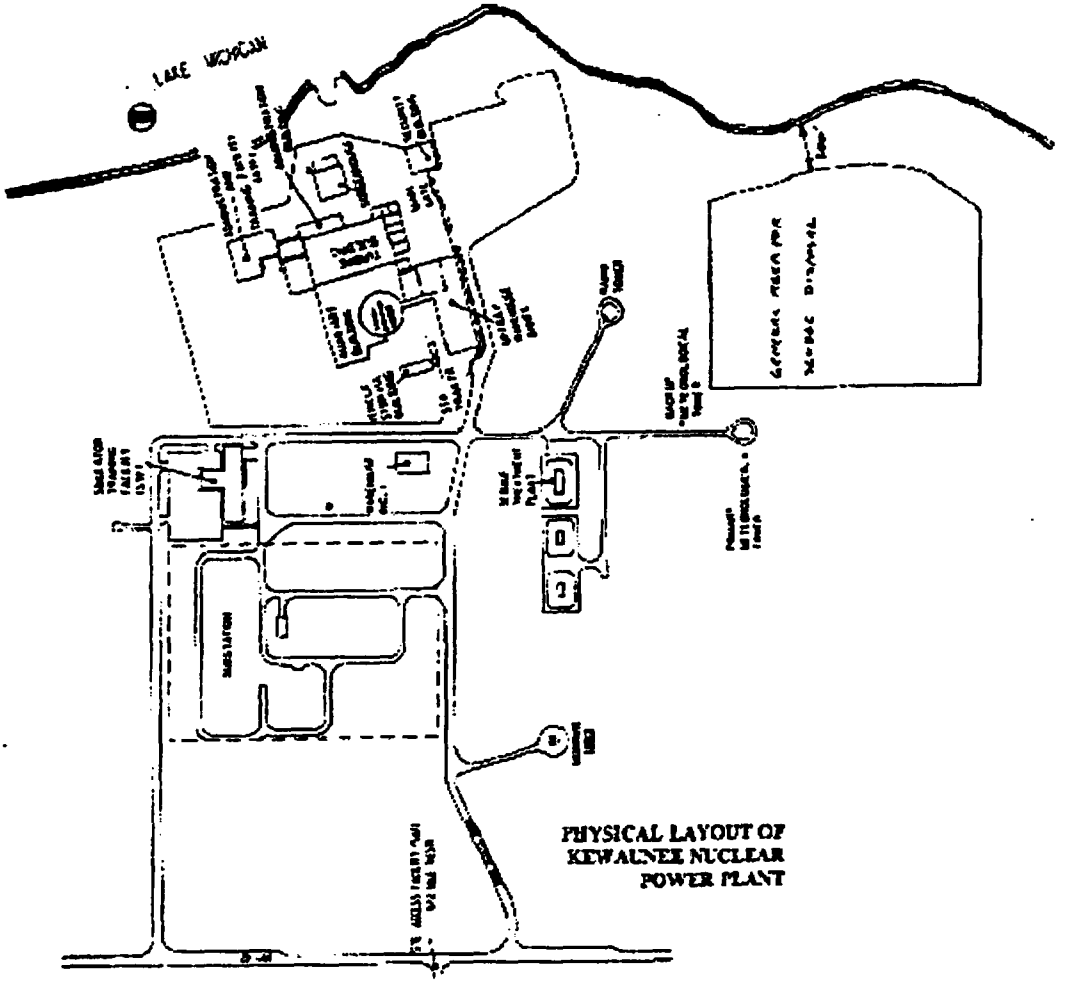

K-94-195
9/21/94

UNITED STATES
NUCLEAR REGULATORY COMMISSION
WASHINGTON, D.C. 20555-0001

September 14, 1994

Mr. C. A. Schrock
Manager - Nuclear Engineering
Wisconsin Public Service Corporation
Post Office Box 19002
Green Bay, WI 54307-9002

SUBJECT: SAFETY EVALUATION FOR AN AMENDMENT TO AN APPROVED 10 CFR 20.302 APPLICATION FOR THE KEWAUNEE NUCLEAR PLANT (TAC NO. M89719)

Dear Mr. Schrock:

By letter dated June 23, 1994, as supplemented June 29, 1994, you requested approval to use another onsite area for the disposal of contaminated waste sludge in addition to the location approved by the NRC on June 17, 1992. The staff has completed its review of your request and finds that your proposal meets the radiological boundary conditions approved in the June 17, 1992, Safety Evaluation, and is therefore acceptable. The staff also finds that your proposal is in accordance with 10 CFR 20.2002 which replaced 20.302 on January 1, 1994.

This approval is granted provided that the enclosed Safety Evaluation is permanently incorporated into your Offsite Dose Calculation Manual (ODCM) as an Appendix, and that future modifications of these commitments are reported to the NRC.

Sincerely,

Richard J. Laufer

Richard J. Laufer, Acting Project Manager
Project Directorate III-3
Division of Reactor Projects III/IV
Office of Nuclear Reactor Regulation

Docket No. 50-305

Enclosure:
Safety Evaluation

cc w/enclosure:
see next page

T A Hanson (MGE&L)
M W Seitz (WPL)
Larry Nielsen (ANPC)
D A Bollom G6
D E Cole KNP
K H Evers KNP
J P Giesler KNP
K A Hoops KNP
M L Marchi KNP
D L Maurik KNP
J N Morrison D1
L A Nuthals (NSRAC)
R F Pulec D2 (2)
C A Schrock D2
C S Smoker KNP
C R Steinhardt D2
C A Stornitky KNP
T J Webb KNP
S F Wozniak D2
QA Vault KNP

cc:

Foley & Lardner
Attention: Mr. Bradley D. Jackson
One South Pinckney Street
P. O. Box 1497
Madison, Wisconsin 53701-1497

Chairman
Town of Carlton
Route 1
Kewaunee, Wisconsin 54216

Mr. Harold Reckelberg, Chairman
Kewaunee County Board
Kewaunee County Courthouse
Kewaunee, Wisconsin 54216

Chairman
Public Service Commission of
Wisconsin
Hill Farms State Office Building
Madison, Wisconsin 53702

Attorney General
114 East, State Capitol
Madison, Wisconsin 53702

U. S. Nuclear Regulatory Commission
Resident Inspectors Office
Route #1, Box 999
Kewaunee, Wisconsin 54216

Regional Administrator - Region III
U. S. Nuclear Regulatory Commission
801 Warrenville Road
Lisle, Illinois 60532-4531

Mr. Robert S. Cullen
Chief Engineer
Wisconsin Public Service Commission
P. O. Box 7854
Madison, Wisconsin 53707

UNITED STATES
NUCLEAR REGULATORY COMMISSION
WASHINGTON, D.C. 20555-0001

SAFETY EVALUATION BY THE OFFICE OF NUCLEAR REACTOR REGULATION

RELATING TO ONSITE DISPOSAL OF LOW-LEVEL RADIOACTIVELY

CONTAMINATED WASTE SLUDGE

AT THE KEWAUNEE NUCLEAR POWER PLANT

WISCONSIN PUBLIC SERVICE CORPORATION
WISCONSIN POWER AND LIGHT COMPANY
MADISON GAS AND ELECTRIC COMPANY

DOCKET NO. 50-305

1.0 INTRODUCTION

By letter dated June 23, 1994, and as supplemented on June 29, 1994, Wisconsin Public Service Corporation (the licensee) requested approval to use another onsite area for the disposal of contaminated waste sludge in addition to the location approved by the NRC on June 17, 1992.

2.0 EVALUATION

A Safety Evaluation (SE) dated June 17, 1992, approved the licensee's request pursuant to 10 CFR 20.302 for the disposal of 15,000 cubic feet of contaminated waste sludge by land application at the Kewaunee Nuclear Power Plant (KNPP) at a specific onsite location. The SE imposed the following boundary conditions:

1. The annual disposal must be less than a total activity of 0.2 mCi.

2. The whole body dose to the hypothetical maximally exposed individual must be less than 0.1 mrem/year.

3. The disposal must be the same site.

The site designated in the SE was an unused area adjacent to the onsite lagoon at the KNPP sewage treatment facility. In 1993, approximately 7500 cubic feet of the original 15,000 cubic feet of contaminated sludge was spread on that location. The licensee has now proposed to dispose of the remaining contaminated sludge at another onsite location northwest of the plant (see Attachment). The licensee has committed that the new disposal location will meet all the radiological boundary conditions contained in the SE for the 10 CFR 20.302 application approved on June 17, 1992. Additionally, the licensee has stated that this additional disposal site will meet all applicable Wisconsin Department of Natural Resources (WDNR) application requirements (i.e., sludge application rate and frequency of spreading rate), in addition to WDNR landspreading requirements regarding location and performance standards that were required at the original disposal site.

3.0 CONCLUSION

The staff finds the licensee's proposal to dispose of the low-level radioactive waste sludge in the additional onsite location to be within the radiological boundary conditions approved in the June 17, 1992, SE and is therefore acceptable. The staff also finds that your proposal is in accordance with 10 CFR 20.2002 which replaced 20.302 on January 1, 1994.

As stated in the NRC's June 17, 1992, approval of the licensee's 10 CFR 20.302 application, the licensee is required to permanently incorporate this modification into the *Offsite Dose Calculation Manual* as an *Appendix*, and that future modification of this commitment be reported to the NRC.

Principal Contributor: S. Klementowicz

Date: September 14, 1994

Attachment: KNPP Site Area Map

KEWAUNEE NUCLEAR POWER PLANT SITE AREA MAP

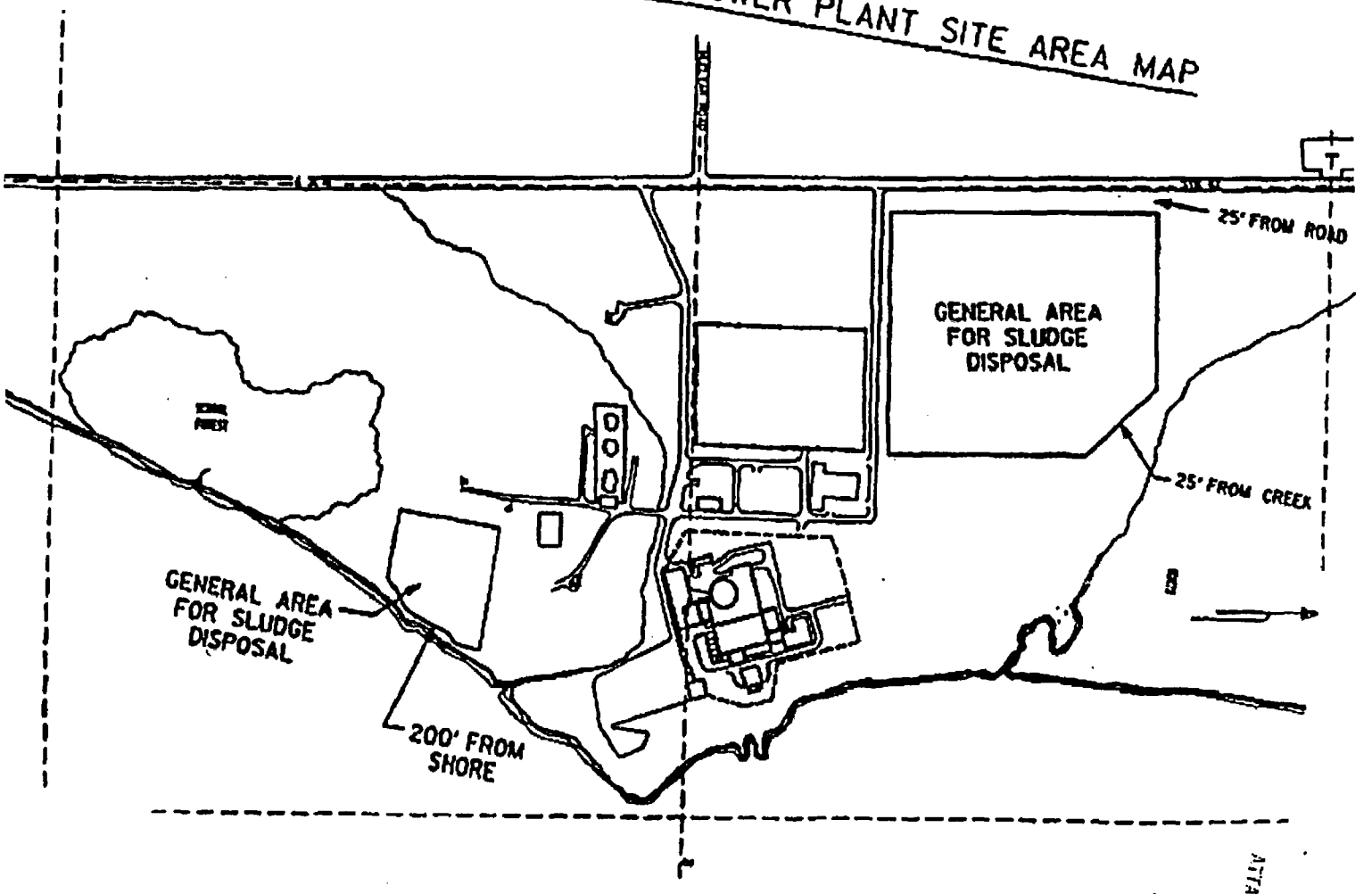

ATTACHMENT

K-95-172
Rec'd. 11-20-95

UNITED STATES
NUCLEAR REGULATORY COMMISSION
WASHINGTON, D.C. 20555-0001

November 13, 1995

Mr. M. L. Marchi
Manager - Nuclear Business Group
Wisconsin Public Service Corporation
Post Office Box 19002
Green Bay, WI 54307-9002

SUBJECT: ALTERNATE DISPOSAL OF CONTAMINATED SEWAGE TREATMENT PLANT SLUDGE IN ACCORDANCE WITH 10 CFR 20.2002 (TAC NO. M93844)

Dear Mr. Marchi:

By letter dated October 17, 1995, as supplemented on November 3, 1995, you requested approval for the onsite disposal of contaminated sewage treatment sludge in accordance with 10 CFR 20.2002. This request was similar to a previous disposal request that was approved by the NRC on June 17, 1992.

The staff has completed its review of your request and finds that your proposal meets the radiological boundary conditions approved in the June 17, 1992, Safety Evaluation, and is therefore acceptable.

This approval is granted provided that the enclosed safety evaluation is permanently incorporated into you Offsite Dose Calculation Manual (ODCM) as an Appendix, and that future modifications of these commitments are reported to the NRC.

Sincerely,

Richard J. Laufer, Project Manager
Project Directorate III-3
Division of Reactor Projects III/IV
Office of Nuclear Reactor Regulation

Docket No. 50-305

Enclosure: Safety Evaluation

cc: See next page

NRC to WPSC LETTER DISTRIBUTION

T A Hanson (MG&E)	K H Evers KNP	C S Smoker KNP
M W Seitz (WPL)	M L Marchi D2	C R Steinhardt D2
Larry Nielsen (ANFC)	J K Jobin (NSRAC)	CA Sternitzky KNP(Lic)
D A Bollom G6	R P Pulec KNP (3)	S F Wozniak D2
D E Day D1	C A Schrock KNP	BJ Dornick KNP (Corr)

cc:

Foley & Lardner
Attention: Mr. Bradley D. Jackson
One South Pinckney Street
P. O. Box 1497
Madison, Wisconsin 53701-1497

Chairman
Town of Carlton
Route 1
Kewaunee, Wisconsin 54216

Mr. Harold Reckelberg, Chairman
Kewaunee County Board
Kewaunee County Courthouse
Kewaunee, Wisconsin 54216

Chairman
Public Service Commission of
Wisconsin
Hill Farms State Office Building
Madison, Wisconsin 53702

Attorney General
114 East, State Capitol
Madison, Wisconsin 53702

U. S. Nuclear Regulatory Commission
Resident Inspectors Office
Route #1, Box 999
Kewaunee, Wisconsin 54216

Regional Administrator - Region III
U. S. Nuclear Regulatory Commission
801 Warrenville Road
Lisle, Illinois 60532-4531

Mr. Robert S. Cullen
Chief Engineer
Wisconsin Public Service Commission
P. O. Box 7854
Madison, Wisconsin 53707

UNITED STATES
NUCLEAR REGULATORY COMMISSION
WASHINGTON, D.C. 20555-0001

SAFETY EVALUATION BY THE OFFICE OF NUCLEAR REACTOR REGULATION

RELATING TO ONSITE DISPOSAL OF LOW-LEVEL RADIOACTIVELY

CONTAMINATED SEWAGE TREATMENT SLUDGE

AT THE KEWAUNEE NUCLEAR POWER PLANT

WISCONSIN PUBLIC SERVICE CORPORATION
WISCONSIN POWER AND LIGHT COMPANY
MADISON GAS AND ELECTRIC COMPANY

DOCKET NO. 50-305

1.0 INTRODUCTION

By letter dated October 17, 1995, as supplemented on November 3, 1995, Wisconsin Public Service Corporation (the licensee) requested approval for the onsite disposal of contaminated sewage sludge similar to a previous disposal request that was approved by the NRC on June 17, 1992.

2.0 BACKGROUND

In a letter dated September 12, 1989, the licensee requested authorization for the alternate disposal of very-low-level radioactive material. In a Safety Evaluation (SE) dated June 17, 1992, the NRC approved the licensee's request pursuant to 10 CFR 20.302 (new 10 CFR 20.2002) for the disposal of 15,000 cubic feet of contaminated waste sludge by land application at the Kewaunee Nuclear Power Plant (KNPP) location. The SE imposed the following boundary conditions:

1. The annual disposal must be less than a total activity of 0.2 mCi.

2. The whole body dose to the hypothetical maximally exposed individual must be less than 0.1 mrem/year.

3. The disposal must be at the same site.

The licensee completed the disposal of the contaminated waste sludge discussed in the SE dated June 17, 1992. The licensee is now requesting authorization to dispose of additional contaminated waste sludge within the boundary conditions of the previously approved disposal.

3.0 EVALUATION

The licensee has proposed to dispose of approximately 6000 gallons (800 cubic feet) of sewage sludge similar to the material approved for disposal in the SE dated June 17, 1992. The principal radionuclides identified in the waste sludge and their activity based on measurements in May 1995 are: Co-58,

0.0009 mCi; Co-60, 0.0008 mCi; and Cr-51, 0.0006 mCi. The total combined activity is 0.0023 mCi. This activity is well below the boundary value of 0.2 mCi. Additionally, Cr-51 with it short half-life (27.7 day) will have undergone significant decay from its initial value of 0.0006 mCi.

The licensee has committed that the new disposal will meet all the radiological boundary conditions, on a cumulative basis, contained in the SE for the 10 CFR 20.302 application approved on June 17, 1992. Additionally, the licensee has stated that all applicable permits for this disposal have been obtained from the Wisconsin Department of Natural Resources.

4.0 CONCLUSION

The staff finds the licensee's proposal to dispose of the low-level radioactive waste sludge pursuant to 10 CFR 20.2002, on the licensee's site (see Attachment), is within the radiological boundary conditions approved in the June 17, 1992, SER and is therefore acceptable.

The licensee is required to permanently incorporate this modification into the Offsite Dose Calculation Manual as an Appendix, and to ensure that future modifications of these commitments are reported to the NRC.

Principal Contributor: S. Klementowicz

Date: November 13, 1995

Attachment: KNPP Site Area Map

KEWAUNEE NUCLEAR POWER PLANT SITE AREA MAP

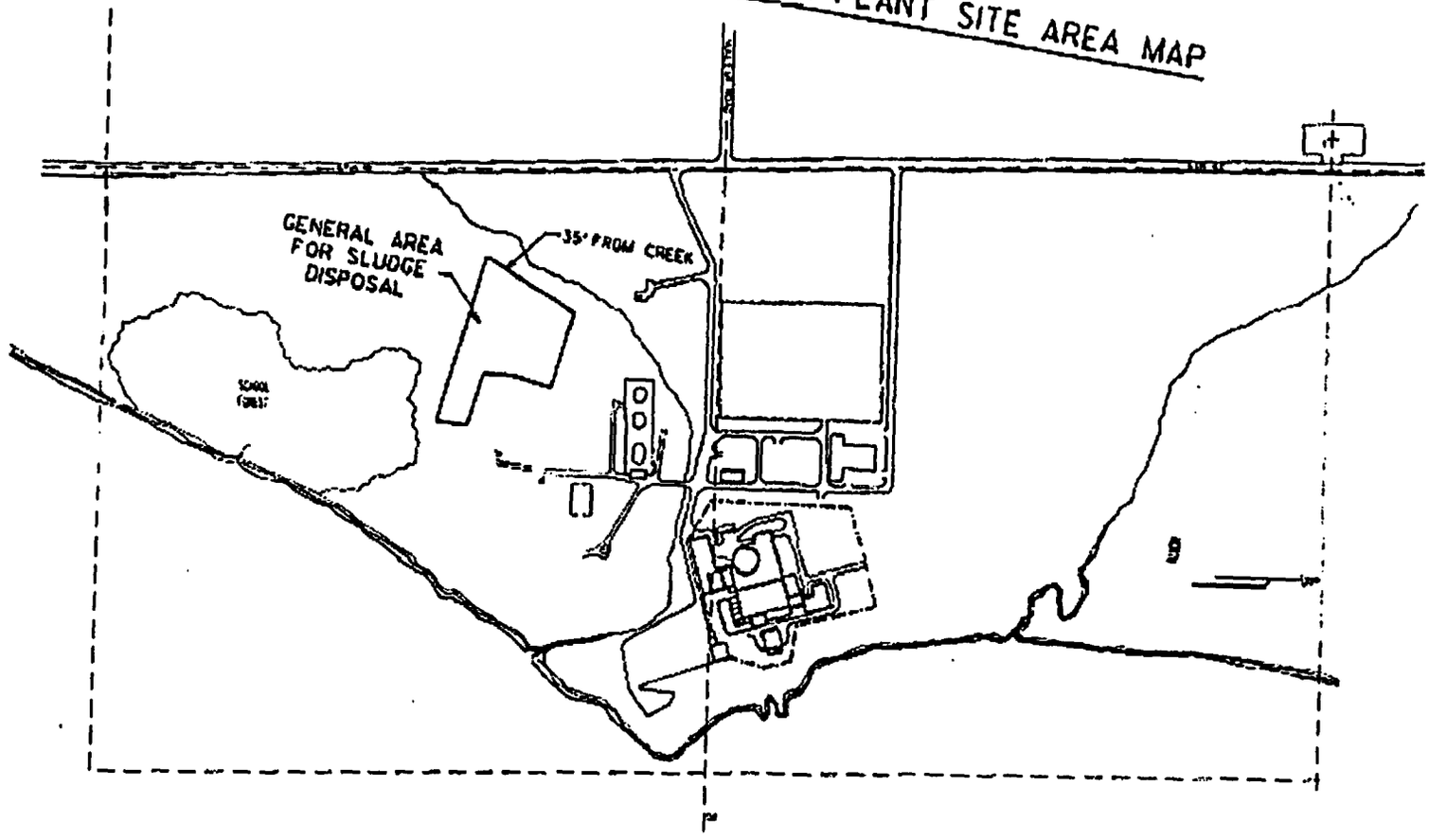

K-97-64
Rec'd 4-14-9

UNITED STATES
NUCLEAR REGULATORY COMMISSION
WASHINGTON, D.C. 20555-0001

April 9, 1997

Mr. M. L. Marchi
Manager - Nuclear Business Group
Wisconsin Public Service Corporation
Post Office Box 19002
Green Bay, WI 54307-9002

SUBJECT: ONSITE DISPOSAL OF CONTAMINATED SLUDGE PURSUANT TO 10 CFR 20.2002 (TAC NO. M97411)

Dear Mr. Marchi:

By letter dated December 10, 1996, you requested that the U.S. Nuclear Regulatory Commission (NRC) review the applicability of a 10 CFR 20.203 (now 20.2002) application approved on June 17, 1992, for additional disposals of a similar nature.

The staff has completed its review of your request and agrees with your determination that the 10 CFR 20.203 application for onsite disposal of sludge contaminated with licensed radioactive material, which was approved on June 17, 1992, contains bounding conditions that are applicable for additional onsite disposals of a similar nature. A copy of the Safety Evaluation is enclosed.

Sincerely,

Richard J. Laufer

Richard J. Laufer, Project Manager
Project Directorate III-3
Division of Reactor Projects III/IV
Office of Nuclear Reactor Regulation

Docket No. 50-305

Enclosure: Safety Evaluation

cc: See next page

NRC to WPSC LETTER DISTRIBUTION

T A Hanson (MG&E)
M W Seitz (WPL)
H D Curet (SPC)
D A Bollom G6
D E Day D1

K H Evers KNP
M L Marchi D2
JBennett KNP (NSRAC)
R P Fulec KNP (3)
C A Schrock KNP

C S Smoker KNP
C R Steinhardt D2
GA Sulewski KNP(Lic)
S F Wozniak D2
BJDomnick/PRReschesko KNP (Com/USAR)

cc:

Foley & Lardner
Attention: Mr. Bradley D. Jackson
One South Pinckney Street
P. O. Box 1497
Madison, Wisconsin 53701-1497

Chairman
Town of Carlton
Route 1
Kewaunee, Wisconsin 54216

Mr. Harold Reckelberg, Chairman
Kewaunee County Board
Kewaunee County Courthouse
Kewaunee, Wisconsin 54216

Chairman
Wisconsin Public Service Commission
610 N. Whitney Way
Madison, Wisconsin 53705-2729

Attorney General
114 East, State Capitol
Madison, Wisconsin 53702

U. S. Nuclear Regulatory Commission
Resident Inspectors Office
Route #1, Box 999
Kewaunee, Wisconsin 54216

Regional Administrator - Region III
U. S. Nuclear Regulatory Commission
801 Warrenville Road
Lisle, Illinois 60532-4531

Mr. Robert S. Cullen
Chief Engineer
Wisconsin Public Service Commission
610 N. Whitney Way
Madison, Wisconsin 53705-2829

UNITED STATES
NUCLEAR REGULATORY COMMISSION
WASHINGTON, D.C. 20555-0001

SAFETY EVALUATION BY THE OFFICE OF NUCLEAR REACTOR REGULATION

RELATING TO ONSITE DISPOSAL OF CONTAMINATED SLUDGE

AT THE KEWAUNEE NUCLEAR POWER PLANT

WISCONSIN PUBLIC SERVICE CORPORATION
WISCONSIN POWER AND LIGHT COMPANY
MADISON GAS AND ELECTRIC COMPANY

DOCKET NO. 50-305

1.0 INTRODUCTION

By letter dated December 10, 1996, Wisconsin Public Service Corporation (the licensee) requested that the U.S. Nuclear Regulatory Commission (NRC) review its determination that NRC approval, pursuant to 10 CFR 20.2002, for the onsite disposal of contaminated sludge at the Kewaunee Nuclear Power Plant (KNPP) is not required, provided such disposals are conducted within the limits and bounding conditions approved by the NRC in its June 17, 1992, Safety Evaluation (SE).

2.0 BACKGROUND

In a letter dated September 12, 1989, the licensee requested authorization for the alternate disposal of sludge contaminated with licensed radioactive material. In an SE dated June 17, 1992, the NRC approved the licensee's request pursuant to 10 CFR 20.302 (new 10 CFR 20.2002) for the disposal of 15,000 cubic feet of contaminated waste sludge by land application at the KNPP location. The SE imposed boundary conditions as follows:

1. The annual disposal must be less than a total activity of 0.2 mCi;

2. The whole body dose to the hypothetical maximally exposed individual must be less than 0.1 mrem/year; and

3. The disposal must be at the same site.

The SE also stated that for any repetitive disposals, the licensee must reapply to the NRC when a particular disposal would exceed the boundary conditions.

3.0 EVALUATION

The licensee has determined that NRC approval for future onsite disposals of sludge contaminated with licensed radioactive material is not required provided the disposals comply with the limits and conditions of the SE issued on June 17, 1992. The licensee has also developed a sludge sampling and analysis procedure that implements the guidance contained in NRC Information

Notice 88-22. Specifically, the licensee's procedure will require the analysis of sludge samples using a detection system design and operating characteristics that yield a lower limit of detection for Co-58, Co-60, Cs-134, and Cs-137 consistent with measurements of environmental samples. The licensee has provided a site map (attached) that specifies the acceptable onsite disposal areas for the contaminated sludge.

4.0 CONCLUSION

The staff agrees with the licensee's determination that additional onsite disposals of contaminated sludge, which are conducted within the bounding limits and conditions contained in the June 17, 1992, SE and within the areas specified in the attached site map, do not require specific NRC approval.

The licensee should permanently incorporate this Safety Evaluation into the Offsite Dose Calculation Manual as an Appendix.

Principal Contributor: S. Klementowicz

Date: April 9, 1997

Attachment: KNPP Site Map

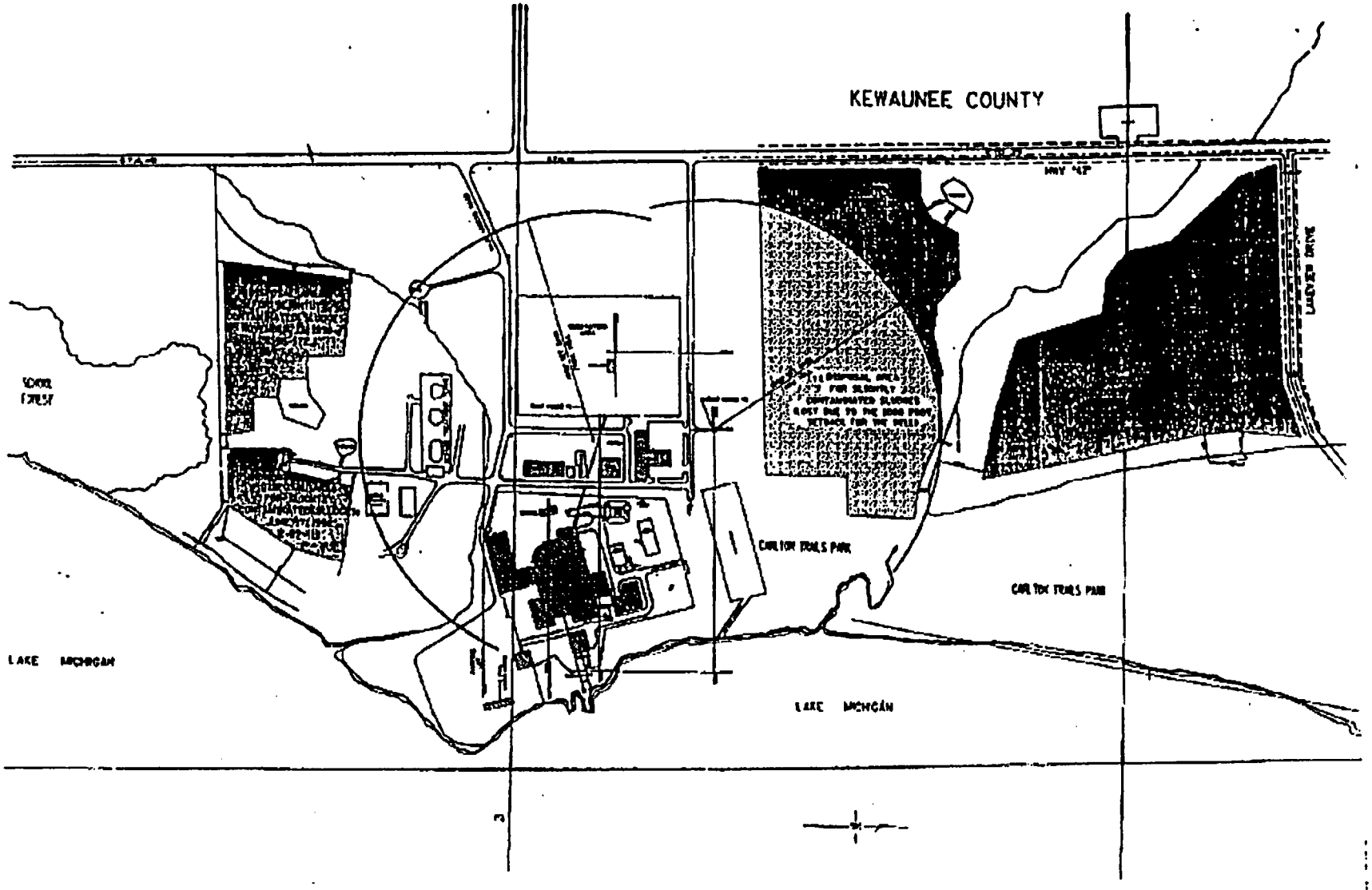
KEWAUNEE COUNTY
LAKE MICHIGAN
LAKE MICHIGAN

Appendix C

Kewaunee Power Station

Annual Radioactive Effluent Release Report

January 1 – December 31, 2003

Revised Section 3.0 Liquid Effluents

Table of Contents

Section	Description	
3.0	Liquid Effluents	C4
3.1	Lower Limits of Detection (LLD) for Liquid Effluents	C4
3.2	Liquid Batch Release Statistics	C6
3.3	Liquid Effluent Data	C6
	Table 3.1 Liquid Effluents - Summation of all Releases	C7
	Table 3.2A Liquid Effluents - Batch Releases 1st Quarter	C8
	Table 3.2B Liquid Effluents - Batch Releases 2nd Quarter	C10
	Table 3.2C Liquid Effluents - Batch Releases 3rd Quarter	C12
	Table 3.2D Liquid Effluents - Batch Releases 4th Quarter	C14
	Table 3.3A Liquid Effluents - Continuous Releases 1st Quarter	C16
	Table 3.3B Liquid Effluents - Continuous Releases 2nd Quarter	C18
	Table 3.3C Liquid Effluents - Continuous Releases 3rd Quarter	C20
	Table 3.3D Liquid Effluents - Continuous Releases 4th Quarter	C22
	Table 3.4 Dose From Liquid Effluents	C24

0.0 SUMMARY

During 2003 all liquid radioactive effluents from the Kewaunee Nuclear Plant were well below regulatory limits. For liquid effluent stream, the quarterly limit most closely approached was:

LIQUID:	Ingestion Pathway-Organ	GI-LLI	
	Quarterly Limit (mRems)	5	
	Actual Dose (mRems)	0.01252	(4th Quarter)
	% of Limit	0.25	

3.0 LIQUID EFFLUENTS

3.1 Lower Limits of Detection (LLD) for Liquid Effluents

Liquid radioactive effluents are released as both batch releases and continuous releases. Each batch is sampled prior to release and analyzed for gamma emitters and tritium. A fraction of each sample is retained for a monthly proportional composite which is then analyzed for Gross Alpha, Strontium 89, Strontium 90 and Iron 55.

The LLD's for liquid batch release radioanalyses, as listed in Table 4.3 of the Kewaunee Nuclear Power Plant Off-Site Dose Calculation Manual, are:

Analysis	LLD (µCi/ml)
Principal Gamma Emitters	1.00 E-06
Iodine 131	1.00 E-06
Tritium	1.00 E-05
Gross Alpha	5.00 E-07
Strontium 89, 90	5.00 E-08
Iron 55	1.00 E-06

The actual obtained "a priori" LLD values for batch releases are shown below.

Isotope	1st Quarter	2nd Quarter	3rd Quarter	4th Quarter	Average a priori LLD (µCi/ml)
Mn-54	6.62E-10	6.62E-08	6.62E-10	6.62E-10	1.70E-08
Fe-59	1.46E-09	1.46E-09	1.46E-09	1.46E-09	1.46E-09
Co-58	6.50E-08	6.50E-10	6.50E-10	6.50E-10	1.67E-08
Co-60	9.61E-10	9.61E-10	9.61E-08	9.61E-10	2.47E-08
Zn-65	1.64E-09	1.64E-09	1.64E-09	1.64E-09	1.64E-09
Mo-99	4.70E-09	4.69E-09	4.69E-09	4.69E-09	4.69E-09
Cs-134	5.22E-10	5.22E-10	5.22E-10	5.22E-10	5.22E-10
Cs-137	6.44E-10	6.44E-08	6.44E-10	6.44E-10	1.66E-08
Ce-141	7.62E-08	3.81E-10	4.21E-08	3.81E-10	2.98E-08
Ce-144	1.71E-07	5.90E-07	1.71E-07	4.86E-07	3.54E-07
I-131	4.06E-10	4.06E-10	4.06E-08	4.06E-08	2.05E-08
H-3	3.33E-06	3.82E-06	3.57E-06	3.76E-06	3.62E-06
Sr-89	1.63E-08	2.87E-08	1.60E-08	1.10E-08	1.80E-08
Sr-90	6.73E-09	9.27E-09	6.60E-09	7.87E-09	7.62E-09
Gross Alpha	8.23E-09	7.23E-09	5.40E-09	5.83E-09	6.68E-09
Fe-55	7.93E-07	8.40E-07	8.23E-07	9.43E-07	8.50E-07

Continuous liquid releases are grab sampled weekly and analyzed for principal gamma emitters. A fraction of each weekly sample is retained for a monthly proportional composite which is then analyzed for Tritium, Gross Alpha, Strontium 89, Strontium 90 and Iron 55.

The LLD's for liquid continuous release radioanalyses, as listed in Table 4.3 of the Kewaunee Nuclear Power Plant Off-Site Dose Calculation Manual, are:

Analysis	LLD (μCi/ml)
Principal Gamma Emitters	5.00 E-07
Iodine 131	1.00 E-06
Tritium	1.00 E-05
Gross Alpha	5.00 E-07
Strontium 89, 90	5.00 E-08
Iron 55	1.00 E-06

The actual obtained "a priori" LLD values for continuous releases are shown below.

Isotope	1st Quarter	2nd Quarter	3rd Quarter	4th Quarter	Average a priori LLD (μCi/ml)
Mn-54	2.73E-08	1.56E-08	1.10E-08	1.91E-08	1.83E-08
Fe-59	2.43E-10	4.20E-08	2.43E-10	2.43E-10	1.07E-08
Co-58	1.20E-08	1.35E-08	2.42E-08	1.53E-08	1.63E-08
Co-60	2.04E-08	3.23E-08	2.89E-08	1.44E-08	2.40E-08
Zn-65	2.73E-08	2.73E-10	2.73E-10	3.02E-08	1.45E-08
Mo-99	1.48E-07	2.84E-07	3.19E-07	2.17E-07	2.42E-07
Cs-134	9.58E-09	8.69E-11	1.98E-08	3.88E-08	1.71E-08
Cs-137	2.90E-08	1.07E-10	3.51E-08	1.07E-10	1.61E-08
Ce-141	3.45E-08	1.56E-08	1.68E-08	1.68E-08	2.09E-08
Ce-144	7.55E-08	1.34E-07	1.67E-07	1.90E-07	1.41E-07
I-131	4.46E-08	1.33E-08	1.69E-08	6.76E-09	2.04E-08
H-3	3.33E-06	3.82E-06	3.57E-06	3.76E-06	3.62E-06
Sr-89	1.67E-08	2.70E-08	1.63E-08	1.26E-08	1.82E-08
Sr-90	7.55E-09	8.70E-09	7.68E-09	7.78E-09	7.93E-09
Gross Alpha	5.12E-09	4.77E-09	5.10E-09	4.82E-09	4.95E-09
Fe-55	7.90E-07	8.38E-07	8.22E-07	9.18E-07	8.42E-07

3.2 **Liquid Batch Release Statistics**

The following is a summation of all liquid batch releases made during 2003.

Release Type	Number	Gallons Released
A SGBT Monitor Tk.	10	93650.0
B SGBT Monitor Tk.	9	84704.0
A CVC Monitor 16	99365.0	
B CVC Monitor 14	89215.0	
Both WCTs 8	14480.0	

Total time for all batch releases..... 23632.0 Min.

Maximum time for a batch release..... 837.0 Min.

Minimum time for a batch release..... 55.0 Min.

Average time for a batch release..... 414.6 Min.

3.3 **Liquid Effluent Data**

The following Table 3.1 presents a quarterly summation of the total activity released and average concentration for all liquid effluents. It also presents the gross alpha activity released, volume of waste released and volume of dilution water used. Tables 3.2 and 3.3 are monthly summations of the same information in Table 3.1. Table 3.2 contains the quantity of the individual isotopes released to the unrestricted area for batch releases. Table 3.3 presents a monthly summation of gross radioactivity, tritium, gross alpha and isotopic activity for the secondary blowdown and leakage releases. It also presents the monthly total volume for these releases and dilution volumes. Table 3.4 presents the doses from liquid effluents for each quarter and the calculated doses this year from liquid effluents.

TABLE 3.1
Annual Radioactive Effluent Release Report 2003
Liquid Effluents - Summation of all Releases

	1st Qtr	2nd Qtr	3rd Qtr	4th Qtr
Fission and Activation Products				
Total Release Excluding H3 and Dissolved Gases (Ci)	4.878E-003	3.860E-002	6.136E-003	3.116E-003
Average Concentration (µCi/ml)	4.596E-011	2.447E-010	2.981E-011	1.873E-011
Tritium				
Total Release (Ci)	2.163E+002	3.794E+001	1.518E+001	1.094E+001
Average Concentration (µCi/ml)	2.038E-006	2.405E-007	7.376E-008	6.573E-008
% of Tech. Spec. Limit(3.0E-3 µCi/ml)	6.793E-002	8.017E-003	2.459E-003	2.191E-003
Dissolved Gases				
Total Release (Ci)	1.553E-004	0.000E+000	0.000E+000	0.000E+000
Average Concentration (µCi/ml)	1.464E-012	0.000E+000	0.000E+000	0.000E+000
% of Tech. Spec. Limit(2.0E-4 µCi/ml)	7.318E-007	0.000E+000	0.000E+000	0.000E+000
Gross Alpha Activity				
Total Release (Ci)	0.000E+000	0.000E+000	0.000E+000	0.000E+000
Volume of Waste Released				
Batch (liters)	6.058E+005	5.012E+005	2.530E+005	8.374E+004
Continuous (liters)	2.315E+007	2.438E+007	1.991E+007	2.055E+007
Total (liters)	2.376E+007	2.488E+007	2.016E+007	2.064E+007
Volume of Dilution Water				
Batch (liters)	8.022E+009	8.386E+009	5.239E+009	1.761E+009
Continuous (liters)	9.812E+010	1.494E+011	2.006E+011	1.646E+011
Total (liters)	1.061E+011	1.577E+011	2.058E+011	1.664E+011

TABLE 3.2A
Annual Radioactive Effluent Release Report 2003
Liquid Effluents - Batch Releases

	January	February	March	Total
Gross Radioactivity				
Total Release Excluding H3 and Dissolved Gases (Ci)	7.245E-004	1.169E-003	1.595E-003	3.489E-003
Avg. Conc. (µCi/ml)	3.731E-010	4.636E-010	4.483E-010	
Tritium				
Total Release (Ci)	5.241E+001	8.403E+001	7.982E+001	2.163E+002
Avg. Conc. (µCi/ml)	2.699E-005	3.332E-005	2.243E-005	
Dissolved Gases				
Total Release (Ci)	2.895E-006	1.070E-005	1.418E-004	1.553E-004
Avg. Conc. (µCi/ml)	1.491E-012	4.242E-012	3.984E-011	
Gross Alpha Activity				
Total Release (Ci)	0.000E+000	0.000E+000	0.000E+000	0.000E+000
Avg. Conc. (µCi/ml)	0.000E+000	0.000E+000	0.000E+000	
Volume of Waste Released				
(liters)	1.455E+005	1.980E+005	2.623E+005	6.058E+005
Volume of Dilution Water				
(liters)	1.942E+009	2.522E+009	3.558E+009	8.022E+009

TABLE 3.2A (Con't)
Annual Radioactive Effluent Release Report 2003
Liquid Effluents - Batch Releases

Isotope (Ci)	January	February	March	Total
H-3	5.241E+001	8.403E+001	7.982E+001	2.163E+002
Fe-55	1.746E-004	5.940E-004	4.984E-004	1.267E-003
Co-58	5.353E-005	3.756E-005	1.949E-004	2.860E-004
Co-60	4.531E-005	6.684E-005	2.868E-004	3.989E-004
Sr-89	2.328E-007	0.000E+000	0.000E+000	2.328E-007
Sr-90	4.364E-008	1.980E-008	4.197E-007	4.831E-007
Ag-110m	9.400E-005	1.401E-004	1.903E-004	4.244E-004
Sb-125	3.569E-004	3.232E-004	4.244E-004	1.104E-003
Xe-133	0.000E+000	1.070E-005	1.418E-004	1.525E-004
Xe-135	2.895E-006	0.000E+000	0.000E+000	2.895E-006
Cs-137	0.000E+000	7.278E-006	0.000E+000	7.278E-006
Total	5.241E+001	8.403E+001	7.982E+001	2.163E+002

TABLE 3.2B
Annual Radioactive Effluent Release Report 2003
Liquid Effluents - Batch Releases

	April	May	June	Total
Gross Radioactivity				
Total Release Excluding H3 and Dissolved Gases (Ci)	1.575E-002	1.510E-002	4.692E-003	3.554E-002
Avg. Conc. (µCi/ml)	5.389E-009	1.134E-008	1.135E-009	
Tritium				
Total Release (Ci)	2.549E+001	2.987E+000	9.463E+000	3.794E+001
Avg. Conc. (µCi/ml)	8.723E-006	2.243E-006	2.290E-006	
Dissolved Gases				
Total Release (Ci)	0.000E+000	0.000E+000	0.000E+000	0.000E+000
Avg. Conc. (µCi/ml)	0.000E+000	0.000E+000	0.000E+000	
Gross Alpha Activity				
Total Release (Ci)	0.000E+000	0.000E+000	0.000E+000	0.000E+000
Avg. Conc. (µCi/ml)	0.000E+000	0.000E+000	0.000E+000	
Volume of Waste Released				
(liters)	2.413E+005	1.102E+005	1.497E+005	5.012E+005
Volume of Dilution Water				
(liters)	2.922E+009	1.332E+009	4.132E+009	8.386E+009

TABLE 3.2B (Con't)
Annual Radioactive Effluent Release Report 2003
Liquid Effluents - Batch Releases

Isotope (Ci)	April	May	June	Total
H-3	2.549E+001	2.987E+000	9.463E+000	3.794E+001
Cr-51	2.294E-004	3.848E-003	2.091E-004	4.287E-003
Mn-54	3.093E-004	9.073E-005	2.245E-006	4.023E-004
Fe-55	4.585E-003	2.093E-003	2.845E-003	9.524E-003
Co-58	1.249E-003	5.339E-003	1.382E-003	7.970E-003
Fe-59	0.000E+000	1.118E-003	1.254E-004	1.244E-003
Co-60	6.994E-003	8.813E-004	6.984E-005	7.945E-003
Sr-90	2.100E-006	9.585E-007	1.303E-006	4.361E-006
Nb-95	0.000E+000	5.280E-004	2.308E-005	5.510E-004
Zr-95	0.000E+000	3.285E-004	0.000E+000	3.285E-004
Ag-110m	2.379E-003	8.169E-004	3.418E-005	3.230E-003
Sn-113	0.000E+000	5.564E-005	0.000E+000	5.564E-005
Total	2.551E+001	3.002E+000	9.467E+000	3.798E+001

TABLE 3.2C
Annual Radioactive Effluent Release Report 2003
Liquid Effluents - Batch Releases

	July	August	September	Total
Gross Radioactivity				
Total Release Excluding H3 and Dissolved Gases (Ci)	1.184E-003	3.319E-004	5.801E-004	2.096E-003
Avg. Conc. (µCi/ml)	3.277E-010	7.164E-010	4.989E-010	
Tritium				
Total Release (Ci)	1.032E+001	1.222E+000	3.642E+000	1.518E+001
Avg. Conc. (µCi/ml)	2.857E-006	2.637E-006	3.131E-006	
Dissolved Gases				
Total Release (Ci)	0.000E+000	0.000E+000	0.000E+000	0.000E+000
Avg. Conc. (µCi/ml)	0.000E+000	0.000E+000	0.000E+000	
Gross Alpha Activity				
Total Release (Ci)	0.000E+000	0.000E+000	0.000E+000	0.000E+000
Avg. Conc. (µCi/ml)	0.000E+000	0.000E+000	0.000E+000	
Volume of Waste Released				
(liters)	1.773E+005	3.541E+004	4.031E+004	2.530E+005
Volume of Dilution Water				
(liters)	3.613E+009	4.633E+008	1.163E+009	5.239E+009

TABLE 3.2C (Con't)
Annual Radioactive Effluent Release Report 2003
Liquid Effluents - Batch Releases

Isotope (Ci)	July	August	September	Total
H-3	1.032E+001	1.222E+000	3.642E+000	1.518E+001
Fe-55	4.078E-004	8.144E-005	9.271E-005	5.820E-004
Co-58	4.268E-004	7.769E-005	9.718E-006	5.142E-004
Co-60	8.535E-005	1.637E-005	2.274E-005	1.245E-004
Sr-90	3.724E-007	7.436E-008	8.465E-008	5.314E-007
Ag-110m	1.828E-004	6.880E-005	1.484E-004	4.000E-004
Sb-125	8.075E-005	8.757E-005	3.064E-004	4.747E-004
Total	1.032E+001	1.222E+000	3.642E+000	1.519E+001

TABLE 3.2D
Annual Radioactive Effluent Release Report 2003
Liquid Effluents - Batch Releases

	October	November	December	Total
Gross Radioactivity				
Total Release Excluding H3 and Dissolved Gases (Ci)	4.166E-005	1.145E-003	1.923E-003	3.110E-003
Avg. Conc. (µCi/ml)	4.743E-010	9.757E-010	3.848E-009	
Tritium				
Total Release (Ci)	7.655E-005	4.104E+000	6.831E+000	1.094E+001
Avg. Conc. (µCi/ml)	8.717E-010	3.498E-006	1.367E-005	
Dissolved Gases				
Total Release (Ci)	0.000E+000	0.000E+000	0.000E+000	0.000E+000
Avg. Conc. (µCi/ml)	0.000E+000	0.000E+000	0.000E+000	
Gross Alpha Activity				
Total Release (Ci)	0.000E+000	0.000E+000	0.000E+000	0.000E+000
Avg. Conc. (µCi/ml)	0.000E+000	0.000E+000	0.000E+000	
Volume of Waste Released				
(liters)	7.154E+003	4.063E+004	3.595E+004	8.374E+004
Volume of Dilution Water				
(liters)	8.782E+007	1.173E+009	4.997E+008	1.761E+009

TABLE 3.2D (Con't)
Annual Radioactive Effluent Release Report 2003
Liquid Effluents - Batch Releases

Isotope (Ci)	October	November	December	Total
H-3	7.655E-005	4.104E+000	6.831E+000	1.094E+001
Fe-55	3.935E-005	2.235E-004	1.977E-004	4.606E-004
Co-58	2.277E-006	5.960E-005	1.175E-004	1.794E-004
Co-60	0.000E+000	2.789E-005	4.286E-005	7.075E-005
Sr-89	2.862E-008	1.625E-007	1.438E-007	3.350E-007
Ag-110m	0.000E+000	4.873E-004	3.897E-004	8.771E-004
Sb-125	0.000E+000	3.466E-004	1.175E-003	1.522E-003
Total	1.182E-004	4.105E+000	6.833E+000	1.094E+001

TABLE 3.3A
Annual Radioactive Effluent Release Report 2003
Liquid Effluents - Continuous Releases

	January	February	March	Total
Gross Radioactivity				
Total Release Excluding H3 and Dissolved Gases (Ci)	1.720E-005	9.236E-004	4.482E-004	1.389E-003
Avg. Conc. (µCi/ml)	5.089E-013	3.026E-011	1.326E-011	
Tritium				
Total Release (Ci)	2.861E-002	0.000E+000	0.000E+000	2.861E-002
Avg. Conc. (µCi/ml)	8.465E-010	0.000E+000	0.000E+000	
Dissolved Gases				
Total Release (Ci)	0.000E+000	0.000E+000	0.000E+000	0.000E+000
Avg. Conc. (µCi/ml)	0.000E+000	0.000E+000	0.000E+000	
Gross Alpha Activity				
Total Release (Ci)	0.000E+000	0.000E+000	0.000E+000	0.000E+000
Avg. Conc. (µCi/ml)	0.000E+000	0.000E+000	0.000E+000	
Volume of Waste Released				
(liters)	7.280E+006	7.411E+006	8.461E+006	2.315E+007
Volume of Dilution Water				
(liters)	3.380E+010	3.053E+010	3.380E+010	9.812E+010

TABLE 3.3A (Con't)
Annual Radioactive Effluent Release Report 2003
Liquid Effluents - Continuous Releases

Isotope (Ci)	January	February	March	Total
H-3	2.861E-002	0.000E+000	0.000E+000	2.861E-002
Fe-55	0.000E+000	8.637E-004	3.587E-004	1.222E-003
Sr-89	0.000E+000	5.974E-005	8.948E-005	1.492E-004
Sr-90	1.720E-005	2.353E-007	0.000E+000	1.744E-005
Total	2.862E-002	9.236E-004	4.482E-004	3.000E-002

TABLE 3.3B
Annual Radioactive Effluent Release Report 2003
Liquid Effluents - Continuous Releases

	April	May	June	Total
Gross Radioactivity				
Total Release Excluding H3 and Dissolved Gases (Ci)	1.063E-003	1.020E-003	9.729E-004	3.056E-003
Avg. Conc. (µCi/ml)	3.047E-011	2.079E-011	1.487E-011	
Tritium				
Total Release (Ci)	0.000E+000	0.000E+000	0.000E+000	0.000E+000
Avg. Conc. (µCi/ml)	0.000E+000	0.000E+000	0.000E+000	
Dissolved Gases				
Total Release (Ci)	0.000E+000	0.000E+000	0.000E+000	0.000E+000
Avg. Conc. (µCi/ml)	0.000E+000	0.000E+000	0.000E+000	
Gross Alpha Activity				
Total Release (Ci)	0.000E+000	0.000E+000	0.000E+000	0.000E+000
Avg. Conc. (µCi/ml)	0.000E+000	0.000E+000	0.000E+000	
Volume of Waste Released				
(liters)	8.030E+006	9.145E+006	7.207E+006	2.438E+007
Volume of Dilution Water				
(liters)	3.489E+010	4.906E+010	6.541E+010	1.494E+011

TABLE 3.3B (Con't)
Annual Radioactive Effluent Release Report 2003
Liquid Effluents - Continuous Releases

Isotope (Ci)	April	May	June	Total
Fe-55	1.021E-003	9.589E-004	9.369E-004	2.917E-003
Sr-89	4.157E-005	6.036E-005	3.603E-005	1.380E-004
Sr-90	8.150E-008	8.363E-007	0.000E+000	9.179E-007
Total	1.063E-003	1.020E-003	9.729E-004	3.056E-003

TABLE 3.3C
Annual Radioactive Effluent Release Report 2003
Liquid Effluents - Continuous Releases

	July	August	September	Total
Gross Radioactivity				
Total Release Excluding H3 and Dissolved Gases (Ci)	1.224E-003	1.337E-003	1.480E-003	4.040E-003
Avg. Conc. (µCi/ml)	1.811E-011	1.978E-011	2.262E-011	
Tritium				
Total Release (Ci)	0.000E+000	0.000E+000	0.000E+000	0.000E+000
Avg. Conc. (µCi/ml)	0.000E+000	0.000E+000	0.000E+000	
Dissolved Gases				
Total Release (Ci)	0.000E+000	0.000E+000	0.000E+000	0.000E+000
Avg. Conc. (µCi/ml)	0.000E+000	0.000E+000	0.000E+000	
Gross Alpha Activity				
Total Release (Ci)	0.000E+000	0.000E+000	0.000E+000	0.000E+000
Avg. Conc. (µCi/ml)	0.000E+000	0.000E+000	0.000E+000	
Volume of Waste Released				
(liters)	5.684E+006	7.407E+006	6.818E+006	1.991E+007
Volume of Dilution Water				
(liters)	6.759E+010	6.759E+010	6.541E+010	2.006E+011

TABLE 3.3C (Con't)
Annual Radioactive Effluent Release Report 2003
Liquid Effluents - Continuous Releases

Isotope (Ci)	July	August	September	Total
Fe-55	1.184E-003	1.291E-003	1.432E-003	3.907E-003
Sr-89	3.948E-005	4.305E-005	4.773E-005	1.302E-004
Sr-90	8.848E-008	2.516E-006	0.000E+000	2.604E-006
Total	1.224E-003	1.337E-003	1.480E-003	4.040E-003

TABLE 3.3D
Annual Radioactive Effluent Release Report 2003
Liquid Effluents - Continuous Releases

	October	November	December	Total
Gross Radioactivity				
Total Release Excluding H3 and Dissolved Gases (Ci)	1.716E-006	1.821E-006	2.629E-006	6.166E-006
Avg. Conc. (µCi/ml)	2.538E-014	2.879E-014	7.780E-014	
Tritium				
Total Release (Ci)	0.000E+000	0.000E+000	0.000E+000	0.000E+000
Avg. Conc. (µCi/ml)	0.000E+000	0.000E+000	0.000E+000	
Dissolved Gases				
Total Release (Ci)	0.000E+000	0.000E+000	0.000E+000	0.000E+000
Avg. Conc. (µCi/ml)	0.000E+000	0.000E+000	0.000E+000	
Gross Alpha Activity				
Total Release (Ci)	0.000E+000	0.000E+000	0.000E+000	0.000E+000
Avg. Conc. (µCi/ml)	0.000E+000	0.000E+000	0.000E+000	
Volume of Waste Released				
(liters)	5.719E+006	6.069E+006	8.765E+006	2.055E+007
Volume of Dilution Water				
(liters)	6.759E+010	6.323E+010	3.380E+010	1.646E+011

TABLE 3.3D (Con't)
Annual Radioactive Effluent Release Report 2003
Liquid Effluents - Continuous Releases

Isotope (Ci)	October	November	December	Total
Sr-90	1.716E-006	1.821E-006	2.629E-006	6.166E-006
Total	1.716E-006	1.821E-006	2.629E-006	6.166E-006

Table 3.4
Annual Radioactive Effluent Report 2003
Dose From Liquid Effluents

The dose to a member of the public from total liquid radioactive releases for each quarter was below the ODCM limits of 1.5 mrems to the total body and less than or equal to 5 mrems to any organ. Additionally, the dose to a member of the public from total liquid radioactive releases for the year was below the ODCM limits of 3 mrems to the total body and less than or equal to 10 mrems to any organ.

Instantaneous release concentrations are limited by the individual radionuclide concentrations established in 10 CFR 20, Appendix B, for unrestricted areas. During the report period, none of the isotopes released exceed the concentrations specified in Appendix B. The following offsite doses were calculated using equation 1.5 from the Kewaunee ODCM.

Organ 1st Qtr Dose	Dose Total mRem	Quarterly Limit mRem	Percent of Limit
Total Body	1.636E-003	1.5	0.11
Bone	8.578E-005	5.0	0.00
Liver	1.670E-003	5.0	0.03
Thyroid	1.571E-003	5.0	0.03
Kidney	1.599E-003	5.0	0.03
Lung	1.588E-003	5.0	0.03
GI-LLI	1.639E-003	5.0	0.03

Organ 2nd Qtr Dose	Dose Total mRem	Quarterly Limit mRem	Percent of Limit
Total Body	4.295E-004	1.5	0.03
Bone	1.867E-004	5.0	0.00
Liver	4.772E-004	5.0	0.01
Thyroid	2.391E-004	5.0	0.00
Kidney	2.535E-004	5.0	0.01
Lung	2.995E-004	5.0	0.01
GI-LLI	1.920E-002	5.0	0.38

Table 3.4 (Con't)
Annual Radioactive Effluent Report 2003
Dose From Liquid Effluents

Organ 3rd Qtr Dose	Dose Total mRem	Quarterly Limit mRem	Percent of Limit
Total Body	6.790E-005	1.5	0.00
Bone	8.386E-005	5.0	0.00
Liver	7.860E-005	5.0	0.00
Thyroid	5.515E-005	5.0	0.00
Kidney	5.516E-005	5.0	0.00
Lung	6.777E-005	5.0	0.00
GI-LLI	9.282E-005	5.0	0.00

Organ 4th Qtr Dose	Dose Total mRem	Quarterly Limit mRem	Percent of Limit
Total Body	7.922E-005	1.5	0.01
Bone	5.618E-005	5.0	0.00
Liver	6.847E-005	5.0	0.00
Thyroid	6.453E-005	5.0	0.00
Kidney	6.456E-005	5.0	0.00
Lung	6.652E-005	5.0	0.00
GI-LLI	8.738E-005	5.0	0.00

Calculated Dose This Year

Organ	Dose Total mRem	Annual Limit mRem	Percent of Limit
Total Body	2.213E-003	3.0	0.07
Bone	4.125E-004	10.0	0.00
Liver	2.294E-003	10.0	0.02
Thyroid	1.930E-003	10.0	0.02
Kidney	1.973E-003	10.0	0.02
Lung	2.021E-003	10.0	0.02
GI-LLI	2.102E-002	10.0	0.21